NATIONAL ADVISORY COMMITTEE FOR AERONAUTICS

WARTIME REPORT

ORIGINALLY ISSUED
January 1943 as
Memorandum Report

GENERAL FREE TO TRIM TESTS IN NACA TANK NO. 2 OF THREE 1/8-FULL-SIZE MODELS OF FLYING-BOAT HULLS AT LOW SPEEDS - NACA MODELS 116E-3k, 120R, and 143

By Arthur W. Carter

Langley Memorial Aeronautical Laboratory
Langley Field, Va.

NACA

WASHINGTON

NACA WARTIME REPORTS are reprints of papers originally issued to provide rapid distribution of advance research results to an authorized group requiring them for the war effort. They were previously held under a security status but are now unclassified. Some of these reports were not technically edited. All have been reproduced without change in order to expedite general distribution.

3 1176 01354 3542

L-585

MEMORANDUM REPORT

for the

Bureau of Aeronautics, Navy Department

GENERAL FREE TO TRIM TESTS IN NACA TANK NO. 2 OF THREE 1/8-FULL-SIZE MODELS OF FLYING-BOAT HULLS AT LOW SPEEDS - NACA MODELS 116E-3k, 120R, and 143

By Arthur W. Carter

INTRODUCTION

At the request of the Bureau of Aeronautics, Navy Department, general free to trim tests of representative models of flying-boat hulls were made to determine the resistance at low speeds. The models were chosen for testing from those already available at the NACA tank. The models were towed both forward and astern at speeds below the range covered in a normal tank test. These data were requested by the Bureau for use in solving problems involving the hull resistance of a towed or a drifting flying boat.

The tests were made in NACA tank no. 2 in December 1942 using the auxiliary carriage. Because the permanent towing equipment had not yet been completed, the towing gear was assembled from spare pieces of equipment available from NACA tank no. 1.

DESCRIPTION OF MODELS

The three models tested were 1/8-full-size and were designated as follows: NACA model 120R, NACA model 116E-3k, and NACA model 143.

The principal dimensions of the models are given in table I and the principal lines are shown in figures 1 to 3. Model 120R was a tank model of the Martin XPBM-3 flying boat. Model 116E-3k was a dynamic model of the Consolidated XPB2Y-3 flying boat. Spray strips, 1 inch wide (0.67 feet, full size), had been added to the chines of model 116E-3. The strips were turned down 30° starting 2.5 inches (1.7 feet, full size) from the bow and fairing into the hull 30.0 inches (20.0 feet, full size) from the bow. The model with this modification was designated 116E-3k.

Model 143 was a dynamic model of the Consolidated XP4Y-1 flying boat, a description of which was reported in reference 1.

TEST PROCEDURE

The models were tested free-to-trim by the general method. Readings were made of the trim, draft, resistance, and speed.

At the low speed range over which the tests were made the resistance of the full-size flying boat could perhaps be more accurately predicted if a definitely turbulent flow had

been established ahead of the model by artificial means but the accuracy desired from these tests did not seem to warrant this additional complication of the tests.

L-585

The trim is considered positive when the bow of the model is raised. When the models were towed astern, the forces were such as to raise the tail of the model, thus producing a negative trim at the higher speeds.

RESULTS AND DISCUSSION

The models were tested at various load coefficients from $C_\Delta = 0.4$ to $C_\Delta = 1.2$. These correspond to full-size gross loads of 25,500 to 76,500 pounds for the Martin XPBM-3, 29,600 to 88,800 pounds for the Consolidated XPB2Y-3, and 19,700 to 59,100 pounds for the Consolidated XP4Y-1. The data from the tests are presented in curves plotted in non-dimensional coefficients. Curves of resistance coefficient and trim plotted against speed coefficient are given in figure 4 for model 120R, in figure 5 for model 116E-3k, and in figure 6 for model 143. The effect of load coefficient on resistance coefficient is shown in figure 7 for model 120R, in figure 8 for model 116E-3k, and in figure 9 for model 143. Figure 10 shows a comparison of resistance coefficient for the three models at a load coefficient of 0.8.

There is considerable difference between resistance coefficients when model 120R is towed forward and when towed astern (fig. 4). The difference becomes smaller as the load coefficient is increased.

Whether model 116E-3k is towed forward or astern, there is no difference in resistance coefficient up to a speed coefficient of approximately 1.0. (fig. 5). Above a speed coefficient of 1.0 and at small load coefficients, the resistance coefficient of the model towed astern is much higher than when the model is towed forward. However, at the larger load coefficients there is practically no difference between the resistance coefficients of the model when towed forward or astern.

The resistance coefficients of model 143 towed astern are larger than when the model is towed forward by approximately the same amount at all load coefficients. (fig. 6).

A comparison of the resistance coefficients for the three models at a load coefficient of 0.8, when towed forward, shows small differences at speed coefficients up to approximately 0.8 (fig. 10). Above a speed coefficient of 0.8, there are larger differences in the resistance coefficients, but the differences between models is smaller than the difference in load coefficients for each model. When the resistance coefficients of the three models towed astern are compared, the differences are seen to be small at all speed coefficients within the range covered in these tests.

In view of the relatively small differences obtained in resistance coefficient from the three models tested, it seems reasonable to assume that, when data are lacking for

other hulls, these data may be used for towing and drifting calculations of other hulls of the same general type as those tested.

Langley Memorial Aeronautical Laboratory,
National Advisory Committee for Aeronautics,
Langley Field, Va., January 19, 1943.

REFERENCE

1. Brooke, H. E.: Detailed Specification of XP4Y-1 1/8 Scale Dynamic Model. Rep. No. ZH-31-014, Consolidated Aircraft Corp., June 19, 1942.

L-585

TABLE I

PRINCIPAL DIMENSIONS OF NACA MODELS

120R, 116E-3k, and 143

	120R	116E-3k	143
Distance center of gravity forward of step, inches	6.93	7.95	5.61
Location of center of gravity, percent M.A.C.		28.00	30.00
Distance center of gravity above keel, inches	14.50	18.50	18.00
M.A.C., inches		24.29	15.41
L.E. M.A.C. aft L.E.W. at root, inches		6.01	2.13
L.E.W. at root aft nose, inches		29.05	30.23
Bow to first step at keel, inches	50.31	49.81	42.59
First step to second step at keel, inches	41.10	31.75	32.78
Length over-all, inches	120.04	118.50	111.56
Beam at step, inches	15.00	15.75	13.75
Angle forebody keel, degrees	0	1	0
Angle afterbody keel, degrees	7.50	6.25	6.50
Depth of step at keel, inches	.73	.87	.898
Angle of dead rise, degrees	17.00	22.50	20.00

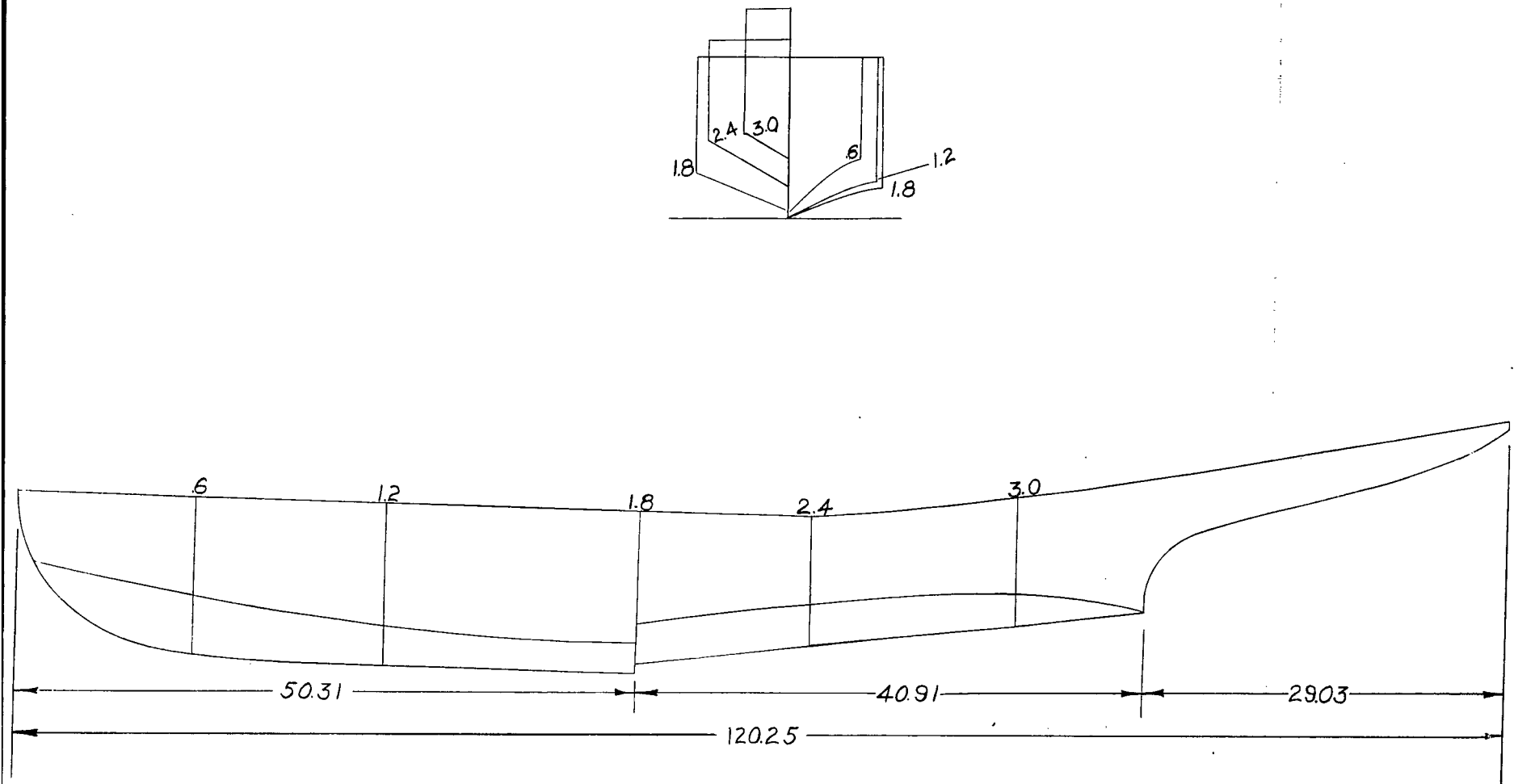

Figure 1.-Profile and typical sections of NACA Model 120 R

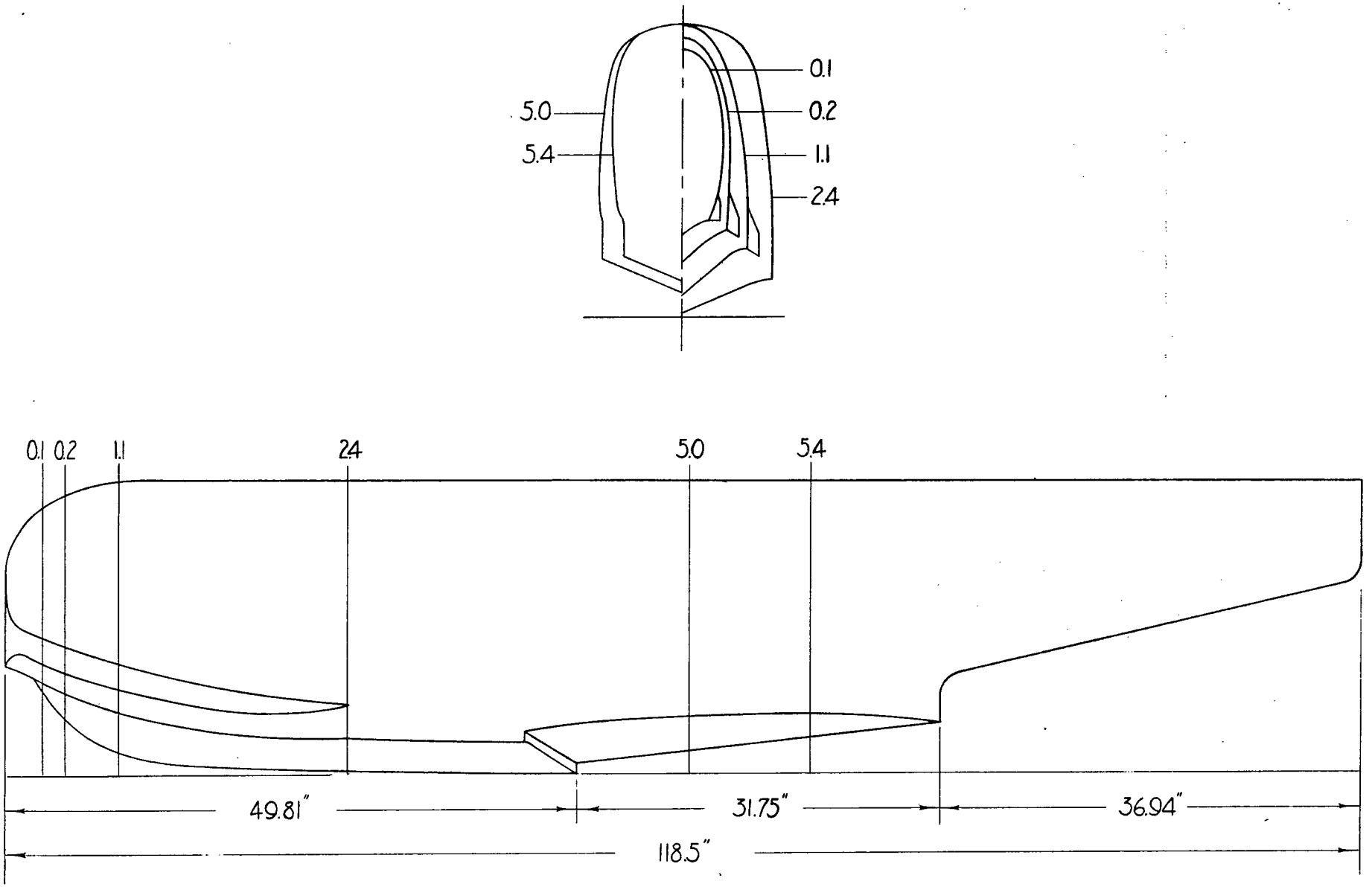

Figure 2.- Profile and typical sections of NACA model 116E-3K

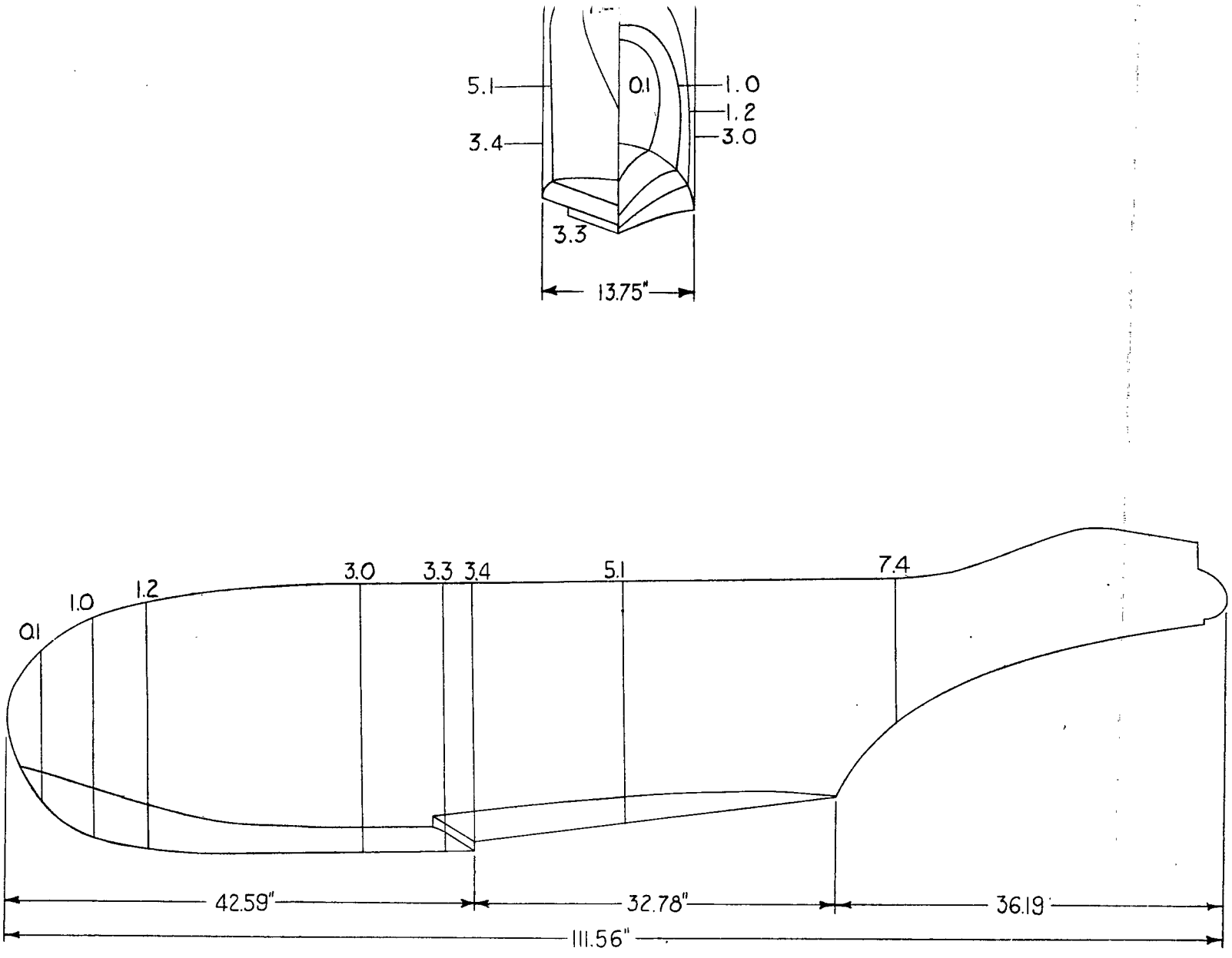

Figure 3 - Profile and typical sections of N.A.C.A. model 143

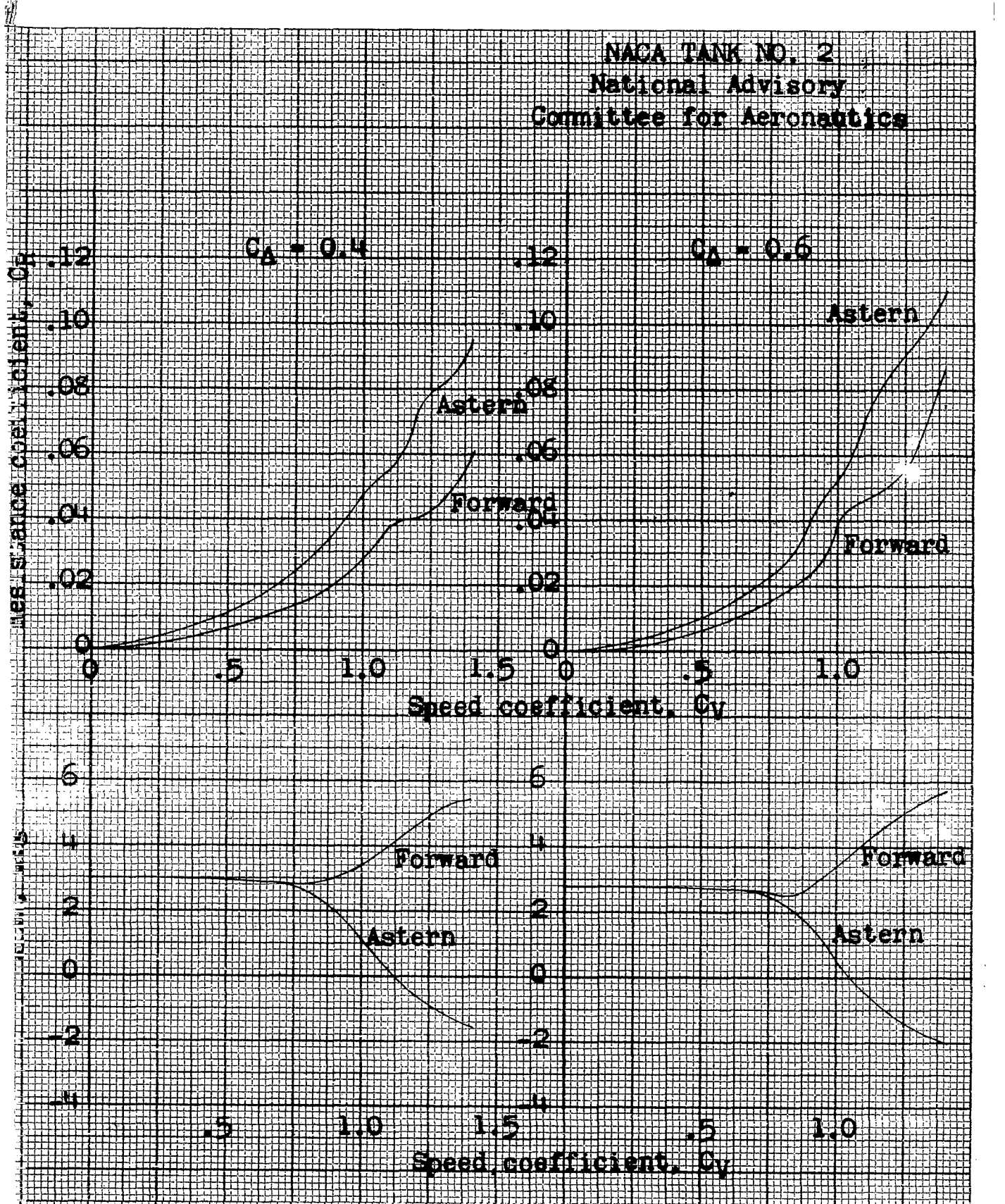

Figure 4.- NACA model 120R. Variation of resistance coefficient and trim with speed coefficien at low speeds. Free-to-trim.

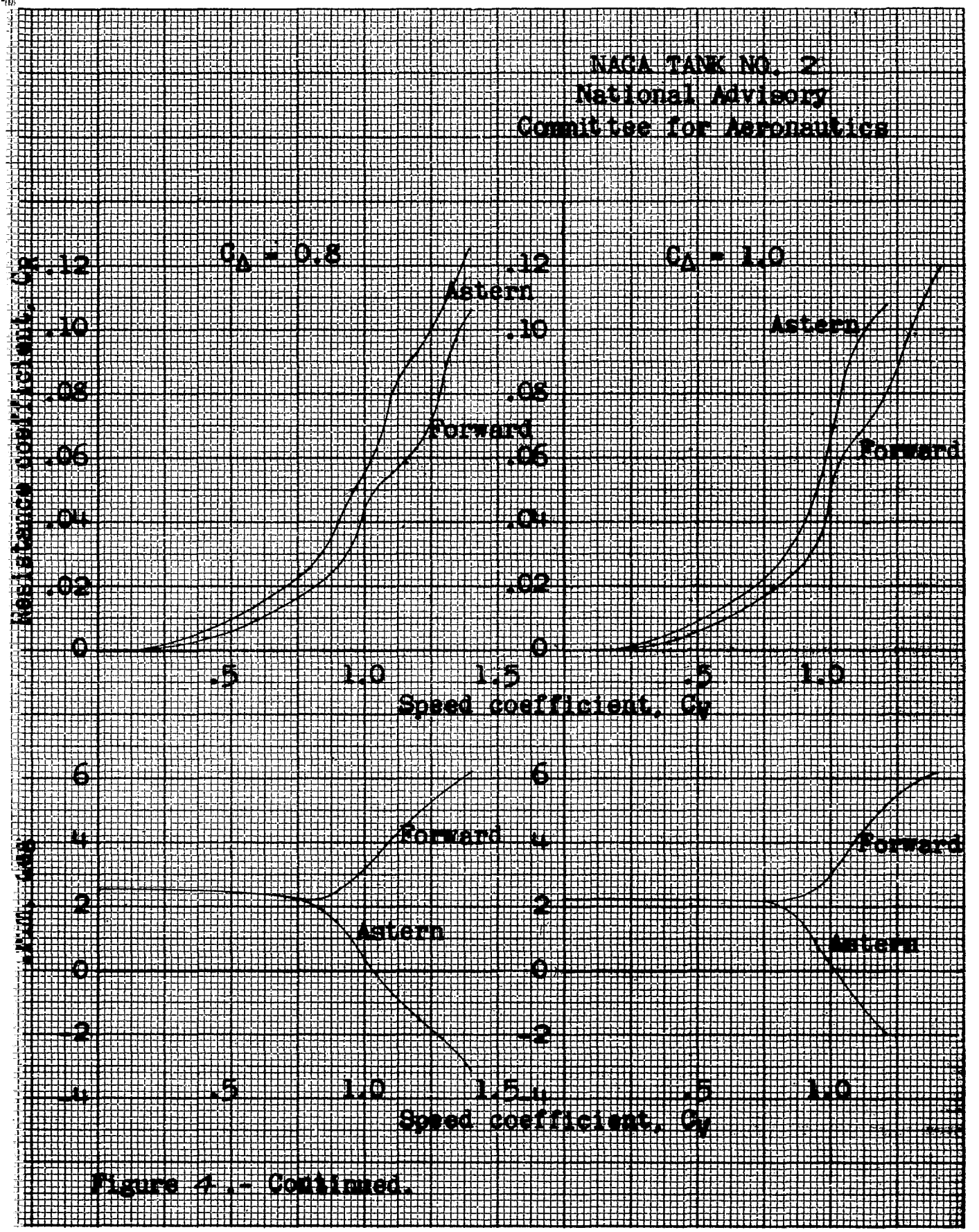

Figure 4.- Continued.

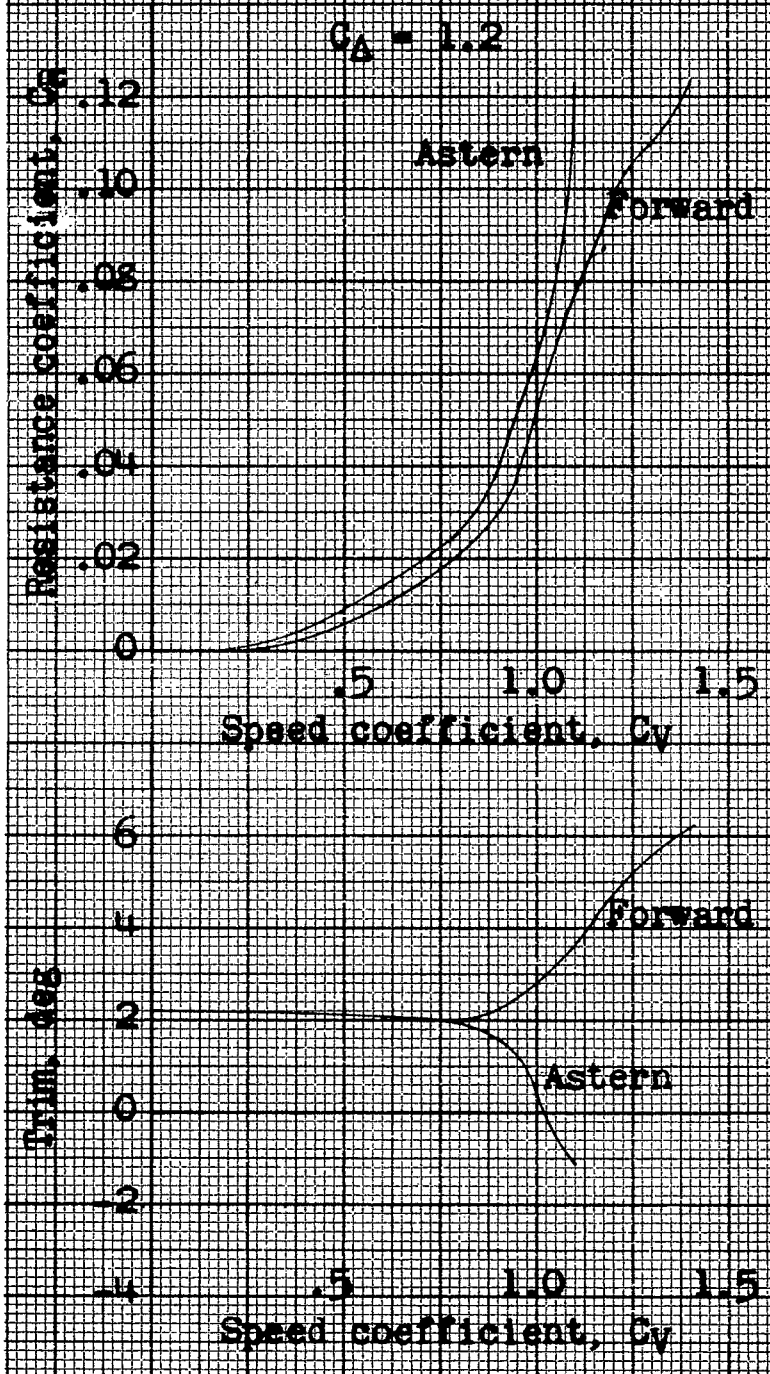

Figure 4.- Concluded.

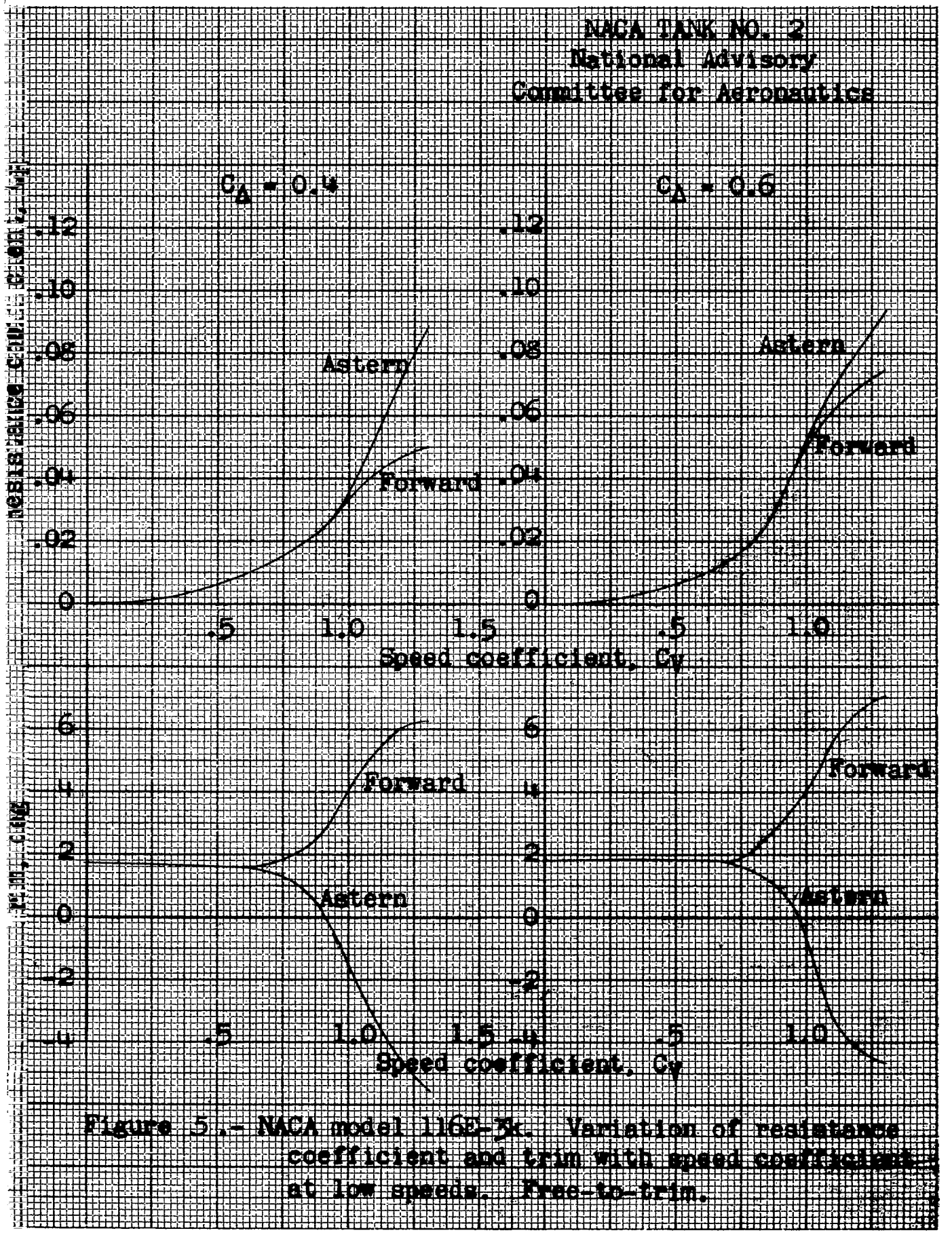

Figure 5.- NACA model 116E-3k. Variation of resistance coefficient and trim with speed coefficient at low speeds. Free-to-trim.

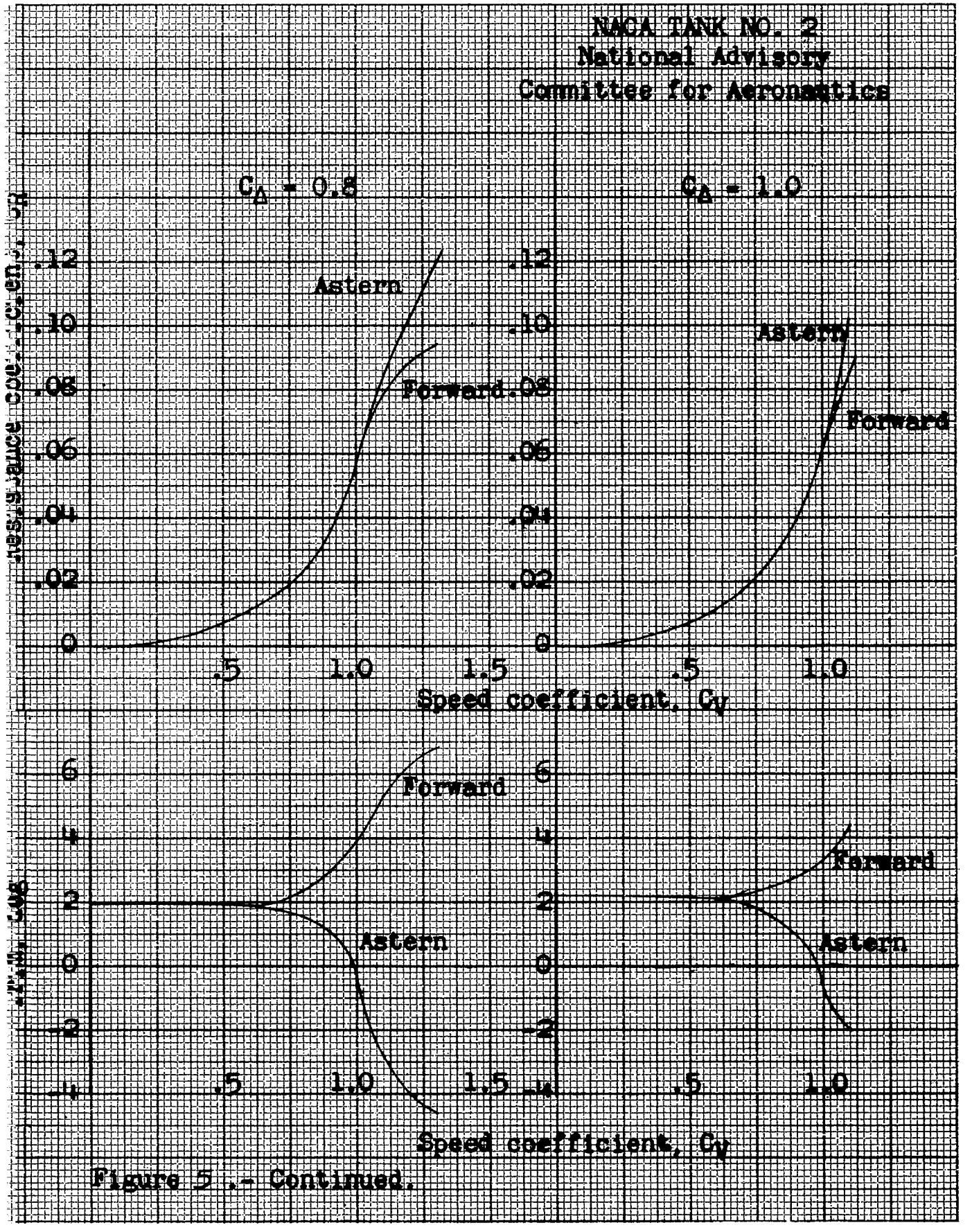

Figure 5.- Continued.

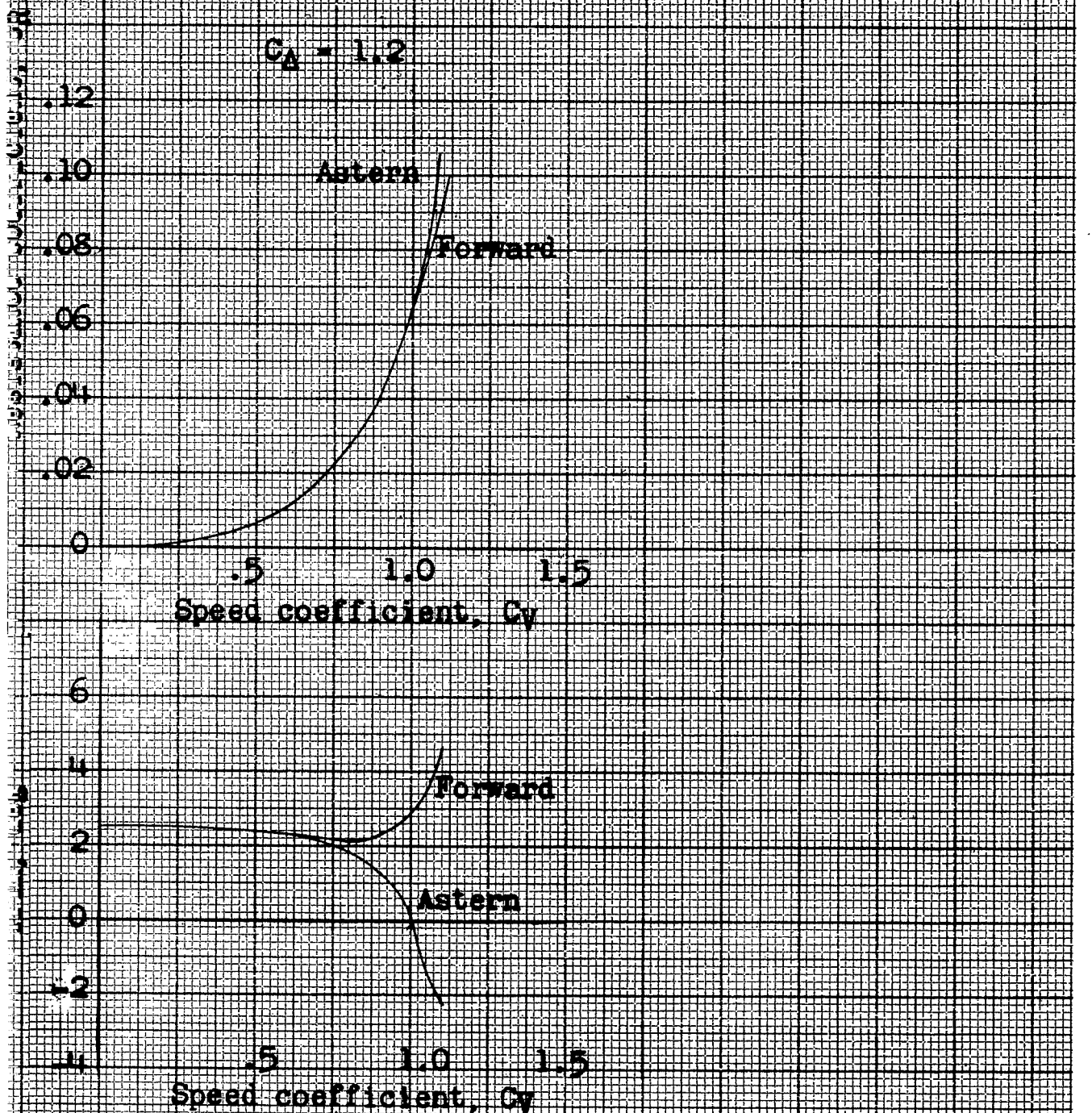

Figure 5 .- Concluded.

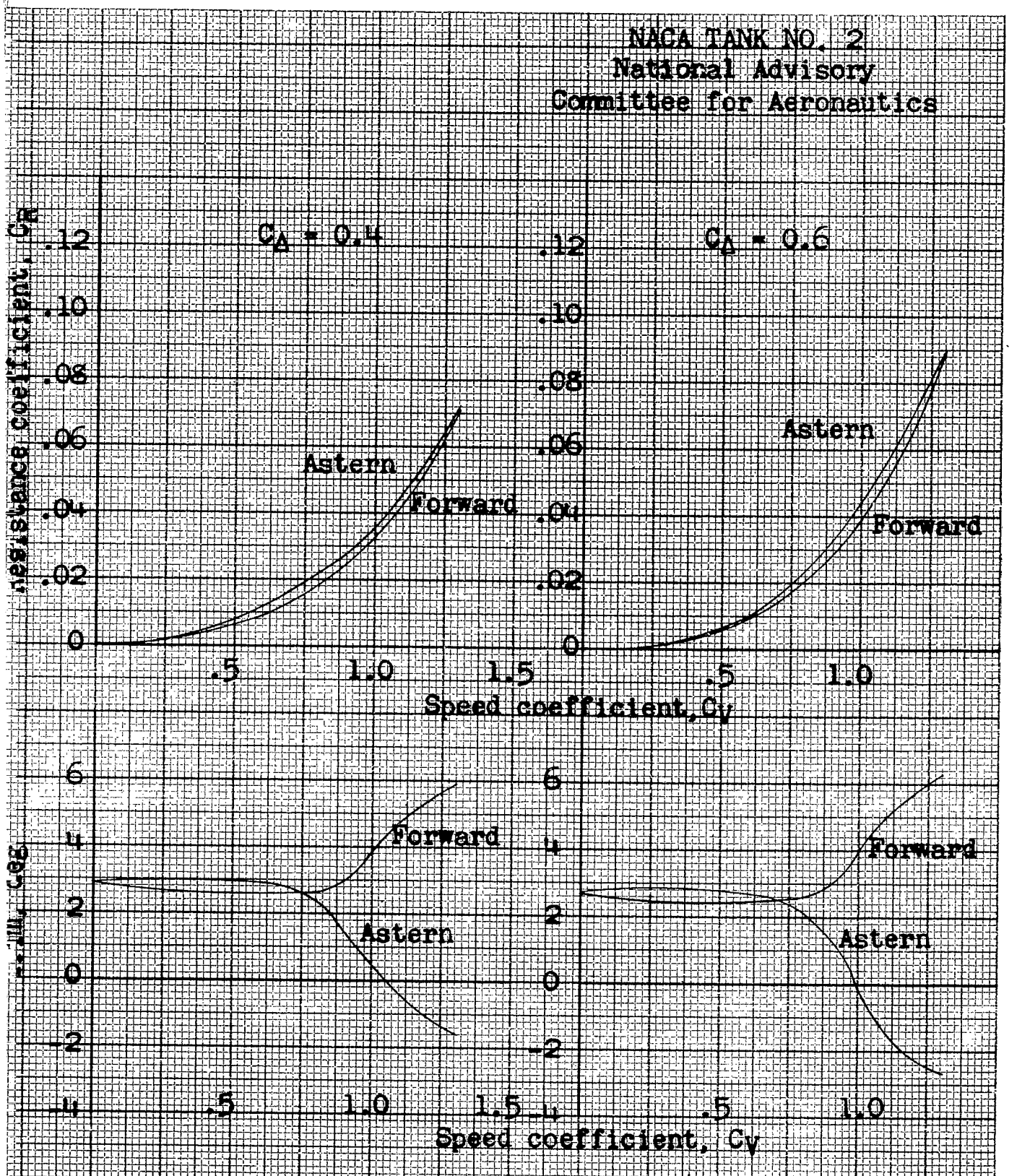

Figure 6.- NACA model 143. Variation of resistance coefficient and trim with speed coefficient at low speeds. Free-to-trim.

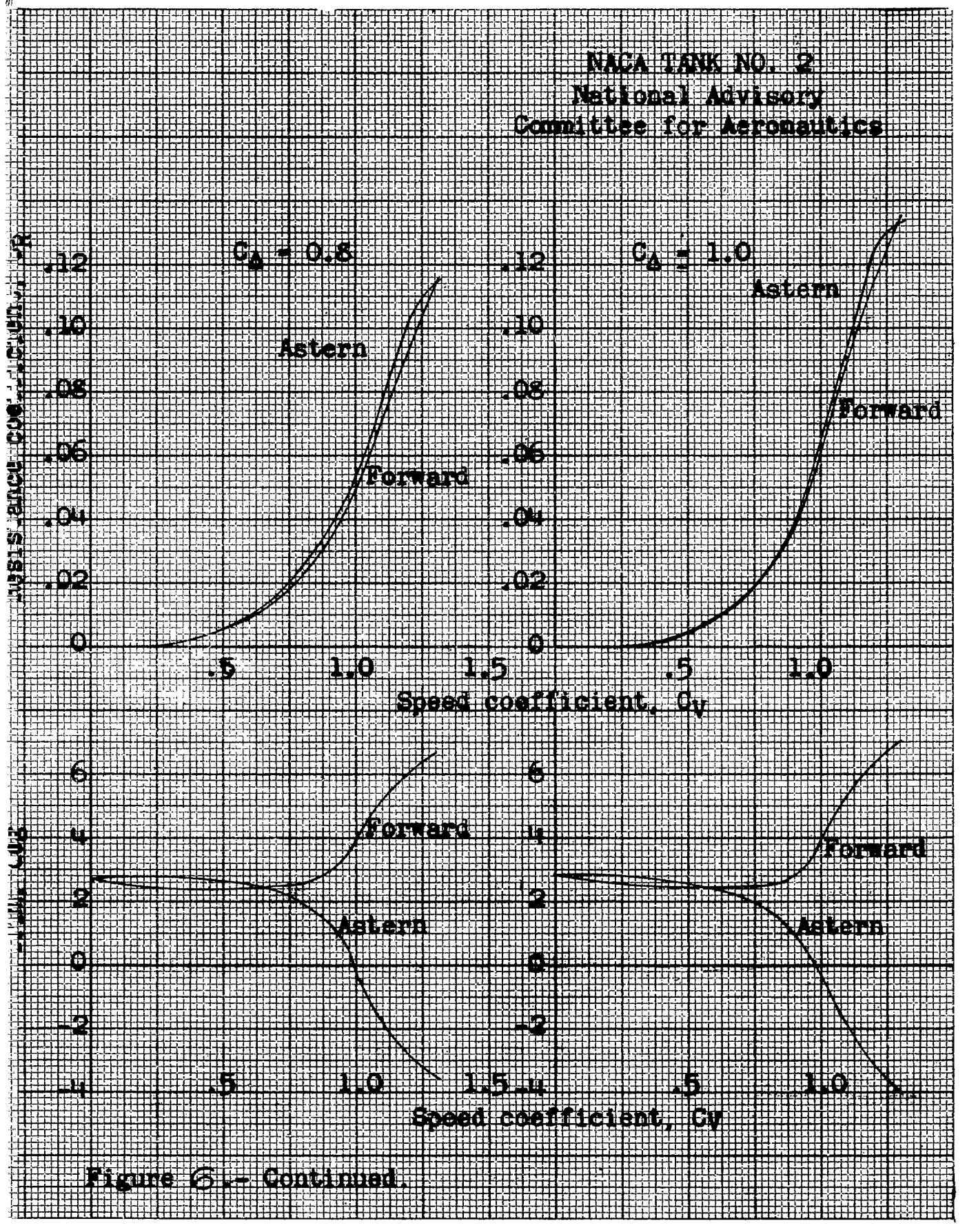

Figure 6.- Continued.

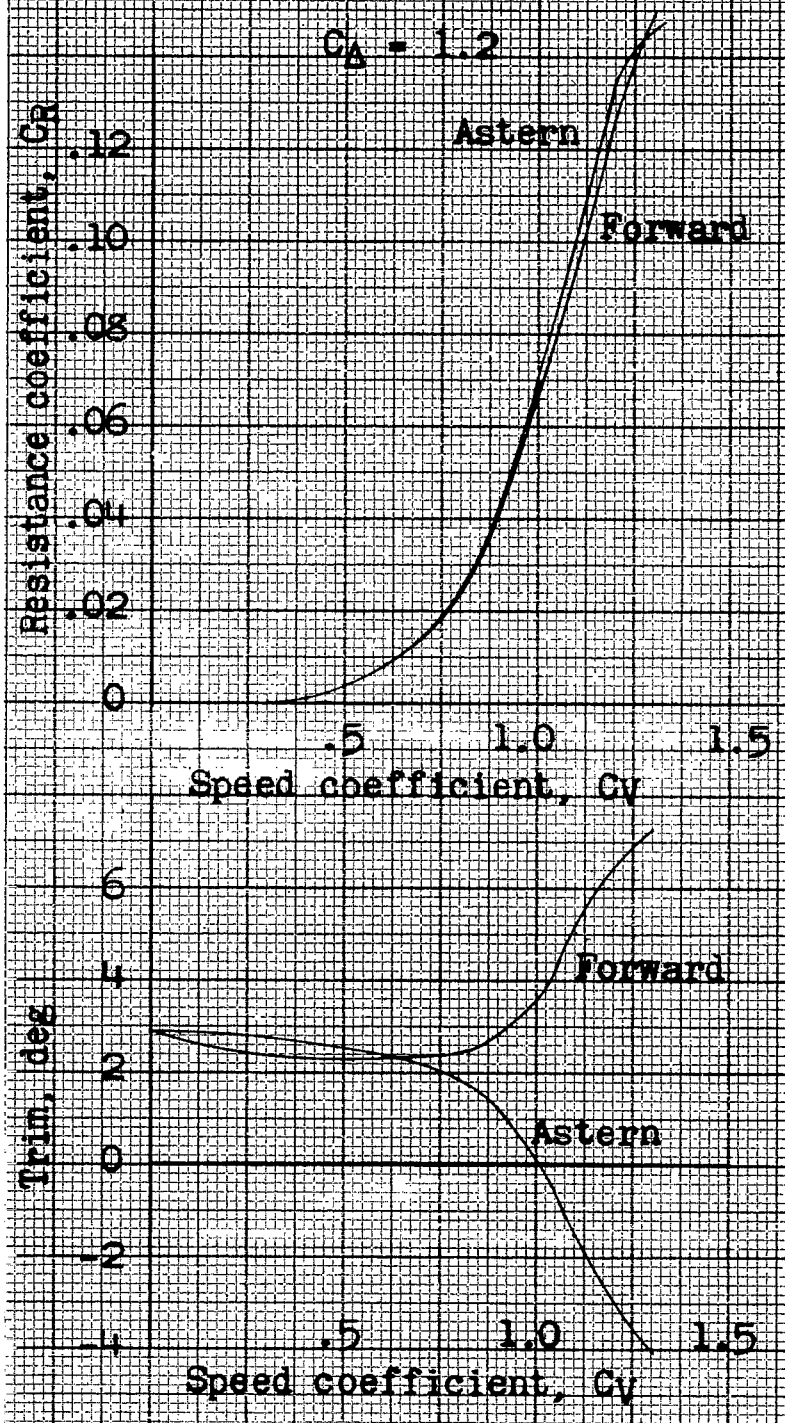

Figure 6.- Concluded.

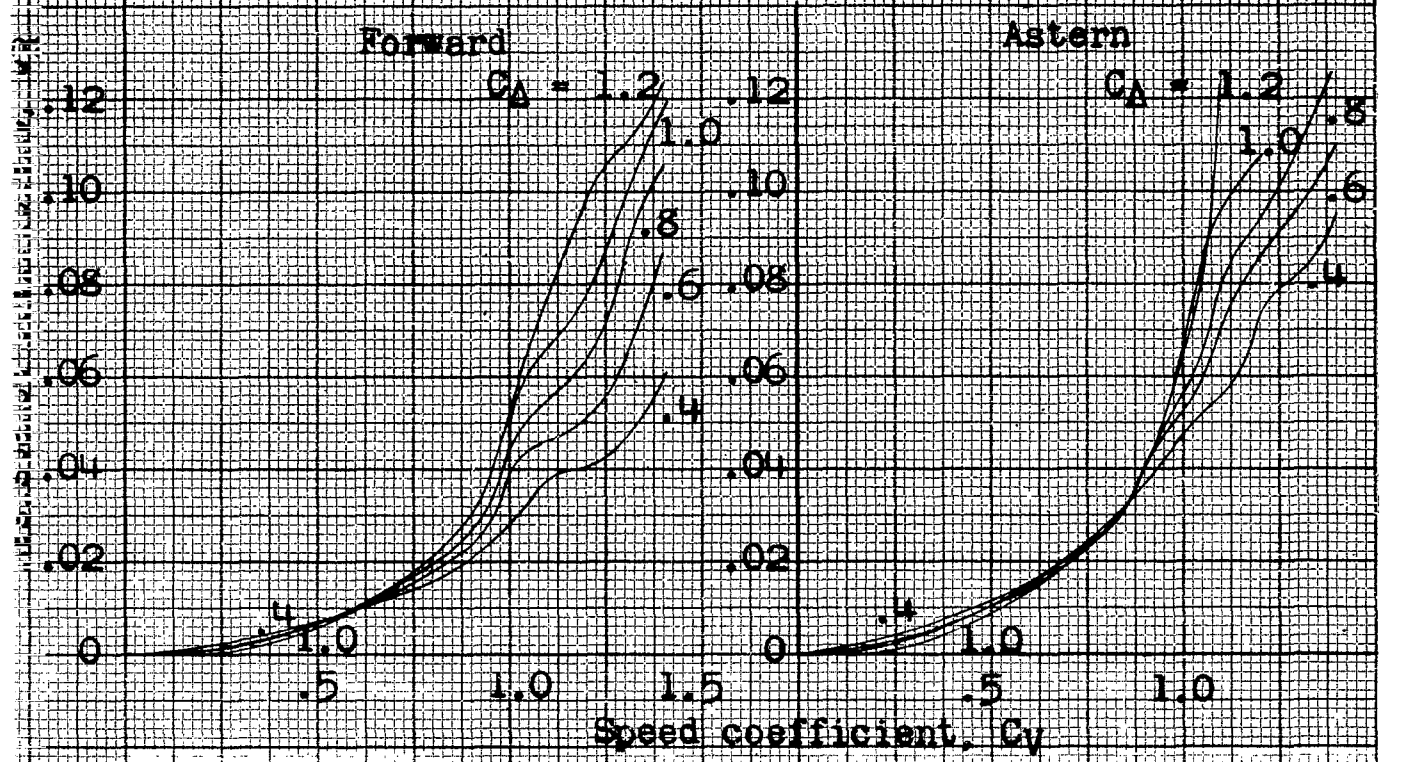

Figure 7.- NACA model 120R. Effect of load coefficient on resistance coefficient at low speeds. Free-to-trim.

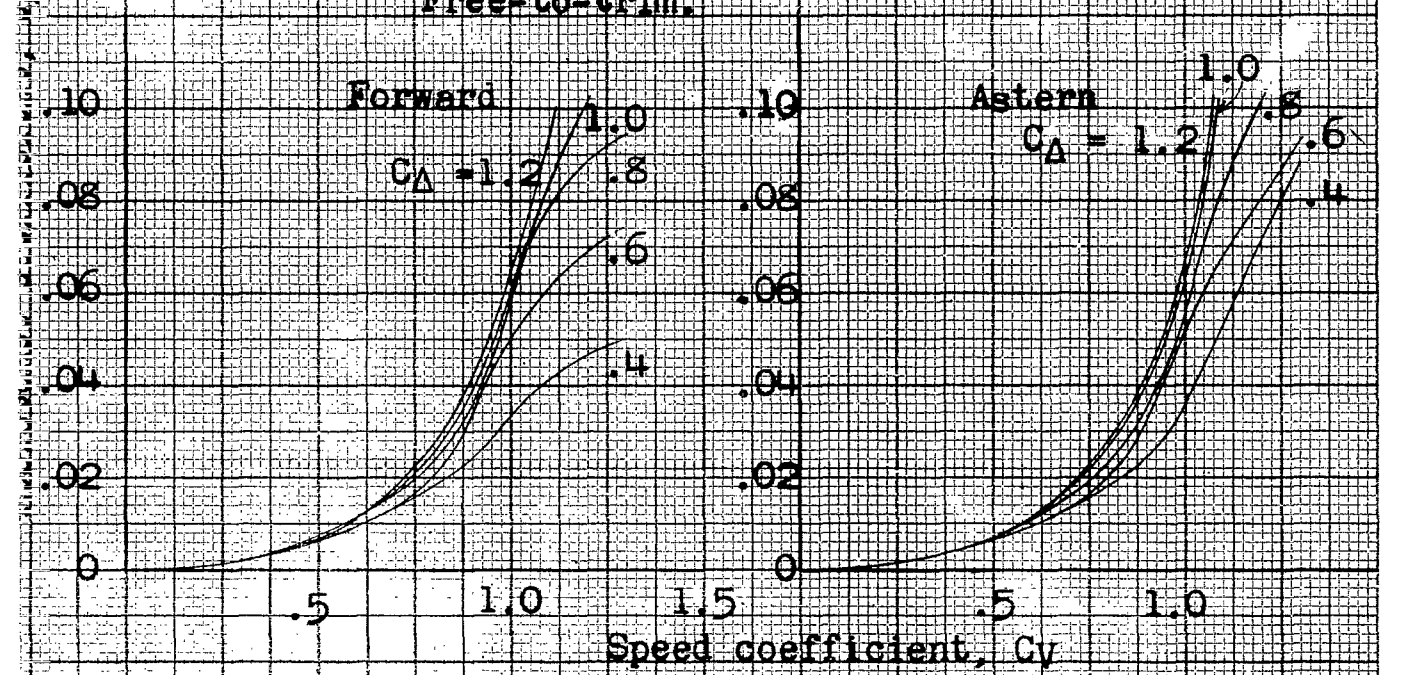

Figure 8.- NACA model 116E-3k. Effect of load coefficient on resistance coefficient at low speeds. Free-to-trim.

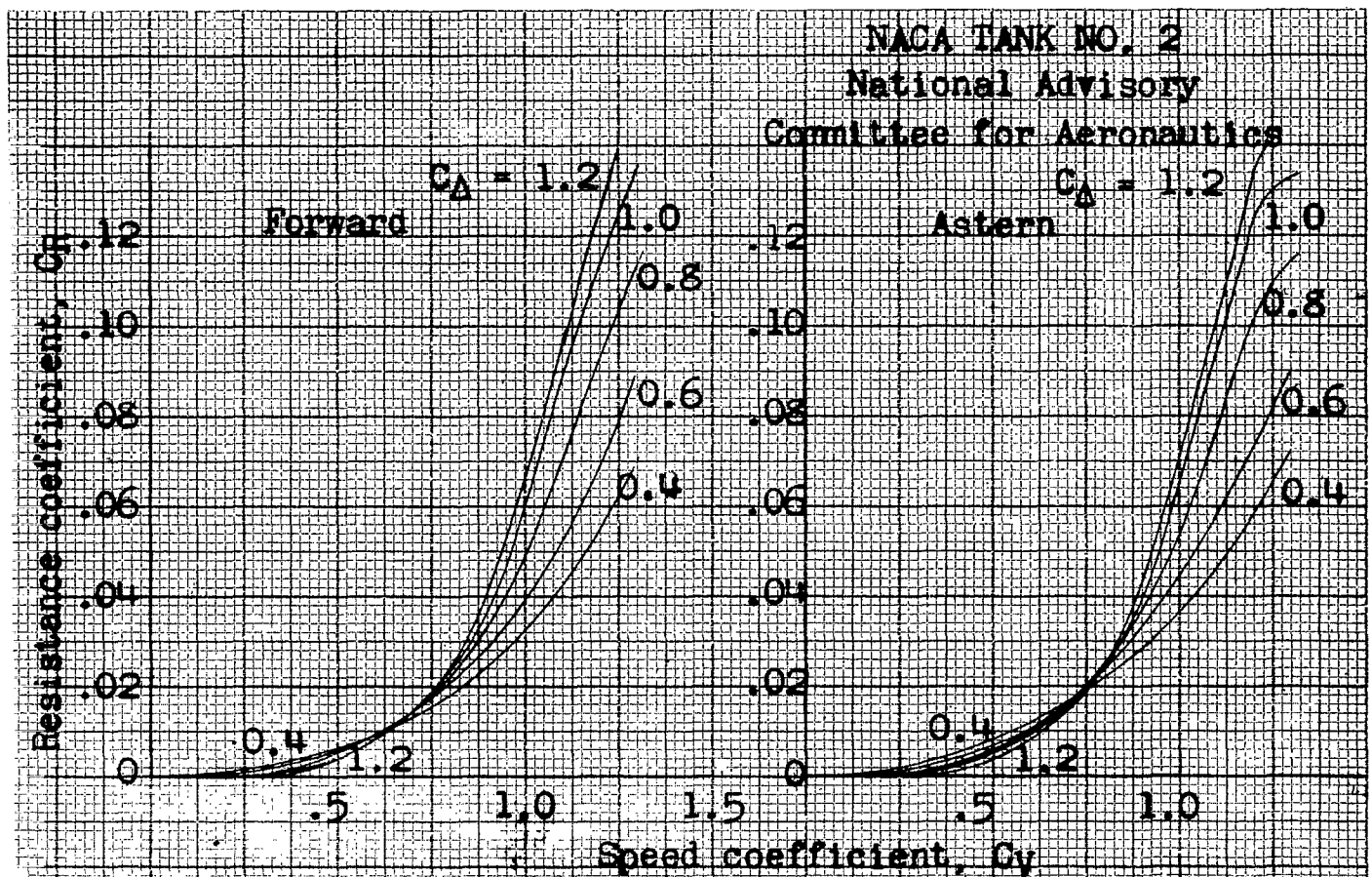

Figure 9.- NACA model 143. Effect of load coefficient on resistance coefficient at low speeds. Free-to-trim.

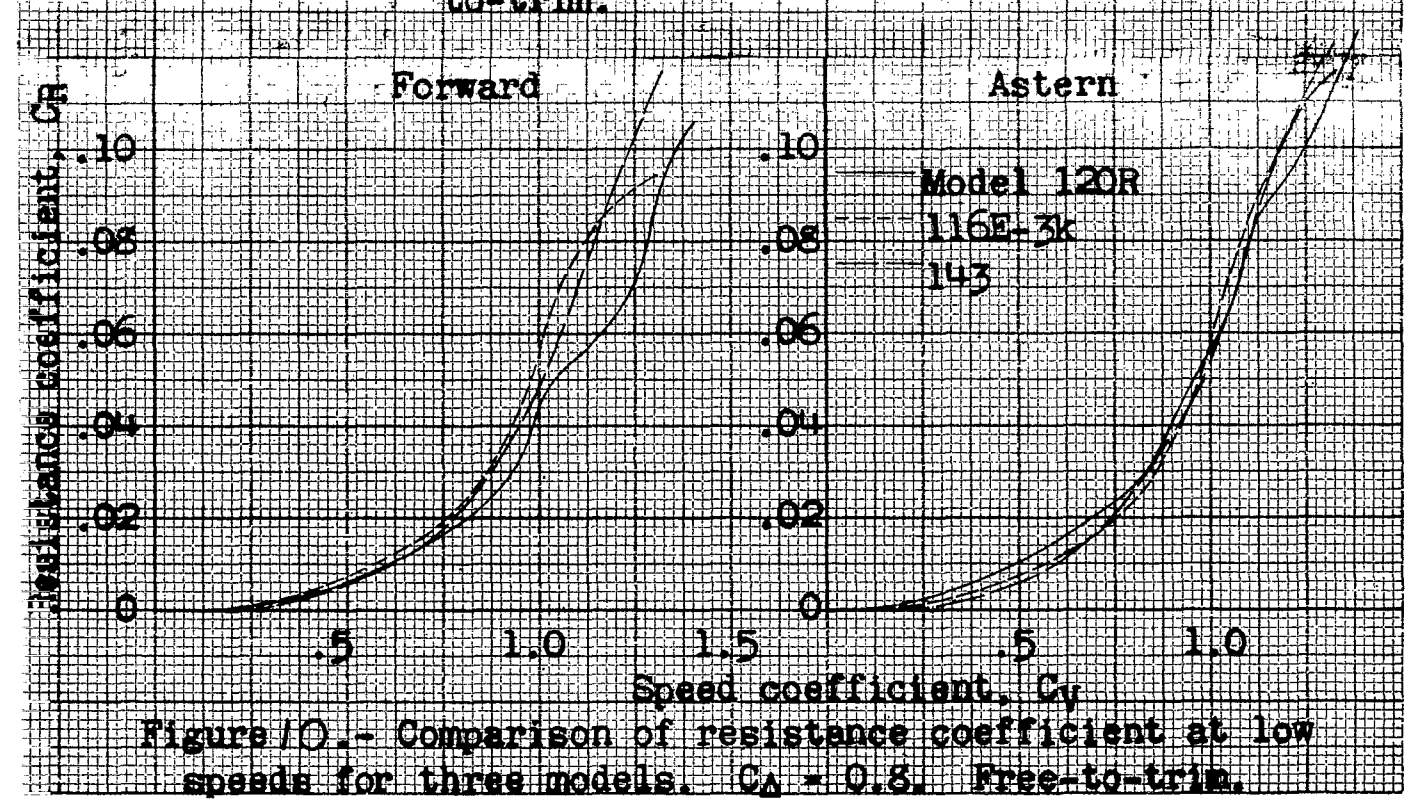

Figure 10.- Comparison of resistance coefficient at low speeds for three models. C_Δ = 0.8. Free-to-trim.

LANGLEY RESEARCH CENTER
3 1176 01354 35