NATIONAL ADVISORY COMMITTEE FOR AERONAUTICS

WARTIME REPORT

ORIGINALLY ISSUED

March 1945 as
Memorandum Report E5C30

OPERATING STRESSES IN AIRCRAFT-ENGINE CRANKSHAFTS AND CONNECTING RODS

I - SLIP-RING AND BRUSH COMBINATIONS FOR DYNAMIC-STRAIN MEASUREMENTS

By Francis J. Dutee, Franklyn W. Phillips
and Richard H. Kemp

Aircraft Engine Research Laboratory
Cleveland, Ohio

NACA

WASHINGTON

NACA WARTIME REPORTS are reprints of papers originally issued to provide rapid distribution of advance research results to an authorized group requiring them for the war effort. They were previously held under a security status but are now unclassified. Some of these reports were not technically edited. All have been reproduced without change in order to expedite general distribution.

3 1176 01354 1686

NACA MR No. E5C30

NATIONAL ADVISORY COMMITTEE FOR AERONAUTICS

MEMORANDUM REPORT

for the

Army Air Forces, Air Technical Service Command

OPERATING STRESSES IN AIRCRAFT-ENGINE CRANKSHAFTS AND CONNECTING RODS

I - SLIP-RING AND BRUSH COMBINATIONS FOR DYNAMIC-STRAIN MEASUREMENTS

By Francis J. Butee, Franklyn W. Phillips
and Richard H. Kemp

SUMMARY

Tests were conducted to develop a slip-ring and brush system that will perform satisfactorily in aircraft-engine, dynamic-strain-measuring applications where resistance-wire strain gages are the means of measuring the strain and to correlate the data obtained from tests in order to provide a basis for predicting the performance of similar slip-ring and brush systems operating under conditions similar to those imposed by these tests.

A total of 24 combinations of slip-ring and brush materials were tested dry and 8 of these combinations were also tested in oil. Tests were run in oil because in some dynamic-strain-measuring applications, such as those within engine crankcases, oil is on the sliding contacts.

Test results of the slip-ring and brush combinations rated as the most practicable for use in circuits to measure dynamic strain are as follows:

Material combination	Brush pressure required for satisfactory operation dry (lb/sq in.)
Plate-brass slip rings and silver-graphite brushes	90
Monel-metal slip rings and silver-graphite brushes	95
Inconel slip rings and silver-graphite brushes	100
Shim-brass slip rings and silver-graphite brushes	95
Silver-plated slip rings and soft-carbon brushes	95

The only combination to operate satisfactorily in oil was the shim-brass slip rings (Vickers hardness number, 150) and the silver-graphite brushes; a brush pressure of 175 pounds per square inch was required. None of the foregoing combinations showed excessive wear when tested dry and the shim-brass slip rings operated in oil from 5 to 10 hours without undue wear.

The results of these tests were utilized in the design of a slip-ring and brush system that performed satisfactorily in a crankshaft and connecting-rod stress-measuring application.

INTRODUCTION

The investigation reported herein was made at the NACA Cleveland laboratory at the request of the Army Air Forces, Air Technical Service Command, and is part of a program to develop instrumentation for use in determining actual operating stresses in rotating-shaft systems such as aircraft-engine crankshafts and connecting rods. Where resistance-wire strain gages are used to measure dynamic strains, a means of communication between the strain gages and the instruments recording the strains is necessary. Slip rings and brushes, or some other type of sliding contact, are most commonly used as a means of communication.

Considerable research has been done on the phenomena of sliding contacts used to transmit electric power, as in the case of electric motors. The results of this previous work have proved of little practical value insofar as systems for measuring dynamic strain are concerned, because strain-measuring systems transmit only a small amount of electric power. Furthermore, slip rings and brushes on electric motors are designed to have a low voltage

drop and relatively little attention is given to the variations in the drop. A good slip-ring system for measuring dynamic strains can have an appreciable voltage drop, but it is important that the drop remain constant within very close limits.

The objects of the present investigation were therefore (1) the development of a slip-ring and brush system through which a small amount of electric power could be transmitted and in which the contact-resistance change between the slip rings and brushes would remain small enough that the strain signal would not be obscured by variations of voltage drop through the slip rings and brushes; (2) the correlation of data from tests of slip rings and brushes in order to provide a basis for predicting the performance of similar systems operating under similar conditions.

Tests were run on 24 combinations of slip-ring and brush materials operating dry and 8 of these combinations operating in oil. Tests were run in oil because in some applications of dynamic-strain measurements oil is on the sliding contacts as, for example, within an engine crankcase. Slip-ring speed and brush pressure were varied to determine the operating characteristics at several conditions. Wear tests were run on one combination in oil and wear characteristics were noted throughout all the other tests. The results are given in the form of tables and graphs, which can be of assistance in the design of similar systems. Reference is made to the performance of aircraft-engine, dynamic-strain-measuring applications that are the result of these tests.

APPARATUS

Slip-Ring and Brush Testing Machine

The equipment shown in figure 1 was designed to test combinations of slip-ring and brush materials both dry and wet with oil and at various slip-ring speeds and brush pressures. All the slip rings tested were of the axial type; that is, the sliding-contact surfaces were perpendicular to the slip-ring axes of rotation.

Two different types of construction were used on the slip rings. In one type of assembly, the slip rings were made of shim brass, 0.016 inch thick and 3/8 inch wide, with mean diameters of $1\frac{1}{2}$, 3, $4\frac{1}{2}$, and 6 inches. A phenolic resin cement was used to attach these four thin rings to a steel disk 1/4 inch thick and 7 inches in diameter. The second type of construction used slip rings that were disks 1/4 inch thick and 7 inches in diameter made of the slip-ring materials being tested. These slip rings, or "ring plates," were bolted to face

plates on either end of the shaft of the testing machine (fig. 1). The ring plate on one end of the shaft of the testing machine was housed to provide for operation of the slip rings in oil. As the ring plate rotated, it dipped into an oil bath in the bottom of the housing in such a way that oil was copiously splashed on the slip rings during operation. A variable-speed drive was used to rotate the slip rings at speeds from 500 to 3000 rpm.

The brushes were 1/8 inch in diameter and 9/16 inch in length and their longitudinal axes were parallel to the axis of slip-ring rotation. Calibrated springs were used in adjustable brush holders to provide brush pressures from 12 to 400 pounds per square inch. The brush holders were so spaced that the brushes could be operated on any one of four slip-ring diameters, $1\frac{1}{2}$, 3, $4\frac{1}{2}$, or 6 inches.

The slip-ring and brush materials tested are listed in tables I and II.

Signal Generator

Signals of various amplitudes were generated by resistance-wire strain gages of 500-ohm and 1000-ohm resistance with a strain-sensitivity factor of approximately 2.15. These strain gages were mounted on a steel cantilever beam that was subjected to a bending stress at a frequency of 1000 cycles per minute. The signal thus generated closely resembled a sine wave. The stress ranges applied to the 500-ohm and the 1000-ohm gages were 12,000 and 8300 pounds per square inch, respectively.

Instrumentation

The circuits shown in figure 2 were so interconnected that either the Wheatstone-bridge circuit or the potentiometer circuit could be used depending on the position of a selector switch.

Wheatstone-bridge circuit. - The slip rings and brushes at the ends of the testing-machine shaft could be placed in series with the battery circuit or shorted out of the battery circuit. In a dynamic-strain-measuring application, where all the arms of the bridge would be attached to the rotating part under test, slip rings and brushes would have to be used in the amplifier-oscilloscope circuit in addition to those in the battery circuit. In these tests, however, it was considered unnecessary to test the sliding contacts in the amplifier-oscilloscope circuit because the varying contact resistance of the slip rings and brushes was negligible when compared with

the 500,000-ohm total impedance of the amplifier-oscilloscope circuit. Tests with sliding contacts in both circuits verified this assumption.

The amplifier-oscilloscope circuit of a Wheatstone bridge is affected by slip-ring and brush interference even when the bridge is in resistance balance. This interference is due to the effect of the rapidly changing voltages and currents applied by the slip rings and brushes and is a function of all the capacitances, inductances, and resistances in the entire circuit. The bridge could be so balanced for one frequency that a sinusoidal change of resistance in the battery circuit would not affect the oscilloscope. A condition was never found, however, that would eliminate the slip-ring and brush interference because this interference includes a wide band of frequencies.

An improvement in the system could be effected by employing a filter in the battery circuit, but filters were not used in this investigation because they would have partly obscured the comparison of performance between the various types of slip ring. The use of a filter in the amplifier-oscilloscope circuit would not be desirable because it would eliminate components of the strain signal as well as the interference introduced by the slip rings and brushes.

Potentiometer circuit. - The slip rings and brushes at the ends of the testing-machine shaft could be either placed in series with the battery and the strain gage or shorted out of the circuit. A combination electronic voltmeter and amplifier served as a means of calibrating the cathode-ray oscilloscope and also of preamplifying the strain-gage signals or the signals generated by the varying voltage drop across the sliding contacts.

In the potentiometer circuit, a change in resistance through the sliding contacts had exactly the same effect on the recording instruments as a similar change in resistance of the strain gage. For this reason, recording instruments in the potentiometer circuit were more sensitive to changes in sliding-contact resistance than recording instruments in the Wheatstone-bridge circuit, as was shown by tests of these two circuits under the same conditions.

TEST PROCEDURE

Determination of Minimum Brush Pressure for Satisfactory Performance

The purpose of the first set of tests was to determine the minimum brush pressure at which a given slip-ring and brush combination would perform satisfactorily. Satisfactory performance was defined

as the condition of operation in which no difference was apparent between the signals when the slip rings and brushes were in the circuit and when they were shorted out of the circuit.

Four brushes on the same slip-ring diameter were placed in the battery circuit of the Wheatstone bridge shown in figure 2(a). Two of the brushes connected in parallel conducted the current into the slip rings and two of the brushes connected in parallel conducted the current out of the slip rings. The signal was generated by a strain gage of 1000-ohm resistance mounted on the steel cantilever beam at a point where the maximum alternating stress was 8300 pounds per square inch. The strain-gage current was maintained between 20 and 25 milliamperes.

At the beginning of a test the slip rings and brushes were cleaned with acetone and their mating surfaces were polished. The setup was then given a 1-hour run-in with the slip rings rotating at 1000 rpm and the brush pressure at approximately 60 percent of that required for satisfactory operation. This run-in period allowed the film conditions of the brushes and slip rings to approach equilibrium.

Following the run-in period, the brush pressure was reduced to 12 pounds per square inch, the slip-ring speed was increased to 2370 rpm, and the slip ring was run for 15 minutes. If at the end of that time the trace observed on the oscilloscope screen was unsatisfactory, the brush pressure was increased and the slip ring was again allowed to run for 15 minutes. Thus, while the slip-ring speed remained constant, the brush pressure was increased until a point was reached at which the trace was satisfactory. This brush pressure was recorded as the minimum allowable for satisfactory signal transmission. The foregoing procedure was repeated for each slip-ring diameter and for each of the 24 combinations tested dry (table I) and the 8 combinations tested in oil (table II). The data obtained are shown in these tables. The oil used in these tests (SAE 60) was maintained at a temperature of approximately 150° F.

Five of the combinations listed in table I were considered most practicable for use in circuits to measure dynamic strain; these combinations were tested to determine their minimum brush pressure for satisfactory operation at slip-ring speeds of 500, 1000, 2000, and 3000 rpm. The testing procedure was the same as the one previously described except that the strain-gage resistance was 500 ohms, the stress at the point where the strain gage was attached to the steel cantilever beam was 12,000 pounds per square inch, and the strain-gage current was maintained between 35 and 40 milliamperes.

Contact-Resistance Change

The slip-ring and brush contact-resistance change of the five combinations mentioned in the preceding paragraph was measured as follows:

The oscilloscope was calibrated in the potentiometer circuit (fig. 2(b)) by connecting the electronic voltmeter across an operating strain gage and adjusting the strain-gage current until the signal amplitude was equal to 0.00265 volt (rms), as indicated by the voltmeter. With the signal amplitude set at this value, the voltmeter was used as an amplifier and its output connected to the oscilloscope. The total signal amplitude as viewed on the oscilloscope screen was equal to

$$\frac{0.00265 \times 2}{0.707} = 0.0075 \text{ volt}$$

The amplifier-gain controls were so adjusted that the total signal amplitude was equal to 1/2 inch, thus fixing the calibration at 0.015 volt per inch.

In order to determine the contact-resistance change, the signal generator was shut off and the amplifier and the oscilloscope were connected across the operating slip rings and brushes. By means of the calibration, the magnitude of the varying voltage drop through the slip rings and brushes was measured on the oscilloscope screen. The high-frequency contact-resistance change ΔR was calculated by substituting the measured values for the current I and the voltage drop ΔV in the equation.

$$\Delta R = \frac{\Delta V}{I}$$

Wear Tests in Oil

Wear tests were run on shim-brass slip rings and silver-graphite brushes operating in oil because of the extremely high brush pressures required for satisfactory performance. The slip rings and brushes were cleaned in acetone, the brush pressures were set sufficiently high to give satisfactory operation (150 to 250 lb/sq in.), and the slip-ring speed was set at 2370 rpm. The slip rings were allowed to run continuously except for inspections at regular intervals. The durations of all tests ranged from 6 to 10 hours.

DISCUSSION OF RESULTS

Operation of Slip Rings and Brushes Dry

The slip-ring and brush combinations tested dry are listed in table I together with remarks concerning their operating characteristics. Many of these combinations were satisfactory in performance but the following five combinations were considered most practicable for use in circuits to measure dynamic strain:

Plate-brass slip rings and silver-graphite brushes
Monel-metal slip rings and silver-graphite brushes
Inconel slip rings and silver-graphite brushes
Shim-brass slip rings and silver-graphite brushes
Silver-plated slip rings and soft-carbon brushes

The minimum brush pressures required for satisfactory operation of the foregoing combinations are given in figure 3. The remarks on performance in table I and the data in figure 3 are applicable only to the Wheatstone-bridge circuit. The figure shows data in terms of surface speed (ft/min), because slip rings of four diameters were tested at various speeds of rotation.

If the results of these tests are to be applied to similar slip-ring and brush systems, the effect of certain factors on the strain-gage signal must be considered. The magnitude of the strain-gage signal is dependent on the gage current, the gage resistance, the gage strain-sensitivity factor, and the amount of strain at the point where the gage is mounted. The values that were assigned to each of these factors for use in this investigation were arbitrary and are not necessarily the same as will be used in other dynamic-strain applications. It should be noted that the ratio of slip-ring and brush interference to strain-gage signal varies inversely as the gage resistance, the gage strain-sensitivity factor, and the range of strain at the point where the gage is mounted. This same ratio is unaffected by changes in gage current. An improvement in the performance of a slip-ring and brush system can thus be effected by increasing the gage resistance, the sensitivity factor of the strain gages, or the range of strain.

Figure 4 shows data taken at various surface speeds in which a decrease in the high-frequency contact-resistance change was observed as the brush pressure was increased. It is apparent from the trend of the data that the brush pressure is critical and that to decrease it much below the minimum values shown in figure 3 would greatly increase the amount of interference in the signal.

It is possible to determine the performance of a potentiometer circuit from the contact-resistance change of the slip rings and brushes because the strain gage and the sliding contacts are in series in the potentiometer circuit. The strain-gage signal and the slip-ring and brush interference are directly proportional to the resistance change of the strain gage and the resistance change of the sliding contacts. If a 500-ohm strain gage mounted on steel is subjected to a stress of 10,000 pounds per square inch, the resistance change of the strain gage is 0.358 ohm. From the data in figure 4 (a) it can be seen that the lowest value of contact-resistance change is 0.031 ohm. Thus, for the operating conditions given in figure 4(a), the minimum ratio of interference to strain-gage signal would be:

$$\frac{0.031}{0.358} = 0.086$$

This ratio or interference factor can then be used as a measure of the performance of the circuit; the low r the interference factor the better the performance obtained from the system.

There is evidence that films such as oxides form on the surface of slip rings. (See reference 1.) These films are seldom continuous and therefore they contribute to changes of the contact resistance. The brushes scrape a part or all of this film from the slip rings, depending on the brush pressure, and thus at the higher brush pressures most of the film is removed and the contact-resistance change is lowered. The tendency of films to form more easily on some surfaces than on others is one of the factors that distinguish a poor slip ring from a good one.

The wear-resistant characteristics of these combinations were excellent at all the brush pressures used during the tests. The total running time on any combination did not, however, exceed 6 hours; it was estimated that this amount of time would be sufficient to obtain dynamic-strain data from an operating engine part. A shim-brass slip ring and silver-graphite brush combination operated satisfactorily without excessive wear on a crankshaft and connecting-rod strain-measuring application for 22 hours.

Operation of Slip Rings and Brushes in Oil

The most significant fact observed from the tests run in oil was the extremely high brush pressure required for satisfactory operation. (See fig. 3 and table II.) Only the shim-brass slip rings and the silver-graphite brushes were satisfactory under these conditions. The high brush pressures used in these tests apparently eliminated the trends observed in figure 4 for dry operation because,

in all the tests on the shim-brass slip rings and silver-graphite brushes run in oil, the contact-resistance change remained at an undetermined high value until a brush pressure was reached at which the resistance change fell abruptly to a negligible quantity.

The difference noted between operation dry and operation in oil can be explained by the presence of an oil film on the slip rings. This oil film remained on the contact surface between the brushes and slip rings until the brush pressure was sufficiently high to break it down. The breakdown of this film was for all practical purposes, instantaneous, after which the brushes made positive electrical contact with the slip rings and the contact resistance became negligible.

The wear-resistant characteristics of the materials involved in operation in oil are extremely important because of the high brush pressure required to break down the lubricating oil film at the points of sliding contact. Tests conducted at brush pressures of 200 pounds per square inch and speeds of 2370 rpm indicated that the slip rings could be operated for 10 hours without undue wear. One of these shim-brass slip-ring systems was also installed on an engine-crankshaft and connecting-rod stress-measurement setup where it operated for 5 hours before the wear became excessive. It was found that, if these slip rings had a Vickers hardness number of less than 150 or if the brushes became chipped at their contact surfaces, prohibitive wear might take place in as short a time as 30 minutes. In an effort to eliminate chipped brushes as a cause of wear, the contact surfaces of the brushes and slip rings were polished and the edges of the brushes were rounded to a 1/64-inch radius.

SUMMARY OF RESULTS

Tests of 24 combinations of slip-ring and brush materials operating dry and 8 of these combinations operating in oil over a range of slip-ring speeds and brush pressures gave the following results:

1. The following 5 combinations were considered most practicable for use in circuits to measure dynamic strain:

Material combination	Brush pressure required for satisfactory operation dry (lb/sq in.)
Plate-brass slip rings and silver-graphite brushes	90
Monel-metal slip rings and silver-graphite brushes	95
Inconel slip rings and silver-graphite brushes	100
Shim-brass slip rings and silver-graphite brushes	95
Silver-plated slip rings and soft-carbon brushes	95

2. The shim-brass slip rings (Vickers hardness number, 150) and the silver-graphite brushes were the only combination to perform satisfactorily in oil; a brush pressure of 175 pounds per square inch was required.

3. These data may be used to predict the performance of slip-ring and brush systems provided that the conditions of operation surrounding the systems and the strain-measuring circuits are similar to those used in the present tests.

4. An application of the results of the tests on the shim-brass slip rings and the silver-graphite brushes was made to the measurement of operating stresses in an engine crankshaft and connecting

rod. The slip rings operating in oil ran for 5 hours before they started to wear excessively, and the slip rings operating dry ran for 22 hours without wearing excessively.

Aircraft Engine Research Laboratory,
National Advisory Committee for Aeronautics,
Cleveland, Ohio, March 30, 1945.

REFERENCE

1. Baker, R. M.: Sliding Contacts-Electrical Characteristics. Elec. Eng., vol. 55, no. 1, Jan. 1936, pp. 94-100.

TABLE I - SLIP-RING AND BRUSH MATERIALS TESTED DRY

[Gage strain-sensitivity factor, 2.15; gage current, 20-25 milliamperes; gage resistance, 1000 ohms; alternating stress at gage, 8300 lb/sq in.; slip-ring speed, 2370 rpm; tests made with Wheatstone-bridge circuit]

Slip-ring material	Vickers hardness number	Brush material	Performance
Plate brass	116	Silver graphite[a]	Good; brush pressure of 90 lb/sq in. required
Plate brass	116	Copper graphite[b]	Good; brush pressure of 125 lb/sq in. required
Plate brass	116	Magnesium alloy	Poor; excessive wear of rings at brush pressure of 12 lb/sq in.
Plate brass	116	Aluminum	Poor; excessive wear of slip rings at brush pressure of 12 lb/sq in.
Plate brass	116	Soft carbon	Poor; unstable operation at brush pressure of 175 lb/sq in.
Plate brass, shotblasted	161	Silver graphite[a]	Good; brush pressure of 80 lb/sq in. required
Shim brass	139	Copper graphite[b]	Good; brush pressure of 150 lb/sq in. required
Shim brass	139	Soft carbon	Good; brush pressure of 175 lb/sq in. required
Shim brass	139	Hard carbon	Good; brush pressure of 150 lb/sq in. required
Shim brass	150	Silver graphite[a]	Good; brush pressure of 95 lb/sq in. required
Silver plated		Silver graphite[a]	Poor; unstable and slight wear of slip rings at 80 lb/sq in.
Silver plated		Copper graphite[b]	Poor; slight wear of slip rings at 40 lb/sq in.
Silver plated		Soft carbon	Good; brush pressure of 95 lb/sq in. required

[a]All silver-graphite brushes used in these tests were 60-percent silver by volume.

[b]All copper-graphite brushes used in these tests were 50-percent copper by volume.

National Advisory Committee
for Aeronautics

TABLE I - SLIP-RING AND BRUSH MATERIALS TESTED DRY - Concluded

Slip-ring material	Vickers hardness number	Brush material	Performance
Silver plated		Hard carbon	Good; brush pressure of 95 lb/sq in. required
Monel metal	124	Silver graphite[a]	Good; brush pressure of 95 lb/sq in. required
Monel metal	124	Copper graphite[b]	Good; brush pressure of 125 lb/sq in. required
Monel metal	124	Hard carbon	Good; brush pressure of 225 lb/sq in. required
Inconel	181	Silver graphite[a]	Good; brush pressure of 100 lb/sq in. required
Inconel	181	Copper graphite[b]	Good; brush pressure of 125 lb/sq in. required
Inconel	181	Soft carbon	Good; brush pressure of 200 lb/sq in. required
Stainless steel	185	Silver graphite[a]	Good; brush pressure of 100 lb/sq in. required
Stainless steel	185	Copper graphite[b]	Poor; unstable operation and slight wear of slip rings at 100 lb/sq in.
Stainless steel		Soft carbon	Poor; unstable operation up to brush pressure of 250 lb/sq in.
Carbon steel, hardened	602	Magnesium alloy	Poor; unstable operation and excessive brush wear at brush pressure of 12 lb/sq in.

[a]All silver-graphite brushes used in these tests were 60-percent silver by volume.

[b]All copper-graphite brushes used in these tests were 50-percent copper by volume.

National Advisory Committee
for Aeronautics

TABLE II - SLIP-RING AND BRUSH MATERIALS TESTED IN OIL

[Gage strain-sensitivity factor, 2.15; gage current, 20-25 milliamperes; gage resistance, 500 ohms; alternating stress at gage, 8300 lb/sq in.; slip-ring speed, 2370 rpm; tests made with Wheatstone-bridge circuit]

Slip-ring material	Vickers hardness number	Brush material	Performance
Plate brass	116	Silver graphite[a]	Poor; slip rings worn excessively at brush pressure of 185 lb/sq in.
Shim brass	150	Silver graphite[a]	Good; brush pressure of 175 lb/sq in. required
Silver plated		Silver graphite[a]	Poor; slip rings worn excessively at brush pressure of 12 lb/sq in.
Silver plated		Copper graphite[b]	Poor; slip rings worn excessively at brush pressure of 60 lb/sq in.
Silver plated		Hard carbon	Poor; slip rings worn excessively at brush pressure of 60 lb/sq in.
Silver plated		Soft carbon	Poor; slip rings worn excessively at brush pressure of 60 lb/sq in.
Monel metal	124	Silver graphite[a]	Poor; unstable up to brush pressure of 400 lb/sq in.
Inconel	181	Silver graphite[a]	Poor; unstable up to brush pressure of 400 lb/sq in.

[a]All silver-graphite brushes used in these tests were 60-percent silver by volume.

[b]All copper-graphite brushes used in these tests were 50-percent copper by volume.

National Advisory Committee
for Aeronautics

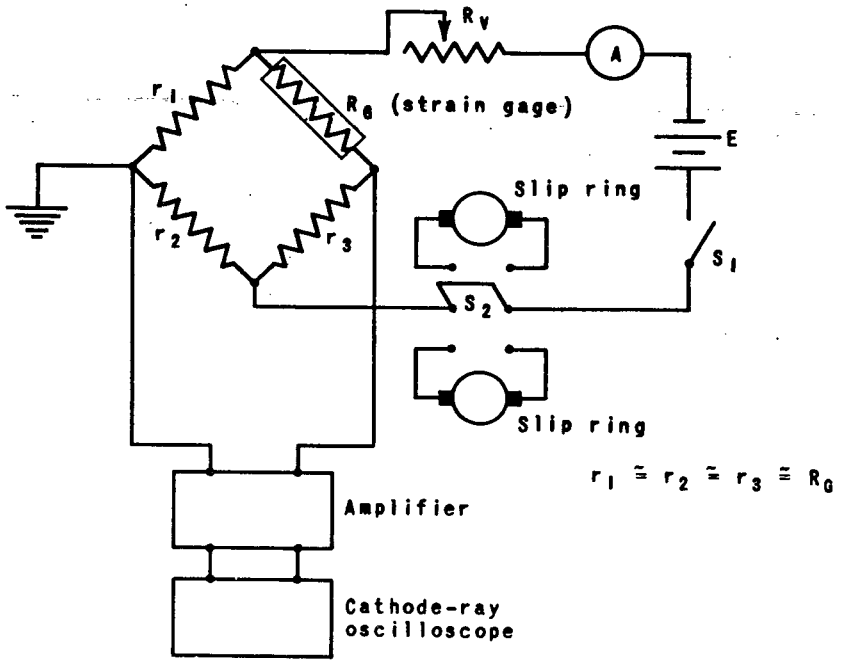

(a) Wheatstone-bridge circuit.

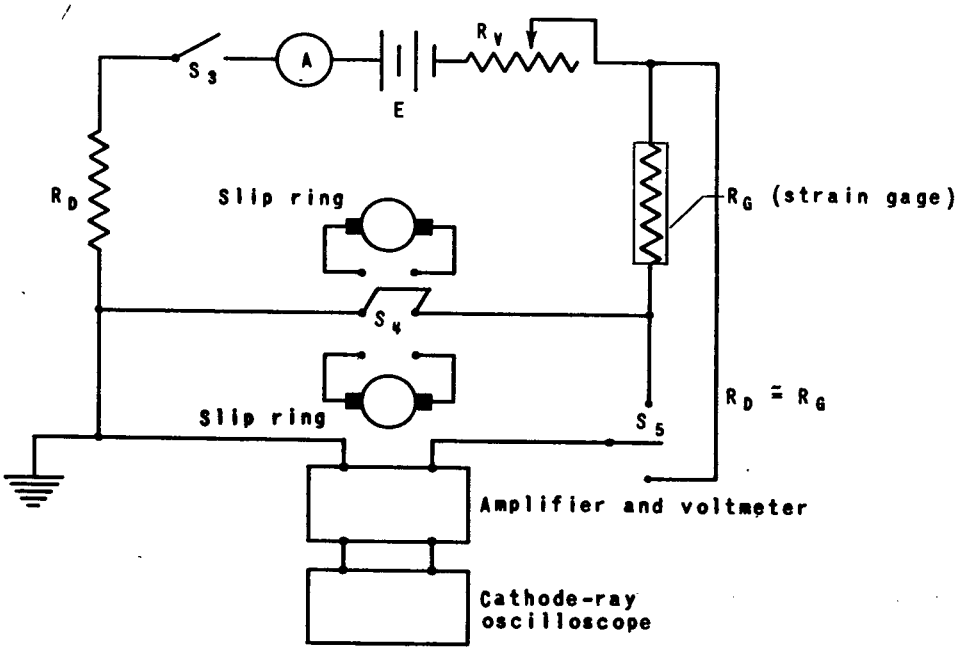

(b) Potentiometer circuit.

NATIONAL ADVISORY
COMMITTEE FOR AERONAUTICS

Figure 2. - Circuit diagrams for testing slip rings and brushes for use in dynamic-strain-measuring applications.

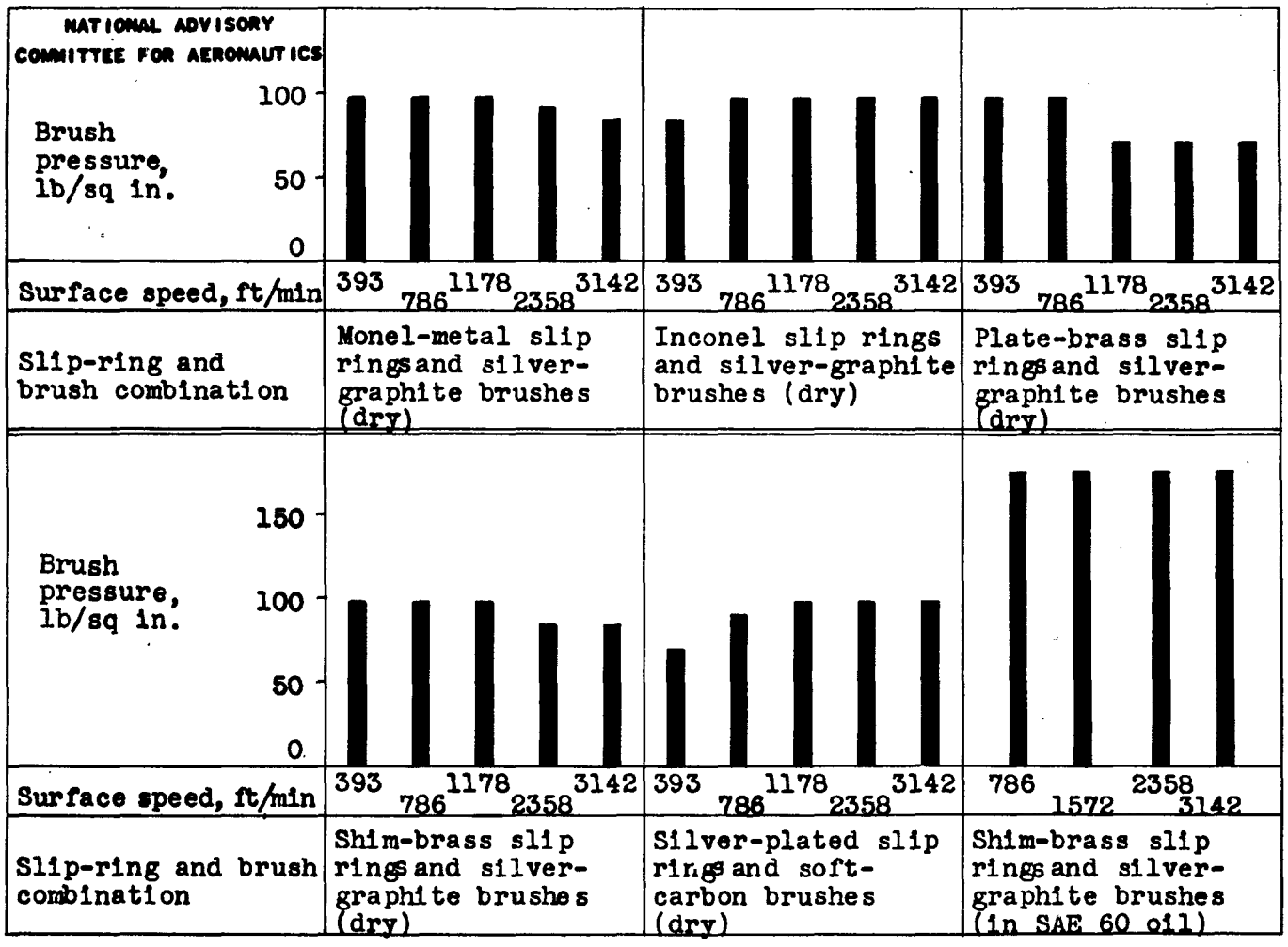

Figure 3. - Minimum brush pressures required for satisfactory performance of various slip-ring and brush combinations in dynamic-strain-measuring applications. Gage strain-sensitivity factor, 2.15; gage current, 35-40 milliamperes; gage resistance, 500 ohms; alternating stress at gage, 12,000 pounds per square inch; tests made with Wheatstone-bridge circuit.

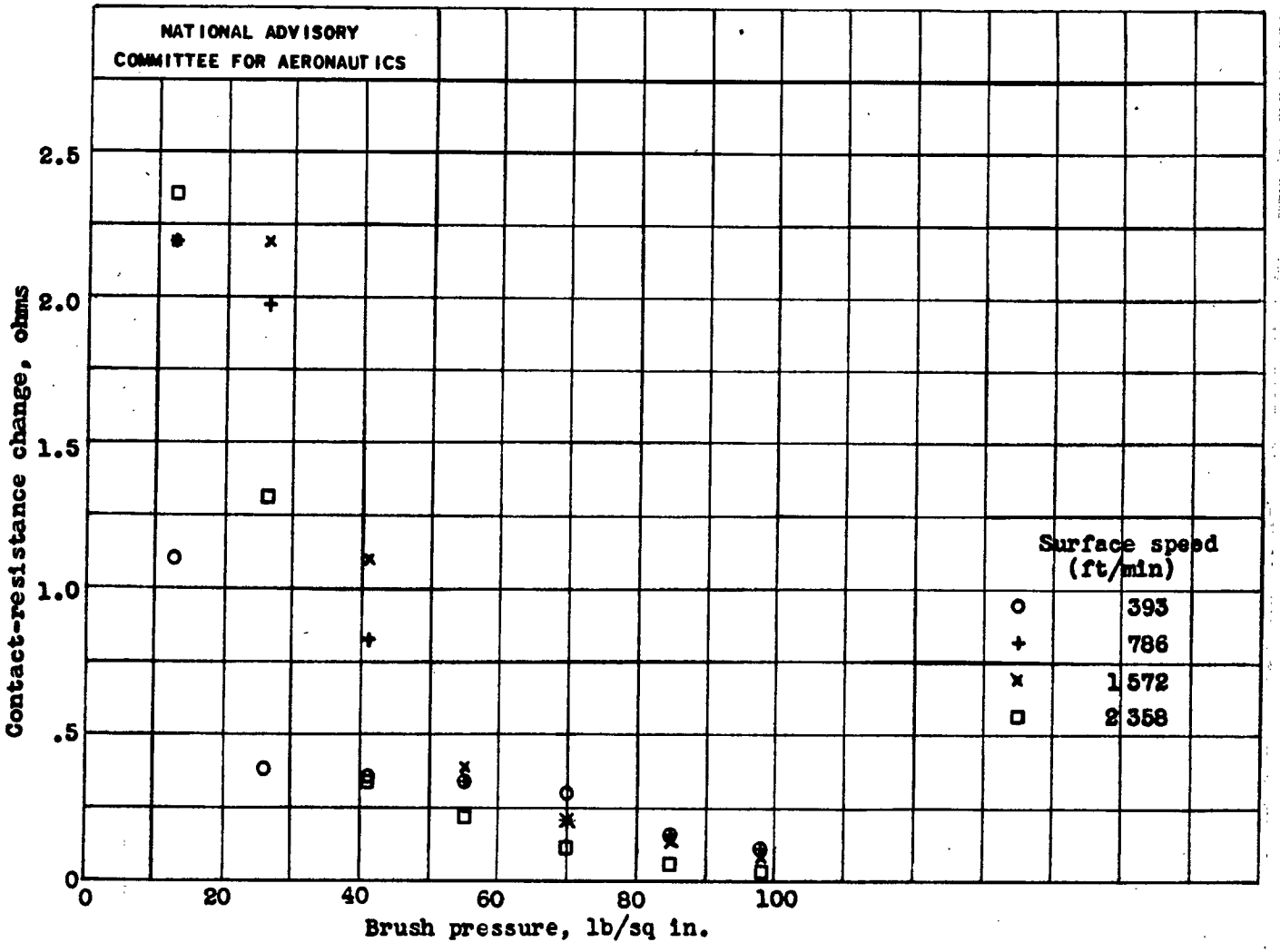

(a) Plate-brass slip rings and silver-graphite brushes.

Figure 4. - Effect of brush pressure on contact-resistance change for various slip-ring and brush combinations tested dry.

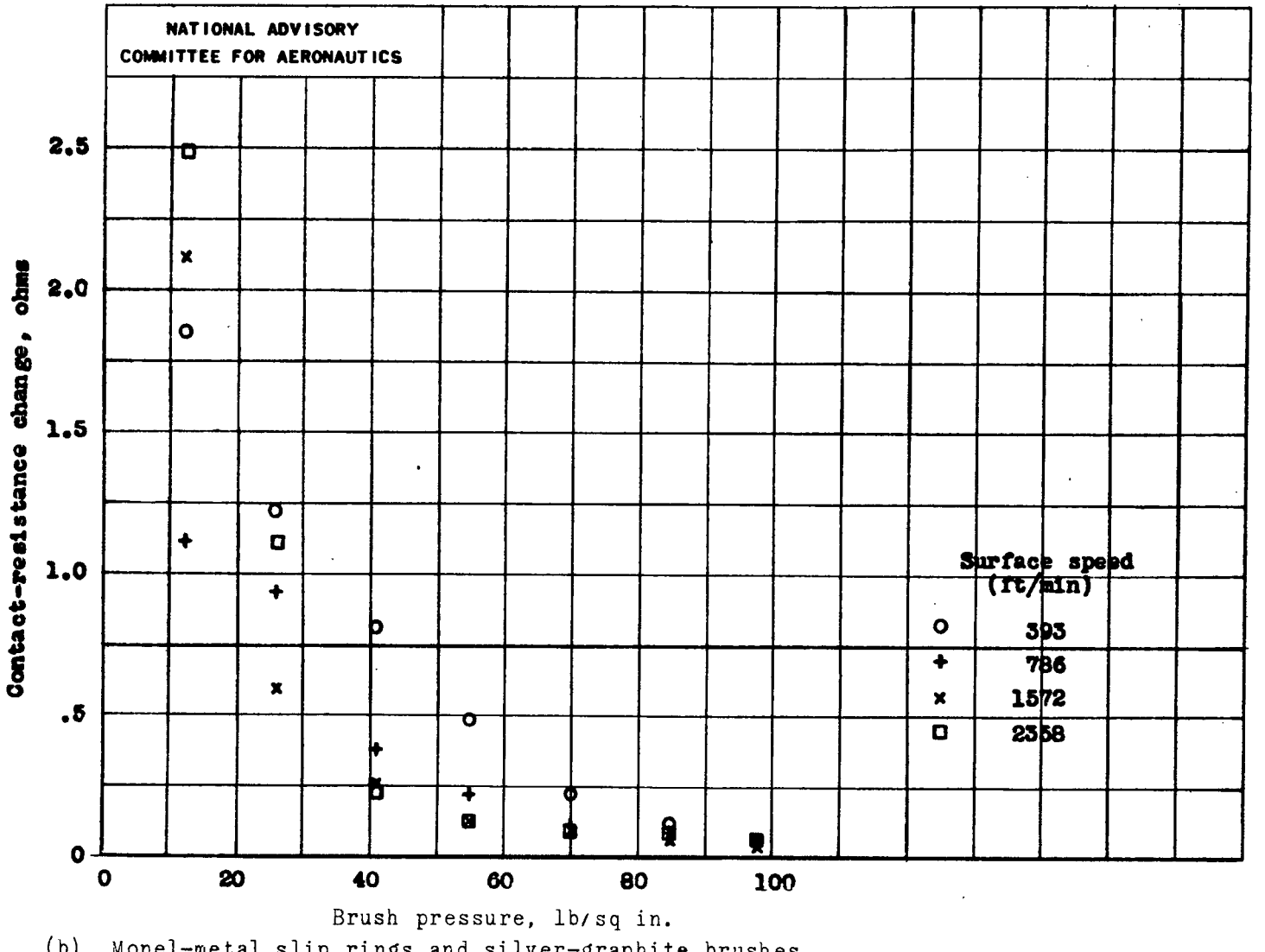

(b) Monel-metal slip rings and silver-graphite brushes.

Figure 4. - Continued. Effect of brush pressure on contact-resistance change for various slip-ring and brush combinations tested dry.

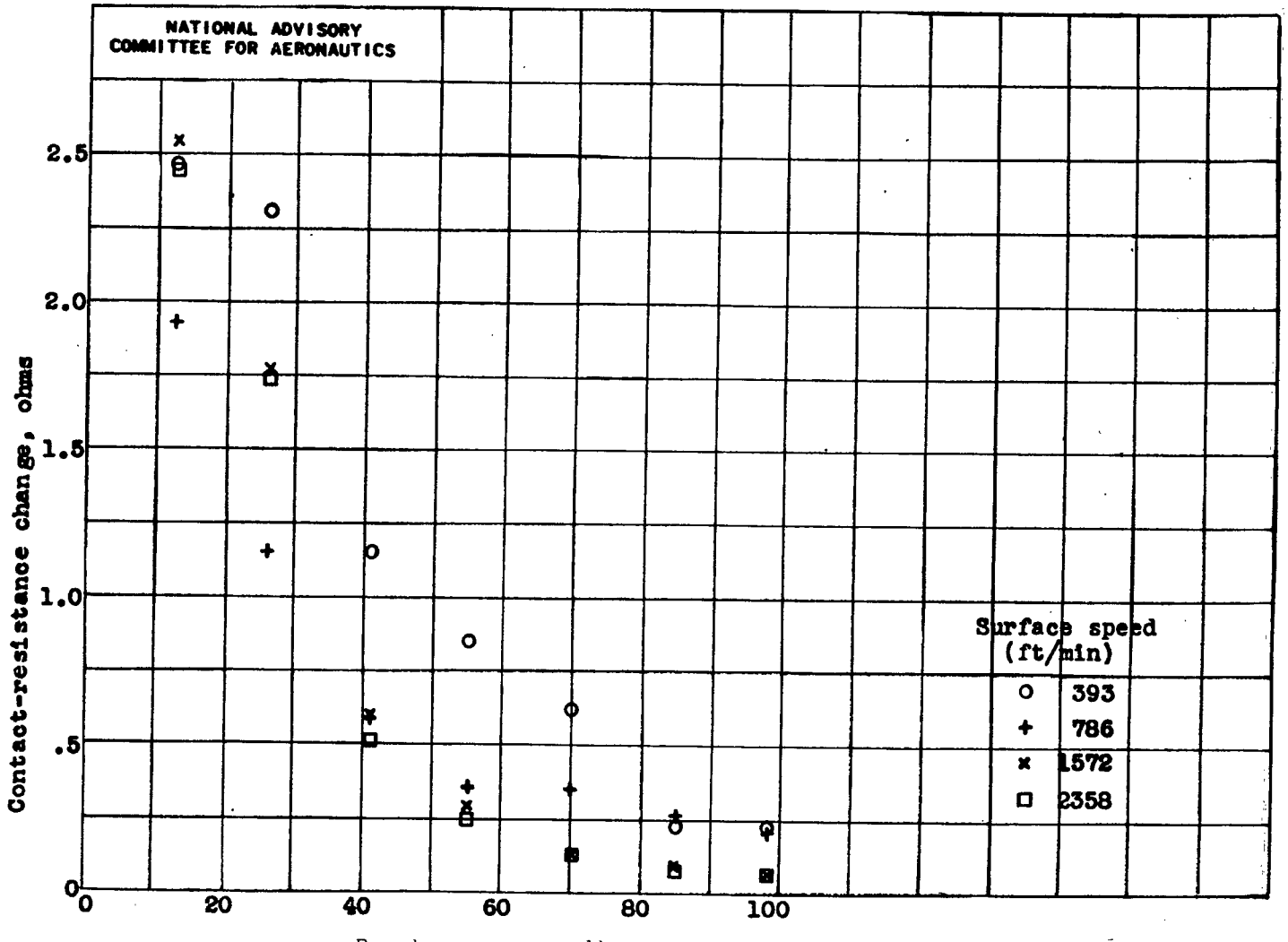

(c) Inconel slip rings and silver-graphite brushes.

Figure 4. - Continued. Effect of brush pressure on contact-resistance change for various slip-ring and brush combinations tested dry.

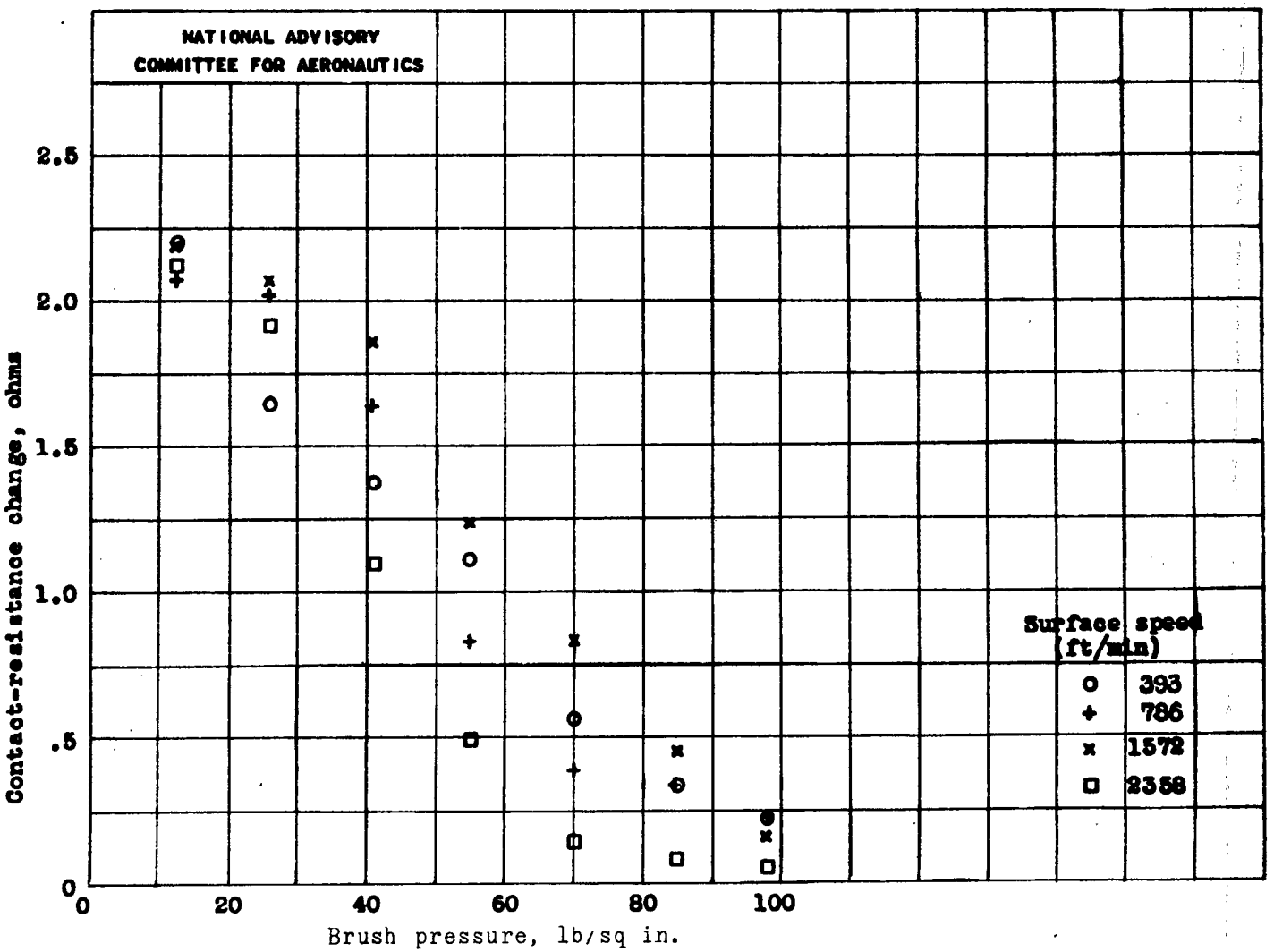

(d) Shim-brass slip rings and silver-graphite brushes.

Figure 4. - Continued. Effect of brush pressure on contact-resistance change for various slip-ring and brush combinations tested dry.

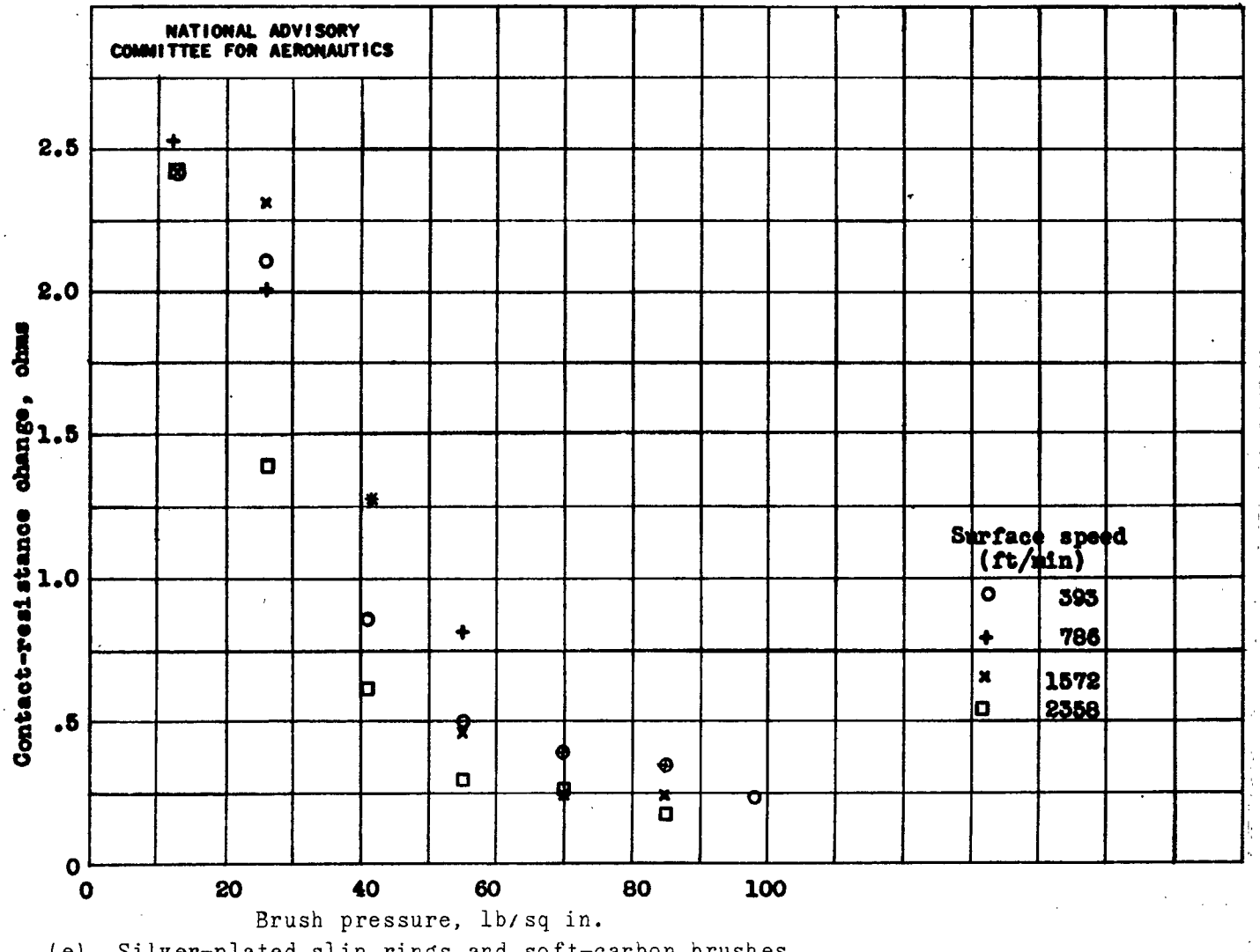

(e) Silver-plated slip rings and soft-carbon brushes.

Figure 4. - Concluded. Effect of brush pressure on contact-resistance change for various slip-ring and brush combinations tested dry.

LANGLEY RESEARCH CENTER
3 1176 01354 1686