DEC 2 4

NATIONAL ADVISORY COMMITTEE FOR AERONAUTICS

3 1176 00100 4978

WARTIME REPORT

ORIGINALLY ISSUED

May 1944 as
Confidential Bulletin L4E29

EFFECT OF MACH NUMBER ON POSITION ERROR AS APPLIED TO A PITOT-STATIC TUBE LOCATED 0.55 CHORD AHEAD OF AN AIRPLANE WING

By W. F. Lindsey

Langley Memorial Aeronautical Laboratory
Langley Field, Va.

NACA

WASHINGTON

NACA WARTIME REPORTS are reprints of papers originally issued to provide rapid distribution of advance research results to an authorized group requiring them for the war effort. They were previously held under a security status but are now unclassified. Some of these reports were not technically edited. All have been reproduced without change in order to expedite general distribution.

NATIONAL ADVISORY COMMITTEE FOR AERONAUTICS

CONFIDENTIAL BULLETIN

EFFECT OF MACH NUMBER ON POSITION ERROR AS APPLIED TO A PITOT-STATIC TUBE LOCATED 0.55 CHORD AHEAD OF AN AIRPLANE WING

By W. F. Lindsey

SUMMARY

The effect on static-pressure measurements of locating a pitot-static tube 0.55 chord ahead of an airfoil section has been investigated. The tests were conducted in the NACA 24-inch high-speed tunnel on airfoil sections of various thickness ratios over a large range of Mach number. The results show that for a wing having a thickness ratio of 0.15 the measured Mach number, determined from a pitot-static-tube reading, is approximately 0.01 too low at a stream Mach number of 0.4 and approximately 0.03 too low at a Mach number of 0.8.

INTRODUCTION

Pressure measurements from pitot-static tubes mounted on aircraft are subject to two types of error, namely, the calibration error and the position error. The calibration error is a function of the design of the pitot-static tube, and considerable data are available to show the variation of this error at high Mach numbers (reference 1). The position error, which is dependent on the location of the pitot-static tube with respect to some other body, results from the influence of that body on the flow at the pitot-static tube and affects, primarily, the static pressure. The magnitude of this error and the variation of the magnitude with angle of attack are usually determined by low-altitude flight calibrations. The existence of

a large change in position error at high Mach numbers has been observed in flight for installations below the wings of aircraft.

The data presented and discussed herein were obtained as a part of a tunnel-wall investigation which was conducted in the NACA 24-inch high-speed tunnel and in which a part of the two-dimensional-flow field around an airfoil was measured. The measurements of the static pressure were made at the tunnel wall in the region ahead of the airfoil on the chord extended (fig. 1). These measurements indicate the position error in the case of many standard pitot-static-tube installations but not the change in calibration error resulting from the variations in the pitch angle of the pitot-static tube or the errors in the total pressure. The tests were conducted for a large range of thickness ratio at lift coefficients extending from approximately 0 to 0.7 and at Mach numbers extending from approximately 0.35 to 0.80

APPARATUS AND METHOD

Tests of the NACA 16-106, NACA 16-215, and NACA 16-130 airfoil sections were conducted in the NACA 24-inch high-speed tunnel (reference 2) with the circular test section modified by the installation of flats on the tunnel walls. Those flats reduced the span of each model from 24 to 18 inches (fig. 2). Each model completely spanned the test section and passed through holes, of the same shape but slightly larger, in large circular plates that were fitted into the flats in such a way as to rotate with the model. (See fig. 2.) Pressures were measured at static-pressure orifices installed in these plates ahead of the model on the chord extended, as shown in figure 1. These pressure orifices were connected to a photo-recording multiple-tube manometer (reference 3), and measurements were made for Mach numbers extending from approximately 0.35 to 0.80.

RESULTS AND DISCUSSION

The symbols used in the presentation of data for the present tests are as follows:

[redacted]

p' static pressure measured at orifice ahead of airfoil

p stream static pressure

H total or stagnation pressure

c_l section lift coefficient

M Mach number

t/c thickness ratio of model

α angle of attack of model

c chord of model

V_i indicated airspeed (true airspeed at standard sea-level pressure and temperature)

h pressure altitude

The basic results presented in figure 3 show that the static pressure at 0.55c ahead of the leading edge of the model is greater than the stream static pressure, in accordance with theory. This result occurs because of the stagnation region that exists at the leading edge of the model. Figure 3 also shows that the magnitude of the difference between the measured and the stream static pressures increases as the thickness of the model increases because of the increased extent of the stagnation region.

The effects of compressibility on the flow along the upper and lower surfaces of an airfoil have been shown by experimental investigations (reference 2) and by theoretical studies (references 4 to 7). No quantitative information, however, has been available on the flow field ahead of the point of stagnation pressures, that is, the region of zero velocity. Because of the unusual condition existing at this point, the methods which have been applied to the flow along the surfaces are not believed to be applicable to the region under consideration.

Theoretical studies of compressible flows and experimental data have shown, however, that the extent of the region at the leading edge of models, in which

the pressure is greater than stream pressure, increases with increasing Mach number. These increases are comparable to increases in thickness, the effect of which at a constant Mach number can be seen in figure 3. This effect may be modified by the decrease in the extent of the field of influence upstream of the model with increasing Mach number, which results because the velocity of pressure propagation is equal to the velocity of sound. Although no quantitative comparison of the relative magnitudes of the two effects can be given from previous investigations, it can be seen in figure 3 that for the present investigation the over-all effect of compressibility on the field of flow is to increase the pressure and thereby increase the position error with increased Mach number.

The location of the pressure orifice relative to the model remained unchanged for changes in angle of attack. The effect of changes in angle of attack or in lift coefficient on the static-pressure error is small within the limits of this investigation. A more extensive investigation of the field of flow ahead of the model would be needed to explain the reason for the difference in direction of the change in this static-pressure error with increase in lift coefficient at $M = 0.4$ for the airfoils having thickness ratios of 0.06 and 0.30. (See fig. 3.)

The effect of pressure altitude on the variation of the position error with indicated airspeed is presented in figure 4. These variations with altitude are a result of the variations of Mach number with altitude at a constant indicated airspeed.

The basic results of figure 3 for an angle of attack of 0° have been converted to show, in figure 5, the error in Mach number resulting from the increased static pressure. The most significant result indicated in this figure is the effect of position error on the magnitude of the error in the determination of the Mach number. For the airfoil with a thickness ratio of 0.15, the Mach number decrement is approximately 0.01 at a Mach number of 0.4 and 0.03 at a Mach number of 0.8; for the airfoil with $t/c = 0.30$, the Mach number

decrement is approximately 0.01 at a Mach number of 0.25 and 0.06 at a Mach number of 0.72. The decrement for airfoils having a thickness ratio of 0.06 or less is probably within the usual accuracy of measurements.

Langley Memorial Aeronautical Laboratory,
National Advisory Committee for Aeronautics,
Langley Field, Va.

REFERENCES

1. Hensley, Reece V.: Calibrations of Pitot-Static Tubes at High Speeds. NACA ACR, July 1942.

2. Stack, John, Lindsey, W. F., and Littell, Robert E.: The Compressibility Burble and the Effect of Compressibility on Pressures and Forces Acting on an Airfoil. NACA Rep. No. 646, 1938.

3. Pinkerton, Robert M.: Calculated and Measured Pressure Distributions over the Midspan Section of the N.A.C.A. 4412 Airfoil. NACA Rep. No. 563, 1936.

4. Glauert, H.: The Effect of Compressibility on the Lift of an Aerofoil. R. & M. No. 1135, British A.R.C., 1927.

5. Prandtl, L.: General Considerations on the Flow of Compressible Fluids. NACA TM No. 805, 1936.

6. von Kármán, Th.: Compressibility Effects in Aerodynamics. Jour. Aero. Sci., vol. 8, no. 9, July 1941, pp. 337-356.

7. Kaplan, Carl: The Flow of a Compressible Fluid past a Curved Surface. NACA ARR No. 3K02, 1943.

[redacted]

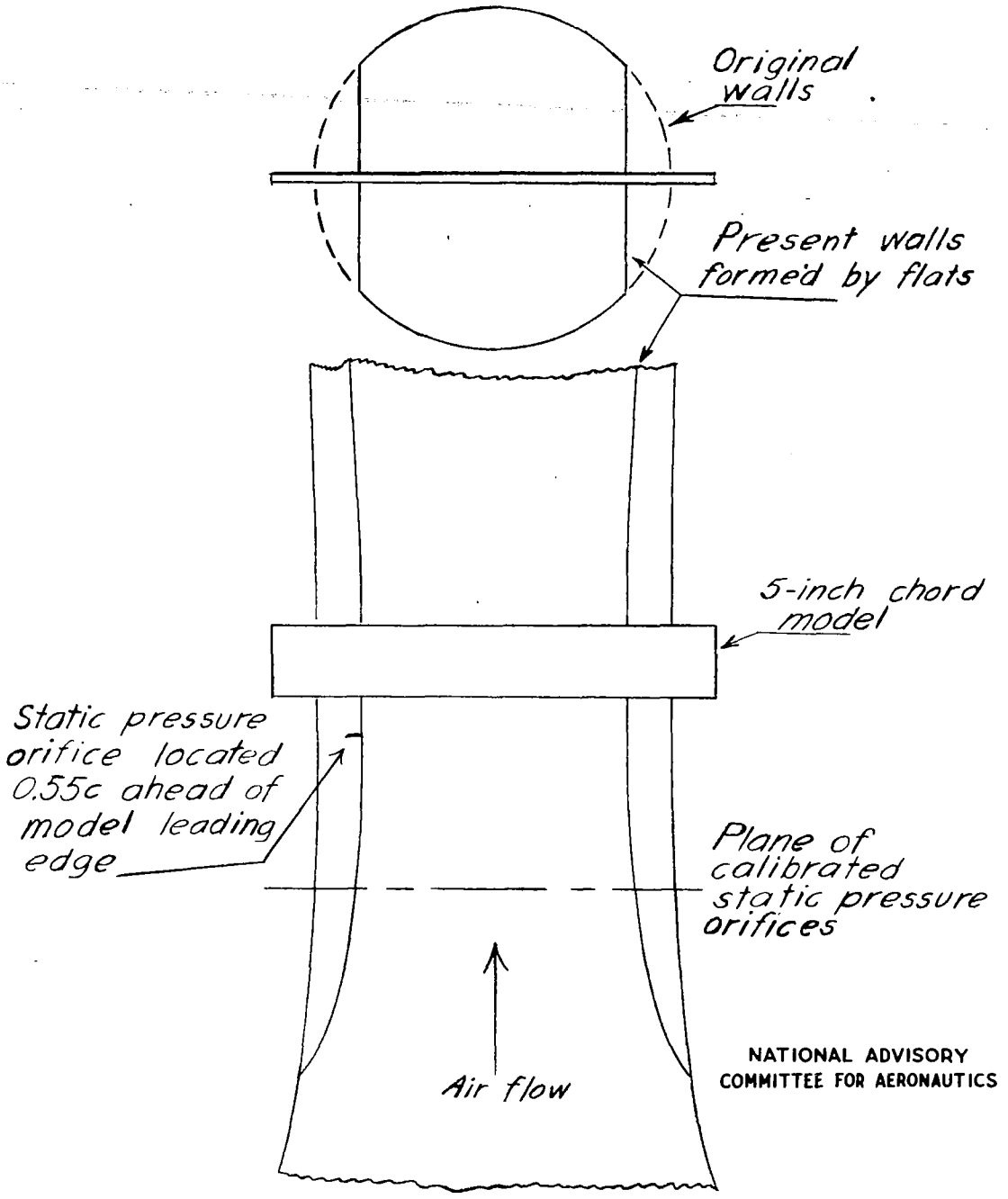

Figure 1.- Modified test section of NACA 24-inch high-speed tunnel.

[redacted]

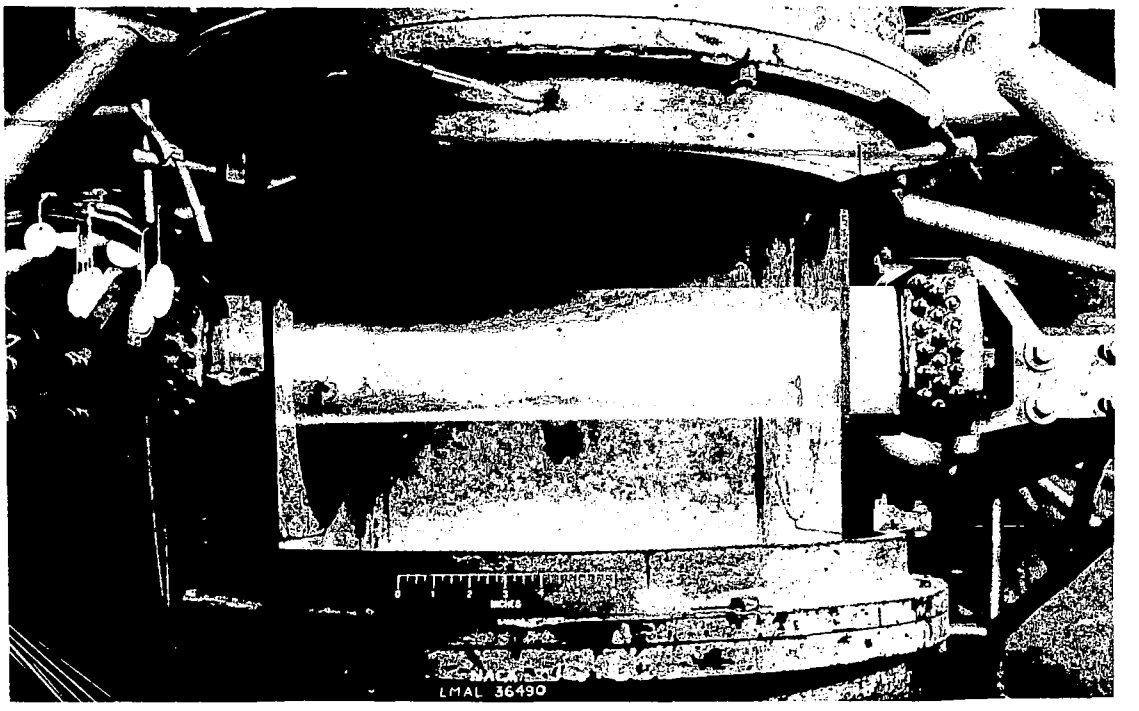

(a) Over-all view with access door removed showing model installation.

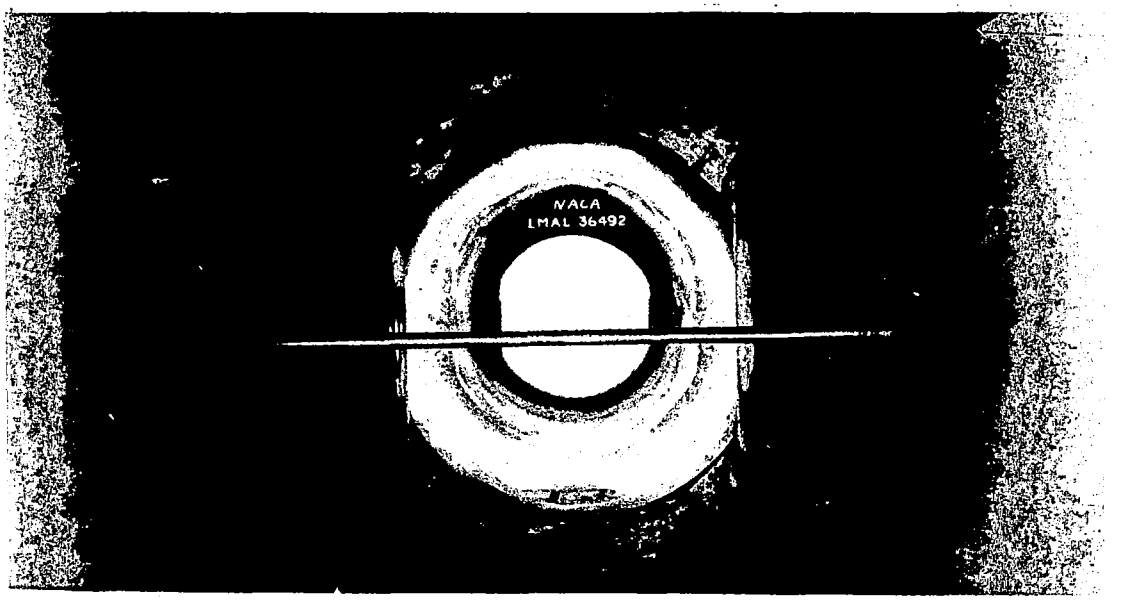

(b) Downstream view with model in place.

Figure 2.- Modified test section of the NACA 24-inch high-speed tunnel.

NATIONAL ADVISORY
COMMITTEE FOR AERONAUTICS.

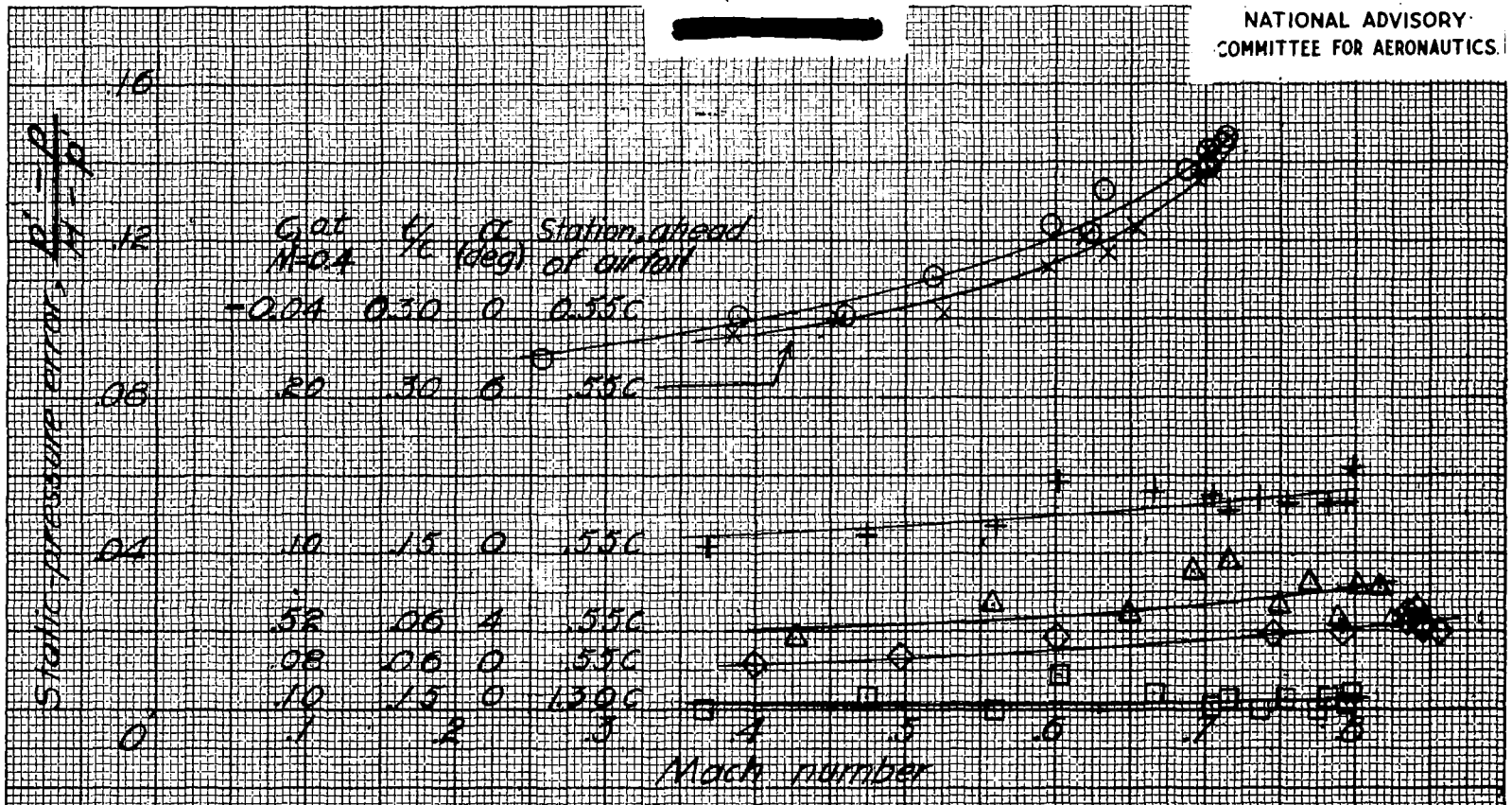

Figure 3.- Static pressure at a station on chord of model extended upstream from model leading edge, as affected by model thickness, station location, and compressibility.

[redacted]

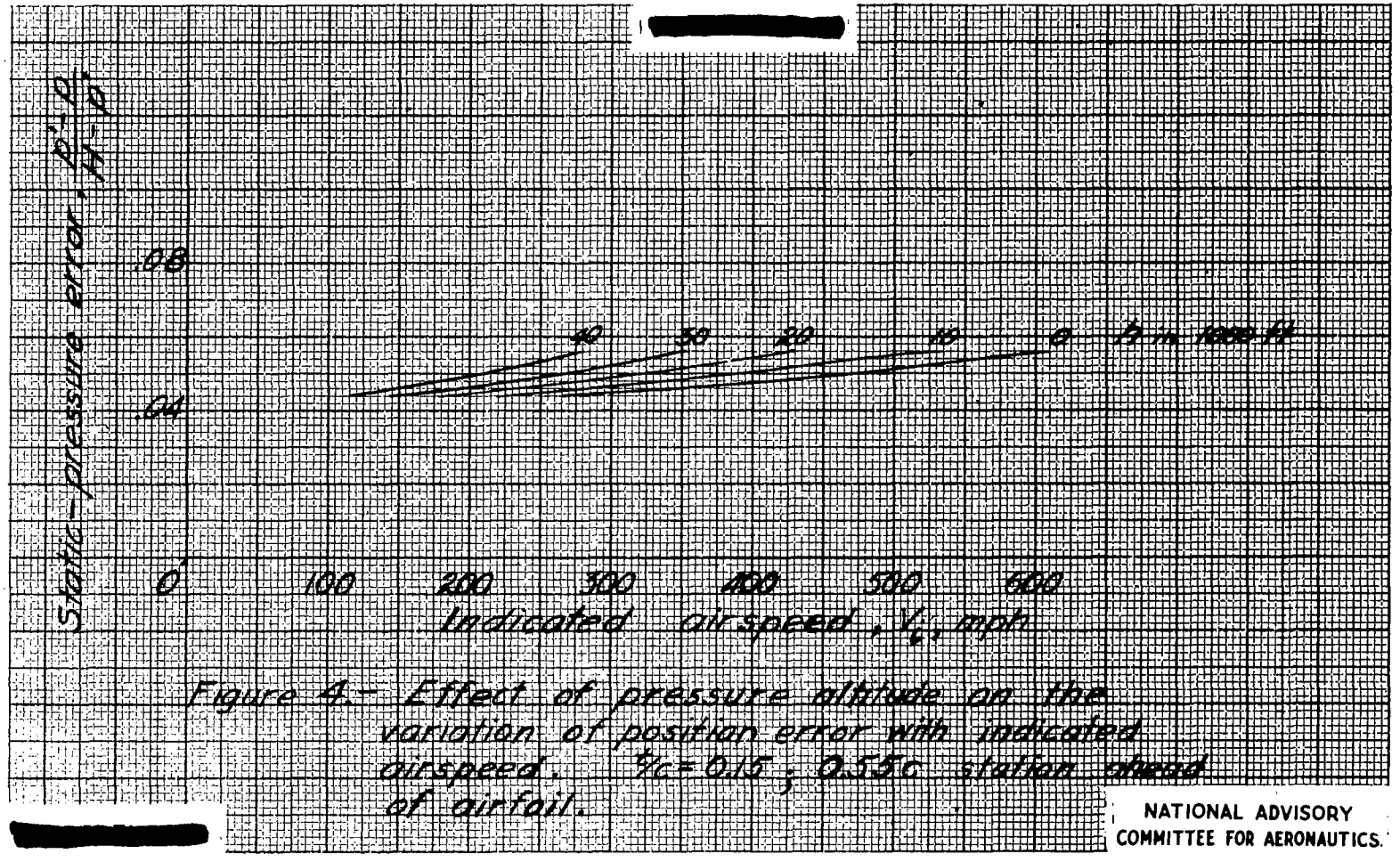

Figure 4.- Effect of pressure altitude on the variation of position error with indicated airspeed. t/c = 0.15 ; 0.55c station ahead of airfoil.

[redacted]

NATIONAL ADVISORY COMMITTEE FOR AERONAUTICS.

[redacted]

NATIONAL ADVISORY
COMMITTEE FOR AERONAUTICS.

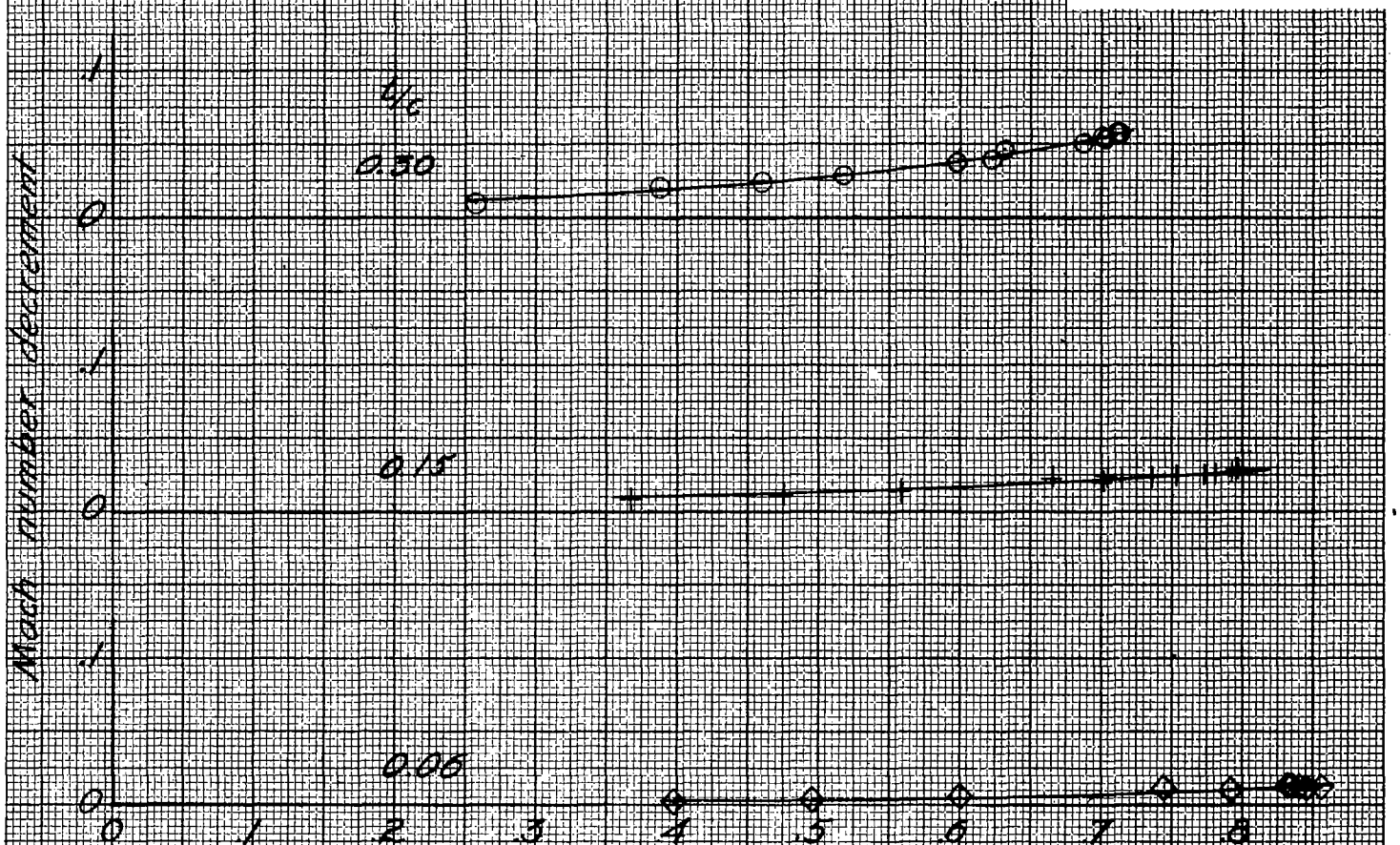

Figure 5 - Mach number decrement of station 0.55c ahead of leading edge of models of various thickness-chord ratios. $\alpha = 0°$.

[redacted]