NASA-CR-194667

PROCEEDINGS NCC9-16

Real-Time Simulation Development for Aerospace Applications

Simulation Design

N94-70069

Unclas

Z9/61 0193085

(NASA-CR-194667) REAL-TIME SIMULATION DEVELOPMENT FOR AEROSPACE APPLICATIONS. SIMULATION DESIGN (Houston Univ.) 36 p

January 9, 1990

University of Houston-Clear Lake
Bayou Building 1-311

o-Sponsored by:

NASA/ Johnson Space Center
University of Houston-Clear Lake
Rockwell Space Operations Company

SEPEC

Software Engineering Professional Education Center
(713) 282-2223

2006)

ATTENDEES

A'lvarez	J. Carlos	GHG	15726 Torry Pines Rd.	Houston	TX
Allen	Andre	NASA/JSC	FR411	Houston	TX
Anderson	Jim	Rockwell	600 Gemini, MC: R16G	Houston	TX
Arnold	Grady	CAE Link	2224 Bay Area Blvd., MC: I171	Houston	TX
Backus	Larry	CAE Link	2224 Bay Area Blvd., MC: I171	Houston	TX
Bernard	Monique	UNISYS	600 Gemini, U05C	Houston	TX
Birch	Eric	CAE Link	2224 Bay Area Blvd.,	Houston	TX
Birkner	Charles	Rockwell	600 Gemini, R16G	Houston	TX
Bowman	John		212 #1 Coryell	LeagueCity	TX
Brown	Patricia	Barrios	1331 Gemini, AC3	Houston	TX
Bryan	Martin	CAE Link	2224 Bay Area Blvd.	Houston	TX
Bryant	Jacqueline	CAE Link	2224 Bay Area Blvd., MC: I171	Houston	TX
Burke	Bill	NASA/JSC	FS53	Houston	TX
Calloway		CAE Link	2224 Bay Area Blvd., MC: I171	Houston	TX
Campbell	Richard	UNISYS	600 Gemini, STSOC, MC: U07B-16	Houston	TX
Carvajal	James	NASA/JSC	NS5	Houston	TX
Cerling	Roy	IBM	370 Bay Area Blvd., 3606	Houston	TX
Ciangaru	George	Lockheed	2400 Nasa Rd. 1	Houston	TX
Cleary	Billy	Convex	2547 Sagebrush	Sugarland	TX
Conley	William	MITRE	1120 Nasa Rd.1, FD/MITRE	Houston	TX
Cooksey	Kathryn	MITRE	1120 NASA Rd 1, FD/MITRE	Houston	TX
Copper		CAE Link	2224 Bay Area Blvd., MC: I171	Houston	TX
Corbo	Joe	IBM	370 Bay Area Blvd., MC 1204	Houston	TX
Crocker	Kenneth	UNISYS	600 Gemini, U09A	Houston	TX
Dougherty	Matthew	EIM Simulation	PO Box 980425	Houston	TX
Durand	Dave	CAE Link	2224 Bay Area Blvd.	Houston	TX
Durba	Monica	IBM	370 Bay Area Blvd. MC 6606B	Houston	TX
Garcia	Amilia	Bendix	501 Gemini, MC: B24E-555	Houston	TX
Gerteis	Chuck	Lockheed	2400 Nasa RD. 1, A22	Houston	TX
Giusti	Ron	MITRE	1120 Nasa Rd. 1, MC: MITRE/FD	Houston	TX
Graham	Susan	NASA/JSC	MC: FS9	Houston	TX
Ha	Huy H.T.	Lockheed	2400 Nasa Rd. 1, C32	Houston	TX
Hernandez	Danny	Rockwell	12214 So. Lakewood Blvd., DA31	Downey	CA
Hoernig	Wayne	CAE Link	2224 Bay Area Blvd., MC: I171	Houston	TX
Hope	Larry	UNISYS	600 GeminiU05B	Houston	TX
Hughes	Frank	NASA/JSC	DS2	Houston	TX
Humbert	Mark	UNISYS	600 Gemini MC: U09A	Houston	TX
Hunter	Kelly	IBM	370 Bay Area Blvd. MC 3606	Houston	TX
Jacobs	Rebecca	Barrios	1331 Gemini, DC 36	Houston	TX
James	Delphine	MITRE	1120 Nasa Rd. 1, MC: FD/MITRE	Houston	TX
Jones	David	CAE Link	2224 Bay Area Blvd., MC: GE3	Houston	TX
Jordon	Keith	NASA/JSC	FS93	Houston	TX
Kayser	Fred	UNISYS	600 Gemini U01B	Houston	TX
Kinsey	Robert	UNISYS	600 Gemini, U05A	Houston	TX
Kirkham	Roberta	Lockheed	2400 Nasa Rd. 1, C83	Houston	TX
Kliesing	Judy	NASA/JSC	MC: EF3	Houston	TX
Kumpunen	Hank	CAE Link	2224 Bay Area Blvd.	Houston	TX
Labberton	Don	Lockheed	2400 NASA Rd. 1 MC:C32	Houston	TX
Lai	Donna	UNISYS	600 Gemini U07B16	Houston	TX
Lauritsen	Janet	NASA/JSC	MC: FS9	Houston	TX
Lazerus	Harry	Lockheed	2400 Nasa Rd. 1 C07	Houston	TX
Liebfried	Dr. Ted	UHCL	2700 Bay Area Blvd., Box 216	Houston	TX
Lockhart	Steve	Intermetrics	1100 Hercules	Houston	TX
Matthews	Wayne	Rockwell	600 Gemini, R19-A	Houston	TX
Mauceri	A.J.	Rockwell	12214 So. Lakewood Blvd., DA31	Downey	CA
McCormac	Jenny	UNISYS	600 Gemini U05D	Houston	TX
McDaniel	Brent	UNISYS	600 Gemini, STSOC, MC: U07A	Houston	TX
McLendon	Judy	CAE Link	2224 Bay Area Blvd., MC: I171	Houston	TX

Mehnert	Robert	IBM	370 Bay Area Blvd. MC 1204	Houston	TX
Milhoan	Jerry	NASA/JSC	FS91	Houston	TX
Moyer	Phillip	Rockwell	600 Gemini R14A	Houston	TX
Mumma	Don	CAE Link	2224 Bay Area Blvd., MC: I175	Houston	TX
Norton	Colby	MITRE	1120 Nasa Rd. 1	Houston,	TX
Ostermiller	Dan	MITRE	1120 Nasa Rd. 1	Houston,	TX
Page	Preston	IBM	370 Bay Area Blvd. MC 2606	Houston	TX
Pantazis	Mike	Rockwell	600 Gemini, MC: R11C	Houston	TX
Peugh	Ron	CAE Link	2224 Bay Area Blvd., MC: 5E1	Houston	TX
Plum	Rick	CAE Link	2224 Bay Area Blvd.	Houston	TX
Plunkett	Pete	CAE Link	2224 Bay Area Blvd., MC: I171	Houston	TX
Price	Lonnie	Barrios	1331 Gemini, DC3	Houston	TX
Rando	I.G.	Lockheed	2400 Nasa Rd. 1	Houston	TX
Ratcliff	Shirley	So.west Rsrch	P.O.Drawer 28510	SanAntonio	TX
Restemeyer	Kelley	NASA/JSC	DC441	Houston	TX
Rodriguez	Reynaldo	CAE Link	2224 Bay Area Blvd., MC: I171	Houston	TX
Rogers	B.	Lockheed	2400 NASA Rd. 1 MC: C32	Houston	TX
Rogganbuck	Jim	UNISYS	600 Gemini U01B	Houston	TX
Ross	Mike	CAE Link	2224 Bay Area Blvd., MC: 4W1	Houston	TX
Saha	H.	UNISYS	600 Gemini MC: U07A	Houston	TX
Schindeler	Rita	Lockheed	2400 NASA Rd. 1 MC: C18	Houston	TX
Shenoda	Nader	CAE Link	2224 Bay Area Blvd., MC: I171	Houston	TX
Shipp	Reid	Bendix	501 Gemini, B24E-555	Houston	TX
Singh	B.K.	UNISYS	600 Gemini, STSOC, MC: U07B-16	Houston	TX
Smith	Gwyn	NASA/JSC	DS2	Houston	TX
Soria	Gil G.R.	Lockheed	2400 Nasa Rd. 1 C32	Houston	TX
Stern	Kenneth M.	Rockwell	12214 So. Lakewood Blvd., DC 31	Downey	CA
Strathmeyer	Audrey	CAE Link	2224 Bay Area Blvd.	Houston	TX
Street	E.A.	Lockheed	2400 NASA RD 1 C18	Houston	TX
Sylvester	Andre	NASA/JSC	MC: EF311	Houston	TX
Townsend	Hal	CAE Link	2224 Bay Area Blvd.	Houston	TX
Urqhart	Roy	CAE Link	2224 Bay Area Blvd.	Houston	TX
Varner	Denise	So.west Rsrch	PO Drawer 28510	SanAntonia	TX
Velasquez	Luis	CAE Link	2224 Bay Area Blvd., MC: I171	Houston	TX
Wallace	Rodney	IBM	370 Bay Area Blvd. MC 1204	Houston	TX
Ward	Dawn	NASA/JSC	FS54	Houston	TX
Watts	John	CAE Link	2224 Bay Area Blvd.	Houston	TX
Webb	Gary	CAE Link	2224 Bay Area Blvd.	Houston	TX
Webster	Wade	Lockheed	2400 Nasa Rd. 1, A22	Houston	TX
White	Kerrin	CAE Link	2224 Bay Area Blvd., MC: I171	Houston	TX
Winters	Mark	CAE Link	2224 Bay Area Blvd., MC: 5E1	Houston	TX
Works	Keith	CAE Link	2224 Bay Area Blvd., MC: I171	Houston	TX

Simulation Design

Agenda

Introduction **Rockwell**

Session 1 **Trends in Simulation Design**

A. J. Mauceri
Director, Aerospace Simulation & System Test Lab
Space Transportation System Division
RI, Downey, California

Danny Hernandez
Senior Engineering Specialist
ASST Laboratory, RI, Downey

Session 2 **Design Strategies for Real-Time Simulation**

Kenneth M. Stern
Technical Staff
ASST Laboratory, RI, Downey

Session 3 **Correlating Requirements and Design Methodologies**

Brent McDaniel
Unisys Corporation Manager
Software & Orbiter Data Reduction, SAIL
STSOC, Houston, Texas

B. K. Singh
Unisys Manager, Math Model & System Analysis, SAIL
STSOC, Houston, Texas

Richard Campbell
Project Manager for GTS
Unisys Corporation

Co-Sponsored by:
NASA/Johnson Space Center
University of Houston-Clear Lake
Rockwell Space Operations Company

AEROSPACE SIMULATION CENTER

Background &Support Capabilities
Simulators
Test Systems
Mission Support Systems

A. J. Mauceri, Director
Aerospace Simulation &
Systems Test Center
Engineering

AEROSPACE SIMULATION CENTER

- STSD named Aerospace Simulation and Systems Test Center (ASSTC) for Rockwell International Aerospace Operations

- Provides Support To:

Strategic Defense Center
SABIR
ASAT

North American Aircraft Division
X31
B-1B
Hypersonic Vehicle Simulation

Space Transporation Systems Division
Hypersonic Vehicle Simulation
GN&C Test Station

ASSTC BACKGROUND & SUPPORT CAPABILITIES

ASSTC Laboratory Environments

Environment	Examples
Simulation Systems	Non Real-Time & Real-Time Vehicle & System Full Mission Training Using Man-In-The-Loop Math Model or Hardware/Software Verification
Avionics & Payload Test	Subsystem/LRU Testing and Breadboarding, Payload Integration and Compatibility
Real-Time Mission Support	Flight Support and Ground Checkout Support Air-To-Ground Communications / Protocol Secure Systems
Artificial Intelligence and Expert Systems	Real-Time Process Control Autonomous Robotics Adaptive Control Systems
Man / Machine Interface	Interactive Display and Control Development Human Engineering Studies Crew Procedures, Familiarization and Training Natural Language Interfaces
Automation & Robotics	Robotics Research, Vision System Development Space-Based Construction and Servicing Man-In-The-Loop Operations
Hardware/Test-System Development	Microprocessor Systems Data Link and Telemetry Communications Hardware Simulators Avionic System Interfaces Deliverable Test Systems and Remote Checkout Systems

ASSTC Facility

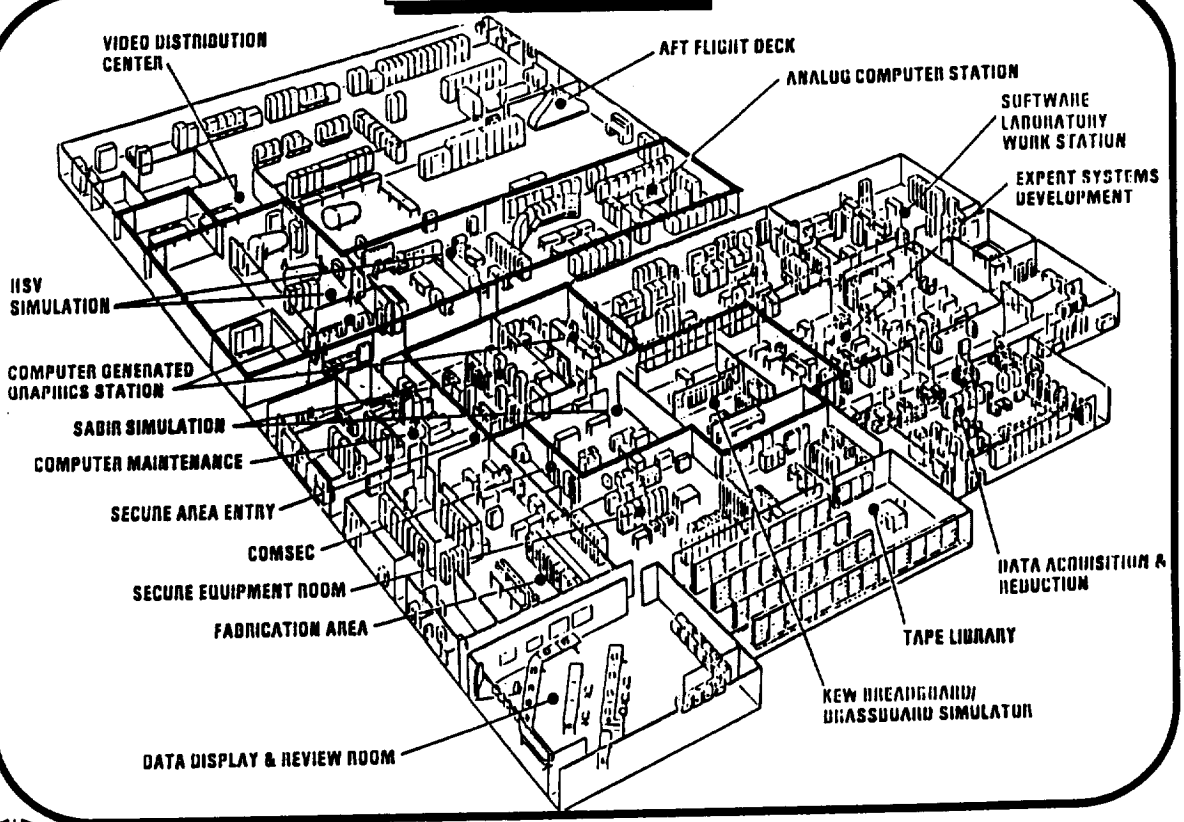

ASSTC Supports Complete Life Cycle of a Program

Concept Exploration	Demonstration/ Validation	Full Scale Dev & Production	Operations
Functions ○ Feasibility Analysis ○ Requirement Definition ○ Trade Studies ○ Modeling ○ Architecture Synthesis ○ Man-Machine I/F	○ Avionic Test Bed ○ Brassboard Simulator ○ Parameter Optimization ○ Integrate Tightly Coupled Engine, Airframe, GN&C Models for Evaluation	○ HW & Man-in-the-Loop Simulation ○ Cockpit Design Verification ○ Flight SW Validation ○ Avionic Development ○ Flight HW &SW Compatibility ○ Test & Checkout	○ Mission Support Systems ○ Mission Procedures Development ○ Crew Training ○ Depot Operations ○ Launch Processing ○ Payload Processing
Projects ○ HSV Simulator ○ KEW Breadboard Simulator ○ Shuttle Simulator ○ ETEEM ○ Controls & Displays ○ Space Station Cupola	○ HSV Simulator ○ Shuttle Simulator ○ KEW Brassboard Simulator ○ Multipurpose Avionic Test Bed (IR&D)	○ B-1B Checkout Equipment (DBIS,CEMU) ○ Shuttle Man-in-the-Loop Simulator ○ Shuttle Avionic Test Set	○ DD&R Room ○ Forward/Aft Cockpit ○ Shuttle Close Loop Simulation ○ ATE for RSC ○ CITE Augmentation System ○ OPF/LPS Augmentation Study ○ Expert Systems

SIMULATORS

Typical ASSTC Simulation Systems

ANALYSIS AND DESIGN

Math Model Simulations
Real Time Continuous
- OMV/RMU
- SBKEW
- Structural Dynamics

Strategic System Architectures
- SODSIM
- STRADEM
- ETEEM

Man-Machine Interface
- Controls and Displays
- Space Station Cupola

RMS Simulations
- Assembly Techniques
- Payload Deployment Operations

SYSTEM TEST AND INTEGRATION

Hardware In The Loop Testing / Simulations
- Shuttle LRU Open Loop Tests SIT, DIT, FAT

Image Sensor Autoprocessor
- Video Recording of Simulated Flight Over Terrain Model
- Tape Used as Input to Image Processor for Target Recognition Studies

Deliverable HWIL Systems
- CAS 1,2&3
- PRIS
- PITS 1,2&3 OSTA
- DBIS (B1-B Production C/O & Test) ATE

SYSTEM VERIFICATION

Integrated System Verification Testing
- Real Time, Closed Loop, Hybrid Simulator
- Mission Validation
- Anomaly Resolution
- Flight Support

Space Shuttle Verification Simulator

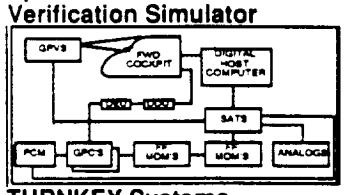

TURNKEY Systems
- CEMU: B-1B Flight Line Verification & Maintenance Systems

CAPSIM
- Uses Pre-Recorded Sim Data to Stimulate GN&C System
- Real Time SW Execution In a High Fidelity Emulation of Actual Flight

Shuttle Deorbit-Rollout Man-in-the-Loop Simulator

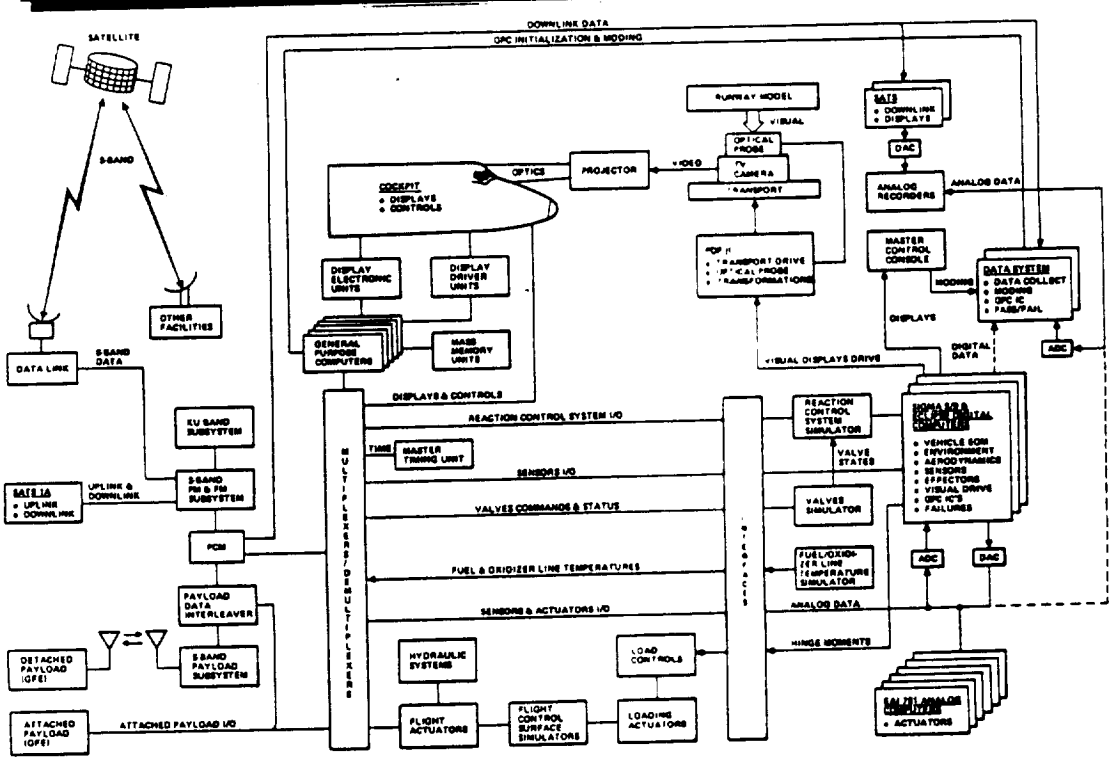

SABIR Simulator Block Diagram

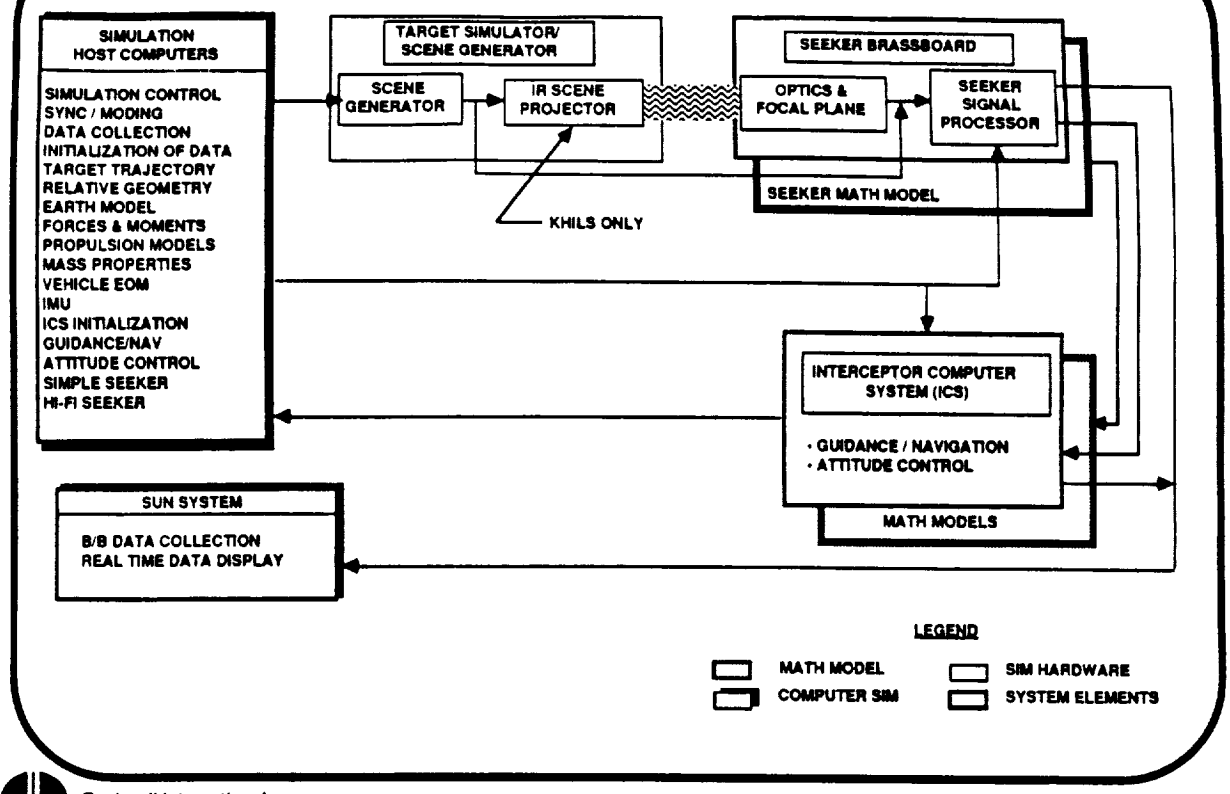

DOME (X31) REAL TIME SIMULATOR

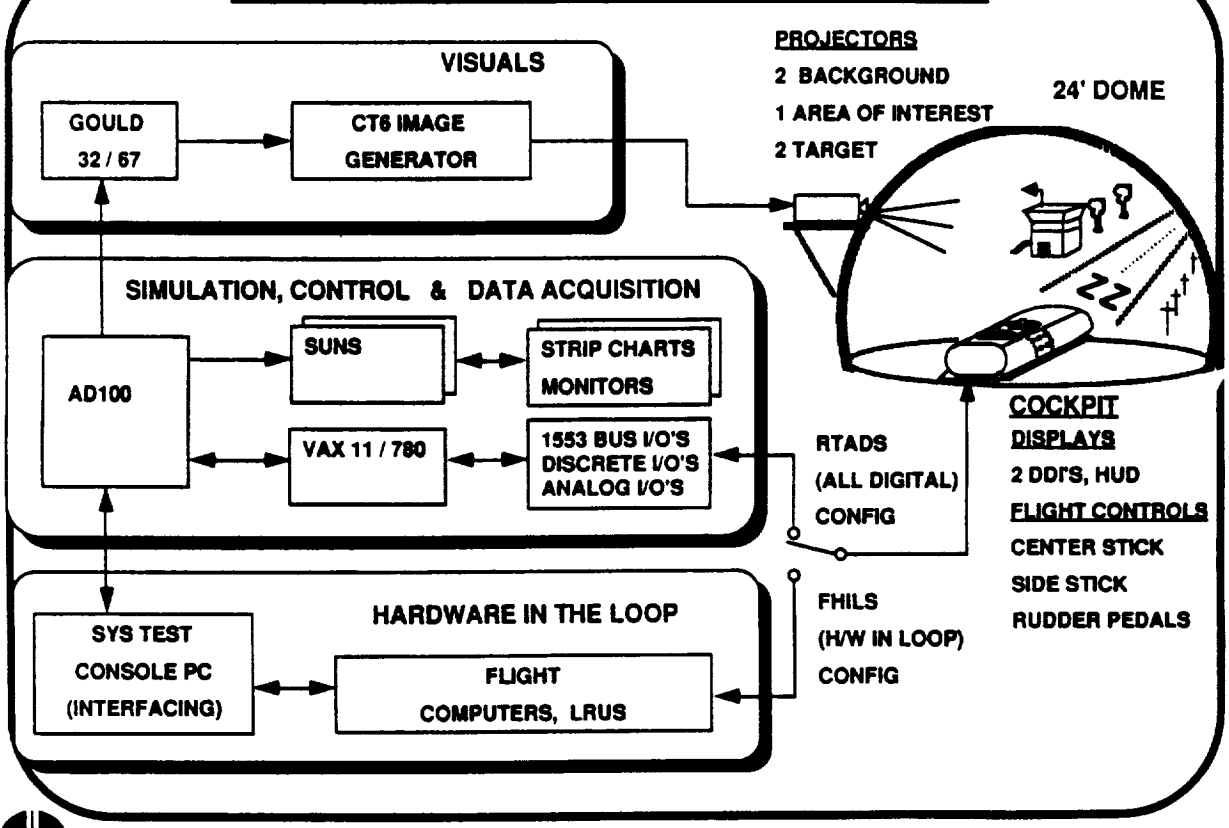

HSV SIMULATOR ALLOCATION DIAGRAM

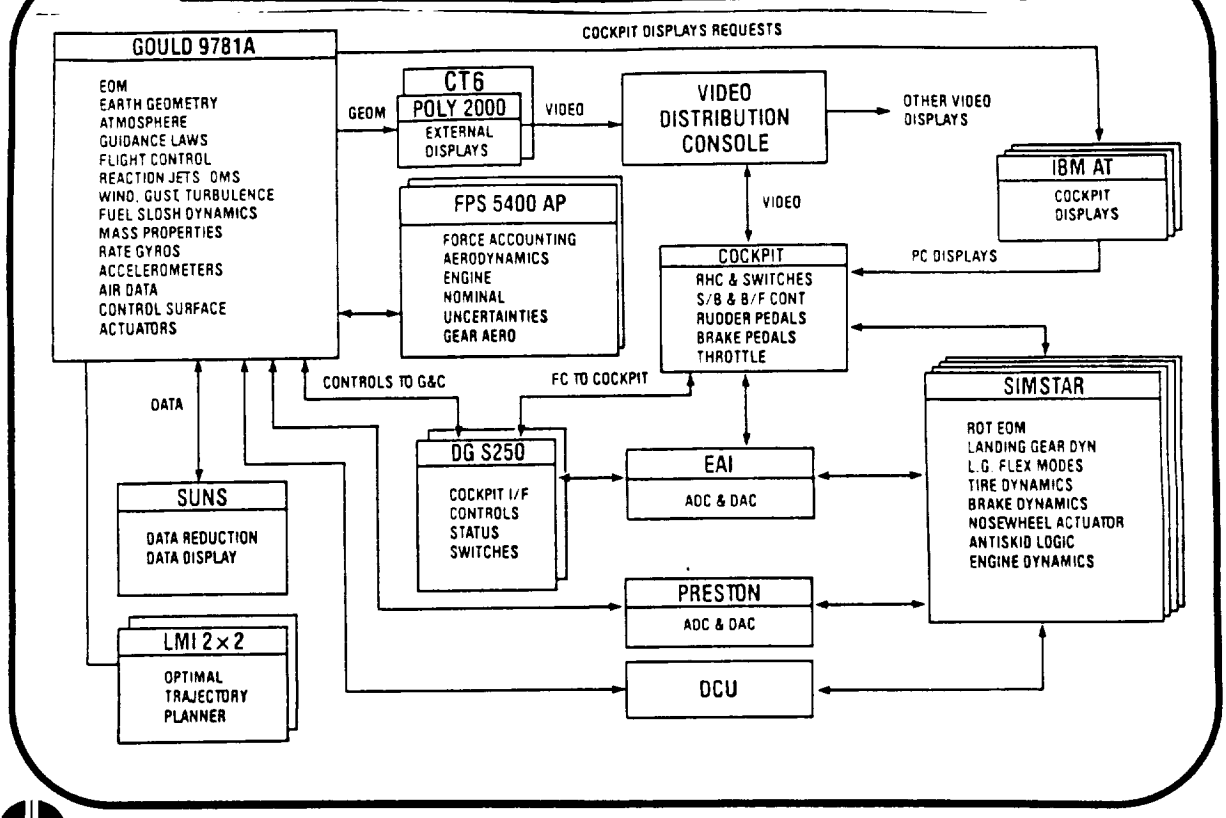

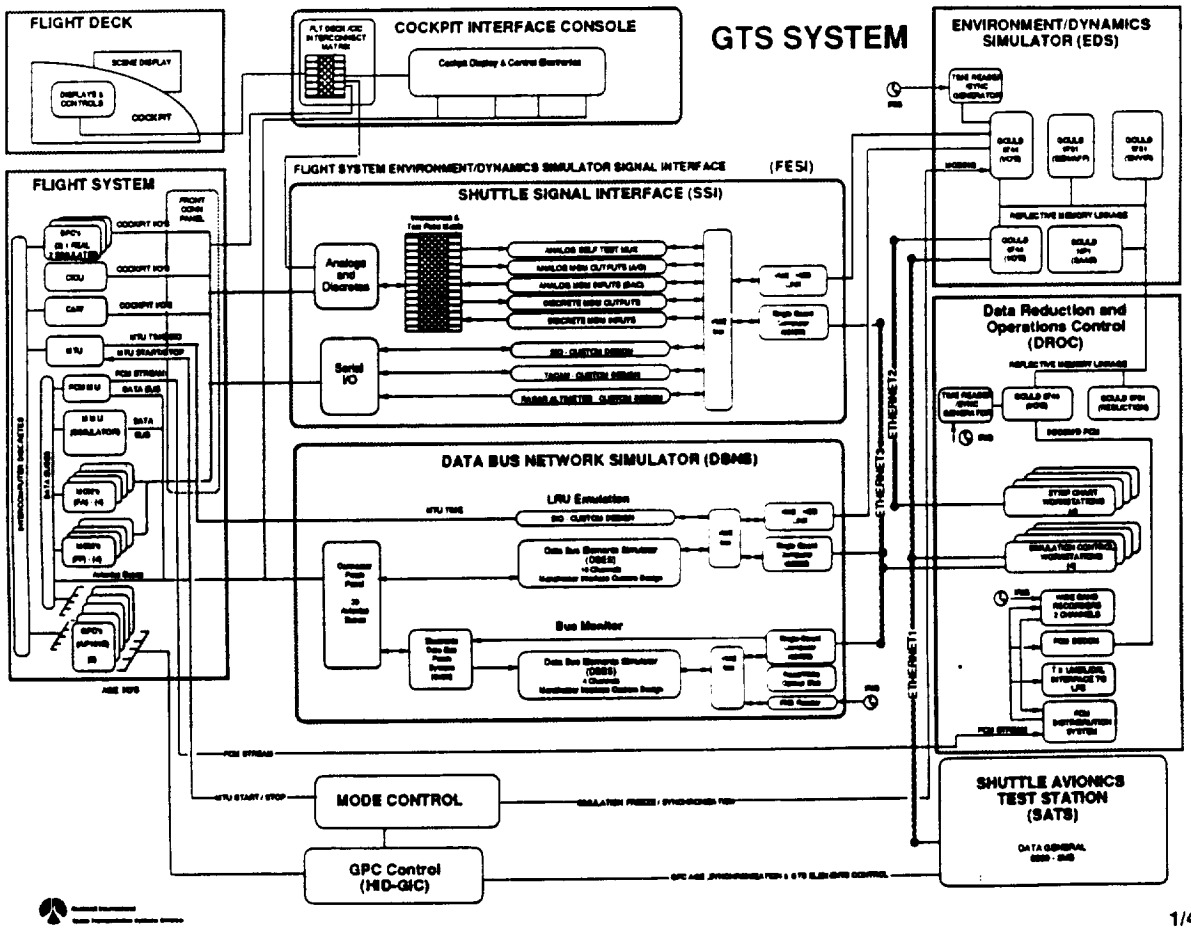

TEST SYSTEMS

Ground System Designs Have Evolved

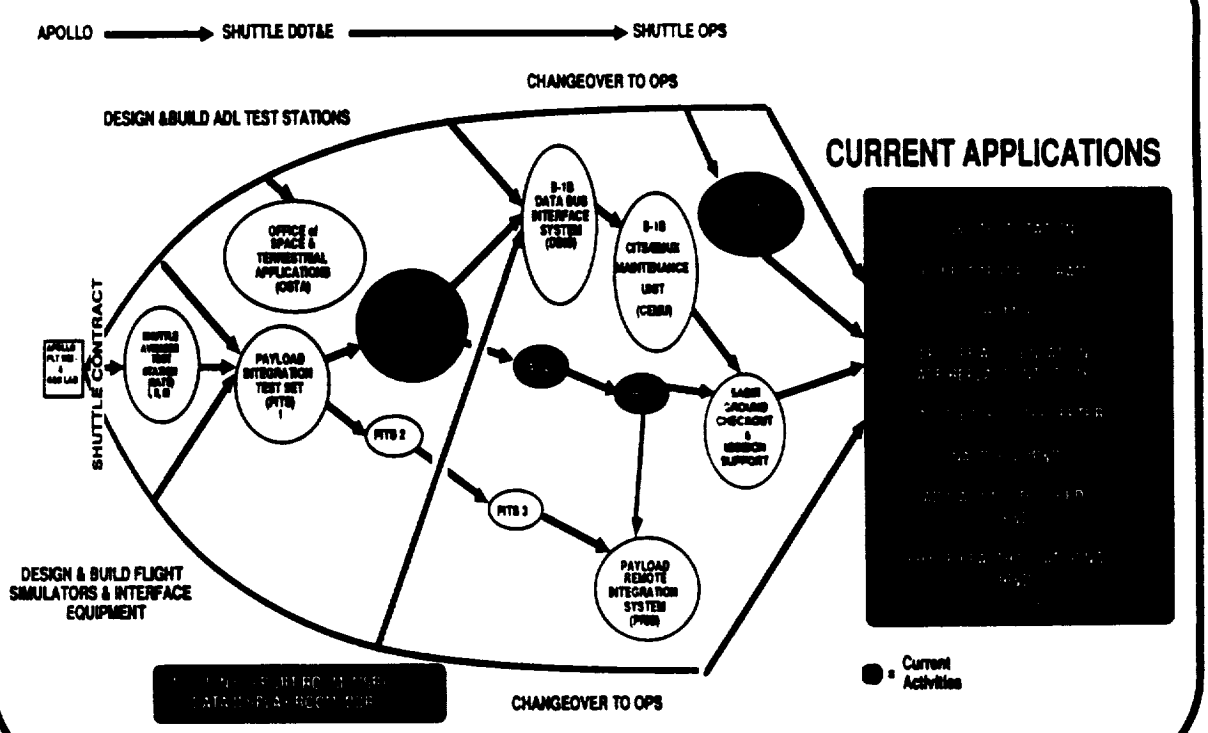

Layered, Building Block Approach to Program Support

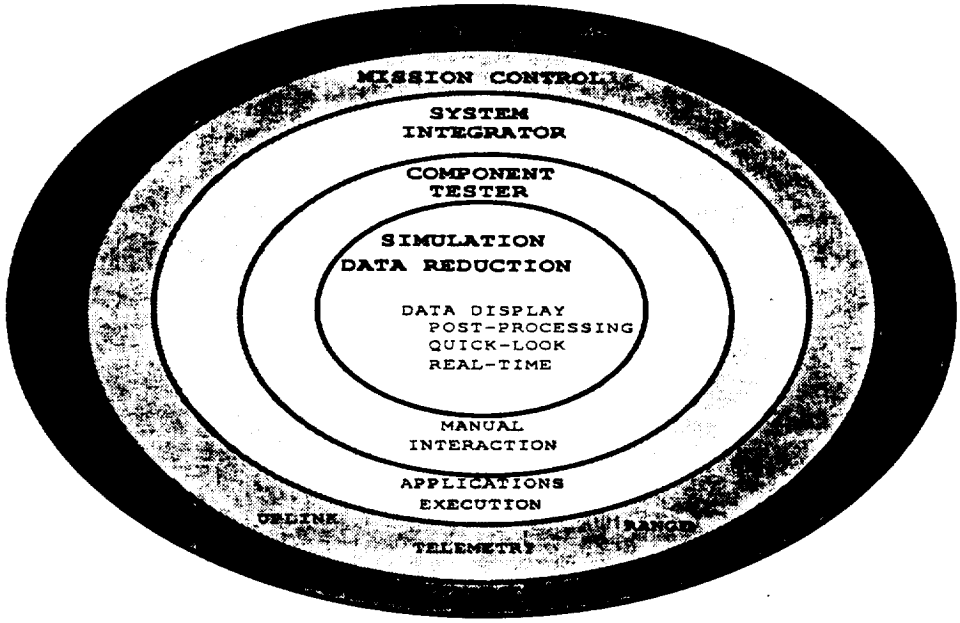

Building Block Architecture Provides for Transportability of Data, Procedures, and Knowledge

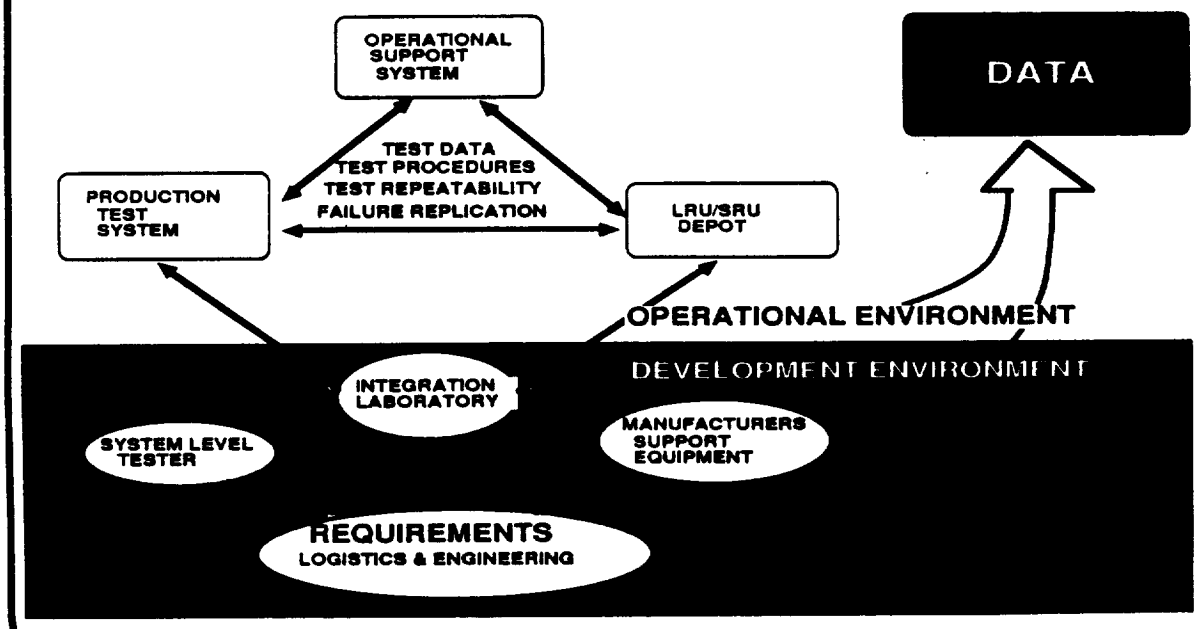

Automatic Test Equipment for RSC at KSC $27M

- **Test And Verify Line Replaceable Units (LRU's) And Shop Replaceable Units (SRU's) For Space Shuttle Electrical/Electronic Elements**
  - Functional (Performance) Testing To OEM's Acceptance Test Procedures (Minimum)
  - Fault Isolation And Diagnostics
  - Thermal And Vibration Testing
- **System Was Spec'ed To Test 47 Different LRU's (150 Configurations)**
  - MDM Is First Case - 3-90
- **ATE System Is Comprised Of 4 State-Of-The-Art Computer Systems**
  - Traceability System - SUN Microsystems And IBM PC's With NASTEC Case 2000
  - Program Development Station - Development And Test Of Application Software And Databases - HP9000/350
  - Automatic Test Station - LRU And Selected SRU Test Execution - HP9000/330
  - SRU Tester - HP1000/A400
- **Rockwell Will Develop And Integrate System**
  - Test Requirements Documents
  - Interface Test Adapters
  - Test Procedure Code (ATLAS)
  - System Support Software (Database Access, Networking, Critical Parameter Monitor, Report Generation

Shuttle Checkout System

SHUTTLE PROCESSING AUGMENTATION

- **Based on ACE Replacement Study**
  - Designed System Architecture
  - Use Existing IR&D Developed Software
    Currently Being Applied in DDR Workstation Upgrade
- **Potential Applications for KSC**
  - Replace Cargo Integration Augmentation System
- **Supports Multiple Programs**
  - West Coast Check-out/Refurbishment Facility (Palmdale)
  - OV-106
  - Shuttle-C
- **Current Activities**
  - IR&D Funding for Demonstration Development
  - Commercialization of Ground System to Support Multiple Programs

MISSION SUPPORT SYSTEMS

Data Display and Review (DDR) Room

APPLYING SYSTEMS CONCEPTS TO SHUTTLE SUPPORT

- **Member of Emergency Mission Control Center (EMCC)**
  - MILA Data Link Independent From JSC
- **Real-Time Monitoring of the Vehicle During Mission & Pre-Launch**
  - Prvoide Subsystem Engineers visibility on Vehicle Performance
  - Processing of Two Vehicles simultaneously
  - Real-time Data Processing and Displays
  - Post Processing
- **Currently Upgrading DDR to Workstation (SUN) Architecture**
  - Architecture Has Front End Processor, Server, and User Workstations
  - Rehost of MEWS Software From MER on Sun 4 for Use in Downey
  - Dataview Display Builder for User Configurable Displays

Data Display & Review (DDR) Room (continued)

- **IMU Pre-Launch Monitor / Rockwell Inertial Monitoring System (RIMS)**
  - Monitors IMU Calibration and Alignment
  - Real Time Analysis of State Data and Graphical Display
  - Determines Acceptable Duration of Orbiter On-Pad Holds

- **Palmdale-Downey Data Link for OV-105 Checkout**

- **Real-Time Expert Systems (IR&D)**
  - Multi-Level Expert System Architecture
  - Subsystem Specific Expert Systems being Developed are:
    OMS, SSME, ECLSS, Fuel Cell, EPD&C
  - Flight Anomaly Manager Expert System
    Flight Director, Room Captain

Trends in Simulation Design

- Simulation Support
- Simulation Software
- Simulation Hardware

D. Hernandez
Senior Technical Specialist
Aerospace Simulation &
Systems Test Center
Engineering

Rockwell International
Space Transportation Systems Division

Simulation Support

Rockwell International
Space Transportation Systems Division

Key Simulator Design Drivers

- Support the Strategic Business Plan
- Rapid Response to Marketing & Project Needs
- Corporate Image Enhancement
- Good Return on Investment
- Support All Project Phases Efficiently
- Support Program Life Cycle Test & Evaluation Activities
- Good Support of Critical Issues Resolution
- Development and Operational Risk Reduction
- Produce a Good Product, on Schedule, at a Lower Cost

Rockwell International
Space Transportation Systems Division

Program Life Cycle Test & Evaluation Activities

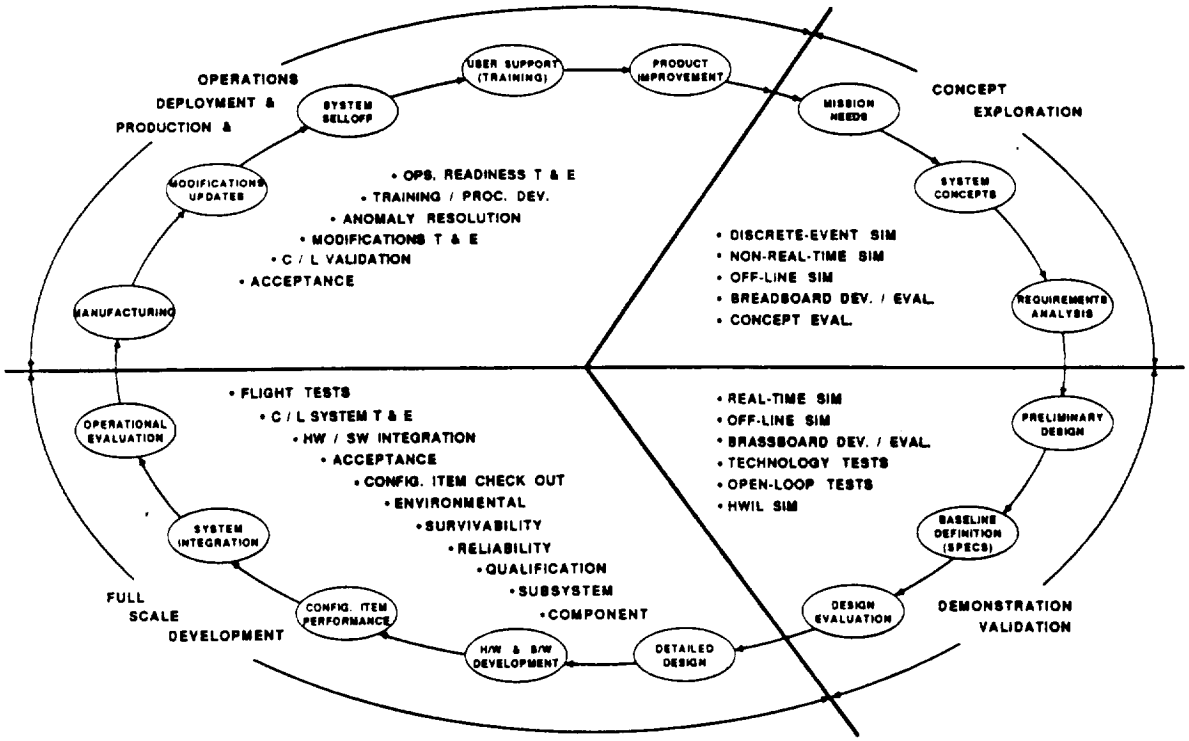

Rockwell International
Space Transportation Systems Division

The Full Spectrum of Simulation/Testing Capabilities is Needed to Satisfy The Test and Evaluation Hierarchy

(Antisatellite System Example)

MODELING SPECTRUM AND SIMULATORS	SIMULATORS TREND & CAPABILITY	ASAT SIM/TEST HIERARCHY	ANSWER
DISCRETE-EVENT MODELS DOMINANCE	PERFORMANCE EVALUATION	STRATEGIC EXCHANGE	
• ETEEM	MORE OBJECTS REPRESENTATION	SDI ARCHITECTURE	WHAT
• OSPREY	NON-REAL-TIME EXECUTION		
• NEMESIS	MORE ABSTRACT MODELS	ASAT ARCHITECTURE FULL SYSTEM & ENVIRONMENT	
MIXED MODELS	INCREASE MODEL FIDELITY	ASAT & SUPPORT SYSTEMS WITH ENGAGEMENT	
• ASAT SIM	FINER GRANULARITY		
• EXPERIMENTS	MORE DETAILS	ASAT & SUPPORT SYSTEMS	
• KHIL	LESS OBJECTS		HOW
• LAB TEST	MORE HARDWARE-IN-THE-LOOP	ONE ASAT	
CONTINUOUS MODELS DOMINANCE	REAL-TIME EXECUTION	ASAT SUBSYSTEMS	

Rockwell International
Space Transportation Systems Division

Combined Simulation Framework Can Better Support All Program Phases

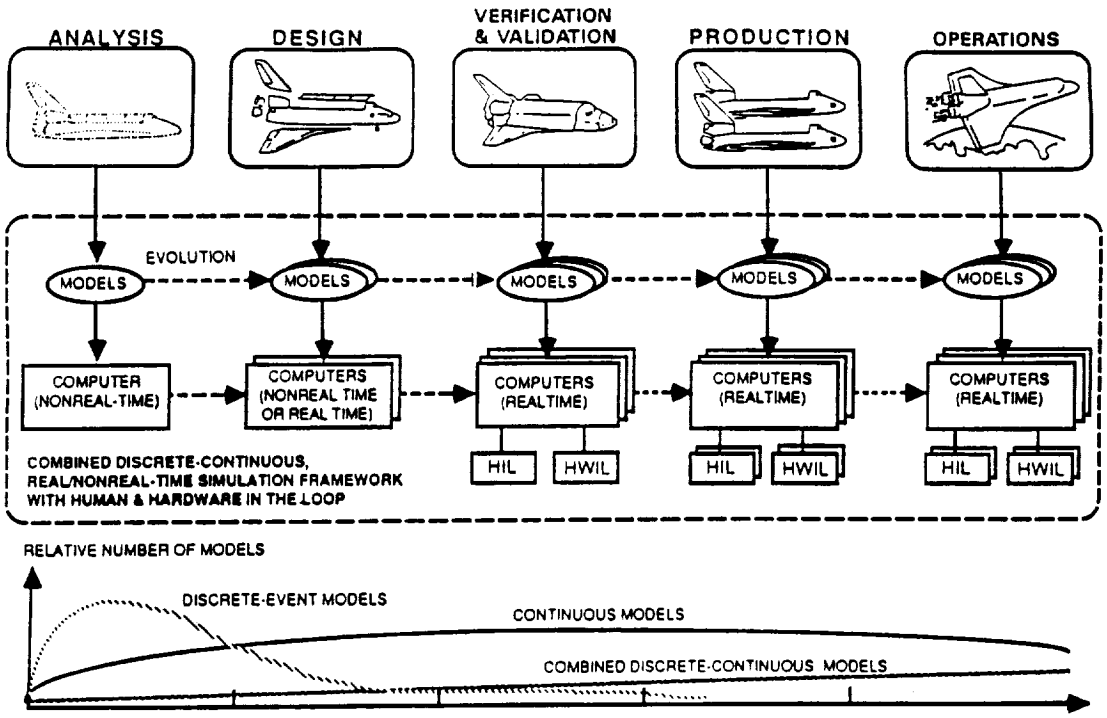

Rockwell International
Space Transportation Systems Division

Combined Discrete-Continuous Simulations Increase Simulator Fidelity and Capabilities

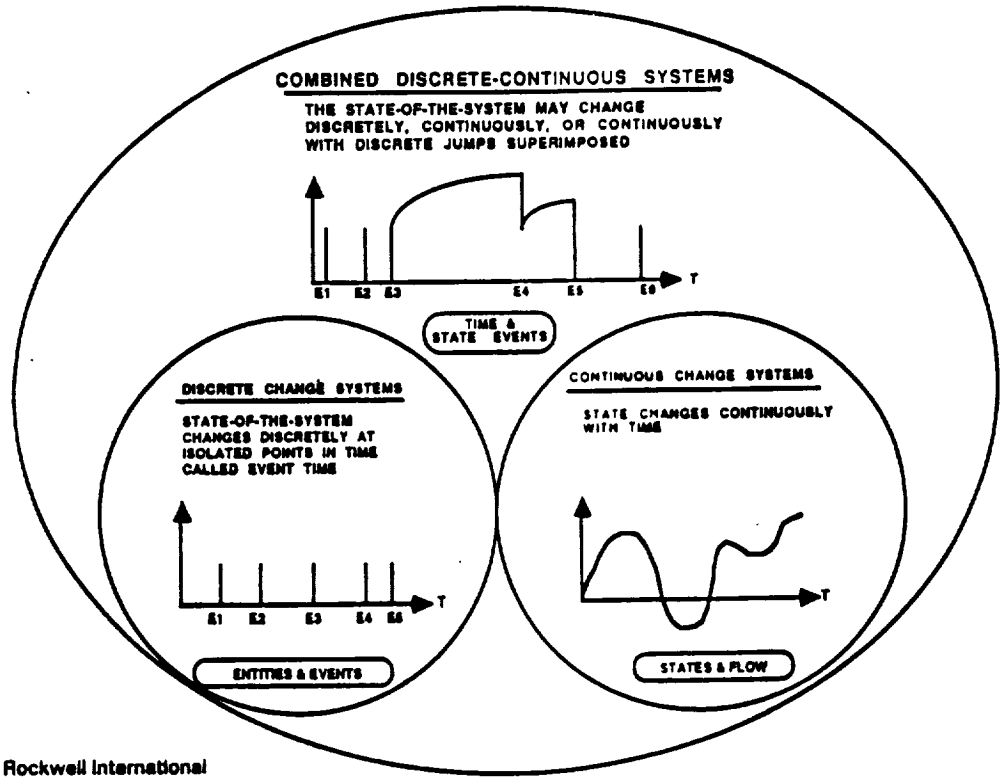

Rockwell International
Space Transportation Systems Division

Mixed Time- and Event-Driven Models Simulation Provides Flexibility for Issues Resolution

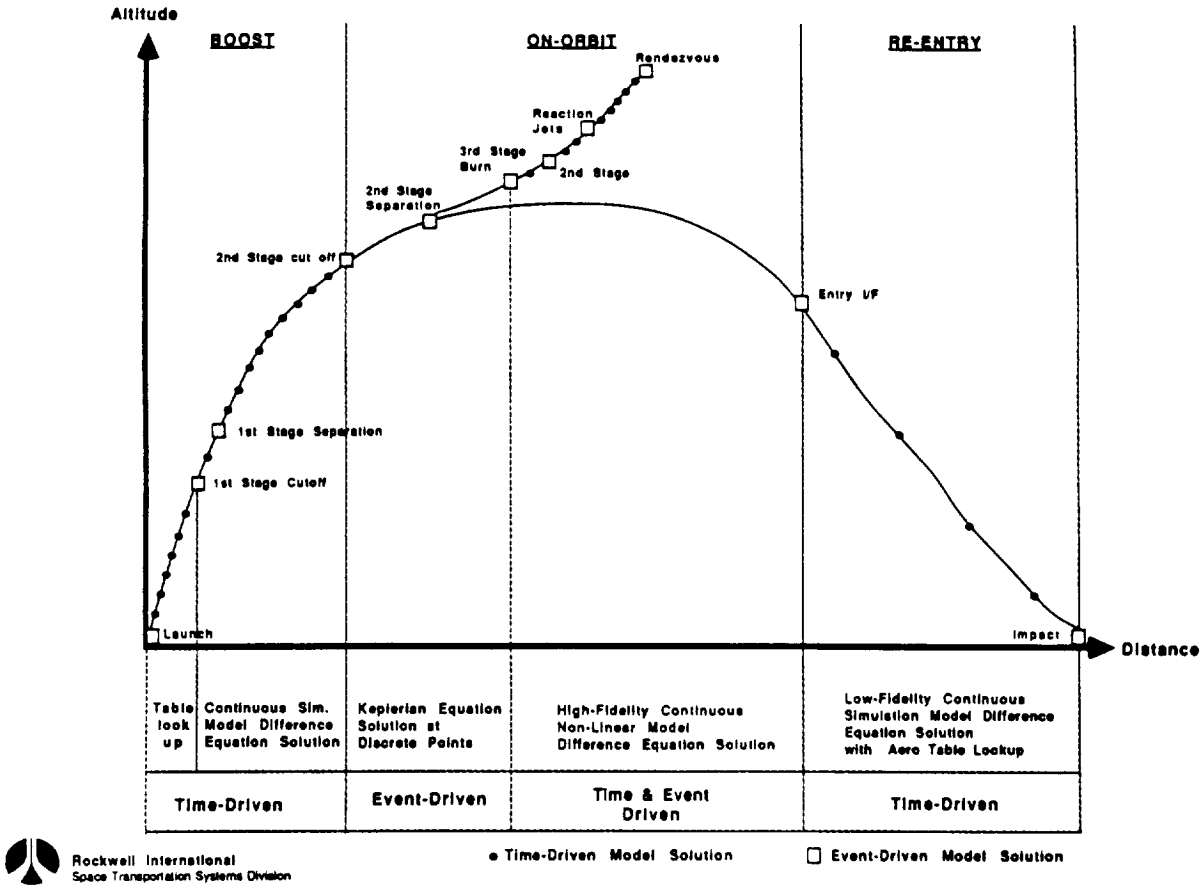

Tests are Performed in Different Environments Based on Test Objectives and Simulation & Testing Capabilities

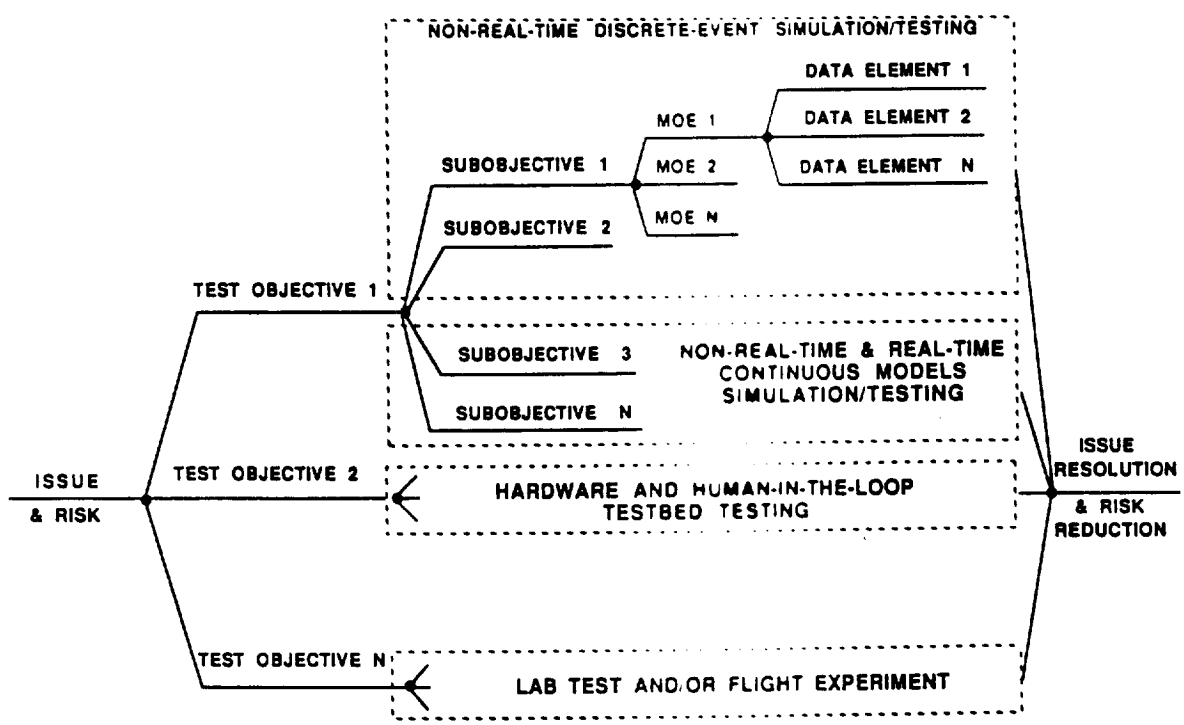

Rockwell International
Space Transportation Systems Division

Simulation Software

Rockwell International
Space Transportation Systems Division

Advanced Simulation IR&D Reflects Our Near Term Testbed Design Trends

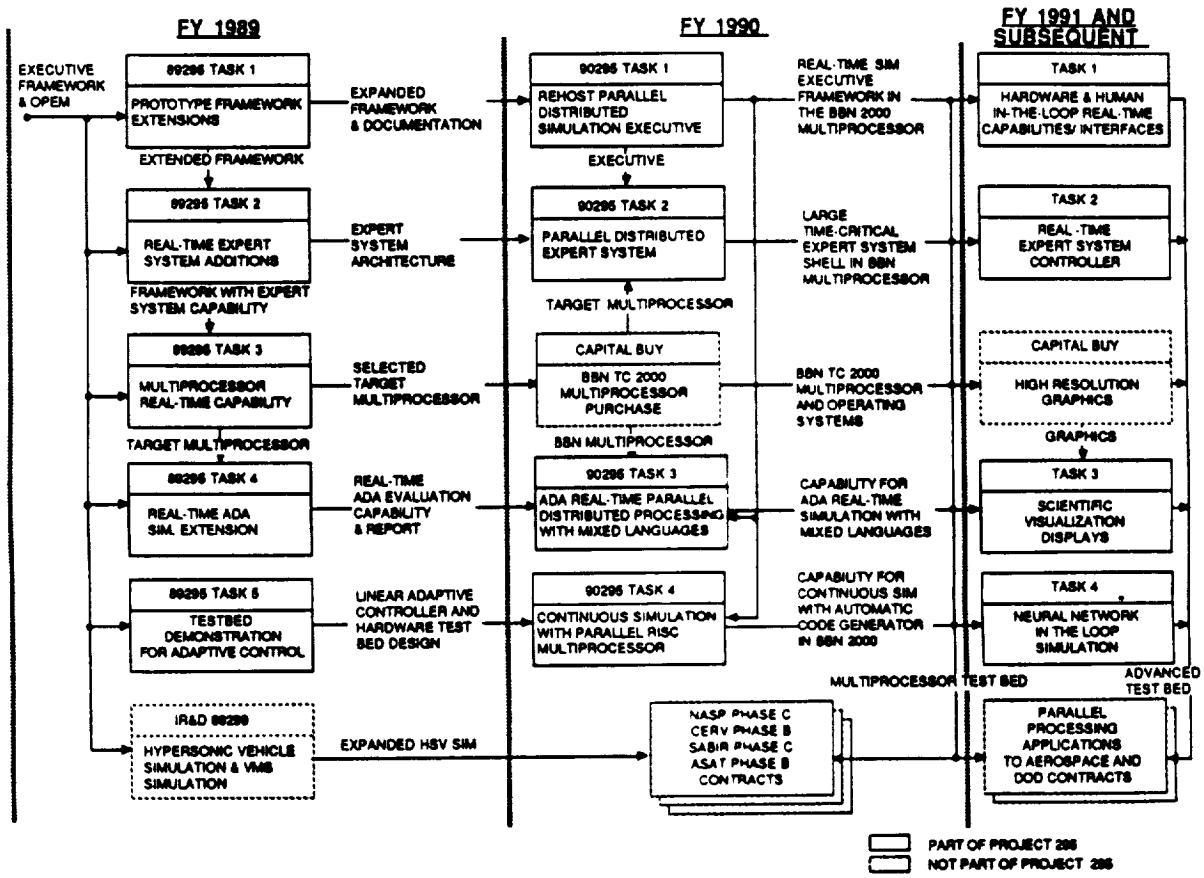

Distributed Parallel Multiprocessor Simulation Framework Is Planned for Multiyear IR&D Implementation

SIMULATION ELEMENTS \ PROJECT TASKS	FY 1988				FY 1989					FY 1990			
	DISCRETE EVENT EXECUTIVE	COMBINED SIMULATION EXECUTIVE	REAL-TIME EXTENSION	DISCRETE-EVENT DISTRIBUTED SIM EVALUATION	PROTOTYPE FRAMEWORK EXTENSIONS	REAL-TIME EXPERT SYSTEM ADDITION	MULTIPROCESSOR REAL-TIME CAPABILITY	TESTBED DEMO FOR ADAPTIVE CONTROL	REAL-TIME ADA SIM EXTENSION	DISTRIBUTED PARALLEL SIM EXECUTIVE REHOSTING	DISTRIBUTED PARALLEL EXPERT SYSTEM	ADA REAL-TIME DISTRIBUTED PARALLEL PROCESSING	CONTINUOUS SIM WITH RISC PARALLEL PROCESSORS
USER CONTROL & INTERFACE			←	↑	←	←	↑		↑	←	↑	←	↑
EXPERT SYSTEM	←			↑		←		←		↑	←	↑	
APPLICATIONS				←			↑	←	↑	↑	←	←	←
EXECUTIVE/SCHEDULER	←	←	←	↑	←	←	↑		←	←	↑	↑	←
OPERATING SYSTEM				←	←		↑		←	←	↑	↑	↑
COMMUNICATIONS				↑		↑	↑		↑	←	↑	↑	↑

↑ ELEMENT SUPPORTS TASK OBJECTIVES ← ELEMENT CREATED, MODIFIED OR EXTENDED BY TASK

Rockwell International
Space Transportation Systems Division

More Simulation Control and Visibility, Data Access, and Expert Knowledge Needed

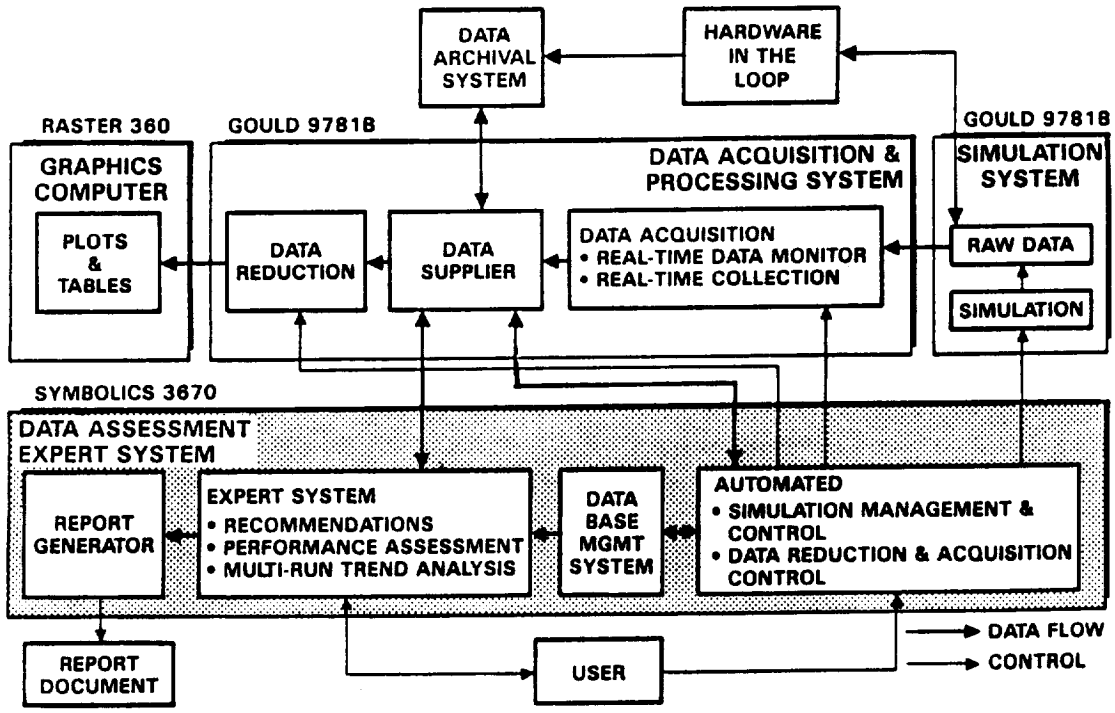

Rockwell International
Space Transportation Systems Division

Combined-Models Mixed-Languages Distributed Simulation Framework

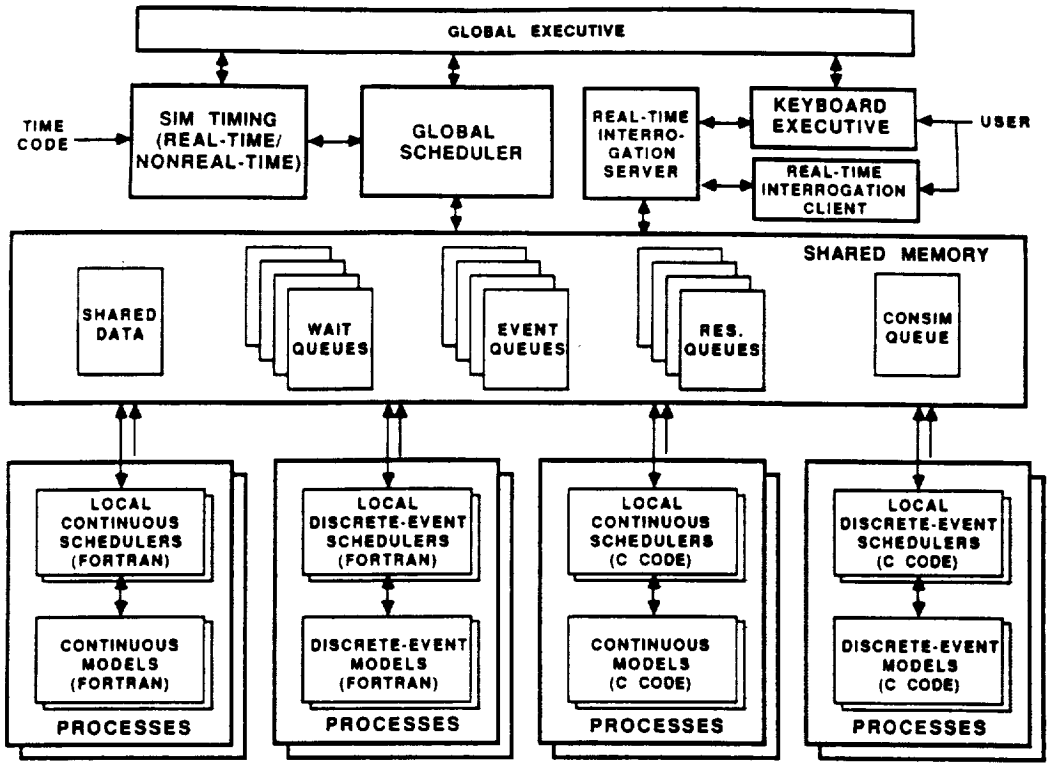

Rockwell International
Space Transportation Systems Division

A Multiprocessor With an Integrated Systems Engineering Environment

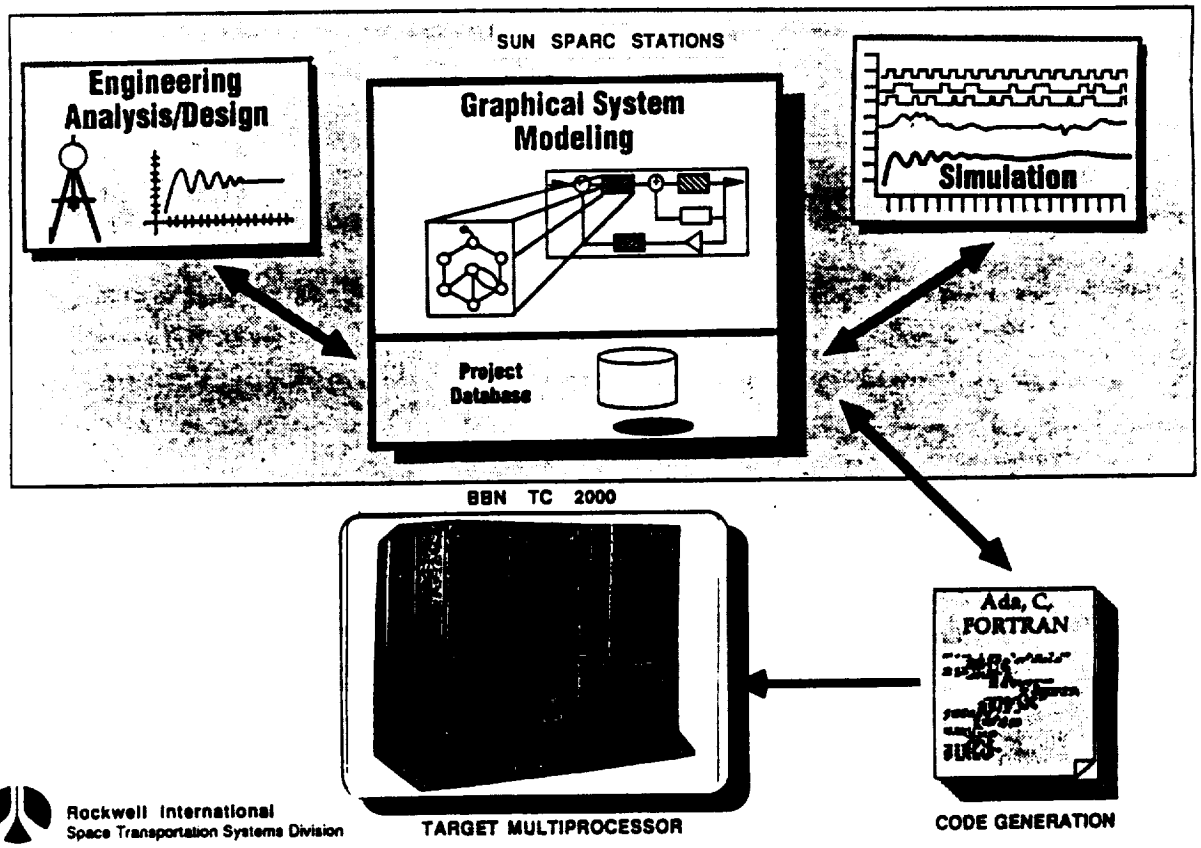

Rockwell International
Space Transportation Systems Division

Framework Allows Cybernetic System Modeling

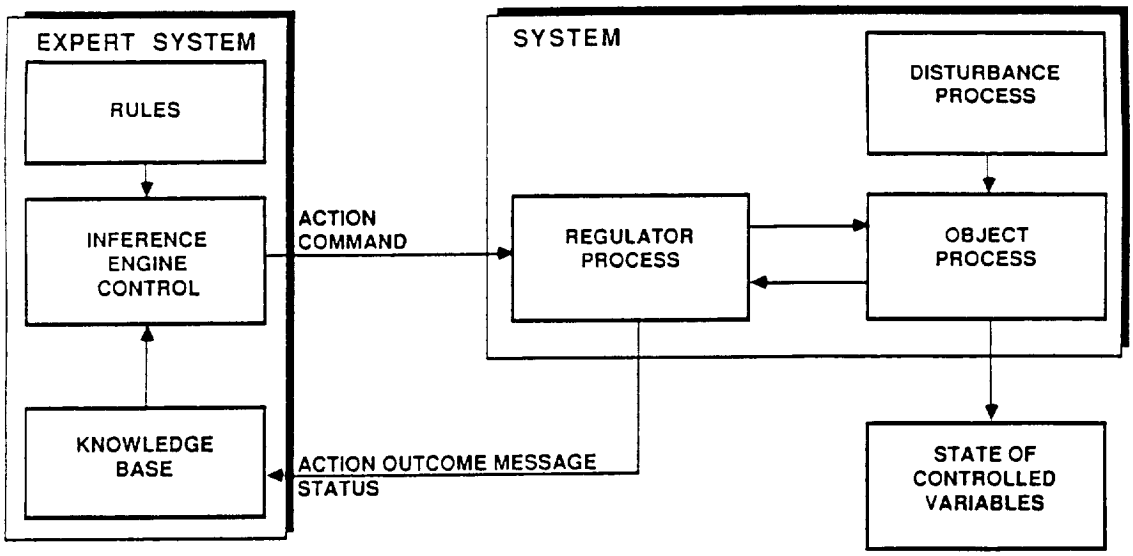

- ROCKWELL CYBERNETIC SYSTEM MODELING PROVIDES SYSTEMATIC APPROACH TO DEFINE BATTLE MANAGER RULES

Rockwell International
Space Transportation Systems Division

Discrete-Continuous, Real-time, Parallel Simulation Prototype Is In Place

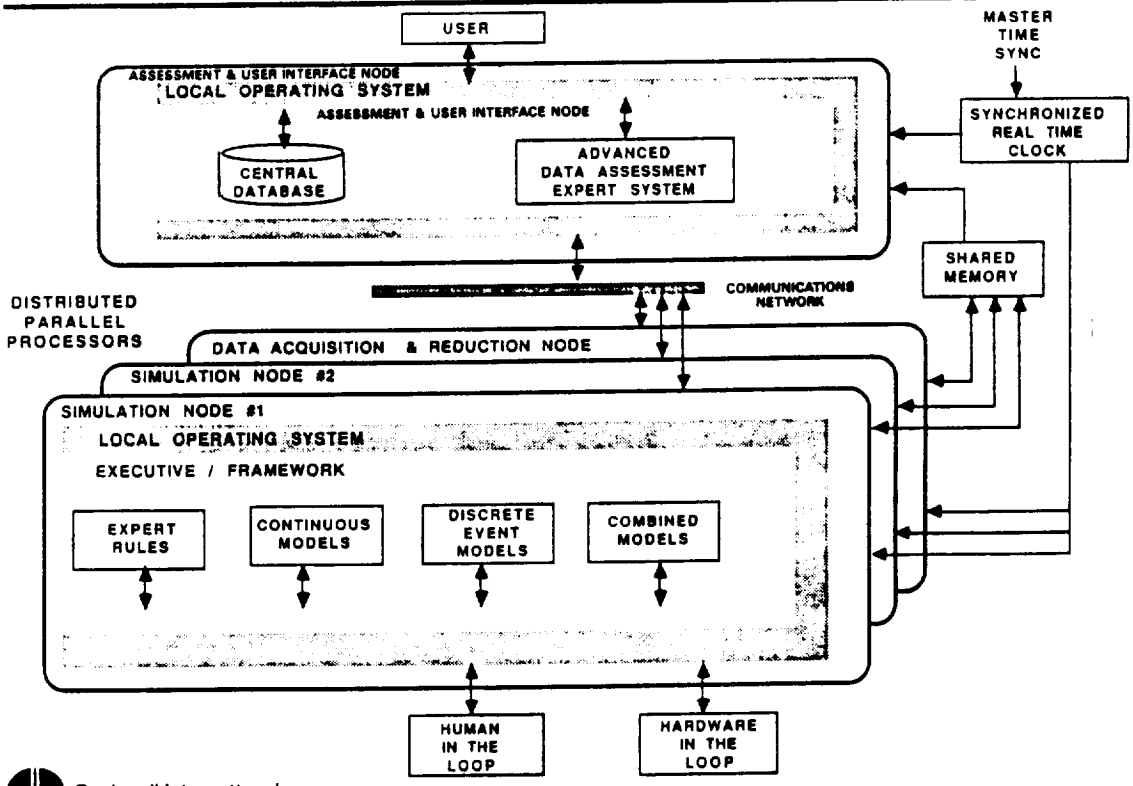

Rockwell International
Space Transportation Systems Division

Simulation Hardware

Rockwell International
Space Transportation Systems Division

Representative MIMD Parallel Computers

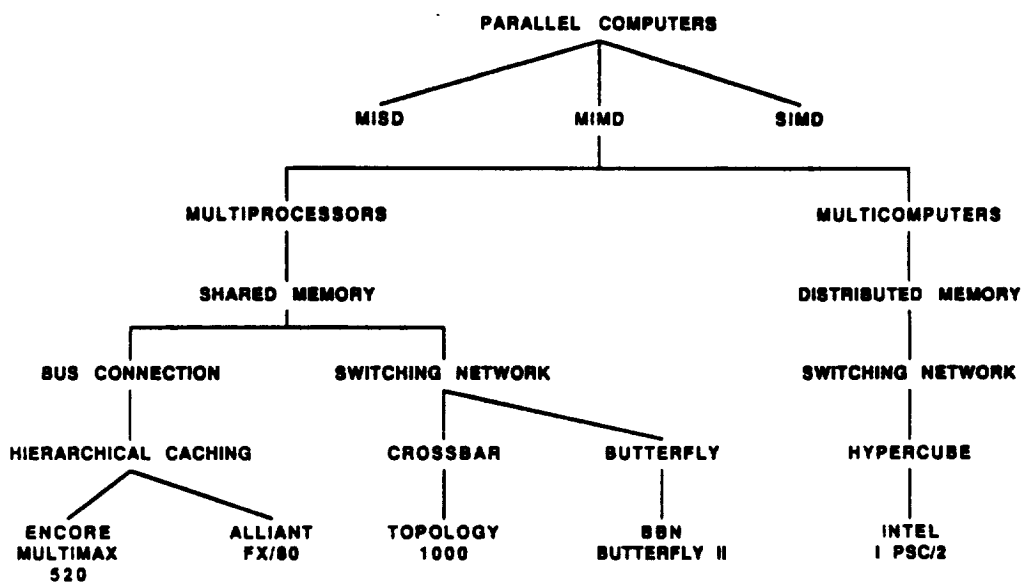

Rockwell International
Space Transportation Systems Division

A Technical Evaluation is Performed to Select Simulation Computers

CATEGORY	CRITERION: SUBFACTORS	MAXIMUM SCORE
PERFORMANCE	• AGGREGATE PROCESSORS SPEED	6
	• AGGREGATE NETWORK/BUS BANDWIDTH	4
	• MEMORY SPEED	4
	• REAL-TIME CLOCK RESPONSE	4
	• I/O (VME) BANDWIDTH	3
	• REAL-TIME OP SYSTEM RESPONSE	6
	• CONCURRENT ON-LINE SIMULATIONS/OFF-LINE DEV.	3
	Subtotal	30
SOFTWARE SUPPORT	• PARALLEL COMPILERS (FORTRAN, C)	3
	• PARALLEL DEBUGGING TOOLS	5
	• OPERATING SYSTEMS(S)	3
	• OPTICAL DISK CONTROLLERS	3
	• PERFORMANCE MONITORING S/W	4
	• TRAINING	2
	Subtotal	20
EXPANDABILITY	• ADDING PROCESSORS	4
	• LIMITS TO NUMBER PROCESSORS	4
	• BUS BANDWIDTH ISSUES	4
	• ADDING I/O CAPACITY	3
	Subtotal	15
MODULARITY/ FLEXIBILITY	• EXCESS CAPACITY	3
	• GENERALITY OF HARDWARE ARCHITECTURE	3
	• RESOURCES ALLOCATION FLEXIBILITY	3
	• INTERFACE ADAPTABILITY	3
	• GENERALITY OF SOFTWARE ARCHITECTURE	3
	Subtotal	15
CONNECTIVITY & MATURITY	• HARDWARE MATURITY	2
	• SOFTWARE MATURITY	2
	• INTERFACES SUPPORT	2
	• UPGRADED PROCESSORS CONNECTIVITY	2
	• ADDITIONAL RESOURCES CONNECTIVITY	2
	Subtotal	10
RELIABILITY & MAINTAINABILITY	• HIGH AVAILABILITY	1
	• DEGREE OF REDUNDANCY	2
	• DEGRADABILITY	2
	• ALTERNATE PATH RECOVERY	1
	• FAULT DETECTION/CORRECTION	2
	• STANDARDIZATION	1
	• SOFTWARE DIAGNOSTICS	1
	Subtotal	10
	TOTAL SYSTEM SCORES	100

Scene Generator Hardware Diagram

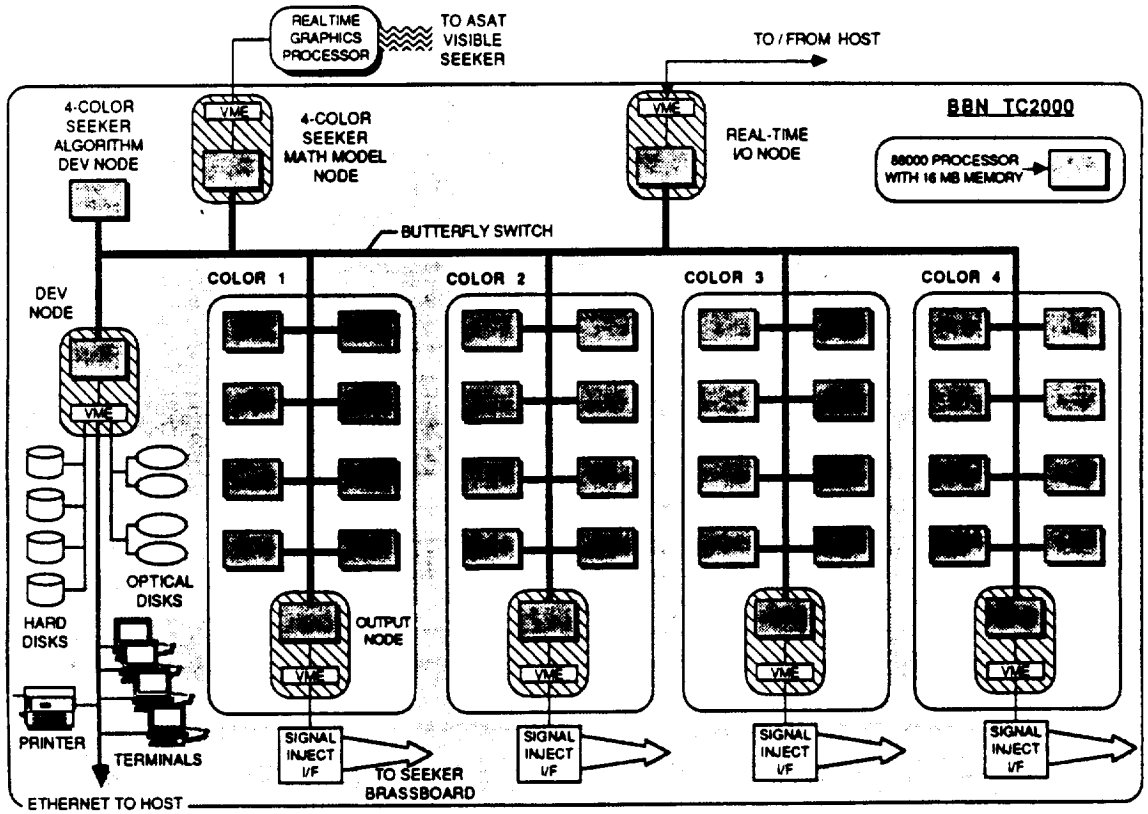

A BBN TC 2000 Multiprocessor Provides an Excellent Simulation Platform

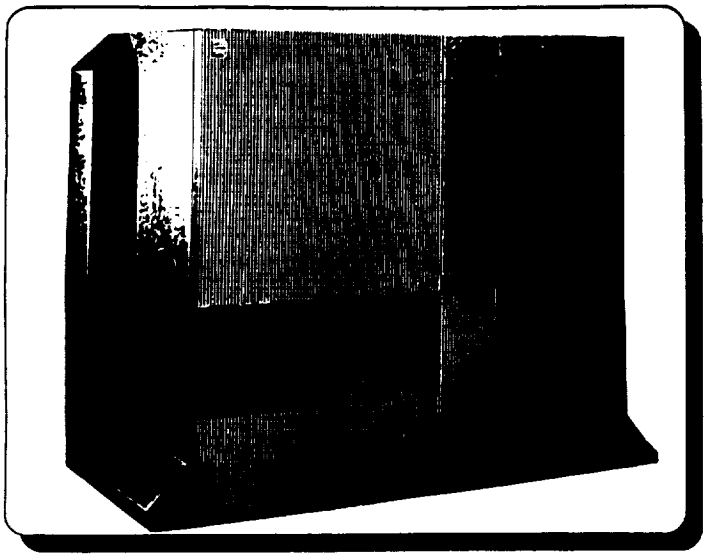

TARGET APPLICATIONS

- HARD REAL-TIME SYSTEMS
- TIME CRITICAL APPLICATIONS
- HARDWARE IN THE LOOP
- HUMAN IN THE LOOP
- MIXED MODELS
- MIXED LANGUAGES
- COMPLEX SYSTEMS
  - SABIR, ASAT

FEATURES

- MIMD COMPUTER
- SHARED MEMORY
- BUTTERFLY SWITCH NETWORK
- CLUSTER COMPUTING
- DUAL OPERATING SYSTEM
- SCALABLE
- HIGH PERFORMANCE
- EXPANDABLE ARCHITECTURE

SPECIFICATIONS

- 40 PROCESSORS (EXPANDABLE TO 504)
- MOTOROLA 80100 RISC MICROPROCESSORS
- 17 X 40 = 680 "VAX" MIPS PEAK
- 20 X 40 = 800 MFLOPS PEAK
- 16 X 40 = 640 MBYTES OF SHARED MEMORY
- 38 X 40 = 1520 MBYTES/SEC NETWORK BANDWITH
- PSOS+ REAL-TIME OPERATING SYSTEM
- MACH OPERATING SYSTEM
- FORTRAN, C, ADA, & ASSEMBLY LANGUAGES

A Powerful Multiprocessor Offers a Flexible Simulation Test Bed

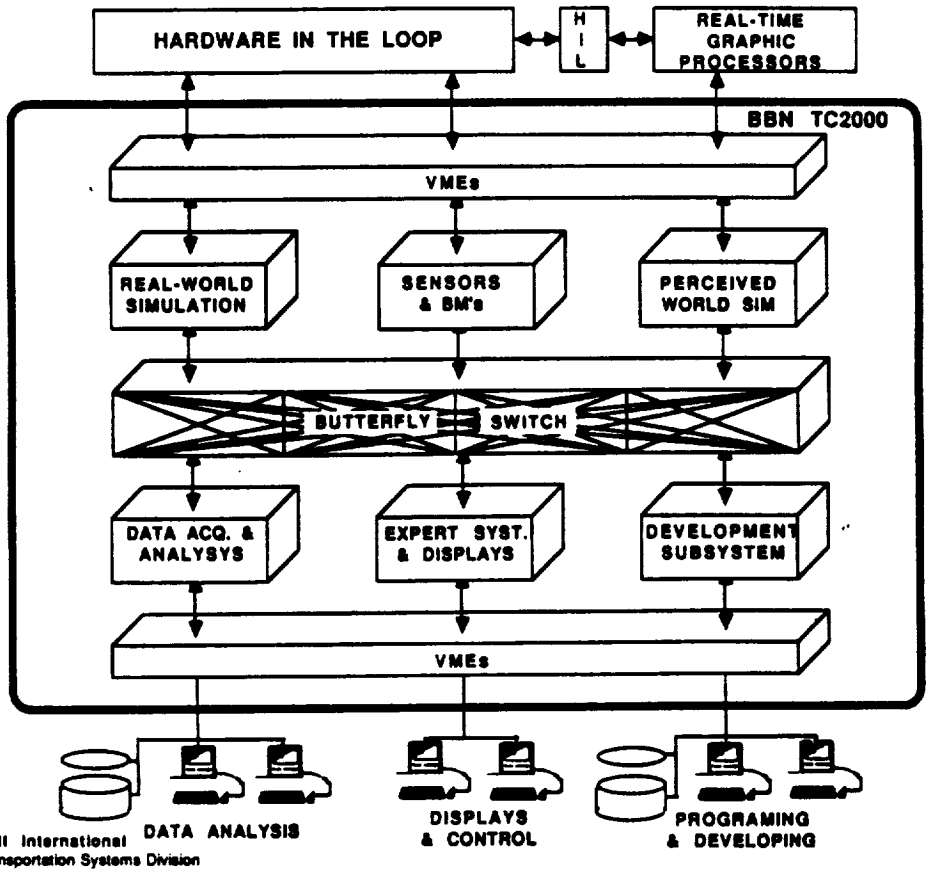

Shuttle Non-Homogeneous Loosely-Coupled Simulation

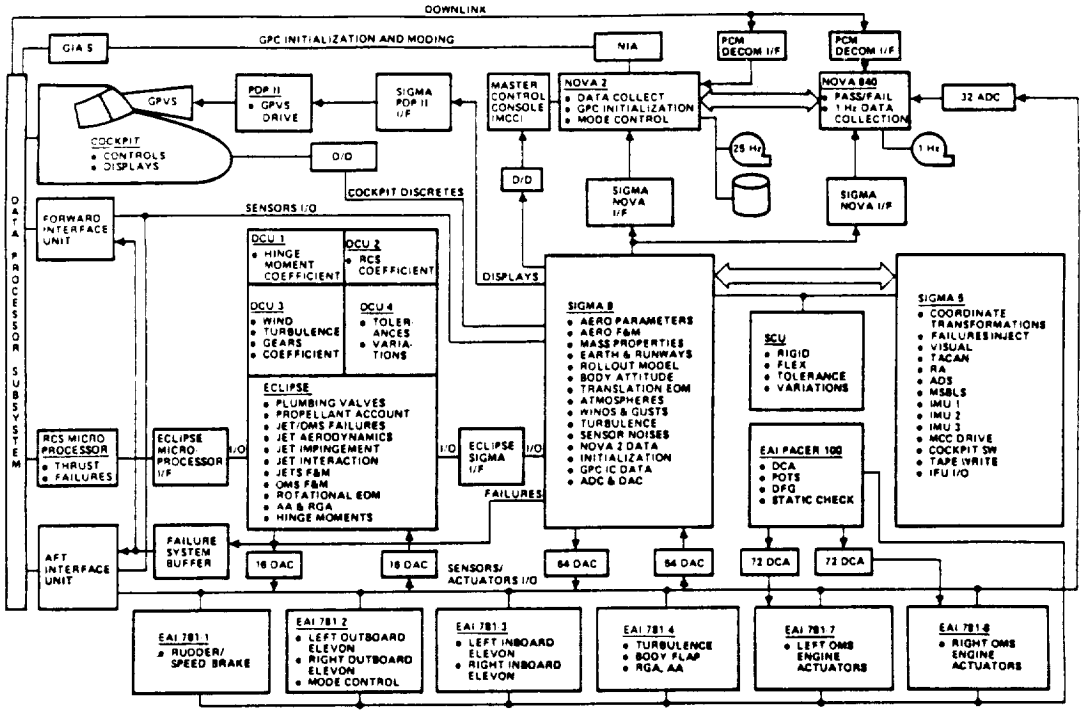

Rockwell International
Space Transportation Systems Division

Present HSV Non-Homogeneous Loosely-Coupled Simulation

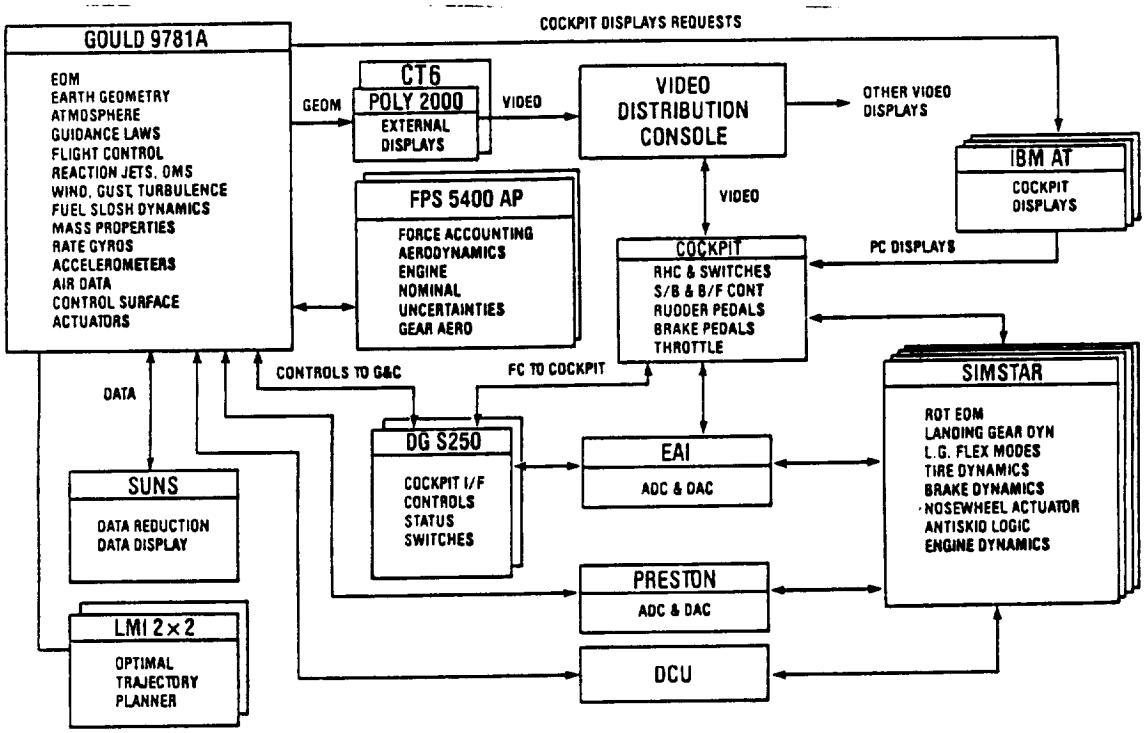

Rockwell International
Space Transportation Systems Division

Homogeneous Closely-Coupled Multiprocessor Simulation Testbed

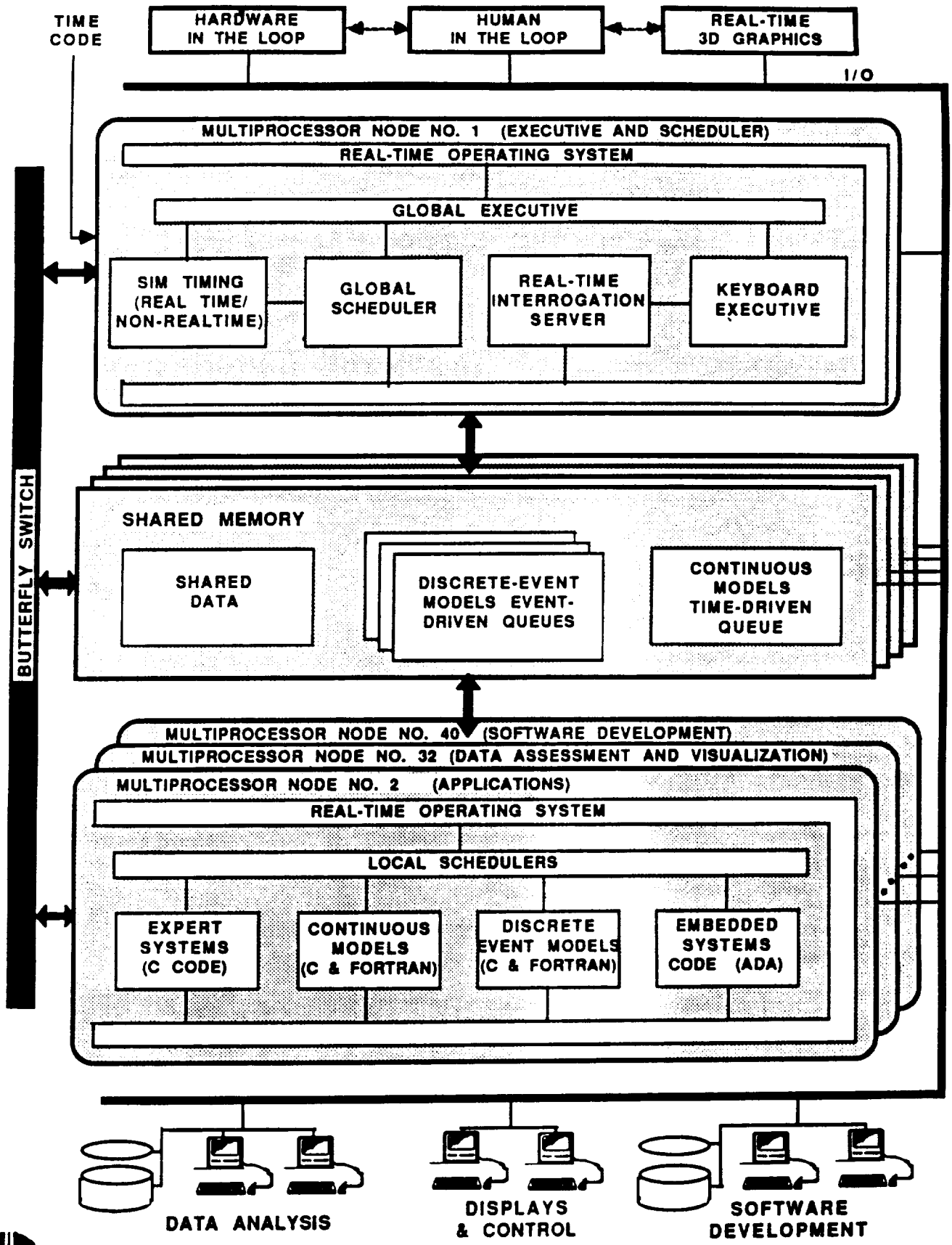

Rockwell International
Space Transportation Systems Division

Summary of Trends in Simulation Design at the ASSTC

- Open Parallel Multiprocessor Architecture
- Homogeneous Processors
- Powerful Software Framework and Kernel
- Mixed Languages Simulation
- Combined Continuous and Discrete-Event Models
- More Complex and Higher-Fidelity Simulations
- Combined Software Development and Multiple Execution Environment
- Integrated Graphic Processing
- Integrated Knowledge-Based System
- Support Program Phases Efficiently

DESIGN STRATEGY

FOR

REAL-TIME SIMULATION

KENNETH M. STERN
TECHNICAL STAFF
AEROSPACE SIMULATION AND
SYSTEMS TEST CENTER
ROCKWELL INTERNATIONAL

DESIGN OBJECTIVES

- MODULARITY
- FLEXIBILITY
- EXTENSIBILITY
- VERIFIABILITY

PREVIOUS DESIGN METHODS

MOCKUPS
CONTROLS & DISPLAYS
VISUAL SCENE GENERATION

DRAWBACKS

- DIFFICULT / TIME CONSUMING TO CHANGE
- LACK OF FLEXIBILITY FOR FUTURE MODIFICATION

FLEXIBLE DESIGN STRATEGY

PROTOTYPING IS KEY

SOFTWARE REQUIREMENTS

- 3D CAD / ANALYSIS / ANIMATION
- DISPLAY GENERATION
- ADVANTAGES

  OFF-THE-SHELF

  TAILORABLE

FLEXIBLE DESIGN STRATEGY

HARDWARE REQUIREMENTS

- GRAPHICS WORKSTATIONS
- LOW COST IMAGE GENERATORS
- ADVANTAGES
  - OFF-THE-SHELF
  - ADAPTABLE

FLEXIBLE DESIGN STRATEGY

GENERATE PROTOTYPE MODELS OF

- SIMULATOR MODELS
- MOCKUPS
- CONTROLS AND DISPLAYS

  TOUCH SCREENS
- VISUAL SCENES

FLEXIBLE DESIGN STRATEGY

USES

- CONTROLS AND DISPLAYS
- REACH / CLEARANCE TESTS
- VISION ANALYSIS - WINDOW PLACEMENT
- INSTRUMENT LAYOUT
- MISSION ANALYSES
- FACILITY LAYOUT

FLEXIBLE DESIGN STRATEGY

COST / TIME SAVINGS

- SAVES VALUABLE SIMULATOR TIME
- OFFLOADS TASKS WHICH DON'T NEED SIMULATION
- ALLOWS RE-USE OF DATABASES NO NEED TO RE-DESIGN EACH TIME
- ELIMINATES COST/TIME ASSOCIATED WITH FIXED OR PHYSICAL MODELS

FLEXIBLE DESIGN STRATEGY

FUTURE BENEFITS

- COST EFFECTIVE SOLUTION FOR EVOLVING DESIGN IDEAS
- ALLOW VISUALIZATION OF PRELIMINARY ENGINEERING DESIGN CONCEPTS
- ITERATIVE PROCEDURAL DESIGN
  - ENGINEERING ORIENTED
- ENABLES USING PREVIOUS DESIGN IDEAS