NASA-TM-108759

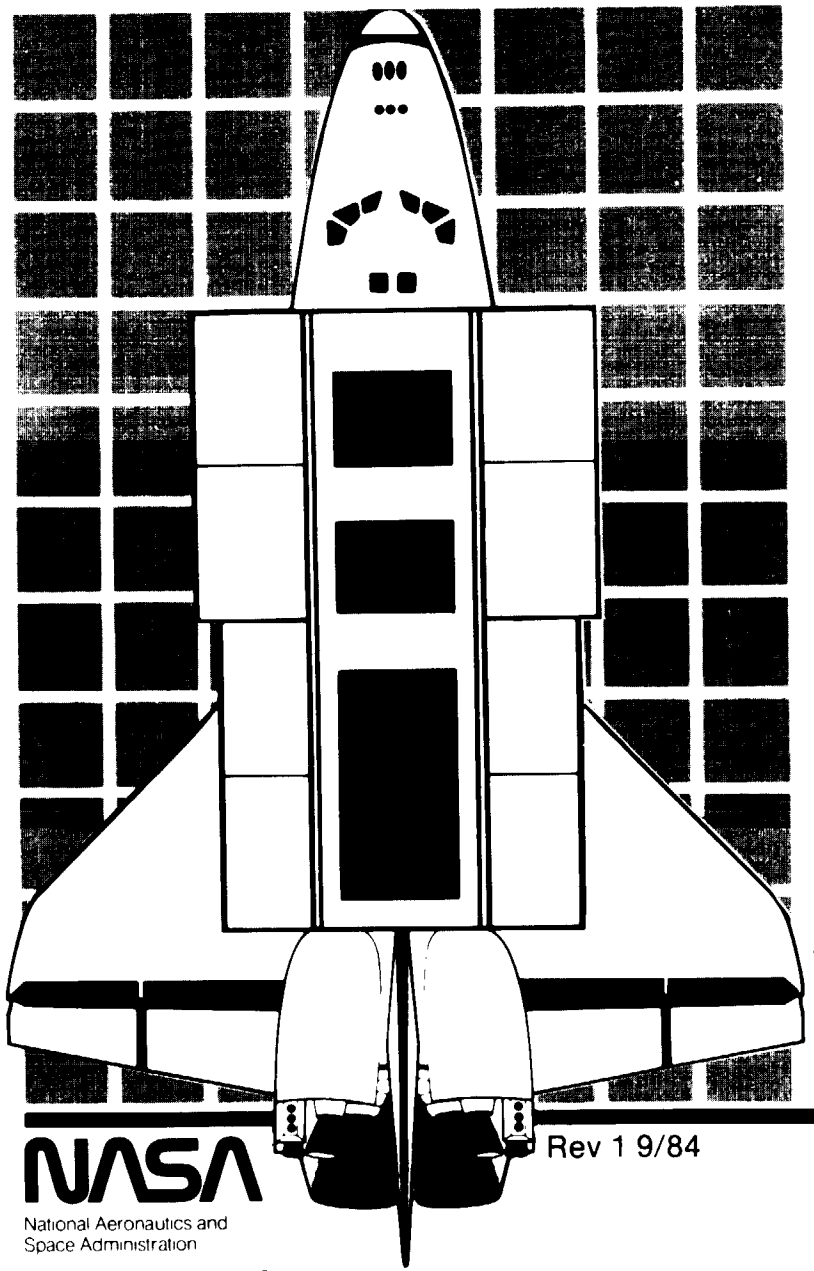

SPACE SHUTTLE PAYLOAD

DESIGN AND DEVELOPMENT

JSC-20052
VOLUME 2

N1-37
/11/16
/1/ 5
p. 47

(NASA-TM-108759) SPACE SHUTTLE PAYLOAD DESIGN AND DEVELOPMENT. VOLUME 2: AVIONICS INTERFACES AND REQUIREMENTS (NASA) 47 p

N94-70366

Unclas

Z9/16 0167298

AVIONICS INTERFACES AND REQUIREMENTS

Rev 1 9/84

NASA
National Aeronautics and
Space Administration

Lyndon B. Johnson Space Center

CONTENTS

SECTION	PAGE
OVERVIEW	1
POWER	10
COMMAND AND DATA	18
HARNESSING	36
EMI/EMC	38

1 of 2

PRECEDING PAGE BLANK NOT FILMED

OVERVIEW OF SHUTTLE ORBITER AVIONICS

S-84-01497

- THE ORBITER AVIONICS SYSTEM PROVIDES SUPPORT FOR PAYLOAD COMMAND, DATA, AND TELEMETRY INTERFACES, AS WELL AS ELECTRICAL POWER INTERFACES
- THE ORBITER IS WIRED TO SUPPORT A CARGO OF FOUR MAJOR PAYLOADS, SUCH AS COMMUNICATIONS SATELLITES, THAT EACH USE ABOUT ONE-FOURTH OF THE ORBITER'S SIZE AND WEIGHT CAPABILITY
- THIS WIRING, CALLED THE STANDARD MIXED CARGO HARNESS (SMCH), PROVIDES THE PATHS THAT CONNECT THE AFT FLIGHT DECK (AFD), POWER, COMMAND AND DATA INTERFACES TO THE PAYLOADS BACK IN THE PAYLOAD BAY

ORIGINAL PAGE
BLACK AND WHITE PHOTOGRAPH

ORIGINAL PAGE
BLACK AND WHITE PHOTOGRAPH
ORIGINAL PAGE
BLACK AND WHITE PHOTOGRAPH

DESIGN AND DEVELOPMENT

S-84-01063
Rev 1

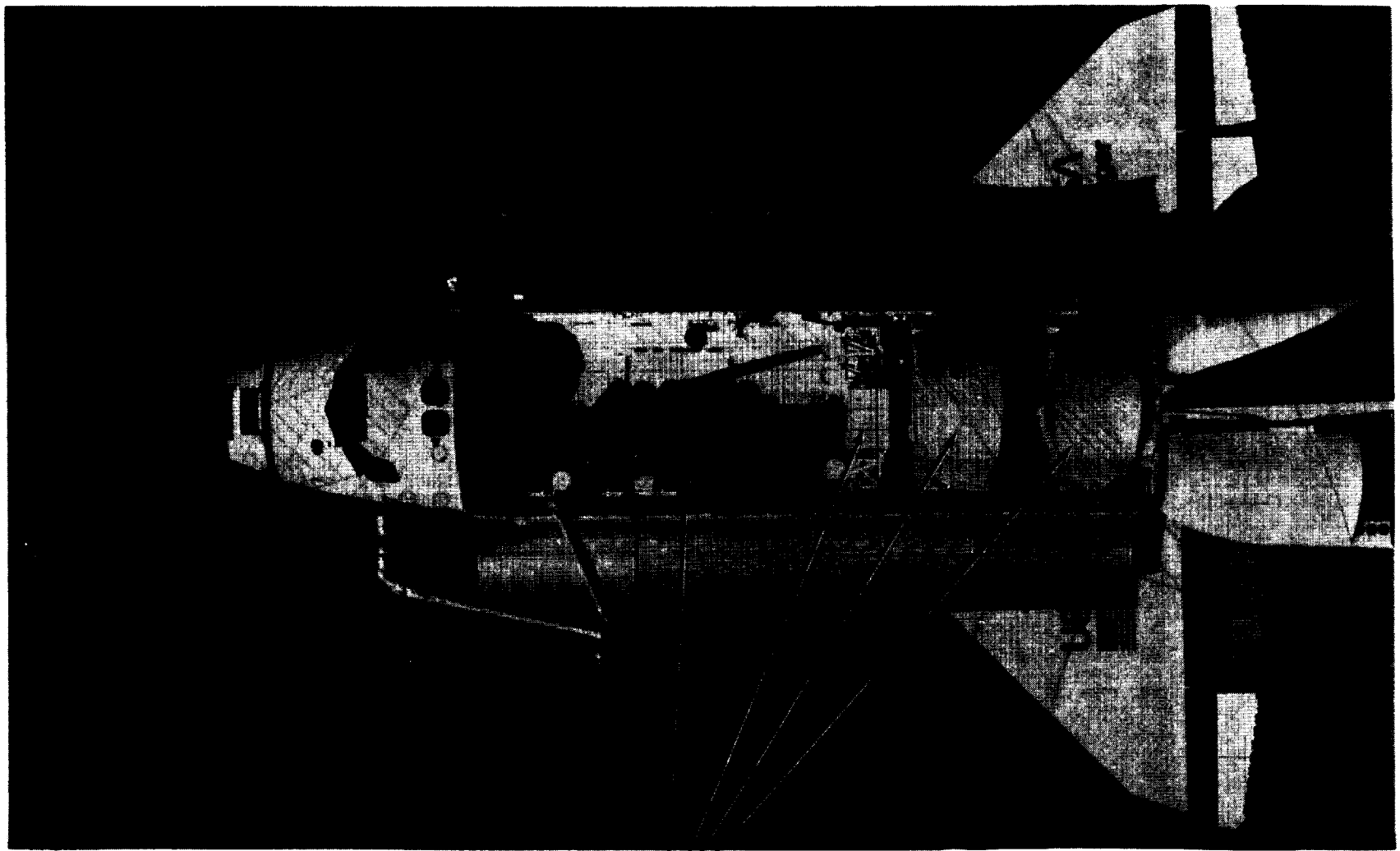

FOUR MAJOR PAYLOAD
POSSIBLE LOCATIONS

AFT FLIGHT DECK

S-84-01039
Rev 1

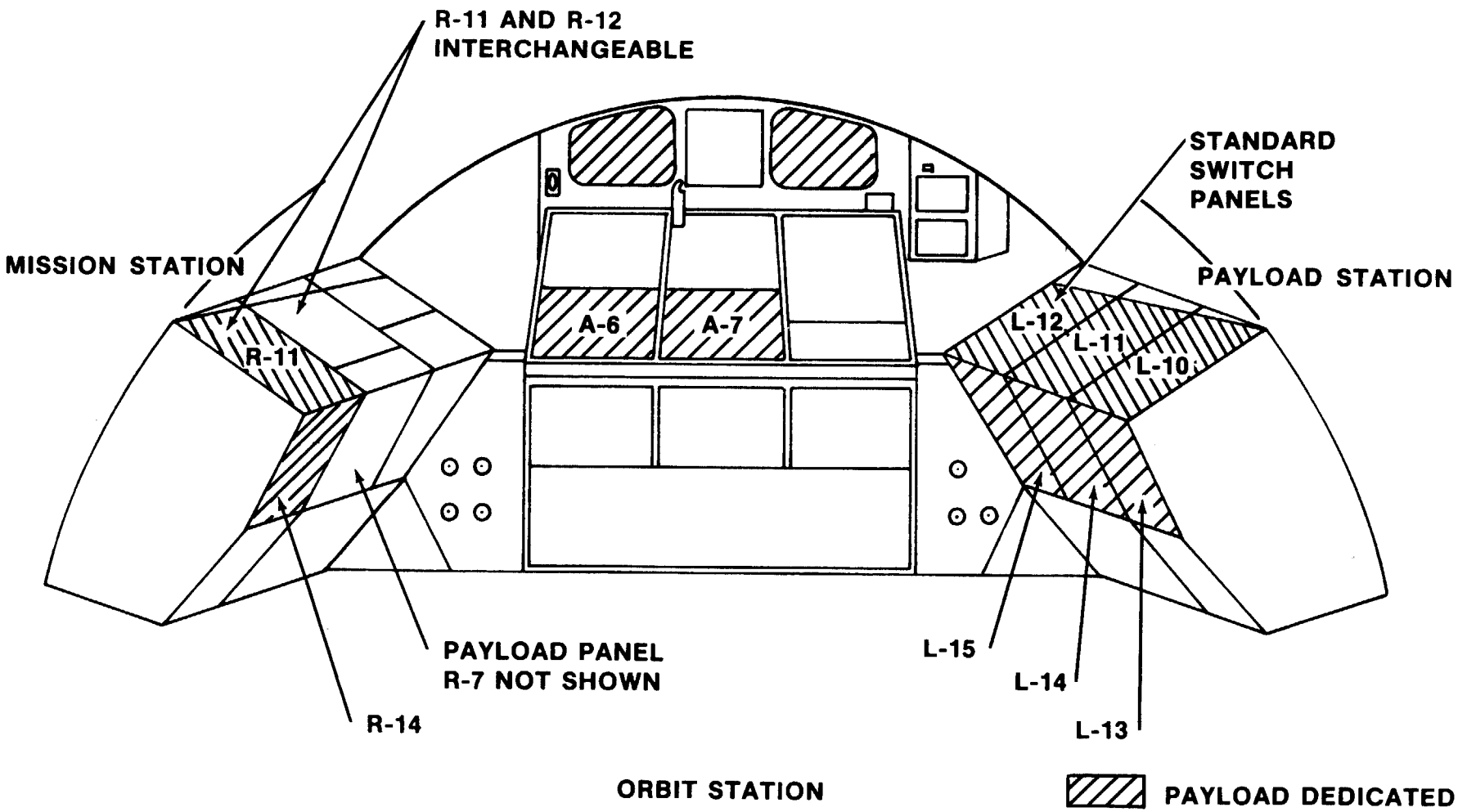

ORIGINAL PAGE
BLACK AND WHITE PHOTOGRAPH

S-84-04086
Rev 1

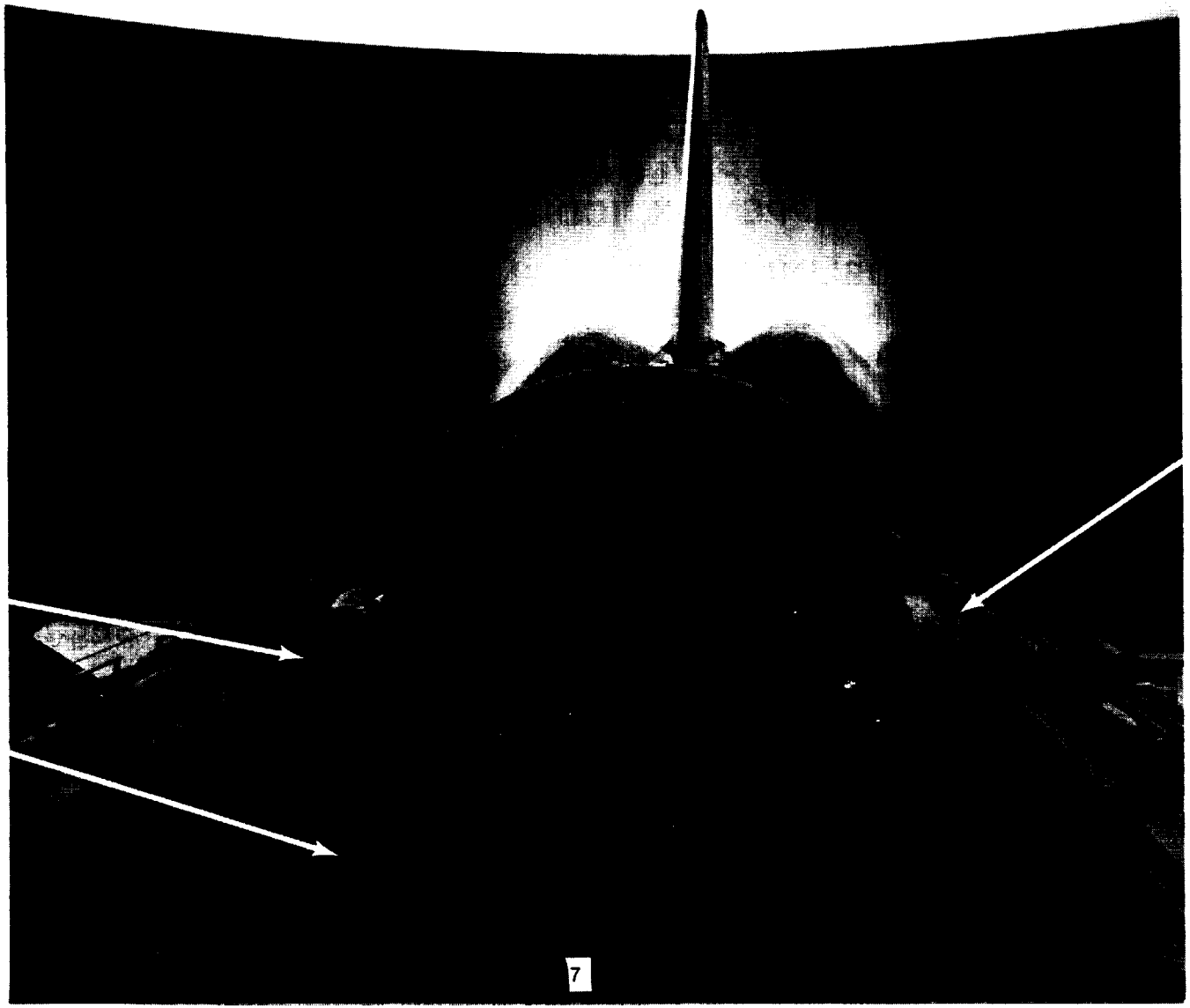

AVIONICS GUIDELINES

S-84-01486

- IN THE AVIONICS AREA, GUIDELINES ARE PROVIDED IN THE SPACE SHUTTLE SYSTEM PAYLOAD ACCOMMODATIONS, JSC 07700, VOLUME XIV, AND ITS APPENDIX, ICD-2-19001
- THESE GUIDELINES HAVE BEEN DEVELOPED TO AID IN EQUITABLE SHARING OF AVIONICS SERVICES AMONG ALL PAYLOADS WITHIN A MISSION CARGO MANIFEST
- THESE GUIDELINES RECOMMEND THAT EACH PAYLOAD TRY TO ACHIEVE ITS MISSION GOAL WHILE STAYING WITHIN THE POWER, COMMAND AND DATA, ELECTROMAGNETIC INTERFERENCE (EMI)/ ELECTROMAGNETIC COMPATIBILITY (EMC), CONTROL PANELS, AND HARNESSING PROVIDED AS STANDARD ACCOMMODATIONS FOR MIXED CARGO FLIGHTS (JSC 07700, VOLUME XIV, SECTION 11.1)

AVIONICS DOCUMENTATION

S-84-01025

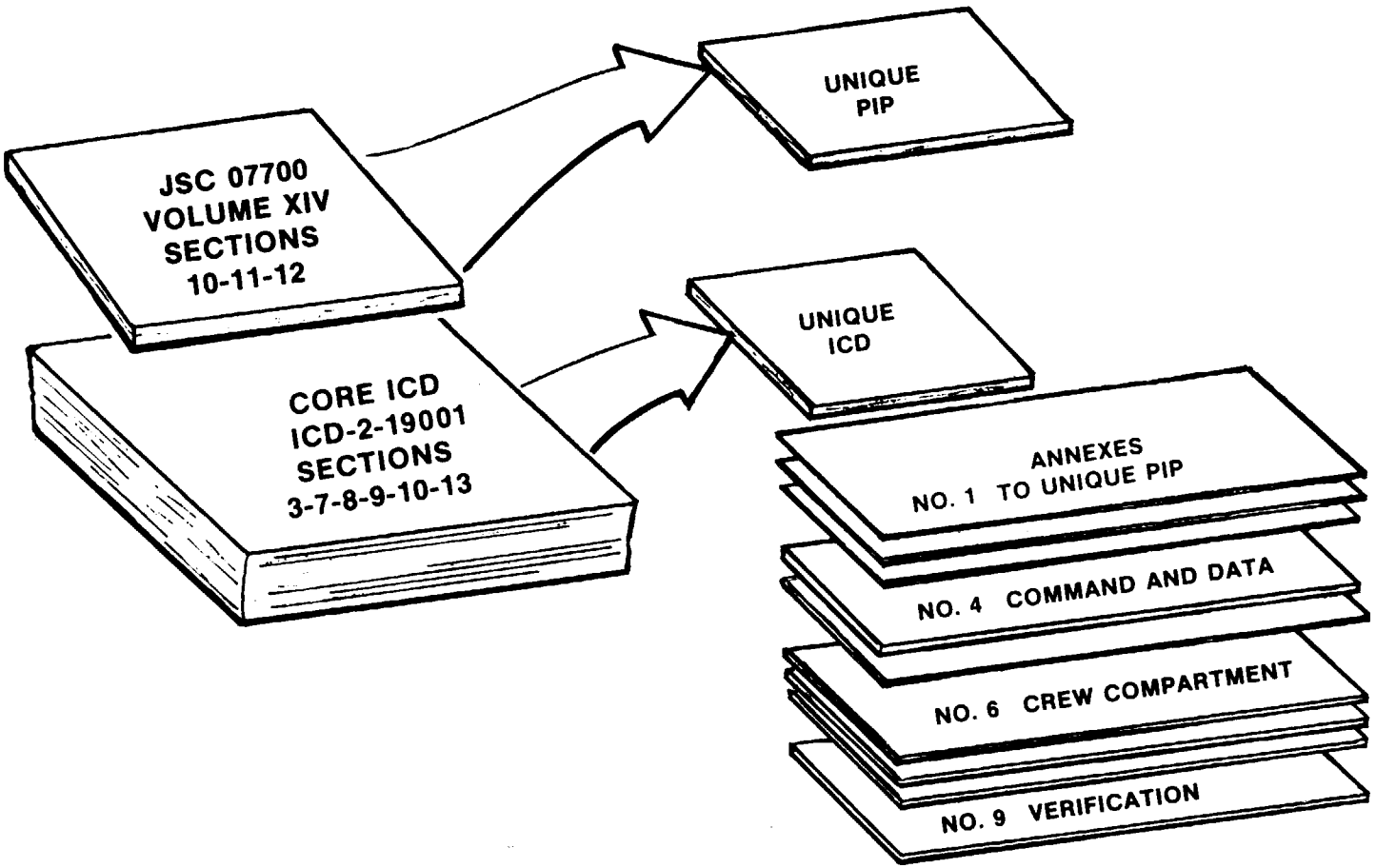

PAYLOAD POWER BUSES (28 V DC NOMINAL)

S-84-01030

	STANDARD	OPTIONAL	OPTIONAL	OPTIONAL
	PRIMARY PAYLOAD BUS	AFT BUS	AFD CABIN BUS	AUX BUS
LOCATION OF POWER OUTLET	SIP	X_o 1203 (WIRE TRAY)	PSDP/OOSDP/ MSDP	PSDP X_o 645
NUMBER OF CREW SELECTABLE INPUT BUSES	3	NOT APPLICABLE	2	NOT APPLICABLE
BUSES AVAILABLE	B OR C OR BUS TIE BUS (A-B,B-C,A-B-C)	B OR C	A OR B	A OR B
NUMBER OF OUTLET/ BUSES	4 X_o 645 OR SIP	2 X_o 1203 WIRE TRAY	3 - PSDP 2 - MSDP 1 - OOSDP	2 - PSDP 2 - X_o 645
INDEPENDENT	4	2	3	2
WIRE GAGE	0 AWG	4 AWG	12 AWG	8 AWG/X_o 645 12 AWG/PSDP
CURRENT LIMITER (EACH INDEPENDENT OUTLET)	200A FUSE	80A FUSE	15A RPC	20A RPC
ON/OFF CONTROL	P/L BUS ON/OFF	P/L AFT MAIN C ON/OFF MAIN B ON/OFF	P/L CABIN BUS A/OFF/BUS B	P/L AUX ON/OFF
SWITCHES/OUTLETS	1 SW/4 OUTLETS	1 SW/1 OUTLET	1 SW/6 OUTLETS	1 SW/4 OUTLETS
CURRENT SENSORS		1/OUTLET		

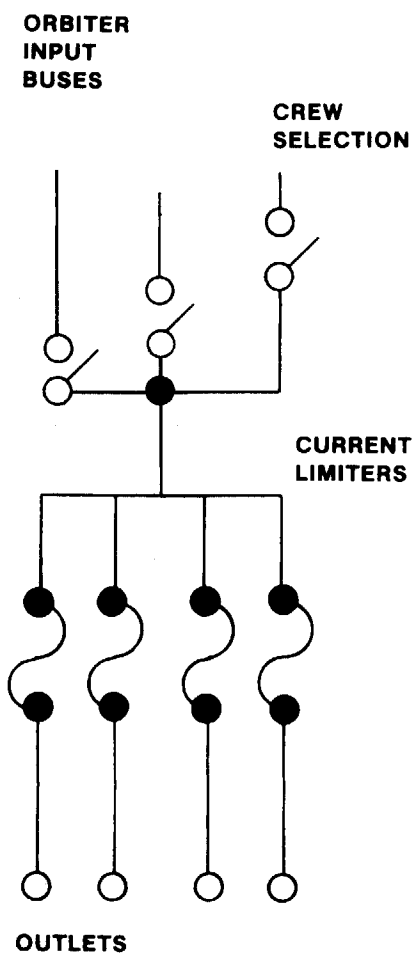

ORBITER/PAYLOAD POWER INTERFACE CHARACTERISTICS SINGLE SECTION

S-84-01895

(TOTAL CAPABILITY TO ALL PAYLOADS IS FOUR TIMES NUMBERS SHOWN)

INTERFACE	ORBITER STATION	MISSION PHASE	VOLTAGE RANGE (VOLTS)*	POWER (kW)		TIME LIMITATION ON PEAK POWER	COMMENTS
				MAXIMUM CONTINUOUS	PEAK		
PRI P/L POWER CONNECTOR	SIP	GROUND OPERATION (GSE POWER)	25.8-32	0.75		15 MIN/3 HR	NORMAL CHECKOUT
			25.8-32	1.75	3.0	15 MIN/3 HR	ORBITER POWERED DOWN
PRI P/L POWER CONNECTOR	SIP	PRELAUNCH/ ASCENT/ DESCENT/ POSTLANDING	25.8-32	0.25	0.375	2 MIN/PHASE	
PRI P/L POWER CONNECTOR	SIP	ON-ORBIT PAYLOAD OPERATIONS	25.8-32	1.75	3.0	15 MIN/3 HR	TIME SHARE ORBITER BUS WITH 3 FUEL CELLS OPERATING

*ASSUMES ONE SECTION AT PEAK POWER. TWO SECTIONS AT MAXIMUM CONTINUOUS POWER AND ONE SECTION AT 25 PERCENT OF MAXIMUM CONTINUOUS POWER

ORBITER/CARGO POWER INTERFACE CHARACTERISTICS

S-84-01444

- IF A FUEL CELL FAILURE OCCURS DURING ON-ORBIT OPERATION, CARGO POWER MAY BE SUPPLIED FROM THE ORBITER BUS AND TIME SHARED WITH ORBITER SUBSYSTEMS AT A REDUCED LEVEL OF 50-W CONTINUOUS PER PAYLOAD
- A PAYLOAD MAY EXPERIENCE A TOTAL LOSS OF POWER IF THE FC POWERING THE ORBITER BUS CONNECTED TO THE PAYLOAD FAILS. POWER IS MANUALLY RESTORED TO THE BUS BY THE ORBITER CREW WITHIN A MAXIMUM OF 15 MIN
- USE OF POWER FROM ALL SOURCES IS LIMITED BY HEAT REJECTION CAPABILITY TO THAT SPECIFIED FOR THE PRIMARY PAYLOAD BUS

POWER

S-84-01492
Rev 1

PAYLOAD DESIGN

- REQUIREMENTS
  - THE PAYLOAD IS REQUIRED TO
    - — PROVIDE POWER DISCONNECTS THAT CAN BE CONTROLLED FROM THE AFT FLIGHT DECK TO ALLOW THE CREW TO LIMIT POWER USAGE DURING ORBITER EMERGENCIES AND DURING PAYLOAD FAILURES OR EMERGENCIES
    - — PROVIDE FUSING OR OTHER CURRENT LIMITERS THAT PROTECT PAYLOAD/ORBITER WIRING
- INFORMATION THE CUSTOMER FURNISHES
  - DETAILS OF THE INFORMATION NEEDED WILL BE COVERED IN THE PAYLOAD-UNIQUE ICD
  - IN GENERAL TERMS, THE CUSTOMER IDENTIFIES THE POWER AND VOLTAGE LEVELS THE PAYLOAD REQUIRES DURING MAJOR MISSION PHASES. THE CUSTOMER ALSO IDENTIFIES THE INPUT POWER CIRCUITRY, CONTACTORS, RELAYS, ETC

PAYLOAD POWER FLIGHT EXPERIENCE

S-84-01422
Rev 1

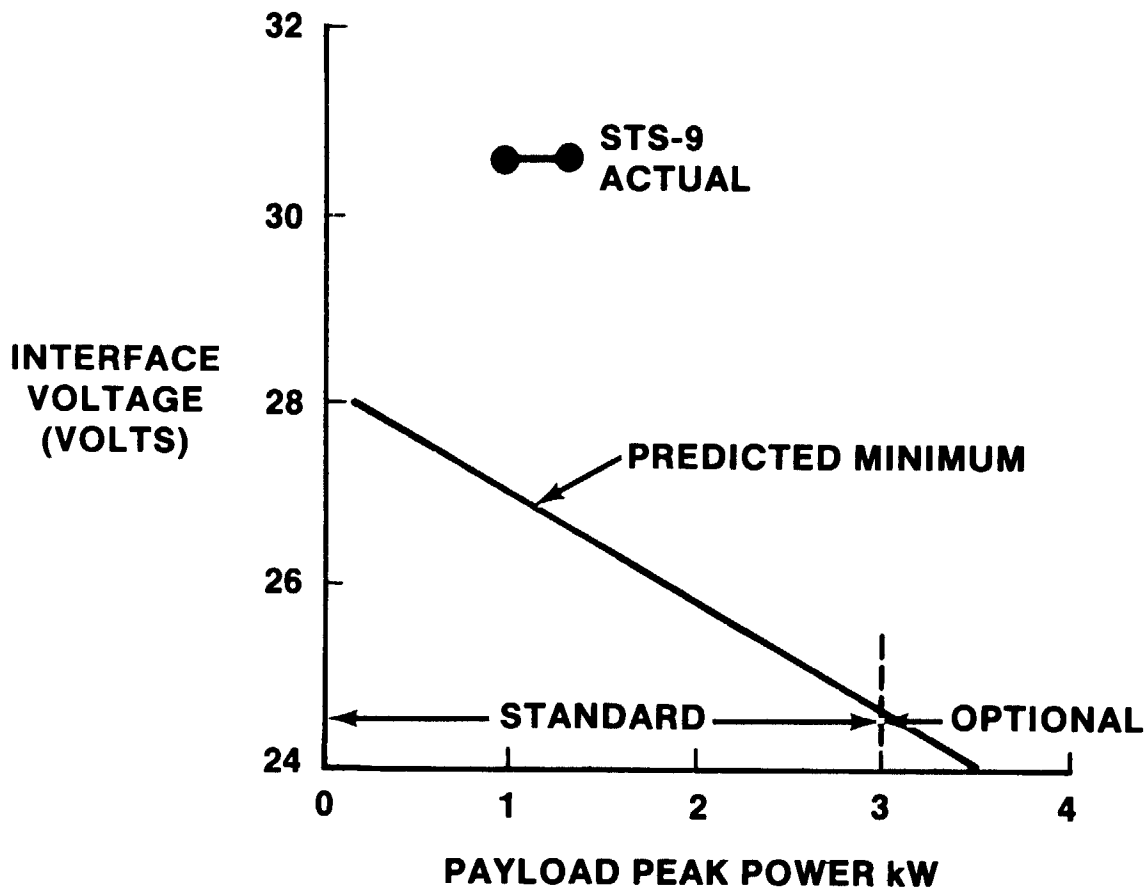

S-84-01413

POWER (CONT)

FLIGHT EXPERIENCE

- FLIGHT EXPERIENCE HAS SHOWN THAT THE ORBITER CAN SUPPLY PAYLOADS WITH THEIR POWER REQUIREMENT WHILE STAYING WELL WITHIN THE VOLTAGE RANGES SHOWN IN ICD-2-19001
- DURING THE STS-9 MISSION, THE SPACELAB WAS POWERED BY FOUR PRIMARY PAYLOAD BUS OUTLETS AT VARYING POWER LEVELS. SINCE THE SPACELAB WAS INSTRUMENTED TO PROVIDE BOTH INPUT VOLTAGE AND CURRENT, THAT FLIGHT WAS ABLE TO DOCUMENT SEVERAL POWER CASES, OF WHICH TWO ARE DESCRIBED HERE
- THESE TWO CASES ARE EQUIVALENT TO 1.0 kW AND 1.25 kW FOR A SINGLE SECTION PAYLOAD. THE ACTUAL VOLTAGES ON THIS MISSION CORRESPOND TO AT LEAST A +3 VOLT MARGIN OVER THE "WORST CASE" LOW VOLTAGES SHOWN IN ICD-2-19001
- EVEN ALLOWING FOR THE HIGHER VOLTAGE OF THE NEW FUEL CELLS ON THIS FLIGHT, THE DATA SHOW THAT THE ORBITER WILL BE ABLE TO SUPPLY POWER AND VOLTAGE ADEQUATE FOR PAYLOAD AVIONICS

POWER (CONT)

S-84-01474

PAYLOAD INTEGRATION PROCESS

- THE PAYLOAD'S POWER REQUIREMENTS ARE NEGOTIATED AND DOCUMENTED IN THE PAYLOAD INTEGRATION PLAN (PIP)
- THE PAYLOAD'S VOLTAGE REQUIREMENTS AND CONTROL REQUIREMENTS ARE NEGOTIATED AND DOCUMENTED IN THE INTERFACE CONTROL DOCUMENT (ICD)
- THE IMPLEMENTATION OF THESE REQUIREMENTS IS DEFINED IN THE STS-PROVIDED INTERFACE DIAGRAM AND INTEGRATED SCHEMATIC, WHICH ARE REVIEWED BY CUSTOMER, NASA, AND INTEGRATION CONTRACTOR ROCKWELL INTERNATIONAL (RI) AT THE CARGO INTEGRATION REVIEW

DESIGN AND DEVELOPMENT

S-84-01033

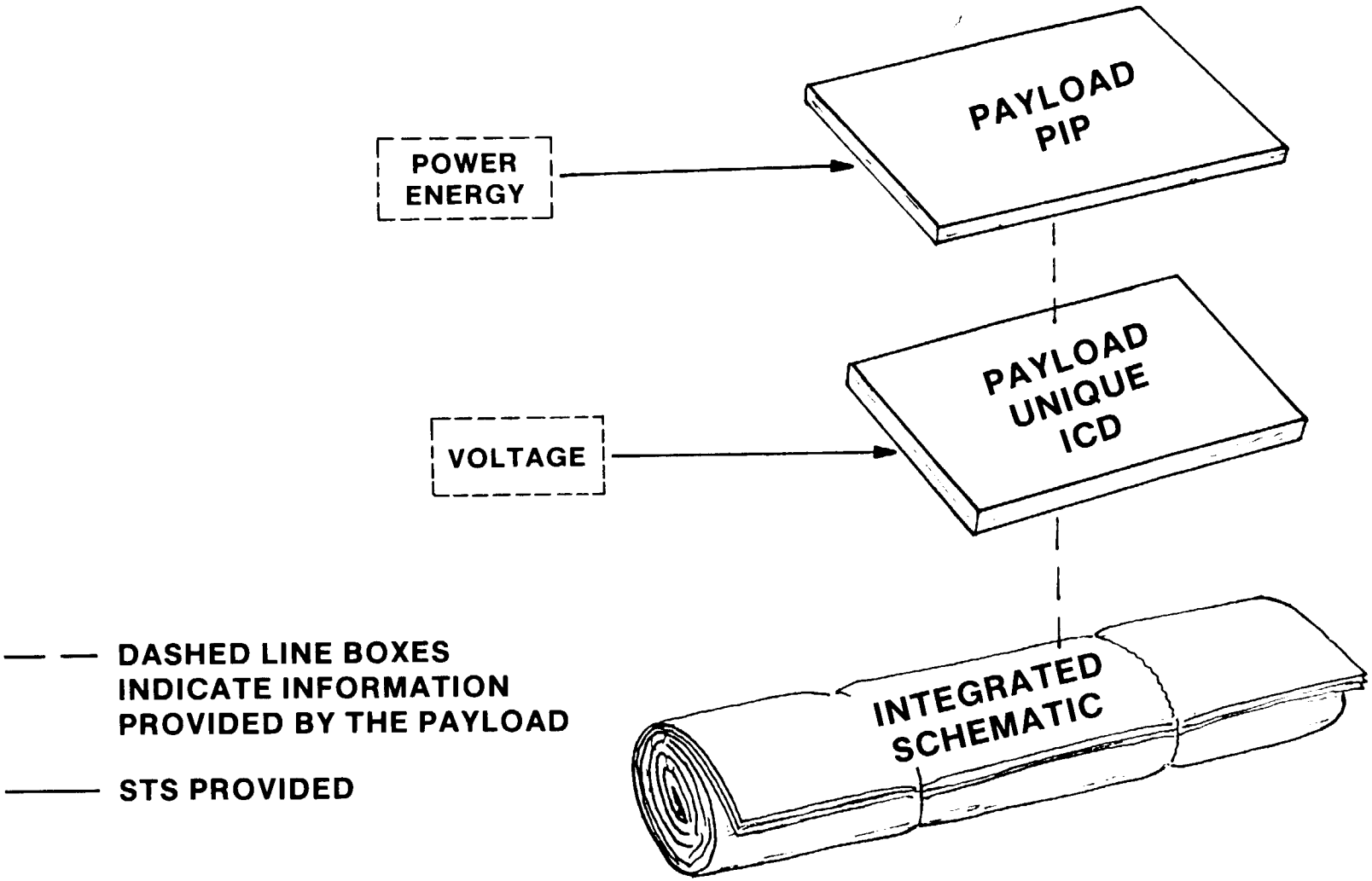

COMMAND AND DATA

S-84-01468

- THE AREA OF COMMAND AND DATA COVERS TWO MAJOR DISCIPLINES
  - *COMMUNICATIONS* — THE TRANSMITTING OF COMMANDS AND DATA BASES UP TO THE SHUTTLE FROM THE GROUND AND TRANSMITTING OF MISSION AND PAYLOAD DATA BACK DOWN TO THE GROUND
  - *COMMAND AND DATA PROCESSING* — THE HANDLING AND PROCESSING OF COMMANDS AND DATA WITHIN THE SHUTTLE EQUIPMENT

ORBITER AVIONICS SYSTEM OVERVIEW

S-84-01040
Rev 1

PDI: PAYLOAD DATA INTERLEAVER
PCMMU: PULSE CODE MODULATION MASTER UNIT
PR: PAYLOAD RECORDER
PI: PAYLOAD INTERROGATOR
NSP: NETWORK SIGNAL PROCESSOR
MDM: MULTIPLEXER/DEMULTIPLEXER
GPC: GENERAL PURPOSE COMPUTER
OR: OPERATIONAL RECORDER
PSP: PAYLOAD SIGNAL PROCESSOR

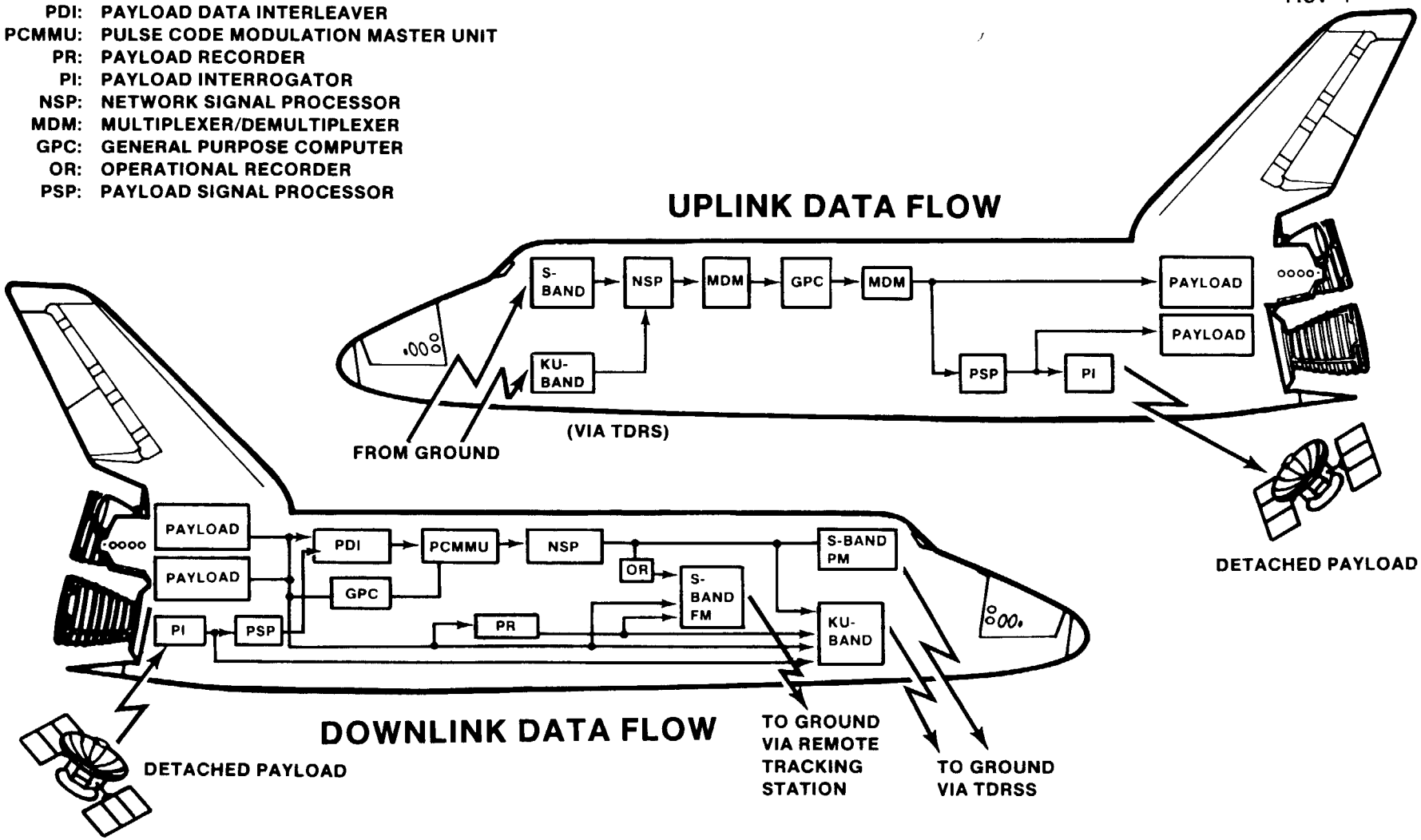

COMMAND AND DATA (CONT)

S-84-01487

COMMUNICATIONS

- FOR COMMUNICATIONS, THE SHUTTLE HAS TWO SYSTEMS — EACH WITH STRENGTHS AND LIMITATIONS
  - S-BAND SYSTEM
    - PM — EXCELLENT GROUND STATION COVERAGE; ROUGHLY HALF ITS BANDWIDTH IS USED FOR ORBITER INSTRUMENTATION DATA
  - KU-BAND SYSTEMS
    - DOUBLE THE BANDWIDTH OF THE S-BAND SYSTEM
    - SINCE A DEVELOPED ANTENNA IS USED, OPERATION IS RESTRICTED TO ON-ORBIT WITH PAYLOAD BAY DOORS OPEN
    - WITH THE TRACKING AND DATA RELAY SATELLITES (TDRS), THERE IS EXCELLENT ORBITAL COVERAGE
    - PROVIDE REAL-TIME TV COVERAGE OF PAYLOAD BAY OPERATIONS
    - POSSIBLE EXPOSURE OF PAYLOADS TO A 10 V/M KU-BAND RADIATION WITH A POTENTIAL EXPOSURE, IN CASE OF FAILURE, TO THE CENTER BEAM OF HIGHER LEVELS

COMMAND AND DATA (CONT)

S-84-01498

INTERFACES

- ORBITER AVIONICS OFFER A WIDE RANGE OF INTERFACES TO PAYLOADS. THEY VARY IN COMPLEXITY AND CAPABILITY, FROM PANELS WITH SWITCHES AND ON/OFF INDICATORS UP TO DUPLEX HIGH SPEED SERIAL DATA CONNECTIONS TO THE ONBOARD COMPUTER
- IN THE FOLLOWING MATERIAL, THOSE AVIONICS SERVICES THAT REQUIRE TAILORING FOR EACH PAYLOAD APPLICATION ARE DENOTED WITH A "T"

COMMAND AND DATA (CONT)

S-84-01481

PAYLOAD DATA SERVICES

- FOR DATA THAT ARE TO BE REVIEWED AFTER THE MISSION, THERE ARE TWO MAJOR OPTIONS
  - ORBITER'S PAYLOAD RECORDER
  - T____ TELEMETRY TO GROUND FOR CUSTOMER RECORDING
- FOR DATA THAT ARE TO BE REVIEWED BY THE CREW DURING THE MISSION, THERE ARE SEVERAL OPTIONS
  - STANDARD SWITCH PANEL (SSP)
  - SPECIAL PAYLOAD PROVIDED PANEL
  - T____ MULTIFUNCTION CRT DISPLAY SYSTEM (MCDS) COUPLED TO THE PAYLOAD BY
    - T____ PROCESSED PAYLOAD DATA INTERLEAVER (PDI) DATA
    - T____ MULTIPLEXER/DEMULTIPLEXER (MDM) DISCRETES
    - T____ COMPUTER DATA BUS
    - T____ MDM SERIAL INPUT/OUTPUT
- FOR DATA THAT ARE TO BE REVIEWED ON THE GROUND DURING THE MISSION, THE MAJOR OPTIONS ARE
  - BLOCK MODE PDI
  - T____ PROCESSED MODE PDI
  - T____ COMPUTER DOWN LIST

T = TAILORED

DATA PROCESSING

S-84-02093

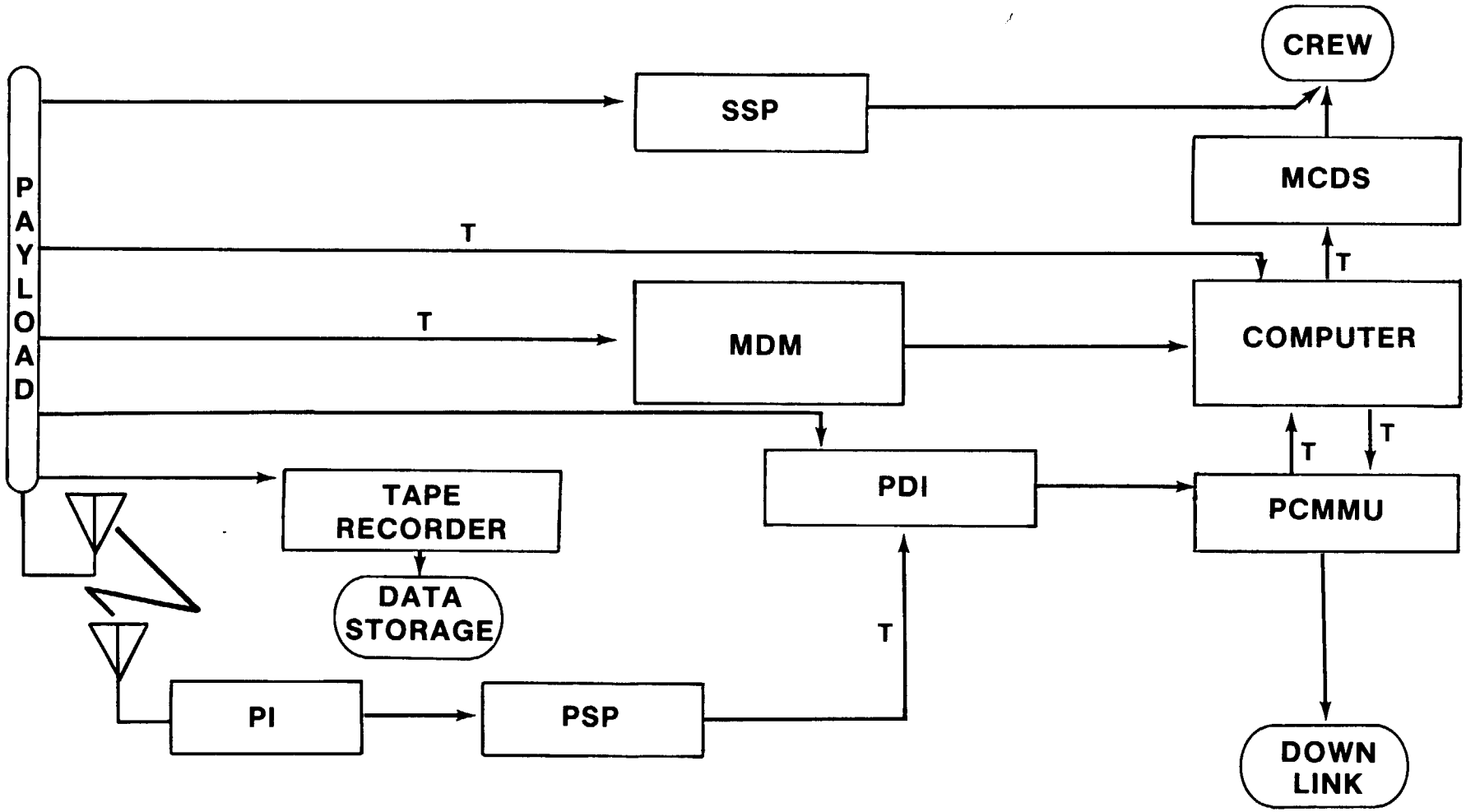

T = TAILORED

DATA INTERFACES

S-84-01896

SSP INDICATORS		10-2 POSITION, 2-3 POSITION
TAPE RECORDER	DIGITAL	32 to 64 kbps (5 V DIFFERENTIAL)
	ANALOG	1.9 kHz TO 125 kHz (1 V DIFFERENTIAL)
MCDS		40 ANALOG OR DISCRETE PARAMETERS
TELEMETRY		
THROUGHPUT	DEPLOYABLE	1 kbps NOMINAL / 32 kbps (20 MIN) CHECKOUT
	SORTIE	8 kbps
	DETACHED	16 kbps (PI-PSP-PDI)
GPC DOWNLIST		32-16-bit WORDS ~ AVERAGE RATE 800 bps
HIGH SPEED INTERFACE		
• GPC DATA BUS		1 Mbps - MIL-STD-1572 - MIA INTERFACE
• MDM SIO		1 Mbps - MIL-STD-1512 - USER-DEVELOPED INTERFACE

S-84-01493

COMMAND AND DATA (CONT)

PAYLOAD COMMAND INTERFACES

- FOR COMMANDS GENERATED BY THE CREW MEMBERS, THE OPTIONS ARE
  - STANDARD SWITCH PANEL (SSP)
  - T____MCDS COUPLED TO THE PAYLOAD BY
    - T____MDM DISCRETES
    - T____PSP
    - T____COMPUTER DATA BUS
    - T____MDM SERIAL INPUT/OUTPUT
- FOR UPLINKED COMMANDS, THE PATHS ARE THOSE TAILORED PATHS USED BY THE MCDS
- FOR DETACHED PAYLOADS, THE LINK OPTIONS ARE
  - DIRECT GROUND STATION COMMUNICATIONS
  - DIRECT PAYLOAD INTERROGATOR INTERFACE (LIKE IUS)
  - T____PAYLOAD SIGNAL PROCESSOR (COMPUTER PROCESSED UPLINK)

T = TAILORED

COMMANDS PROCESSING

S-84-01026

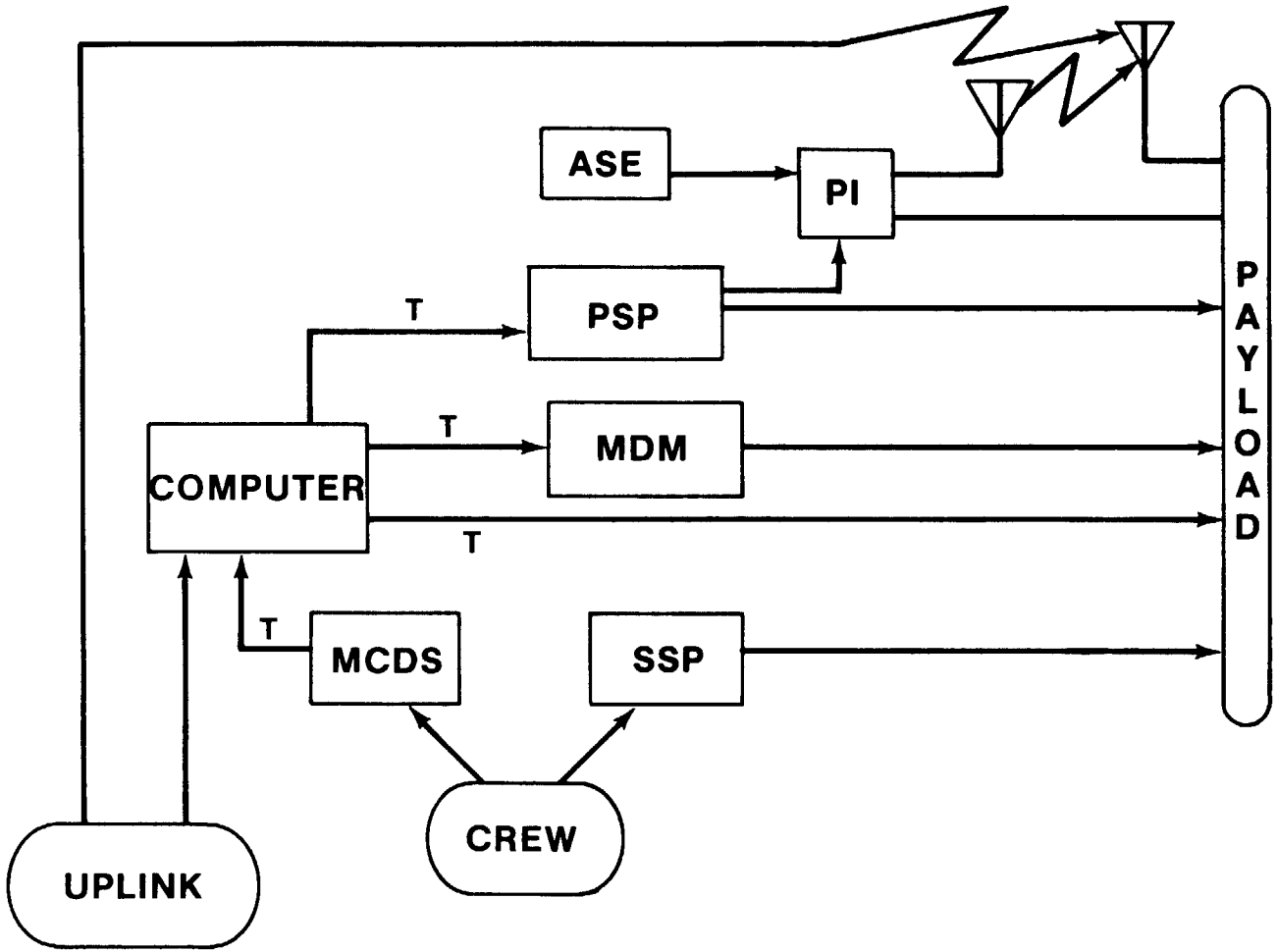

T = TAILORED

COMMAND INTERFACES

S-84-01893

SSP SWITCHES	6-2 POSITION, 6-3 POSITION
DIRECT FROM GROUND	INDEPENDENT OF ORBITER AVIONICS EXCEPT FOR EMC
MCDS	40 COMMANDS
TELEMETRY	
THROUGHPUT	2 kbps
BOX OUTPUT RATES	
• PSP	2 kbps
• GPC DATA BUS	1 Mbps
• MDM SIO	1 Mbps

PAYLOAD SOFTWARE SUPPORT

S-84-01407

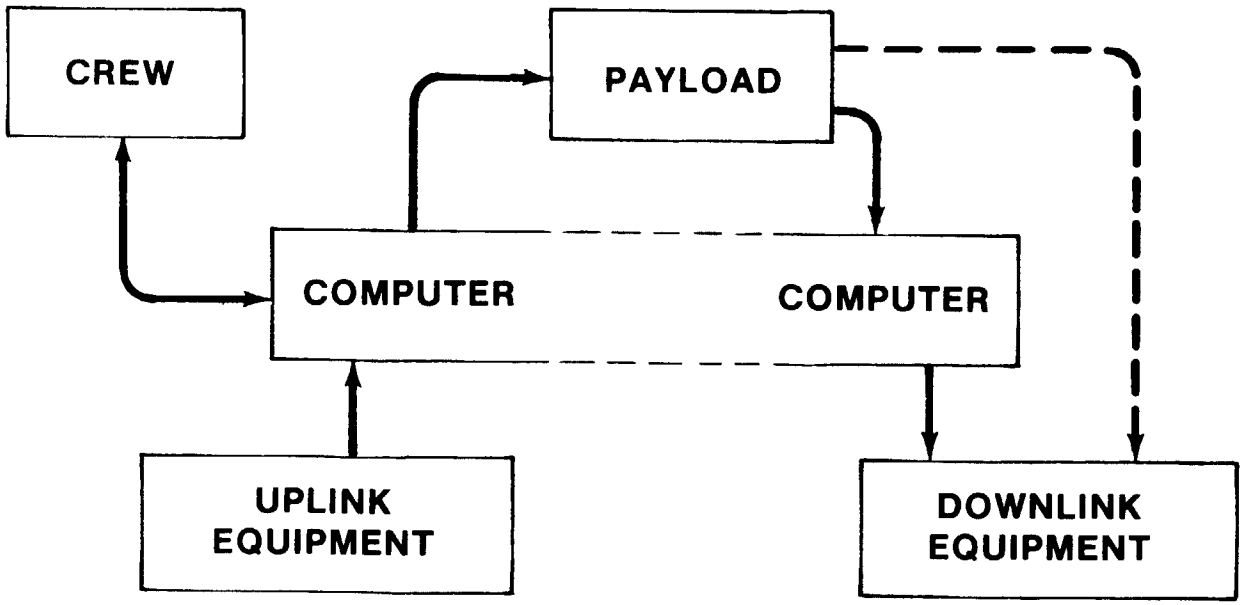

PAYLOAD SOFTWARE SUPPORT

S-84-01485

- ONBOARD DATA PROCESSING FOR 40 PARAMETERS IS PROVIDED AS A STANDARD SERVICE TO EACH SECTION THAT INCLUDES
  - CREW DISPLAY
  - SCALING
  - CONVERSION TO ENGINEERING UNITS
  - LIMIT SENSING
  - DOWNLIST
- THESE 40 PARAMETERS MAY BE EITHER ANALOGS OR DISCRETES
- ONBOARD INITIATED COMMAND PROCESSING FOR 40 SINGLE COMMANDS IS PROVIDED AS A STANDARD SERVICE TO EACH SECTION

S-84-01479

PAYLOAD SOFTWARE SUPPORT TIME AVAILABILITY

- SOFTWARE IS AVAILABLE TO SUPPORT PAYLOADS IN THE PRELAUNCH PHASE UNTIL APPROXIMATELY T-20 MINUTES. AT THIS TIME, THE ASCENT MEMORY CONFIGURATION IS LOADED. FOR A NOMINAL MISSION, THE ON-ORBIT MEMORY RECONFIGURATION TO SUPPORT PAYLOAD ON-ORBIT OPERATIONS (GPC SUPPORT) IS AVAILABLE APPROXIMATELY 77 MINUTES AFTER LIFT-OFF

  THE ON-ORBIT SOFTWARE TO SUPPORT PAYLOADS IS AVAILABLE UNTIL THE MEMORY IS RECONFIGURED TO SUPPORT THE ENTRY PHASE OF THE FLIGHT. THE ENTRY MEMORY CONFIGURATION OCCURS APPROXIMATELY 3 HOURS BEFORE THE ENTRY PHASE

FLIGHT EXPERIENCE TELEMETRY DATA RATES

S-84-01894

DATA RATES (kbps)	TELEMETRY BANDWIDTH (kbps)	FLIGHTS	IMPACT ORBITER TELEMETRY REDUCTION (kbps)
1	1.6	5, 6, 7, 8, 11, 13, 14	NONE
8	9.6	7, 8, 11, 14	REDUCE OI 57.6 → 44.8
16	17.6	6, 13	REDUCE OI 57.6 → 44.8 GPC 2 19.2 → 16

OI = ORBITER INSTRUMENTATION

GPC = GENERAL PURPOSE COMPUTER

S-84-01455

COMMAND AND DATA (CONT)
PAYLOAD INTEGRATION PROCESS

- THE PAYLOAD COMMAND AND DATA REQUIREMENTS FOR DATA RATES AND PATHS ARE NEGOTIATED AND DOCUMENTED IN THE PIP
- THE PAYLOAD COMMAND AND DATA PATHS REQUIREMENTS ARE NEGOTIATED AND THE MECHANIZATION DOCUMENTED IN THE PAYLOAD-UNIQUE ICD
- THE PAYLOAD COMMAND AND DATA RATES, FORMAT, INFORMATION CONTENT, AND OTHER INFORMATION ARE NEGOTIATED AND DOCUMENTED IN ANNEX 4, COMMAND AND DATA ANNEX, TO THE PIP
- THE IMPLEMENTATION OF THESE REQUIREMENTS, AS DOCUMENTED IN THE INTEGRATED SCHEMATIC AND ANNEX 4, IS REVIEWED BY THE CUSTOMER, NASA, AND INTEGRATION CONTRACTOR (RI) AT THE CARGO INTEGRATION REVIEWS
- PRIOR TO FLIGHT, IMPLEMENTATION OF THESE REQUIREMENTS IS VERIFIED IN THE CARGO INTEGRATION TEST EQUIPMENT (CITE) FACILITIES AT KSC. THESE VERIFICATION REQUIREMENTS ARE DOCUMENTED IN ANNEX 9 TO THE PIP

DESIGN AND DEVELOPMENT

S-84-01031

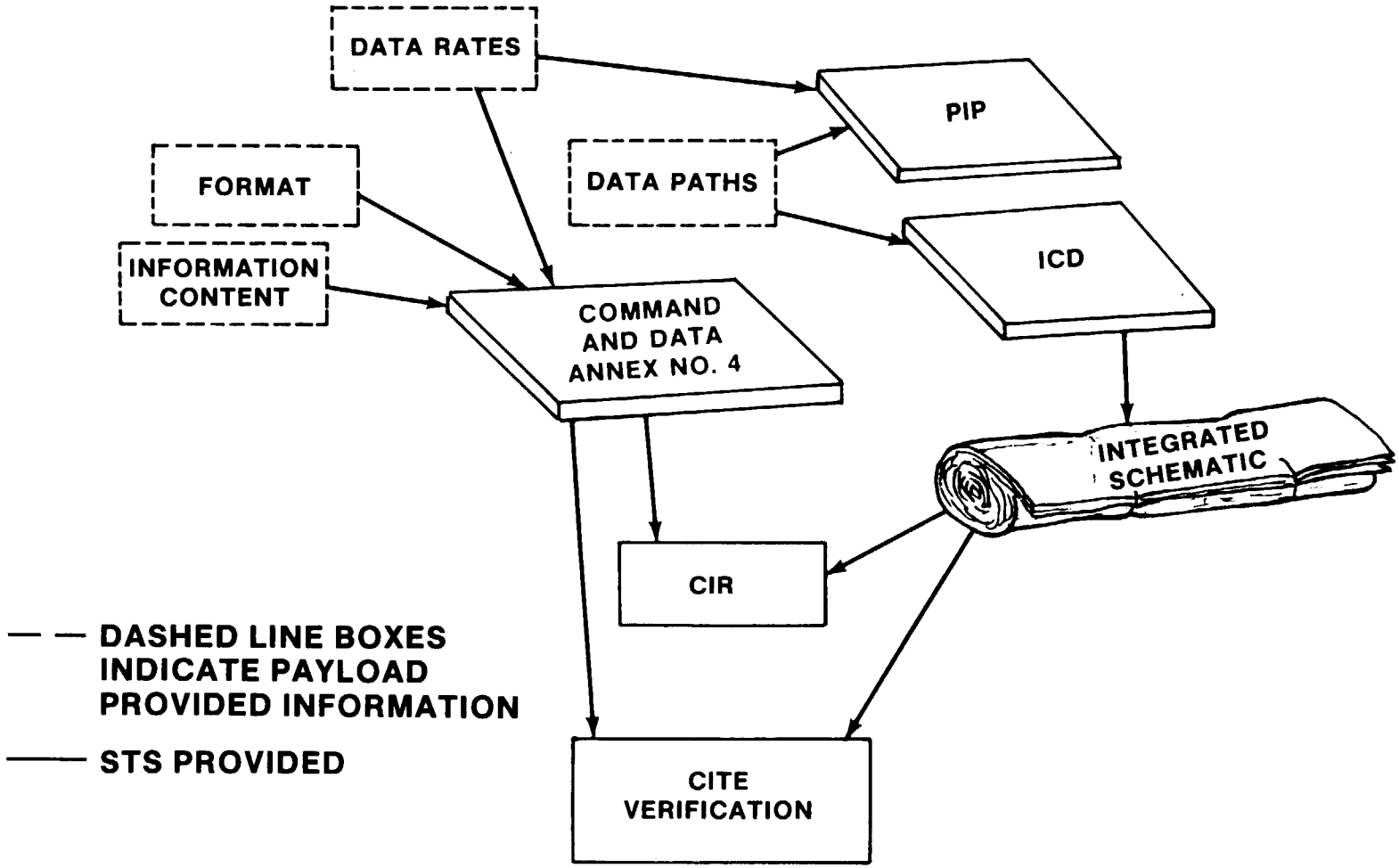

HARNESSING

S-84-01473

- STANDARD MIXED CARGO HARNESSING HAS BEEN PROVIDED FOR THE PAYLOAD BAY AND THE AFT FLIGHT DECK
  - THE SMCH FUNCTIONS ESSENTIALLY AS "EXTENSION CORDS" TO CONNECT PAYLOAD IN THE PAYLOAD BAY WITH AVIONICS SERVICES AT THE AFT FLIGHT DECK'S PAYLOAD STATION PANEL
  - IT IS UNNECESSARY FOR MOST PAYLOADS TO HAVE CUSTOMIZED PAYLOAD BAY SMCH, EXCEPT IN THE AREA OF POWER
- THE SMCH BRINGS POWER TO THE STARBOARD SIDE OF THE PAYLOAD, SIGNAL AND CONTROL INTERFACES TO THE PORT SIDE, AND THE COMPUTER DATA BUS TO BOTH PORT AND STARBOARD SIDES OF THE PAYLOAD

DESIGN AND DEVELOPMENT

S-84-01035

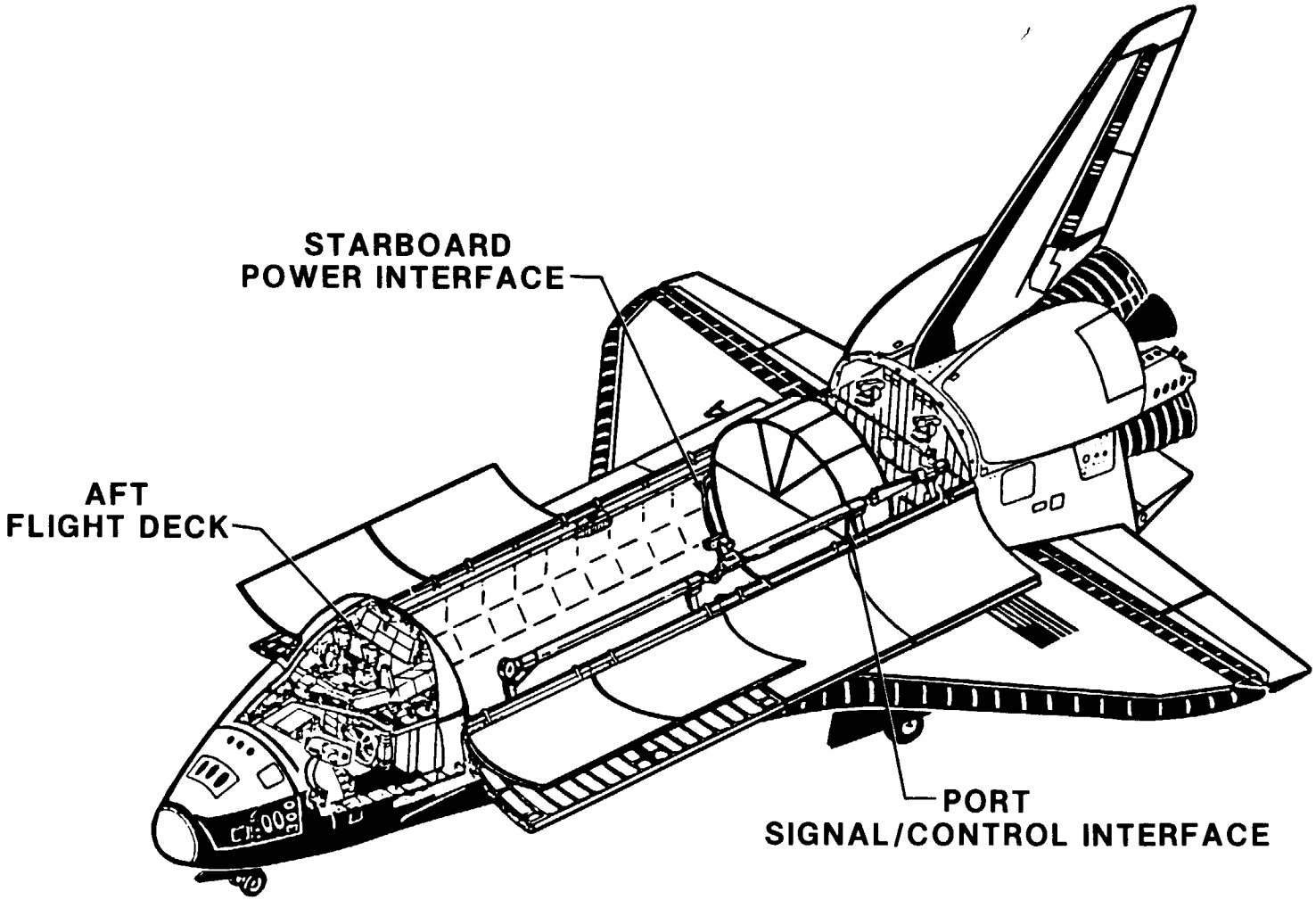

S-84-01480

ELECTROMAGNETIC INTERFERENCE AND COMPATIBILITY

EMEC CLASSFICATION

- SINCE THERE ARE ORBITER SIGNAL AND CONTROL HARNESSES IN CLOSE PROXIMITY TO A PAYLOAD'S HARNESSES, AND ALSO TO OTHER PAYLOAD HARNESSES, A SYSTEM OF CLASSIFYING A CIRCUIT'S ELECTROMAGNETIC EFFECTS COMPATIBILITY (EMEC) HAS BEEN ESTABLISHED TO AID IN MUTUAL ELECTROMAGNETIC COMPATIBILITY (EMC)
- THIS SYSTEM PROTECTS THE SIGNALS IN THE "ML" HARNESSES FROM THE POWER TRANSIENTS OF THE "EO" AND "HO" HARNESSES, AND ALSO FROM THE HIGH FREQUENCY NOISE OF THE DIGITAL DATA OR TV VIDEO IN THE RF HARNESSES. THE PROTECTION INVOLVES SEPARATE CONNECTORS, SEPARATE WIRE TRAY COMPARTMENTS, AND SPECIAL SHIELDING

CIRCUIT EMEC CLASSIFICATION

S-84-01897

CLASS	VOLTAGE	TYPE OF WIRE	PRIMARY USAGE	SHIELDING	FREQUENCY-RISE/FALL TIME
EO	>40 V	TW	ac POWER	NONE	<50 kHz OR >10 μs
HO	>6 V to ≤ 40 V	TW	dc POWER	NONE	
ML	≤6 V	TWS	ANALOG SIGNALS	SPG	
RF	ALL	TWS/TWDS	DIGITAL DATA	MPG	>50 kHz OR ≤10 μs RISE/FALL TIME
		COAX	HIGH-SPEED DIGITAL DATA OR VIDEO	MPG	>1 MHz

SMCH PROVISIONING

S-84-01450

- THE PAYLOAD BAY SMCH, COUPLED WITH THE AFT FLIGHT DECK SMCH, PROVIDE A UNIFORM SET OF AVIONICS SERVICES CONSISTENT WITH VOLUME XIV OF JSC 00700, SECTION 11.0, FOR EACH OF THE FOUR MAJOR PAYLOADS
- THIS HARNESSING IS ADAPTABLE, IN THAT A PAYLOAD'S SECTION OF THE AFT FLIGHT DECK HARNESS NORMALLY CONNECTED TO ONE-HALF OF A STANDARD SWITCH PANEL CAN BE MOVED OVER TO A UNIQUE PANEL
- A PAYLOAD REQUIRING ONE OR MORE "OPTIONAL" AVIONICS SERVICES CAN, BY MEANS OF A UNIQUE PATCH HARNESS AT THE PAYLOAD STATION DISTRIBUTION PANEL, CONNECT THESE SERVICES TO THE PAYLOAD IN THE BAY BY MEANS OF THE 10 SPARE "RF" TWISTED SHIELDED CABLES (TSP'S) IN THE SMCH

SMCH PROVISIONING — SINGLE CARGO ELEMENT

S-84-01027
Rev 1

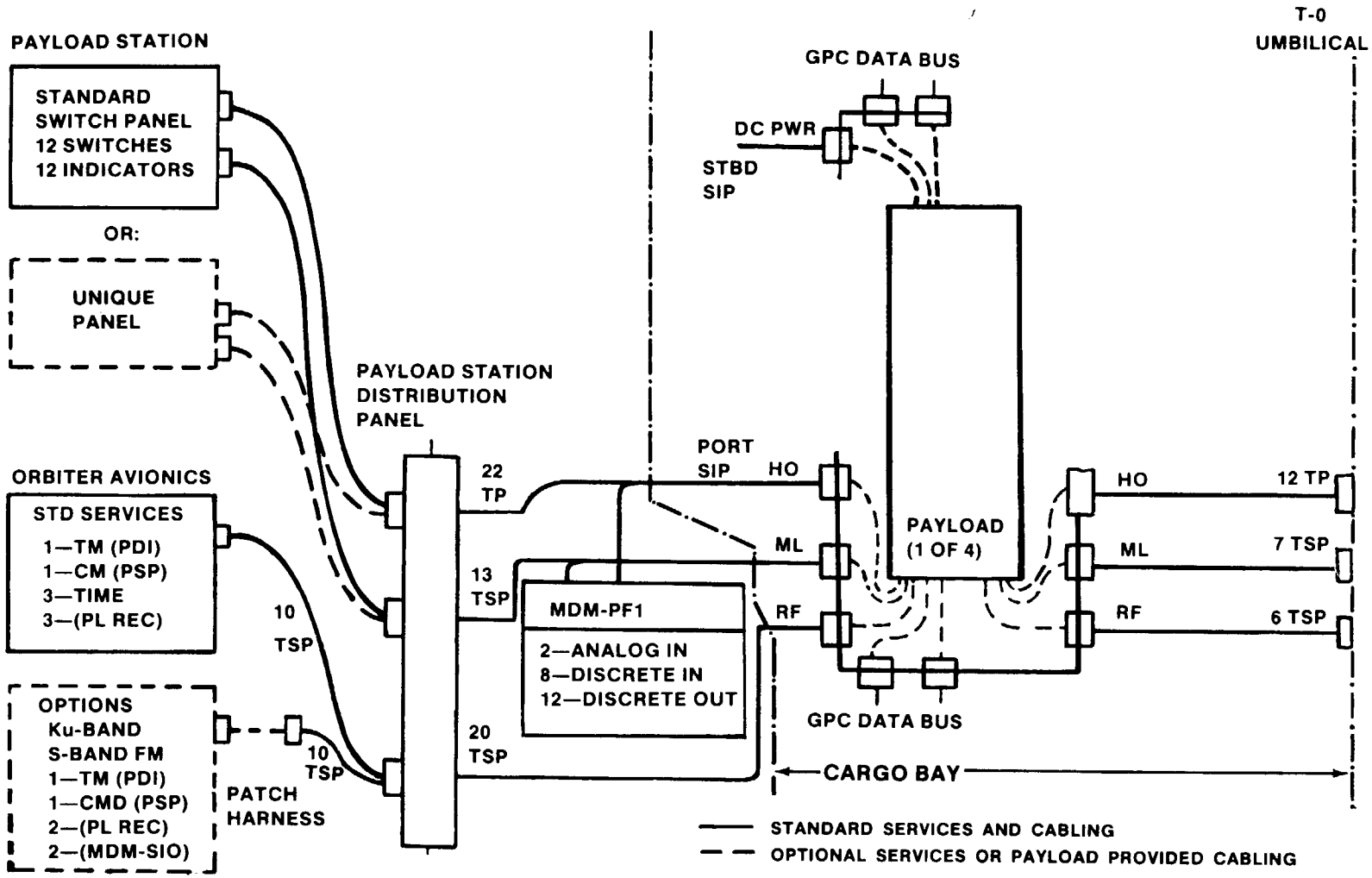

ORBITER AVIONICS SERVICES TO PAYLOADS

S-84-01019

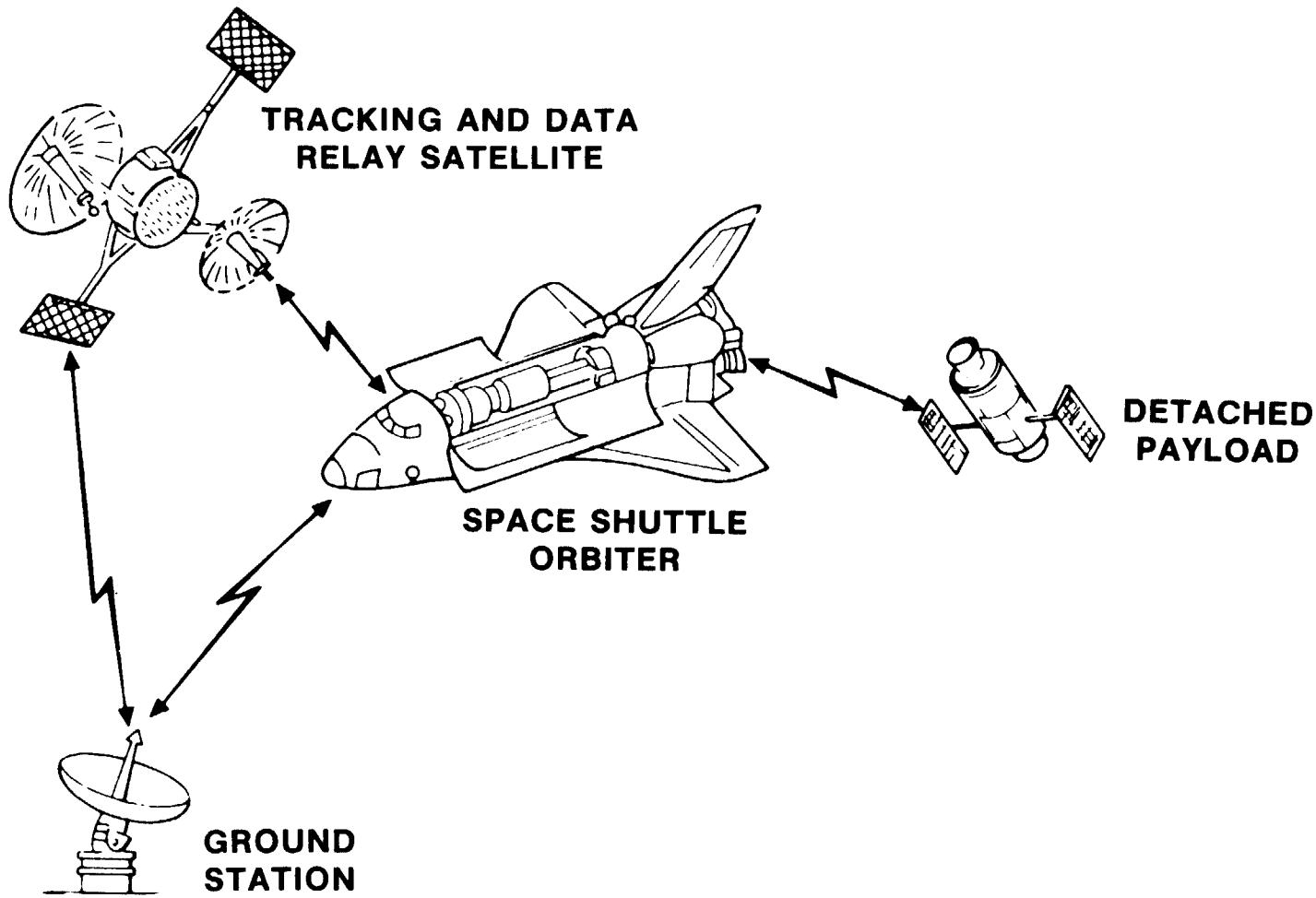

S-84-01456
Rev 1

ELECTROMAGNETIC INTERFERENCE AND COMPATIBILITY (CONT)

PAYLOAD INTEGRATION PROCESS

- THE PAYLOAD REQUIREMENT FOR UNIQUE RF COMMUNICATIONS LINK ANALYSES AND ANY MISSION OPERATION CONSTRAINTS ARE NEGOTIATED AND DOCUMENTED IN THE PIP
- THE PAYLOAD EMISSIONS AND SUSCEPTIBILITY ARE DOCUMENTED IN ANNEX 1, PAYLOAD DATA PACKAGE, TO THE PIP
- PRIOR TO THE CARGO INTEGRATION REVIEW, EMI/EMC ANALYSES ARE COMPLETED TO ESTABLISH COMPATIBILITY BETWEEN THE ORBITER AND A PAYLOAD, ONE PAYLOAD AND ANOTHER PAYLOAD, AND A PAYLOAD AND CERTAIN GROUND TRANSMITTERS
  - THE RESULTS OF THESE ANALYSES ARE REVIEWED BY NASA, THE CUSTOMERS, AND THE INTEGRATION CONTRACTOR (RI)

DESIGN AND DEVELOPMENT

S-84-01037

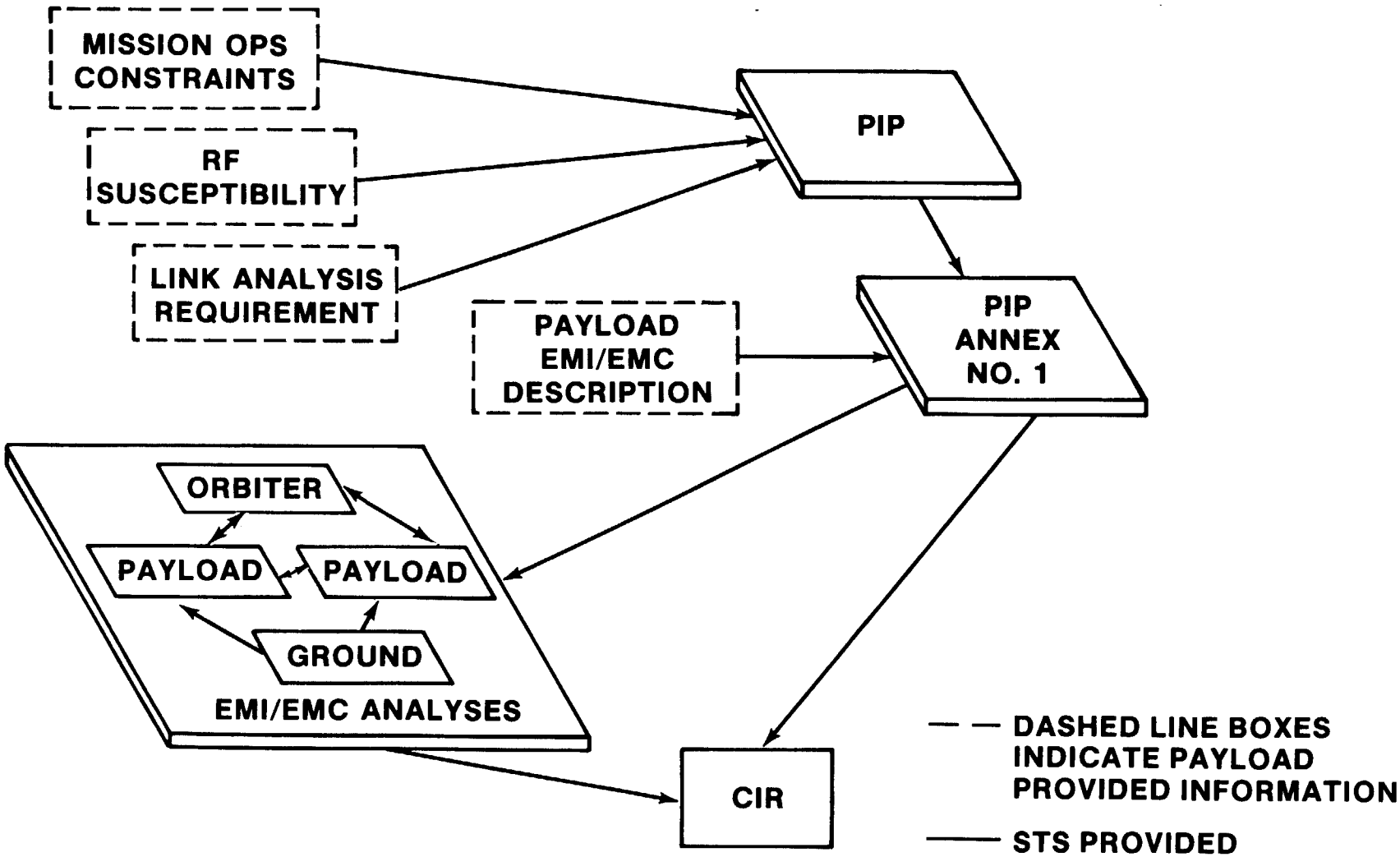

BASIC AVIONICS INTERFACE

S-84-01416

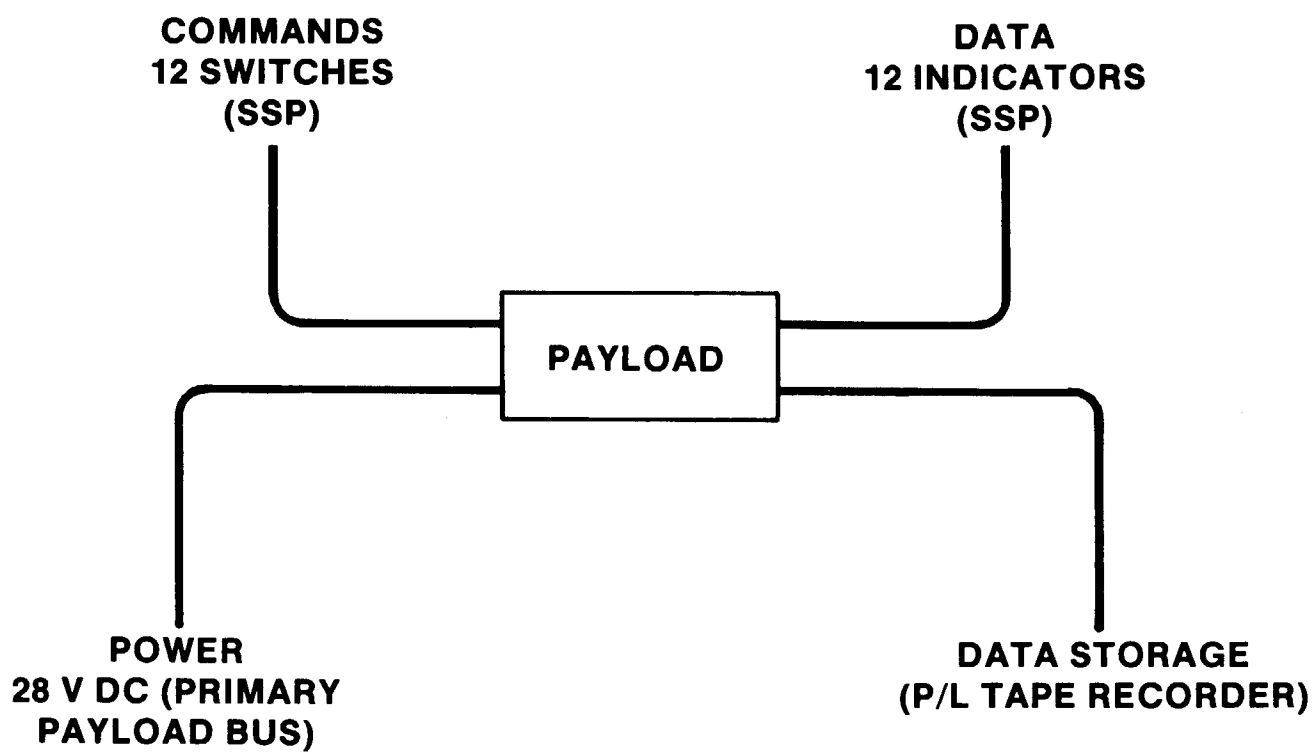

MEDIUM AVIONICS INTERFACE

S-84-01409

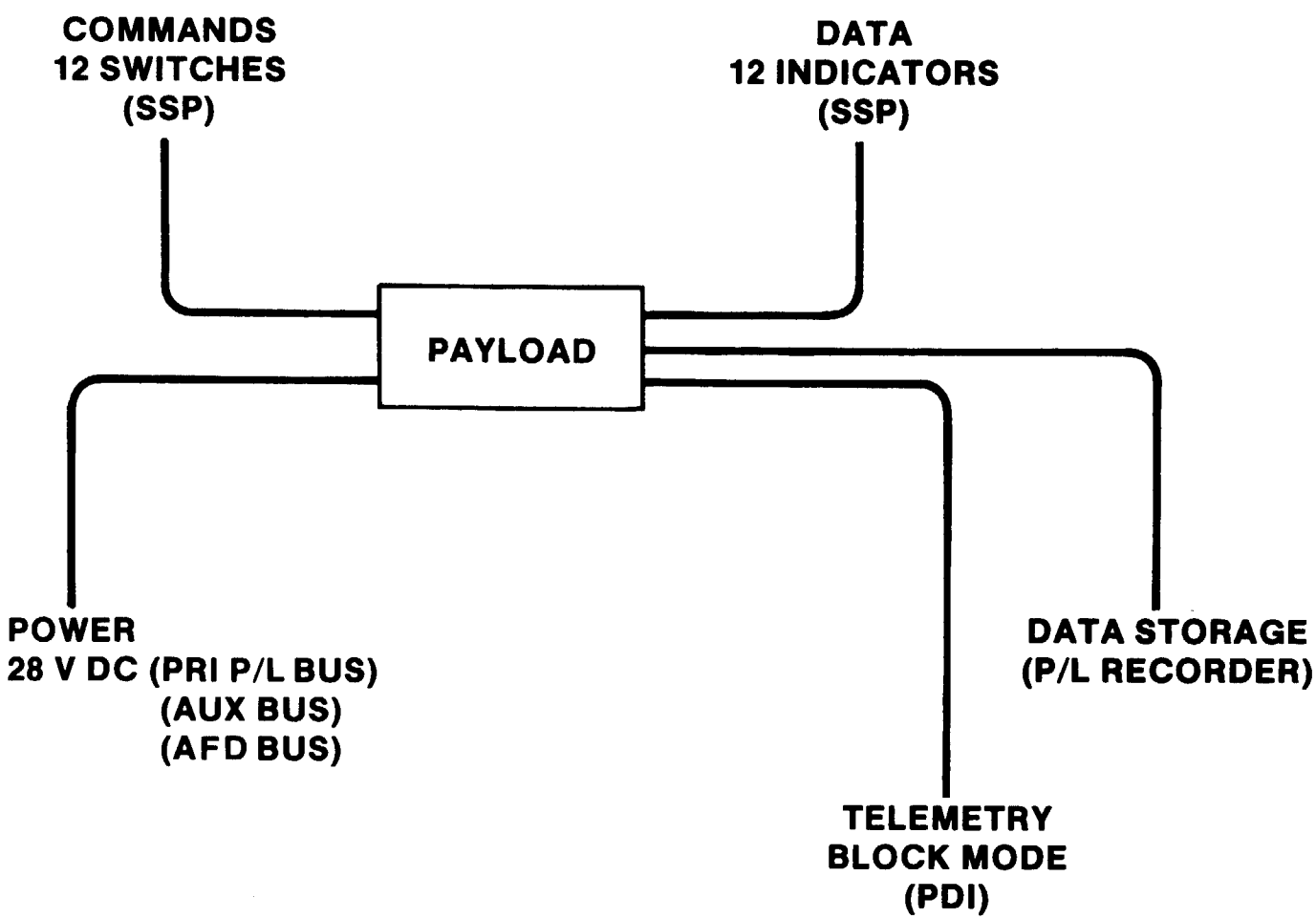

HIGH-LEVEL AVIONICS INTERFACE

S-84-01408

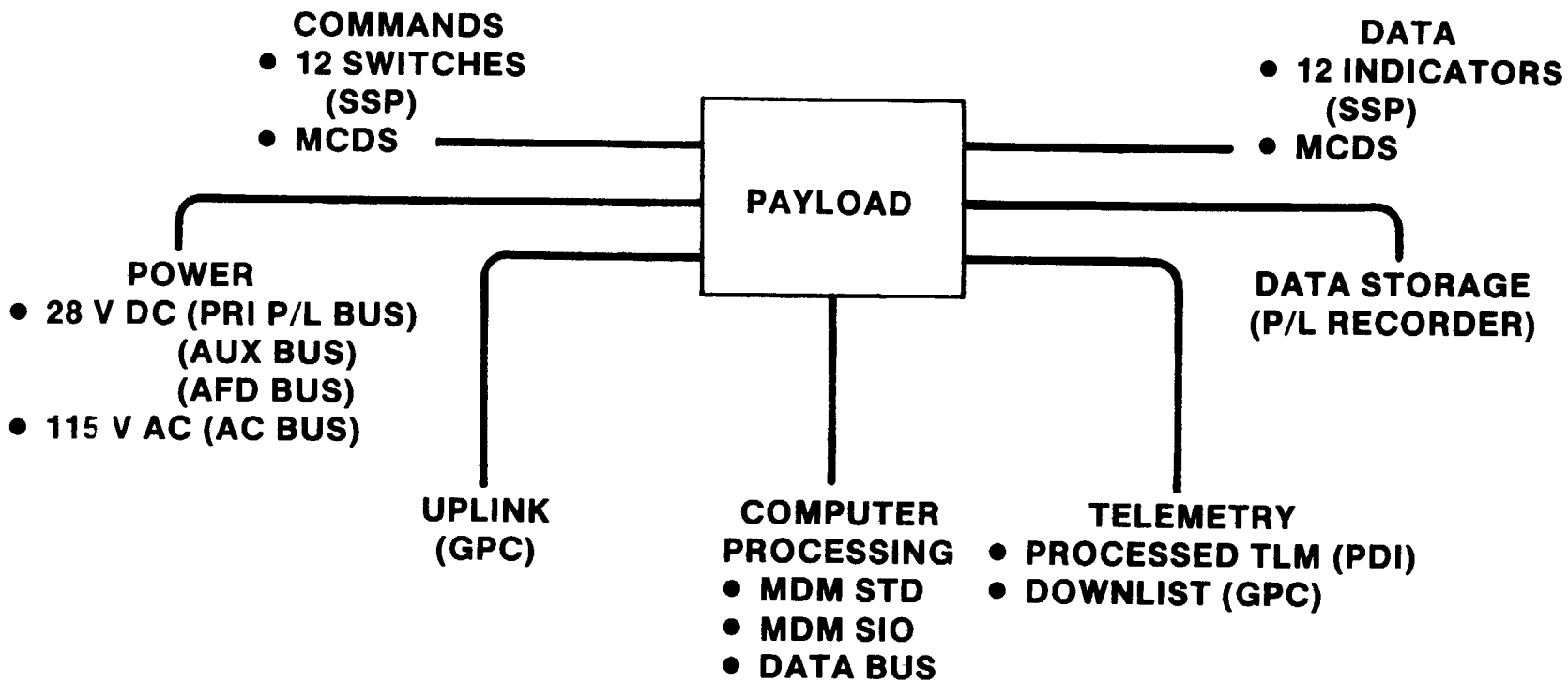

AVIONICS SUMMARY

S-84-02029

PRECEDING PAGE BLANK NOT FILMED

- THE STANDARD AVIONICS INTERFACE TO A PAYLOAD HAS THE CAPABILITY TO SUPPORT VIRTUALLY ANY PAYLOAD REQUIREMENT
- THE INTERFACE IS THERE FOR SIMPLE OPERATIONS
- EXPERIENCE HAS SHOWN THAT
  - THE SIMPLE INTERFACES ARE ADEQUATE FOR MOST PAYLOADS
  - THE SIMPLE INTERFACES DO NOT REQUIRE A PAYLOAD TO GO THROUGH CARGO INTEGRATION TEST EQUIPMENT (CITE) TESTING

* U.S. GOVERNMENT PRINTING OFFICE: 1984—759-013/7674

46
PAGE INTENTIONALLY BLANK