NASA-TM-108232

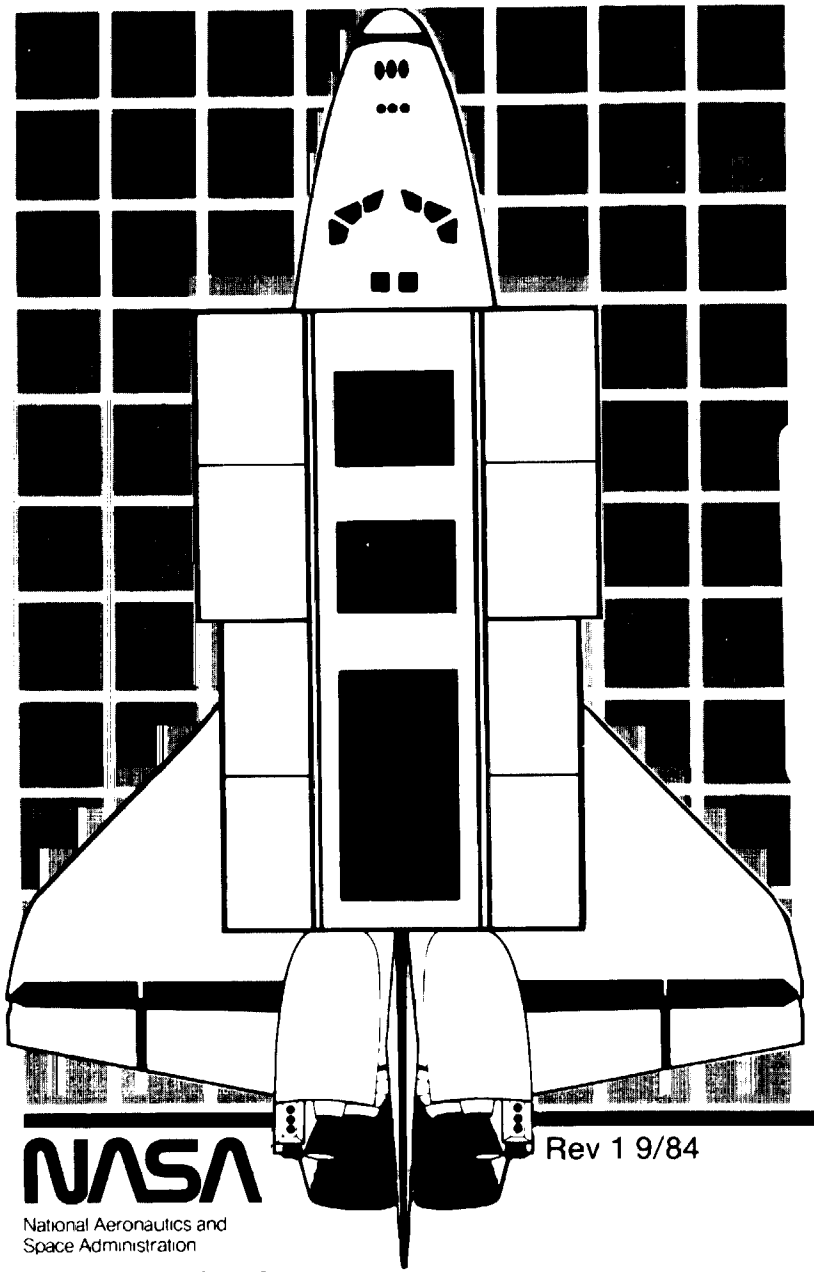

SPACE SHUTTLE PAYLOAD

JSC-20052
VOLUME 8

NASA
7N-16-TM
167304

DESIGN AND DEVELOPMENT

(NASA-TM-108232) SPACE SHUTTLE PAYLOAD DESIGN AND DEVELOPMENT. VOLUME 8: STRUCTURAL/MECHANICAL INTERFACES AND REQUIREMENTS (NASA) 66 p

N94-70372

Unclas

Z9/16 0167304

STRUCTURAL/ MECHANICAL INTERFACES AND REQUIREMENTS

Rev 1 9/84

NASA
National Aeronautics and Space Administration
Lyndon B. Johnson Space Center

CONTENTS

SECTION	PAGE
STS/PAYLOAD MECHANICAL INTERFACES	4
PAYLOAD BAY ENVELOPE	4
ATTACHMENT METHODS AND LOCATIONS	6
ATTACH FITTINGS	12
REMOTE MANIPULATOR SYSTEM	26
PAYLOAD WEIGHT AND CENTER-OF-GRAVITY ALLOWABLES	32
STS/PAYLOAD STRUCTURAL DESIGN	34
OVERVIEW OF STS LOADING ENVIRONMENTS	35
STRUCTURAL REQUIREMENTS	37
PRELIMINARY DESIGN ENVIRONMENTS	38
MINIMUM PAYLOAD STRUCTURAL FREQUENCY	50
STRENGTH AND MATH MODEL VERIFICATION	52
FLIGHT DATA	54
MATERIALS	59
INTEGRATION AND SERVICES	68

PRECEDING PAGE BLANK NOT FILMED

1-2

PAYLOAD BAY ENVELOPE

S-84-01639

- A 15- BY 60-FT (4.6- BY 18.3-m) CYLINDRICAL ENVELOPE IS AVAILABLE TO ACCOMMODATE STS PAYLOADS
- THE CENTER OF THE ENVELOPE IS AT ORBITER Z_0 STATION 400 AND Y_0 STATION ZERO
- THE FORWARD END OF THE BAY IS AT X_0 STATION 582 AND THE AFT END AT X_0 STATION 1302
- PAYLOAD STRUCTURE MAY PROTRUDE OUTSIDE THIS ENVELOPE ONLY AT ORBITER ATTACH POINTS AND AT AVIONICS, ELECTRICAL, AND FLUID INTERFACES. THE REMAINDER OF THE PAYLOAD MUST REMAIN WITHIN THE ENVELOPE UNDER ALL STRUCTURAL LOAD CONDITIONS (OTHER THAN DEPLOYMENT)

PAYLOAD BAY ENVELOPE

S-84-01041

MID-FUSELAGE VIEW LOOKING AFT

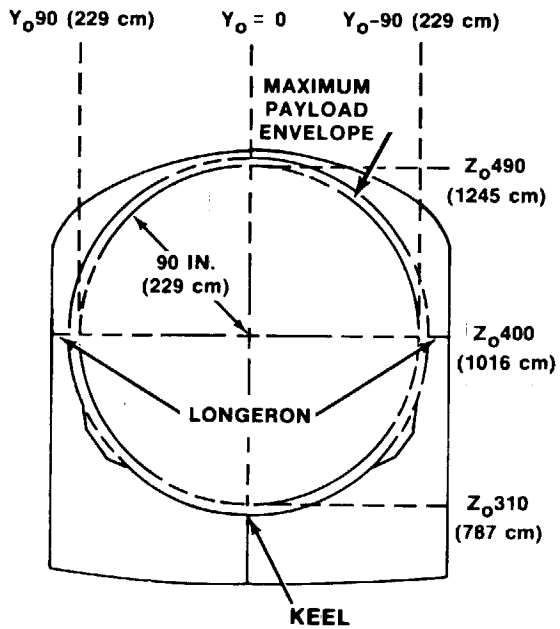

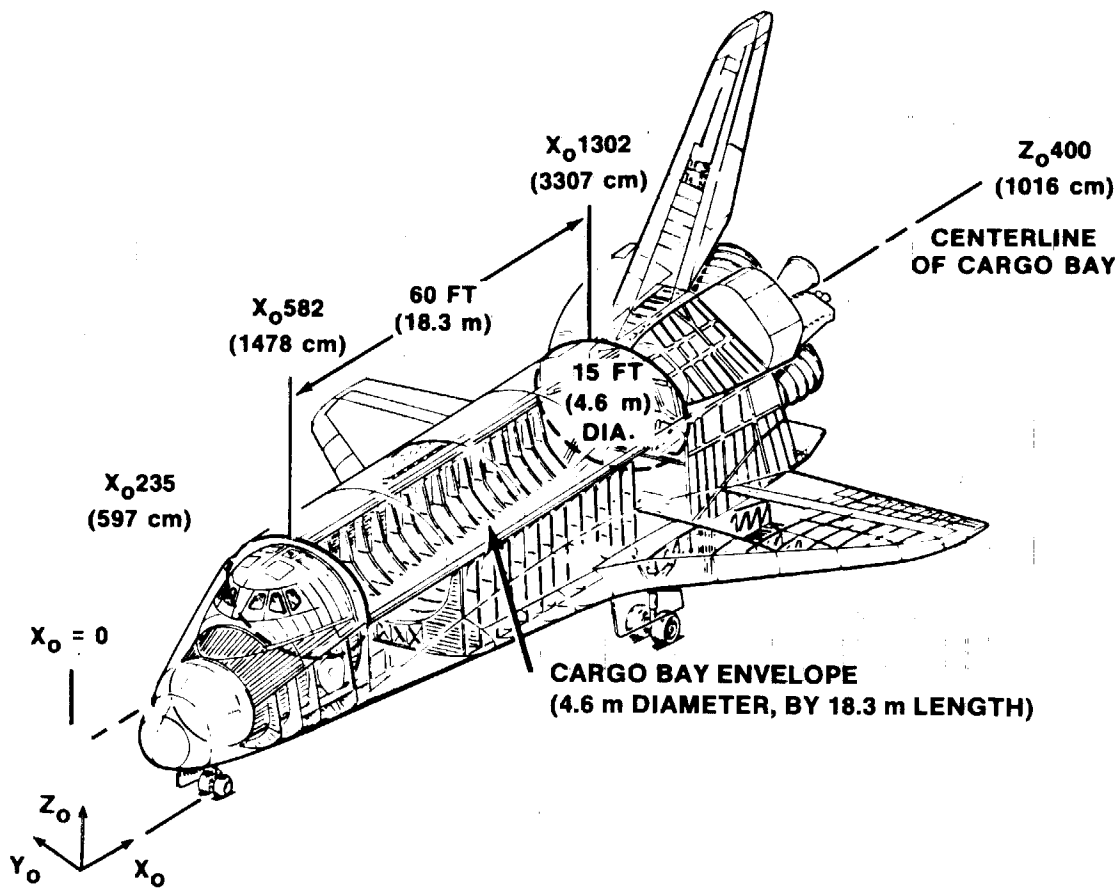

PAYLOAD ATTACHMENT METHODS

- PAYLOADS ATTACH TO THE ORBITER AT LONGERON AND KEEL INTERFACES
- LONGERON FITTINGS GENERALLY REACT X_0 AND/OR Z_0 LOADS
  - PRIMARY FITTINGS REACT X_0 AND Z_0 LOADS
  - STABILIZING FITTINGS REACT Z_0 LOADS
- KEEL FITTINGS GENERALLY REACT Y_0 LOADS, BUT MAY REACT LIMITED X_0 LOADS
- 5-POINT ATTACHMENT SCHEMES ARE MOST COMMON, BUT 3-POINT, 4-POINT, OR OTHERS ARE AVAILABLE. (EXAMPLES FOLLOW)

ILLUSTRATION OF 5-POINT AND 3-POINT PAYLOAD ATTACHMENT METHODS

S-84-01066

5-POINT ATTACH

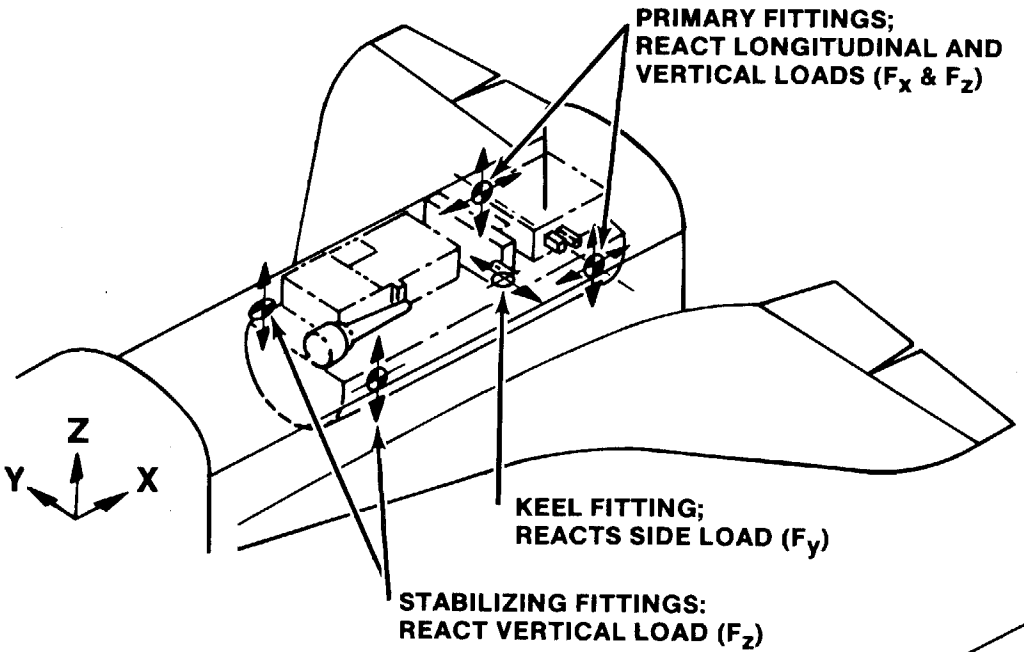

3-POINT ATTACH

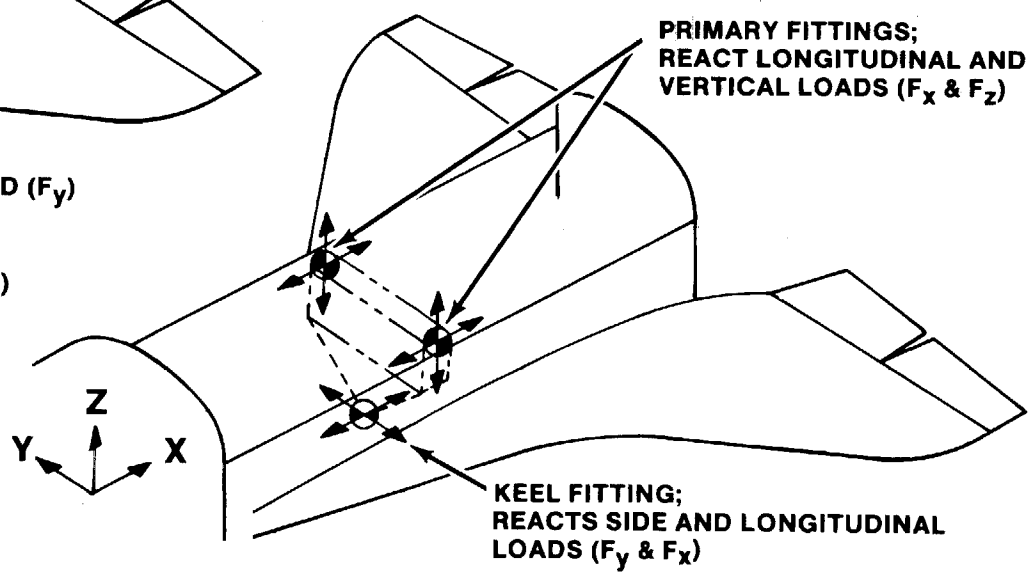

PAM-D CRADLE, SPAS, AND SPACELAB PALLET ILLUSTRATION

S-84-01058
Rev 1

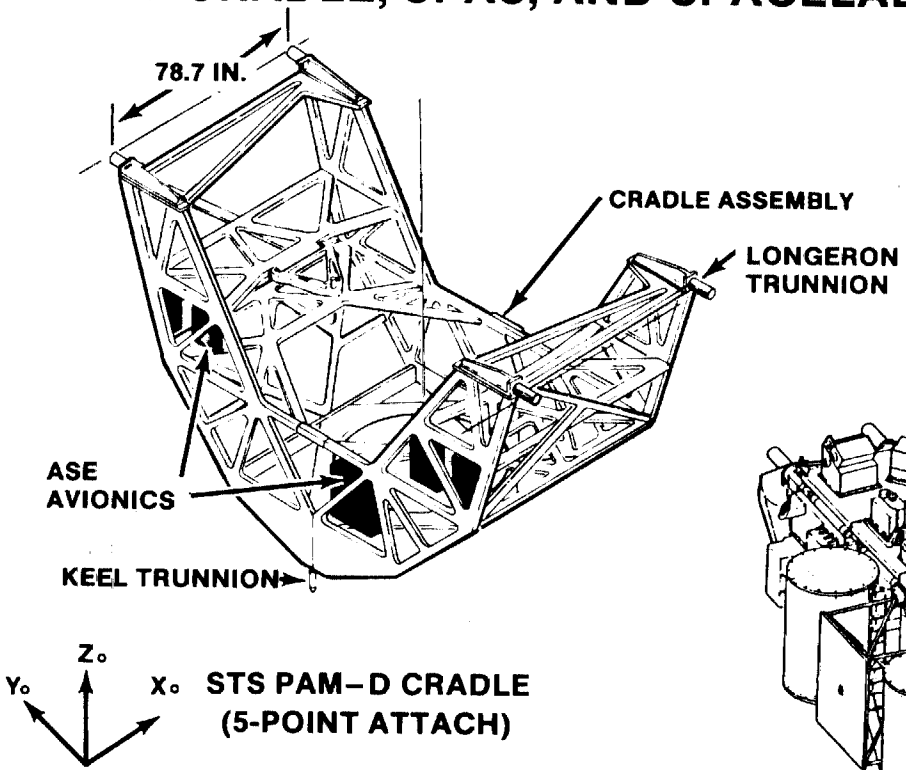

STS PAM–D CRADLE
(5-POINT ATTACH)

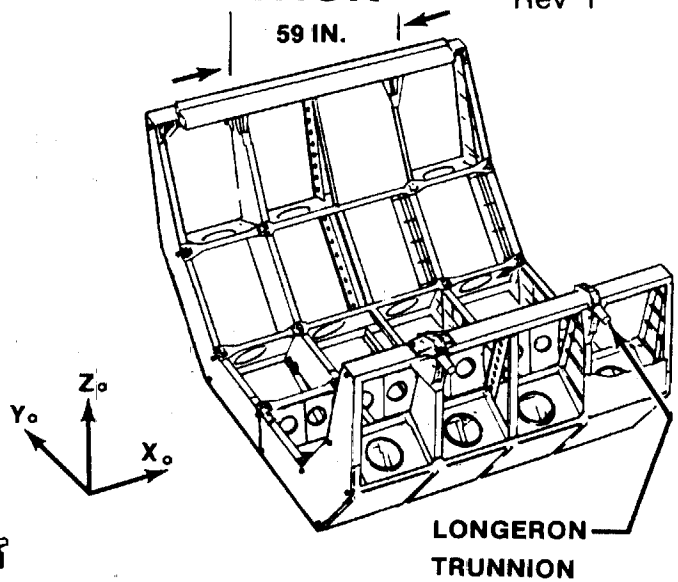

SPACELAB PALLET
(5-POINT ATTACH)

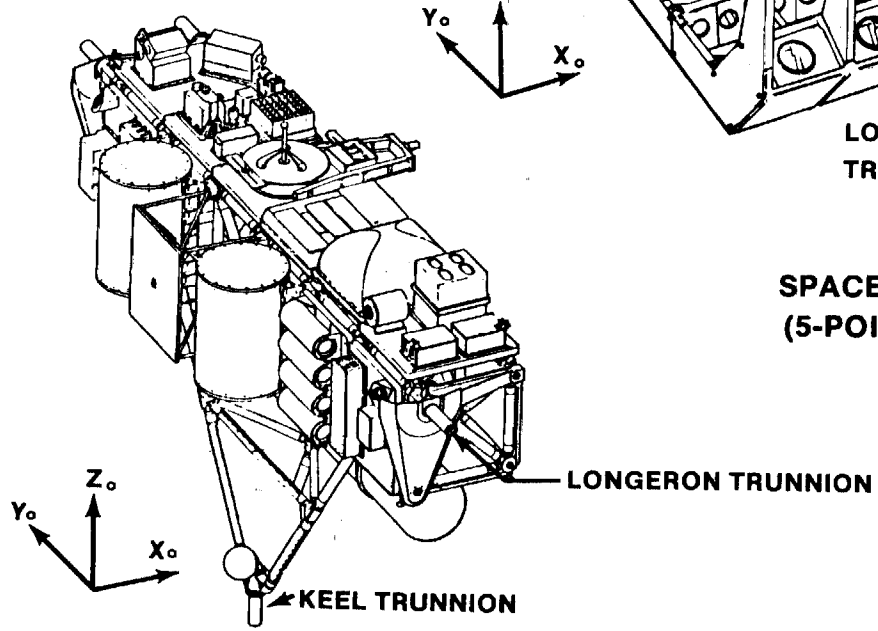

SPAS-01 (3-POINT ATTACH)

STS-2 FLIGHT OSTA-1, DFI PALLET

S-84-01056
Rev 1

PAYLOAD ATTACHMENT LOCATIONS

- PAYLOADS CAN ATTACH TO ORBITER AT 3.933 IN. (.1 M) SPACING ALONG X_0 AXIS
- ATTACH POINTS BEGIN AT X_0 STATION 612.73 AND AFT TO STATION 1281.4 (NOT ALL POINTS ARE AVAILABLE — SEE JSC 07700, VOL. XIV, "SPACE SHUTTLE SYSTEM PAYLOAD ACCOMMODATIONS"
- Z_0 STATION OF PAYLOAD LONGERON ATTACHMENT IS $Z_0 = 414$
- Z_0 STATION OF KEEL ATTACHMENT IS $Z_0 = 305$ WHEN FORWARD OF $X_0 = 1191$, AND $Z_0 = 308.4$ WHEN AFT OF $X_0 = 1191$
- PAYLOADS ARE SUPPORTED BY ORBITER LONGERONS AND FRAMES USING BRIDGE ASSEMBLIES AND ATTACH FITTINGS

ORBITER/PAYLOAD ATTACHMENT LOCATIONS

S-84-01049
Rev 1

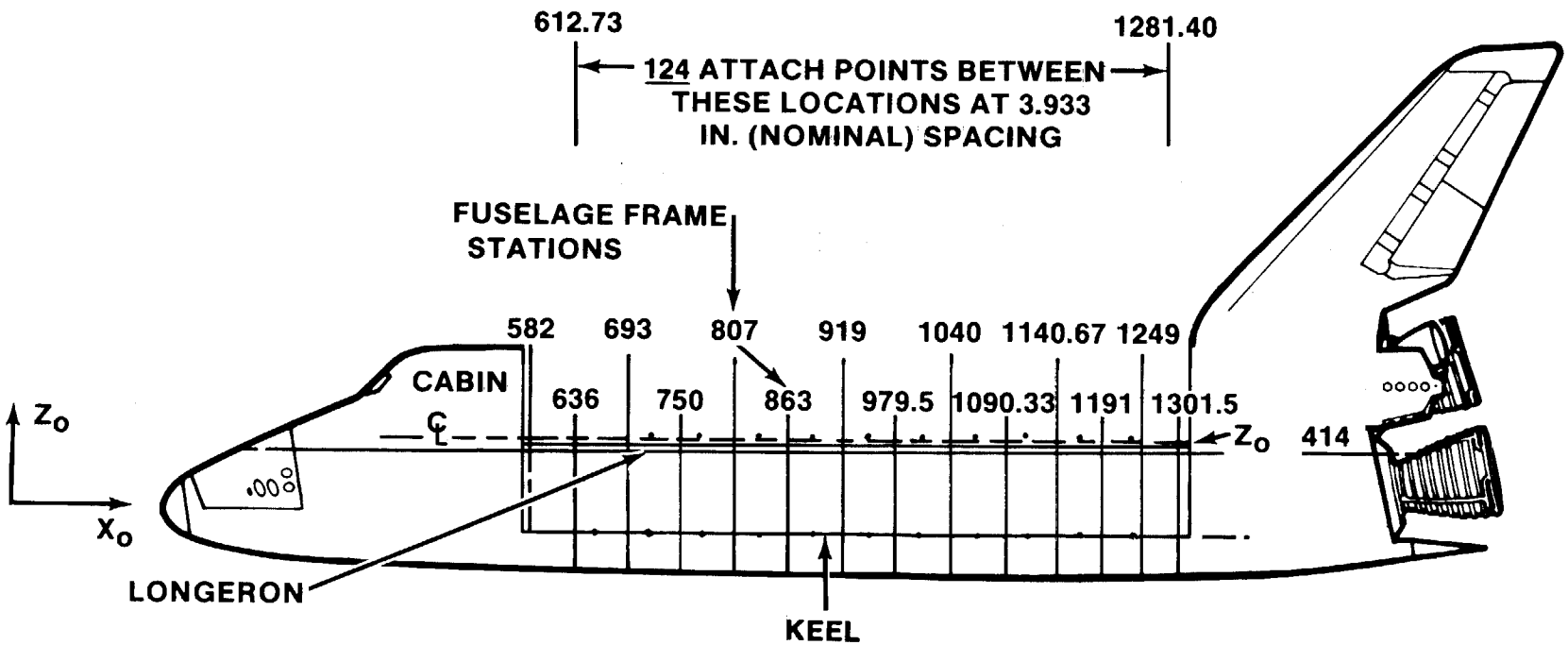

PAYLOAD BRIDGE ASSEMBLIES AND ATTACH FITTINGS

- LONGERON BRIDGES ARE CONNECTED TO THE ORBITER LONGERON AND TO TWO ADJACENT FRAMES ALONG THE SIDES OF THE PAYLOAD BAY
- KEEL BRIDGES ARE CONNECTED TO THE ORBITER ON TWO ADJACENT FRAMES ALONG THE BOTTOM OF PAYLOAD BAY
- EACH PAYLOAD ATTACH FITTING FOR BOTH LONGERON AND KEEL IS SUPPORTED BY A BRIDGE AND INTERFACES WITH THE PAYLOAD THROUGH A CYLINDRICAL BEARING
- LONGERON FITTINGS MAY BE ACTIVE OR PASSIVE
  - ACTIVE CAN BE OPENED IN ORBIT FOR RELEASING DEPLOYABLE PAYLOADS
  - PASSIVE FITTINGS REMAIN CLOSED AFTER INSTALLATION
- KEEL FITTINGS ARE ALL ACTIVE, FOR EASE OF INSTALLATION

S-84-01401

PAYLOAD ATTACH FITTINGS

ATTACH POINT ARRANGEMENT

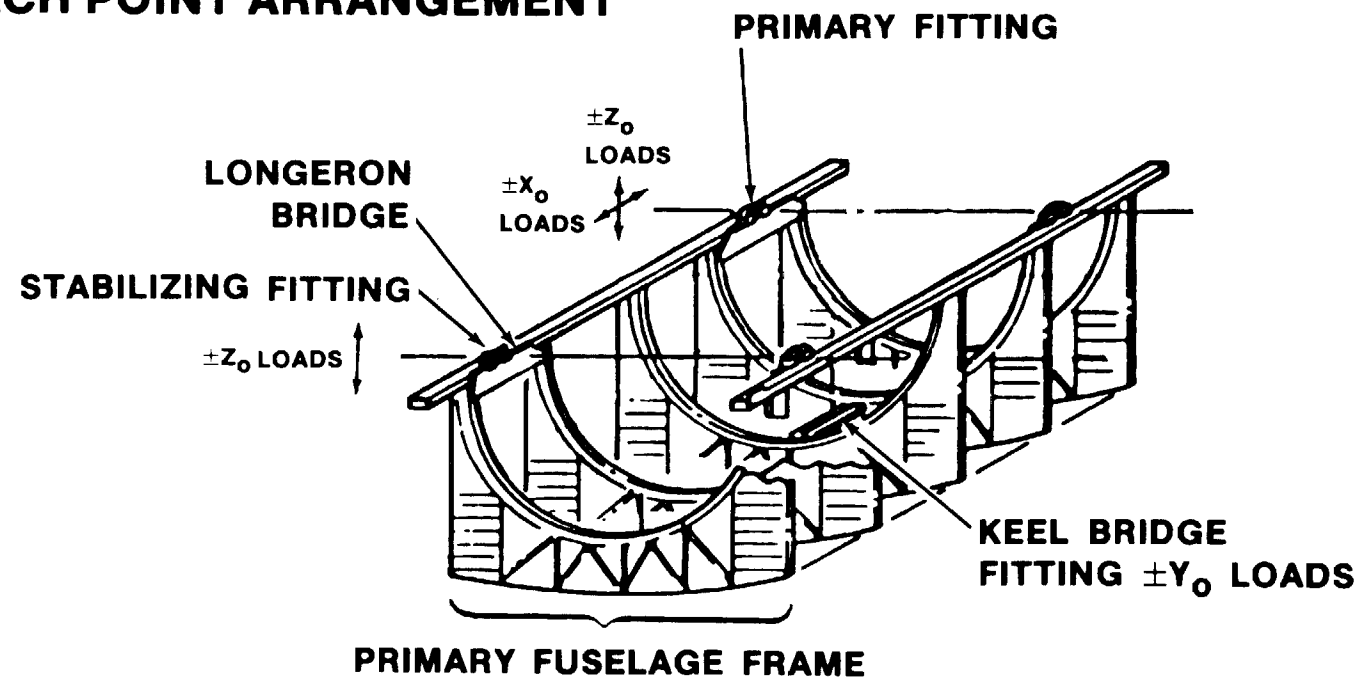

PAYLOAD ATTACH FITTINGS

S-84-04050
Rev 1

NONDEPLOYABLE ATTACH FITTING — LONGERON

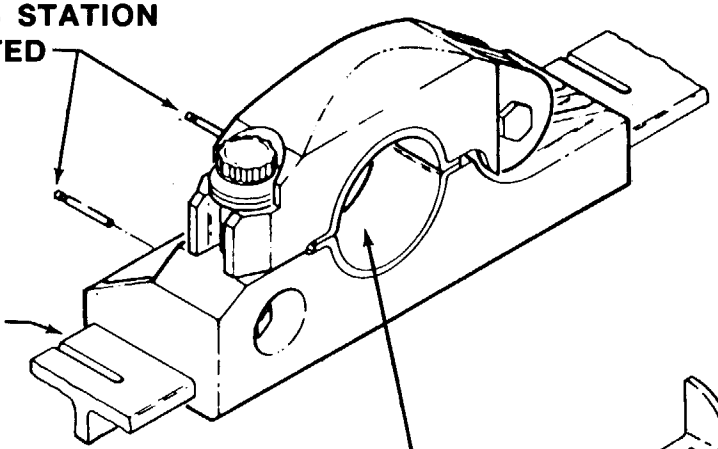

PAYLOAD KEEL FITTING

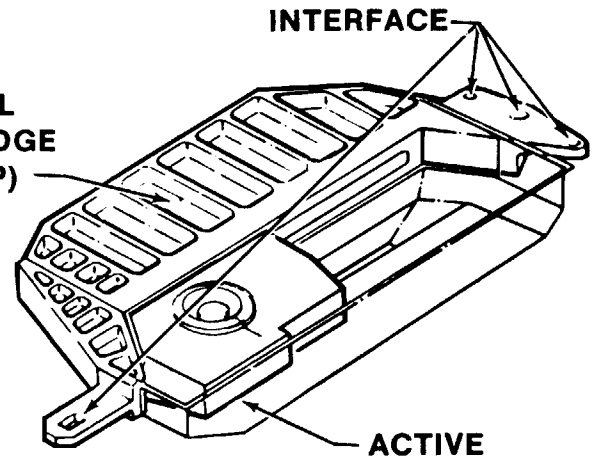

ACTIVE ATTACH FITTING/MECHANISM — LONGERON

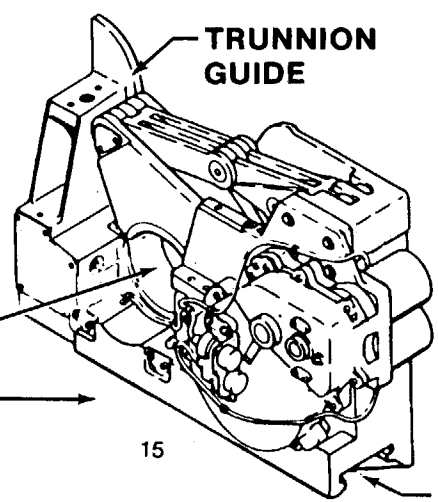

PRECEDING PAGE BLANK NOT FILMED
PAGE 14 INTENTIONALLY BLANK

LONGERON TRUNNIONS FOR NONDEPLOYABLE ATTACH FITTINGS

- THE PAYLOAD INTERFACES WITH THE ORBITER THROUGH CYLINDRICAL TRUNNIONS, WHICH ARE 3.248 INCHES IN DIAMETER
- TRUNNIONS MUST BE CHROME PLATED
- BASE OF LONGERON TRUNNIONS WILL BE AT STATION $Y_0 = \pm 90$ IN. FOR NONDEPLOYABLE PAYLOADS. THIS DIMENSION WILL PROVIDE A 3-IN. CLEARANCE BETWEEN THE TRUNNION BASE AND THE ORBITER BRIDGE FITTING FOR PAYLOAD GROUND HANDLING AND INSTALLATION
- THE NONDEPLOYABLE PAYLOAD TRUNNION LENGTH IS A USER OPTION AND MAY RANGE FROM 6.5 IN. TO 7.75 IN. THE 6.5-IN. TRUNNION IS RECOMMENDED FOR PAYLOADS WITH TRUNNION SPACING LESS THAN 100 IN., AND 7.75 IN. FOR THOSE WITH SPACING GREATER THAN 100 IN.

NONDEPLOYABLE LONGERON ATTACH FITTING AND PAYLOAD TRUNNION

S-84-01051

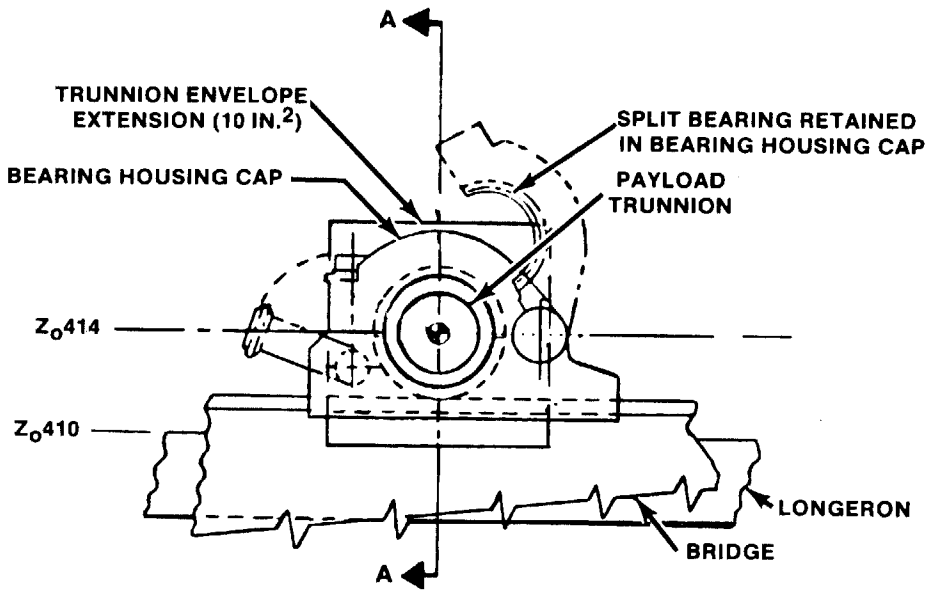

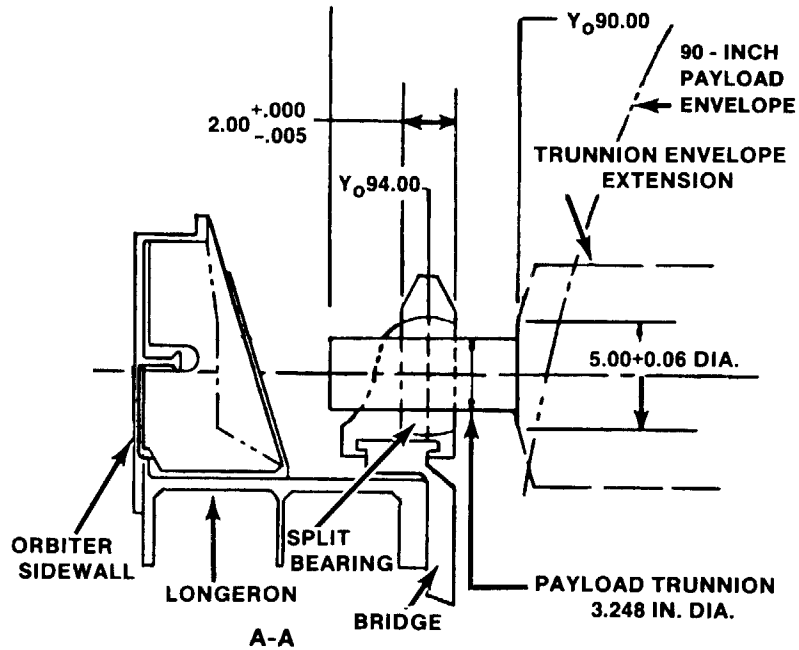

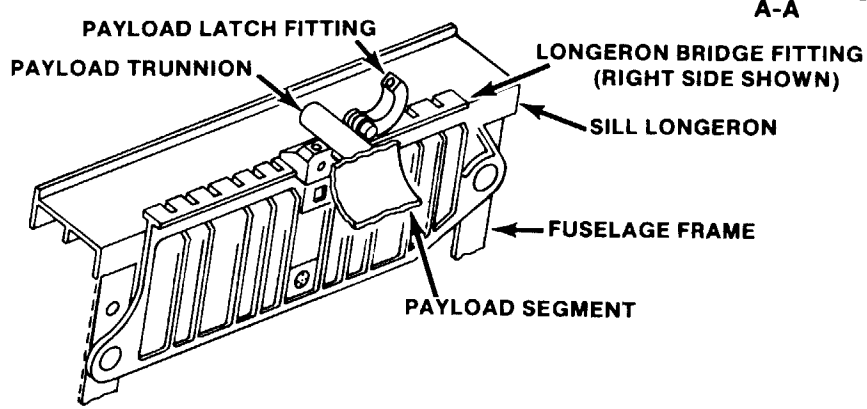

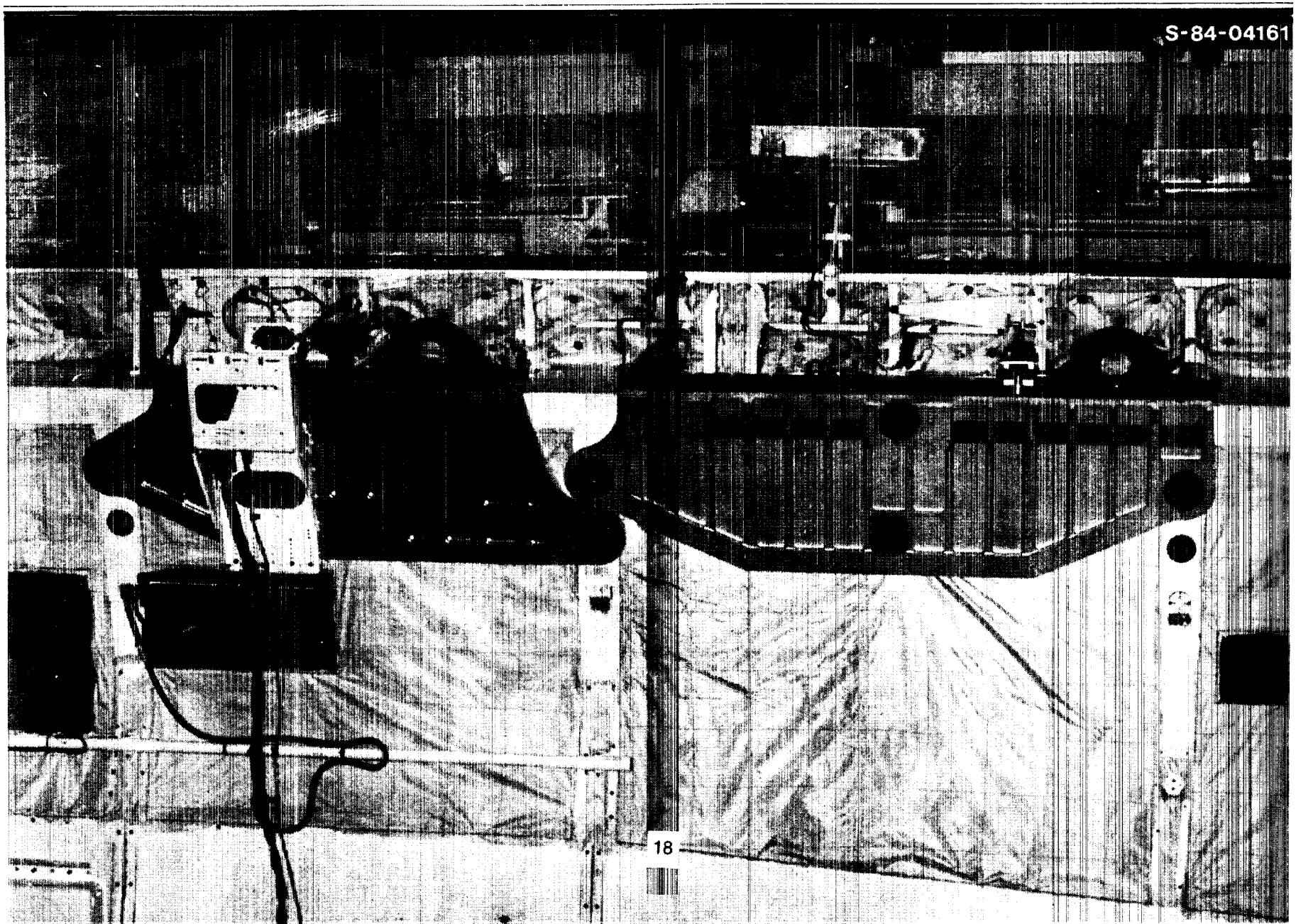

ORIGINAL PAGE IS
OF POOR QUALITY

SPACE
SHUTTLE
PAYLOAD

DESIGN AND DEVELOPMENT

NASA

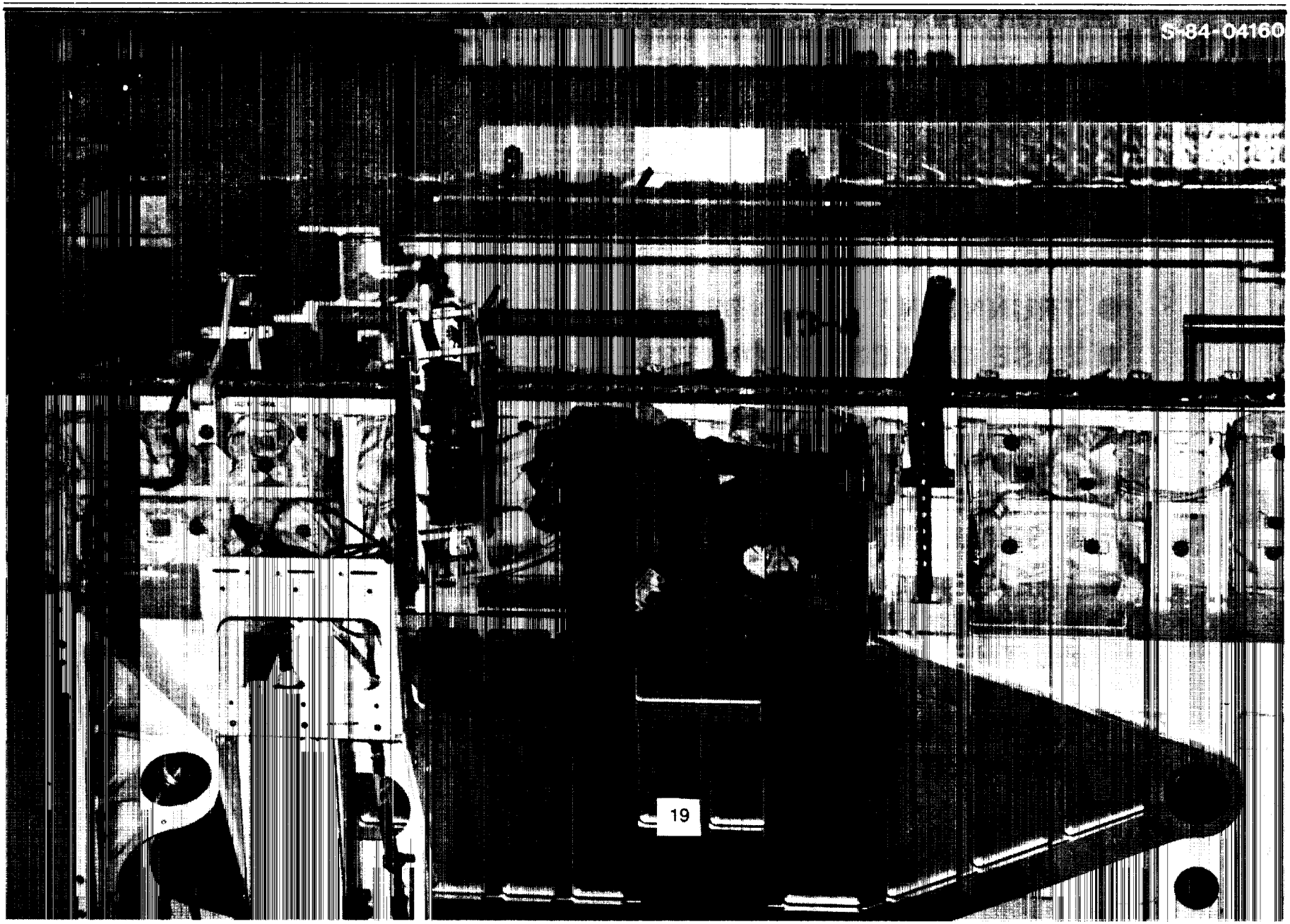

ORIGINAL PAGE IS
OF POOR QUALITY

LONGERON TRUNNIONS FOR PAYLOADS WITH ACTIVE ATTACH FITTINGS

- THE PAYLOAD INTERFACES WITH THE ORBITER THROUGH CYLINDRICAL TRUNNIONS, WHICH ARE 3.248 INCHES IN DIAMETER
- TRUNNIONS MUST BE CHROME PLATED
- BASE OF LONGERON TRUNNIONS WILL BE AT STATION $Y_0 = \pm$ 89.5 IN. FOR DEPLOYABLE PAYLOADS. THIS DIMENSION WILL PROVIDE A 3-IN. CLEARANCE BETWEEN THE TRUNNION BASE AND THE ORBITER BRIDGE FITTING OR PAYLOAD GROUND HANDLING AND INSTALLATION
- THE DEPLOYABLE PAYLOAD TRUNNION LENGTH IS A USER OPTION AND MAY RANGE FROM 7.0 IN. TO 8.25 IN. THE 7.0-IN. TRUNNION IS RECOMMENDED FOR PAYLOADS WITH TRUNNION SPACING LESS THAN 100 IN., AND 8.25 IN. FOR THOSE WITH SPACING GREATER THAN 100 IN.

ACTIVE ATTACH FITTING FOR PAYLOADS DEPLOYABLE FROM ORBITER INTERFACE

S-84-01064
Rev 1

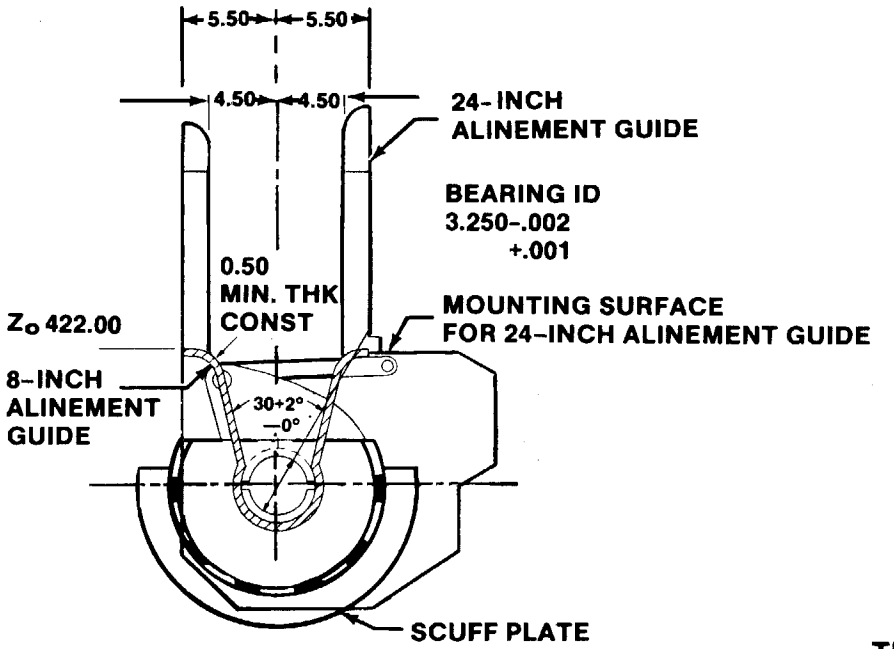

VIEW LOOKING INBOARD

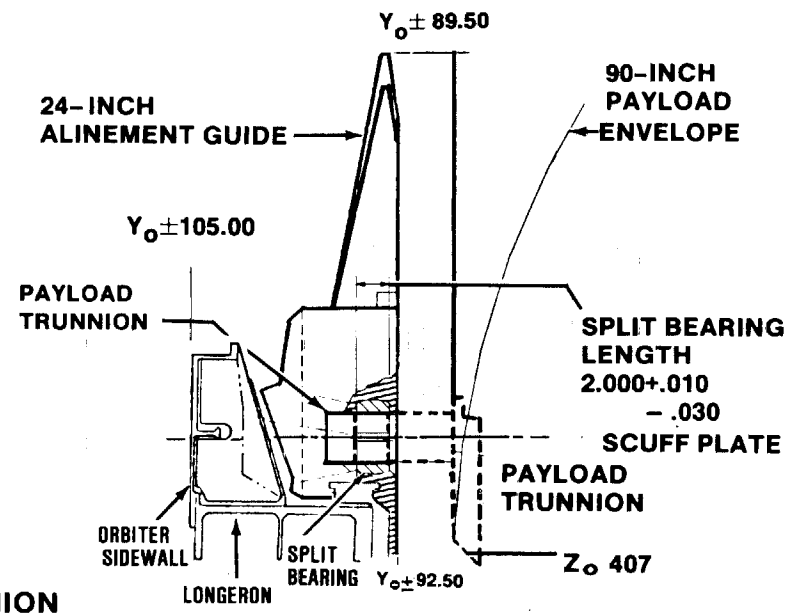

VIEW LOOKING AFT
STARBOARD SIDE

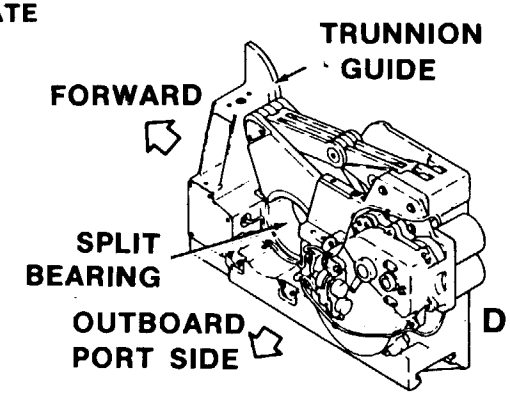

DEPLOYABLE PAYLOAD ATTACH
FITTING/MECHANISM

PAYLOAD KEEL FITTING AND TRUNNION

S-84-01807

- PAYLOAD INTERFACE AT KEEL IS A CYLINDRICAL TRUNNION, WHICH IS 2.996 INCHES IN DIAMETER
- TRUNNION IS CHROME PLATED
- BASE OF KEEL TRUNNION WILL BE AT Z_0 STATION 309.5 FOR PAYLOAD WITH KEEL FORWARD OF X_0 STATION 1191, AND AT Z_0 STATION 311.10 IN. IF AFT OF THIS LOCATION
- KEEL TRUNNION LENGTH SHOULD BE 8.0 IN. IF KEEL IS FORWARD OF X_0 1191 AND LENGTH SHOULD BE 4.82 IN. IF AFT OF THIS LOCATION

PAYLOAD KEEL FITTING AND TRUNNION

S-84-01042
Rev 1

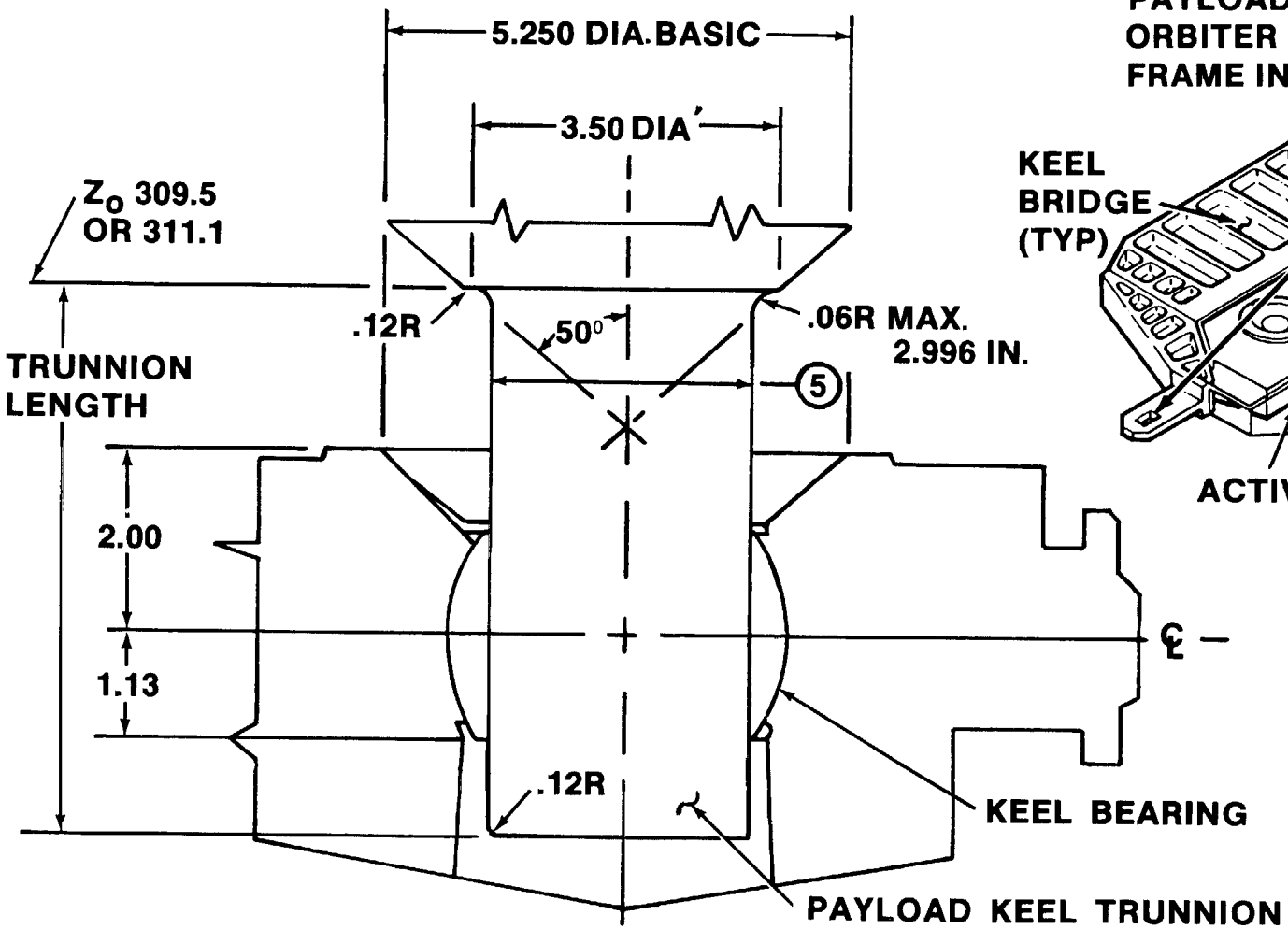

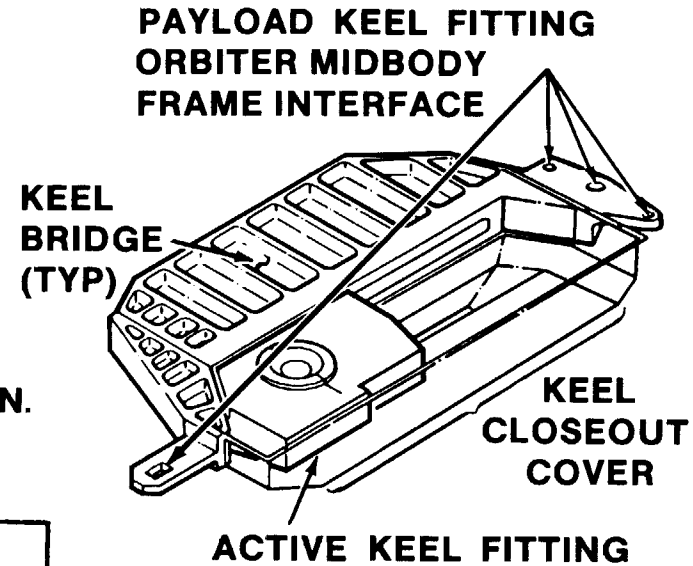

SPACE
SHUTTLE
PAYLOAD

DESIGN AND DEVELOPMENT

NASA

S-84-01833
Rev 1

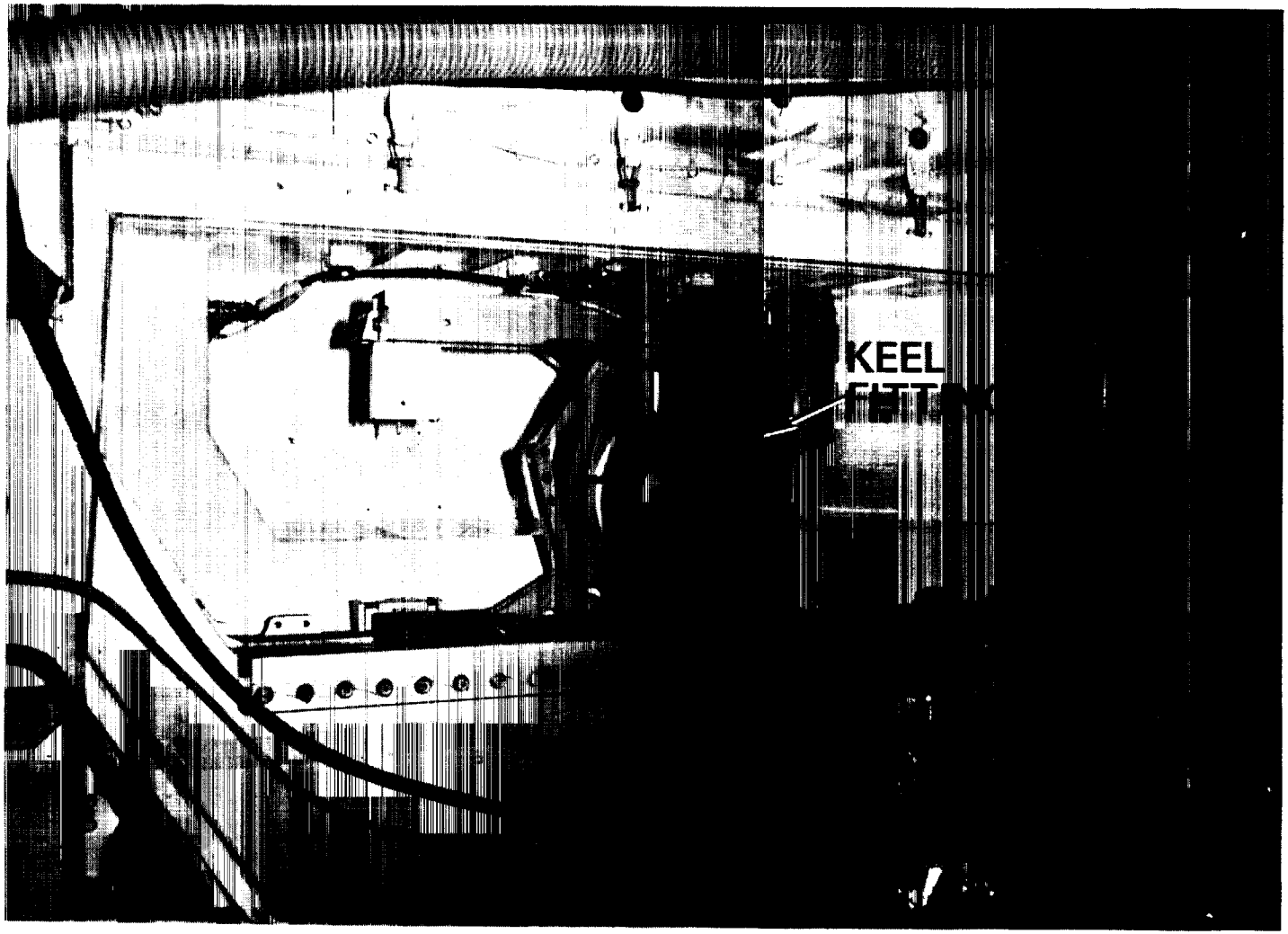

ORIGINAL PAGE
BLACK AND WHITE PHOTOGRAPH

PRECEDING PAGE BLANK NOT FILMED

PAYLOAD DEPLOYMENT AND THE REMOTE MANIPULATOR SYSTEM (RMS)

- THE RMS IS AVAILABLE FOR USE IN PAYLOAD DEPLOYMENT AND/OR RETRIEVAL
- RMS INTERFACES TO THE PAYLOAD THROUGH AN STS-PROVIDED GRAPPLE FIXTURE
- PAYLOAD CUSTOMERS ARE RESPONSIBLE FOR MOUNTING THIS GRAPPLE FIXTURE TO THE PAYLOAD STRUCTURE
- RMS CAN RELEASE PAYLOAD WITH MAXIMUM RATES OF LESS THAN 0.1° PER SEC AND LESS THAN 10° ATTITUDE ERROR
- GRAPPLE FIXTURE CAN BE RELEASED FROM PAYLOAD BY CREWMEMBER IF NORMAL RELEASE FAILS
- RMS CAN RELEASE PAYLOADS WEIGHING UP TO 65,000 LB
- INTERFACE FREQUENCY OF PAYLOAD RELATIVE TO GRAPPLE FIXTURE INTERFACE SHOULD BE GREATER THAN 0.5 Hz

STS REMOTE MANIPULATOR SYSTEM

S-84-01044
Rev 1

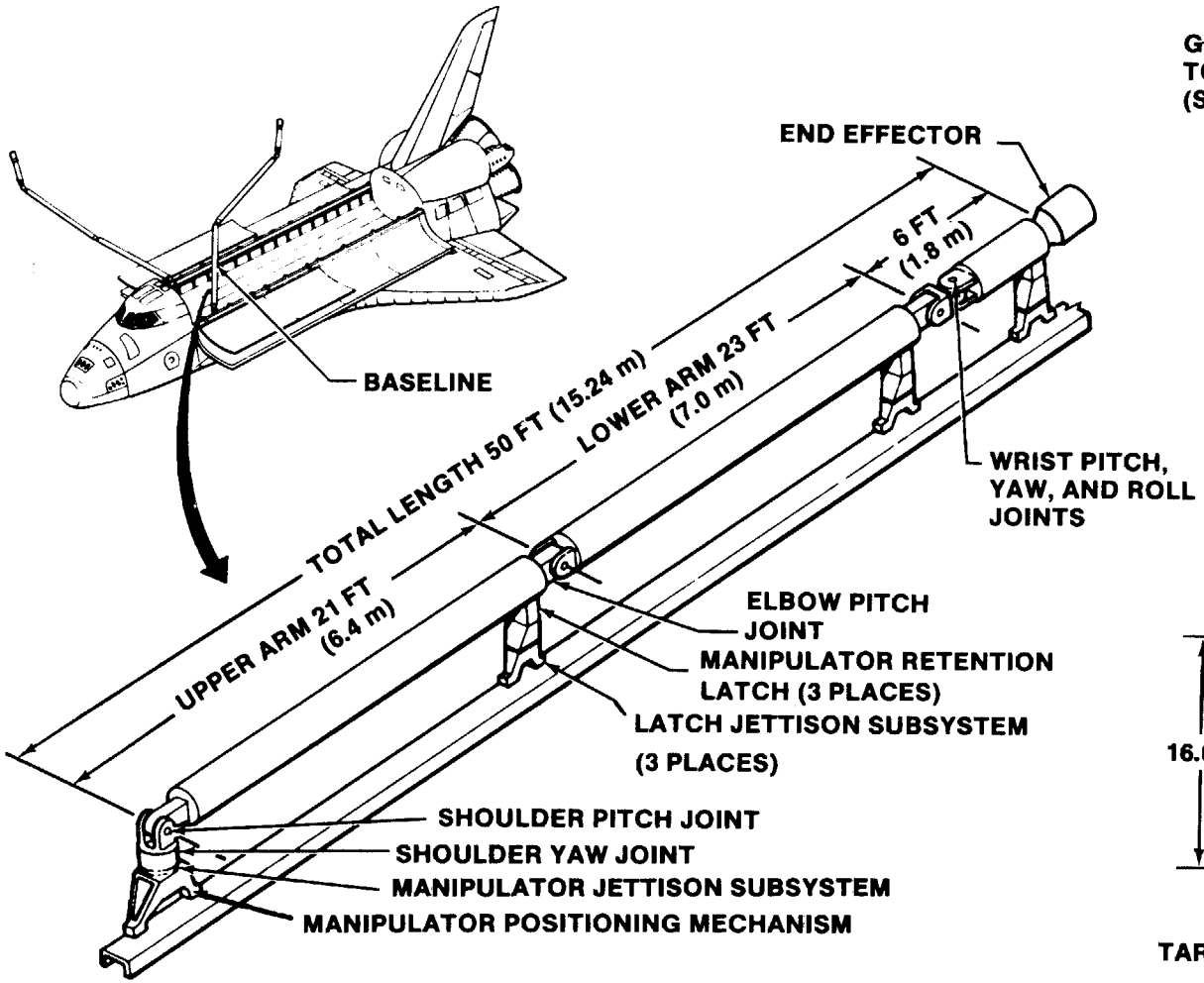

GRAPPLE FIXTURE AND TARGET TO BE ATTACHED TO PAYLOADS (SUPPLIED BY NASA)

INTERFACE BOLT PATTERN (3/8 IN. HOLE) AT 10 IN. RADIUS, FOR ATTACHMENT TO PAYLOAD

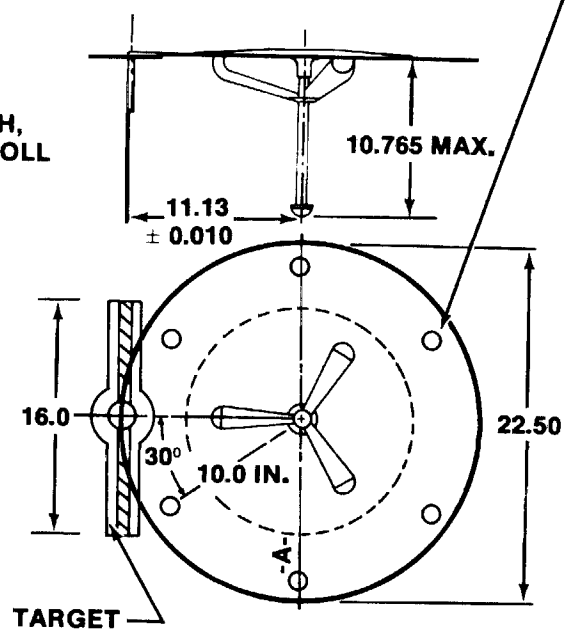

STS-7 SPAS-01 PALLET

S-84-01057

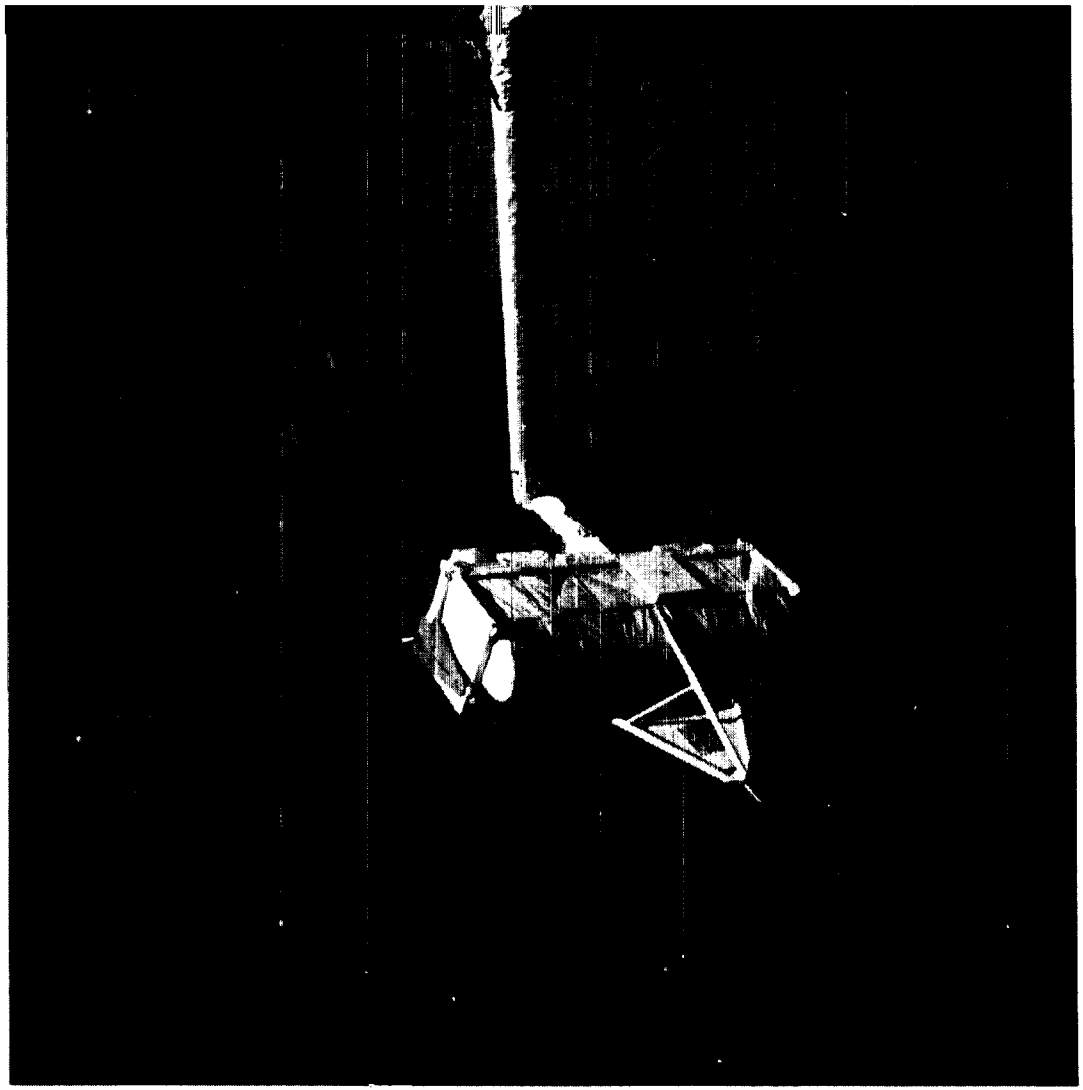

PRECEDING PAGE BLANK NOT FILMED

28

STS-6 IUS/TDRS DEPLOYMENT

S-84-01060

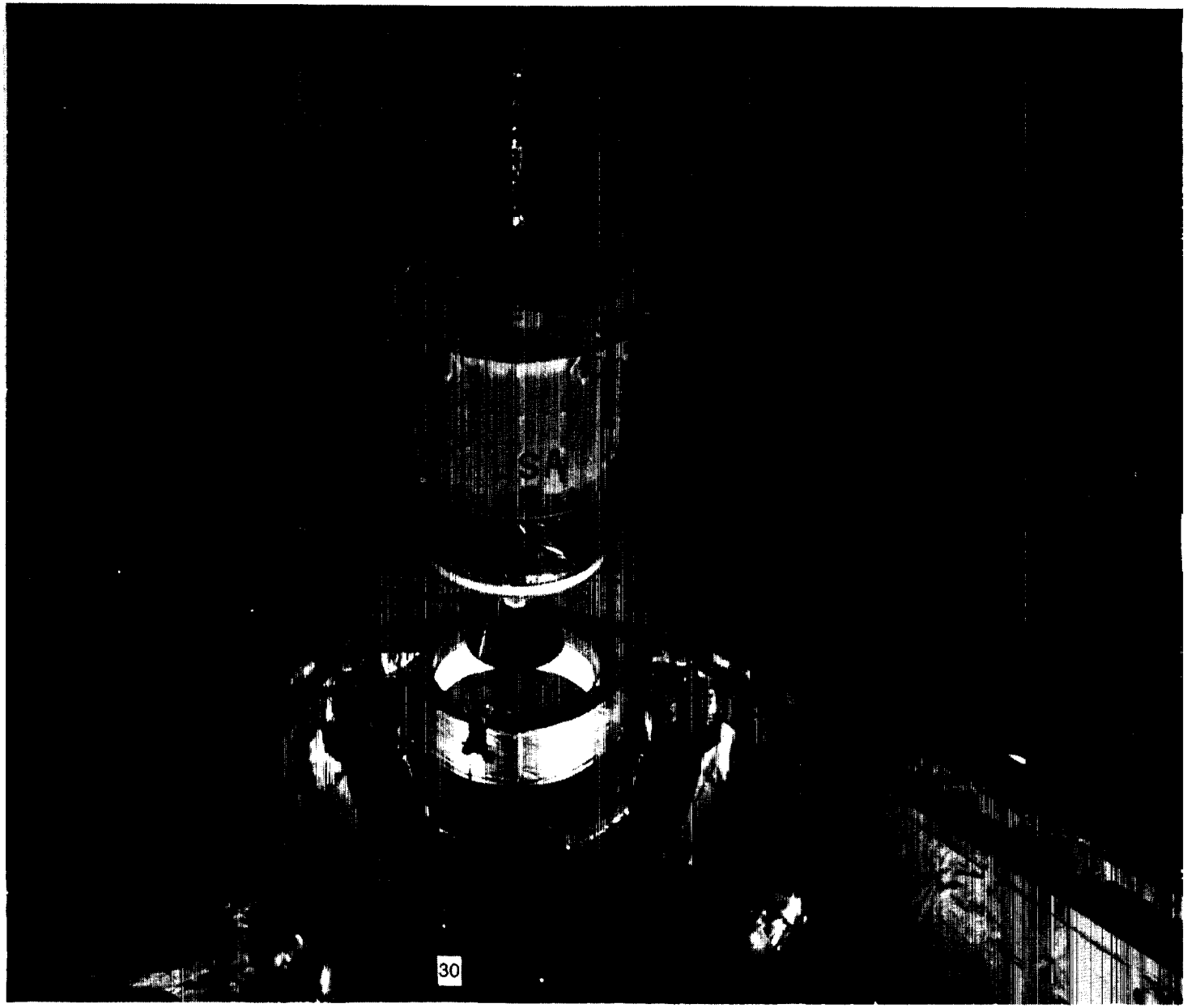

STS-5 TELSAT-E DEPLOYMENT

S-84-01061
Rev 1

PAYLOAD WEIGHT AND C.G. REQUIREMENTS

S-84-01633

- THE CENTER-OF-GRAVITY (C.G.) ENVELOPE FOR PAYLOADS ALLOWS PLACEMENT OF LOW-WEIGHT PAYLOADS TOWARD THE FRONT OF BAY, WITH LARGER WEIGHTS TOWARD THE AFT
- THE MAXIMUM ALLOWABLE WEIGHT FOR NONDEPLOYABLE PAYLOADS IS 32 000 LB
- THE MAXIMUM ALLOWABLE WEIGHT FOR DEPLOYABLE PAYLOADS IS 65 000 LB
- FOR HEAVIER PAYLOADS, THE C.G. MUST BE CLOSE TO THE PAYLOAD BAY CENTERLINE, WITH SMALL OFFSET ALLOWED IN THE Y_0 DIRECTION

CARGO CENTER-OF-GRAVITY ENVELOPE REQUIREMENTS

S-84-01050
Rev 1

LONGITUDINAL (X-AXIS)

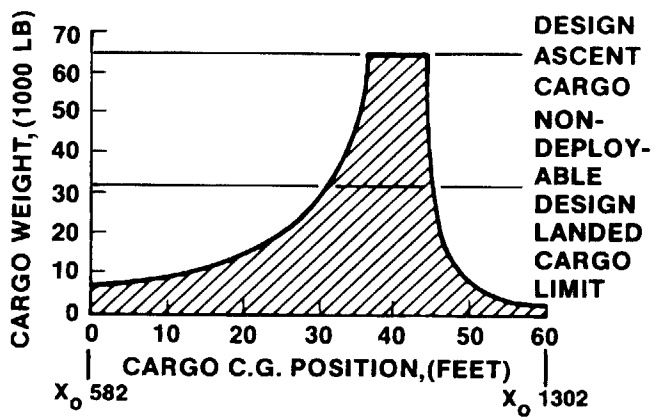

VERTICAL (Z-AXIS)

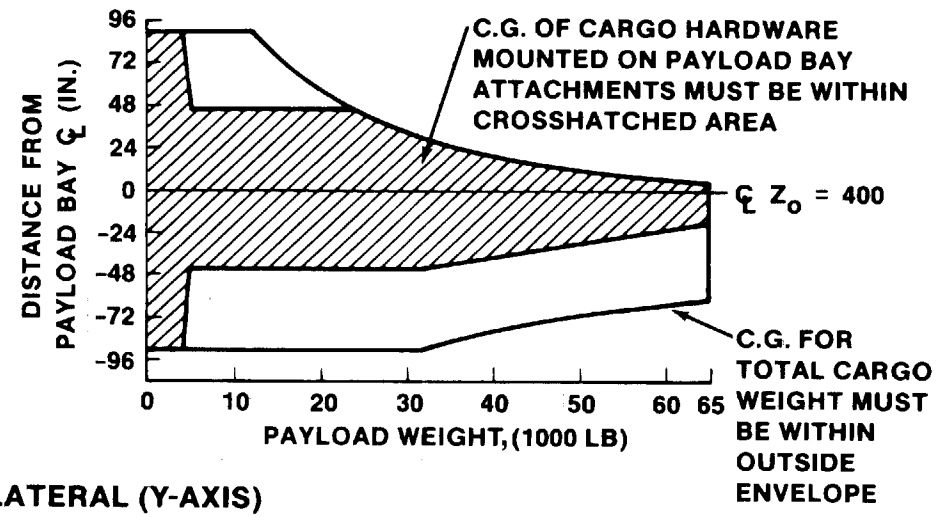

LATERAL (Y-AXIS)

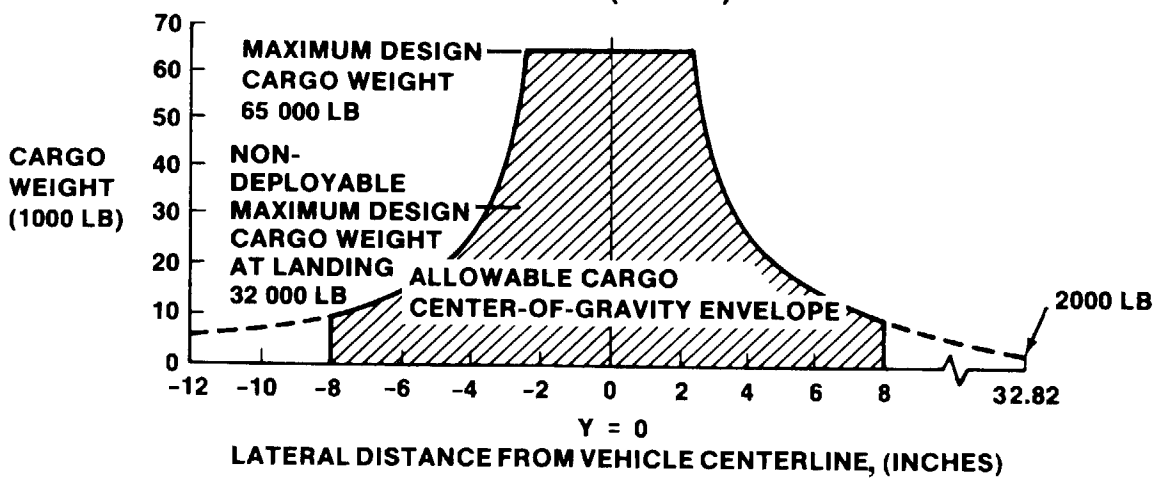

S-84-01810

STS/PAYLOAD STRUCTURAL DESIGN LOADS AND REQUIREMENTS

SHUTTLE DYNAMIC LOADS FLIGHT EVENTS

S-84-01233

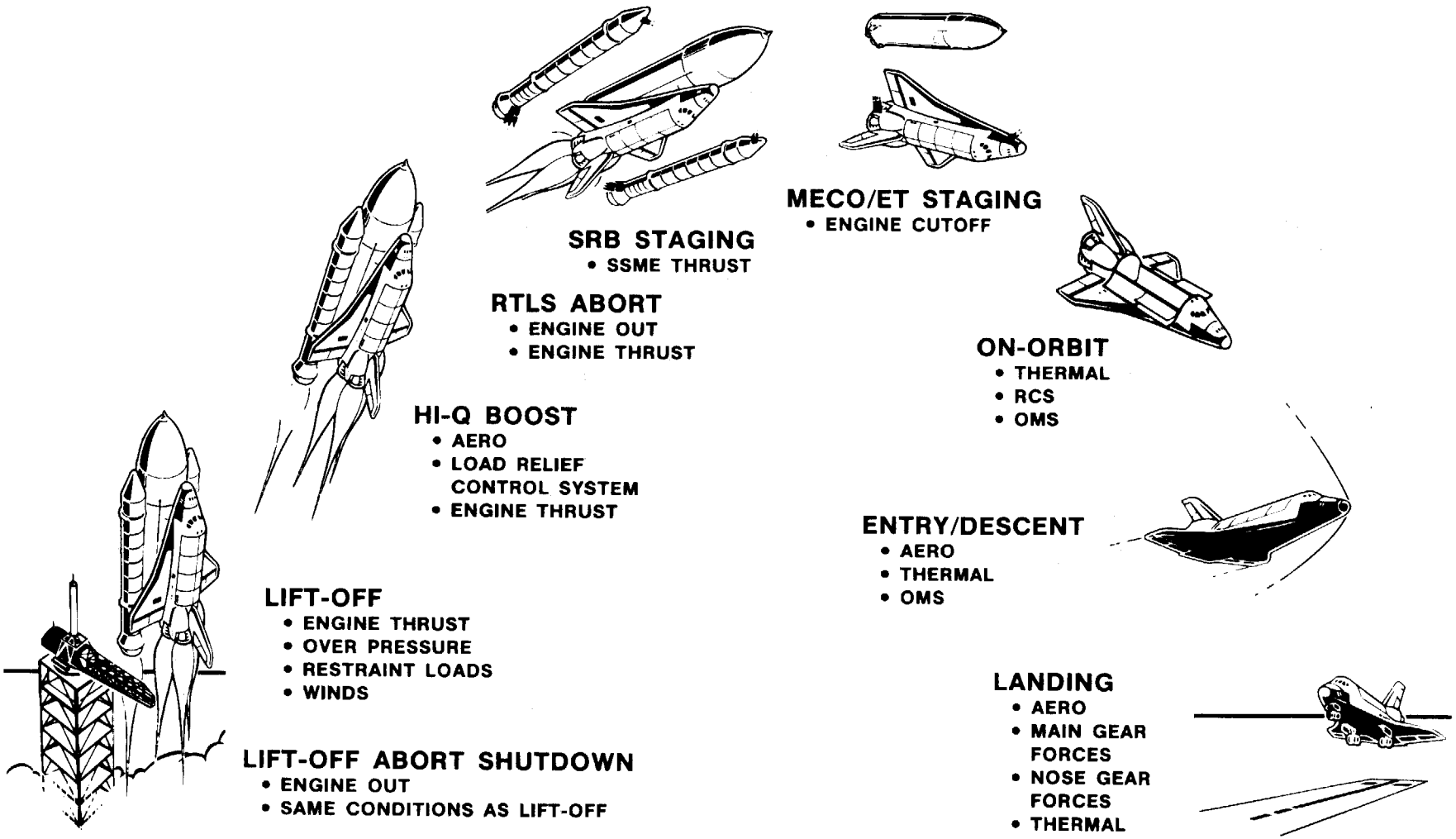

THE SPACE SHUTTLE VEHICLE

S-84-01059
Rev 1

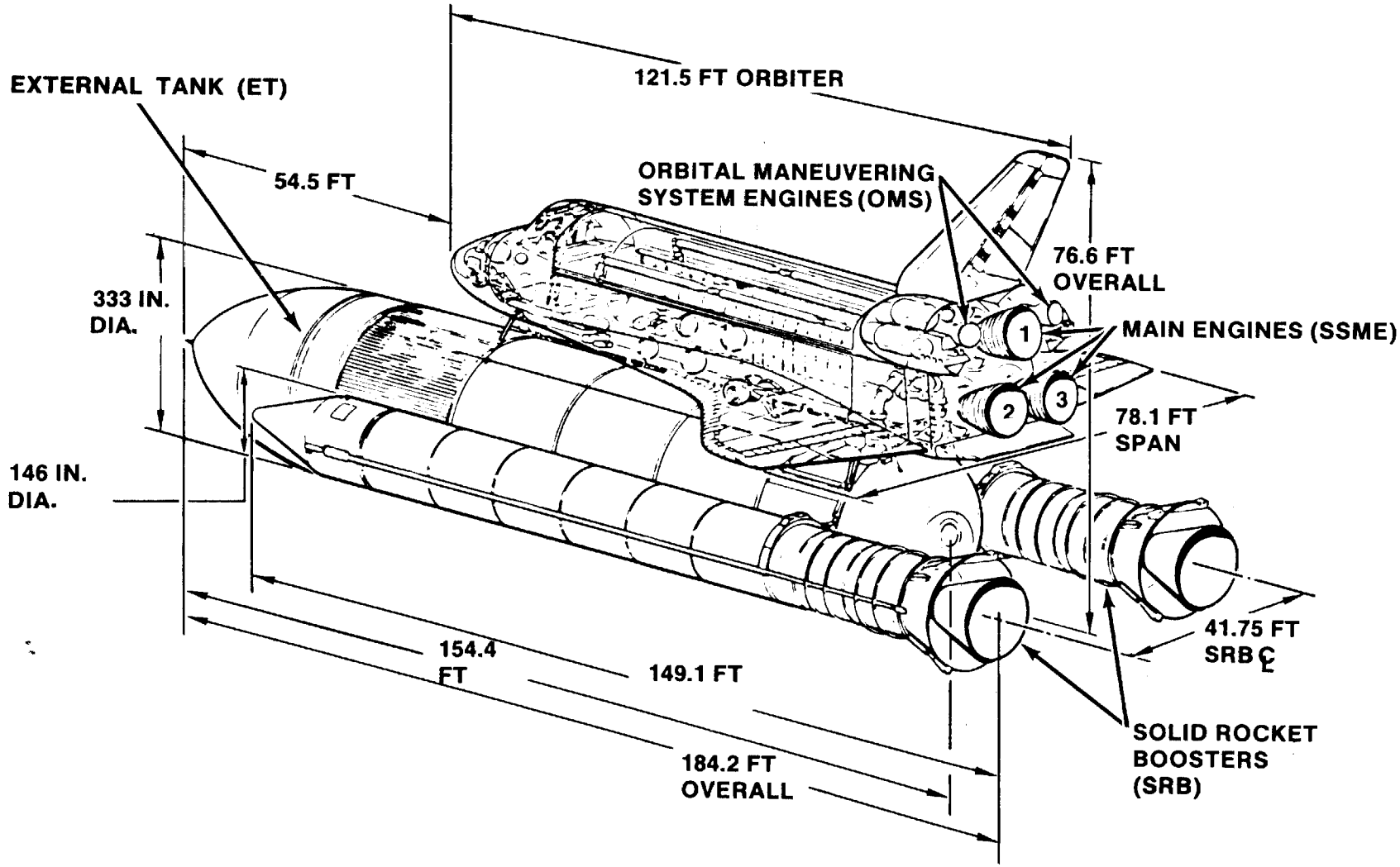

STRUCTURAL REQUIREMENTS FOR STS PAYLOADS

- SHOW POSITIVE STRUCTURAL MARGINS FOR STATIC AND DYNAMIC LOAD CONDITIONS
  - DESIGN APPROACH MAY USE LOAD FACTORS AND/OR COUPLED LOADS APPROACH
- STATIC PROOF TEST OR EQUIVALENT — JSC 14046, "PAYLOAD VERIFICATION REQUIREMENTS"
- MATH MODEL VERIFICATION TEST OR EQUIVALENT — JSC 14046
- MATERIALS ALLOWABLES
- FRACTURE CONTROL PLAN — JSC 18327 "FRACTURE CONTROL GUIDELINES FOR STS PAYLOADS"
- MINIMUM STRUCTURAL FREQUENCY TO AVOID FLIGHT CONTROL INTERACTION

PRELIMINARY DESIGN LOAD FACTORS

S-84-01632

- BASED ON VARIOUS DYNAMIC AND QUASI-STATIC LOADING CONDITIONS OF THE SHUTTLE
- LOAD FACTORS FOR LIFT-OFF AND LANDING HAVE BEEN DEVELOPED FROM COUPLED STS/PAYLOAD DYNAMIC LOADS ANALYSIS
- THE REMAINDER OF LOAD CONDITIONS ARE CALLED QUASI-STATIC, AND DO NOT GENERALLY CAUSE SIGNIFICANT PAYLOAD ELASTIC RESPONSE
- THE ON-ORBIT LOAD FACTORS MAY BE SIGNIFICANT TO PAYLOADS WHICH TILT UP IN THE PAYLOAD BAY PRIOR TO DEPLOYMENT
- THE EMERGENCY LANDING (CRASH) LOAD FACTORS ARE CONSIDERED ULTIMATE LOADS

S-84-01625
Rev 1

SHUTTLE PAYLOAD PRELIMINARY DESIGN LIMIT LOAD FACTORS*

	LOAD FACTOR			ANGULAR ACCELERATION		
FLIGHT CONDITION	Nx	Ny	Nz	$\ddot{\theta}x$	$\ddot{\theta}y$ (RD/S^2)	$\ddot{\theta}z$
LIFT-OFF	-0.2 -3.2	±1.4	±2.5	±3.7	±7.7	±3.1
ASCENT	-1.10 -3.17	±0.4	-0.1 -0.8	±0.2	±0.25	±0.25
DESCENT	0.9 -1.01	±0.85	2.5 -1.0	±1.28	0.02 -0.11	±0.13
LANDING RETURNABLE	1.8 -2.0	±1.5	4.2 -1.0	±4.0	±11.3	±4.9
NONRETURNABLE	1.5 -1.7	±0.80	3.0 -0.2	±3.4	±5.4	±3.0
EMERGENCY LANDING (ULTIMATE LOAD)	4.5 -1.5	±1.5	4.5 -2.0			
ON-ORBIT PRCS	.017 -0.009	±0.009	.039 -0.029	±0.019	.023 -0.015	±0.013
OMS OPERATION	-0.273	±0.0048	-0.089	±0.01	±0.0051	±0.0045

*LOAD FACTOR ≡ TOTAL EXTERNAL FORCE DIVIDED BY WEIGHT

S-84-01406

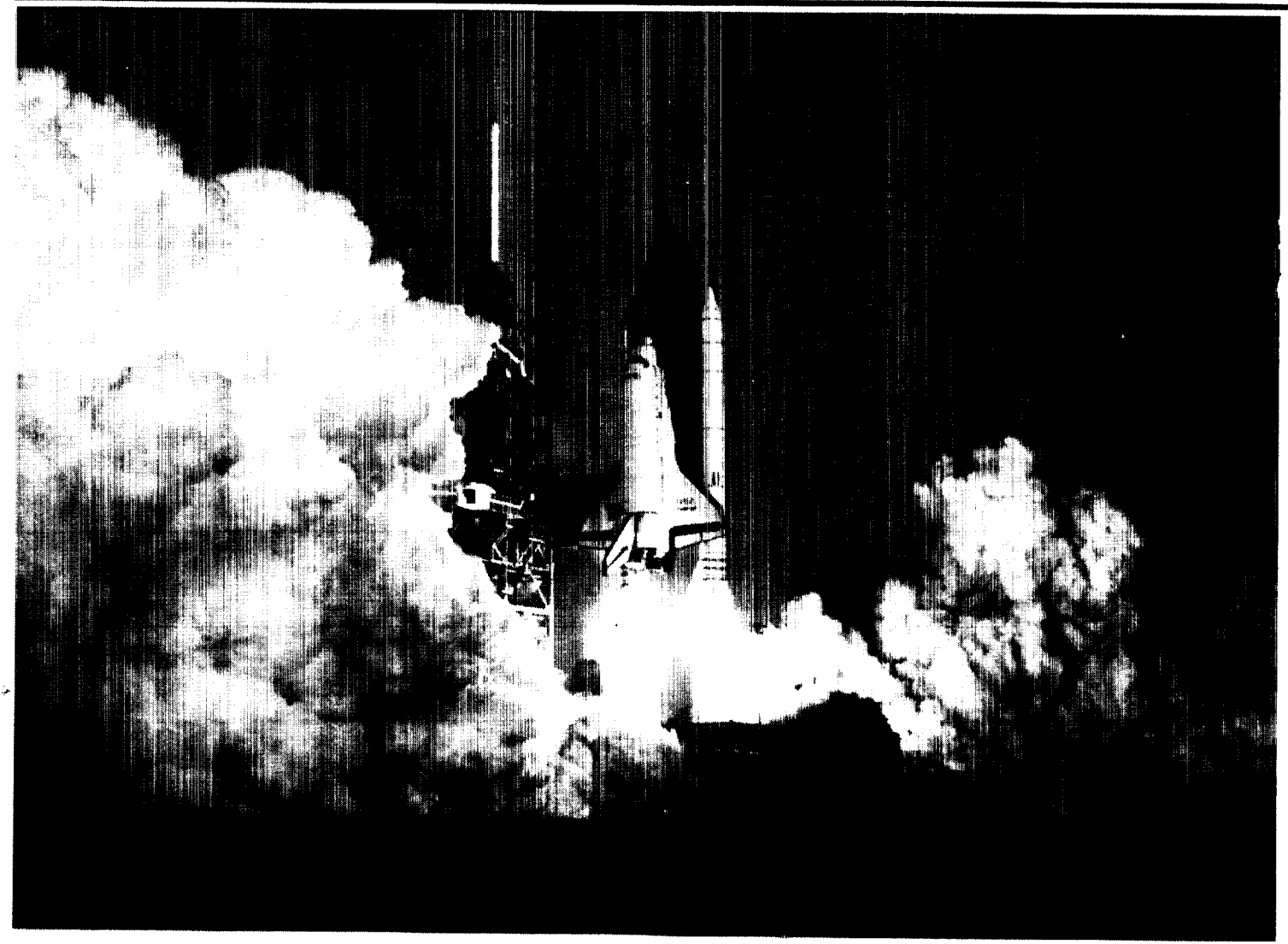

ORIGINAL PAGE
BLACK AND WHITE PHOTOGRAPH

DESIGN AND DEVELOPMENT

S-84-01405

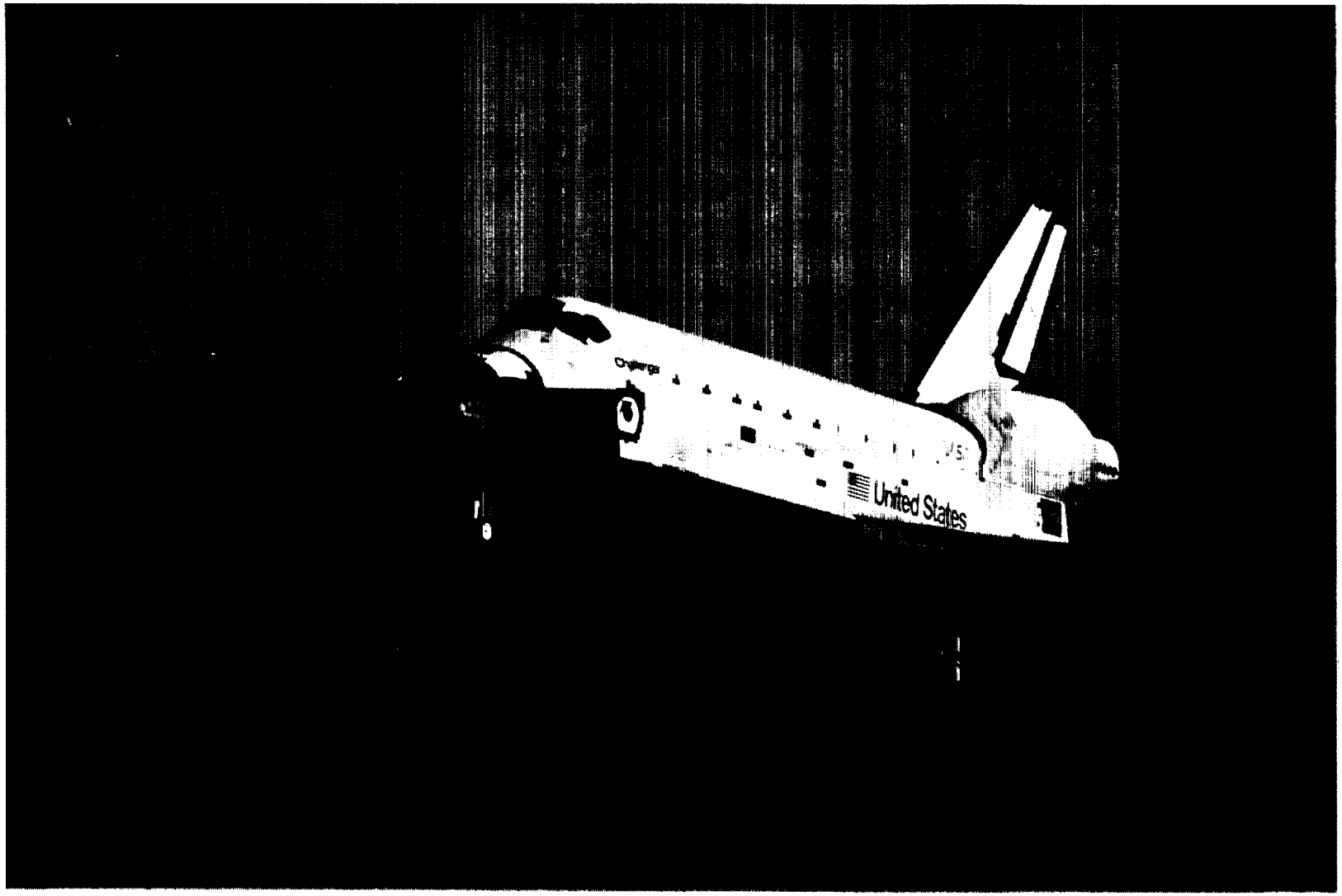

ORIGINAL PAGE
BLACK AND WHITE PHOTOGRAPH

S-84-01631
Rev 1

COUPLED LOADS ANALYSES FOR SHUTTLE LIFT-OFF AND LANDING CONDITIONS

- NASA USES COUPLED LOADS ANALYSES FOR DETERMINING FINAL FLIGHT LOADS AND PAYLOAD MUST SHOW COMPATIBILITY WITH THESE LOADS
- DURING DESIGN EVOLUTION, PAYLOAD CAN UTILIZE SUCH ANALYSES TO REFINE DESIGN LOADS AND POSSIBLY REDUCE WEIGHT
- STS MAY DO COUPLED LOADS FOR PAYLOAD CUSTOMER (OPTIONAL SERVICE)
- PAYLOAD CUSTOMERS MAY DO THEIR OWN COUPLED ANALYSES USING STS-PROVIDED MODELS AND FORCES
- PAYLOAD STRUCTURAL MATH MODEL IS COMBINED WITH STS MODELS FOR COUPLED ANALYSES
  - LIFT-OFF — ORBITER, ET, SRB, LAUNCH PLATFORM + PAYLOAD
  - LANDING — ORBITER + PAYLOAD

COUPLED LOADS ANALYSES

S-84-04474
Rev 1

- TYPICAL PAYLOAD MATH MODEL IS IN THE FORM OF CRAIG-BAMPTON MODES OR MASS AND STIFFNESS MATRICES
  - MAXIMUM OF 300 DEGREES-OF-FREEDOM (DOF) FOR DEDICATED MISSION; 100 DOF IS TYPICAL
- TRANSIENT LOADS ANALYSES
  - LIFT-OFF — 10 CASES THAT SIMULATE STS/PAYLOAD RESPONSE TO SSME AND SRB THRUST, LAUNCH PAD RESTRAINT LOADS, OVERPRESSURE, AND WINDS
  - LANDING — 5 CASES THAT SIMULATE STS/PAYLOAD LOADS FROM SHUTTLE LANDINGS WITH MAXIMUM SINK RATE, HORIZONTAL VELOCITY, AND CROSSWIND
- OUTPUT FROM LOADS ANALYSES INCLUDES: INTERFACE LOADS AND DEFLECTIONS, PAYLOAD LOAD FACTORS, MASS POINT ACCELERATIONS, AND LOAD TRANSFORMATION MATRIX (LTM) ITEMS

TRUNNION FRICTION LOADS

S-84-01647

- FRICTIONAL LOADS AT LONGERON AND KEEL TRUNNION INTERFACES
- THESE LOADS OCCUR IN THE NONRESTRAINED DEGREES-OF-FREEDOM OF EACH PAYLOAD ATTACH POINT (I.E., THE SLIDING INTERFACES)
- THE FRICTION LOADS ARE CALCULATED STATICALLY BY MULTIPLYING A FRICTION COEFFICIENT TIMES THE NORMAL LOAD
- THE FRICTION COEFFICIENT IS 0.1 FOR TEMPERATURES ABOVE -30° F. IT VARIES AT LOWER TEMPERATURES, BASED ON NORMAL LOAD AND TYPE OF FITTING

TRUNNION FRICTION COEFFICIENT

S-84-01404
Rev 1

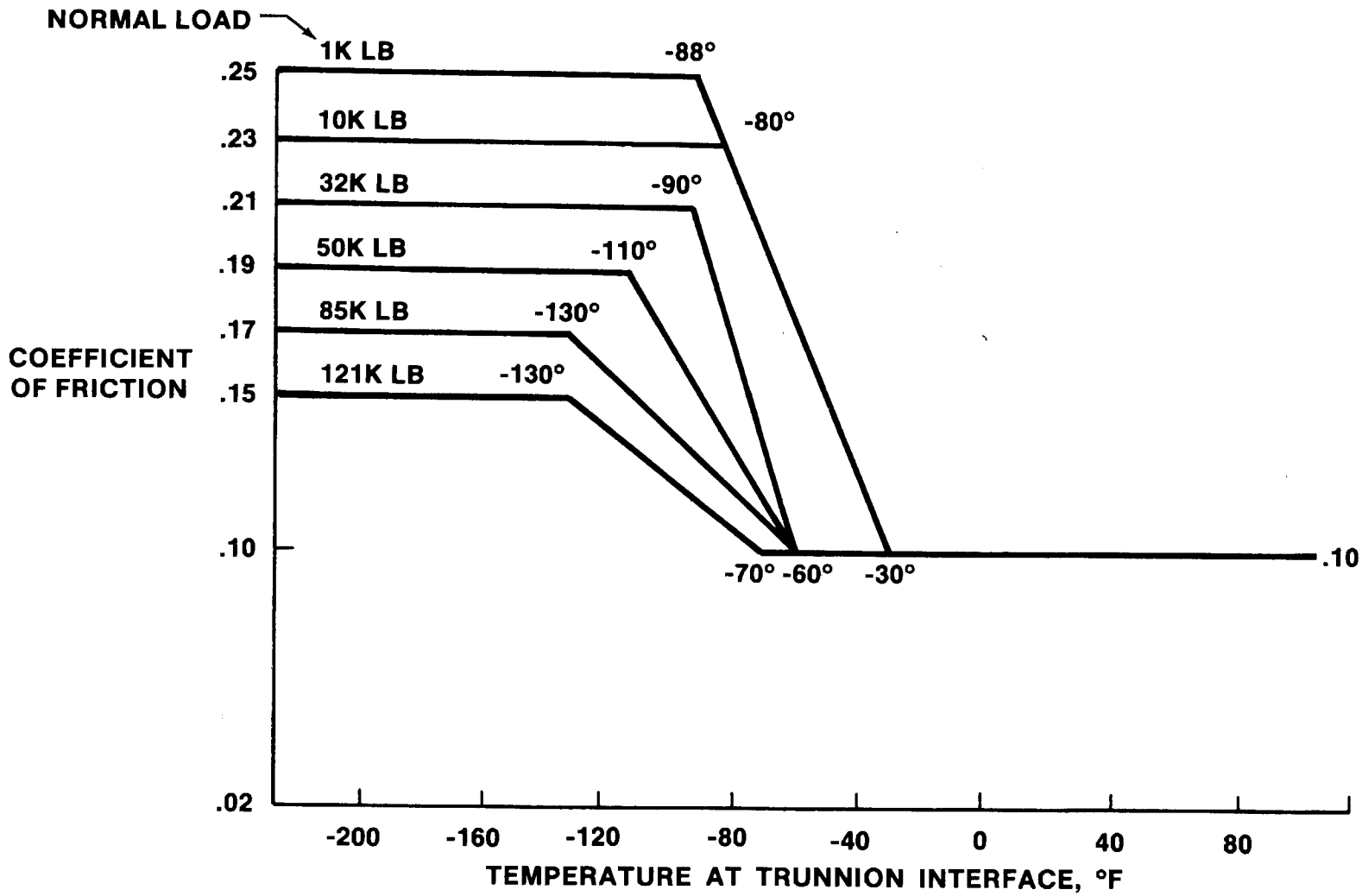

VIBRATION AND ACOUSTICS

- RANDOM VIBRATION ENVIRONMENTS ARE DEFINED AT THE ORBITER/PAYLOAD TRUNNION INTERFACES OVER THE 20 TO 2000 Hz FREQUENCY RANGE
  - DURATION OF 5 SECONDS PER MISSION
  - STATISTICALLY UNCORRELATED
- HIGHER VIBRATION LEVELS ARE DEFINED FOR PAYLOADS WEIGHING LESS THAN 10 000 LB DUE TO LESS MASS ATTENUATION
- THE ACOUSTIC ENVIRONMENT IN THE PAYLOAD BAY IS DEFINED IN SOUND PRESSURE LEVEL OVER THE FREQUENCY RANGE OF 31.5 TO 2500 Hz
- THERE IS A NARROW BAND NOISE ENVIRONMENT DURING ASCENT AT FREQUENCIES OF 250, 315 AND 400 Hz

LONGERON AND KEEL RANDOM VIBRATION AT PAYLOAD TRUNNION

S-84-02093
Rev 1

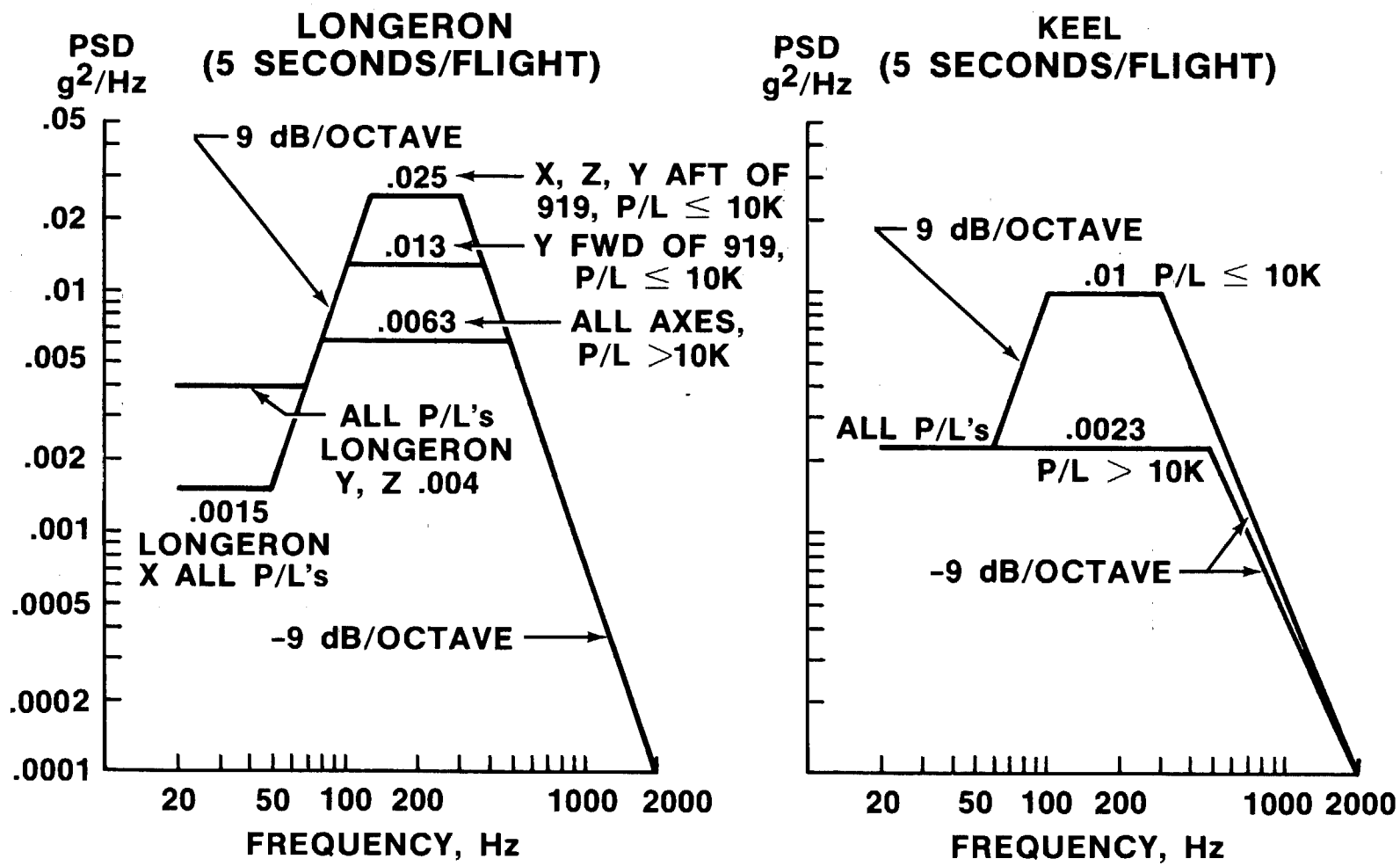

ORBITER PAYLOAD BAY INTERNAL ACOUSTIC ENVIRONMENT

S-84-01055
Rev 1

LIFT-OFF

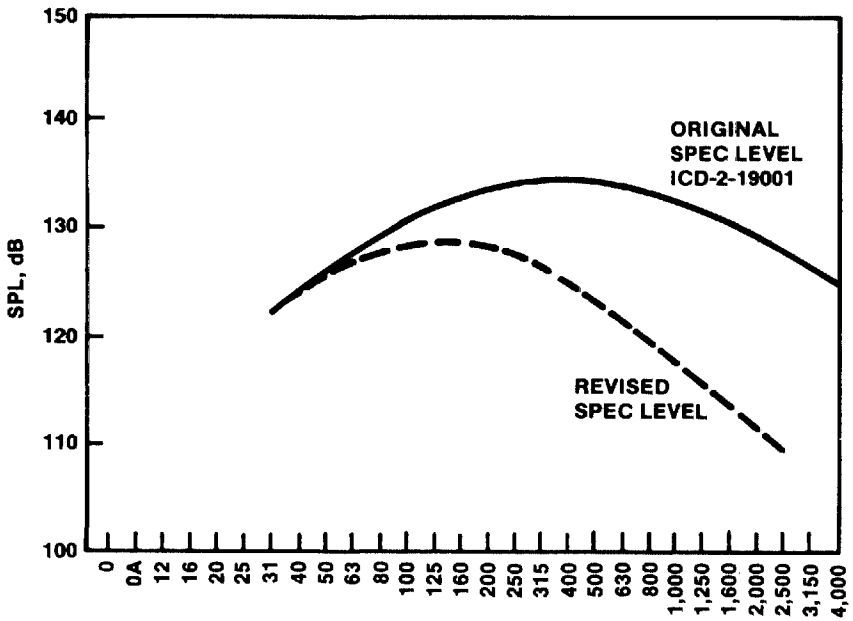

ONE-THIRD OCTAVE BAND CENTER FREQUENCIES, Hz
5 SECONDS PER FLIGHT

AERONOISE

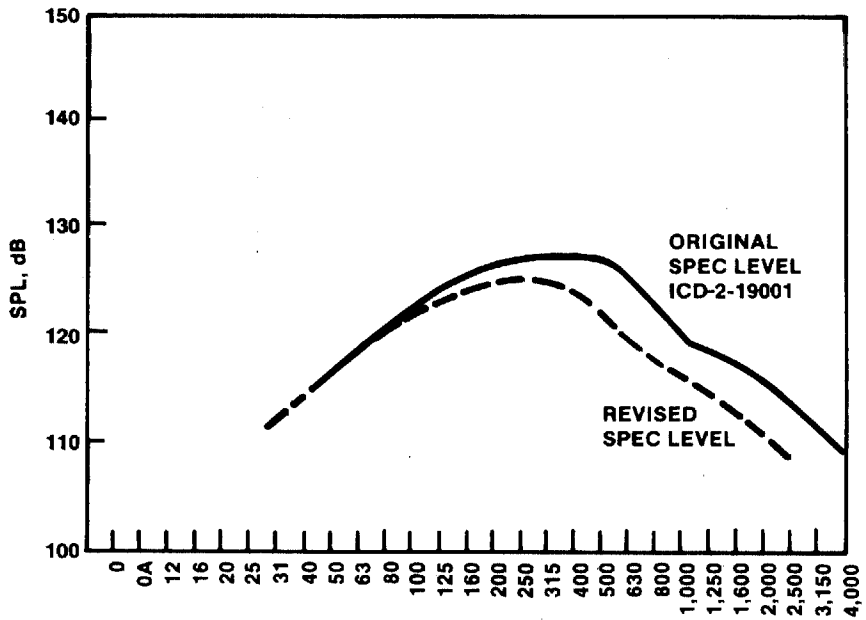

ONE-THIRD OCTAVE BAND CENTER FREQUENCIES, Hz
10 SECONDS PER FLIGHT

PAYLOAD BAY ACOUSTICS INDUCED BY NARROW-BAND AERONOISE COMING THROUGH ORBITER VENTS

ONE-THIRD OCTAVE BAND CENTER FREQUENCIES	SOUND PRESSURE LEVEL dB REF. 2×10^{-5} N/m^2			
HERTZ	RADIAL LOCATION IN CARGO BAY $Y_o \sim$ INCHES			
	52	64	76	83
250	118.0	120.5	124.0	130.0
315	126.0	128.5	132.0	138.0
400	120.0	122.5	126.0	135.0

NOTES:

1. 8 SECONDS PER FLIGHT
2. NARROW BAND DISCRETE NOISE IS RADIATED FROM THE CARGO BAY VENT DOORS DURING TRANSONIC/LOW SUPERSONIC FLIGHT. THE NOISE RADIATED FROM ANY ONE VENT IS DESCRIBED AT DISCRETE ORBITER RADIAL STATIONS (Y_o)

PAYLOAD FREQUENCIES TO AVOID FLIGHT CONTROL INTERACTION

- TO PRECLUDE INTERACTION WITH THE SHUTTLE FLIGHT CONTROL SYSTEM DURING ASCENT AND ENTRY, THE PAYLOAD MINIMUM STRUCTURAL FREQUENCY IS DEFINED AS A FUNCTION OF PAYLOAD WEIGHT
- THIS STRUCTURAL FREQUENCY IS DEFINED BY THE LOWEST STRUCTURAL MODE OF THE PAYLOAD, WHEN FIXED AT THE RESTRAINED ORBITER/PAYLOAD ATTACH POINTS
- THESE GUIDELINES WERE DEVELOPED BY THE STS WITH AN ASSUMED STRUCTURAL DAMPING OF ONE PERCENT OF CRITICAL DAMPING FOR THE PAYLOAD
- PAYLOADS THAT CANNOT MEET THESE PRELIMINARY DESIGN CRITERIA MUST BE ASSESSED BY THE STS TO DETERMINE IF FLIGHT-UNIQUE CONTROL SYSTEM PARAMETERS WILL BE REQUIRED

S-84-01046

PAYLOAD FREQUENCY RESTRICTIONS TO AVOID INTERACTION WITH STS FLIGHT CONTROL SYSTEM

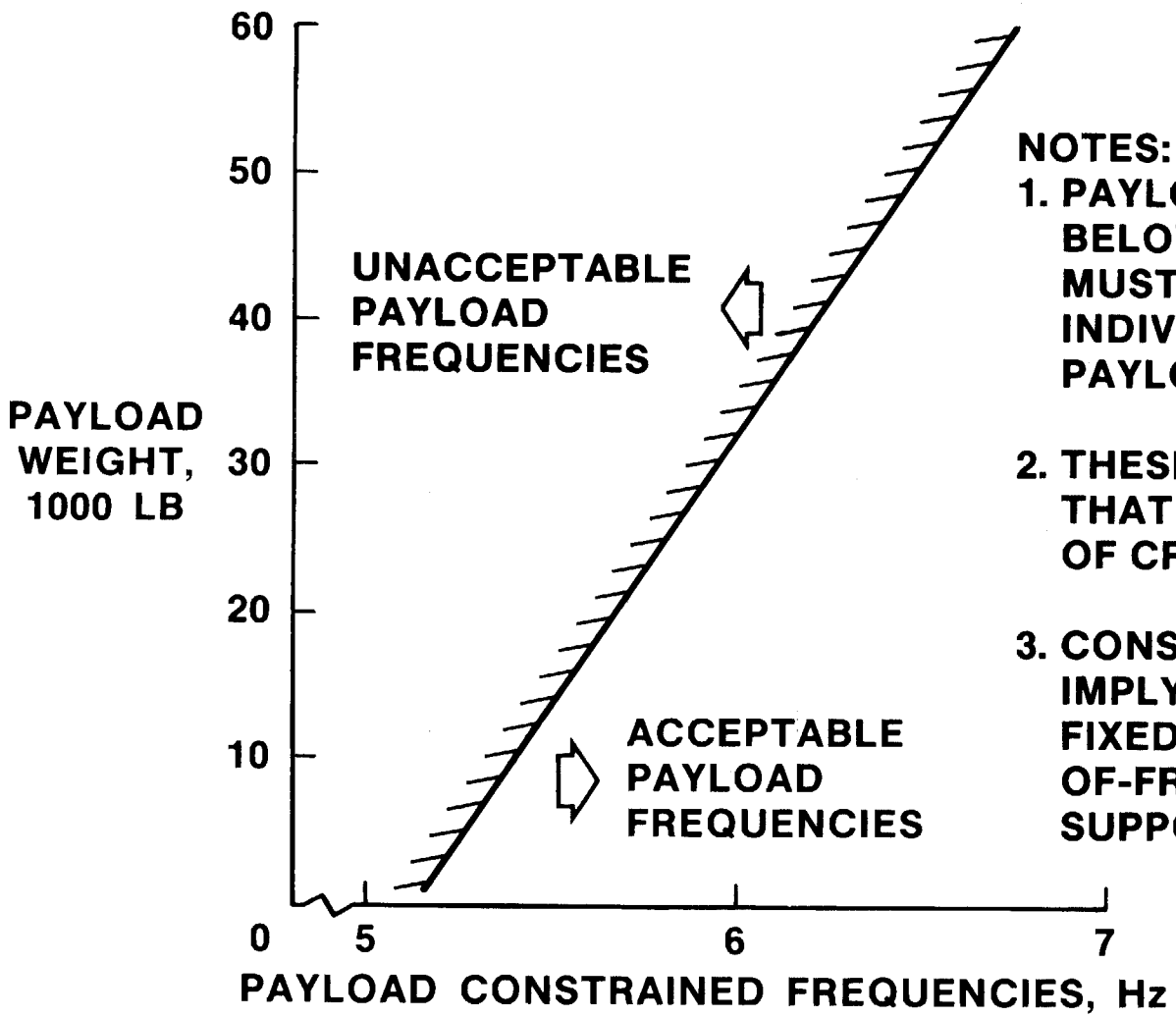

NOTES:

1. PAYLOADS WITH FREQUENCIES BELOW THESE GUIDELINES MUST BE ASSESSED ON AN INDIVIDUAL BASIS USING PAYLOAD MODEL PROPERTIES
2. THESE GUIDELINES ASSUME THAT PAYLOAD DAMPING IS 1% OF CRITICAL OR GREATER
3. CONSTRAINED FREQUENCIES IMPLY THAT THE PAYLOAD IS FIXED AT THE SAME DEGREES-OF-FREEDOM AS WHEN IT IS SUPPORTED IN THE ORBITER

STRENGTH VERIFICATION — OPTIONS

JSC 14046

- STATIC TEST TO ULTIMATE LOAD (1.4 TIMES LIMIT)
- STATIC TEST OF FLIGHT ARTICLE OR EQUIVALENT TO 1.2 TIMES LIMIT LOAD WITH NO YIELDING
- STATIC TEST OF FLIGHT ARTICLE OR EQUIVALENT TO 1.1 TIMES LIMIT LOAD AND CRITICAL ELEMENTS TO ULTIMATE. DEMONSTRATED DESIGN EXPERIENCE AND DESIGN DATA BASE VALIDATION
- OTHER COMBINATIONS OF CRITERIA AND/OR STATIC TESTS, EQUIVALENT TO THOSE ABOVE

MATH MODEL VERIFICATION

JSC 14046

S-84-01627
Rev 1

- STRUCTURAL MATH MODEL PROVIDED TO STS BY PAYLOAD CUSTOMER SHOULD BE VERIFIED TO APPROXIMATELY 40 Hz
- VERIFICATION TESTING METHODS
  - MODAL SURVEY — MULITPOINT SINE VIBRATION
  - SINGLE/MULTIPLE POINT RANDOM VIBRATION
  - INFLUENCE COEFFICIENT TEST FOR STRUCTURES WITH CONCENTRATED MASS
- NON-TEST OPTIONS
  - PAYLOAD DESIGNS THAT CAN BE ACCURATELY CHARACTERIZED BY STATIC TEST AND ANALYSIS
  - PAYLOAD WITH HIGH STRENGTH AND CLEARANCE MARGINS
  - PAYLOAD WITH FIRST FIXED INTERFACE MODE GREATER THAN 35 Hz

S-84-01808

FLIGHT DATA

ORBITER LOW-FREQUENCY ACCELEROMETERS
STS-1 THROUGH STS-5

S-84-01045

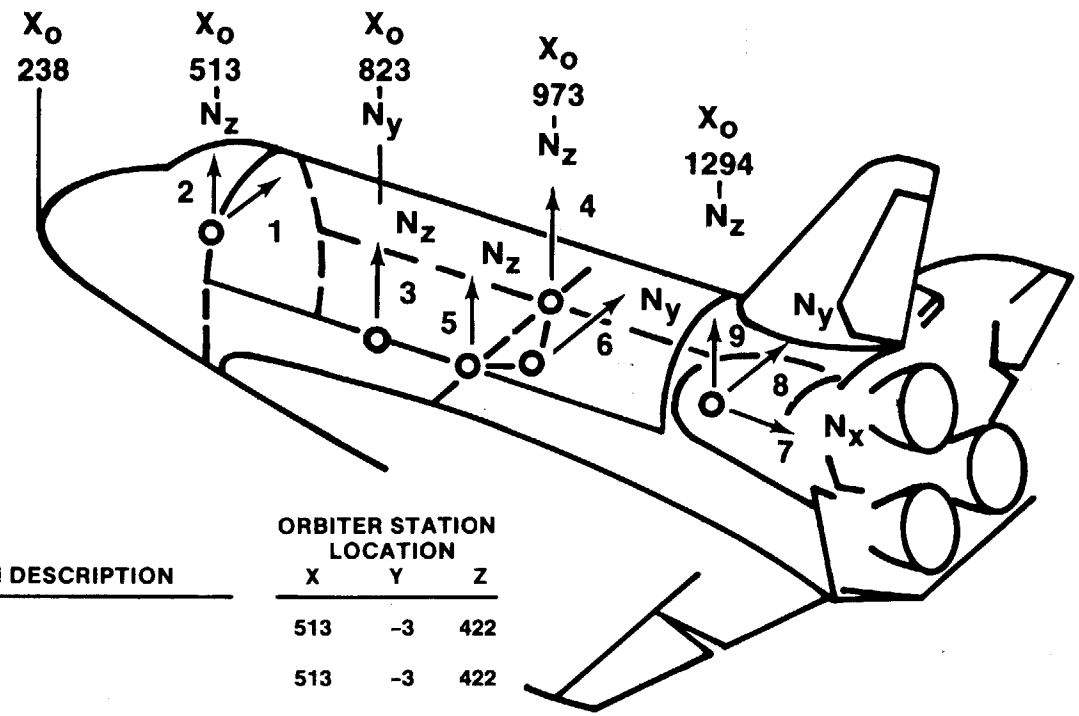

	MEASUREMENT NO.	DIR.	RANGE (g)	LOCATION DESCRIPTION	ORBITER STATION LOCATION X	Y	Z
1.	V33A9215A	Y	-2,+2	CREW CABIN	513	-3	422
2.	V33A9216A	Z	-2,+6	CREW CABIN	513	-3	422
3.	V34A9430A	Z	-2,+5	CARGO BAY, SILL LONGERON	823	-100	407
4.	V34A9431A	Z	-2,+5	CARGO BAY, SILL LONGERON	973	100	407
5.	V34A9432A	Z	-2,+5	CARGO BAY, SILL LONGERON	973	-100	407
6.	V34A9433A	Y	-2,+2	CARGO BAY NEAR KEEL LONGERON	979	+9	305
7.	V34A9434A	X	+3.4,-2.5	CARGO BAY, AFT BULKHEAD	1294	+3	296
8.	V34A9435A	Y	-2,+2	CARGO BAY, AFT BULKHEAD	1294	+3	300
9.	V34A9436A	Z	-1.5,+5	CARGO BAY, AFT BULKHEAD	1294	+3	290

S-84-01624

MAXIMUM LOAD FACTORS FOR STS LIFT-OFF FROM THE ORBITER LOW-FREQUENCY ACCELEROMETERS

MEASUREMENT NUMBER	X_O LOCATION, DESCRIPTION	DIRECTION	FLIGHT DATA, G					PRELIMINARY DESIGN LOAD FACTORS
			STS-1	STS-2	STS-3	STS-4	STS-5	
V34A9434A	1294, BULKHEAD	NX	-2.10	-1.79	-1.91	-1.82	-1.87	-0.2/-3.2
V34A9433A	979, KEEL	NY	0.40	0.16	0.16	0.14	0.15	±1.4
V34A9435A	1294, BULKHEAD	NY	0.25	0.13	0.19	0.08	0.13	±1.4
V34A9430A	823, LEFT LONGERON	NZ	2.8*	0.74	0.72	0.84	0.77	±2.5
V34A9431A	973, RIGHT LONGERON	NZ	2.9*	0.60	0.66	0.70	0.66	±2.5
V34A9432A	973, LEFT LONGERON	NZ	2.9*	0.52	0.58	0.72	0.66	±2.5
V34A9436A	1294, BULKHEAD	NZ	1.25*	0.25	0.25	0.35	0.32	±2.5

*HIGH Z_O ACCELERATIONS ON STS-1 CAUSED BY SRB IGNITION OVERPRESSURE. LAUNCH PAD MODIFICATIONS WERE MADE PRIOR TO STS-2

S-84-01622

MAXIMUM LOAD FACTORS FOR STS LANDING FROM THE ORBITER LOW-FREQUENCY ACCELEROMETERS

MEASUREMENT NUMBER	X_O LOCATION, DESCRIPTION	DIRECTION	FLIGHT DATA, G					PRELIMINARY DESIGN LOAD FACTORS
			STS-1	STS-2	STS-3	STS-4	STS-5	
V34A9434A	1294, BULKHEAD	NX	0.6	0.5	0.6	0.3	0.3	1.5/-1.7
V34A9433A	979, KEEL	NY	0.2	0.2	0.9	0.1	0.1	±0.8
V34A9435A	1294, BULKHEAD	NY	0.2	0.1	0.5	0.1	0.1	±0.8
V34A9430A	823, LEFT LONGERON	NZ	1.6	1.3	2.8	1.4	1.4	0.2/3.0
V34A9431A	973, RIGHT LONGERON	NZ	1.4	1.3	2.3	1.4	1.3	0.2/3.0
V34A9432A	973, LEFT LONGERON	NZ	1.4	1.2	2.3	1.4	1.4	0.2/3.0
V34A9436A	1294, BULKHEAD	NZ	1.4	1.2	2.2	1.3	1.2	0.2/3.0

S-84-01623

SHUTTLE QUASI-STATIC LOAD FACTORS ON STS-1 THROUGH STS-5

DIRECTION	LOAD FACTOR					
	STS-1	STS-2	STS-3	STS-4	STS-5	P/L REQUIREMENTS
ASCENT						
NX	-2.92	-2.99	-2.92	-2.93	-2.95	-3.17
NY	0.1	0.2	0.1	0.2	0.2	0.4
NZ	-0.6	-0.6	-0.6	-0.6	-0.6	-0.8
DESCENT						
NX	0.4	0.4	0.3	0.3	0.4	1.01
NY	0.2	0.2	0.3	0.3	0.1	0.85
NZ	1.6	1.9	1.6	1.8	1.7	2.5

MATERIALS

S-84-01648
Rev 1

- STS MATERIALS REQUIREMENTS ADDRESS FLAMMABILITY, HAZARDOUS MATERIALS, CREW CABIN OFFGASSING, STRESS CORROSION, FRACTURE CONTROL, AND CONTAMINATION
- HAZARDOUS MATERIALS (OXYGEN, HYDRAZINE, NITROGEN TETROXIDE)
  - AVOID MATERIALS/FLUID INCOMPATIBILITY
  - NO DETONATION DUE TO FLUID COMPRESSION HEATING
  - NO MATERIALS EMBRITTLEMENT, SOFTENING, DEGRADATION, ETC.
  - NO CATALYTIC DECOMPOSITION OF FLUIDS BY METALS OR OXIDES
  - UTILIZE BATCH/LOT CONTROL ON MATERIALS SENSITIVE TO IGNITION OR DETONATION
- CREW CABIN OFFGASSING
  - NO OFFGASSING OF TOXIC GASES INTO CREW CABIN (NHB 8060.1B)
  - OFFGASSING TRACE GAS DATA OR MATERIALS LIST IS REQUIRED
  - REQUIREMENTS DO NOT APPLY IF MATERIAL IS ENCAPSULATED

FLAMMABILITY

S-84-01646

- MATERIALS MUST NOT PROPAGATE FIRE IN FLIGHT CONFIGURATION
- RATIONALE FOR ACCEPTABILITY OF FLAMMABLE MATERIALS INCLUDE
  - MATERIALS ACCEPTABLE PER TEST DEFINED IN NHB 8060.1B AT WORST CASE ENVIRONMENT
  - MATERIALS USED IN SMALL AMOUNTS OR IN SPECIAL CONFIGURATIONS, e.g., VELCRO
  - MATERIALS ENCAPSULATED IN NONFLAMMABLE PACKAGE
  - NO IGNITION SOURCE IN PROXIMITY TO A FLAMMABLE MATERIAL

FRACTURE CONTROL

S-84-01641

- FRACTURE CONTROL REQUIREMENTS OF STS HAVE BEEN DEVELOPED FOR FLIGHT SAFETY
- FAIL-SAFE COMPONENTS ARE EXEMPT
  - ASSUME THAT A COMPONENT IS FRACTURED, REDISTRIBUTE LOAD, AND SHOW THAT POSITIVE MARGIN EXISTS (WITH FACTOR OF SAFETY OF 1.0)
  - LOOSE PIECES OF FRACTURED COMPONENT MUST BE CONTAINED, OR WEIGH LESS THAN .03 LB
- EXCEPT GLASS, ALL NONMETALLIC MATERIALS AND FIBER/METAL MATRIX COMPOSITES ARE EXEMPT
- ALL OTHER PARTS REQUIRE FRACTURE MECHANICS ANALYSIS AND NONDESTRUCTIVE INSPECTION
- SEQUENCE OF ACCEPTANCE WOULD BE
  - INSPECT PART FOR FLAWS
  - CALCULATE FLAW GROWTH
  - DEMONSTRATE POSITIVE MARGIN BASED ON LIMIT LOAD

NONDESTRUCTIVE INSPECTION AND FRACTURE ANALYSIS

- INSPECTION METHODS FOR MATERIAL FLAWS — THE METHODS CAN DETECT FLAWS AS SMALL AS .075-IN. DEEP AND .15-IN. LONG
  - DYE PENETRANT
  - ULTRASONICS
  - EDDY CURRENT
  - MAGNETIC PARTICLE
  - X-RAY (70 PERCENT DEEP)
- FLAW GROWTH IS DETERMINED BY FRACTURE TEST OR ANALYSIS USING MATERIAL TYPE (GROWTH RATE) AND LOADING SPECTRUM
  - COMPUTER PROGRAM "FLAGRO" IS AVAILABLE
  - OTHER METHODS INCLUDE PREMADE CURVES FOR DESIGNERS, HAND CALCULATIONS, OTHER COMPUTER PROGRAMS

PRESSURE VESSEL REQUIREMENTS

S-84-01626
Rev 1

- STS REQUIREMENTS APPLY TO PRESSURE VESSELS THAT CONTAIN STORED ENERGY OF AT LEAST 0.01 LB TNT EQUIVALENT OR HAZARDOUS FLUIDS (SUCH AS N_2O_4, MMH, OXYGEN)
- OPTIONS DEFINED IN NHB 1700.7A INCLUDE
  - SAFETY FACTOR OF 4 OR GREATER AND NO AGGRESSIVE FLUIDS
  - MIL-STD-1522
    - — TEST ONE VESSEL TO TWICE MAXIMUM OPERATING PRESSURE
    - — CYCLIC LOAD ONE VESSEL AT 1.5 TIMES MAXIMUM OPERATING PRESSURE FOR TWO TIMES PREDICTED NUMBER OF CYCLES
    - — ACCEPTANCE PROOF TEST FLIGHT VESSELS TO 1.5 TIMES MAXIMUM OPERATING PRESSURE
  - NSS-HP-1740.1, SAFETY FACTOR 1.5 OR GREATER AND ONE VESSEL DEMONSTRATION TO DESIGN BURST ($\geq$ 2.0 x MEOP)

CONTAMINATION — HARDWARE REQUIREMENTS

- STS CONTAMINATION REQUIREMENTS HAVE BEEN DEVELOPED TO PRECLUDE CROSS-CONTAMINATION OF PAYLOADS AND TO PROVIDE A CLEAN ENVIRONMENT FOR PAYLOADS
- PAYLOAD REQUIREMENTS
  - OUTGASSING OF NONMETALLIC MATERIALS
    - — MAXIMUM OUTGASSING WEIGHT LOSS OF LESS THAN 1.0 PERCENT AND MAXIMUM VOLATILE CONDENSABLE MATERIALS (VCM) THAT ARE OUTGASSED SHALL BE LESS THAN 0.1 PERCENT OF WEIGHT
    - — PREPROCESSING OF MATERIALS IS ACCEPTABLE — THERMAL VACUUM TEST, ETC.
    - — EUROPEAN SPACE AGENCY (ESA) HAS SIMILAR REQUIREMENTS
  - PAYLOAD MUST BE CLEANABLE — PAYLOAD RESPONSIBILITY
  - NO FLUID DUMPS WHEN ORBITER DOORS CLOSED; FLUID DUMPS ALLOWED ON ORBIT (STS APPROVAL)

STRESS CORROSION

S-84-04475
Rev 1

- MATERIALS SHOULD COMPLY WITH MSFC 522A, TABLE I OR EQUIVALENT
- ALLOYS NOT INCLUDED IN MSFC 522A, (SUCH AS EUROPEAN ALLOYS) WILL BE EVALUATED BY SIMILARITY
  - CHEMICAL COMPOSITION AND HEAT TREAT MUST BE CONSIDERED
  - WHERE SIMILARITY CANNOT BE ESTABLISHED, TEST DATA MUST BE SUPPLIED (30 DAYS - ALTERNATE IMMERSION IN 3 1/2 PERCENT SALT SOLUTION OR EQUIVALENT TEST CONDITIONS)
- MATERIALS IN TABLES II, III OF MSFC 522A MAY BE USED PROVIDED THEIR APPLICATION IS ACCEPTABLE - WAIVER REQUIRED IF CATASTROPHIC HAZARD

CONTAMINATION — STS INDUCED ENVIRONMENTS

S-84-02055
Rev 1

- GASEOUS LEVELS AROUND THE ORBITER IN ORBIT ARE SPECIFIED IN TERMS OF COLUMN DENSITY
- LIGHT BACKGROUND — BASICALLY NOT TO EXCEED SKY BACKGROUND LIGHT LEVELS IN VARIOUS SPECTRAL REGIONS
- PARTICLE EMISSIONS ARE SPECIFIED IN TERMS OF PARTICLE RELEASE RATE — NO MORE THAN ONE PARTICLE; 5 mm OR GREATER IN SIZE, PER ORBIT IN 1.5×10^{-5} sr FIELD OF VIEW
- MOLECULAR DEPOSITS ARE SPECIFIED IN TERMS OF DEPOSITION RATE FOR SURFACES AT VARIOUS TEMPERATURES — LESS THAN 10^{-5} g/cm^2/30 DAYS 2π sr ON 27° C SURFACE
- LOWEST LEVEL OF CONTAMINATION ACHIEVABLE ONLY DURING QUIESCENT PERIODS

CONTAMINATION - GROUND HANDLING

S-84-04476
Rev 1

- FREE AIR PARTICULATES
  - HIGH EFFICIENCY PARTICULATE FILTERS PROVIDE AT LEAST CLASS 5000 AIR AT FILTER EXIT IN PAYLOAD HANDLING FACILITIES
  - PARTICULATES ARE MONITORED IN ORBITER PROCESSING FACILITY (OPF) AND PAYLOAD CHANGEOUT ROOM (PCR)
- PARTICULATE FALLOUT - STS SURFACES WILL BE CLEANED TO ONE OF THE FOLLOWING LEVELS
  - STANDARD
  - SENSITIVE
  - HIGHLY SENSITIVE
- MOLECULAR ENVIRONMENT
  - NON-VOLATILE RESIDUE MEASURED AND MAINTAINED TO LESS THAN 1 $mg/FT^2/MONTH$
  - TOTAL HYDROCARBONS MAINTAINED TO LESS THAN 15 PPM

S-84-01643

STRUCTURAL/MECHANICAL PAYLOAD INTEGRATION
SEQUENCE OF EVENTS

- INTEGRATION MEETING(S) — OVERVIEW OF SHUTTLE AND CARGO
- PAYLOAD INTEGRATION PLAN
  - DEFINITION OF RESPONSIBILITIES/REQUIREMENTS
    - — WHO DOES LOADS/DEFLECTIONS, MATH MODELS, ETC.
    - — SCHEDULE
    - — INTERFACE HARDWARE
- INTERFACE CONTROL DOCUMENT
  - DEFINITION OF PHYSICAL INTERFACES
  - LOADS AND CLEARANCES
- STRUCTURAL/MECHANICAL WORKING GROUP MEETINGS
  - REVIEW STRUCTURAL VERIFICATION PLANS — STRENGTH, MATH MODEL, MATERIALS, FRACTURE
  - ICD DEVELOPMENT AND MAINTENANCE
  - TECHNICAL INTERCHANGE
    - — SHUTTLE DATA — FLIGHT AND ANALYSIS
- VERIFICATION LOADS CYCLE AND PAYLOAD CERTIFICATION

S-84-01638

STANDARD AND OPTIONAL SERVICES FOR PAYLOADS

- STANDARD SERVICES — STS PROVIDED
  - VERIFICATION LOADS CYCLE — COUPLED LOADS ANALYSIS OF FLIGHT MANIFEST
  - A SET OF STS MATH MODELS AND FORCING FUNCTIONS, WHICH CAN BE USED BY PAYLOAD ORGANIZATION FOR COUPLED LOADS ANALYSIS
  - TECHNICAL SUPPORT FOR DEFINITION AND INTERPRETATION OF REQUIREMENTS
- OPTIONAL SERVICES
  - DESIGN LOADS ANALYSIS — STS MAY CONDUCT COUPLED LOADS ANALYSIS FOR PAYLOAD DEVELOPER
  - DEVELOP LOADS TRANSFORMATION MATRIX (LTM) FROM PAYLOAD FINITE ELEMENT MODEL
  - SOME MATERIALS TESTING

SUMMARY

S-84-02056

- STS PROVIDES A LARGE ENVELOPE FOR PAYLOAD USE (4.6 m BY 18.3 m) AND CAN ACCOMMODATE PAYLOADS UP TO 65, 000 LB
- THE PAYLOAD INTERFACES WITH THE ORBITER THROUGH STANDARD CYLINDRICAL TRUNNIONS WHICH CAN BE SPACED TO ACCOMMODATE THE PAYLOAD REQUIREMENTS
- A MECHANICAL ARM IS AVAILABLE TO DEPLOY/RETRIEVE PAYLOADS
- STS ENVIRONMENTS ARE WELL DEFINED AND VERIFIED AND SIMILAR TO OTHER LAUNCH VECHICLES
  - STRUCTURES
  - CONTAMINATION
- STRUCTURAL TEST REQUIREMENTS FOR FLIGHT SAFETY ARE FLEXIBLE AND OFTEN ENCOMPASSED BY PAYLOAD CERTIFICATION TESTING

PRECEDING PAGE BLANK NOT FILMED

★ U.S. GOVERNMENT PRINTING OFFICE: 1984—789-013/7729