NASA-TM-109394

KSC-DM-3491

NASA

KENNEDY SPACE CENTER

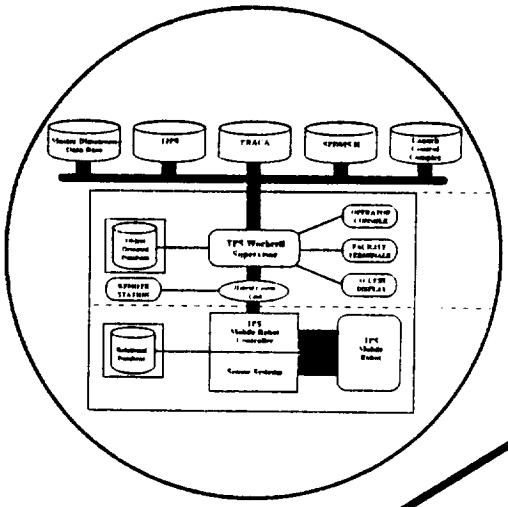

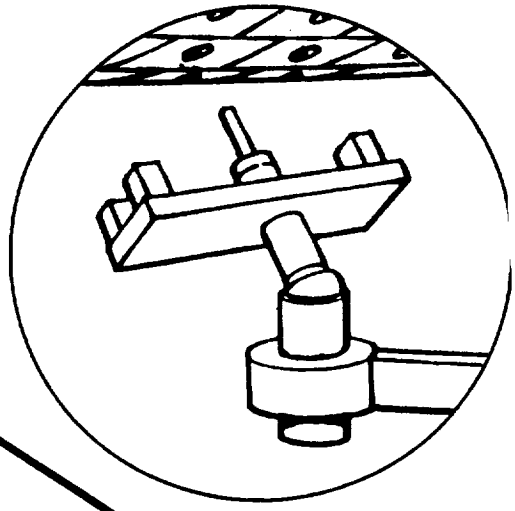

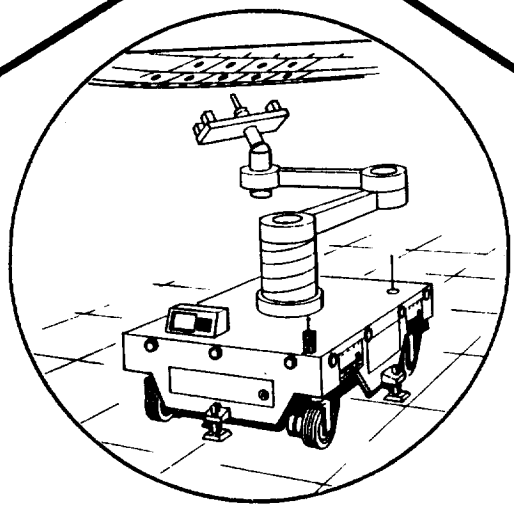

(NASA-TM-109394) THERMAL PROTECTION SYSTEM PROCESS AUTOMATION STUDY Final Report (Boeing Aerospace Co.) 374 p

N94-71364

Unclas

Z9/16 0201771

THERMAL PROTECTION SYSTEM PROCESS AUTOMATION STUDY

Final Report

KSC-DM-3491

ORIGINAL PAGE IS
OF POOR QUALITY

THERMAL PROTECTION SYSTEM PROCESS AUTOMATION STUDY

Final Report

ORIGINAL PAGE IS
OF POOR QUALITY

ORIGINAL PAGE IS
OF POOR QUALITY

OCTOBER 1990

ENGINEERING DEVELOPMENT DIRECTORATE

National Aeronautics and
Space Administration

John F. Kennedy Space Center

KSC-DM-3491

THERMAL PROTECTION SYSTEM PROCESS AUTOMATION STUDY
Final Report

PREPARED BY

BOEING AEROSPACE OPERATIONS, INC.
ENGINEERING SUPPORT CONTRACTOR
JOHN F. KENNEDY SPACE CENTER, FLORIDA

FOR

ADVANCED PROJECTS, TECHNOLOGY, & COMMERCIALIZATION OFFICE
NATIONAL AERONAUTICS AND SPACE ADMINISTRATION
JOHN F. KENNEDY SPACE CENTER, FLORIDA

Eric Rhodes,
KSC Advanced Projects Robotic Manager
PT-AST

V. Leon Davis,
KSC Robotics Section Chief
DM-MED-12

Todd Graham,
KSC, Project Manager
DM-MED-12

William Spiker II,
KSC Project Lead
BAO/ESC-KSC, MS/FA-58

OCTOBER 1990

NATIONAL AERONAUTICS AND SPACE ADMINISTRATION
JOHN F. KENNEDY SPACE CENTER, FLORIDA

KSC-DM-3491

THERMAL PROTECTION SYSTEM PROCESS AUTOMATION STUDY
Final Report

APPROVED BY:

Kevin Dowling,
Robotics Institute - Field Robotics Center
Carnegie Mellon University

Plesent "Mike" Goode,
Automation Technology Branch
NASA Langley Research Center

Prasanna Mulgaonkar
Robotics Laboratory
SRI International

*** TABLE OF CONTENTS ***

1. EXECUTIVE SUMMARY 1-1

2. INTRODUCTION 2-1

3. SCOPE 3-1

4. BACKGROUND 4-1

5. STUDY APPROACH 5-1

6. TPS PROCESS OVERVIEW 6-1

6.1. TPS Components 6-1

6.1.1. Tiles (HRSI/LRSI) 6-1
6.1.2. Filler Bar 6-3
6.1.3. Strain Isolation Pad (SIP) 6-3
6.1.4. Gap Fillers 6-5
6.1.5. Ceramic Plugs/Inserts 6-5
6.1.6. Thermal Barriers 6-6
6.1.7. Flexible Insulation Blankets (FIB) 6-6
6.1.8. Reinforced Carbon/Carbon (RCC) 6-6
6.1.9. Felt Reusable Surface Insulation (FRSI) 6-6

6.2. TPS Work Content 6-7

6.2.1. TPS General Flow 6-7

6.3 Planning/Sceduling/Execution of TPS Work 6-10

7. INITIAL REVIEW AND DETAILED PROCESS DESCRIPTIONS 7-1

7.1. Preliminary Process Review 7-1

7.1.1. Related Studies 7-1
7.1.2. Interviews and Observations 7-2
7.1.3. Facilities 7-6

7.2. Preliminary Review Results 7-20

7.2.1. Information Systems 7-21
7.2.2. Human Performance 7-23
7.2.3. Materials and Design 7-23
7.2.4. Tools and Mechanisms 7-23
7.2.5. Robots and Sensors 7-24

*** TABLE OF CONTENTS ***

7.3. Potential Robot/Sensor Applications 7-26

7.3.1. Tracer Pattern Fabrication (P102).....7-27
7.3.2. Tile Rewaterproofing (P113).....7-29
7.3.3. FIB Rewaterproofing (P114).....7-38
7.3.4. Tile Bonding (P301).....7-42
7.3.5. Diced Tile Bonding (P302).....7-44
7.3.6. Tile Step & Gap (P310).....7-45
7.3.7. Tile Bond Verification (P315).....7-50
7.3.8. FIB Step & Gap (P504).....7-57
7.3.9. Gap Filler Fab FIBs (P505).....7-59
7.3.10. Gap Filler Fab Tiles (P601-604).....7-61
7.3.11. Post-Flight RSI Inspection (V6028).....7-63
7.3.12. Pre-OPF Rollout Inspection (V6037).....7-78
7.3.13. Premate/Pre-VAB Rollout Inspection (V6039).....7-80
7.3.14. Pre-Launch Inspection (V6040).....7-81
7.3.15. Inspection After COM/NAV Testing (V6045).....7-82
7.3.16. OML Surface Contour Measurements.....7-83

7.4. Summary of Processes Selected and Productivity Benefits.....7-85

7.4.1. Processes Selected.....7-85

7.4.2. Summary of Productivity Benefits.....7-85

8. PROCESS RANKING 8-1

8.1. Formal Analysis.....8-1
8.2. Guidelines 8-2
8.3. Results 8-3

9. TPS PROCESS INITIAL DESIGN FOCUS 9-1

9.1. Initial Processes.....9-2
9.2. Add-on Processes.....9-3

10. SYSTEM CONCEPT EVOLUTION.....10-1

10.1. Sensor and Tool Concepts.....10-3

10.1.1. Tile Cavity Digitization.....10-3
10.1.2. Tile Rewaterproofing.....10-6
10.1.3. Tile Step and Gap.....10-17
10.1.4. Non-Contact Tile Bond Verification.....10-18
10.1.5. Tile Gap Filler Digitization.....10-18
10.1.6. Bottomside Post Flight TPS Inspection.....10-18

*** TABLE OF CONTENTS ***

10.1.7. Bottomside Pre-OPF Rollout Inspection....10-26
10.1.8. OML Contour Measurements....10-26
10.1.9. Common Sensor Processes....10-26
10.1.10. Sensor and Tool Summarization....10-29

10.2. Positioning Mechanism Concepts....10-31

10.2.1. Fixed and Semi-Autonomous Concepts....10-31
10.2.2. Articulated Arm on Vertical Elevator....10-34
10.2.3. Articulated Arm with No Elevator....10-36
10.2.4. Vertical Extension on X-Y Translation....10-38
10.2.5. Semi-Autonomous Positioning....10-40
10.2.6 SCARA Arm on Vertical Elevator....10-40

10.3. Mechanical Sub-System Concepts....10-42
10.3.1. Mobile Base....10-42
10.3.2. Elevator Mechanisms....10-45
10.3.3. Fine Positioner....10-45
10.3.4. End Effector....10-49

10.4. Navigation Sensor Concepts....10-51

10.4.1. Location Sensors....10-51
10.4.2. Obstacle Detection Sensors....10-54

10.5. Control System Architecture....10-55

10.5.1. Enterprise Systems....10-58
10.5.2. Workcell Supervisor....10-60
10.5.3. Mobile Robot Controller....10-62
10.5.4. Typical Operating Scenario....10-64

10.6. Consolidated System Concept....10-68

11. PRELIMINARY SYSTEM DESIGN GUIDE....11-1

11.1. System Description....11-1
11.2. General System Requirements....11-2

11.2.1. System Features....11-5

11.3. Sub-System Requirements....11-7

11.3.1. Process Sensors and Tools....11-7
11.3.2. Mechanical System....11-10
11.3.3. Autonomous Navigation Requirements....11-13
11.3.4. Control System Requirements....11-14

*** TABLE OF CONTENTS ***

12. DEVELOPMENT PLAN 12-1

12.1. Technical Summary 12-1
12.2. Justification 12-2
12.3. Goals and Objectives 12-5
12.4. Approach 12-6
12.5. Schedule 12-11
12.6. Resource Rquirements 12-14

13. CONCLUSION 13-1

14. WORKING COMMITTEE 14-1

15. ACKNOWLEDGEMENTS 15-1

16. GLOSSARY 16-1

*** APPENDICES ***

A. Complete Process Listing (132) A-1

B. Complete Reference Document Listing B-1

C. Detailed Flow Diagrams C-1

D. Complete Drawings/Models listing D-1

E. Process Review Questionnaire E-1

F. Photo/Video References F-1

G. Positional Reach Requirements Study G-1

H. Vision Sensors H-1

I. Topographical (3D) Sensors I-1

J. Tile Rewaterproof J-1

K. Wide Area Sensors K-1

L. Tile Centroid Measurements KSC L-1

LIST OF FIGURES

Figure No.	DESCRIPTION	Page
5-1	Study Flow	5-2
6-1	Orbiter Thermal Protection System	6-2
6-2	TPS Bottomside Components	6-4
7-1	Orbiter After Defueling	7-8
7-2	Orbiter in the MDM	7-10
7-3	Aft Looking Forward View of Underside of Orbiter	7-11
7-4	Forward Looking Aft View of Underside of Orbiter	7-12
7-5	Orbiter Inside OPF Highbay	7-15
7-6	Orbiter Inside the VAB	7-17
7-7	Space Shuttle on the Launch Pad	7-19
7-8	Orbiter Temperature Frofile During Re-entry	7-32
7-9	Tile Rewaterproofing Tool	7-34
7-10	FIB Rewaterproofing Tool	7-40
7-11	Step and Gap Measurement Problem	7-47
7-12	Tile Bond Verification Overview	7-51
7-13	Advanced Shearography	7-56
7-14	FIB Step and Gap Tool	7-58
8-1	TPS Team Level 1 Ranking	8-5
10-1	Digitized Cavity	10-5
10-2	Tile Cavity	10-7
10-3	Modified Tile Rewaterproofing Tool	10-9
10-4	DMES Leak Trapping Tool	10-11
10-5	Leak Detection Subsystem Using DMES Vapor Pressure	10-12
10-6	Injection Hole Locations	10-16
10-7	Line Camera Concept	10-21
10-8	Color Camera Concept	10-23
10-9	Charred Filler Bar Inspection	10-25
10-10	Partially Obscured Tile Number	10-30
10-11	Planar Arm on Telescoping Elevator	10-33
10-12	Articulated Arm on Vertical Elevator	10-35
10-13	Articulated Arm with No Elevator	10-37
10-14	Vertical Extension On X-Y Table	10-39
10-15	Semi-Autonomous Postitioning	10-41
10-16	Mobile Base Concept	10-43
10-17	End of Arm Concept	10-50
10-18	Automated TPS Control System Architecture	10-56
10-19	Consolidated Positioning Concept	10-69
11-1	Major System Components	11-3
11-2	Automated TPS Control System Architecture	11-17
11-3	Flight Control System	11-19
11-4	Mobile Robot Controller Diagram	11-22
12-1	Responsive Prototyping Methodology	12-7
12-2	Project Schedule	12-2

LIST OF TABLES

TABLE NO.	DESCRIPTION	PAGE
7-1	Breakdown of V6028 by Major Tasks	7-65
7-2	Summarized Distribution of V6028 Defects	7-70
7-3	Process Efficiency Gains	7-86
8-1	Consensus Rankings of Operational Payoff Criteria	8-3
8-2	Ordered Criteria Weights	8-4
8-3	Ordered Process Rank	8-4
9-1	Process Groupings	9-1
10-1	Concept Evaluation Criteria	10-48
10-2	Facility Modification Impact Estimation Matrix	10-52
12-1	Resource Requirements	12-1

ABBREVIATIONS AND ACRONYMS

AFRSI	Advanced Felt Reusable Surface Insulation
A.M.	Before Noon
BV	Bond Verification
CAD	Computer Aided Design
CAM	Computer Aided Manufacturing
CASE	Computer Aided System Engineering
CCD	Charge Coupled Device
CID	Charge Injection Device
CMAV	Configuration Management Accounting and Verification
CMM	Coordinate Measuring Machine
CMU	Carnegie Mellon University
CNC	Computer Numeric Controlled
CS	Control System
DMES	Dimethylethyloxysilane
DOF	Degree(s) of Freedom
DR	Discrepancy Report
e.g.	For Example
ESC	Engineering Support Contract
ET	External Tank
FI	Flexible Insulation

FIB	Flexible Insulation Blanket
FMEA	Failure Modes and Effects Analysis
FRCS	Forward Reaction Control System
FRSI	Felt Reusable Surface Insulation
GSE	Ground Support Equipment
HRSI	High-temperature Reusable Surface Insulation
i.e.	That is
IML	Inside Mold Line
IMS	Information Management System
IR	Infra-red
JSC	Johnson Space Center
KSC	John F. Kennedy Space Center
LAN	Local Area Network
LaRC	Langley Research Center
LIDAR	Laser-Radar
LRSI	Low-temperature Reusable Surface Insulation
LSOC	Lockheed Space Operations Company
MDD	Mate/Demate Device
MDM	Manipulator Deployment Mechanism
MDR	Matrix Discrepancy Report
MKKP	Mission and Modification Planning/Accounting

MLGD	Main Landing Gear Door
MLP	Mobile Launch Platform
MRB	Material Review Board
NASA	National Aeronautics and Space Administration
NC	Numeric Control
NEC	Nippon Electric Company
NLGD	Nose Landing Gear Door
NTSC	National Transportation Safety Committee
OMI	Orbiter Maintenance Instruction
OML	Outer Mold Line
OMRF	Orbiter Maintenance and Refurbishment Facility
OMS	Orbiter Maneuvering System
OODBMS	Object-oriented Database Management System
OPF	Orbiter Processing Facility
P.M.	After Noon
P/E	Ratio of Payoff to Effort
PCASS	Program Compliance Assurance and Status
PPI	Pixel Per Inch
PR	Problem Report
PRACA	Problem Reporting and Corrective Action
PSI	Pound Per Square Inch

QC	Quality Control
RADL	Robotics Application Development Laboratory
ROG	Reaction-cured Glass
RDD	Research and Development Division
RGB	Red Green Blue
RISC	Reduced Instruction Set Computer
RRS	Rolling Surface Structure
RSI	Reusable Surface Insulation
RTOP	Research and Technology Objectives and Plans
RTV	Room-temperature Vulcanized
SCARA	Selectively Compliant Articulated Robot for Assembly
SIORA	Space Systems Integration and Operations Research Applications
SIP	Strain Isolation Pad
SPC	Shuttle Processing Contract
SPDMS II	Shuttle Processing Data Management System II
SPFA	Single Point Failure Analysis
SR&QA	Safety, Reliability, and Quality Assurance
SRB	Solid Rocket Booster
STS	Space Transportation System
TIPS	Tile Information Processing System

TLV	Threshold Limit Value
TPS	Thermal Protection System
UCF	University of Central Florida
UF	University of Florida
VAB	Vehicle Assembly Building
YC	Luminance Chromanance
°C	Degree Celcius
°F	Degrees Farenheit

1. Executive Summary

This report describes the findings of a six-month study to evaluate Orbiter maintenance procedures on the Thermal Protection System (TPS) and select ones that may be automated using today's robotic and sensor technology. This study was conducted by a team of engineers from Kennedy Space Center (NASA and Boeing), Langley Research Center, Carnegie Mellon University's Field Robotics Center, and SRI International. The objectives of the study were to:

(1) Identify TPS tasks whose automation is cost effective and can improve the Orbiter maintenance schedule,

(2) Integrate state-of-the-art robotic technologies into NASA's ground operations, and

(3) Provide an impressive yet low-risk demonstration of NASA's robotic program.

The two tasks that survived the screening process as the prime candidates for initial automation are tile rewaterproofing and visual anomaly detection. Because of the thorough and methodical approach of selecting tasks and the required technologies, there was consensus expressed in the conceptual designs of the various subsystems and the overall operational concept. The constituent technologies for these designs are available and an aggressive development and demonstration schedule is recommended. Several additional tasks were identified that would use the same mechanisms as the initial two candidates and, therefore, they provide a natural and low-cost growth path for future expansion.

Routine TPS inspection and refurbishment operations are performed at two locations: Dryden in California where the Shuttle currently lands, and in Florida at the Orbiter Processing Facility (OPF). Minor tasks are also performed in the Vehicle Assembly Building (VAB) and on the launch pads. A list of all relevant tasks was compiled. This list comprised 132 processes from which 19 tasks were selected as candidates for automation using available robotic and sensor based technologies. The team's preliminary evaluation of these tasks narrowed the list to 7 tasks that could be justifiably automated with available technology. The study team members then ranked these tasks using a formal ranking methodology. This methodology selected the step-and-repeat tasks (tile rewaterproofing and TPS anomaly detection) as initial processes to be automated. The team noted that four

of the remaining tasks could be added at a later date with software additions only, and one would require a specialized sensor being developed under a different program.

The tile rewaterproofing procedure uses a portable manual tool to deliver dimethylethoxysilane (DMES) into each tile on the Orbiter. A technician places the tool nozzle over a small hole in the ceramic coating on the tile and a precise quantity of DMES is injected through the hole under pressure. DMES is toxic and flammable and the task is currently performed only on third shift with a large clear area around the work site.

A variety of general and special visual inspections are routinely carried out over the entire Shuttle. Visual anomaly detection is performed after every flight to detect gouged, chipped, discolored, and otherwise unacceptable conditions on the surface of every tile. Defects determine the extent and amount of rework required during each TPS refurbishment flow cycle and their early identification is highly desirable.

This study resulted in a conceptual design for a robotic system capable of moving sensors and specialized tools to inject and inspect the lower surface tiles. The rewaterproofing concept is based on special modifications to the existing waterproofing tool to trap and measure any leaking DMES. The visual anomaly detection concept couples use of off-the-shelf sensors with special software for storing and comparing the appearance of each tile. Because the waterproofing tool has to be moved from tile to tile and because current sensor technology is incapable of viewing the entire Orbiter underside, a mobile base with an associated fine-positioning mechanism is required to move the tools and sensors around in a timely manner. The mobile base can be semi-automatically or automatically moved into various positions underneath the Orbiter, and is capable of being transported to the appropriate facility during the refurbishment cycle to perform work.

To achieve both short term goals and longer term objectives, a project plan was developed that would allow significant demonstration of intermediate capabilities of the system throughout the development cycle. Early demonstrations will include operator interface displays and tile rewaterproof and sensor capabilities. Intermediate demonstrations will include mobile-base move and fine-positioner capabilities. Early in the integration, demonstrations at the OPF of system navigation, positioning and sensor interaction will be

demonstrated in the proximity of Orbiter TPS. The robot will locate randomly selected tiles and sensor data will be acquired and displayed.

These and later demonstrations will directly support the final goal of complete integration of a production qualifiable system. The final system will be a valuable contribution to field-robotic technology because it will demonstrate mobility in a large unstructured work volume, while requiring precise control of positions, approach angles and forces over this volume. It will integrate man and machine into a complex robotic system involving sophisticated sensors, advanced communications and highly powerful real time computers. It will also have a positive impact on KSC's infrastructure (e.g. Orbiter configuration management and access control).

The study team concluded that the system proposed for automating the selected tasks is viable, and will have high visibility. Initial labor hour savings are calculated to be 630 hours per flow and 2500 hours per flow on full implementation. Process efficiency savings of several weeks per flow will be realized for some tasks automated. Improvements to shop safety, TPS quality and paperless documentation will also be significant.

This will be the first mobile robotic system used for Orbiter launch processing and development of the system will result in a nontrivial integration of state-of-the-art technologies, while exercising several demonstrable low-risk options along the way.

2.0 Introduction

The Thermal Protection System, although a passive system, is as critical to the mission success of Space Shuttles as any other component or active system. The maintenence and refurbishment of the Space Shuttle TPS is and will continue to be an important and integral part of the work necessary to ensure safe and reliable manned space flight. With the present aggressive Space Shuttle schedules of 12 flights per year and the increasingly stringent testing and quality requirements needed to ensure uneventful, on-schedule flights, the importance of expediting the TPS refurbishment process presents itself as inevitable.

This challenge could be met in the short term by additions to an already costly labor force, or this objective could be approached with an intelligent, well thought out plan that includes: (1) the application of state-of-the-art automation techniques, (2) integration of modern tools and systems to enable the existing valued labor force to work more efficiently and accurately, and (3) a reduction in the amount of manual and time-consuming tasks associated with TPS refurbishment. NASA has choosen to take the automated approach.

Under the leadership of NASA KSC, a team of experts in the fields of robotics, sensors, and advanced systems was formed. The Team included members from Boeing, LaRC, CMU, and SRI. The first phase of the automation project was to perform a comprehensive TPS process study with the following stated objectives:

1) To identify which TPS tasks can be automated, and in what combination to get the most impact from system design.

2) To identify what technologies are applicable, their present maturity levels and how they could best be integrated as a complete system concept.

3) To provide a plan for system development organized to ensure low risk, high-visibility, rapid design of a system that is both highly useful and justifiable.

This report presents the detailed results of the TPS process study. It is the last step in the first phase of the TPS automation project.

This report has been organized in a fashion that closely follows the steps taken to conduct a formal process study. The first sections introduce the backround of the TPS processes and materials and the related automation studies. Issues dealing with TPS work content, planning, flow, and facilities are also addressed.

Sections that follow address the specific details of processes selected, automation scenarios, specific tasks, and detailed benefits analyses. The TPS tasks selected are then ordered by rank of the most benefit to the present TPS flow, as well as importance to expediting the development cycle.

Later sections present a unified system conceptual design, including all details known regarding the proposed sensors, positioner mechanisms, and control system architecture. These sections include references to tests conducted, studies performed, and the rationale employed when selecting key system components.

The concluding sections provide a comprehensive strategy and plan for the rapid design, demonstration, and implementation of a system that is low risk, yet highly visable.

This TPS process study presents some unique opportunities for the Space Shuttle program, NASA KSC, and the technology community in general. The complete integration of a system employing state-of-the-art robotics, sensors, and navigation, tightly coupled by advanced communications and computer technologies, will be the first such automated system applied to Space Shuttle processing directly and will set the stage for other automation projects.

The system described will provide well-defined, immediate, and long-term TPS process improvement benefits. At the same time, the system will include all necessary hardware and control hooks to support the rapidly emerging advancements in mechanisms, sensors, computer power, and use of knowledge-based, real-time systems.

The exchange of ideas and concepts between the specialized technical experts assembled to conduct the TPS process study is already having the effect of making all members a little wiser and more well-rounded automation experts. It is hoped that after reviewing this

report the reader too might gain some insight into TPS processes and the interesting field of automation and robotics.

3.0 Scope

The scope of the TPS process study was to include all aspects of the TPS refurbishment process from Space Shuttle landing to launch. This entails all components, processes, facilities, work performed, documentation, and related automation studies.

TPS components were to include all components, not just tiles as expressed in previous Research and Technology Objectives and Plans (RTOP) and related literature. Processes were to include all inspections, tests, fabrications, reworks, and related operations. Facilities were to include all facilities where TPS work to operational Orbiters is performed.

TPS work performed was to include all planning, execution, accounting, documentation, and engineering support tasks.

Opportunities for automation were to be identified by the most appropriate and beneficial automation technique, with greater detail and emphasis noted for candidate processes that could be automated using robotic and sensor-based technologies.

A significant amount of emphasis was to be placed on researching prior and ongoing studies related to TPS process automation, so that work done and conclusions drawn from other studies could be built upon during this TPS process study.

4.0 Background

This section briefly describes the evolution of the TPS and previous work in the area of robotics. It also describes how this study complements other related studies and programs along with brief descriptions of these studies and programs. The section concludes with a description of how this study came about and who was part of the working group.

The thermal protection system of the Obiters evolved over time. Different thermal protection systems were proposed during the early stages of the Space Shuttle Orbiter design. One such system was comprised of exotic metals and sophisticated cooling schemes. Another system was comprised largely of tiles. The tiles were chosen because they were the cheapest system to manufacture and install. At that time, many thought that maintenance requirements may be significant with the system selected; however, assessments of how significant were impossible to make. During the first flights of the Orbiters, the tiles underwent significant modifications and repairs. Problems were encountered from flight damage, type of rewaterproofing materials used, etc. In fact, some Orbiter flows had in excess of 3000 tiles to be removed and replaced with either replacement tiles or newly designed materials. This amount of work was not anticipated and presented considerable delays in the refurbishment cycle. The amount of maintenance and rework has been significantly reduced as designs and processes have improved.

Strides toward TPS process improvement have been made in many areas. These areas include: information management systems for streamlining paperwork, advanced tools (e.g., Lockheed's Laser Step and Gap Tool), ergonomically designed workstands, and robotics. The amount of work in the application of robotics has been limited to simple demonstrations of how robots can accurately position tools. Other work has focused on dedicated robotic facilities for TPS processing. A comprehensive study of applying robotics to TPS was needed. This study was conducted to address that need.

This study complements the numerous previous and on-going TPS process improvement programs and studies. It does this in three ways. First, it looks at the entire TPS process

and identifies many potential process improvement techniques, not only robotics. Second, robotic and sensor experts were brought together to evaluate what could be done to integrate proven technologies to solve the robotic process improvements. The intent of the study was to present the feasibility and capability of an operational system; not to only perform research. Third, system design concepts are constrained to provide minimal impacts to the current operations and facilities. This reduces costs and provides a quicker return on investment.

The following related programs and studies are being conducted by various NASA centers, contractors, and universities:

(1) Lockheed Research and Development Division (RDD) sucessfully developed and qualified the hand-held laser step-and-gap tool. This tool has improved measurement accuracy over previous manual techniques and has also increased the efficiency of making measurements around landing gear and external tank doors. The tool has also helped to reduce the total number of measurements that must be made.

(2) Lockheed RDD performed a study and proposed a specialized facility for tile inspection and refurbishment. This facility was designed such that the entire vehicle could be accessed by robotic manipulators and their specialized tools and end-effectors.

(3) The University of Central Florida (UCF) at Orlando is conducting a number of studies directed at providing the TPS technicians with new workstands for overhead tasks, training strategies for a Voice Data Entry information system, and replacement tile cavity digitization. A prototype workstand will be built for testing by the TPS technicians and further refinement. It is believed that this workstand will significantly improve technician efficiency and comfort.

(4) The University of Florida (UF) at Gainsville developed a prototype hand-held tile moisture content tool. This tool has the ability to measure absolute moisture content.

(5) The Space Systems Integration and Operations Research Applications (SIORA) program was a cooperative effort between NASA KSC, Stanford University, and Lockheed Space Operations Company (LSOC). This program developed and tested a prototype imformation system. This system demonstrated technologies that would significantly improve the inefficiencies caused from TPS documentation and quality assurance requirements.

(6) Many of the technologies developed under the SIORA program are being incorporated by LSOC into the Shuttle Processing Data Management System II (SPDMS II). SPDMS II is being developed to increase Shuttle processing efficiency by streamlining the processing of documentation and quality assurance paperwork. TPS processing is just one of the many processes being included in this system.

(7) NASA Langley Research Center was involved in testing a variety of sensor technologies that could be used for inspection and dimensioning of tiles.

(8) In the KSC robotics laboratory, the robotics group integrated and sucessfully demonstrated the operation of the Lockheed laser step-and-gap tool with a robot The purpose of this effort was to show how a robot could be used to efficiently and accurately position the tool.

As a follow-on to the KSC effort, KSC prepared and submitted an (RTOP) to NASA Headquarters Code RC for fiscal year 1990. This RTOP proposed the development of a prototype robotic system for processing Orbiter tiles. A number of iterations were made on this proposal, and it was finally decided by Code RC in March 1990 that a complete system study must be performed. Two basic designs were thought to be viable; a complete mobile robot or a fixed, long-range sensor array.

The Study Team was formed to assist KSC in determining which of these designs was best. Auxiliary members include: (1) NASA LaRC personnel, (2) Carnegie Mellon University's Robitics Institute faculty and researchers, and (3) SRI International

personnel. This group is a good mix of the required technical backgrounds needed to carry out a comprehensive system study.

5.0 Study Approach

This section describes the approach taken to reach the goals and objectives of the TPS study in the required timeframe. An aggressive approach was taken with activities occurring in parallel whenever possible. This was necessary to conduct a comprehensive study of a complicated process in just six months. Figure 5-1 shows the flow of events during the study. A description of this flow follows.

The first meeting of the Study Team was introductory in nature. Its objective was to augment all team members knowledge of the Thermal Protection System, the documents that described the processes, and the facilities at KSC where processing takes place. Some initial processes were discussed based on KSC's experience of what are important tasks. A preliminary selection of seemingly feasible and justifiable tasks was made, based on work performed prior to this study. Although this was somewhat risky because these tasks may not be the ones ultimately automated, it was necessary to expedite the conceptual design process. All of the team members were tasked with reviewing the process procedures in detail to ensure that all potential robotic/sensor process improvements were identified.

Other areas of potential process improvement were also identified. This effort was necessary early in the study to narrow the field of candidate processes so that greater focus could be placed on those processes. In parallel, development of design concepts was initiated by all team members. The intent was to independently develop concepts for automation. These concepts along with the potential processes for automation were then presented at the next team meeting. Throughout this process, information on TPS processes was being acquired through interviews, observations of processes, attending training courses, attending TPS planning and scheduling meetings, etc.

The second meeting's emphasis was on reviewing the TPS processes suitable for robotic automation and preliminary design concepts. All of the processes that had even the slightest possibility of being automated were discussed. Again the number of candidate processes was further reduced to consider only those that appeared to be both technically feasible and justifiable. The best candidates were further classified based on two criteria: (1) those

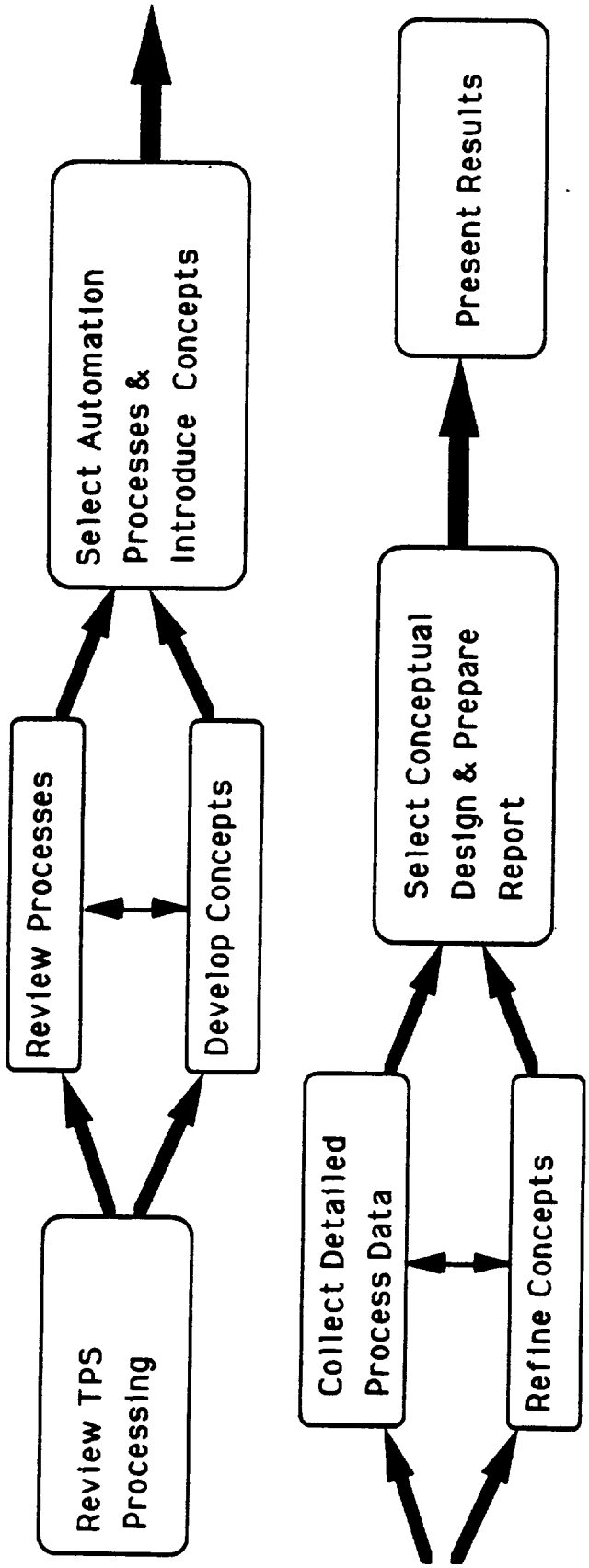

Figure 5-1
Study Flow

processes which should be automated in the near term, and (2) those processes which would allow future additions to the remaining processes.

Discussions about the technologies required to automate these processes were held. Areas that needed further testing or further research were identified. All team members presented system design concepts. All concepts had the same major themes: a mobile base, an elevating mechanism, and some type of robotic arm or mechanism for fine positioning. Selection of the type of arm or mechanism was discussed, but it was clear that a decision could not be made at that time. It was decided, however, that a comprehensive reach capability study would be needed to provoke this decision, that a mobile base location strategy was needed, and that measurements to determine the accuracy of the tile Computer-Aided Data (CAD) were also needed. Again, information necessary for all areas of concept design was being refined and added.

The third meeting had three primary purposes. First, the selection of a mechanism for the fine positioner was necessary. A detailed reach capabilities study was presented and trade-off comparisons were made for the types of fine positioners. An agreement was reached: A Selectively Compliant (SCARA)-type planar arm was chosen. The best candidate mobile base location strategy was chosen based on the tests performed to quantify the accuracy of the tile CAD data and available location sensor accuracies. Second, sensor issues relevant to visual anomaly detection and rewaterproofing were discussed. From these discussions, it was decided that anomaly detection and rewaterproofing were technically feasible and implementable in the near term (1 to 2 years); the necessary sensors and sensor interpretation algorithms exist. Third, the final report outline was reviewed and tentatively approved.

In summary, a comprehensive study has been performed. This study was approached aggressively to meet the objectives and requirements in the allotted time. Risks were taken by initiating the design process before the final processes to automate were selected. This turned out to have been a wise decision, since significant progress was made in the design process (i.e., a complete definition of the system architecture), and it allowed in-depth analysis and research of candidate processes to be made. As always, more time could have been spent performing specialized tests and studies so that higher confidence levels in this

design could be attained (i.e., higher than 90%). The same type of aggressiveness will be needed to successfully develop the proposed system design.

6.0 TPS Process Overview

This section provides an overview of the TPS components, TPS work content, and the planning and scheduling of the TPS work flow. A brief description of each TPS component type is provided for those unfamiliar with TPS. TPS work content is addressed to include both "planned" and "unplanned" work. The general TPS flow is presented to include the facilities, operations, and typical durations. This section is concluded with a discussion of scheduling and planning issues.

6.1 TPS Components

This subsection describes the major components that comprise the Thermal Protection System (TPS) of the Space Shuttle Orbiters. The TPS is a collection of various systems of materials applied to the outer surface of an Orbiter to protect it from the extreme temperature ranges it experiences during a flight. The functional purpose of each component and typical locations on an Orbiter are presented. Figure 6-1 shows the locations of the major surface treatment materials.

6.1.1 Tiles

The tiles are the primary component of the TPS. A tile is made up of a base silica material that is coated with a reaction-cured glass (RCG) coating on five of its six sides. The RCG is to protect the fragile silica from being damaged by the aerodynamic environment. The RCG does not completely cover the side walls of the tiles. About 1/2 inch of the silica material is exposed near the tile face that bonds to the Orbiter. This face is not coated with the RCG and is densified with a slurry to strengthen it for bonding. A typical "acreage" tile measures 6 by 6 by 2 inches, but the size of a tile may vary from one-fourth to four times that. The geometry varies from a basic rectangular block to complex geometries that often have more than one surface plane to be bonded to the skin of an Orbiter.

6.1.1.1 High-Temperature Reusable Surface Insulation Tile (HRSI Tile)

These tiles can be designed to withstand temperatures in excess of 2400 degrees Fahrenheit. These tiles are coated with black RCG and are located on the Orbiter's lower surface, on

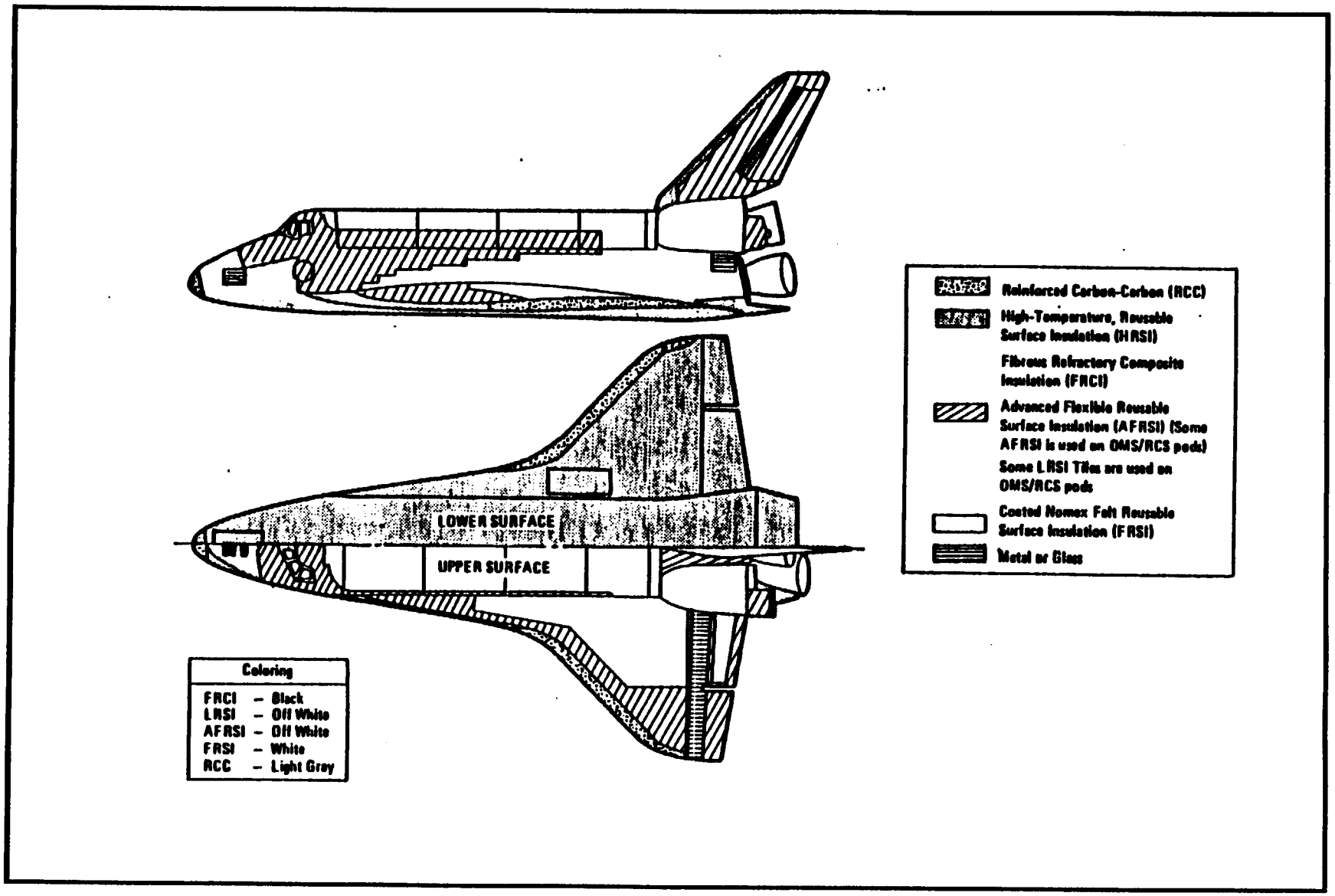

FIGURE 6-1 ORBITER THERMAL PROTECTION SYSTEM

the base heat shield around the main engines, on portions of the Forward Reaction Control System (FRCS), on the rear Orbital Maneuvering System (OMS) pods, and on portions of the vertical stabilizer and speed brake. Black RCG is primarily used on these areas so that approximately 90 percent of the heat absorbed from re-entry is radiated away from the Orbiter back to the atmosphere. There are approximately 17,000 HRSI tiles on a typical Orbiter.

6.1.1.2 Low-Temperature Reusable Surface Insulation Tile (HRSI Tile)

The LRSI tiles can be designed to withstand 1200 °F. They are coated with a white RCG and are located on the majority of the vertical stabilizer, majority of the rear OMS pods, portions of the FRCS, and around the crew compartment windows. There are roughly 6,000 LRSI tiles on a typical Orbiter.

6.1.2 Filler Bar

The filler bar is a thermal barrier that prevents hot gasses that may flow between tile gaps from reaching an Orbiter's aluminum skin. Filler bar is typically 1 inch wide. Any given tile covers one-half the width of a filler bar strip. If one were to remove all the tiles from the Orbiter and leave the filler bars in place, the filler bars would outline the perimeter of the bonding surface of the tiles. Figure 6-2 illustrates filler bar and where it is located with respect to other TPS components.

6.1.3 Strain Isolation Pad (SIP)

The SIP transfers tile loads to the Orbiter surface. It is designed to prevent a tile from breaking while the vehicle is flexing under load and during temperature extremes, since tiles are relatively fragile. The SIP's come in a variety of strengths and thicknesses depending on tile thickness and location on the vehicle. The SIP is bonded to the densified surface of a tile and the tile/SIP assembly is then bonded to the aluminum skin of the Orbiter (see figure 6-2).

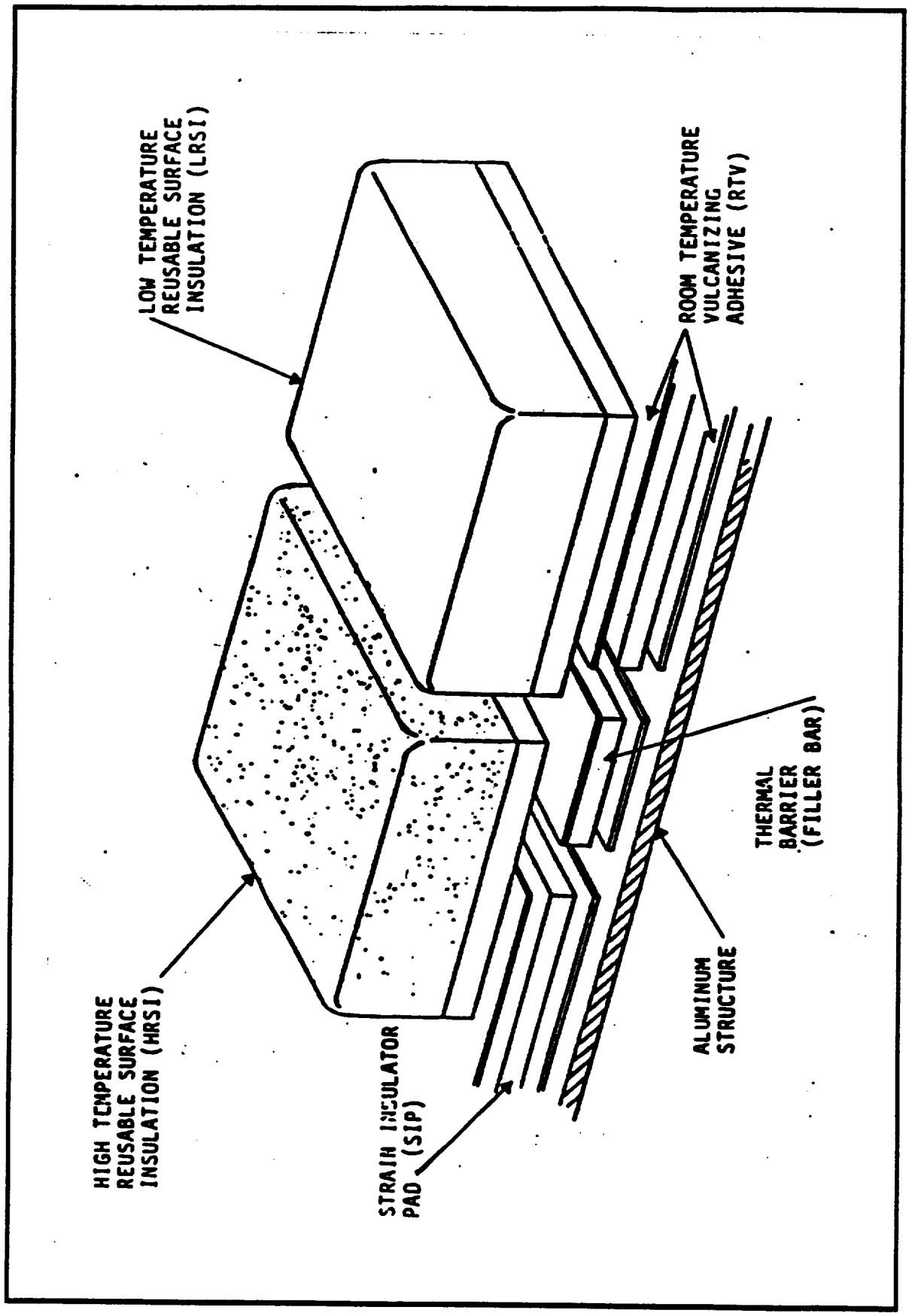

FIGURE 6-2 TPS BOTTOMSIDE COMPONENTS

6.1.4 Gap Fillers

Gap fillers are located between adjacent tiles and designed to prevent hot gasses from flowing into the gaps between tiles and down to the Orbiter substrate. (see figure 6-2)

6.1.4.1 Ames Gap Fillers

Ames type gap fillers are typically used to fill smaller gaps up to about 0.10 inches wide. The material used to fabricate Ames gap fillers is a screen-type material that has been impregnated with black, room-temperature vulcanized (RTV) material. Different thicknesses are obtained by bonding material layers together; hence, Ames gap fillers are available in several standard thicknesses.

6.1.4.2 Pad/Pillow Gap Fillers

Pad/Pillow gap fillers are generally used to fill gaps greater than the Ames-type allows. The body flap and elevon gaps are filled with pad/pillow gap fillers. Pad/pillow gap fillers are a high-temperature fabric that is folded and sewn over Inconel foil and other insulating materials to obtain the desired thickness. It is more difficult to obtain the proper thickness with the pad/pillow type than with Ames-type gap fillers due to the fabrication process.

6.1.5 Ceramic Plugs and Inserts

Ceramic plugs and inserts are used on carrier panels for access to the bolts that fasten these panels to the vehicle. Carrier panels provide access to various components and subsystems of the Orbiter. During an Orbiter flow, many of these panels must be removed for inspection purposes and for testing and maintenance. Tiles are bonded to these panels. To remove or replace the panel attachment bolts, the ceramic plug must be removed from the threaded insert that is bonded to the tile. Once a plug is removed, a tool is used to remove the bolts.

The plug prevents the flow of hot gasses down the access hole to the bolts and aluminum skin. The insert is bonded to the tile and threaded to allow the plug to be screwed into it.

6.1.6 Thermal Barriers

As the name implies, thermal barriers prevent the flow of hot gasses. They are a ceramic fabric that has been sewn around springs to form a compliant gasket, very much like the one found on commercial high-temperature oven doors. Thermal barriers are used around the landing gear doors, external tank doors, the forward reaction control system, and a multitude of other vents and hatches.

6.1.7 Flexible Insulation Blankets

Flexible insulation blankets (FIB's) are made from bonded silica fibers that have a ceramic fabric sewed to them in a quilted pattern. They are bonded to the aluminum skin of the Orbiter in a similar way as the tiles. The blankets are also known as advanced felt reusable surface insulation (AFRSI). They can be designed to withstand temperatures up to 1500 °F. FIB's are typically located on the fuselage sidewalls, the rear Orbiter maneuvering system pods, on portions of the payload bay doors, and on the forward reaction control system.

6.1.8 Reinforced Carbon/Carbon

Reinforced carbon/carbon is a carbon composite material. It can be designed to withstand temperatures up to 3200 °F. It is used on the wing leading edges and on the nose cone where the highest temperatures are experienced. This material is difficult to repair, so precautions are taken during Orbiter processing to protect these surfaces.

6.1.9 Felt Reusable Surface Insulation (FRSI)

Felt reuseable surface insulation has the lowest temperature range of all the TPS surface materials. It is also the only material that can be walked on by personnel. FRSI is a heat-treated, nonwoven Nomex felt material that is coated with a white elastomeric compound. It can be designed to withstand temperatures up to 750 °F. FRSI is used primarily in the payload bay doors and on the upper surface of the wings is where it is primarily located on an orbiter.

6.2 TPS Work Content

This section describes the breakdown of work performed on the Orbiter's thermal protection system during a typical Orbiter processing flow. A description is provided of the general TPS operations performed at the various facilities during a typical Orbiter flow.

6.2.1 TPS General Flow

An Orbiter flow begins when the Orbiter lands, and ends when it is launched. There are a host of tasks that must be performed to ready an Orbiter for launch. The TPS is just one of the many systems that must be maintained and refurbished. Figure 6-3 illustrates the major aspects of a flow including major processes and where they are performed. This section provides details on the TPS tasks presented in this figure.

6.2.1.1 Dryden Flight Research Facility (DFRF) ...

TPS flow begins with a post-flight visual inspection on the runway after the vehicle has been safed. The vehicle is then rolled over to the mate/ demate device where is is jacked and leveled to a maintenance position in preparation for the ferry flight back to KSC. A number of tile operations are performed at this facility. Here, a detailed inspection of the TPS is performed so that: 1) early assessment of TPS rework can be made, 2) interim rework can be performed in preparation for the ferry flight to KSC, and 3) work authorization documents can be released so the work planning and scheduling process can begin back at KSC. During this inspection a debris team that identifies and documents foreign object debris encountered flight and an inspection team that inspects for other types of TPS anomalies including damage and contamination. These inspections are usually performed on first and second shifts. The rewaterproofing of bottomside tiles is also performed to reduce the chance of tiles absorbing moisture during the ferry flight back to KSC. The rewaterproofing is performed on a non-interference-basis during the third shift. The TPS is ready for the ferry flight after all necessary inspections and repairs have been made. This generally takes about five days.

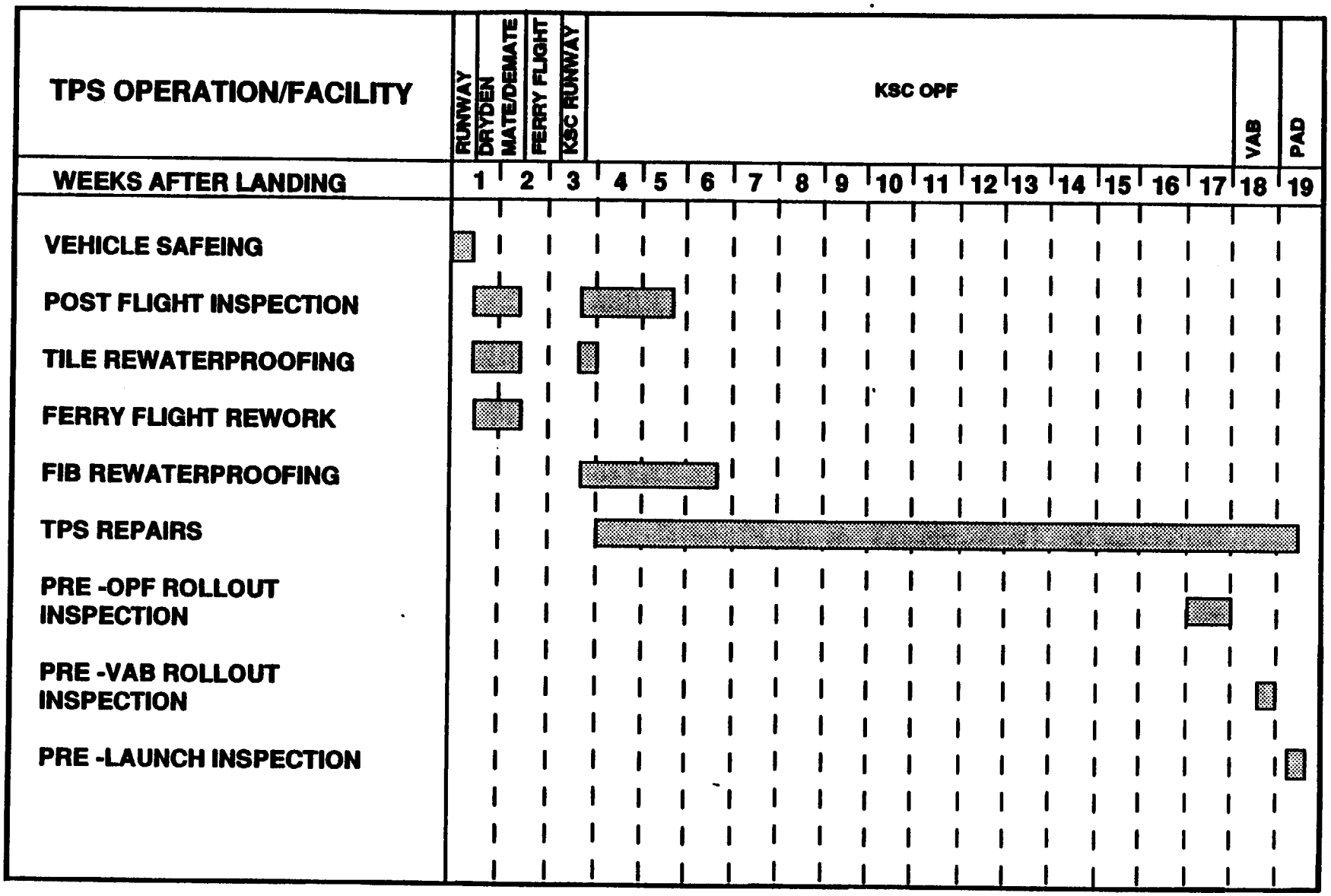

FIGURE 6-3 TPS FLOW

6.2.1.2 Kennedy Space Center (KSC)

If the Orbiter lands at KSC, the only operation performed on the runway is a quick-look inspection, which is performed immediately after the vehicle is safed.

6.2.1.3 Orbiter Processing Facility (OPF)

The final post-flight inspection is performed in the OPF. This inspection is very detailed and typically takes 2 to 3 weeks to complete with a manpower loading of 600 to 800 hours distributed between two shifts. Every component of the TPS is visually inspected.

All major maintenance and refurbishment work is performed in the OPF. This includes at minimum the following processes:

- Tile surface coating repairs due to flight/ground damage
- Tile removal/replacement because of other system testing and inspections
- Tile removal/replacement because of tile damage/contamination and other problems
- Repair/removal/replacement of thermal barriers
- Repair/installation of tile gap fillers
- Tile step-and-gap measurements around landing gear and External Tank (ET) doors
- Vehicle engineering modifications

Prior to transfer of the Orbiter to the VAB for mating to the external tank(ET) and solid rocket boosters(SRB's), an inspection is performed to ensure that the Orbiter is ready for roll-out.This inspection takes about a week to perform on two shifts.

6.2.1.4 Vehicle Assembly Building (VAB)

Typically, a limited amount of TPS work is performed in the VAB. Occasionally, tiles may need to be repaired as a result of the mating processing; for instance, near the ET attachment points. On some flows, tile step-and-gap measurements may be taken in the VAB because of lack of time in the OPF flow, due to unexpected problems near the end of the flow. Another inspection is performed to identify any tile damage before the Orbiter and ET/SRB stack rolls out to the pad.

6.2.1.5 Launch Pad

In most cases a minimal amount of TPS work is performed at the launch pad. Access panels for hypergolic servicing and the crew hatches are installed just prior to lift-off. A final pre-flight inspection is performed with emphasis on those areas accessed by personnel.

6.2.1.6 Summary

While TPS processing may occur at all facilities during an Orbiter flow, the OPF is the facility in which the majority of Orbiter TPS inspection and refurbishment takes place. Generally, TPS work reduces as the launch date approaches, and the amount of work in the VAB and at the Pad is usually small.

6.3 Planning, Scheduling, and Execution of TPS Work

The planning and successfully completion of all TPS refurbishment tasks in an efficient manner is a challenging undertaking. The TPS work is always unique. There are always different components that sustain flight and/or ground damage, even though they may be in the same general vehicle location from flow to flow. The most challenging aspect of TPS work is that it is extremely dependent on vehicle configuration and generally has lower priority than other vehicle processing tasks. The reasons for this lower priority is that much of the TPS work can be done at almost any point in the flow and usually requires relatively simple set-ups and tools for performing the maintenance and refurbishment tasks. It is important to note that the TPS is just as flight critical as other Orbiter systems, however it is

not a redundant system. This makes it equally important to flight success, however, due to the low priority of the work, it is difficult to plan, schedule, and efficiently control the required maintenance and refurbishment tasks.

Plans and schedules for TPS processes are typically developed long before a flow for a given vehicle even begins. Projections are made of expected flight-related damage based on historical data. These projections are usually reliable if nothing extraordinary occurs during a mission. This work is defined as "unplanned" by TPS flow managers and schedulers and comprises approximately 40 percent of the total TPS work performed during a refurbishment flow. This 40 percent is comprised of flight related damage, ground induced damage and reassessment of previously performed TPS rework.

The remaining 60 percent of the work load is comprised of routine work (e.g., rewaterproofing, inspections, step-and-gap measurements, etc.), engineering changes, and deferred work. This 60 percent is referred as "planned" work on TPS schedules. The amount of "planned" work remains constant from flow to flow; however, the amount of "deferred" work is constantly growing. "Deferred" work is created when damage to TPS is repaired using temporary rework processes. Ultimately, complete removal and replacement of TPS components will be necessary for temporary rework of this nature. At present, each Orbiter has more than 700 tiles that will have to eventually be removed and replaced at a future date when flow time is available. Most of this work is being delayed until a major vehicle modification is required and scheduled, however, some of this deferred is performed during the present flows.

Preliminary TPS flow schedules are created that include both "planned" and "unplanned" work. The moment the Shuttle lands, the preliminary schedules are put to the test and execution of the scheduled tasks begins. Early in the flow, post-flight inspections are performed. They are used to quantify all flight-related damage and to provide input to update the TPS schedules by defining "unplanned" work. As the flow proceeds, many other conditions may influence the schedule. One of the biggest factors affecting the TPS flow schedule is special vehicle testing that requires the Orbiter be put in a certain configuration (for example placing the elevons up and the body flap is down, or placing the vehicle on aft jack stands). These configurations may make it impossible to gain access to a tile for repair or replacement. The TPS flow schedule is usually in a constant state of change as some problems are resolved and new ones arise.

7.0 TPS Initial Process Review and Detailed Descriptions

The TPS process study entailed a review of related TPS process automation studies, interviews with TPS personnel, visits to facilities, first hand observation of key processes, review of each of the processes and many other efforts. The need to become familiar with personnel, facilities, tools, procedures, paperwork and planning, was a foremost prerequisite to deciding how the TPS processes could be improved or automated.

Section 7 addresses these subjects to document the observations and interviews, summarize the requirements, select candidate TPS processes and present automated scenarios. Assessments are also made of expected productivity improvements (including: labor hour savings, improvements to efficiency, shop safety, TPS quality and more.) A summary of these benefits is provided at the conclusion of the section.

7.1 Preliminary Process Review

Early phases of the TPS process study included researching related automation studies, interviews and conversations with TPS personnel, and observations of the TPS processes at the various facilities.

7.1.1 Related Studies

During the initial stages of the TPS process study, a considerable amount of research was conducted to determine if other groups had looked at automating the TPS processes and, if so, what was their approach, conclusions, and recommendations. It was also important to find out how these studies may complement this TPS study.

Research began with the present Shuttle Processing Contractor(Lockheed). Conversations with process improvement engineers yielded a wealth of background information regarding related projects and who to contact for further details.

Lockheed successfully developed and qualified a hand-held laser step-and-gap tool for automation of the tile step-and-gap measurement process. This tool is now undergoing

complete integration with the Shuttle Processing Database Management System (SPDMS). Lockheed had also performed a complete TPS process study and recommended a specialized facility for tile inspection and refurbishment.

The University of Central Florida conducted a number of studies resulting in recommendations for improved human performance, voice data entry, and tile cavity digitization.

The SIORA program was a cooperative effort involving NASA KSC, Standford University, and Lockheed that resulted in the development and demonstration of a prototype voice data entry system.

The Shuttle Processing Database Management System II, (SPDMSII), was investigated to determine evolving information systems for use in TPS processing. The goal of this system is to streamline documentation and quality control paperwork, as well as tie all Orbiter processing systems together into one cohesive network and database.

These and other studies are discussed in section 4 of this report. Appendix "B" of this report lists all related studies, as well as, provides a comprehensive and complete list of subjects researched as part of this process automation study. The documents listed in this appendix are well organized into three complete file cabinet drawers and will serve as a document library during the next phase of this project. These reference documents constitute a significant amount of research and are available upon request for reprint and review by those interested.

7.1.2 Interviews and Observations

During the early stages of the TPS process study, TPS personnel were queried for inputs regarding the TPS processes. All TPS departments questioned were quite helpful in expediting the TPS study group to become familiar with the TPS processes and procedures. A complete and thorough list of questions was created (appendix "E") and used as a guide during the interview phase to insure all aspects of process improvement were addressed.

TPS planning personnel were instrumental in providing insight into TPS flow and planning issues. Detailed Historical and Future TPS flow schedules proved invaluable assets for quantifying TPS work.

TPS training instructors provided complete sets of formal student class handouts and directed the TPS study group where to obtain all documentation describing process procedures, TPS material specifications, QC acceptance criteria, and more.

QC supervision and inspectors allowed the study group to observe and participate with TPS inspections. QC inspectors participated for several nights to help make a video film of TPS materials, anomalies and defect conditions, which was later used in meetings, presentations, and as an aide in process familiarization(appendix "F").

TPS technicians, supervisors, and back shop personnel provided comprehensive presentations of TPS materials, tools, and processes to the TPS study group. Special tours with in-depth explanations, sample materials, and visual demonstrations quickly educated the study group regarding TPS problems, issues, and needs.

Engineers supporting TPS materials and processes including: NASA support engineers, Shuttle Processing(Lockheed), and TPS design(Rockwell), were very responsive to technical questions that arose on a daily basis during the coarse of the TPS process automation study. Support engineers were also responsive to production qualification issues.

At KSC, meetings are currently held daily, weekly and monthly regarding TPS process planning, problem solving, and improvement planning. The TPS study group attended many of these meetings, asked questions, and took thorough notes. Many common themes surfaced regarding what TPS personnel needed most to improve TPS processes and where they felt automation using computers, robotics, and sensors, would be the most beneficial. The following highlights some of the key requests.

Paperwork

All TPS groups indicated that the TPS processes entailed far too much paperwork. Anything we, (the study group), could do to help in this regard would be appreciated. However, we were warned that "terminal key in" was not the desire.

Inspection

Most all TPS groups felt the automation of the TPS inspections (especially V6028) using sensors and robotics was possible, would have significant impact on TPS process flow, and was highly desired. QC personnel expressed a strong desire in this regard.

Tile Cavity Digitization

Several TPS personnel suggested that the study get involved with the tile cavity digitization work being proposed by UCF. Many felt that the sensor selection process was nearing completion; however, a robotic positioner was required to completely automate the process.

Gap Fillers

Many personnel said the study group should concentrate on the most common and repetitive tasks like gap filler mylars. Some explained that over 1000 gap fillers have to be fabricated during each Orbiter flow and that present tools and techniques were very inefficient and inaccurate.

Tight Area Access

Some personnel interviewed said the study should concentrate on designing a robot for inspection of inaccessible areas (elevon cove, tile gaps, flap hinges, and other). Some suggested the use of borescopes and miniature cameras mounted to a highly articulated robotic arm.

Area Access and Vehicle Configuration

Most all groups expressed the view that much time is wasted waiting for TPS area access due to; 1) other higher priority tasks taking place in the same area(vehicle work), 2) access impossible due to current flap or door positions, and 3) work stands or scaffolds not in place, or cannot be moved in place to perform TPS work.

With all of these inputs and more, the TPS study group decided to weigh heavily TPS personnel desired inputs when making decisions regarding system design.

Of major significance regarding personnel inputs, was the early decision of the TPS study group to include systems for the display and query of vehicle configuration and area access, regardless of which processes were ultimately selected for automation. The consensus of the study group was: 1) Area Access and Vehicle Configuration affect the efficiency of all processes, 2) A robust CAD based display system could be provided very quickly (less than a year), 3) Any robotic solution implemented would also require knowing in realtime the vehicle configuration and area access.

Interviews and discussions with TPS personnel also revealed that a few general requirements were necessary for the implementation of an automated system. Their desires can be summarized as follows: no facility modifications, no TPS flow impact, no complicated use, training, or setup, be COMPLETELY autonomous, safe, and friendly, CLIMB scaffolds, JUMP over hoses and learn to use manual tools, have ZERO process time after automation, require no changes to how we do business now, require no cost to develop or build and, oh by the way, be delivered next week.

Having a large set of user desires and a well defined set of system requirements, the TPS study group understood well the challenge ahead and proceeded with the study, next determining facility constraints.

7.1.3 Facilities

A comprehensive understanding of the various facilities in which TPS work is performed was necessary to determine system constraints, work envelope and windows of opportunity for autonomously performing TPS work. The present facilities, in which TPS work can possibly be performed include Dryden, California (mate/demate device and runway) and KSC facilities(mate/demate device, runway, OPF, VAB and launch pads).

The TPS study group was fortunate to spend a considerable amount of time at each of the KSC facilities while Orbiter TPS processes were in progress. Several days a week, the OPF high bays were visited throughout a complete TPS flow process from vehicle rollin and leveling to vehicle rollout. Thorough notes were kept regarding vehicle access, the positions of stands and service structures, and general floor access.

The TPS study group also made several trips to the Vehicle Assembly Building(VAB) to observe TPS processes in progress. In addition, Orbiters were also observed up close from all levels of both launch pads (39A, 39B), including the Mobile Launch Platform(MLP).

The unfortunate circumstance that frustrated the study group with regards to facilities was that no trips were made to Dryden, California, to observe first hand the TPS processing at that facility. Although travel plans were made several times, fuel leaks and other problems caused the Orbiters to be grounded during the timeframe of the study. Study group members went so far as to obtain security clearances, get complete medical exams, obtain certifications for use of organic respirators, and take formal training classes, only to have such trips cancelled at the last minute on several occasions The objective was to be a hands-on integral part of the Orbiter landing and five day TPS process that occurs in Dryden. As a result, information obtained concerning the Dryden facilities was derived from interviews with TPS personnel and the review of literally hundreds of color photographs found in the KSC photo library.

A complete "reach" study was also carried out (for all facilities) using CAD models and engineering drawings, and is included as appendix "G" of this report. Reach, access and

obstacle avoidance play very key roles in determining both the design of the positioner mechanisms and the amount of facility modifications that may be required.

The following sections discuss some of the key features of the various facilities where TPS work is performed.

7.1.3.1 Dryden Runway

After the Orbiter lands in Dryden, California, the astronauts leave the vehicle and defueling commences while still on the runway. This period (approx 8 to 16 hours) represents a period of opportunity to perform some TPS work on the vehicle. Figure 7-1 illustrates the vehicle just after defueling. Key points that can be made about this period of time are:

- Landing gear doors are open and down.
- Clearance underneath the Orbiter is at its minimum during the flow cycle (approximately 6 feet)
- Access to practically all high-up HRSI tile is possible in this configuration, while it is blocked by scaffolds in the OPF and mate/demate devices.
- Access to aft sections of TPS are open and clear
- The ground under the Orbiter is clear of obstructions with the exception of landing gear.
- An explosion proofed mechanism could perform work during defueling
- There are very few personnel working under the vehicle
- Conditions are outdoor arid dry desert and probably some blowing wind and dust.

ORIGINAL PAGE
BLACK AND WHITE PHOTOGRAPH

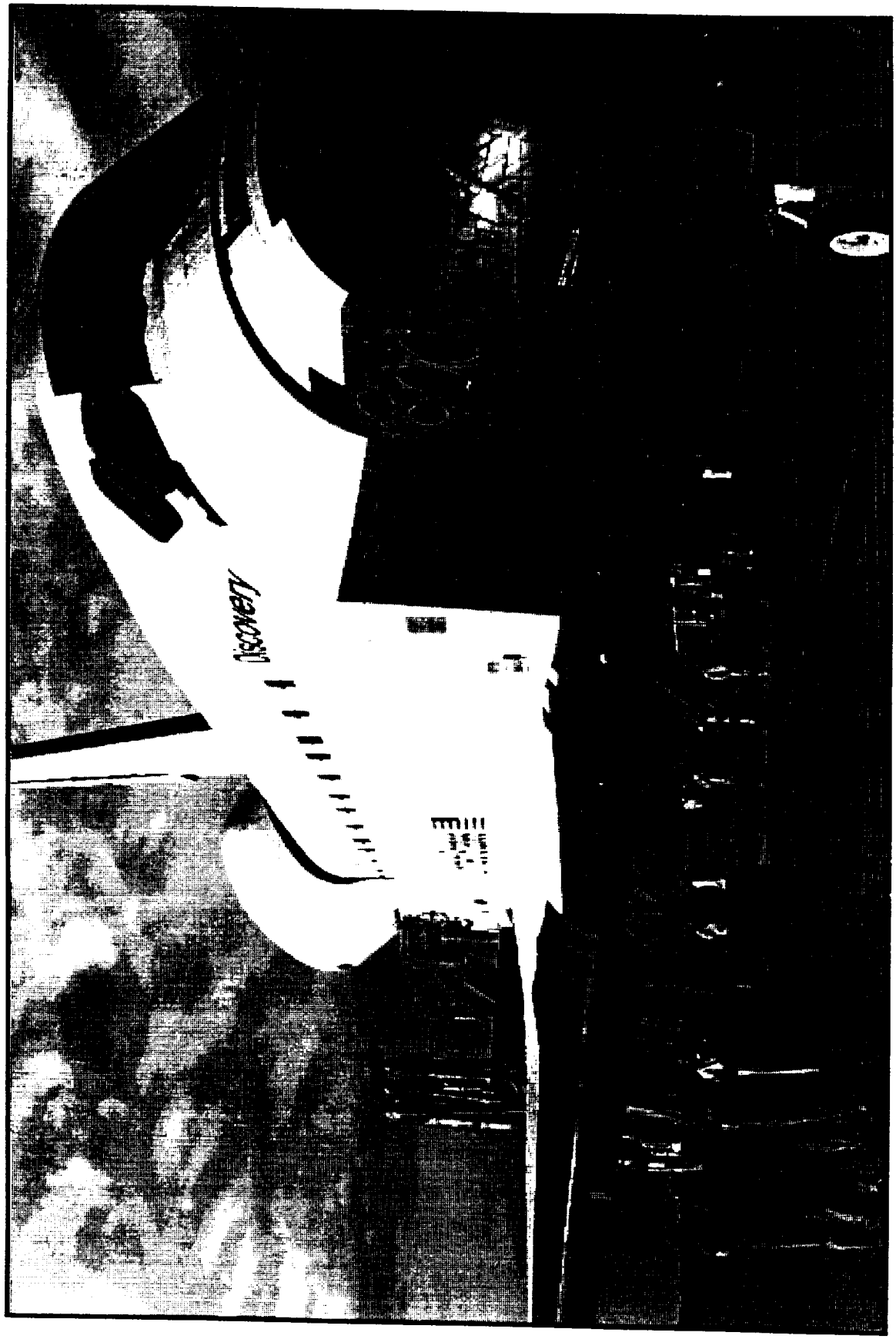

FIGURE 7-1 ORBITER AFTER DEFUELING

7.1.3.2 Dryden Mate/Demate

After defueling operations on the runway, the Orbiter is moved to a mate/demate device for about 5 days where it is prepared for ferry flight. During this time TPS work includes tile rewaterproofing (on third shift) and V6028 inspection on the first and second shifts. Figure 7-2 shows the entire mate/demate device with one of the Orbiters in its nest. Figures 7-3 and 7-4 show views underneath an Orbiter with the mate/demate device facing forward and aft, respectively. Key points about the Dryden mate/demate device are:

- TPS accessibility is somewhat limited on Orbited topside and and aft sections.
- Vehicle is resting on jack stands, (1) forward. and (2) aft. Landing gear doors are open and down.
- Vehicle controls may be powered up to enable changing flight surfaces(flaps).
- Workstands, floor jacks, and other obstacles may limit floor accessibility somewhat.
- The area is arid dry desert, probably some wind and dust, however, quite well ventilated.
- A tail cone is installed during later stages that would limit accessibility to tail sections of TPS.
- The vehicle is parked and leveled to within tolerances of plus or minus 1.5 inches while on jack stands.
- During the last day, landing gear are stowed and doors closed. A Boeing 747 is moved under Orbiter for mate.

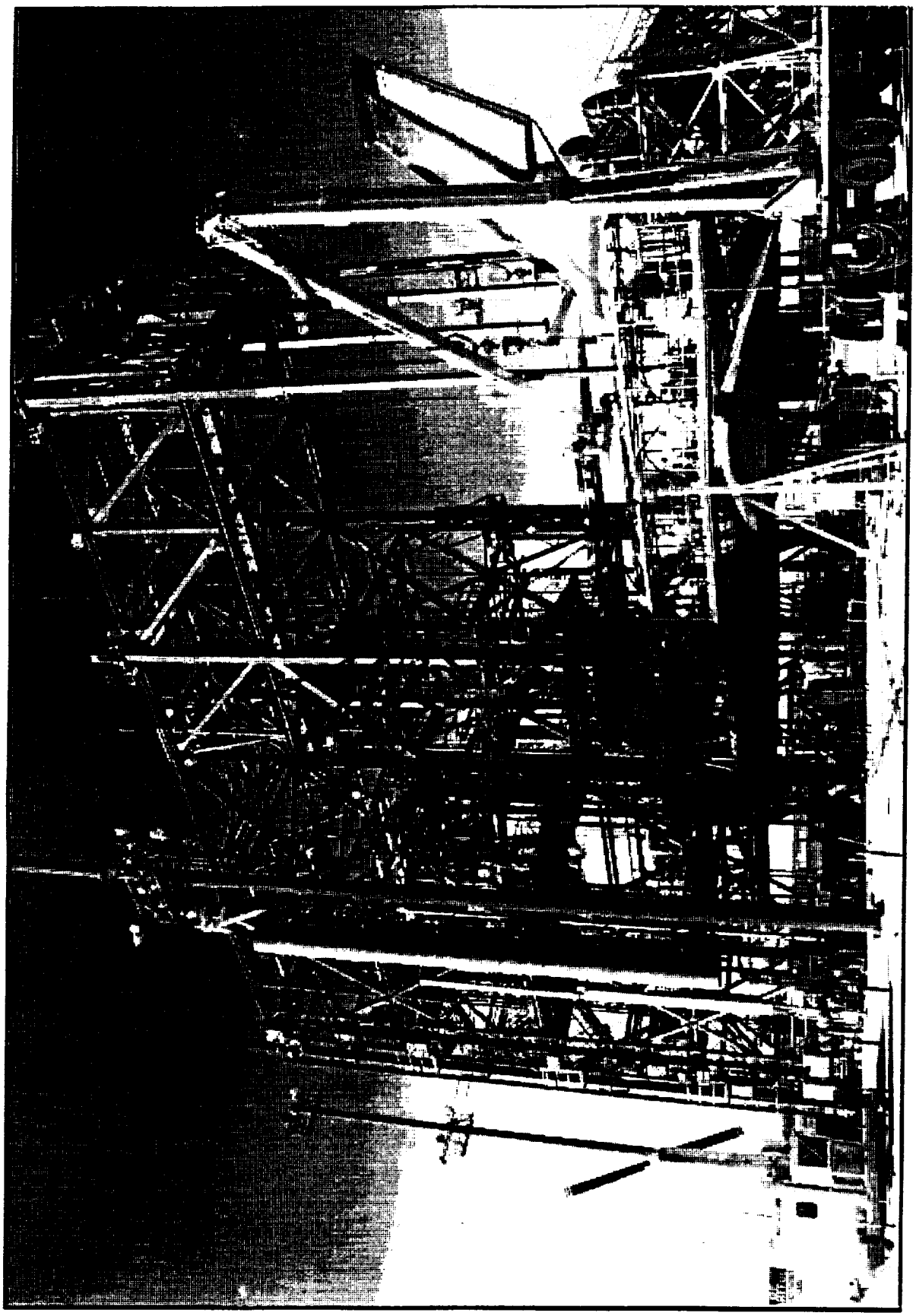

FIGURE 7-2 ORBITER IN THE MDM

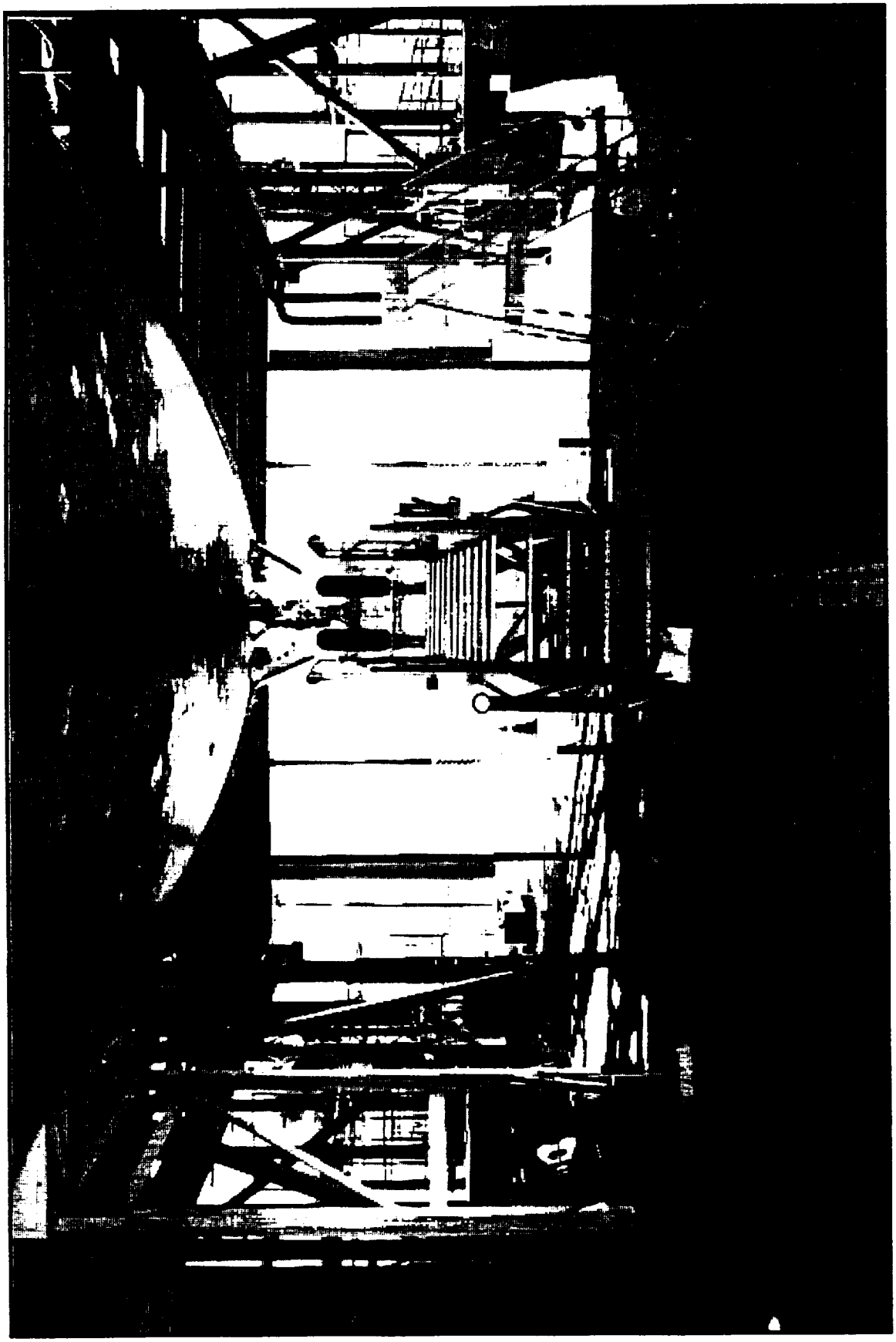

FIGURE 7-3 AFT LOOKING FOWARD VIEW OF UNDERSIDE OF ORBITER

ORIGINAL PAGE
BLACK AND WHITE PHOTOGRAPH

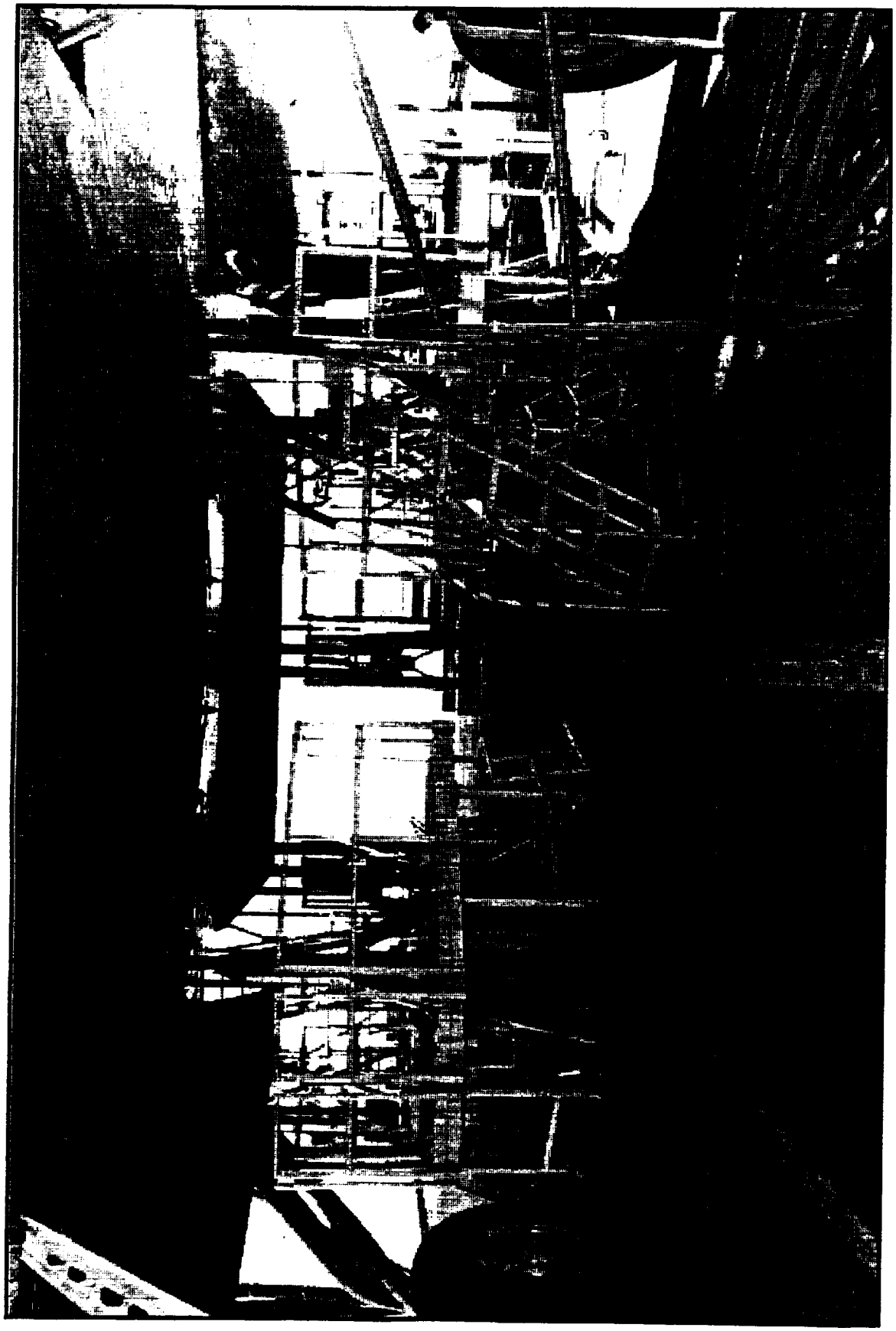

FIGURE 7-4 FOWARD LOOKING AFT VIEW OF UNDERSIDE OF ORBITER

ORIGINAL PAGE
BLACK AND WHITE PHOTOGRAPH

7.1.3.3 KSC Mate/Demate Device

The mate/demate device at KSC is identical to the one in Dryden, California; however, the opportunity to perform TPS work is dependent on whether or not the vehicle lands at KSC (future) or is ferried in from Dryden.

If the vehicle is ferried to KSC from Dryden, (present scenario), the opportunity to perform TPS work is almost nonexistent because the vehicle is quickly demated and moved to the OPF to preclude the possibility of letting it get wet by rain.

If, however, landings occur at KSC, (future scenario), the opportunity to perform TPS work, (possibly rewaterproofing and inspection), might be considered if a shell or roof where placed over the mate/demate device to protect it from adverse weather. In this situation, it might be possible to perform complete rewaterproofing (tiles and FIB's) away from crowds of people. If performed on an around-the-clock (24 hour) basis, this operation could be completed in 2 to 3 days. Concurrent with this operation, a significant portion of V6028 postflight inspection could be performed.

7.1.3.4 KSC Runway

The opportunity to perform useful TPS work after the ferry flight (present scenario) is minimal; however, if the Orbiters start landing at KSC (future scenario) the runway may be an opportunity to perform work on TPS in difficult to reach areas. The runway at KSC will entail the same opportunities for reach and access as the Dryden runway(section 7.1.3.1), however, the chance of rain on the vehicle may force defueling operations to take place under a roof or shell. (The KSC mate/demate device may be a good candidate shelter after all.) TPS work performed in preparation for the ferry flight would no longer be necessary. TPS personnel could concentrate on rewaterproofing and V6028 inspection processes.

Another likely scenario that might take place when Orbiters start landing at KSC is that the vehicle would be defueled and quickly moved to the OPF. This would also eliminate the need to perform work in preparation for ferry flight; however, it would be accompanied by the risk of exposing the vehicle TPS to rain during defueling.

7.1.3.5 KSC Orbiter Processing Facilities

The KSC OPF high bays are designed specifically to perform refurbishment operations on the active components(engines, OMS pods, etc...) and passive components(TPS, payload bay doors, etc.). As such, upon rollin to the OPF, the vehicle becomes immediately surrounded with platforms, scaffolds, and workstands to the forward, mid-, fuselage, and wing sections. Figure 7-5 illustrates an OPF highbay just after rollin of an Orbiter. Within 24 hours the Orbiter is jacked and leveled. This process aligns the Orbiter to with 1.5 inches in all axes(XYZ). (The TPS study group performed measurements to verify accuracy of a typical Orbiter parking, appendix "L")

Key points that can be made about the KSC OPF are:

- During the first 48 hours there is clear access to the aft sections of the Orbiter, afterwards the rolling service structures block access.
- Access to mid and forward sections of the Orbiter, slightly above fuselage vertical radius, is blocked from the bottomside.
- During the first week following OPF Orbiter rollin, the floor is relatively clear except for jack stands and a few workstands. As work progresses, the floor becomes more and more cluttered with workstands, lights, power cords, etc
- 95 percent of all TPS work is performed in this facility. The duration in this facility is presently 60 - 70 days.
- The environment is clean and climate controlled.
- There are many personnel working on all sections of the vehicle while in the OPF.
- During the last day in the OPF, landing gear is stowed, doors are closed, and a transporter is moved under the Orbiter

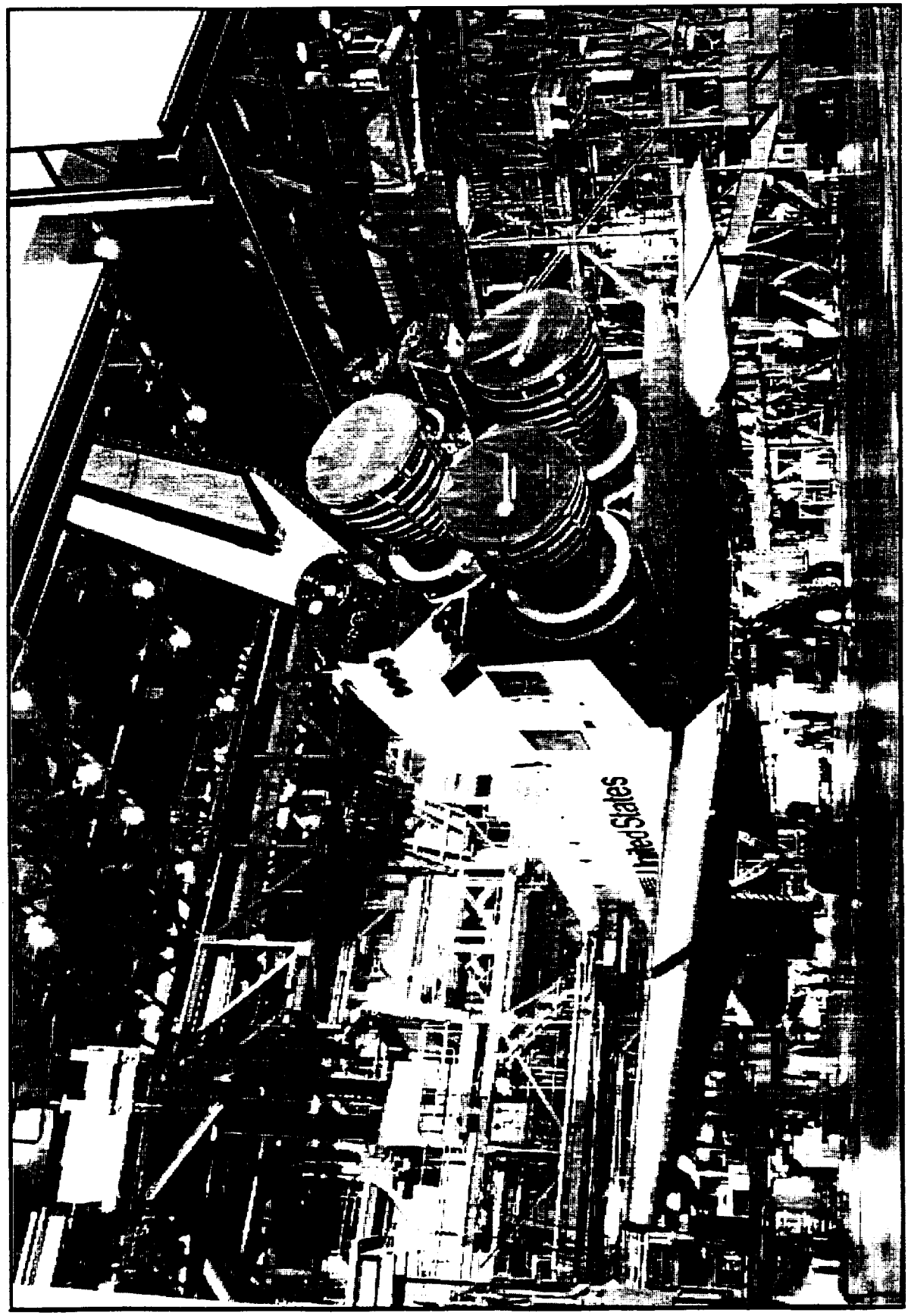

FIGURE 7.5 ORBITER INSIDE OPF HIGHBAY

ORIGINAL PAGE
BLACK AND WHITE PHOTOGRAPH

7.1.3.6 KSC Vertical Assembly Building

Once in the VAB, the Orbiter is rotated to a vertical position and married to the external tank and launch structure. Figure 7-6 illustrates a VAB highbay looking down toward the Space Shuttle launch structure, just after the Orbiter has been rotated to a vertical position. In this illustration, the Orbiter holding fixture and overhead crane are still attached. Key points that can be made about this facility with respect to TPS processes include:

- The Orbiter in a vertical position, which means a very high reach would be necessary to process the TPS.
- TPS work performed in this facility are typically last-minute repairs, step-and-gap measurements, and some TPS inspection.
- Access to the Orbiter's bottomside would be difficult because it is blocked by access platforms
- Access to all portions of Orbiter's topside is clear
- The presence of solid rocket boosters (SRB's) may impose special design requirements

ORIGINAL PAGE
BLACK AND WHITE PHOTOGRAPH

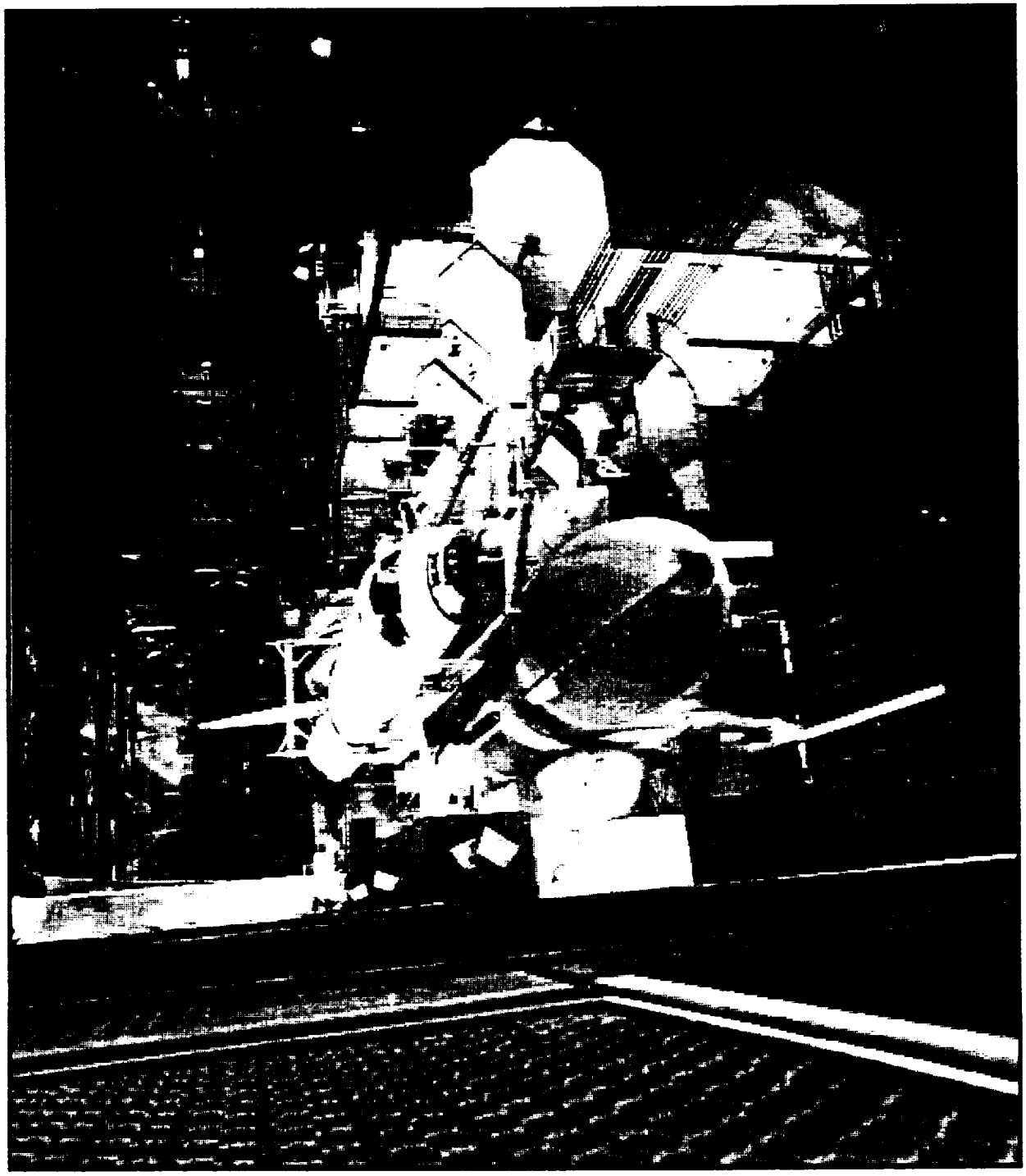

FIGURE 7-6 ORBITER INSIDE THE VAB

7.1.3.7 KSC Launch Pads

Even after the Space Shuttle launch structure is moved to the launch pads, (39A, 39B), some TPS work is performed. This includes an inspection of the TPS for ground damage and some last-minute repairs. Figure 7-7 illustrates the Space Shuttle structure at the launch pad just before actual launch. Key points regarding the launch pads with respect to TPS work include:

- The TPS work performed here is minimal and nonrepetitive.
- The Orbiter is in a vertical position requiring very high reach
- Access to the Orbiter topside is limited because the rolling service structure(RSS) covers the Orbiter and payload bay.
- Access to the Orbiter bottomside and aft sections is limited due to many obstacles.
- Opportunities to perform useful automated TPS work is almost nonexistent

ORIGINAL PAGE
BLACK AND WHITE PHOTOGRAPH

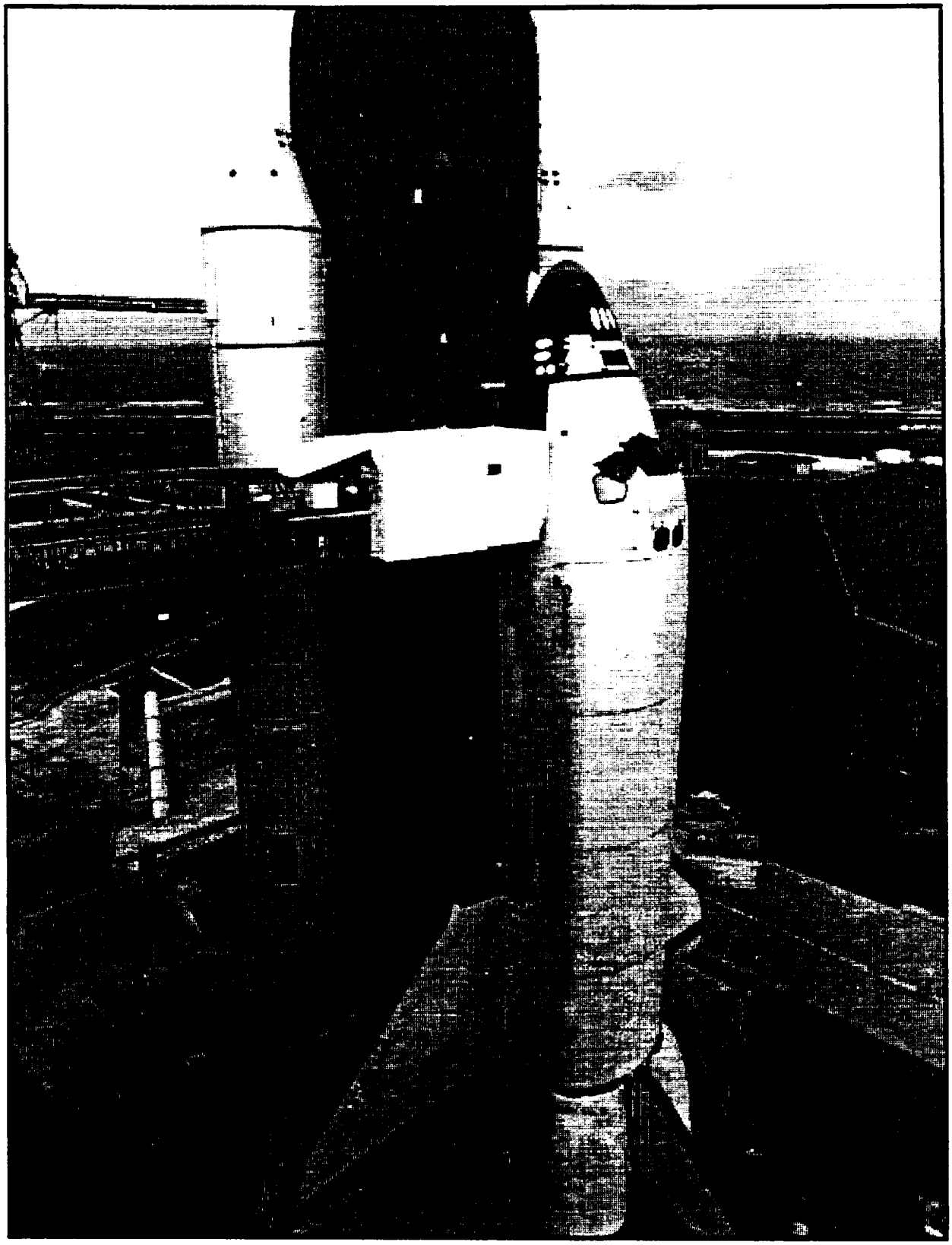

FIGURE 7-7 SPACE SHUTTLE ON THE LAUNCH PAD

ORIGINAL PAGE
BLACK AND WHITE PHOTOGRAPH

7.2 Preliminary Process Review Results

This section discusses the results of the initial review by the TPS study group of the 132 processes that comprised the Orbiter TPS refurbishment cycle. The detailed results of this review for each of the 132 processes are listed in appendix "A" of this report with "X"s indicating applicability to process improvement category. A summarization of review results by process improvement category is provided here:

- Total processes reviewed (9024 - 9026, V60XX) 132
- Information Systems 83

  Voice Data Entry (55)

  Video Database (9)

  Digitization(7)

  Vehicle Configuration (all -> 132)

  Area Access to Vehicle Location (all -> 132)
- Human Performance 35
- Materials and Design 2
- Tools and Mechanisms 9
- Robotics and Sensors 19

While it is not the charter of the TPS study group to design and implement non-robotic/sensor based automation solutions, some discussion of these process improvement techniques is warranted to completely address the subject TPS process automation. It is

also the intent of these discussions to point out that the application of robotic and sensor based technology will not solve all TPS processing issues, but in fact, is limited to a relatively small portion of TPS processing when compared to all other process improvement techniques that could be implemented.

The sections that follow provide a brief explanation of some of the non-robot/sensor process improvement techniques that could be used to improve the TPS processes. This section is then concluded with a brief categorization of the TPS processes that includes an assessment of suitability of robotics for automation these categories of TPS processes.

7.2.1 Information Systems

The TPS study group concluded that "information systems" was the process improvement technique chosen most often for improving the current TPS processes. "Information systems" was indicated for 83 of the different TPS processes as the best method for improving the process. The following briefly discusses the categories of information systems cited most often for TPS process improvement.

Voice data entry

The foremost thought when reviewing the process procedures was the amount of paperwork required to perform most processes. Much operator time is spent acquiring paperwork, (procedures, tables, maps) and filling out paperwork, (OMI's, PR's, DR's, tile maps, etc...). Significant process improvement efficiencies could be realized by implementation and use of a "Paperless" system. The voice data entry system developed and demonstrated by the SPC(Lockheed) could enable these process improvements. Other"paperless" techniques are available.

Video Data Base

During the initial review process it was discovered that there were 9 processes that entailed either taking photographs or retrieving photographs prior to performing work. (For example instrumented tile removal and post flight contamination). In many cases, photographs needed at KSC OPF may be taken and stored at other facilities. The current state of computer disk storage and video cameras is at a point where online video databases

stored on optical disks would enable highly efficient storage and retrieval of high resolution photographs. A significant amount of time could be saved by online display or printout of previously taken pictures on strategically located local terminals and printers.

Digitization

Digitization was an automated method identified for 7 different inspection and measurement tasks. Digitizations could be produced by mechanical methods (bed of nails) or electrical non-contact methods (topographical sensors). Information systems could be programmed to post process digitizations of cavities, gaps, steps, etc... to produce CAD models of items being measured, and when needed could be displayed as CAD models along with critical dimensions.

Vehicle Configuration

Much of the TPS work that is carried out (inspections or repairs) is dependent on whether there is clear access to a specific region or component on the Orbiter TPS. Personnel access to many locations may be dependent on flap positions, door positions and whether access panels or major TPS sections (FRCS) are even present. During daily TPS planning meetings, "runners" are sent out to the OPF bays to check constantly changing vehicle configurations, so that daily work assignments can be made. Online realtime display of the configuration of all Orbiters being refurbished would be an invaluable aide to TPS process planning and daily work assignment .

Area Access To Vehicle Location

Area access to specific Orbiter locations to perform TPS work is further complicated by the fact that other groups may be working in an area (vehicle techs, engr's) and TPS processes, having a lower priority, must wait for access to perform work. In addition, structures may be blocking access. Schaffolds may not be in place or perhaps access with work stands may be blocked. Online display of these and other conditions could expedite TPS planning and work assignments significantly. The ability to plan for and make adjustments to the TPS processes, based on vehicle TPS area access would be an invaluable asset and reduce planning complexities and day to day work assignments.

7.2.2 Human Performance

Improvement to human performance could affect improvement to the elapsed time of 35 different TPS processes. These processes entail all work performed to the bottom side of the Orbiters in an overhead fashion, while standing on a scaffold or workstand. The ongoing UCF process improvement studies, covering the design of improved workstands, would prove beneficial for improving human performance, and thereby result in TPS process improvement. These goals would be met by providing a less fatiguing, well organized, comfortable platform from which to perform overhead work, with considerations given to tool proximity, body position and visual fatigue.

7.2.3 Materials and Design

While the materials and design of the Orbiter TPS is now "fixed", with little chance of change, 2 materials issues were noted that could result in TPS process improvement.

Practically all TPS materials are bonded to the Orbiter using Room Temperature Curing Vulcanized Rubber or RTV. The common cure time for RTV is at least 8 hours. Speeding up the cure cycle by the addition of a catalyst, the application of heat or some other means could save considerable process time while performing many TPS bonding and fabrication processes.

Finding a permanent TPS rewaterproofing chemical would eliminate the need to rewaterproof both tiles and FIB's during each Orbiter flow. This would reduce TPS process time significantly.

7.2.4 Tools and Mechanisms

The design of more efficient and accurate hand held tools, fixtures and mechanisms was noted as a process improvement opportunity for 9 different TPS process procedures. Generic, adaptable bonding and bond verification tools were included as potential candidates for process improvement, as well as, some inspection and measuring devices. Design and implementation of these recommended tools would enable reduced tile specific tool fabrication that presently requires many hours per tool, improved accuracy for some

tools and enable reduced TPS component customization for other tools. All represent reduced labor hours and process efficiency gains.

7.2.5 Robots and Sensors

The application of robot and sensor based technologies for automation was considered possible for 19 different processes during the initial TPS process review. The following summarizes the 132 TPS processes reviewed into general categories and discusses the applicability of robotics to those categories.

1. *General surface coverage motions.*
   (Non-contact: painting, spraying.
   Contact: adhesive application, cleaning, sanding.)

Nearly all of these tasks involve application of chemicals to the surface of the tiles. While the specific motions may be different such as painting or adhesion, both operations involve close proximity control of motions. (Waterproofing is not included here because it is significantly different in that a specific point on the surface must be identified, applicator positioned, and a tool placed stationary on the tile.) A distinction is also made between contact and non-contact due to the very different control schemes needed for accurate quality operations by either a human or a robot device. Contact forces must be kept small to prevent damage to the Thermal Protection System. Thus greater control is required for contact operations.

A robotic arm strategically placed can provide the motions needed to carry out most of these kinds of tasks. It is not clear that this would be any faster than presently accomplished and the setup time may increase for a given operation. However, offboard operations in shops may find these capabilities useful.

2. *Precise cutting or tracing operations.*
   (Making and machining of patterns and molds.)

Many operations involving tile fabrication or gap fillers need accurate dimensioning for fitting. CNC tools can and do provide the precise cutting operations needed. For tile

replacement it is currently a week-long process of measuring, cutting, fitting, gluing and refitting. Given accurate measurements and knowledge of the materials involved, it seems that a single pass should result in a properly fit tile or gap filler. If it is a matter of precision then high-tolerance parts can be made through traditional machine-shop techniques.

The use of a robotic device seems to have no direct benefits here, other than for assisting in accurate making measurements.

3. *Accurate measurements.*

(Inspecting, dimensioning and measuring)

The cutting and machine operations require highly accurate dimensioning of parts. Feeler gages, rulers, cavity measurements, material thickness gaging are all part of the measuring process. While these are currently contact measurements, some of them like step and gap, tile cavity and gap filler cavities, can be done thru non-contact means such as scanning.

This set of tasks shows great promise depending primarily on sensor specifications. Identification, distinguishing color or shading and small dimensioning of irregular materials; are not easy tasks, however, can be accomplished with current technology.

Force application.

(Tile bonding, gluing, clamping. Also Tile removal and bond test.)

For curing and drying of newly installed tiles, a sufficient pressure must be applied over time to insure a quality bond between tile and other surfaces. This is within the capability of a robot device but is overkill for a problem solved by the use of a simple flexible fixture. While some force application tasks use compression others such as tile removal or bond test use tension. Pulling forces are applied to the tile to test adhesion and also to remove the tile. Both of these involve relatively high forces over a short period of time. Again, the positioning of a robotic device to perform these operations on a contact basis does not appear to outweigh the simple handheld devices or fixturing mechanisms to remove tiles or test tile adhesion.

Chemical injection.

(Rewaterproofing)

A small amount of chemical solution is injected into each tile to prevent water absorption by the porous tiles. A small hole is found in the tile and the tip of the injector placed over the hole and the chemical injected. There is a significant safety issue with the chemical used. Personnel have to be trained and use respirators and safety clothing to carry out the operation. Additionally, the area around the Orbiter is usually cleared during this operation due to the hazards involved. This makes the operation far more tractable for a free-ranging robotic device.

7.3 Potential Robot/Sensor Applications

After careful review of all TPS inspection and refurbishment tasks by the TPS study group, it was decided that there were nineteen that could potentially be automated using robotic and sensor based technologies. This section discusses in depth each of the potential processes selected.

The details discussed for each of the candidate processes include at first some background about how the current process evolved to its present practice for those processes that have been improved. A description is then provided on how each process is presently performed to include: setup, tools ,where, by whom and other related data. Information supporting the process descriptions was derived from interviews, observations, training and in some cases hands on experience. Also discussed for each process are details regarding human safety, certifications, required accuracies, documentation and quality and reliability issues when appropriate.

Known quantitative and qualitative data are then presented for the current method of performing each process. A significant amount of time was spent collecting, analyzing and summarizing this information so that a true measure of the current process could be documented.

Each section also contains a description of how robotics and sensor based technologies could be applied to automate the process. This discussion also includes quantitative and qualitative data enabling assessment of potential automation benefits.

Each process presented concludes with a recommendation from the TPS study group whether or not to include the requirements for the process when designing the initial automated system, along with justifications for decisions made. These decisions were based on information that was available at the time of this report and may be subject to change as further work is done during the next phase of the project.

7.3.1 Tracer Pattern Fabrication(P102)

This process is described in detail in MLO601-9024 process 102. It is more commonly referred to as a "SPLASH" by TPS personnel.

7.3.1.1 Current Process

A "SPLASH" consists of creating a plug pattern of a tile cavity for tile machining, or to provide the actual configuration for tile replacement. This process is most commonly performed for creating a tile replacement pattern, primarily when the tile is blocked on four sides by adjacent tiles or other TPS components, and the previous tile was destroyed or damaged beyond use. Appendix "C" illustrates in detail the present flow of the tile remove and replace process, and when a "SPLASH" is performed.

The process is performed primarily in the OPF facilities at KSC during the normal TPS refurbishment cycle (section 6.2.3). However, it can be performed at any time during an Orbiter flow. To perform this process, TPS technicians must wear protective clothing(ie goggles/face shields, organic respirators, gloves...), have a current medical certification and obtain certification by taking formal training classes.

The process entails lining the cavity with an approved plastic film, filling the cavity with foam blocks and uncured foam, allowing the foam to cure, and then trimming and filling the resulting pattern to meet OML step & gap requirements. The pattern is then identified and sent to the TPS back shop where it is used as a guide for making a new tile.

Fabricating a new tile entails a machining operation using using a gunstock cutter. During this operation the plug pattern is traced along each surface while a rotating diamond studded mill performs matching cuts on a block of tile material. The process also consists of performing a host of coating, curing and marking processes. In addition to using the plug

pattern for tile fabrication, the pattern may also be used for fabrication of a tile specific bond verification chuck (section 7.3.7) and a tile specific pressure pad (appendix "C" - tile installation). The pressure pad is used to bond the tile to the Orbiter, while the bond verification chuck is used to mate with the tile during the bond verification process.

7.3.1.2 Quality and Reliability

The fit of the newly fabricated tile is very critical. The resultant steps and gaps must be consistent and accurate within a few thousandths of an inch. Tile gaps may range from .000 to .250 depending on location. Tile step heights must be held flush to less than .010 ", especially on forward facing edges (MLO601-0001). The outer mold line of the tile must follow a smooth contour to preserve aerodynamics as specified by the waviness criteria of MLO301-0010.

7.3.1.3 Quantitative Data

TPS personnel indicate it takes about 8 hours to fabricate a SPLASH pattern from set up to completion using present techniques. A review of planning data indicates there are normally about 35 - 40 splashes performed per flow. Although fabrication of a new tile from a splash takes about 40 - 44 hours, the initial machining operation takes only a few minutes. Much of the time spent fabricating and installing a new tile is spent coating, curing and performing densification of the tile surface. A large portion of the time is also spent performing "PRE-FIT" checks in the actual tile cavity and then sanding the tile surfaces to achieve a good fit.

7.3.1.4 Application of Robotics/Sensors

The "SPLASH" process could be automated by using a three dimensional (3-D) topographical sensor to perform a digitization of tile cavity to be filled, provided the digitizer could be accurately positioned and held steady during the process The digitized data would then be loaded into the existing CAD system (CADAM/CATIA), where outer mold line (OML) surface data would be added to produce a (3-D) solid model of the replacement tile. This model would then be further processed to produce numeric control (NC) commands that could be used to drive the newly acquired five(5) degree of freedom (DOF) milling machine procured specifically for machining replacement tiles. Previous studies have shown that accurate 3-D digitization of tile cavities is feasible. Figure 10-1

(section 10) illustrates a CAD view of a 3-D digitization recently performed on an actual tile cavity using a "Hymarc" 3-D topograghical laser-based sensor in a laboratory environment.

By mounting the 3-D topographical sensor to a positioner mechanism, the topographical sensor can be autonomously positioned to digitize the tile cavity. A mobile robot would be ideally suited to position to the cavity, position the tool the right distance from the cavity and at the correct angle, and enable the digitization of the cavity.

A conservative estimate of how long it would take to perform an automated cavity digitization from setup to completion is 30 minutes, assuming the robot would have clear access to the vehicle at request time. Within minutes of completion, a solid model of the tile could be created and NC commands could be loaded into the 5 DOF milling machine.

Speculation is that higher precision dimensions could be achieved via autonomous cavity digitization than is currently achieved by performing the splash process. Higher precision would result in improved step and gap accuracy, better fit and reduced prefit rework.

7.3.1.5 TPS Study Group Decision

Automation of this process appears both justifiable and technically feasible. Significant productivity increases could be realized by automating this process. In addition, tile geometric precision improvement could be realized, resulting in improved gap accuracy, better OML match and reduced prefit rework, however, some further testing is required to verify this point.

It is the decision of the TPS study group to include the requirements for this process when designing the system for use in automating the Orbiter TPS processes.

7.3.2 Tile Rewaterproofing (P113)

This process procedure is described in detail in MLO601-9024 process 113. The maintenance procedure and drawings of the tile rewaterproofing tool are defined by LR4272-001. The material safety requirements for the tile rewaterproofing chemical dimethylethoxysilane (or DMES) is described in KSC Material Safety Data Sheet CAT. NO. D5635:113.

7.3.2.1 Background

The process of rewaterproofing the Space Shuttle HRSI and LRSI tiles occurs after each space flight. (Original specifications for Space Shuttle tiles called for permanent waterproofing. However, to date no material has been developed that does not lose its hydrophobil characteristics after experiencing the high temperatures encountered during Orbiter re-entry into the earths atmosphere.)

Waterproofing of tiles is necessary due to the strong propensity of the tile material to absorb water. A Shuttle tile is comprised of bonded silica fibers and is extremely porous, in fact, greater than 95% air by volume. This makes it a very good light weight thermal insulator, however, also makes it capable of absorbing water to 95% of its volume. As a demonstration, the average tile (6" X 6" X 2") can readily absorb and retain more than 9 small cups of water in just a few minutes, more than tripling its own weight. Because the Orbiters may be exposed to rain while being transported between facilities and on the launch pads, rewaterproofing of tiles must be accomplished early in the Orbiter refurbishment flow to prevent water absorption.

Water in the tiles poses two threats to the Orbiter: 1) additional weight may cause tile bonds to fail, 2) water in the tiles in space would freeze causing damage to the silica based tiles.

The first method used to waterproof Shuttle tiles was the external application of a waterproofing chemical. The entire Orbiter surface was sprayed with aerosol cans of "SCOTCHGARD". The process was messy, yielded an inconsistent uneven coating, was unhealthy and caused problems with some of the non-tile TPS components. The application of Scotchgard was also a poor waterproofing technique because it was only a surface treatment.

The second method attempted for rewaterproofing tiles entailed making a hole in each tile and injecting each tile, (using a hypodermic needle,) with an organic saline solution. This method was very labor intensive. While this technique resulted in a more water resistant tile, it was later discovered that the original chemical selected had the long term detrimental effect of attacking and deteriorating a critical TPS component called SCREED. This RTV based material is used to smooth out rough or stepped surfaces on the Orbiter skin before

tiles are bonded on. This material mismatch led to replacing literally thousands of tiles. Tiles had to be removed, the SCREED removed and replaced and then the tiles rebonded.

As a result, the following requirements evolved for the rewaterproofing material: 1) waterproofing material must be internally applied(ie not a surface treatment), 2) it must be totally compatible with all TPS components (ie RTV, screed, heatsinks, SIP, etc...), and 3) it must be easy to apply and safe for human exposure. Some 70 to 80 organic saline based chemicals were reviewed and tested to find one that would meet the criteria. Finally dimethylethoxysilane (DMES) was selected for immediate use, primarily due to its compatibility with TPS components. DMES was found to have excellent waterproofing characteristics, however, like all organic saline compounds, it has a tendency to evaporate out of tiles to a depth of about 3/8" when exposed to temperatures higher than 1050 °F. (bottomside hrsi tiles are exposed to greater than 2500 °F during Orbiter re-entry. See figure 7-8) As a result, rewaterproofing of tiles after each Orbiter flight must still be performed.

Another drawback to DMES is human safety. DMES has not been used in industry and hence complete testing for short and long term exposure effects on human beings is unknown. In addition DMES is flammable.and has a flash point of -5 ° C. It actually burns with a very low blue flame similar to alcohol. This is because ethanol is one of the primary byproducts when exposed to the atmosphere. DMES also reacts when it is exposed to water. For this reason, tiles must be completely dry before rewaterproofing with DMES.

Several studies, in both universities and in industry, have been sponsored by NASA over the past year to find a rewaterproofing chemical that is both compatible with the Orbiter TPS materials and yet will last through Orbiter atmospheric re-entry. No one has been successful to date. It is believed that DMES will be the rewaterproofing chemical throughout the life of the current Space Shuttles. As a result, NASA Johnson Space Center (JSC) is soon to perform laboratory testing to determine both the short and long term effects of human exposure to DMES, as well as establish the threshold limit values (TLV) for human exposure. Until these tests are concluded, KSC TPS personnel will be required to treat DMES with extreme caution, minimizing human exposure to the greatest extent possible.

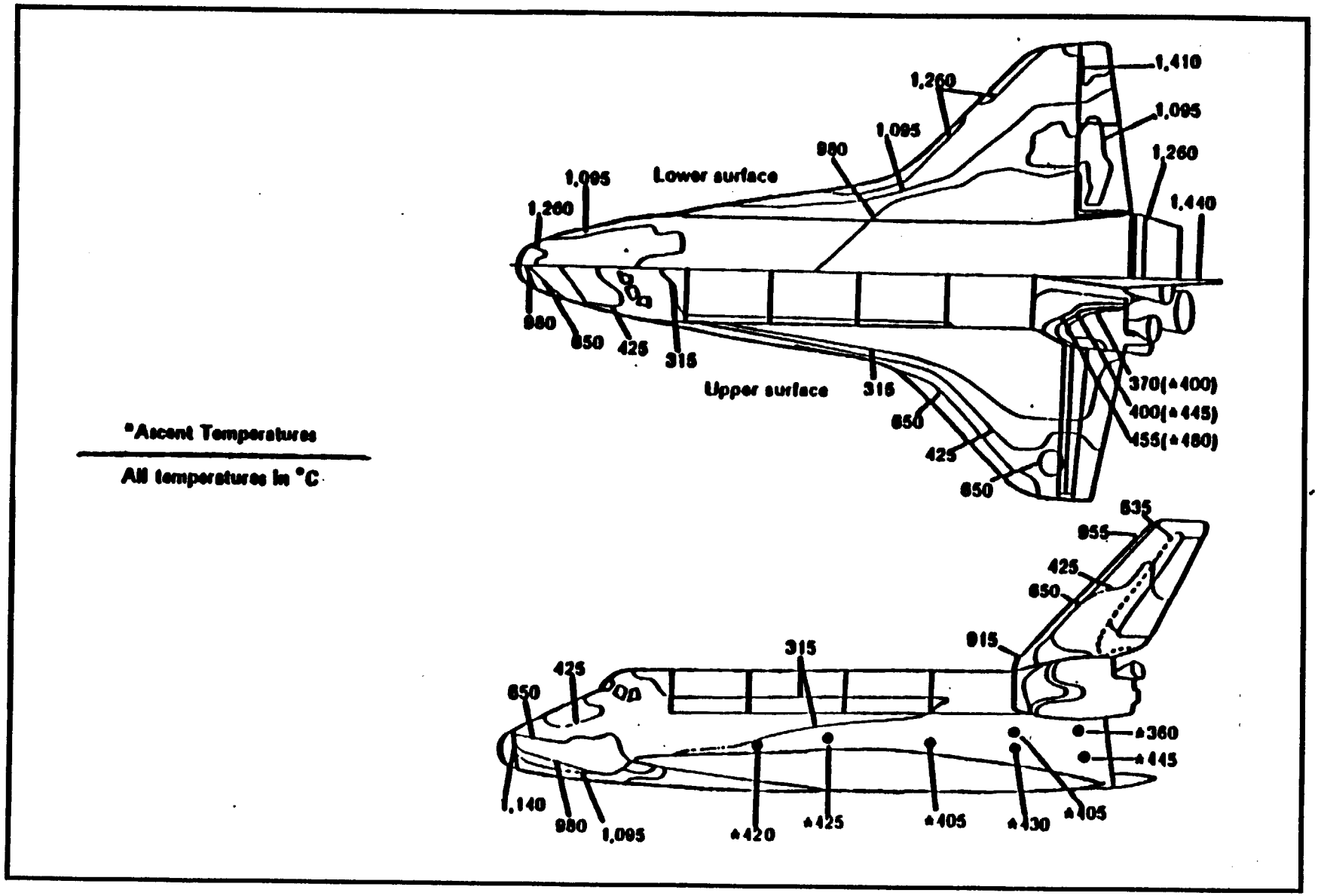

FIGURE 7- 8 ORBITER TEMPERATURE PROFILE DURING RE-ENTRY

Current Method

The current method for rewaterproofing a Shuttle tile entails injecting a small amount of DMES into the tile using a nitrogen pressurized (50 psi) needleless gun. During early testing it was determined that approximately 1/2 ml of DMES is required to rewaterproof a standard size tile(6" X 6"), however, a minimum of 2 ml is currently specified to insure (400% safety factor) an adequate amount is present in each tile.

TPS personnel indicate greater than 90 percent of Shuttle tiles are currently rewaterproofed in Dryden, California, during the 5 day preparation for ferry flight. Rewaterproofing operations are typically performed after the vehicle is safed (all fuels removed), parked in the mate/demate device and only during third shift(12:00 pm to 7:00 am). Reasons for the odd shift are primarily shop safety.

Prior to tile rewaterproofing, Safety is contacted to establish a 10 foot clear zone and Environmental Health is notified, however, they need not be present. TPS technicians also must cover those tiles that have been previously shaved or that have had extensive OML surface rework with an approved plastic film. This is roughly 100 tiles for the Orbiters observed.

The tile rewaterproofing process begins by first obtaining all necessary materials and tools to include: tile maps, safety equipment, needleless injection gun/harness and a nitrogen pressurized container of DMES. The injection tool is then inspected and purged, loaded with DMES and adjusted to release 2 ml plus/minus .2 ml of DMES on depression of the trigger.

The TPS technician then moves a work stand under the Orbiter to start work on a group of tiles, climbs up the stand, and one by one finds the hole in the tile, places the injection nozzle over the tile hole with about 10 lbs of pressure and using his/her other hand squeezes the release trigger located on the injection tool belt. (see figure 7-9 injection tool). The release trigger and nozzle are held in place until an injection buzzer stops sounding.

The injection cycle itself lasts about 3 - 4 seconds with 1 second required to force in the DMES, followed by 2 - 3 seconds of high pressure nitrogen only, needed to force the

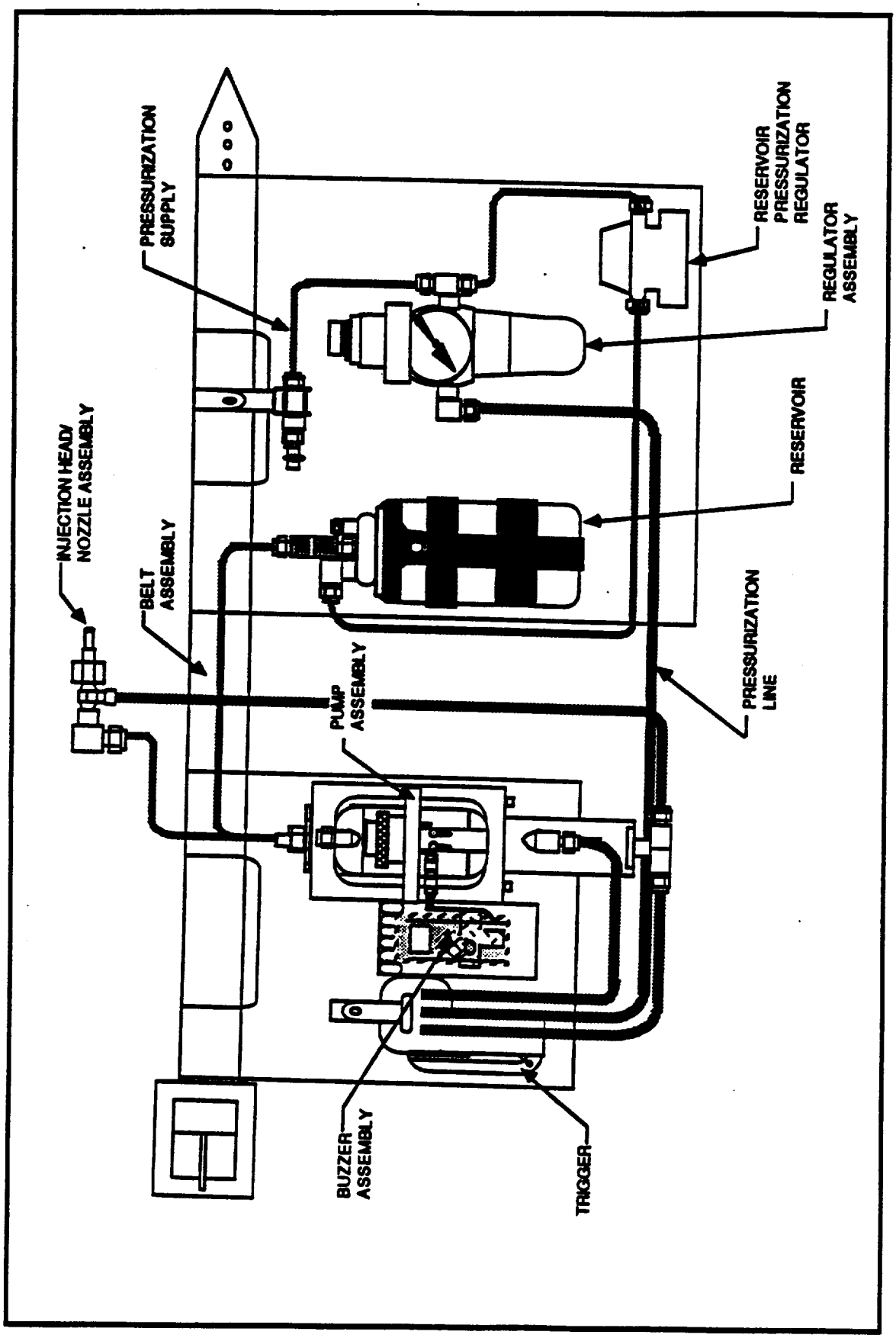

FIGURE 7-9 TILE REWATERPROOFING TOOL

DMES deeper into the tile material. The process is not a clean one. The nozzle must be held near perpendicular to the tile surface, but even with experience some DMES still manages to squirt out and run down the arms of operators, especially on tiles that have uneven or crusty surfaces.

Tile rewaterproofing is typically carried out by two people per rewaterproofing tool. One person carries a tile map of the area being worked on and highlights each tile as it is waterproofed. This approach prevents the tool operator from losing track of which tile he/she left off at This highlighted map then serves as documented proof of which tiles have been processed. The second person of the pair actually performs the rewaterproofing and the two alternate each hour or so because the actual injection process is typically overhead work and very fatiguing.

7.3.2.3 Human Safety

TPS technicians who perform tile rewaterproofing are required to have a current medical certification. When performing the process technicians must wear safety approved faceshields/goggles, half-face air purifying organic vapor respirators, safety approved smocks/coveralls and solvent impermeable gloves. Safety establishes a 10 foot clear zone around tile rewaterproofing operations. Practically all tile rewaterproofing operations are performed on third shift (12:00 pm to 7:00 am). This is to prevent exposure to DMES by co-workers and because of the unpleasant smell of DMES.

7.3.2.4 Quantitative Data

TPS operations personnel indicate it takes six(6) technicians five(5) days to perform tile rewaterproofing on about ninety(90) percent of the Orbiter tiles at Dryden, California.

7.3.2.5 Certification

TPS technicians are required to attend a 16 hour training class to become certified for tile rewaterproofing. About 12 hours is classroom work, while 4 hours is actual hands on training. Two members of the TPS study group attended this class to become more knowledgeable about the process and experience the hands on use of the rewaterproofing tools. This required both medical certification and organic vapor respirator training and checkout.

7.3.2.6 Application of Robotics/Sensors

The tile rewaterproofing process is an ideal candidate TPS process for automation. Tiles are laid out as a grid covering the skin of the Orbiters and tile locations are defined by XYZ coordinates relative to the Orbiter axis system. Rewaterproofing of tiles is a "step and repeat" process whereby a mobile robot with the appropriate end effector could: 1) move to a zone (group of tiles), 2) establish a reference frame relative to the Orbiter reference frame, 3) position the end effector at an approach point slightly away from the centroid of the tile OML, 4) position to the tile rewaterproofing hole, 5) inject 2 ml DMES, 6) position to next tile and repeat, 7) position to next group of tiles and repeat.

Preliminary studies have shown that automating the tile rewaterproofing process using robotics and sensors is low risk and quite feasible. Locating the tile rewaterproofing hole using a 2-D vision and/or 3-D topographical sensor has been tested and is proving feasible.

Design concepts for a closed loop, accurate, automated rewaterproofing tool that captures excess DMES is progressing well. (section 10.1.2). Several designs are under consideration that insure DMES does not leak out during high pressure needleless injection. Flow meters will measure exacting amounts of DMES injected in each tile. Force/Torque sensors and built in compliance will be an integral part of the end effector to insure precise and consistent tool pressure, far more accurately and consistently than by humans.

Preliminary estimates of how long it will take to perform a mobile base move and establish a reference frame is about 20 to 30 seconds. Estimates of how long it will take to perform an automated tile rewaterproof are about 10 seconds (first pass) and 6 seconds (second and subsequent passes). First pass includes locating and recording the position of the rewaterproofing hole relative to the tile centriod, as well as injecting DMES. Second and subsequent pass includes injecting DMES only using previously recorded offset information. Assuming the robot reach is sufficient to process tile groups of 100 tiles per base move, the estimated time required to process 20000 tiles on first pass would be approximately 56 hours, or 7 days working 8 hour shifts. The estimated time required to process 20000 tiles on second or subsequent passes would be 35 hours or just over 4 days working 8 hour shifts.

The current manual method requires six(6) technicians about five(5) days to accomplish the same task. These technicians could be used to perform flexible insulation blanket (FIB) rewaterproofing (see section 7.3.3) during the same time that autonomous tile rewaterproofing is taking place. This process is equally critical to the Orbiter TPS, however, is not currently performed until after the ferry flight to KSC.

Besides the significant productivity improvements achieved by automation, there are additional benefits. The most significant advantage is the reduction of human exposure to the toxic rewaterproofing chemical DMES. Although formal test results defining the toxicity of DMES will not be available for some time, preliminary studies exposing laboratory rats to significant doses of DMES resulted in death to the rats. In addition, the physical act of rewaterproofing bottomside tiles itself is somewhat risky and exposes the workers to risk of falling.

Another significant advantage of autonomous tile rewaterproofing could be realized if the positioner system could be made explosion proof. In this case the system could perform work on the Orbiter during safing or defueling operations. This represents about a 16 hour window of opportunity to perform work that could not be carried out by humans due to safety considerations and the presence of hypergols.

As a final consideration, there are tentative plans to start landing the Orbiters on KSC runway in Florida as early as next year. (New brakes have been installed and tested on some Orbiters already, to enable KSC landings.) As long as vehicles were landing in Dryden, California, the risk of exposing non-waterproofed TPS to rain was minimal, however, it has been known to rain in Florida. Having a method to rapidly rewaterproof tiles prior to exposure to rain could mean saving weeks of flow time. Previous Orbiters exposed to rain, (and one time the OPF water deluge system), required that the Orbiters spend several weeks in the OPF under hundreds heat lamps in order to dry out the TPS.

7.3.2.7 TPS Study Group Decision

It is the decision of the TPS study group to include the requirements of this process when designing the initial system for use in automating the Orbiter TPS processes. Significant labor savings, improved shop safety and low risk system design are the primary motivating factors for this decision.

7.3.3 FIB Rewaterproofing (P114)

This process procedure is described in detail in MLO601-9024 process 114. The maintenance procedure and drawings of the flexible insulation blanket (FIB) rewaterproofing tool are defined by the document LR3684-001. The material safety requirements for the FIB rewaterproofing chemical dimethylethoxysilane (DMES) are described in a KSC Material Safety Data Sheet CAT NO. D5635:113.

7.3.3.1 Background

The background for rewaterproofing FIB's follows very closely with tile rewaterproofing. (see section 7.3.2.1) FIB rewaterproofing was originally the external application of "SCOTCHGARD", later followed by the internal application of an organic saline that was incompatible with SCREED. Finally, the present method entailing the internal application of DMES was adopted and is currently in use

7.3.3.2 Current Method

Flexible insulation blankets (FIB's) differ from tiles in many ways and yet have many common characteristics and requirements. FIB's are much thinner (approximately 3/8" - 1/2 "), cover large areas, and are only exposed to Orbiter re-entry temperatures 1500 degrees Fahrenheit and below. They are typically located only on topside locations of the Space Shuttles to include the fuselage, payload bay doors and vertical stabilizers, etc. The FIB material is a low density silica fiber batting sewn between two woven glass fabrics. Waterproofing materials also vaporize from FIB's on Orbiter re-entry and therefore FIB's must also be rewaterproofed during each Orbiter flow.

Observations at the OPF and a review of TPS schedules indicate that all FIB rewaterproofing occurs during the normal TPS refurbishment cycle at KSC Orbiter Processing Facilities (OPF). (see section 6.2.3). As with tile rewaterproofing, all work with DMES is performed on third shift (12:00 PM to 7:00 AM). While the chemical used as a waterproofing agent for FIB's is the same as for tiles, the method of application is much more complex to automate.

Prior to FIB rewaterproofing, Safety is contacted to establish a 20 foot clear zone. Environmental health is also notified prior to starting work, however, need not be present.

The FIB rewaterproofing process begins with the acquisition of all needed materials and tools to include: FIB maps, safety equipment, injection tool, plastic film, tape and a nitrogen pressurized container of DMES. FIB's are then covered with a plastic film that is taped in place. "X's" are then marked on the film on approximately 4 inch centers. Prior to injection, the needle bearing injection tool is purged, loaded with DMES and then adjusted to release 2 ml plus/minus .2 ml of DMES. on depression of the trigger. (see figure 7-10 illustrating current tool)

The injection of DMES entails placing the hand held injection tool on top of the plastic film in the areas denoted by the "X's" and depressing the trigger. A small hypodermic type needle punctures the plastic film and goes into the FIB material about 1/8 " and pressurized nitrogen forces the DMES into the material. Each injection takes about 3 to 4 seconds. After a complete FIB has been injected, the time and date is marked on the plastic film and the TPS technician must wait 24 hours before the film can be removed.

7.3.3.3 Human Safety

TPS technicians who perform FIB rewaterproofing are required to have a current medical certification. When performing the process technicians must wear safety approved faceshields/goggles, half-face air purifying organic vapor respirators, safety approved smocks/coveralls and solvent impermeable gloves. Safety establishes a 20 foot clear zone around FIB rewaterproofing operations when DMES is being injected. Practically all FIB rewaterproofing is performed on third shift(12:00 pm to 7:00 am) to minimize exposure to DMES by personnel.

7.3.3.4 Quantitative Data

Discussions with TPS personnel and observations made in the OPF indicate that FIB rewaterproofing takes 5 days using 6 TPS technicians, working third shift only.

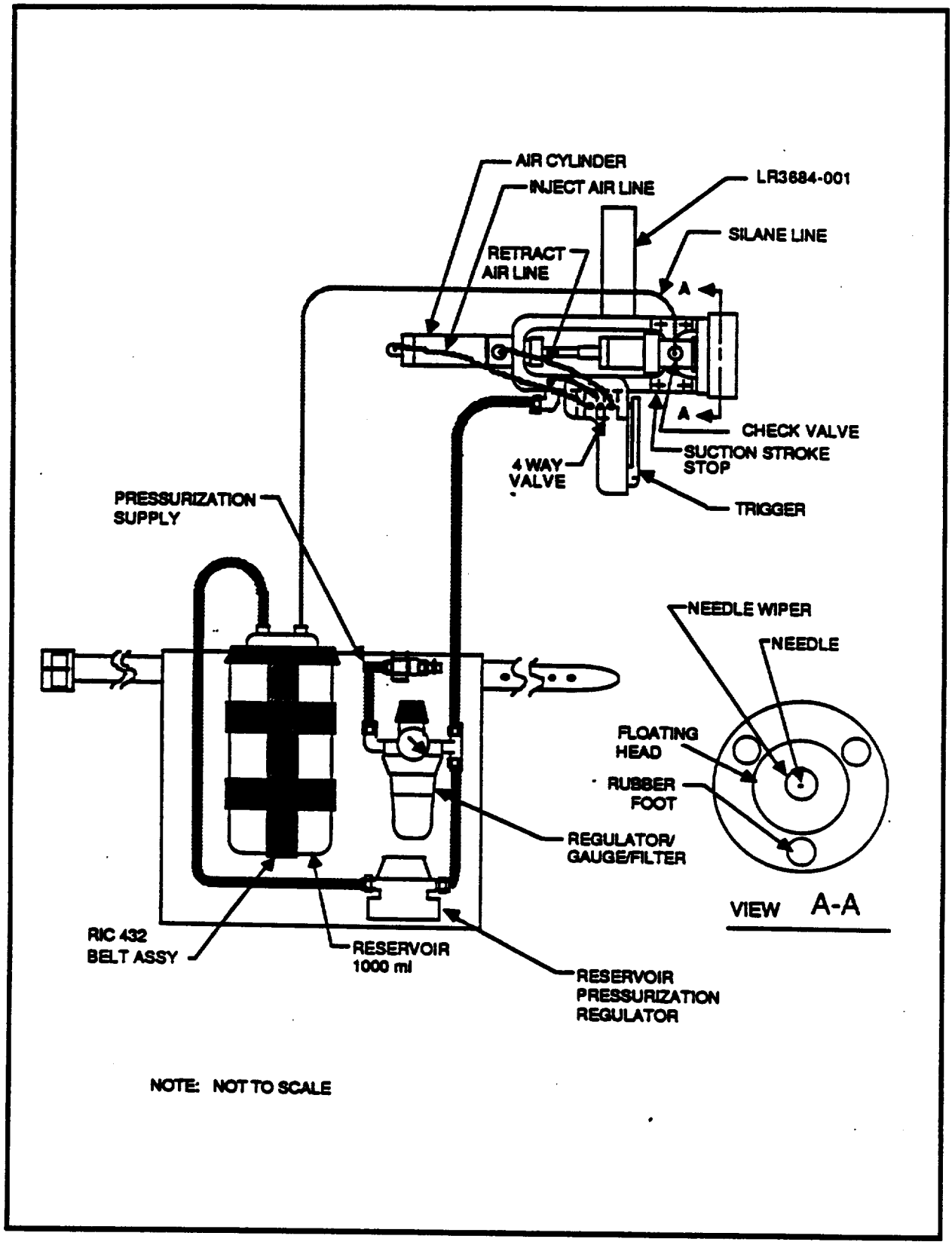

FIGURE 7-10 FIB REWATERPROOFING TOOL

7.3.3.5 Certification

The same 16 hour class required for certification for tile rewaterproofing covers certification for FIB rewaterproofing.

7.3.3.6 Application of Robotics/Sensors

The FIB rewaterproofing process appears to be a relatively good application for automation, but is somewhat more complex than tile rewaterproofing. To begin with, TPS technicians would still be required to apply the plastic film to all of the FIB's. This portion of the process consumes more time than the actual injection of DMES. Once the film is in place, a robotic system could be programmed to position to each FIB using Orbiter CAD data. The robotic system could also be programmed to perform a step and repeat DMES injection process on 4 inch centers without the need for the "X's" on the film. The automated tooling to inject the DMES would be simpler to design, as compared to the tile rewaterproofing tooling, because there would be no concerns about DMES squirting out or not going into the material.

The biggest design challenge to automating this process would be access. Positioner mechanisms would most likely have to be overhead gantry or suspended type mechanisms capable of long reach over large area. Facility modifications for required construction would significant and costly. In addition, such a positioner would be designated for use only in the particular facility where it is resident.

7.3.3.7 TPS Study Group Decision

It is the decision of the TPS study group to <u>not</u> include the requirements for this process in the initial system design for TPS automation. The primary reason for disqualification at this time is the large reach required to automate the process, that would require significant facility design modifications.

7.3.4 Tile Bonding (P301)

This process is described in detail in MLO601-9024 process 301.
A complete flow diagram of the tile installation process can also be found in appendix "C" of this document. The area of interest of this process is not the entire tile installation procedure (P301), but instead is limited to only the final bonding of the tile to the Orbiter.

7.3.4.1 Current Process

After a tile has been fabricated, all prefit checks made and the strain isolation pad (SIP) attached, the tile is ready to be bonded to the Orbiter. The three specified methods for applying pressure to the tile while the RTV is curing include: 1) bagging with a plastic film and drawing a vacuum, 2) dead weight loading with shot bags(topside tiles only) and 3) the most common method, which is applying positive pressure using stands or fixtures and reactive tooling. Positive pressure bonding probably accounts for over 98% of all replacement tile bonding.

In order to perform positive pressure bonding, fabrication of a tile specific pressure pad is necessary. The pressure pad is fabricated from calibrated foam pad bonded to a 1/2 inch thick Plexiglass backing plate with a threaded hole for attaching to reactive tooling.
The contour of the pad and the shape of the circumference of the pad must very closely match the OML of the tile to insure an even distribution of pressure on the tile when bonding. It is important to note that a tile is very fragile and that the maximum amount of surface contact is desired when bonding a tile to the Orbiter. It is also important to note that during bonding the direction of the force must be held normal to the IML bond surface.

Pressures applied during bonding are: 1 to 3 psi for acreage tiles, 2.5 to 3 psi for instrumented tiles and 4 to 5 psi for tiles abuting spring loaded thermal barriers. This correlates to 36 to 108 pounds of force required when bonding an average 6" X 6" acreage tile. The actual force needed is applied by a pressure pad attached to one of several different types of fixtures which in turn are attached floor stands, vacuum fixtures or scaffolds. Force is generated by tightening reaction screws until the pressure pad is compressed to a pre-determined specified thickness. The pressure is then held constant for a period of 8 hours while the RTV used for bonding cures.

7.3.4.2 Quantitative Data

A review of past Orbiter flow data and a review of the TPS planning schedules for several Orbiter flows, reveals tile bonding to occur on the average of about 70 - 80 times per flow, with the count ranging from a low of 39 bonds to a high of 499 bonds for the flows reviewed. Estimates of the time required to fabricate a tile bond pressure pad (4 to 6 hours), set up fixturing and apply pressure (1 to 2 hours @ 2 people), cure RTV (8 hours).

7.3.4.3 Application of Robotics/Sensors

The tile bonding process could be automated using presently available robotics and sensor technology with minimal risk. A conceptual robotic mechanism would be equipped with a force/torque sensor to provide closed loop feedback of the amount pressure applied.

The end effector could simply accept the currently used pressure pads and sticky-back tape to hold the tile or be a universally self adapting mechanism(for example a bed of nails with vacuum tips and variable shutter mechanism). The positioner mechanism could use Orbiter CAD (master dimension DB) data to position to the cavity, calculate the correct pressure force based on tile OML surface area and apply the correct directional force much more accurately than present techniques.

Positioning to a tile cavity using existing CAD data has been studied (appendix "L") and can be easily accomplished, especially if coupled with a vision camera. Calculations for determining applied pressure and force vector direction are straightforward.

A limitation to automating this process is that the system would not be able to handle captive gap fillers without human intervention, however, these tiles are a minority. Another limitation of the concept is that tiles having non-planar geometries might represent a significant challenge to tool design. Although these tiles are also a minority, they seem to be located in positions that are very prone to shop induced damage such as corners, access panels, etc... A limitation that might significantly impact the usefulness of the system is that it would be designated to the task of holding a tile in place during the entire cure cycle, not allowing it to perform any other useful work.

7.3.4.4 TPS Study Group Decision

It is the decision of the TPS study group to not include the requirements of this process when designing the initial system for automating TPS processes. While the automation of this process is relatively low risk, the group feels it is a significant overkill for performing a task that can easily be accomplished by other means. Significant productivity increases might be realized by simply designing a generic, directly attachable pressure pad tool that could accept most all tile configurations, as opposed to the present technique of fabricating a unique pressure pad for each tile bonding.

7.3.5 Diced Tile Bonding (P302)

The process procedure for replacement of undensified diced tile segments is described in detail in MLO601-9024 process 302. Diced tile are actually small thin tiles approximately .200 " to .800" in thickness. They are organized in a matrix fashion on mats, with the key advantage of being able to conform to rounded surfaces. The temperature ratings for diced tile segments is the same as for FIB's at a maximum of 1500 ° F. They are located on topside surfaces of Orbiters where only a few still exist, however, have been replaced on newer Orbiters by the use of FIB's (section 7.3.3). The area of interest of this process is not the complete remove and replacement process, but instead limited to only the final bonding of the diced tile segments.

7.3.5.1 Current Method

After a diced tile segment has been fabricated, all prefit checks made and SIP refurbished, it must be bonded to the Orbiter using techniques similar to HRSI tile bonding(see section 7.3.4). The most common method of diced tile bonding is the use of positive pressure applied by using a calibrated pressure pad and fixturing similar to an HRSI tile. Pressures required are 1 to 3 psi and because diced tile segments are small a require force of only 5 to 15 pounds is necessary during bonding.

7.3.5.2 Quantitative Data

Diced tile segment replacement and bonding occurs very infrequently, probably less than 20 times per flow and only on two of the operational Orbiters. The actually bonding process takes just over 10 hours from set up to complete cure.

7.3.5.3 Application of Robotics/Sensors

The diced tile bonding process could be automated with minimal risk,using presently available robotics and sensor technologies in a fashion similar to bonding HRSI tile(section 7.3.4.3). However, because the diced tile segments are located on the Orbiter top side locations, robotic positioner reach may require significant facility modifications to accomplish. (see section 7.3.3.6)

7.3.5.4 TPS Study Group Decision

It is the decision of the TPS study group to not include the requirements of this process when designing the initial system for automating TPS processes. Reasons for disqualification at this time include: 1) the low frequency of this process being performed, 2) costly facility modifications that might be required and 3) the significant overkill of using a complex mechanism to do a simple task that can be accomplished by other means.

7.3.6 Tile Step and Gap Measurements (P310)

This process procedure is described in detail in MLO601-9024 process 310. The detailed requirements for tile step heights, gap widths and general Space Shuttle surface roughness are described by MLO601-0001. Appendix "B" of this report provides a complete list of all referenced documents, prior studies and previous work performed to automate the tile step and gap measurement process.

7.3.6.1 Background

The gaps between the Space Shuttle tiles must be very precise to allow the right amount of expansion and contraction during temperature extremes, without crushing or cracking the brittle tile surfaces. The gaps vary in width (.000" to .415") and filler material, depending on tile thickness and location on the vehicle, but are designed to seal, blocking heat flow during re-entry.

The surface to surface height between any two adjacent tiles is referred to as the tile step height. The combination of all tile step heights greatly affects the overall Space Shuttle surface roughness, which in turn greatly influences the Shuttles aerodynamics. Of greatest

concern are forward facing tile step heights. while tile step heights may range from .000" to .250", maximum step heights are determined by location on the vehicle and whether a step is forward or aft facing.

Too large a tile gap or forward facing step could cause heat to flow down to the Orbiter substrate which is predominantly aluminum. While the melting point for aluminum is around 1200 ° F, bottom side temperatures exceed 2500° F during Orbiter reentry. The consequences of an incorrect tile step or gap could prove catastrophic.

7.3.6.1.1 Original Tile Step and Gap Requirements

Figure 7-11 summarizes the original tile step/gap measurement problem. The original methods for measuring tile steps and gaps were accomplished with feeler gauges and trammel tools with a resulting accuracy of greater than plus or minus .010". Measurements were subjective and resulted in inconsistency from one measurement to the next.

A research and development project was sponsored by NASA to enable LOCKHEED(Space Shuttle Contractor) to design a tile step and gap tool that was faster and more accurate. The original handheld tool developed incorporated the use of a light stripe laser and vision camera. While improving measurement accuracy, the number of measurements was also reduced from 48000 to 24000 using the new tool. The first prototype was demonstrated in the OMRF March 1988 and later certified by ROCKWELL/JSC in September 1988.

7.3.6.1.2 Automated Tool

Work continued with the newly developed tile step and gap tool in several areas including: additional capabilities, integration with robotics and use in Shuttle TPS processing.

Based on the success of the original laser tool for tile step and gap measurements, development work was continued by LOCKHEED, under the sponsorship of NASA, to further develop an automated tool. A new tool was developed that used the same laser and camera technology as the original tool, but in addition,. projected several laser strips across intersecting gaps and simultaneously measured all steps/gaps required for tile corner measurements. The first prototype of this tool was demonstrated in February of 1989 and resulted in a further reduction of measurements to 12000 from the original 48000.

SUMMARY OF STEP/GAP MEASUREMENT PROBLEM

- 30,000 TILES ON AN ORBITER
- ~1000 TILES REQUIRE STEP/GAP EACH FLOW
- ~24 MEASUREMENT LOCATIONS PER TILE
- OLD METHODS USE TWO TOOLS
  - FEELER GAUGES MEASURE GAPS
  - TRAMMEL TOOLS (DIAL INDICATORS) MEASURE STEPS

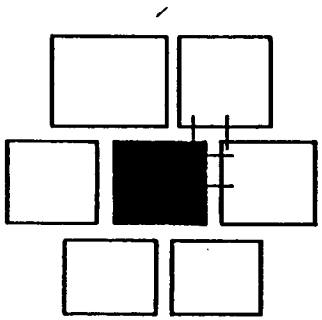

18 CORNER
6 MIDPOINT

24 LOCATIONS

X 2 TOOLS

= 48 MEAS./TILE

EXAMPLE OF TILE MEASUREMENT LOCATIONS

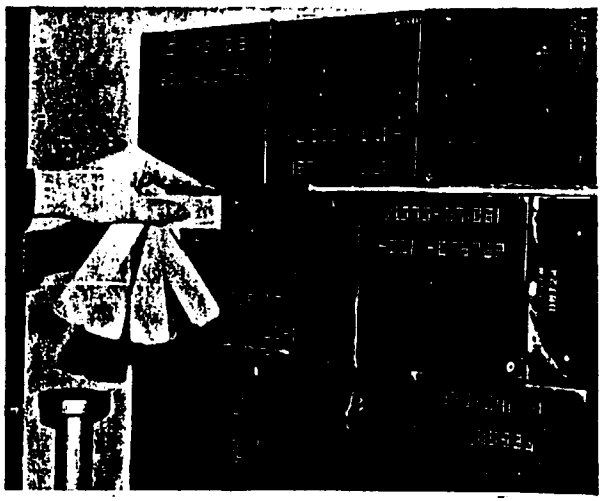

TILE PANEL SHOWING MANUAL GAP MEASUREMENT

~48,000 STEPS AND GAPS ARE MEASURED EACH ORBITER FLOW USING OLD MEASUREMENT METHODS

FIGURE 7-11 STEP AND GAP MEASURENENT PROBLEM

At the same time, work was being carried out in KSC's Robotics Application Development Laboratories (RADL) in preparation for integrating the new laser based tile step and gap tool to a robot. Working under the leadership of NASA KSC's special projects group in charge of robotics, BOEING AEROSPACE (Engineering Support Contractor) and LOCKHEED (Shuttle Processing Contractor) teamed up to: 1) Fabricate a mockup of a Shuttle tile covered section, 2) integrate the newly developed laser based tile step and gap tool with an existing six(6) degree of freedom ASEA IRB90 robot , 3) successfully demonstrate autonomous non-contact measurements of tile step and gap using the combination.(January 1989) Videos of this demonstration and are available for review.(This demonstration motivated the writing of a formal RTOP, which ultimately became the funding source to perform this TPS study.)

7.3.6.2 Current Method

At present, most of the required tile step and gap measurements occur near the end of the TPS repair and refurbishment cycle (see section 6.2.3) in the KSC Orbiter Processing Facilities(OPF) or in the Vertical Assembly Building (VAB). The TPS study group observed the nose landing gear door measurements being made by TPS technicians and engineers on level "E" of the VAB. The measurements were being made from temporary scaffolds under very awkward and precarious conditions.

From about January 1989 to present, the hand held laser based tile step and gap tool has been used to make measurements on the Orbiters any time a large group measurements are required, that are located in the same proximity of one another on an Orbiter.(for example landing gear doors and access panels) Because of the amount of set up and calibration time required to use the automated tool, feeler gages and trammel tools are still used when one tile or a relative few measurements are required.

However, because the automated tool proved more accurate and consistent than using manual methods, conclusions could be drawn that tile steps and gaps remained constant, flow after flow, contrary to prior speculations that these dimensions might change with time. As a result, the current requirements for tile step and gap measurements have been reduced substantially to fewer than 1000 measurements per Orbiter flow. These

measurements are primarily taken in the areas of the landing gear doors (NLGD & MLGD's) and a few other removed/replaced tiles or access panels. TPS personnel indicate that the step and gap measurement requirements for the main landing gear doors may soon also go away, further lowering the total number of measurements required.

7.3.6.3 Quantitative Data

The current requirements for tile step and gap measurements are less than 1000 measurements per flow. Observations of the step and gap measurement process using the automated tool take 3 to 4 technicians about 8 to 10 hours to make 260 measurements in the area of the nose landing gear door (NLGD) at the VAB. As to why the measurements were made at the VAB it was explained the available time at the OPF (when they could gain access to that area) was less than 8 hours, which was insufficient to make the measurements.

7.3.6.4 Quality and Reliability

The use of the present automated handheld laser based tool for measuring tile steps and gaps is far more accurate and consistent than the manual methods that use feeler gages and trammel tools. In addition, this method provides a method to semi-automatically record measurement results and upload those results to the appropriate Shuttle data base systems, thereby reducing paperwork and keying errors. However, there are some problems with the current tool that could be improved. The most important is interpretation of data. Observations of the process and conversations with TPS engineers indicate that some measurements taken with the laser based tool must be reverified using manual techniques. The current tool can be affected by ambient lighting conditions, glare, material color changes(rework) and a few other vision based problems. While TPS technicians are trained to spot and compensate for these exceptions, human judgement required to validate the data makes it difficult to assume that complete automation is possible using the existing laser based tool.

7.3.6.5 Application of Robotics/Sensors

The tile step and gap measuring process appears to be a reasonably good application for automation using robotics and sensors. However, the use of 3-D topographical sensor may be desirable instead of the existing sensor (light stripe type laser). Preliminary testing

(appendix "I") indicate robust results are achievable using 3-D topographical sensors.. Digitizations at densities of less than .002" are capable of providing hundreds of measurements of tile gap or step over a large area (ie > 4 inches) on a single frame scan. Presently available 3-D topographical sensors can measure and record high density XYZ maps at a rate of up to 10000 points per second. This data can be further processed to produce average, min, max, std deviation, range, etc..., statistics that are far more robust than the single line scan present light stripe based laser tool.

A mobile positioner, properly integrated with a 3-D topographical sensor, could be programmed to automatically: 1) position to a group of tiles, 2) establish a reference frame relative to the Orbiter reference frame, 3) make tile step and gap measurements as directed by a user, 4) report the results graphically to the user and electronically to the Shuttle data management systems. The entire process for a group of tiles would probably take somewhere between one and two hours.

7.3.6.6 TPS Study Group Decision

It is the decision of the study group to include the requirements for this process when designing the initial system for automating TPS processes. Automation of this process is technically feasible and will yield some productivity increases.

7.3.7 Tile Bond Verification (P315)

The process procedure for bond verification of tiles is describe in detail in MLO601-9024 process 315. Appendix "C" of this report illustrates the flow of the complete tile remove and replace process and shows when tile bond verification is performed. This section discusses two basic methods of tile bond verification to include: 1) the contact method currently performed and 2) a non-contact method employing advanced sensor technology.

7.3.7.1 Background

After a tile has been bonded to the Orbiter, the RTV allowed to cure and fixturing removed, a test must be performed to verify the bonding is complete and without voids that would degrade the strength of the bond. Figure 7-12 illustrates an overview of the tile bond verification problem for new tiles bonded to the Orbiters. The present technique for

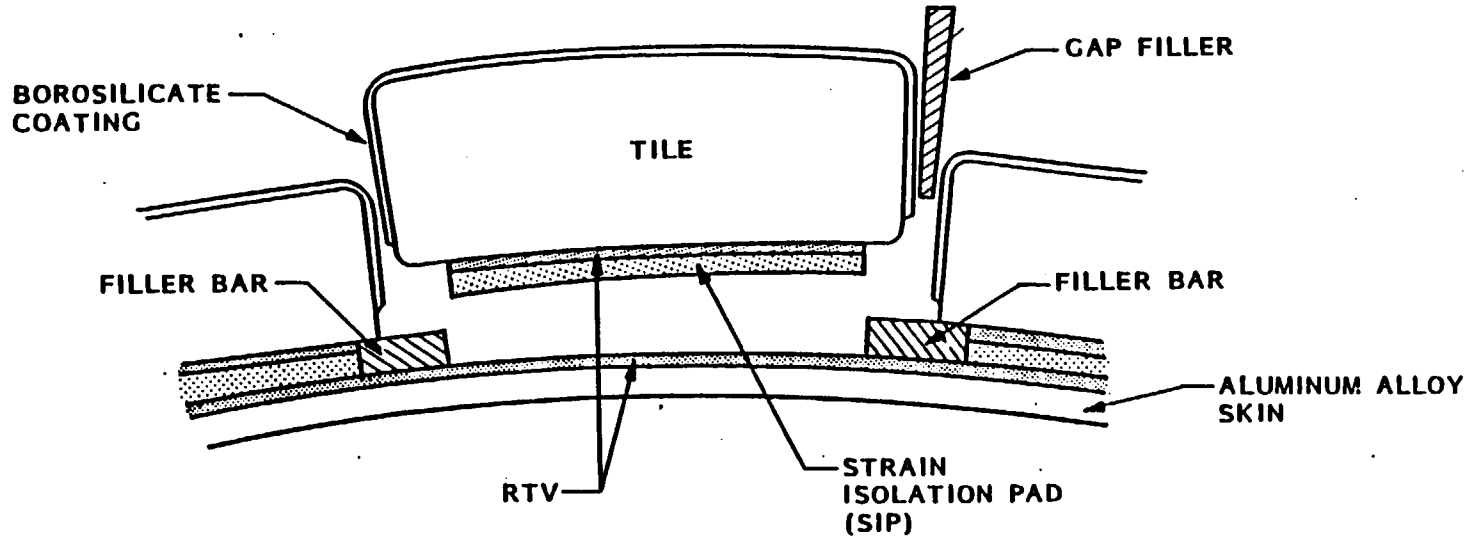

PROBABLE CAUSE OF BOND PROBLEMS

- POOR ADHESION BETWEEN SIP AND RTV
- POOR ADHESION BETWEEN RTV AND ORBITER SKIN
- PHYSICAL INTERFERENCE IN CAVITY; SIP RESTS ON EDGE OF FILLER BAR

CURRENT BOND CERTIFICATION METHOD IS A PULL TEST

- INADEQUATE: >20% CERTIFIED BONDS LATER FOUND UNACCEPTABLE

FIGURE 7-12 TILE BOND VERIFICATION OVERVIEW

verifying tile bond integrity involves the application of pull force to a vacuum chuck attached to the tile, resulting many times in the removal of the tile protective OML coating(borosilicate). An unknown amount of damage may also be occuring to either (or both) the internal structure of the tile or the tile bond itself.

Also of concern is how well a tile bond holds up over repeated Orbiter flights and re-entries. It is speculated that some tile bonds that were initially weak may have degraded with time and that all tiles should be checked at least periodically to verify bond strength, however, no such periodic tests are presently performed. The loss of a tile during flight or Orbiter re-entry could be catastrophic. Each time an Orbiter is launched there is a certain amount of risk taken that a tile might come loose.

It is for these reasons that NASA KSC is presently funding a sensor study project in hopes of locating a non-destructive, non-contact type sensor that could in some way measure bond integrity in a very rapid fashion, that does not require pull testing of the 24000+ tiles.

7.3.7.2 Current Method

The current method of verifying tile bond integrity of tiles consists of first fabricating a tile unique bond verification chuck. The BV chuck must match the tile OML contour and circumference as closely as possible (.010" to .030" max gap) to insure the maximum amount of contact area and hence, the minimum amount of load per unit area. Before performing bond verification, the TPS technician must wait at least 8 hours after the RTV adhesive reaches a Shore "A" hardness of 50 to 55 depending on RTV type.

The method of force application and the amount of tension force applied to tiles is specified by MLO301-0033 and MTO501-546. For HRSI tiles, the amount of tension force required is about 10 psi and is based on the SIP area rather than tile surface area. For a typical acreage tile (6" X 6") this equates to roughly 250 - 300 pounds of tension force.

The force must be applied perpendicular (normal) to the tile IML surface (plus/minus 2 degrees) and through the SIP centroid, so that even distribution of the load is achieved. An uneven application of force will easily damage the tile OML surface or bond structure.

Remember tiles are somewhat fragile. The load is applied from zero to maximum load, held for 1 second and then back to zero in a continuous fashion.

Literally hundreds of tiles have been visually damaged using present contact method of bond verification, as can be seen by up close inspection of the present Orbiters. The typical damage consists of complete removal of the OML hardened surface and is generally reworked by manually coating and redensifying the tile surface (MLO601-9026 process 377) after MRB concurrence. The rework itself takes many hours, is temporary in nature and requires that special processing(bagging) of the tile be practiced during subsequent rewaterproofing operations.

7.3.7.3 Quantitative Data

The time required to fabricate a tile unique bond verification chuck is about 6 to 8 hours. The time required to set up and perform an actual tile bond verification is about 1.to 2 hours., depending on complexity of tile configuration. The time required to rework a tile that has been damaged during bond verification may very from 3 to 6 hours, plus MRB disposition time, depending on the extent of damage which is typically extensive. Tile bond verification is performed approximately 70 to 80 times per Orbiter flow.

7.3.7.4 Quality and Reliability

Conversations with TPS personnel revealed that the present technique for verifying tile bond integrity is very inaccurate and that debonded areas up to 40 percent may still pass the present test. Further conversations revealed that the only other present technique used to verify tile bond integrity is "Wiggling". During this test a certified tile "wiggler" places his/her hand on the tile and rocks it back and forth to see if it is loose. Apparently there is only one certified "wiggler" at present, and this test could only produce marginal results at best.

7.3.7.5 Application of Robotics/Sensors

Three different concepts must be addressed when considering the application of robotics/sensors to the problem of tile bond verification to include: 1) use of existing BV chucks attached to a mobile robotic system, 2) use of a generic universal BV chuck attached

to a mobile robotic system and 3) use of a non-contact BV sensor attached to a mobile robotic system.

7.3.7.5.1 Use of Existing BV Chucks (method 1)

One approach to performing tile bond verification in an autonomous fashion using robotics and sensor technology would be to attach the existing tile unique BV chuck to the end of the mobile robot arm and have it 1) position to an approach point for the correct tile, 2) gently touch the BV chuck to the OML surface of the tile and draw a vacuum, 3) using force/torque sensing, apply the lower limit of the appropriate calculated tension force required (based on the SIP surface area) and 4) hold for 1 second , 5) back off on the applied force til zero, 6) display (and upload) test results and force applied,
7) retract arm and move back to safe storage.

While this scenario could probably be performed with very high accuracy with regard to force direction and load, and in probably less than 30 minutes, it is likely that some damage would still be incured to the tile and the fabrication of the BV chuck would still be necessary.(8 hours).

7.3.7.5.2 Use of a Universal BV Chuck (method 2)

Another approach to the tile bond verification problem is to design a pair of universal BV chucks for bond verification. One would be for flat tiles(< .020 curvation) with an adjustable shutter type mechanism that only applies vacuum to the OML surface of the tile to be tested. A second BV chuck would be designed to handle non-flat tiles. It would incorporate a multitude of vacuum tipped, pivoting end tubes that could conform to non-flat surfaces. Once again a shutter type mechanism could be employed to limit the active vacuum to those tubes making contact with the tile OML.

Either of these tools would be attached to a mobile robot and tile bond verification would be carried out as described in method 1 above. Once again this scenario could probably performed with very high accuracy with regard to force direction, location, and load. While this method overcomes the problem of fabricating a unique BV tool for each tile, the likelihood of tile surface damage would be increased due to the decrease in the area of surface contact made with the tile.

7.3.7.5.3 Use of a Non-Contact Sensor (method 3)

Much work has already been done (under another program) to find a sensor that would accomplish tile bond verification without the need for destructively pulling on the tile. Technologies such as ultrasonics(sonar), microwaves, advanced sherography, backscatter tomography(xrays), and others have been investigated for potential application to Space Shuttle tile bond verification.

So far the most promising technology appears to be advanced sherography. This technique involves activating an area of tiles with a very low frequency(300 hz) and measuring the resulting tile vibrations. Figure 7-13 shows the promising results that can be achieved on a test panel with 10 Orbiter tiles.

Once such a sensor has proven viable and robust, the sensor could be mounted to a positioner mechanism, whereby, all tiles could be scanned and an exception report could be generated listing only tiles with weak bonds. This method has many benefits over the present method including: non-destructive methods, no need for a tile unique BV tool, reduced rework, and the capability of processing many tiles at one time.

7.3.7.6 TPS Study Group Decision

It is the decision of the TPS study group to include the provisions for attaching a non-contact BV sensor when designing the initial system for automating TPS processes. It is felt that once this sensor becomes available it could be easily integrated to a mobile positioner using integral quick change tool adapters on the end-of-arm tooling. Automation of this process by non-contact techniques will result in significant productivity improvements. The quality and reliability of resultant tile bonds and tile OML surfaces, will also be greatly improved. Finally, implementation of the system would enable detecting the weak bonds of <u>all</u> tiles, which cannot be accomplished without significant work (BV tools) and further inevitable tile damage using the present practices.

LASER TECHNOLOGY, INC.
1055 WEST GERMANTOWN PIKE • NORRISTOWN, PENNSYLVANIA 19403
TELEPHONE (215) 631-5043 FAX (215) 631-0934

SPACE SHUTTLE ORBITER THERMAL PROTECTION TILE

DEBONDED INSPECTION

Test panel consisting of 10 Orbiter tiles, several of which had flown in space, were used to produce a test panel for test method development. Tile No. 5 had a debond programmed at the bondline for the strain isolation pad. Using an ES-9500 Advanced Shearography System, the panel is inspected for debonded tiles in approximately 1 second.

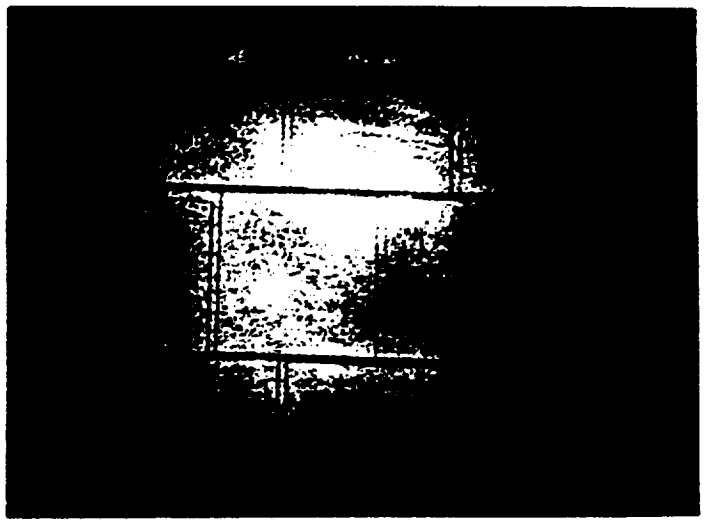

Image of the tile panel showing all 10 tiles in the field of view of the camera.

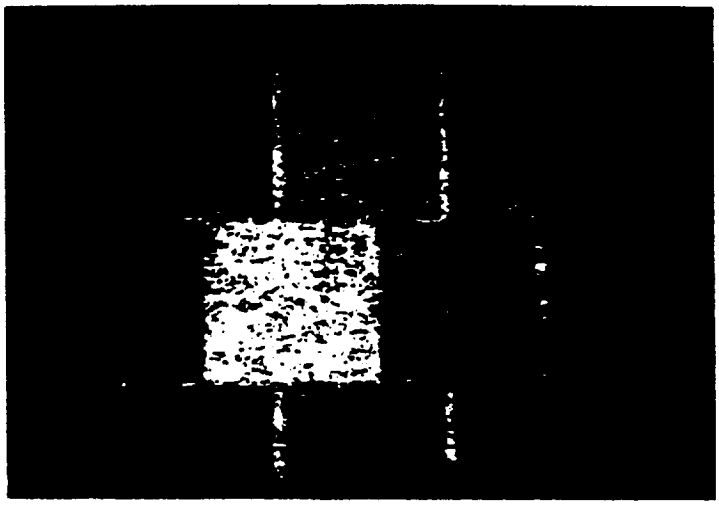

Test results showing Tile No. 5 turned white indicating a broad bandwidth frequency resonance due to the presence of a weakened tile bond.

FIGURE 7-13 ADVANCED SHEAROGRAPHY

C2

7.3.8 FIB Step & Gap (P504)

This TPS process procedure is described in detail in MLO601-9024 process 504. FIB step, ramp, gap and interference requirements are provided in MAO606-317, MLO301-0034 and MTO501-550. the tools used for performing FIB step and gap measurements are GMT001 thru GMT005 and are selected depending on the adjacent TPS material(ie tile, blanket, elevon, etc...).

7.3.8.1 Current Method

Flexible insulation blankets (FIB's) are similar to tiles in step and gap measurements are required to insure a tight and smooth fit between FIB's and at points of intersection between FIB's and other TPS components. While the tolerances of the measurements for FIB steps and gap measurements are not quite as tight as those for tiles, excessive gaps or steps can lead to damage to the TPS which may eventually result in failure of the TPS.

The measurement of FIB step and gap occurs typically most often when a FIB is replaced. The process is carried out by first obtaining the correct tool(s), placing the tool at approximately 2 inch steps along each edge of the FIB and in each corner and reading and recording the displayed measurement.(step or gap) Figure 7-14 illustrates a typical FIB step measurement tool.

7.3.8.2 Quantitative Data

A review of TPS planning data indicates as average of from 10 to 15 FIB's are replaced/reworked during a typical Orbiter flow, that require step and gap measurements. The time required to setup, perform and record results for a FIB step and gap measurement is variable depending on adjacent materials and FIB size (2 - 4 hours)

7.3.8.3 Application of Robotics /Sensors

The automation of step and gap measurement for FIB's using robotics and sensor technologies is somewhat difficult. The material comprising a FIB does not produce clean,

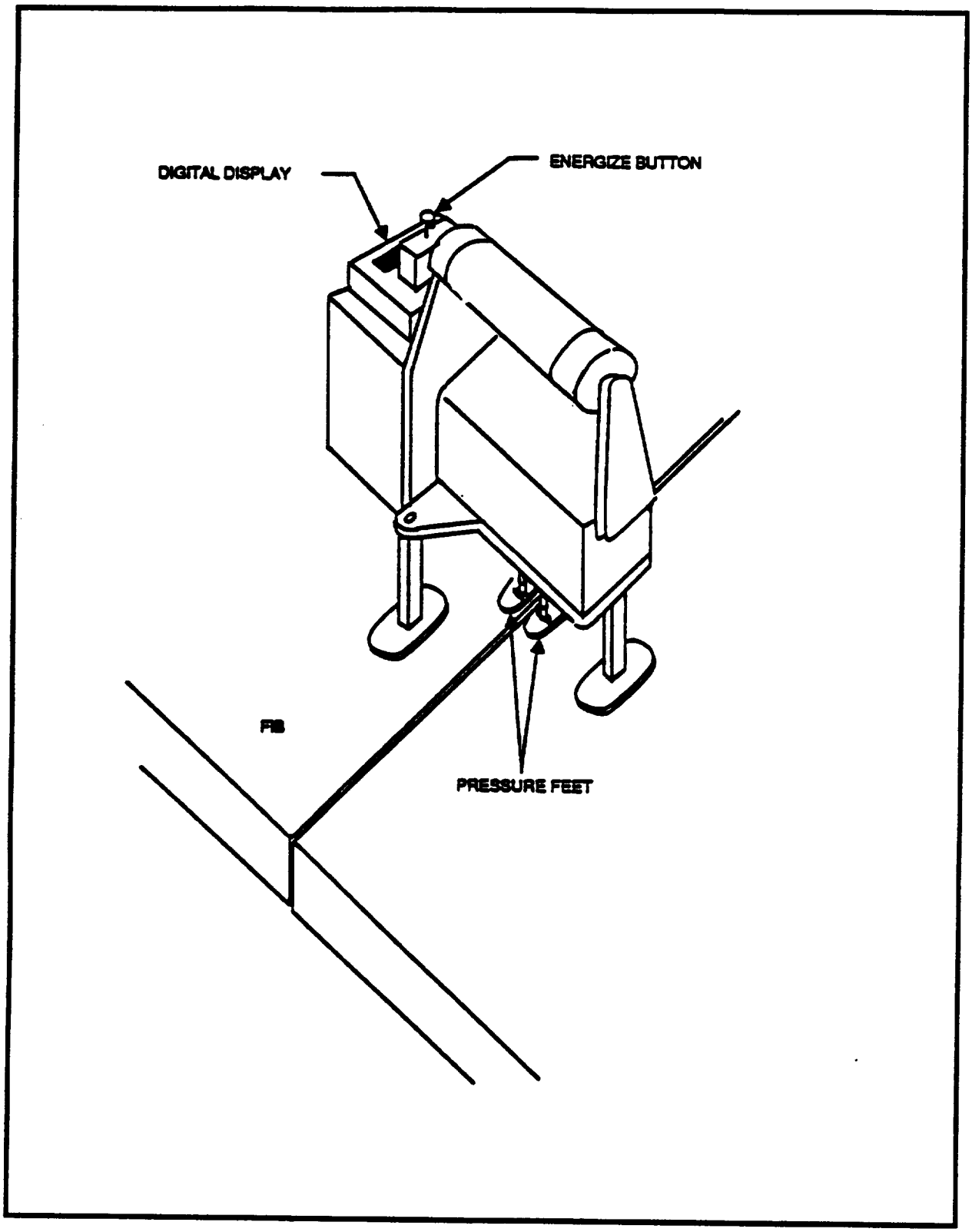

FIGURE 7-14 FIB STEP AND GAP TOOL

well defined edges when viewed with either 2-D vision or 3-D topographical sensor techniques. The fibrous material in a FIB has a diffuse appearance that would cause unpredictable results. Most of the FIB step measurements require a small amount of force be applied to hold the blankets in place while measurements are being taken. This would require contact with adjacent areas and knowledge of the materials being touched.

Even if no problems were encountered with measurement sensors, FI blankets are typically located on the top side of the Orbiters. This would mean significant facility modifications might be required to implement a positioner mechanism with sufficient reach to locate to all FIB's.

7.3.8.4 TPS Study Group Decision

It is the decision of the TPS Study group to not include the requirements of this process when designing the initial robotic system for TPS processing. Primary reasons for this decision are: 1) significant facility modifications may be required. 2) Some risk might be entailed in the design of a robust measurement sensor, 3) insufficient productivity gains or quality improvements would be realized by automation of the process.

7.3.9 Gap Filler Fabrication for FIB's (P505)

The process of fabricating a gap filler for flexible insulation blankets is described in detail in MLO601-9024 process 505. This process is used to install RTV adhesive bonded MBO135-098 FI blanket gap fillers; MBO135-074 cord, ceramic fiber; and MBO135-091 FI plugs to completely fill FI blanket to tile or blanket to blanket structure. The only area of interest of this process is the actual measurement of the FIB gap cavity.

7.3.9.1 Current Method

The present method for creating a pattern for use when fabricating a new FIB gap filler is first determine the length and depth of the gap to be filled. This is typically accomplished with a scale. From this data, a mylar pattern of the gap profile is fabricated that should also reflect any contour the gap may have. Gap thickness measurements are then made and recorded on the mylar pattern at appropriate locations (see P504 step/gap for fib's). After gap measurements are recorded, a determination of the type, class and shape of gap filler

material is made, based on abuting TPS materials and gap depth and gap configuration. This information is derived from tables (P505-1), and recorded, and the mylar pattern and paperwork are forwarded to the TPS backshop for fabrication of the gap filler. (Note: FIB gap fillers are made slightly larger than the gap width because an interference fit must result after installation.)

The FIB gap filler fabrication process occurs primarily during the normal TPS refurbishment and repair cycle at KSC OPF.

7.3.9.2 Quantitative Data

Based on a review of V6028 inspection defect and rework data for three(3) Orbiter flows, it was found that fabrication of FIB gap fillers occurs about 15 to 20 times per Orbiter flow Estimates of the time required to create the mylar pattern and record the data are about 1 to 2 hours.

7.3.9.3 Application of Robotics/Sensors

The automated measurement and recording of FIB gap fillers could be accomplished using robotic and sensor based technology, however, not without overcoming some interesting challenges.

A scenario for autonomous operation might include: 1) position sensors to FIB gap to be measured, 2) use both vision and a 3-D topographical sensor to find edges, make measurements and record data, 3) step along FIB gap and repeat process, 4) merge gap data to produce a continuous solid model, 5) using dimensional data, CAD data to determine abuting material, and known rules for material selection (procedure tables), determine appropriate FIB gap filler type, class and configuration, 6) electronically transmit a complete 3-D model of FIB gap filler, with dimensions, to the TPS backshop for display.

Because FI blankets are predominantly located on the topside of Orbiters, significant facility modifications might be required to design a positioner that would reach all FIB gaps. The material comprising a FIB does not produce clean, well defined edges when viewed with either vision or 3-D topographical sensor techniques. While these difficulties can be overcome, they might be costly.

7.3.9.4 TPS Study Group Decision

It is the decision of the TPS study group to not include the requirements of this process when designing the initial robotic system for TPS processing. Primary reasons for this decision are: 1) significant facility modifications may be required. 2) Some risk might be entailed in the design of a robust measurement sensor, 3) insufficient productivity gains or quality improvements would be realized by automation of this process.

7.3.10 Gap Filler Fabrication For Tiles (P601 - P604)

The process of fabricating replacement tile gap fillers are described in MLO601-9024 processes 601 thru 604. These gap filler installation processes include; process 601 - "pillow", process 602 - "ames", process 603 - "captive", and process 604 - "vertical stabilizer in-line" gap fillers. Common to all of these processes and the only area of interest of concern for automation, is the measurement of the tile gap cavity, necessary to fabricate a new tile gap filler.

7.3.10.1 Current Method

The most common present method for measuring and recording gap dimensions involves the fabrication of a mylar pattern. Using 7 mil mylar drafting film, the technical first cuts the mylar to the desired length. If the IML of the gap to be filled is contoured, the technician uses a special tool (SK016947 or G070-007461) to measure the contour, and cuts the IML edge of the mylar pattern to match. The mylar is then inserted into the gap, and the OML edge is marked. The mylar is then removed and cut so that the resultant pattern is flush to .12" below the OML surface. (note: for wing trailing edge and elevon leading edge the requirement is flush to .050").

Next gap measurements are made. Plastic shims are inserted into the gap until it contacts the filler bar. The shims are held at a 60° to 90° angle between thumb and forefinger, and swept the length of the gap. This procedure is repeated with progressively thicker shims until the gap thickness is known along appropriate length and height locations along the gap. These thickness measurements are then recorded at corresponding locations on the mylar pattern. The mylar is also identified with adjacent tile numbers before sending to the TPS backshop for gap filler fabrication. (note: for gaps requiring complete fill, the gap must be filled to +.010 to -.000 over the length and height of the entire gap.)

While this method of recording gap dimensions appears quite straight forward, resultant gap fillers are rejected for improper fit much of the time. In some cases, many rework cycles are required before proper fit is achieved. The problems encountered are primarily due to the inaccurate tools provided to make the gap measurements and the fact that many gaps are not nice neat rectangular cavities. Many gaps vary in thickness significantly from end to end and top to bottom. Some gap fillers span 3 or more tiles, adding geometric irregularities and complexity. Some gaps are actually wider at the bottom(IML) than at the top(OML) by a significant amount and are presently measuring by wiggling a feeler gage in the bottom of the gap and guessing at the approximate dimension.

7.3.10.2 Quantitative Data

Conversations with with TPS personnel and a review of inspection defect data indicates that greater than 1000 gap fillers are fabricated per Orbiter flow. The time required make measurements and fabricate a mylar pattern and record information is from about 30 minutes to 2 hours depending on complexity, with an average of about 1 hour. First pass acceptance rates for new fabricated gap fillers are expected to be about 90 percent.

7.3.10.3 Application of Robotics/Sensors

The application of robotic and sensor technologies to automate tile gap measurements represents an interesting opportunity. A scenario to perform this process might follow: 1) Position a mobile robotic base to the area under the tile gap to be measured, 2) using key features adjust the robot reference frame to the Orbiter reference frame, 3) Position the end effector(tool or sensor) to the tile gap 4) perform the measurements. 5) using Orbiter CAD data defining gap location and adjacent tile configurations, known rules for material selection (procedure tables) and measurement data taken, a solid model of the gap filler could be constructed with dimensions and materials noted, and electronically forwarded to the TPS back shop for fabrication.

As presented in previous sections of this report, all sensor positioning requirements for this scenario are feasible. using existing technology and tested data. Required Orbiter TPS CAD data and gap filler material rules are well documented and the computing requirements to produce an accurate model with annotations are minimal. In addition, precisely measuring tile gaps where the OML gap width is greater than or equal to the IML width

could be accomplished. It is speculated that greater than 95 percent of tile gaps are of this configuration and could be measured by a 3-D topographical sensor.

However, accurate measurement and modeling of tile gaps where the OML width is less than the IML width will require additional R/D work. Early concept discussions for these unique measurements include the possible use of properly placed special lenses, mirrors, fiber optics and even the use of completely different (CAD based) techniques altogether.

7.3.10.4 TPS Study Group Decision

It is the decision of the TPS study group to include the requirements for performing gap filler measurement and recording
when designing the initial system for TPS automation. It is felt that automation of the process is both justifiable and technically feasible.

Conservative estimates of how long it would take to position, measure, record, and model a tile gap using automated techniques are about 30 minutes for a single measurement, however, subsequent measurement processes for other tile gaps during the same excursion would be as low as 5 minutes. When compared with an average manual method of about 1 hour, man hour savings would range from 500 to 900 hours per flow @ 1000 gap fillers per flow.

In addition, the improvement to measurement accuracy, automated materials decisions and paperless data transfer, would result in improved gap filler first pass installation and reduced TPS rework.

7.3.11 Post Flight RSI Inspection (V6028)

This process is described by Orbiter Maintenance Instruction (OMI) number "V6028". Acceptance criteria used during this inspection is defined by MLO601-0002 (RSI acceptance criteria for operational vehicles).

7.3.11.1 Background

The Post flight inspection of the Orbiter TPS is one of the most important inspections performed during an Orbiter refurbishment flow. It is during the course of this inspection that all flight related damage to the Thermal Protection System is identified, measured and recorded, resulting in the eventual Work Authorization Documents that comprise the majority of all work performed on the Orbiter TPS, whether immediate or deferred. Consequently, it is imperative that the inspection be performed both as *soon as possible* and as *fast as possible* during an Orbiter flow, so that work orders can be released and an assessment of flow planning can be made(how many people, how long, etc...).

The OMI for post flight inspection (V6028) breaks the process into 7 tasks as listed in table 7-1.

Task number "01" is accomplished by engineering team comprised of a NASA KSC/JSC, LSOC and RIC TPS engineering. This inspection is performed immediately following vehicle hazard and safety inspection, just after the Orbiter lands. The purpose of this inspection is to assess overall vehicle post flight condition while placing special emphasis on potential impacts to TPS turn around processing. During this inspection the Vehicle is visually inspected for gross TPS anomalies. Any anomalies are documented and immediately assessed for any significant special processing that may be required during the TPS refurbishment cycle.

Task number "02" is performed by the same engineering team as task number "01". This task is performed to assess and assign any temporary rework deemed necessary for ferry flight, such as temporary plug fillers for missing tiles, tape down of loose FIB's, etc...

Table 7-1 Breakdown of V6028 by Major Tasks

Task Number	Who Performs	Task Description
01	Engineering Team	Runway Quicklook Inspect -tion
02	Engineering Team	Pre-Ferry Flight Macro Inspection
03	TPS Quality Control	Macro and Micro RSI Inspection
04	Engineering Team	Additional Micro Inspect -tions
05	TPS Quality Control	Micro Inspection of LESS & Nose Cap
06	TPS Quality Control	Micro Inspection of RCC R/H Panels #10 & #17
07	TPS Quality Control	Micro Inspection of RCC L/H Panel #9

Task number "04" is also performed by the same engineering team as task number "01". This task is performed to assess the TPS for specific areas (not cover by task "03") that the group feels should receive special quality control micro inspection. These may be areas of hydraulic fluid leakage, significant outgassing, or major TPS damage.

Task numbers "01", "02" and "04" are gross inspections that are performed in a very short amount time by gross visual examination by an engineering group and are not under consideration for automation.

Tasks numbers "05", "06" and "07" are performed by TPS quality control inspectors, however, are 'internal' inspections that we are told are covered during "structural inspections" later in the flow and are not performed as a part of V6028. These particular tasks are also not under consideration for automation.

Task number "03" of V6028 is the 'real' work performed by TPS quality control, taking the majority of time (approx 3 weeks) and the most people. It is during this inspection that the majority of all TPS rework is identified. It is this portion of V6028 that is under consideration for automation. All subsequent references made to V6028 inspection will be referring to task number "03" of said process.

7.3.11.2 Current Method

Post flight TPS inspection(V6028) begins at the earliest time possible, just after the vehicle is safed in Dryden, California. The process continues until a couple of weeks after ferry flight in the OPF at KSC. The QC inspectors are under much pressure to hurry up and perform the inspections and document results, so that rework dispositions can be made and work orders released to perform rework.

The process is performed by TPS quality control personnel. Most TPS QC personnel are actual experienced TPS technicians, that attended formal training classes for TPS inspection and have a valid 376 certification.

Observations of this inspection and conversations with QC personnel reveal that much of the actual work consists of acquiring the required tools and paper work, filling out the discrepancy reports and coloring in maps to record inspections performed. They said the actual inspection itself is the easy part that takes the least amount of time, at least when performing surface inspection.

Post flight inspection(V6028) consists two major types of inspection to include "surface" and "sub-surface".

7.3.11.2.1 Surface Inspection

Post flight inspection(V6028) primarily consists of surface inspection, that is, the external visual examination of the TPS components(ie tiles, FIB's, FRSI, etc...) for damage caused either during flight or during ground operations. The process consists of first visually examining an area or TPS component for anomalies(ie damage, contamination), and then making a decision whether each anomaly is within acceptable limits or should be classified as a defect. If an anomaly is determined to be a defect, a discrepancy report (DR), problem report (PR) or Matrix Discrepancy Report (MDR) is prepared containing all relevant instance data (Time, date, ID, location, Orbiter, etc...) and all defect data(length, width, size, color, etc....). A crude picture is also drawn (for tile defects) that shows the tile configuration, defect location, defect shape and approximate locations of previous rework to the same tile. A piece of approved tape is then usually affixed to the Orbiter TPS flagging the defect, containing "V6028" and typically an arrow or some other message.

A determination of "what" constitutes a defect vs an acceptable anomaly, is determined by acceptance criteria. The acceptance criteria for TPS components are affected by many variables including: material type, component location on Orbiter, new anomaly size, shape, volume and location characteristics, previous rework size, shape, volume and proximity to new anomaly, color, texture, permanency, and more... may all effect TPS anomaly acceptance.

MLO601-0002 (RSI acceptance criteria for operational vehicles). defines the acceptance criteria for TPS anomalies. Figure C-1 of appendix "C" of this report illustrates the categorization of anomalies described in MLO601-0002. (Only bottom side TPS

components are shown.) Figures C-2 through C-7 of appendix "C" illustrate graphically the acceptance criteria and decision logic for each of the TPS bottom side components.

These illustrations represent the decisions that a QC inspector must make for each anomaly encountered. What can be seen in these figures, is that defect determination for TPS component anomalies is very complex and requires many pieces of data, however, once materials and locations are known and dimensional measurements made, the decision logic to determine acceptance or defect is actually a well defined set of rules.

7.3.11.2.2 Sub-Surface Inspection

Sub-surface inspection follows surface inspection procedurally and also contains a well define set of rules for defect determination. However, sub-surface inspection is much more tedious and time consuming. Sub-surface inspection is primarily performed to locate charred filler bar, however, is also used to locate defective gap fillers and tile sidewall anomalies.

Observation of charred filler bar inspection was undertaken by two members of the TPS study group. The process was carried out by an experienced inspector standing on the floor of the OPF under the Orbiter, equipped with a very bright light (500,000 candle power), and lining up row by row with the tile gaps and looking for charred(non-red) filler bar in tile gaps as small as .030". The inspector was quite cooperative and showed us how well the technique works, even pointing out some actual charred filler bar.

Discussions with TPS QC personnel and later observations revealed that the bright light technique was only the first stage of charred filler bar inspection. During the next stage of this inspection, QC personnel equipped with a small flashlight must climb up a work stand and perform an up close examination of every tile gap looking for TPS sub-surface anomalies. This inspection is back breaking, monotonous and significantly fatiguing.

QC personnel were quite helpful with the TPS study, and expressed a strong desire to automate the TPS inspection process. Even when we mentioned that possibly only partial automation might be achieved, their response was "We'll take it...". Of course, we were just kidding them...

7.3.11.3 Quantitative Data

A significant amount of data was extracted, organized and analyzed regarding the TPS post-flight inspection process (V6028).
The bulk of this data was extracted from the Problem Reporting And Corrective Action (PRACA) system located in the VAB. This system is a central repository for all Orbiter defects, including TPS defects and rework performed. The V6028 defect data for three(3) complete recent Orbiter flows was extracted from this system and provides the basis for much of the following analyses. During this data extraction, care was taken to not include usual or irregular flows(ie hail damage, water damage, etc..), so that conservative realistic estimates could be established for the present process.

7.3.11.3.1 Productivity Data

Conversations with TPS QC personnel indicate that it takes approximately 630 QC man hours to perform a V6028 inspection. Charred filler bar inspection is estimated at 40 hours. A summarization of defects recorded and rework performed indicates that about 24.4 percent of V6028 inspection is Orbiter topside related. Topside TPS components are assumed to include FIB's, FRSI, diced tile, some LSRI tiles, and some thermal barriers. This leaves approximately 75.6 percent for Orbiter bottomside inspection. TPS bottomside components are assumed to include HRSI tile, some LRSI tile, gap fillers, filler bar, ceramic inserts/plugs and some thermal barriers.

7.3.11.3.2 Defect Data

Table 7-2 list the results of summarizing defect data. By far the TPS component accounting for the greatest number of defects are gap fillers(40.7 %). We would expect this to be true because there are at least twice as many gap fillers as tiles (approx 50,000). Tile defects are second at 29.1 % (approx 24,000) , followed by FIB's (second largest surface area) at 21.8 %. Finally burnt filler bar comes into play at 8.2 % and all other defects at less than 5 %

Table 7-2 Summarized Distribution of V6028 Defects

TPS Component	Percent of Total	Topside/ Bottomside
Flexible Insulation Bankets	21.8 %	topside
FRSI	1.5 %	topside
Thermal Barriers	1.1 %	topside
	topside sub-total --> 24.4 %	
RSI Tile	29.1 %	bottomside
Gap filler	40.7 %	bottomside
Filler Bar	8.2%	bottomside
Thermal barriers	1.1 %	bottomside
	bottomside sub-total --> 75.6 %	

7.3.11.4 Application of Robotics/Sensors

Conversations with TPS personnel and others might lead one to believe that automated inspection of the Orbiter TPS could be accomplished by simply placing lots of sophisticated sensors (vision, 3-D, other) on a roll around platform (or possibly a large door frame) several feet from the Orbiter surface, and automatically inspecting large areas of the Orbiter TPS with a high degree of accuracy and repeatability in a very short time. However, such is not the case...

Anomalies found during TPS inspections are either discolorations or damage. Long distance sensing for TPS anomalies using 3-D topographical sensing would have the following difficulties: 1) unable to sense discolorations(contamination, charred materials), 2) unable to sense small defects with sufficient resolution without taking a considerably long time, and 3) system would have limited utility to perform other TPS processes. Long distance sensing for TPS anomalies using 2-D vision only would also be a problem when considering required lighting, focal optics and the inability to accurtately measure the size and depth of damage induced anomalies(pits, gouges, etc...).

And while long distance inspection is not considered an operational solution, close proximity inspection of the Orbiter bottomside TPS looks quite promising, but will require some further testing to guarantee all anomalies and defects can be detected and measured.

7.3.11.4.1 Surface Inspection

With a combination comprised of sensors mounted to a mobile positioner, post flight (V6028) bottomside surface inspection would become a "step and repeat" process whereby a system would: 1) move to a group of tiles, 2) establish a reference frame relative to the Orbiter, 3) position the end effector at an approach point slightly away from the centroid of the tile OML, 4) take a 2-D grey level picture of the tile and surrounding gap fillers, 5) perform special processing of the image, 6) move to the next tile and repeat, 7) move to the next group of tiles and repeat until all tiles are processed.

In this scenario, one might notice that the "step and repeat" process very closely follows the exact same steps as those which might be used to perform tile rewaterproofing.(see section 7.3.2.6) In fact, the only step that differs is step 5 (perform special processing). This subject will be addressed in greater detail at a later point in this section, for now however, a discussion of special processing is warranted.

The special processing of the digitized image of a tile indicated as step 5 in the automated scenario might take several different approaches, each increasing in complexity, yet providing a greater level of autonomous operation.

Approach #1

One approach might be to perform V6028 bottomside inspection in conjunction with tile rewaterproofing and only store the tile image for later off line processing. In this approach, the newly acquired tile image would be normalized for comparison with a previously stored image of the same tile, and if there is a mismatch somewhere in the image, an anomaly could be suspected. An exception list could then be generated of all tiles/gaps that have suspect anomalies to be used by QC personnel as an aid in locating bottomside TPS anomalies.

Approach # 2

A second approach might be to perform same scenario as approach #1 except to perform the tile image comparison on-line in real time as part of the process. When an anomaly is detected as a result of the image compare, a piece of tape could be placed on the tile indicating a possible anomaly.

Approach # 3

A third approach might use the same on-line image comparison as described in approach #2. However, further processing could be performed by other sensors when an anomaly is suspected. In this approach a step would be added to position a high resolution color camera in the area of the suspected anomaly and capture an image of the anomaly. Another step could position a high resolution 3-D topographical sensor in the area of the suspected

TPS to flag the potential anomaly. Both the high resolution color image and 3-D digitization would then be stored. A QC inspector would then later sit down at a computer work station, review the list of anomalies, display the high resolution color image of each anomaly and determine which are actual defects.

The 3-D digitizations of the anomalies that are not simply contaminations or discolorations (ie damage, protrusions, bridges, etc...) would also be further processed to extract highly accurate dimensional characteristics. Length, width, depth, location and volume of the anomaly could be computed and displayed along with a solid model (or wire frame) model of the anomaly. This anomaly model would be displayed right on a model of the actual tile, along with previous rework performed to the tile. This would further aide the inspector in determining which anomalies are actual defects.

Approach # 4

A fourth approach might follow approach # 3, however, using the vision images, 3-D digitization, prior rework data, location data, materials data and TPS acceptance criteria rules(appendices C-1 thru C-7), software could be added to discern defects from acceptable anomalies. The data would then be used to:1) automatically create a discrepancy report(DR), 2) be available to QC inspectors to view and disposition normal rework, 3) be available for viewing by TPS engineers and MRB members for on-line dispositioning at their desks.(NOTE: The rework disposition process follows rules that depend primarily on the depth, volume, size and location of the defect.)

Approach # 5

A fifth approach is semi-automatic V6028 bottomside inspection. This method would follow approach #2, (on-line anomaly detection,) except that a QC inspector interacts with the system. When the robot encounters an anomaly, it would sound a buzzer or bell to get the inspectors attention, and then display a message stating an anomaly has been encountered and what would the inspector like to do. A menu would then be displayed enabling the inspector to: 1) obtain and display a close up color image, 2) obtain and display a 3-D digitization of the anomaly including dimensions, 3) disregard the anomaly, or 4) perform all processing necessary to automatically generate a discrepancy report(DR).

In this approach, the inspection process would probably not be carried out in conjunction with tile rewaterproofing.

Approach # 6

The previous five approaches have considered V6028 inspection in conjunction with tile rewaterproofing. A sixth approach would be to perform inspection completely independent of tile rewaterproofing. In this scenario Post flight bottomside inspection (V6028) would be run during first and second shift (7:00 AM to 12:00 PM) as opposed to only on third shift, which is presently a requirement when performing tile rewaterproofing.

7.3.11.4.2 Sub-Surface Inspection

The application of robotic and sensor based technologies to V6028 sub-surface inspection differs somewhat from surface inspection, primarily from a standpoint of sensor selection, application and positioning accuracy. While gap filler and tile OML radius anomalies could be located and processed during the surface inspection process, locating charred filler bar will require a completely different process.

Filler bar has a reddish color when normal. Charred filler bar appears dark brown or black. Preliminary studies conducted as part of this study, indicate that there are methods available for distinguishing normal filler bar from charred filler bar.

A conceptual sensor design for filler bar inspection might consist of a small bundle of fiber optic threads terminated on the robot side by a light source (some threads) and a photo sensor (other threads). Very careful positioning, aided by a vision system and edge following algorithms, could enable placing the soft fibers down into the tile gaps. Following along the tile gaps(2 sides per tile), allows observing the filler bar (color, reflectivity) at short intervals (.1" to .2 ") along the way. This process would be performed in a step and repeat fashion along with surface inspection and/or tile rewaterproofing.
As with surface inspection, filler bar anomalies discovered would be stored for later listing or display, and each anomaly might be flagged by placement of a piece of approved tape to the Orbiter TPS.

A further enhancement to such a sensor might include a method for determining how severe the charring to the filler bar was.(class 1, 2 or 3). The present method of checking this involves pushing on the filler bar with a feeler gauge to see if material is missing or if the nomex felt is still resilient. The above discussed sensor might use a small pressure sensitive probe to check for missing material or resilience., based on the known filler bar thickness and known tile thickness.

7.3.11.5 Estimates of Autonomous Operations

A detail detailed motion analysis of candidate robotic/sensor approaches is necessary to determine just how long it might take perform bottomside V6028 inspection in an autonomous or semi-autonomous fashion. The following are very conservative estimates When considering V6028 inspection one must also consider that it could be performed in conjunction with tile rewaterproofing (section 7.3.2.6) or completely independent of that process.

Note: the following estimates are based on processing 20000 tiles. (see appendix "G") The following also assumes tiles would be processed in groups of 100 per robot base move, 1000 anomalies would be discovered and 650 defects would be detected. Also note that image storage operations may be performed while moving the sensor to the next tile.

Tile Rewaterproof only (section 7.3.2.6) 35.0 hrs

Approach # 1 - Anomaly detection, Surface only, Offline process, with Rewaterproof.

Time to required to position, acquire 2-D image
and store... 3 secs per tile X 20000 = 60000 secs.(16.7 hrs)
(Note: this time could be as low as 1.5 secs per
tile with proper placement of camera and simultaneous
processing)

Total time rewaterproof and anomaly detect 51.7 hrs

Approach # 2 - Anomaly detection, surface only, On-line process, with Rewaterproof, placement of tape.

Time required for image 3 seconds (above), plus time required for online compare (conservative) 3 secs = 6 seconds X 20000 = 120000 secs or 33.4 hours.

Time required to place tape = 3 secs X 1000 anomalies = 3000 seconds or .8 hours

Total time rewaterproof, on-line anomaly, and tape 69.2 hrs

Approach # 3 - Anomaly detect, surface only, On-line process, with Rewaterproof, placement of tape, high resolution color image, 3-D digitization, QC offline defect processing.

Time required to position, acquire and store high resolution color image.
7 secs X 1000 anomalies = 7000 seconds (or 1.9 hours)

Time required to position, acquire and store 3-D digitized image
10 secs X 1000 anomalies = 10000 seconds (or 3.2 hours)

Total time rewaterproof, on-line anomaly, apply tape and acquire images 74.3 hrs

Approach # 4 - Autonomous defect detection and automatic discrepancy report generation, with rewaterproofing

Same time required as approach # 3, all computations could be performed off-line by a host computer 74.3 hrs

Approach # 5 - Semi-autonomous operation, anomaly detection, no rewaterproofing, QC inspector intervention.

Time required fro base moves (20000/100) X 30 secs = 6000 secs or 1.7 hours.

Time required for tile move (6 secs) + image acquisition and compare
(6 secs) X 20000 tiles = 240000 seconds (or 66.7 hrs)

QC inspector time to review anomalies when encountered 2 minutes (or 120 secs) X 1000 anomalies = 120000 (or 33.4 hrs)

Total time semi-autonomous operation 101.8 hrs

Approach # 6 - autonomous defect detection and automatic discrepancy report generation, without rewaterproof.

rewaterproof time 6 secs X 20000 tiles = 120000 or 33.4 hours.

Total time (74.4 hrs - 33.4 hrs) = 41.0 hrs

7.3.11.6 TPS Study Group Decision

The application of robotic and sensor based technologies for automating Orbiter post flight inspection (V6028) is a concept that could take many avenues, each which provides differing benefits, but all of which result in significant improvements to the current inspection process.

It is the decision of the study group to include the requirements for performing V6028 post-flight bottomside inspection when designing the initial system for TPS automation. It is felt that automation of the process is both justifiable and feasible.

Preliminary test results (Appendices "H" through "K") using vision and 3-D digitization techniques as potential inspection sensor mechanisms are showing positive results, however, much more testing will be required to verify all anomaly types.

Estimates of man hour savings by automation of the process using a robotic/sensor based system are from 300 to 470 hours. Significant efficiency improvements could be realized over the current method of performing the inspection which requires about 3 weeks. Elapsed times from as low as 2 1/2 days (16 hour shifts) to 7 days (16 hour shifts) saving at least 2 weeks of elapsed time. Automation of the process would also result in improved data integrity, better defect documentation, consistent defect determination, reduced inspector fatigue and improved automated defect determination and rework dispositioning.

7.3.12 Orbiter Pre-OPF Rollout Inspection(V6037)

This process is described by Orbiter Maintenance Instruction (OMI) number "V6037". Acceptance criteria used during this inspection is defined by MLO601-0002 (RSI acceptance criteria for operational vehicles).

7.3.12.1 Background

The purpose of this inspection is to perform a pre-OPF rollout inspection of the Orbiter TPS and determine if any damage or contamination occurred during OPF operations that may warrant repair or rework. It is also the purpose of this inspection to locate and record any rework that was not completed during the TPS refurbishment cycle.

7.3.12.2 Current Method

The current method for performing this inspection is exactly the same the method used to perform V6028 surface inspection that is described in detail in section 7.3.11.2.1. V6037 does not include sub-surface inspection, however, and hence can be performed in a much shorter period of time. This entire inspection is performed in the Orbiter Processing Facilities at KSC.

7.3.12.3 Quantitative Data

conversations with TPS QC personnel indicate that it takes about 300 man hours to perform a pre-OPF rollout inspection. A review of TPS planning data indicates the elapsed time for the inspection process to be about 7 days. It is estimated that about 70 % of this inspection is spent on bottomside components(RSI tiles, gap fillers, etc...).

7.3.12.4 Application of Robotics/Sensors

The V6037 inspection process could be automated using robotic/sensor based technology using the approaches discussed for V6028 surface inspection (section 7.3.11.4.1), however, without performing tile rewaterproofing during the same process.

This results in the following estimations for time required to autonomously perform operation.

Anomaly detection	35.0 hours
Defect detection with DR generation	39.3 hours
Semi-autonomous operation	101.8 hours

Working 2 shifts per day at 8 hours each, the system would be able to complete the inspection process in from 2.5 to 6.5 days, depending on approach employed.

Images obtained from this inspection, in general, will include all rework performed during the TPS refurbishment cycle and could be used to perform the next V6028 inspection for the same Orbiter.

7.3.12.5 TPS Study Group Decision

It is the decision of the study group to include the requirements for performing V6037 pre-OPF rollout bottomside inspection when designing the initial system for TPS automation. It is felt that automation of the process is both justifiably and feasible.

Automation of this process is a subset of the functionality required to perform V6028 post flight inspection. All feasibility issues are addressed in the discussion of that process.

Labor savings of up to 225 man hours could be realized by the automation of this process.

As with V6028, additional benefits of automating this process might include improvements to data integrity, defect documentation, consistency of defect determination, reduce inspector fatigue and on-line rework dispositioning.

7.3.13 Orbiter RSI Premate/Pre-VAB Rollout Insp(V6039)

This process is described by Orbiter Maintenance Instruction (OMI) number "V6039". Acceptance criteria used during this inspection is defined by MLO601-0002 (RSI acceptance criteria for operational vehicles).

7.3.13.1 Background

The purpose of this inspection is to: 1) determine if any TPS damage occurred during vehicle rollover when placing in vertical position, 2) determine if any damage occurred during VAB operations. Emphasis during task "01" of this inspection is placed on the area of landing gear doors and surrounding TPS.

7.3.13.2 Current Method

The current method for performing this inspection is exactly the same the method used to perform V6028 surface inspection that is described in detail in section 7.3.11.2.1. V6039 does not include sub-surface inspection, however, and hence can be performed in a much shorter period of time. This entire inspection is performed in the Vehicle Assembly Building (VAB) at KSC.

7.3.13.3 Quantitative Data

Conversations with TPS QC personnel indicate that it takes about 200 man hours to perform this inspection. A review of TPS planning data indicates the elapsed time for the inspection process to be about 5 days working 2 shifts.

7.3.13.4 Application of Robotics/Sensors

The V6039 inspection process could be automated using robotic/sensor based technology approaches discussed for V6028 surface inspection (section 7.3.11.4.1), however, because the vehicle is in a vertical position, a robotic positioner to accomplish the task would be required to have a very tall reach, and even if obstacles (ie scaffolds, MLP, ET, etc...) could be worked around, the positioner mechanism would probably be very costly, require significant facility modifications and be designated for use only in the VAB.

7.3.13.5 TPS Study Group Decision

It is the decision of the study group to not include the requirements for performing V6039 inspection when designing the initial robotic/sensor based system for TPS automation. It is felt that automation of the process would require costly facility modifications and might prove very difficult to design a positioner for that would provide sufficient TPS coverage.

7.3.14 Orbiter RSI Pre-Launch Inspection(V6040)

This process is described by Orbiter Maintenance Instruction (OMI) number "V6040". Acceptance criteria used during this inspection is defined by MLO601-0002 (RSI acceptance criteria for operational vehicles).

7.3.14.1 Background

The purpose of this inspection is to determine if any TPS damage occurred during vehicle rollout to the pad or during launch pad operations.

7.3.14.2 Current Method

The current method for performing this inspection is exactly the same the method used to perform V6028 surface inspection that is described in detail in section 7.3.11.2.1. V6040 does not include sub-surface inspection, however, and hence can be performed in a much shorter period of time. This entire inspection is performed at the launch pads (39A, 39B). Much of it is performed using Binoculars.

7.3.14.3 Quantitative Data

conversations with TPS QC personnel indicate that it takes about 200 man hours to perform this inspection. A review of TPS planning data indicates the elapsed time for the inspection process to be about 4 days.

7.3.14.4 Application of Robotics/Sensors

The V6040 inspection process could be automated using robotic/sensor based technology approaches discussed for V6028 surface inspection (section 7.3.11.4.1), however,

because the vehicle is in a vertical position, a robotic positioner to accomplish the task would be required to have a very tall reach, and even if obstacles (ie scaffolds, MLP, ET, etc...) could be worked around, the positioner mechanism would probably be very costly, require significant facility modifications and be designated for use only at the launch pads.

7.3.14.5 TPS Study Group Decision

It is the decision of the study group to not include the requirements for performing V6040 inspection when designing the initial system for TPS automation. It is felt that automation of the process would require costly facility modifications and might prove very difficult to design a positioner for that would provide sufficient TPS coverage.

7.3.15 TPS Inspection After Com/Nav Testing(V6045)

This process is described by Orbiter Maintenance Instruction (OMI) number "V6045". Acceptance criteria used during this inspection is defined by MLO601-0002 (RSI acceptance criteria for operational vehicles).

7.3.15.1 Background

The purpose of this inspection is to determine if any TPS damage occurred during the use of the Antenna Couplers used to test Orbiter communications and navigation antennas. These antennas are located just below the TPS on both the top and bottomside of Orbiters.

7.3.15.2 Current Method

The current method for performing this inspection is exactly the same the method used to perform V6028 surface inspection that is described in detail in section 7.3.11.2.1. V6045 is limited, however, to just the areas around the antennas, and can be performed in a relatively short amount of time. This inspection is performed exclusively in the OPF at KSC.

7.3.15.3 Quantitative Data

conversations with TPS QC personnel indicate that it takes about 8 man hours to perform this inspection. A review of TPS planning data indicates the elapsed time for the inspection

process to be about 1 day. Approximately 50% of this inspection is of TPS bottomside components.

7.3.15.4 Application of Robotics/Sensors

The V6045 inspection process could be automated using robotic/sensor based technology approaches discussed for V6028 surface inspection (section 7.3.11.4.1). However, the man hour savings realized by automating this process would be insignificant.

7.3.15.5 TPS Study Group Decision

It is the decision of the study group to not include the requirements for performing V6045 inspection when designing the initial system for TPS automation. It is felt that automation of the process would not be cost justifiable. (note: this operation is really only a subset of V6028 surface inspection and actually already covered.)

7.3.16 Orbiter OML Surface Contour Measurement

The requirements for these measurements are defined by the specification MLO301-0010, entitled, "Reusable Surface Insulation (RSI) installation - Obiter Vehicle".

7.3.16.1 Background

During the review of previous TPS process improvement studies and in several conversations with TPS personnel, It has been mentioned that a good application of robotics for TPS processing might be Orbiter OML contour measurements. A review of the specification describing surface contour requirements (MLO301-0010) indicates the junctions of both dissimilar and similar TPS materials must maintain critical flushness requirements as well as an overall smooth contour to prevent excessive turbulence and overheating during Orbiter re-entry. In addition, some aerodynamic surface contours must be periodically checked to insure aerodynamic functionality.

7.3.16.2 Current Method

Knowledge gained about performing these measurements is very limited because: 1) The process was not performed during the course of this study and therefore could not be

witnessed, 2) The written procedure to perform these measurements could not be located and, may in fact, not exist.

However, conversations with TPS engineers and technicians revealed that the present method of making these measurements is very crude, not very accurate and carried out by a group of vehicle engineers. According to TPS personnel, the measurement process consists of fabricating cardboard patterns based on OML CAD drawings. These cardboard patterns are then manually held up to the Orbiter surface at pre-defined locations along the leading edges of wings, nose cap, and other critical surfaces, while a second person watches for significant air gaps along the adjoining edge of the patterns and TPS. Significant air gaps are then measured using dial indicators, feeler gages, and other techniques that may not be very accurate. This process is typically carried out in the OPF at KSC.

7.3.16.3 Quantitative Data

Conversations with TPS personnel indicate that these measurements are made on about every other Orbiter refurbishment flow. The work is performed by engineers. How many man hours are required for pattern fab, setup, measurement and documentation are unknown at this time. Also unknown is how many people and how long the measurement process takes.

7.3.16.4 Application of Robotics/Sensors

Coupling a 3-D topographical laser with a mobile robotic positioner, these measurements could be made with a high degree of accuracy and repeatability.

7.3.16.5 TPS Study Group Decision

It is the decision of the study group to include the requirements for performing these contour measurements when designing the initial system for TPS automation. It is felt that automation of the process could be justified by improvements to accuracy, repeatability and documentation of the measurements made. The system components and functionality to perform these measurements are already included in the requirements of other processes selected for automation. Minimal development work would be required to enable this process to be performed autonomously.

7.4 Summary of Processes Selected/Productivity Benefits

This section summarizes the details discussed in section 7.3. Included is a list of candidate processes selected by the TPS study group and a summarization of productivity benefits achievable through automation.

7.4.1 Processes Selected

The following lists the processes selected by the TPS study group as best candidates for automation using robotic and sensor based technologies:

1) Tile Cavity Digitization (P102)

2) Tile Rewaterproof (P113)

3) Tile Step & Gap (P310)

4) Non-Contact Tile Bond Verification (P315)

5) Tile Gap Filler Digitization (P601 - P604)

6) Bottomside TPS inspection (V6028 and V6037)

7) Orbiter OML Contour Measurements (MLO301-0010)

7.4.2 Summary of Benefits

The following summarizes process improvements to TPS processing that could be realized by automating the selected processes using robotic and sensor based technologies.

Labor Hour Savings

The number of labor hours saved by initially automating only tile rewaterproofing and bottomside TPS inspections (V6028, V6037) with anomaly detection only would be about 600 man hours per Orbiter flow. It is assumed that these processes might be attacked first to enable complete debug of the positioner mechanisms. Once all processes selected have been fully implemented(approx 1 year later), the labor savings should climb to greater than 2530 man hours per flow.

Efficiency Improvements

Efficiency is a measure of how much faster a process could be performed in terms of elapsed time. Automation of the processes selected would result in improved process efficiency for some of the processes. These processes include:

TABLE 7-3 Process Efficiency Gains

Process description	Present Method	Automated Method
Tile Bond Verification	8 hours	1.0 hour
Tile Cavity Digitization	8 - 10 hours	0.5 hours
* Post-Flight Inspect	3 weeks	2.5 to 7 days
Pre-OPF Rollout Inspect	7 days	2.5 to 7 days

* note: A shorter elapsed time for this inspection will mean earlier rework dispositions and earlier WAD release.

Human Safety

The major improvement to shop safety that results from the automation of these processes is the reduced exposure of TPS personnel to DMES during rewaterproofing.

Other shop safety issues addressed include reduced chances of falling from workstands and scaffolds during tile rewaterproofing and inspection operations and reduced operator fatigue during all bottomside operations automated.

TPS Quality and Reliability

Significant TPS quality improvements would be realized by automation of many of the selected processes. Tile Step and Gap, tile cavity digitization, tile gap digitization and OML contour measurements would be more accurate, resulting in improved fits, better assessments, improved fisrt pass yields(R/R work) and ultimately less rework.

Tile rewaterproofing would see improved accuracy and consistency as to how much DMES is injected into each tile. Non-contact tile bond verification would completely eliminate the chance of the present destruction of tiles that occurs frequently when a pull force of 250 to 300 pounds is applied. In addition, non-contact tile bond verification would enable all weak tile bonds be identified and corrected. This capability does not exist using present practices.

Automation of TPS inspections would show the greatest improvement to overall TPS quality. Consistent, constantly improving techniques developed to identify anomalies and measure defects would be applied to each and every tile, gap filler and other TPS component in a relentless, repetitive, non-fatiguing fashion, that would reduce the potential for human error. High resolution color pictorials and 3-D digitizations will provide QC inspectors with more accurate information to make better decisions, concentrate only on discrepant areas, and view defects with greater clarity.

Engineering Assistance

Automating the selected processes will yield significant engineering assistance. The OML contour measurements that are presently performed by a group of engineers would be performed autonomously and more accurately. The digitizations, high resolution color images and solid models produced during autonomous inspections (V6028, V6037) will enable on-line rework dispositioning of most TPS anomalies.

Data Integrity

Automating the selected processes will include the generation of complete and accurate process status records in all cases. Accountability for processes performed will be logged by mission, Orbiter, zone and individual TPS component. Anomaly and defect data will include concise PR or DR report generation, MRB and engineering dispositions and conclude with actual rework performed.

All data will be generated, checked for validity, and transferred in a realtime electronic mode, with minimal human intervention. The present day problems with lack of standardization and use of free form text fields that cannot be grouped, matched, summarized or further processed will be eliminated.

8. PROCESS RANKING

A major part of this study has been the determination of which Thermal Protection System (TPS) maintenance processes would benefit from automation. The methodology by which the processes were selected consisted of roughly three efforts. First, a list of all the TPS processes currently being performed(appendix "A") was generated and distributed to all the study team members. Each member then made a sublist of which processes would be most improved by automation and robotics. Second, the sublists were further refined by KSC team members through interaction with KSC operations personnel and by other team members through consultation with their colleagues working in automation and robotics. Third, the refined sublist arrived at by study group consensus was submitted to a formal analysis.

8.1 Formal Analysis

The formal analysis consists of two parts. The first part is a qualitative evaluation of the candidate processes using a process versus criterion matrix and the second part is a pairwise comparison of the criteria to determine a hierarchy of criteria importance. The second was done to test the consistency of the first part's results.

The qualitative evaluation is based on a task versus criteria matrix derived from the list of candidate processes and programmatic, technological, and operational objectives for TPS automation. Most of the criteria should be self explanatory, but the following criteria are further defined. Complexity refers to the complexity of the process relative to automation. Coverage is the amount of RSI to be accessed. Control refers to the complexity, robustness, and safety of the guidance system required to automate the process. Total Processing Time should reflect the impact on shuttle flow of automating the process. Evolution is the ability of the automated system to grow with respect to taking on additional processes. Availability is essentially lead time for technology acquisition. Personnel Effectiveness refers to increase in human work efficiency. Process Rank is the weighted sum of the 11 criteria values. The weights represent the relative importance of each of the sub-criteria. The weights are derived by asking each of the evaluators to rank the criteria in importance from 1 to 10 where 1 is least important and 10 is most important. The average

of the evaluator's rankings for each criteria is found and normalized such that the sum of the averages equal one.

Each of the criteria are then evaluated by assigning a value between 1 and 10 inclusive. The values represent a qualitative evaluation of the improvement relative to each criteria that the automation of a process would generate. They are also influenced by pairwise comparisons among the processes and by each person's internal standards of what constitutes improvement. The value is the ratio of payoff to effort (P/E) and is chosen using the following guidelines:

8.2 Guidelines

VALUE GUIDELINE

1 P/E is minimal. No essential benefit in automating process.

3 P/E may have value in technology demonstration.

5 P/E yields proof of concept (i.e. automated process is as effective by every measure as manual process).

8 P/E is substantial. Automation of the process results in increased effectiveness.

10 P/E is maximum. Automated process would completely replace manual process

When evaluating cost, complexity, total processing time, and implementation time, an increase in P/E reflects a reduction in these criteria.

The second part of the analysis is a pairwise evaluation of the criteria based on a technique developed by Thomas L. Saaty (1). It serves as a formal validation of the criteria weighting.

The summarization of the analysis results and the forms used in scoring the processes accompany this narrative. Tables 8-1 through 8-3 summarize the results of the qualitative analysis.

8.3 Results

TABLE 8-1 Consenses Rankings of Operational Payoff Criteria

	*WP	DD	BV	GAP	TD	S/G	CON
Cost	6	4	3	6	6	7	4
Complexity	5	4	3	4	7	6	4
Coverage	7	7	6	8	8	9	8
Control	8	6	6	8	8	7	6
Processing Time	8	7	5	3	4	5	4
Evolution	8	8	3	4	5	7	2
Availability	8	7	2	5	5	7	5
Effectiveness	7	6	6	7	7	6	4
Shop Safety	9	5	5	5	5	5	4
Flight Safety	5	6	6	4	5	6	5
Implementation Time	7	7	3	4	4	5	5

WP - Water Proofing *DD* - Defect Detection
BV - Bond Verification *GAP* - Gap Digitization
TD - TIle Digitization *S/G* - Step Gap
CON - Contour

TABLE 8-2 Ordered Criteria Weights

Shop Safety	.149
Total Processing Time	.149
Availability	.132
Flight Safety	.124
Implemention Time	.091
Complexity	.083
Personnel Effectiveness	.083
Coverage	.074
Cost	.066
Evolution	.033
Control	.017

TABLE 8-3 Ordered Process Rank

Tile rewaterproofing	7.156
Tile Step/Gap	6.081
TPS Inspection	6.071
Tile Cavity Digitization	5.436
Tile Gap Digitization	4.881
Contour Measurement	4.615
Bond Verification	4.361

The graph in figure 8-1 shows the results of the pairwise analysis. Each of the groups on the study team is represented by a curve.

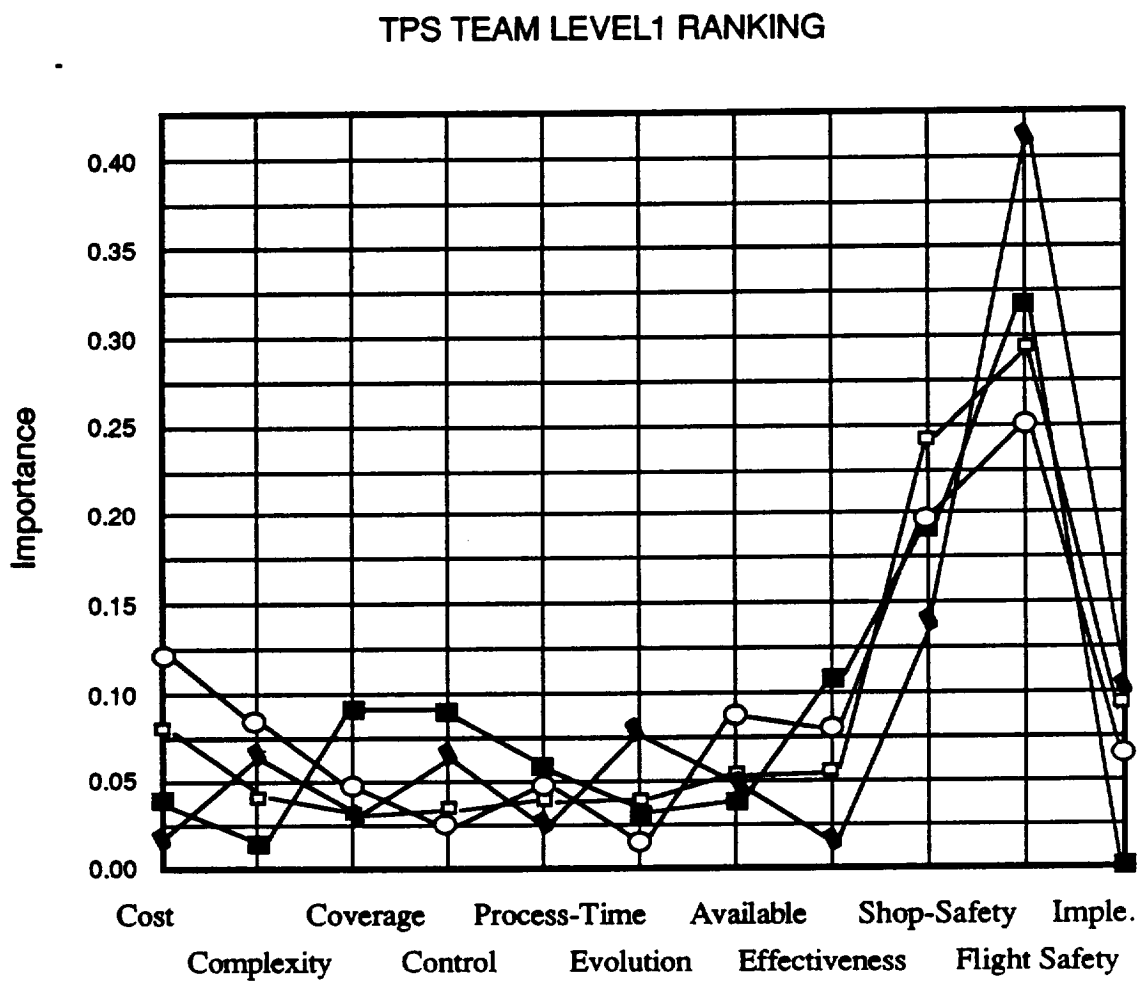

FIGURE 8-1

References

1. Saaty, T.L., *The Analytic Hierarchy Process*, McGraw-Hill, New York, 1980

9. TPS PROCESS DESIGN FOCUS

The formal process ranking in section 8 ordered the seven TPS processes that were candidates for automation. The study group then considered automation systems that could perform one or more of these tasks. The seven tasks were partitioned into overlapping groups based on their characteristics, shown below in Table 9-1.

Table 9-1. Process Groupings

	CONTACT/NON-	COVERAGE	SENSOR/TOOL
Tile Cavity Digitization	N	F	
Tile Rewaterproofing	C	M	
Tile Step & Gap	N	F	
Non-Contact Bond Verify	N	F	YES
Gap filler Digitization	N	F	YES *
Visual Inspection	N	M	
Contour Measurement	N	F	

1) Contact (C) indicates that the task requires a mechanism to be brought into contact with the orbiter, 2) Coverage indicates whether the task is normally performed on a large number of tiles (M), or for only a few isolated and widely separated tiles (F), 3) Sensor/Tool indicates if a new sensor or tool has to be developed to perform the task.

By grouping the processes into these categories, it becomes apparent that certain tasks can be logically accomplished using a single system concept. This leads to the focus on selecting a conceptual design that will initially perform a few tasks and that could later be expanded by adding functionality for performing the remaining processes.

* *[Gap filler fabrication uses noncontact sensing, but because the sensor must see through a small slit, it must be brought essentially into contact with the upper opening of the gap]*

9.1 Initial processes

Based on interviews with operations, ranking results and the TPS study group consensus on which processes would expedite the development schedule, rewaterproofing and defect detection were selected as the initial processes for automation. Justification for the selection is broken down into the following two areas:

1. *Technology Impact*

Both of the selected processes cover a large number of tiles, providing a prototype to verify the positional capabilities necessary for step-and-repeat type tasks. The technology developed for these tasks also provides a platform for incorporating the add-on processes described in section 9.2. Each of the add-on processes requires the same mobile positioning system with either software-only modifications or retrofitted with additional sensors / tools. The positioner system, control system and all interfaces can be completely debugged prior to addons.

2. *Operational Impact*

Automation of these processes will provide significant gains in the reduction of total processing time and can utilize off-the-shelf technology with little or no modifications. In addition, successful automation of RSI injection will have a major impact on shop safety, which was one of the top ranked criteria in the section 8 evaluation.

Because current robot technology is best suited for repetitive tasks, these tasks are ideally suited to current state-of-the-art technology. Furthermore, these two tasks can be easily performed by a single, integrated system because their positioning requirements are similar. And since both tasks are currently performed for every tile on every flow, their automation could have a positive impact on Shuttle turn around time. The efficiency gains for these two processes are detailed in sections 7.3 and 7.4.

Clearly, automation of RSI injection requires that the injection device be moved and positioned relative to every tile on the underside of the orbiter. This mobility requirement is also consistent with the high-resolution image sensing requirement of the visual inspection task. Both tasks can be performed in parallel because they do not interfere with each other. And their automation would be a convincing demonstration of the state of the art in controls, mobile robotics, and computer vision.

9.2 Add-on Processes

Once a mobile system has been successfully demonstrated, it can be upgraded with the addition of software only changes, to perform additional tasks such as tile cavity digitization, tile step and gap measurements and OML contour measurement. Non-contact bond verification and tile gap digitization could could be added after a suitable sensor or tool is developed.

Elements of the proposed solution for these tasks are common for other tasks. In later sections positioning devices that are capable of wielding other tools and sensors for additional tasks will be described

Cavity digitization involves measuring the exacting dimensions of a tile cavity and producing information to machine a new tile. Much of the necessary equipment is already in place: a CAD system which will convert the digitized data to NC commands and a 5-DOF milling machine.

Gap digitization is similar to cavity digitization except that the product is new gap fillers. The current process typically requires several tries to obtain a good fit.

Tile step and gap measurement could also be accomplished with a digitizer mounted on the robot. Some tests have been performed on sensors usable for this application [appendix "I"]. A hand-held tool for this purpose has already been designed and built.

Surface contour measurement is necessary to verify the aerodynamic contour of the underside of the Shuttle. Currently this is performed every other flow using primitive manual techniques. A 3-D sensor mounted on the robot will be positioned to acquire the necessary shape data.

Bond verification is needed after a new tile has been installed. Currently, a potentially destructive pull test is employed to check bond integrity. Many tiles are damaged by this technique and some are probably weakened. A non-contact method would reduce risk of tile damage during bond verification. This sensor is being developed as a separate research project. Design hooks will be provided to accompdate its mounting and positioning requirements.

Bond verification is also required for large areas of tiles, however, the only method presently employed to accomplish this is by having a qualified technician manually "wiggle" a tile to

determine its bond integrity. Once a new sensor is selected for non-contact bond verification, integration with the proposed mobile positioner will enable for the first time the ability to rapidly verify all tile bonds without degrading TPS quality. The development of a non-contact sensor for this process is being studied independent of this automation study by a different KSC group.

10. System Concept Evolution

Section 10 discusses the methodology and design issues addressed in arriving at a consolidated system concept for automating the seven TPS processes selected in the previous sections (7 - 9).

Conceptual system design began early during the TPS process study. Based on a review of prior related studies, interviews with TPS personnel and early TPS study group findings, a best guess list of potential TPS processes was compiled and presented to the group for automation system concept design consideration. This approach, while somewhat risky, was taken to enable sufficient time to research, test and experiment with many of the constituent components comprising the final concept. It enabled sufficient time to consider many alternatives and lower the associated technology risks, while at the same time, enabled on going detailed analysis and investigation of an evolvingly reduced set of candidate TPS processes. Under this approach, all members of the TPS study group were kept working full time in their respective areas of expertise, resulting in a well thought out, fully investigated system. In the end, the initial processes identified proved to be the most justifiable and technically feasible. The risk paid off, and a comprehensive and thoroughly investigative system concept evolution was possible.

Early in the system concept evolution, each represented organization of the study group was asked to prepare and present what they thought would be the best solution to automating the candidate processes. It was the concensus of the group that the independent conceptual approach would yield the most variety of solutions, of which each could be reviewed for capabilities, and the best ideas of each could be extracted for inclusion in a unified concept.

Section 10 presents many of these early system concepts and more. It begins by first addressing sensor issues. Sensor devices and tooling are first discussed by selected TPS process. The use of sensors for positional alignment and feedback is also briefly discussed.

Next, positioning mechanisms are presented. It is here that early positional concepts are presented with a brief discussion of strengths and weaknesses. Included in the discussion are fixed sensor platforms, semi-autonomous vehicles and fully autonomous systems.

The common theme that emerged from these early concepts, is one of a mobile base and some type of fine positioner. Although each candidate TPS process has its own unique process requirements, all processes have a common need to accurately position one or more sensors or tools in close proximity to the Orbiter. It was the concensus of the group that by specifying a general-purpose positioning system that is both mobile and transportable, it is possible to perform a variety of TPS refurbishment and inspection tasks in many different facilities by either: 1) changing the selected sensor or tool via quick disconnect, 2) performing process unique routines using a generic set of sensors and tools, or 3) a combination of both techniques.

Mechanical sub-system concepts are addressed next in this section. Details regarding the proposed mobile base, elevator and end effector mechanisms are presented. A discussion is then provided detailing the special studies performed and the steps taken to arrive at a mutually agreed upon fine positioner mechanism.

Navigation and location strategies are also addressed in this section. Consideration was given to many different types of location strategies, each employing differing mechanisms, sensors and techniques. After considering many design factors, solutions are proposed that require no facility modification, are sufficiently accurate and require no maintenance.

The control system architecture chosen is also presented in this section. Reasons for selecting a three level architecture are presented along with some of the key functional and data requirements of the "enterprise", "workcell" and "robot" levels.

This section concludes with a consolidated system concept. Many of the key design features are summarized as part of this conclusion

10.1 SENSOR & TOOL CONCEPTS

Each of the seven candidate TPS processes selected for automation will require a combination of sensors and/or tools that will be functionally specific to the process. In the following sections(10.1.1 - 10.1.8), each TPS process is individually examined, and concepts for suitable sensors and tools are developed.

In addition to these process-specific issues, there is a common requirement for a sensing method to precisely determine the positioner location relative to the Orbiter TPS at the conclusion of a base move. Concepts are presented employing "tile location strategies" to satisfy this need(10.1.9).

10.1.1 Tile Cavity Digitization

As described in section 7.3.1, the tracer pattern fabrication (cavity digitization) process is extremely time consuming. Given a sensor with sufficient resolution, it is certain that digitizing the tile cavity will be faster than the current procedure. Two general methods can be used for dimensional inspection — one using contact probes and the other using non-contact 3-D topographic sensors.

Contact methods are widely used for highly accurate dimensional inspection in industry. However, this task is not a good application for such methods because 1) a very large number of sample data points will be needed to accurately describe a cavity, and 2) special tooling would be required to sense all sides of a cavity. These shortcomings are so severe that contact methods were eliminated from consideration.

Non-contact 3-D sensors are also widely used in industry, but are typically used on tasks that do not require highly accurate measurements (e.g, inspection of metal castings). A survey of commercially available 3-D sensors appears in appendix "I". Two of these sensors, the Hymark and the Chesapeake LTG 21, indicate adequate resolution (.001" and .0005", respectively) to warrant consideration. Data from these or similar sensors could be used to generate the complete dimensional specifications for fabricating a new tile. Since the Orbiter shape is well characterized, the correct planar or curved OML surface can be fitted to the sensor data to generate high-quality output for tile fabrication.

Figure 10-1 shows and example of the type of data that can be obtained using 3-D non-contact methods. These data were obtained by scanning a cavity on a sample array of tiles using a Hymarc model 45C sensor, which was mounted on a precision mechanical positioning device (a Coordinate Measuring Machine, or CMM). The highly precise movements of the machine allow the data to be easily integrated into a single reference frame, as shown in the figure. Since the positioning method for the TPS automation system cannot be expected to have the precision of a highly rigid CMM, it will be necessary to interpret and combine the data without relying on precision movements of the sensor around the cavity. Further work is necessary to determine which of several available techniques will be adequate for data merging and interpretation.

Further study is also required to ensure that any chosen sensor achieves sufficient resolution in this application. Vendors typically measure a sensor's range resolution by repeatedly sensing an ideal, matte reflective surface using an ideal sensor configuration (usually the sensor is positioned for a perpendicular view of the surface). Any deviation from these ideal conditions degrades the sensor performance. Further testing is required for this application because the surfaces to be sensed are far from ideal. In particular, since the side surfaces of tiles are somewhat shielded from aerodynamic friction (compared with the OML), they are likely to retain their dark and shiny appearance. And since the sensor cannot be positioned for a perpendicular view of these surfaces, most of the projected energy from the sensor may be either absorbed by the surface or reflected away from the detector. This effect significantly degrades the performance of most sensors, usually by causing the data to be very noisy. (Note that some sensors detect this condition and mark those measurements having insufficient signal as invalid.) Some of the new sensor designs provide for feedback from the detector to the laser power so that good data can be obtained from a wide variety of surfaces.

Given a sensor that obtains adequate resolution (about +/- 1 mil), the software required to interpret the sensor data and generate high quality output data for fabricating the tile may nevertheless be formidable. The essential problem for interpretation of 3-D data is the variation (or noise) between neighboring measurements. This noise for measurements on a single flat surface is often as large or larger than twice the measured sensor resolution. For example, data from sensors having +/- 1 mil resolution often contain neighboring measurements that differ by more than 2 mils. Such noise is seldom a problem for sensing a single surface because an average of neighboring measurements can be used to smooth

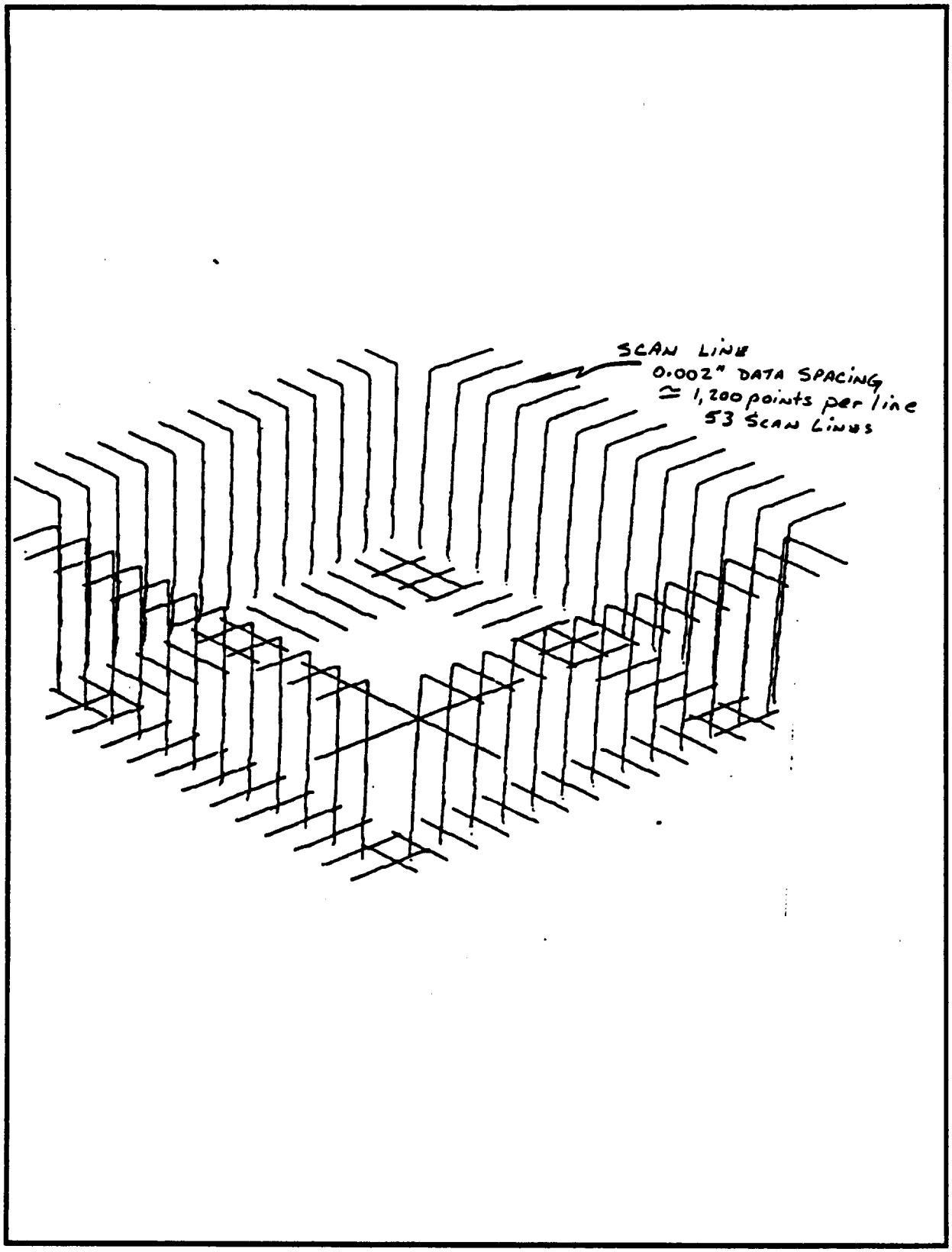

FIGURE 10-1 DIGITIZED CAVITY

the data. However, this noise can greatly complicate the process of separating (aka, segmenting) two surfaces. For example, consider the tile cavity shown in Figure 10-2. The side surface at the top of the cavity consists of two parallel planes with a small step between them. Further tests are necessary to show that small steps of this type can be detected and accurately described.

10.1.2 Tile Re-Waterproofing

In the current method of tile rewaterproofing, the operator can see if any leaks occur and can estimate their magnitude, so that a repeat injection can be performed if necessary. In order to automate the re-waterproofing task, the system must automatically trap, detect, and measure any leaking DMES. Two concepts for a modified injection tool are described, one using a sponge-type material to absorb any leaks (Section 10.1.2.1) and the other using vacuum to trap leaks (10.1.2.2). Both concepts incorporate techniques to measure the volume of leaked DMES. A detailed study of various techniques for leak trapping, detection and measurement appears in appendix "J".

Since the tool tip diameter is only about 0.375 inch and since the tip must completely cover each injection hole to avoid leaks, the position of injection hole(s) on each tile must be known with high-precision. However, the location of the hole only needs to be determined the first time each Orbiter is processed by the TPS automation system. The precise hole location with respect to the tile's centroid is then stored for use on subsequent missions. Section 10.1.2.3 describes several methods to find the injection hole on each tile.

Note that a desirable feature of a modified tool is to increase the diameter of the tip, so as to lower the required positional accuracy of the automation system. However, increasing the tip diameter is expected to increase the force required to achieve an adequate seal, because the force is related to the area of contact between the tile surface and the pressurized DMES and dry nitrogen. Although preliminary tests indicate that the increased sealing force will not damage the tiles, it is desirable to minimize the required force to reduce the constraints on the mechanical design. The second conceptual design (Section 10.1.2.2) addresses this issue by using vacuum to provide a portion of the sealing force.

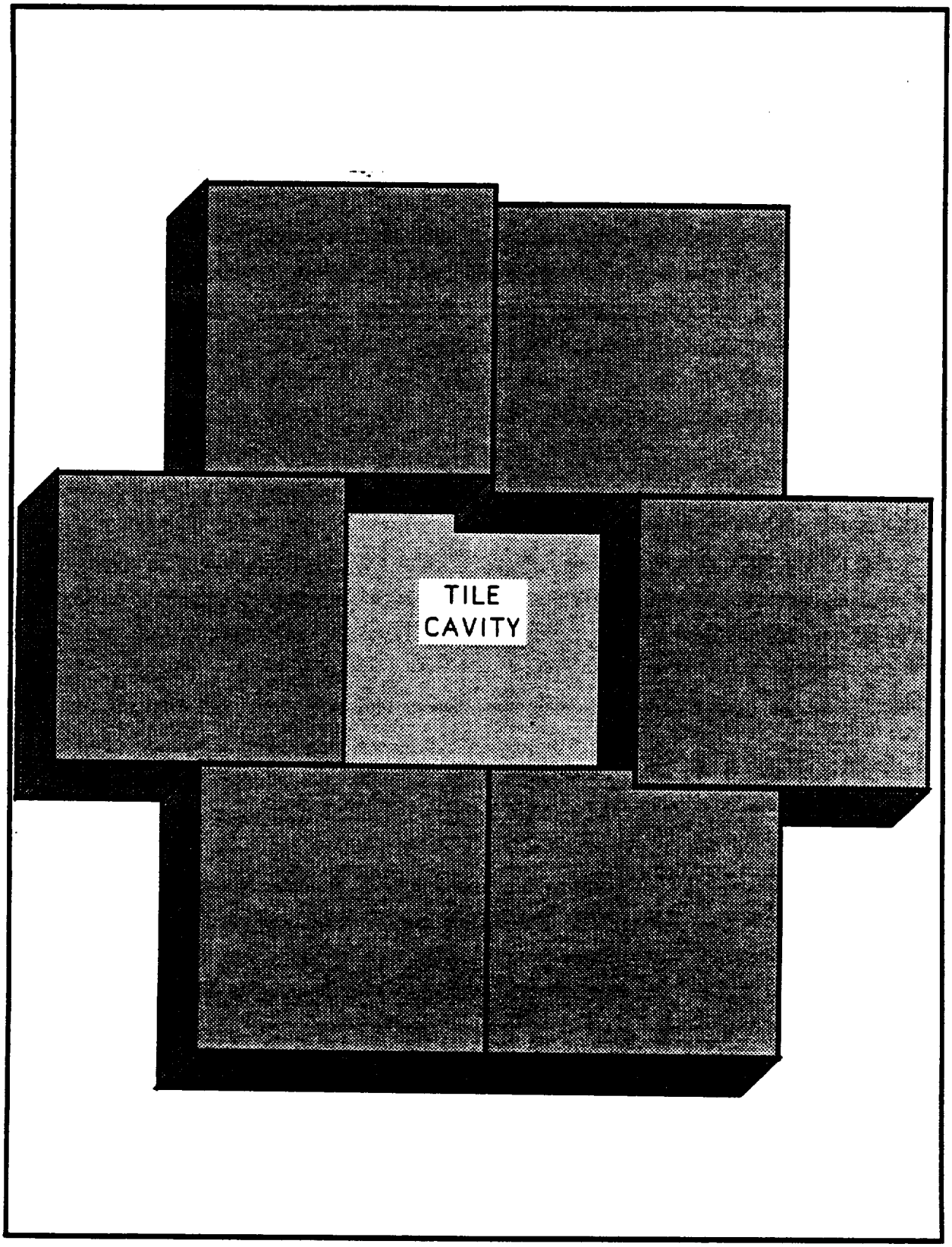

FIGURE 10-2 TILE CAVITY

10.1.2.1 Leak Absorption and Measurement

The fundamental concept is to surround the injection nozzle with a ring of sponge-like material to intercept and absorb any streams of leaking DMES. Figure 10-3 illustrates the modified injection tool with significant modifications to the existing, manual injection tool shown as shaded regions. The sponge is mounted on a spring in order to measure the mass (and hence, the volume) of any leaks. After each injection operation, the tool is pulled away from the tile surface and the sponge/spring structure is made to oscillate (e.g., by exciting it with a solenoid). The oscillation frequency indicates whether any additional mass, i.e. leaked DMES, has been absorbed.

In the current concept, the sponge/spring is supported by flex bearings (e.g., composed of thin sheets of flexible spring material such as a beryllium-copper alloy). The flex bearing design allows the spring to oscillate about its central axis, but inhibits any other motion. This is desirable to ensure that only one mode of oscillation is excited by the action of the exciter/detector coils on the permanent magnets. The rotational mode of oscillation was chosen over translational modes to reduce air damping, because damping will broaden the resonance peak (in the frequency domain) and thereby reduce measurement accuracy.

The design shown in Figure 10-3 includes limit switches to interrupt power and prevent damage to the Shuttle under an error condition. A light suction is also included to evaporate the DMES from the absorbant material after a leak has been found. The only other significant modification to the manual injector is a flow meter to measure the DMES flow to the injector. It is expected that the flow meter can be a standard Venturi type of meter, but further work is needed to determine if this type of flow meter will give adequate transient response (the steady state response of Venturi flow meters is good, often with less than 1% error).

Since a computer will already be in the system to control the robot, it makes sense to take advantage of the computer for calibration of the detector. This will be done occasionally in between injections. The calibration will consist of a sending an impulse to the exciter/detector coils and measuring the resonance frequency. The calibration will be fast (< 0.1 sec) and will adjust for any gradual changes in the detector system, such as might

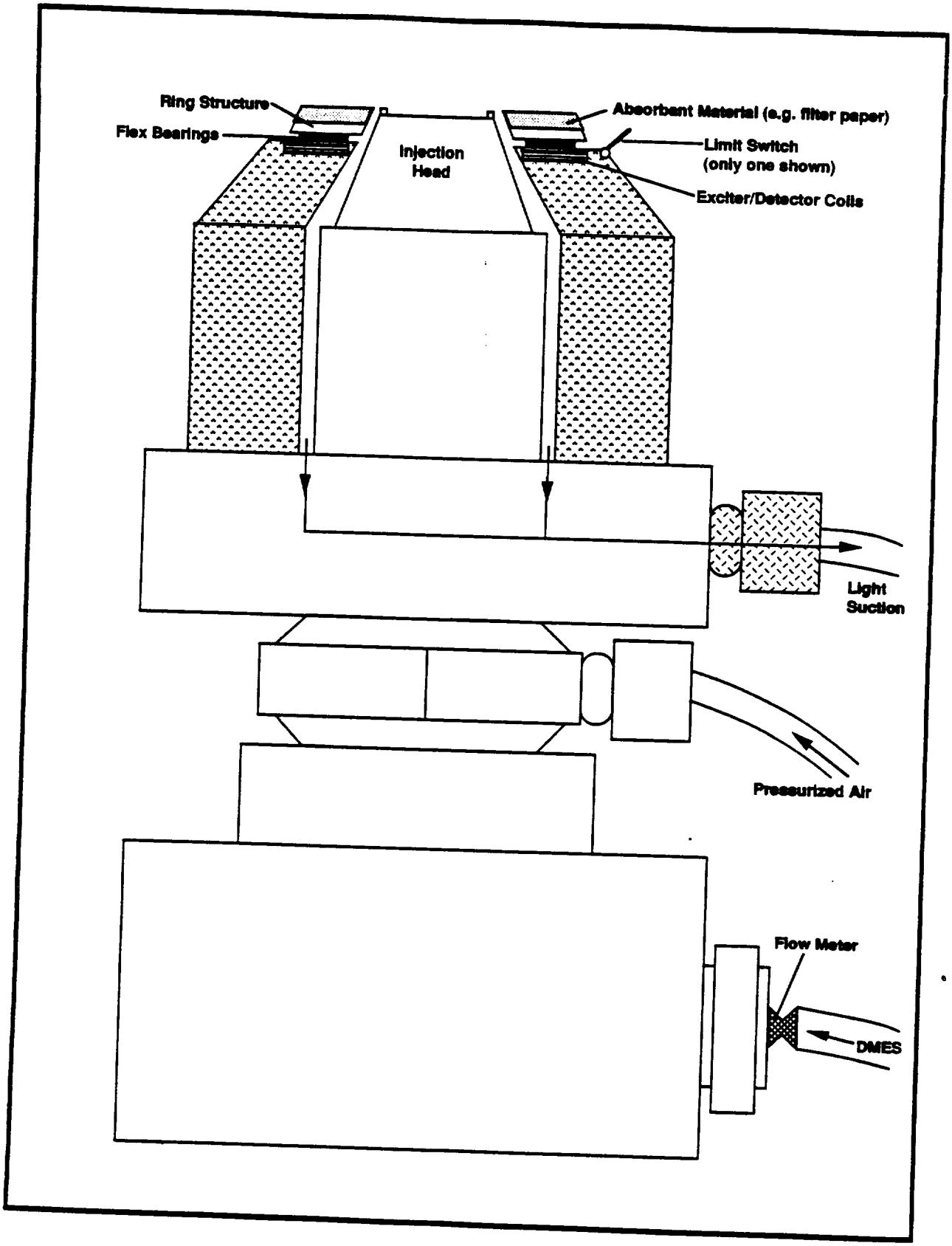

FIGURE 10-3 MODIFIED TILE REWATERPROOFING TOOL

occur from temperature variations, contaminants, creep, etc. In the event a leak is detected, calibration can also be used to verify that the DMES has been fully evaporated by the air suction before the next injection is attempted.

One other issue should be mentioned. It is possible that the absorbed fluid will not oscillate in phase with the sponge. This might happen if the absorbant material does not hold the fluid adequately, or at too high a frequency. Experiments will be needed to determine if this is a significant effect. In the event that it is, the phenomena will show up as increased damping of the oscillation, or, alternately, as an additional phase shift between the sponge/spring oscillation and the exciter coil current when the exciter coils are driven at a given frequency. This effect may make an accurate determination of the leaked fluid more difficult. Several approaches might be used to address this issue. One approach is to measure the amplitude of oscillation, and hence the damping, rather than measure its frequency. Another approach is to excite the oscillation and measure phase shifts. A third approach is to use a denser absorbant material that holds the fluid more strongly. Finally, lower frequencies might be used to reduce the accelerations and forces experienced by the fluid.

10.1.2.2 Vacuum Leak Trapping and Measurement

The modified tool for trapping leaked DMES with a vacuum seal surrounding the injection tip is illustrated in Figure 10-4. (The figure is intended only to convey the tool components and their general layout and is not to scale.) Figure 10-4 shows the leak detection subsystem of this conceptual design, which can be located some distance (several meters) from the tool and need not be mounted on the end effector. The tool and detector subsystems are connected only by the tube shown in both figures

An operational scenario is as follows. To rewaterproof a tile, the tool is positioned so that the RTV Suction Seal is against the tile's surface. At this point in the cycle there is no vacuum, so the Retraction Spring pushes the injection head against the Mechanical Stops. (The Retraction Spring will be a fairly weak spring, generating roughly 1 to 5 pounds of force.)

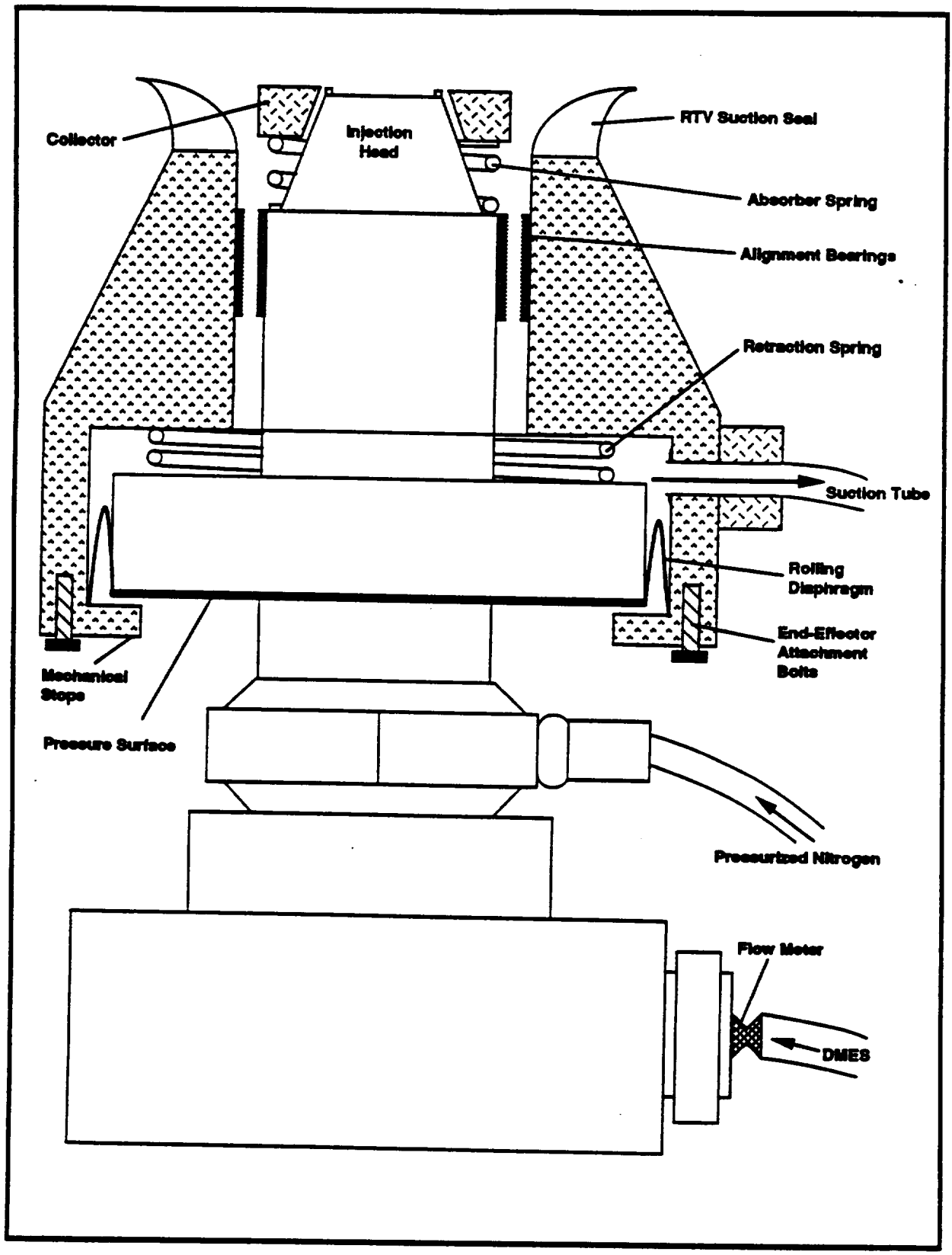

FIGURE 10-4 DMES LEAK TRAPPING TOOL

The next step in the injection cycle will be to apply vacuum. This is done by opening both Valve A and Valve B (Figure 10-5) while holding the Release Valve closed. Both Valves A and B will be solenoid actuated valves. The quality of the RTV Suction Seal is then measured using the Pressure Gauge (which will be solid state for high speed and accuracy.) If the quality of the RTV Suction Seal against the tile is inadequate, i.e. the Vacuum Pump cannot pump down to low pressures, the injection process is aborted, the tile location is recorded, and manual injection will be necessary for this tile.

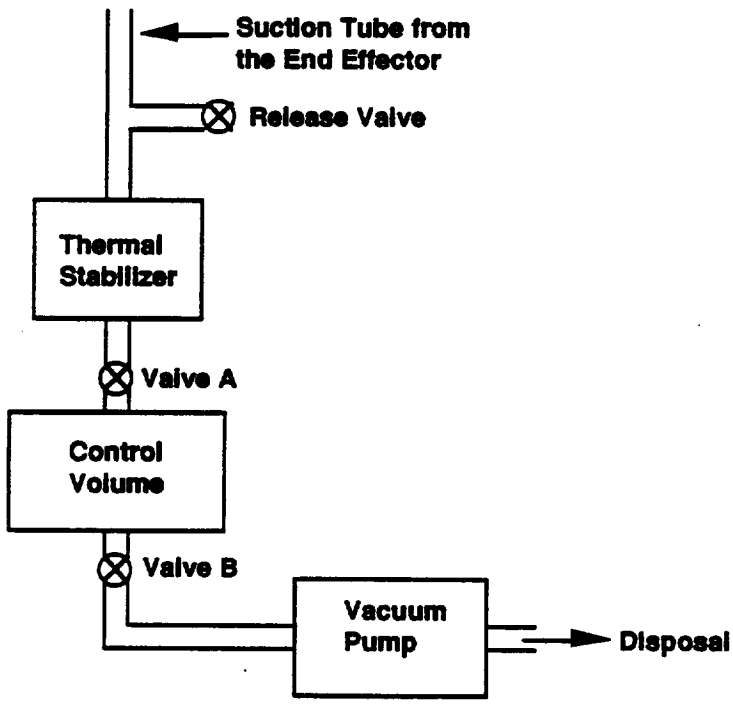

Figure 10-5: Leak Detection Subsystem Using DMES Vapor Pressure

Assuming the seal is adequate, a drop in pressure will be detected. (Note that the Rolling Diaphragm will seal against air entering the system. Rolling diaphragms can be obtained commercially.) As the pressure drops, atmospheric pressure will push on the Pressure Surface. Since the Retraction Spring is weak, the forces on the Pressure Surface will cause the injection head to be forced against the tile. The Alignment Bearings maintain proper alignment of the injection head. (The Alignment Bearings can be a simple tube of stainless steel. Alternately, they can be dry roller bearings for reduced wear and friction.) By adjusting the area of the Pressure Surface, the injection head force necessary for injection

sealing can be obtained. If A_p is the area of the Pressure Surface in square inches, and atmospheric pressure is roughly 15 psi, the force, F_p, on the Pressure Surface will be:

$$F_p = A_p\,(15\text{ psi}) \qquad (1)$$

For example, a Pressure Surface having a diameter of 1.8 inches generates about 40 pounds of force on the injection tool. Thus, it can be seen that the concept of using vacuum to provide substantial sealing forces is plausible.

After achieving an adequate seal, the next step will be injection of the DMES fluid (with 40 psi dry nitrogen). Leaking fluid will be detected by a rise in pressure monitored by the Pressure Gauge. This approach relies on the substantial vapor pressure of DMES (230 mm Hg at 20 °C). If no leak is detected, Valve A (Figure 10-5) is closed and the Release Valve is opened. This releases the suction and the robot moves to the next tile for injection.

If there is a DMES leak, it is absorbed by the Collector (Figure 10-4). The purpose of the Collector is to speed up the evaporation of DMES. When liquid begins to evaporate, the remaining liquid is cooled, the temperature drops, and evaporation slows down. By providing a thermal mass in the Collector, the temperature drop due to evaporation is decreased, so a high rate of evaporation is maintained. The Collector is also designed to spread out the DMES so that the fluid achieves a good thermal contact with the thermal mass of the Collector. The design of the Collector is discussed in more detail in the **Development Issues** section below.

The evaporated DMES passes through holes in the Alignment Bearings, out the Teflon tube and then passes through the Thermal Stabilizer (Figure 10-5). The Thermal Stabilizer forces the DMES vapor to be at a known temperature. This component can be made of a block of aluminum, copper, or other high thermal conductivity material through which small holes are drilled. Alternately it can be a long spiral coil of small diameter tubing immersed in a fluid or in a fan-driven flow of air. If needed, the temperature of the Thermal Stabilizer can be monitored directly with a thermocouple. To reduce system volume, it may be desirable to incorporate the Thermal Stabilizer into the Control Volume. The Control Volume is just a fixed volume into which the DMES vapor can flow. For the sake of clarity these two functions are described and drawn separately, but in practice they

can be the same physical component. In this case Valve A will be placed before the Thermal Stabilizer/Control Volume.

At a given temperature, the quantity of leaked DMES can be measured using a known volume and a measured pressure. This is done using Valves A and B, the Control Volume, and the Vacuum Pump. Initially Valve A is open and B is closed. DMES vapor flows into the Control Volume. Valve A is then also closed and the pressure is measured using the Pressure Gauge. The mass of the DMES in the Control Volume can then be calculated using the known volume in the Control Volume and density versus pressure curves for DMES vapor at the given temperature. After the mass is calculated by the robot's computer, Valve B is opened. The Vacuum Pump is never shut off during the injection process, so that opening Valve B allows the Vacuum Pump to remove the DMES in the Control Volume. Valve B is then closed, Valve A is opened, and the entire sequence is repeated until no more DMES vapor is detected by the pressure gauge.

Development Issues

There are two major issues that need to be addressed: 1) obtaining a suitable vacuum, 2) the speed of the system.

The issue of obtaining a suitable vacuum does not concern the RTV Suction Seal itself. The RTV Suction Seal should be fairly straight forward, and a failure to seal with the RTV Suction Seal indicates an abnormal surface roughness or surface defect. In this case DMES injection should probably not be attempted on such a tile in the first place, so failure to seal can be an advantageous warning signal. The real issue is whether there are too many small cracks or pores in the tile surface for sufficient vacuum sealing. Results of a preliminary vacuum test (appendix "J") are encouraging, but this issue needs further evaluation, experiments, and inspection of actual tiles in use.

A related issue, but one which is not as potentially serious, is that air will be pulled out of the injection hole. This should not be a problem if the Retraction Spring is weak and the Vacuum Pump is strong. In this case the force on the injection head due to pressure differences should push the head against the injection hole even before a full vacuum is obtained. As a worst case scenario, the Retraction Spring can be replaced with a small actuator.

The second issue, speed of leak detection and measurement, is determined primarily by the pumping speed and the evaporation rate. The pumping speed can always be increased by increasing the power of the pump and/or by decreasing the gas flow resistance. For this type of system one can also use a large, evacuated volume with valving as a vacuum reservoir. Such a vacuum reservoir will level out the load on the pump between injections. Thus, pump speed is not expected to a significant issue.

Evaporation rate is determined by the properties of DMES and the design of the Collector. Determination of the evaporation rate by analysis for a given Collector design is a very complex problem involving several disciplines including fluid dynamics, absorption, material compatibility questions, and heat transfer to name a few. In practice a better approach is by experimentation. At this time all the thermodynamic properties of DMES have not yet been located in the literature or measured. In particular, the heat of vaporization is unknown at present.

10.1.2.3 Finding the Injection Hole on a Tile

As previously described, the exact location of the hole on each tile must be measured the first time each Orbiter is processed by the TPS automation system. Once measured, this location will be stored relative to the tile edges, centroid, or other easily measured feature.

Injection hole(s) are surrounded by a small white circle on the vast majority of tiles (see Figure 10-6). These circles can be readily detected using conventional machine-vision techniques, thereby restricting the search to a small region. Note that the center of these circles can provide good reference points for describing the hole location on each tile. Unfortunately, some tiles do not have easily recognized circles due to omission, wear or coverage by RTV outgassing common with AMES gap fillers.

Locating Holes with Intensity Images

The injection holes penetrate the OML of the tiles and consequently, the bottoms of the hole appear white. This white spot will be detectable in a sufficiently high resolution image, if the light source is placed orthogonal to the OML. The disadvantage of this technique is that it requires that the illumination be orthogonal to the hole. As the illumination becomes

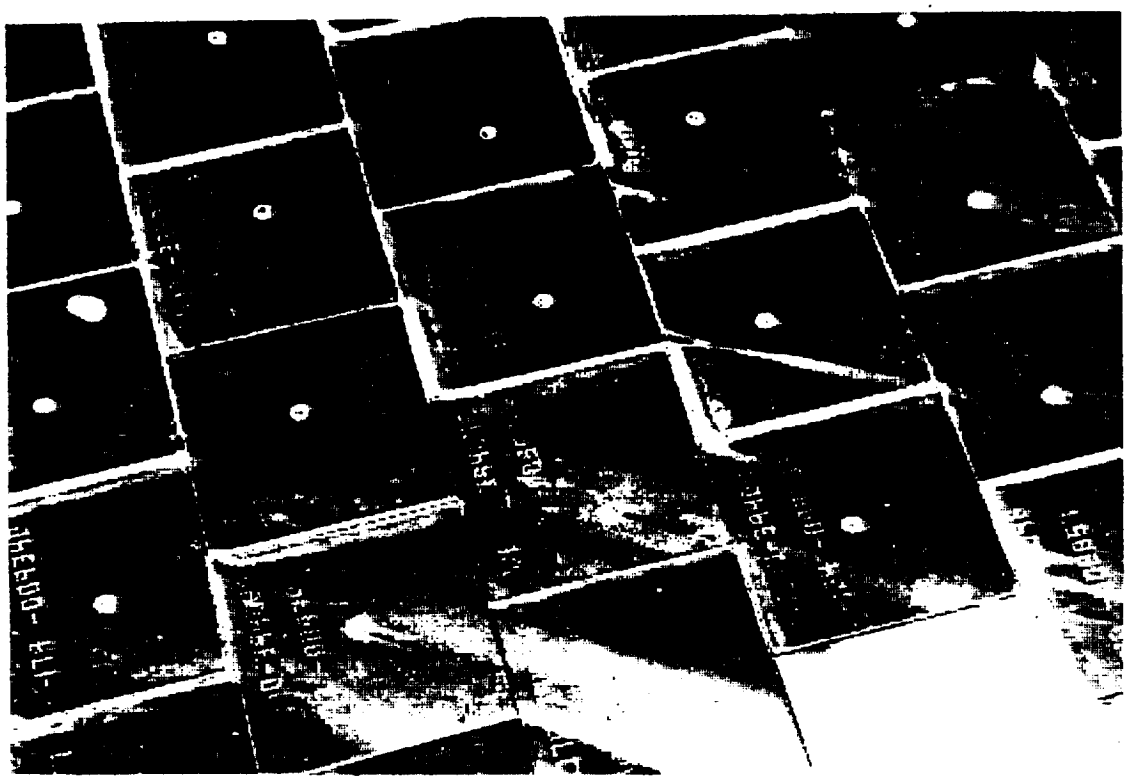

FIGURE 10-6 INJECTION HOLE LOCATIONS

inclined relative to the surface, the bottom of the hole gets shadowed by the hole edges and the contrast between the hole and the background disappears. If this procedure is used on a large area of the tile it may be difficult to maintain orthogonal illumination. A further disadvantage is that many tiles become coated with a light-grey material over time, resulting in low contrast between the tile surface and the substrate material.

An alternative intensity-based technique is to illuminate the tile with low angle illumination so that the entire tile surface appears light. The hole is now in shadow and appears dark. Further tests are required to ensure that this technique will succeed on tiles having a surface that is not smooth (the study group observed several such tiles on the Orbiters).

Locating Holes with 3-D Data

A 3-D topographic sensor such as the Perceptron or the DSC scanner could theoretically locate the injection hole. However, this approach has two potential drawbacks.

First, the scanners are slow. Assuming an average rate of 5000 data points per second, it will take 8 seconds to scan a 2"x2" square area with 10 mil resolution (which will be required to reliably detect a 50 mil diameter hole). This is in contrast to the 0.033 second acquisition time for one intensity image (video rates).
Second, the sensor may malfunction when its beam transitions from the dark tile surface to the white substrate visible in the hole, causing erroneous data values that may make hole detection difficult. Some sensors control the intensity of the laser in order to compensate for the dynamic range. Further tests are required to determine the necessary sensor capabilities for this task.

10.1.3 Tile Step And Gap

Preliminary tests indicate that good results are achievable using 3-D topographical sensors (e.g., see Figure 10.1.1-1 regarding sensing for Cavity Digitization). Such a sensor can provide hundreds of measurements of tile gap or step over a large area (ie > 4 inches). Currently available 3-D topographical lasers (e.g., Hymarc) can measure and record data at a rate up to 10000 points per second. This data can be further processed to produce average, min, max, std deviation, range, etc..., statistics that will be more robust than a single measurement.

10.1.4 Non-Contact Tile Bond Verification

Sensor technology to automate this task is being developed under another program (see Section 7.3.4 for a description). When available, this sensor can be mounted on the end-effector of the TPS automation system.

10.1.5 Tile Gap Filler Digitization

In principle a 3-D topographic sensor can be used to determine the cross-sectional geometry of tile gaps for fabrication of fillers. However, since the gaps are very narrow (100 - 250 mils), special packaging of the sensor may be required to ensure that both the transmitted beam and the detector are not occluded by the tile OML. Note that about 95 % of the gaps have OML gaps >= IML gaps. Although further tests are required, it may be possible to measure these gaps without the special tooling, that will probably be required for the remaining gaps (whose OML opening is smaller than their IML gap).

10.1.6 Bottomside Post Flight TPS Inspection (V6028)

Automatic visual inspection of tiles has usually been considered infeasible in the past, because of the difficulty of finding the truly defective regions in the presence of other non-defective regions having similar appearance. However, by exploiting the extensive historical data that exists for each tile, visual detection on anomalous regions is well within the capabilities of existing technology.

The method employed will automatically compare images obtained before flight and after flight for each tile (the post-flight image of each tile will become its reference image for the next flight, except for those tiles requiring repairs, in which case the pre-OPF rollout image will become the reference image.). Changes, such as new light or dark regions, resulting from damage or contamination to the emissive coating, will be flagged as possible defects. A high-resolution image of possible defects will then be obtained for display to an operator, either on-line at time of inspection or at a later time on a work station The obtained image will also be used for record-keeping and rework dispositioning purposes.

The system will be equipped to automatically label the anomalous region (eg., with the V6028 white tape label) to assist an inspector in locating it on the Orbiter. In this way the bulk of the inspection on normal tiles will be performed automatically, while the difficult job of classifying the relatively small number(<1000) of anomalies will be performed by highly-skilled operators, using the best talents of both machine and man.

This is envisioned as the initial stage of automated TPS inspection development. Later stages will include 3-D topographical sensor based anomaly measurement, online defect determination, autonomous discrepancy report(DR) generation and a host of other enhancements.

10.1.6.1 High-Resolution Grey-Scale Images

The high-resolution images described in the preceding scenario are necessary to provide adequate information to an inspector viewing the display screen. A determination of the required image resolution (in pixels per inch on the tile surface) requires experimentation with several inspectors and is beyond the scope of this study at this point. As an example of other high-resolution images used by humans for decision making, studies by the postal service indicate that images having 180 pixels per inch resolution are necessary for human operators to read address labels on a display screen (automatic character recognition typically requires 200-300 pixels per inch). It is also important to note that the system must guarantee a minimum resolution in any direction, since anomalous features can appear at any orientation in the image. For example, a 512 x 512 pixel camera arranged to have a 6-inch square field-of-view provides 85 pixels/inch resolution in the image directions corresponding to the rows and columns of pixels, but only provides 60 pixels/inch in the diagonal direction.

As can be seen from the survey of commercially available cameras (appendix "H") there are no moderate cost cameras that will provide 180 pixels/inch over a standard 6 inch tile. Several methods to obtain high resolution images using available cameras are described in the following subsections.

Mosaic Imaging

One very simple method to obtain high resolution images is to form a composite or "mosaic" image of a tile from several high-resolution images of portions of the tile. Since the cameras can be rigidly mounted on a common platform (with slightly-overlapping fields of view), they can be calibrated so that their distortions are repeatable and thus can be removed by image processing software to provide a mosaic-image free from distortions. For example, a resolution of 180 pixels/inch across the diagonal of a 6 inch square tile can be obtained by combining the images of 9 cameras having 512x512 pixels. The field of view of each camera will be a square area of the tile having sides of 2 inches.

Steerable High-Resolution Camera

If all anomalies of interest can be detected in lower-resolution images, then another possibility is to detect any anomaly at low (coarse) resolution and then point a camera with a telephoto lens (i.e., the camera has a small field-of-view) at the region to obtain a high resolution image of it. This option has the disadvantage of requiring additional time to re-orient the high-resolution camera, which will negatively impact the time required to complete the robot's mission if a large number of regions were classified as anomalous.

Swept-Line Camera

Very high-resolution images can be obtained by sweeping the view of a linear array camera. For example, a device using one 2048 element line camera can provide 240 pixels/inch across the diagonal of a 6-inch tile. Higher resolution could be obtained by using multiple cameras. In addition to the obvious advantage of high resolution, this type of arrangement allows the available light to be focused in the linear viewing region, so that less overall power is required for adequate illumination. The disadvantages of this approach are complexity, weight, and cost. While still within the body of known technology, the complexity of controlling a swept or rotating prism (or mirror) is significant. It will probably also be necessary to include an auto-focus mechanism, since the length of the optical path changes from the middle to the edge of the tile. (However, further study and experimentation may show that adequate depth-of-field can be obtained for some configurations.) Note, that although the software will not be trivial, it should be possible to produce a high-quality image since both the known tile size and the previously-stored image provide a correction method for any unexpected image distortions (e.g., from a variation in the rotary speed of the prism).

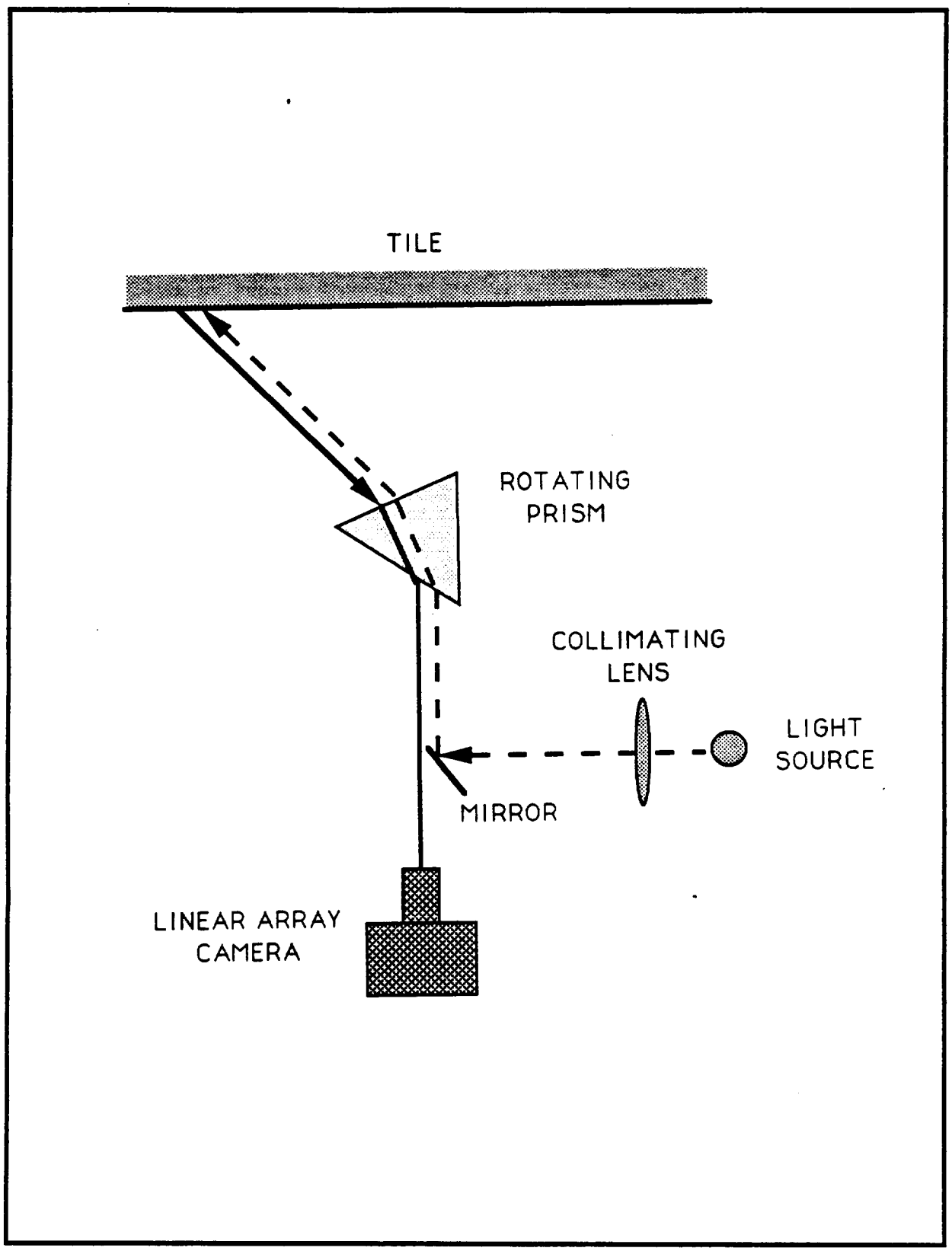

FIGURE 10-7 LINE CAMERA CONCEPT

10.1.6.2 Color Vision

Despite the wide availability of color video cameras, accurate measurement of true color is rather complex and usually requires special instrumentation in a laboratory setting. One major difficulty with color measurements in the OPF environment is uncontrolled ambient lighting. For example, nearby fluorescent lights add a green tint to the measured colors, whereas incandescent lights typically add a yellow tint. Another problem is that the color balance of light sources and the spectral sensitivity of cameras change over time, so that even when there are no problems with ambient lighting, the color measurements are not absolute. In addition to these general problems, measuring the color of an outgassing pattern on a tile is further complicated by the fact that the material is not opaque, and therefore the color measurement for a region includes the variable appearance of the tile surface. Finally, it is worth noting that the true color of a region is often significantly different from the color that people perceive. This effect is probably an artifact of the process that allows people to perceive colors more-or-less correctly even under fluorescent lighting (whereas the colors in a photograph using fluorescent lighting are noticeably tinted).

Although the appearance of a tile is often very complex (due to outgassing patterns and previous repairs), the presence of colored material is rare. With few exceptions (e.g., reddish outgassing originating at an instrument) these colored regions are anomalous. Thus the system need only detect color differences relative to the normal background color. An industrial quality 3-chip video camera is sufficient for this purpose, if a target of known color is placed in every image. A survey of video cameras is included in the appendix "H". The known characteristics of the target allow for automatic correction of the image brightness and color balance, so that image measurements are repeatable.

Figure 10-8 shows a simple and reliable design for a color camera and known target. In this design the target is a painted frame just within the camera field of view. Having the target surround the image is important because it improves the ability to compensate for lighting variations across the field of view (e.g., caused by uncontrolled lights of differing type and intensity lying on opposite sides of the TPS robot). By painting the frame a single color (e.g., light gray) and making its visible portion cover a strip about an inch wide around the edge of the camera field of view, then it will not be necessary for the frame be in

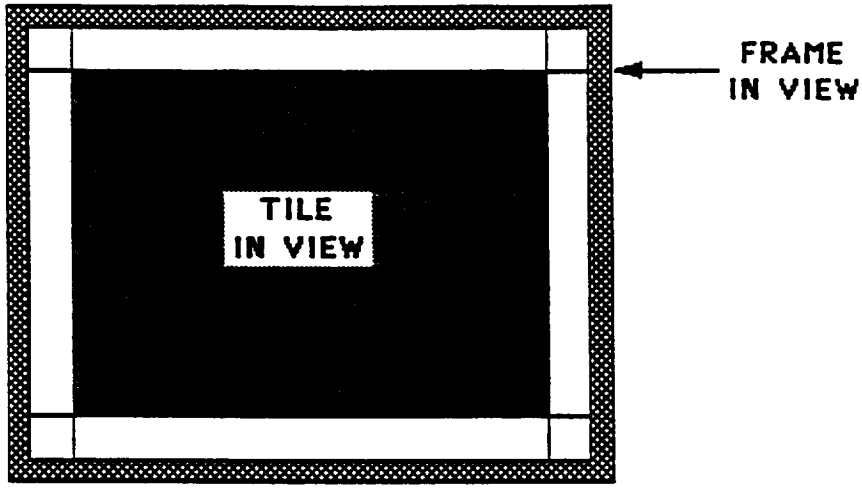

TYPICAL IMAGE OF TILE AND FRAME

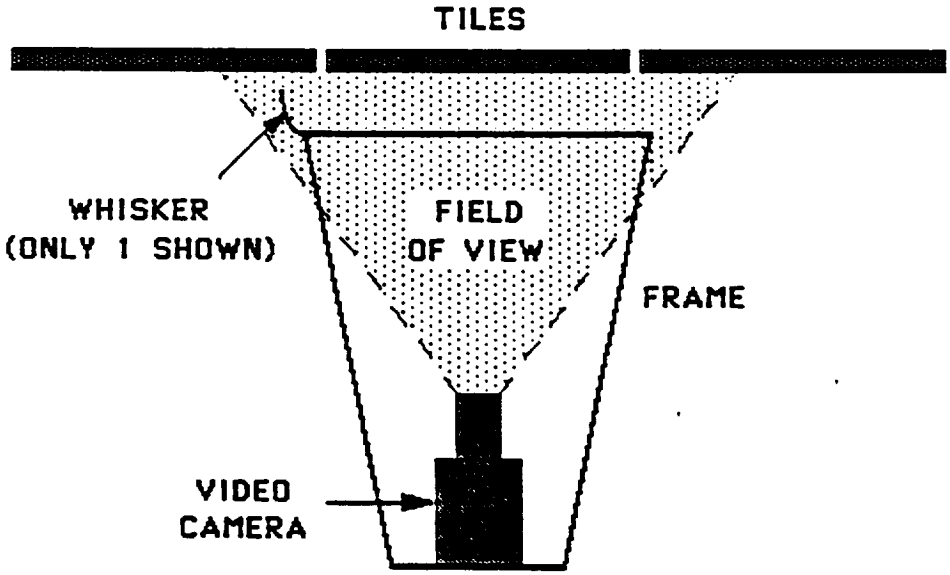

FIGURE 10-8 COLOR CAMERA CONCEPT

sharp focus. That is, safe operation can be ensured by placing the frame a short distance away from the tile surface (the proper distance will depend on the lens focal length). The calibration software will only use the middle portion of the frame region to eliminate edge artifacts due to its being slightly out of focus.

10.1.6.3 Charred Filler-Bar Inspection

This part of the subsurface inspection process can be automated using a specially-designed sensor. However, the design of such a tool is non-trivial because the gaps are very narrow (about 100 mils) and can be several inches deep. Observing the condition of the filler-bars through this thin slit will require special tools. Assuming such a tool is developed, it will be inserted into a gap and moved along the gap to obtain readings. The control system for the insertion and translation will need the following capabilities: (1) compliant fine position and force control to avoid damaging the sides of the tiles, (2) soft mechanical or visual tracking for following the gap between the tiles, (3) sensors for detecting unexpected gap fillers that may obstruct the motion of the tool.

Charring of the filler-bar has two indicators. The primary indication of a filler-bar problem is a change in color -- from the normal red color through dark brown/black, depending on the degree of charring. The degree of charring (and hence the necessary rework) is measured as a change in resiliency and is detected by pressing the filler bar with plastic shims.

A specialized tool for detecting charred filler-bar need only check for a change in color. Fiberoptic techniques, such as those used in borescopes and medical endoscopes, are applicable to the imaging problem. One conceptual design is shown in Figure 10-9. A long flexible fiberoptic lightpipe brings light to the tip of the tool. A second lightpipe brings the reflected light back to the photosensor. The lightpipes have to be extremely thin and need not be spatially coherent (i.e., they do not have to form an image at the sensor). The color can be measured using a beam splitter, color filters, and pin-diodes to measure their relative intensities in two or more spectral bands (e.g., red and green). Experiments may reveal other spectral characteristics of the filler bar. For example, the color change from red to black may be easier to detect at near IR wavelengths. (One would expect that the charred

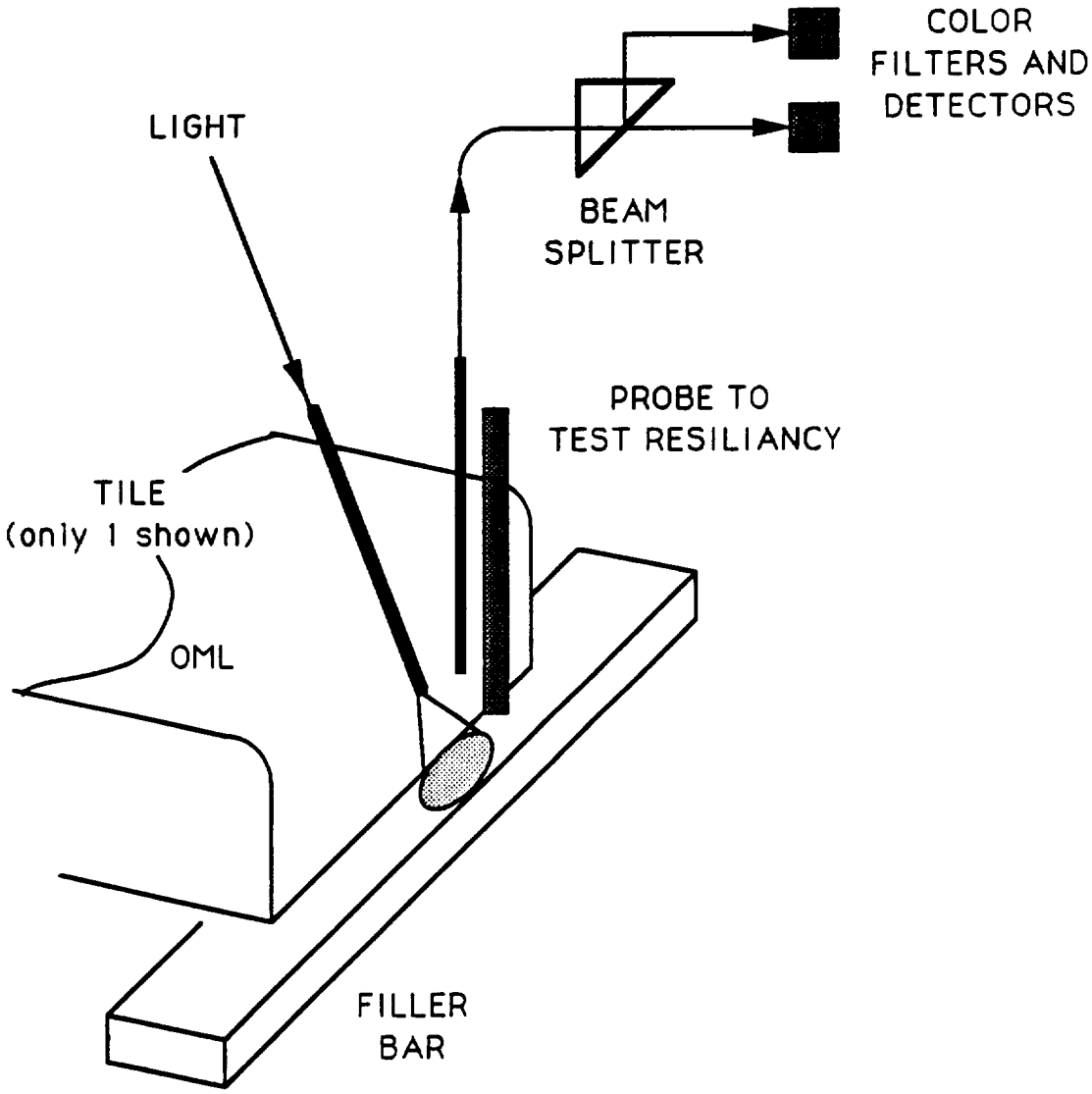
COLOR
FILTERS AND
DETECTORS
LIGHT
BEAM
SPLITTER
PROBE TO
TEST RESILIANCY
TILE
(only 1 shown)
OML
FILLER
BAR

material to be a good absorber of IR.) Further studies and tests are required to refine these concepts.

A tool can also be designed to perform the resiliency test. By measuring the distance travelled by a probe and the resisting forces, filler-bar conditions can be quantified.

10.1.7 Bottomside Pre-OPF Rollout Inspection (V6037)

As described in section 7.3.12, this inspection is a subset of the bottomside V6028 inspection described in Section 10.1.6. As such, the same sensors and techniques will be used.

10.1.8 OML Contour Measurements

By coupling a 3-D topographical sensor with a mobile robotic positioner, these measurements can be made with a high degree of accuracy and repeatability. Data interpretation software can detect and remove data from tile gaps, average the data from the OML of each tile, and combine the data into a common reference frame. Cross-sections of the data can be displayed on a graphical display superimposed on the design shape for easy comparison with deviations to known limits highlighted. If desired, curved surfaces of any type (polynomial, B-spline, etc.) can be fit to the data for estimation of aerodynamic or other properties of the current contour.

10.1.9 Common Sensor Processes

All of the processes under consideration share a common need for accurate positioning of the end effector with respect to a specific group of tiles or single tile. In addition, it may be desirable to periodically verify the actual tile identification during some TPS processes.

10 1.9.1 TPS Location Alignment

Gross positioning of the mobile robotic base and elevator will be accomplished using tile location data and radio based triangulation techniques. However, due to operating tolerances (e.g. tile location stack up, triangulation accuracy, Orbiter parking tolerances) the need to perform position calibrations will be a common requirement to all processes.

Two types of positioner calibration will be required that employ sensors for input: Orbiter OML zone alignment and specific tile alignment.

Orbiter OML Zone Alignment

Orbiter OML zone alignment will be performed after each move of the mobile base, typically before performing work on a large group of tiles. This operation will result in only a reference frame correction and will not be followed by positioner moves. The purpose of this calibration will be to correct the robot arm base reference frame in X, Y, Z, Yaw, Pitch, and Roll, relative to where the tile position data indicates the Orbiter reference frame is.

OML zone alignment will be accomplished by positioning the end effector to a minimum of three widely separated key TPS features. These key features may be tile edges, vertices or centroids. At each key TPS feature, translational and rotational offset deviations to X, Y and Z will be recorded. Translation offsets parallel to the OML surface will typically be measured using a standard 2-D grey scale type camera, while tool to TPS distances will typically require a 3-D topograghic sensor. The 3-D measurements will only require a single stripe of low density to be sufficiently accurate, indicating that speed of execution will not be an issue.

The data acquired will be used to adjust translations and rotations to the robot reference frame, after which, moves to individual tiles within the zone will be sufficiently accurate for most TPS processes.

Specific Tile Alignment

Some TPS processes, (for example tile or gap digitization,) will require that the robot tool center point(TCP) be precisely aligned perpendicular to a tile surface at the tile centroid or gap. This process will be accomplished by first moving to an approach point, believed to be perpendicular to the tile surface, and through the tile centroid. Measurements will be made capturing deviations to perpendicular rotations and actual tool to OML distances using a 3-D topographical sensor. An end effector move will then made to correct tool approach angle and distance. Next, measurements will be made using a 2-D camera to capture

deviations to angular rotation and translations to the appropriate X, Y and/or Z axes. An end effector move will then be made to center the TCP through the tile centroid and rotated the correct orientation for the TPS process to be performed. As with OML zone alignment, tile edges, vertices and surfaces will typically be used to determine angles and distances.

10.1.9.2 Tile ID Verification

During the course of the TPS process study special tests were conducted to determine the operational tolerances for tile locations and Orbiter parking were reasonably accurate (appendix "L"). Detailed studies were also performed (section 10.4.1) of presently available location sensors and it was concluded that positioning a mobile robot end effector to the approach point of a specific tile can be accomplished with certainty without having to read the tile ID to verify it is the correct one. However, it was also considered a desirable feature to be able to determine a tiles unique ID using sensor techniques to make the system more robust and redundant.

Tile ID By Comparison

Each tile has a unique identifying number painted on the emissive coating. However, automatically reading the number to determine which tile is being observed will be somewhat difficult, because many of the characters are partially or totally obscured by outgassing patterns, white circles around RSI injection holes, and previous repairs.

An additional difficulty to reading tile ID's, is that several different type fonts are used on tiles. But since the font used on each tile is (presumably) encoded in the tile's history, the appropriate image processing routines can be used to detect the features characteristic of each font. For example, the characters in several of the fonts consist of straight line segments (block letters), but the characters in other fonts are composed of small dots.

Instead of attempting to read the characters, the system can simply verify that the observed tile is the correct one by comparing its current appearance to its stored image. That is, the system can use the visible portions of the characters to determine if the identification number is consistent with its prior appearance.

It is also worth noting that although the appearance of most tiles seems similar, close examination shows that most tiles have distinctive markings with respect to their neighbors (see Figure 10-10). In the unusual case where the comparison between detected and expected tile numbers is not conclusive, these marking can be used to help determine the tile identity.

Even in a worst-case scenario, where the end-effector is inadvertently positioned on a tile neighboring the desired one, there are relatively few adjacent tiles (usually only 6) and comparison between the the current image and the stored images for all adjacent tiles can find the best match.

10.1.10 Sensor and Tool Summarization

The information presented concerning sensors and tools is only a general overview of the details necessary to specify devices for fabrication of the system. Further details regarding special tests and studies performed, including estimates of sensor resolutions is provided in appendices "H" through "K" of this report.

Conceptual designs for sensors to accomplish the seven TPS processes will include 2-D grey scale vision, high resolution color vision and 3-D topographical sensor, at minimum. Specialized tools will include a modified tile rewaterproofing tool and a filler bar inspection tool. A noncontact tile bond verification sensor is being researched and developed under another program, but is being planned for inclusion in this system design.

To summarize, the application of sensors and tools to perform the selected TPS tasks is achievable, however, additional testing and research will be necessary before final decisions can be made regarding specific sensor requirements.

FIGURE 10-10 PARTIALLY OBSCURED TILE NUMBER

ORIGINAL PAGE
BLACK AND WHITE PHOTOGRAPH

10.2 POSITIONING MECHANISM CONCEPTS

With a general idea of the sensors and tools necessary to perform the TPS processes known, it was necessary to determine how those devices will be positioned to carry out the selected processes. This is the primary function of the positioning mechanism. The secondary function of the positioning mechanism is to provide resources, such as power and communications, to the attached sensors, tools and ancillary devices.

Concepts for several different positioning mechanisms were developed independently by the Study Group participants, and presented at the second meeting. These concepts were surprisingly similar. The solutions tended to address the need for a system with a large work envelope which had minimal impact on existing facilities. It was recognized that such a device will probably require two types of positioning mechanisms, the first capable of large and relatively inaccurate displacements, and the second capable of executing small precise motions for fine alignment. All concepts recognized that a mobile base represents the optimum solution to the coarse positioning problem, and most considered some type of robotic arm as being the preferred solution to the fine alignment problem.

10.2.1 Fixed and Semi-Mobile Concepts

Several positioner concepts that were not fully mobile were considered and abandoned for various reasons. These systems must still perform the basic function of placing the sensors in proximity to the TPS components being processed, but there was some initial feeling that perhaps a fully mobile solution was too complicated and would be an over-kill.

A "garage door" type device was proposed. This concept envisioned positioning sensors around a work stand. This work stand would orient the sensors in such a way that the Orbiter could be towed past them, and the sensors would remotely gather pertinent data. Several factors led to the early demise of this concept. It became apparent that the required sensing technology does not currently exist, and would have to be developed.

Also, this approach requires multiples of the same sensor to accomplish a given task, which based on current prices, would be very expensive. This approach would also require extensive facility modification, and an installation would be required at each facility.

Finally, this concept would be incapable of accomplishing any refurbishment or re-waterproofing, so its utility would be further limited.

Several concepts were considered which required extensive facility modifications. A company was identified which manufactures a planar arm which is mounted on a telescoping elevator. A SCARA type robotic arm is then mounted at the end of the planar arm. This system (Figure 10-11) was originally designed to spray paint airplanes. It has the ability to reach about sixty feet horizontally, and fifty feet vertically. This concept obviously requires extensive facility modification in order to install the elevating mechanism. It was estimated that at least two devices per facility would be required to service the Orbiter. Also, this device is not transportable, so an installation would be required at each facility were TPS processing was to occur.

Several robot manufacturers have suggested mounting their fully articulated arms on a rail mechanism. This idea again suffers from the extensive facility modifications which would be required. Also, obviously such a design would not be transportable. This concept would have an extreme impact on the workplace environment, particularly in the OPF where such a mechanism would have trouble working around the crowded environment.

When compared with these concepts, the Study Group concluded that the mobile robot offered the best solution to the problems presented by automated TPS processing. The remaining concepts presented here represent variations on the fully mobile system.

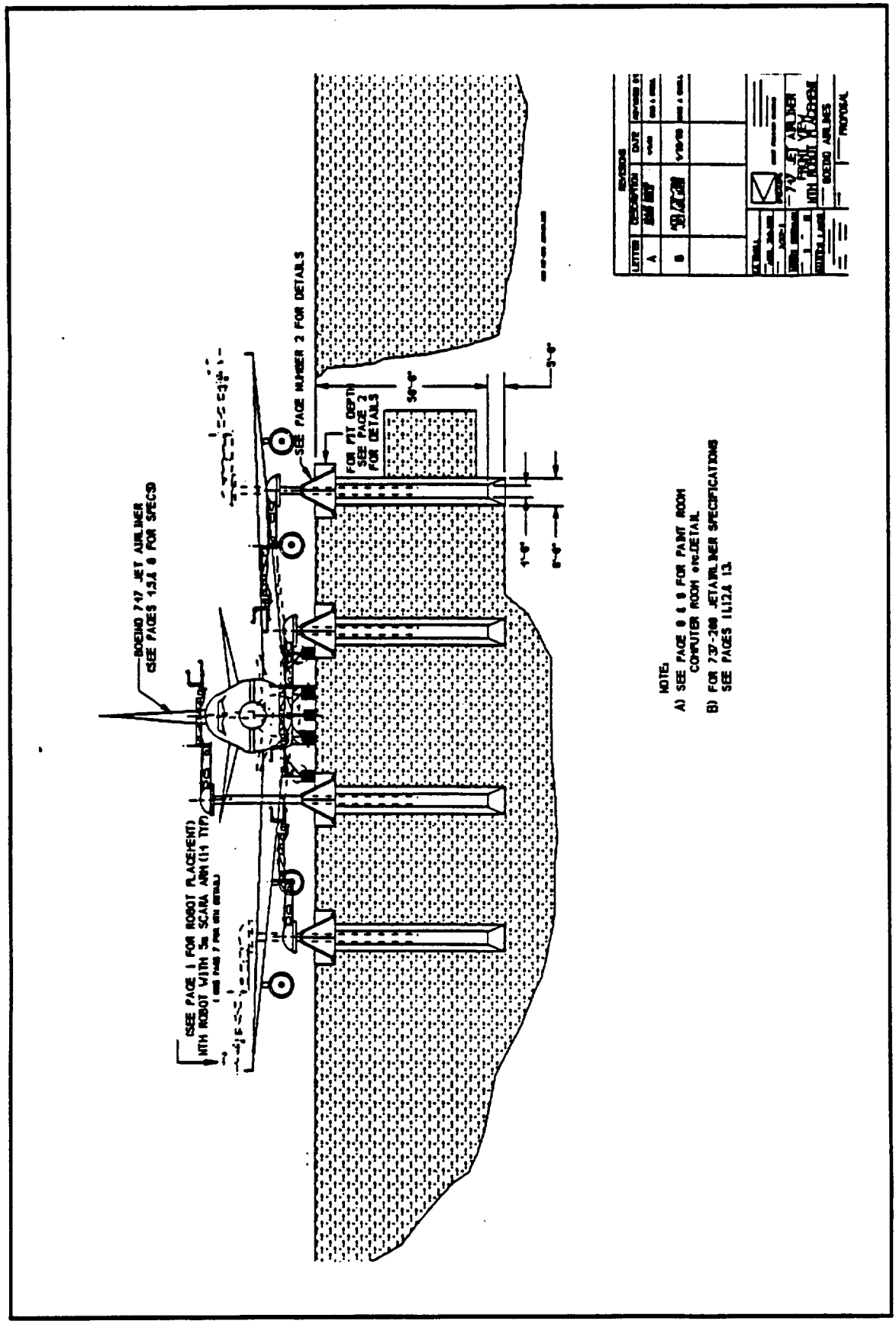

FIGURE 10-11 PLANAR ARM ON TELESCOPING ELEVATOR

10.2.2 Articulated Arm On Vertical Elevator

The first concept is detailed in Figure 10-12. This mechanism consists of a fully articulated arm mounted to a telescoping tube type elevating mechanism which is mounted to a mobile base. This device would be capable of working within a six foot diameter work envelope at an elevation of fourteen feet above the floor. The mobile base gives this system a large horizontal work envelope. The fully articulated arm gives the system the flexibility to position tooling in any orientation in the work envelope. The arm also has the capability of reaching around obstacles. This mechanism could be assembled from commercially available components, and can work autonomously or semi-autonomously. The disadvantages associated with this system are, that it will have, 1) a relatively low payload to weight ratio, 2) relatively high power consumption, and 3) potential vibration problems associated with a heavy arm mounted atop a tall slender tube. It was also recognized that the relatively complex kinematics of the arm may make collision detection difficult.

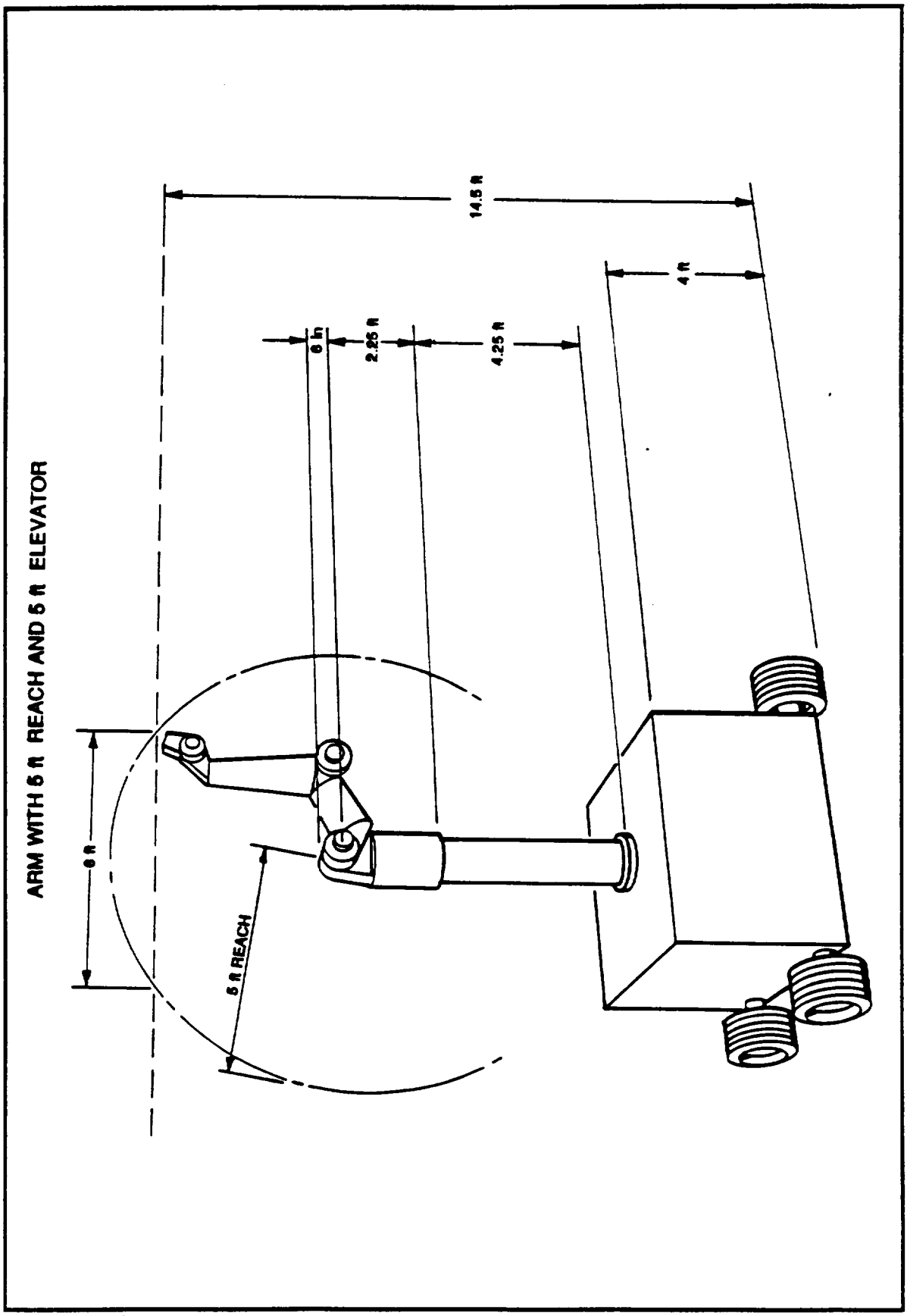

FIGURE 10-12 ARTICULATED ARM ON VERTICAL ELEVATOR

10.2.3 Articulated Arm With No Elevator

A similar concept is shown in Figure 10-13. This concept involves putting a robotic arm of sufficient reach on a mobile base. An arm with a reach of 9.5 feet mounted on a six foot high mobile base would be capable of working in a six foot diameter work envelope 14.5 feet above the ground. Because of the mobile base, this system will also have a large horizontal work area. The multi degree of freedom industrial type robotic arm will be able to position tooling in any orientation within its work envelope. This mechanism can reach around obstructions to complete a task. Using an arm with a long reach could obviate the need for an elevating mechanism. Such a system could be built from commercially available components. This approach suffers from several disadvantages. An arm with the required reach will be very heavy, certainly over 1000 pounds. The power consumption will be relatively high. This type of arm will be less dexterous than the one specified above. The payload to weight ratio for this type of arm is expected to be relatively low. It is also expected that this mechanism will be difficult to package efficiently

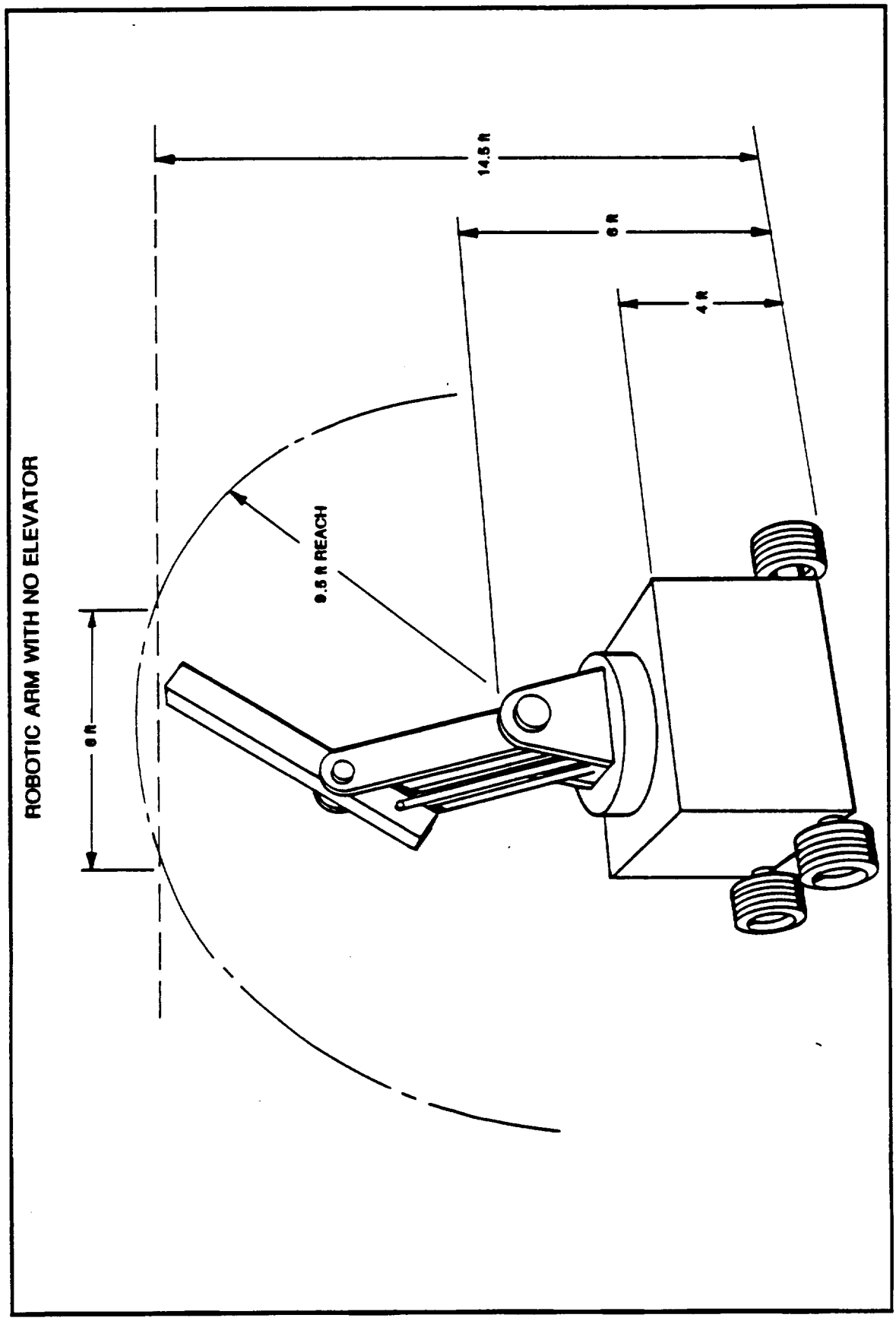

FIGURE 10-13 ARTICULATED ARM WITH NO ELEVATOR

10.2.4 Vertical Extension on X-Y Translation

Figure 10-14 details a Cartesian positioning mechanism. Again, the mobile base provides coarse positioning. This device uses an X-Y table mounted on the base to effect fine motion in these axis. Fine Z motion is effected with the elevating mechanism which consists of a telescoping tube. An alternative elevating mechanism that was presented is a commercial mechanism known as the SpiraLift, which has the feature that it collapses in to a very flat package. Orientation is accomplished with a gimbal-wrist mechanism which holds the end effector. This type of mechanism will have the simplest kinematics, which will make the collision detection problem relatively straight forward. It can have a high payload to weight ratio, and can be compactly packaged. The power consumption is expected to be relatively low. The major shortcomings of this design are that it cannot reach over or around obstacles, so the TPS accessibility will be relatively low. Also, most of the hardware is not be commercially available.

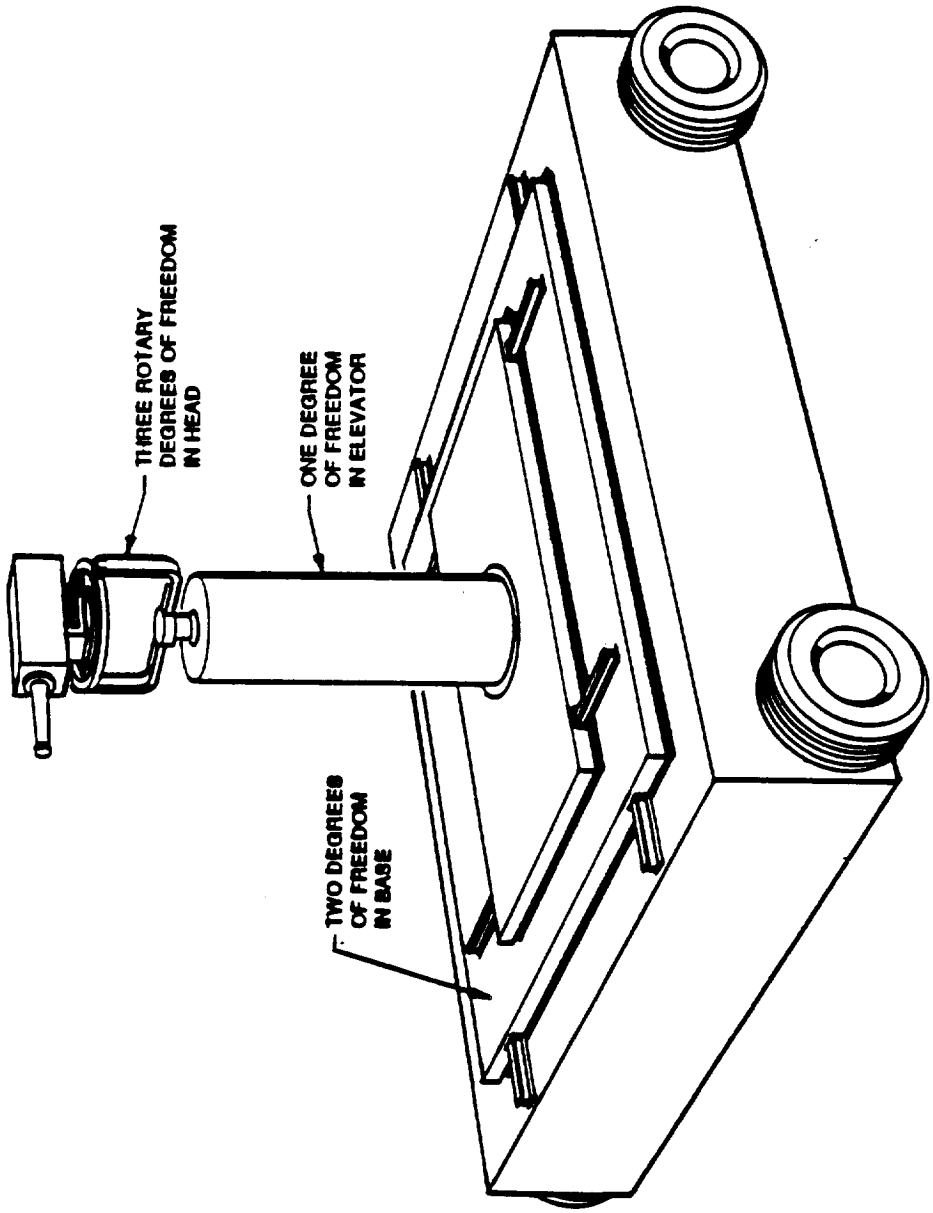

FIGURE 10-14 VERTICAL EXTENSION ON X-Y TABLE

10.2.5 Semi-Autonomous Positioning

The next concept is illustrated in Figure 10-15 This device would operate in a semi-autonomous mode. The main point here is that a human being would be in control of the coarse positioning of the system. This approach could be used with any of the mechanism configurations previously described. This solution to the problem will simplify the system design by obviating the need to solve the navigation problems which will arise when a completely autonomous system is considered. The driver could function as a Quality Control inspector and help insure proper system operation. This type approach would probably be easier to sell due to the human element in the loop. Such a system could be assembled from commercially available components. As the system is not fully automatic, it would be more expensive and slower to operate.

10.2.6 SCARA Arm on Vertical Elevator

Mounting a SCARA arm to a telescoping tube type elevating mechanism, which is in turn mounted to a mobile base, was also considered as a concept. Once again, the mobile base provides a large horizontal envelope, while the elevator provides a large vertical envelope. A SCARA arm with some type of wrist could provide almost the same flexibility as a fully articulated arm; however, it may require less power and be capable of carrying heavier payloads. Figure 4 of Appendix G and Figure 10-19 in this section illustrate this positioning concept.

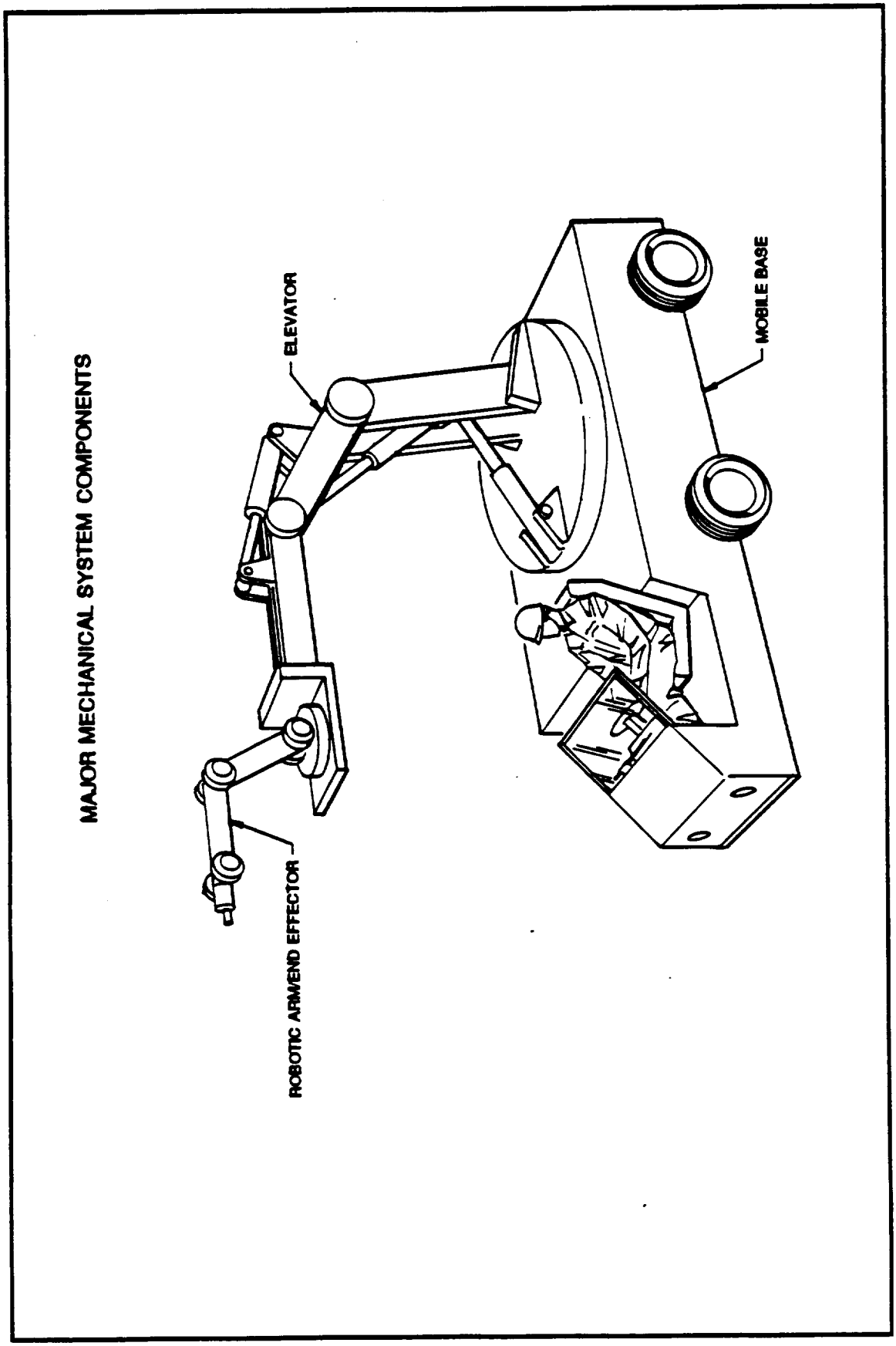

FIGURE 10-15 SEMI-AUTONOMOUS POSITIONING

10.3 MECHANICAL SUB-SYSTEM CONCEPTS

Several themes were apparent in all concepts presented. All teams agreed that a mobile base with some type of elevating mechanism was required. This device will provide relatively crude positioning and another manipulator will be required to provide precise positioning of the end effector (carrying process specific sensors and tools) relative to the Orbiter. This type of system has a very large work envelope. It will not be fixed to a given facility so the mechanism can potentially be transported between locations and do work at more than one facility. The impact on existing facilities can also be minimized. The only facility requirement for this type device is a place to store it when it is not in use. Clearly, the preliminary concepts developed by the Study Group meet the preliminary design requirements.

10.3.1 Mobile Base Concept

In order to function properly, a mobile base must have certain features. Figure 10-16 illustrates a preliminary mobile base concept. The primary function for the mobile base is to provide coarse positioning to the end effector. The secondary function of the base is to store any equipment and utilities which the system requires, such as batteries for electric power, compressed gas, or any process chemicals. The elevator mechanism is mounted to the top of the base. If required, a stabilizing mechanism can be built into the base. This stabilizer levels the system and prevents tipping and base vibration. An operator interface and tool tray is be mounted on the base. Area sensors required for autonomous navigation and position sensors to locate the base in the facility are required. Several electronic units must be packaged within the base, including a robot controller, base drive controller, data acquisition system, and a communication link between the system and the cell controller. In order to simplify the base positioning problem, it is desirable for the drive system to be capable of orthogonal motions while maintaining constant orientation.

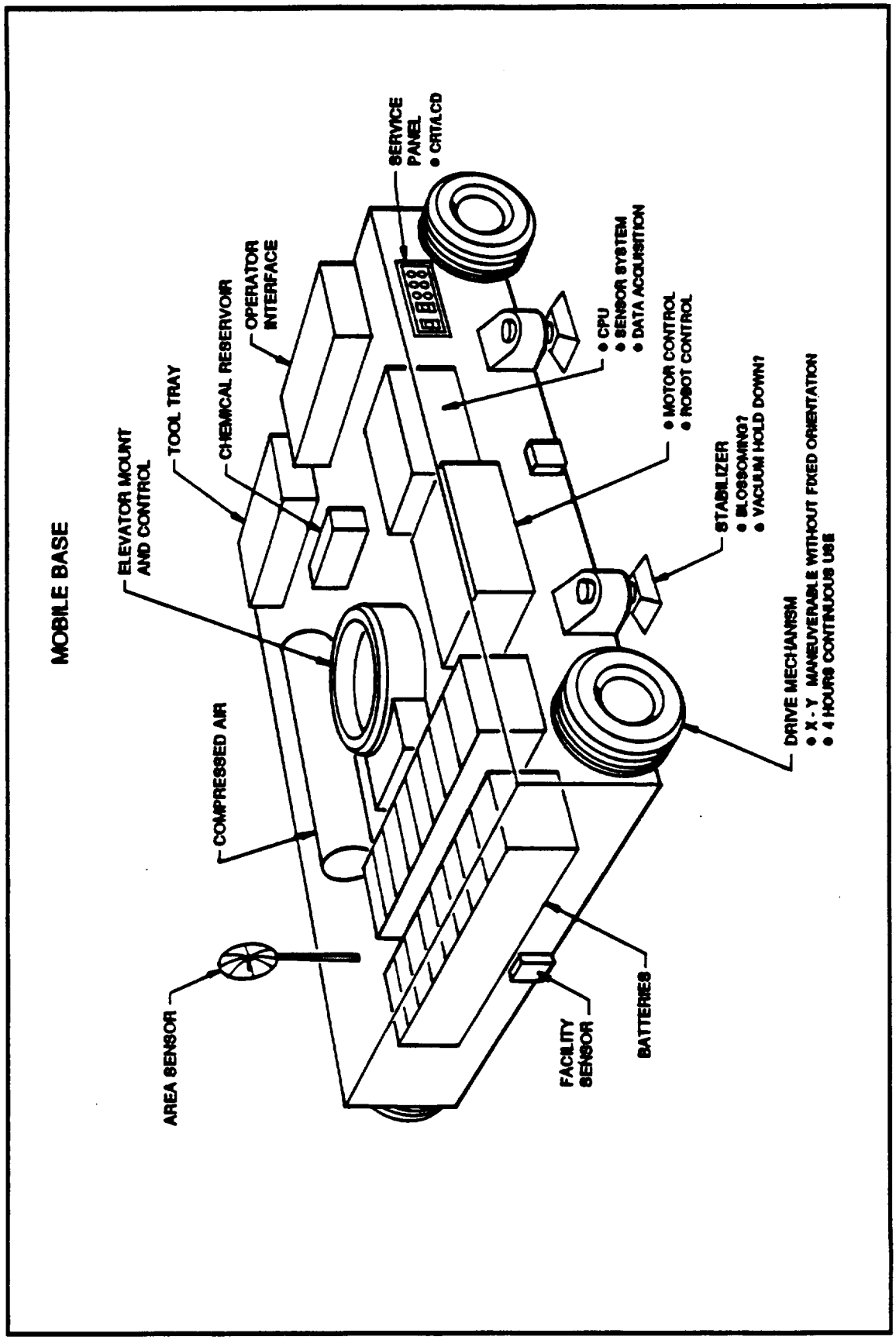

FIGURE 10-16 MOBILE BASE CONCEPT

The Mobile Base can provide varying degrees of mobility depending on wheel steering and drive configurations. Configuration of wheel drive and steer will not only impact mechanical issues but control and software planning issues. Trade-offs of maneuverability, climbing ability, complexity and control all affect final design. Two wheel or Ackerman steering like an automobile is not ideal for constrained workspaces. Lateral movements become impossible without multiple point turns and the additional motions complicate planning and affect long term position reckoning.

Skid-steering, like a tractor or some all-terrain vehicles, uses a great deal of power for tight turning and dead-reckoning of positioning is less accurate due to the high frictions and tire compliance that occurs. Coupled or articulated steering, as in some construction equipment, can provide great maneuverability. If wheels are allowed to turn 90 degrees, then turn and point moves become possible.

A synchronous steer vehicle, where all wheels are steered and driven simultaneously, provides exceptional maneuverability. Some commercial bases provide this capability in three-wheel packages. Advantages are: two motors can steer and drive every wheel simultaneously, good traction, potential for accurate dead-reckoning, and drive sequences for motion become point-and-move. Disadvantages are that the orientation of the body is always the same. An additional turntable motion can provide orientation control but adds complexity.

Other unique types of wheels have been developed that facilitate maneuverability but these exotic solutions have drawbacks in their ability to overcome obstacles. The Swedish Mechanum wheels are one such example of this type. Through the use of passive rollers about the periphery of the wheel and independent wheel control, complete control of forward/backward, side-to-side, and rotational motions in the plane are possible.

Robots have been built which use these wheels for three degree of freedom control in interior spaces. There are other variations on these 'roller-on-roller' wheels, but they are all limited to the radius of the small roller for overcoming obstacles. Two pairs of synchronous wheel sets can be used to provide the maneuverability needed without the complex mechanics joining all wheels. This setup provides the crab or lateral steering capability, as well as, the tight radius articulated steering needed for orientation changes.

10.3.2 Elevator Mechanisms

Because portions of the TPS are located at varying heights above the floor, an elevating mechanism will be a necessity. Telescoping devices are available in a variety of configurations driven by either hydraulic or electric power sources. Generally, these units are capable of extending two to three times the collapsed length. A scissor type jack is also a possibility. Both of these approaches, while feasible, potentially suffer from a packaging problem. In order to work on the Orbiter, it will be necessary to access many confined areas, and it is likely that these bulky elevator solutions will not afford the required combination of strength, rigidity, and compactness. Another option which must be considered is the possibility of designing a stabilizing mechanism which has the capability of lifting the entire mobile base several feet into the air. This concept has been used on a mobile robot at CCAFS which is designed to clean SRB's after each mission.

What is needed is an efficient, small packaged device capable of reaching about 20 feet from a stowed position. A number of devices have been identified, including a package from Spiralift which has the desired properties. This particular package builds a tower by interlacing a steel coil into a rigid support 'H' shaped piece forming a upward spiral. Side-loads are currently an issue with this particular device but its compactness, and compressive strength make it the primary elevating mechanism to be considered at this time.

10.3.3 Fine Positioner

Two types of fine positioner were presented in the concepts detailed above. The most popular idea is some type of robotic arm. The concepts initially presented focus on industrial type 6 DOF arms. SCARA type planer arms have certain advantages which must be considered. The other type of fine positioning mechanism which was considered was an X-Y table mechanism. This type of device is well established commercially, and is capable of very high precision, however, as stated above, these Cartesian mechanisms will have limited accessibility to confined or obstructed areas.

The industrial type six degree of freedom (6 DOF) articulated arm, as shown in Figures 10-12 and 10-13, is in wide use. There are many commercially available arms that are fully

developed and proven reliable in industrial environments. The kinematic and control problems have been solved for these machines. Using a tightly controlled off-the-shelf mechanism such as this would greatly reduce the technological risk associated with this project.

As these units have six degrees of freedom at the end effector, it is very easy to orient tooling and sensors normal to any tile on the Orbiter. This should result in a system which will be operationally efficient due to the relative ease with which difficult to reach areas can be accessed.

This type of arm has several perceived disadvantages. These arms have relatively low payloads for a given system weight. This is largely due to the structure of these arms which requires that all gravity loads must be reacted by motors. This also leads to relatively high power consumption for these arms.

Another issue which arises is the inherent safety of this type of arm, and how well it will tolerate a failure of the servo systems which must react the gravity load. If, for example, the arm were doing TPS processing over a wing, and a servo drive failed, it must be possible to guarantee that the arm would not collapse and damage the Orbiter wing.

The SCARA type arm (Figure 10-11) uses three parallel revolute joints and two rigid links to allow end effector motion in a plane. A prismatic joint at the end of the arm allows the end effector to move normal to the plane of arm motion. There are several SCARA type arms commercially available. As the motion is planar, the bending loads associated with gravity are absorbed by the joints, not the motors. This results in an arm which is more tolerant of drive failures, has a relatively high payload to weight ratio, and has lower power consumption. The major disadvantage of this system is that the end effector is limited to four degrees of freedom unless some type of wrist is installed as part of the end of arm tooling. Even with a wrist, the possible tooling trajectories are limited by the planar arm motion. This might present some operational problems when processing TPS in confined areas.

At the conclusion of the second Study Group meeting there was unanimous agreement that the mechanical system will consist of a mobile base with a robotic arm attached to an elevating mechanism. There was not a clear agreement on the type of robotic arm to be

used. One group preferred the 6 DOF industrial arm, and another preferred the SCARA type arm. It was agreed that this issue would be further analyzed, and then resolved at the third meeting of the Study Group.

In the intervening period, a tile accessibility study was completed (appendix "G"). This study indicated that there is very little difference between the SCARA arm and a fully articulated arm when tile accessibility is considered. In order to reach a group consensus and resolve the fine positioner issue, the merits of each type of actuator were compared in the matrix shown in Table 10-1 The value ranks were assigned with the concurrence of the study members. It can be seen that based on the criteria selected, the SCARA and commercial 6 DOF arm were ranked equally. The Cartesian mechanism was ranked last, and dropped from further consideration. At this point, two other factors were considered: power consumption and payload to weight ratio. On each of these points, the SCARA arm was judged superior. An additional point which was emphasized was that the SCARA will be inherently safer and easier to protect against collisions. Based on these factors, the Study Group agreed that the SCARA type arm was the best candidate for the fine positioning system.

Table 10-1 Concept Evaluation Criteria

Concept Name	Maturity	Complexity	Implement time	Cost	Risk	Safety	Power	Accuracy	Coverage	Overall Score
XYZ @ Base	5.0	8.0	8.0	9.0	8.0	10.0	9.0	9.0	5.0	53.1
SCARA type Arm	7.0	9.0	8.0	9.0	8.0	9.0	10.0	10.0	6.5	58.2
Commercial 6 DOF Arm	10.0	9.0	8.0	10.0	8.0	7.0	6.0	8.0	7.0	55.8

Weighting Factor	Definitions	
0.9	Maturity	technical maturity of concept (10-commercially available, 0-concept)
0.9	Complexity	sophistication of requisite technologies (10-simple, 0-extremely sophisticated)
0.6	Implement time	time to develop qualifiable prototype (10- 1 yr, 8- 1.5 yr, 6- 2 yr, 4- 3 yr, ...)
0.6	Cost	total cost up to qualification (10 - $1.0M, 8 - $1.5M, 6 - $2.0M, ...)
0.6	Risk	confidence of successful prototype development (10 - sure win, 0 - sure failure)
0.7	Safety	fail safe design (10 - inherently fail safe (i.e no additional sensors rq'd), 0 - can't be made fail safe)
0.8	Power	power consumption relative to other concepts(10 lowest power consumption, 1 - highest power cor
0.8	Accuracy	accuracy relative to other concepts (10 most accurate, 1- 10% as accurate as most accurate)
1.0	Coverage	number tiles accessible (10- 100% coverage, 1- 10% coverage)

10.3.4 End Effector Concept

A preliminary concept for end of arm tooling requirements was also presented at the second meeting. This concept is presented in Figure 10-17 Certain end of arm components will be common to all process work, including a video camera, proximity sensors, adapter plates, force torque sensor, and quick change tool exchange system. Other components will depend on the process, including specialized sensors such as a topographic laser and specialized tooling such as a re-waterproofing tool.

The video camera is required for optical inspection and to locate Orbiter features relative to the robot for precision positioning. The proximity sensors will be used to detect impending collisions. The force torque sensor will function both as a collision detection sensor and as a process sensor to measure force applied to the Orbiter during contact operations. The tooling quick change system will enable simplified tool change of specialized tools or sensors. Some of the specialized devices already identified include: a filler bar inspection tool, tile rewaterproofing tool and a noncontact bond verification sensor.

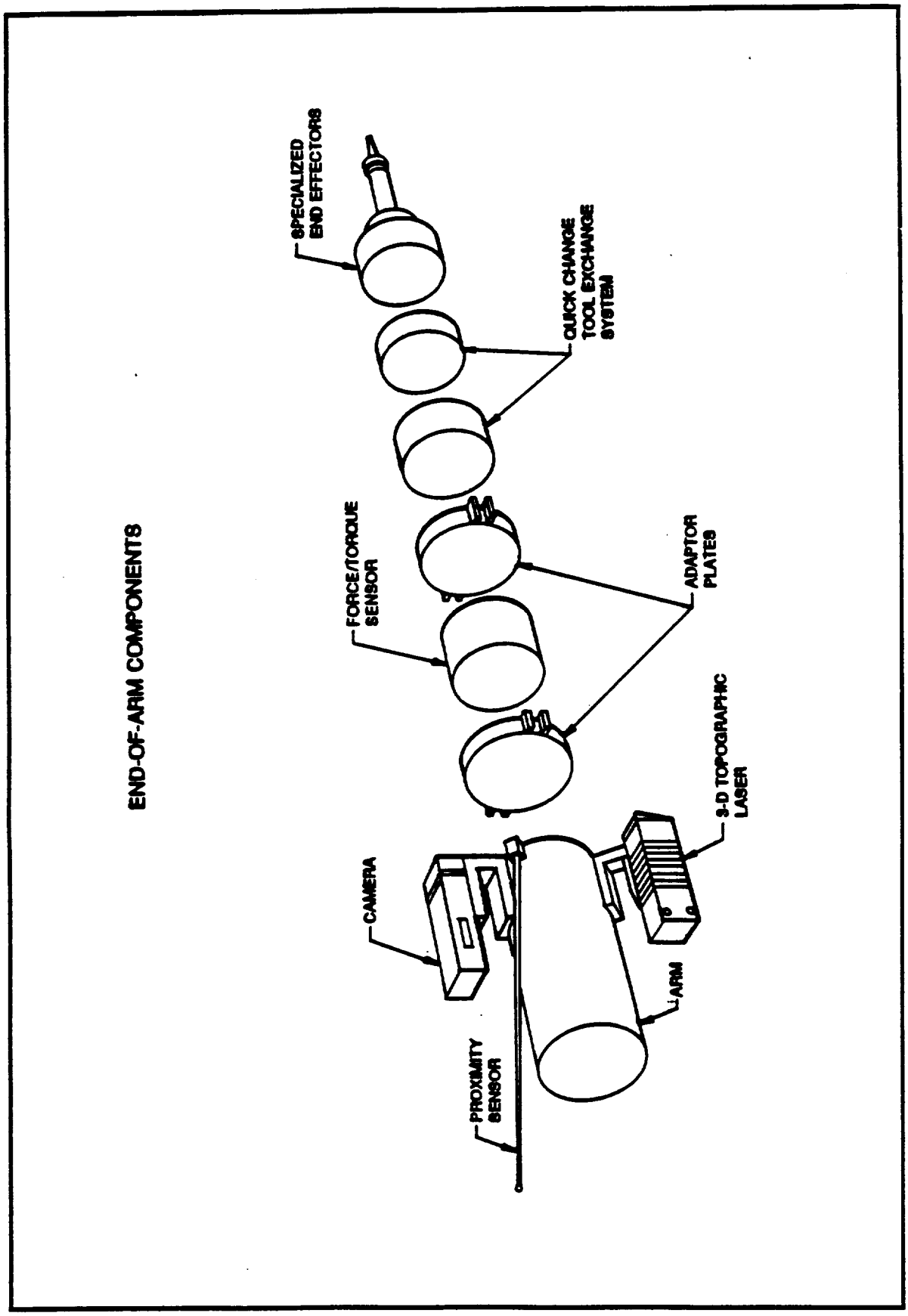

FIGURE 10-17 END OF ARM CONCEPT

10.4 NAVIGATION SENSOR CONCEPTS

The navigational sensor system guides the mobile base to a desired position below the Orbiter to allow the end effector to access the desired TPS sites. To perform this task, it utilizes two basic types of sensors: position sensors to locate the mobile base with respect to the surrounding facility, and wide area sensors to detect obstacles that must be avoided while navigating.

10.4.1 Location Sensors

Location sensors use either passive or active techniques to interact with the environment and determine their position. Several different schemes were analyzed which might be suitable for the proposed tasks, and graded according to the following properties: positional accuracy, cost of use and installation, impact on the facility, and maintenance. Since the system is meant to be flexible in terms of which facility it operates in, installation and maintenance will be critical issues. The following sections detail the techniques, and table 10-2 shows the ratings.

10.4.1.1 Floor Tape, Paint Stripes, and Chemical Fields

The floor of the facility in which the device operates is gridded with patterns made of tape, paint, or chemicals. Sensors on the bottom of the mobile base detect these patterns and can thus determine the position of the base.

Although very cheap and potentially very accurate, these systems have one major draw back. Because they are on the floor, they will tend to be worn off, requiring reapplication. Due to the impact on the facility during their installation and maintenance, these techniques were deemed inappropriate.

DRYDEN MATE/DE-MATE FACILITY MODIFICATION IMPACT ESTIMATION MATRIX

FACILITY MODIFICATION	* COST APPROXIMATION	MAINTENANCE	POSITIONAL ACCURACY
FLOOR TAPE	LOW	HIGH	± 1/4 "
FLOOR PAINT STRIPES	LOW	HIGH	± 1/4 "
RETRO-REFLECTORS	LOW	LOW	± 1/2 "
BEACONS	MED	MED	± 1/2 "
CHEMICAL FIELDS	LOW	HIGH	± 1 "
LASERS	HIGH	LOW	± 1/8 "
EMI, RF, IR	MED HIGH	LOW	± 3 "
COILS IN FLOOR	HIGH	VERY LOW	± 1 "
RE-BAR IN FLOOR	MED	VERY LOW	± 3 "

*** Cost impacts:**
Low : mod < $2k
Medium: $2k < mod < $20k
High: mod > $20k

TABLE 10-2

10.4.1.2 Coils or Rebar In the Floor

In this scheme, wires are buried in to the floor, then electrically excited so they produce small magnetic fields. A magnetic sensor in the mobile base detects these fields, and can determine the position. A variation on this theme uses the existing structural rebar already buried in the concrete, with signals applied to the exposed ends.

The accuracy of these systems is low, and the maintenance is very low once installed, but the impact to the facility, which would include cutting in to the concrete floor, was found to be expensive and excessive.

10.4.1.3 Radio

In these systems, radios at fixed locations in the facility transmit signals which are received on the mobile base and decoded to determine the position. The accuracy of these systems is low, and the radio frequency interference they produce is not suitable for facilities such as the OPF.

10.4.1.4 Beacons

Infrared beacons are fixed to known locations about the facility, each modulated at a different frequency for identification. A rotating scanner on the mobile base detects and identifies these beacons, noting their angular position. By triangulation, the position of the base can be determined.

Beacons were determined to be a good solution for positioning — they are a proven technology and work well. The beacons can be permanently located in out of the way positions in facilities such as the OPF and the MDD, and need only be provided with power. On the runway, they can be temporarily attached to known locations on the Orbiter such as landing gear, or on portable stands, and their exact locations determined with simple surveying equipment.

10.4.1.5 Retro-Reflectors

Retro-reflection systems are conceptually the inverse of the beacon systems: Passive retro-reflectors are attached to the facility, and a low power laser or coherent light source is scanned to pick out these targets. If some knowledge of the base position is already known (from dead reckoning, for example), then the retro-reflectors can be simple corner-cube mirrors. In a more robust system, the reflectors can contain bar code-like interference patterns, so they can be identified when hit.

From the evaluations, beacon and retro-reflective systems were determined to be the most viable location sensors for the task.

10.4.2 Obstacle Detection Sensors

Obstacle detection sensors serve to both determine open space around the base for navigation, and to detect potential collusions to protect the robot, the Orbiter, and the operating environment. There are many different types of obstacle detection sensors currently available, and it is anticipated that more than one type will be used, both for redundancy and to take advantage of their differing capabilities.

Example types are sensors are: micro switches (for last ditch bump detection), sonar range sensors, infrared proximity detectors, scanning laser range finders (LIDAR), and even video cameras.

The choice of specific obstacle detection sensors is dependent on other factors in the overall system design, so they will not be evaluated here. There are enough suitable sensors based on different technologies that they are not felt to pose a problem.

10.5 CONTROL SYSTEM ARCHITECTURE

The Control System for TPS process automation is the glue that ties together all of the resources, mechanisms and devices into one cohesive network, to create a complete automation system. The control system receives all inputs, direct all tasks, stores all results and channels all outputs, to control automated TPS processes. It enables real time query to all ongoing processes and databases, and yet services a distributed and varied environment of facilities, support systems and personnel disciplines.

Recent advances computer hardware, software and communications, are just now making automation using robotics and sensors both affordable and technically feasible. With the onset of reduced instruction set computers (RISC) and advances in silicon wafer fabrication, large scale mainframe computational power is becoming available in small packages for work stations, sensors and robotic control. With the introduction of 4 megabit dynamic rams(DRAMS), large high speed real memory will enable real time vision and solid model processing to become common place. As for large scale extended memory storage, optical disk storage units (WORM, 'write once read many', drives) are now available in small foot prints that exceed 20 gigabytes of storage capacity. Communications are now exceeding 10 megabits/second on simple twisted pair wiring and 50 megabits/second on coaxial cable and fiber optic links. Forth generation languages and databases are enabling software application development in weeks verses the years previously required.

And the end is not in sight. In fact, computer power is expected to quadruple every two years, while cost is expected to remain flat. Automation projects at KSC are poised to take advantage of these technology advancements by placing compute power and responsiveness in places most beneficial to TPS process automation.

The control system concept for TPS process automation is a three level architecture including: Enterprise, Workcell and Robot Control levels.(see figure 10-18) While such a seemingly straight forward and simple architectural approach might appear somewhat trivial, the true value of this control system architecture should not be under estimated.

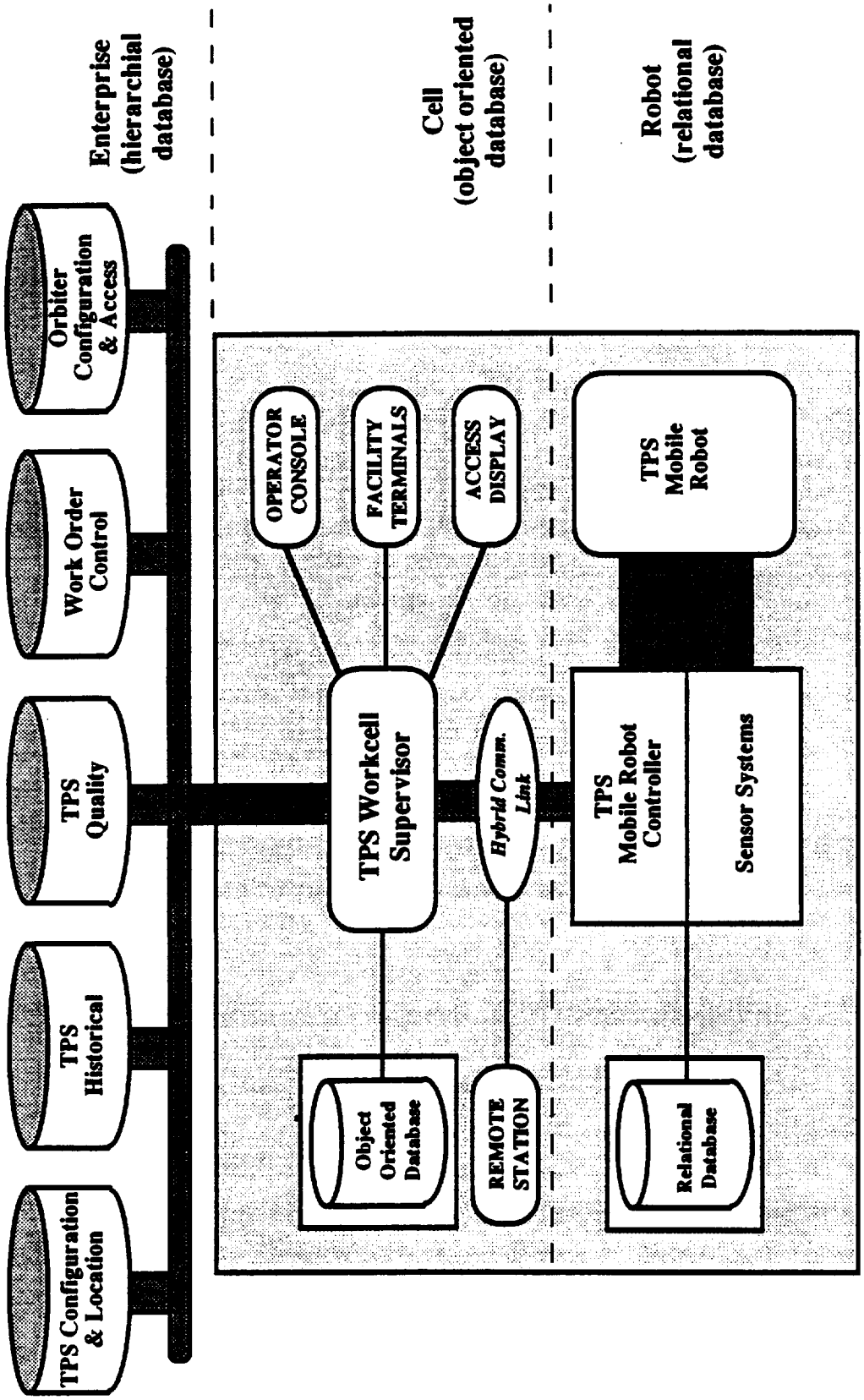

FIGURE 10-18: Automated TPS Control System Architecture

C3

Some of the more important key features of this control system architecture include:

- Single point of contact for all existing *Enterprise* systems with full support of differing protocols

- On line access and query to all levels from *Workcell* level

- Data driven architecture enables flexibility and expandability of autonomous robotic functions

- The large database of the *workcell* controller will contain the TPS data for all Orbiters, all facilities, all processes and all historical data. It will also handle all offline processing(e.g queries, dispositions, menus, etc...)

- The *Robot* controller will carry a only a small active data base for the tasks being performed and be able to concentrate on performing tasks uninterrupted

- Wide area access of *workcell* controller will enable real time communication with *robot* controller in multiple facilities, as well as monitoring all Orbiter access and OML configurations

- *Workcell* controller will be capable of supporting multiple *robot* controllers at a later date, with no impact

- A properly configured *workcell* controller will enable users to view and process anomalies and defects using high resolution 2-D color and 3-D solid models

- Independent design and debug of *workcell*, *robot* and sensor controllers will be made possible, expediting the system development cycle.

The sections that follow discuss these and other key aspects of the control system architecture for automating TPS processes.

10.5.1 Enterprise Systems

Within the context of the automated TPS processing system, *Enterprise* systems are those existing mainframe systems and networks that are currently in use to store and process information for all aspects of Shuttle operations. Although the majority of the processing required to perform TPS tasks autonomously or semi-autonomously will be resident within the TPS Control System proper, it will nevertheless be required to interface with the existing *Enterprise* systems for the transfer of at least six major types of process critical data. These include:

- Orbiter TPS Location and Configuration Data (CAD)
- Orbiter Vehicle Configuration Data
- Work Area Access
- TPS Historical Fabrication Data
- TPS Quality Data
- Work Order Control/Scheduling

A brief description of these six process critical data categories is necessary to understand their importance and how the overall system will function.

Orbiter TPS Location and Configuration Data (CAD)

TPS location information is needed by the mobile robotic system to enable positioning to the individual components(e.g tiles). TPS configuration data is required to know component shape, size, thickness and centriod. Special testing was conducted as part of this study to verify the accuracy and correctness of this data that already exists in the Master Dimension CAD database(appendix "L")

Orbiter Vehicle Configuration Data

Because the OML surfaces of an Orbiter can change, (for example the body flap,) it is necessary to know the exacting position of all movable surfaces prior to performing autonomous work with a robot. Preliminary investigation has revealed that this information

can be extracted in from the Flight Control System. This is a large network of systems comprising many different networks and computers.

Work Area Access

Before performing TPS work in either the present manual or future autonomous mode, it is necessary to know whether access to an Orbiter TPS zone is clear or obstructed. This information is not presently available in real time. As part of this system design, mechanisms (discrete sensors, planning data and mouse driven operator methods), will be developed and used to enable this important information source.

TPS Historical Fabrication Data

Many of TPS processes selected require access to TPS historical fabrication data. Examples of this data include such items as gap filler type, prior defects, prior rework performed, and more... This information is used to make logical decisions regarding, defect determination, method of tile rewaterproofing, method of inspection and acceptance criteria, and more...Preliminary research is showing this data is available and online in the TIPS database.

TPS Quality Data

This information is generated and uploaded for each inspection performed. Analysis of literally thousands of quality records in the existing PRACA system indicates major improvements will be made to the integrity, usefulness and quality of this data.

Work Order Control/Scheduling

Status records and completion maps are generated and uploaded to these enterprise systems during, and at the completion, of each autonomously performed TPS process.

In actual implementation, other types of "high level" information may also be required. The "process critical" data itemized above are first cut estimates of the different types of information needed by a system performing automated TPS processing. Although this information is available from different sources in different forms, the TPS Process Study

revealed that the majority of this data can be accessed electronically through mainframe systems primarily maintained and operated by STS contractors such as Lockheed and Rockwell.

10.5.2 Workcell Supervisor

The Workcell Supervisor is the heart of the Control System. It is in essence the central hub of the Control System such that all systems will be accessible through it. The Workcell Supervisor is responsible for coordinating the planning and scheduling of tasks performed by the Mobile Robot. The Workcell Supervisor functions as the high level user interface providing development, operations and support personnel access to the many databases and applications resident on or accessible through the Workcell Supervisor. The major functions of the Workcell Supervisor are:

- Primary User Interface
- Single Point of Contact Enterprise System Interface
- High Capacity TPS Database Management System
- Realtime Update of Vehicle Configuration and Area Access
- Offline Processing to Support Robot
- Primary Robot Interface

Brief descriptions of these primary workcell functions are as follows:

Primary User Interface

The workcell supervisor is the primary interface to the user community. Strategically located work stations and/or terminals attached to a single host display menus to users to enable: information and status inquiries, requests for robot to perform tasks, online display of Orbiter configuration and area access and graphic display and disposition of TPS anomalies and defects. The user interface will incorporate a mouse, icons, windows and 3-D solid model manipulation capability as appropriate to create friendly interface that is easy to use.

Single Point of Contact Enterprise System Interface

The workcell supervisor includes all physical interfaces necessary to communicate with the enterprise systems. This may include realtime network connections, periodic batch mode transmissions or one time download file transfers as deemed necessary.

High Capacity TPS Database Management System

A high capacity full function database management system and database are an integral part of the workcell controller. Preliminary research has revealed the use of a Object Orientated Database as most appropriate for the workcell controller. Some of the rationalization for this selection include: 1) Database items will be 3-D digitizations, maps, 2-D vision images and CAD models, as well as, normal textual and numerical data stored in conventional databases, 2) Special relationships will exist between data items that cannot be expressed in conventional databases (e.g. relational or hierarchical), 3) Special data relationships enhance data integrity by not allowing deletion of individual data items unless certain criteria are met.(for example closing a work order), 4) Object Orientated databases are very memory efficient, common characteristics or compute processes can be stored once for a large set of like items reducing redundancy and 5) Use of rule based logic for such operations as defect determination, rework disposition, task planning and others, is contingent on establishing special data relationships between data items. The marriage of rule based logic with an object orientated database is a natural one widely practiced for modern system development.

would we be proposing this?

Realtime Update of Vehicle Configuration and Area Access

The workcell supervisor is the primary information center for Vehicle configuration and area access data. The workcell controller uses Orbiter configuration data extracted from the LCC system when vehicles are online during configuration changes, discrete signals and switches indicating the state of service structures and realtime planning data, to enable display of both vehicle configuration and area access.

Offline Processing to Support Robot

The workcell controller performs both pre-processing and post-processing functions for the mobile robotic system. Pre-processing functions include such tasks as queuing incoming work requests, scheduling tasks, creation and linking of task sequences, retrieval and formatting of task specific data subsets and more. Robotic post-processing tasks include: task completion map creation by TPS item, (for example which tiles were rewaterproofed), post processing of digitizations to produce annotated solid models with dimensions, electronic creation of documentation (problem reports, discrepancy reports, etc...), and other tasks as required.

Primary Robot Interface

The workcell controller includes both a high speed and low speed interfaces to the mobile robot. The high speed interface will consist of either a network cable that plugs into a mobile robot base jack when it is in stow, physical transfer of data using optical disks or both. The high speed interface enables the upward or downward transfer of very large files (for example vision images, digitizations, tile locations). A low speed (9600 baud) wireless interface is included (ie. infrared or radio based) to enable realtime communication between the robot and workcell controller. Real time two-way communication includes transmissions such as: vehicle configuration and area access status, task completion status, robot health status, and others.

10.5.3 Robot Controller

The robot controller consists of several computers, controllers and peripheral devices tightly coupled into one sub-system with a primary goal of autonomous TPS task execution. In order to accomplish this goal the robot controller includes the following major functions:

- Process Scheduling
- Data Management
- Navigation and Obstacle Avoidance
- Position Control
- Sensor and Tool Control

- Power and Resource Management
- User interfaces
- Workcell Interfaces

A brief description of these functions follows:

Process Scheduling

The robot controller contains a master controller for supervisory control of all process functions. The main program resident within this master controller is the scheduler. The scheduler is responsible for all process scheduling and control. This includes starting up and shutting down of all other tasks(communications, navigation, resource management, etc...), as well as executing task sequences.

Data Management

The robot controller has a database that is organized in a relational structure. This database includes all information needed to perform a job, as well as, store the results.

Navigation and Obstacle Avoidance

A major function of the robot controller is navigation and obstacle avoidance. Basic area access data will be downloaded to the robot controller at the start of a job and any time obstacles are added to or removed from the area. The robot controller will use this data for first cut path planning. As the robot moves or performs work, objects in the general area will be monitored by area wide sensors in real time. Objects blocking paths will be gone around. Objects entering robot air space will cause the robot to halt and give warning. The robot controller monitors many redundant proximity sensors during excursions and positional moves.

Position Control

The robot controller directs all positional control to include: mobile base steering and drive, elevator, arm and end effector movements.

Sensor and Tool Control

The robot controller is tightly coupled with the tool and sensor controllers. High level commands from the robot controller causes the sensors and tools to perform specialized functions. The integration of both movements and sensor functions by the robot controller results in work being performed.

Power and Resource Management

A background task of the robot controller is to monitor all power and resource requirements. Pressured Nitrogen, self contained battery power, DMES levels and extended memory are the key resources. Early operator alerts will be triggered if these resources get low.

User Interfaces

The robot controller contains two types of user interface to include pendant control and operator display. A hand held pendant provides users the ability to manually drive, steer and control the mobile base. A position adjustable visual display, (with simple selection keys similar to an automatic bank teller,) enables the robot controller to display images, menus, warnings and prompts to the operator.

Workcell Interfaces

Both the high speed and wireless low speed communications of the robot controller complement those discussed for the workcell controller. In addition, the robot controller contains the logic and queuing facilities to store transmissions when not in contact with the workcell controller.

10.5.4. Typical Operating Scenario

A greatly simplified operating scenario for performing an autonomous task will proceed as follows:

1) Operator signs into workcell controller and selects the option to request a TPS process be performed.

2) Operator selects one of seven TPS processes to perform and selects a TPS area, zone or component to perform the process on.

3) Workcell controller post-processes request to create data records and files that will be necessary to perform the process, and stores the data in a format usable by the robot. All data is then posted in a job queue.

4) The highest priority job can then be downloaded to the robot controller in several different ways:

   a) If the robot is online and attached to the high speed communication link, a job can be down loaded immediately to the robot controller.

   b) If the robot is offline, but the high speed link attached, it can be powered up, which will automatically cause it to download a job at the completion of system boot, if one is in the job queue of the workcell controller.

   c) If the robot is offline and the high speed link not attached, power up sequencing can terminate with portions of a job transfer over low speed communications, and step by step directions will be displayed to the operator describing which optical disks to load into which storage units.(This will be the likely case for remote work performed at Dryden or on runways)

5) The robot will be disconnected from its power recharging source, if necessary, and an operator, using a pendant with joy stick, will drive the mobile base to the vicinity of the Orbiter where work is to be performed. The robot will then be put in auto mode.

6) The robot will first determine its location relative to the Orbiter using triangulation, and then make a safe move to a position under the Orbiter where work is to be performed.

7) The robot will then perform a task (or tasks) until completion or interruption by an operator, alternating between positioner moves, sensor commands and inputs and tool commands

8) During task execution, the robot will either transmit task completion status to the workcell controller or spool them for later transfer. Large files, (for example vision images and 3-D digitizations) will always be written to disc for later transfer by: manual disc exchange, high speed transfer or low speed transfer.

9) At the completion of a job, the robot will notify the operator of completion (if required). It will then request transfer of another job , and if one is in queue and sufficient memory is available, load it into memory. To perform another job, the operator may be directed to perform some optical disc exchanges as discussed earlier.

10) At the completion of a shift(operator interrupt), all requested jobs, or an extremely low resource condition, the robot will move to a safe location which will be: 1) original starting location for runways, 2) stowing areas for OPF or Dryden, or 3) an operator designated area under operator pendent control.

As mentioned earlier, this is a greatly simplified operating scenario. Some of the actions that the robot controller is performing simultaneous with process execution include: monitoring all proximity sensors for area and space violations, listening for workcell controller interrupts and incoming messages regarding area access, vehicle configuration and status requests, planning safe paths and much more...

Simultaneously, the workcell controller is performing post and pre-processing tasks for the robot controller, performing transfers to/from the enterprise systems, servicing user inquiries and enabling user interactive tasks such as anomaly and defect dispositioning, monitoring vehicle configuration and area access, discrepancy document generation and more...

The three levels of the control system architecture for TPS process automation are working both independent of one another, yet together, servicing the common goal of autonomous TPS processing. The control system architectural approach for TPS process automation is indeed simple and straight forward, yet significantly useful and powerful.

10.6 CONSOLIDATED SYSTEM CONCEPT

At the conclusion of the third meeting, the Study Group was in agreement on the general parameters for a system to perform automated TPS processing. This agreement was arrived at after several months of study by the different organizations involved. As detailed above, the proposed system consists of process-specific sensors and tools, a mobile robot based positioning system, navigational sensors, and a computer control system.

The mobile robot will consist of an omni-directional mobile base, an elevating mechanism, and a SCARA type arm.(figure 10-19) The configuration of the mobile base and elevating mechanism has not been completely established, but several candidate devices have been identified. To summarize, this type of system has the large work envelope required to perform the assigned tasks. It is transportable which gives the option of performing TPS processing in more than one facility. It will be capable of operating in close proximity to the Orbiter. It will be flexible by enabling many processes to be performed by a generic set of fixed tools, yet enable specialized processing through simple tool change. The system will require minimal facility modification. Clearly, the mechanical configuration proposed satisfies the stated program requirements.

The control system will be designed to address the requirements of automated TPS processing. In order to meet the needs a three level architecture is proposed. Existing NASA databases are an integral part of the system. Interfacing with these systems will facilitate the efficient, orderly transfer of information which is required to insure TPS integrity. The workcell supervisor will function as the primary human interface to the system. It will also handle all communication between enterprise system databases and the mobile robot controller. The mobile robot controller will take commands from the workcell supervisor, and translate this information into actions required to position the system to perform work. This system will also have responsibility for controlling the end of arm tooling to effect the given task. This system will provide many advantages over the current system. Simply by systematically collecting, organizing, and communicating the vast amount of data required to insure TPS integrity, this system will positively and significantly impact Orbiter flow.

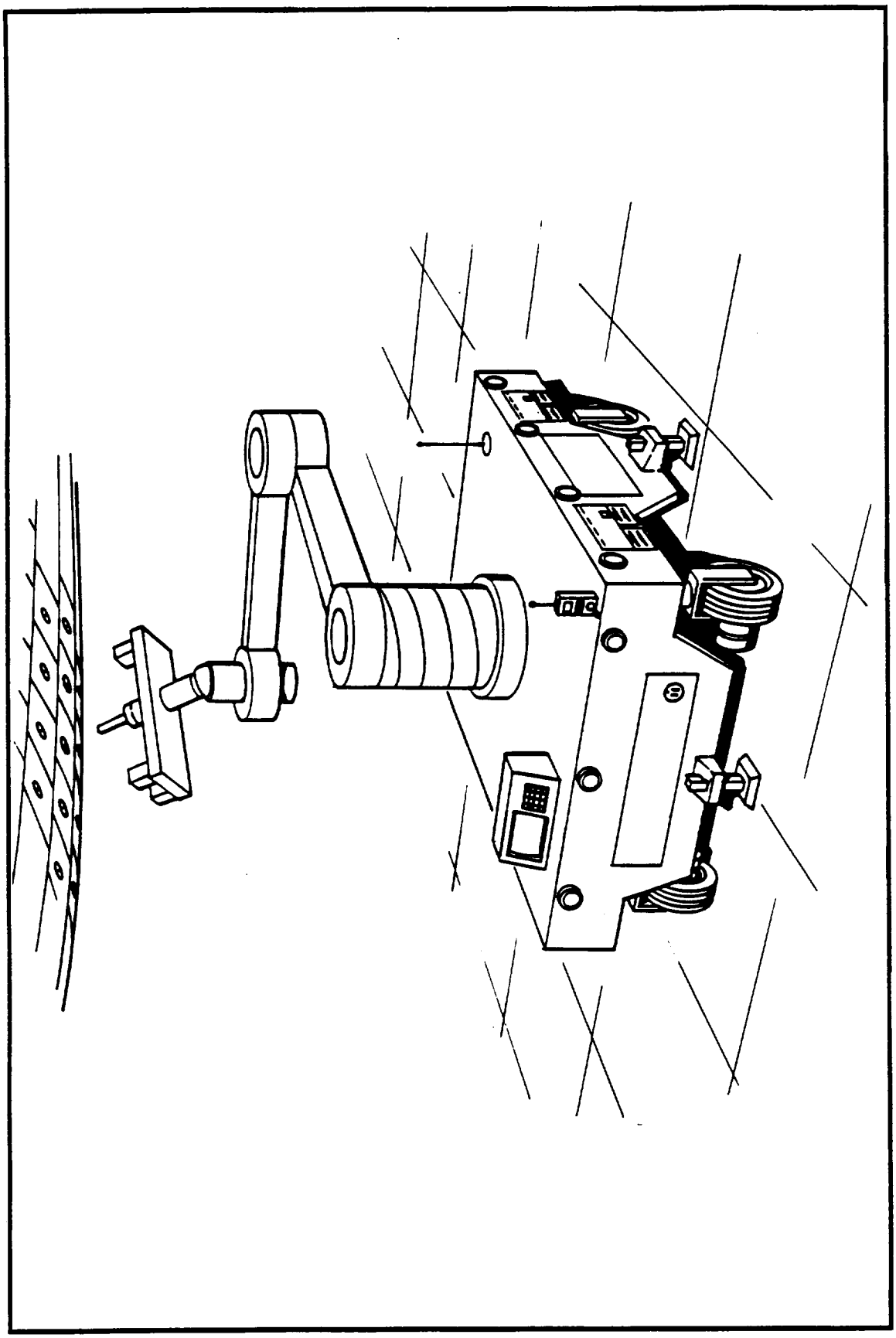

FIGURE 10-19 CONSOLIDATED POSITIONING CONCEPT

11. Preliminary System Design Guide

The TPS Study group, in section 10, has presented a system to perform automated processing of the Orbiter TPS. This system will use a mobile robot as a platform to precisely locate tooling and sensors as required to affect automated TPS processing. The robot and sensors will be controlled by a computer system which will communicate with existing NASA databases.

The automated TPS processing system, $AT(PS)^2$, will be designed to work autonomously, in close proximity of the Orbiter. The design must be flexible so that it is possible to inspect, repair, and maintain the Orbiter TPS automatically. The system will be capable of executing a given task without human intervention, in a variety of environmental conditions. In order to achieve this goal there are a number of requirements that must be satisfied to insure that the proposed device performs in a safe, efficient manner without any adverse impact to existing operations. There are two basic types of requirements that must be satisfied. The first type are those specified by NASA in order to certify the system for use on flight hardware. The second type are those which must be met in order to accomplish the proposed task.

11.1 System Description

The automated TPS processing system will be composed of three major sub systems. These are: 1) the sensor systems, 2) the mechanical positioner system, and 3) the computer control system.(figure 11-1) These will be integrated into a system which is capable of performing TPS processing automatically, with minimal human intervention. The system will be designed to interface with existing NASA databases so that the flow of information as well as the physical process can be highly automated. This highly integrated system will greatly improve operational efficiency resulting in a decrease in the time required to prepare an Orbiter for flight.

The process sensors are all the sensors which are used to inspect the Orbiter, or monitor work in progress. The primary sensors will be 2-D vision and 3-D rangefinding systems. These units will be capable of performing tasks such as detecting the edges of tiles,

inspecting tiles for surface defects, and making precision mesurements. Certain special tooling will be required for some operations such as rewaterproofing and filler-bar inspection. During the rewaterproofing operation, a pressure sensor and flowmeter will be used to monitor the quantity of rewaterproofing fluid injected into a tile. A force torque sensor will be used to precisely monitor and control the contact force.

The mechanical system consists of a mobile base, elevating mechanism, and planar robotic arm. This collection of mechanisms is a mobile robot. The robot will be capable of moving about the floor of a facility and upon reaching the desired point, raising the planar arm to a specified elevation. The mobile base and elevating mechanism will position the robotic arm in space relative to the Orbiter. The robotic arm will precisely position process sensors and tooling relative to the TPS so that work can be performed. This fine alignment will be accomplished by using feedback information from the sensor system. The mobile base will provide for autonomous operation of the system, which means that all required utilities must be carried in the base. These utilities will include at minimum: electric power, pressurized nitrogen, and process chemicals. The robot and base controller electronics, communications hardware, and sensor electronics, will also be carried onboard the base.

Their are three major computer system levels to include: the existing enterprise systems, the cell controller, and the mobile robot controller. The cell controller will be the primary user interface. It will query enterprise system data bases to determine what work must be done, where it is to be done, and when access to the required area is available. With this information, the cell controller will plan a course of action for the mobile robot. This plan will then be downloaded to the mobile robot controller. The robot controller will, at the proper time, position the mobile base at the required location in the facility, raise the elevator to the proper height, and position the robotic arm so that the end of arm tooling can perform the required task.

As currently conceived, there will be two types of navigation sensors, location sensors and obstacle detection sensors. Location sensors will be used to determine the location of the mobile robot relative to the facility which it is operating in. The current strategy is to use a system of fixed transmitters or optical targets from which the location of the mobile robot can be determined by triangulation. Either retroreflectors or light beacon systems will be used to locate the mobile robot relative to the facility.

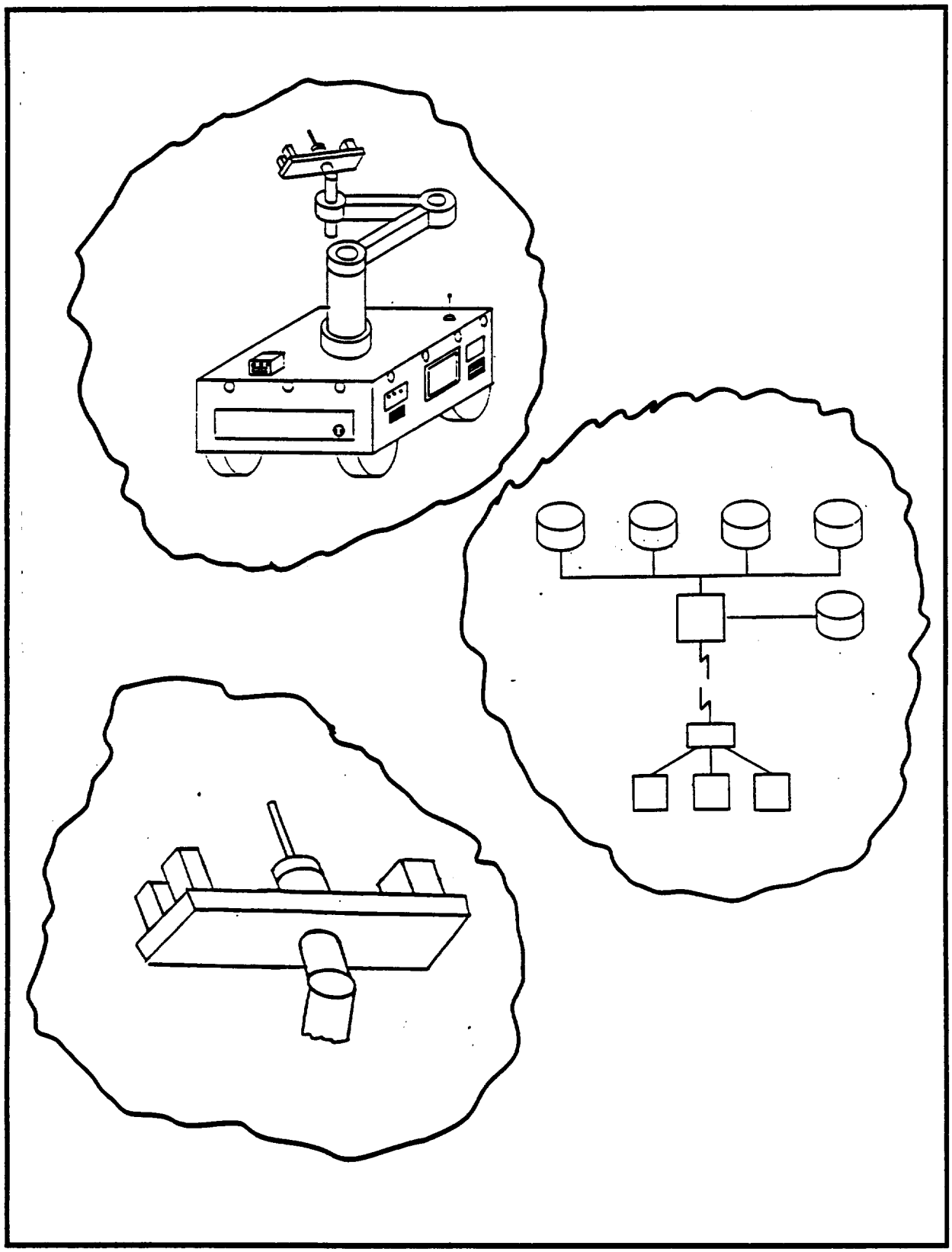

FIGURE 11-1 MAJOR SYSTEM COMPONENTS

Obstacle detection requires sensors which are capable of detecting any fixed or moving object within the work envelope of the robot. There are two types of sensors required, area sensors and proximity sensors. Area sensors provide information to the robot controller about the type of obstacles which are in the robot workspace, so that the object can be avoided . This sensor is typically a relatively long range device. Candidate sensors include ultrasonic rangefinders, or LIDAR.

Proximity sensors are short range sensors. They will act as the final defense against any collision between the robot and its environment. There are many potential proximity sensors that can be used. These include ultrasonic sensors, hall effect sensors, photoelectric sensors, and mechanical limit switches to name a few. In normal operation, the system will not get close enough to an object to activate a proximity sensor. However, they are necessary in order to have a redundant obstacle avoidance system.

11.2 General System Requirements

The Automated TPS Processing System must be certified if it is to work on the Orbiter. This certification process is detailed in NSTS 07700-MVP-10-01 and JSC 20423. A detailed set of production certification requirements must be defined. Johnson Space Center (JSC) has primary responsibility for certification of this system. Kennedy Space Center (KSC) will also have requirements which must be satisfied. The Shuttle Processing Contractor (SPC) will have inputs into the certification process. Boeing Aerospace will have responsibility for overseeing the design and development of a GSE production qualifiable prototype automated TPS Processing System. This responsibility will include writing a detailed design specification and request for proposal. The SPC will have responsibility for organizing the certification process. This certification process includes a review of the following; 1) engineering drawings, 2) acceptance testing, 3) an SR&QA plan, 4) maintenance plan, 5) repair spare parts plan 6), personnel training plan, and 7) facility design data. After all relevant data has been reviewed, it is the responsibility of the JSC Certification Team to authorize system certification.

The following list of governing specifications has been identified as of this date. The system will be required to satisfy relevant parts of these documents. This list is not necessarily complete, and other documents may be identified as the detailed design specification is written.

- NSTS 07700 Vol. X — Space Shuttle ground systems
- NSTS 07700 Vol. XVIII — Computer System and Software
- SW-E-0002 — General Requirements for GSE
- NHB 5300.4 — SR&QA Handbook
- KSC-DE-512-SM GSE — Design Guide
- KSC-STD-118 — Failure Modes and Effects Analysis

There may be other pertinent specifications of the ESC and SPC which have yet to be identified. In order to insure that all requirements of JSC, KSC, and the SPC are satisfied, it is important that these organizations be included in the review process for the system design specification and the resulting request for proposal.

11.2.1 System Features

In order to function in the manner described in section 11.1, the study group has identified several desirable system features. These features are design goals which cannot be quantitatively specified at this time. The detailed design specification will be written so that these features are implemented to the greatest possible extent.

11.2.1.1 Transportable

It has been established that TPS processing will be done in several widely separated facilities. In order to provide maximum economy it is currently considered desirable that the Automated TPS Processing System be transportable by truck or airplane. The limitations that this requirement imposes(size, weight, etc.) on the system have not yet been determined.

11.2.1.2 Stable

Stability refers to the ability to the mechanical system to hold tooling and sensors in a stationary position. Two possible sources of instability must be considered, vibration, and tipping. Requirements for tipping stability are detailed in ANSI/ASME B30.5 section 5-1.1. This specification is intended for application to mobile cranes but should be valid for this system. There are two primary sources of vibration which must be considered, vibration of the mobile robot, and vibration of the Orbiter. Vibration of the mobile robot

can be induced by movement of the planar arm, or by vibration of the floor. Previous investigators have measured vibration of the Orbiter as it sits in the OPF. This vibration was at a frequency of 20 Hertz and a half amplitude of .00025 inches. An unacceptable vibration profile is one which will prevent a tool or sensor from completing its assigned task. Allowable vibration profiles will be determined and included as part of the detailed design specification.

11.2.1.3 Safe and Reliable

The Automated TPS Processing System operates in an environment where a system failure could cause severe problems. The design of the system must be inherently fail safe. General safety requirements are specified in NHB 5300.4.

Hazardproofing could enable the system to perform tasks during vehicle defueling. Hazardproofing requirements are specified in KSC-STD-0002 If the System is to operate within 50 feet of Orbiter purge vents during the period between landing and vehicle safing, then the electrical systems must meet the requirements of NEC Class 1, Division 2, and appropriate group. There are no known hazardproofing requirements for operation in the OPF. The impact of the tile rewaterproofing chemical(DMES) on hazardproofing requirements has not been determined. It should be noted, however, that this substance is highly flammable and certain precautions will most likely be required when handling it. A completely closed loop system for containment of DMES will be a requirement.

11.2.1.4 Environmental

The mobile robot must be capable of working either indoors or outdoors. The locations currently under consideration for automated tile processing are, 1) in the OPF, 2) at the MDM, and 3) on the apron either at Dryden or KSC. There are certain constraints that the facilities will impose on the robot. Each facility will have a set of operational and safety requirements which must be defined.

11.2.1.5 Size

In order to operate in the OPF the size of the mechanical system is limited. The maximum allowable collapsed height is 6 feet. The maximum allowable footprint is six feet by six feet.

11.2.1.6 Work Envelope

The work envelope will determine what percentage of the TPS can be processed. The impact of this was studied, and the results detailed in appendix "G". To summarize, the system should have vertical reach of about twenty feet, and a horizontal reach of about 10 feet. A system with these basic parameters has the potential of processing up to 80% to the Orbiter TPS tiles. To maximize system potential, the robot should be capable of orienting the tool anywhere within a hemisphere whose major axis is perpendicular with respect to the horizontal.

11.3 Sub-system Requirements

The Automated TPS System is composed of three distinct sub-systems. For purposes of discussion, an additional section on navigation and location strategies has been added to this section. These subsystems must include certain features, if the system is to perform as conceptually planned. This section details those features which are deemed necessary for the automated TPS processing system.

11.3.1 Process Sensors and Tools

This section briefly describes the types of sensors and their characteristics. Additional research and testing will be required before specific sensors can be selected for the automated TPS processing system, in particular, to demonstrate that the data acquired from these sensors is adequate for automating the desired tasks.

11.3.1.1 Grey-scale Vision

Grey-scale vision will be used for the following tasks

- Visual anomaly detection (V6028, V6037)
- Finding the tile re-waterproofing hole
- Locating tile edges for fine positioning of the end-effector
- Verification of tile ID

Commercially available cameras are often quite small and light, usually weighing less than 5 pounds (including lens). Some cameras are designed for the imaging head to be separate from the electronic control circuits. For these cameras the weight of the lens and remote head may be less than one pound. Various concepts were presented in Section 10.1.6.1 for obtaining the necessary data resolution.

Using the Steerable High-Resolution concept requires 2 cameras, so their combined weight would be no more than 10 pounds. The Mosaic concept would require 4 or perhaps 9 cameras, resulting in a combined maximum weight of 45 pound for integrated cameras, but only about 10 pounds for cameras with remote heads. The weight of a special swept-line sensor would be higher than for a commercial camera, primarily due because of the prism or mirror. Nevertheless, the sensor would probably weigh no more than about 20 pounds

11.3.1.2 Color Vision

Color vision would be used in the visual anomaly detection tasks (V6028, V6037) to distinguish between normal grey/black and anomalous red outgassing, and for capturing high quality anomaly images for QC review. Detecting discoloration of gap fillers may also be possible. An ideal choice among the commercially available color cameras is one with a remote head (e.g., the Sony DXC 750). The remote head is rather small, (about 3x3x4 inches without the lens), and weighs only 2 pounds. A wide variety of lenses is available for these cameras with weights starting at 2-3 pounds for a simple lens, and up to about 10 pounds for lenses with large apertures, zoom capability, etc.

11.3.1.3 3-D Topographic Sensor

Three-dimensional data may be used to measure the shape and size of an object or cavity for many different tasks to include:

- tile cavity digitization
- gap filler digitization
- tile step and gap
- anomaly length, depth and volume

Many different types of 3-D sensors are available. The leading candidate for the TPS automation system uses the triangulation technique. Triangulation-based sensors can be

generally quite small, (for example the Hymarc sensor weighs only about 5 pounds). Another possible type of 3D sensor uses LIDAR (light radar).

11.3.1.4 Special Tools

Special tools will be required for :

- automatic tile rewaterproofing
- detecting charred filler bar

The current rewaterproofing tool weighs less than 2 pounds and we estimate that the modifications to the tool (Section 10.1.2) would only add a couple of additional pounds, for a total maximum weight of about 5 pounds.

The size and weight of the tool for detecting charred filler bar is difficult to estimate at this early stage, but would probably not exceed 5 pounds, since all components are small and since the only moving part is the optional probe to test resiliency.

11.3.1.5 Comments

The size, weight and power requirements of the various sensors must be consistent with the size of the end-effector, the payload capacity of the positioner, and available power. Although the exact size and weight depends on the individual sensors chosen, most of the sensors are fairly small and light (the main exceptions are the LIDAR-type 3-D topographic sensors). The primary unknown remaining is the amount of illumination required for visual sensing. Fairly low power (< 100 watts) may be sufficient for grey-scale vision. However, color vision typically requires much more power. For example, in a preliminary test, wherein color images were acquired of sections of the bottomside of Discovery, 1300 watts of illumination were used (albeit from a distance of several feet). Further studies and tests will be required to confidently define the illumination power requirements for various sensor concepts and TPS processes.

11.3.2 Mechanical System

The following section outlines the requirements for the mechanical system as currently conceived. It should be emphasized that the robot that is eventually constructed may vary considerably from this proposed preliminary design concept due to design improvement and evolution during the detailed design process.

11.3.2.1 Mobile Base

The mobile base is a highly maneuverable, stable platform designed to position payload such as elevator, effector, and task specific computing, at a specified location under the orbiter and provide electrical power to the payload. It is self contained and carries all necessary power and low level computing for safe payload transportation. Motion of the base will encompass three degrees of freedom, meaning that simultaneous forward/backward, side to side, and rotational motions are possible, greatly facilitating maneuvering in crowded workspaces. Although it will have sensors and control for basic obstacle detection and collision avoidance, primary navigation will provided by the payload. Preliminary design criteria for the mobile base, based on the system requirements, are:

- Self contained – carries all power and low level control necessary for mobility.
- Payload-to be determined
- Simultaneous 3 degree-of-freedom motion.
- Capable of surmounting 2" obstacles, such as cables and hoses.
- Power for 8 hours continuous operation – including payload.
- Power recharge is manually initiated.

Figure 10-19 illustrates a design encompassing these criteria.

11.3.2.1.1 Drive Mechanism

The base rests on four wheel assemblies – a front pair and rear pair that are mechanically independent. Each pair has linked drive and steer, through two motors. This concept is similar to the synchro-drive mechanism, but decoupling the wheel pairs allows tight and zero radius turns to reorient the base, which is not possible with synchro-drive. This also keeps the wheel units modular and less complex independent assemblies.

The wheel assemblies will consist of single off-axis tires, similar to the Denning and Cybermotion robots, to allow the assemblies to be steered with minimal slipping and eliminating the friction 'patch' that a on-axis steering normally implies. The tires will be soft rubber, on the order of 12" in diameter, and the wheel assemblies passively suspended, to provide the compliance necessary to climb over obstacles.

11.3.2.1.2 Power

Power to the base and payload will be provided via sealed lead acid batteries. 300 pounds of batteries will provide a continuous 720 watts for 8 hours. A potential problem with lead acid batteries is hydrogen outgassing. While minimal, it precludes completely sealing the battery compartment, which may be necessary for explosion proof requirements. If this is the case, then it is possible to seal the compartment, and only vent it during recharge, when the base is in a safe position. In the mate-demate facility since it is primarily outside this shouldn't be an issue.

Battery sensors in the base will detect low charge conditions, and report these via the status connection to the payload, which can begin shutdown procedures and relay the message to a human operator. The power subsystem will allow non-battery operation by powering through an umbilical cord in the event of battery depletion before the batteries can be recharged.

The battery recharging system will be an off-board station. The robot will be manually driven to the station, cables attached, then left to recharge. Even with a high current charger, the time to recharge from a drained state will be on the order of 12 hours. The charger will automatically switch from bulk charge to maintenance charge mode, so the robot can be left attached whenever it is not in use. A modular battery pack will eliminate

the recharge time problem and allow near continuous operation for long periods of time. The modular battery pack will be slide mounted for ease of operator pack exchange.

11.3.2.2 Elevator

The elevator will be capable of lifting the planar arm to an elevation of 20 feet above the floor. The extension required to achieve this is dependent on the height of the mobile base. The packaging requirements for the elevator will also be driven by the base design and the size requirement detailed in Section 11.2.1.5. Obviously it is desirable to have a small elevator package when the system is collapsed. The elevator must be stiff enough to precisely position the end effector with minimal vibration. The stiffness requirement will be driven by the configuration of the robotic arm, and the allowable vibration spectra.

11.3.2.3 Fine Positioner

The planar arm consists of two rigid links, the first attached to the top of the elevator via a 360 degree revolute joint, and the second attached to the end of the first via a 180 degree revolute joint. The both joints rotate in the horizontal plane. The two links are each approximately 4 feet long, with the exact lengths set to maximize coverage. Fine motion in the vertical plane will be achieved by a prismatic joint located at the end of the arm. Payload and accuracy requirements will be defined based on further study of process requirements. Current estimates are that the minimum payload should be 40 pounds, and that the system should position to within .005 inches.

11.3.2.4 End Effector

Certain end of arm components will be common to all Automated Processing and certain components will be process specific. Process specific tooling or sensors will be connected to the robotic arm with a quick change tool exchange system. This will allow the TPS Processing System to perform several tasks without human intervention. Typical mission specific tooling includes, the tile rewaterproofing mechanism, filler bar inspection device and the noncontact bond verification sensor. Vision cameras, 3-D topographical sensor, force torque sensor, and proximity sensors are typical devices which will be required for all TPS processing. Devices such as these will be permanently mounted to the robotic arm. It is estimated that the maximum total weight of the end of arm tooling and sensors will not exceed forty pounds for any given task.

The planar arm will provide four degrees of freedom to the end effector. In order to achieve the required six degrees of freedom at the end effector, it will be necessary to mount the end effector on a robotic wrist. This wrist should provide at least 180 degrees of rotary freedom about all axis.

11.3.3 Autonomous Navigation Requirements

The automated TPS processing system will be operating in an autonomous or semi-autonomous mode. There will be a variety of obstacles both fixed, and moveable which the robot will have to detect, and avoid. Some of the moveable objects will include people, and work platforms. Some of the fixed obstacles would include the Orbiter, and structural columns in the workplace. The collision avoidance system must have multiple redundancy particularly when human, and Orbiter safety is involved. The system will be composed of area sensors and proximity sensors. The area sensors will function in a collision avoidance mode, supplying the navigation computer with information about the workplace environment so that an appropriate path can be determined which avoids all obstacles. Proximity sensors will function more to detect impending obstacles and stop the system before an incident can occur.

In order for the mobile robot to successfully navigate in the workplace, it is necessary for the navigation computer to know the position of the robot relative to the Orbiter. There are two distinct problems which have to be solved. When the Orbiter is in the jacked and leveled in the OPF or MDM, its location with respect to the facility is well defined. In this case, locating the mobile robot with respect to the Orbiter can be determined by measuring the location of the robot with respect to the facility. When the Orbiter is on the apron, its orientation is not fixed accurately with respect to any facility. In this case it is necessary to locate the robot directly with respect to the Orbiter. In either case it will be necessary to locate the mobile base with respect to the Orbiter coordinate system within two inches. It is anticipated that some type of optical target or retroreflector system will be suitable for this task. A system such as this can be mounted to hard points on the Orbiter, so that the robot position relative to Orbiter can be determined in the field. In the OPF this type of navigation system can be installed with minimum impact on the facility.

11.3.4. Control System Requirements

Section 10.5 of this report presented the architectual and functional details of the control system for the automated TPS processing system. The purpose of this section is to identify and define, to some extent, the design requirements of the control system. These design requirements include both general requirements and a few specific details regarding the sub-systems where known.

11.3.4.1 Control System General Requirements

The high level goal of the control system is to realize the efficient control of the automated TPS processing system mobile robot for the optimal implementation of automated and semi-automated TPS processing tasks. From a design standpoint, system developers and implementors of the control system will make maximum use of commercially available hardware, software, interfaces, and development tools (CASE) in meeting the capabilities and requirements identified by the TPS study group.

There are of course many other goals of the system, and these are implied in the requirements and system features outlined below. Once again, however, these requirements are only preliminary: *Further study and development activities will be required before firm requirements are specified.* This document merely presents concepts, characteristics and "requirements" that the Study Team has identified as desirable for optimal system implementation and performance.

User Interface:

The control system will provide a standard man-machine interface which has the same characteristics for all user functions of the control system. The use of menus, windows and a mouse driven environment, will be integral to the user interface.

User Adaptability:

The control system will provide the functionality to tailor the user interfaces to accommodate the specific needs of different user classes such as operators, application programmers, subsystem, experiment and system development engineers.

Security:

Operator specific login and passwords will be employed in the control system to regulate security and data access. Several levels of varying privelege will be provided on a need to access or execute basis.

Minimized Environmental Impact:

The control system shall incorporate navigational and operational subsystems that have minimal impact on the Facility (OPF). This criteria will govern the design of the major subsystems in that minimal facility impact is a primary high level requirement.

Reliability and Maintainability:

Redundant, non-stop hardware will be selected to insure reliable control system operation. Error correcting code (ECC) and automatic retry schemes will be integral to all data paths and communication links.

External Interfaces:

The control system will include appropriate communications interfaces to the enterprise systems. Both high speed and wireless low speed communications will be provided to link the workcell and robot controllers.

Languages:

A full function high level language will be selected for system programming that is both transportable and compatable with existing systems.

Operating System:

A mature real time, multi-tasking operating system will be selected for both the workcell and robot controllers that contains a large library of utilities and is back by a large source of application programs, DBMS's and language support.

Data Management:

The workcell controller will employ a full function object orientated data base management system. The robot controller will most likely require a relational data base management system.

Responsiveness:

A complete formal system analysis will be performed to determine CPU compute power, memory requirements and communications speeds of the control system. Prototype control system developement of the workcell controller will occur on upgraded existing hardware. Final system hardware procurement will be delayed until the end of the development cycle to take advantage of the rapidly advancing computer technology market.

11.3.4.2. Sub-system Requirements

The control system architecture will be comprised of three levels to include enterprise, workcell and robot. Figure 11-2 illustrates the control system with enterprise systems that are known at present. This section will briefly address specific requirements of each of the three levels of control.

11.3.4.2.1 Enterprise Systems

Although the majority of processing required to perform TPS tasks autonomously or semi-autonomously will be performed within the TPS Control System proper, it will nevertheless be required to interface with enterprise systems for the transfer and receipt of six major types of process critical data :

Orbiter TPS Location and Configuration Data (CAD)

Before executing a given task, the control system must know the general position, orientation, shape, and dimensions of a TPS component before it can begin automated process execution. The control system will therefore access an enterprise database(s) to obtain database records that contain relevant TPS location and configuration information,

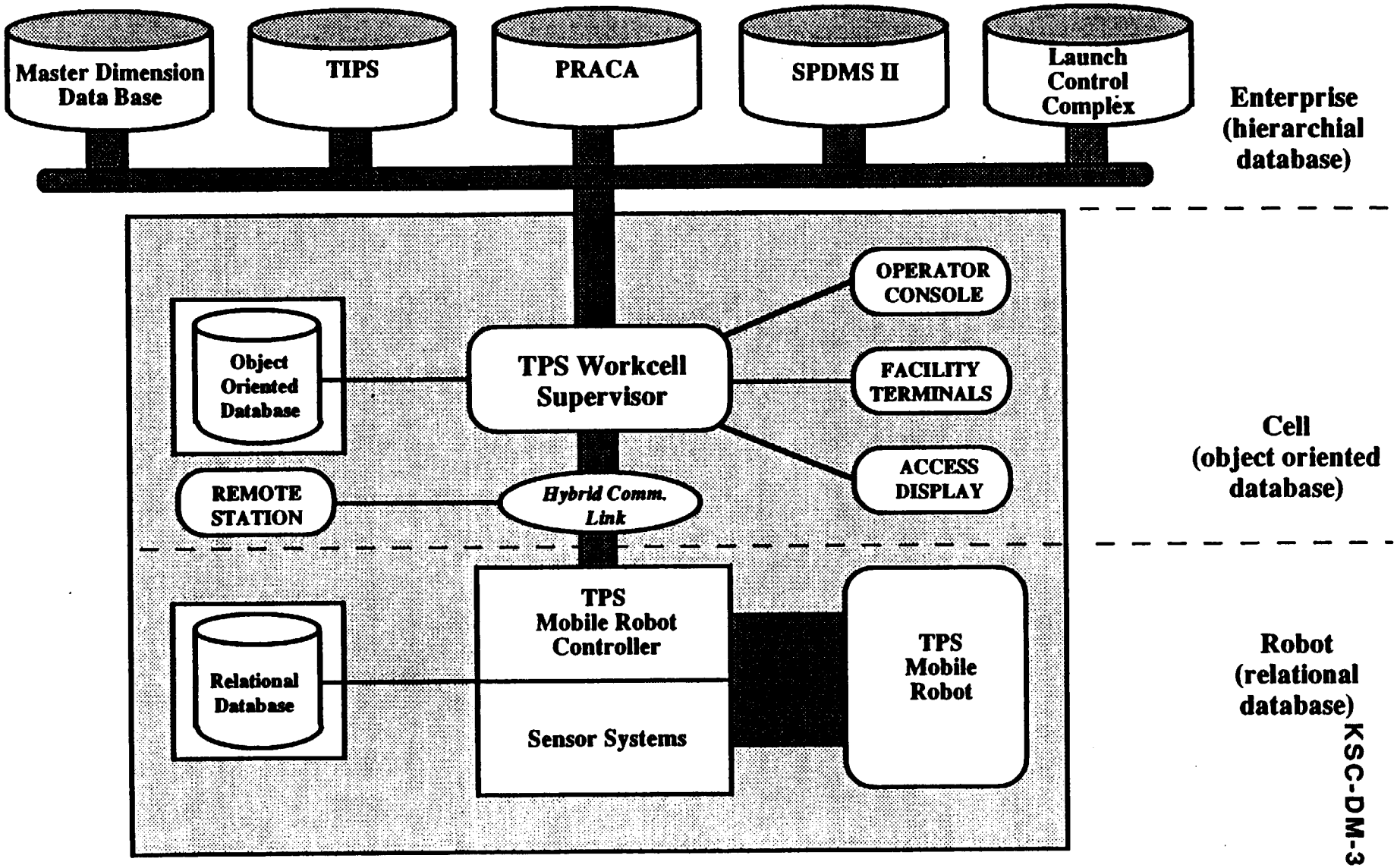

FIGURE 11-2: Automated TPS Control System Architecture

prior to scheduling and executing a given task. This information is resident in the Master Dimension Database resident on Rockwell's Information Management System. The accuracy of this database has been verified to be ± 1.5 inches by Study Team members (see appendix "L"). This data will probably be accessed in a one time memory dump (for each orbiter) and "permanently" integrated into the TPS Processing Systems own (control system) Database Management System.

Orbiter Vehicle Configuration Data

During automated TPS processing, the Mobile Robot will be required to navigate around the Orbiter vehicle to access TPS scheduled for work. Some portions of TPS are located on movable surfaces (control surfaces) on the Orbiter, and the control system must have knowledge of where these surfaces are before work on their TPS can begin. The control system must therefore access the enterprise system that provides real-time data on Orbiter (control surface) configuration. This enterprise access is an "almost real-time" access requirement, in that the control system must have access to Orbiter control surface configuration at all times during task scheduling and task execution. This information is available "real-time" through Flight Control Systems (see figure 11-3), and the surface position corresponds to an analog voltage (real number).

Work Area Access

During typical flow processing, the OPF becomes a dynamic environment where workstands, GSE, and personnel are constantly moving and being moved to different zones of the orbiter for scheduled work. For the control system to perform work, it must have the capability of knowing which areas are accessible at a given time so that it will not interfere with work in progress or pending scheduled flow processing activities. As a baseline approach to this problem, the Study group proposes the implementation of a simple, yet powerful display board that flow processing personnel can use to schedule, monitor, and log shuttle processing activities. This display panel will permit flow processing personnel (and the control system) to selectively view, "real-time", information regarding areas that are accessible for work to avoid conflict with other flow processing groups. This access board system will use human inputs as well as receive information from facility sensors. The control system may also access enterprise databases that contain

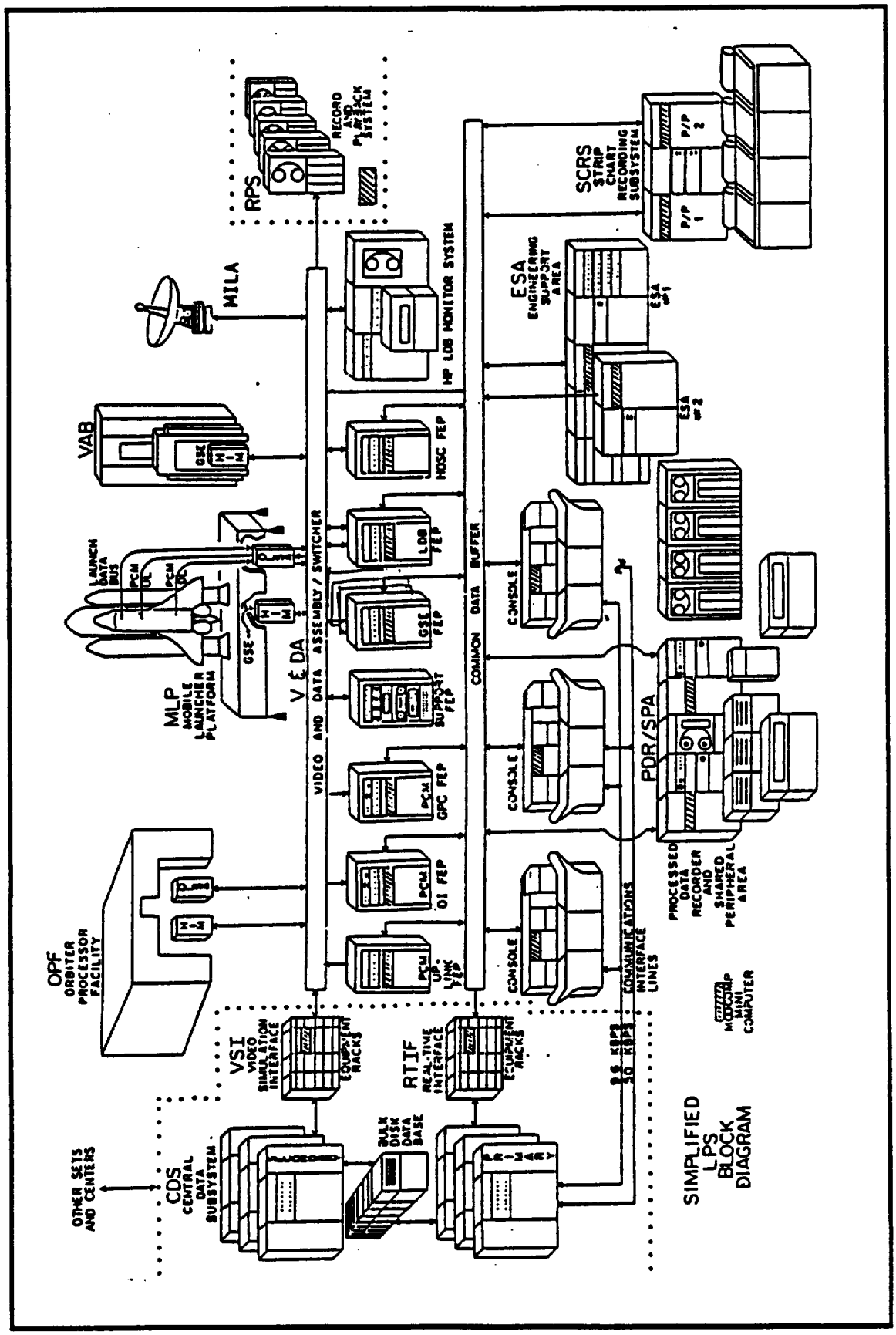

FIGURE 11-3 FLIGHT CONTROL SYSTEMS

flow scheduling information that may be used for long-range planning and scheduling of automated TPS processing activities.

TPS Historical Fabrication Data

When considering the possibilities of extensive automation of TPS processing tasks, TPS historical fabrication data is a key element for advanced system applications. Fabrication data, also resident on enterprise system databases, will facilitate the implementation of a system that will fully automate TPS rework process from anomaly detection to specification of materials, dimensions, location, tools., etc. needed by technicians to repair or replace TPS. Historical TPS data is currently available from the "TIPS" database resident on SPDMS. At the time of implementation, the current database of historical TPS data may be downloaded into the control system as a one time transfer. However, it may prove more feasible to build up the control system internal TPS Historical Fabrication Database over time, only accessing blocks of data from the enterprise system as it is needed. Further study must be undertaken before the optimal method is specified.

TPS Quality Data

Before beginning work on, or inspection of TPS, the control system may require knowledge of previous work performed on a TPS component. During a typical inspection for example, a detected anomaly may or may not in fact be a defect. TPS quality data will reveal whether or not an anomaly that the control system detects should be flagged for re-work or not. If for example, the historical quality data reveals that a detected anomaly is "identical" to a recorded defect, the system would ignore the anomaly and move on to another task. The TPS Quality data will most likely be downloaded from an enterprise database into the Supervisor, where it will be integrated into a flexible, high capacity database management system (e.g., an object-oriented database) containing color photographs, digitized, images, etc. This download will also serve to limit enterprise system communication overhead and transaction processing. The control system must also update the existing enterprise system databases containing TPS Quality data whenever it performs any work on TPS. Currently, the required Quality database information resides on the PRACA system. As in the case of TPS Fabrication data, the current database (at the time of implementation) of Quality TPS data may be downloaded into the control system as a one time transfer. However, it may prove more feasible to build up the control system

internal TPS Quality Database over time, only accessing blocks of data from the enterprise system as it is needed. Further study must be undertaken before the optimal method is specified.

Work Order Control/Scheduling

Work Order Control/Scheduling information is needed for the same reasons the control system needs Work Area Access information. Enterprise databases provide information the control system needs to do long range task planning around Work Order information that defines shuttle processing tasks that the Automated TPS Processing System must work around. Although this type of information is resident on many systems, the Configuration Management Accounting & Verification System is a primary source. The CMAV database resident on the SPDMS system will provide the control system with access to status accounting data for WAD's (Work Authorizing Documents) as it relates to Engineering Instructions and Engineering Orders. The CMAV also provides need dates set by Operations Planning and Control. Although the CMAV has been identified as a primary source for Work Order Control/Scheduling information, further study is required to define the specific information requirements and the proper database access requirements.

11.3.4.2.2 Workcell Supervisor

The functionality of the workcell level of the control system is discussed in detail in section 10.5.2 of this report. The workcell hardware will consist of medium sized minicomputer with a large disk capacity functioning as both a file server and communication hub. It will be a multi-tasking real time system supporting many communication protocols and peripheral devices. Attached to the workcell controller will be engineering work stations and/or high quality graphic terminals that may be link to the controller via terminal servers or direct asynchronous wires. The workcell controller will be linked to other facilities via modems and satellite communications, probably operating at 9600 baud. Specific CPU power, type, memory and speed will be determined at a later date during the detailed design phase of the project.

11.3.4.2.3 Mobile Robot Controller

The functionality of the robot controller is discussed in detail in section 10.5.3 of this report. As mentioned earlier, the robot controller will be comprised of a central or master controller and several subordinate slave controllers for sensors, positioners and tools. Figure 11-4 illustrates the interrelationships of the control mechanisms for tile rewaterproofing. In this case the central controller will be sending commands and data to the rewaterproof gun, vision system, and all of the positioner mechanisms. The central controller for robot control will most likely be a real time, multi-tasking, high powered, RISC based machine. Specific details regarding CPU size, type, memory, and more, will be addressed during detail design.

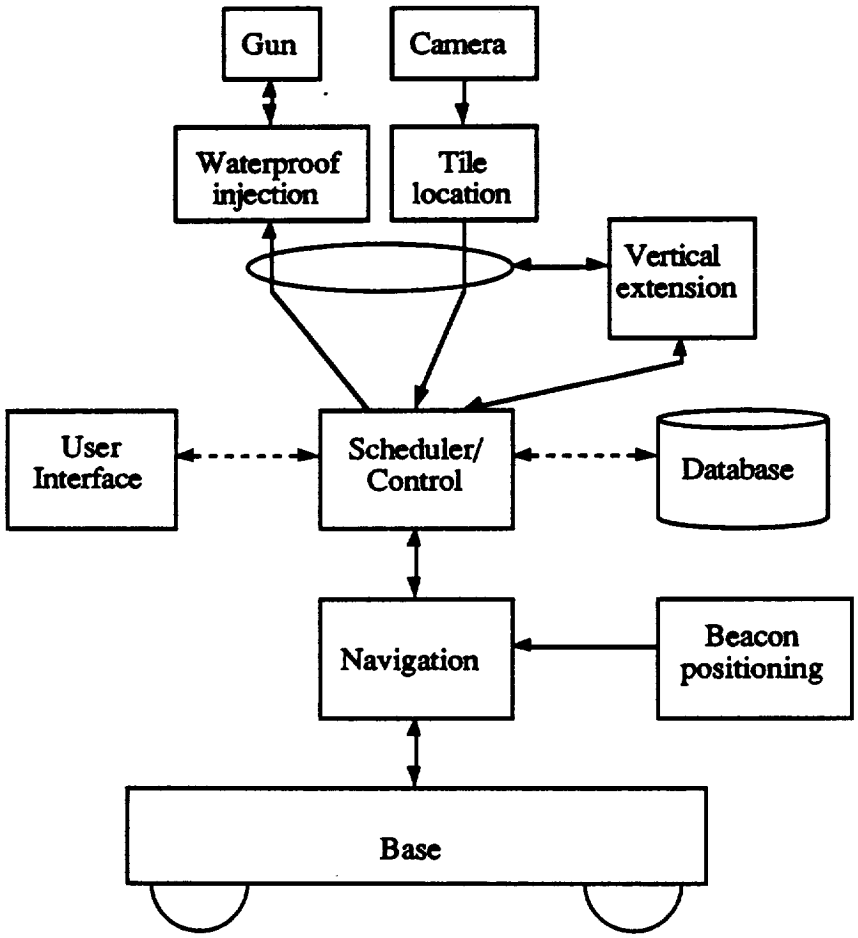

FIGURE 11-4

12.0 Development Plan

This section describes the development plan for an Automated Thermal Protection System (TPS) Processing System. The section is organized as follows. First, a technical summary is provided. This is followed by project justification, goals and objectives, and a development approach. It concludes with a project schedule and resource requirements.

12.1 Technical Summary

An automated TPS processing system will incorporate advanced sensor and robot technology to perform detailed TPS maintenance and inspection tasks during the Space Shuttle repair and refurbishment flow.

The system will function by:

- Accepting user defined data (tasks, regions to work on, etc.)
- Performing tasks in an autonomous interactive fashion
- Automatically uploading the resulting data (inspections, dimensions, pictures, maps, rewaterproof confirmation, etc.) to the appropriate database management systems

The Space Shuttle Program will benefit by reduction of tedious manual tasks, increased safety for TPS personnel, improved data quality and accuracy, potentially reduced flow times, and early defect detection with the potential for automatic disposition and rework authorization. In addition, NASA will benefit from the knowledge and experience gained through automated system development that is applicable to future ground support equipment as well as on-orbit Space Station support equipment.

Frequent demonstrations of significant progress are a key feature of the development plan. One year from the start of work (i.e. from the end of the procurement phase), demonstrations will be made of the primary user interfaces, tile rewaterproofing tooling and vision sensors. The vision sensors will acquire an image of a selected tile and compare the new image to the previous tile appearance, in order to detect tile anomalies. During the second year, demonstrations of the autonomous operation of the positioner (i.e. mobile

base, elevator, SCARA type planar arm) will be made. During the third year, the fully integrated system will be demonstrated to perform precise positioning to tiles with anomaly detection, automated rewaterproofing and control system processing. These demonstrations will occur in both operational and laboratory environments. Early and intermediate demonstrations of techical advancements will be performed in the KSC Robotics Application Development Laboratory(RADL), while, fully integrated system demonstrations will occur in the KSC OPF under an Orbiter.

12.2 JUSTIFICATION

Each of the Space Shuttles has approximately 24,000 thermal protection tiles comprising its aerodynamic surface. The majority of these tiles are located on the bottomside surfaces and on some leading edge surfaces. Since tiles are flight-critical components, they must be carefully inspected after each flight. Damaged or contaminated tiles and other TPS components, must be repaired or replaced. This TPS refurbishment flow cycle is a highly labor-intensive procedure.

At present the entire Shuttle must be visually inspected for Thermal Protection System (TPS) component defects including such things as: charred filler bar, tile surface and/or subsurface contamination, gap filler damage, tile indentations, scratches, cracks, chips and other anomalies. The specific TPS components exhibiting damage require measuring the defects, manually recording the location and detailed defect data (e.g. volume, depth, length, width, color, etc.), and keying in the data into one or more database systems. This data is then reviewed by TPS engineers who determine rework disposition and authorize work orders. Once a work authorization document is processed, components are then repaired and/or replaced.

Another task performed on each tile during each Shuttle flow cycle is rewaterproofing. Tiles are extremely porous and can readily absorb large quantities of water. Therefore, early in the maintenance and refurbishment flow all tiles are internally rewaterproofed by an injection of a toxic and flammable organic chemical, Dimethylethoxysilane (DMES). A vast majority of the rewaterproofing material burns out during the reentry into the earth's atmosphere. Rewaterproofing is necessary to prevent tiles from absorbing water encountered during: ferry flight, accidental exposure to water during maintenance and refurbishment operations, vehicle transfers between facilities, and launch pad operations.

Because the long term effects of exposure to DMES by humans is unknown at this time, certified TPS technicians must wear solvent impermeable gloves, faceshields/goggles, organic vapor respirators, and coveralls and have a medical physical. When performing this critical operation to each tile, a 10 foot clear area is maintained. Exhaustive searches and studies have not yielded a substitute chemical that is compatible with all TPS materials, impervious to reentry burnout, and non-hazardous to humans.

Other manually intensive, dimensionally accurate, and equally critical tasks performed during each Shuttle refurbishment flow include: tile step-and-gap measurements (>500 per flow), tile replacement cavity measurement, gap-filler replacement cavity measurement (>1000 per flow), contour measurements, and more.

By integrating properly selected sensors and tools, tightly coupled with a system architecture that includes a mobile robot positioner; step-and-repeat processes such as tile rewaterproofing and selected tile post-flight inspections could be easily handled. An ideal system architecture consist of: a distributed control system, sensors and tools, and an autonomous positioner comprising a mobile base, elevating mechanism, and modified SCARA type planar arm. This system would be configured such that it could autonomously: 1) perform the tasks (i.e. anomaly detection, tile rewaterproofing), 2) record data (location, detailed defect data, images, maps, etc.), 3) automatically upload the data to appropriate control systems, 4) enable on-line viewing and disposition, and 5) enable automatic/semi-automatic generation of appropriate rework.

Studies conducted of available sensor technologies for this system by LaRC, SRI, CMU, and KSC, (2-D vision, 3-D topographical sensors and special tooling), indicate that the inspection and dimensioning processes encountered during the Shuttle refurbishment flow could be performed in an efficient, accurate, and reliable fashion. Sensors to precisely position and enable robust navigation are also readily available. Special tests conducted during this study have revealed that the tile CAD information needed to drive the mobile positiioner system to precise locations for TPS operations is available, online, and sufficiently accurate. The ability to monitor vehicle configuration (e.g. control surface position) in real time also exists.

Productivity improvements and possible flow time reductions will be achieved with the automated TPS processing system. Conservative estimates indicate that this system will

save 630 manhours per flow on initial installation, and greater than 2500 manhours perflow within one year after installation.

Additional productivity improvements that will be realized as a result of implementing the system to include:

Shop Safety

- significant reduction of human exposure to DMES

Data Integrity

- more accurate maps, images and digitzations of tile anomalies
- more accurate dimensions defining TPS defects
- automatic DR, PR and job completion generation and transmittal

Efficiency

- significantly reduced elapsed flow times for inspections, enabling early work order release
- reduced elapsed flow times for rewaterproofing and dimensioning tasks with electronic transmittal of results
- reduction in the amount of time inspection and rewaterproofing personnel must perform manual overhead work

Quality and Reliability

- increased accuracy of dimensional data for replacement tile and gap filler cavities that would reduce waste and rework
- improved consistency and accuracy of TPS inspections performed
- more consistent and accurate injection of DMES with better accountability
- improved Space Shuttle TPS integrity

Technology gains will also be realized by integrating robotics, sensors, and control system know-how to a challenging "real world" application. Applying these technologies to Space Shuttle TPS processing will demonstrate its applicability to other ground support equipment and future Space Station support equipment. This will be the first mobile robotic system to be used for Orbiter launch processing and much will be learned from its implementation.

12.3 GOALS AND OBJECTIVES

Project Goals

1) Select appropriate tasks that can be implemented with existing technology to:
   a) have a positive impact on Orbiter processing
   b) integrate various proven technologies into an operational robotic system, and
   c) serve as a viable technology demonstration

   These goals were met by the study phase.

2) Design, develop and integrate a production qualifiable mobile robotic system within a three to four year time frame.

3) Provide a framework for effective management of the development process.

4) Define significant milestones that can be used to:
   a) demonstrate visible progress towards the technical objectives,
   b) allow early detection and correction of potential show stoppers, and
   c) enable operational feedback to refine the system design.

5) Expose NASA operations to robotic solutions applied to current processing needs.

6) Define development task elements that can be carried out in parallel, and integration strategies that will allow the outputs of each task element to be merged into the complete system.

Technical Objectives

1) Design, fabricate, and integrate a production qualifiable system for TPS process automation. This system will initially perform TPS inspections and tile rewaterproofing on the bottomside of the Orbiters, and provide on-line query and display capabilities of vehicle configuration and area access.

2) Provide the necessary structure within the robotic system to allow expansion of the system to the following tasks (potentially software only add-ons).

   a) tile step-and-gap measurements
   b) Orbiter outer mold line contour measurement
   c) replacement tile cavity digitization
   d) tile gap cavity digitization (generation of a pattern for gap filler fabrication)
   e) non-contact bond verification (R&D effort currently in work)

12.4 APPROACH

The approach to achieving these goals and objectives is to leverage previously developed and proven technologies throughout system development and to utilize a responsive prototyping methodology [Bares '87], (see figure 12-1 for block diagram). This methodology was chosen so that the 3-4 year development goal can be obtained. The responsive prototyping method forces subsystem development efforts to occur in parallel, while maintaining strong interaction between all aspects of the development process. This interaction is needed for efficient system development and is enabled through detailed functional specifications early in the development stages.

Some of the steps outlined for a responsive prototyping methodology have already been accomplished by performing a comprehensive system study. Specifically, the following steps have been completed.

(1) establishment of a justifiable (i.e. rational) project

(2) development of a technically feasible (i.e. credible) system design concept

(3) development of general system design specifications (i.e. mobile robotic positioner, sensors and tools, and control system architecture)

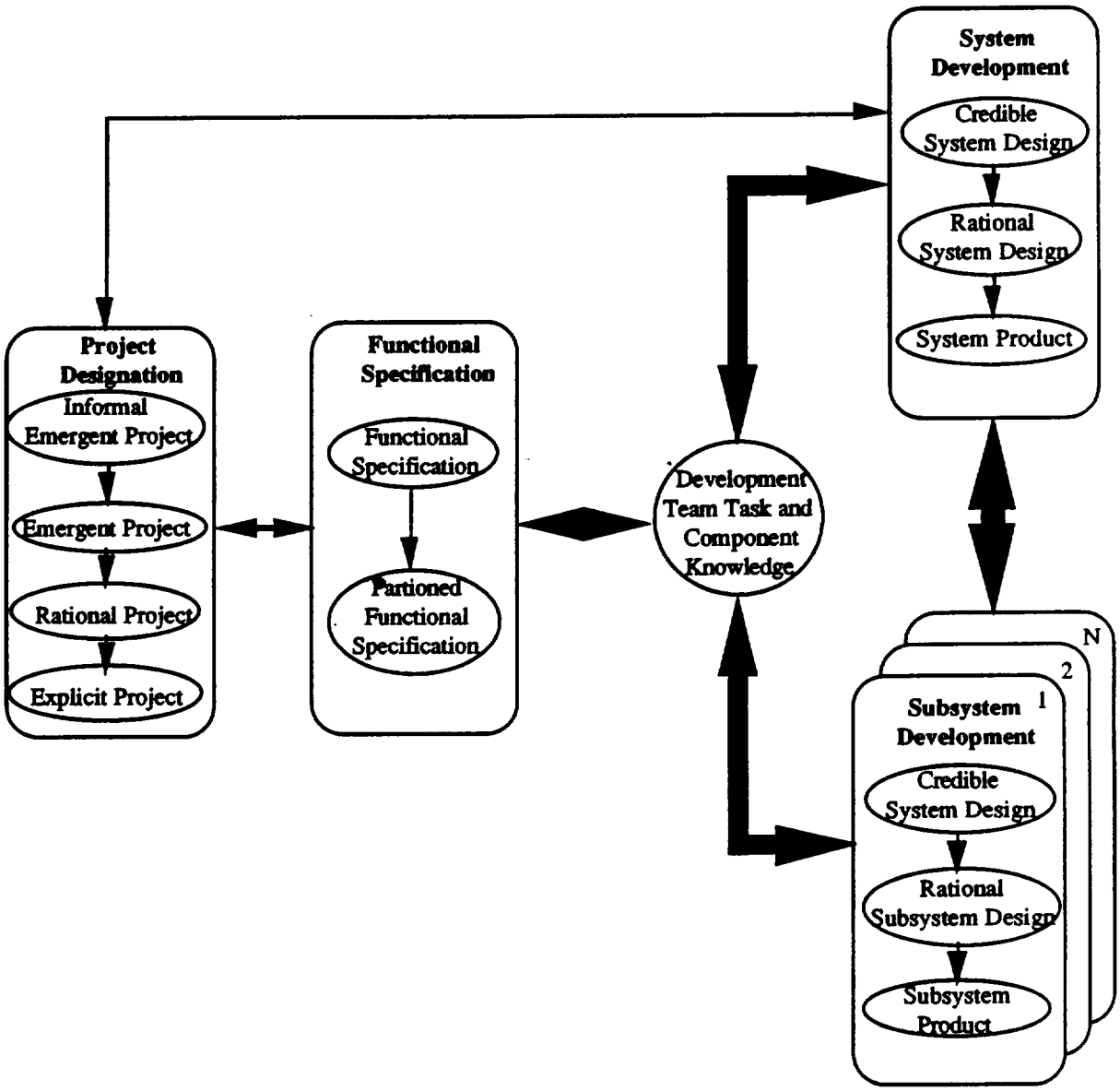

FIGURE 12-1 Responsive Prototyping Methodology

The project is now in a state to begin preparing the detailed functional specifications for system and subsystem designs. The remainder of this section is devoted to describing how the remaining tasks, as outlined in figure 12-1, will be planned and executed.

Robustness and reliability are prime design goals. Expandability and modularity will be key features of the system and subsystem designs. By correct selection of TPS sensor components, it will be possible to expand system capabilities to include tile and gap filler cavity digitization, and other dimensioning tasks, without additional hardware or sensors (i.e. software additions only).

The three major subsystems that comprise the TPS automation system are: 1) mobile positioner, 2) sensors and specialized tools, and 3) supervisory workcell controller. Informal design reviews will be held for major components within each subsystem. For example, formal design reviews will be held for each of the major components comprising the positioner subsystem to include: 1) mobile base, 2) elevating mechanism, 3) end-effector positioning mechanism, and 4) robot controller.

These reviews will help to ensure that a coherent system is efficiently developed by feeding information back to the development team, so that changes and/or revisions can be assessed by all team members and reflected in the design and functional specifications.

Substantive demonstrations are a key element of the development plan. These demonstrations will mark accomplishment of significant milestones, allow operations personnel to gain familiarity with the robotic system and subsystems, and provide an additional means of feedback to the development team on system design criteria. It is important to note that early detection and resolution of potential show stoppers will be effected through consistent application of the previous guidelines.

The following is a listing of significant milestones at both the system and subsystem levels. Each list is ordered sequentially. Subsystem demonstrations will occur in a laboratory environment. Fully integrated system demonstrations will occur both in laboratory and operational envirnments.

System Milestones

1) Functional Specification Development
   - mobile positioner
   - sensors and tools
   - control system
2) System Design Reviews
3) Key Demonstrations

   a) primary control system user interface
      purpose: to demonstrate menu's, windows and 3D capabilites, as well as vehicle configuration and area access displays.
   b) vision sensor and rewaterproof tooling.
      purpose: to demonstrate anomaly detection and automated rewaterproofing tooling
   c) mobile base and location strategy
      purpose: to show how the mobile base operates, locates and positions itself
   d) mobile base with arm
      purpose: to demonstrate navigation and precise positioning capabilites of the postioner subsystem

   e) positioner and rewaterproofing end-effector
      purpose: to show operation of the prototype rewaterproofing system
   f) positioner and anomaly detection sensor
      purpose: to show how the prototype inspection system operates
   g) completely integrated system
      purpose: *to introduce production qualifiable system from user initiated task selection through task completion including all electronic data exchanges, pre- and post-processing, and results.*

Positioner Subsystem Milestones

Major components:

- mobile base
- elevating mechanism
- effector positioner (SCARA type planar arm)
- robot controller

1) Component/Subsystem Design Reviews
2) Mobile base fabrication and testing complete
3) Elevating mechanism fabrication and testing complete
4) Effector positioner (mod. SCARA) fabrication and testing complete
5) Robot controller coding and testing complete
6) Subsystem integration and testing complete

Sensor and Special Tools Subsystem Milestones

Major components:

- 2-D Vision Sensors
- 3-D Topoghaphical Sensors
- Tile Rewaterproofing Tooling

1) Anomalies defined (initial definition)
2) Experimental verification of technologies for anomaly detection
   a) tile edge finding, tile ID verification
   b) image capture, enhancement, storage
3) Anomaly Detection Component/Subsystem Design Reviews
4) Demonstration of image display workstation
5) Definitions of anomalies finalized
6) Algorithms developed for autonomous anomaly detection/classification/disposition and tile location
7) Demonstration of autonomous anomaly detection/classification/ dispositioning and tile location
8) Experimental verification of technologies for rewaterproofing

a) fluid metering and leak detection

c) injection hole location/verification

9) Rewaterproofing injection tool Design Reviews

10) Rewaterproofing injection tool testing (Laboratory)

11) Completion of sensor and special tools subsystem

Supervisory Workcell Controller

Major components:

- Enterprise Interfaces
- Workcell Controller with Display Stations and Peripheral Equipment
- Robot Interfaces

1) Detail System Functional Specification

1) Component/subsystem Design Reviews

2) Demonstration of Area Access/Vehicle Configuration graphical interface

3) Demonstration of real time database generation/modification

4) Demonstration of Enterprise system interfaces

5) Demonstration of wireless communication with mobile robot

6) Subsystem integration complete

12.5 SCHEDULE

Contacts with operations management and end-users will be maintained and exercised extensively throughout the development cycle to ensure that appropriate designs are developed. The first year's efforts will be devoted to the following major tasks.

1) Development of the detailed design specification for the entire TPS processing system. This will include system architecture, connectivity(physical, electrical, software), hardware and software modules, detailed functional requirements, and user interface requirements.

2) Awarding of Contracts for procurement of major subsystems and components.

3) Initiation of all subsystem designs.

The efforts of the first part of the second year will be on completing all subsystem design specifications. The remainder of the year's efforts will be on subsystem fabrication,

software coding, and testing. Some initial stages of system integration will also take place towards the end of this year. During the third year all subsystem development work will be completed and system integration and testing will be initiated. All system integration and testing will be completed by the middle of the fourth year. The development schedule is presented in figure 12-2.

Key milestones/demonstrations of this development schedule are listed below in sequential order by fiscal year.

Fiscal Year 1991

Detailed Functional Specification Complete (2nd Qtr)
Subsystem Contracts Awarded(4th Qtr)
Demonstration of Area Access/Vehicle Configuration Graphical Interface (4th Qtr)

Fiscal Year 1992

Demonstration of Tile ID/Location/Orientation (2nd Qtr)
Design of Positioner Complete (3rd Qtr)
Demonstration of Anomaly Detection(4th Qtr)
Demonstration of Mobile Base and Location Strategy (4th Qtr)

Fiscal Year 1993

Integration of Positioner Complete(1st Qtr)
Demonstration of Rewaterproofing Tool(2nd Qtr)
Demonstration of Positioner and Anomaly Detection(2nd Qtr)
Demonstration of Positioner and Rewaterproofing (4th Qtr)

Fiscal Year 1994

Demonstration of Fully Integrated System (2nd Qtr)

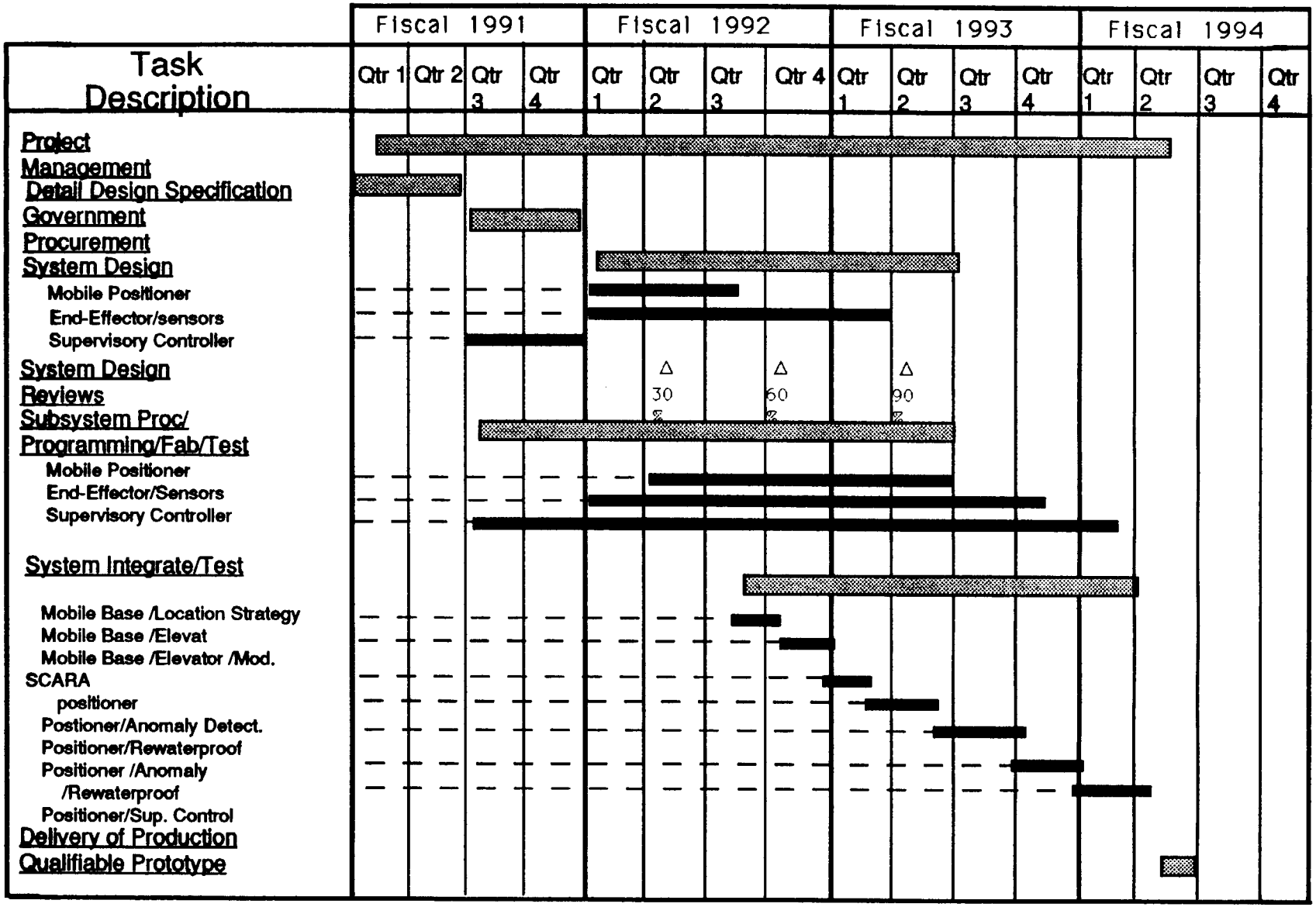

Figure 12.-2
Project Schedule

SECTION 12.6 RESOURCE REQUIREMENTS

This section describes the resource requirements for this project. Table 12-1 provides a breakdown of all resources by fiscal year, manpower, and hardware and software. A summary of the total resource requirements by year and for the entire project is provided at the bottom of table.

Major Tasks	Resource	FY 1991	FY 1992	FY 1993	FY 1994
Project Management	C.S. Manpower	1 manyear	1 manyear	1 manyear	1 manyear
Detail Design Spec	C.S. Manpower	1 manyear			
	Contr. Manpower	4 manyears			
Supervisory Control					
	Contr. Manpower	2 manyear	2 manyears	1 manyear	1 manyear
	H/W & S/W	$100K		$100K	
End-Effectors/ Sensors					
Vision	Hardware	$100K			
3D Range	Hardware		$250K		
Tooling	Hardware	$120K			
	Contr. Manpower	2 manyears	3 manyears		
Mobile Positioner					
Mechanisms					
Base	Hardware	$200K			
Elevator	Hardware		$50K		
Mod. SCARA	Hardware		$200K		
	Contr. Manpower	2 manyears	3 manyears		
Planning/Cont					
	Hardware	$80K			
	Contr. Manpower	2 manyears	2 manyears		
System Integrate/Test					
	Contr. Manpower		1 manyears	2 manyears	2 manyears
TOTALS					
by Fiscal Year	C.S. Manyears	2	1	1	1
	Contr. Manyears	12	10	3	3
(* calculated based	Contr. Costs*	$1.2M	$1.0M	$0.3M	$0.3M
on $100K/manyear)	Hardware & S/W	$0.6M	$0.5M	$0.1M	
	Total $$	$1.8M	$1.5M	$0.4M	$0.3M

for Program	C.S. Manyears	5
	Contr. Manyears	28 @ $100K/year = $2.8M
	Hardware & S/W	.....$1.2M

Total Cost = $4.0M
Program Length = 3.5 years

Table 12-1
Resource Requirements

13.0 CONCLUSIONS

The objectives identified at the beginning of the TPS process automation study have been met in a complete and comprehensive fashion. A thorough research of the current TPS processes, ongoing related studies, materials, facilities, and scheduling issues was conducted and the summarized findings are presented in this report.

Nineteen TPS processes were identified that could be automated using robotic and sensor based technologies, however, seven processes were selected through formal analysis that are both cost justifiable and technically feasible using presently available technology solutions. These seven tasks include: 1) tile cavity digitization, 2) gap filler digitization, 3) OML surface contour measurement, 4) tile step-and-gap measurement, 5) noncontact tile bond verification, 6) bottomside anomaly detection, and 7) bottomside tile rewaterproofing. Bottomside anomaly detection and tile rewaterproofing were selected for the initial production qualifiable prototype system, because they represent the greatest productivity increases and enable full hardware system debug at the earliest possible time in the development cycle. The remaining processes selected for automation are envisioned as software addons only.

The TPS study resulted in a conceptual design for a robotic system capable of positioning sensors and specialized tools to perform the seven processes in an autonomous fashion, with significant manhour savings and improvements to TPS process efficiency, quality and human safety. The overall integrity of the Space Shuttle TPS will be greatly improved by incorporating the proposed system, while the quality of TPS worklife will be enhanced with electronic documentation, reduction in manual tasks, useful systems and tools, and a safer environment.

The consolidated system concept for TPS process automation encompasses three major subsystems to fullfill automation goals to include: 1) Sensors and Tools, 2) Mobile Robot, and 3) Control System. Each of these subsystem designs represents opportunities for demonstating state-of-the-art technology innovations, robust architectures and significant immediate usefulness, with all hooks provided for high reliabilty and future expandability.

The development plan formulated to design, integrate and build the proposed system consists of a responsive prototyping approach that will enable low risk, rapid prototype development, with high visabilty, concise milestones and purposeful design refinement feedback. Decisions regarding the most cost effective methods for fabrication of the major subsystems remains optional, with time planned for additional research, special testing and technology surveys. The goal of a low risk, yet high technology application design, will continue under the proposed development plan.

The TPS process automation study has demonstrated both teamwork and the effective project management of large scale automation system design, as exemplified by this final study report. It has resulted the exchange of many good ideas and concepts between the participants, and at the same time enabled the incorporation of many good suggestions and ideas from the TPS operations group. This report is intended to lay a firm foundation for the development process, as well as, serve a guide for future TPS automation work.

14.0 TPS Study Group

At Kennedy Space Center:

NASA

Eric Rhodes PT-AST
Leon Davis DM-MED-12
Todd Graham DM-MED-12

Boeing Aerospace Operations

William Spiker II (Lead)
Rich Bennett
James Spencer

At Langley Research Center

Jack Pennington
Mike Goode

At the Carnegie Mellon Robotics Institute:

Red Whittaker (Principal Investigator)
Kevin Dowling (Lead)
Mike Blackwell
Nathan Harding
Derek Noonburg
Bob O'Toole
Wayne Wong

At SRI International

Prasanna Mulgaonkar
Cregg Cowan

15.0 Acknowledgements

The TPS study team would like to thank Code "R" for the challenging opportunity to perform this TPS process study and providing the funding resource. The study team would also like to acknowledge their respective management functions for having the patience and endurance to enable performing a thorough and comprehensive process automation study, and providing the time to publish the results with a substantial level of detail. Finally, the study group would like to greatfully thank and acknowledge the TPS operations personnel for taking the time to provide valuable inputs, suggestions, and help, without which, this TPS study would not have been possible. Key contributors include:

TPS Engineering

NASA

Frank Jones, Lenny Duncil, Lyle Davis,
Chuck Tatro, Cedric Hill, Tim Barth

Lockheed

Rick Corsillo, Don Honig, Lauren Litton,
Dave Weber

TPS Process Improvement Group

Scott Study, Ken Wagy, Cindy Mollakarimi,
Danniele Schnitzius, Mark Yvanovich

TPS Flow Management

NASA

Cindy Lodge

Lockheed

Bud Miller, Gaver Powers, ...

TPS Quality

Z.P. Shaw Jr., Vicky Lorick,Daurena Harrison,
Wayne Haubert

TPs Training

Rick Banks, Kevin Harrington

EG&G survey crew

Don Lanthorne, Dave Kugelmann

Rockwell

Roberta Morgan, Howard Massey

University of Central Florida

Dr. Yasser Hosni

16.0 Glossary

ARRAY

A GROUP OF INDIVIDUAL TILES HELD IN A FIXTURE AND BONDED TO THE SUBSTRATE IN ONE OPERATION.

ARRAY MYLAR

A MASTER TEMPLATE USED TO LOCATE THE INDIVIDUAL AT VARIOUS PERIPHERAL AREAS OF THE ARRAY DURING THE INITIAL BONDING OPERATION SO THAT THEY CAN BE REMOVED OT MAKE ROOM FROM THE FRAME OF THE MULTI-PURPOSE SUB-INSTALLATION TOOL WHEN AN ADJACENT ARRAY IS BEING BONDED. THESE REMOVED TILE ARE THEN SUBSEQUENTLY BONDED (BACK FILLED) INTO THE OPEN CAVITIES BETWEEN THE BONDED ARRAYS.

CATALYST

AN AGENT ADDED TO RTV BASE WHICH ACCELERATES POLYMERIZATION.

CLOSE-OUT-TILE

TILE WHOSE DIMENSIONS ARE NOT DETERMINED BY ENGINEERING DRAWING BUT ARE DETERMINED BY A CAVITY BOUNDED BY PREVIOUSLY BONDED TILE BY THE OML FAIRED TO THE ADJACENT FILES.

CURE

THE TIME REQUIRED FOR THE ADHESIVE MIX TO POLARIZE TO A MINIMUM HARDNESS OF 35 SHORE A OR MORE. THE REQUIRED HARDNESS IS NOT LIKELY TO BE ACHIEVED BEFORE SIXTEEN HOURS OF CURE.

DUROMETER

INSTRUMENT FOR THE MEASURING HARDNESS OF RUBBER

FAYING SURFACE

A FAYING SURFACE IS THE SURFACE OF ANY MATERIAL WHICH IS TO JOINED TO ANOTHER MATERIAL BY MEANS SUCH AS RIVETING, WELDING AND BONDING OPERATIONS.

FIB (FLEXIBLE INSULATION BLANKET)

LOW DENSITY SILICA FIBER BATTING SEWN BETWEEN TWO WOVEN GLASS FABRICS. TEMPERATURE RANGE OF +1500 DEGREES F.

FILLER BAR

A RTV COATED HIGH TEMPERATURE NOMEX FELT THAT IS BONDED TO THE SUBSTRATE UNDER THE GAPS BETWEEN FILLER BAR SERVES AS THERMAL AND MOISTURE BARRIER BETWEEN THE TILES.

FRSI (FELT REUSABLE SURFACE INSULATION)

NON-WOVEN NOMEX FELT, HEAT TREATED, COATED WITH WHITE ELASTOMERIC COMPOUND. TEMPERATURE RANGE OF + 750 DEGREES F.

GAP

THE DISTANCE BETWEEN TILE EDGES AS REQUIRED BY DRAWING.

HRSI (HIGH TEMPERATURE) RE-USEABLE SURFACE INSULATION

HRSI IS A BLACK CERAMIC COATED SILICA TILE APPLIED EXTERNALLY TO THE PRIMARILY STRUCTURAL SHELL OF THE ORBITER VEHICLE AND MAINTAINS AIRFRAME OUTER SKIN WITHIN THE ACCEPTABLE TEMPERATURE LIMITS. THESE TILE ARE USED IN AREAS EXPOSED TO TEMPERATURES UP TO 2300 DEGREES F.

HUMIDGRAPH

INSTRUMENT MEASURING THE TEMPERATURE AND HUMIDITY.

INCHES OF MERCURY

A UNIT OF VACUUM MEASUREMENT. ONE INCH OF MERCURY IS THE APPROXIMATE EQUIVALENT OF 0.5 POUNDS PER SQUARE INCH PRESSURE.

IML INTERFACE MOLD LINE

THE INTERFACE MOLD LINE IS THE OUTER SURFACE OF THE VEHICLE STRUCTURE. THIS IS THE WHAT THE RSI IS BONDED TO. THE WHITE UNGLAZED SURFACE OF THE RSI TILE IS REFERRED TO AS THE IML OF THE TILE.

LRSI LOW TEMPERATURE REUSABLE SURFACE INSULATION

LRSI IS A WHITE CERAMIC COATED SILICA TILE APPLIED EXTERNALLY TO THE PRIMARY STRUCTURAL SHELL OF THE ORBITER VEHICLE AND MAINTAINS THE AIRFRAME OUTER SKIN WITHIN ACCEPTABLE TEMPERATURE LIMITS. THESE TILES ARE USED IN AREAS EXPOSED TO TEMPERATURES UP TO 1200 DEGREES F.

MIX RATIO

THE MIX RATIO IS GIVEN BY FORMULA NUMBER WHICH DELINEATES THE QUANTITY OF CATALYST REQUIRED TO MIX A GIVEN AMOUNT TO ADHESIVE BASE TO PRODUCE A BOND WHICH WILL MEET ENGINEERING REQUIREMENTS.

OML OUTER MOLD LINE

THE OUTERMOST SURFACE OF THE VEHICLE WHICH IS GLAZED SURFACE OF THE TILES.

POLYMERIZATION

A CHANGE IN MOLECULAR STRUCTURE, GOING FORM A LIQUID TO A SOLID.

POT LIFE

THE WORKING LIFE OF AN ADHESIVE MIX. THE POTLIFE STARTS WHEN THE FIRST DROP OF CATALYST IS ADDED. PRESSURE MUST BE APPLIED TO THE BOND BEFORE THIS POTLIFE HAS EXPIRED.

PSI POUND PER SQUARE INCH

A UNIT OF PRESSURE MEASUREMENT WHICH DESCRIBES THE AMOUNT OF FORCE APPLIED TO EACH SQUARE INCH OF SURFACE AREA.

PRIMER

AN AGENT APPLIED TO A METALLIC FAYING SURFACE WHENEVER RTV IS USED AS THE ADHESIVE IN A BONDING OPERATION.

RCC REINFORCE CARBON CARBON

A NON-METALLIC INSULATION MATERIAL WITH A TEMPERATURE RANGE OF +3200 DEGREES F. MATERIAL IS APPLIED TO THE NOSE CAP AND LEADING EDGES OF WINGS.

RCG REACTION CURED GLASS

THE CERAMIC COATING ON THE OUTER SURFACE LRSI AND HRSI TILES.

RELATIVE HUMIDITY (RH)

THE PERCENTAGE OF MOISTURE IN THE AIR COMPARED TO AMOUNT AIR MAY HOLD.

RSI REUSABLE SURFACE INSULATION

INSULATION MATERIALS THAT CAN BE REUSED OR OR REPLACED AND ARE APPLIED TO THE OUTER SURFACE.

RTV ROOM TEMPERATURE VULCANIZATION

ANY SILICONE RUBBER ADHESIVE THAT POLYMERIZES AT ROOM TEMPERATURE.

SHELF LIFE

THE MAXIMUM AMOUNT OF TIME FROM THE DATE OF MANUFACTURER THAT THE MATERIAL IS KNOWN OR WARRANTED TO CONFORM, UNDER SPECIFIC STORAGE CONDITIONS, TO THE REQUIREMENTS OF THE APPLICABLE MATERIAL SPECIFICATION OF VENDORS RECOMMENDATION. MATERIALS STORED BEYOND THE EXPIRATION DATE OR BEYOND THE REQUIRED STORAGE TEMPERATURE MUST BE RETESTED OR DISCARDED.

SHORE "A" SAMPLE

A SAMPLE OF RTV

SUBSTRATE

THE EXTERNAL PRIMARY STRUCTURAL SHELL OF THE ORBITER VEHICLE.

SURFACE PREPARATION

A MECHANICAL/CHEMICAL CLEANING PROCESS FOR ANY FAYING SURFACE TO BE BONDED.

TERMINATOR LINE

THE EDGE OF THE RCG COATING ON THE SIDEWALLS OF THE TILE.

TPS THERMAL PROTECTION SYSTEM

VARIOUS SYSTEM OF MATERIALS APPLIED TO THE OUTER SURFACE OF THE VEHICLE ORBITER TO PROTECT IF FROM EXTREME TEMPERATURE RANGES WHICH WILL DAMAGE THE ORBITER.

WET FILM GAGE

INSTRUMENT USED IN MEASURING WET RTV THICKNESS

APPENDIX "A" - TPS Process Procedures

MAJOR DOCUMENT	MINOR DOCUMENT	PROCESS DESCRIPTION	ROB OT	SEN SOR	TOOL MECH	MATL DESG	HUM PER	VOI DE	INFO SYS
MLO301-0010		REUSABLE SURFACE INSULATION(RSI) INSTALLATION							
MLO601-9024		TPS RESUABLE SURFACE INSULATION MAINTENANCE							
MLO601-9024	PROCESS 1 XX	PREP. & HANDLING OF MAT'L /SUPPORT OPERATIONS FOR RSI APPLICATIONS							
MLO601-9024	PROCESS 100	RTV ADHESIVES - PROCURING, MIXING AND CONTROLLING OF RTV				I		I	I
MLO601-9024	PROCESS 101	PAINTING OF RSI SURFACES						I	I
MLO601-9024	PROCESS 102	FABRICATING TRACER PATTERN	I	I	I		I		I
MLO601-9024	PROCESS 103	TPS BONDING FIXTURE SET-UP			I			I	I
MLO601-9024	PROCESS 104	PREPARING RTV ADHESIVE APPLICATION ROLLERS				I			
MLO601-9024	PROCESS 105	CLEANING FABRICATION AIDS AND TEST FIXTURES						I	I
MLO601-9024	PROCESS 106	USE OF VACUUM BAG ASSEMBLY FOR APPLYING BOND PRESSURE						I	I
MLO601-9024	PROCESS 107	LEAK CHECK OF SUBSTRATE BONDING AREA				I		I	I
MLO601-9024	PROCESS 108	PREPATATION OF ACTIVATED TETRAETHYL ORTHOSILICATE (TEOS)							
MLO601-9024	PROCESS 109	FABRICATION OF PLASTER SETTERS						I	I
MLO601-9024	PROCESS 110	VACUUM BORDER ASSEMBLY FOR APPLYING CLOSEOUT FI BLANKET BOND PRESSURE							
MLO601-9024	PROCESS 111	RESERVED FOR FUTURE PROCESS							
MLO601-9024	PROCESS 112	EXTERNAL WINDOW SURFACES POLISHING							
MLO601-9024	PROCESS 113	RSI TILE REWATERPROOFING	I	I	I		I	I	I
MLO601-9024	PROCESS 114	FI BLANKET REWATERPROOFING	I	I		I		I	I
MLO601-9024	PROCESS 115	BONDING MULTILAYER FILLER BARS						I	I
MLO601-9024	PROCESS 2 XX	PREPARATION OF SURFACES FOR RSI BONDING							
MLO601-9024	PROCESS 200	SURFACE PREP. BARE, KOROPON, TYP II DICHROMATE SEALED ANODIZED AL AND MISC SURF.					I	I	I
MLO601-9024	PROCESS 201	SURFACE PREP. OF BARE OR KOROPON PRIMED GRAPHITE STRUCTURE ON OMS POD					I	I	I
MLO601-9024	PROCESS 202	SURFACE PREPARATION OF KOROPON PRIMED BERYLLIUM					I	I	I
MLO601-9024	PROCESS 203	RESERVED FOR FUTURE PROCESSES							
MLO601-9024	PROCESS 204	SURFACE PREPARATION OF NON-KOROPON PRIMED NON-METALLIC SURFACES (OTHER THAN G-E)					I	I	I
MLO601-9024	PROCESS 205	SURFACE PREP. OF PAYLOAD DOOR GRAPHITE-EPOXY SURFACE					I	I	I
MLO601-9024	PROCESS 206	SURFACE PREP OF TITANIUM, INCONEL, OR OTHER CORROSION RESISTANT METAL SURFACES					I	I	I
MLO601-9024	PROCESS 207	SURFACE PREP OF CURED SILICONE SURFACES					I	I	I

MAJOR DOCUMENT	MINOR DOCUMENT	PROCESS DESCRIPTION	ROB OT	SEN SOR	TOOL MECH	MATL DESG	HUM PER	VOI DE	INFO SYS
MLO601-9024	PROCESS 208	PRIMING SURFACES FOR RSI BONDING					X	X	X
MLO601-9024	PROCESS 209	CLEANING SURFACES COATED WITH PVA					X	X	X
MLO601-9024	PROCESS 210	APPLICATION OF KOROPON TO TPS BONDING SURFACES					X	X	X
MLO601-9024	PROCESS 211	BONDIG HEATSINKS OF RTV SILICONE RUBBER					X	X	X
MLO601-9024	PROCESS 212	INSTALL SUBSTRATE SCREED					X	X	X
MLO601-9024	PROCESS 213	APPLICATION OF SCREE FOR REWORK OF EXISTING SCREED OR HEATSINK RTV					X	X	X
MLO601-9024	PROCESS 214	SPOT BONDING INSTRUMENTATION WIRING					X	X	X
MLO601-9024	PROCESS 215	FILLER BAR INSTALLATION/REWORK					X	X	X
MLO601-9024	PROCESS 216	CLEANING FILLER BAR, SUBSTRT AND CERAMIC MAT'L FOR GAP FILLER AND SEAL TAB INST					X	X	X
MLO601-9024	PROCESS 217	DEW POINT/TEMPERATURE MONITORING AND CONTROL					X	X	X
MLO601-9024	PROCESS 3 XX	REUSEABLE SURFACE INSULATION (RSI) TILE MAINTENANCE							
MLO601-9024	PROCESS 300	TILE REMOVAL					X	X	X
MLO601-9024	PROCESS 301	TILE INSTALLATION	X	X	X		X	X	X
MLO601-9024	PROCESS 302	REPLACEMENT OF UNDENSIFIED DICE TILE SEGMENTS	X	X	X		X	X	X
MLO601-9024	PROCESS 303	FLOW RESTRICTOR AND INCONEL FLOW STOPPER INSTALLATION, REPLACEMENT OR REWORK					X	X	X
MLO601-9024	PROCESS 304	MACHINING TILE SIDEWALLS AND SURFACE PREP FOR INST OF FLOW RESTR. AND STOPPERS					X	X	X
MLO601-9024	PROCESS 305	PLUG ASSEMBLY INSTALLATION							
MLO601-9024	PROCESS 306	IML RTV FILL					X	X	X
MLO601-9024	PROCESS 307	BONDING OF RTV SHIMS TO FILLER BAR OR TILE IML EDGE SEAL ZONE					X	X	X
MLO601-9024	PROCESS 308	TILE OML IDENTIFICATION MARKING					X	X	X
MLO601-9024	PROCESS 309	BONDING INSTALLED TILE TO FILLER BAR			X		X	X	X
MLO601-9024	PROCESS 310	FINAL STEP AND GAP INSPECTION	X	X	X		X	X	X
MLO601-9024	PROCESS 311	COATING RSI TILE SURFACES WITH BLACK RTV					X	X	X
MLO601-9024	PROCESS 312	REPAIR OF EXISTING RTV REPAIRS					X	X	X
MLO601-9024	PROCESS 313	CHARRED FILLER BAR REWORK					X	X	X
MLO601-9024	PROCESS 314	HEAT CLEAING OF CONTAMINATED TILES					X	X	X
MLO601-9024	PROCESS 315	BOND VERIFICATION OF RSI TILES	X	X	X		X	X	X
MLO601-9024	PROCESS 4 XX	FELT REUSABLE SURFACE INSULATION (FRSI)							
MLO601-9024	PROCESS 400	FRSI REMOVAL							X
MLO601-9024	PROCESS 401	FRSI INSTALLATION							X
MLO601-9024	PROCESS 402	ASSEMBLY OF MULTILAYER FRSI AND RAMPED FRSI							X
MLO601-9024	PROCESS 403	FRSI PAINT SEAL							
MLO601-9024	PROCESS 404	FRSI JOINT SEAL							

MAJOR DOCUMENT	MINOR DOCUMENT	PROCESS DESCRIPTION	ROB OT	SEN SOR	TOOL MECH	MATL DESG	HUM PER	VOI DE	INFO SYS
MLO601-9024	PROCESS 405	FRSI CLOSEOUT EDGE MEMBER CASTING - OFF VEHICLE							
MLO601-9024	PROCESS 406	FRSI CLOSEOUT EDGE MEMBER CASTING - ON VEHICLE							
MLO601-9024	PROCESS 407	IN PROCESS FRSI COATING REWORK							
MLO601-9024	PROCESS 408	FRSI VENTING						X	X
MLO601-9024	PROCESS 5 XX	FLEXIBLE INSULATION (FI) BLANKETS							
MLO601-9024	PROCESS 500	FLEXIBLE INSULATION BLANKET REMOVAL						X	X
MLO601-9024	PROCESS 501	INSTALLATION OF FLEXIBLE INSULATION BLANKETS						X	X
MLO601-9024	PROCESS 502	INSTALLATION OF FILLER BAR FOR FLEXIBLE INSULATION BLANKETS						X	X
MLO601-9024	PROCESS 503	INSTALLATION OF SUB-INSULATION FOR FLEXIBLE INSULATION BLANKETS						X	X
MLO601-9024	PROCESS 504	STEP & GAP INSPECTION OF INSTALLED FLEXIBLE INSULATION BLANKETS	X	X	X				X
MLO601-9024	PROCESS 505	INSTALLATION OF GAP FILLERS FOR FLEXIBLE INSULATION BLANKETS	X	X					X
MLO601-9024	PROCESS 506	APPLICATION OF SILICA COATING TO FLEXIBLE INSULATION BLANKETS							
MLO601-9024	PROCESS 507	FLEXIBLE INSULATION BLANKET GAP FILLER REMOVAL							
MLO601-9024	PROCESS 6 XX	GAP FILLERS							
MLO601-9024	PROCESS 600	REMOVAL OF PILLOW AND AMES GAP FILLERS						X	X
MLO601-9024	PROCESS 601	INSTALLATION OF PILLOW (ALUMINA) GAP FILLER	X	X			X	X	X
MLO601-9024	PROCESS 602	INSTALLATION OF AMES GAP FILLERS	X	X	X			X	X
MLO601-9024	PROCESS 603	INSTALLATION OF CAPTIVE GAP FILLERS	X	X	X			X	X
MLO601-9024	PROCESS 604	INSTALLATION OF VERTICAL STABILIZER LEADING EDGE IN-LINE GAP FILLERS	X	X	X			X	X
MLO601-9024	PROCESS 605	RESERVED FOR FUTURE PROCESSES							
MLO601-9024	PROCESS 606	APPLICATION/REPAIR OF DAMAGE THERMAL BARRIERS OR GAP FILLERS USING BLACK RTV						X	X
MLO601-9024	PROCESS 607	REWORK OF PILLOW TYPE GAP FILLERS FOR INSTALLATION						X	X
MLO601-9024	PROCESS 608	APPLICATION OF EMITTANCE COATING ON GAP FILLERS AND THERMAL BARRIERS						X	X
MLO601-9024	PROCESS 7 XX	INSTRUMENTATION							
MLO601-9024	PROCESS 701	INSTALLATION, PRESSURE PORT TILE - KULITE TYPE							
MLO601-9024	PROCESS 702	INSTALLATION, PRESSURE PORT TILE - GOULD TYPE							
MLO601-9024	PROCESS 703	LEAK TEST OF PRESSURE PORT INSTRUMENTATION							
MLO601-9024	PROCESS 704	REWORK, PRESSURE PORT TILE - KULITE TYPE							
MLO601-9024	PROCESS 8 XX	ELEVON COVE FLOW RESTRICTORS							
MLO601-9024	PROCESS 800	FABRICATION OF FLOW RESTRICTOR PREFORM MOLDS							

MAJOR DOCUMENT	MINOR DOCUMENT	PROCESS DESCRIPTION	ROB OT	SEN SOR	TOOL MECH	MATL DESG	HUM PER	VOI DE	INFO SYS
MLO601-9024	PROCESS 801	FABRICATION OF ELEVON COVE END FLOW RESTRICTORS AND GAP FLOW RESTRICTORS							
MLO601-9024	PROCESS 802	FABRICATION OF ELEVON COVE EDGE AND PLUG FLOW RESTRICTORS							
MLO601-9024	PROCESS 803	TRANSFER COATING FRSI FLOW RESTRICTORS							
MLO601-9024	PROCESS 804	FABRICATION OF WING TRAILING EDGE SEAL							
MLO601-9024	PROCESS 805	INSTALLATION OF ELEVON COVE EDGE AND END FLOW RESTRICTORS							
MLO601-9024	PROCESS 806	INSTALLATION OF ELEVON COVE PLUG AND GAP FLOW RESTRICTORS							
MLO601-9024	PROCESS 807	VERIFICATION OF FLOW RESTRICTOR INTERFERENCE FIT							
MLO601-9025		TPS STANDARD MAINTENANCE PROCEDURES (NO MR'S REQUIRED)							
MLO601-9025	TPS-201	CONTOURED SURFACE TILE PLUG REPAIR							
MLO601-9025	TPS-202	TILE PLUG REPAIR							
MLO601-9025	TPS-203	FABRICATION OF RSI REPLACEMENT TILE							
MLO601-9025	TPS-207	REPAIR OF TILE COATING FOR EROSION RESISTANCE							X
MLO601-9025	TPS-211	COATING REPAIR FOR DAMAGED RSI TILE							X
MLO601-9025	TPS-214	RSI TILE IML FILL							
MLO601-9025	TPS-221	RSI TILE SIDEWALL TRIM							
MLO601-9025	TPS-224	REPAIR OF RSI TILE IML DAMAGE							
MLO601-9025	TPS-229	REWORK OF INSTALLED TILES WITH EXCESSIVE GAPS							X
MLO601-9025	TPS-234	FOAM TILE INSTALLATION FOR FERRY FLIGHT							
MLO601-9025	TPS-237	FABRICATION OF REPLACEMENT FLEXIBLE INSULATION BLANKET							
MLO601-9025	TPS-263	REWORK OF DAMAGED GAP FILLERS							
MLO601-9025	TPS-264	REPAIR OF EXISTING MB0130-119 TYP II (RTV 577) TILE REPAIRS							
MLO601-9025	TPS-266	REPLACEMENT OF DICED TILE SEGMENTS							X
MLO601-9025	TPS-267	TEMP. APPL. OF COLORED CHEM. FILM COATINGS (ALODINE) ON BARE ALUMINUM SUBSTRATE							
MLO601-9026		TPS MATERIAL REVIEW MAINTENANCE PROCEDURES							
MLO601-9026	TPS-307	REPAIR OF TILE COATING FOR EROSION RESISTANCE							X
MLO601-9026	TPS-311	COATING REPAIR FOR DAMAGED RSI TILE							X
MLO601-9026	TPS-312	REPAIR OF DAMAGED THERMAL BARRIERS OR GAP FILLERS USING BLACK RTV							X
MLO601-9026	TPS-314	RSI TILE INNER MOLD LINE (IML) FILL							
MLO601-9026	TPS-319	RSI IML MACHINING							
MLO601-9026	TPS-321	RSI TILE SIDEWALL TRIM							X
MLO601-9026	TPS-324	REPAIR OF RSIT TILE IML DAMAGE							

MAJOR DOCUMENT	MINOR DOCUMENT	PROCESS DESCRIPTION	ROB OT	SEN SOR	TOOL MECH	MATL DESG	HUM PER	VOI DE	INFO SYS
MLO601-9026	TPS-328	REWORK OF INSTALLED TILES WITH EXCESSIVE GAP USING CERAMIC ADHESIVE BONDED SHIMS							X
MLO601-9026	TPS-329	REWORK OF INSTALLED TILES WITH EXCESSIVE GAPS							X
MLO601-9026	TPS-330	LARGE DAMAGE COATING REPAIR (RSI)							X
MLO601-9026	TPS-335	FLEXIBLE INSULATION PLUG REPAIR							X
MLO601-9026	TPS-340	REPAIR OF FLEXIBLE INSULATION BLANKET ASSEMBLIES OUT-OF-TOLERANCE STEP CONDITION							
MLO601-9026	TPS-341	FIB REPAIRS USING QUARTZ FABRIC PATCH/SEWING/SILICA COATING							
MLO601-9026	TPS-342	FABRICATION OF MULTIPLE FLEXIBLE INSULATION BLANKETS (FIB'S)							
MLO601-9026	TPS-362	REWORK OF OVERTOLERANCE OML STEPS AND WAVINESS ON INSTALLED TILES							X
MLO601-9026	TPS-363	REWORK OF OUT-OF-TOLERANCE STEPS AND GAPS USING GAP FILLERS							X
MLO601-9026	TPS-364	RTV REFURBISHMENT AND UPPER SURFACE RTV REPAIRS							X
MLO601-9026	TPS-365	REINFORCED CARBON CARBON (RCC) REPAIR							
MLO601-9026	TPS-367	SUBSTITUTION OF MB0130-085 (RTV 566) FOR MB0130-119 TYP II (RTV 560)							
MLO601-9026	TPS-368	BROKEN TILE REPAIR							X
MLO601-9026	TPS-370	FABRICATION AND INSTALLATION OF MAIN LANDING GEAR DOOR (MLGD) THERMAL BARR. PTCH							
MLO601-9026	TPS-371	REMOVAL AND REPLACEMENT OF MLGD THERMAL BARRIERS							
MLO601-9026	TPS-372	PARTIAL REMOVAL AND REPLACEMENT OF MLGD THERMAL BARRIERS							
MLO601-9026	TPS-374	HYDRAULIC LEAK DETECTION AND SUBSTRATE SEALING							
MLO601-9026	TPS-377	LARGE AREA REPAIR OF RSI COATING							X
MYO501-550		INSPECTION OF INSTALL FIB'S							
V6028		POST FLIGHT RSI INSPECTION	X	X					X
V6037		ORBITER RSI PRE-OPF ROLLOUT INSPECTION	X	X					X
V6039		ORBITER RSI PREMATE, VAB TRANSFER AISLE & PRE-VAB ROLLOUT INSPECTION	X	X					X
V6040		ORBITER RSI PRE-LAUNCH INSPECTION	X	X					X
V6045		TPS INSPECTION AFTER COM/NAV TESTING	X	X					X
106M319M23		SINGLE TILE TPS INSTALLATION							
106M319M23		SINGLE TILE TPS INSTALLATION (NEW VEHICLE)							
MAO106-319		RTV SILICONE ADHESIVE-BONDED SILICA							
MAO609-301		MACHINING, COATING, REWATERPROOFING OF RSI							

MAJOR DOCUMENT	MINOR DOCUMENT	PROCESS DESCRIPTION	ROB SEN TOOL MATL HUM VOI INFO OT SOR MECH DESG PER DE SYS
MLO301-0010		RSI INSTALLATION (NEW VEHICLES)	
MLO301-0034		FIB INSTALLATION	
MLO601-0001		TILE STEP/GAP REQUIREMENTS AND ACCEPTANCE CRITERIA	
MLO601-0002		REUSEABLE SURFACE INSULATION ACCEPTANCE CRITERIA	
MLO601-0002	SEC 4.1	RSI TILE	
MLO601-0002	SEC 4.2	FILLER BAR	
MLO601-0002	SEC 4.3	(SIP) STRAIN ISOLATOR PAD	
MLO601-0002	SEC 4.4	(FRSI) FELT REUSABLE SURFACE INSULATION	
MLO601-0002	SEC 4.5	(FI) FLEXIBLE INSULATION	
MLO601-0002	SEC 4.6	CERAMIC INSERTS	
MLO601-0002	SEC 4.7	CERAMIC PLUGS	
MLO601-0002	SEC 4.8	FRSI PLUGS	
MLO601-0002	SEC 4.9	GAP FILLERS	
MLO601-0002	SEC 4.10	THERMAL BARRIERS	
MLO601-0002	SEC 4.11	FLOW RESTRICTORS/FLOW STOPPERS	
MLO601-0002	SEC 4.12	(RCC) REINFORCED CARBONCARBON	
MLO601-0002	SEC 4.13	REPAIRS	

APPENDIX "B" - TPS Reference Documents

MAJOR TOPIC	MAJOR DOC	DESCRIPTION	APPROX PAGE	ORGANIZATION	DATE
BARCODE		KENNEDY INVENTORY MANAGEMENT SYSTEM (KIMS)	12	EG & G	/ /
BARCODE		SPACE SHUTTLE TILES (MAG ARTICLE)	5	INTERMEC CORP	01/01/90
BARCODE		STATUS/PROTOTYPE DEMONSTRATION TILE BARCODE IDENTIFICATION (T-BIS)	12	LOCKHEED	12/15/89
BARCODE		MIL-STD-1189B (DOD STANDARD)	23		09/10/89
BARCODE		MICRO VERICODE	6	VERITECH	/ /
BARCODE		BARCODE IMPLEMENTATION PLAN	20	NASA	01/17/85
BARCODE		TBIS - COMMENTS FROM TODD AND ERIC TO SCOTT STUDY	9	DE / PT	02/21/90
BARCODE		LOGISTICS BAR CODING METHODOLOGY	20	ROCKWELL	/ /
CAVITY DIGITIZATION	COST JUSTIFY		2		04/09/90
ENTERPRIZE		TILE AUTOMATION SYSTEM REQUIREMENTS	400	LOCKHEED	01/27/87
ENTERPRIZE		USER ID & SIGNIN INFO	2	TODD GRAHAM	04/15/90
ENTERPRIZE	CAD	CAD BASED MACHINING OF TILES	3	LOCKHEED	12/15/82
ENTERPRIZE	MASTER DIMENSION	SAMPLE TILE SIZE, SHAPE, & LOCATION INFORMATION	3	R. MORGAN/ROCKWELL	03/05/90
ENTERPRIZE	SPDMS II	PROCESS MASTER 3.0 AND BOOKMANAGER	10	M. HILDRETH	02/07/90
ENTERPRIZE	SPDMS II	COMMAND LINE PROCESSING BUSINESS SYSTEM DESIGN PHASE I	20	WILLIAM BELONGRA	01/26/90
ENTERPRIZE	SPDMS II	PROGRAM COMPLIANCE ASSURANCE STATUS SYSTEM INTERFACE FUNCTIONAL DESIGN REVIEW	40	B. HARRIS	02/07/90
ENTERPRIZE	SPDMS II	PROBLEM REPORTING AND CORRECTIVE ACTION FUNCTIONAL DESIGN REVIEW	10	P. KENT	02/07/90
ENTERPRIZE	SPDMS II	PRACA FUNCTIONAL REQUIREMENTS DOCUMENT	50	LOCKHEED	02/01/90
ENTERPRIZE	SPDMS II	STEP & GAP PHASE I FUNCTIONAL DESIGN REVIEW	12	G. KLEIN	02/07/90
ENTERPRIZE	SPDMS II	STEP & GAP FUNCTIONAL REQUIREMENTS DOCUMENT	50	LOCKHEED	01/18/90
ENTERPRIZE	SPDMS II	STEP & GAP AUTOMATION PLAN	50	LOCKHEED	01/18/90
ENTERPRIZE	TIPS	USER'S GUIDE	50	B.J. SCHELL/ROCKWELL	05/15/90
ENTERPRIZE	TIPS	OV-103 TIPS DOWNLOAD FOR PROTOTYPE DEVELOPMENT	2	C. MOLLAKARIMI/LSOC	04/13/90
FACILITIES		CAD MODELS AVAILABLE (MDAC)	2	MC DAC	06/01/90
KSC DESIGN	KSC-DE-512-SAA	KSC DESIGN REQUIREMENTS FOR GSE	100	KSC	06/01/88
KSC DESIGN	KSC-STD-118	STD FOR PREP OF FAILURE MODE AND EFFECTS ANALYSIS	18	JAMES D. PHILLIPS DE	06/30/86
KSC DESIGN	NHB5300.4	SAFETY, RELIABILITY, MAINTAINABILITY, QUALIFCATION REQ. FOR SHUTTLE	30	NASA	10/01/79
KSC DESIGN	NSTS 22254	METHOD FOR CONDUCT OF NSTS HAZARD ANALYSES	10	KSC	/ /
KSC PROCESS IMPROV.		KSC PROCESSING IMPROVEMENTS STUDY	17	LARRY ELLIS	03/15/90
LOCATION STRATEGY	SEE DESCRIPT	CHESAPEAKE LASER SYSTEM	0		04/13/90
MATERIALS	FRCI-12	TILE MATERIAL SPEC SHEET	3	LOCKHEED	/ /
MATERIALS	LI-2200	TILE MATERIAL SPEC SHEET	3	LOCKHEED	/ /
MATERIALS	LI-900	TILE MATERIAL SPEC SHEET	3	LOCKHEED	/ /
OBJECT DBASE		G2 REAL-TIME EXPERT SYSTEM PRESENTATION	30	GENSYM	03/19/90

MAJOR TOPIC	MAJOR DOC	DESCRIPTION	APPROX PAGE	ORGANIZATION	DATE
OBJECT DBASE		OBJECT ORIENTED KNOWLEDGE BASES PART I - MAG ARTICLE	10	AI MAG	03/15/90
OBJECT DBASE		INTELLIGENT DATABASES - MAG ARTICLE	10	FRANK MANOLA	03/15/90
ORBITOR	ICD-2-1A002	OPF ORBITOR PARKING	20	NASA KSC REV "K"	/ /
ORBITOR	ICD-2-1D004	MATE/DEMATE DEVICE INTFC	50	JSC	02/09/90
RANDE	WHITE PAPER	RANDE FOR SPACE SHUTTLE TILE INSPECTION	12	LOCKHEED	03/29/89
RANDE	WHITE PAPER	ROBOTIZED & AUTOMATED NONDESTRUCTIVE TESTING	10	LOCKHEED	03/29/89
REWATERPROOF		MAINTENENCE PROCEDURE FOR INJECTION TOOL	21	F. CHIN	12/15/86
REWATERPROOF		PMES SAFETY DATA SHEET	2	OSHA	/ /
REWATERPROOF		DMES INSTALL TESTING/QUALIFY	10	ROCK/LOCK	09/22/87
REWATERPROOF		CLASS HANDOUT (WITH NOTES)	15	LOCKHEED	06/05/90
REWATERPROOF		FLOW IMPACT	3	LENNY DUVCIL	/ /
REWATERPROOF	V1275	RE-WATERPROOF OMI	3	LOCKHEED	11/10/88
ROBOT INFORMATION		NASREM NASA/NBS STANDARD REFERENCE FOR TELEROBOT CONTROL SYSTEM	86		06/18/87
ROBOT INFORMATION		MICRO LINEAR POSITIONER	8	EALING ELECTRO-OPTIC	05/11/90
ROBOT INFORMATION		ROBOTIC LOCATING SYSTEM (RLS)	12	MARTIN MARRIETA	/ /
ROBOT INFORMATION		ROCKWELL LAB CAPABILITIES PRESENTATION	20	ROCKWELL	06/07/90
ROBOT INFORMATION		CMU SNAKE ROBOTS (PAYLOAD MINUTES)	60	CMU	07/03/90
ROBOT INFORMATION	ACTUAL SIMULATION	SIMULATION PHOTO'S USING IGRIP	4	RICH	/ /
ROBOT INFORMATION	AIRCRAFT ROBOT	AIRCRAFT PAINTING ROBOT (MAG ARTICLE)	1	AER	/ /
ROBOT INFORMATION	K1607	SPEC SHEET - INDUSTRIAL ARM	10	ROBOTICS RESEARCH	04/13/90
ROBOT INFORMATION	MOBILE	PARALLEL VISION ALGORITHIM	20	CMU	01/14/87
ROBOT INFORMATION	MOBILE	THERMAL IMAGING IN OUTDOOR SCENES	50	CMU	04/01/90
ROBOT INFORMATION	MOBILE	COMPLEX VISION SYSTEM ON SYSTOLIC ARRAY MACHINE	15	CMU	06/01/87
ROBOT INFORMATION	MOBILE	3-D VISION TECHNIQUES FOR AUTO VEHICLES	30	CMU	08/01/88
ROBOT INFORMATION	MOBILE	AUTONOMOUS PLANETARY ROVER	20	CMU	02/01/90
ROBOT INFORMATION	MOBILE	COLOR IMAGE PROCESSING FOR NAVIGATION	20	CMU	04/01/90
ROBOT INFORMATION	MOBILE	DRIVING CONTROL SCHEME FOR MOBILE ROBOTS	20	CMU	06/01/88
ROBOT INFORMATION	MOBILE	MOBILE ROBOT LOCALIZATION USING VISION (FRANCE)	20	CMU	05/01/89
ROBOT INFORMATION	MOBILE	IMPACT OF DOMAIN DYNAMICS ON INTELLIGENT ROBOT DESIGN	15	CMU	05/01/90
ROBOT INFORMATION	MOBILE	USE OF OCCUPANCY GRIDS FOR MOBILE ROBOTS	10	CMU	06/01/89
ROBOT INFORMATION	MOBILE	AMBLER-AUTONOMOUS ROBOT FOR PLANETARY EXPLANATION	7	CMU	06/01/89
ROBOT INFORMATION	MOBILE	COMPUTER VISION FOR AUTONOMOUS NAVIGATION	56	CMU	06/05/88
ROBOT INFORMATION	MOBILE	INTEGRATED MOBILE ROBOT SYSTEM	100	CMU	07/01/87
ROBOT INFORMATION	MOBILE	CAD MODEL TO REPRESENT BIN PICKING	25	CMU	08/01/86

MAJOR TOPIC	MAJOR DOC	DESCRIPTION	APPROX PAGE	ORGANIZATION	DATE
ROBOT INFORMATION	MOBILE	KINEMATIC MODELING OF WHEELED MOBILE ROBOTS	100	CMU	06/01/86
ROBOT INFORMATION	MOBILE	NAV LAB - AUTONOMOUS NAVIGATION TEST BED	50	CMU	11/01/87
ROBOT INFORMATION	MOBILE	AUTONOMOUS ROAD FOLLOWING	125	CMU	02/01/89
ROBOT INFORMATION	MOBILE	SENSOR FUSION IN CERTAINTY GRIDS FOR MOBILE ROBOTS	12	CMU	06/07/88
ROBOT INFORMATION	MOBILE	BAYESIAN MENTOD FOR CERTAINTY GRIDS	10	CMU	07/01/88
ROBOT INFORMATION	MOBILE	OCCUPANCY GRIDS FOR MOBILE ROBOT PERCEPTION	8	CMU	06/01/89
ROBOT INFORMATION	MOBILE	STANFORD CART AND THE CMU ROVER	12	CMU	07/01/83
ROBOT INFORMATION	MOBILE	BOOKS (ROBOTS VS HUMANS)	20	CMU	01/09/89
ROBOT INFORMATION	MOBILE BASE	NAVMASTER SELF GUIDED VEHICLE	20	CYBERMOTION	/ /
ROBOT INFORMATION	SPLINE ROBOTICS	SNAKE LIKE ROBOTS	5	CMU	/ /
ROBOT INFORMATION	SW-E-0002	GROUND SUPPORT EQUIPMENT GENERAL DESIGN REQUIREMENTS	50		05/11/87
ROBOT INFORMATION	TOOL CHANGE	LIGHT WEIGHT TOOL CHANGER	6	APPLIED ROBOTICS	/ /
ROBOT INFORMATION	WRIST	OMNI DIRECTIONAL WRIST	4	ROSS/HIME	06/05/90
ROBOT INFORMATION,		5 METER SCARA FOR 747 PAINTING	3	USBI	04/18/89
SENSORS		ADVANCED SHEROGRAPHY INSPECTION	30	LASER TECH INC.	02/06/90
SENSORS		ULTRASONIC SAFETY SYSTEM (SONAR)	5	CYBERMOTION	/ /
SENSORS		BUYERS GUIDE LISTING	80		05/11/90
SENSORS		6MM - 10MM VIDEO BORESCOPE	8	MEMCO	04/02/90
SENSORS		TECH PAPER SME - RADAR 3-D VISION SENSORS	15	GOODWIN	01/01/85
SENSORS		3D MACHINE VISION SYSTEM (EAGLE 3004)	4	DIGITAL OPTRONICS	/ /
SENSORS		3D LASER VISION TECHNOLOGY	20	SERVO ROBOT	/ /
SENSORS		3D SURFACE MAPPING	5	EOIS	/ /
SENSORS		3D ELECTROTOPOGRAPHY	30	ELECTROTOPOGRAPH COR	/ /
SENSORS		STATEMENT OF WORK, ACOUSTIC SENSOR, BLIND TESTS	4	INEL	10/15/89
SENSORS		NDE OF THE ORBITER THERMAL PROTECTION SYSTEM	30	EG & G	08/28/89
SENSORS		VISION METROLOGY SYSTEM (VMS)	45	GENERAL DYNAMICS	10/13/89
SENSORS		BACKSCATTER TOMOGRAPHY (XRAY)	5	ARACOR	09/28/89
SENSORS		3D CAVITY DIGITIZATION (TEST RESULTS)	10	HYMARC	02/19/90
SENSORS		LASER VISION SEAM TRACKING	15	MVS	06/11/90
SENSORS	3D	3D TESTS RESULTS (DIG OPTRONICS)	8	LANGLEY	04/12/90
SENSORS	3D	3D SURFACE MAPPING FOR INSPECTION	4		06/06/90
SENSORS	VIBRATION	NDC OF ORBITOR TPS (IDAHO)	50	EG&G	03/01/89
SIMULATION	IGRIP SPECS	MISCELLANEOUS IGRIP DATA	40	DENEB	03/15/90
SIMULATION	INTERPRO 6000	HARDWARE DATA	11		03/15/90
SIMULATION	PROS/CONS	FUNCTIONAL SPECIFICATION EVALUATION	10	GREG MALIOTIS	03/15/90
SIMULATION	SILMA	SILMA USERS GUIDE	300	SILMA INC	03/15/90
SIORA		SPACE SYSTEMS INTEGRATION & OPERATIONS RESEARCH APPLICATIONS - NASA,LSOC,STANFRD	200		04/13/90
SIORA	CHANGE REQUEST	NASA LEVEL II CHANGE REQUEST FOR TPS AUTOMATED WORK AUTHORIZATION DOCUMENT SYS.	1	L. ELLIS/NASA TP	/ /

MAJOR TOPIC	MAJOR DOC	DESCRIPTION	APPROX PAGE	ORGANIZATION	DATE
SIORA	COOPERATIVE AGRMNT	COOPERATIVE AGREEMENT BETWEEN KSC (NASA,LSOC) AND STANFORD -- NCC 10-0001	2	MOLLAKARIMI/LSOC	/ /
SIORA	JOURNAL ARTICLE	AUTOMATION OF SHUTTLE TILE INSPECTION: ENGINEERING METHODOLOGY FOR SPACE STATION	3	MOLLAKARIMI/LSOC	01/01/87
SIORA	JOURNAL ARTICLE	VOICE DATA ENTRY ON SPACE SHUTTLE PROCESSING	9	MOLLAKARIMI/LSOC	01/01/87
SIORA	PROCESS FLOW	PROCESS FLOWCHART FOR TILE AUTOMATION SYSTEM -- SIORA PROGRAM IMPLEMENTATION	200	SCHNITZUIS	04/01/90
SIORA	PROGRAM DESCRIPTION	SIORA PROGRAM DESCRIPTION (FY 89) -- GOALS, SCOPE, RESPONSIBILITIES, ...	11	WISKERCHEN/STANFORD	08/26/88
STEP AND GAP		SUMMARY OF STEP AND GAP MEASUREMENT PROBLEM	4	LOCKHEED	09/30/88
STEP AND GAP		STUDENT HANDOUT (UNOFFICIAL)	10	LOCKHEED	09/30/88
STEP AND GAP		PREVIOUS NOTES AND MINUTES	20	EDUARDO CASTILLO	07/06/88
STEP AND GAP		MISC NOTES AND REQUIREMENTS	10	TODD GRAHAM	01/01/90
STEP AND GAP		EXISTING S/G SYSTEM (PICTORIALS)	5	LOCKHEED	09/26/88
STEP AND GAP		SYSTEM DESIGN REQUIREMENTS	4	TODD GRAHAM	01/22/90
TILE STUDY		MEMORANDUM OF UNDERSTANDING	2	ERIC RHODES	04/13/90
TILE STUDY		MEETING MINUTES	400	VARIOUS	04/13/90
TILE STUDY		DYSE CLASS HANDOUT (OUTLINE FOR A STUDY)	20	ERIC RHODES	04/13/90
TILE STUDY		RED WHITAKER ABSTRACT	10	RED WHITAKER/CMU	03/15/90
TILE STUDY		CODE R MEETING WITH MEL	75	NASA/KSC	03/15/90
TILE STUDY		STUDY PLANS AND QUESTIONAIRE	5	SPIKER/GRAHAM	03/15/90
TILE STUDY		LANGLEY/SRI SOW	3	MIKE GOODE	04/23/90
TILE STUDY		GENERAL CORRESPONDENCE	50		/ /
TILE STUDY		DM SUPPORT LETTER FROM TV/DIRECTORATE	2	J. R. SMITH	03/16/89
TILE STUDY		LANGLEY TPS PROCESS EVALUATION	20	LANGLEY	08/15/90
TILE STUDY		PRIOR PLANNING EFFORTS	50	SPIKER	/ /
TILE STUDY		SLIDES/PICTURES	100	SPIKER	08/16/90
TILE STUDY		PRE-STUDY WORK AND SLIDES	50	TODD GRA	08/16/90
TILE STUDY	CONCEPTS	ORGINAL CONCEPT PICTORIALS	30	WC	08/14/90
TILE STUDY	FACILITY	FACILITY MOD IMPACT MATRIX	4	SPIKER	08/14/90
TILE STUDY	PLAN DATA	PLAN ABC DATA	10	WC	08/14/90
TILE STUDY	SENSOR	V6028 SENSOR REQUIREMENTS MATRIX	30	SPIKER	08/14/90
TILE STUDY OPS		OPERATIONS MEETING 6/29 9:00-11:00	20	SPIKER	06/29/90
TPS FLOW		KSC INTEGRATED CONTROL SCHEDULE	60		04/16/90
TPS FLOW		KSC INTEGRATED SCHEDULE	50		05/15/90
TPS FLOW		WORK BY PROCESS (SPLASH)	5	TPS FLOW	06/07/90
TPS FLOW		BOND STATUS REPORT	10	TPS FLOW	06/07/90
TPS FLOW		ORBITOR TPS PLANNING AND CONTROL	10	TPS FLOW	06/07/90
TPS FLOW	DATA FLOW	FLOW RELATIONSHIPS(SYSTEMS, PROCESSES, PAPERWORK, ETC...)	3	Tim Barth	04/13/90
TPS FLOW	LOCKHEED DATA	PROCESS TREE (TILE INSTALLATION)	3	Danielle Schnitzuis	04/13/90
TPS FLOW	LOCKHEED DATA	PROCESS CHANGE REQUEST CHECKLIST	18	Rick Corsillo	04/13/90

MAJOR TOPIC	MAJOR DOC	DESCRIPTION	APPROX PAGE	ORGANIZATION	DATE
TPS FLOW	REPAIR INDEX	LIST OF TILE REPAIR OPERATIONS (INCOMPLETE)	3	Scott Study	04/01/90
TPS FLOW	SEE DESCRIPT.	BOND VERIFICATION	1		04/13/90
TPS FLOW	STS-35R	DFRF TPS Plan	7	Cindy Lodge	01/15/90
TPS FLOW	STS-38R	TILE FLOW ASSESSMENT	15	Cindy Lodge	04/13/90
TPS FLOW	STS-41	TPS Plan Developement	23	Cindy Lodge	03/21/90
TPS FLOW	TILE R & R	TILE REMOVE AND REPLACE FLOWCHART	2	Scott Study	01/27/87
TPS QTY OF WORK	SPDMS WADSORT	PARTIAL WORK AUTHORIZATION DOCUMENT (WAD) FOR TPS SCHEDULE	2	--/SPDMS	02/28/90
TPS QTY OF WORK	TIPS REPORT	QUANTIFIES ALL TILE REMOVALS, FLIGHT AND NON-FLIGHT RELATED THROUGH STS-28	3	R. MORGAN/ROCKWELL	03/02/90
TPS QTY OF WORK	TIPS REPORT OV-102	QUANTIFIES ALL TILE, FIB, AND FRSI REMOVED AND REPLACES FOR OV-102, STS-32	77	R. MORGAN/ROCKWELL	01/08/90
TPS QTY OF WORK	TIPS REPORT OV-103	QUANTIFIES ALL TILE, FIB, AND FRSI REMOVED AND REPLACED OR OV-103, STS-31	64	R. MORGAN/ROCKWELL	04/09/90
TPS QTY OF WORK	TIPS REPORT OV-104	QUANTIFIES ALL TILE, FIB, AND FRSI REMOVED AND REPLACES FOR OV-104, STS-36	56	R. MORGAN/ROCKWELL	02/28/90
TRAINING		FELT REUSABLE SURFACE INSULATION(OVERVIEW)	10		04/13/90
TRAINING		FLEXIBLE BLANKET INSTALLATION	10		04/13/90
TRAINING		TRACER PATTERN INSTALLATION	10		04/13/90
TRAINING		SPLASH PATTERN FABRICATION	10		04/13/90
TRAINING		RSI TILE INSTALLATION(OVERVIEW)	21		04/13/90
TRAINING		RCC REPAIR (REINFORCED CARBON CARBON)	10		04/13/90
TRAINING		LEADING EDGE STRUCTUAL SUBSYSTEM	10		04/13/90
TRAINING		RSI TILE BOND VERIFICATION	10		04/13/90
TRAINING		RSI TILE STEP AND GAP MEASUREMENT	20		09/30/88
TRAINING		AMES AND DESIGN/MR PILLOW GAP FILLER	2		03/15/90
UNIVERSITY STUDIES	NCSU	HAND HELD 3D VISION SYSTEM (UNSOLICITED PROPOSAL)	50	REN C. LUO	11/20/89
UNIVERSITY STUDIES	UCF	PRODUCTIVITY IMPROVEMENT TECHNIQUES (PROGRESS REPORT)	12	HOSNI	09/05/89
UNIVERSITY STUDIES	UCF	PRODUCTIVITY IMPROVEMENT TECHNIQUES (PROJECT OUTCOME)	6	HOSNI	10/24/89
UNIVERSITY STUDIES	UCF	PRODUCTIVITY IMPROVEMENT TECHNIQUES (COOPERATIVE AGREEMENT)	10	TIM BARTH	03/01/90
UNIVERSITY STUDIES	UCF	CAVITY DIGITIZATION FEASIBILITY STUDY PRESENTATION	20	DR. HOSNI	02/15/90
UNIVERSITY STUDIES	UCF	UCF SUPPORTING DATA FOR UCF'S PRODUCTIVITY STUDIES	80		04/13/90
UNIVERSITY STUDIES	UCF	HYMARC PRODUCT LITERATURE (LASER DIGITIZER)	13	HYMARC	01/01/90
UNIVERSITY STUDIES	UCF	NON-CONTACT, THREE DIMENSIONAL OBJECT DIGITIZING SYSTEM	75	D.K. HASSER	09/15/90

MAJOR TOPIC	MAJOR DOC	DESCRIPTION	APPROX PAGE	ORGANIZATION	DATE
UNIVERSITY STUDIES	UCF	HUMAN PERFORMANCE GENERAL PRESENTATION	12	DR. HOSNI	04/13/90
UNIVERSITY STUDIES	UCF	VOICE DATA ENTRY GENERAL PRESENTATION -- PRODUCTIVITY STUDIES	20	Y. HOSNI	03/15/90
UNIVERSITY STUDIES	UCF	INTERIM REPORT -- IMPLEMENTATION PLAN FOR VOICE DATA ENTRY	75	T. HAMID/K. COLE	03/15/90
UNIVERSITY STUDIES	UCF	WORKSTAND DESIGN GENERAL PRESENTATION -- PART OF PRODUCTIVITY STUDIES	15	Y. HOSNI	04/13/90
UNIVERSITY STUDIES	UCF	INTERIM REPORT ON WORKSTAND DESIGN	15	J. CREECH	01/01/90
UNIVERSITY STUDIES	UNIVERSITY FLORIDA	TILE MOISTURE CONTENT TOOL OPERATING INSTRUCTION	12	E.A. FARBER	04/13/90
UNIVERSITY STUDIES	UNIVERSITY FLORIDA	TILE MOISTURE CONTENT DETERMINATION RESEARCH PAPER	52	E.A. FARBER	04/13/90
V6028		QUALITY DEFACE DATA (AVO)	1	NASA	07/20/90
V6028		OBSERVATION NOTES OF ACTUAL	2	TODD GRA	05/09/90
*** Total ***			5311		

APPENDIX "C"

Detailed Process Flow Diagrams

This appendix contains the following detailed process flow diagrams:

C-1	V6028 Categorization of Anomalies
C-2	Gap Filler Inspection Defect Determination
C-3	Thermal Barrier Inspection Defect Determination
C-4	Filler Bar Inspection Defect Determination
C-5	Ceramic Inserts & Plugs Inspection Defect Determination
C-6	Defect Criteria for Previous HRSI Tile Rework
C-7	New HRSI Tile Anomalies, Inspection Defect Determination
C-8	Tile Removal Process
C-9	Tile Installation Process

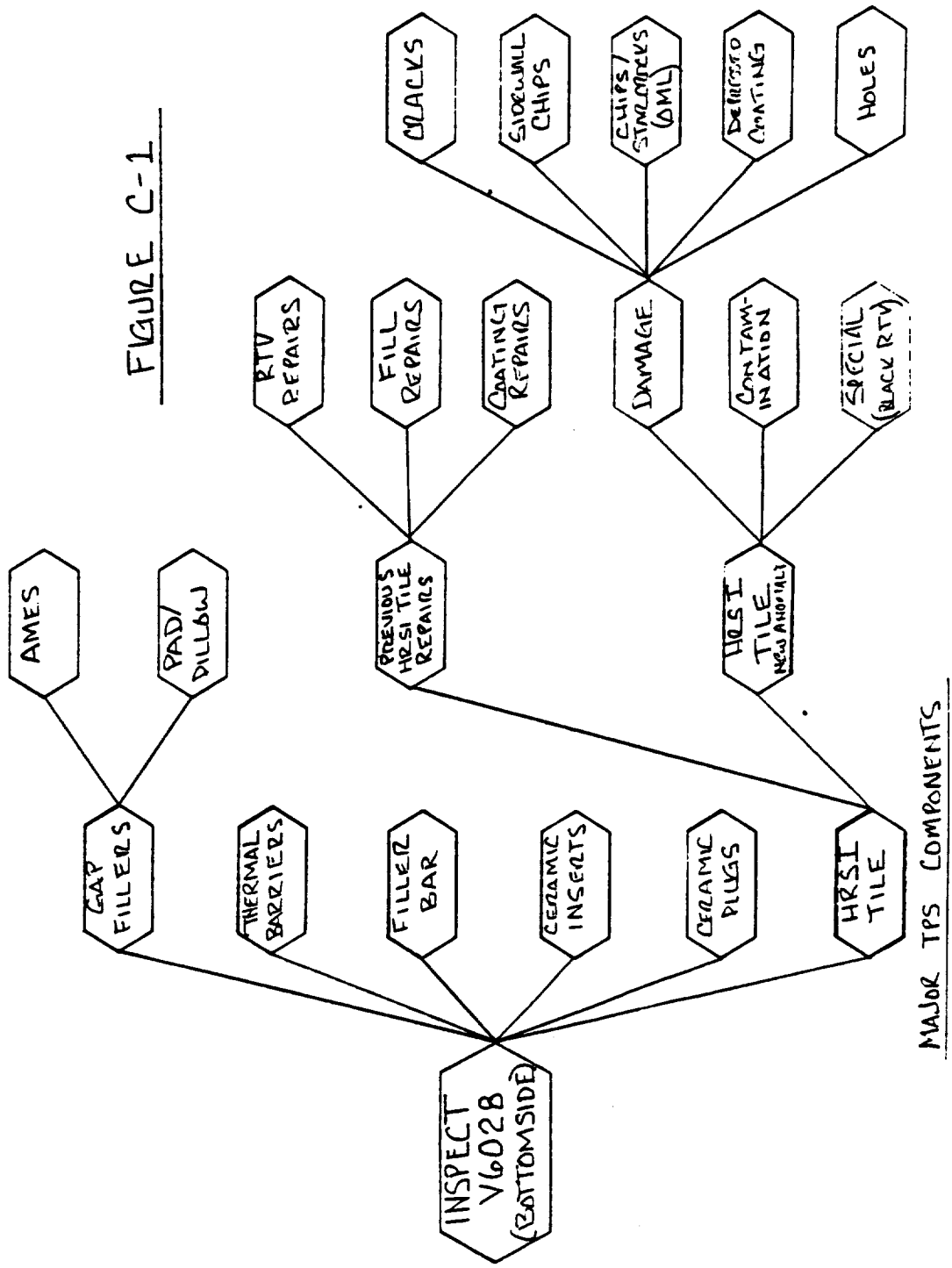

FIGURE C-1

ML0601-0002 TPS INSPECT CRITERIA
V6028 (BOTTOMSIDE) INSPECTION ANLT
CATEGORIZATION OF ANOMALIES

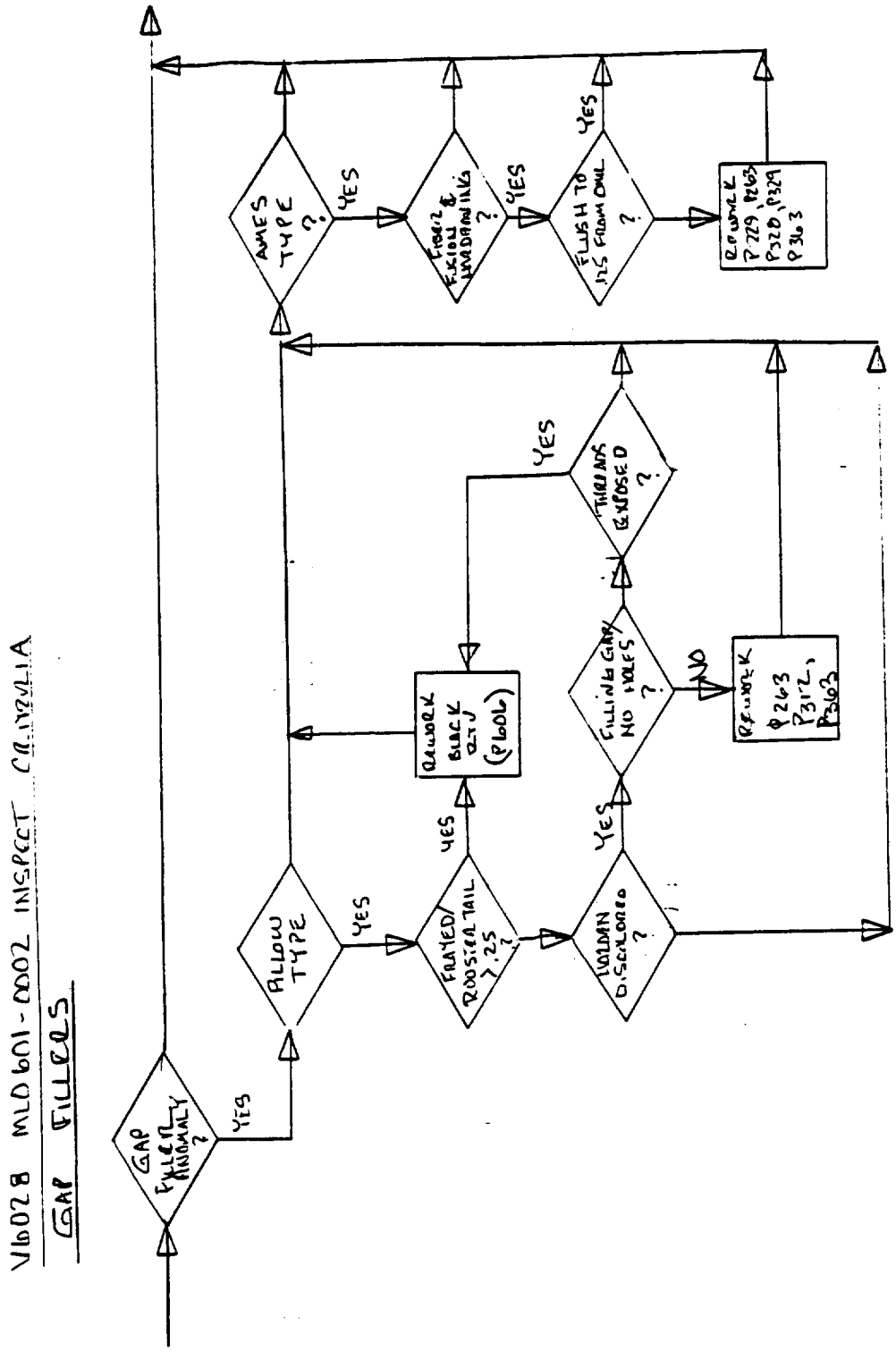
V16028 MLO601-0002 INSPECT CAVITY
GAP FILLERS
GAP FILLER ANOMALY ?
YES
ALLOW TYPE
YES
FRAYED/ ROOSTER TAIL >.25 ?
YES
REWORK BACK OUT (PLOL)
VOLCAN DISCLOSED ?
YES
FILLING GAP/ NO HOLES ?
NO
REWORK P263 P312, P363
THERMAL EXPOSED ?
YES
AMES TYPE ?
YES
FRAYED & EXCIBLE LOADING ?
YES
FLUSH TO ILS FROM OML ?
REWORK P229, P263 P320, P329 P363

FIGURE C-2

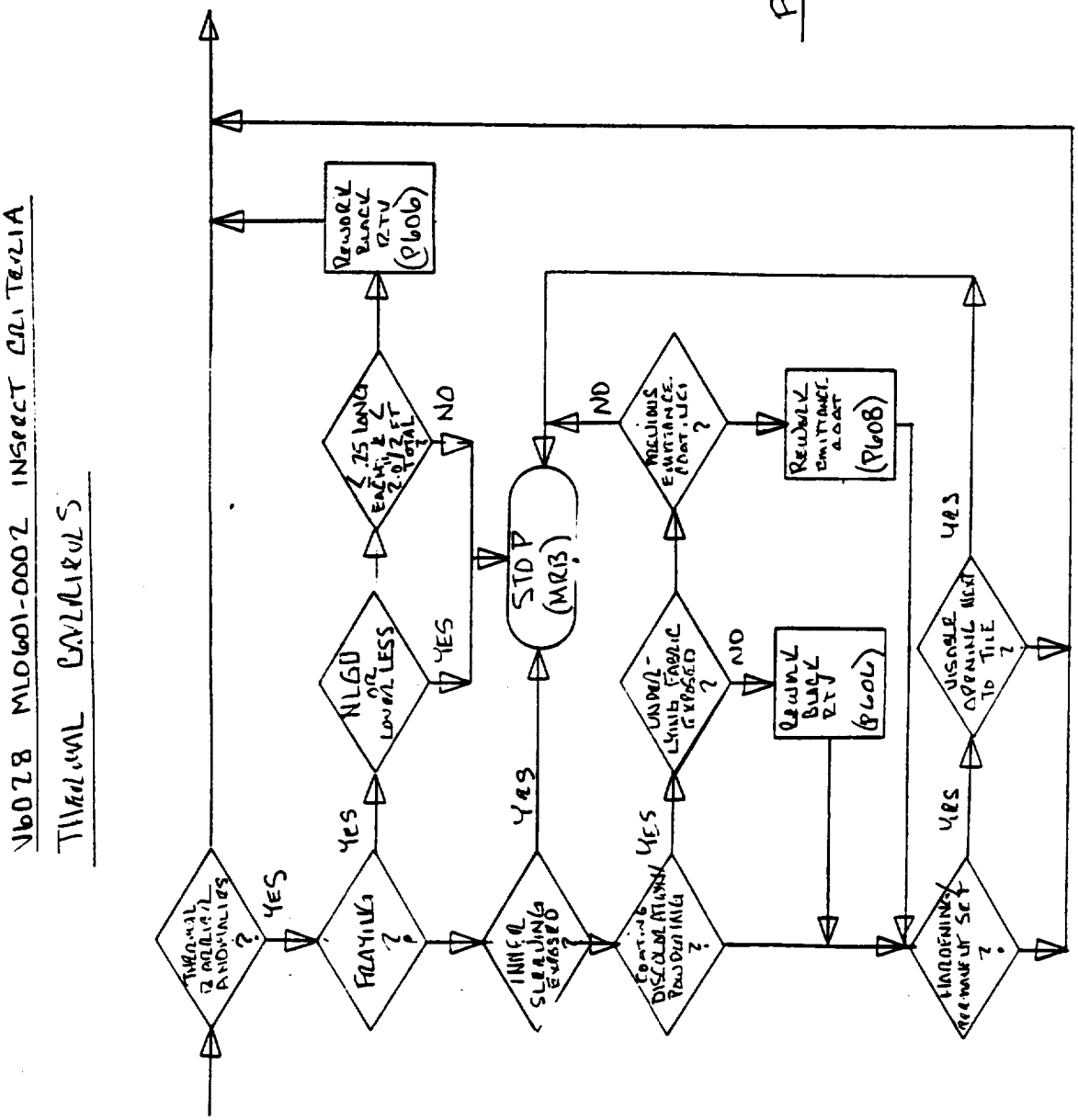
V6028 MLOG01-0002 INSPECT CRITERIA
THERMAL CAVALIERS
THERMAL CAVALIERS ANOMALIES ?
YES
FLAYING ?
YES
NLGD OR LONGER LESS
YES
.25 LONG EACH & 2 TOTAL ?
NO
REWORK BLACK RTV (P606)
THERMAL SLEEVING EXPOSED ?
YES
STOP (MRB)
CONTROL DISCOLORATION POWDERING ?
YES
UNDER-LIMIT FABRIC EXPOSED ?
NO
REWORK BLACK RTV (P601)
MELTING EMITTANCE FORM. UCI ?
NO
REWORK EMITTANCE COAT (P608)
LANDING GEAR WELL SET ?
YES
VISUALLY OPENING NEXT TO TILE ?
YES

FIGURE C-3

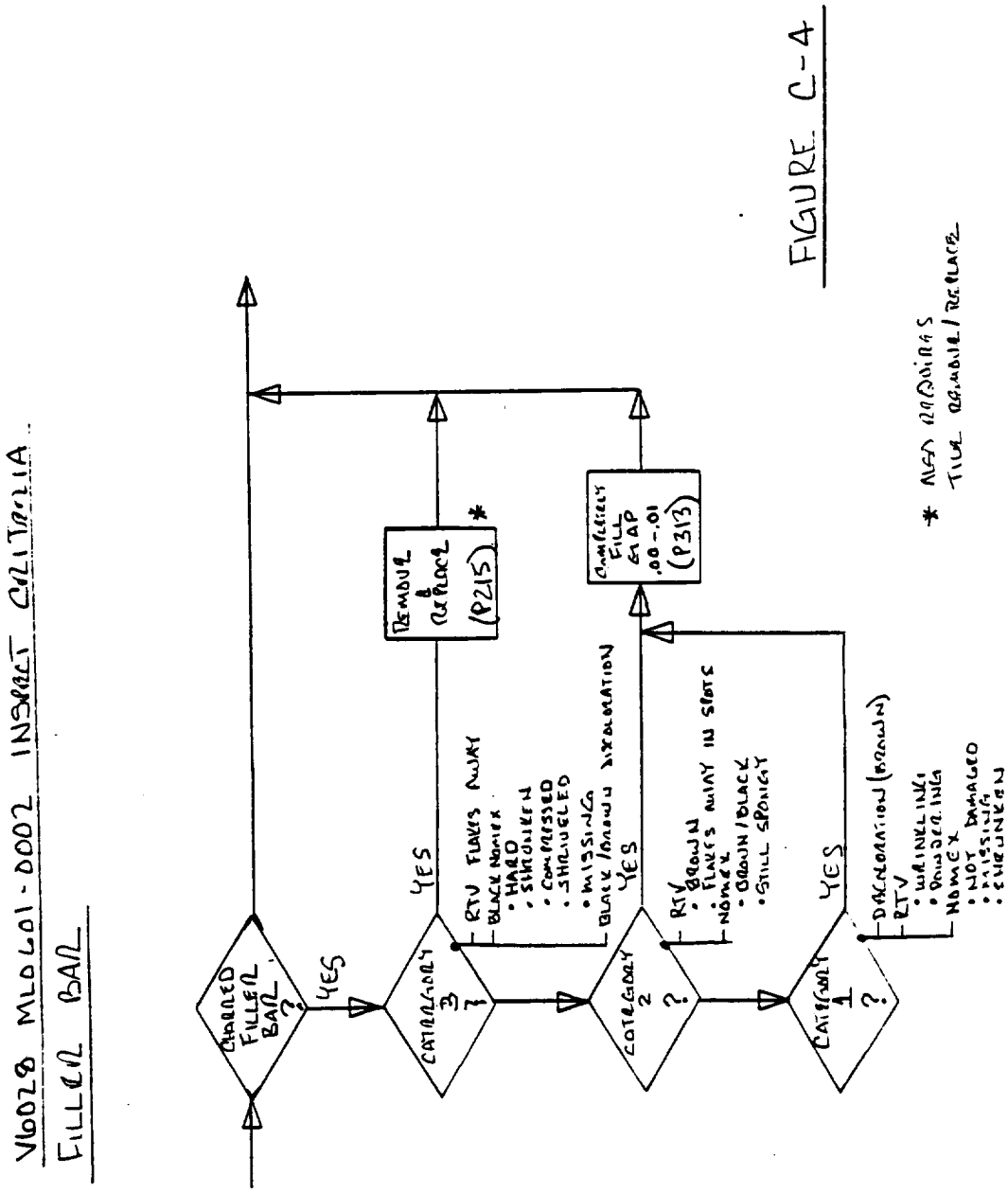
V6028 MLO601-0002 INSPECT CRITERIA
FILLER BAR
CHANGED FILLER BAR ?
YES
CATEGORY 3 ?
YES
REMOVE & REPLACE (P215) *
RTV FLAKES AWAY
BLACK NOMEX
• HARD
• SHRUNKEN
• COMPRESSED
• SHRIVELED
• MISSING
BLACK/BROWN DISCOLORATION
CATEGORY 2 ?
YES
CONFIRMED FILL GAP .00-.01 (P313)
RTV
• BROWN
• FLAKES AWAY IN SPOTS
NOMEX
• BROWN/BLACK
• STILL SPONGY
CATEGORY 1 ?
YES
DISCOLORATION (BROWN)
RTV
• WRINKLING
• POWDERING
NOMEX
• NOT DAMAGED
• MISSING
• SHRUNKEN
* NEED REPAIRING
TILE REMOVE / REPLACE

FIGURE C-4

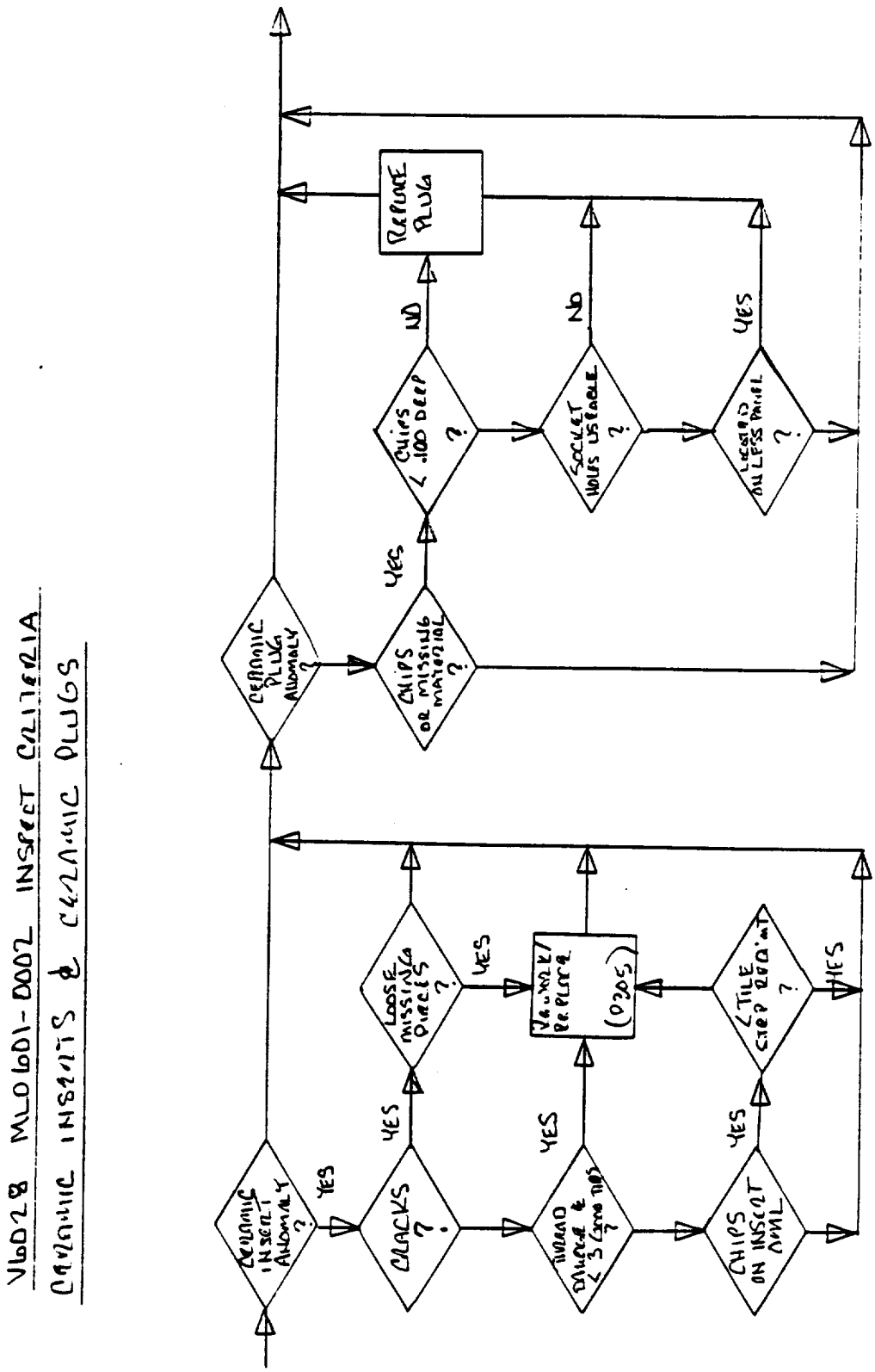
VL0028 MLO 601-0002 INSPECT CRITERIA
CERAMIC INSERTS & CERAMIC PLUGS
CERAMIC INSERT ANOMALY ?
YES
CRACKS ?
YES
LOOSE MISSING PIECES ?
YES
VACUUM/ REPLACE (0205)
YES
THERMO DAMAGE & < 3 (mm DIA) ?
YES
CHIPS ON INSERT ANML
YES
< TILE STEP REQ'MT ?
YES
CERAMIC PLUG ANOMALY ?
YES
CHIPS OR MISSING MATERIAL ?
YES
CHIPS < .100 DEEP ?
NO
REPLACE PLUG
SOCKET HOLES USEABLE ?
NO
LEGEND ALL LEFS PANEL ?
YES

FIGURE C-5

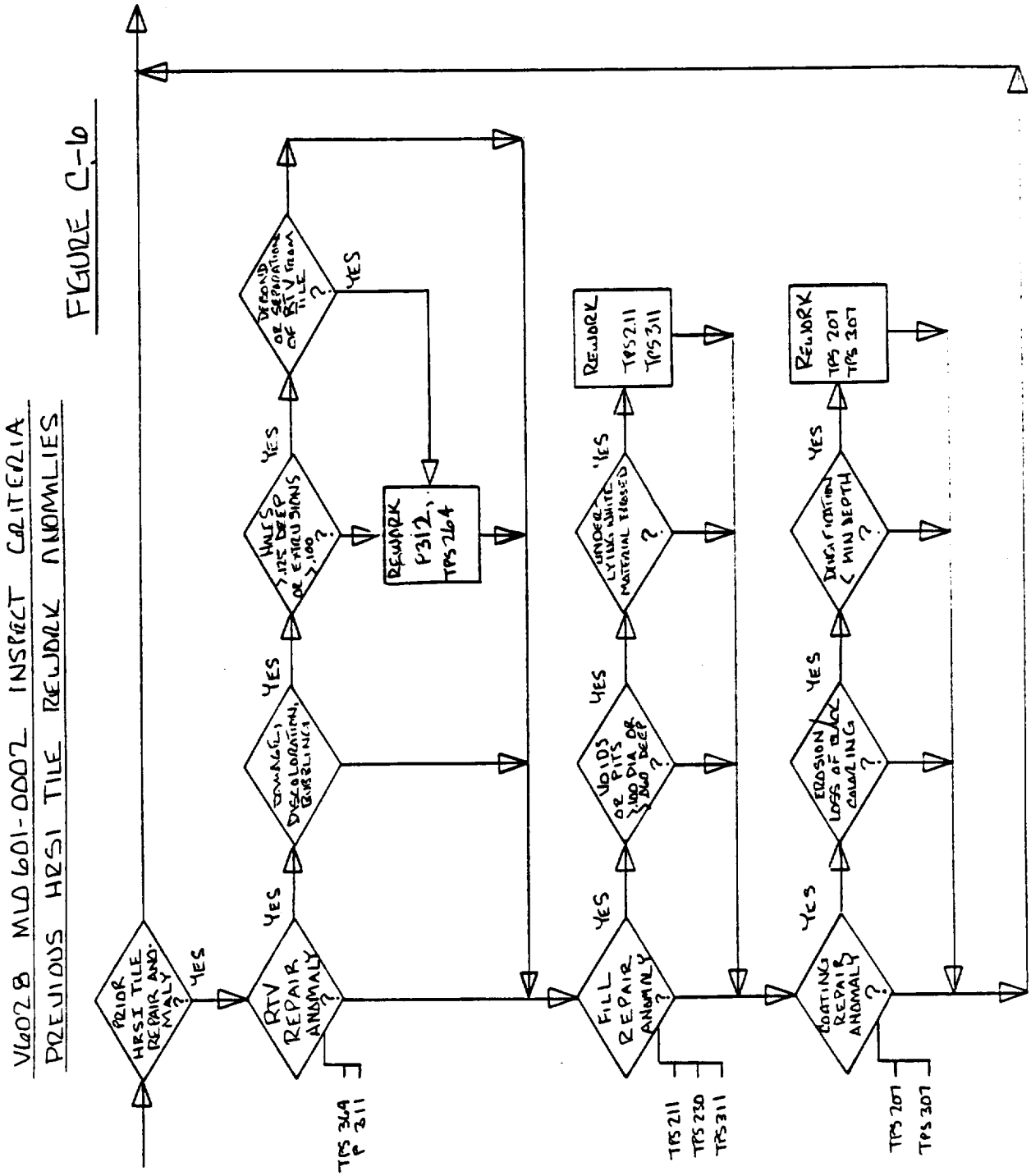
V6028 MLO601-0002 INSPECT CRITERIA
PREVIOUS HRSI TILE REWORK ANOMALIES
FIGURE C-6
PRIOR HRSI TILE REPAIR ANOMALY ?
YES
RTV REPAIR ANOMALY ?
TPS 349 P 311
YES
DAMAGE, DISCOLORATION, CRAZELINES
YES
HALF SP >.125 DEEP OR EXTENSIONS >.100 ?
YES
DEBOND OF SEPARATION OF RTV FROM TILE ?
YES
REWORK P312, TPS 264
FILL REPAIR ANOMALY ?
TPS 211 TPS 230 TPS 311
YES
VOIDS OR PITS >.100 DIA OR >.100 DEEP ?
YES
UNDER LYING WHITE MATERIAL EXPOSED ?
YES
REWORK TPS 211 TPS 311
COATING REPAIR ANOMALY ?
TPS 207 TPS 307
YES
EROSION LOSS OF BLACK COATING ?
YES
DEGRADATION < MIN DEPTH ?
YES
REWORK TPS 207 TPS 307

MLO 601-0002 INSPECTION CRITERIA

V6028 (BOTTOM SIDE) INSPECTION

NEW HRSI TILE ANOMALIES

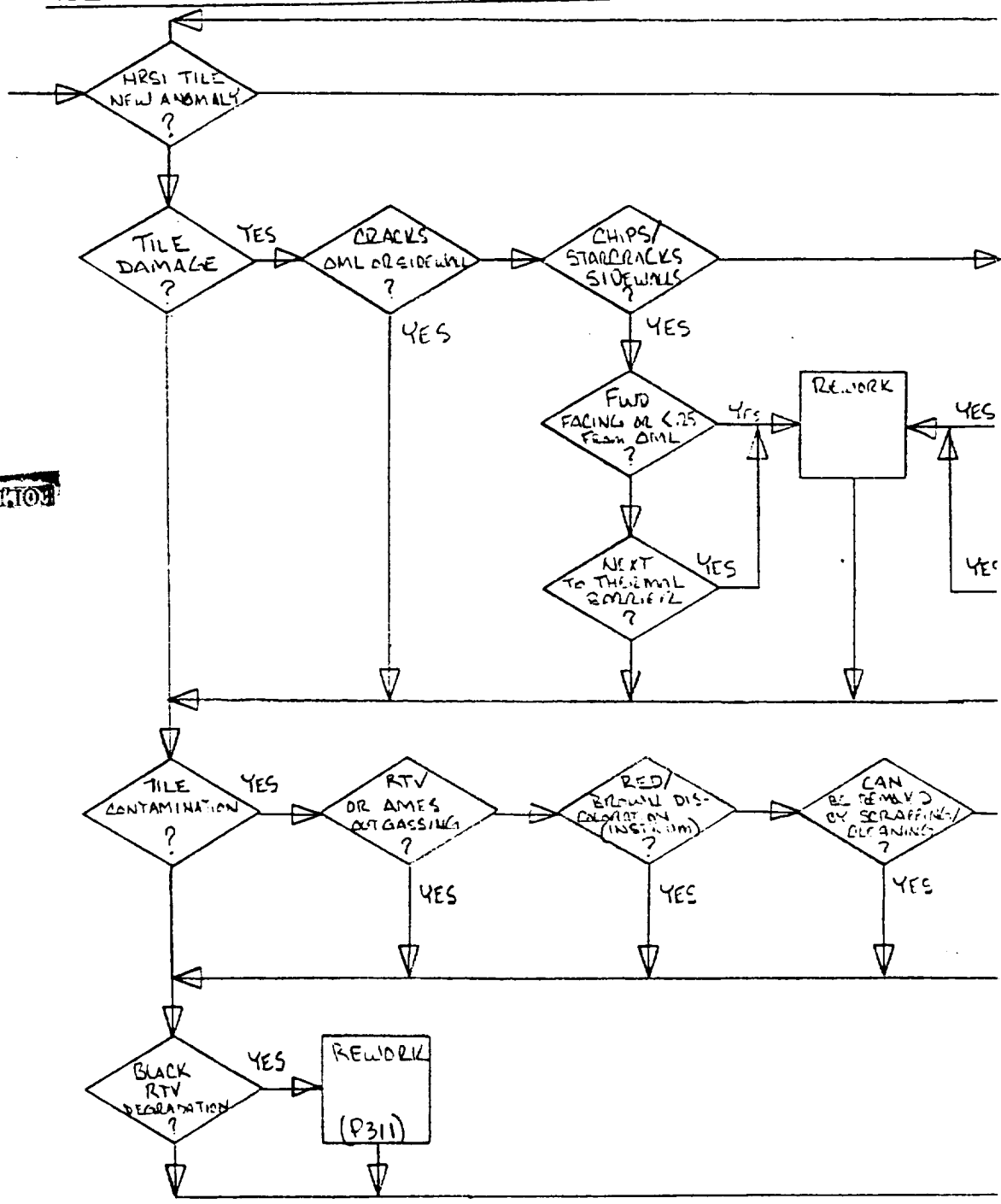

FOLDOUT FRAME

FOLDOUT FRAME

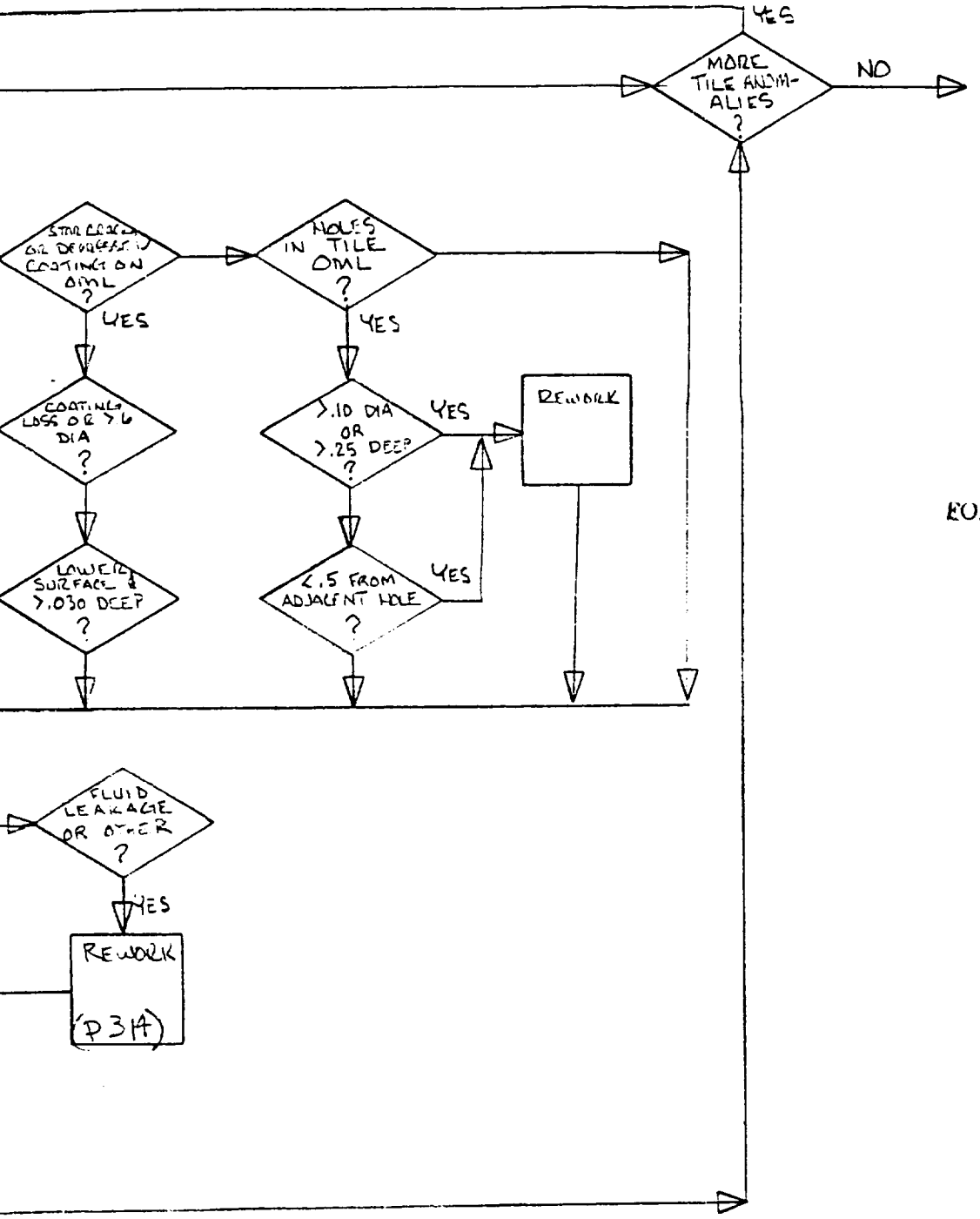

FOLDOUT FRAME

FIGURE C-7

PROCESS ML0601-9024 P300
TILE REMOVAL

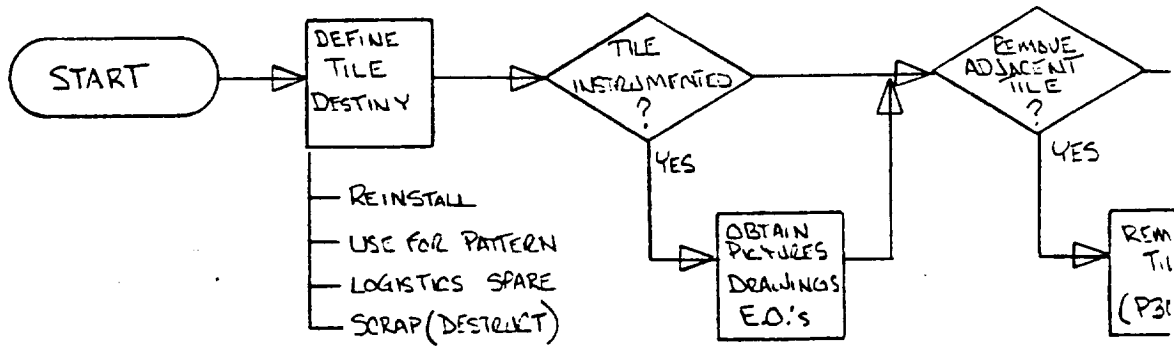

FOLDOUT FRAME

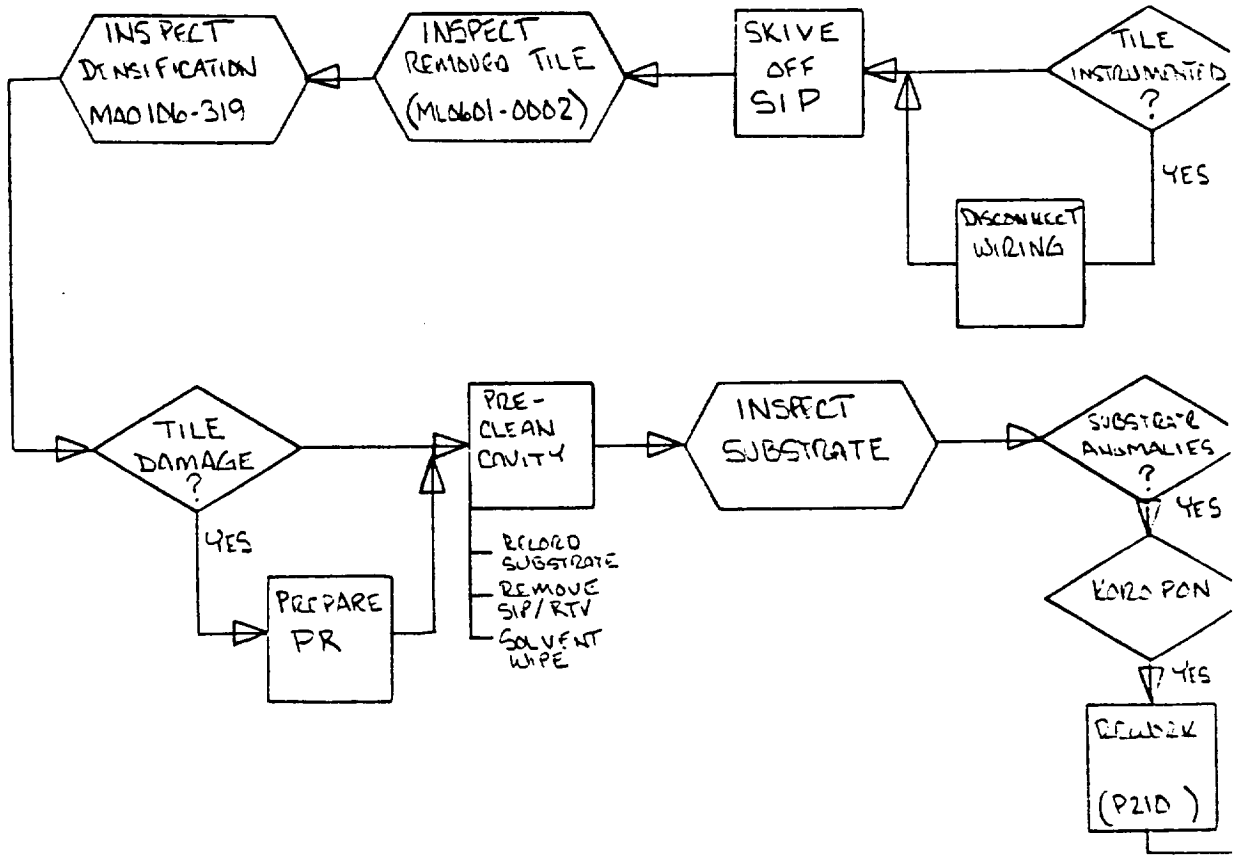

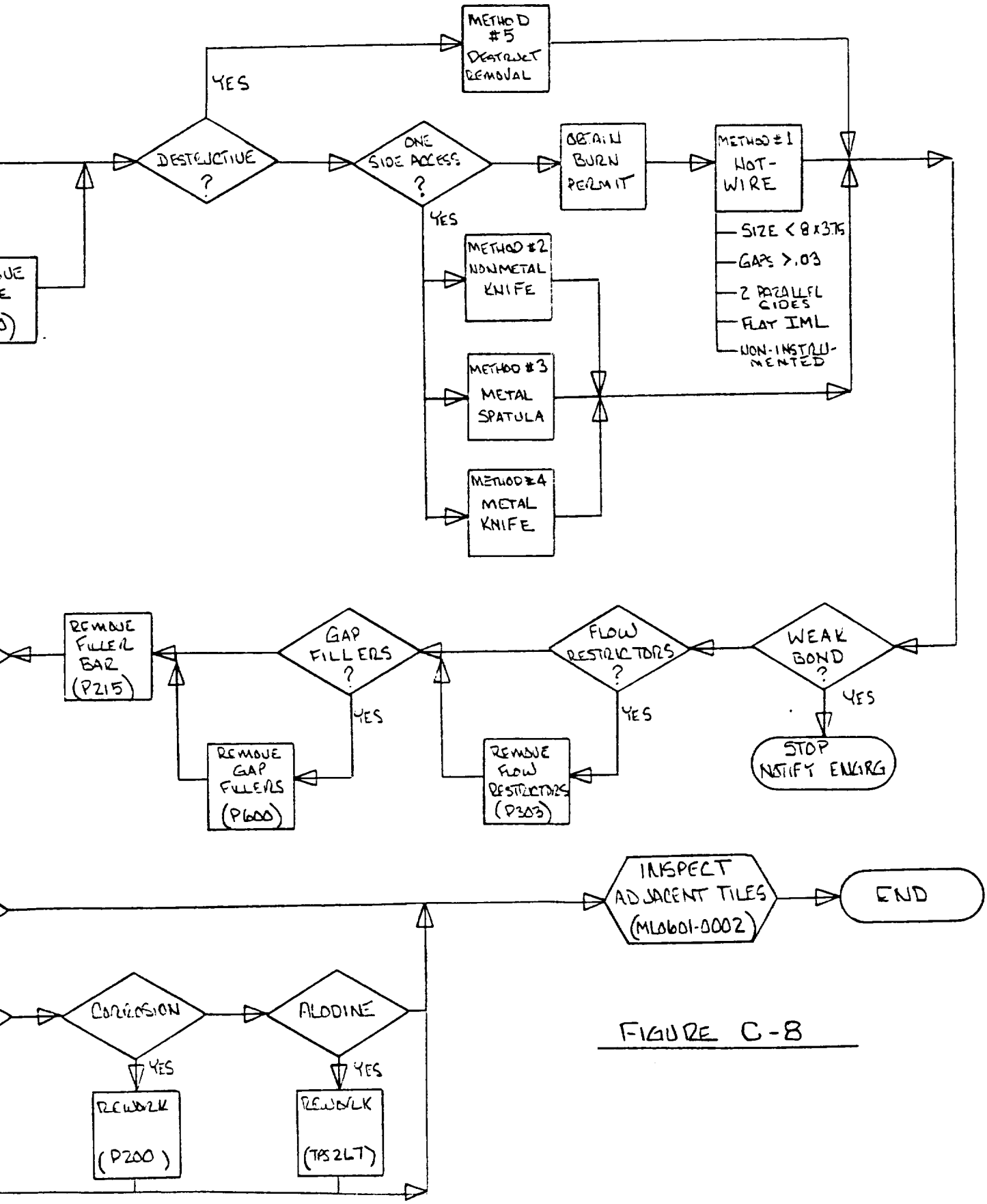
METHOD #5 DESTRUCT REMOVAL
YES
DESTRUCTIVE ?
ONE SIDE ACCESS ?
OBTAIN BURN PERMIT
METHOD #1 HOT-WIRE
SIZE < 8 x 3.75
GAPS > .03
2 PARALLEL SIDES
FLAT IML
NON-INSTRUMENTED
YES
METHOD #2 NONMETAL KNIFE
METHOD #3 METAL SPATULA
METHOD #4 METAL KNIFE
REMOVE FILLER BAR (P215)
GAP FILLERS ?
YES
REMOVE GAP FILLERS (P600)
FLOW RESTRICTORS ?
YES
REMOVE FLOW RESTRICTORS (P303)
WEAK BOND ?
YES
STOP NOTIFY ENGRG
INSPECT ADJACENT TILES (ML0601-0002)
END
CORROSION
YES
REWORK (P200)
ALODINE
YES
REWORK (TPS 2LT)

FIGURE C-8

PROCESS MLO 601-9024 P 301

TILE INSTALLATION

FOLDOUT FRAME

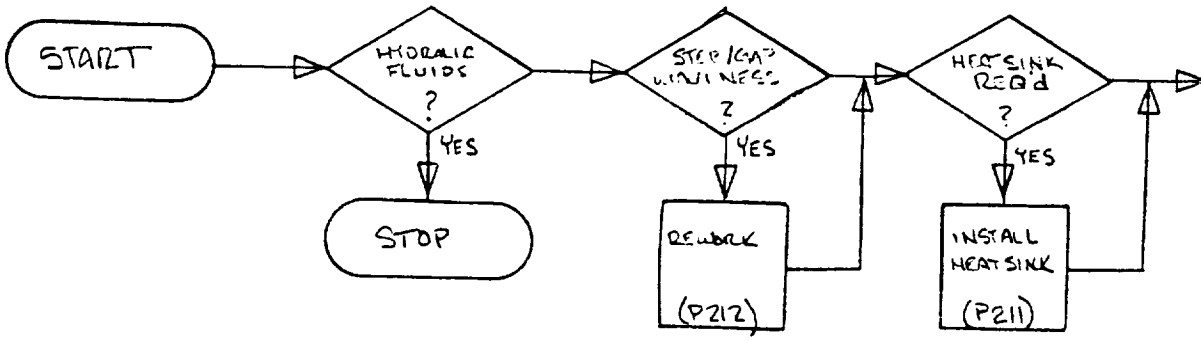

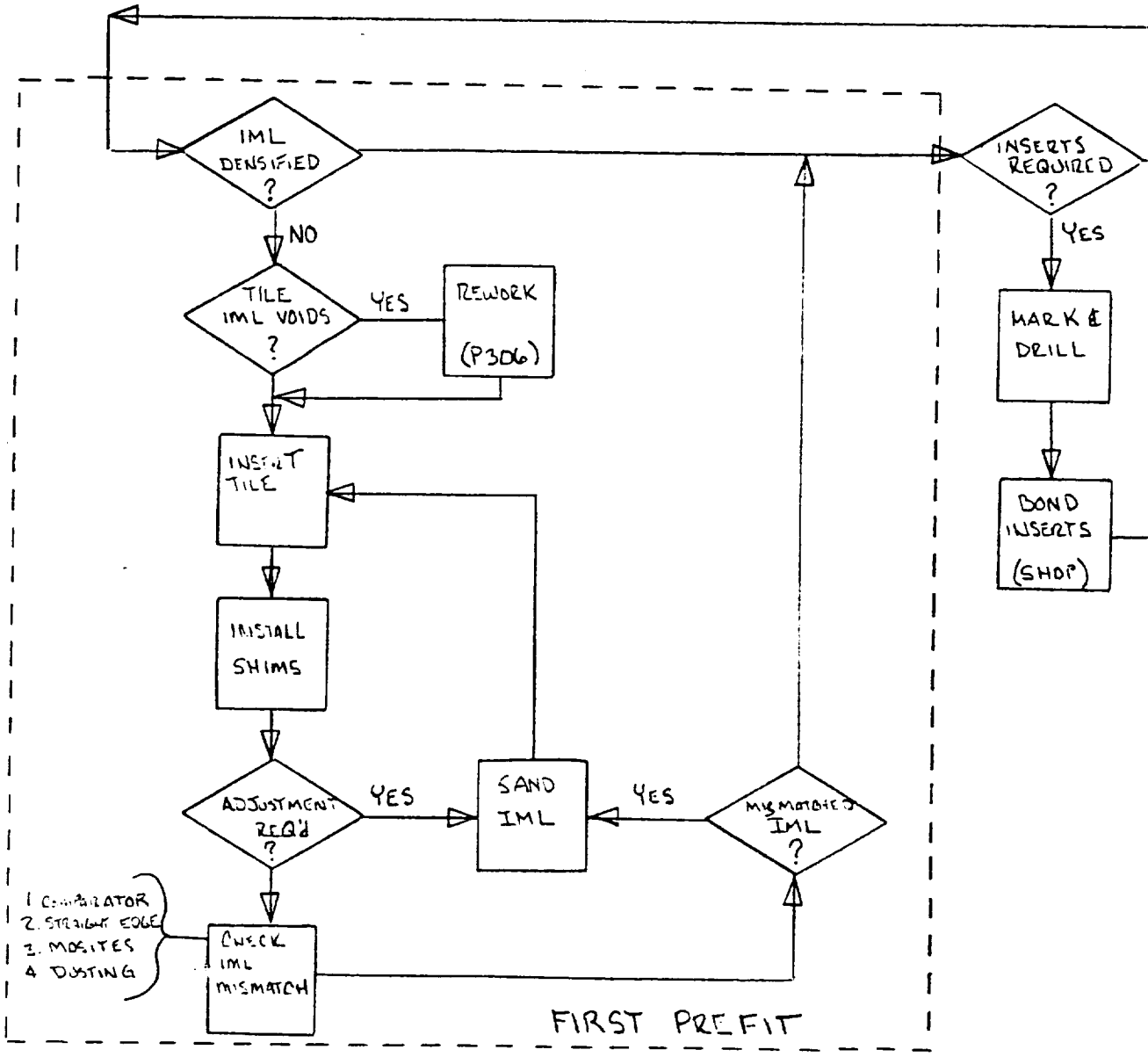

FOLDOUT FRAME

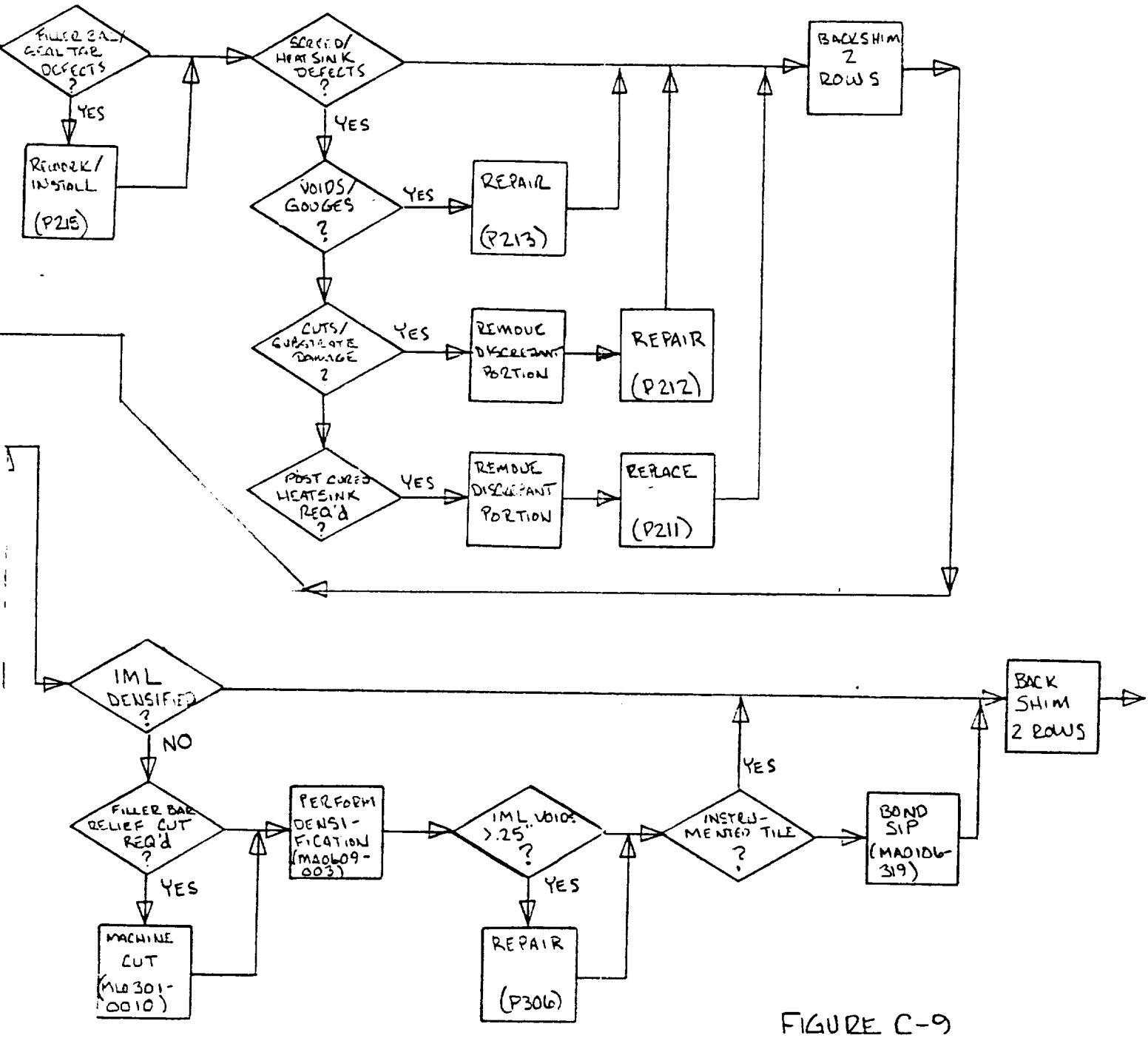

FIGURE C-9

FOLDOUT FRAME

PROCESS ML0601-9024 P 301

TILE INSTALLATION (CONTINUED)

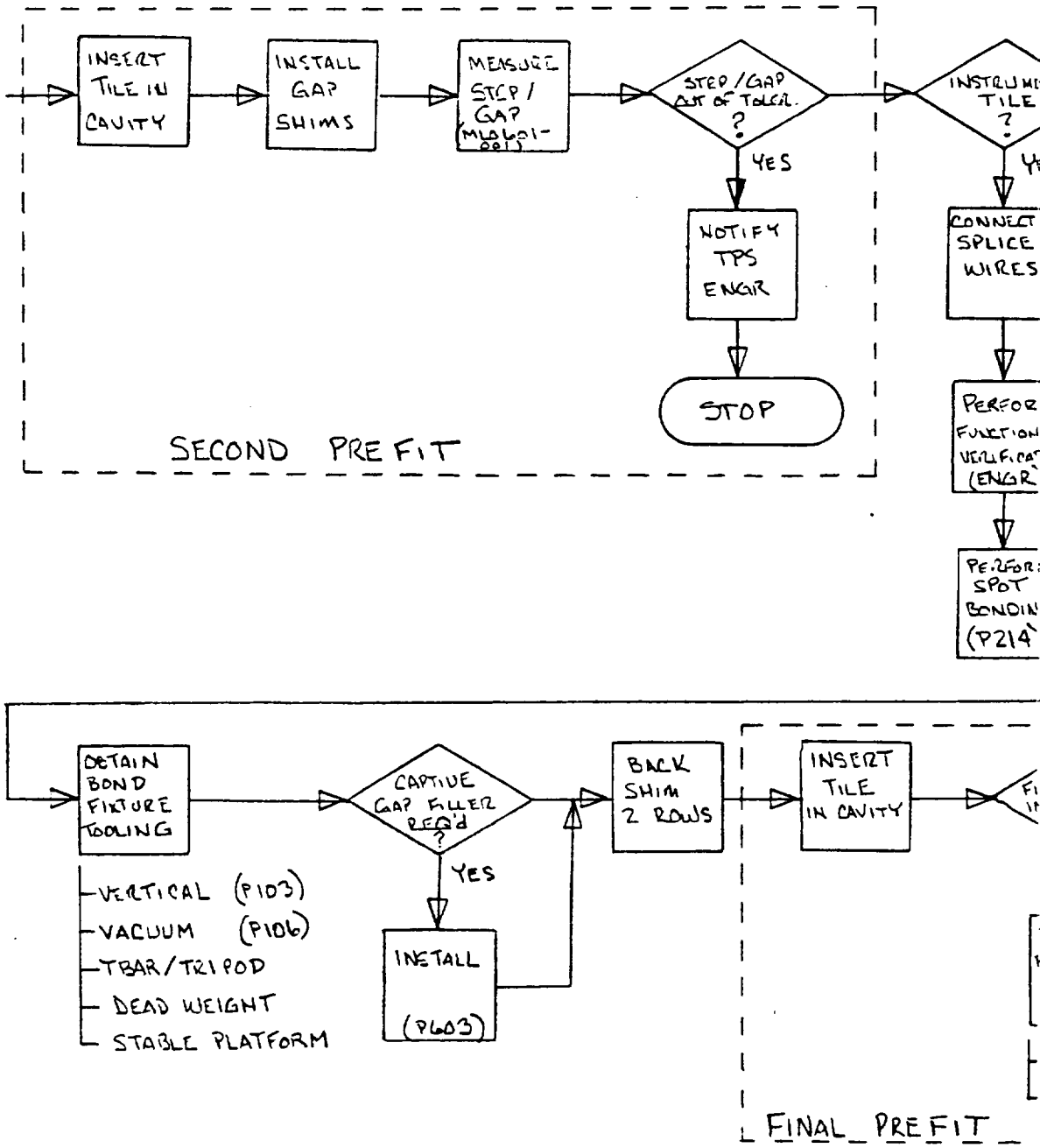

FOLDOUT FRAME

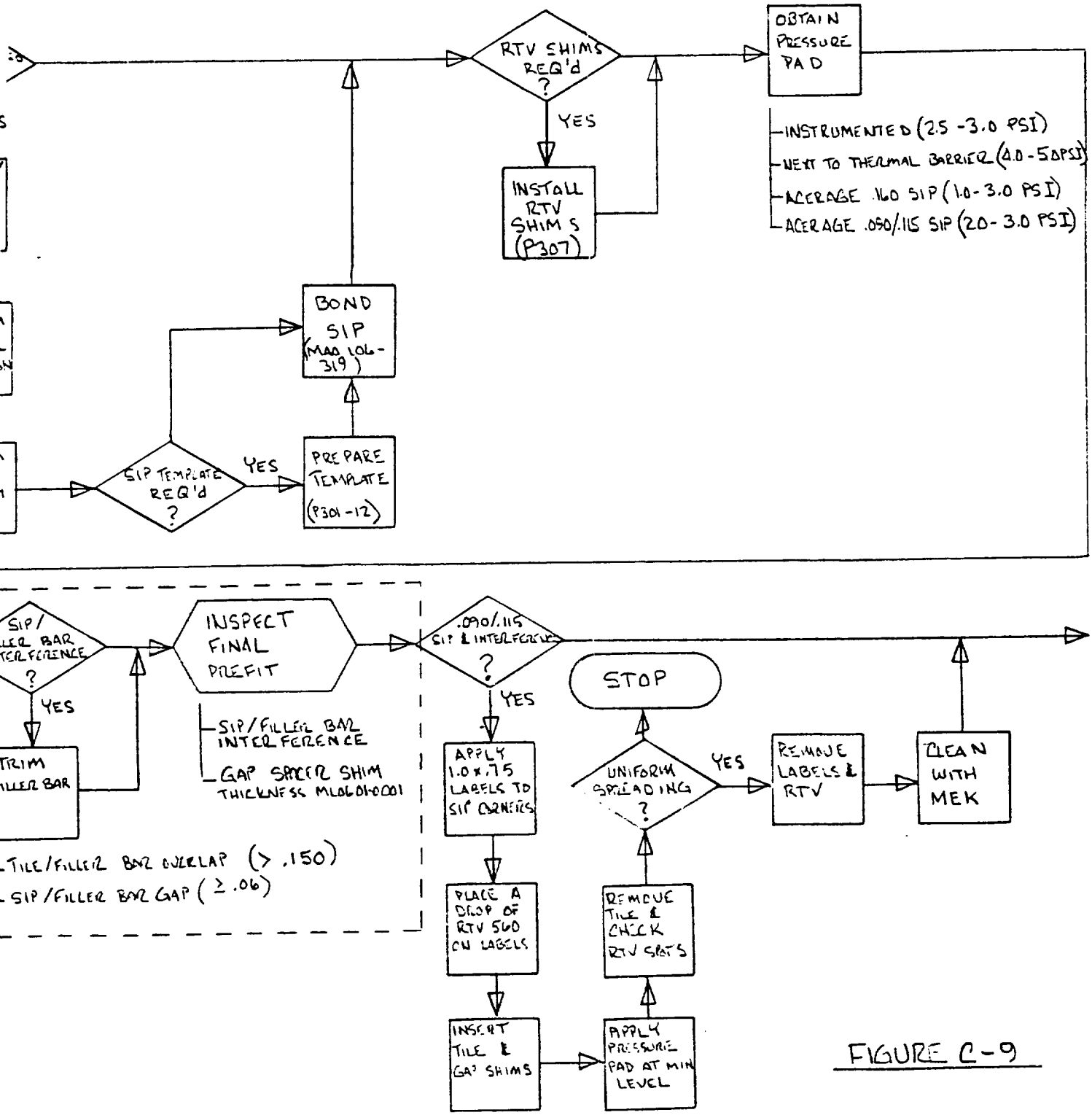

FIGURE C-9

PROCESS PROCEDURE ML0601-9024 P301

TILE INSTALLATION (CONTINUED)

FOLDOUT FRAME

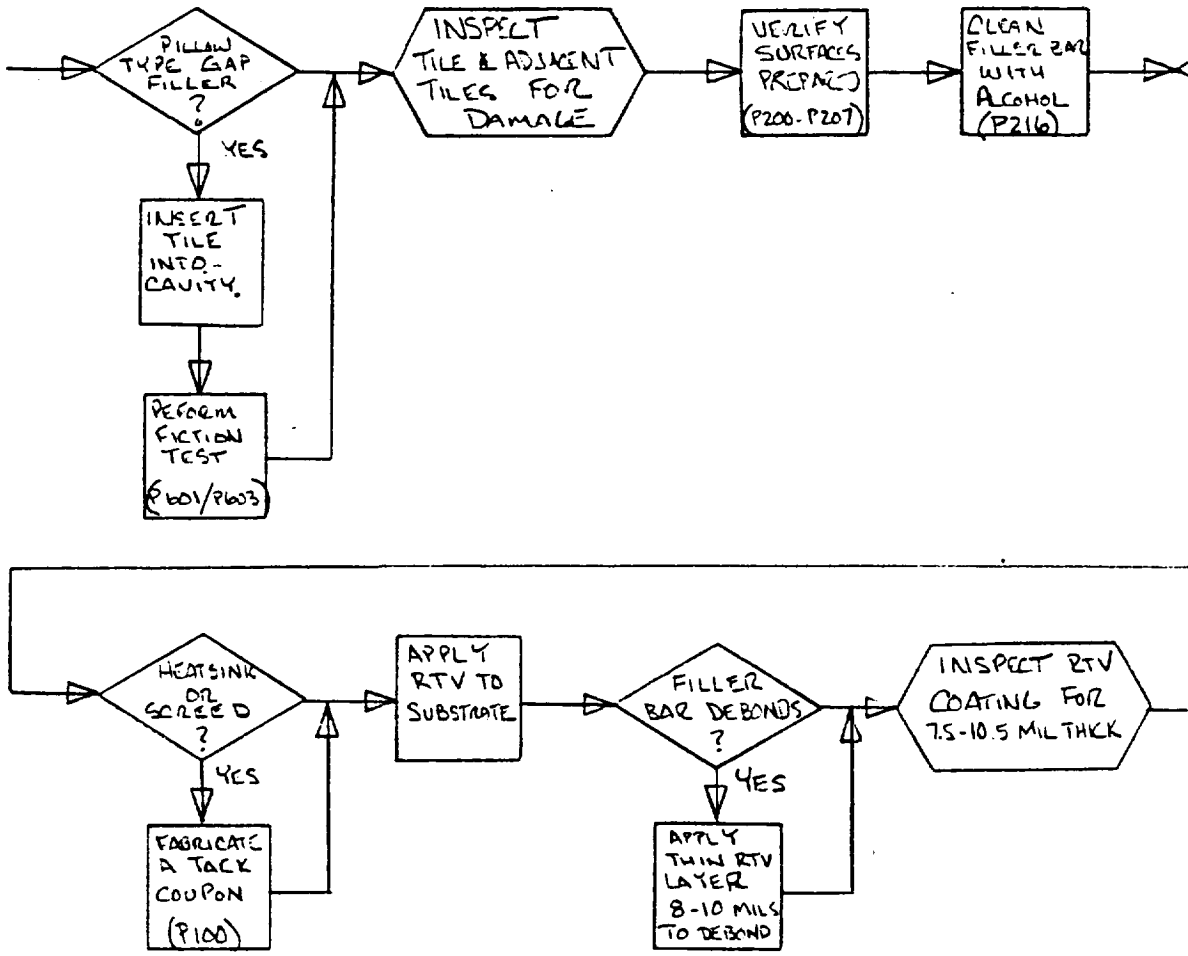

FOLDOUT FRAME

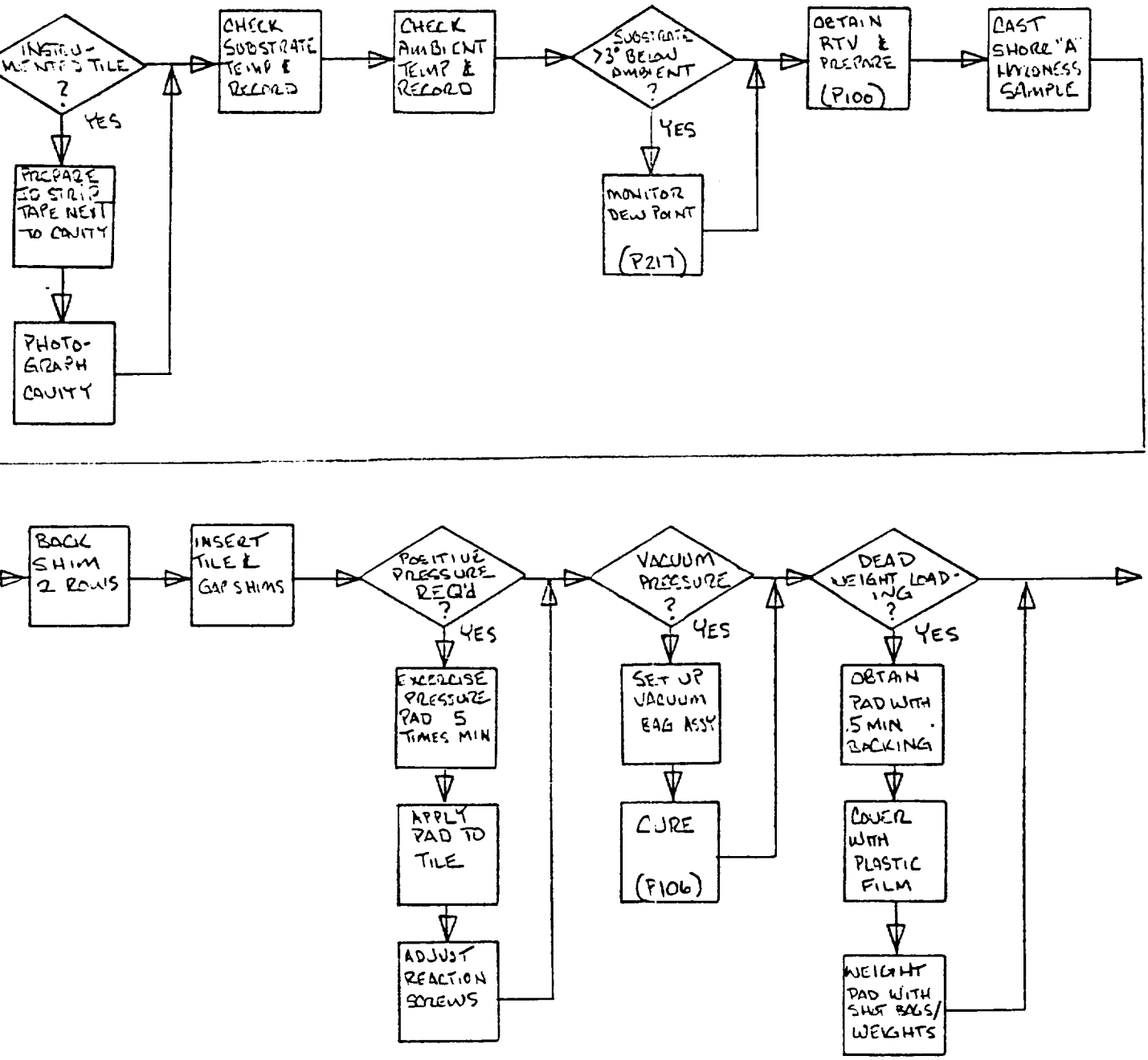

FIGURE C-9

PROCESS PROCEDURE MLO601-9024 P301

TILE INSTALLATION (CONTINUED)

FOLDOUT FRAME

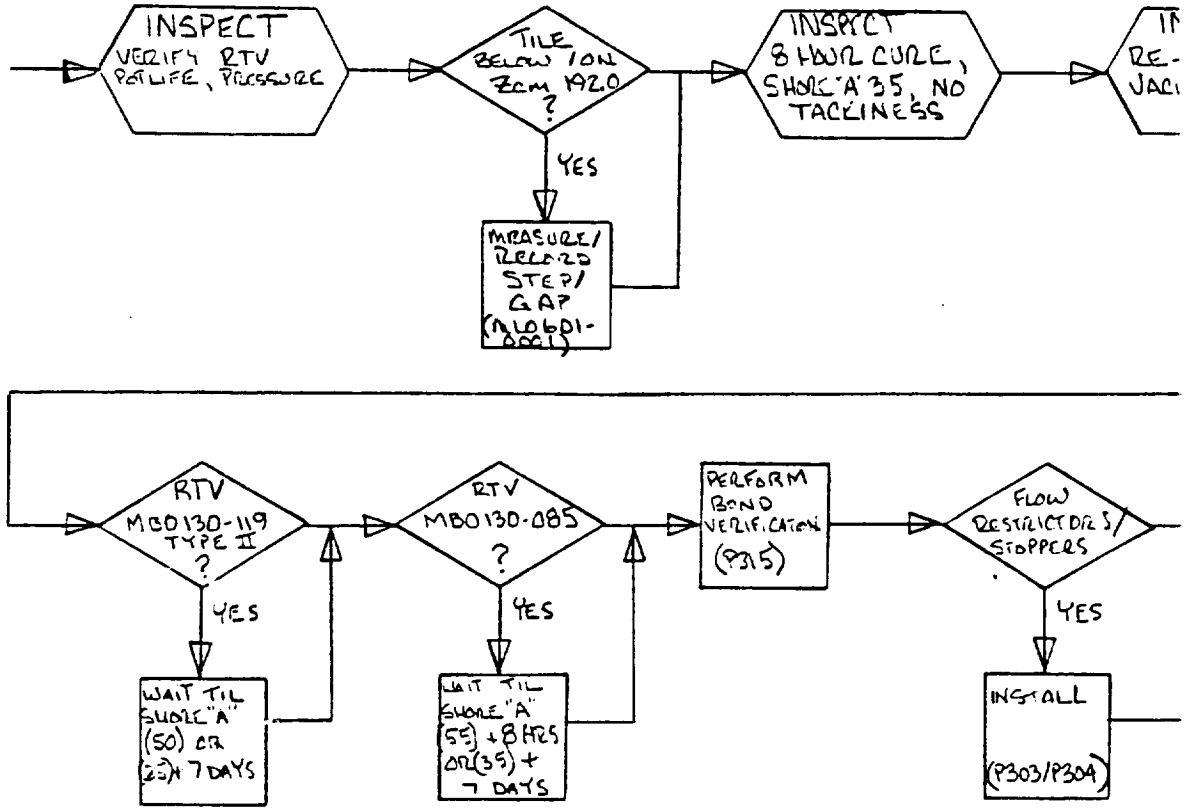

FOLDOUT FRAME

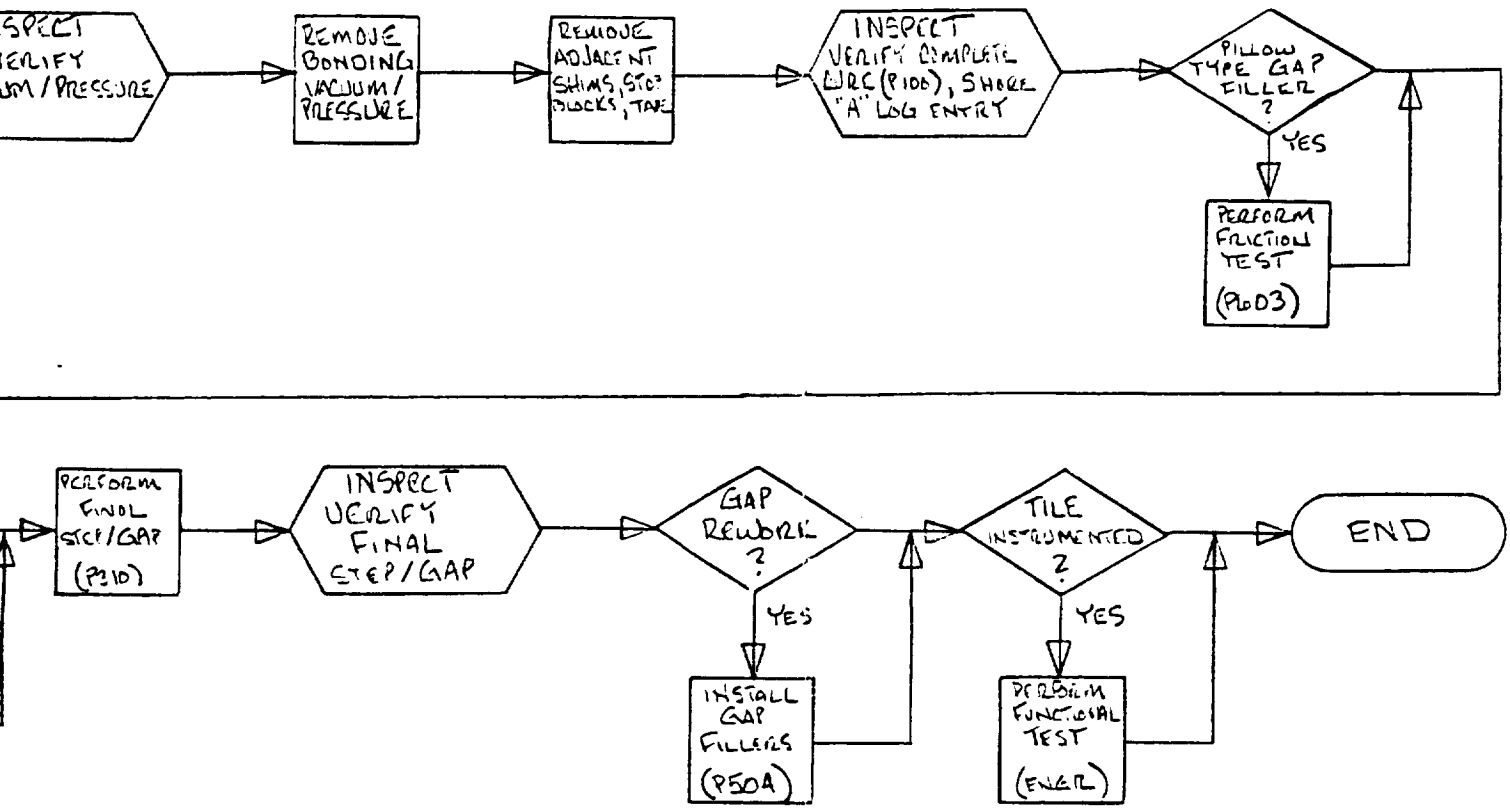

FIGURE C-9

Appendix "D"

Drawings and Models

The following list details the drawings and models which were used as part of the TPS Study:

79K08118	OPF High Bay Two
79K05459	Orbiter Mating Device (Edwards Air Force Base)
79K08112	Orbiter Mate Demate Device (Kennedy Space Center)
BCD V70-900-30-01	Tile Identification Diagram Lower Fuselage
BCD V70-900-30-02	Tile Identification Diagram Lower Left Hand Wing
BCD V70-900-30-03	Tile Identification Diagram Deleted
BCD V70-900-30-04	Tile Identification Diagram Lower Right Hand Wing
BCD V70-900-30-05	Tile Identification Diagram Upper Fuselage
BCD V70-900-30-06	Tile Identification Diagram Upper Left Hand Wing
BCD V70-900-30-07	Tile Identification Diagram Upper Right Hand Wing
BCD V70-900-30-08	Tile Identification Diagram Left Hand Side Fuselage
BCD V70-900-30-09	Tile Identification Diagram Right Hand Side Complete
BCD V70-900-30-10	Tile Identification Diagram Vertical Stabilizer
BCD V70-900-30-11	Tile Identification Diagram Aft Heat Sheild Oms Pod And RCS
Model One	Three Dimensional Solid Model Of Orbiter located on KSC Intergraph system
Model Two	Three Dimensional Solid Model of OPF Platforms 1,2,4 and 8 located on KSC Intergraph System

APPENDIX E

Process Review Questionaire

I. Background and Driving Specifications/Requirements for the operation

1) Why is it done?
2) Is the operation driven by random events?
3) Can it be eliminated?
4) Can it be simplified?
5) Can it be automated?
6) Can it be combined with another operation?
7) Can it be accomplished using another technique?
8) Can it be performed by another working group?
9) Can it be performed in a different facility?
10) Can it be performed by more than one operator at a time?
11) When is it done?
12) Does it have to be coordinated with other operations?
13) How many times is it performed?
    a) per flow
    b) Does historical data exist for actual operations performed? If so, where is it?
14) Is there a time standard for the operation? (nominal execution time)
    a) What is it?
    b) How was it derived?
        allowances
        overhead
        other ...
15) Can the operation result in reject(s)?
    a) How much waste is produced?
        material, time, ...
    a) Do parts need to be reworked?
    c) Do additional operations result?
        (e.g. damage to surrounding tiles)

II. Design

1) What are the tolerances?
    a) Are they too strict?
    b) How are they verified?
    c) 100% or AQL? (i.e. partial sample)
2) What materials are used?
3) What finishes are specified?
    a) hardness
    b) reflectivity
    c) texture
    d) cure time, number of coats, ...
    e) other ...
4) What are the requirements for form/shape/symmetry?

5) What features are specified?
   a) holes
   b) edges
   c) other ...
6) How are parts identified?

III. Materials

1) What materials are currently used for each operation?
2) How expensive are they?
3) How easily are they processed?
   a) machinability
   b) hardness
4) How much waste is produced?
   a) How is it produced?
   b) Can it be reduced?
   c) Can it be salvaged or recycled?
5) Can they be standardized?

IV. Operation Flow

1) Is it a sequential operation?
2) What is the operation flow?
   a) set up
   b) calibrations
   c) tile identification
   d) task execution
   e) data recording
   f) data analysis
3) Are there any future plans for this operation?
4) Can operations/subprocesses be rearranged?
5) Can operations/subprocesses be combined?
6) Can more than one item be processed simultaneously?
7) Can manual operations be automated?

V. Equipment/Setup/Materials Requirements

1) What equipment is currently used/available? (during operation)
   a) workstands, scaffolds, fixtures, ...
   b) computers
   c) general tools
   d) special purpose tools
   e) machines
   f) unique technician wardrobe(s)
   g) multiple equipment users (e.g. time delays)
   h) part and personnel positioning

2) How is current equipment used?
    a) required training/certification
    b) portability
3) How is current equipment maintained?
    a) repairs
    b) preventative maintenance
4) Why is the current equipment being used?
    a) background
    b) accuracy requirements
    c) capacity
5) Is new equipment being developed?
    a) initiating organization(s)
    b) driving requirements and specifications
    c) developmental timeline
6) What equipment setup requirements exist for each operation?
    a) tools, gages, workstands, ...
    b) instructions/authorizing document
    c) drawings
    d) materials
7) Are computers required?
    a) security/login procedures
    b) training
    c) availability
    d) user friendliness
    e) data entry
    f) data integrity
    g) computations
    h) outputs
        error reports
        operation reports
        labels
        other ...
8) What materials are required?
9) When are materials required?
10) How much material is required?
11) Where are materials required?
12) How are materials distributed?
    a) handling costs
    b) unit size
    c) storage
        shelf life
        method
        unit size
        special requirements
        other ...

VI. Working Conditions

1) lighting
2) temperature
3) humidity
4) ventilation
   a) cleanliness
   b) toxic gasses
   c) toxic liquids
      hypergolic fuels
      cleaners
5) acoustics
6) cleanliness/neatness

VII. Environmental Requirements & Constraints

1) Where is the operation performed?
2) Why is the operation performed where it is?
3) Are there plans to change the operation location?
4) What are the environmental/facility requirements?
5) Why do the environmental requirements exist?
6) Are the environmental/facility requirements subject to change?
7) What are the interfacility requirements/relationships?
8) What is the current configuration?
   a) Is it optimal?
   b) Would a change improve productivity?
   c) Where are facility services located?
      air, water, computer LAN, power, ...
   d) Is there any facility designated hardware for a operation?
      fixed, moveable, ...

VII. Safety, Reliability & Quality

1) Is there an associated confidence level?
2) What Hazards are present?
   a) electrical
   b) lighting
   c) hypergolic fuels
   d) others ...
3) Are there any safety requirements?
   a) background information
   b) changing requirements
4) Approvals to perform operation?
5) Inspections performed on work accomplished?

VIII. Personnel Requirements

1) Who performs the operation?
2) Why do the current people perform the operation?
3) What level of personnel training is required?
4) Human fatigue
5) Physical Requirements
   a) Dexterity
   b) Required reach
6) Special clothing
7) Typing skills required

IX. Motion economy

1) Does operation require long reaches?
2) Does operation require overhead work?
3) Is operation optimized to use both hands?
4) Is operation optimized to perform greatest number of tasks from one physical position or location?
5) Is operation optimized for fewest motions per hand?
6) Are holding fixtures required?

APPENDIX F - Photo/Video References

Photo References

The following photographs were used during the course of the system study to better understand those aspects of TPS processing the team was unable to personally observe.

Photo No.	Description
KSC-90C-614	STS-31 Post Landing. ET Door Thermal Barrier
KSC-90C-615	STS-31 Post Landing. ET Door Thermal Barrier
KSC-90C-616	STS-31 Post Landing. ET Door Thermal Barrier
KSC-90C-617	STS-31 Post Landing. ET Door Thermal Barrier
KSC-90C-618	STS-31 Post Landing. ET Door Thermal Barrier
KSC-90C-619	STS-31 Post Landing. ET Door Thermal Barrier
KSC-90C-620	STS-31 Post Landing. ET Door Thermal Barrier
KSC-90C-621	STS-31 Post Landing. ET Door Thermal Barrier
KSC-90C-622	STS-31 Post Landing. ET Door Thermal Barrier
KSC-90C-623	STS-31 Post Landing. ET Door Thermal Barrier
KSC-90C-624	STS-31 Post Landing. ET Door Thermal Barrier
KSC-90C-625	STS-31 Post Landing. ET Door Thermal Barrier
KSC-90C-626	STS-31 Post Landing. ET Door Thermal Barrier
KSC-90C-636	STS-31 Post Landing. RH RCC Panel # 5
KSC-90C-637	STS-31 Post Landing. RH RCC Panel # 4
KSC-90C-638	STS-31 Post Landing. LH RCC Panel # 5
KSC-90C-657	STS-31 Post Landing. Tile OML Contamination
KSC-90C-658	STS-31 Post Landing. Tile Impact Damage
KSC-90C-659	STS-31 Post Landing. RH ET Door Debris
KSC-90C-660	STS-31 Post Landing. RH ET Door Debris
KSC-90C-661	STS-31 Post Landing. RH ET Door Debris
KSC-90C-662	STS-31 Post Landing. RH ET Door Debris
KSC-90C-663	STS-31 Post Landing. LH Wing RCC
KSC-90C-664	STS-31 Post Landing. Tile Impact Damage
KSC-90C-689	STS-31 Post Landing. Loose FIB above LH Startracker Door
KSC-90C-690	STS-31 Post Landing. Broken Tile on LH Startracker Door
KSC-90C-691	STS-31 Post Landing. Around the Clock - Left Side
KSC-90C-692	STS-31 Post Landing. Around the Clock - Front Side

KSC-90C-693	STS-31 Post Landing. Around the Clock - Right Side
KSC-90C-694	STS-31 Post Landing. Around the Clock - Back Side
KSC-90C-127	STS-32 Post Landing. Dryden MDD - West Side
KSC-90C-128	STS-32 Post Landing. Dryden MDD - West Side
KSC-90C-130	STS-32 Post Landing. Dryden MDD - Elevon Attach Fitting
KSC-90C-131	STS-32 Post Landing. Dryden MDD - Upper Body Flap
KSC-90C-137	STS-32 Post Landing. Dryden MDD - LH OMS Pod
KSC-90C-138	STS-32 Post Landing. Dryden MDD - RH OMS Pod
KSC-90C-139	STS-32 Post Landing. Dryden MDD - RH OMS Pod
KSC-90C-141	STS-32 Post Landing. Dryden MDD - RH Elevon
KSC-90C-142	STS-32 Post Landing. Dryden MDD - Body Flap
KSC-90C-143	STS-32 Post Landing. Dryden MDD - East Side
KSC-90C-144	STS-32 Post Landing. Dryden MDD - SSME Purge
KSC-90C-145	STS-32 Post Landing, Dryden MDD - Forward from NLG
KSC-90C-146	STS-32 Post Landing. Dryden MDD - Looking Aft from MID
KSC-90C-147	STS-32 Post Landing. Dryden MDD - East Side
KSC-90C-148	STS-32 Post Landing. Dryden MDD - East Side Closeup
KSC-90C-149	STS-32 Post Landing, Dryden MDD - Looking Aft from Nose
KSC-90C-155	STS-32 Post Landing. Dryden MDD - Access to Nose Cap
KSC-90C-157	STS-32 Post Landing. Dryden MDD - RH FRCS
KSC-90C-168	STS-32 Post Landing. Dryden MDD - Forward Overall
KSC-87PC-61	OV-103 Nose Landing Gear Door Work in OPF
KSC-81PC-664	Orbiter in Tow From OPF to VAB
KSC-84PC-97	OV-099 on Runway at KSC
KSC-81PC-436	OV-102 In Tow on Runway
KSC-89PC-956	OV-103 On Orbiter Transporter enroute to the VAB
KSC-82PC-1237	OV-102 on Launch Pad 39A
KSC-82PC-1331	OV-102 being towed into the OPF
KSC-87PC-59	Tile Work on OV-103 in OPF
KSC-82PC-403	OV-102 on 747 during Ferry Flight
KSC-82PC-405	KSC MDD - OV-102

Video References

The following videos were created and/or used during the course of the system study.

Description	Length
Silma Cimstation Graphical Simulation of Tile Processing Robot prepared by Boeing	3 minutes
ROBOCAD Graphical Simulation of Tile Processing Robot prepared by CMU	3 minutes
Post Flight Visual Inspection - Raw Footage of TPS Anomalies prepared by Boeing	1-1/2 hours
Summary of TPS Tile Anomalies prepared by Boeing	5 minutes
Japanese robot with mobile base, elevator, and snake arm obtained from CMU	3 minutes
Dryden Mate Demate Device Safety Familiarization	10 minutes

Appendix "G"
TPS Robot Reach Study

INTRODUCTION

Boeing Aerospace Operation was tasked by NASA KSC Robotics Section to study the feasibility of doing automated on Orbiter processing of the Thermal Protection System (TPS) tiles. The mechanism for accomplishing this task will probably be a robotic arm mounted to an elevating mechanism, which will be mounted to a mobile base. In order to establish some basic system parameters (reach of the robotic arm, extension required of the elevator ect.), a Tile Acessibility Study was conducted. Tile maps BCD V70-900-03-01, BCD V70-900-03-02, and BCD V70-900-30-04 through BCD V70-900-03-12 were used to manually count tiles in various locations on the Orbiter. This information was used to evaluate the effect of the system configuration on the number of tiles which can be processed. Currently, there are three locations were automated tile processing could occur. These locations are, 1) on the apron at Dryden, 2) in the Mate Demate Device (MDM), or 3) in the Orbiter Processing Facility (OPF) at Kennedy Space Center (KSC). The location where tile processing occurs and the robot configuration determine the number of tiles the system will be able to process. Both of these factors were considered in the report.

CONCLUSION

The facility where processing is to be done, and the mechanical design of the robot are two major factors influencing the number of tiles which can be processed. As of the date of this report, no tiles have been identified which absolutely must be processed by the mobile robot. Therefore, it is assumed that the ideal design is one which minimizes some type of cost benefit ratio. This study proposes a mobile robot with a vertical reach of seventeen to twenty feet. The horizontal reach should be about nine to ten feet. The ideal mechanism seems to depend on the facility where the device will be primarily used. In the OPF a fully articulated robot would be desireable. The relative complexity of the design would be justified by the operational flexibility particularly when processing tiles in highly curved areas. At the MDM, or on the apron a SCARA type arm would be preferable because the

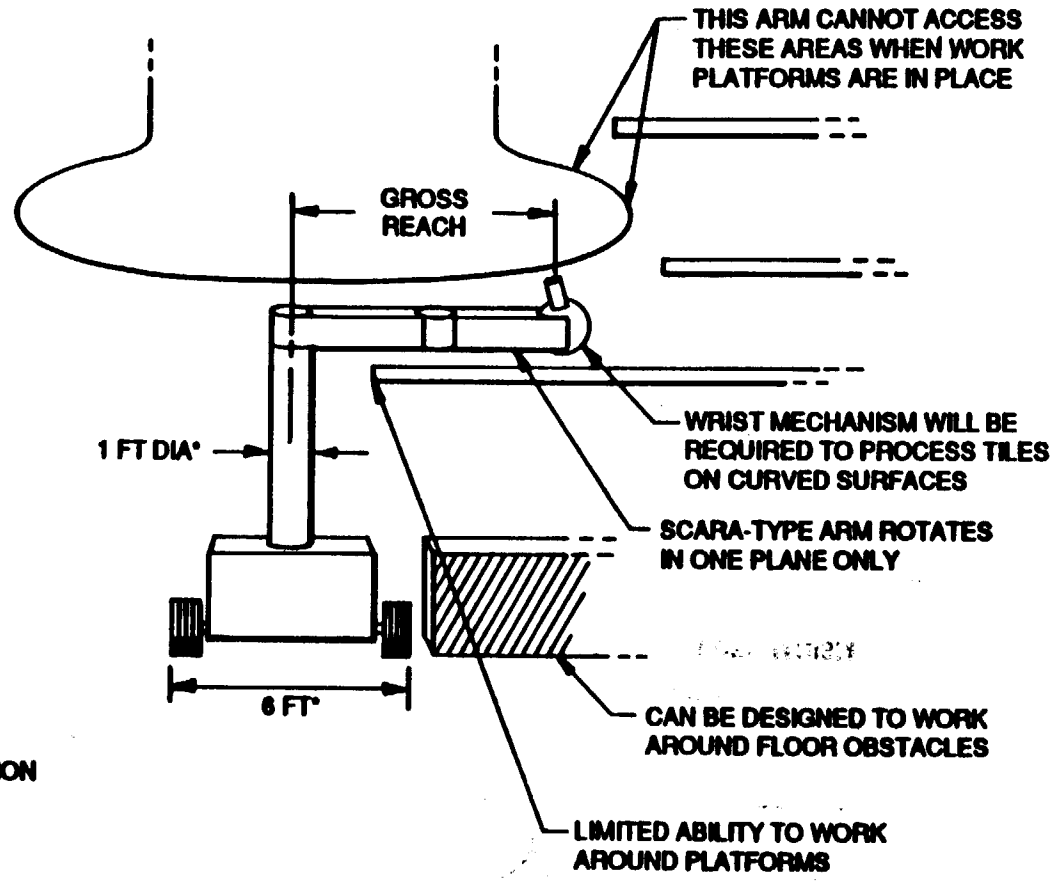

- ADVANTAGES
  - RELATIVELY SIMPLE
  - MORE TOLERANT OF DRIVE FAILURE WHEN COMPARED TO ARTICULATED ARM
  - LOWER POWER CONSUMPTION
- DISADVANTAGES
  - NOT ABLE TO ACCESS TILES OBSCURED BY WORK PLATFORMS
  - LESS ABILITY TO ACCESS TILES ON HIGHLY CURVED SURFACES

* DIMENSIONS ASSUMED FOR STUDY

FIGURE 2. SCARA-TYPE ARM

- ADVANTAGES
  - SIMPLEST DESIGN
  - MOST TOLERANT OF DRIVE FAILURE
- DISADVANTAGES
  - ACCESS THE FEWEST NUMBER OF TILES
  - NOT COMMERCIALLY AVAILABLE

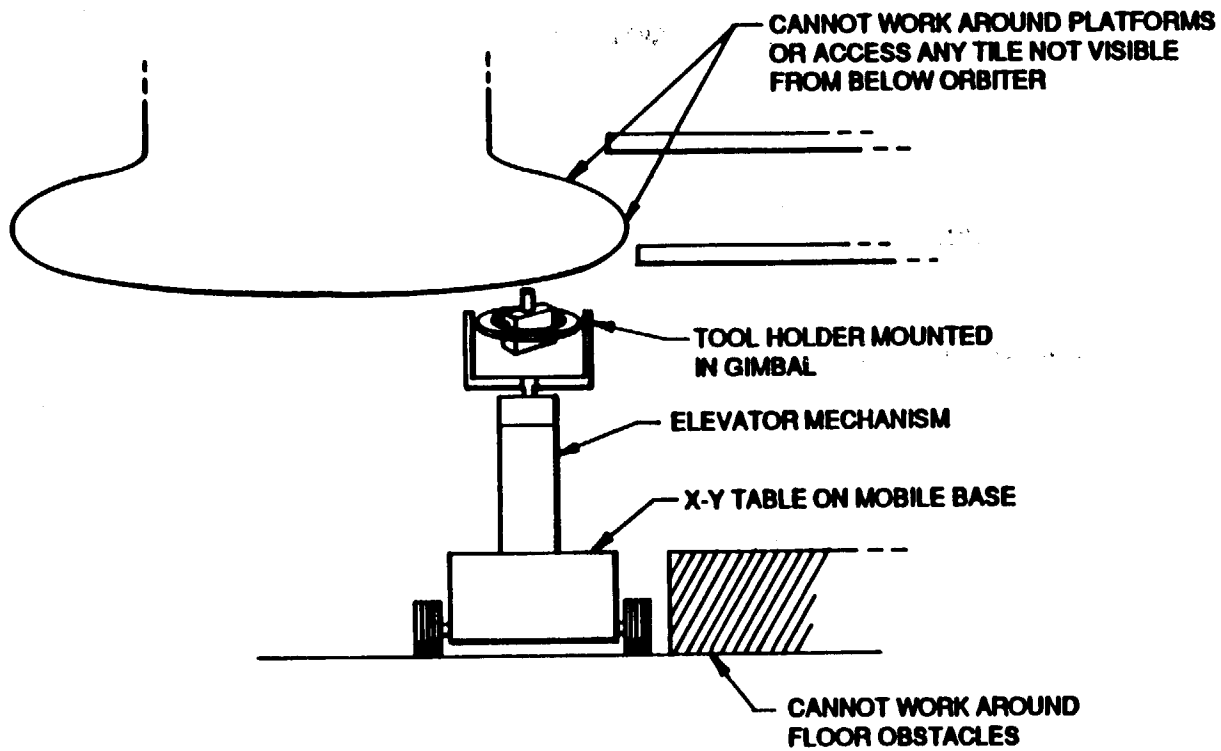

FIGURE 3. SIMPLIFIED MECHANISM

mechanism is capable of only planar motion, it should be possible to de-energize joint servomotors while processing a tile, therby reducing power consumption. Restricting the arm to planar motions should also make the system more tolerant of system drive failures. The kenimatics of the SCARA will result in a system which is relatively easy to protect against arm-Orbiter collisions. The primary weakness of the SCARA arm appears to be processing tiles on highly curved surfaces, particularly around the nose of the Orbiter. This difficulty arises because the arm is constrained to move in a plane, so any orientation must be accomplished by a wrist. This difficulty can be easily overcome when processing tiles on the apron or at the MDM because it should be possible to position the robot in such a way that it can easily access these curved areas. Tile processing with a SCARA type arm in the OPF however may prove more difficult due to the number of obstacles that the robot will encounter (FIGURE 4.). It is anticipated that there will not be a comercially available SCARA type arm which would be suitable for use on the tile processing robot.

The simplest mechanism would not be capable of working around any type of obstacle so it would be capable of processing only the tiles which are readily accessible in a given facility. This appears to be the primary weakness of this type of device. Given its simple kenimatics, this device should be the easiest to prevent from colliding with the Orbiter. As this device cannot overhang any part of the Orbiter any drive failure sbhould not pose a hazard to the Orbiter. The payload to weight ratio should be relatively high, and its power consumption should be relatively low.

II. END EFFECTOR ORIENTATION

The CAD model of the Orbiter was used to determine the orientation of tiles. The orientation of the Orbiter Outer Mold Line was determined at various sections thru the Orbiter Z(o) axis Figure 5). The X(o) and Y(o) coordinates of the tangents at 10 degrees and 45 degrees were measured (Figure 6). This data was then transfered to the relevant tile maps, and the number of tiles between each contour was counted The results of this study are tabulated in Tables 1, 2, and 3. This data was determined by considering the Orbiter in the OPF. The data is equally valid for the Orbiter in the MDM. On the apron, the Orbiter is aligned approximately 4 degrees with respect to the horizon along its major axis. As most of the significant curvature occurs on planes cut though the major axis, the effect of the

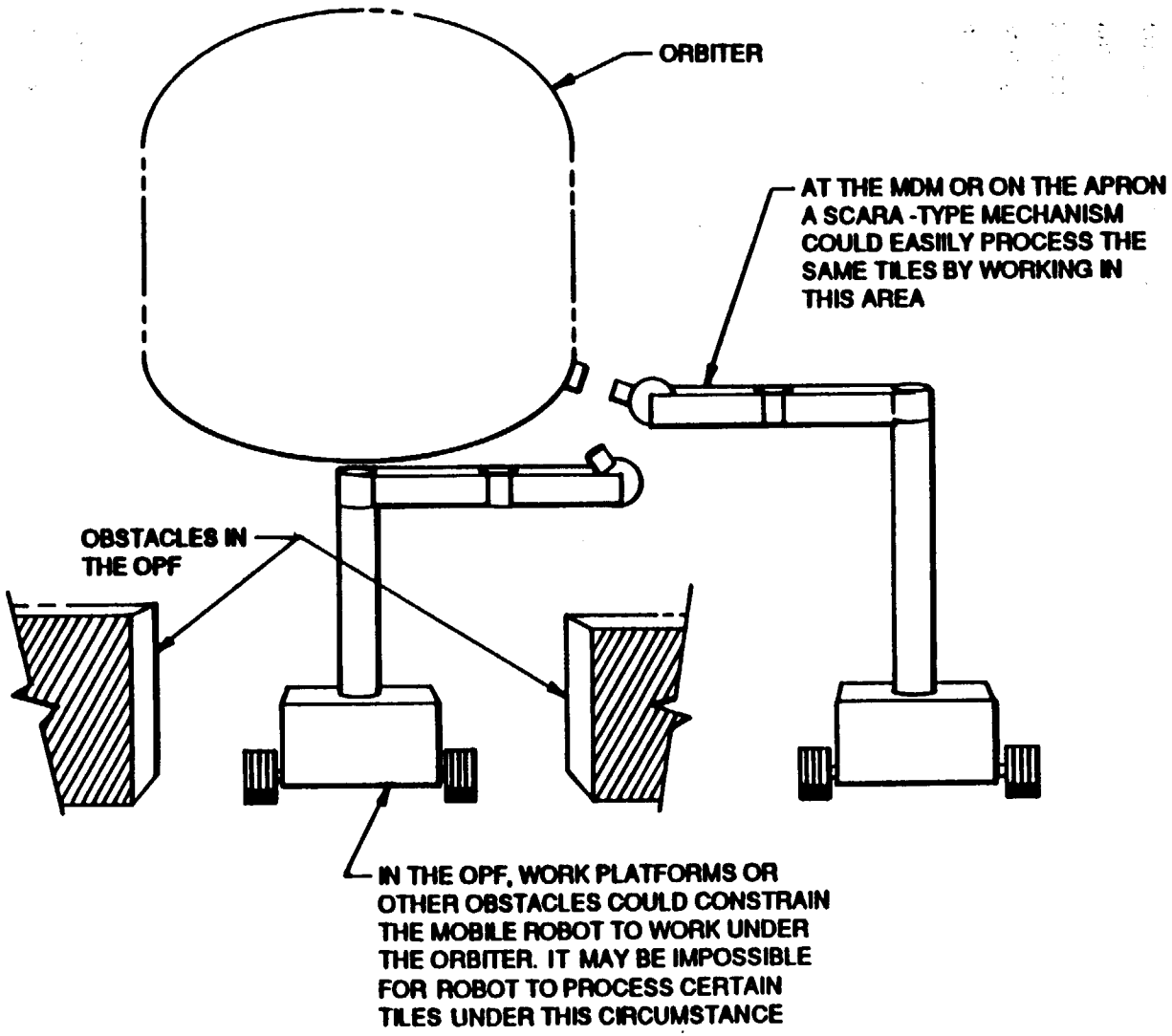

FIGURE 4. SCARA ARM LIMITATION

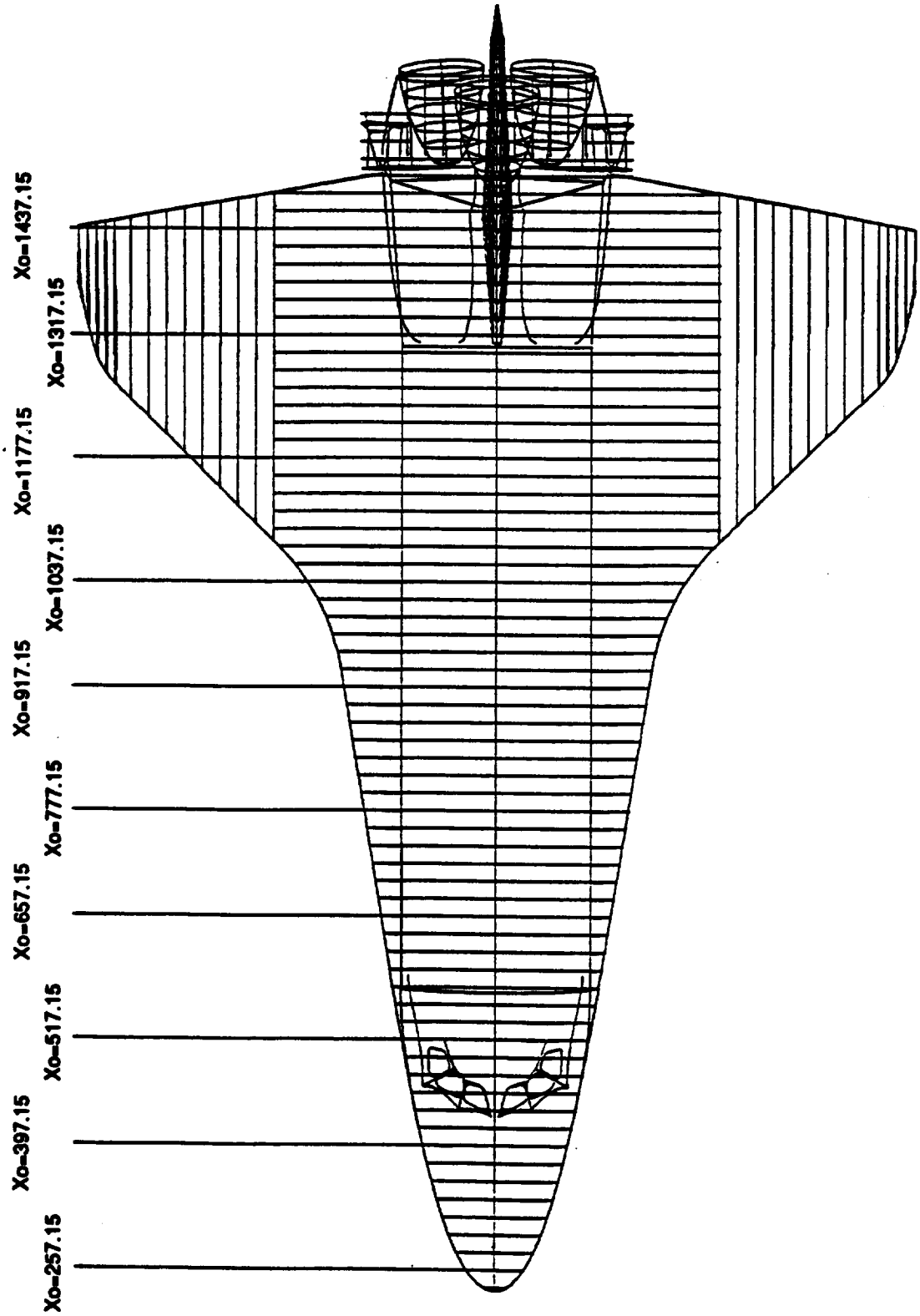

FIGURE 5. SECTIONS THRU ORBITER TO DETERMINE ORIENTATION OF TILE

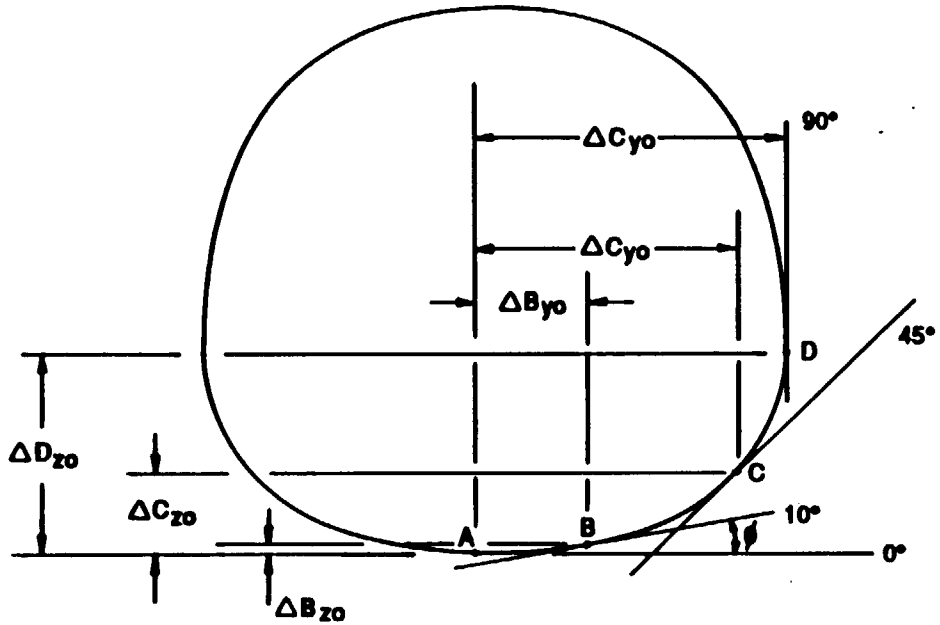

STATION	10°		45°		90°	
Xo	ΔB_{yo}	ΔB_{zo}	ΔC_{yo}	ΔC_{zo}	ΔD_{yo}	ΔD_{zo}
257.15	10.2	.83	25.84	7.95	31.76	21.58
397.15	38.98	3.02	72.3	16.84	81.0	38.1
517.15	56.89	4.05	97.0	20.74	104.86	38.93
657.15	68.3	5.45	123.58	27.71	128.2	35.55
777.15	83.51	6.43	146.43	28.48	147.39	32.5
917.15	111.89	9.29	169.38	25.03	170.9	28.8
1037.15	169.64	12.78	210.5	25.3	212.57	29.68
1177.15	311.0	26.48	342.0	35.18	343.14	37.45
1317.15	439.59	37.46	454.49	44.65	456.03	48.76
1437.15	457.94	35.31	468.61	38.36	468.61	38.36

FIGURE 6. LOCATION OF TANGENT POINTS (ORBITER COORDINATES)

Orbiter inclination should not have a significant impact. Hence, this data should approximate tile orientation on the apron with reasonable accuracy.

This study was undertaken to evaluate the need for the robot to provide orientation. To successfully process a tile will require that the robot orient the tool normal to the surface of the tile. Based on this effort, it appears that an orientation of at least plus or minus 90 degrees with respect to the horizontal plane (up and down motion) and vertical axis (twisting motion) is desireable. This amount of articulation will allow the robot to process tiles on the upper body flap, upper wing, and side fuselage areas (Figure 7). This type of orientation ability will be particularly important if a SCARA type arm is used, because this type of device generally operates in only one plane.

III. TILE ACCESSIBILITY IN THE OPF

When the Orbiter is parked in the OPF, its location with respect to the facility is defined in ICD-2-1A0002. The OPF environment is controlled, however the workspace around the Orbiter is cluttered with many permanent and temporary work platforms, cables, hoses, jackstands and people. For this reason, the OPF seems to present the most demanding environment for the mechanical design of a mobile robot. The primary fixed structures which will impact the design are platforms 1, 4, 8, and 11 (Figures 8a and 8b). The Rear Swinging Platforms could also affect the design. These structures are defined on KSC drawing 79K08118. Portions of platforms 1, 4, 8, and 11 which are adjacent to the Orbiter are movable. They are retracted away from the Orbiter during leveling and jacking operations, and positioned within six inches of the Orbiter so that work can be performed on the vehicle. Ideally, all automated processing would occur with the platforms retracted. However, at this point it is not clear that this is possible so the tile accessibility study in the OPF assumes all platforms are in the working position. This assumption results in the most severe constraints on the mechanical design.

The primary areas which are readily accessible in the OPF are the lower wing and lower fuselage. There are 15834 tiles in these areas detailed on drawings BCD V70-900-30-01, BCD V70-900-30-02, and BCD V70-900-30-04. Of that number, 13,828 are readily accessible. The remaining 2006 tiles are conditionally accessible. Of these tiles, there are 242 tiles obscured by the forward jack stands, 376 tiles obscured by the aft jack stands,

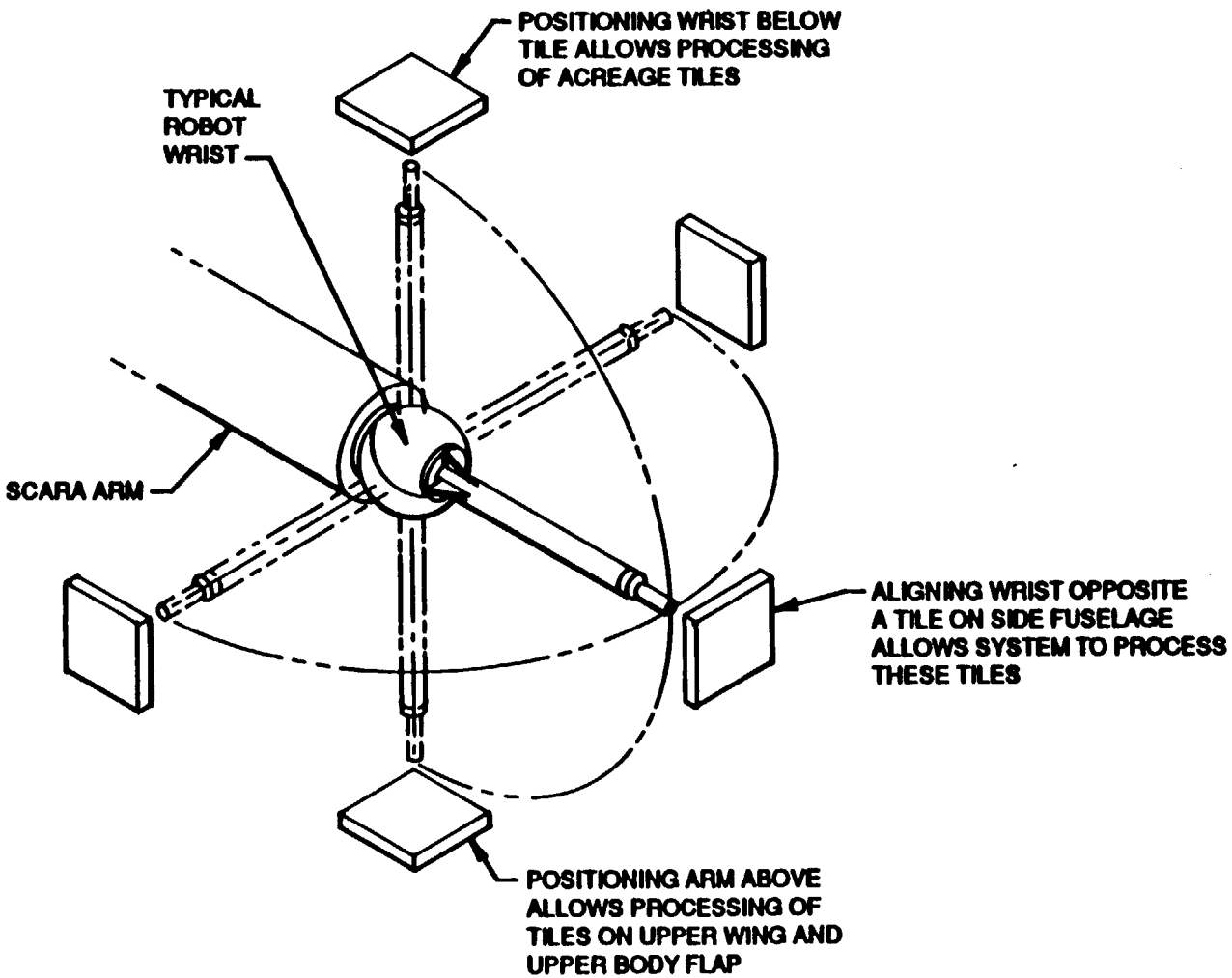

FIGURE 7. WRIST ROTATION REQUIREMENTS

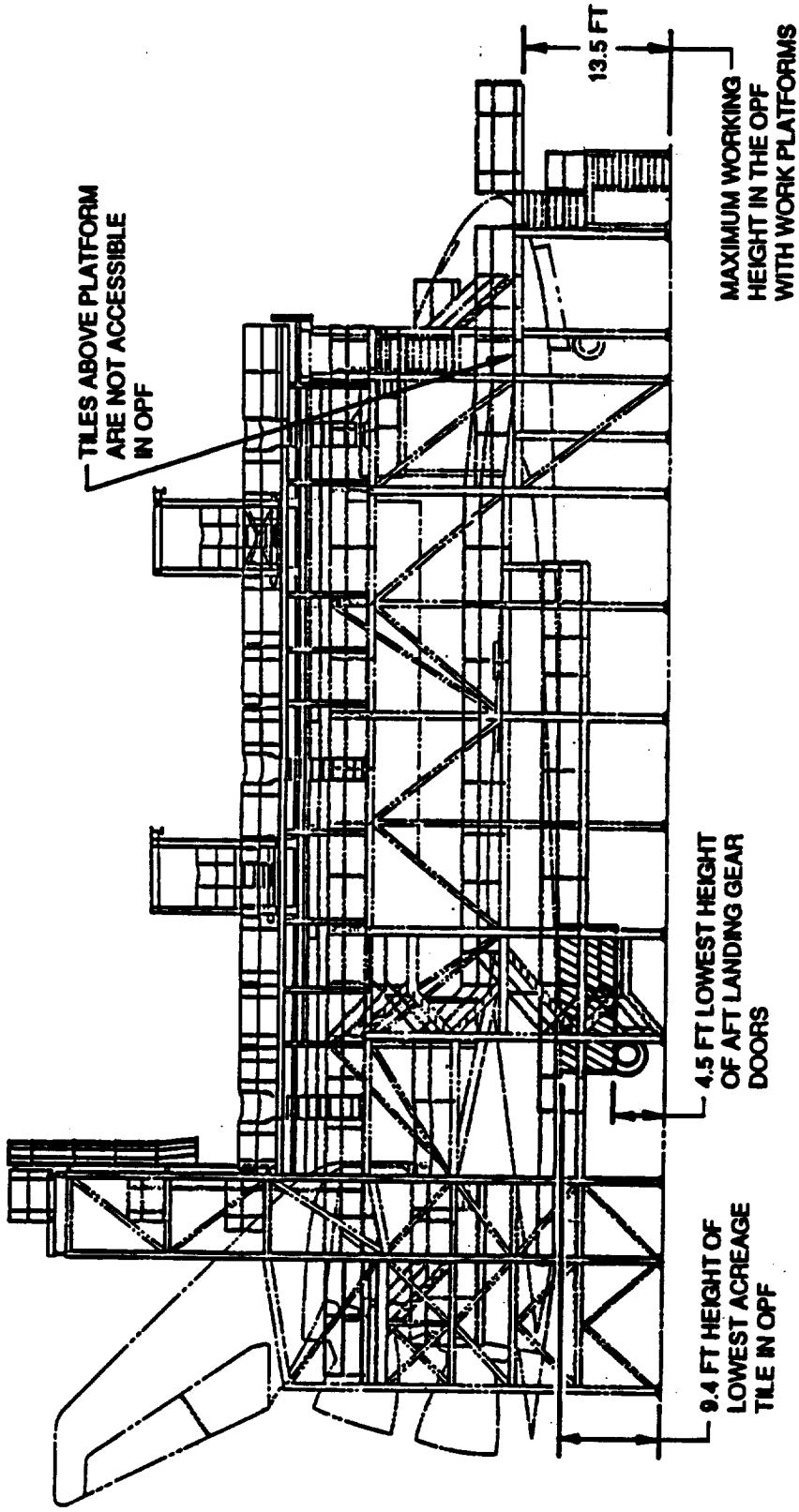

FIGURE 8A. ORBITER IN THE OPF

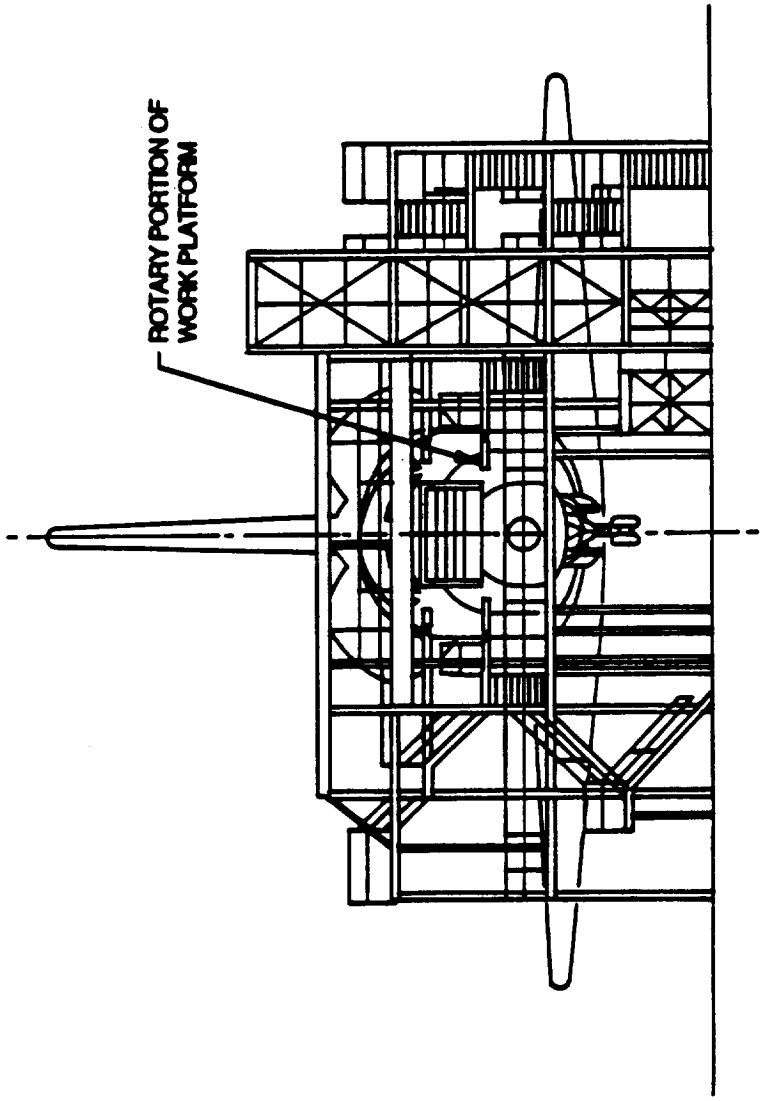

FRONT ELEVATION

FIGURE 8B. ORBITER IN THE OPF

546 tiles are located on the aft landing gear doors, and 842 tiles obscured by platform 8. To reach the readily accessible tiles will require a robot capable of reaching about 13.5 feet above the OPF floor. This is the approximate height at which platform 1 would obstruct access in the nose area of the Orbiter . Tiles in the vicinity of the E.T. Tank doors are located approximately 9.4 feet above the OPF floor. These are closer to the floor than any other acreage tiles.

In order to reach 618 tiles obscured by the forward and aft jack stands, the robot would have to reach about 6.5 feet beyond its base in the horizontal plane. Of the 842 tiles obscured by platform 8, 340 tiles are located at the tips of the Orbiter wing, and 502 tiles are located around the leading edge of the wing roughly between X(o)=500 and X(o)=900 . The 340 tiles located on the wing tips can be processed by a robot with a 4 foot reach. Some of the tiles located on the leading edge would be difficult to reach with anything but a six or seven degree of freedom articulated arm. Some of the tiles would be obscured by platform 8, and platform 4 as illustrated in Figure 1, these tiles would be very difficult to process reliably. The tiles located on the landing gear bay doors has been classified as conditionally accessible because, in the OPF, these doors are usually open, which means they are oriented in a vertical plane. At its lowest, each of these doors is about 4.5 feet above the OPF floor .

The upper fuselage of the Orbiter has 1336 tiles attached to it as specified in BCD V70-900-30-05. The cockpit and RCS areas of the upper fuselage have 493 tiles all of which are considered not accessible due to the obstruction of the area by platform 1 (see Figure 8a.), and the height of the area which ranges from 18 to 29 feet above the OPF floor. There are 78 tiles located at the base of the rudder which are also considered not accessible due to their location. There are 765 tiles located on the upper surface of the body flap which are conditionally accessible. The robot would need a horizontal reach of about 8.5 feet and a vertical reach of 13.5 feet to process all of these tiles (see Figure 9). To access these tiles it would probably be necessary to have the rear swinging platforms in the retracted position.

There are 958 tiles located on the upper wings as detailed on drawings BCD V70-900-30-06, and BCD V70-900-30-07. All of these tiles are conditionally accessible. The 742 tiles located on the upper wings between X(o)=500 and X(o)=900 would be obscured by platform 8 and platform 4, the limited access would make tile processing very difficult even for a 7 D.O.F. fully articulated robot arm (see Figure 1). The 216 tiles located on the

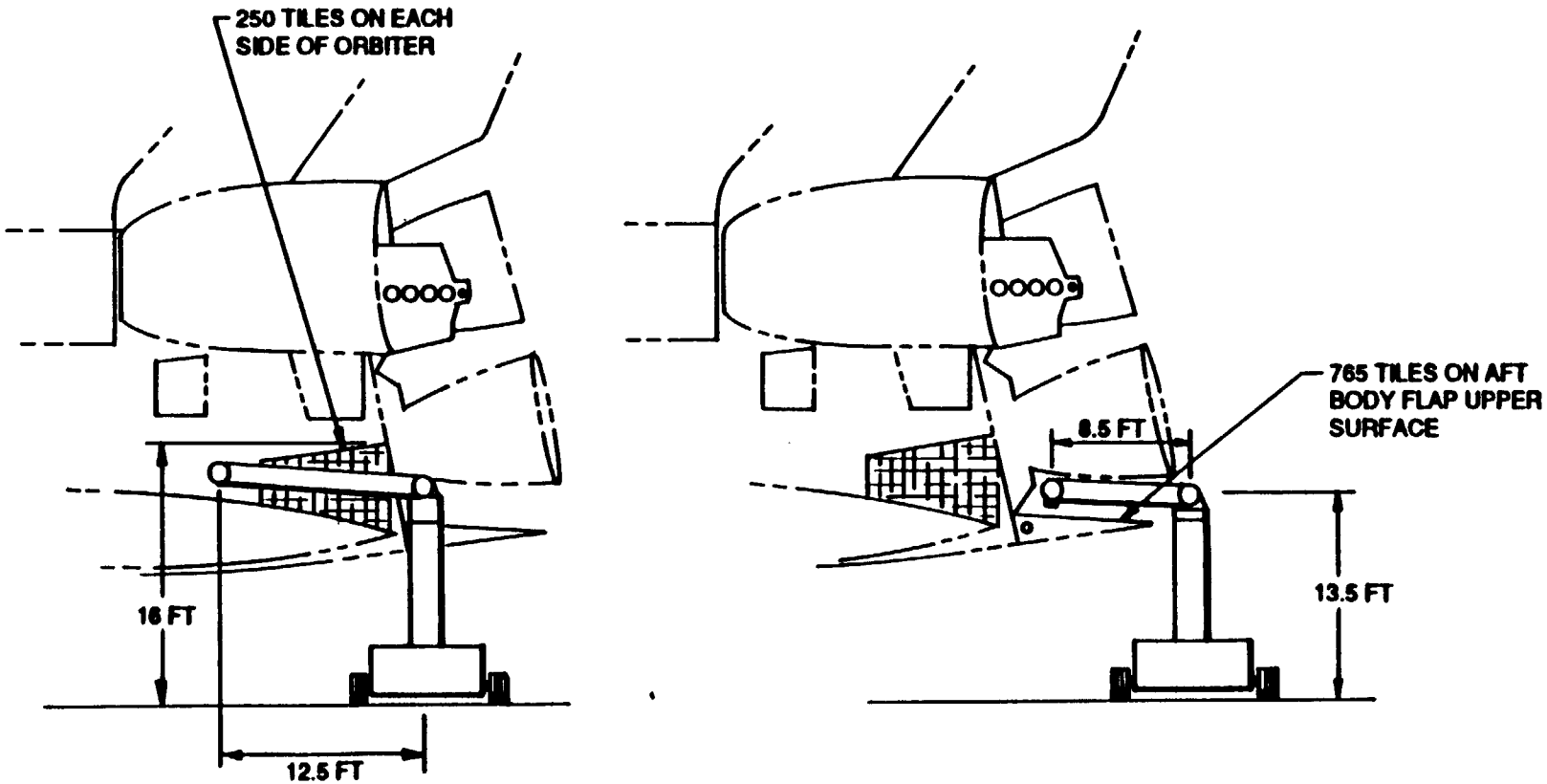

FIGURE 9. BODY FLAP AND SIDE FUSELAGE REACH

horizontal elevon surfaces are conditionally accessible because of the limited space, and the need for one elevon to be in the fully down position, and the adjacent one to be in the fully up position in order to gain access to the area.

There are 2734 tiles located on the side fuselage areas of the Orbiter. These are detailed on drawings BCD V70-900-30-08 and BCD V70-900-30-09. Of these, 412 are readily accessible because they are located below platform 1. A maximum robot reach of 13.5 feet above the OPF floor would be required to process these tiles. There are 514 conditionally accessible tiles on the side fuselage areas. These tiles comprise the 64 tiles on the vertical surfaces of the bodyflap, and 450 tiles on the side fuselage adjacent to the body flap. In order to process the 450 tiles on the side fuselage, the horizontal reach of the robotic arm would have to be about 12.5 feet at an elevation of 16 feet above the OPF floor (see Figure 3). There are 1808 tiles on the side fuselage which are not considered accessible in the OPF. These include 148 tiles around the cockpit windshield, 1128 tiles in the vicinity of the Forward RCS, 322 tiles in the nose area aft of the Reinforced Carbon-Carbon (RCC), 38 tiles at the base of the OMS Pods, and 172 tiles in the vicinity of the payload bay door hinges. These tiles are obscured by platform 1 as well as being relatively high of off the OPF floor.

Finally there are 586 tiles located on the Orbiter Vertical Stabilizer as specified on drawing BCD V70-900-30-10. None of these tiles are accessible due to the height above the OPF floor (29.5 to over 55 feet). These tiles would also be difficult to access because they are obscured by either the Space Shuttle Main Engines (SSME) or the Orbiter fuselage. Drawing BCD V70-900-30-11 details 2995 tiles on the Aft Heat Shield, OMS Pods, and RCS Pods, none of these tiles is accessible due to the obstruction of other parts of the Orbiter (SSME and Body Flap to name two), most of these tiles are also relatively high above the OPF floor.

To summarize, there are 13828 tiles which are readily accessible to a properly designed mobile robotic mechanism operating in the OPF. In this facility, there are 4229 tiles which are conditionally accessible, and 5974 tiles which are not accessible

As stated above, the conditionally accessible tiles are those are those which can be processed by a mechanism possessing sufficient reach and dexterity. In order to examine the tradeoff between these factors, several different mechanisms were considered and the

number of tiles processed by each mechanism was counted. The mechanisms considered were the simplified mechanism, SCARA type arms with reaches of 3, 7, 9.5, and 13 feet, and fully articulated arms with reaches of 9.5, and 13 feet. the results are tabulated in tables 5 thru 11, and plotted in Figure (10). Implicit in this presentation is the existence of a wrist which will allow the SCARA type mechanism to orient a tool properly with respect to the tile. Given the existence of such a device, Figure (10) shows a near linear relationship between reach and processible tiles until a reach of eight to ten feet, at which time the return starts to diminish. The maximum required vertical reach in the OPF is about 16 feet.

IV. TILE ACCESSIBILITY ON THE APRON

On the apron, the centerline of the Orbiter is inclined about four degrees from the horizontal and there are no work platforms to obstruct access to the vehicle. The net result being, on the apron, some areas of the Orbiter are easier to access and some areas are more difficult to access when compared to the OPF environment.

On the apron, the landing gear bay doors are open, and some of the tiles on the doors are about three feet above the ground. The acreage tiles in the area of the forward landing gear are approximately 4.5 feet above the ground. Some of the tiles on the side fuselage adjacent to the aft heat shield are about 17.5 feet above the ground. Tiles on the body flap can be up to 15 feet above the ground, as are some of the tiles on the upper wings. Notice, the aft end of the Orbiter is closer to the ground when it is jacked and leveled in the OPF. The forward end of the Orbiter is closer to the ground on the apron. The primary advantage of processing tiles on the apron is the ability to reach tiles on the upper, forward fuselage. There are 493 tiles on drawing BCD V70-900-30-5 around the forward RCS which are not accessible in the OPF. These tiles could be reached on the apron with a mechanism which has a seven foot horizontal reach seventeen feet above the ground. There are 725 tiles detailed on drawing BCD-V70-900-30-08 and 725 tiles on V70-900-30-09 which are not accessible in the OPF. These tiles could also be processed on the apron with the mechanism detailed above.The results of this survey are tabulated in Table 12.

Analysis of the data presented in Table 12 indicates that the tiles are much more accessible on the apron when compared with the OPF. On the apron, there are 15288 readily accessible tiles, this increase due to the lack of jackstands and work platforms. There are

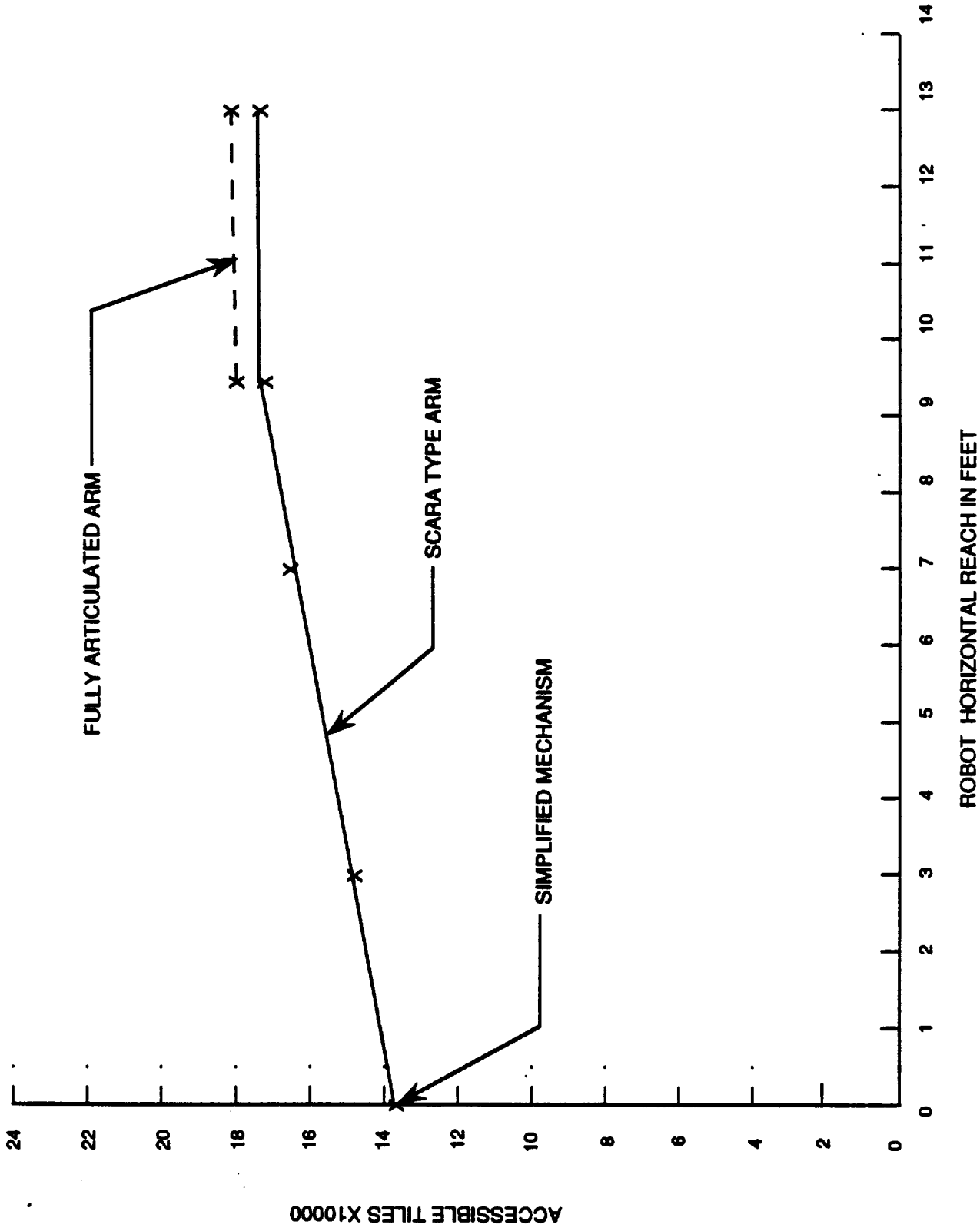

FIGURE 10. TILE ACCESSIBILITY VS. ROBOT HORIZONTAL REACH

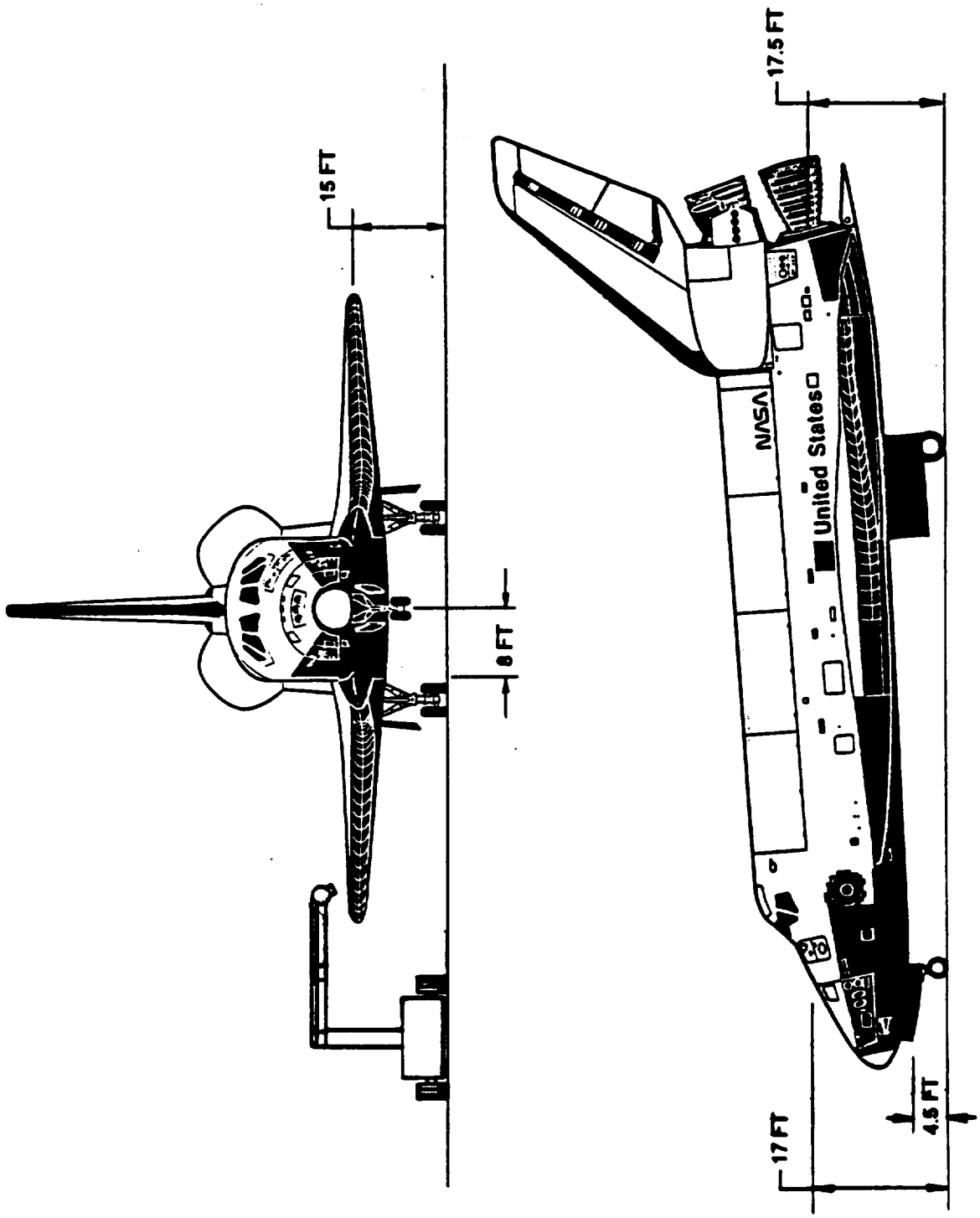

FIGURE 11. TILE PROCESSING ON THE APRON

4712 conditionally accessible tiles, and only 4031 tiles which are not accessible. Many of the conditionally accessible tiles , such as those on the upper wings, would be much easier to process on the apron because there are no platforms to obstruct access. The drop in not accessible tiles is due primarily to the ability to process tiles on the foward upper fuselage. On the apron, it is feasible to process up to 20000 tiles which is 83% of the total.

There are at least two disadvantages to doing tile processing on the apron. The first is the problem of determining the alignment of the Orbiter with respect to the mobile robot. As the robot is not precisely aligned with respect to any facility, this may be a difficult task. The second potential problem is the hazardproofing requirements. If tile processing is attempted on the apron prior to safing the vehicle, it may be necessary for the robot to meet the requirements of NFPA No. 70 Class 1 Division 2 hazardproofing. Assuming these obstacles can be dealt with, the apron may be the ideal place to do automated tile processing.

V. TILE PROCESSING IN THE MDM

When jacked and leveled in the MDM, the Orbiter location relative to the ground is identical to its orientation in the OPF. However tile access in the MDM should be improved relative to the OPF. Two factors contribute to this, 1) Platform 8 is not used in the MDM, and 2) the forward jack stands are also not in use. In the OPF, the forward jackstands obscure 242 tiles, in the MDM, these tiles would be readily accessible. There are 150 tiles on the leading edge of the Orbiter wing which are obscured by the forward jackstands. These tiles would also be readily accessible in the MDM. Platform 8 obscures 340 tiles on the tips of the Orbiter wings. These tiles are also readily accessible in the MDM. Access to the 352 tiles around the leading edge of the Orbiter wing would also be improved in the MDM. It should be possible to process these tiles with a SCARA type arm in the MDM, rather than the fully articulated arm which would be required in the OPF. In summary, there are an additional 1084 tiles which could be readily accessed in the MDM. These tiles are not so easily accessible in the OPF. This data is tabulated in Table 13.

VI. IN THE OPF PRIOR TO INSTALLING WORK PLATFORMS

As mentioned above, there is a time after the Orbiter is parked in the OPF when there are no work platforms in position. At this time, the Orbiter is sitting on its landing gear, in an orientation exactly like the orientation on the apron. In this attitude, all of the comments regarding tile accessibility on the apron apply. This may be an ideal time to do tile processing because tile accessibility is at a maximum. The Orbiter is also roughly aligned to the facility, so the facility sensors should be useful in determining the location of the robot relative to the Orbiter.

Rockwell Drawing	Area of Orbiter	Total	Orientation 0<ø<10	10<ø<45	ø>45
BCD V70-900-30-01	Lower Fuselage	7974	6566	1250	158
BCD V70-900-30-02	Lower Left Hand Wing	3724	2935	456	333
BCD V70-900-30-03	Deleted	0	0	0	0
BCD V70-900-30-04	Lower Right Hand Wing	3724	2935	456	333
BCD V70-900-30-05	Upper Fuselage	1336	0	0	1336
BCD V70-900-30-06	Upper Left Hand Wing	479	0	0	479
BCD V70-900-30-07	Upper Right Hand Wing	479	0	0	479
BCD V70-900-30-08	Left Hand Side Fuselage	1367	0	0	1367
BCD V70-900-30-09	Right Hand Side Fuselage	1367	0	0	1367
BCD V70-900-30-10	Vertical Stabilizer	586	0	0	586
BCD V70-900-30-11	Aft Heat Shield,OMS & RCS Pods	2995	0	0	2995
	TOTAL	24031	12436	2162	9433

TABLE 1. Tiles Counted On Orbiter

Rockwell Drawing	Area of Orbiter	Total	Orientation 10<ø<10	10<ø<45	ø>45
BCD V70-900-30-01	Lower Fuselage	7732	6480	1094	158
BCD V70-900-30-02	Lower Left Hand Wing	2842	2616	220	6
BCD V70-900-30-03	Deleted	0	0	0	0
BCD V70-900-30-04	Lower Right Hand Wing	2842	2616	220	6
BCD V70-900-30-05	Upper Fuselage	0	0	0	0
BCD V70-900-30-06	Upper Left Hand Wing	0	0	0	0
BCD V70-900-30-07	Upper Right Hand Wing	0	0	0	0
BCD V70-900-30-08	Fwd fuselage below platform	206	0	0	206
BCD V70-900-30-09	Fwd fuselage below platform	206	0	0	206
BCD V70-900-30-10	Vertical Stabilizer	0	0	0	0
BCD V70-900-30-11	Aft Heat Shield,OMS & RCS Pods	0	0	0	0
	TOTAL	13828	11712	1534	582

TABLE 2. Readily Accessible Tiles (OPF)

Rockwell Drawing	Location on Orbiter	Total	Orientation 0<ø<10	10<ø<45	ø>45
BCD V70-900-30-01	Over Fwd. jack stands	242	86	156	0
BCD V70-900-30-02	Over aft jack stand	188	188	0	0
	On aft landing gear door	273	0	0	273
	Wing tips over platform 8	170	131	39	0
	Around leading edge of wing	176	0	176	0
	Leading edge and platform 8	75	0	21	54
BCD V70-900-30-03	Deleted	0	0	0	0
BCD V70-900-30-04	Over aft jack stand	188	188	0	0
	On aft landing gear door	273	0	0	273
	Wing tips over platform 8	170	131	39	0
	Around leading edge of wing	176	0	176	0
	Leading edge and platform 8	75	0	21	54
BCD V70-900-30-05	Upper surface of body flap	765	0	0	765
BCD V70-900-30-06	Upper wing	310	0	0	310
	Horizontal elevon surfaces	54	0	0	54
	Vertical elevon surfaces	108	0	0	108
BCD V70-900-30-07	Upper wing	310	0	0	310
	Horizontal elevon surfaces	54	0	0	54
	Vertical elevon surfaces	108	0	0	108
BCD V70-900-30-08	Vertical surface of body flap	32	0	0	32
	Side Fuselage near body flap	225	0	0	225
BCD V70-900-30-09	Vertical surface of body flap	32	0	0	32
	Side Fuselage near body flap	225	0	0	225
BCD V70-900-30-10	Vertical Stabilizer	0	0	0	0
BCD V70-900-30-11	Aft Heat Shield, OMS @ RCS Pods	0	0	0	0
	TOTAL	4229	724	628	2877

TABLE 3. Conditionally Accessible Tiles (OPF)

Rockwell Drawing	Location on Orbiter	Number of Tiles
BCD V70-900-30-01	Lower Fuselage	0
BCD V70-900-30-02	Lower Left Hand Wing	0
BCD V70-900-30-03	Deleted	0
BCD V70-900-30-04	Lower Right Hand Wing	0
BCD V70-900-30-05	Cockpit @ Fwd RCS	493
	Base of rudder	78
BCD V70-900-30-06	Base of OMS Pod	7
BCD V70-900-30-07	Base of OMS Pod	7
BCD V70-900-30-08	Around cockpit windshield	74
	Around Fwd RCS	564
	Nose area aft of RCS	161
	Base of OMS Pod	19
	Around Payload Bay Door hinge	86
BCD V70-900-30-09	Around cockpit windshield	74
	Around Fwd RCS	564
	Nose area aft of RCS	161
	Base of OMS Pod	19
	Around Payload Bay Door hin	86
BCD V70-900-30-10	Vertical Stabilizer	586
BCD V70-900-30-11	Aft Heat Shield OMS @ RCS Pods	2995
	TOTAL	5974

TABLE 4. Location of Tiles Which Are Not Accessible (OPF)

Rockwell Drawing	Location on Orbiter	Total	Accessible
BCD V70-900-30-01	Over Fwd. jackstands	242	0
BCD V70-900-30-02	Over aft jack stand	188	0
	On aft landing gear door	273	0
	Wing tips over platform 8	170	0
	Around leading edge of wing	176	0
	Leading edge and platform 8	75	0
BCD V70-900-30-03	Deleted	0	0
BCD V70-900-30-04	Over aft jack stand	188	0
	On aft landing gear door	273	0
	Wing tips over platform 8	170	0
	Around leading edge of wing	176	0
	Leading edge and platform 8	75	0
BCD V70-900-30-05	Upper surface of body flap	765	0
BCD V70-900-30-06	Upper wing	310	0
	Horizontal elevon surfaces	54	0
	Vertical elevon surfaces	108	0
BCD V70-900-30-07	Upper wing	310	0
	Horizontal elevon surfaces	54	0
	Vertical elevon surfaces	108	0
BCD V70-900-30-08	Vertical surface of body flap	32	0
	Side Fuselage near body flap	225	0
BCD V70-900-30-09	Vertical surface of body flap	32	0
	Side Fuselage near body flap	225	0
BCD V70-900-30-10	Vertical Stabilizer	0	0
BCD V70-900-30-11	Aft Heat Shield,OMS @ RCS Pods	0	0
	TOTAL	4229	0

TABLE 5. Process Improvement for Simplified Mechanism (OPF)

Rockwell Drawing	Location on Orbiter	TOTAL	Accessible
BCD V70-900-30-01		242	0
BCD V70-900-30-02	Over aft jack stand	188	0
	On aft landing gear door	273	0
	Wing tips over platform 8	170	119
	Around leading edge of wing	176	93
	Leading edge and platform 8	75	0
BCD V70-900-30-03	Deleted	0	0
BCD V70-900-30-04	Over aft jack stand	188	0
	On aft landing gear door	273	0
	Wing tips over platform 8	170	119
	Around leading edge of wing	176	93
	Leading edge and platform 8	75	0
BCD V70-900-30-05	Upper surface of body flap	765	152
BCD V70-900-30-06	Upper wing	310	0
	Horizontal elevon surfaces	54	48
	Vertical elevon surfaces	108	108
BCD V70-900-30-07	Upper wing	310	0
	Horizontal elevon surfaces	54	48
	Vertical elevon surfaces	108	108
BCD V70-900-30-08	Vertical surface of body flap	32	32
	Side Fuselage near body flap	225	32
BCD V70-900-30-09	Vertical surface of body flap	32	32
	Side Fuselage near body flap	225	32
BCD V70-900-30-10	Vertical Stabilizer	0	0
BCD V70-900-30-11	Aft Heat Shield,OMS @ RCS Pods	0	0
	TOTAL	4229	1016

TABLE 6. Process Improvement for a SCARA Arm - 3' Gross Reach (OPF)

Rockwell Drawing	Location on Orbiter	Total	Accessible
BCD V70-900-30-01	Over Fwd. jackstands	242	242
BCD V70-900-30-02	Over aft jack stand	188	188
	On aft landing gear door	273	273
	Wing tips over platform 8	170	170
	Around leading edge of wing	176	119
	Leading edge and platform 8	75	42
BCD V70-900-30-03	Deleted	0	0
BCD V70-900-30-04	Over aft jack stand	188	188
	On aft landing gear door	273	273
	Wing tips over platform 8	170	170
	Around leading edge of wing	176	119
	Leading edge and platform 8	75	42
BCD V70-900-30-05	Upper surface of body flap	765	312
BCD V70-900-30-06	Upper wing	310	0
	Horizontal elevon surfaces	54	48
	Vertical elevon surfaces	108	108
BCD V70-900-30-07	Upper wing	310	0
	Horizontal elevon surfaces	54	48
	Vertical elevon surfaces	108	108
BCD V70-900-30-08	Vertical surface of body flap	32	32
	Side Fuselage near body flap	225	80
BCD V70-900-30-09	Vertical surface of body flap	32	32
	Side Fuselage near body flap	225	80
BCD V70-900-30-10	Vertical Stabilizer	0	0
BCD V70-900-30-11	Aft Heat Shield,OMS @ RCS Pods	0	0
	TOTAL	4229	2674

TABLE 7. Process Improvement for SCARA Arm - 7' Gross Reach (OPF)

Rockwell Drawing	Location on Orbiter	Total	Accessible
BCD V70-900-30-01		242	242
BCD V70-900-30-02	Over aft jack stand	188	188
	On aft landing gear door	273	273
	Wing tips over platform 8	170	170
	Around leading edge of wing	176	119
	Leading edge and platform 8	75	42
BCD V70-900-30-03	Deleted	0	0
BCD V70-900-30-04	Over aft jack stand	188	188
	On aft landing gear door	273	273
	Wing tips over platform 8	170	170
	Around leading edge of wing	176	119
	Leading edge and platform 8	75	42
BCD V70-900-30-05	Upper surface of body flap	765	765
BCD V70-900-30-06	Upper wing	310	0
	Horizontal elevon surfaces	54	54
	Vertical elevon surfaces	108	108
BCD V70-900-30-07	Upper wing	310	0
	Horizontal elevon surfaces	54	54
	Vertical elevon surfaces	108	108
BCD V70-900-30-08	Vertical surface of body flap	32	32
	Side Fuselage near body flap	225	225
BCD V70-900-30-09	Vertical surface of body flap	32	32
	Side Fuselage near body flap	225	225
BCD V70-900-30-10	Vertical Stabilizer	0	0
BCD V70-900-30-11	Aft Heat Shield,OMS @ RCS Pods	0	0
	TOTAL	4229	3299

TABLE 8. Process Improvement For A SCARA Arm - 9.5 Foot Gross Reach (OPF)

Rockwell Drawing	Location on Orbiter	Total	Accessible
BCD V70-900-30-01		242	242
BCD V70-900-30-02	Over aft jack stand	188	188
	On aft landing gear door	273	273
	Wing tips over platform 8	170	170
	Around leading edge of wing	176	119
	Leading edge and platform 8	75	42
BCD V70-900-30-03	Deleted	0	0
BCD V70-900-30-04	Over aft jack stand	188	188
	On aft landing gear door	273	273
	Wing tips over platform 8	170	170
	Around leading edge of wing	176	119
	Leading edge and platform 8	75	42
BCD V70-900-30-05	Upper surface of body flap	765	765
BCD V70-900-30-06	Upper wing	310	0
	Horizontal elevon surfaces	54	54
	Vertical elevon surfaces	108	108
BCD V70-900-30-07	Upper wing	310	0
	Horizontal elevon surfaces	54	54
	Vertical elevon surfaces	108	108
BCD V70-900-30-08	Vertical surface of body flap	32	32
	Side Fuselage near body flap	225	225
BCD V70-900-30-09	Vertical surface of body flap	32	32
	Side Fuselage near body flap	225	225
BCD V70-900-30-10	Vertical Stabilizer	0	0
BCD V70-900-30-11	Aft Heat Shield,OMS @ RCS Pods	0	0
	TOTAL	4229	3429

TABLE 9. Process Improvement for a SCARA Arm - 13 Foot Gross Reach (OPF)

Rockwell Drawing	Location on Orbiter	Total	Accessible
BCD V70-900-30-01		242	242
BCD V70-900-30-02	Over aft jack stand	188	188
	On aft landing gear door	273	273
	Wing tips over platform 8	170	170
	Around leading edge of wing	176	176
	Leading edge and platform 8	75	75
BCD V70-900-30-03	Deleted	0	0
BCD V70-900-30-04	Over aft jack stand	188	188
	On aft landing gear door	273	273
	Wing tips over platform 8	170	170
	Around leading edge of wing	176	176
	Leading edge and platform 8	75	75
BCD V70-900-30-05	Upper surface of body flap	765	765
BCD V70-900-30-06	Upper wing	310	310
	Horizontal elevon surfaces	54	54
	Vertical elevon surfaces	108	108
BCD V70-900-30-07	Upper wing	310	310
	Horizontal elevon surfaces	54	54
	Vertical elevon surfaces	108	108
BCD V70-900-30-08	Vertical surface of body flap	32	32
	Side Fuselage near body flap	225	160
BCD V70-900-30-09	Vertical surface of body flap	32	32
	Side Fuselage near body flap	225	160
BCD V70-900-30-10	Vertical Stabilizer	0	0
BCD V70-900-30-11	Aft Heat Shield,OMS @ RCS Pods	0	0
	TOTAL	4229	4099

TABLE 10 Process Improvement For A Fully Articulate Arm - 9.5' Gross Reach (OPF)

Rockwell Drawing	Location on Orbiter	Total	Accessible
BCD V70-900-30-01		242	242
BCD V70-900-30-02	Over aft jack stand	188	188
	On aft landing gear door	273	273
	Wing tips over platform 8	170	170
	Around leading edge of wing	176	176
	Leading edge and platform 8	75	75
BCD V70-900-30-03	Deleted	0	0
BCD V70-900-30-04	Over aft jack stand	188	188
	On aft landing gear door	273	273
	Wing tips over platform 8	170	170
	Around leading edge of wing	176	176
	Leading edge and platform 8	75	75
BCD V70-900-30-05	Upper surface of body flap	765	765
BCD V70-900-30-06	Upper wing	310	310
	Horizontal elevon surfaces	54	54
	Vertical elevon surfaces	108	108
BCD V70-900-30-07	Upper wing	310	310
	Horizontal elevon surfaces	54	54
	Vertical elevon surfaces	108	108
BCD V70-900-30-08	Vertical surface of body flap	32	32
	Side Fuselage near body flap	225	225
BCD V70-900-30-09	Vertical surface of body flap	32	32
	Side Fuselage near body flap	225	225
BCD V70-900-30-10	Vertical Stabilizer	0	0
BCD V70-900-30-11	Aft Heat Shield,OMS @ RCS Pods	0	0
	TOTAL	4229	4229

TABLE 11.Process Improvement For A Fully Articulated Arm 13 Foot Gross Reach

Rockwell Drawing	Area of Orbiter	Total	RAT	CAT	NA
BCD V70-900-30-01	Lower Fuselage	7974	7974	0	0
BCD V70-900-30-02	Lower Left Hand Wing	3724	3451	273	0
BCD V70-900-30-03	Deleted	0	0	0	0
BCD V70-900-30-04	Lower Right Hand Wing	3724	3451	273	0
BCD V70-900-30-05	Upper Fuselage	1336	0	1258	78
BCD V70-900-30-06	Upper Left Hand Wing	479	0	472	7
BCD V70-900-30-07	Upper Right Hand Wing	479	0	472	7
BCD V70-900-30-08	Left Hand Side Fuselage	1367	206	982	179
BCD V70-900-30-09	Right Hand Side Fuselage	1376	206	982	179
BCD V70-900-30-10	Vertical Stabilizer	586	0	0	586
BCD V70-900-30-11	Aft Heat Shield,OMS & RCS Pods	2995	0	0	2995
	TOTAL	24031	15288	4712	4031

TABLE 12. Tile Accessibility On The Apron

Rockwell Drawing	Area of Orbiter	Total	RAT	CAT	NA
BCD V70-900-30-01	Lower Fuselage	7974	7974	0	0
BCD V70-900-30-02	Lower Left Hand Wing	3724	3087	637	0
BCD V70-900-30-03	Deleted	0	0	0	0
BCD V70-900-30-04	Lower Right Hand Wing	3724	3087	637	0
BCD V70-900-30-05	Upper Fuselage	1336	0	765	571
BCD V70-900-30-06	Upper Left Hand Wing	479	0	472	7
BCD V70-900-30-07	Upper Right Hand Wing	479	0	472	7
BCD V70-900-30-08	Left Hand Side Fuselage	1367	206	257	904
BCD V70-900-30-09	Right Hand Side Fuselage	1376	206	257	904
BCD V70-900-30-10	Vertical Stabilizer	586	0	0	586
BCD V70-900-30-11	Aft Heat Shield,OMS & RCS Pods	2995	0	0	2995
	TOTAL	24031	14560	3497	5974

TABLE 13. Tile Accessibility On The MDM

Rockwell Drawing	Area of Orbiter	Total	RAT	CAT	NA
BCD V70-900-30-01	Lower Fuselage	7974	7732	242	0
BCD V70-900-30-02	Lower Left Hand Wing	3724	2842	882	0
BCD V70-900-30-03	Deleted	0	0	0	0
BCD V70-900-30-04	Lower Right Hand Wing	3724	2842	882	0
BCD V70-900-30-05	Upper Fuselage	1336	0	765	571
BCD V70-900-30-06	Upper Left Hand Wing	479	0	472	7
BCD V70-900-30-07	Upper Right Hand Wing	479	0	472	7
BCD V70-900-30-08	Left Hand Side Fuselage	1367	206	257	904
BCD V70-900-30-09	Right Hand Side Fuselage	1376	206	257	904
BCD V70-900-30-10	Vertical Stabilizer	586	0	0	586
BCD V70-900-30-11	Aft Heat Shield,OMS & RCS Pods	2995	0	0	2995
	TOTAL	24031	14560	3497	5974

TABLE 14. Summary of Tile Accessibility in the OPF

Appendix "H"

Vision Sensors Special Studies

This appendix consists of special visions sensor tests and studies. It consists of two major sections to include:

Appendix H.1 Survey of Vision Sensors for TPS automation Study

Appendix H.2 Determination of Required Sensor Resolutions

Appendix H.1

SURVEY OF VISION SENSORS FOR TPS AUTOMATION STUDY

PURPOSE: To determine the characteristics representative of commercially available grey-scale cameras.

METHOD: Technical and sales brouchures were obtained from a variety of camera manufacturers.

PERFORMED BY: SRI International.

SUMMARY: The following table summarizes the relevant characteristics of several cameras that are commercially available. Primary emphasis has been placed on finding examples having small size and high resolution. Cameras having a "remote" head, with lens and CCD array connected to the controller over a variable-length cable, are designated in the next-to-last column.

Vendor	Model	Pixel Array	Size(HxV)	len wid ht	Cost
ELMO	SE300	574 x 489	11 x 10	126 65 65	
ELMO	EM-102BW	570 x 485	11 x 10	53 17 17	
Videk	MEGAPLUS	1320 x 1035	7 x 7	134 127 76	10-20,000
NEC	TI-22	384 x 490			
Cohu	4110	739 x 484	8 x 19		2800
Dalsa	CT-E1	512 x 512	13 x 13		4000
Pulnix	TM540R	510 x 492	17 x 13	32 38 32	
Pulnix	TM840	800 x 490	11 x 13	136 32 45	
Pulnix	TM740	768 x 493	9 x 7	119 44 32	1600
Pulnix	TM460	422 x 579		178 45 39	

DISCUSSION:

There are several advantages of CCD cameras over the older tube-type cameras that have made the CCD the sensor of choice for machine vision applications. They are nearly maintenance-free and do not change with age, so they typically provide several years of trouble-free service. Since they contain no deflection coils, they are very resistant to nearby electromagnetic interference. They are not sensitive to vibrations and are free from thje distortions typical of vidicons tubes. Finally, jCCD array cameras are not damaged by bright illumination and so do not have the problem with burning of the sensor.

Typical array cameras used in machine vision have pixel arrays consisting from 250 to 500 pixels on each side. New cameras with larger arrays are becoming available. For examlple, there are currently several cameras with array size of about 800 x 500 pixels, and one camera whose pixel array is 1300 x 1000. The price of these higher resolution cameras typically starts around $3000. The camera cost usually depends in part on the manufacturer's guarantee regarding the maximum number of defective pixels. For the highest cost camera in the above table, the Videk MegaPlus, the cost may be as low as $10,000 for a camera with 20-30 defects (out of 1.3 million pixels) up to a maximum of $20,000 for a camera with no more than 5 defective pixels.

Current camera technology does have shortcomings in addtion to its cost In addtion to limited resolution, current camera technology has the additional shortcoming of a limited dynamic range. That is, there is a fairly limited range of brightness that a CCD device can sense. This limitation is especially important for observing the HRSI tiles because the are black and specular. A large lens aperture must normally be used to sense the dark surface, but specular (mirror) reflection of the light source, e.g., from the rounded edge of a neighboring tile, may exceed the camera dynamic range. The camera dynamic range depends on the amount of photoelectric charge that can be accumulated at each pixel. When the pixel exceeds its maximum charge, the excess charge leaks into the neighboring transfer channel causing one column or row to appear completely white. Some cameras, e.g. the General Electric TN2500 series, use a different technique known as CID (Charge Injection Device), which has the desirable feature that the excess charge is retained in the overloaded pixel. Unfortunately, CID sensors generally do not have as much resolution as CCD's.
Most CCD cameras in use for machine vision are primarily designed for surveillance or security applications.

As such, their frame rate (the rate with shich they collect images) is based on the normal video rate of 30 frames per second. However, using such a short time for image acquisition means that more light must be used (so that sufficient accumulates at each pixel. The required illumination is very important for a battery-powered vihicle because of their power requirements. jTo illustrate this point, typical machine-vision applications in industry may use 500-1000 watts of illumination (of course, these applications typically do not depend on batteries for their power. Some cameras, e.g., the Videk Megaplus, have a variable frame rate. Obviously, this is a desirable feature from the standpoint of required power.

Size and weight are also an important considerations for any system on a mobile platform. Some cameras provide for the image-sensing head to be remote from the electronic control equipment. This feature is also obviously desirable but further study is necessary to determine the relative importance of sensor size and weight.

Appendix H.2

Sensor Resolution

PURPOSE:

The conceptual designs presented in sections 10.1.1 - 10.1.9 have described various tasks that may be performed using grey-scale or color vision (2D), using 3D topographic sensors, or a combination of them. This discussion addresses the required resolution from each of these sensors for the various tasks.

Perform By:

SRI International

Conclusions:

A Table located at the end of appendix summarizes the estimates of required sensor resolutions. Further live testing with operators and sample TPS materials and anomalies will be necessary to determine exact sensor specifications

Discussion

Clearly the size of the smallest feature that must be detected by any sensor defines the minimum required resolution for its task. Automatic detection of small but significant image features is difficult because images are generally quite noisy. For example, in a grey-scale image of a uniform surface, pixel-to-pixel differences of 3 or 4 intensity values are common. The noise in 3-D range images is often much worse -- the difference between neighboring pixels on a flat surface often exceeds the manufacturer's specifications (the manufacturer usually states the device's performance on an ideal, matte surface), and sometimes the images include isolated erroneous values differing by an inch or more from the surrounding region. Due to these noise problems, automatic feature detection requires multiple pixels across the smallest feature to be detected. Two to five pixels are sufficient to detect a feature if it exhibits high contrast with the background (with higher contrast, fewer pixels are required). For example, Figure SRI-2PIXEL illustrates the detection of a bright

spot on a dark background with a spatial resolution guaranteeing only two pixels across the spot. In Figure SRI-2PIXELa the image of the region boundary is aligned with the pixel boundaries; in Figure SRI-2PIXELb the region boundary is completely out of alignment with the pixel array, so that two mixed pixels are formed (so called because their data is an average or mix of multiple image features). The spot is easily detectable in the image because its high contract causes the pixel values to be significantly different from the background, even for the mixed pixels. To detect and reliably measure the size of an image feature usually requires 10 pixels across the smallest feature, so that an error of +/- one pixel (due to the mixed-pixel effect), only results in a 10% error.

It is also important to note that the system must guarantee a minimum resolution in *any* direction, since anomalous features may appear at any orientation in the image. For example, a 512 x 512 pixel camera arranged to view a 6-inch square tile obtains 85 pixels per inch (ppi) in the image directions corresponding to the rows and columns of pixels, but only obtains 60 ppi in the diagonal direction.

The following subsections discuss the sensory systems using 2D monochrome (greyscale) images, 2D color images, and 3D range sensors. A general discussion of sensor capabilities and tradeoffs is included for each type of sensor, along with a description of the desired characteristics for each type.

2D Monochrome Vision

Monochrome (or greyscale) imaging is the basic sensing method for visual anomaly inspections (v6028, V6037) and for verifying the identity and location of a tile. As previously described, the size of the smallest anomaly to be detected determines the required image resolution. Another important imaging characteristic is the dynamic range of the camera and the camera's response when the image brightness exceeds its dynamic range. In particular, when the charge accumulated at one pixel in a typical CCD array exceeds its capacity, the excess voltage overflows into the adjacent transfer channel. This effect is called blooming and usually results in the loss of entire rows or columns of data, depending on the chip design. Obviously, blooming is undesirable. However, many tiles have dark regions and therefore will require a large lens aperture to obtain a sufficient signal on those regions. At the same time tiles may have bright regions (e.g., visible white substrate) and many tiles have shiny regions that may cause mirror reflection of the light-source into the camera, either of which may exceed the camera's dynamic range. Since it will probably not be possible to guarantee that blooming does not occur, it will be necessary to detect the condition and compensate for it (for example, by closing the aperture to eliminate the blooming or by rotating the camera so that the row or column of lost data corresponds to a different portion of the tile).

There are some cameras that do not bloom. In particular, the GE TN2500 series cameras use CID (charge injection device) technology, which allows a simple and reliable clipping of pixels with excess charge. However, these cameras generally do not provide the resolution available with the more common CCD technology. A comparison of available cameras appears in Appendix G.2.1.

The most important physical characteristic of the camera is that it be small. Small size is especially important when multiple cameras are used (as described in Section 10.3.2) because each of the adjacent cameras should be oriented for a normal (perpendicular) view of the tile being inspected. Using a large camera in such an arrangement would require that one or more of the cameras be tilted from the normal view. Although it would be possible to correct for the distortions caused by a non-normal view, it is best to avoid the problem altogether so as to reduce the required computation. In a similar way it is desirable for the camera to be light weight in order to maximize the flexibility of adding additional tools ore sensors without exceeding the maximum positioner pay load.

In a typical scenario video digitizing equipment is needed in order to capture each greyscale image and place it into computer memory for processing. (The primary exception is when the Videk Megaplus camera is used, because it provides digital image output). The digitizer grabs an individual video frame, samples the analog waveform and converts the analog samples to digital. Ideally the camera and digitizer should have the same resolution (or sampling interval) to avoid distortion of the signal (called aliasing -- for a discussion of aliasing, see "The Fourier Transform and its Application," by R. Bracewell).

Color Vision

Although there are relatively few tile image feature whose color differs from the normal grey/black spectrum, accurate color comparison is nevertheless nontrivial. In particular, algorithms for automatic detection of colored regions do not approach the visual acuity of the human visual system. To ensure adequate separation of colors and to maximize the ability to calibrate the color system, it is highly recommended that a camera incorporating 3 CCD arrays be used. Single chip cameras use an integral striped filter atop the CCD array and therefore cause a loss of spatial resolution in each color. In addition, the single chip cameras only have one set of CCD readout and video electronics, whereas the 3 chip cameras have 3 sets, allowing better calibration of the video output signal.

The desired camera output format is component video -- each of the color signals is output as a separate channel (whereas in composite video all signals are combined). It is also preferable that the camera provide red, green and blue outputs because that is the necessary input to the color image digitizer. However it is also possible to convert the output of certain cameras (e.g., the Panasonic

M-II system) using the luminance-chromanance (YC) format into the necessary red, green and blue signals without significant loss of color fidelity. As a final note regarding video formats, to maintain good color resolution it is important that the video signal not be converted to the NTSC format at any point before it is digitized. (Some low-cost color cameras use NTSC internally and simply provide a conversion to RGB as an optional output.)

The final piece of electronic equipment needed to obtain a color image is a digitizer. It is important that the digitizer provide separate circuitry for the red, green, and blue channels for calibration purposes. Furthermore, the system must provide the facility (preferably in software) to individually calibrate the gains and offsets for each of the analog-digital circuits.

3D Vision

An ideal 3D topographic sensor would be one that could scan all the necessary data for the inspection of one tile (or cavity) without having to be repositioned. That is, the ideal sensor would sweep its spot in two directions (or its line in one direction) to gather a dense "map" of data over a region of the tile surface. Unfortunately, it is not yet known if any commercially available sensor provides this capability while also providing the resolution and speed required for TPS automation.

As previously mentioned it is common for the noise level in a range image to far exceed the device specification because the manufacturer tests it on ideal (usually matte) surfaces. Therefore it is usually necessary to test each sensor on representative surface materials during the process of selecting a sensor.

The scanning rate of a range sensor is also especially important because of the large number of measurements needed to form a dense map of range values. Consider an example task of measuring a small region to a resolution of 5 mils using the HyScan range sensor (currently popular with the automotive industry). At its specified maximum rate of 10,000 points per second it would take 4 seconds to measure each square inch of the region.

It is also worth noting that some range sensors may perform poorly in scenes having a large dynamic range. Obviously any range sensor using a CCD array as a detector will fail if any pixel in the image array blooms.

Finally it must be noted that some sensors may give very bad data on regions where the substrate is visible. For example, the Technical Arts White Scanner triangulation system gives completely erroneous values for such regions. The reason for its failure is that the system uses a simple binary

image threshold to find the location of the stripe of light. When the light stripe falls on any portion of the visible substrate region, the translucence of the material allows the light to penetrate the substrate with the result that the entire region appears relatively bright. In cases where the region's brightness exceeds the stripe-location threshold, the range calculation method fails completely and the the gouged region appears as a tilted surface that is above the tile on one side and below it on the other. Furthermore there is no indication that these values are in error.

Resolution for Visual Anomaly Detection

The following paragraphs describe sensing requirements for the various inspection procedures for HRSI tiles. Using the study of the V6028 visual tile inspection (described in Appendix ***), it is possible to estimate the required spatial resolution for each type of defect. Note that although certain inspection criteria do not specify a minimum defect size (e.g., such as the instruction to remove all contamination), it is necessary in an automated system to define a minimum feature size. Assuming that the system must assure detection of anomalous regions whose diameter is .030 inch then each pixel should measure a region .006 inch in diameter (for a spatial resoluton of 167 ppi). For a 6 inch square tile, 1400 pixels would be required to obtain the required minimum resolution in all directions on the tile surface.

Gap Fillers

Fairly low resolution would be sufficient to detect fraying of pad/pillow type gap fillers. According to the V6028 inspection criteria, the critical size of a "rooster-tail" is 0.25 inch. To determine if a "rooster-tail" is larger than 0.25 inch would require about 40 ppi resolution. However, detecting small holes in the gap filler requires higher resolution. To detect holes as small as .030 inch requires spatial resolution of 167 ppi. Note that since the system must do anomaly detection over the entire tile using similar high resolution, it should be possible to use a slightly larger field of view so that the gap fillers are also inspected at the same resolution.

Detecting discoloration of pad/pillow type gap fillers probably requires color sensing, but it might be possible to detect a change in reflectivity using a greyscale camera. Note that if color sensing is required, the distinction between a normal and a discolored gap filler may be somewhat subtle. Complete specification of the required sensing to detect this type of discoloration must be the subject of further study.

Due to the lack of available examples, it is not currently possible to determine the resolution necessary to detect fiber fusion of Ames-type gap fillers. However it is reasonable to expect that

rather high resolution would be required because the most likely technique would be to detect a significant alteration of the texture on the edge of the gap filler. The gap fillers are composed of rather small fibers (about .030 inch) and each fiber does not have a uniform appearance, so that the minimum feature size for visually detecting fiber fusion may be .005 inch or smaller. These estimates would indicate that image resolution of about 1000 ppi may be necessary.

To determine if the location of an Ames-type gap filler is within .125 inch of the OML requires range sensing. Since the gap may be as thin as .030 it is desirable to use range resolution of about .003. Note that for this task the spatial and depth resolutions need not be identical because the main problem is to get enough range samples on the gap filler. Thus it would be sufficient to have .003 spatial resolution with a range resolution of about .010.

Thermal Barriers

The inspection and rework criteria for a frayed thermal barrier is similar to that for a pad/pillow type gap filler and a similar visual resolution would be required (40 ppi). However the visual detection of exposed inner sleave material would require higher resolution. Although no minimum defect size is specified, it is reasonable to assume .030 inch as a minimum size until further study can be performed. Thus the required spatial resolution is 167 ppi. The requirements for detecting discoloration of thermal barriers is assumed to be similar to those of pad/pillow type gap fillers.

Filler Bar

Current visual detection of charred filler bar is entirely based on the accompanying color change from the normal red-brown color of RTV to brown/black. The envisioned special tool (described in Section 10.3.X) would look down the gap to observe the color of the filler bar in a small region. The tool would be translated over all gaps. With this tool very low spatial resolution would be required. In fact the tool would not form an "image" of the gap filler, but would simply be an analog device detecting the color of the underlying filler bar. Since the charred regions can be expected to be relatively long (at least ***1 inch) a field of view should be about .25-.50 inch should be sufficient.

Ceramic Inserts

According to the V6028 inspection criteria the visible edge of ceramic inserts must be inspected for cracks and, if found, a determination must be made if the pieces are loose or missing. It is certainly possible to detect missing pieces -- e.g., missing pieces greater than .030 inch can be detected using

spatial resolution of 167 ppi. Note that range information is not required since the loss of any material may be considered anomalous. Detecting all cracks however is more difficult due to their potentially very thin appearance. To detect cracks whose gap is .005 would require 1000 ppi resolution. Further study is needed to determine the minimum gap size that must be detected.

Ceramic Plugs

Although the inspection criteria does not specify the minimum size of chips or missing material, it is reasonable to assume .030 as a minimum, so that 167 ppi is sufficient. Once a chip is detected, it must be measured to determine if its depth exceeds .100 inch, indicating a required range resolution of .010 inch.

HRSI Tile

The inspection criteria for a HRSI tile depends on whether the anomaly lies within a previously repaired region or not. However in either case it is necessary to visually detect small anomalies (e.g, contamination, coating loss, bubbling of prior RTV repairs, etc.). Once again it seems reasonable to use .030 inch as a minimum anomaly size resulting in a required spatial resolution of 167 ppi. This resolution easily handles the required detection of .100 inch voids or holes (for a fill repair anomaly and for holes in the OML on a new anomaly), and regions of depressed coating greater that .6 inch. Note that further study is required to ensure that a region of depressed coating with no coating loss is detectable visually. Once holes are detected their depth must be measured. The smallest critical depth is .030 inch (for depressed coating), requiring range resolution of .003 inch. Detecting the color of an anomaly is also important in order to distinguish between normal grey outgassing and anomalous red/brown outgassing.

Summary

The following table summarizes the preceeding discussion on the necessary resolution for each sensing task. Tasks that do not require range or color sensing have no entry in the corresponding column.

TASK	SPATIAL RESOLUTION (PPI)	RANGE RESOLUTION (MILS)	COLOR NEEDED?
GAP FILLER			
PAD-TYPE	167		maybe
AMES-TYPE	1000 (est)	3	
THERMAL BARR	167		maybe
FILLER BAR	2		yes
CERAMIC INSRT	1000 (est)		
CERAMIC PLUG	167	10	
HRSI TILE	167	3	yes

Appendix "I"

3-D Topograhical Sensors

This appendix contains special tests and studies conducted for 3-D topographical sensors. This appendix contains 3 sections to include:

Appendix I.1	3-D Scanner Tests	CMU
Appendix I.2	3-D Supplier Survey	SRI
Appendix I.3	3-D Special Test	LaRC

Appendix I.1

3D Scanner Tests

Purpose:

Rangefinders can be used to obtain a three-dimensional map of the surface of the shuttle, from which tile step, gap and other surface imperfections measured and stored. These sensors can also be used to obtain cavity shapes and possibly to locate waterproofing injection holes.

As part of a study on sensor capability determining sensor suitability CMU obtained an array of ten tiles and scanned it with two types of commercially available sensors: a light stripe system and a 2-meter LIDAR scanner.

Perform by: Carnegie Mellon University

Discussion:

Light Stripe System

Light stripe sensors use structured light. They project a plane of light, forming a stripe on the object. A stripe image is then digitized. Since the light stripe is two-dimensional, and the geometry of the light source and the camera are known, a stripe of three-dimensional points on the surface can be determined. The light stripe is moved across the object resulting in a complete three-dimensional surface mapping. Advantages of this technology include the relatively simplicity of the electronics – most of the work involved is limited only by the speed of the available computers. The major disadvantage is that this technique is slow because a video picture, taking 1/30 second, must be taken of each stripe. This could be solved by using specialized hardware reading directly from a CCD array. Also, shadowing in the gaps (because the light is projected at an angle to the gap) is a problem with any type of structured light sensor.

The test data scanned from a tile array showed several things. A 4"x6" image took approximately 4-5 minutes with a 300μ step. Accuracy was approximately 20μ – enough for step and gap

measurement but not for finding waterproofing holes. The amount of shadowing varied greatly with the angle at which the scan was performed. This can be compensated by using two perpendicular scans.

If the speed problem can be overcome with specialized hardware then the simplicity of light stripe scanning looks very attractive for this work.

LIDAR Scanner

LIDAR is very similar to RADAR, except that it uses visible or IR light. A modulated beam is scanned over an object, and difference in the phase of the return light and the outgoing beam is porportional to distance. The primary advantage to this technique is speed: a complete surface map can be created at frame rates. A disadvantage is that LIDAR scanners require more complex electronics resulting in heavier, bulkier, and more power consuming packages.

The 2-meter LIDAR scanner which was tested by the FRC imaged a one-meter by one-meter patch per image and was accurate to approximately 0.5 mm, which is not enough for tile step and gap measurement. Time to take this data was 0.5 seconds. However new generation scanners are expected to have an 80μ accuracy, sufficient for these measurements. Another advantage of the LIDAR scanner is that it returns both range and intensity measurements for each pixel so correlated monochromatic color information can be determined with the same sensor.

Current generation LIDAR devices are heavy and fragile and don't meet project needs for accuracy. Certainly with the pace and development effort underway these devices become viable. However, for current work the LIDAR-type device does not appear to do the job.

Appendix I.2

3-D Vision Survey

Purpose:

To investigate commericilly available 3-D topographical Sensors for use in the TPS process automation system.

Performed By:

SRI International

Conclusion:

The following list potential candidate 3-D topographical sensors:

Model	max PPS	Standoff (mm)	Resolution (mm)	Field of View (mm)
Hymark HyScan	10000	150	.025	100
Chesapeake LTG 2100	1800	630	.013	76
Perceptron LIDAR	360000	2400	1.500	1400

Appendix I.3

EVALUATION OF COHERENT LASER RADAR APPLICATION TO SHUTTLE GAP AND HEIGHT DIFFERENTIAL MEASUREMENT

Purpose

To determine the effectiveness of Coherent Laser Radar (CLR) technology in measuring shuttle tile migration.

Performed by:

Langley Research Center (LaRC)

Process

This experiment was conducted on 4/12/89 in the laboratory of Digital Optronics Corporation of Herndon, VA. The instrument used was a high precision version of CLR similar to a system at LaRC. LaRC's system is an order of magnitude less precise but three orders of magnitude faster. The instrument used in this experiment is now at Digital Signal Corporation of Springfield, VA, the original developers of the CLR technology. The instrument as currently configured may not be directly applicable to this application but the experimental results indicate the technology's capability for automating the inspection and step/gap measurement processes.

The accompanying figures are a diagram and graphic results of the experiment. Two black tiles were mounted side by side, one on a nonmovable holder and the other on a positioning device capable of being adjusted 10 microns per tick in the Z direction (i.e. along the range axis of the instrument). The tiles were positioned 10 mils apart between their bottom edges resulting in a 55 mil separation between their top shoulders (see diagram). The nominal distance of the tiles from the scanning instrument was 71 inches. A single line was scanned across the tiles for each of three conditions:1) No range differential between their top surfaces, 2) A three (3) mil range differential between their top surfaces, and 3) A six (6) mil range differential between their top surfaces (the actual distance increment for each condition was 7 ticks of the positioning device - 70 microns or 2.75 mils). All data represent ranges to a series of points representing a line roughly centered on

the gap between the tiles. A high resolution and a low resolution graph is shown for each condition. On the graphs, spacing refers to gap and offset refers to step.

Conclusion

The instrument is capable of locating a target with a 1 sigma accuracy of 3 mils and an absolute accuracy of 10 mils in the Z direction. At this distance the absolute location accuracy in the X,Y plane is 5 mils. Data was also taken at 120 inches in condition 1. Z direction accuracy at this distance is the same as at 71 inches with a 10 mil location accuracy in the X,Y plane.

EXPERIMENT DIAGRAM

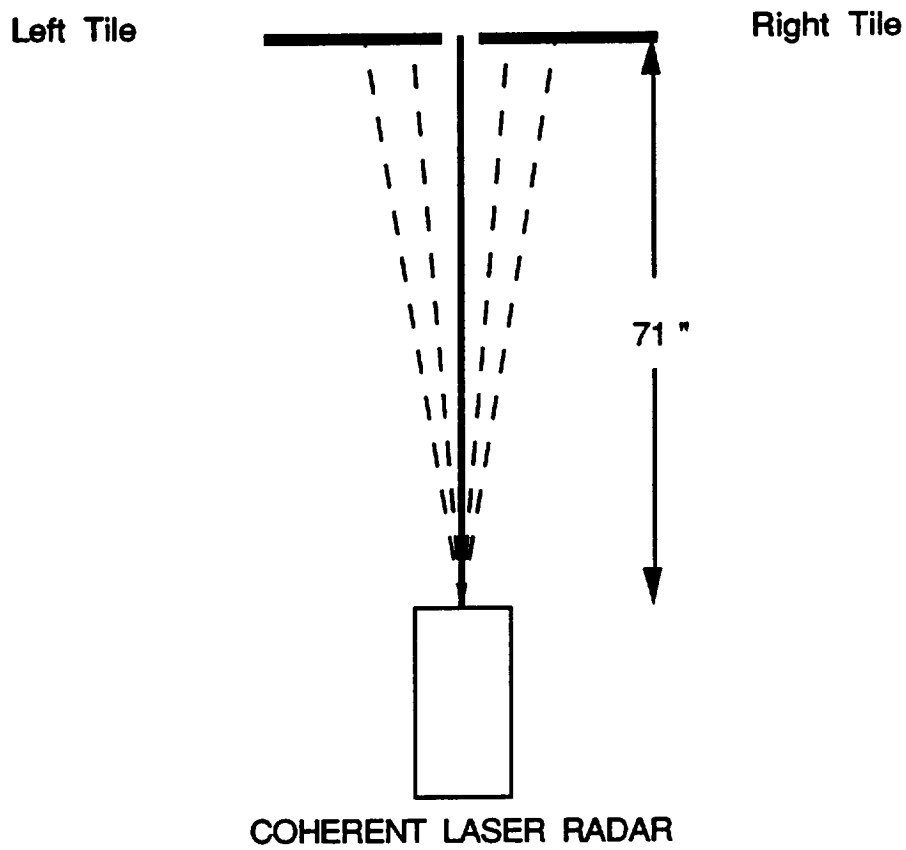

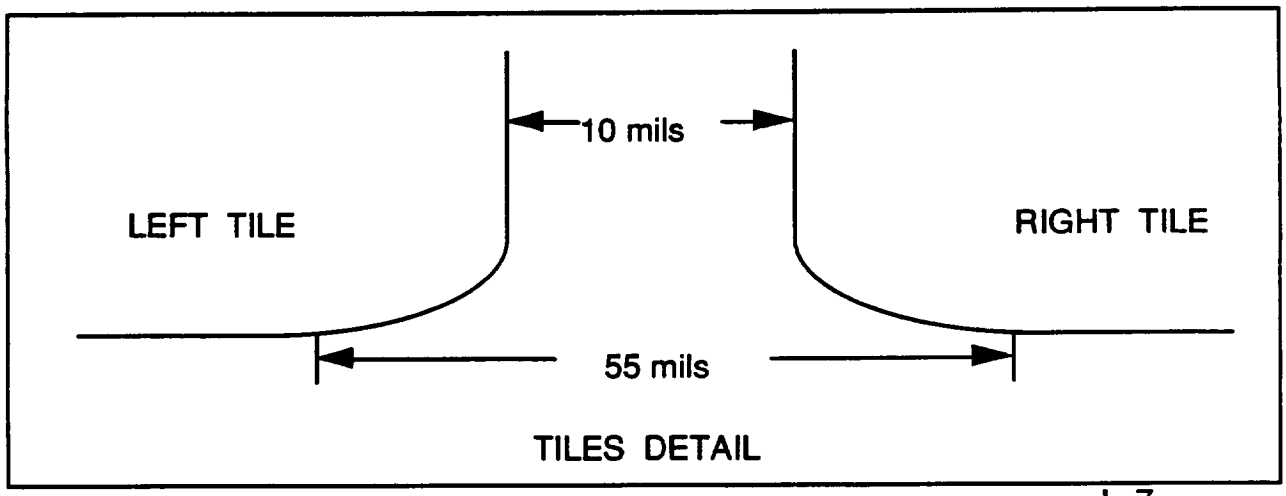

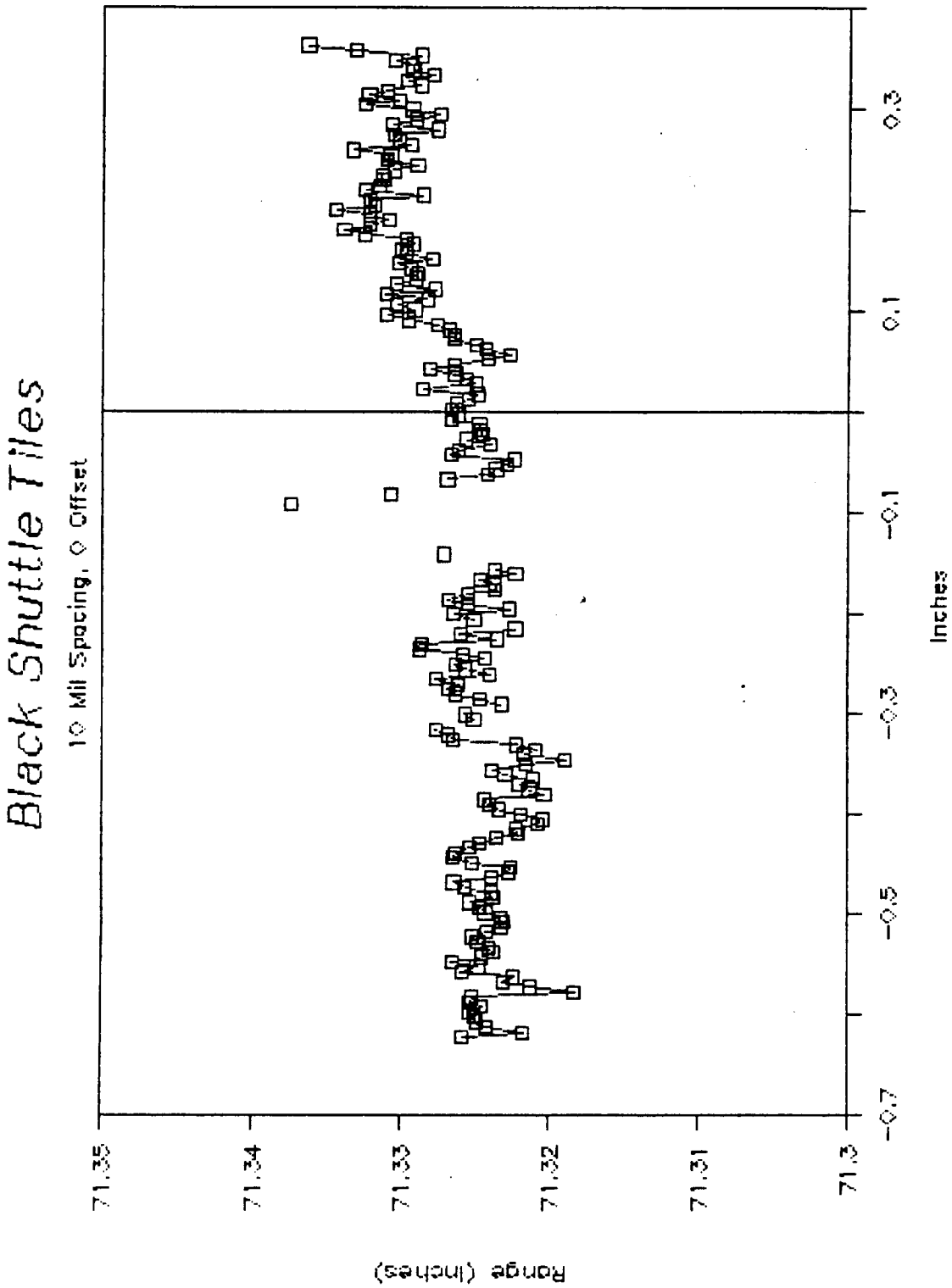
Black Shuttle Tiles
10 Mil Spacing, 0 Offset
Range (Inches)
71.35
71.34
71.33
71.32
71.31
71.3
-0.7
-0.5
-0.3
-0.1
0.1
0.3
Inches

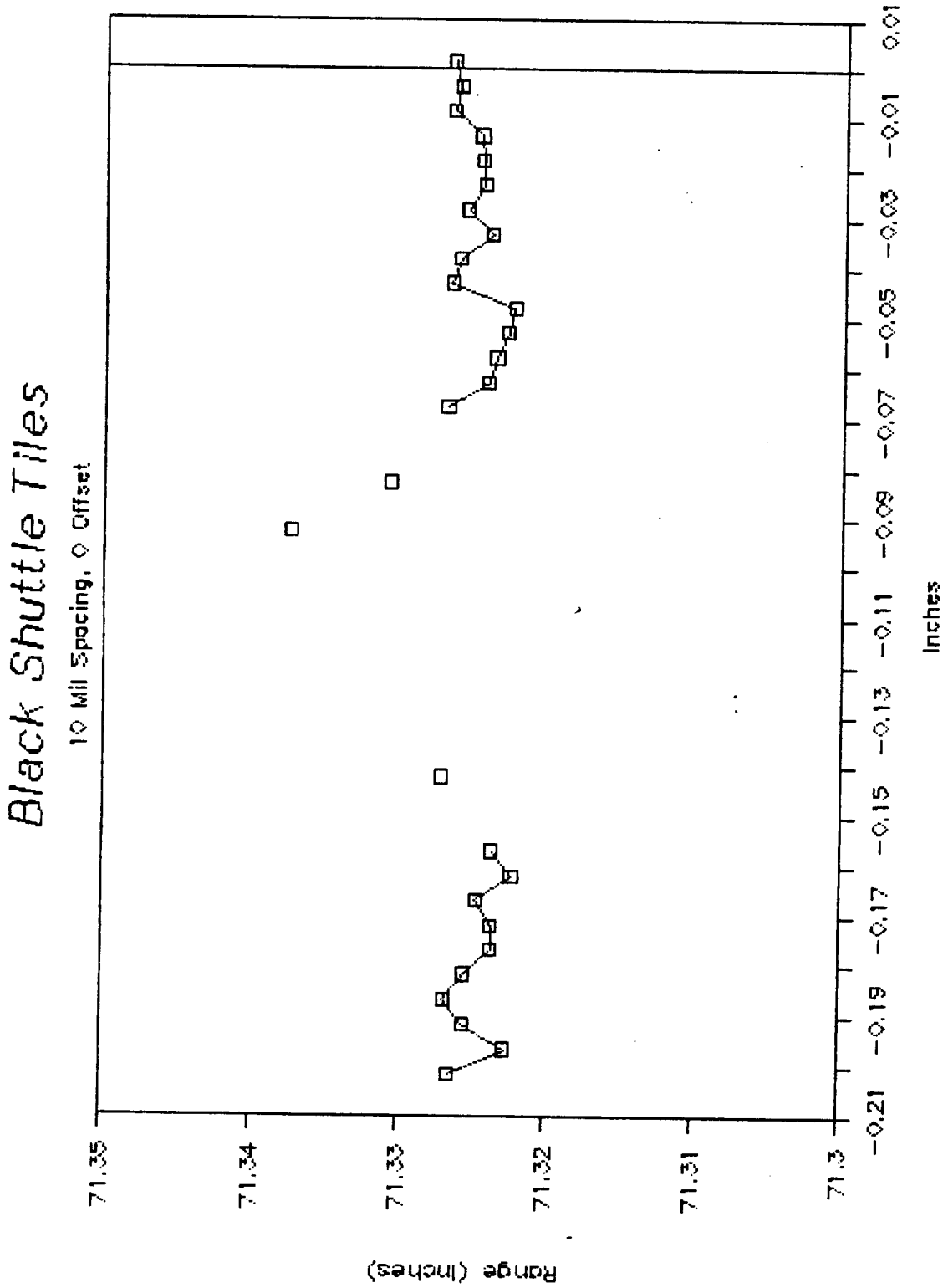
Black Shuttle Tiles
10 Mil Spacing, 0 Offset
Range (Inches)
71.35
71.34
71.33
71.32
71.31
71.3
Inches
-0.21
-0.19
-0.17
-0.15
-0.13
-0.11
-0.09
-0.07
-0.05
-0.03
-0.01
0.01

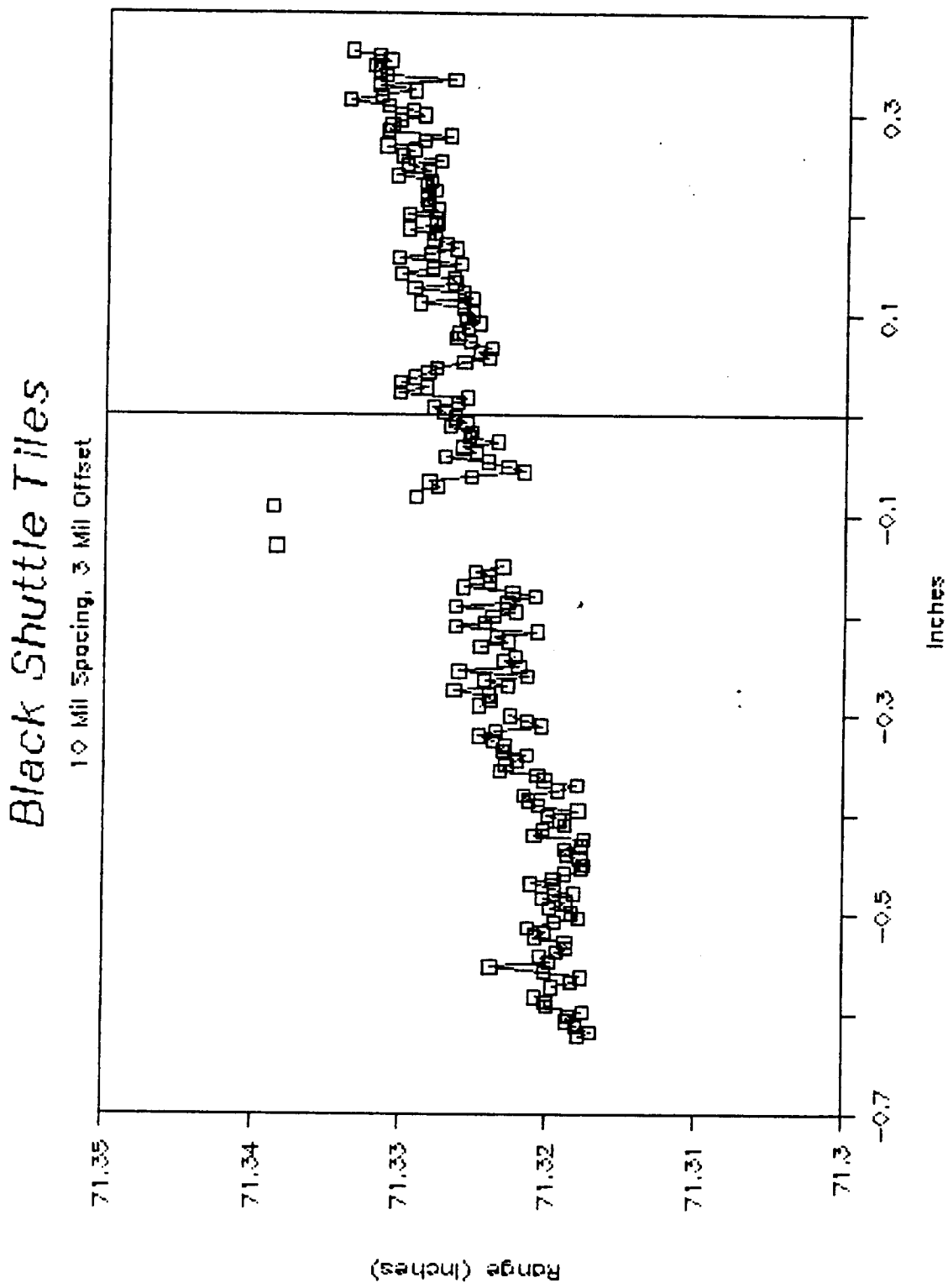
Black Shuttle Tiles
10 Mil Spacing, 3 Mil Offset
Range (Inches)
71.35
71.34
71.33
71.32
71.31
71.3
Inches
-0.7
-0.5
-0.3
-0.1
0.1
0.3

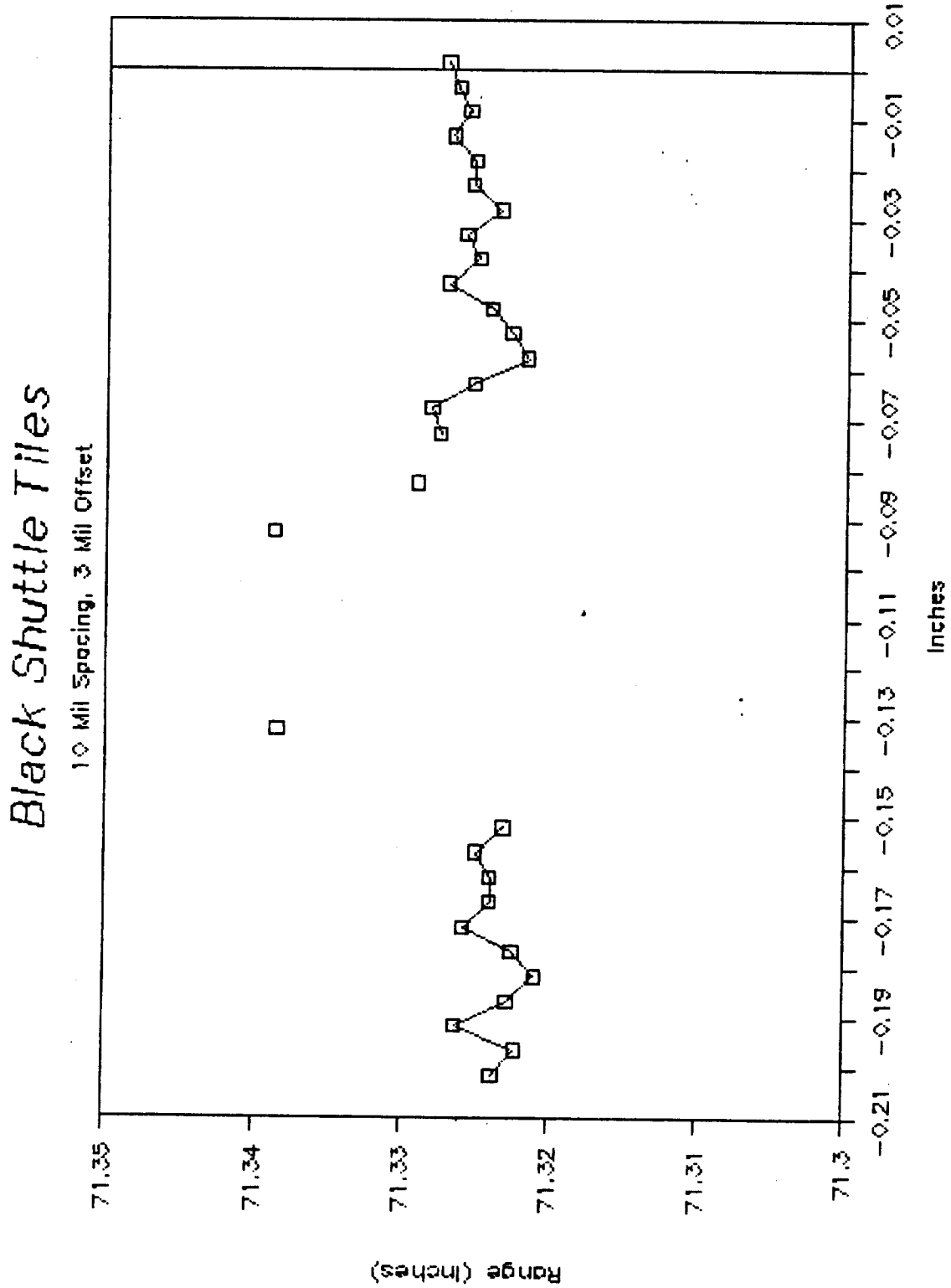
Black Shuttle Tiles
10 Mil Spacing, 3 Mil Offset
Range (Inches)
71.35
71.34
71.33
71.32
71.31
71.3
-0.21
-0.19
-0.17
-0.15
-0.13
-0.11
-0.09
-0.07
-0.05
-0.03
-0.01
0.01
Inches

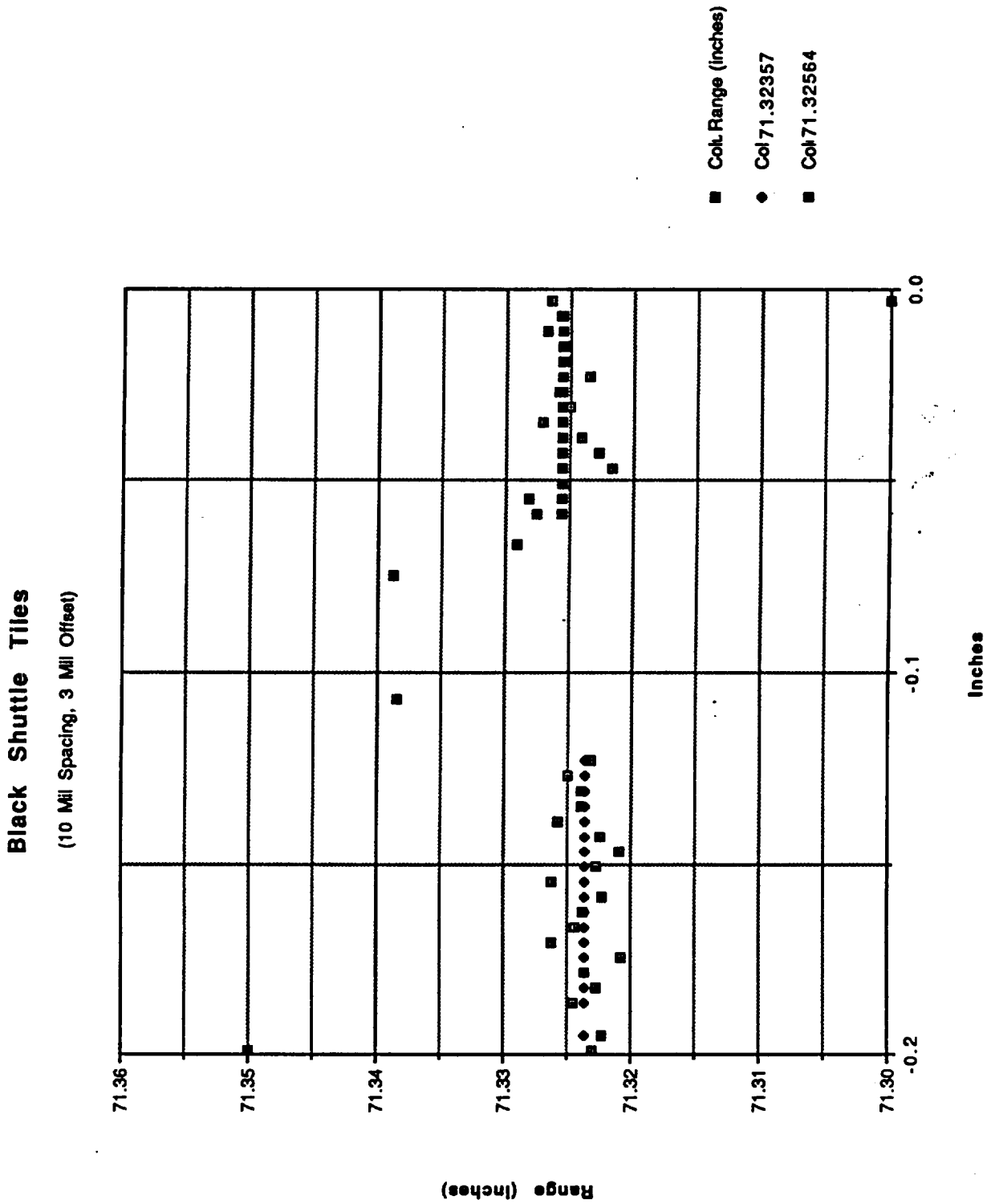
Black Shuttle Tiles
(10 Mil Spacing, 3 Mil Offset)
Col. Range (inches)
Col 71.32357
Col 71.32564
71.36
71.35
71.34
71.33
71.32
71.31
71.30
Range (Inches)
-0.2
-0.1
0.0
Inches

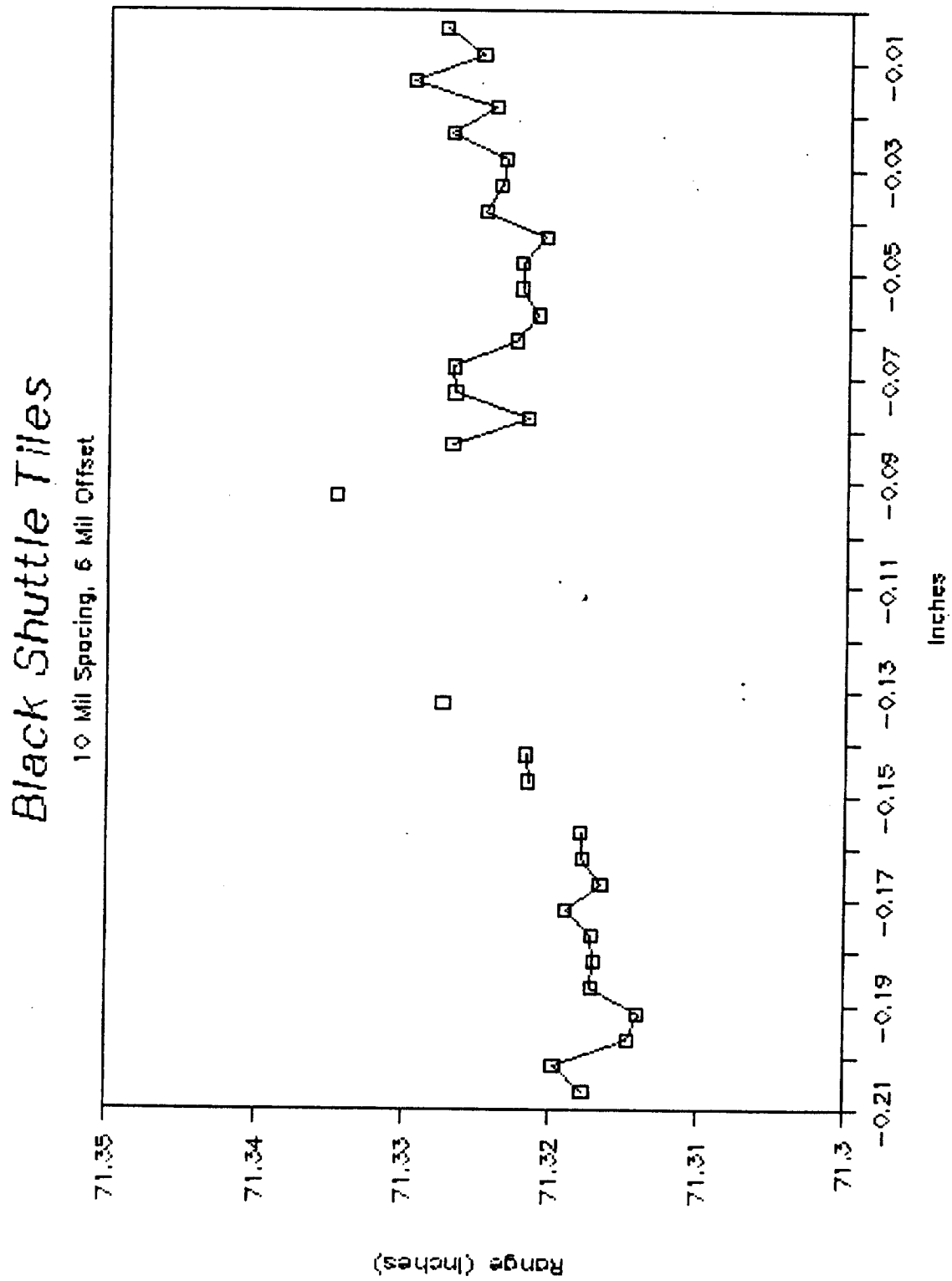
Black Shuttle Tiles
10 Mil Spacing, 6 Mil Offset
Range (Inches)
71.35
71.34
71.33
71.32
71.31
71.3
-0.21
-0.19
-0.17
-0.15
-0.13
-0.11
-0.09
-0.07
-0.05
-0.03
-0.01
Inches

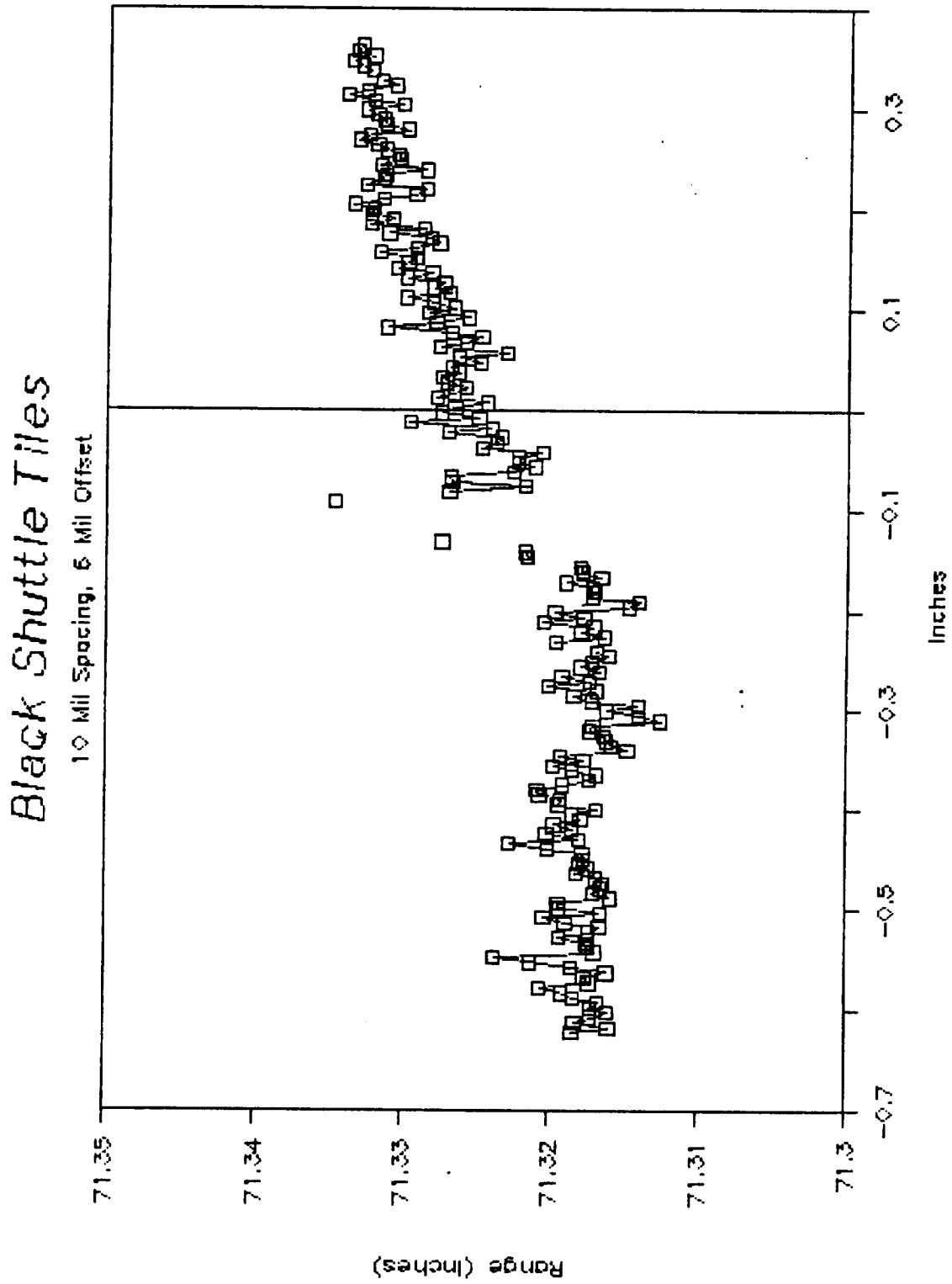
Black Shuttle Tiles
10 Mil Spacing, 6 Mil Offset
Range (Inches)
71.35
71.34
71.33
71.32
71.31
71.3
Inches
-0.7
-0.5
-0.3
-0.1
0.1
0.3

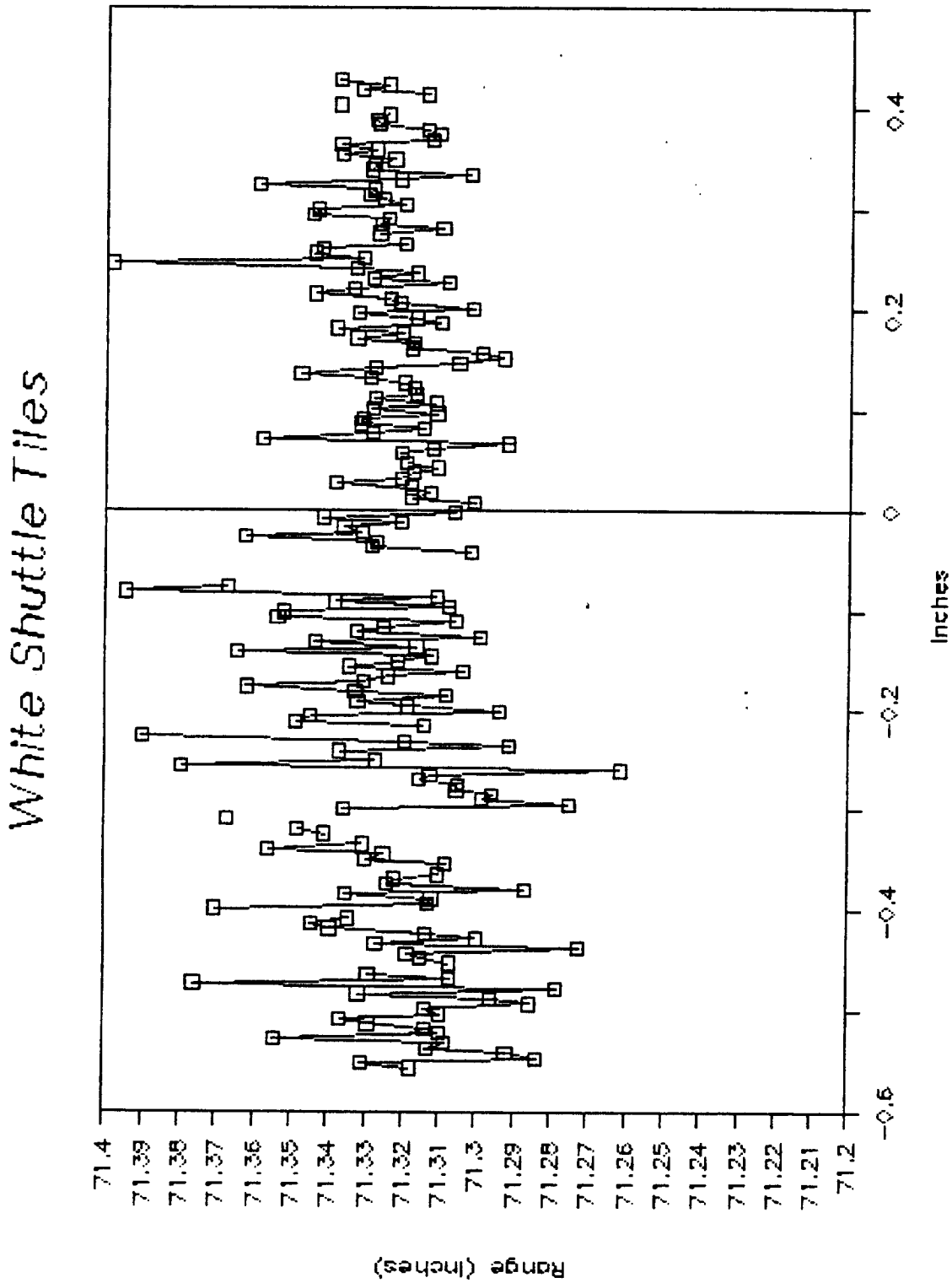
White Shuttle Tiles
Range (Inches)
71.4
71.39
71.38
71.37
71.36
71.35
71.34
71.33
71.32
71.31
71.3
71.29
71.28
71.27
71.26
71.25
71.24
71.23
71.22
71.21
71.2
Inches
-0.6
-0.4
-0.2
0
0.2
0.4

Appendix "J"

Tile Rewaterproofing Special Studies

PURPOSE: To determine if feasible technologies exist for use in a modified tile injection tool that enable its use in automated system.

METHOD: A study was conducted into various options for modifying the existing tile injection tool to collect, measure and dispose of any leaking DMES.

PERFORMED BY: Standford Research International

SUMMARY: Two methods for measuring the amount of leaked DMES appear the most feasible. Conceptual designs featuring these two methods were developed (Section 10.1.2).

DISCUSSION:

The major modification to adapt the hand-held unit for robotic use would be a subsystem to trap and detect any leak. We should also consider what happens to the DMES, i.e. disposal, in a worst case scenario where the full 2 ml leaks out of the injection nozzle.

Leak Trapping Options

Suction Trapping. One option is to use suction in a secondary annulus surrounding the injection nozzle to draw in any leaking DMES. Fluid may be ejected from any leak with a pressure of up to 40 psi. The maximum velocity of ejection, V, is found from standard orifice formulas as:

$$P = d\ V^2 / 2$$

where d is the density of the silane. For P = 40 psi, V can be as high as 6.3 m/sec. With a worst case scenario of all 2 ml being jetted out, it may be difficult to create a sufficiently strong secondary suction to pull all of this into the suction without any escaping.

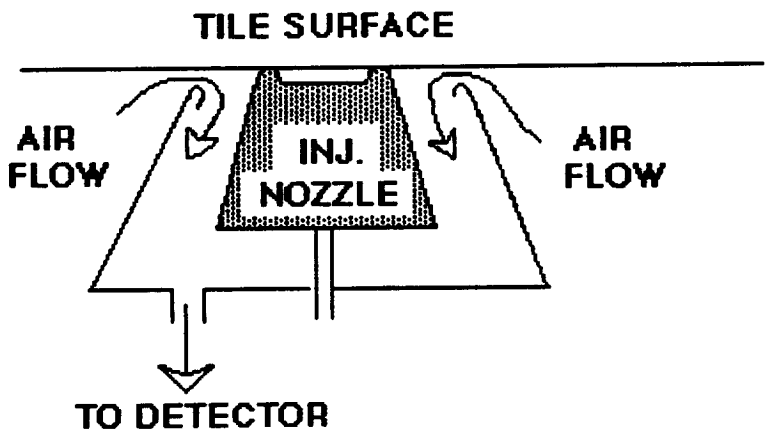

Secondary Seal. With this method the secondary ring is used to form a seal. A vacuum is pulled between the secondary seal and the injection nozzle. Leaks would be absorbed on a sponge or paper filter, and the low pressure of the chamber would cause the silane to quickly evaporate and be drawn down to the vacuum pump.

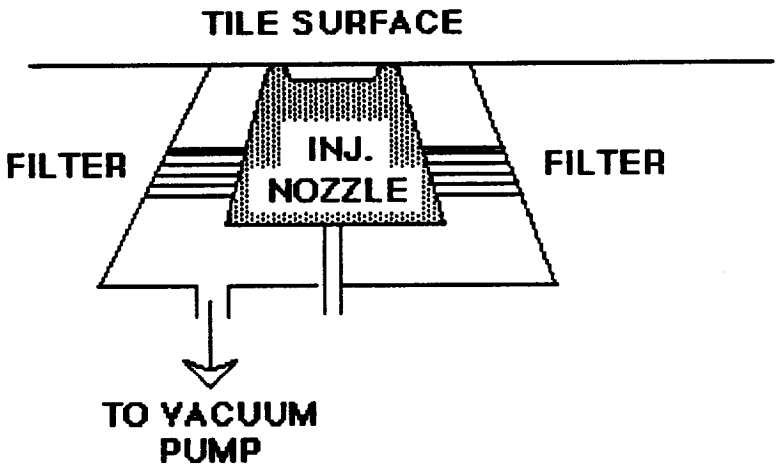

Sponge Trapping. Another option is to use a soft, absorbant material, surrounding the primary seal. The material might be some type of cotton, sponge, or cloth. The soft material will break the flow of any ejected silane and absorb it. The material has to be soft enough to provide a (low pressure) secondary seal even if the surface is rough. It would probably still be advisable to maintain a secondary suction to evaporate the silane in a safe

manner. The gases going down the suction tube could then be analyzed for silane in some detection schemes. Only enough suction to keep a steady stream of air moving across the sponge and into the suction tube would be needed.

Detection Options

We need to be able to detect any leaking silane so we know when there is a problem. Here are some possibilities.

Spring Mass Detection. The idea is to detect the added silane mass when it is absorbed on a sponge or cloth. The sponge is mounted on a thin, but stiff, rigid frame which in turn is connected by a flexure spring to the robot. During injection the spring forces the sponge against the tile for a secondary seal. When the manipulator is moved quickly away from the tile, the spring will oscillate with a frequency that depends on its mass. Alternately, a solenoid can be used to compress the sponge during injection and/or to excite the spring oscillation. The resonant frequency of the oscillation would be measured to determine if any silane mass has been absorbed. The frequency can be measured by strain gauges, magnetic pickup, an accelerometer, etc. Since frequency depends on $1/(m)^{0.5}$, where m is the mass, the fractional frequency change will be roughly

$$\Delta f/f = \Delta m/2m$$

where f is the frequency. Assume we want to detect a 0.1 ml leak. and further assume that this is about 0.1 gram. The oscillating mass needs to go around the 1 inch (2.54 cm) injection nozzle. This would give a circumference of about 8 cm. Assume a 1 cm width, and a thickness of 1 cm at a density of 1 gram per cc (note that the absorbant material should actually be less than this density). These assumptions imply an oscillating mass of perhaps 10 to 20 grams. With a value of 20 grams, a 0.1 gram absorbed mass would give a frequency shift of 1 part in 400. This should be easily detected. With an appropriate choice for the spring, resonant frequencies of 100 to 1000 Hz can be used, so the detector would be fast.

Impact Detector. A plate could be positioned in the air stream of the suction trapping method so that the liquid DMES collects on the plate and is blown off as drops onto a piezoelectric sensor, which detects the impact of the drops. This would require that the

piezo element be positioned in the air stream so that it is impacted by the drops, but this can be done by channeling the air flow at a 90° angle to piezo element. The greater mass of the drops will cause them to continue going straight and impact the element. It may be difficult to obtain quanititive information about the leak with this technique, since drop sizes may not be uniform due to variations in air flow, etc.

Evaporative Cooling. The silane is collected in liquid form and its quantity is determined by the temperature drop it causes upon evaporation. This concept would take some work to determine feasibility for small quantities of DMES.

Vapor Pressure Detection. Using the secondary seal trapping method, a pressure gauge monitors the pressure in the vacuum chamber. The pressure vs. time curve (as the pressure is slowly drawn down by the vacuum pump) should indicate how much silane has leaked. This method has the disadvantage of requiring a good secondary seal, but it is attractive in that it can both trap and measure the leaked silane. Another possible advantage is that the vacuum seal could be verified before the tile is injected: if a poor seal is detected, there may be no need to inject the tile since the DMES would probably leak anyway. Such tiles could be done manually.

Catalytic Detection. A platinum wire catalyst is electrically heated to a fixed temperature below the ignition point of DMES in air. When DMES vapor and air passes across the heated catalyst, less electric power is required to maintain the fixed temperature because of the added heat of combustion on the catalyst. It is not clear that this concept can be made practical because of variations in air flow and DMES concentrations, and because of the additional burden of proof that the heated element cannot create a fire/explosion hazard.

Mass Spectrometer. A commercial mass spectrometer is used to detect leaking silane in the secondary suction. Two issues need to be addressed. One is that the silane which is known to be detectable with these units is not dimethyl ethyl oxy-silane. This is probably a solvable issue since the DMES could also be converted to a product that the mass spectrometer can detect. A more serious issue is the time response. A quote from Perkin-Elmer, a mass spectrometer manufacturer, suggested that a response time of about 5 seconds is as fast as we'll get with their machine. Also, we would probably need to carry a teflon tube connected to the mass spectrometer with the robot. Perkin-Elmer was not

encouraging when I suggested carrying the mass spectrometer around - apparently its calibration can be vibration sensitive. On the positive side, this would be an off-the-shelf solution if it worked. However, cost of their standard system is $125K. There is expertise at SRI with mass spectrometers, including new technologies for much faster response.

Disposal Options

Here are a couple simple ideas for disposal of the collected DMES vapors.

Catalytic Combustion. Assuming the silane gas is drawn down a suction tube, catalytic combustion is an option for disposal. The concept would be draw the suction gases through a noble metal catalyst that is maintained at a temperature below the normal ignition point for silane. This would prevent any danger of explosion but would still break down and oxidize the silane.
Dilution. With this idea a large volume of air is simply mixed with the silane vapor and vented. We'd need to know the tolerance levels of the silane to know the amount of air for dilution, but this shouldn't be a problem.

Condensation. It may be possible to condense the vaporous DMES by passing it through a chilled collection system. Adequate cooling for a system can probably be obtained by using liquid nitrogen, which can be stored in a small Dewar flask.

Evaluation of Leak Detection Using an Oscillating Spring-Mass The ring structure for this consists of three major components. The major components are a structural frame, absorbant material, and permanent magnets. The frame would be made out of a lightweight, rigid, DMES compatible metal and would be about 2 millimeters thick. Two aluminum alloys, 7075 Al and 2219 Al, have been tested by Rockwell and were found to be compatible with DMES. These alloys would be good choices for the structural frame. The absorbant material, such as filter paper or cloth, is attached on top of the frame. The magnets are attached to the frame and are used to both excite and detect oscillations of the ring structure by using the exciter/detector coils located just underneath and offset from the ring magnets. The exciter/detector coils are attached to the main injector structure, not to the ring structure itself. The permanent magnets would be neodymium-iron. The compatibility of this material with DMES needs to be determined. Tests by Rockwell that indicate a number of metals are compatible with DMES (the two aluminum alloys

mentioned, as well as stainless steel, Iconel 601, and a titanium alloy) are encouraging. However, as a worst case, it may be necessary to isolate the magnets from the DMES using, for example, a protective coating. The protective coating as well as the attachment material for the absorbant material can be RTV-560, which is the adhesive used to bond the shuttle tiles themselves.

Mass Estimate of the Ring Structure To estimate the properties of the spring-mass detector, we first need to estimate the mass of the total ring structure. If we assume the frame's average diameter is roughly 3.5 cm with a width of 1 cm and a thickness of 2 mm, then the volume of the frame is about π(3.5 cm x 1 cm x 0.2 cm) = 2.2 cm^3. These assumptions will allow the frame to comfortably surround a 1 inch = 2.54 cm diameter injection head, and should also give the frame sufficient rigidity at the oscillation frequencies of interest, 100 - 1000 Hz. Assuming a typical density for aluminum alloys of 2.7 g/cm^3, the mass of the frame is about 6 grams.

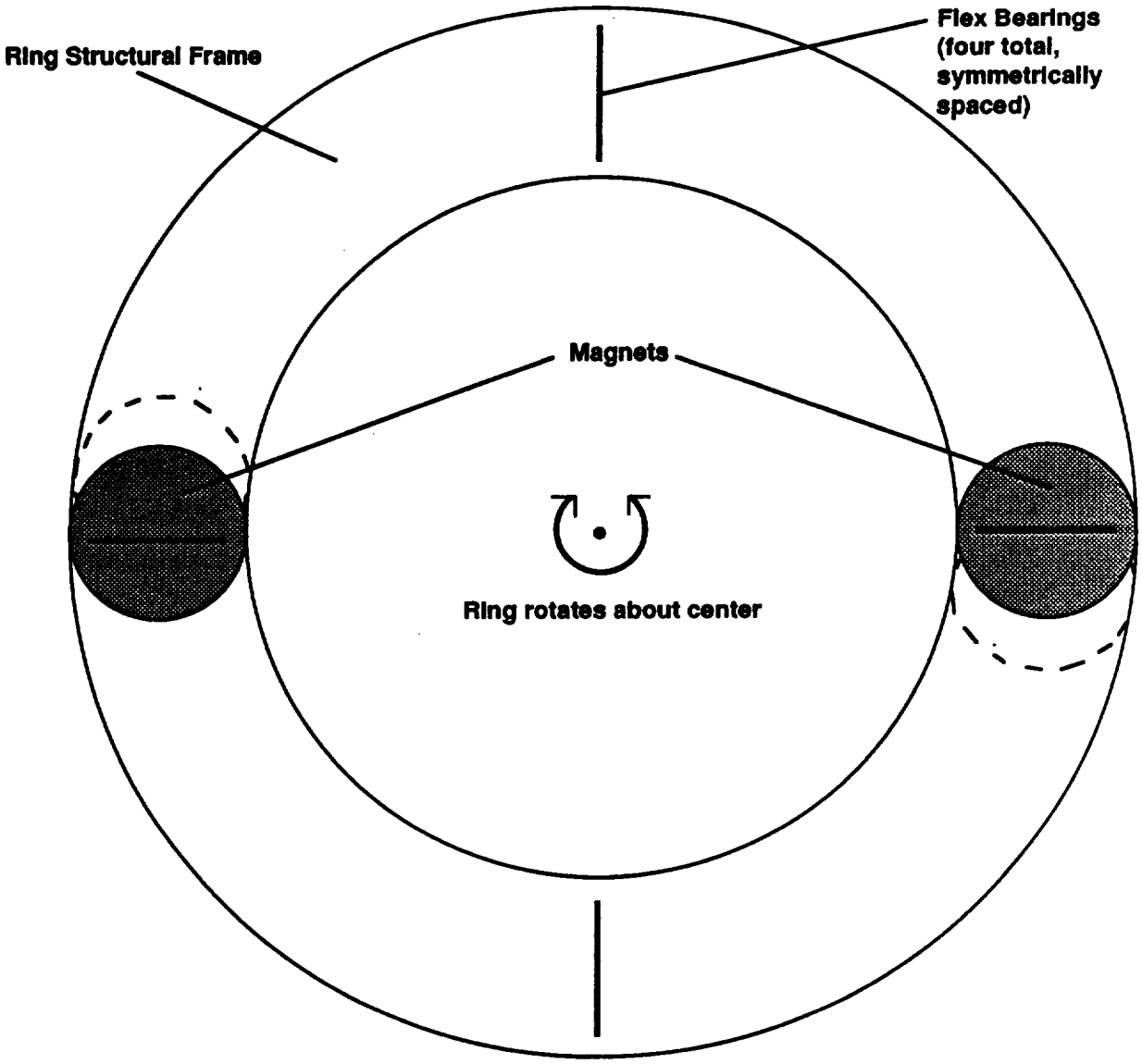

Figure 2. Top view of ring structure showing locations of flex bearings and magnets. Approximate locations of the exciter/detector coils are indicated by the dashed lines offset from the magnets. Exciter/detector coils are not attached to the ring itself.

If we assume the mass of the absorbant material is 3 grams, then its thickness will be about 0.5 cm assuming a density of 0.5 g/cm^3. A low density is assumed for the absorbant material because it must be fairly porous to absorb the DMES easily. It should be possible to make the absorbant ring so that there is about 0.5 to 1 mm (20 to 40 mils) clearance between the absorbant ring and the injection head. With 1 mm clearance and 5 mm thickness for the absorbant material, any DMES which is ejected at less than a 80° jet angle

relative to the shuttle surface will be absorbed (note that a 90° jet angle would be straight back from the tile). This should absorb virtually all of the leaked material. In practice even better absorbtion is probably possible. The clearance might be reduced below 1 mm. Another approach uses the fact that the injector head will expand in the plane of the shuttle tile when it is compressed against the tile for injection. It is therefore possible for the injector head to actually contact the absorbant material during injection but not when the forces are released. With this approach there would be no chance for DMES to leak without being absorbed.

We'll assume for the moment that a magnet mass of 5 grams will be sufficient. The magnet mass determines the force of excitation, and, for a given spring constant, the amplitude of the oscillation. Since the exciter coils only need to provide a brief force lasting perhaps 10 milliseconds, a pulse mode of operation can be used. This allows much higher force levels than could be achieved in the steady state. With a 5 gram magnet mass we can supply 500 grams force (about 1.2 lbs.) for a pulsed mode of operation. This value of force will be checked in the calculation that follows to verify that it will give a detectable deflection of the ring. Finally, we assume that the attachment material adds another gram to the ring structure, so that the total mass of the ring is 15 grams.

Spring Calculations

The flex bearings can essentially be designed to make the ring oscillate at any frequency we want within the range 100 to 1000 Hz. This is done simply by adjusting the flex bearing thicknesses and lengths to give the desired spring constant, k. Suppose the flex bearings are designed for a 500 Hz oscillation frequency. Then, using standard spring oscillation formulas, we have:

$$w = \text{angular frequency} = 2\pi f = 3000 \text{ rad/sec} = (k/m)^{0.5} \qquad (1)$$

Substituting for the ring mass, m = 15 grams, and f = 500 Hz, we can solve for k as:

$$k = 9 \times 10^6 \times 15 \text{ dynes/cm} = 1.3 \times 10^8 \text{ dynes/cm (about 800 lbs/in)} \qquad (2)$$

The exciter coils will deflect the magnets when they are actuated. The amount of deflection is determined by the magnetic force and the spring constant, k, estimated above. Again

using standard formulas, the deflection, d, is related to the spring constant k and the applied magnetic force F by:

$$F = k\,d \quad \text{or} \quad d = F/k \tag{3}$$

If the force on the magnets due to the exciter coils is 500 grams force = 500,000 dynes, then the displacement will be (500,000 dynes)/k or about 0.0037 cm (37 microns, or 1.5 mils). This is a respectable displacement at 500 Hz, and it can be detected by optics (e.g. a phototransistor/photodiode pair) or by a magnetic pick-up coil. The design shown assumes that the magnetic pick-up coils can be the same coils that are used to excite the oscillation. If a more detailed evaluation shows that this is cumbersome electronically, separate pick-up coils can be used. Note that since the coils are not attached to the ring, additional coils will not add more mass to the ring. The frequency shift due to absorbed mass can be derived from Equation (1) as:

$$\Delta f/f = -\Delta m/2m \tag{4}$$

The factor of 2 in Equation (4) is because frequency is related to the inverse square root of the mass, as indicated in Equation (1).

Evaluation of Leak Detection using a Vacuum Chamber

The heat of vaporization determines how much thermal energy must be supplied to the DMES to cause it to change from a liquid to a vapor state. As a ballpark estimate, one can assume the heat of vaporization is about 400 Joules per gram. Most substances are within a factor of 2 of this value. The density of DMES at 20°C is 0.75 grams per milliliter, so as much as 1.5 grams may have to be vaporized for a 2 ml nominal injection volume. This would require 600 Joules of energy, or 600 Watts of thermal power assuming a one second process.

Considering the space requirements, one can probably get about 20 cm^3 of material in the Collector. Typically, materials such as aluminum and steel have volumetric heat capacities of roughly 2 to 4 Joules per degree Centigrade per cm^3. Assuming the lower value of 2 J/°C-cm^3, 600 Joules of energy will lower the temperature of the Collector by 15°C, an acceptable value. This suggests the basic concept of fast evaporation is not unreasonable.

As the name implies, the Collector should have some component which absorbs or at least spreads out the DMES. Otherwise the DMES will form a substantial vapor barrier between the liquid DMES and the Collector. Such a vapor barrier will slow down further heat transfer.

As a tentative Collector design, one might use an aluminum annulus coated on the side that will contact the tile with a thin film of RTV to eliminate any chance of damage. The aluminum annulus would consist of a stack of thin plates and should be built with as close a tolerance to the RTV injection head as possible. During a leak, the DMES will be forced in between the thin plates for good thermal contact. Many other approaches are possible. Stainless steel wool might be used for good absorbtion. An exotic approach is to use a gadolinium inductive heater. Gadolinium has a Curie temperature close to room temperatures. When exposed to oscillating magnetic fields below its Curie temperature it readily absorbs energy from the field which is converted to heat. Above its Curie temperature it absorbs little energy. Thus it forms a natural temperature regulation system close to room temperatures which can absorb a great deal of energy quickly.

Clearly, more experimental work is needed to determine a good design for the Collector. The data should be compared with expected leak rates (number of leaks expected per 100 injections, e.g.) to determine feasibility of vacuum injector approach.

Appendix "K"

Wide Area Sensors

PURPOSE: To determine the feasibility of wide area sensing in relation to precision inspection of the HRSI tiles.

PERFORMED BY: Langley Research Center

CONCLUSIONS: In summary, the ability to scan large areas of HRSI for hue and topographical anomalies from a stationary position is primarily limited by the required measurement resolution in the plane normal to the sensor. Additional constraints on the dimensions of the scanned area are shadowing effects and measurement execution time. Without mechanical respositioning, selected high resolution patches of 150 x 150 millimeters or less within a target area of 0.5 x 0.5 meters can be measured. Best case time for a topographical scan of one high resolution patch is currently 8 minutes.

DISCUSSION: The feasibility of wide area sensing in relation to precision inspection is dependent upon three variables: sensor capability, target parameters, and work space parameters. It is impossible to determine feasibility by addressing the general problem. The more appropriate approach is to ask the question for each specific application, "Is there a sensor capable of robust, accurate assessment of target condition in environments where the target is typically found?" To answer the question successfully is to have a good understanding of the target and work space parameters relative to the application.

For the process of detecting HRSI anomalies, the target and work space parametes are well defined. Target parameters fall into three categories: 1) target composition; 2) anomaly type; and 3) required accuracy of anomaly measurement. Target composition determines the emissivity, reflectivity, and absorption of the target at various wavelengths. It also determines the target's resistance to breakage from physical excitation. The composition characteristics directly affect sensor type relative to the method of sensor/target interaction during the measurement. Because of the brittleness of HRSI, noncontact sensor types are preferable to those requiring contact.

There are two types of anomalies: those that are indicated by changes in hue, and those that cause a change in topography. Although it is possible for one sensor type to detect both kinds of anomalies, it is difficult for it to measure them equally well. It is more technologically feasible to use a different sensor for each of the two anomaly types. The required measurement accuracy is dependent upon the dimensions and scale resolution at which the smallest defect must be detected. For HRSI, the limiting requirement for both hue and topographic anomaly detection is the spatial resolution in the plane normal to the sensor(s). The resolution requirement along the measurement axis (i.e., hue change and depth) can be met by currently available sensor systems. A discussion of hue anomaly detection capability can be found in Section 10 under subsections Anomaly Detection and Color Vision. For topographic sensors, depth resolutions of 0.025 millimeters (0.001 inch) with accuracies of 0.075 millimeters (0.003 inch) at 1 sigma are feasible. Absolute depth accuracy is 0.25 millimeters (.010 inch). The most stringent accuracy requirement in the measurement plane is 0.25 millimeters. The ability of current topographic scanners to meet this requirement is controlled by work space parameters.

Work space parameters include target access, area to be sensed in a single 2-D scan, acceptable measurement execution time, and ambient light. The first three impact accuracy in the measurement plane and the second two, along with target composition, affect accuracy along the measurement axis. These parameters represent conflicting objectives for wide area sensing. To obtain the required resolutions and resultant accuracies with available sensors, both hue-based and topographic, smaller areas must be scanned. For HRSI inspection, this results in a feasible single scan area of 150 millimeters x 150 millimeters (6 inches x 6 inches). Note, however, that the center of the scan area can be redirected almost instantaneously to any part of a larger area (typically 0.5 meters x 0.5 meters) where a 150 x 150 millimeter patch can scan at the higher resolution. The dimensions of the larger area are primarily constrained by the shadowing effect that occurs when the view of the sensor is obstructed by a depression edge.

Wide area sensing in the context of measuring high resolution topographic patches over a 0.5 x 0.5 meter area is feasible with currently available sensor systems. Each system would require some configuration and software modification for application to HRSI inspection but would require no development. The systems are based on one of two technologies - structured light and laser radar. Both types are capable of the required

resolutions and accuracies, but have certain advantages and disadvantages relative to measurement speed, area coverage, range, depth of range, target composition, and ambient light. Structured light, or more aptly, light stripe systems, are capable of measurement rates of 10,000 points per second and have a history of successful operation in real applications. They are also currently more accurate than laser radar systems at short ranges (e.g., 1 meter). With light stripe systems, the range and consistency of valid measurement is more affected by ambient light than with laser radar based systems. Frequency modulated laser radar is impervious to lighting changes from completely dark to bright sun light. The measurement rate of laser radar is relatively slow, however, at 100 measurements per second for the required accuracies. Systems based on either technology will measure reliably at ranges up to 2 meters. Laser radar can be used effectively at 4 meters. The accuracy of laser radar when measuring LRSI (i.e., non-coated white tiles) degrades measurably due to the porous nature of the material. Since only HRSI are to be inspected, however, this is not a major factor.

Appendix L

Tile Centroid Measurements

Purpose: To determine if available tile CAD data is accurate enough for coarse positioning of a robotic device, primarily in the X and Y orbiter coordinates.

Who: Todd Graham NASA DM-MED-12
Don Lanthorne, Dave Kugelmann EG&G Survey Crew

When: July 26, 1990

Vehicle: OV-102/Columbia
Facility: OPF High Bay 2
Survey Equipment: Theodolite

Procedures

The centroid of the OML surface of 21 tiles were measured. The majority of these tiles were near close-out tiles where the maximum deviations from the CAD data should be, see Figure L-1. The centroid was marked on a piece of tape on the tile using a ruler and a pen. The survey crew used a theodolite to measure the position of these centroids and the orbiter partking tolerances.

The estimated measurement inaccuracies follow.

- Theodolite ± 1/8 inch
- Tile Centroid Marking ± 1/8 inch

Measurement Results

Table L-1 contains the tile centroid measurement results. The data is corrected using all of the measured data to arrive at estimates for translational and orientation offsets. The method of least squares was used to determine the homogeneous transformation matrix to account for both translation and orientation offsets. Table L-2 contains the orbiter parking tolerance information. Both the required and measured tolerances are listed.

The raw data, analysis program output, and analysis program listing can be found at the end of this appendix.

Table L-1 Tile Centroid Measurements

	Uncorrected Data	Corrected Data-Translational	Corrected Data-Trans./Orientation
Maximum XY Error, in.	2.02	1.35	1.53
Maximum XYZ Error, in.	2.21	1.66	1.55

Table L-2 Orbiter Parking Tolerances

	Interface Control Document Requirements	Experimental Measurements
Nose Landing Gear Forward Spotting	± 1.0 inches	+ 0.73 inches
Nose Landing Gear Lateral Spotting	± 1.5 inches	+ 1.56 inches
Main Landing Gear Lateral Spotting	± 1.5 inches	+ 1.32 inches
Foward Jack Height	± 0.5 inches	+ 0.4 inches
Orbiter Roll	± 1.0 degrees	+ 0.0 degrees
Orbiter Pitch	± 1.0 degrees	- 0.12 degrees

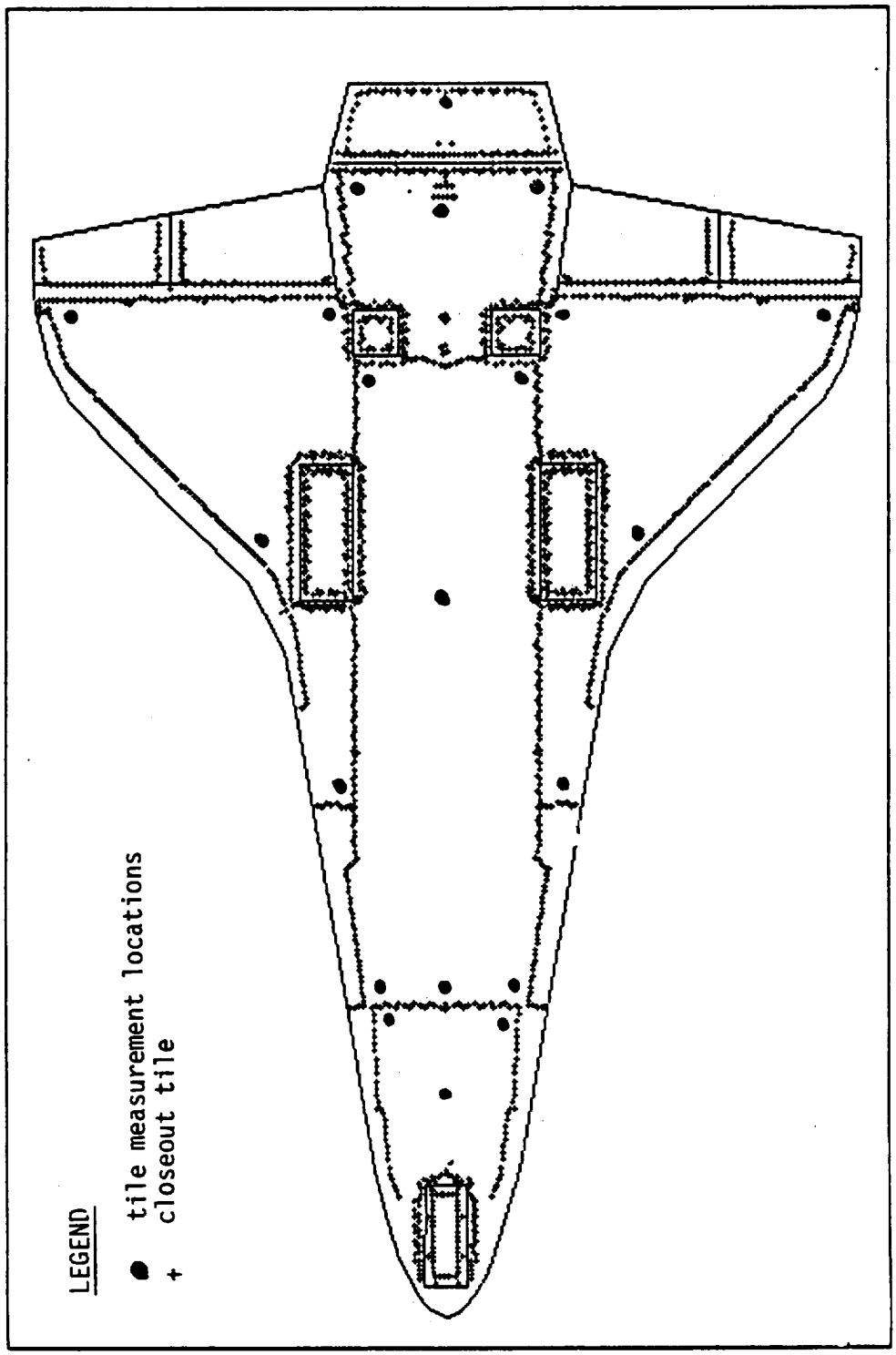

FIGURE L-1

Tile Centroid Measurements

Tile Part Number:	V070-394048-248		
Location:	RH		
Master Dim. Data	X_o, inches	Y_o, inches	Z_o, inches
OML corner points			
	596.85	78.49	283.20
	592.61	82.73	284.62
	596.85	86.97	285.84
	601.09	82.73	284.26
M. Dim. Centroid Location			
	596.85	82.73	284.48
Meas. Centroid Location			
	597.60	83.88	283.92
Summary Data			
Centroid Loc. Error, inches	1.48		

Tile Part Number:	V070-394048-204		
Location:	LH		
Master Dim. Data	X_o, inches	Y_o, inches	Z_o, inches
OML corner points			
	596.85	-78.49	283.20
	592.61	-82.73	284.62
	596.85	-86.97	285.84
	601.09	-82.73	284.26
M. Dim. Centroid Location			
	596.85	-82.73	284.48
Meas. Centroid Location			
	597.24	-81.48	283.56
Summary Data			
Centroid Loc. Error, inches	1.60		

Tile Part Number:	V070-394032-237		
Location:	RH		
	X_o, inches	Y_o, inches	Z_o, inches
OML corner points			
	1288.40	82.73	263.23
	1284.16	86.97	263.65
	1288.40	91.22	263.95
	1292.64	86.97	263.52
M. Dim. Centroid Location			
	1288.40	86.97	263.59
Meas. Centroid Location			
	1288.80	87.48	264.00
Summary Data			
Centroid Loc. Error, inches	0.76		

Tile Centroid Measurements

Tile Part Number:	V070-394032-221		
Location:	LH		
Master Dim. Data	X_o, inches	Y_o, inches	Z_o, inches
OML corner points			
	1288.40	-82.73	263.23
	1284.16	-86.97	263.65
	1288.40	-91.22	263.95
	1292.64	-86.97	263.52
M. Dim. Centroid Location			
	1288.40	-86.97	263.59
Meas. Centroid Location			
	1288.20	-86.76	263.76
Summary Data			
Centroid Loc. Error, inches	0.34		

Tile Part Number:	V070-391061-197		
Location:	RH		
Master Dim. Data	X_o, inches	Y_o, inches	Z_o, inches
OML corner points			
	569.27	63.64	280.62
	565.03	67.88	281.64
	569.27	72.12	282.52
	573.51	67.88	281.38
M. Dim. Centroid Location			
	569.27	67.88	281.54
Meas. Centroid Location			
	569.88	69.00	280.68
Summary Data			
Centroid Loc. Error, inches	1.54		

Tile Part Number:	V070-391061-170		
Location:	LH		
Master Dim. Data	X_o, inches	Y_o, inches	Z_o, inches
OML corner points			
	569.27	-63.64	280.62
	565.03	-67.88	281.64
	569.27	-72.12	282.52
	573.51	-67.88	281.38
M. Dim. Centroid Location			
	569.27	-67.88	281.54
Meas. Centroid Location			
	569.64	-66.48	280.56
Summary Data			
Centroid Loc. Error, inches	1.75		

Tile Centroid Measurements

Tile Part Number:	V070-191001-050		
Location:	RH		
Master Dim. Data	X_o, inches	Y_o, inches	Z_o, inches
OML corner points			
	823.83	114.55	282.14
	820.30	118.09	283.34
	824.54	122.33	284.34
	828.07	118.79	283.08
M. Dim. Centroid Location			
	824.18	118.44	283.22
Meas. Centroid Location			
	825.36	119.76	282.84
Summary Data			
Centroid Loc. Error, inches	1.81		

Tile Part Number:	V070-191001-017		
Location:	LH		
Master Dim. Data	X_o, inches	Y_o, inches	Z_o, inches
OML corner points			
	823.83	-114.55	282.14
	820.30	-118.09	283.34
	824.54	-122.33	284.34
	828.07	-118.79	283.08
M. Dim. Centroid Location			
	824.18	-118.44	283.22
Meas. Centroid Location			
	825.48	-117.96	282.60
Summary Data			
Centroid Loc. Error, inches	1.52		

Tile Part Number:	V070-191004-103		
Location:	RH		
Master Dim. Data	X_o, inches	Y_o, inches	Z_o, inches
OML corner points			
	1097.48	205.77	279.42
	1093.24	210.01	280.27
	1097.48	214.25	280.59
	1101.72	210.01	279.76
M. Dim. Centroid Location			
	1097.48	210.01	280.01
Meas. Centroid Location			
	1097.88	210.72	280.08
Summary Data			
Centroid Loc. Error, inches	0.82		

Tile Centroid Measurements

Tile Part Number:	V070-191004-068		
Location:	LH		
Master Dim. Data	X_o, inches	Y_o, inches	Z_o, inches
OML corner points			
	1097.48	-205.77	279.42
	1093.24	-210.01	280.27
	1097.48	-214.25	280.59
	1101.72	-210.01	279.76
M. Dim. Centroid Location			
	1097.48	-210.01	280.01
Meas. Centroid Location			
	1097.40	-209.52	279.72
Summary Data			
Centroid Loc. Error, inches	0.58		

Tile Part Number:	V070-191026-030		
Location:	LH		
Master Dim. Data	X_o, inches	Y_o, inches	Z_o, inches
OML corner points			
	1361.73	-431.74	296.13
	1356.81	-435.19	296.66
	1360.26	-440.10	297.07
	1365.17	-436.66	296.54
M. Dim. Centroid Location			
	1360.99	-435.92	296.60
Meas. Centroid Location			
	1360.68	-435.96	296.64
Summary Data			
Centroid Loc. Error, inches	0.32		

Tile Part Number:	V070-191017-105		
Location:	LH		
Master Dim. Data	X_o, inches	Y_o, inches	Z_o, inches
OML corner points			
	1364.77	-125.16	267.08
	1360.52	-129.40	267.39
	1364.77	-133.64	267.88
	1369.01	-129.40	267.59
M. Dim. Centroid Location			
	1364.77	-129.40	267.48
Meas. Centroid Location			
	1364.64	-129.24	267.72
Summary Data			
Centroid Loc. Error, inches	0.31		

Tile Centroid Measurements

Tile Part Number:	V070-394027-033		
Location:	CENTER		
Master Dim. Data	X_o, inches	Y_o, inches	Z_o, inches
OML corner points			
	1061.42	4.24	264.67
	1057.18	0.00	264.76
	1061.42	-4.24	264.67
	1065.66	0.00	264.57
M. Dim. Centroid Location			
	1061.42	0.00	264.67
Meas. Centroid Location			
	1061.88	0.84	264.60
Summary Data			
Centroid Loc. Error, inches	0.96		

Tile Part Number:	V070-395007-024		
Location:	CENTER		
Master Dim. Data	X_o, inches	Y_o, inches	Z_o, inches
OML corner points			
	1494.17	4.24	272.91
	1489.93	0.00	272.45
	1494.17	-4.24	272.91
	1498.41	0.00	273.37
M. Dim. Centroid Location			
	1494.17	0.00	272.91
Meas. Centroid Location			
	1495.44	0.25	273.36
Summary Data			
Centroid Loc. Error, inches	1.37		

Tile Part Number:	V070-391018-031		
Location:	CENTER		
Master Dim. Data	X_o, inches	Y_o, inches	Z_o, inches
OML corner points			
	492.90	4.24	277.18
	488.66	0.00	277.27
	492.90	-4.24	277.18
	497.15	0.00	277.06
M. Dim. Centroid Location			
	492.90	0.00	277.17
Meas. Centroid Location			
	493.20	1.44	276.24
Summary Data			
Centroid Loc. Error, inches	1.74		

Tile Centroid Measurements

Tile Part Number:	V070-395015-145		
Location:	CENTER		
Master Dim. Data	X_o, inches	Y_o, inches	Z_o, inches
OML corner points			
	1595.94	4.35	281.59
	1591.61	0.00	281.11
	1595.94	-4.35	281.59
	1600.26	0.00	282.07
M. Dim. Centroid Location			
	1595.94	0.00	281.59
Meas. Centroid Location			
	1595.52	-0.24	282.00
Summary Data			
Centroid Loc. Error, inches	0.63		

Tile Part Number:	V070-191026-054		
Location:	RWNG		
Master Dim. Data	X_o, inches	Y_o, inches	Z_o, inches
OML corner points			
	1361.73	431.74	296.13
	1356.81	435.19	296.66
	1360.26	440.10	297.07
	1365.17	436.66	296.54
M. Dim. Centroid Location			
	1360.99	435.92	296.60
Meas. Centroid Location			
	1361.52	436.44	297.24
Summary Data			
Centroid Loc. Error, inches	0.98		

Tile Part Number:	V070-191017-134		
Location:	CENTER		
Master Dim. Data	X_o, inches	Y_o, inches	Z_o, inches
OML corner points			
	1364.77	125.16	267.08
	1360.52	129.40	267.39
	1364.77	133.64	267.88
	1369.01	129.40	267.59
M. Dim. Centroid Location			
	1364.77	129.40	267.48
Meas. Centroid Location			
	1365.24	129.84	267.96
Summary Data			
Centroid Loc. Error, inches	0.80		

ORIGINAL PAGE IS
OF POOR QUALITY

Tile Centroid Measurements

Tile Part Number:	V070-395005-238		
Location:	LH		
Master Dim. Data	X_o, inches	Y_o, inches	Z_o, inches
OML corner points			
	1504.93	-103.94	274.39
	1500.53	-108.19	274.88
	1504.77	-112.43	274.48
	1509.17	-108.19	274.81
M. Dim. Centroid Location			
	1504.85	-108.19	274.64
Meas. Centroid Location			
	1506.36	-108.36	275.28
Summary Data			
Centroid Loc. Error, inches	1.65		

Tile Part Number:	V070-395005-244		
Location:	RH		
Master Dim. Data	X_o, inches	Y_o, inches	Z_o, inches
OML corner points			
	1504.93	103.94	274.39
	1500.53	108.19	274.88
	1504.77	112.43	274.48
	1509.17	108.19	274.81
M. Dim. Centroid Location			
	1504.85	108.19	274.64
Meas. Centroid Location			
	1506.72	108.96	275.52
Summary Data			
Centroid Loc. Error, inches	2.21		

Tile Part Number:	V070-394020-168		
Location:	RH		
Master Dim. Data	X_o, inches	Y_o, inches	Z_o, inches
OML corner points			
	611.70	4.24	274.56
	607.46	0.00	274.64
	611.70	-4.24	274.56
	615.94	0.00	274.45
M. Dim. Centroid Location			
	611.70	0.00	274.55
Meas. Centroid Location			
	612.00	1.08	273.96
Summary Data			
Centroid Loc. Error, inches	1.27		