Advanced Composition Explorer Mission

Solar Isotope Spectrometer (SIS)

Preliminary Design Review

Caltech

24 February 1994

(NASA-CR-195207) ADVANCED COMPOSITION EXPLORER MISSION. SOLAR ISOTOPE SPECTROMETER (SIS) PRELIMINARY DESIGN REVIEW (California Inst. of Tech.) 210 p

N94-71722

Unclas

Z9/35 0208834

2/24/94

AGENDA for SIS Preliminary Design Review (ver. 2/24/94)

Revised to Include Material Added the Day of the Presentation
(Revised and added material has a letter R added to page number)

102 IPAC, Caltech, Pasadena CA

Day 3 - Thursday - February 24, 1994

	8:30	**Welcome & Meeting Logistics**	
		Introductions & Review Protocols	**Swenson**
		Incorporate Changes	
1	8:40	**Experiment Objectives and Approach**	**Mewaldt**
		1.1 Spectra of Energetic Oxygen Nuclei	
		1.2 Isotopic & Elemental Composition	
		1.3 SIS Sketch (side view)	
		1.4 Primary Scientific Objectives, Approach, and Capabilities	
		1.5 Key Design/Performance Requirements	
		1.6 Additional SIS Performance Requirements	
		1.7 Operation in the Largest Solar Particle Events	
		1.8 SIS Response	
		1.9 SIS Mass Resolution	
		1.10 Collecting Power	
		1.11 Collection Power Comparison	
		1.12 Solar Flare Isotopes	
		1.13R Impact of Reduced Mass Resolution	
		1.14R Solar Flare Isotopes, Estimated for 9/24/77	
		1.15R Summary of Previous Flare Data	
		1.16R Mass Resolution Required to Resolve 40 Rare Isotopes	
		1.17R N-14 Mass Resolution	
		1.18R Si-28 Mass Resolution	
		1.19R Fe-56 Mass Resolution	
		1.20R Precision to Which Abundance is Measured, Theory	
		1.21R Precision to Which Abundance is Measured, Past and Theory	
		1.22R Precision to Which Abundance is Measured, Past & MSU Measured	
		1.23R Solar Flare Isotope Yields	
		1.24R Events per 3 years for 10 cm^2 sr, 5-10 MeV/nuc	
		1.25R SIS Telescope Current Design	
		1.26R SIS Telescope Possible Alternative	
		1.27R SIS Thin Detector Plan	

2	9:00	**Overview of Instrument Development Plans**	**Cummings**
		2.1 Instrument Development Organization	
		2.2 Division of Responsibilities by Institution	
		2.3 Division or Responsibilities by Experiment Element	
		2.4 Organization Chart	
		2.5 Work Breakdown Structure	
		2.6 SIS Development Gantt Schedules	
		2.7 SIS Stack Detector Development Schedule	
		2.8 SIS Matrix Detector Schedule	
		2.9 SIS Mechanical Schedule	
		2.10 SIS GSE Development Schedule	
		2.11 BB Electronic Development and Testing	
3	9:30	**Instrument Overview**	**Cook**
		3.1 Functional Block Diagram	
		3.2 Key Design Features, Packaging Similar to CRIS	
		3.3 Key Design Features, Electronics	
		3.4 Key Design Features, Redundancy	
		3.5 Key Design Features, Health Monitoring Built-in	
4	10:00	**Solid State Detectors**	**Milliken**
		4.1 Detector Overview, Stack Detector Configuration	
		4.2 Detector Configurations, Matrix Detectors	
		4.3 Detector Configurations, Detector Sizes	
		4.4 Functional Description	
		4.5 Fabrication Techniques	
		4.6 Requirements, Thickness Uniformity	
		4.7 Requirements, Dead Layer Minimization	
		4.8 Requirements, Contamination Prevention	
		4.9 Requirements, Radiation Resistance	
		4.10 Requirements, Radiation Resistance (cont.)	
		4.11 Key Specifications, Stack Detectors	
		4.12 Key Specifications, Matrix Detectors	
		4.13R Phase B Detector Activities, Prototype Stack Detectors	
		4.14 Phase B Detector Activities, Prototype Stack Detectors (cont.)	
		4.15 Phase B Detector Activities, MSU Measurements of 100 μm detector	
		4.16 Phase B Detector Activities, MSU Measurements of 1000 μm detector	
		4.17 Phase B Detector Activities, Mass Resolution	
		4.18 Detector Fabrication and Testing, Resolution of 100 μm Stack Detector	
		4.19R1 Detector Fabrication and Testing, Resolution of 100 μm Stack Det. (cont.)	
		4.19R2 Suggested Source of Broadening	
		4.19R3 Mass Resolution Ration, Observation Versus Theory	
		4.20 Detector Fabrication and Testing, Prototype Matrix Detectors	
		4.21R Detector Fabrication and Testing, Silicon Procurement & Det. Fabrication	
		4.22 Detector Fabrication and Testing, Spares Approach	
		4.23 Detector Testing Plan, Detector Testing Plan	
		4.24 Detector Testing Plan, Detector Testing Plan (cont.)	
		4.25 Detector Testing Plan, Tests of Matrix detectors at Caltech	
		4.26 Calibration Plan, Interferometric Mapping	
		4.27 Calibration Plan, Interferometric Mapping (cont.)	
		4.28 Calibration Plan, Detector Calibrations	
		4.29 Calibration Plan, Telescope Calibrations	

5	11:00	**Preliminary Electrical Design of Instrument**		**Cook**
		5.1	Block Diagram	
		5.2	SIS Matrix VLSI Readout	
		5.3	SIS Matrix VLSI PHA Performance	
		5.4	SIS ADC Characteristics	
		5.5	SIS Discriminator Characteristics	
		5.6	Photo	
		5.7	Heavy Ion Strip Detector Readout	
		5.8	SIS Logic Equations	
		5.9	Logic Flow	
		5.10	SIS Grounding Diagram	
		5.11	Power Supply Voltages	
		5.12	SIS Power Requirement and Estimate Summary	
		5.13	Power Estimate Worksheet	
		5.14	Power Estimate Worksheet (cont.)	
		5.15	SIS Low Voltage Power Supply	
		5.16	Bias Supply Block Diagram	
	11:50	**LUNCH**		
6	13:00	**SIS Structure Mechanical Design**		**Shuman**
		6.1	ACE/SIS Instrument	
		6.2	ACE/SIS Interface Control Drawing	
		6.3	SIS Structure Mechanical Design, Attachment Points	
		6.4	FOV Limitations	
		6.5	Observatory Layout Top View	
		6.6	Observatory Layout Side View	
		6.7	Typical Mounting Foot Detail	
		6.8	ACE/SIS Front View	
		6.9	Instrument Box Design	
		6.10	ACE/SIS Top View	
		6.11	Finite Element Analysis	
		6.12	Vibration Testing, Sine Survey	
		6.13R	Vibration Testing, Sine Burst	
		6.14	Vibration Testing, Instrument Random	
		6.15	Card Cage Approach	
		6.16	Card Cage Approach (cont.)	
		6.17	ACE/SIS Stack Detector Design	
		6.18	SIS Requirements for Detector Alignment	
		6.19	SIS Telescope Detector Mounts	
		6.20	ACE/SIS Stack Detector Isometric View	
		6.21	Purge Requirements	
		6.22	Purge System	
		6.23	SIS Mechanical Design	
		6.24	Weight Estimate	
		6.25	ACE/SIS Internal Thermal Drawing	
		6.26	ACE/SIS External Thermal Drawing	

7	13:50	**Thermal Design**	**Williams**
		7.1 PDR Thermal Topics	
		7.2 ACE S/C Orientation	
		7.3 Thermal Design	
		7.4 SIS Thermal Requirements	
		7.5 Component Requirements	
		7.6 SIS Hot and Cold Case Environments	
		7.7 SIS Power Dissipation	
		7.8 SIS Preliminary Thermal Design Approach	
		7.9 SIS Thermal Isolation	
		7.10 SIS Preliminary Thermal Design Approach (cont.)	
		7.11 SIS Heater Types	
		7.12 SIS On Orbit Model (1 of 2)	
		7.13 SIS On Orbit Model (2 of 2)	
		7.14 SIS Detailed Model, Hot Case with 3 Radiators	
		7.15 SIS Detailed Model, Cold Case with 3 Radiators	
		7.16 SIS Detailed Model, Hot Case with 4 Radiators	
		7.17 SIS Detailed Model, Cold Case with 4 Radiators	
		7.18 SIS Preliminary Thermal Results/Conclusions	
		7.19 Thermal Open Issues	
8	14:30	**Flight Software**	**Cook**
		8.1 Functional Requirements	
		8.2 Functional Requirements (cont.)	
		8.3 SIS Flight Software Event Data Flow Diagram	
		8.4 SIS Normal Event Format	
		8.5 SIS Data Format	
		8.6 Event & Echo Format	
		8.7 Housekeeping Data Format	
		8.8 SIS Count Rate & Housekeeping Data Summary	
		8.9 SIS Memory Usage	
		8.10 SIS CPU Usage	
9	14:40	**Ground Support Equipment**	**Wiedenbeck**
		9.1 EGSE Functions, Spacecraft Interface Simulation	
		9.2 EGSE Functions, Process Data from Instrument	
		9.3 EGSE Functions, Limit Checking	
		9.4 EGSE Functions, Commanding	
		9.5 Bench Test Configuration	
		9.6 Accelerator Calibration Configuration	
		9.7 Configuration Onboard Spacecraft	
		9.8 EGSE Software	
		9.9 Instrument Shipping	
10	14:50	**Environmental Test & Cal**	**Mewaldt**
		10.1 Environmental Test and Calibration	
		10.2 SIS Instrument Test Matrix	
11	15:00	**Design Provisions for Specialized Instrument Requirements**	**Cummings**
		11.1 Provisions for Preserving the Integrity of Sensitive Elements	
		11.2 Plans & Provisions for Detector Replacements Before Launch	
		11.3 Plans & Provisions for Direct Access Before Launch	
		11.4 Plans & Provisions for the Use of Red-Tag/Green-Tag Items	
		11.5 Plans & Provisions for Calibrating in Flight	
		11.6 System Safety Considerations Identified for This Design	
		11.7 Operational Constraints Dictated by the Design Chosen	

12	**15:10**	**Parts, Materials, and Processes**	**Grumm**
		12.1 Electronic Parts	
		12.2 CRIS/SIS Parts (1 of 2)	
		12.3 CRIS/SIS Parts (2 of 2)	
		12.4 CRIS/SIS Dean's Parts List (1 of 2)	
		12.5 CRIS/SIS Dean's Parts List (2 of 2)	
		12.6 Radiation Effects	
		12.7 Electronic Parts List Review Summary	
		12.8 Materials	
		12.9 Preliminary Materials List	
		12.10 Electronic Fabrication Materials (1 of 2)	
		12.11 Electronic Fabrication Materials (2 of 2)	
		12.12 Usage List, Metals (GSFC), (1 of 2)	
		12.13 Usage List, Metals (GSFC), (2 of 2)	
		12.14 Usage List, Non-Metallics, (1 of 2)	
		12.15 Usage List, Non-Metallics, (2 of 2)	
		12.16 Electronic Fabrication Process List	
		12.17 Process List for Mechanical Parts	
13	**15:15**	**Reliability**	**Cook**
		13.1 Identification and Control of Limited-Life Items	
		13.2 EEE Parts Deratings/Worst Case Analyses	
		13.3 Failure Modes and Effects Analysis of Interfaces	
		13.4 Provisions for Reviewing/Evaluating Alerts	
		13.5 Parts & Materials Sparing Philosophy	
		13.6 Parts Storage Provisions	
		13.7 Configuration Control Practices	
		13.8 Configuration Control Practices (cont.)	
		13.9 Discrepant Item control & Failure Reporting Plans	
		13.10 Workmanship and Inspection Practices	
	15:20	**Summary and Wrap-Up**	**Swenson**
	15:30	**Meeting of Review Board**	

SIS PDR

Section 1

Experiment Objectives and Approach

2/24/94

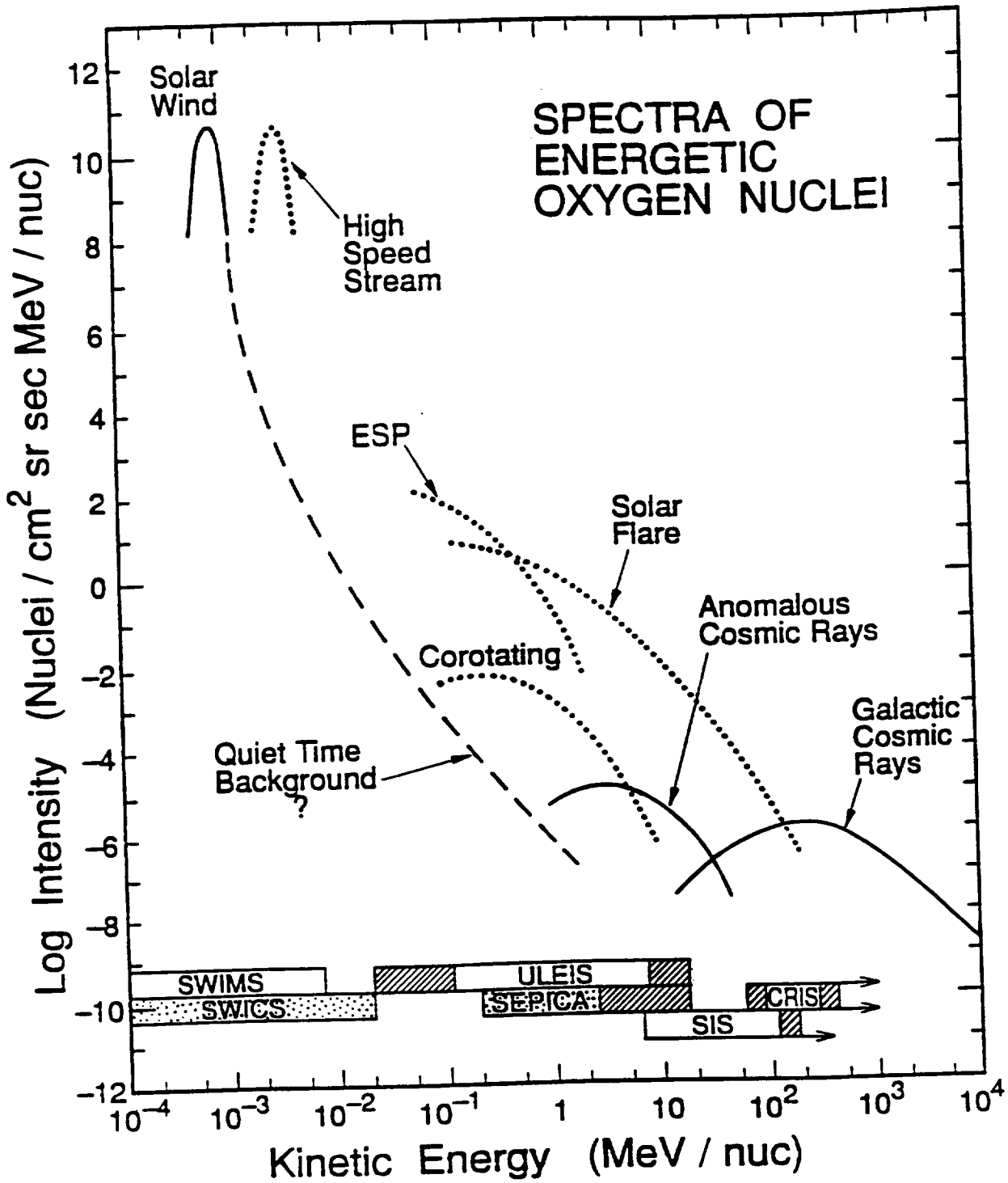
SPECTRA OF ENERGETIC OXYGEN NUCLEI
Solar Wind
High Speed Stream
ESP
Solar Flare
Anomalous Cosmic Rays
Corotating
Galactic Cosmic Rays
Quiet Time Background ?
SWIMS
SWICS
ULEIS
SEPICA
CRIS
SIS
Log Intensity (Nuclei / cm^2 sr sec MeV / nuc)
Kinetic Energy (MeV / nuc)
12
10
8
6
4
2
0
−2
−4
−6
−8
−10
−12
10^{-4}
10^{-3}
10^{-2}
10^{-1}
1
10
10^2
10^3
10^4

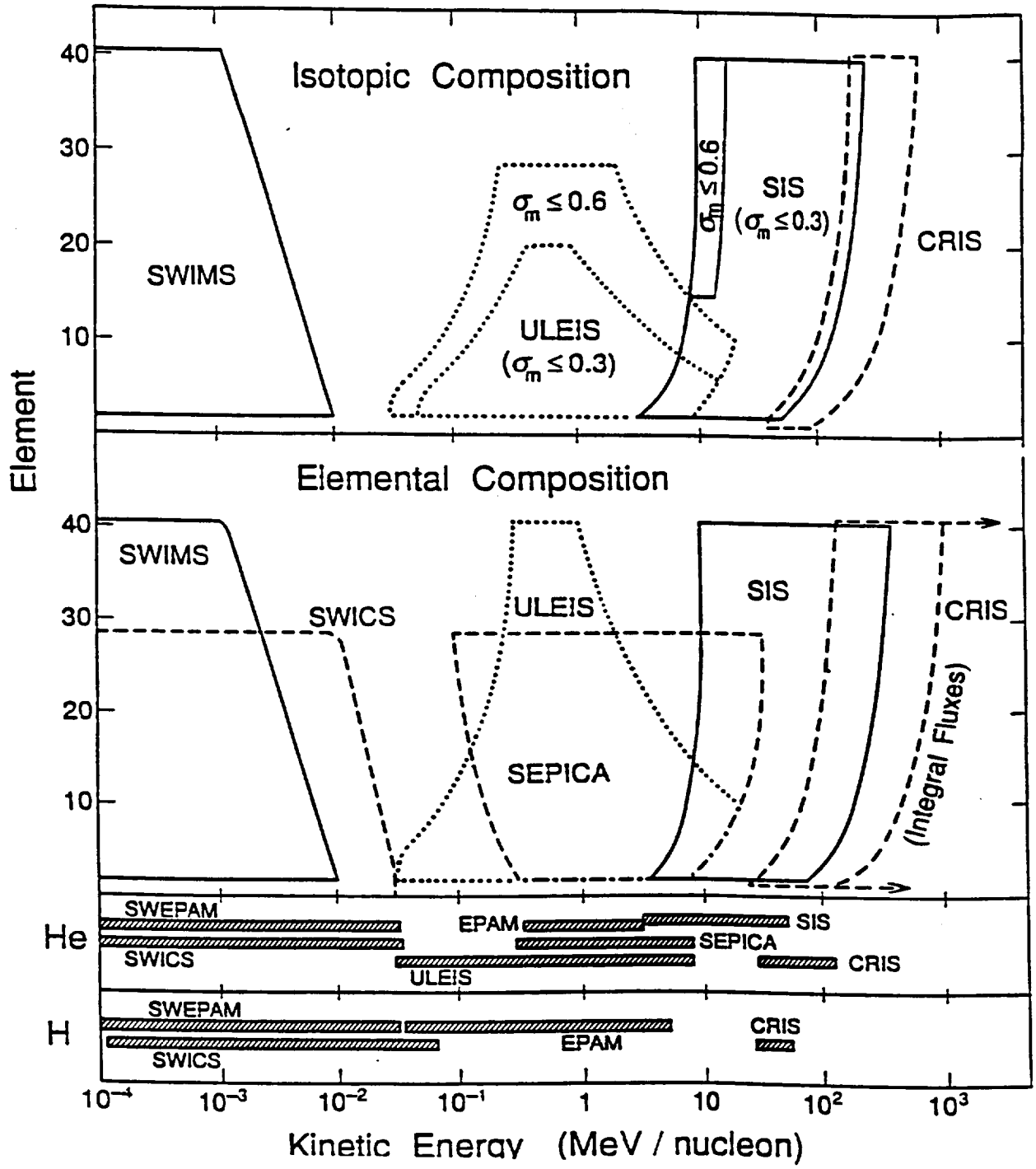
Isotopic Composition
Elemental Composition
Element
SWIMS
ULEIS
($\sigma_m \leq 0.6$)
ULEIS
($\sigma_m \leq 0.3$)
$\sigma_m \leq 0.6$
SIS
($\sigma_m \leq 0.3$)
CRIS
SWICS
SEPICA
(Integral Fluxes)
He
H
SWEPAM
EPAM
SIS
SEPICA
SWICS
ULEIS
CRIS
SWEPAM
CRIS
EPAM
SWICS
Kinetic Energy (MeV / nucleon)

Solar Isotope Spectrometer (SIS)

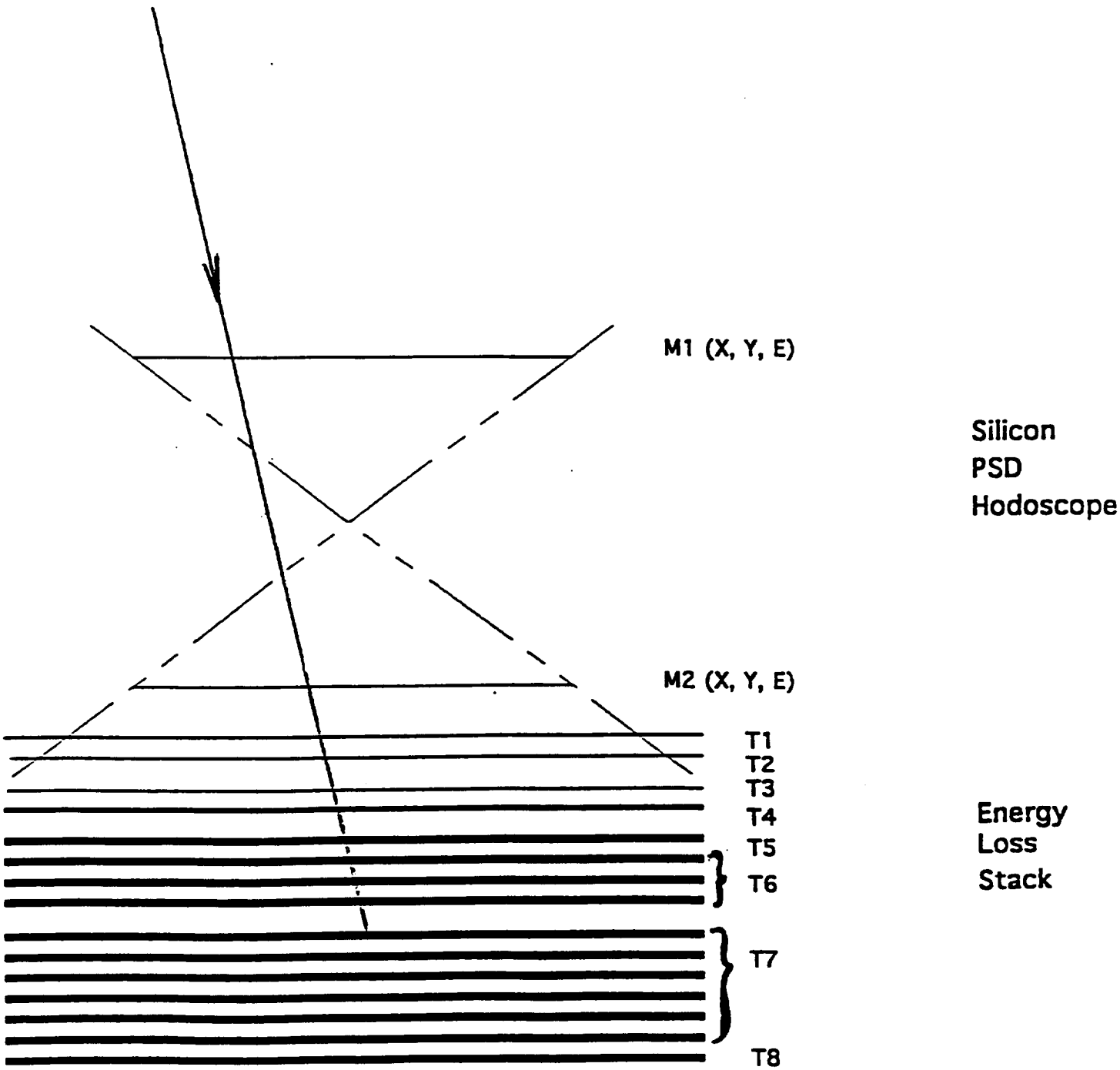

(One of Two Identical Telescopes)

The Solar Isotope Spectrometer (SIS)

Primary Scientific Objectives

- Isotopic composition of solar corona
  - Based on measurement of isotopes of solar flare nuclei
- Isotopic composition of neutral interstellar medium
  - Based on isotope studies of "Anomalous" Cosmic Rays
- Studies of solar/interplanetary particle acceleration
  - Using combined energetic particle/solar wind data sets
- Studies of solar system/Galactic evolution
  - Based on solar/interstellar/meteoritic/cosmic ray abundances

Approach

- Two independent telescopes composed of large-area silicon solid state detectors
- Trajectory/energy measurements with silicon strip detectors (512 individual analysis chains)

Unique Measurement Capabilities

- Isotopic resolution of all elements from He to Zn (Z = 2 to 30)
  - Typical mass resolution of ~0.2 amu
  - Kinetic energies from ~10 to ~100 MeV/nuc
- Only high resolution isotope studies of solar particles in Fe region
- Identification of very rare elements and isotopes with >10 times improvement in collecting power
- Ability to resolve isotopes in the largest solar events

Key Design/Performance Requirements for SIS

	Requirement	Goal
Element range:	Be to Ni (Z = 4 to 28)	He to Zn (Z = 2 to 30)
Energy coverage for $_{14}Si$:	<10 to >100 MeV/n	7-140 MeV/n
Charge resolution (rms)	$\delta Z<0.1$ charge units	$\delta Z<0.05$ cu
Mass resolution:	$\delta M\leq 0.2$ amu ($4\leq Z\leq 14$) $\delta M\leq 0.3$ amu ($15\leq Z\leq 28$)	$\delta M\leq 0.15$ amu $\delta M\leq 0.25$ amu
Total kinetic energy resolution:	<2%	<1%
Geometry factor:	>25 cm^2sr	~40 cm^2sr
Collecting power (number of "anomalous" ^{16}O/yr for isotope analysis @ solar min. conditions)	$>10^4$	$\sim 3 \times 10^4$
Measurement redundancy: (over primary energy range)	≥2 mass measurements	2 to 8 measurements

Additional SIS Performance Requirements

	Requirement	Goal
Operation in large solar flares:	required	>50% efficiency
Hodoscope angular resolution:	≤0.3 deg @ 20 deg	0.2 deg
=> Position resolution	≤0.4 mm	0.28 mm
	<0.5 mm (for maps)	
Multi-track resolution:	Required	ADC on each strip
Inactive material in FOV:	<0.01 g/cm^2	~0.005 g/cm^2
Event telemetry rate:	≥5/sec	~15/sec
Duty cycle (solar quiet time):	>90%	~100%
Pointing direction/accuracy	25° to spin axis	
Field of view (primary)	55° half angle (two telescopes)	

Commands: Ability to disable detectors, modify logic and analysis/readout priorities, and to adjust discriminators

Operation in the Largest Solar Particle Events

Challenging Environment

~10^6 protons/sec with >1 MeV in M1
~3×10^4 He/sec with >1 MeV/nuc in M1
>100 $Z \geq 6$ events/sec suitable for composition studies

Considerations

- Large fraction of events will have multiple "hits" in M1 due to "pileup"
- Count rate of interesting events greatly exceeds telemetry capacity
- Conditions can last for hours to days at a time

Key Design Features in SIS

- M1, M2 Hodoscope
  - Thresholds set above proton energy-loss (~3.5 MeV in M1)
  - Each strip individually pulse-height analyzed
  - Ability to identify heavy-ion track in "pileup" events

- Priority System
  - Multiple priority levels for $Z \geq 10$, CNO, He, H
  - Favor events that penetrate the deepest (best resolution)
  - Favor events with zenith angle <20°
  - Favor events without multiple tracks

- Data Handling
  - Variable length event format maximizes event rate
  - SIS allocation of 2000 bps permits ~15 events/sec

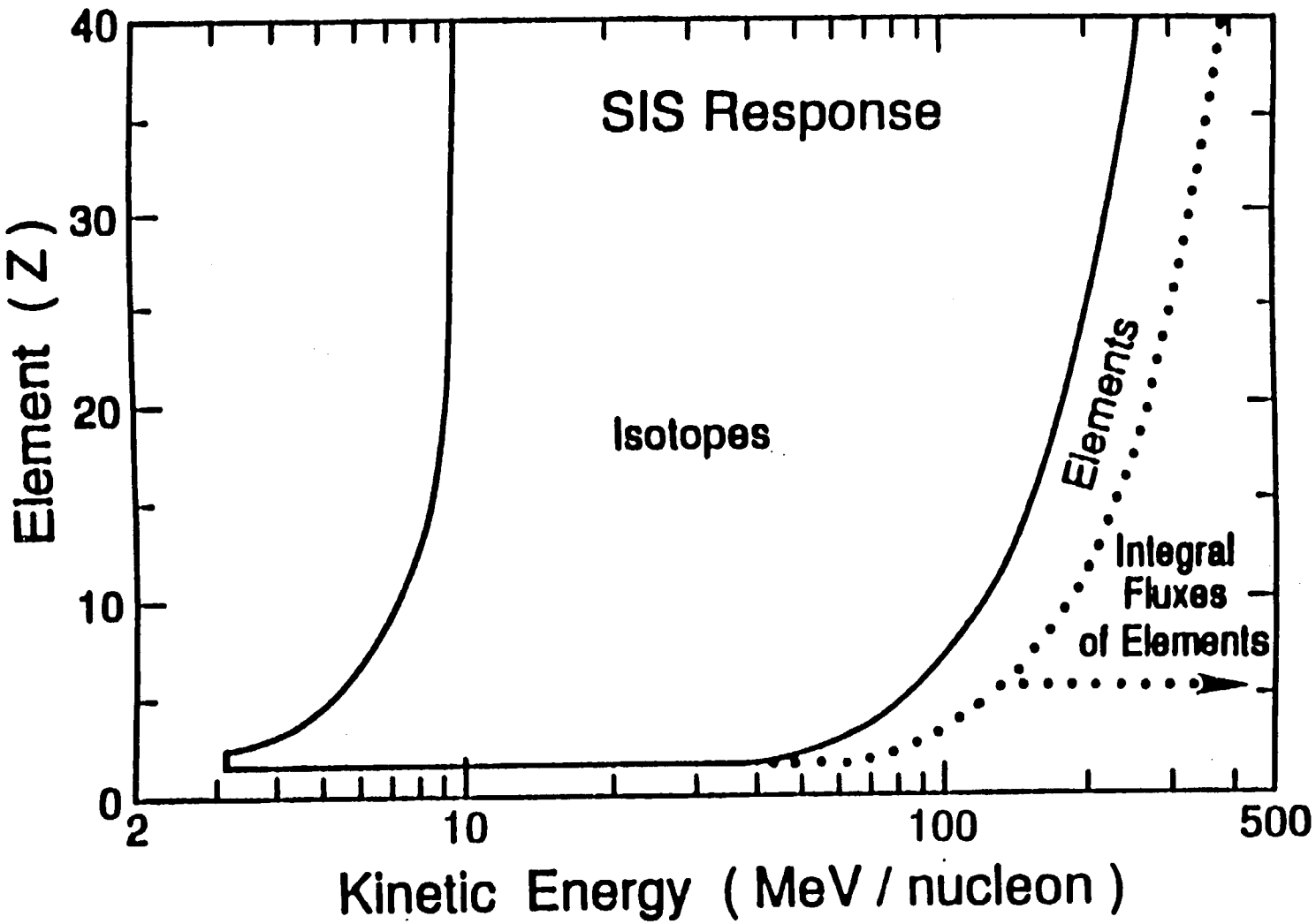
SIS Response
Isotopes
Elements
Integral
Fluxes
of Elements
Element (Z)
Kinetic Energy (MeV / nucleon)
0
10
20
30
40
2
10
100
500

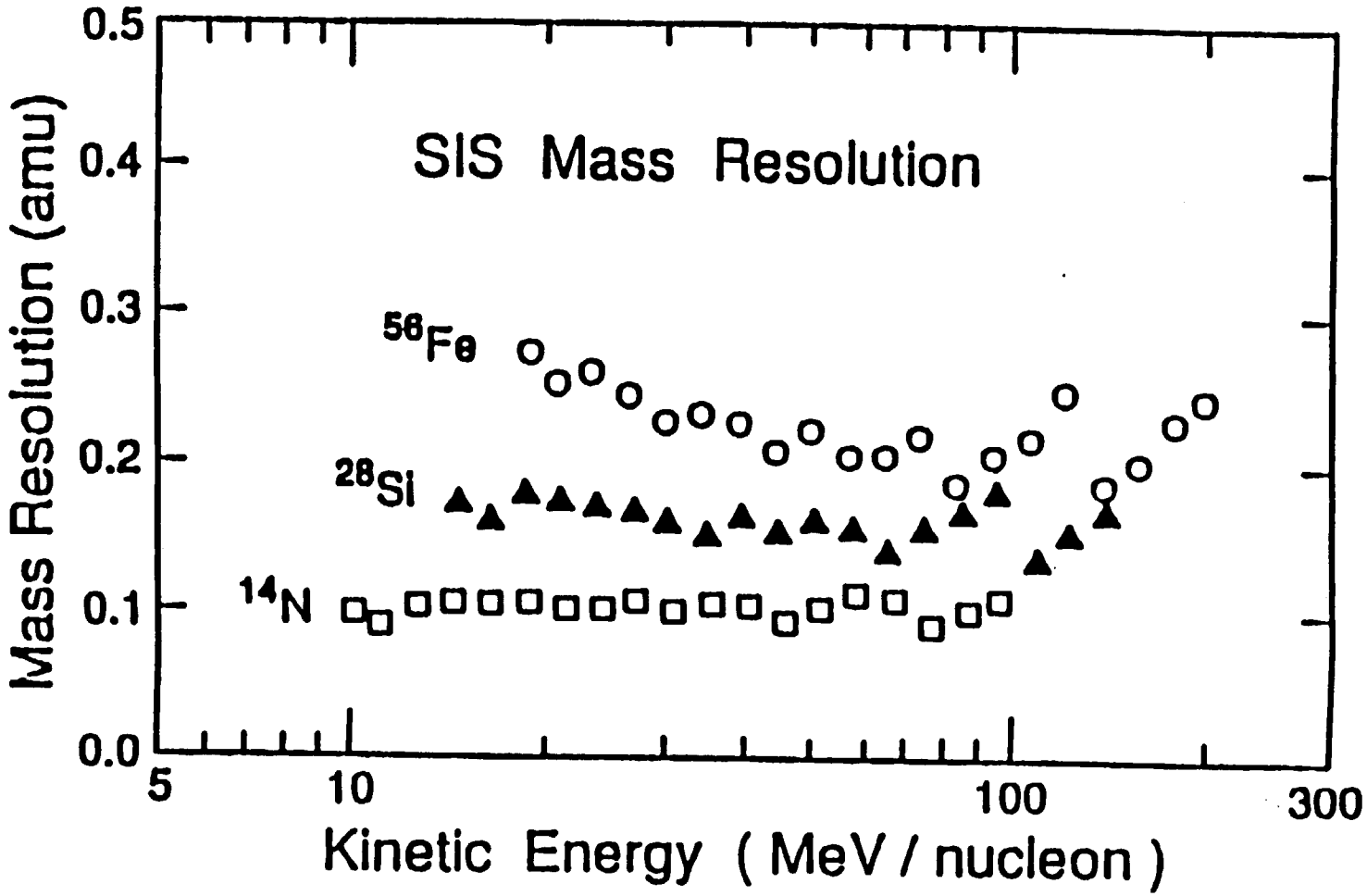

Expected mass resolution based on theoretical estimates of all known contributions The Fe results are for zenith angles < 20 deg (best 50% of the geometry factor)

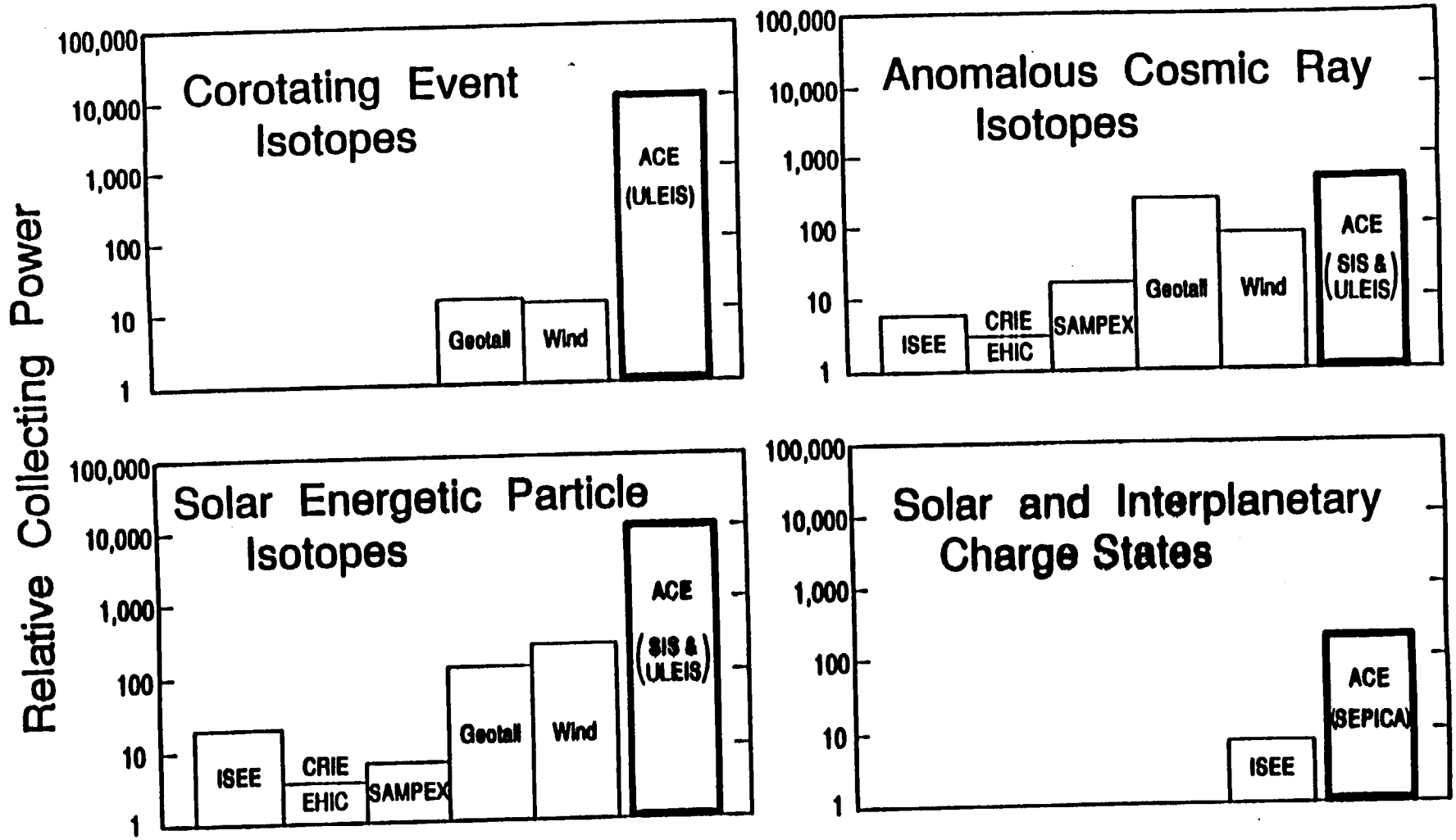
Relative Collecting Power
100,000
10,000
1,000
100
10
1
Corotating Event Isotopes
Geotail
Wind
ACE (ULEIS)
Anomalous Cosmic Ray Isotopes
ISEE
CRIE
EHIC
SAMPEX
Geotail
Wind
ACE (SIS & ULEIS)
Solar Energetic Particle Isotopes
ISEE
CRIE
EHIC
SAMPEX
Geotail
Wind
ACE (SIS & ULEIS)
Solar and Interplanetary Charge States
ISEE
ACE (SEPICA)

Solar Isotope Spectrometers

Collecting Power Comparison

Instrum.	Mission	E1	E2	Geom. Fac.	Orbit Duty Cycle	Spectral Factor	Rel. Coll. Power	Norm Relative Coll. Power
HIST	ISEE-3	14	200	0.7	1	0.43	0.3	0.7
CRIE		17	150	1.5	0.25	0.25	0.09	0.2
MAST	SAMPEX	20	230	14	0.25	0.15	0.53	1.2
MI	Geotail	18	70	45	1	0.2	9	20
EHIC	NOAA-I	17	150	1.5	0.25	0.25	0.09	0.2
EPACT	WIND	14	270	9	1	0.4	3.6	8
SIS	ACE	10	155	44	1	1	44	100
ULEIS	ACE	0.3	1.6	0.95	1	150	143	324

Does not take into account pileup or readout effects

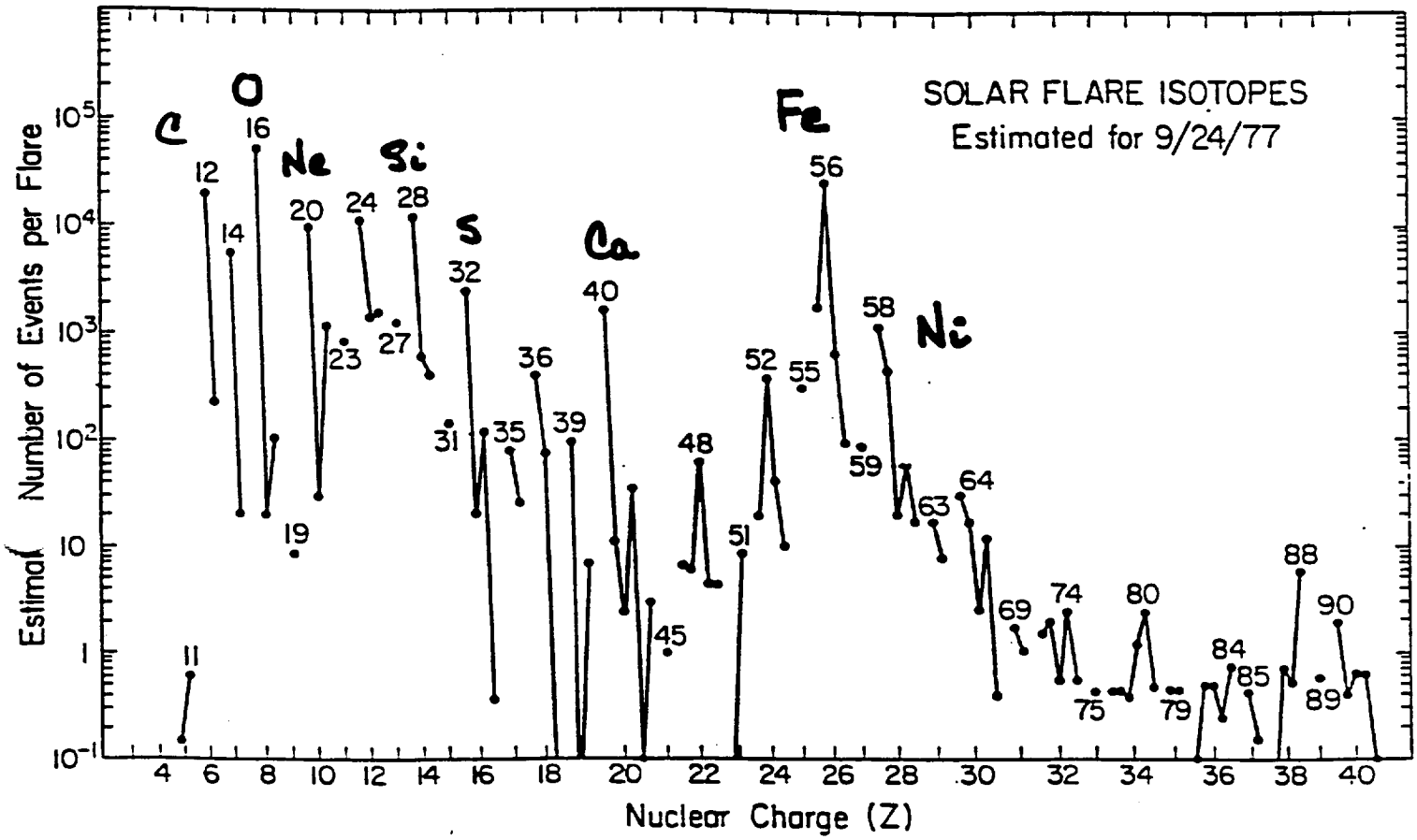
SOLAR FLARE ISOTOPES
Estimated for 9/24/77
Estimated Number of Events per Flare
Nuclear Charge (Z)
C
O
Ne
Si
S
Ca
Fe
Ni
11
12
14
16
19
20
23
24
27
28
31
32
35
36
39
40
45
48
51
52
55
56
58
59
63
64
69
74
75
79
80
84
85
88
89
90

2/24/94

Impact of that Reduced Mass Resolution would have on SIS Science Objectives

Solar Flare Isotopic Composition

- Raises energy threshold to resolve rare isotopes
- Reduces yield and resultant accuracy
- Reduces the number of resolvable rare species
- Fortunately, many rare species separated by $\Delta A = 2$ amu

Anomalous Cosmic Ray Isotopic Composition

- Little or no effect on $^{22}Ne/^{20}Ne$, $^{18}O/^{16}O$ since $\Delta A=2$ amu
- ^{15}N, ^{38}Ar are more difficult, but statistics may be the limit

Solar Flare/Anomalous Cosmic Ray Elemental Composition

- Most likely only minor effect since elements still resolved

Galactic Cosmic Ray Isotopic Composition

(Extending CRIS to lower energy)

- Most likely only limited effect since particles penetrate to back of stack where resolution is adequate

Time Variation and Spectral Studies - no effect

Summary: The level of mass resolution achieved at MSU would reduce somewhat the number of species that could be studied, but SIS would still make a very significant advance in measuring the solar composition. Other SIS studies would be affected only to a minor extent.

Summary of Previous Solar Flare Data

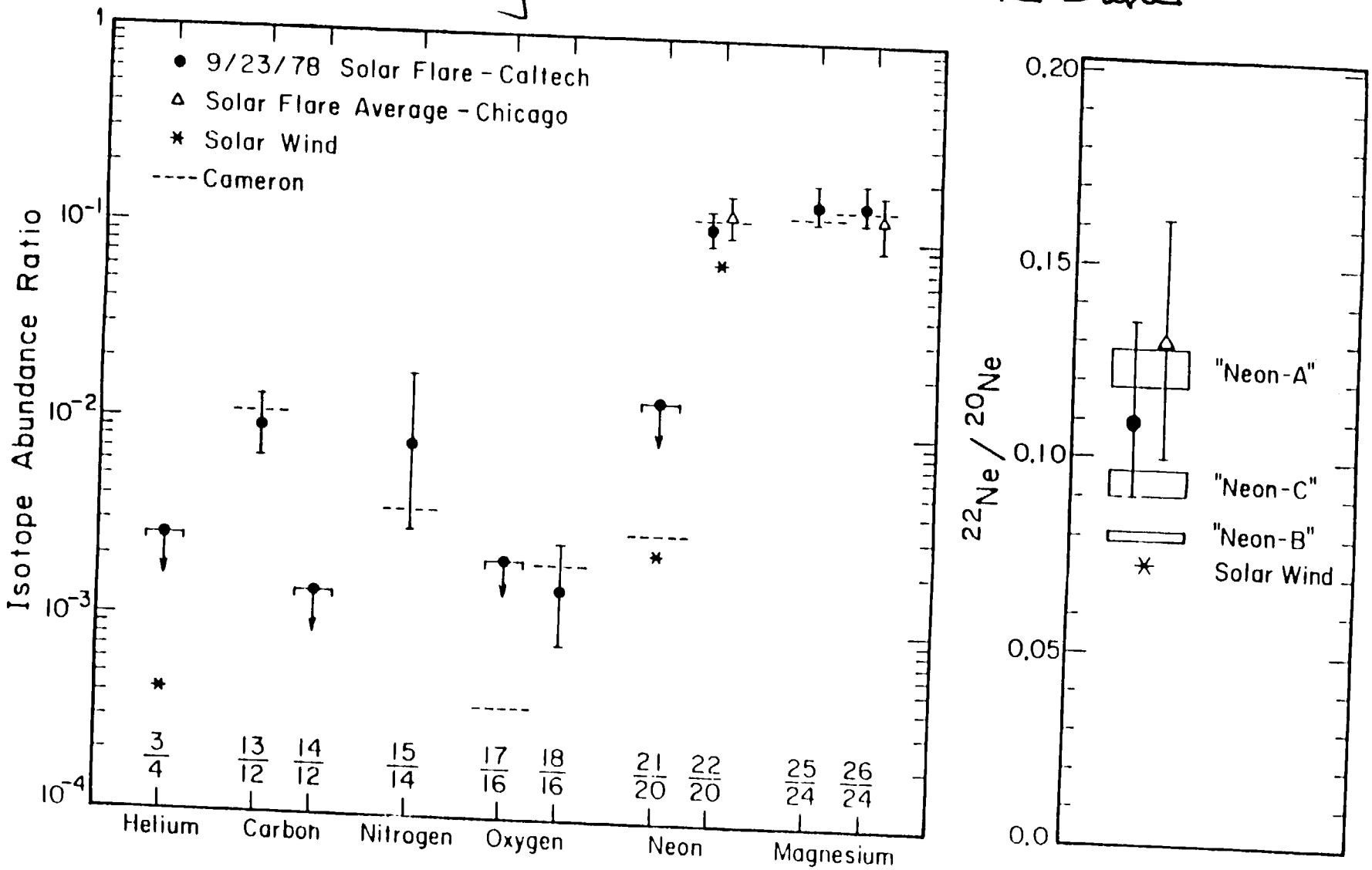

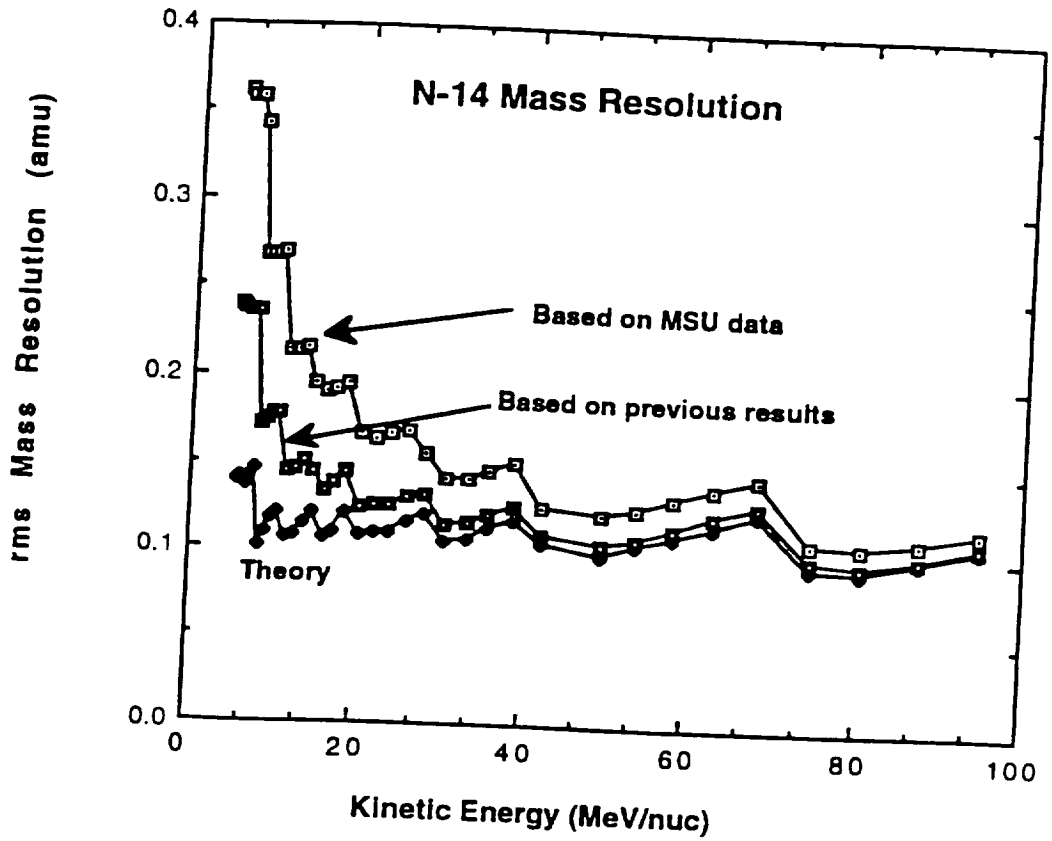

Based on Monte Carlo calculations that take into account the resolution contribution of all detectors in the stack

"Previous results" means resolution comparable to that on ISEE-3

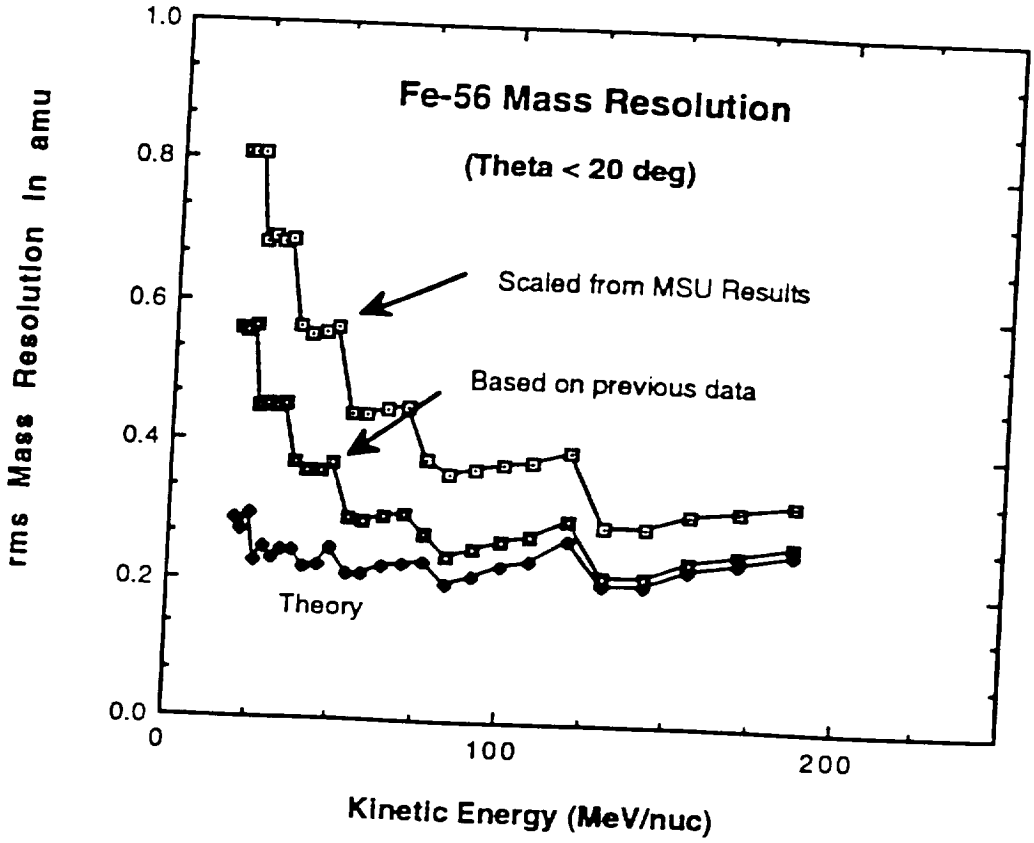
Fe-56 Mass Resolution
(Theta < 20 deg)
Scaled from MSU Results
Based on previous data
Theory
rms Mass Resolution in amu
Kinetic Energy (MeV/nuc)
1.0
0.8
0.6
0.4
0.2
0.0
0
100
200

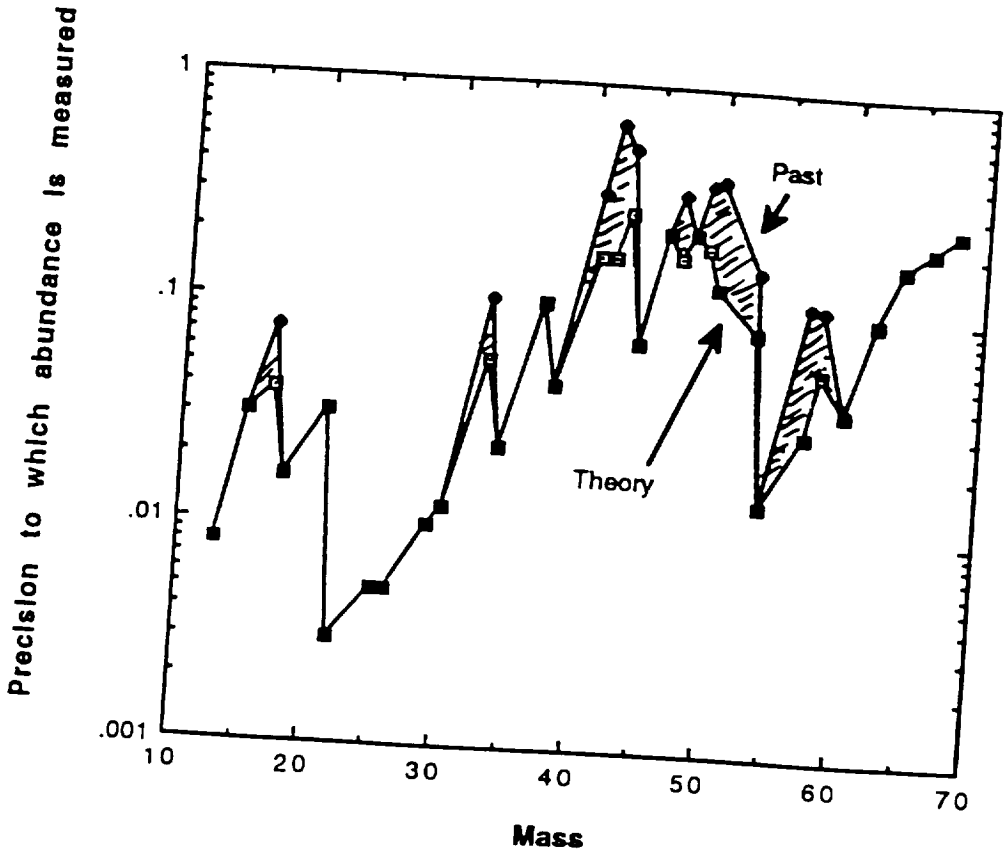
Precision to which abundance is measured
1
.1
.01
.001
10
20
30
40
50
60
70
Mass
Past
Theory

Solar Flare Isotope Yields

A calculation was carried out to estimate the effect that reduced mass resolution would have on solar flare isotope studies. A total of 31 rare isotopes were considered (from ^{13}C to ^{70}Zn). The mass resolution required to "resolve" each of these was estimated by taking into account the relative abundance and mass difference of adjacent, more abundant isotopes (e.g., ^{12}C), based on terrestrial isotope abundances. A representative solar flare energy spectrum was chosen and the yields of all isotopes were calculated, taking into account the thresholds for registration in SIS. Data for a given isotope were accepted only at energies greater than the point where the mass resolution is sufficient to resolve the given isotope. Three levels of mass resolution were considered:

1) Based only on theeory, taking into account known effects
2) Based on previous performance, such as in ISEE-3
3) Based on the MSU results for the 100 and 1000 μm devices

The effect of poorer resolution at low energies is to raise the threshold, thereby reducing the yield and the measurement accuracy. In some cases there was no longer a measureable yield.

The table below shows the number of species that could be measured to a given level of accuracy.

	Measurement Accuracy		
Based On	≤5%	5-10%	10-20%
Theoretical resolution	15	5	11
Past Performance (ISEE-3)	14	2	8
MSU level of performance	11	3	4

In other words, some isotopes can no longer be studied if the resolution is inadequate. The figures show the increased measurement error for a wide range of species.

Solar Isotope Spectrometer (SIS)

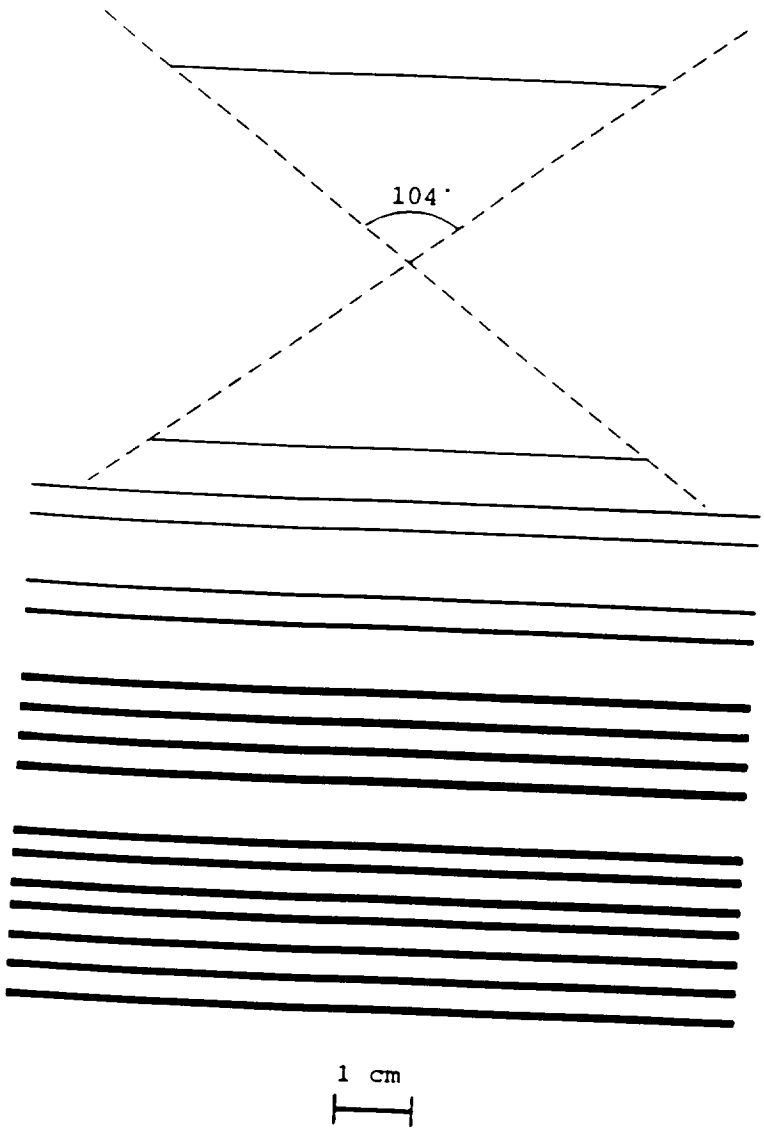

	Top (cm)	Thickness (mm)	Area (cm^2)
M1	0.0	0.06	33.9
M2	5.0	0.06	33.9
T1	5.721	0.1	69.4
T2	6.113	0.1	69.4
T3	7.012	0.25	69.4
T4	7.403	0.5	69.4
T5	8.302	1.0	69.4
T6a	8.693	1.0	69.4
T6b	9.033	1.0	69.4
T6c	9.424	1.0	69.4
T7a	10.323	1.0	69.4
T7b	10.664	1.0	69.4
T7c	11.055	1.0	69.4
T7d	11.395	1.0	69.4
T7e	11.786	1.0	69.4
T7f	12.127	1.0	69.4
T8	12.518	1.0	69.4

Current Design

$A\Omega \simeq 44\ cm^2 sr$

(2 Telescopes)

SIS Thin Detector Plan

- Test new Micron 100 μ replacement detectors in April, along with some spare thin detectors from previous experiments
  - * Investigate "channeling" hypothesis
- Develop an alternate telescope design that does not use Micron 100, 250, or 500 μ detectors
  - * Analyze MSU data from smaller–area 100 μ detector used in WIND
  - * Get sample detectors from Ortec and Hamamatsu by July
  - * Test at accelerator in August along with Micron 250 μ and 500 μ detectors
- Minimize impact on electronics design by keeping the number of PHAs per board the same
  - * May have to use different feedback components in some hybrids at Teledyne
- Prepare alternate mechanical design for the alternate telescope
- Will still be able to have the thin detectors ready for telescope assembly in May 1995, per current schedule

2/24/94

SIS PDR

Section 2

Overview of Instrument Development Plans

2/24/94

Overview of Instrument Development Plans

- **Instrument Development Organization**
  - **SIS = Mech/Therm + Detectors + [illegible] + S/W + GSE**

∗ **Mech/Therm Design**	**GSFC 661/APL**	**von Rosenvinge/Williams**
∗ **Mechanical Fab**	**GSFC 661**	**von Rosenvinge**
∗ Detector Spec	JPL	Wiedenbeck
∗ Detector Bias	[illegible]	[illegible]
∗ Detector Test	JPL	Wiedenbeck
∗ [illegible]	**Caltech**	**Cook**
∗ **SIS Software**	**Caltech**	**Cook**
∗ **GSE/Electrical**	JPL	Wiedenbeck
∗ **GSE/Mechanical**	**GSFC 661**	**von Rosenvinge**
∗ **Assembly & Test**	**Caltech**	**Cook**
∗ **Instrument Level Calibration**	**Caltech**	**Mewaldt**

2/24/94

Overview of Instrument Development Plans (continued)

- Division of Responsibilities

Institution	Responsibilities
Caltech	Project management Stack VLSI design, procure, and test Flight software Stack detector procurement Logic design Digital and analog board design, procure, and test Component level testing S/C level testing and launch support Integration and test Technical support of design efforts at other institutions Specifications and management of all procurements Electronic and accelerator calibrations Flight data analysis software Interface with ASC
GSFC Code 661.0	Matrix detector design, procurement, and qualification test Instrument mechanical design, analysis, fabrication, and test (including telescopes) MGSE design, fabrication, and qualification Technical support of overall SIS design effort Stack detector holder design
JPL	Product assurance Detector telescopes assembly and test Detector contact soldering and assembly EGSE design, assembly, and test, including software Instrument level environmental testing facilities Misc. technical support Stack detector specification
APL	S/C to instrument thermal interface Internal thermal design Thermal blankets External instrument harness
Caltech subcontractors	Stack circuit VLSI design and fabrication Power supply system design, fabrication, and test, including regulators and high voltage supplies

2/24/94

Overview of Instrument Development Plans (continued)

- Division of Responsibilities

Experiment element	specification & functional requirement	design	fab & assembly or procurement	functional test & analysis	qualification test/analysis	calibration	quality & config. control	Inst. Design Document
instrument level	CIT (and Co-investigators)	CIT	n/a	CIT	CIT	CIT	CIT	CIT
matrix detector	JPL/GSFC	GSFC	sub (Micron)	CIT	GSFC	CIT	GSFC	GSFC
stack detector	JPL	GSFC	sub (Micron)	JPL	JPL	CIT	CIT	CIT
detector contacts	GSFC	GSFC	JPL	CIT	n/a	n/a	CIT	GSFC
telescope assembly	JPL	GSFC	GSFC/JPL	JPL	JPL	n/a	JPL	GSFC
VLSI	CIT	CIT/sub	sub	CIT	CIT	CIT	CIT	CIT
EEE parts	CIT	n/a	CIT	CIT	n/a	n/a	CIT	n/a
analog electronics	CIT	CIT/sub	CIT/sub	CIT	CIT	CIT	CIT	CIT
digital electronics	CIT	CIT/sub	CIT/sub	CIT	CIT	CIT	CIT	CIT
flight s/w	CIT	CIT	CIT	CIT	CIT	CIT	CIT	CIT
internal thermal control	CIT	APL	n/a	CIT (at board and circuit level)	CIT	n/a	CIT	n/a
Instrument housing	CIT	GSFC	GSFC	GSFC	GSFC (structural and dynamic analysis)	n/a	GSFC	GSFC
external thermal control	CIT	APL	APL	APL (analysis)	APL (at observatory level)	n/a	APL	n/a (part of S/C data package)
power supply	CIT	sub	sub	sub	sub (again at CIT)	n/a (done at instr. level)	sub	sub
GSE mechanical	CIT/JPL	GSFC	GSFC	GSFC	GSFC	n/a	GSFC	GSFC
GSE electrical	CIT/JPL	JPL	JPL	JPL	JPL	n/a	JPL	JPL
EGSE s/w	CIT/JPL	JPL	n/a	JPL/CIT	JPL/CIT	n/a	JPL	JPL
analysis s/w	CIT/JPL	CIT/JPL	CIT/JPL	CIT	CIT	n/a	CIT	CIT

2/24/94

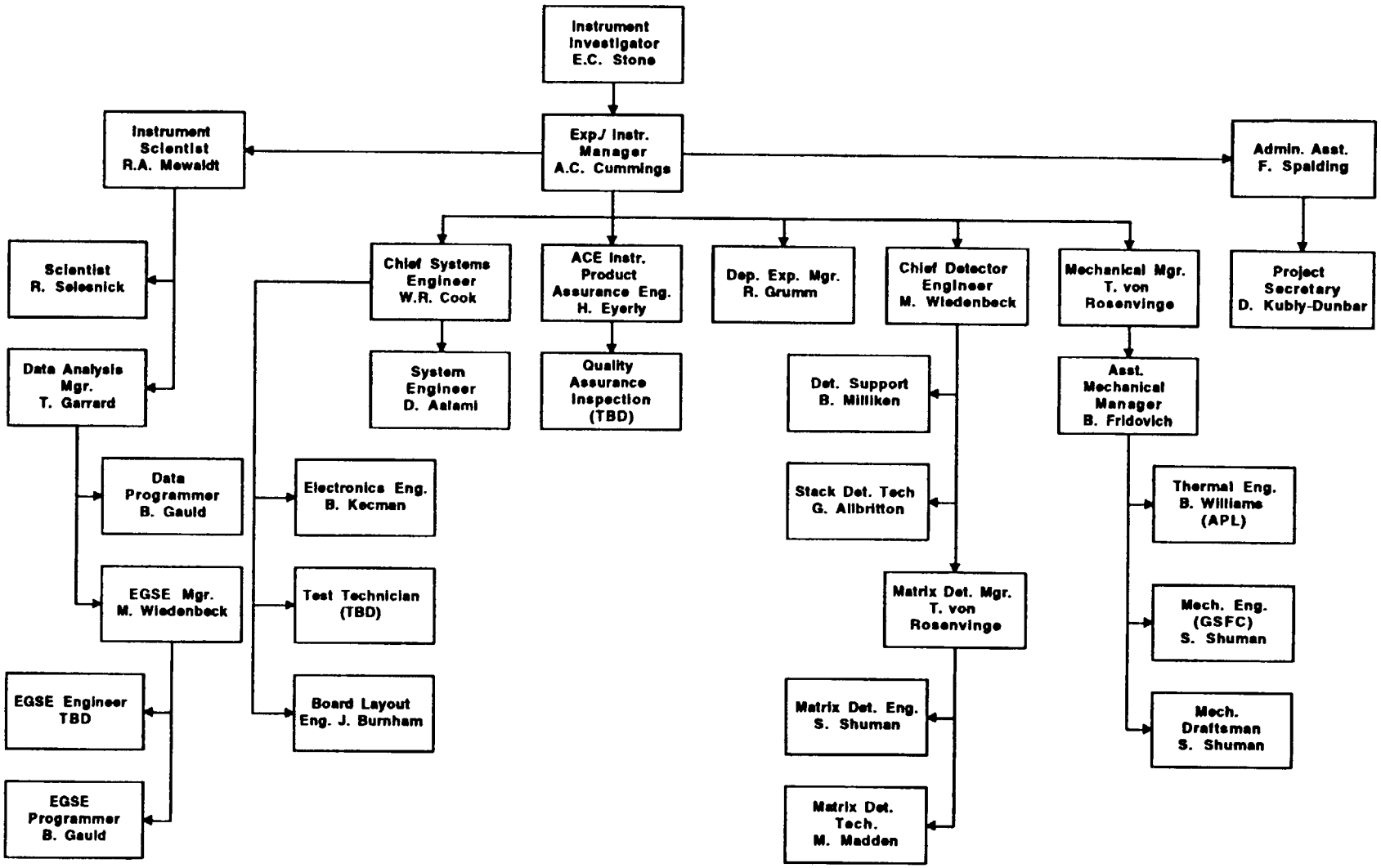
Instrument Investigator E.C. Stone
Exp/ Instr. Manager A.C. Cummings
Instrument Scientist R.A. Mewaldt
Admin. Asst. F. Spalding
Scientist R. Selesnick
Data Analysis Mgr. T. Garrard
Data Programmer B. Gauld
EGSE Mgr. M. Wiedenbeck
EGSE Engineer TBD
EGSE Programmer B. Gauld
Chief Systems Engineer W.R. Cook
System Engineer D. Aalami
Electronics Eng. B. Kecman
Test Technician (TBD)
Board Layout Eng. J. Burnham
ACE Instr. Product Assurance Eng. H. Eyerly
Quality Assurance Inspection (TBD)
Dep. Exp. Mgr. R. Grumm
Chief Detector Engineer M. Wiedenbeck
Det. Support B. Milliken
Stack Det. Tech G. Allbritton
Matrix Det. Mgr. T. von Rosenvinge
Matrix Det. Eng. S. Shuman
Matrix Det. Tech. M. Madden
Mechanical Mgr. T. von Rosenvinge
Asst. Mechanical Manager B. Fridovich
Thermal Eng. B. Williams (APL)
Mech. Eng. (GSFC) S. Shuman
Mech. Draftsman S. Shuman
Project Secretary D. Kubly-Dunbar

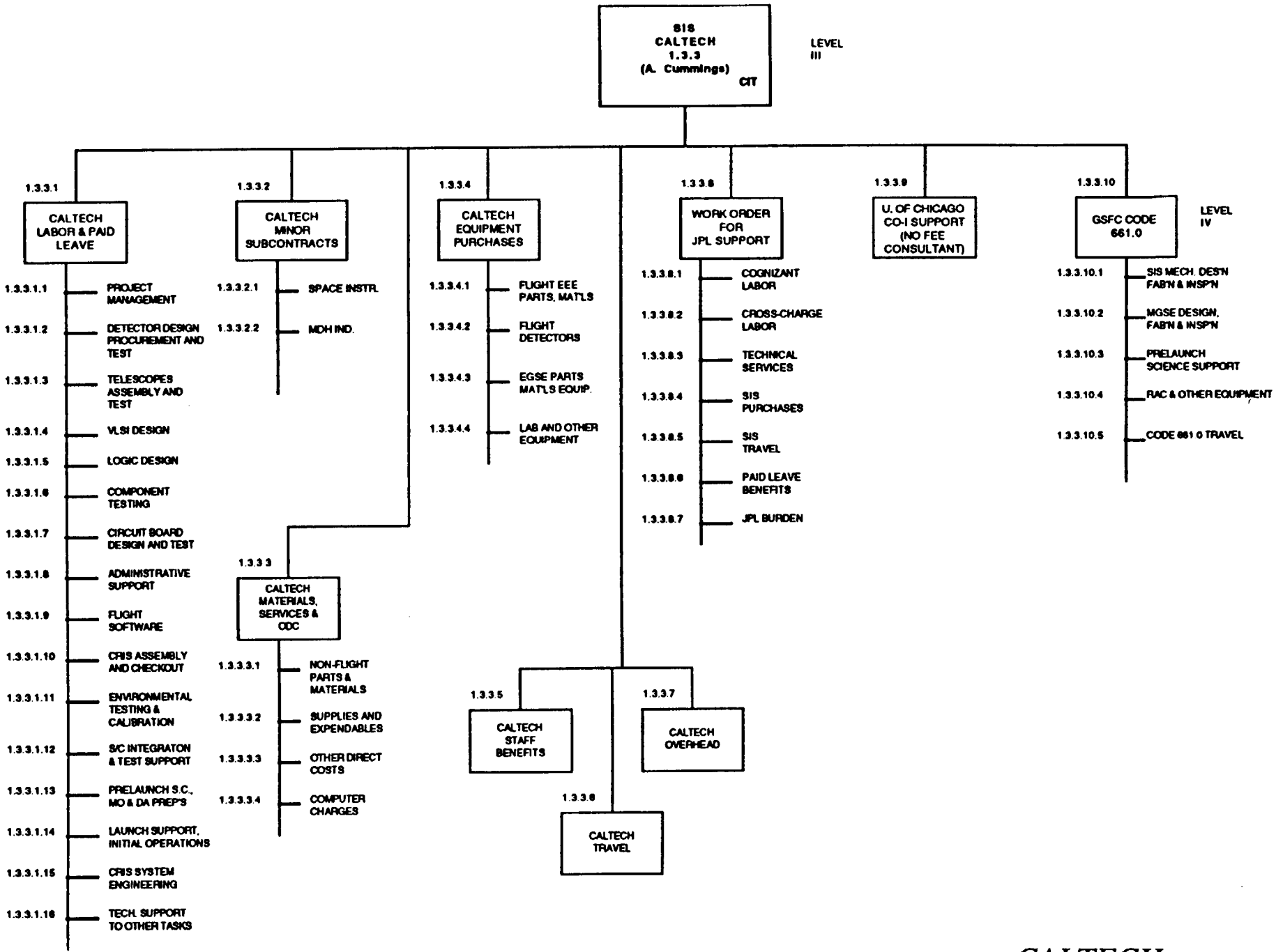
SIS
CALTECH
1.3.3
(A. Cummings)
CIT
LEVEL III
1.3.3.1
CALTECH LABOR & PAID LEAVE
1.3.3.1.1 PROJECT MANAGEMENT
1.3.3.1.2 DETECTOR DESIGN PROCUREMENT AND TEST
1.3.3.1.3 TELESCOPES ASSEMBLY AND TEST
1.3.3.1.4 VLSI DESIGN
1.3.3.1.5 LOGIC DESIGN
1.3.3.1.6 COMPONENT TESTING
1.3.3.1.7 CIRCUIT BOARD DESIGN AND TEST
1.3.3.1.8 ADMINISTRATIVE SUPPORT
1.3.3.1.9 FLIGHT SOFTWARE
1.3.3.1.10 CRIS ASSEMBLY AND CHECKOUT
1.3.3.1.11 ENVIRONMENTAL TESTING & CALIBRATION
1.3.3.1.12 S/C INTEGRATON & TEST SUPPORT
1.3.3.1.13 PRELAUNCH S.C., MO & DA PREP'S
1.3.3.1.14 LAUNCH SUPPORT, INITIAL OPERATIONS
1.3.3.1.15 CRIS SYSTEM ENGINEERING
1.3.3.1.16 TECH. SUPPORT TO OTHER TASKS
1.3.3.2
CALTECH MINOR SUBCONTRACTS
1.3.3.2.1 SPACE INSTR.
1.3.3.2.2 MDH IND.
1.3.3.3
CALTECH MATERIALS, SERVICES & ODC
1.3.3.3.1 NON-FLIGHT PARTS & MATERIALS
1.3.3.3.2 SUPPLIES AND EXPENDABLES
1.3.3.3.3 OTHER DIRECT COSTS
1.3.3.3.4 COMPUTER CHARGES
1.3.3.4
CALTECH EQUIPMENT PURCHASES
1.3.3.4.1 FLIGHT EEE PARTS, MAT'LS
1.3.3.4.2 FLIGHT DETECTORS
1.3.3.4.3 EGSE PARTS MAT'LS EQUIP.
1.3.3.4.4 LAB AND OTHER EQUIPMENT
1.3.3.5
CALTECH STAFF BENEFITS
1.3.3.6
CALTECH TRAVEL
1.3.3.7
CALTECH OVERHEAD
1.3.3.8
WORK ORDER FOR JPL SUPPORT
1.3.3.8.1 COGNIZANT LABOR
1.3.3.8.2 CROSS-CHARGE LABOR
1.3.3.8.3 TECHNICAL SERVICES
1.3.3.8.4 SIS PURCHASES
1.3.3.8.5 SIS TRAVEL
1.3.3.8.6 PAID LEAVE BENEFITS
1.3.3.8.7 JPL BURDEN
1.3.3.9
U. OF CHICAGO CO-I SUPPORT (NO FEE CONSULTANT)
1.3.3.10
GSFC CODE 661.0
LEVEL IV
1.3.3.10.1 SIS MECH. DES'N FAB'N & INSP'N
1.3.3.10.2 MGSE DESIGN, FAB'N & INSP'N
1.3.3.10.3 PRELAUNCH SCIENCE SUPPORT
1.3.3.10.4 RAC & OTHER EQUIPMENT
1.3.3.10.5 CODE 661.0 TRAVEL

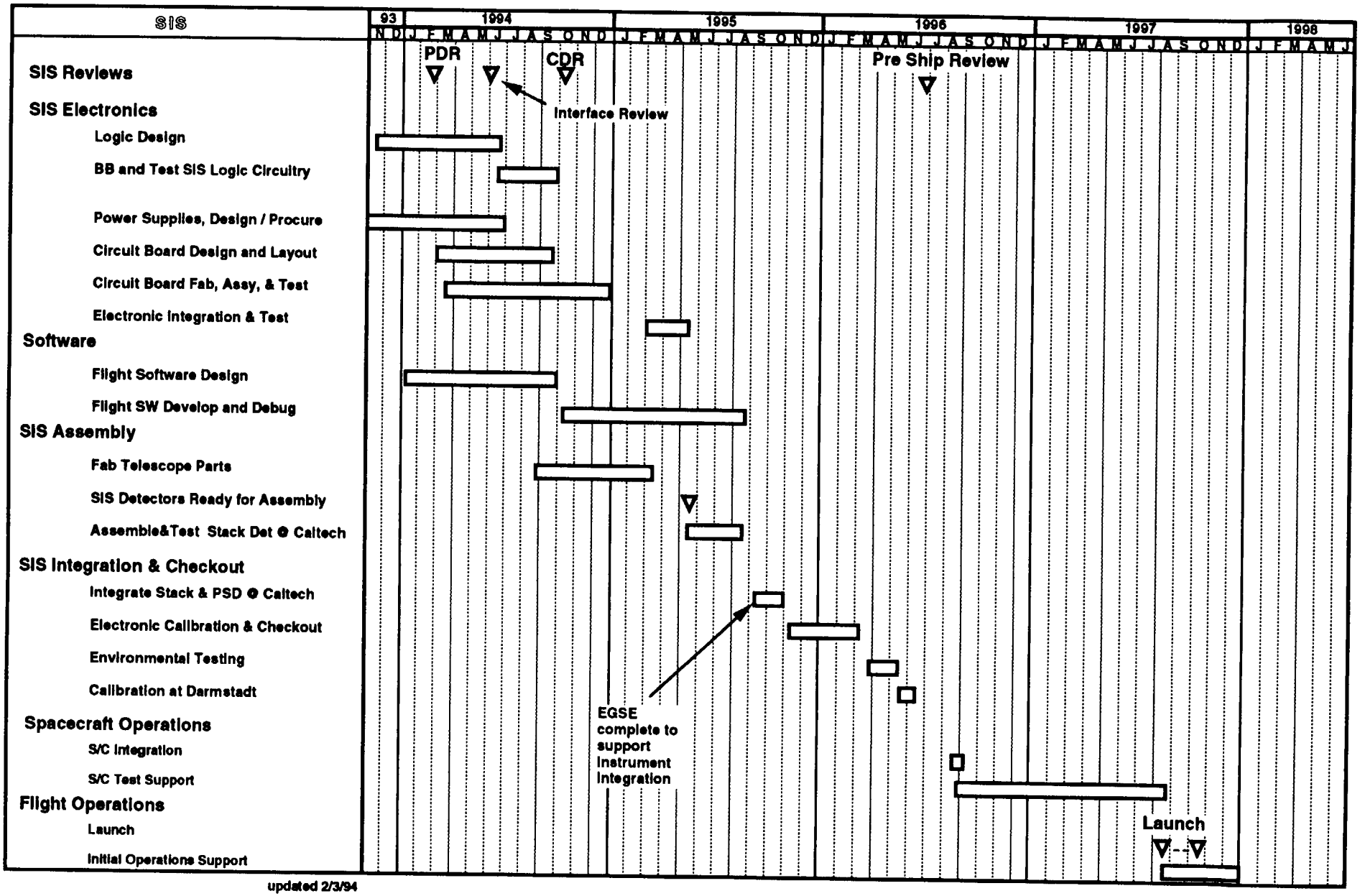

updated 2/3/94

SIS Development Gantt Schedule

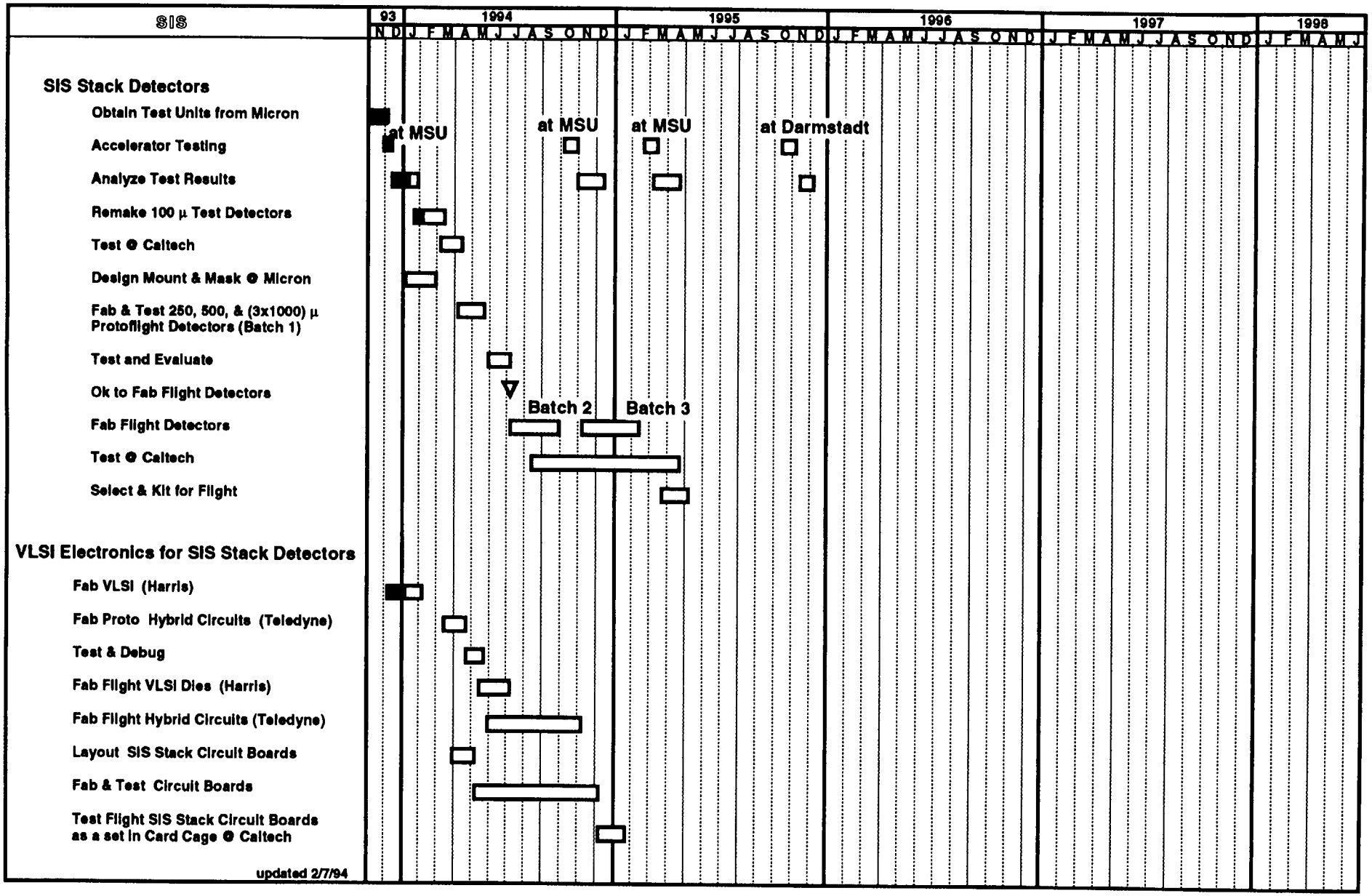

SIS Stack Detector and Stack Development

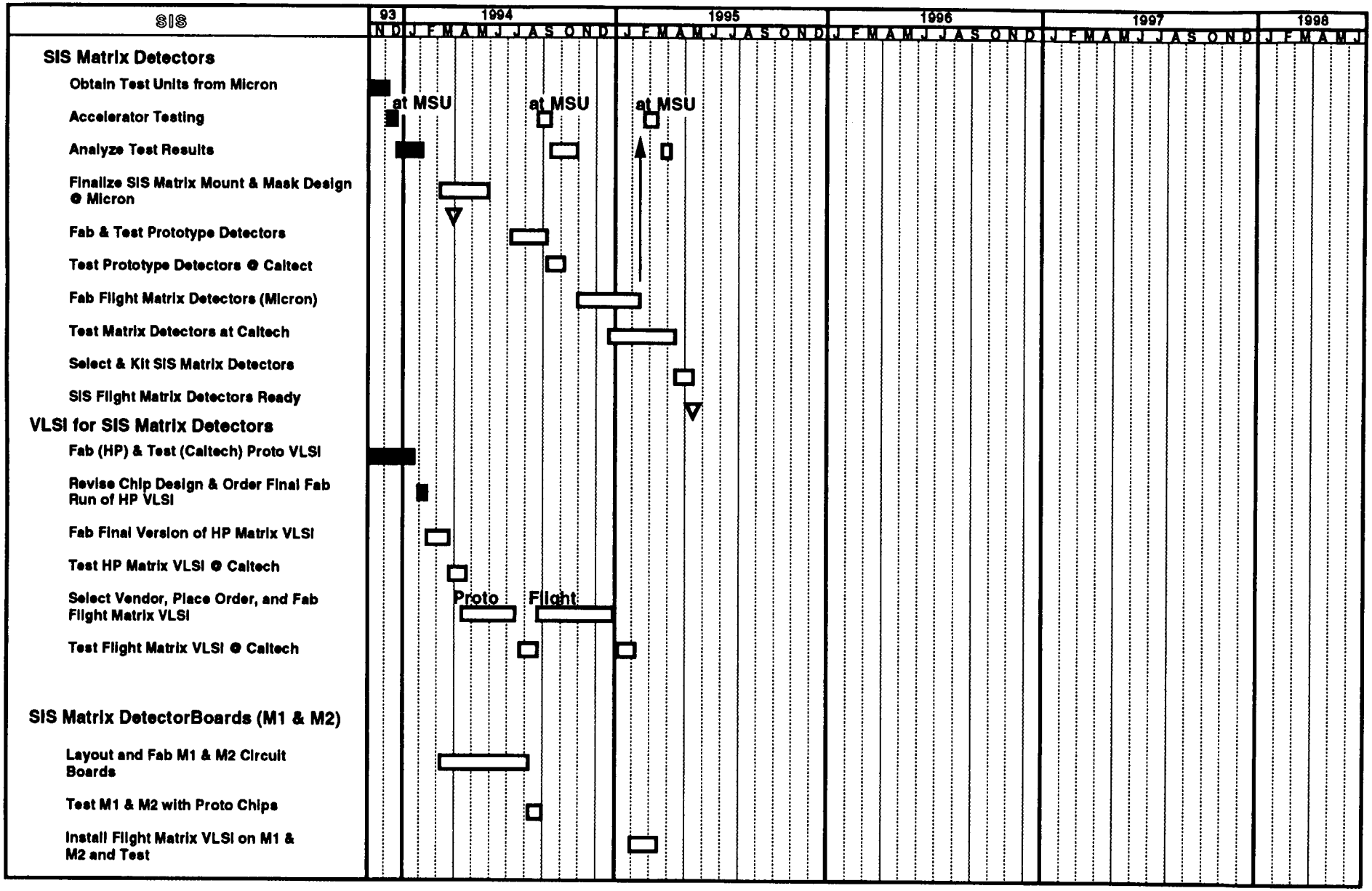

updated 2/7/94

SIS Matrix Detector Gantt Schedule

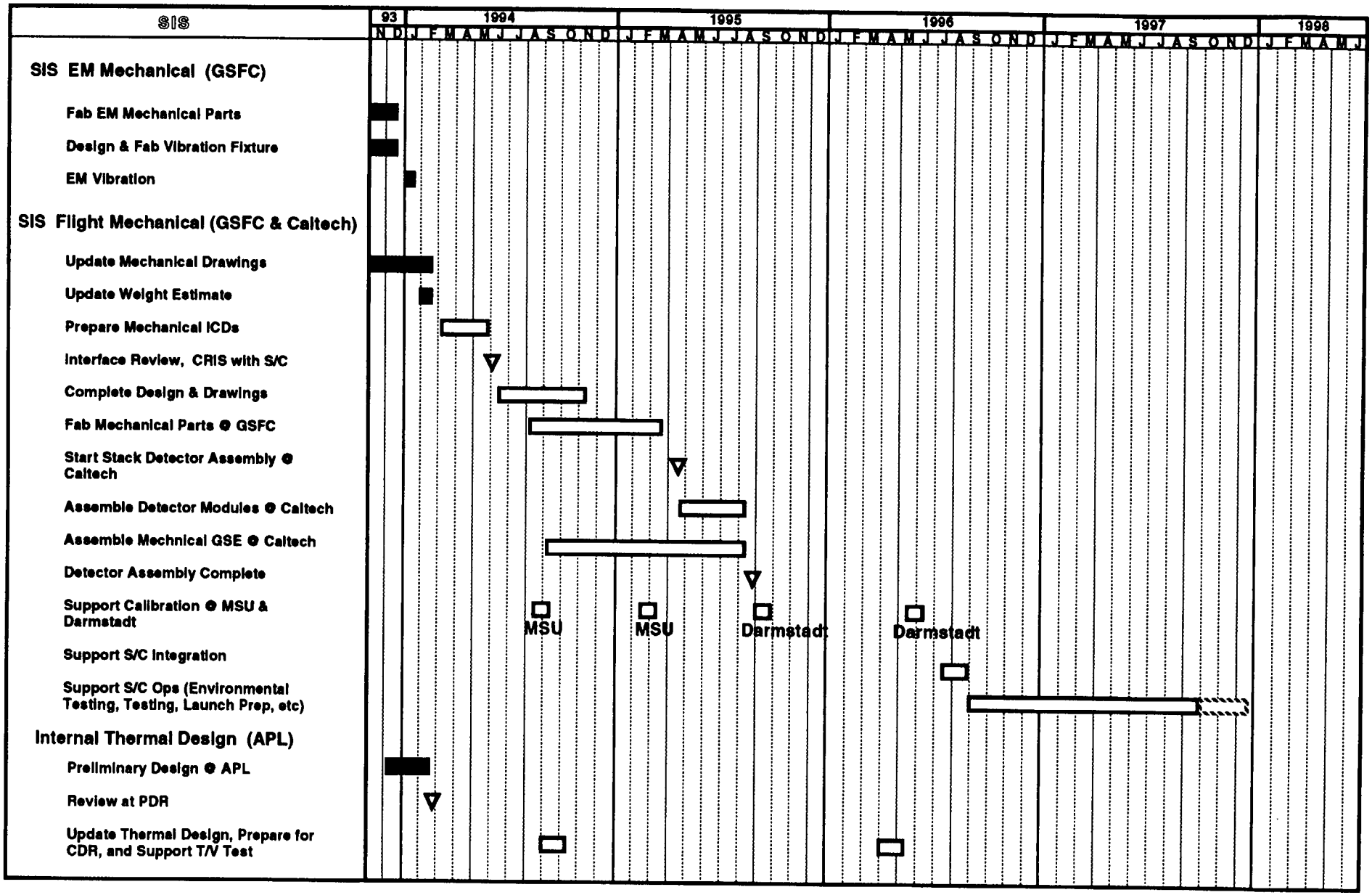

updated 2/3/94

SIS Mechanical Gantt Schedule

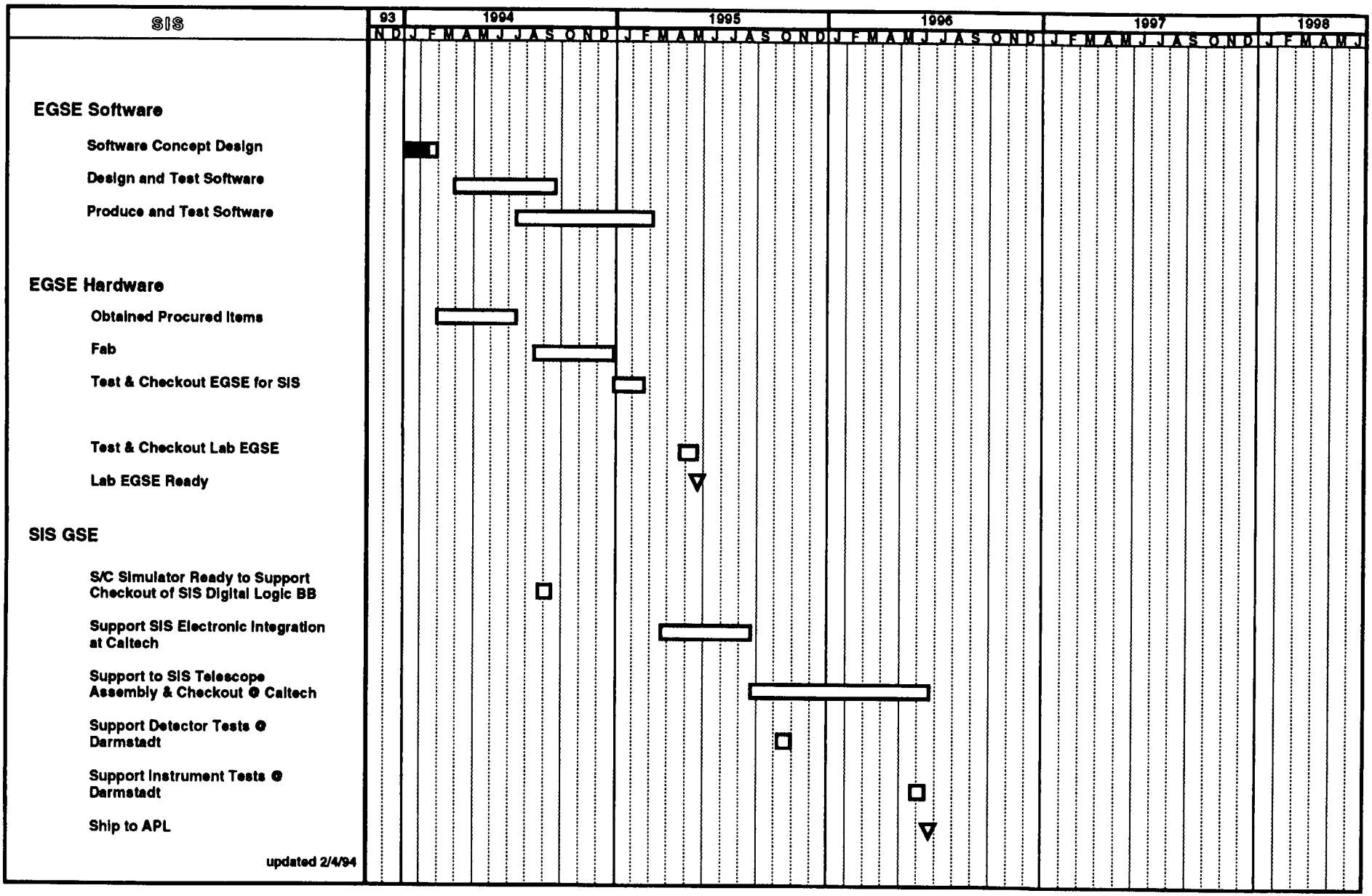

SIS GSE Development

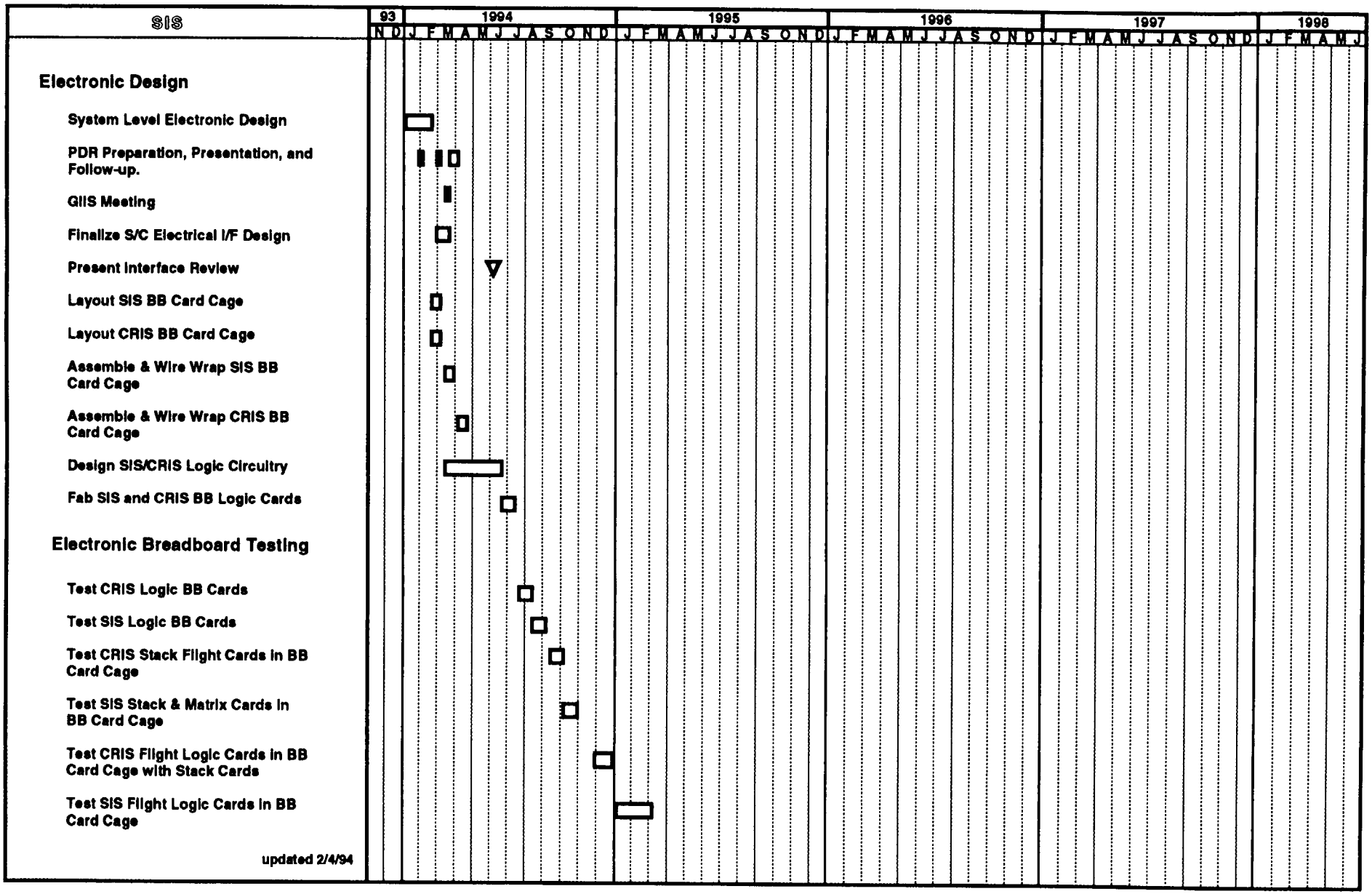

BB Electronic Development and Testing

SIS PDR

Section 3

Instrument Overview

2/24/94

SOLAR ISOTOPE SPECTROMETER (SIS)

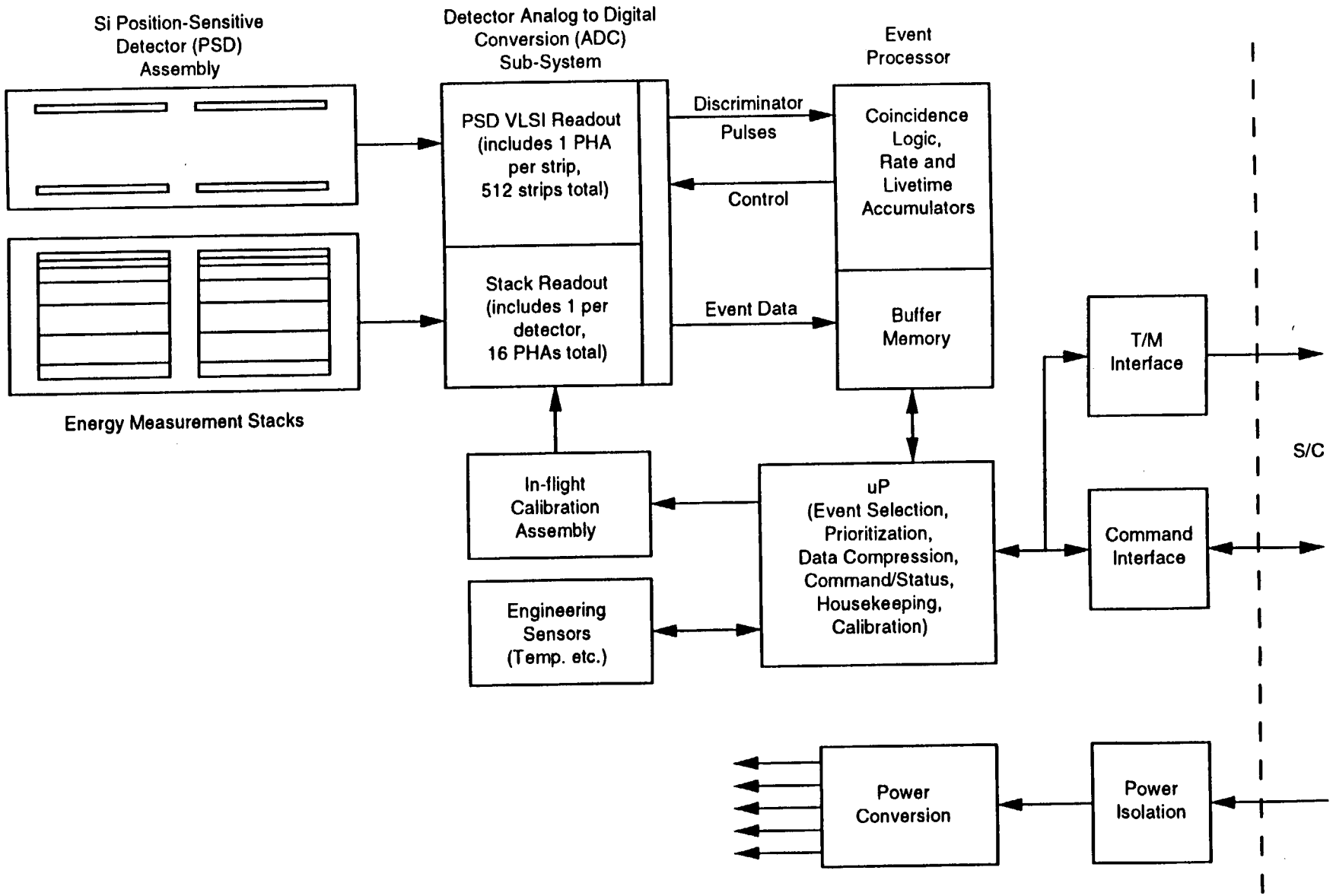

Instrument Overview (continued)

- Key Design Features

  * Packaging similar to CRIS:

    1. A single card cage houses:
       Silicon stack detectors
       Stack detector electronics
       Digital electronics
       Low voltage power supplies
       High voltage power supplies

    2. Stack detectors are in modules attached to PWBs which contain associated pulse height analyzers (PHAs)

    3. All eight stack detector PWBs are identical (each contains two PHAs)

2/24/94

Instrument Overview (continued)

- Key Design Features (continued)

  * **Electronics**

    1. **Stack detector PHAs are each a single hybrid based on a custom VLSI chip**
       - **Prototype hybrid should be in test by PDR**
       - **Same hybrids used in CRIS**
    2. **Main difference from CRIS is that SOFT is replaced by silicon matrix detectors**
    3. **Pulse height analyze each strip to provide both position and ΔE**
    4. **Matrix detector readout is via custom CMOS VLSI design having 16 complete PHAs per chip**
       - **Designed during Phase B**
       - **Prototyping is far along; discussed later**
    5. **Logic and microprocessor parts are the same as CRIS**
    6. **Logic and μP design are similar to CRIS, except that due to higher rates, event data collection to FIFO is not done by μP, rather by hardware**
    7. **Flight software similar to CRIS, with SOFT processing replaced by matrix detector processing**

2/24/94

Instrument Overview (continued)

- Key Design Features (continued)
  - * **Redundancy**

    1. **Two separate telescopes with separate front end electronics**
    2. **Individually programmable HV series regulators corresponding to each detector PHA**
       Allows for possible recovery from certain detector problems
    3. **Programmable PHA thresholds**
       Allows recovery from modest detector noise increases
    4. **Programmable coincidence logic equations handle completely failed individual detectors**
    5. **HV and associated circuitry designed to tolerate detector failure via high leakage currents**

2/24/94

Instrument Overview (continued)

- Key Design Features (continued)
  - ∗ **Improved Detector Health Monitoring via Built−in Leakage Current Measurements for all Detectors**
    1. **Provides better tracking of detector health before launch**
    2. **Combined with easier detector access will help ensure launch of healthy detectors**
    3. **Better diagnosis of possible post−launch detector problems**

SIS PDR

Section 4

Solid State Detectors

2/24/94

DETECTOR OVERVIEW

- **Detector Configurations**
  - Stack Detectors

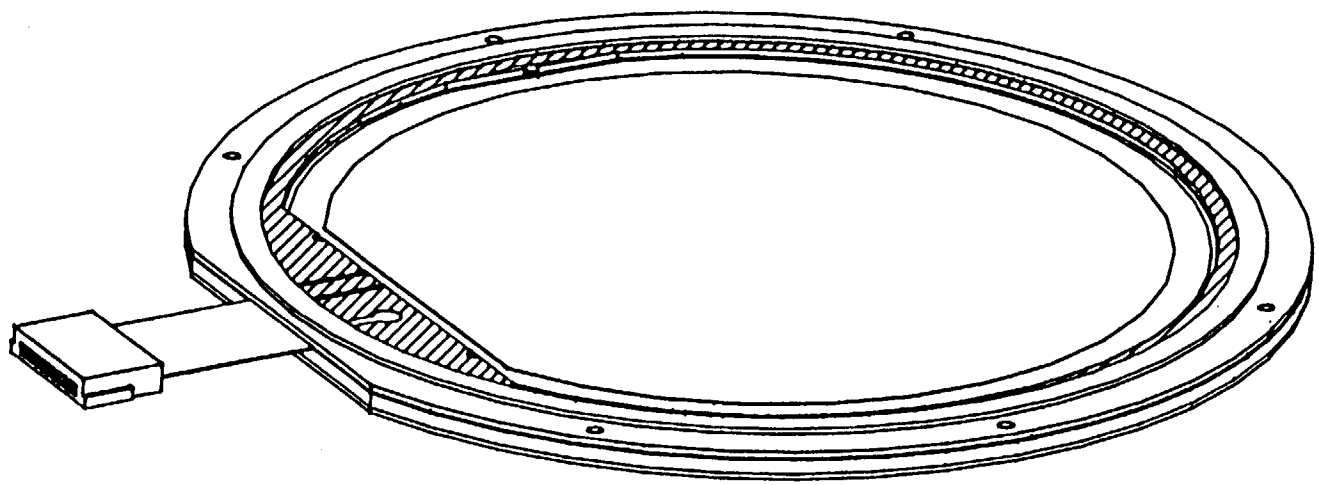

- **Detector Configurations (cont.)**
  - Matrix Detectors

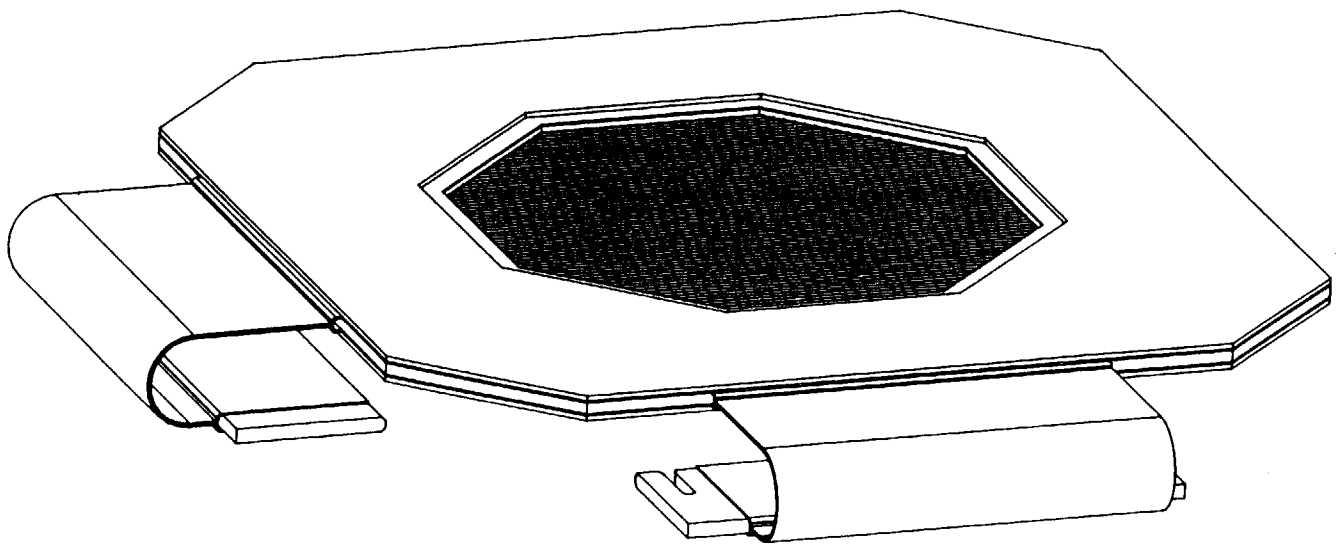

- **Detector Configurations (cont.)**
  - Detector Sizes

Type	Detector ID	Thickness	Active Area
Matrix	M1,M2	60 μm	34 cm^2
Stack	T1,T2	100 μm	65 cm^2
"	T3	250 μm	65 cm^2
"	T4	500 μm	65 cm^2
"	T5,T6*,T7**,T8	1000 μm	65 cm^2

* T6 comprises three 1000 μm detectors

** T7 comprises six 1000 μm detectors

DETECTOR OVERVIEW (cont.)

- **Functional Description**
  - Ionization signal is proportional to energy loss, 3.6 eV per electron-hole pair
  - Current signal dictated by electric field strength, mobility of electrons and holes, and distribution of energy deposition in the detector
  - Current integrated to measure total ionization charge
  - Guard region serves to minimize leakage current and improve depletion characteristics of the detector, but is not instrumented for readout
  - Orthogonal strips on the two surfaces of the matrix detectors provide both energy loss and 2D position for each detected particle

DETECTOR OVERVIEW (cont.)

- **Fabrication Techniques**
  - pn junction is formed by ion implantation of boron in a thin layer at one surface of the n-type silicon
  - Aluminum contacts are evaporated on both detector surfaces
  - Surfaces of completed detector are coated with thin silox (SiO_2) layer for additional protection against damage or contamination
  - Resulting detector has thin dead layers, typically less than 2 μm per surface

DETECTOR OVERVIEW (cont.)

- **Requirements**
  - Thickness Uniformity
    - ▷ 0.1% thickness error produces 0.08 amu mass error for ^{56}Fe
    - ▷ must be able to determine thickness penetrated by each detected particle using a thickness map together with trajectory measurements made with matrix detectors
    - ▷ drives requirement for thickness gradients $\lesssim$0.1%/mm

- **Requirements (cont.)**
  - Dead Layer Minimization
    - ▷ mass determination is most sensitive to ΔE energy loss near the boundary between detectors
    - ▷ need to minimize the thickness of inactive material at this interface
    - ▷ goal is to keep dead layer less than a few percent and uniformity better than a few tenths of a percent of the ΔE detector thickness
    - ▷ dead layers of ion implanted detectors are sufficiently thin, and thicknesses will be mapped to determine the necessary corrections to the data
    - ▷ dead layer uniformity on small scales is currently being studied using prototype detectors procured during Phase B

- **Requirements (cont.)**
  - Contamination Prevention
    - ▷ detector operation is particularly sensitive to the chemistry of the detector surfaces
    - ▷ detector performance and longevity can be degraded by surface contamination
    - ▷ some protection is provided by the thin silox (SiO_2) coating on the SIS ion implanted detectors
    - ▷ to keep surfaces clean, detectors are stored in a dry N_2 atmosphere
    - ▷ to prevent detector contamination in the laboratory or on the spacecraft, use of volatile chemicals nearby must be restricted, "if you can smell it, it is suspect"
    - ▷ instrument will be purged with dry N_2 whenever practical in the laboratory and on the spacecraft

- **Requirements (cont.)**
  - Radiation Resistance
    - ▷ detector response can shift under high radiation exposures
    - ▷ important parameter is fluence (particles/cm^2) rather than dose because deterioration is caused primarily by production of defects in the silicon lattice
    - ▷ radiation effects on ion implanted detectors have been tested with accelerator beams—changes in leakage current, charge collection, and depletion voltage become appreciable for proton fluences $\gtrsim 10^{12}$/cm^2
    - ▷ degradation is less severe at 0°C (the desired operating temperature for SIS detectors) than at room temperature

- Radiation Resistance (cont.)
  - for accelerator calibration of detectors, will keep fluences $<10^6/cm^2$ (corresponding to a dose of $\lesssim$400 rad for the heaviest nuclei of interest) by making sure that beam spot covers 1 cm^2 or more and that particle fluxes do not significantly exceed the rate at which we can collect data

KEY SPECIFICATIONS

- **Stack Detectors**

Parameter	Value*	
Thickness	100 μm	1000 μm
Thickness Tolerance	$\pm$10 μm	$\pm$50 μm
Thickness Gradient	<0.1 μm/mm	<1 μm/mm
Total Dead Layer Thickness	<3.0 μm	<3.0 μm
Dead Layer Variation (rms)**	<0.25 μm	<0.5 μm
Depletion Voltage	20$\pm$10V	150$\pm$50V
Operating Voltage Range	>30V	>30V
Leakage Current (at 20°C)	<1.5μA	<3.0μA
Operating Temperature Range	−40 to 40C	−40 to 40C

* values for 250 μm and 500 μm detectors are intermediate between the values shown here

** on scales too small to spatially resolve ($\lesssim$1 mm)

KEY SPECIFICATIONS (cont.)

- **Matrix Detectors**

Parameter	Value
Active Area	34 cm^2
Thickness	$60 \pm 10\ \mu m$
Thickness Gradient	$<0.06\ \mu m/mm$
Number of Strips (each surface)	64
Strip Pitch	1 mm
Interstrip Gap	$25\ \mu m$
Total Dead Layer Thickness	$<4\ \mu m$
Dead Layer Variation (rms)	$<0.15\ \mu m$
Leakage Current (at 20°C)	
Total	$<2 \mu A$
per Strip	$<0.05 \mu A$
Operating Temperature Range	−40 to 40C

* on scales too small to resolve ($\lesssim$1 mm)

PHASE B DETECTOR ACTIVITIES

- **Prototype Stack Detectors**
  - Prototype stack detectors of the full 10 cm diameter were fabricated in the minimum and maximum thicknesses required for SIS (100 μm and 1000 μm) by Micron Semiconductor
  - Leakage current, noise, and alpha particle resolution were measured and found to be in reasonable compliance with specifications
  - A 100 μm thick prototype was successfully put through a random vibration test and thermal soak and cycling
  - Several 1000 μm thick detectors identical to the SIS prototype were extensively tested for use in the EPACT experiment on Wind

- **Prototype Stack Detectors (cont.)**
  - The designs for the stack detector contact pattern and mount have been finalized, and Micron Semiconductor is now working on producing prototypes with thicknesses of 250 μm and 500 μm in the full flight configuration—delivery is expected in May 1994
  - Prototype stack detectors were tested with heavy ion beams ($_{14}$Si through $_{28}$Ni) at the Michigan State University cyclotron in November 1993
  - Results obtained to date:
    - thickness profiles
    - check of mass resolution
  - Analysis of MSU test data is still in progress

PHASE B DETECTOR ACTIVITIES (cont.)

- **Ion Implanted Detector Thickness Profiles**
  - MSU measurements of 100 μm detector

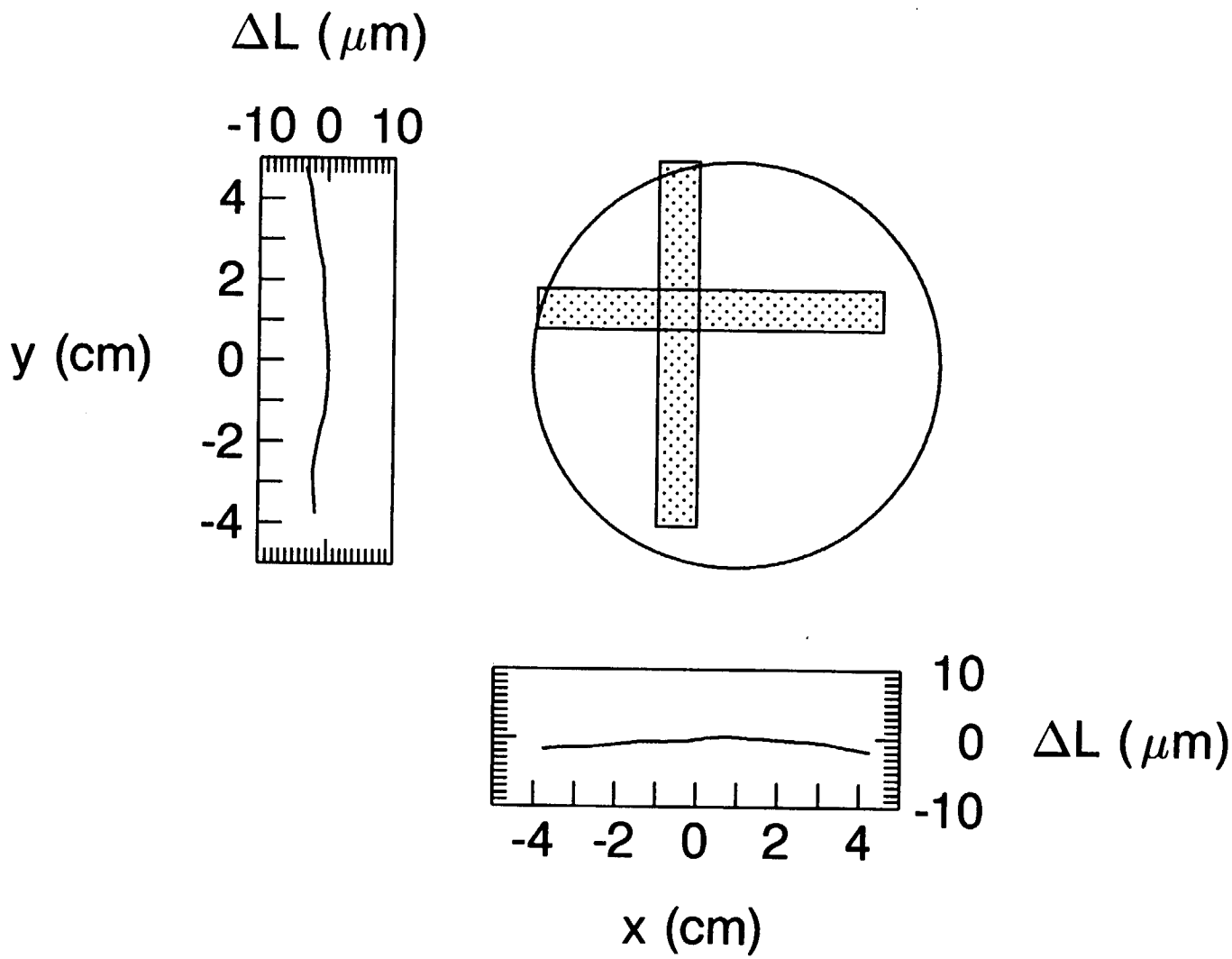

- **ION IMPLANTED DETECTOR THICKNESS PROFILES (cont.)**
  - MSU measurements of 1000 μm detector

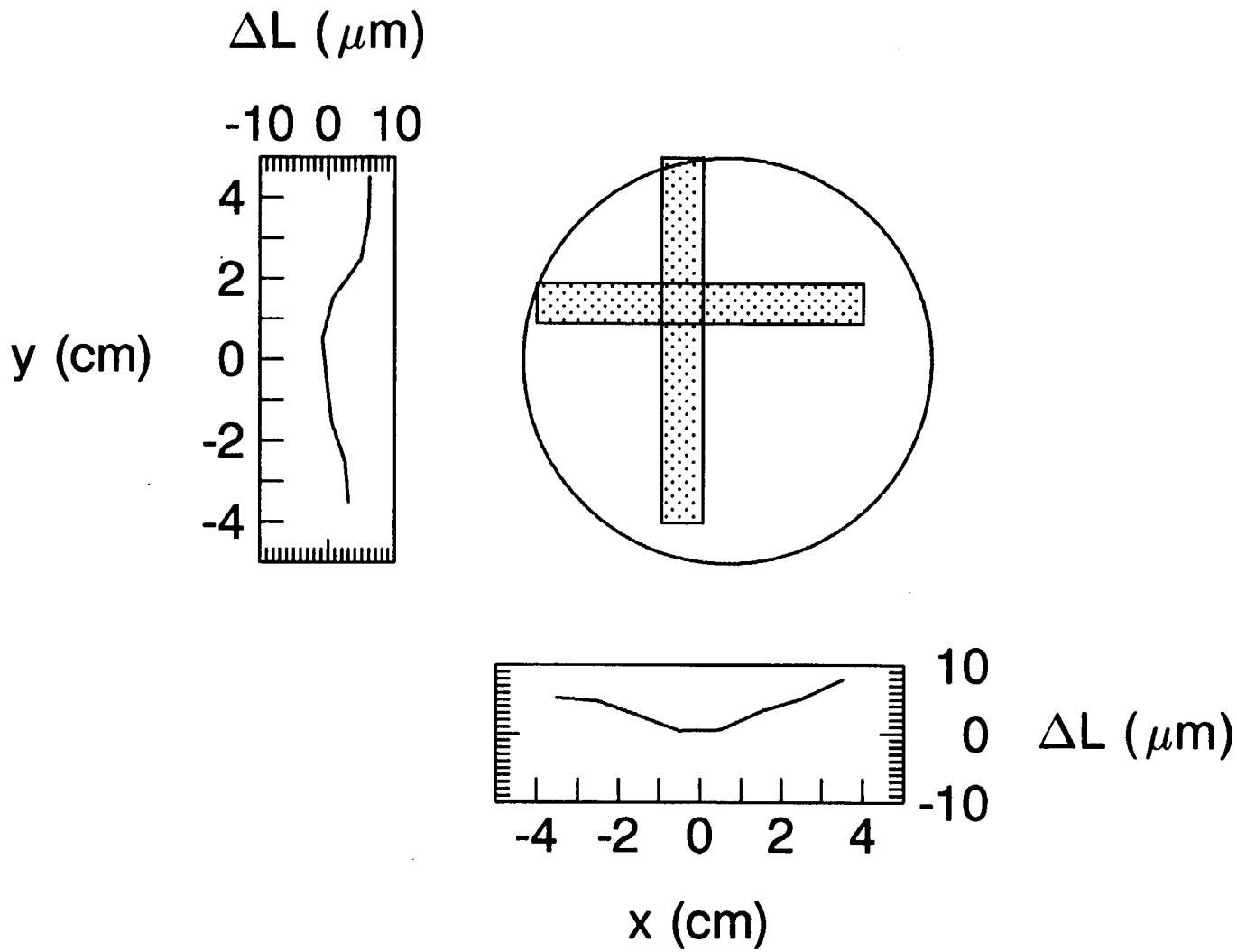

PHASE B DETECTOR ACTIVITIES (cont.)

- **Mass Resolution**
  - MSU tests using ion implanted detectors to measure ΔE

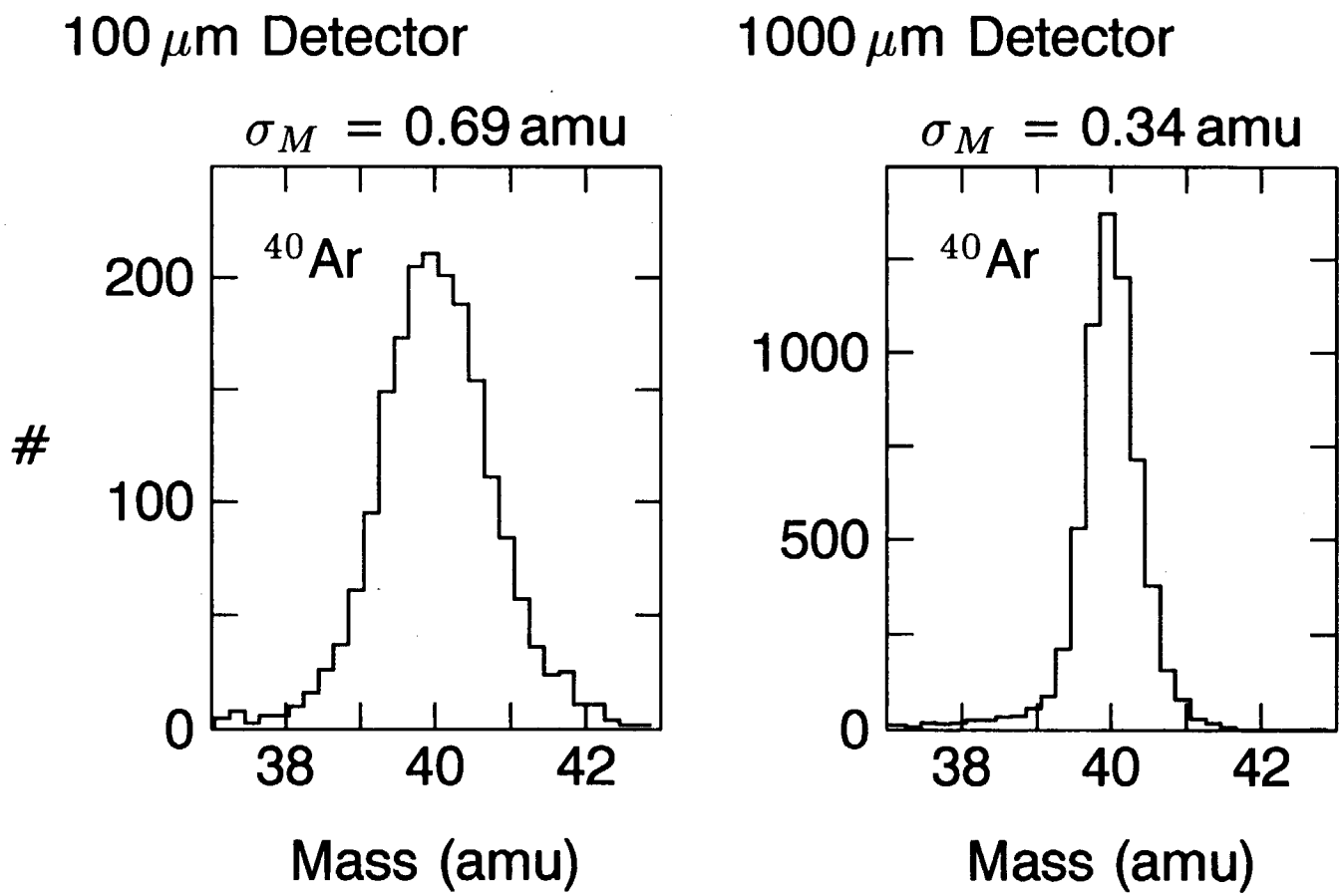

PHASE B DETECTOR ACTIVITIES (cont.)

- **Mass Resolution using 100 μm Stack Detector**
  - Heavy ion mass resolution measurements at MSU accelerator using each of the 100 μm detectors as ΔE are consistent with one another and are significantly poorer than expected
  - Problem is currently under intensive study—a variety of possible explanations have been ruled out on the basis of available measurements
  - Detector manufacturer (Micron Semiconductor) is cooperating in trying to resolve this problem and has just completed fabrication of two additional 100 μm detectors for testing
  - An accelerator test is being planned for the near future (April) to test the new 100 μm devices and to investigate additional hypotheses that have been proposed to explain the poor resolution

- **Mass Resolution using 100 μm Stack Detector (cont.)**
  - The baseline plan for SIS remains the use of detectors from Micron Semiconductor; a production schedule is being developed to assure early deliveries of those detectors which have acceptable performance while the resolution problem is being investigated
  - Discussions have been started with other detector manufacturers in order to develop options which could be implemented if resolution problem cannot be solved

Suggested Source of Broadening	Test Performed
Degraded electronic resolution	Checked pulser signals measured during particle runs
Thickness nonuniformity	
on scales $\gtrsim$2 mm	Measured with particle beams
on scales $\lesssim$0.1 mm	Surface profiles measured with atomic force microscope
on scales between 0.1 and 2 mm	Considered unlikely based on optical quality of surface
Dead layer nonuniformity	Measured with alpha particles (30 μm range)
Poor charge collection from detector	Compared alpha particle signals with a detector with good mass resolution
Spread of angles in beam	Tested by looking for correlations between energy losses in different detectors in the same stack
Particle channelling along a crystal axis	Checked by looking at data collected with detector stack rotated about vertical axis
Particle channelling along horizontal crystal plane	TBD
One-time problem with manufacturing process	Two additional 100 μm detectors just produced—awaiting testing

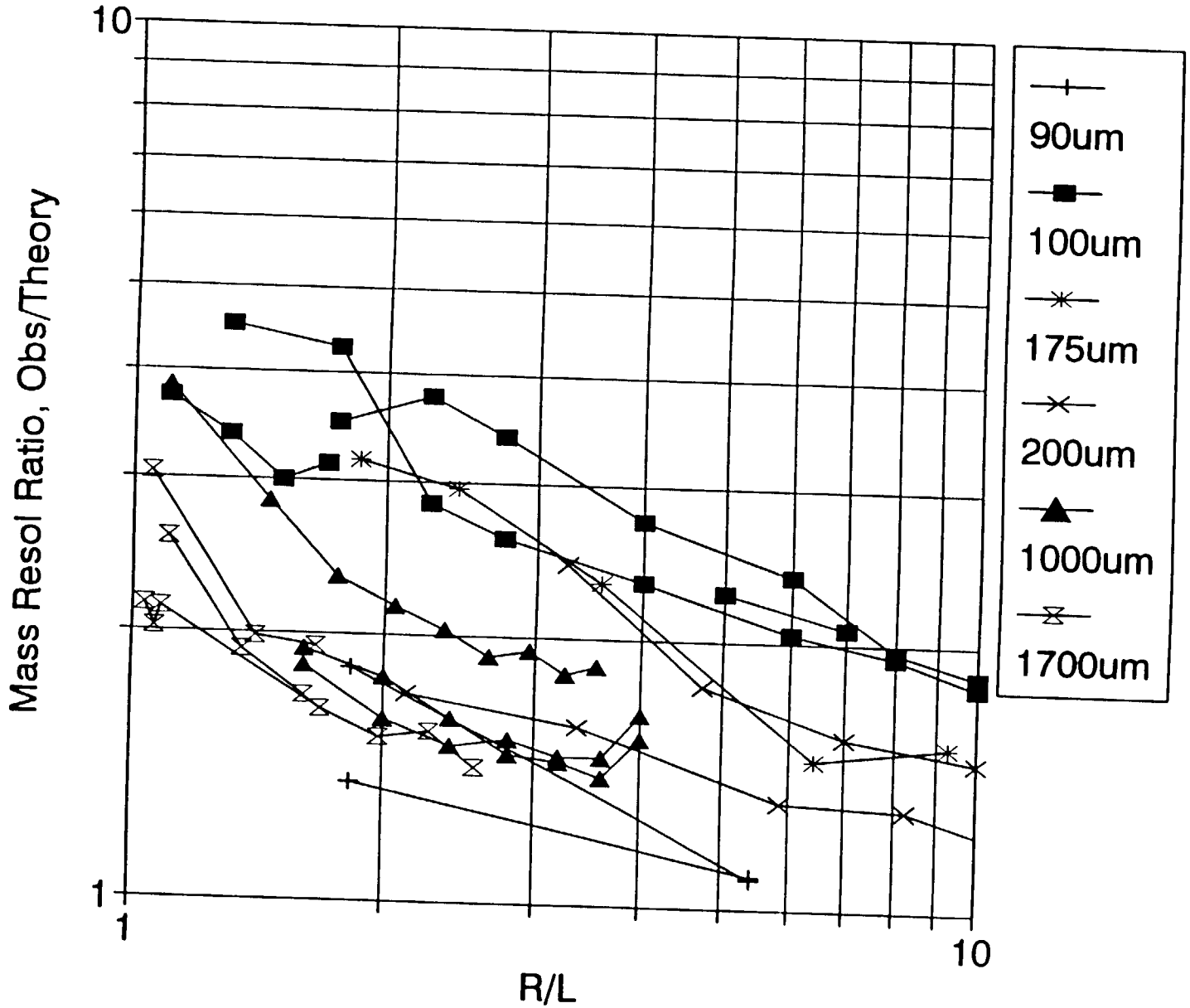
10
1
1
10
Mass Resol Ratio, Obs/Theory
R/L
90um
100um
175um
200um
1000um
1700um

4.19R3

PHASE B DETECTOR ACTIVITIES (cont.)

- **Prototype Matrix Detectors**
  - A prototype 2D matrix detector having the same thickness and stripe pitch as planned for SIS was procured from Micron Semiconductor for use in testing VLSI circuits for matrix detector readout—flight detectors will have larger area and better DC isolation between strips
  - The contact pattern and mount for the flight matrix detectors have been designed at GSFC and the designs submitted to Micron Semiconductor for review
  - Two prototype matrix detectors have been ordered in the full flight configuration—goal is to have them for testing at MSU in late summer 1994

DETECTOR FABRICATION AND TESTING

- **Silicon Procurement**
  - Funding has been provided for Micron Semiconductor to procure all of the silicon needed for the flight detectors

- **Detector Fabrication**
  - First 3 flight 1000 μm detectors have been ordered—should be delivered in May 1994 along with the 250 μm and 500 μm protoflight detectors (1 each)
  - Plan to order additional flight stack detectors in March 1994 with start of fabrication contingent upon successful production and testing of the protoflight units and the first three 1000 μm flight detectors
  - Plan to order the full complement of flight matrix detectors in summer 1994 with start of fabrication contingent upon successful production and testing of the protoflight units

DETECTOR FABRICATION AND TESTING (cont.)

- **Spares Approach**
  - Micron experience in Phase B used as basis for decision concerning amount of silicon required
  - Detector contract to include sufficient spare detectors for one complete extra stack plus $\sqrt{N}$ additional spares to allow selection of best detectors for stacks and to provide replacements in case of detector failures

DETECTOR FABRICATION AND TESTING (cont.)

- **Detector Testing Plan**
  - Tests at Micron Semiconductor:
    - noise and leakage current measurements
    - alpha particle response measurements from both sides
    - random vibration
    - thermal soak and thermal cycling
  - Tests of stack and matrix detectors at Caltech:
    - visual inspection under low power microscope and photography to identify and record any apparent manufacturing defects as basis for acceptance decision and for later reference
    - precise measurements of detector dimensions and positioning in mount to determine compliance with specifications and for use in future data analysis

- Tests of stack and matrix detectors at Caltech (cont.):
  - capacitance vs. bias voltage—check for nominal depletion behavior
  - noise—check for compliance with specification and use as baseline for studying behavior over time and temperature
  - leakage current—check for compliance with specification and use as baseline for studying behavior over time and temperature
  - alpha particle response—check for full depletion, identify possible performance problems
  - alpha particle mapping—raster scan with collimated alpha particle source to map dead layer thicknesses on each surface of the detector
  - life test (thermal vacuum)—check performance at temperature extremes, check for stable operation over extended period, identify marginal detectors

- **Detector Testing Plan (cont.)**
  - Tests of matrix detectors only at Caltech:
    - alpha particle tests (both collimated and uncollimated) with pulse height analysis of multiple strips—check effects related to interactions among strips,this includes charge splitting and charge loss for particles passing between two strips, as well as cross talk

CALIBRATION PLAN

- **Interferometric Mapping**
  - Automated dual Michelson interferometer system being assembled at JPL to provide detailed maps of physical thicknesses of detectors accurate to 0.1% or better of the absolute thickness
  - Interferometer system will be tested with optical flats and with prototype SIS detectors prior to delivery of flight detectors

- **Interferometric Mapping (cont.)**

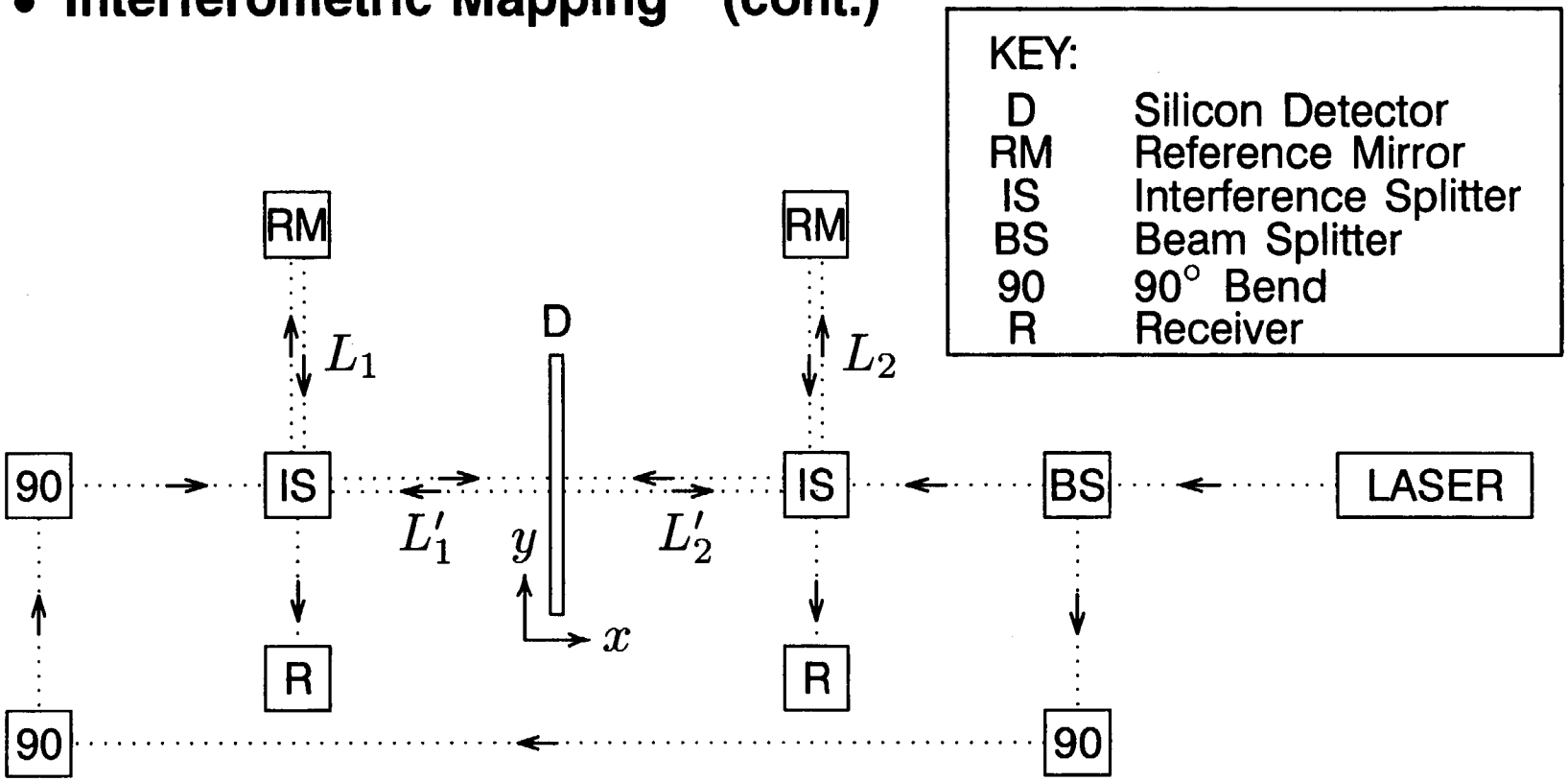

- Measure $(L_1' + L_2') - (L_1 + L_2)$ as a function of position on the detector
- Derive thickness variation map with $\pm 0.05\,\mu$m accuracy
- Insensitive to movement of the detector in the x direction

CALIBRATION PLAN (cont.)

- **Detector Calibrations**
  - Will be carried out at Michigan State University cyclotron
  - Varying thickness of material in beam ahead of detectors produces ΔE–E' tracks
  - Spot checks to be made to validate physical thickness and dead layer maps obtained with interferometer system and with alpha particles and to optimize algorithms for using these maps in the analysis of heavy ion data
  - Tests also help identify any anomalies in detector performance

CALIBRATION PLAN (cont.)

- **Telescope Calibrations**
  - Will be carried out at high energy heavy ion accelerator in Darmstadt, Germany
  - High energy beams can penetrate entire flight detector stacks
  - In first run (planned for September 1995), test performance in flight-like configuration (detector stack with flight electronics) over a wide range of parameters (ion, energy, incidence angle, event rate) to identify system problems and to help in planning final calibration run
  - In second run (planned for May 1996), calibrate completed flight instrument to obtain detailed response functions that can be used in analysis of flight data

SIS PDR

Section 5

Preliminary Electrical Design of Instrument

2/24/94

SOLAR ISOTOPE SPECTROMETER (SIS)

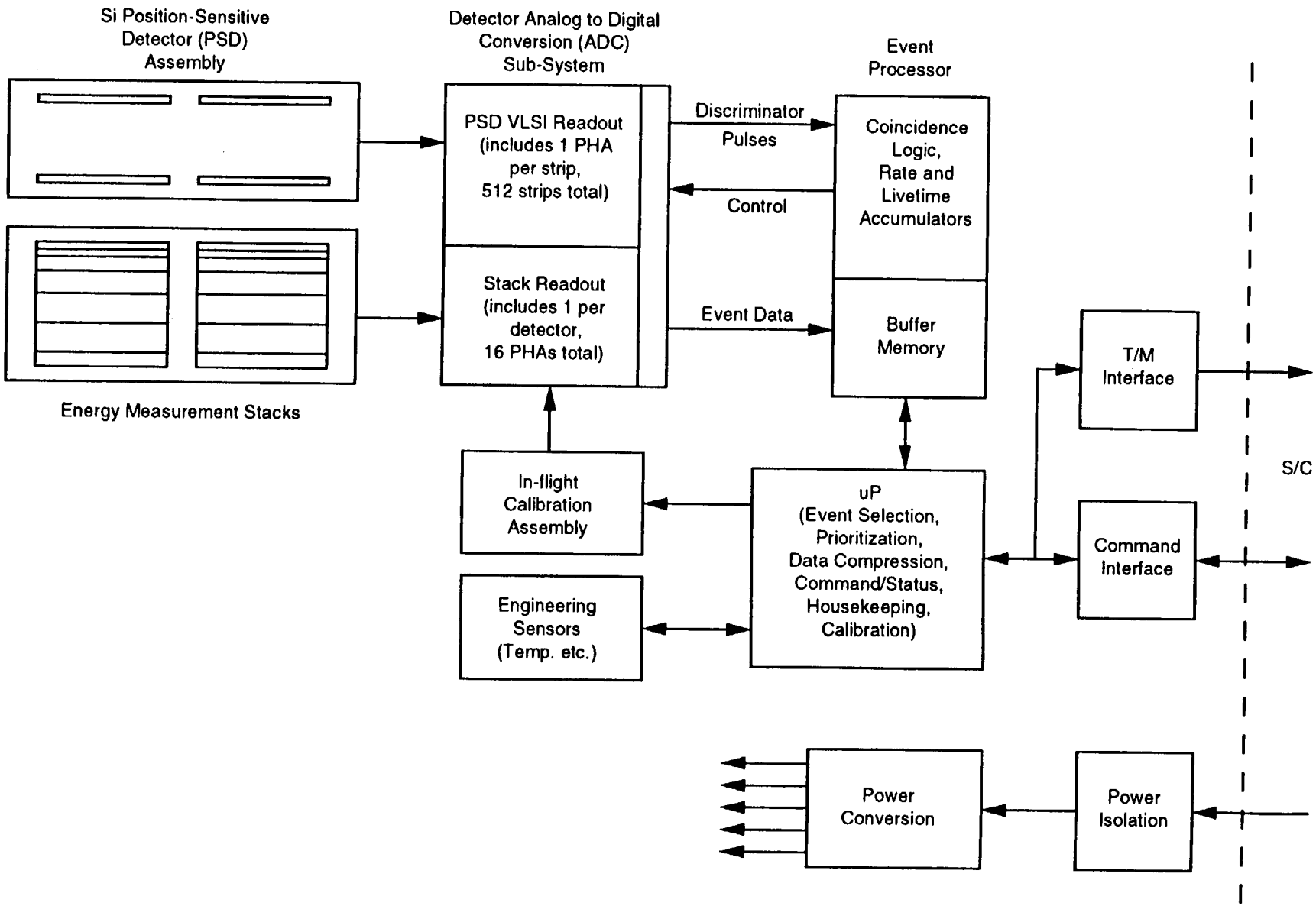

Preliminary Electrical Design of Instrument (continued)

- SIS Matrix VLSI Readout
  - ∗ Custom CMOS VLSI design completed during Phase B
    1. 16 complete PHAs + dual discs per chip
    2. 20 ppm/^{0}C gain stability
    3. Digital in−flight offset subtraction
    4. ±0.1% typical integral non−linearity
    5. Leakage current measured for each strip
  - ∗ Eight channel prototype of analog sections has been tested
  - ∗ Full 16 channel version prototype submitted through MOSIS on 9 February
  - ∗ Two vendors for flight parts under consideration:
    1. UTMC
    2. HP

2/24/94

Preliminary Electrical Design of Instrument (continued)

- Matrix VLSI PHA Performance

	Goal	Measured	Expect
* Linearity	$< \pm 0.1\%$	$< \pm 0.1\%$	
* Gain temp coeff	$< \pm 200$ ppm/^{0}C	$< \pm 20$ ppm/^{0}C	
* Offset temp coeff (-20^0C to $+40^0$C)	<1 ch		Offset meas & dig subtracted
* Noise (rms)	120 keV	70 keV	
* Quantization	11 bits	12 bits	
* 3 MeV threshold var strip to strip	$< \pm 0.5$ MeV	0.27 MeV rms	
* Cross−talk for FS pulse	<1 ch	2 ch	
* Power (mW/PHA)	20	20	15

Main requirement for position information should be easily met

2/24/94

SIS ADC Characteristics

Det.	Thick. (um)	No. /tel.	No. /ADC	C (pF)	Angle	F.S. (MeV) (Zn-65)	Dyn. range	ADC thresh. (MeV)	Cf (pF)	Rf (k) (tau = 2 us)	Imax (uA) (20 C)	Imax (uA) (35 C)	Bias (V)	Thole (ns)
M1	60	1	1	6025	45	700	1400	0.50	84	23.80	4	16	30	2.50
M2	60	1	1	6025	45	700	1400	0.50	84	23.80	4	16	30	2.50
T1	100	1	1	7399	45	850	750	1.00	110	17.40	3	12	30	6.94
T2	100	1	1	7399	45	850	750	1.00	110	17.40	3	12	30	6.94
T3	250	1	1	2960	45	1700	750	2.27	220	8.98	3	12	50	26.04
T4	500	1	1	1480	45	2600	750	3.50	360	5.49	4	16	100	52.08
T5	1000	1	1	740	45	4000	750	5.00	560	3.57	6	24	200	104.17
T6	1000	3	3	2220	44	7500	750	10.00	1000	1.98	18	72	200	104.17
T7	1000	6	6	4440	37	11250	750	15.00	1500	1.30	36	144	200	104.17

Notes:

1. ADC characteristics based on RAM 10/2/92 and RSS 11/6/92 memos.
2. Cf = Feedback capacitance
3. Rf = Feedback resistance
4. Imax = Maximum estimated leakage currents at 20 and 35 degrees C, total per ADC
5. The hole collection time (Thole) is w^2/(mu*V)
   where w is detector thickness, mu=480 cm^2 V^-1 s^-1
   is the hole mobility, V is the bias voltage.

SIS Discriminator Characteristics

Signal	Cap (pf)	Imax (uA)	LLD (MeV)	ULD (MeV)
T8	740	16	0.2 - 1.75	5

Note: LLDs to be adjustable in flight in 50 keV steps (32 levels; 5 bits)

ORIGINAL PAGE
BLACK AND WHITE PHOTOGRAPH

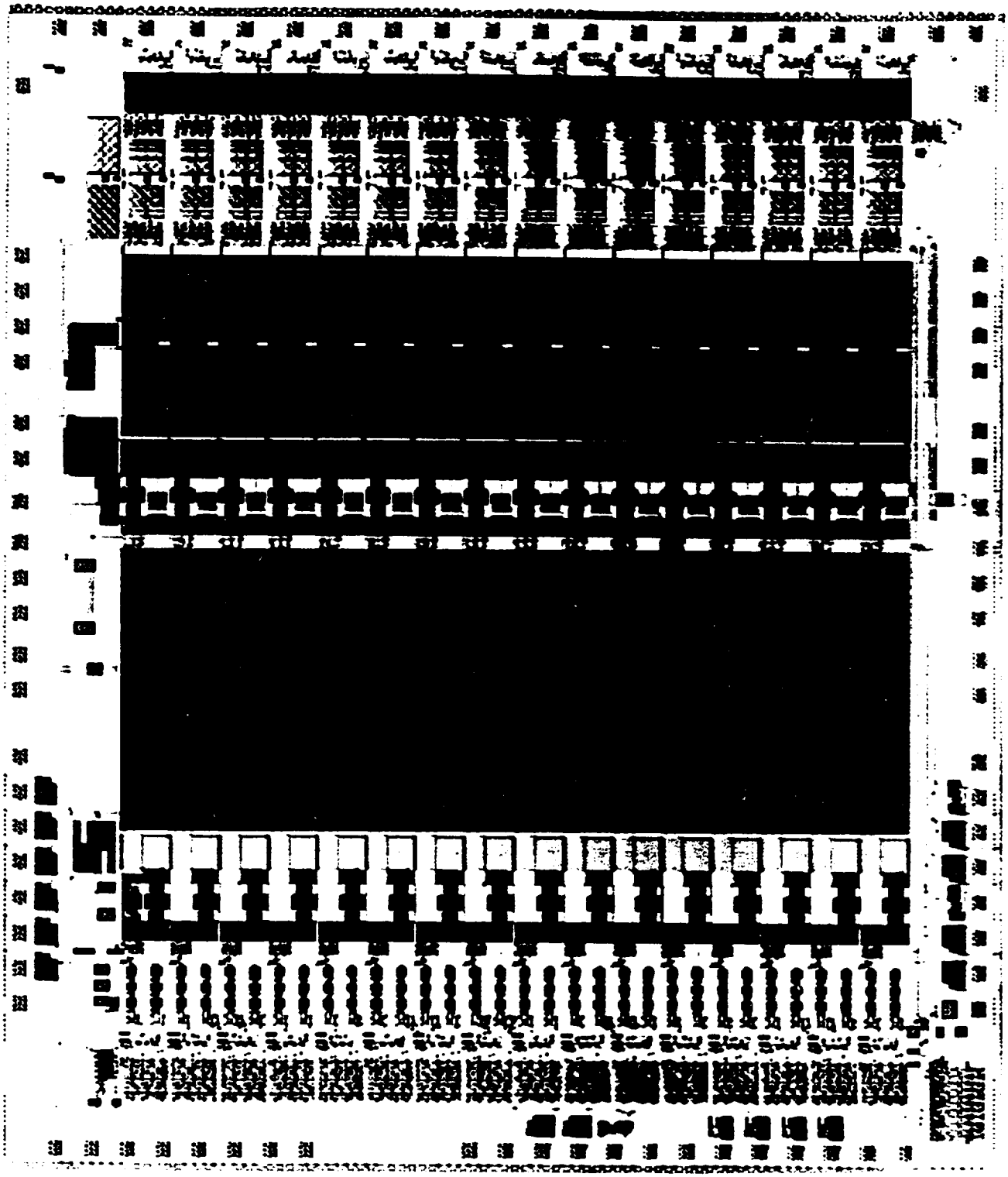

HEAVY ION STRIP DETECTOR READOUT

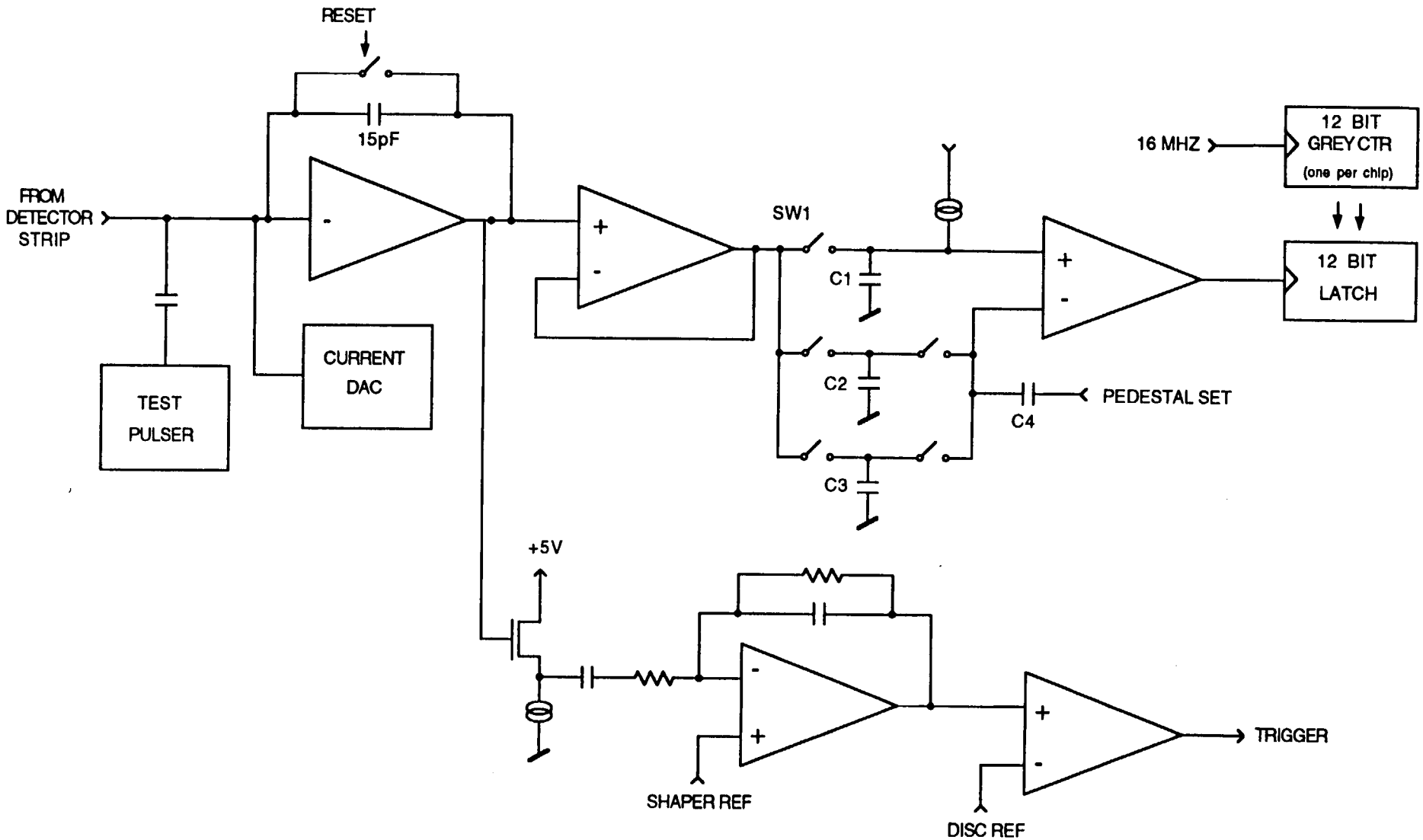

SIS Logic Equations

ADCor = logical OR of all ADCs

1. = ADCor

HEn = H timer expired

HeEn = He timer expired

ADC2 = Any 2 consecutive ADCs following M1

M12 = M1.M2

2. = M12 + M12*.ADC2.(HeEn + HEn)

Mor = logical OR of all M (mid) level discriminators

3. = M12 + M12*.ADC2.(Mor.HeEn + Mor*.HEn)

Hor = logical OR of all H (high) level discriminators

4. = M12.(Hor + HeEn) + M12*.ADC2.(Mor.Hor*.HeEn + Mor*.HEn)

HIZ = M12.Hor

Z2 = HeEn.(M12 + M1t.M2t.M12*.ADC2.Mor).Hor*

Z1 = HEn.M1t.M2t.M12*.ADC2.Mor*

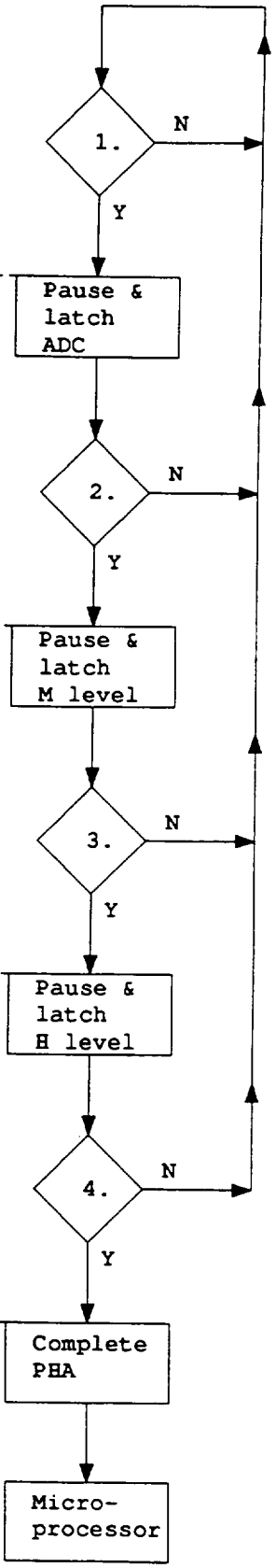

SIS Logic Flow

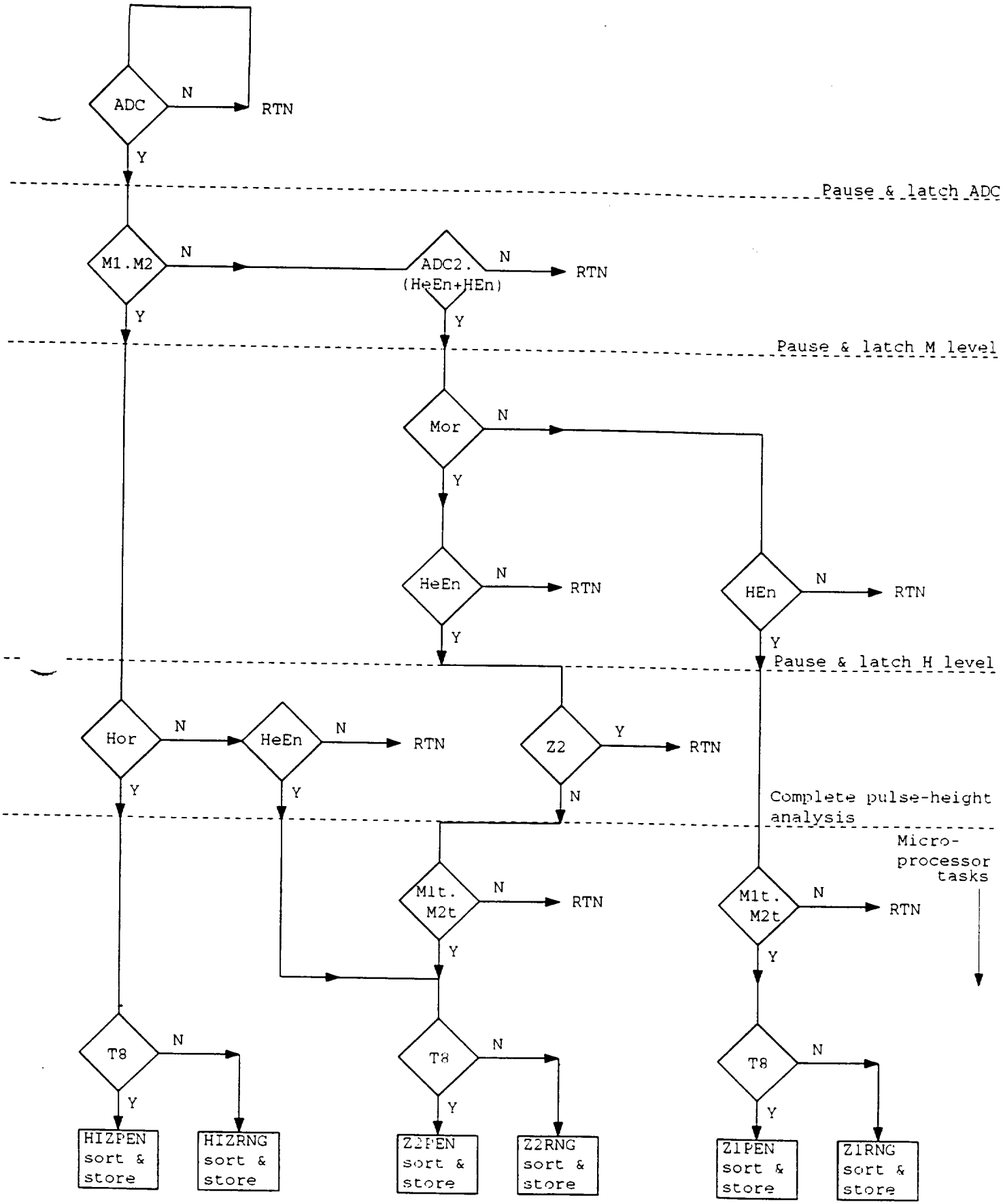

SIS GROUNDING DIAGRAM

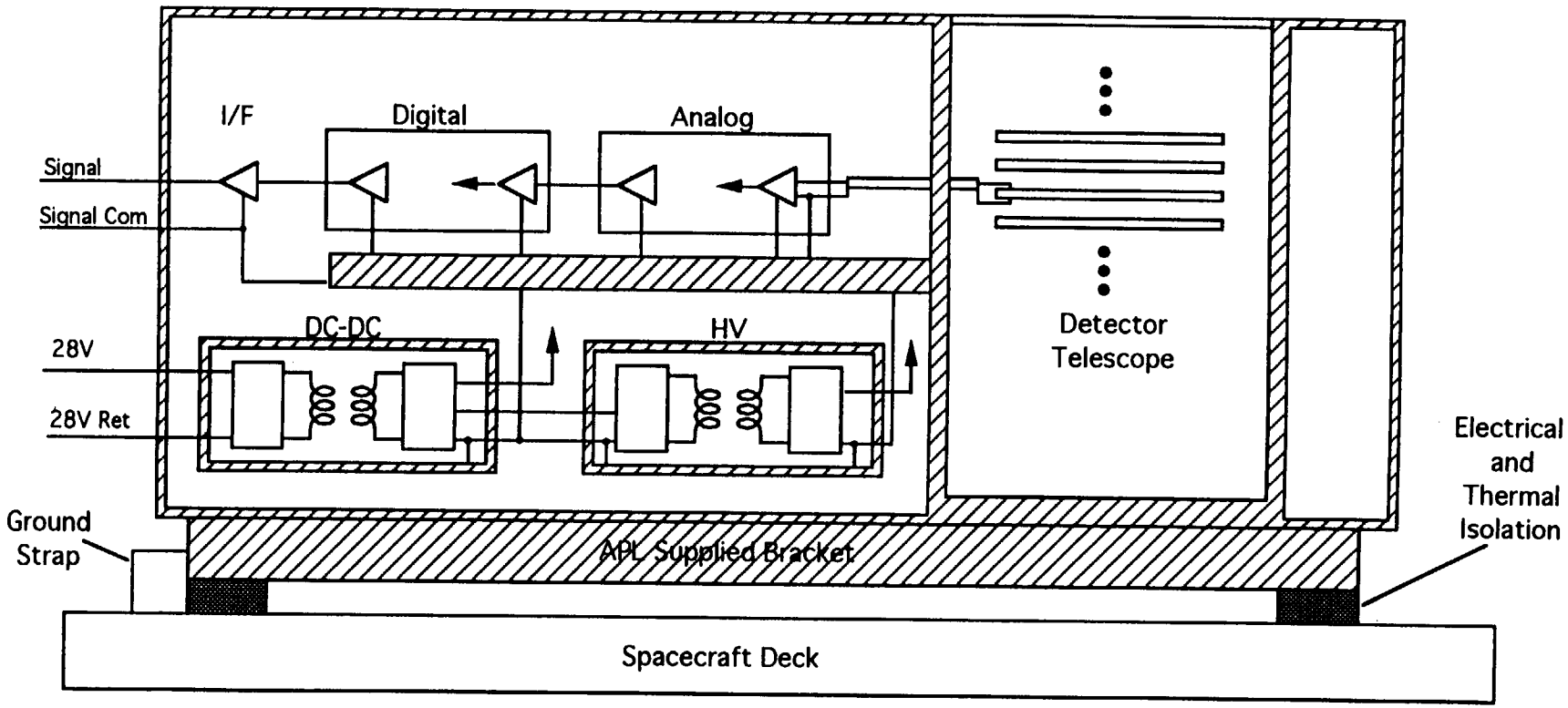

Note: All heater circuitry to be optically isolated from SIS ground system.

POWER SUPPLY VOLTAGES

sis

VOLTAGE	CURRENT (MA)	VOLTAGE	CURRENT (MA)
+12V PHA	36	+30V PSD	77
-12V PHA	71	+5V PSD	1000
+6V PHA	3.5		
-6V PHA	83		
+5V (LOGIC & PHA)	483		
-2.5V PHA	8.1		
+30V HVBIAS	14		
+15 V INST	61		
-15V INST	56		

FILE=500001-4

SIS ESTIMATED POWER

	-25 C to +35 C	
	Nominal	Peak
Instrument	16.24	19.48
Heater, Supplemental	5.00	5.00
Total with Heater	21.24	24.48

SIS DESIGN GOAL

	-25 C to +35 C	
	Nominal	Peak
Instrument	18.00	21.60
Heater, Supplemental	5.00	5.00
Total with Heater	***23.00***	***26.60***

SIS REQUIREMENT

	-25 C to +35 C	
	Nominal	Peak
Instrument	20.08	***24.10***
Heater, Supplemental	5.00	***3.70***
Total with Heater	25.08	***27.80***

Numbers do not include power for survival heater

CD-2

power estimate worksheet SIS

3-Feb-94

Pha volts		Current	Power	# of PHA	PHA pwr
	12	0.398	4.776	16	76.42
	-12	0.557	6.684	16	106.94
	6	1.914	11.484	16	183.74
	-6	2.77	16.62	16	265.92
	5	0.012	0.06	16	0.96
	-2.5	-0.277	-0.6925	16	-11.08
total			38.9315		622.90

Subsystem	Power	QTY	Total Power
PHA (16 x 42.78)	38.9315	16	622.90
PHA counters	25	5	125.00
Post Regulators	150	1	150.00
Logic	12	25	300.00
Processor	1000	1	1000.00
Test pulsers	1	8	8.00
Engineering Subsystem	110	1	110.00
Bias Supply	300	1	300.00
Bias Supply Regulators	240	1	240.00
Detector Leakage (T5 -> T8)	22	0.6	13.20
Vref Generator	120	1	120.00
16 MHz Clock	300	1	300.00
DAC's for PHA's & Disc	25	16	400.00
Misc.	708	1	808.00
TOTAL STACK ELECTRONICS			4497.10

Matrix Detector		15	512	7680.00
TOTAL Regulated Power				12177.10
TOTAL Unregulated Power	75%			16236.14
Heater Power				

SUMMARY	SIS	Nom 25 deg C	Each Telescop 25 deg C	Max (Flare)
PSD PHA (Analog) Electronics		7680.00	3840.00	9216.00
PHA (Analog) electronics Silicon		755.90	377.95	907.08
Digital Electronics Boards		3188.00	1594.00	3825.60
Det Bias Supply (HVPS)		540.00	270.00	648.00
Silicon Detector stack		13.20	6.60	15.84
Low Voltage Power Supply		4059.03	2029.52	4870.84
				0.00
TOTAL POWER (Nominal)		16236.14	8118.07	
TOTAL POWER (Flare)	1.2			19483.37
Heater Power				

BLOCK DIAGRAM
LOW VOLTAGE POWER SUPPLY
SIS

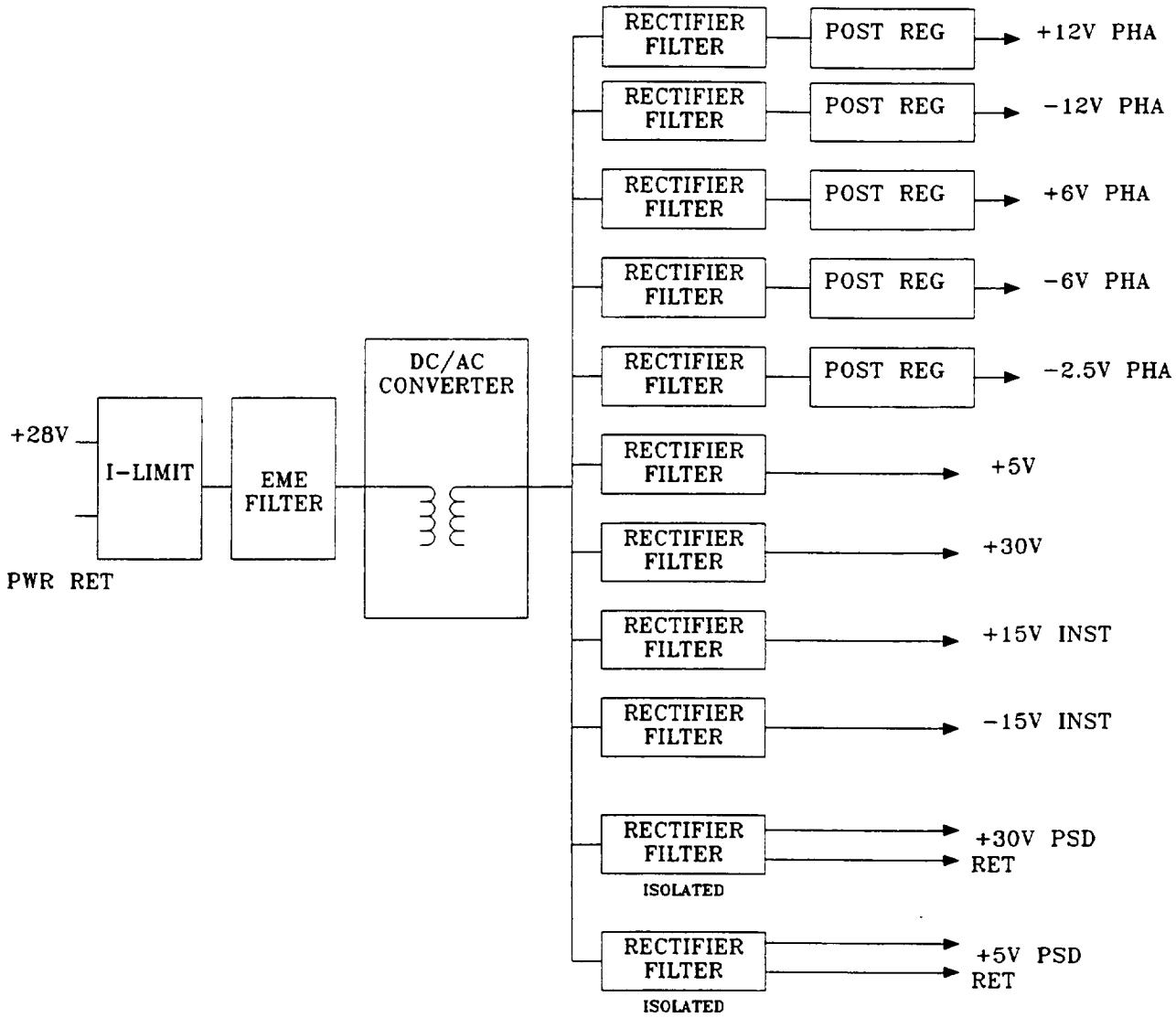

FILE=500001-9

SIS BIAS SUPPLY BLOCK DIAGRAM

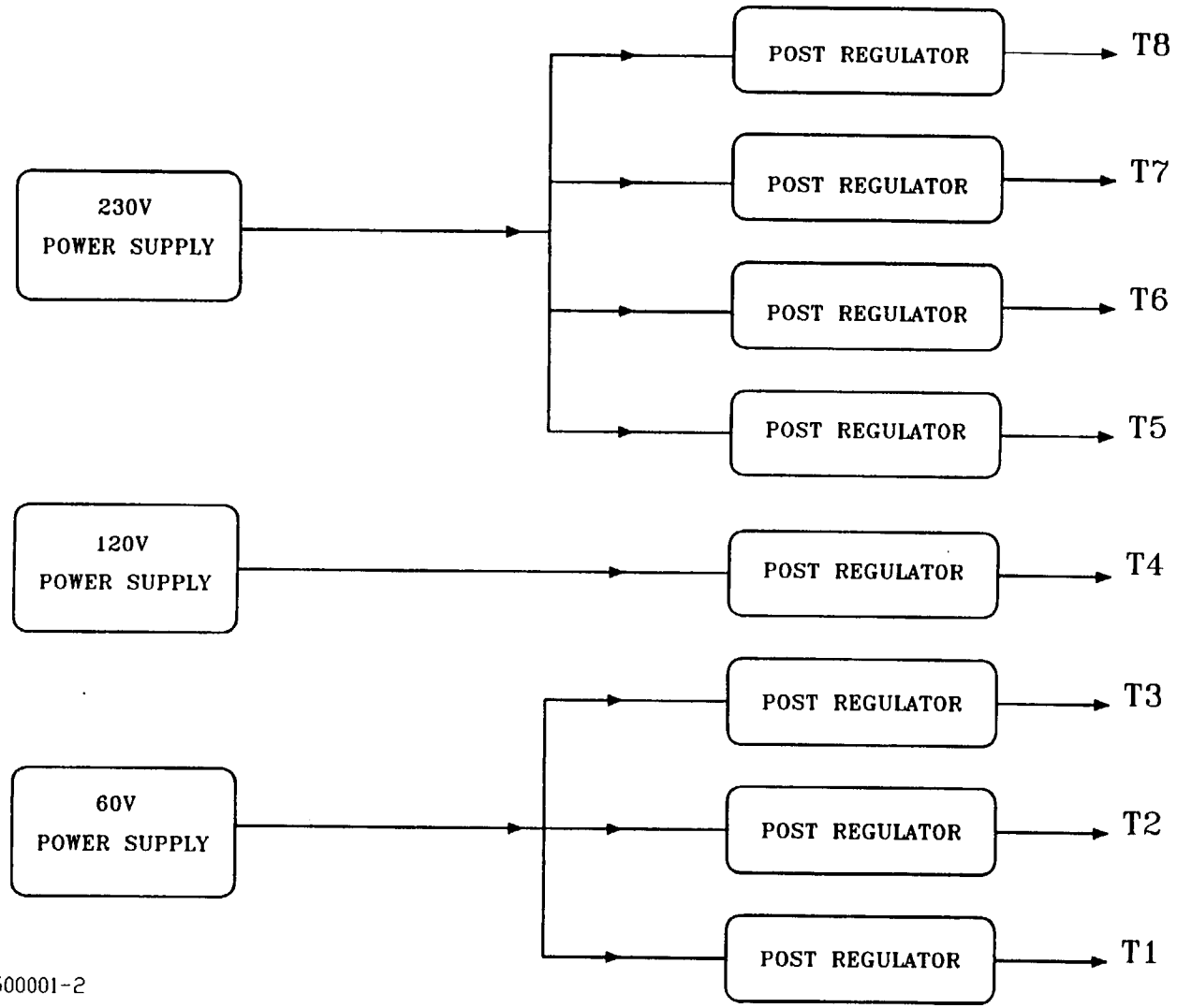

FILE=500001-2

SIS PDR

Section 6

Preliminary Mechanical Design

2/24/94

SOLAR ISOTOPE SPECTROMETER MECHANICAL DESIGN

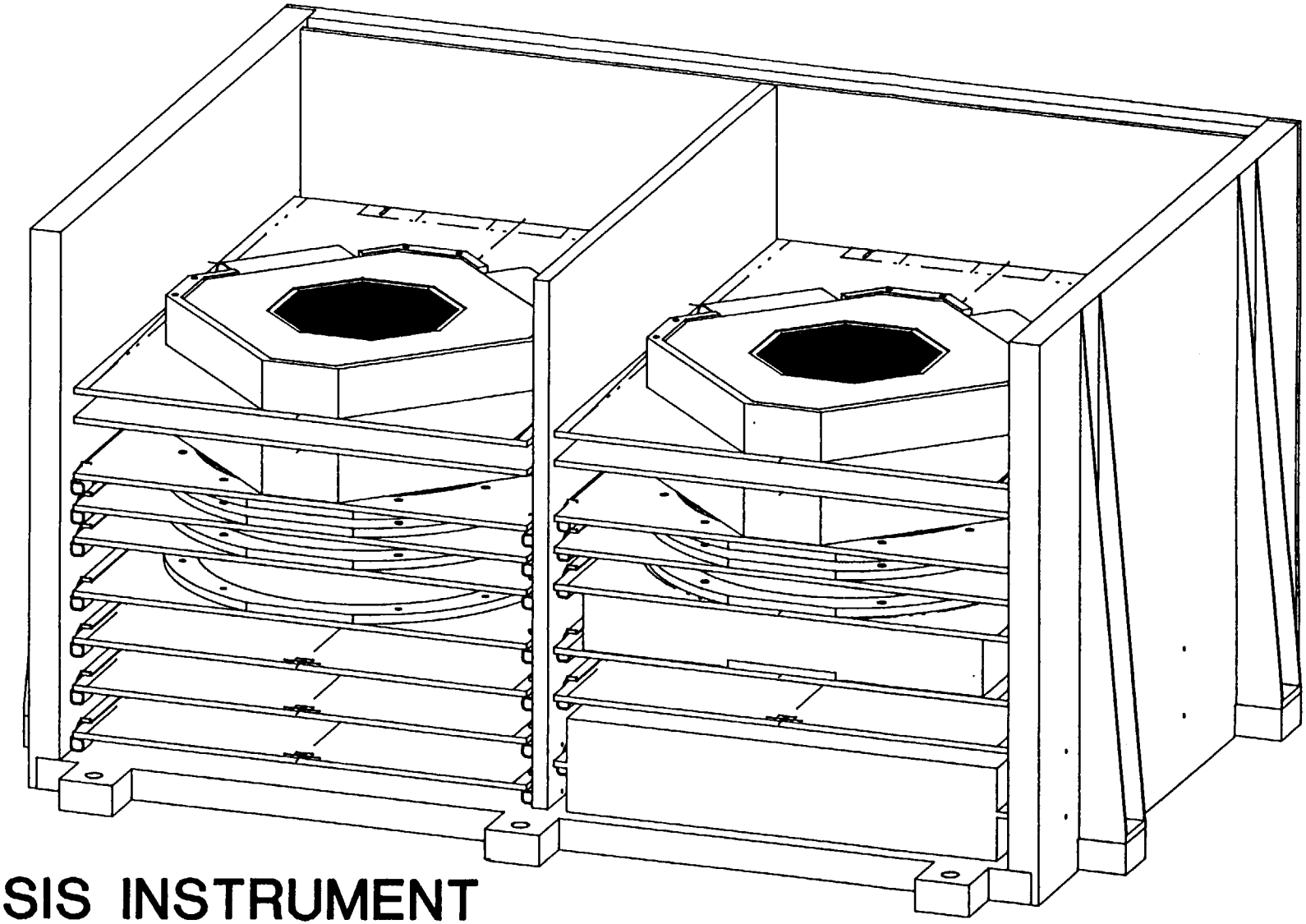

ACE/SIS INSTRUMENT
(FRONT AND TOP PANEL REMOVED)

SOLAR ISOTOPE SPECTROMETER MECHANICAL DESIGN

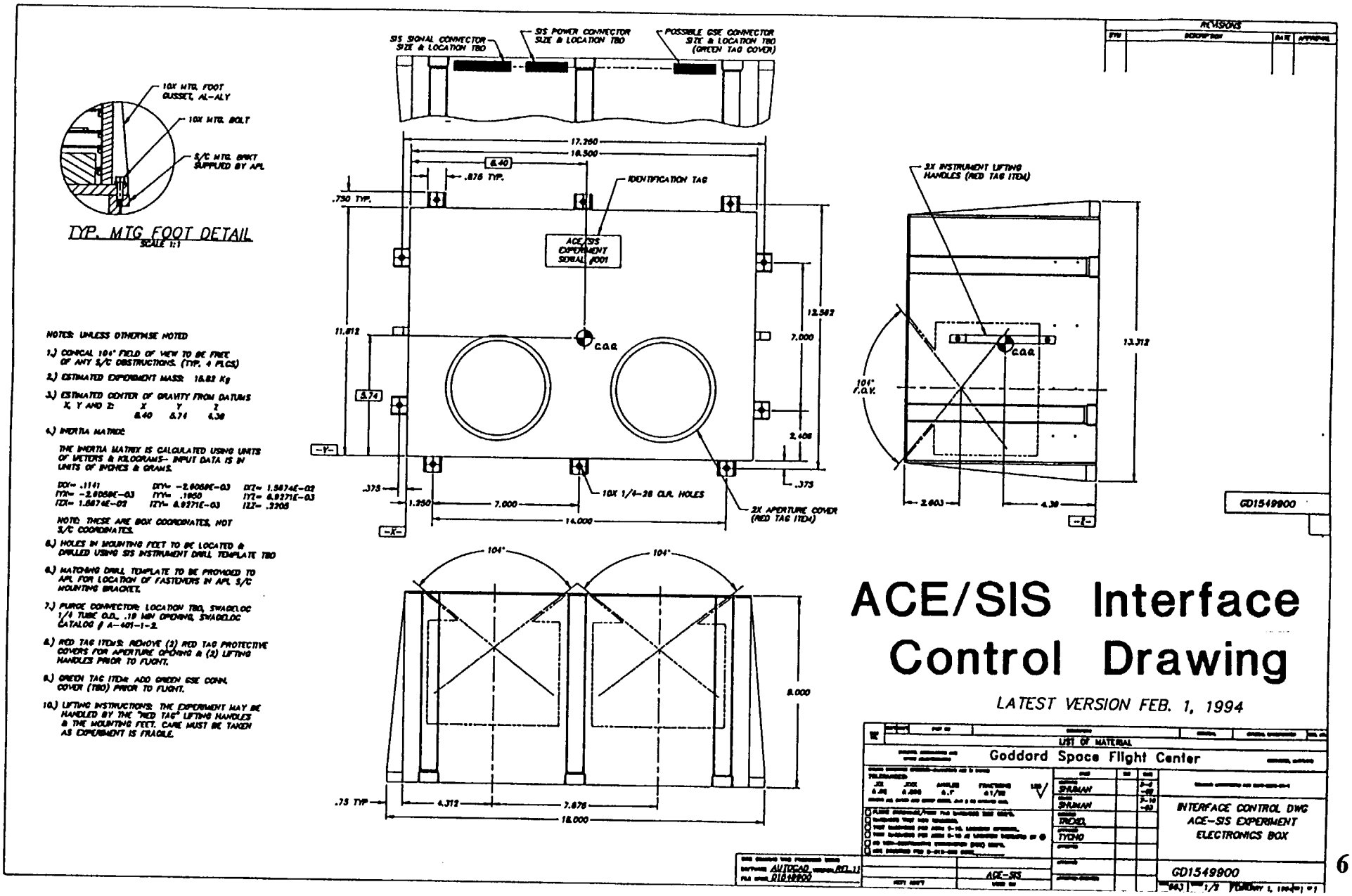

SOLAR ISOTOPE SPECTROMETER MECHANICAL DESIGN

INSTRUMENT LOCATION AND ALIGNMENT PARTICULARS

- Experiment located 45 degrees between +X axis and -Y axis on top instrument deck 25 degrees from +Z axis
- Attachment to spacecraft with (10) #1/4-28 mounting bolts to a bracket provided by the spacecraft (APL)
- Alignment of instrument via 2 tightly toleranced holes in the instrument baseplate

(cont)

SOLAR ISOTOPE SPECTROMETER MECHANICAL DESIGN

INSTRUMENT LOCATION AND ALIGNMENT PARTICULARS

- F. O. V. of each telescope to be 104 degrees conical, telescopes will be 7.87 inches from center to center
- No obstructions will be permitted in F.O.V.

SOLAR ISOTOPE SPECTROMETER MECHANICAL DESIGN

Observatory Layout Top View
From C. Willey (APL)

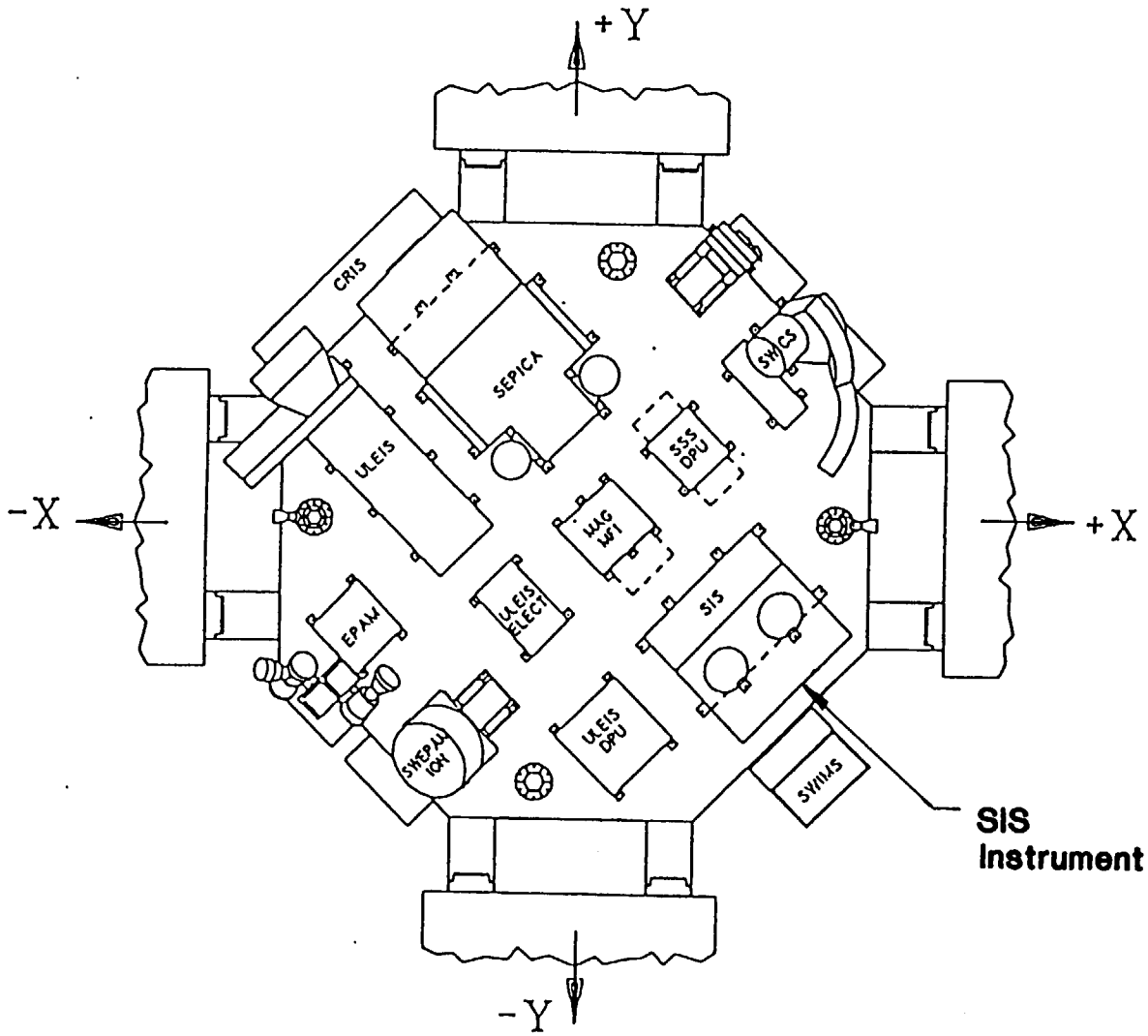

SOLAR ISOTOPE SPECTROMETER MECHANICAL DESIGN

Observatory Layout Side View
From C. Willey (APL)

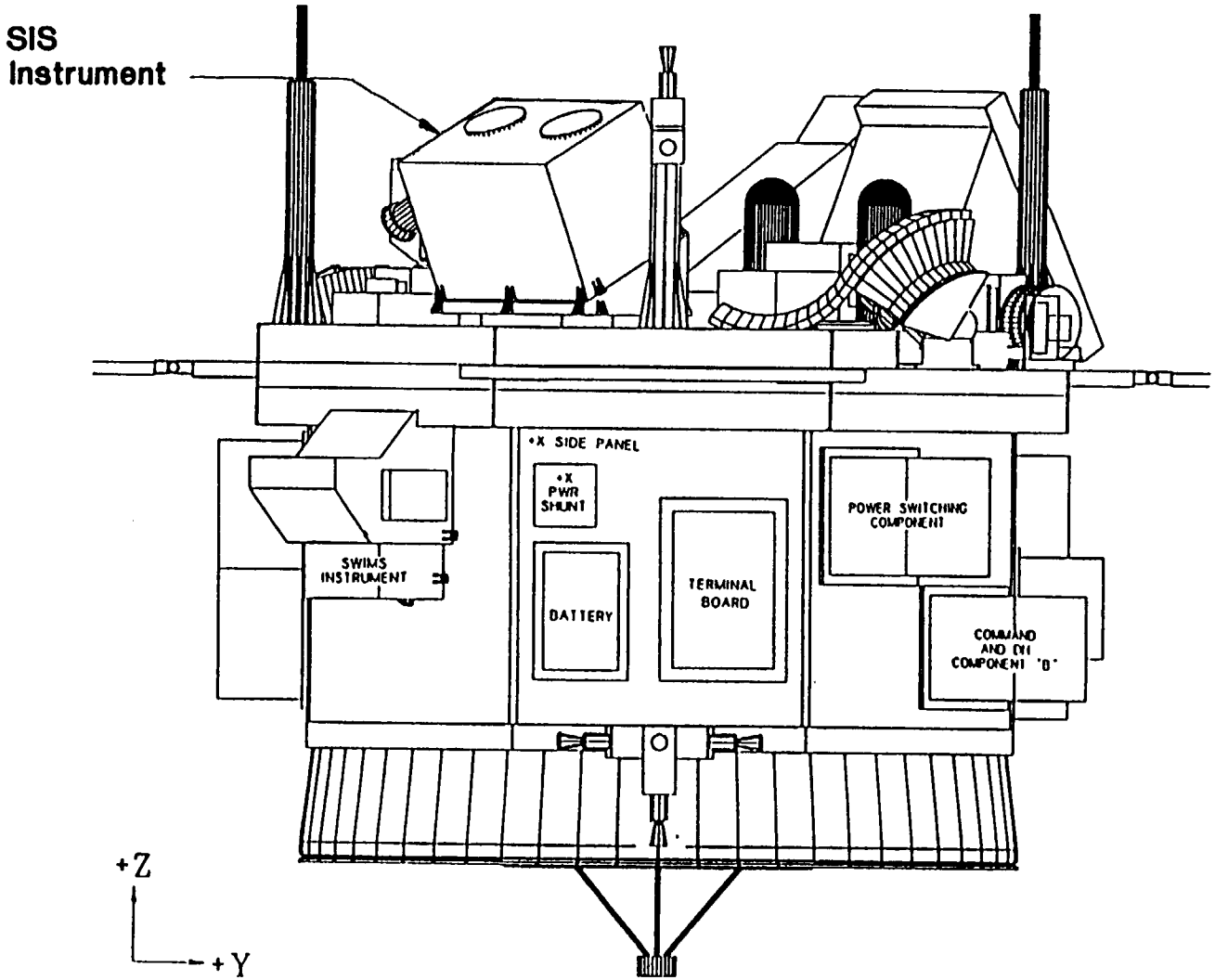

SOLAR ISOTOPE SPECTROMETER MECHANICAL DESIGN

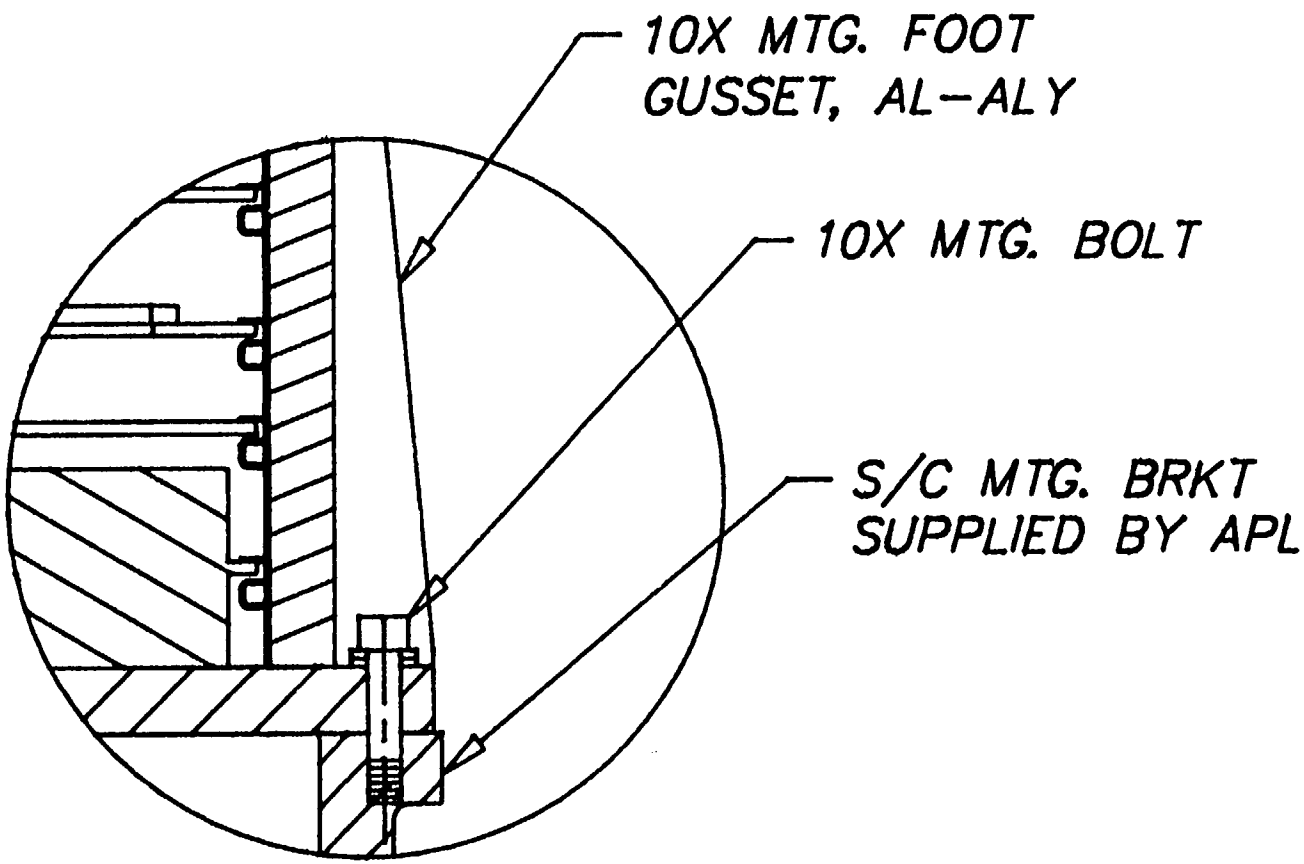

ACE/SIS TYP MOUNTING FOOT DETAIL

*NOTE: ISOLATION FROM S/C PROVIDED BY APL
(BETWEEN BRKT AND TOP INSTRUMENT DECK)

SOLAR ISOTOPE SPECTROMETER MECHANICAL DESIGN

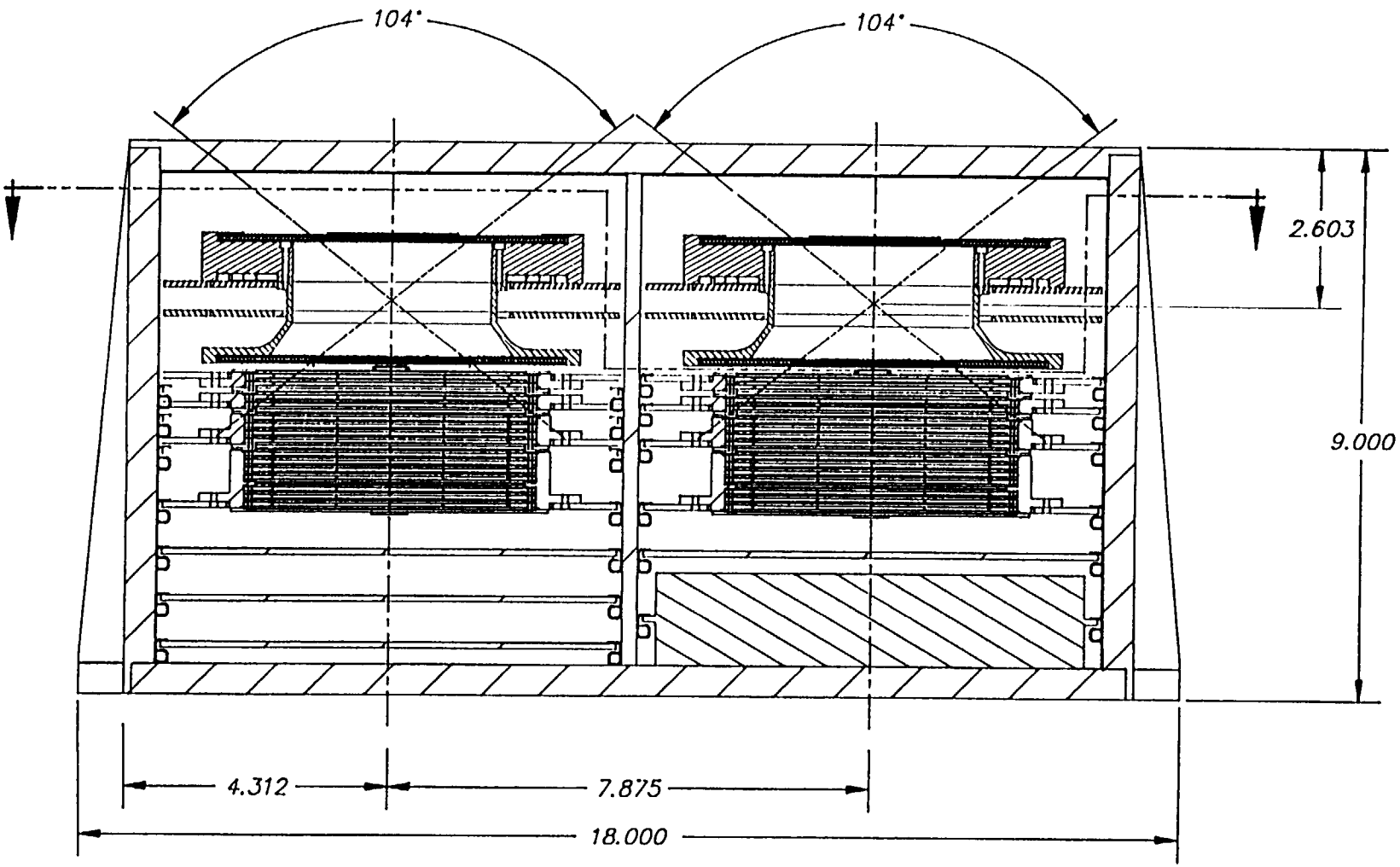

ACE/SIS FRONT VIEW

SOLAR ISOTOPE SPECTROMETER MECHANICAL DESIGN

INSTRUMENT BOX DESIGN

- Instrument design based on many previous experiments built and flown by code 660 at GSFC; some significant differences
- Interlocking side plates for light tightness, thermal and electrical conductivity, RF shield continuity and added strength
- Aluminum honeycomb baseplate used to reduce weight of overall instrument and add structural strength
- Red/Green tag items:
  Red tag items include telescope aperture covers and instrument lifting handles
  Green tag items include GSE connector cover (TBD)

SOLAR ISOTOPE SPECTROMETER MECHANICAL DESIGN

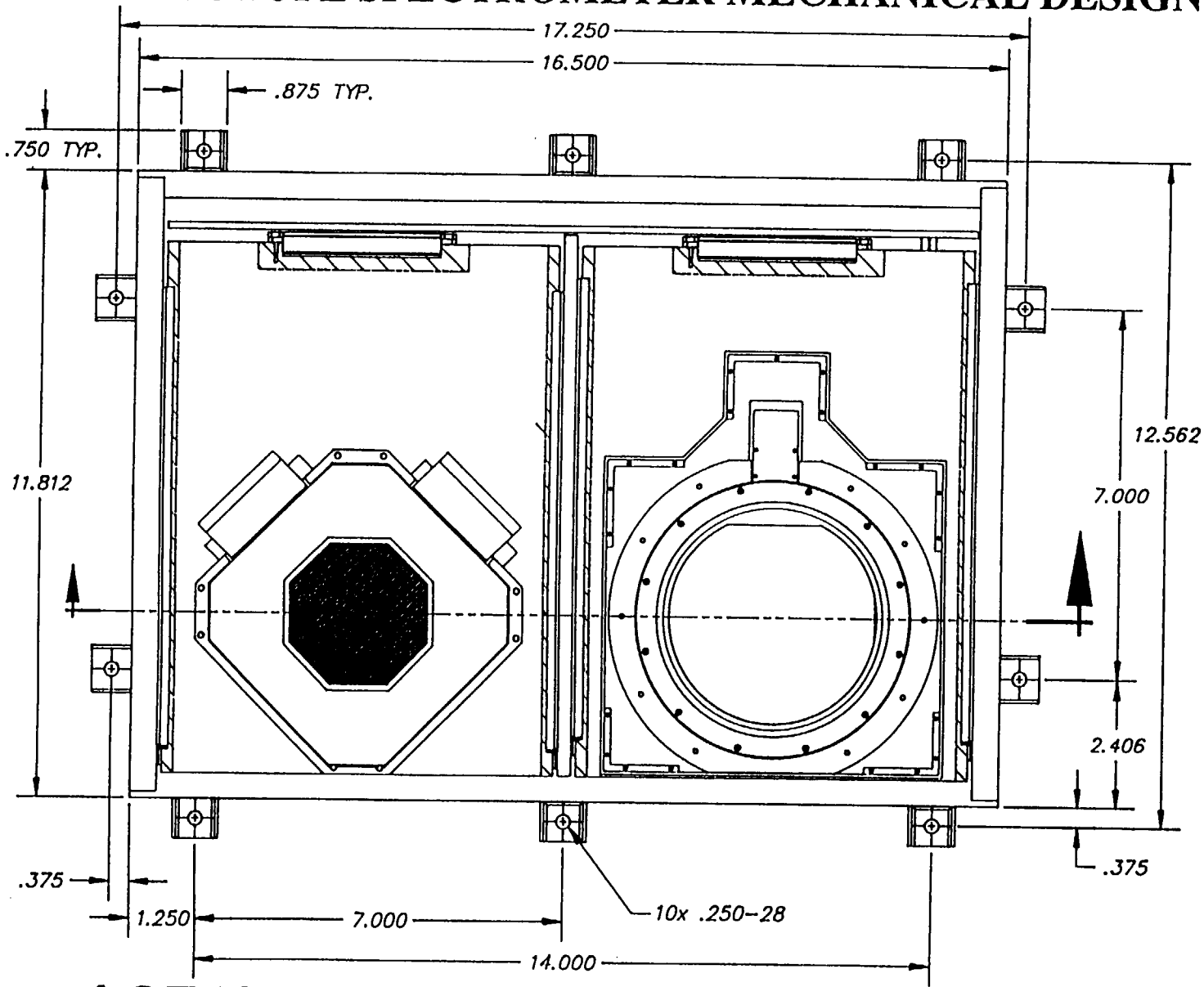

ACE/SIS TOP VIEW (right side PSD removed)

SOLAR ISOTOPE SPECTROMETER MECHANICAL DESIGN

FINITE ELEMENT ANALYSIS

- FEA of mechanical parts using in house analysis software (Pro-Engineer, COSMOS-M and Algor)
- Instrument box modeled for structural analysis
- Detector module housing modeled with detectors for structural analysis
- Printed circuit boards with lump sum masses to be modeled for frequency analysis

SOLAR ISOTOPE SPECTROMETER MECHANICAL DESIGN

VIBRATION TESTING

Test of ACE/SIS instrument will be done to S/C proto-flight vibration levels, instrument will be mounted to bracket (supplied by APL) for all instrument level vibration testing.

- Instrument Sine Survey

All Axes

Frequency (HZ)	Acceleration
10-2000	0.25 G

Sweep Rate = 4 OCT/MIN

SOLAR ISOTOPE SPECTROMETER MECHANICAL DESIGN

VIBRATION TESTING

- Instrument Sine Sweep

Thrust Axis (Z)

Frequency (Hz)	Acceleration (zero to peak)
5 to 6.2	0.5 in. (double amplitude)
6.2 to 20	1.0 g
20 to 25	14.0 g
25 to 38	1.0 g
38 to 48	7.0 g
48 to 100	1.0 g

Sweep rate = 4 octaves/min

Lateral Axes (X,Y)

Frequency (Hz)	Acceleration (zero to peak)
5 to 6.2	0.5 in. (double amplitude)
6.2 to 15	1.0 g
15 to 20	7.5 g
20 to 100	1.0 g

Sweep rate = 4 octaves/min

SOLAR ISOTOPE SPECTROMETER MECHANICAL DESIGN

VIBRATION TESTING

- Instrument Random (3 Axes)

Frequency (HZ)	PSD level
20	0.02 G2/HZ
20-100	+3.4 dB/OCT
100-300	0.12 G2/HZ
300-400	+3 dB/OCT
400-830	0.16 G2/HZ
830-2000	-3 dB/HZ
2000	0.066 G2/HZ

Overall Amplitude = 14.8 G RMS
Duration = 60 seconds

SOLAR ISOTOPE SPECTROMETER MECHANICAL DESIGN

TELESCOPE AND ELECTRONICS CARD CAGE APPROACH

Card cage approach is being used to facilitate the ease of removal & replacement of Si detectors & provides the ability to trouble-shoot possible problems during integration of detectors and electronics.

- Zero insertion force connectors will be used throughout the instrument to connect electronics and detector module boards together through a backplane interconnect board
- Locking card guides for quick and easy access to all detector and electronics boards
- Alignment rods extend through all detector modules and screw securely to the top instrument plate for proper alignment of detectors in each telescope stack

(cont)

SOLAR ISOTOPE SPECTROMETER MECHANICAL DESIGN

TELESCOPE AND ELECTRONICS CARD CAGE APPROACH

- Modular detector cups are used to ease final assembly of the telescope and allow segments of the telescope to be tested separately with minimal disassembly
- P.C. boards integrated into the telescope allow detectors to be close to their corresponding pre-amp electronics
- Collimator with (3) 1/3 mil kapton foils will provide protection for front detector and also will define opening view angle to each telescope

SOLAR ISOTOPE SPECTROMETER MECHANICAL DESIGN

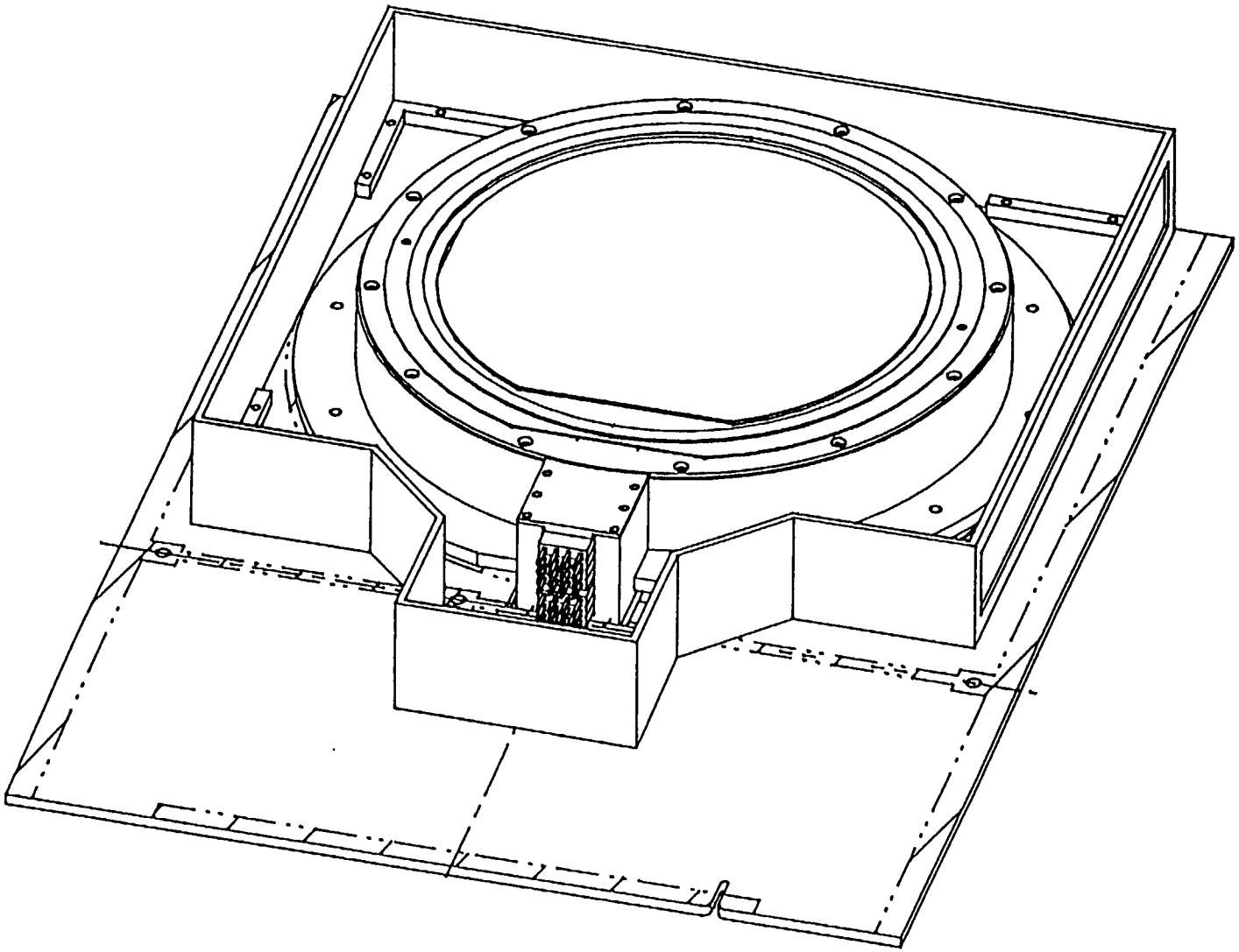

ACE/SIS STACK DETECTOR MODULE

SOLAR ISOTOPE SPECTROMETER MECHANICAL DESIGN

SIS REQUIREMENTS FOR DETECTOR ALIGNMENT

		GOAL	ACCEPTABLE
• Detector position tolerance	Matrix :	.0028"	.006"
	Stack :	.046"	.092"
• Detector orientation co-planarity	Matrix :	.0016"	.005"
	Stack :	.0022"	.007"
• Detector azimuthal orientation	Matrix :	.13°	.62°
	Stack :	1.33°	3.4°

SOLAR ISOTOPE SPECTROMETER MECHANICAL DESIGN

SIS TELESCOPE DETECTOR MOUNTS

A goal was established early on to minimize the use of co-ax cable in telescope to pre-amp connections, this led us to using rigid-flex technology in the design of our SIS ion-planted detector mounts.

- Mount provides a kapton flex strip that carries signal and power via printed circuit traces from the detector wafer to an output connector attached to the end of the flexible strip

- Increased reliability of circuit as a whole due to a reduction of connection points from the detector to its pre-amp electronics

SOLAR ISOTOPE SPECTROMETER MECHANICAL DESIGN

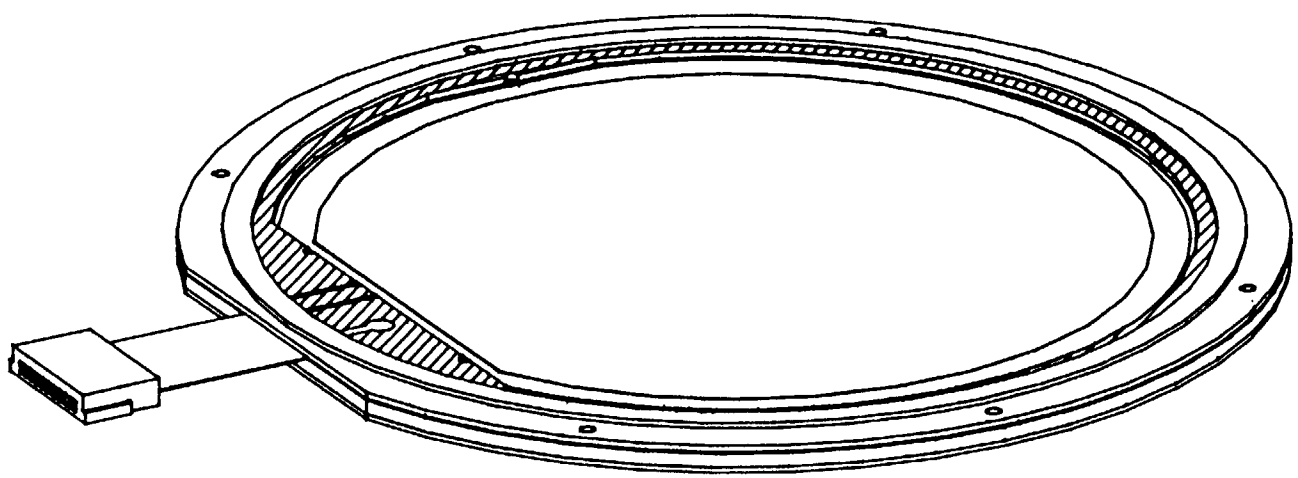

ACE/SIS STACK DETECTOR
(Isometric view)

SOLAR ISOTOPE SPECTROMETER MECHANICAL DESIGN

PURGE REQUIREMENTS

- Purge from spacecraft via teflon tubing on 1/4 NPT connector
- Inlet connector on instrument will carry purge through distribution block into all applicable sections of the instrument
- In-line restrictors will be used in the instrument to acquire proper flow rates
- Flow rate as specified by APL is .018cfm with a nominal pressure of 3.5psi and max. pressure of 5.0psi

SOLAR ISOTOPE SPECTROMETER MECHANICAL DESIGN

Purge System
From C. Willey (APL)

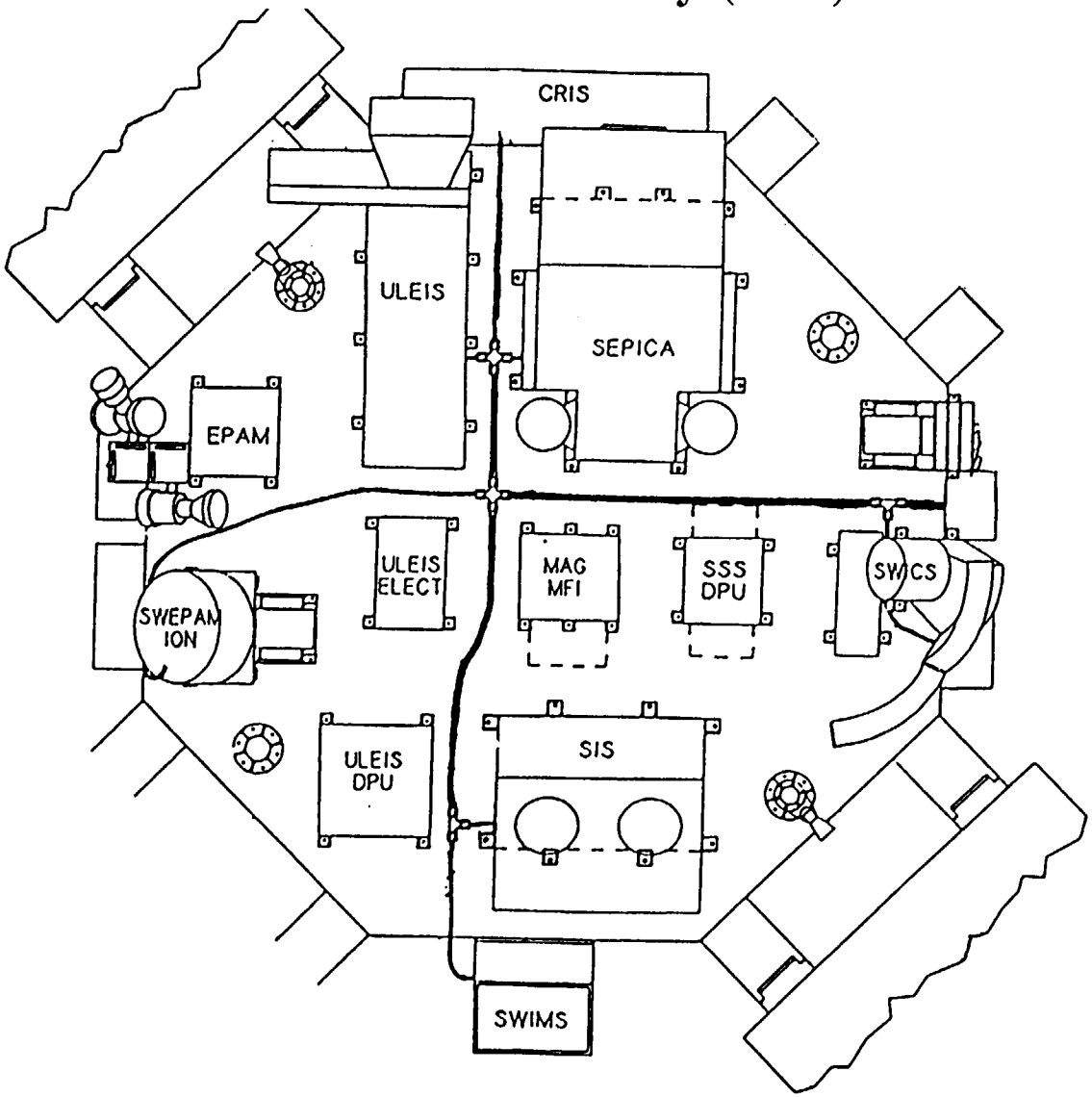

SOLAR ISOTOPE SPECTROMETER MECHANICAL DESIGN

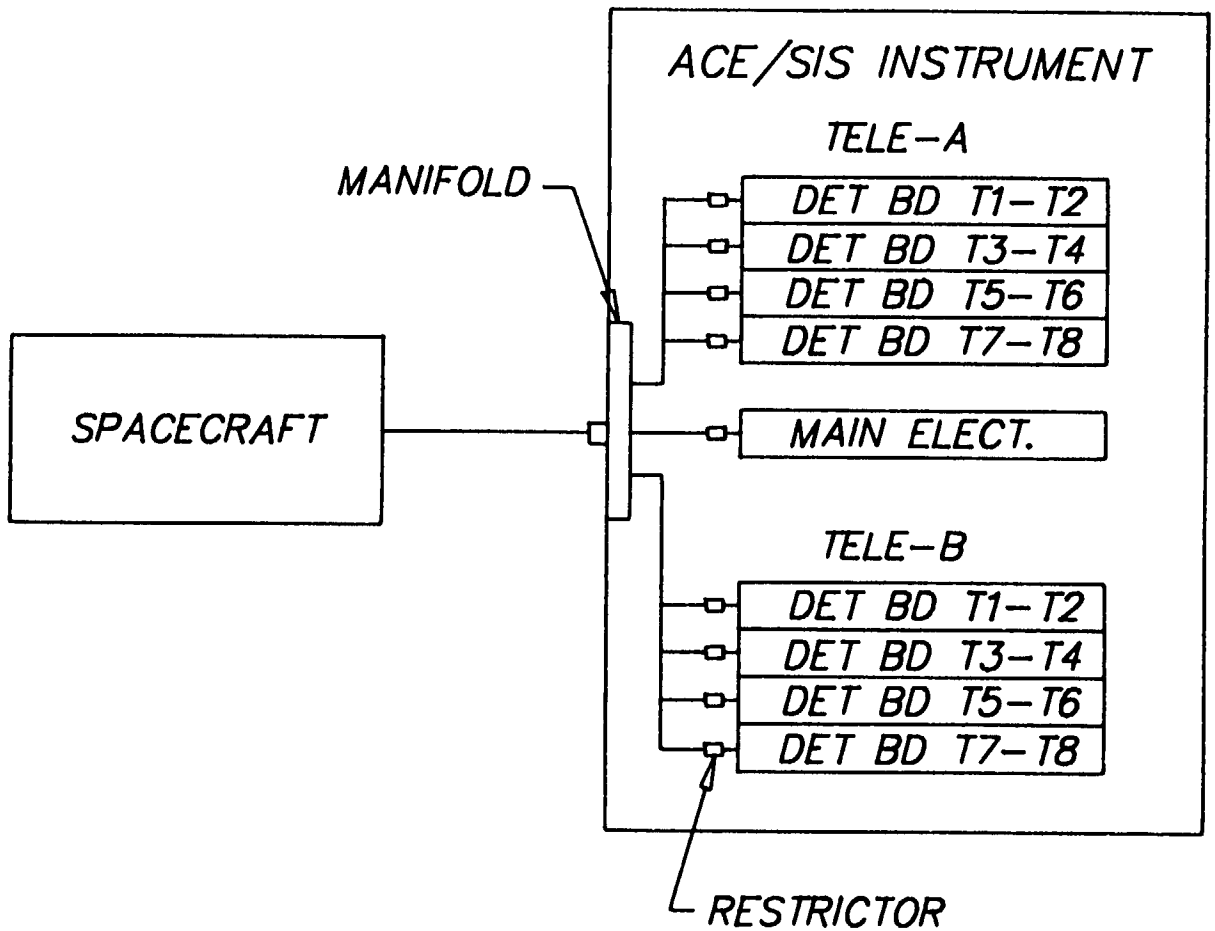

ACE/SIS PURGE SCHEMATIC

SOLAR ISOTOPE SPECTROMETER MECHANICAL DESIGN

ACE/SIS EXPERIMENT WEIGHT ESTIMATE

	grams
• Box Structure	
Includes all box walls, baseplate & telescope separator plate	4370
• Telescope & Card Cage	
Includes silicon, modules, covers, detector boards (detector area only), card guides, RF shields, collimators and hardware	5750
• Experiment Low/High Voltage Supplies	1700
• Experiment Electronics	3750
Including P/A, S/A, Adc portion of detector boards and digital boards, back plane, components conformal coat and connectors	
• SIS estimated weight	15.57 Kg
SIS allocated weight	18.20 Kg
SIS under allocated weight by	2.63 Kg

Note: Center of gravity shown on ICD

SOLAR ISOTOPE SPECTROMETER MECHANICAL DESIGN

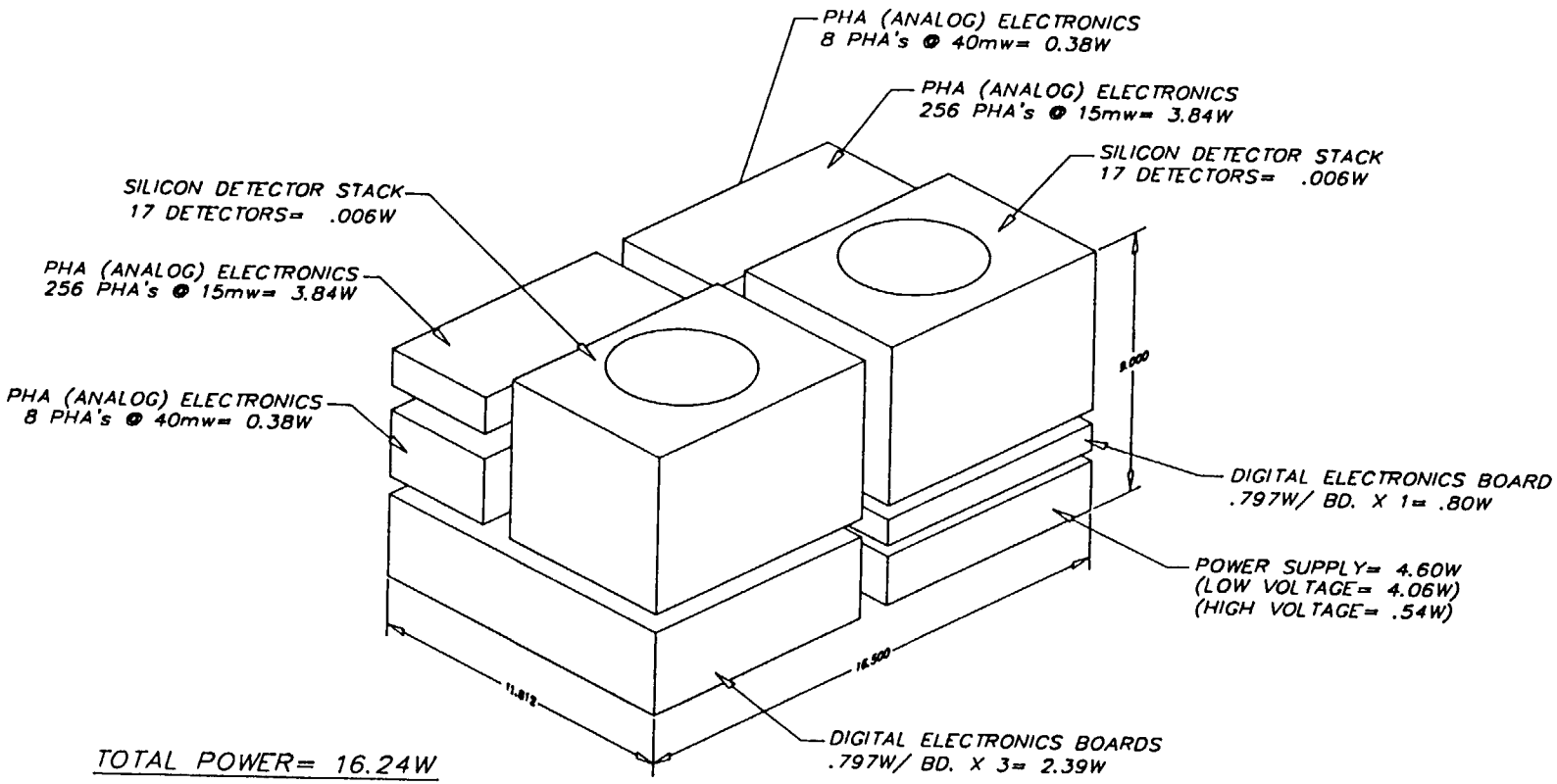

ACE/SIS INTERNAL THERMAL CHARACTERISTICS

SOLAR ISOTOPE SPECTROMETER MECHANICAL DESIGN

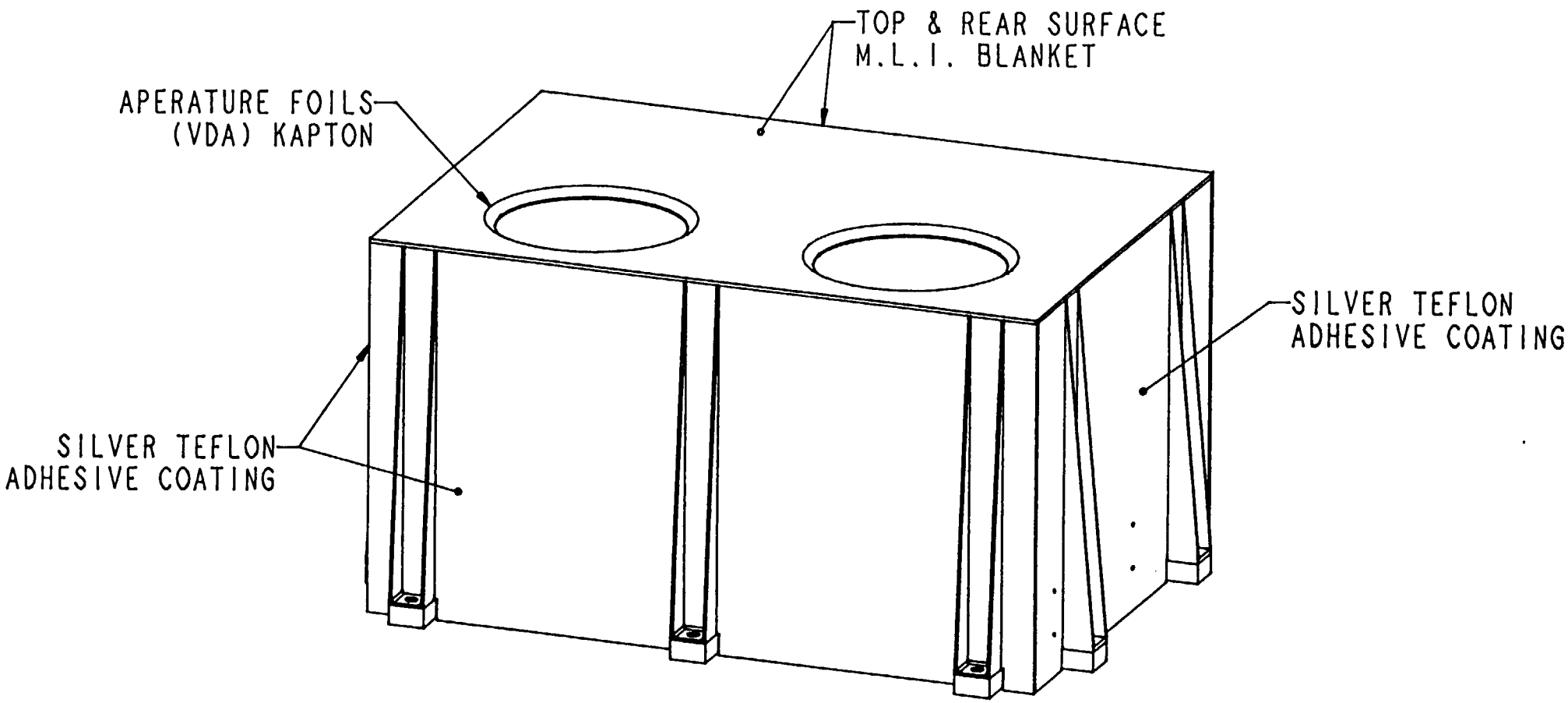

ACE/SIS EXTERNAL THERMAL CHARACTERISTICS

SIS PDR

Section 7

Thermal Design

2/24/94

PDR THERMAL TOPICS

- REQUIREMENTS
- ENVIRONMENTS
- THERMAL DESIGN APPROACH
- PRELIMINARY ANALYSIS RESULTS

ACE S/C ORIENTATION

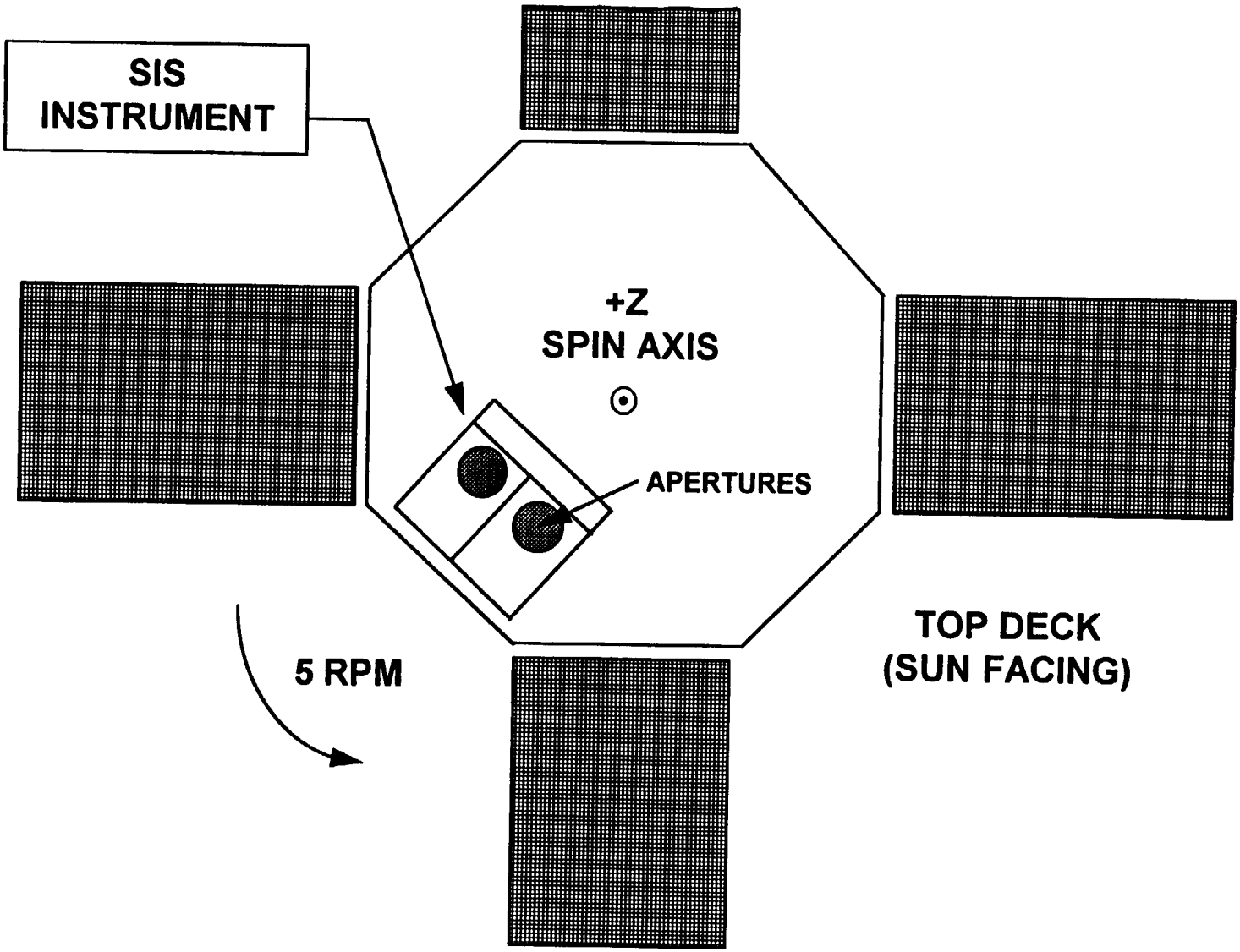

SIS THERMAL DESIGN

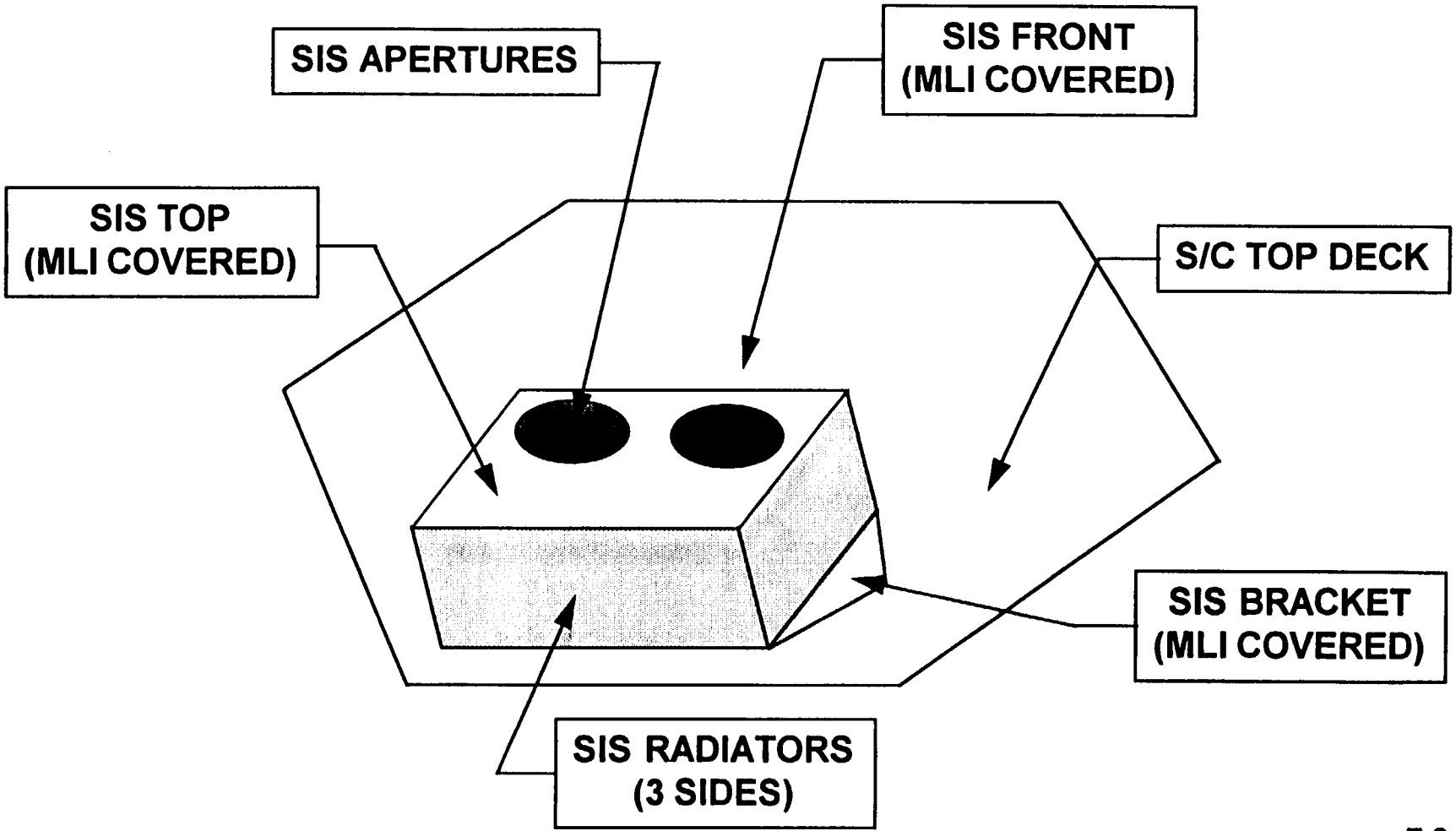

SIS THERMAL REQUIREMENTS

- ACE S/C MAINTAINS +Z SPIN AXIS WITHIN 0 TO 20 DEGREE OF SUN. S/C SPINS AT 5 RPM ABOUT + Z AXIS.
- THERMALLY ISOLATE INSTRUMENT FROM TOP DECK WITH TOP DECK @ -20 TO +40 C.
- MAINTAIN BOXES WITHIN TEMPERATURE LIMITS FOR OPERATING AND NON-OPERATING MODES.
- HEATER POWER AVAILABLE FOR USE DURING LOW TEMPERATURE PERIODS.

COMPONENT REQUIREMENTS

COMPONENT	TEMPERATURE LIMITS (DEG. C)			
	Preferred Oper.	In-Spec. Oper.	Design/Test	Non-Operating
DETECTORS	-10 to + 10	-25 to + 25	-35 to + 35	-35 to + 40
ELECTRONICS	-10 to + 40	-20 to + 40	-23 to + 55	-23 to + 60

HOT AND COLD CASE ENVIRONMENTS

	HOT CASE	COLD CASE
OPTICAL PROPERTIES	EOL	BOL
SOLAR CONSTANT	450 BTU/HR-FT^2	408 BTU/HR-FT^2
ALBEDO	0	0
EARTH SHINE	0	0
SUN ANGLE	0 TO 40	0 TO 40

SIS POWER DISSIPATION

Component	Qave (W)
Detector Stack X 2	0.043
Digital Elect. Brds	2.4
/S & Dig. Elect. Brd	5.42
PHA's X 2	4.21

TOTAL (W)	**16.326**

SIS PRELIMINARY THERMAL DESIGN APPROACH

- INSTRUMENT IS THERMALLY ISOLATED FROM TOP DECK USING G-10 SPACERS.
- RADIATORS ON THREE SIDES OF THE INSTRUMENT WILL PROVIDE NECESSARY THERMAL CONTROL. HEATERS USED TO MAINTAIN MINIMUM TEMPERATURES DURING COLD PERIODS, AS NEEDED.
- MLI COVERS TOP AND FRONT OF BOX.
- RADIATORS ARE Ag-FEP.

SIS THERMAL ISOLATION

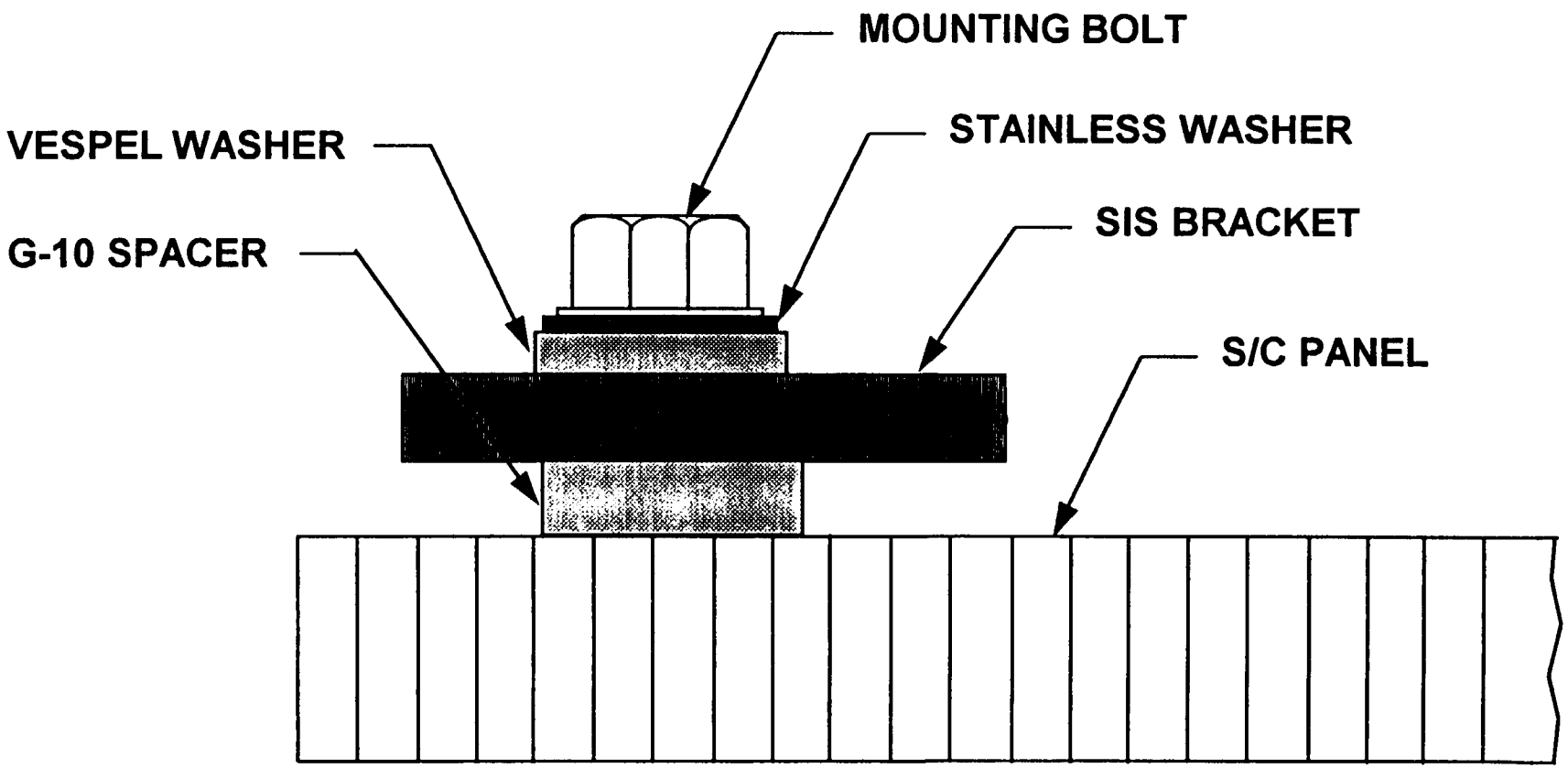

SIS PRELIMINARY THERMAL DESIGN APPROACH (CONT'D)

- BOX SIDES MUST BE WELL COUPLED TOGETHER, INCLUDING SIDES TO BASE.
- INSIDE MUST BE BLACK OR HIGH EMITTANCE SURFACES.

SIS HEATER TYPES

- Survival Heaters: Heaters mounted on instrument exterior. Power and circuits provided by S/C. Heaters defined by Instrument Thermal Engineer.

- Internal Operational Heaters: Heaters mounted inside of instrument for special heating purposes. Power is used from Instrument budget. Defined by PI or Instrument Thermal Engineer. (NOT APPLICABLE)

- Replacement Heaters: Heaters mounted to S/C deck. Power and circuits provided by S/C. Heaters maintain deck interface temperature when Instrument is off. Defined by S/C thermal Engineer.

- Additional Operational Heaters: Heaters mounted inside or outside, as design allows. Heaters used to control temperature of Instrument during normal operations, as needed. Power and circuits provided by S/C. Defined by Instrument Thermal Engineer.

SIS ON ORBIT MODEL

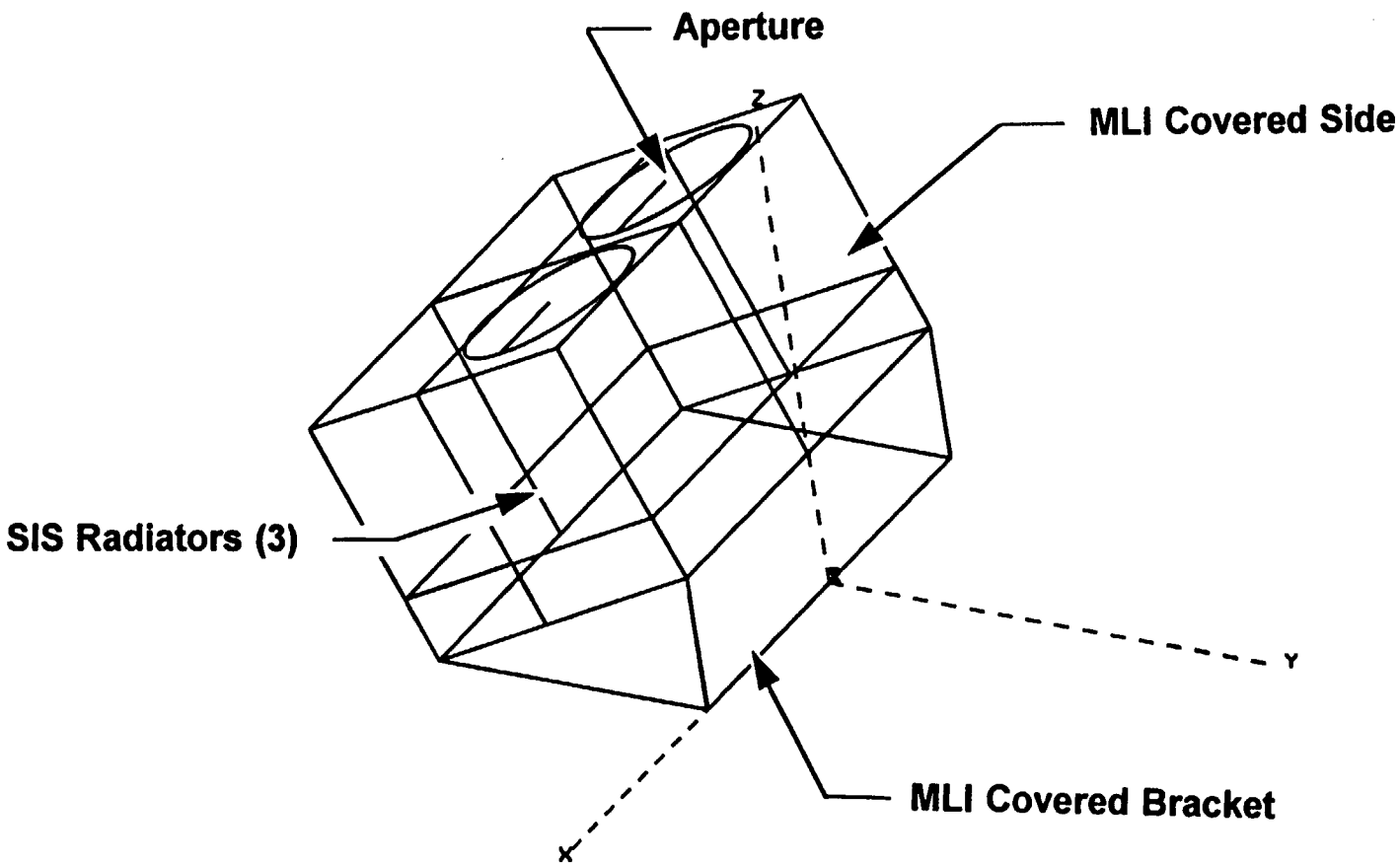

VIEW = 3-D
SCALE = 2.1403
NV = 1

SIS ON ORBIT MODEL

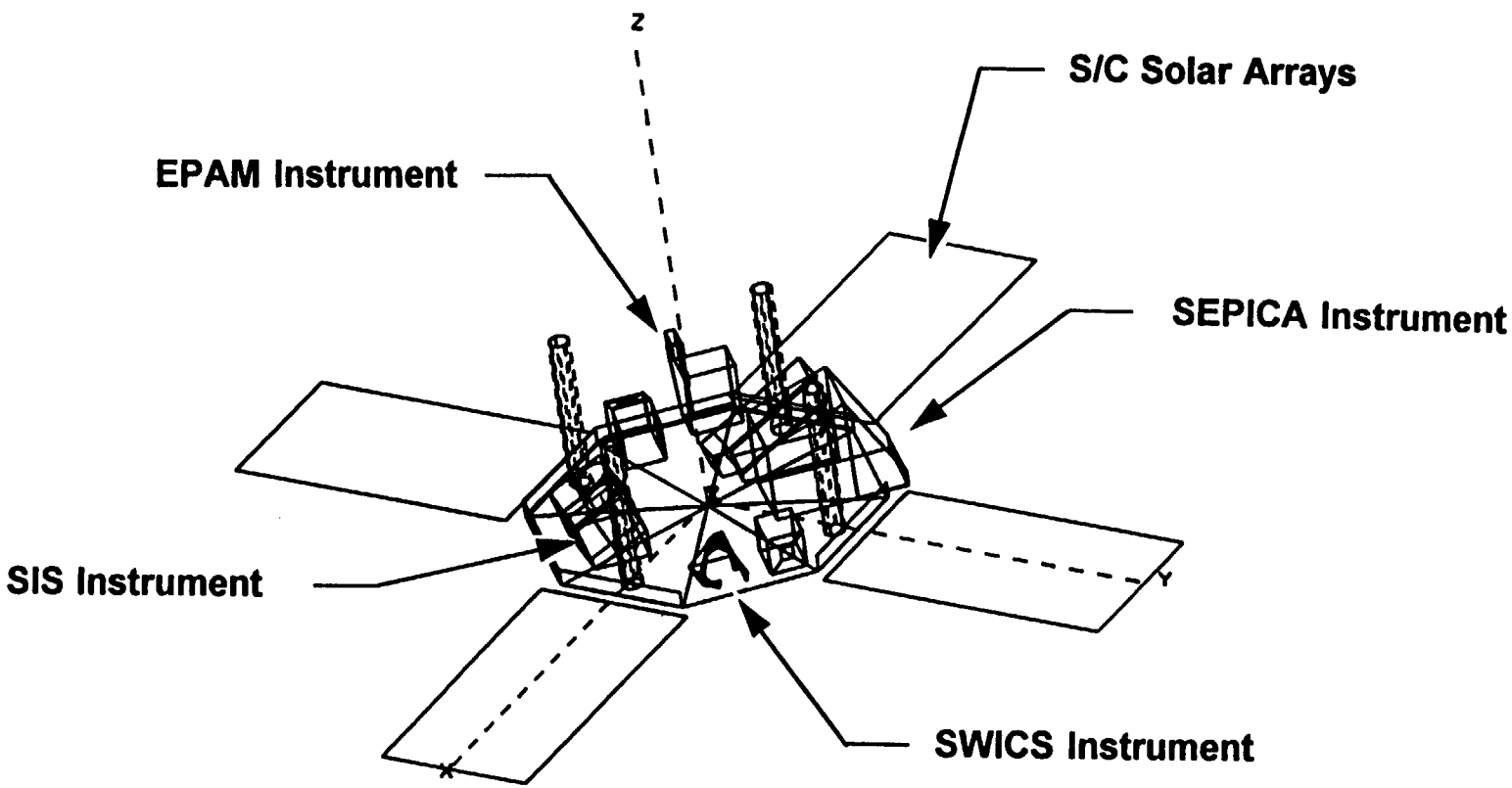

VIEW = 3-D
SCALE = 0.3922
NV = 1

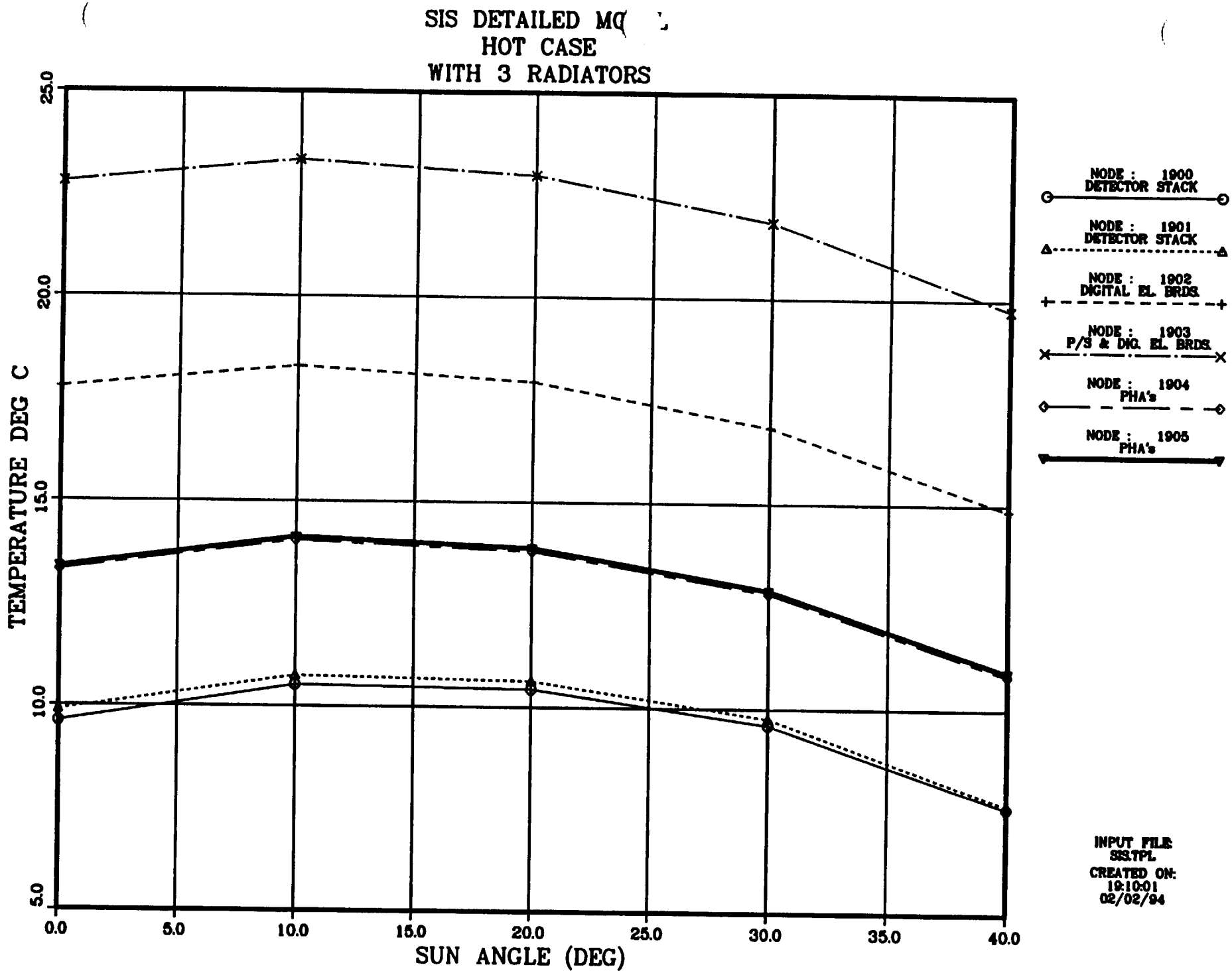
SIS DETAILED MODEL
HOT CASE
WITH 3 RADIATORS
TEMPERATURE DEG C
25.0
20.0
15.0
10.0
5.0
0.0
5.0
10.0
15.0
20.0
25.0
30.0
35.0
40.0
SUN ANGLE (DEG)
NODE : 1900
DETECTOR STACK
NODE : 1901
DETECTOR STACK
NODE : 1902
DIGITAL EL. BRDS.
NODE : 1903
P/S & DIG. EL. BRDS.
NODE : 1904
PHA's
NODE : 1905
PHA's
INPUT FILE:
SIS.TPL
CREATED ON:
19:10:01
02/02/94

SIS DETAILED MO L
COLD CASE
WITH 3 RADIATORS

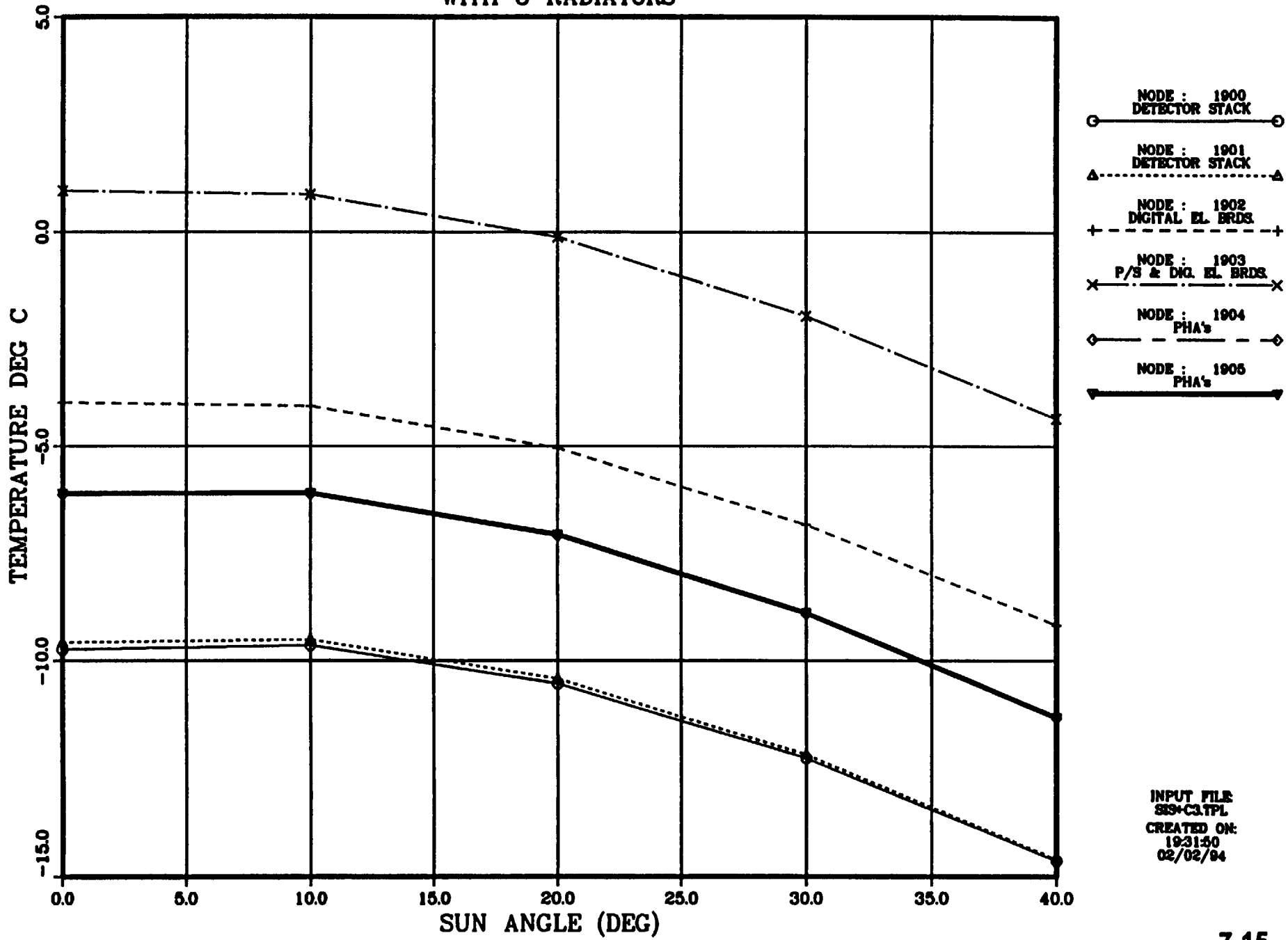

SIS DETAILED MODEL
HOT CASE
WITH 4 RADIATORS

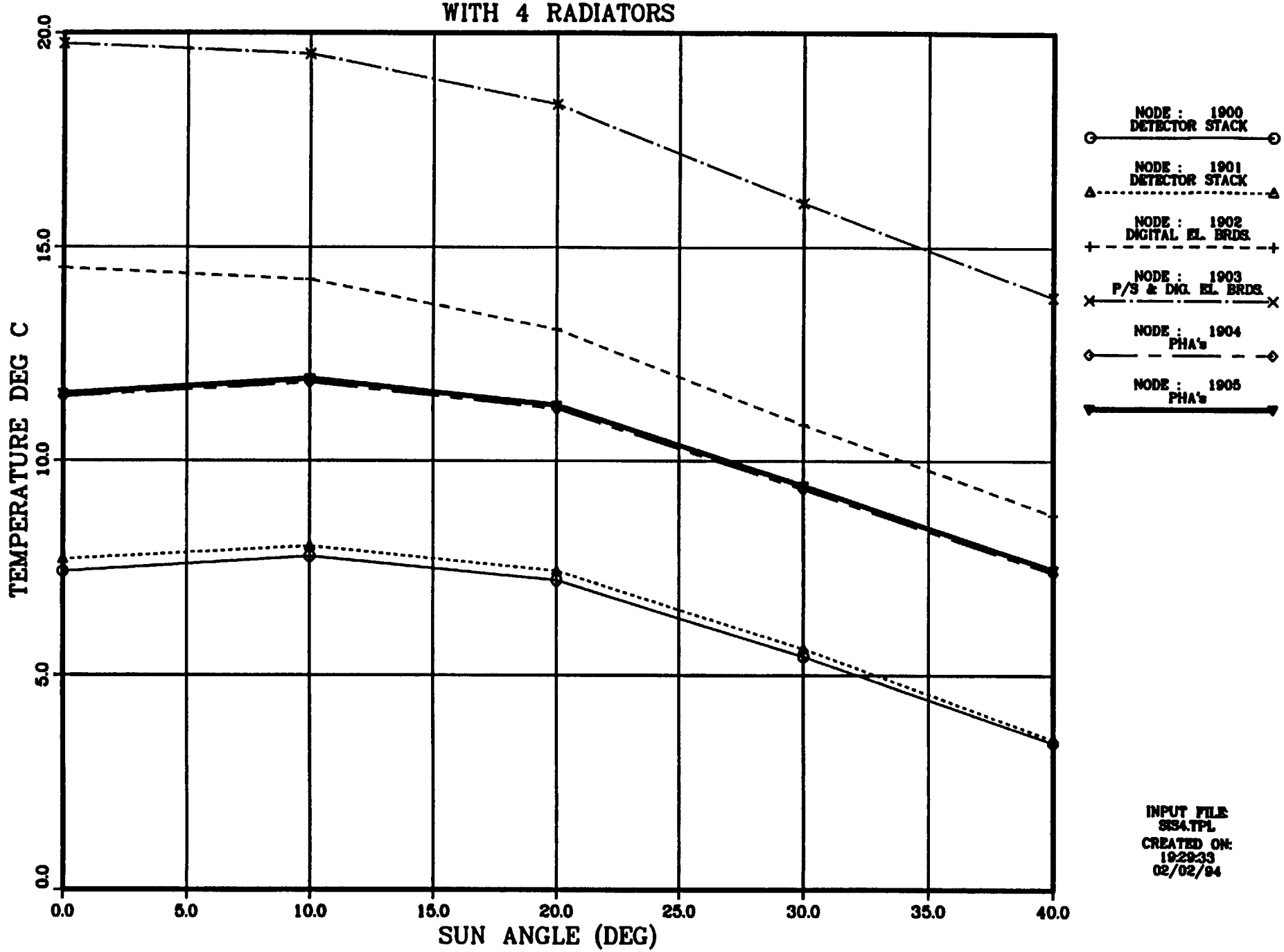

SIS DETAILED MO L
COLD CASE
WITH 4 RADIATORS

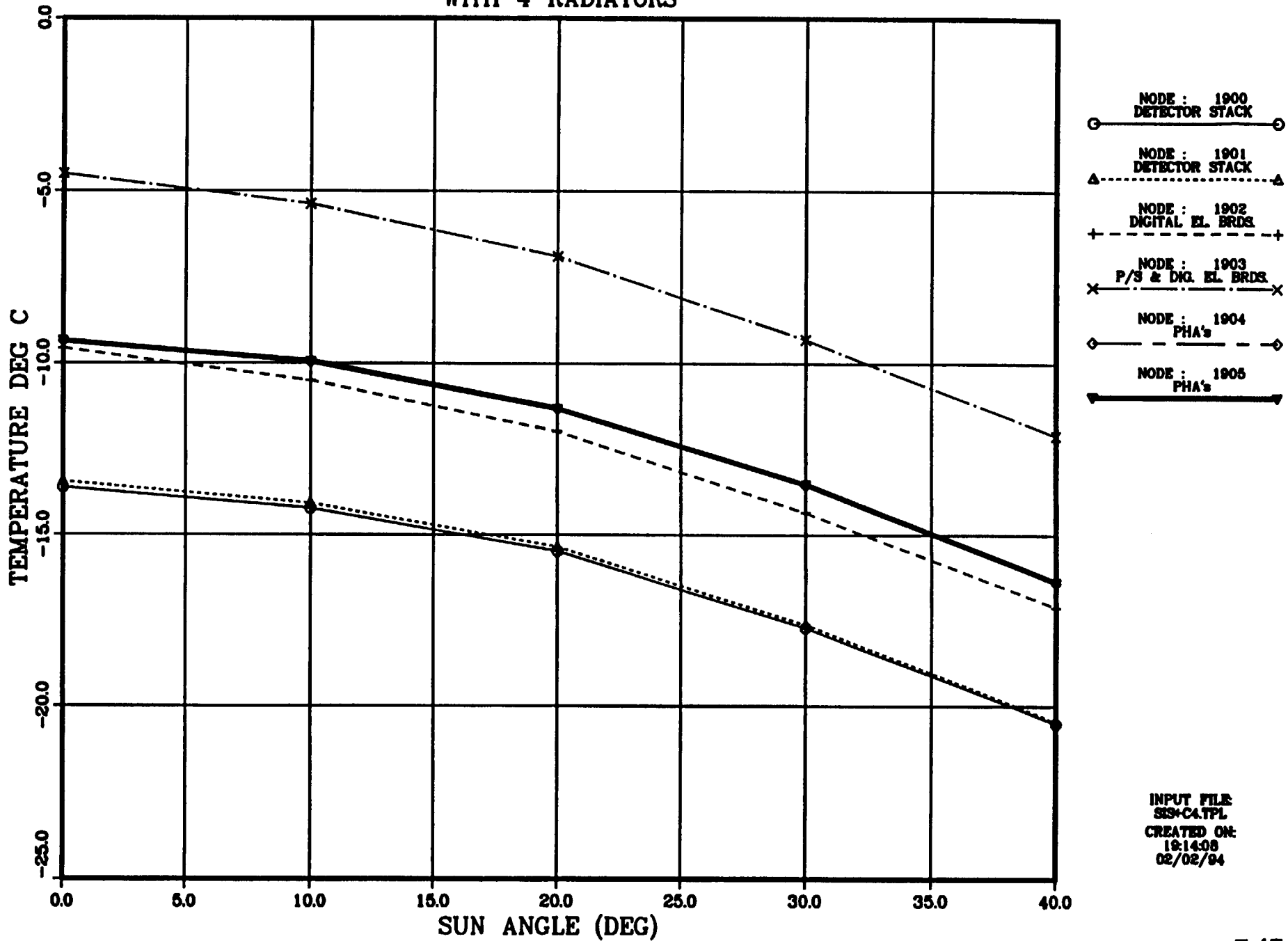

SIS PRELIMINARY THERMAL RESULTS/CONCLUSION

- DETECTORS MAINTAINED BETWEEN -11 AND +11 C, PASSIVELY. (-14/+14 C Margin)
- ELECTRONICS CAN BE MAINTAINED WITHIN THEIR TEMPERATURE LIMITS OF -5 AND +23 C, PASSIVELY. (-15/+17 C Margin)
- TWO DIFFERENT RADIATOR CONFIGURATIONS ARE BEING INVESTIGATED; 3 VERSUS 4 SIDES OF THE INSTRUMENT AS RADIATORS. 3 RADIATORS ARE RECOMMENDED AT THIS POINT
- REQUIRE 1 WATT OF HEATER POWER FOR COLD PERIODS TO SAFEGUARD LOWER TEMPERATURES.

THERMAL OPEN ISSUES

- ADDITIONAL OPERATIONAL HEATER CIRCUITRY MUST BE COORDINATED WITH THE S/C TO ALLOW FOR HARNESSING AND RELAY CONNECTIONS.
- DETERMINE EFFECT THAT DECK MLI HAS ON RADIATOR SINK TEMPERATURES.
- THERMAL BALANCE TESTING IS NOT PLANNED.
- THERMAL ISOLATION VERSUS ELECT. CONDUCTION.

SIS PDR

Section 8

Flight Software

2/24/94

Flight Software

- Functional Requirements
  - * Collect event data from raw event data FIFO
  - * Analyze matrix detector data to extract hit locations and pulse heights
  - * Sort events into different priority categories and maintain event counts for each category
  - * Select and format events for telemetry
  - * Collect housekeeping data, including rate data, temperatures, power supply voltages, detector leakage currents, detector thresholds, and coincidence logic state
  - * Format housekeeping data and incorporate into telemetry
  - * Support intensive instrument functional self−test via pre−programmed stimulated event and command state sequences
  - * Support low−rate continuous self−test via stimulated events in normal (or existing) command state

2/24/94

Flight Software (continued)

- Functional Requirements (continued)
  - ∗ Support a high−rate data mode appropriate for accelerator calibrations
  - ∗ Receive, echo in telemetry, and execute commands to:
    1. Change command state
    2. Define new Forth "words", i.e., make minor adjustments to flight code
    3. Initiate memory dumps, self−test sequence, or other diagnostics
  - ∗ Support matrix detector leakage current cancellation
  - ∗ Maintain three copies of command tables in RAM with errors scrubbed and flagged in telemetry
  - ∗ Periodically reset watchdog timer
  - ∗ Have intelligent boot code which preserves command state when possible (i.e., after watchdog timeout)

2/24/94

SIS FLIGHT SOFTWARE:
EVENT DATA FLOW DIAGRAM

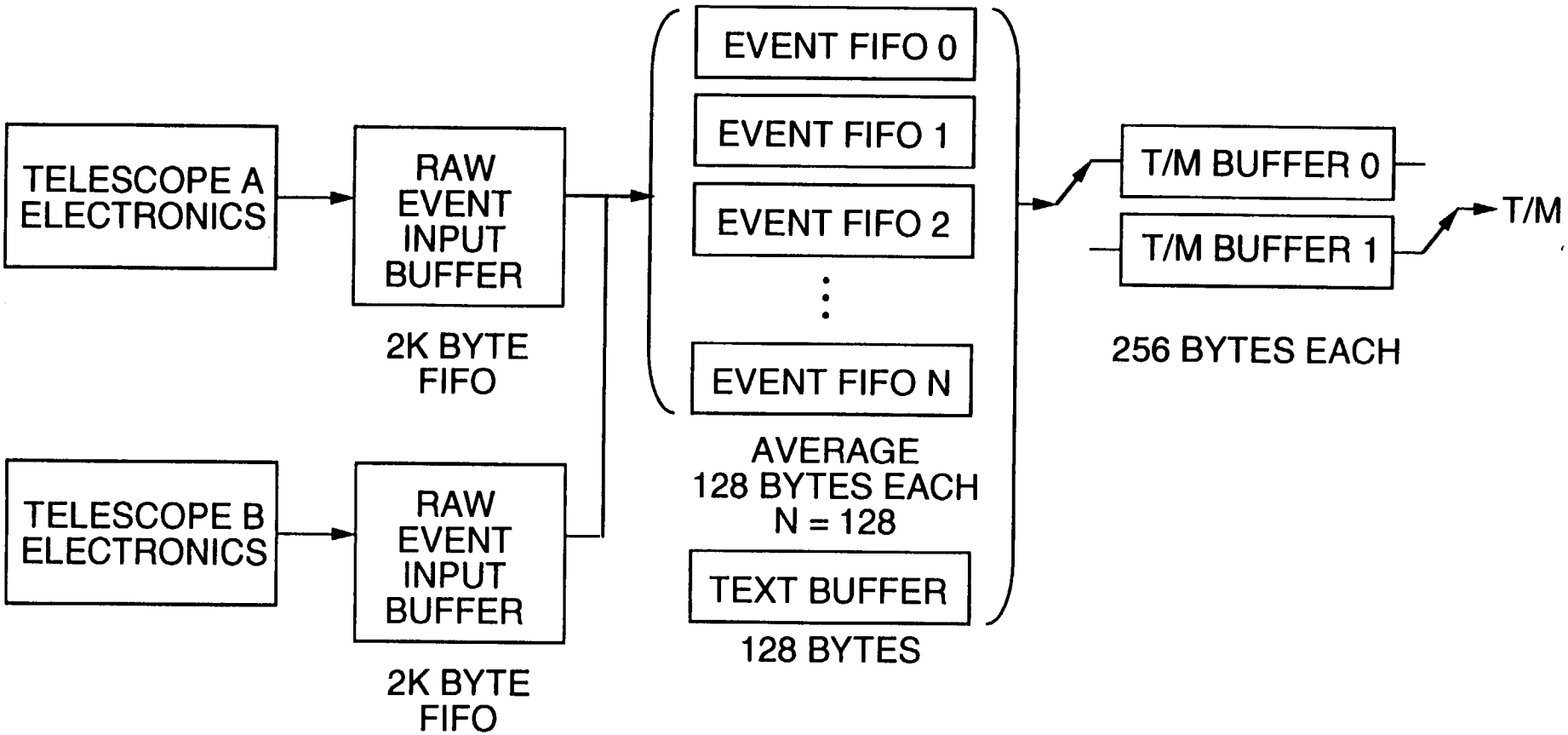

SIS NORMAL EVENT FORMAT

Item #	Count	Bits	Description
Event Header			
1	1	4	Data Format ID
2	1	8	Frame Number at Event Time
3	1	8	Priority Class
4	1	1	A Telescope Hit
5	1	1	B Telescope Hit
A Telescope Data (if hit)			
6	1	5	Number of Matrix Detector Groups (N)*
7	N	2	Matrix Plane Number
8	N	2	Number of Strips Hit in Matrix Group ($M_i, i = 1 \ldots N$)
9	1	4	Range ID (R = number of last stack detector hit)
10	1	1	Hazard Bit
11	$\sum_{i=1}^{N} M_i$	12	Matrix Pulse Heights
12	R	12	Stack Detector Pulse Heights
B Telescope Data (if hit)			
			Analagous to Items 6 through 12, above

* maximum number of matrix detector groups read out is a commandable parameter

Flight Software (continued)

- SIS Data Format

  * T/M data rate:
    1992 bits/sec = 1992 bits/minor frame = 3984 bytes/major frame

  * T/M data includes:
    1. Housekeeping at beginning of major frame; fixed length
    2. Events and command echoes follow, interspersed until next major frame; variable length

  * T/M multiplex cycle length:
    16 major frames = 256 minor frames (seconds)

2/24/94

Flight Software (continued)

- Event & Echo Format

  * Events are variable length, sometimes split across minor frames, except at instrument cycle boundaries

    1. Length ranges from 12 bytes to 64 bytes (commandable) with shorter events being much more likely

    2. Readout synchronized to multiplex cycle length (16 major frames)

  * Command echoes are variable length, sometimes split across minor frames

    1. Length ranges from 6 to 80 bytes

    2. Occurs only in response to commands

    3. Software handling just like events

2/24/94

Flight Software (continued)

- Housekeeping Data Format

  * 600 bits = 75 bytes at beginning of each major frame

    1. Multiplex counter; values 0 − 15
    2. Rates
    3. Command status
    4. LVPS voltages
    5. Temperatures
    6. Detector leakage currents
    7. Pointer to beginning of first complete event block

  * Multiplexing over 16 major frames

2/24/94

SIS Count Rate and Housekeeping Data Summary

Type of Data	Number	# Bits
Rates		
Microprocessor Rates:		
grouped by charge interval, detector depth, angle interval, hodoscope data quality, and telescope	236	2832
Rate Scalers:		
8 detector groupings (T1-T8)		
× 3 discriminator levels		
× 2 telescopes		
48		
+ 2 matrix detectors		
× 2 discriminator levels		
× 2 telescopes		
8		
⇒ 56 singles, subcommed to 4		
+ ~20 misc. rates, not subcommed	~24	~288
Voltages	11	110
Leakage Currents:		
8 detector groupings (T1-T8)		
+ 256 matrix strips		
264		
× 2 telescopes	528	5280
Temperatures	16	160
Detector Thresholds	56	280
Coincidence Logic State	< 100	< 100
Software Parameters	~30	~480
Total # bits:		~9530

Complete readout in 256 frames (=secs)
⇒ Allot ~600 bits once every major frame (1.9% of T/M space)

Flight Software (continued)

- SIS Memory Usage (Kbytes)

	PROM		RAM	
* Forth operating system	12	(16)	4	(48)
* Telemetry buffers			0.25	
* Command tables	0.5	(32)	1.5	
* User code	16		16	
* Program load buffer			4	
* Compressed event buffers			16	(80)
* Rate tables			1	
* Matrix detector leakage table			1	
* Matrix detector offset table			1	
TOTALS	28.5	(48)	44.75	(128)

(Estimated requirement is compared with allocation in parenthesis)

2/24/94

Flight Software (continued)

- SIS CPU Usage (Kbytes)

	% CPU
∗ Compression of raw event data, sorting of events into compressed event FIFOs (2 ms/ev * 200 ev/s = 400 ms/s)#	40
∗ Output T/M byte (~10 μs/byte * 249 bytes/s = 2.5 ms/s)	0.25
∗ Housekeeping & rate servicing	0.2
TOTAL	~40

#(Estimate based on 30 machine cycles per word of raw data and 4MHz clock. Optimized code in similar application used ~7 machine cycles per word of raw data)

2/24/94

SIS PDR

Section 9

Ground Support Equipment

2/24/94

SIS EGSE FUNCTIONS

- **Support Testing of Instrument Components**
  - Solid state detectors
  - Pulse height analyzer hybrids
  - Instrument data processing unit (DPU)
- **Simulate Spacecraft Interfaces to Instrument**
  - Provide to instrument:
    - power
    - control signals
    - commands
  - Receive from instrument:
    - science data
    - analog housekeeping
  - Simulate both halves of S/C C&DH interface

SIS EGSE FUNCTIONS (cont.)

- **Process Data from Instrument**
  - Various Sources:
    - DPU through S/C interface
    - DPU through high speed calibration interface
    - S/C ground support system
    - playback of stored data (from disk or tape)
  - Store telemetry data to disk or tape
  - Maintain logs
    - on time
    - voltage and current
    - commands sent/replies received
    - housekeeping and rates

- **Process Data from Instrument (cont.)**
  - Multiple displays
    - housekeeping summaries
    - rate summaries
    - command status
    - event histograms and scatter plots
    - single event displays

- **Limit Checking, Alarms**
  - Input voltage and current
  - Detector leakage currents

SIS EGSE FUNCTIONS (cont.)

- **Electronics Testing with On Board Pulsers**
  - Select command states and calibration sequences
  - Collect and analyze instrument responses
  - Track thresholds and relative gains over time and identify changes

- **Commanding**
  - Support generation of command sequences
  - Check validity
  - Impose restrictions as appropriate

- **Bench Test Configuration**

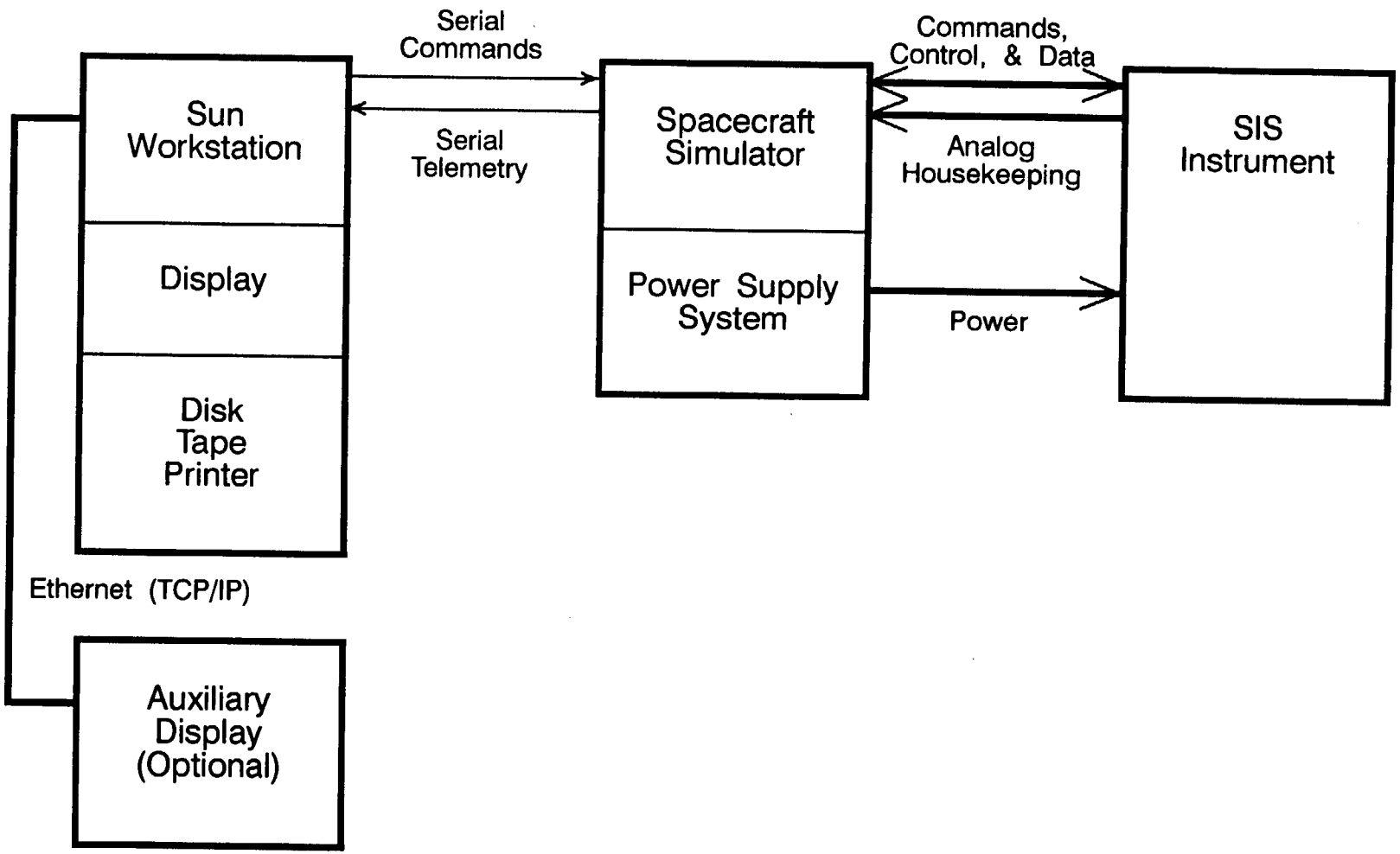

• Accelerator Calibration Configuration

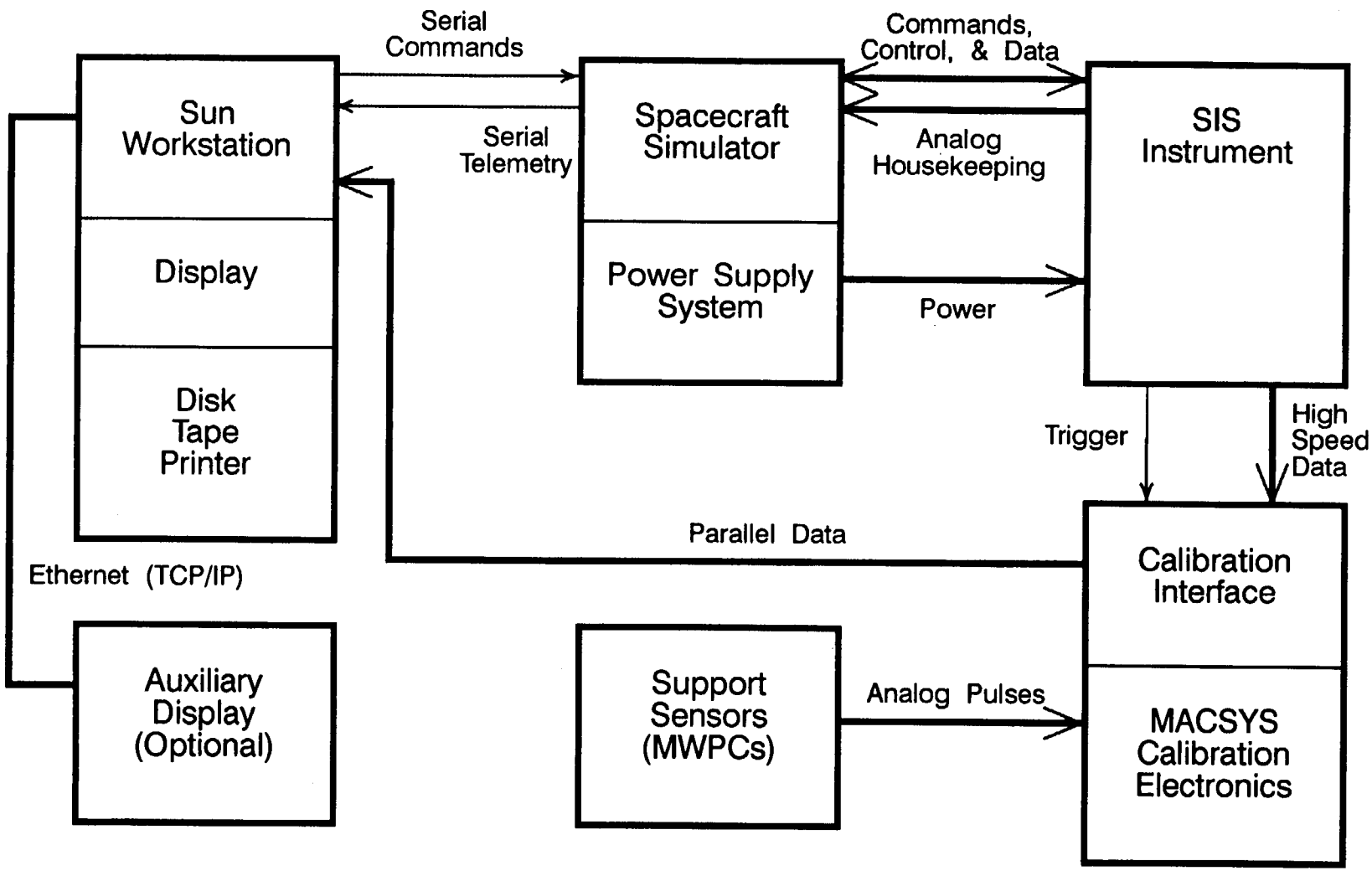

- **Configuration Onboard ACE Spacecraft**

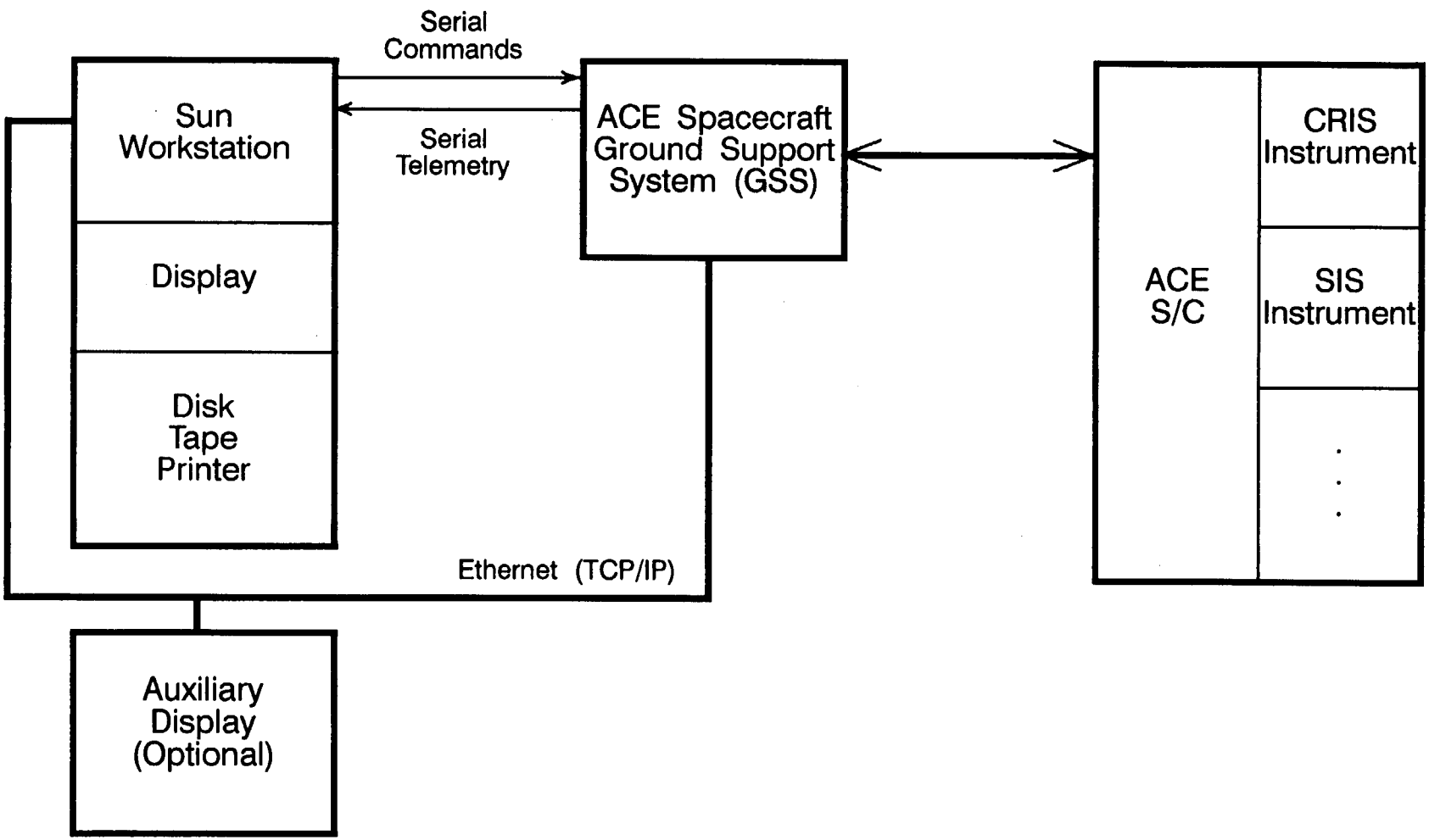

SIS EGSE SOFTWARE

- **Implementation**
  - Unix operating system running on a Sun workstation
  - Application software written in Forth linked to X-Windows library for displays
- **Heritage**
  - General approach and Forth implementation based on previous Caltech and JPL satellite and balloon EGSEs
- **Commonalty**
  - Very similar to CRIS EGSE software except for details related to event formats and different type of trajectory sensor
  - SIS and CRIS software will be developed together

INSTRUMENT SHIPPING

- **Instrument Carrying Case will Have:**
  - Cushioning
  - Provision for dry nitrogen flush
  - Air-tight seal, capability for small internal positive pressure
  - ESD protection for instrument

- **Shipping**
  - Will consult with JPL shipping department to determine appropriate means for shipping instrument to domestic destinations and to Germany for calibration

SIS PDR

Section 10

Environmental Test and Calibration

2/24/94

Environmental Test and Calibration of SIS

Detector Calibration

- Thickness/response of all SIS detectors mapped in laboratory and at particle accelerator
- Maps can be verified with in-flight data ~monthly

Electronic Calibration

- Amplifier/ADC circuitry calibrated prior to instrument assembly over full temperature range
- Built-in test pulsers provide verification of electronic stability during environmental testing and in-flight
- Calibrations can be verified in-flight (~monthly) by monitoring location of mass tracks

Accelerator Calibration

- Calibration of the full instrument in heavy ion beams at Darmstadt accelerator will provide final calibration/verification of:
  - Location of mass tracks
  - Trajectory algorithms
  - Mass resolution
  - Priority system

SIS Instrument Test Matrix[1]

Test	SIS	Electr./Sensor	Power Supplies	Dig. Electr.
Primary Structure, Structural Analysis		A	A	A
Interface FMEAs[2]			A	A
Electron Part Stress Analysis		A	A	A
Transportation Temp/ Shock / Humidity	A			
Mass	T	T	T	T
Center of Gravity	T			
Moments of Inertia	T			
Pressure Profile[3]	A/T	A/T		
Electrical Interface Test		T	T	T
Comprehensive Performance Test[4]	T			
Acoustics	A/T			
Sine Vibration	T			
Limited Performance Test	T			
Random Vibration	T			
Limited Performance Test	T			
Comprehensive Performance Test	T			
EMC Conducted Emissions	T			
EMC Conducted Susceptibility	T			
EMC Radiated Emissions	T			
Comprehensive Performance Test	T			
Thermal Vac[5,6]	T			
Thermal Balance	A/T			
Comprehensive Performance Test	T			
240 Hour Failure Free Burn-In	T			

1. table entries: T for test , A for analysis A/T for analysis and/or test
2. failure modes and effects analysis (electrical)
3 venting of boxes (typically by analysis)
4. first acceptance test
5 with concurrent comprehensive performance tests
6. margin tests will be performed during separate temperature test, not during thermal vac

SIS PDR

Section 11

Design Provisions for Specialized Instrument Requirements

2/24/94

Design Provisions for Specialized Instrument Requirements

- Provisions for Preserving the Integrity of Sensitive Elements
  - ∗ **Detectors**
    1. **Stored under dry N_2 purge in laboratory**
    2. **Purged at instrument level until launch**
    3. **Temperature of these devices will be kept below $+35^0$ C and above -40^0C**
    4. **Instrument will be shipped in sealed (dry N_2) container; shipping method TBD**
  - ∗ **Thermal control surfaces: TBD**

2/24/94

Design Provisions for Specialized Instrument Requirements (continued)

- Plans & Provisions for Detector Replacements Before Launch
  - ∗ Mechanical design permits relatively easy detector replacement
    1. Solid−state detector modules are on boards which slide in and out of a card cage
    2. Detector modules come off board without need for desoldering wires
    3. Will have entire spare modules available for fast replacement
    4. Individual detector replacement in module can be handled "off−line" on bench
  - ∗ Baseline is that we will not need to replace detectors after delivery to spacecraft

2/24/94

Design Provisions for Specialized Instrument Requirements (continued)

- Plans & Provisions for Direct Access Before Launch

  * GSE connector provided in case we need specialized checkout before launch

  * Detector replacement would require instrument coming off the spacecraft

    1. Solid−state detector replacement could be accomplished in one day

    2. Partial instrument disassembly might require re−qual

  * Baseline is that we will not need direct access after delivery

2/24/94

Design Provisions for Specialized Instrument Requirements (continued)

- **Plans & Provisions for the use of Red−Tag/Green−Tag Items**

  * **Red−Tag Items (must be removed before flight):**

    1. Lift handles will be provided for SIS

    2. Telescope aperture covers

  * **Green−Tag Items (must be attached before launch):**

    1. Connector cover for GSFC connector

Design Provisions for Specialized Instrument Requirements (continued)

- Plans & Provisions for Calibrating In Flight
  - ∗ **In−flight calibrator for detector electronics**
    1. **Provides stimulus to signal processing electronics**
    2. **Provide functional check only**
  - ∗ **Flight data calibration**
    1. **Detector characteristics can be calibrated from flight data**

Design Provisions for Specialized Instrument Requirements (continued)

- System Safety Considerations Identified for This Design
  - ∗ **Detectors must be in darkness before bias is applied**
  - ∗ **Instrument must be outgassed for 24 hours before applying bias at vacuum**
  - ∗ **Instrument must be at "hard" vacuum before applying bias ($<10^{-5}$ torr)**
  - ∗ **Detectors must not be exposed to contaminants**
  - ∗ **Instrument interior is sensitive to electrostatic discharge**

Design Provisions for Specialized Instrument Requirements (continued)

- Operational Constraints Dictated for the Design Chosen
  - ∗ **Turn on after 24 hour outgassing period**

SIS PDR

Section 12

Parts, Materials, and Processes

2/24/94

SIS Electronics Parts

- Preliminary parts information submitted to Kristan Evans (JPL Parts Reliability) as they are identified from 2 sources.
  - Caltech
    - Components on logic boards
    - Components included in hybrid circuits
  - Space Instruments (Dean Aalami)
    - Analog boards and power supplies
- JPL maintains parts list and database
  - CRIS and SIS lists are combined in single database
  - Hardcopy lists available first from JPL
  - Electronic access coming via Caltech bulletin board
- Phase B Funded Long Lead Parts
  - Parts that have been <u>delivered</u>
    - RTX2000 (backup for RTX2010)
    - Actel A1020
  - Parts <u>ordered</u>
    - RTX 2010 (due March 1, 1994)
- Common buys for SRAMS and PROMs being pursued

GENERIC	DESC	PROCUREMENT PART NO.	USER DESCRIPTION	MFR	STD/ NSTD	SPEC RTG	SEE RTG	TID RTG	COMMENTS
CDR	C	MIL-C-55081	FIXED, CERAMIC CHIP,		S	A			
CKS	C	MIL-C-123	FIXED, CERAMIC		S	A			
CSR	C	MIL-C-39003	TANTALUM, SOLID		S	A			
1N914	D	JANTX1N914	DIODE,	NATIONAL					
2N2222	Q	JANTXV2N2222A	XSISTOR						
2N3227	Q	JANTXV2N3227	XSISTOR, NPN SMALL SIG	MOTOROLA					
2N3251	Q	JANTXV2N3251	XSISTOR						
TN0104N2	Q	TN0104N2	FET, N-CH EM VERTICAL	SUPERTEX					
TP0104N2	Q	TP0104N2	FET, P-CH EM VERTICAL	SUPERTEX					
VN1304N2	Q	VN1304N2	FET, N-CH EM VERTICAL	SUPERTEX					
VP1304N2	Q	VP1304N2	FET, P-CH EM VERTICAL	SUPERTEX					
	R	TBD	NETWORK, 8 BIT R/2R, 100K	OHMTEK/TEC					
RCR	R	MIL-R-39008	FIXED,COMPOSITION,ER		S	A			
RM	R	MIL-R-55342	FIXED,FILM,CHIP,ER		S	A			
RN(X)	R	MIL-R-55182	FIXED,FILM,HIGH		S	A			
RWR	R	MIL-R-39007	FIXED,WIREWOUND,POWER,ER		S	A			
	U		PROM,SLOW, 256K						COMBINED CRIS & SIS.
54HC244	U	HC244WM OR							
A1020	U	A1020	FPGA	ACTEL		A	A	A	QTY 15 CRIS, 10 SIS. LET >= 22. NO LU >120. MATSUSHITA DIE.
HS508RH	U	HS-508RH/883S	MUX, 8 CHANNEL ANALOG	HARRIS					
HS565ARH	U	HS-565ARH	DAC, 12 BIT RAD HARD	HARRIS					
HS6617	U	HS-1-6617RH-8	PROM, 2Kx8, RAD HARD	HARRIS		A			COMBINED CRIS & SIS. NOTE PROCUREMENT NO.
IBM2568CRH	U	5962H9215303QXX	SRAM, 32Kx8, RAD HARD	IBM					COMBINED CRIS & SIS.

RATINGS : "A" = acceptable; "U" = unacceptable;
"UU" = unknown (no data or insufficient information to rate the part)

GENERIC	DESC	PROCUREMENT PART NO.	USER DESCRIPTION	MFR	STD/ NSTD	SPEC RTG	SEE RTG	TID RTG	COMMENTS
LM108	U	LM108							
MAS7001FB	U	MAS7001FB	FIFO, 512Kx9, RAD HARD	GECPLESSEY					P/N RECOMMENDATION NEEDED
MP7695	U	MP7695SD/883	ADC, 10 BIT, RAD HARD	MICROPOWER					
RTX2010	U	RTX2010RHR-8	MPROCESSOR, RAD HARD	HARRIS	S	A			COMBINED CRIS & SIS.
TBD	U		ASIC	UTMC					SIS ONLY. Matrix readout.
TBD	U		ASIC, ANALOG	HARRIS FST					COMBINED CRIS & SIS. Stack readout.
	Z	TBD	INDUCTOR, 3.9u R<0.4 OHM						
HCPL5631	Z	HCPL5631/883B	OPTOCOUPLER, RAD HARD	HP					

RATINGS : "A" = acceptable; "U" = unacceptable;
"UU" = unknown (no data or insufficient information to rate the part)

GENERIC	DESC	PROCUREMENT PART NO.	USER DESCRIPTION	MFR	STD/ NSTD	SPEC RTG	SEE RTG	TID RTG	COMMENTS
CDR	C	MIL-C-55081	FIXED, CERAMIC CHIP,		S	A			
CKS	C	MIL-C-123	FIXED, CERAMIC		S	A			
CSR	C	MIL-C-39003	TANTALUM, SOLID		S	A			
X7R	C	102H65WxxxPF	HIGH VOLTAGE, CERAMIC,	JOHANSEN	N	U			
1N3070	D	JANTXV1N3070	DIODE SWITCHING		S	A			
1N3600	D	JANTXV1N3600	DIODE		S	A			
1N5711	D	JANTXV1N5711	DIODE, SCHOTTKY BARRIER		S	A			
1N6080	D	JANTXV1N6080	DIODE, POWER		S	A			1N6081 OK TOO.
1N759A	D	JANTXV...	DIODE, 12 V ZENER		S	U			OBSOLETE. USE 1N6326 (SERIES 1N6312 THRU 1N6326).
2N2222A	Q	JANTXV2N2222A	XSISTOR, NPN SMALL SIGNAL		S	A	N/A	A	
2N2369A	Q	JANTXV2N2369A	XSISTOR, SMALL SIGNAL		S	A			VERIFY PART NO.
2N2484	Q	JANTXV2N2484	XSISTOR, NPN, LOW POWER		S	A			
2N2907A	Q	JANTXV2N2907A	XSISTOR, SMALL SIGNAL		S	A			VERIFY PART NO.
2N3251A	Q	JANTXV2N3251A	XSISTOR, SMALL SIGNAL		S	A			
2N3501	Q	JANTXV2N3501	XSISTOR, NPN HIGH VOLTAGE			A			BUY MIL-S-19500 QPL
2N3810	Q	JANTXV2N3810	XSISTOR, DUAL PNP		S	A			VERIFY DESCRIPTION
2N3811	Q	JANTXV2N3811	XSISTOR, DUAL PNP			A			
2N3934	Q	2N3934	DUAL JFET, N CHANNEL			A			HI-REL SPEC NEEDED. ALT JANTXV2N5546 (SOLITRON). VERIFY DESCRIPTION &
2N5096	Q	2N5096	XSISTOR, PNP HIGH VOLTAGE			A			BUY FROM PPC PRODUCTS &/OR SOLID STATE DEVICES. HI-REL SPEC NEEDED.
2N5097	Q	2N5097	XSISTOR, NPN HIGH VOLTAGE			A			BUY FROM PPC PRODUCTS &/OR SOLID STATE DEVICES. HI-REL SPEC NEEDED.
2N5416	Q	JANTXV2N5416	XSISTOR, PNP HIGH VOLTAGE			A			BUY MIL-S-19500 QPL
2N7314	Q	FRM9240	MOS, HI			A			NOTE PROCUREMENT NO. VERIFY DESCRIPTION & STYLE.
IRHF7130	Q	IRHF7130	XSISTOR, N CHANNEL,	INR		A			NOTE MFR AND DESCRIPTION
MOX-400-23	R	S-311-P-672	FIXED,FILM,HI VOLTAGE		S	A			

RATINGS : "A" = acceptable; "U" = unacceptable;
"UU" = unknown (no data or insufficient information to rate the part)

GENERIC	DESC	PROCUREMENT PART NO.	USER DESCRIPTION	MFR	STD/ NSTD	SPEC RTG	SEE RTG	TID RTG	COMMENTS
RCR	R	MIL-R-39008	FIXED,COMPOSITION,ER		S	A			
RM	R	MIL-R-55342	FIXED,FILM,CHIP,ER		S	A			
RN(X)	R	MIL-R-55182	FIXED,FILM,HIGH		S	A			
RWR	R	MIL-R-39007	FIXED,WIREWOUND,POWER,ER		S	A			
54HC14	U	M38510/65702BXX	SCHMITT-TRIGGER HEX	HARRIS	S	A	A	A	NO MOTOROLA TID DATA. USE HARRIS, NSC/TIX LML.
54HC244	U	M38510/65705BXX	3-STATE OCTAL BUFFER	HARRIS	S	A	A	A	NO MOTOROLA TID DATA. USE HARRIS, NSC/TIX LML.
54HC245	U	M38510/65503BXX	OCTAL TRANSCEIVER	HARRIS	S	A	A	A	NO MOTOROLA TID DATA. USE HARRIS, NSC/TIX LML.
54HC373	U	M38510/65403BXX	3-STATE OCTAL BUFFER	HARRIS	S	A	A	A	NO MOTOROLA TID DATA. USE HARRIS, NSC/TIX LML.
AD549LH	U	AD549LH/883B	OP AMP, LOW POWER, LOW		N	U			NOT DESC APPR.OK W/SCREENING.ALT BURR-BROWN OPA128(MEETS RAD), NSC
CD4007UB	U	M38510/05351BXX	INVERTER		S	A			BUY M38510
CD4049UB	U	M38510/05503BXX	HEX BUFFER		S	A			BUY M38510
CD4050B	U	M38510/0554BXX	HEX BUFFER		S	A			BUY M38510
HS3530	U	HS3530RH	OP AMP, LOW POWER, RH	HARRIS	N	U			NOT DESC APPR. OK W/SCREENING. ALT. LINEAR TECH RH LT1078,LT1079.
LM108A	U	M38510/10104BXX	OP AMP, LOW POWER		S	A			BUY M38510
LM139	U	M38510/11201BXX	COMPARATOR, QUAD, LOW		S	A			BUY M38510
311018-10xxxx	Z	GSFC S-311-P-18	THERMISTOR, NEG TC, 30K,	YSI	S	A			
311P409	Z	GSFC-S-311-P-4/0	CONNECTOR, POWER,CRIMP		S				
M28861	Z	MIL-F-28861/1	FILTER,ELECTROMAG		S	A			MIL-F-28861 AVAIABLE TO CLASS B
M39010/3	Z	MIL-C-39010	COIL,FIXED,RF,MICROMINIAT		S	A			ALERT 1991. BUY GRADE 2 FR "R" AND DO DPA ON LOT.

RATINGS : "A" = acceptable; "U" = unacceptable;
"UU" = unknown (no data or insufficient information to rate the part)

RADIATION EFFECTS

- CUSTOM VLSI

  1. Harris bipolar VLSI OK to 100 KRad
     - SEU unimportant

  2. CMOS matrix detector readout OK to >100 KRAD
     - No latchup due to EPI process
     - SEU unimportant

- μP SYSTEM

  1. Key Components
     - RTX2010, IBM 32K x 8 RAM, HARRIS 2K x 8 PROM
       - All rad hard to >100 KRAD
       - All latchup immune with very low SEU rates

  2. Actel glue logic
     - OK to> 100 KRad
     - No latchup
     - Has non-negligible SEU rate of ~ 0.002/day/module in JPL flare environment
     - Get less than 1 upset/10 days (assuming 50 modules used in address decoding, etc.)
     - Utilize watchdog timer to reboot if such infrequent upset causes μP crash
     - Command bits stored in Actel logic periodically refreshed from μP

- SI DETECTORS

  1. Electronics designed to handle post radiation leakage current increases

SIS Electronics Parts List Review Status

- All parts are rated by JPL for reliability and radiation (TIS, SEE) and rated "A" acceptable or "U" unacceptable for the mission.
  - Preliminary lists in PDR package correspond to source
    - List entitled "CRIS/SIS CIT's" is list of logic and hybrid components from Caltech
    - List entitled "CRIS SIS DEAN'S" is list of analog and power supply components from Space Instruments
- Tradeoffs and Alternatives are being evaluated for unacceptable parts

SIS Materials

- Materials information submitted to John Repar (JPL) as they are identified from 2 sources.
  - Caltech
  - GSFC Code 661
- John maintains materials list
  - JPL produces hardcopy list
    - List on word processor (WORD 5.1)
  - Database to be implemented at Caltech
    - Electronic access via Caltech bulletin board planned
- Status
  - Informal reviews have been made:
    - At first cut there are no objectionable materials
    - Some materials require additional review
      - Some may require drawings indicating the application of the material

SIS Preliminary Materials List

Materials List is in 3 sections (includes both CRIS & SIS materials):

- Includes both CRIS & SIS material
- Lists are in chronological bunches
  - Yet to be sorted

Sections are:

1. Materials Identification and Usage List, ACE
   - List of primarily electronic fabrication materials from Caltech
   - Items 71A thru 98
   - 2 pages
2. Materials Identification and Usage List, ACE, **Metals**
   - List of materials submitted by GSFC Code 660
   - 2 pages
3. Materials Identification and Usage List, ACE, **Non-Metallics**
   - List of materials submitted by GSFC Code 660
   - 2 pages

MATERIAL IDENT. .TION AND USAGE LIST

Advanced Composition Explorer (ACE)

DOCUMENT NO.
DOCUMENT REV. LTR. No Change
ORIGINAL ISSUE DATE 1-27-94
REVISION DATE

NOMENCLATURE CIS/CRIS/CTI

PART/DWG NUMBER	REV LTR	NOMENCLATURE	MATERIAL IDENTIFICATION					NONMETALLIC MATERIAL			USAGE EVAL.						MUA STATUS	REMARKS (SPECIAL CURE, ETC)
			MAT'L CODE	MATERIAL DESCRIPTION	MATERIAL MFGR	MATERIAL SPEC	PROCESS SPEC	WT	THK	AREA	FLM	AGE	SCC	COR	TVS	TOX		
86A		Epoxy Semi Regid	-	Epoxy 13-54-1	Leepoxy						-				-	-		
87A		Tape	06525	Mylar Adhesive	Dupont						B				A	A		
88A		Tape	20881	Tape 200A Teflon, FEP	Dupont						A				A	-		
89A		Tape	20881	TFR FEP S24	Dupont						A				A	-		
90A		Tape	05822	Adhesive, Glass No. 69	3M						A				X	-		
91A		ETCHANT - Sodium	-	Tetraetch	Gore						-				-	-		
92		Ink, Marking	00030	Epoxy base Wornowink M-O-N/B3	Hysol						A				X	B		
93		Polyurethane Pottant	62237	Urathane 5753 LV	Furnane	PE Spec 42-1020-102					X				-	B		
94		Solder	10491	SN63 WRMAP 3		QQ-S-571							N	A				
95		Adhesive	05066	Scotchwild 2216	3M	PR Spec 42-0085					A				B	B		
96		Terminal, Bi-Furcated	10234	575-A Brass									A	A				
97		Plastic Sheet, Laminated, Unclod	20139	Epoxy/Fiberglass Type GEE		MIL-P-13949					-				A	K		
98		Polyurethane Pottant	20209	Uralane 5750 LV	Furnane	PE Spec 54-0011					X				B	A		

DOCUMENT NO.
DOCUMENT REV. LTR. No Change
ORIGINAL ISSUE DATE 1-27-94
REVISION DATE

MATERIAL IDEN .TION AND USAGE LIST

Advanced Composition Explorer (ACE)

NOMENCLATURE CIS/CRIS/CTI

PART/DWG NUMBER	REV LTR	NOMENCLATURE	MATERIAL IDENTIFICATION					NONMETALLIC MATERIAL			USAGE EVAL.						MUA STATUS	REMARKS (SPECIAL CURE, ETC)
			MAT'L CODE	MATERIAL DESCRIPTION	MATERIAL MFGR	MATERIAL SPEC	PROCESS SPEC	WT	THK	AREA	FLM	AGE	SCC	COR	TVS	TOX		
71A		Pin-Spring-Tubular, Slotted Cres.	50065	SS410		MS 16562-190							B	B				
72A		Transipad - T05	-	1001X-DAP	Milton Ross						-				-	-		
73A		Washer Laminated	52008	5722-9-1-AO AL 1100 202-4037	Seastrom								A	B				
74A		Wire, Shielded Twisted Pair	05275	Teflon Coated	Microdot						B				C	K		
75A		Cable Coax.	05378	C06C07CC PTFA/FEP	Gore						I				-	A		
76A		Wire, 26AWG, 1000V	-	5311-P13-XX	Raychem						-				-	-		
77A		Shrinkable Tubing	20427	Poly Vinyl Chloride		MIL-T-47051					X				-	-		
78A		Laminated	52064	AL 1100	Seastrom	QQ-A-561							A	B				
79A		Sheet Transparent	61672	Lexan	GE	L-P-393					A				A	A		
80A		Aluminum Alloy	-	Chemical Conversion Coating			MIL-C-5541 Class 3				A		A	A	A	-		
81A		Heatsink	-	260-10SH5B BeCu/Br O/Brass	Wakefield						-		-	-				
82A		Heatsink	-	260-4SH18B BeCu/Br O/Brass	Wakefield						-		-	-				
83A		Core, Toroid	-	K6A-T14-5-20-7 -5 Iron, Ferrite	TDK								-	-				
84A		Wire	85401	Magnet HPT Insulation		MIL-2-583 Type K Class 105					-				-	-		
85A		Wire	85401	Magnet, Heavy, Teflon, Insulation		MIL-2-583 Type K Class 105					-				-	-		

DOCUMENT NO.
DOCUMENT REV. LTR. No Change
ORIGINAL ISSUE DATE 1-27-94
REVISION DATE

MATERIAL IDENTI ION AND USAGE LIST

Advanced Composition Explorer (ACE)

NOMENCLATURE CIS/CRIS/CTI

Metals

PART/DWG NUMBER	REV LTR	NOMENCLATURE	MATERIAL IDENTIFICATION					NONMETALLIC MATERIAL			USAGE EVAL.						MUA STATUS	REMARKS (SPECIAL CURE, ETC)
			MAT'L CODE	MATERIAL DESCRIPTION	MATERIAL MFGR	MATERIAL SPEC	PROCESS SPEC	WT	THK	AREA	FLM	AGE	SCC	COR	TVS	TOX		
1		Chassis, telescope housings	10022	AL 6061-T6				Grs 515					A	B				
		Baseplate, structure	10408	2024 T4 Alclad				320					U	B				
		Spacers		2011-T8				330										
		Washers	50210	5052				12					A	B				
2		Spring contacts, wavy washers	50960	Be Cu				52					A	A				
3		Terminals, solder lugs Terminals	10234	Brass Comp 22 Alloy 360				10					A	A				
4		Wire, contacts, conductors, plating	10311	Copper				115					N	A				
5		Plating contacts, housings, detectors, wires	10328	Gold Type III CL II				4					A	A				
6		Wire plating	10039	Silver				4					N	A				
7		Soldering	10491	Solder				35					N	A				
8		Screws, tie bolts	10419	SS 18-8,				30					A	A				
		Screws	10083	316		AMS 5737		20					A	A				
		Screws	10431	300				20					A	A				
9		Heliocoil inserts	10431	CRES 300				4					A	A				
10		Hybrid case, covers	-	Kovar				850					A	A				
11		Absorbers	30107	Tungsten, Mallory 2000				62					A	A				
12		Radiation spot shields	30141	Lead				6					A	A				

DOCUMENT NO.
DOCUMENT REV. LTR. No Change
ORIGINAL ISSUE DATE 1-27-94
REVISION DATE

MATERIAL IDENTIFICATION AND USAGE LIST

Advanced Composition Explorer (ACE)

NOMENCLATURE CIS/CRIS/CTI

Metals

PART/DWG NUMBER	REV LTR	NOMENCLATURE	MATERIAL IDENTIFICATION					NONMETALLIC MATERIAL			USAGE EVAL.						MUA STATUS	REMARKS (SPECIAL CURE, ETC)
			MAT'L CODE	MATERIAL DESCRIPTION	MATERIAL MFGR	MATERIAL SPEC	PROCESS SPEC	WT	THK	AREA	FLM	AGE	SCC	COR	TVS	TOX		
25		Insulation	05946	Kapton	Dupont			30			A				B	U		
26		Shoulder washers	20879	Phenolic				2			A				A	-		
27		Transformer impregnation	-	Conap, EN11	Conap			1			-				-	-		
28		PWB for bias supply	05660	Teflon/Fiberglass	Dupont			270			A				A	-		
29		Tiedowns	60439	Gudebrod 20D96 18D96	Gudebrod			4			X				A	-		
30		Conformal coating	20209	Uralane 5750	Furank			40			X				B	X		
31		Tape Bonding hybrids and flatpacks	65608	Ablefilm 517	Ablestik			4			-				B	-		
		Tape miscellaneous	06525	Mylar 253	Dupont			1			B				A	A		
		Tape miscellaneous	20881	Teflon FEP	Dupont			1			A				A	-		
		Tape miscellaneous	05822	Glass 3M-69	3M			1			A				X	-		
32		Spot bonding	62237	Uralane 5753 LV	Furank			-			X				-	B		

CD 3

MATERIAL IDENTIFICATION AND USAGE LIST

Advanced Composition Explorer (ACE)

DOCUMENT NO.
DOCUMENT REV. LTR.
ORIGINAL ISSUE DATE 1-27-94
REVISION DATE

NOMENCLATURE SIS/CRIS/GSFC

Non-Metallics

PART/DWG NUMBER	REV LTR	NOMENCLATURE	MATERIAL IDENTIFICATION					NONMETALLIC MATERIAL			USAGE EVAL.						MUA STATUS	REMARKS (SPECIAL CURE, ETC)
			MAT'L CODE	MATERIAL DESCRIPTION	MATERIAL MFGR	MATERIAL SPEC	PROCESS SPEC	WT	THK	AREA	FLM	AGE	SCC	COR	TVS	TOX		
1		Adhesive/PWB	0007	EA 934WA	Hysol						A				B	B		7D @ RT
2		Adhesive/PWB	---	Eccobound 295/9	E&C						-				-	-		3HR @ 50C
3		Adhesive	67532	CV 1142							-				-	-		7D @ RT
4		ADH/RING/TELE	67532	CV 1142							-				-	-		7D @ RT
5		ADH/RING/TELE	67532	CV 1142							-				-	-		7D @ RT
6		Adhesive/PWB	---	CV 2946							-				-	-		7D @ RT
7		Honeycomb	---	FM-410-1							-				-	-		1.5HR @ 120C
8		Honeycomb	85439	FM-73/BR127							A				-	-		1HR @ 120C
9		Ink/PWB	---	Markem 7906							-				-	-		2HR @ 121C
10		TELE Internal HSG	68623	Delrin 507 & 601							-				-	-		
11		Thermal Control	---	Mylar/ ITO/VDA							-				-	-		
12		Thermal Control	---	Kapton/ ITO/VDA							-				-	-		
13		TELE Dust Cover	05946	Kapton Film							A				B	V		
14		Purge System	61407	Teflon Tubing							A				A	A		
15		Shrink Tubing	---	Kynar Fit-350							-				-	-		
16		Conformal Coating	20208	Uralene 5750 LV A/B							X				B	X		7D @ RT
17,18		Staking/Potting Thickener	62237	Uralene 5753 LV A/B Cab-O-Sil M-5							X				-	B		7D @ RT

DOCUMENT NO.
DOCUMENT REV. LTR.
ORIGINAL ISSUE DATE 1-27-94
REVISION DATE

MATERIAL IDENTIF. ION AND USAGE LIST

Advanced Composition Explorer (ACE)

NOMENCLATURE SIS/CRIS/GSFC

Non-Metallics

PART/DWG NUMBER	REV LTR	NOMENCLATURE	MATERIAL IDENTIFICATION					NONMETALLIC MATERIAL			USAGE EVAL.						MUA STATUS	REMARKS (SPECIAL CURE, ETC)
			MAT'L CODE	MATERIAL DESCRIPTION	MATERIAL MFGR	MATERIAL SPEC	PROCESS SPEC	WT	THK	AREA	FLM	AGE	SCC	COR	TVS	TOX		
19		Cable Ties	60439	18 DPTH (Lot 800X)							X				A	-		
20		Tape/PWB & Heaters	05295	Temp-R-K102							A				C	U		
21		Insulation	05379	Vespel SP-5							A				A	V		
22		PWB	05161	Polyimide Laminate							A				A	A		
23		Minco Heaters	06531	3M Y96							A				X	A		
24		Thermal Control Electrical Isolation	20139	G-10 Epoxy							-				A	K		
25		LEMT Foils	06190	Epon 828/ Versamid 140/ADH (1/1)/4 Silflake Silflake 135							X				B	A		7D @ RT
26		Thermal Control	65127	Silver/Teflon							A				A	-		

SIS Electronic Fabrication Process List

Process	Document / Specification
Fab & Inspection of multilayer boards	
Procurement documents being identified for all items	
Forming of leads on EEE parts	
Preparation and soldering of EEE parts to PWBs • tinning (and retinning) • hand solder • vapor phase reflow • IR reflow	*Specific process documents are being identified for all of the processes listed* *List to be complete by PDR*
Removal of surface mount and through hole mounted parts from PWBs	
Cleaning before and after soldering • Parts • PWBs	
Conformal coating • PWBs	
Spot Bonding of EEE parts and cables	
Installation of swage terminals	
Preparation and soldering of wires and coax to terminals	
"Chip-on-Board" processes	

SIS Process List for Mechanical Parts

1.	Iridite per MIL-C-5541, Class 3	Review by J. Repar Complete
2.	Black Anodize per MIL-A-8625, Type R, Class 2	Review by J. Repar Complete
3.	Copper Flash per MIL-C-14550, Class 4	Review by J. Repar Complete
4.	Nickel Strike per QQ-N-290-, Class 2	Review by J. Repar Complete
5.	Gold Plate per MIL-G-45204, Type 1, Class 3	Review by J. Repar Complete
6.	Black Nickel per MIL-C-18317	Review by J. Repar Complete
7.	Passivate per MIL-S-5002	Review by J. Repar Complete

SIS PDR

Section 13

Reliability

2/24/94

Reliability

- Identification and Control of Limited−Life Items

  * **Limited−life items:**

    Preliminary review fo all identified materials and processes indicates that no limited−life items are present

  * **Control:**

    All limited−life items that may have a useful life expectancy less than mission design will be controlled to ensure adequate life−time, e.g.,

    Thermal surfaces
    Humidity controls
    Minimization of shelf life

2/24/94

Reliability (continued)

- EEE Parts Deratings
  - GSFC PPL 20 criteria are used for parts deratings
  - Exceptions are certain tantalum capacitors in the PHA hybrid, in which case 50% derating was used instead of 60% to avoid going to a bigger package size

I/F FMECA

Interfaces Analyzed
- Command
- Data/Telemetry

Preliminary Analysis
- Performed by C. Faulkner (JPL)

Conclusion (Based on Preliminary Design)

No single point failures were found the could propagate across the interface or cause the complete loss of communications with an instrument.

Comment
- Pay particular attention to the command enable lines associated with the redundant command interfaces during system design to make certain that a false enable on one will not disable the other command input.

Next Steps
- Update analysis based upon the final design
- Pay attention to the command enable design comment
- Complete analysis of power interfaces

Reliability (continued)

- Provisions for Reviewing/Evaluating Alerts
  - We provide parts and materials lists to PMO
  - PMO will have lists reviewed by JPL and enter into database
  - We rely on PMO to review/evaluate against Alerts
  - Action will depend on engineering judgement & cost and schedule impact

Reliability (continued)

- Parts & Materials Sparing Philosophy
  - ∗ **Detectors/modules: Covered in Section 4**
  - ∗ **Other EEE parts:**

    Minimum of $1+\sqrt{N}$, where N is the number of the parts of a given type used in the instrument.

2/24/94

Reliability (continued)

- Parts Storage Provisions
  - Hybrids will be stored under dry N_2 purge in locked metal cabinet
  - Silicon detectors are stored in cabinets under dry N_2 purge
  - Other EEE parts will be stored in ESD protective bags or boxes in locked, grounded metal cabinets

Reliability (continued)

- Configuration Control Practices
  - * Will use the ACE Bulletin Board or database to post information about drawings
  - * A file will be set up for each institution/company making drawings
  - * Each file will contain drawing number, title, latest revision letter & date, whether or not there are red−line corrections on the drawing, and who to contact for more information
  - * Anyone can read the files, but data can only be entered by the Experiment Manager or the Deputy Experiment Manager
  - * All drawings will be under this internal configuration control; will start between PDR and CDR when files are established

2/24/94

Reliability (continued)

- Configuration Control Practices (continued)

  * **Configured Articles List and dates baselined (for "external" configuration control):**

1.	IFRD	at CDR
2.	EEE Parts List	at CDR
3.	Materials List	at CDR
4.	Processes List	at CDR
5.	Electrical ICD	at I/F CDR
6.	Mechanical ICD	at I/F CDR

  * **As changes to drawings come into Experiment Manager, they will be reviewed to see if any of the items under external configuration control are affected. If so, appropriate change requests will be made per the ACE Payload Configuration Management Plan document.**

2/24/94

Reliability (continued)

- Discrepant Item Control & Failure Reporting Plans
  - Discrepant items will be handled via procedures in the SIS IAIP.
  - Failure reporting will begin at the instrument level with the first application of power during the first environmental test
  - Failure reporting will be per the IAIP

Reliability (continued)

- Workmanship & Inspection Practices

  * **Use standards from previous programs and/or NHB 5300.**

REPORT DOCUMENTATION PAGE

Form Approved
OMB No. 0704-0188

Public reporting burden for this collection of information is estimated to average 1 hour per response, including the time for reviewing instructions, searching existing data sources, gathering and maintaining the data needed, and completing and reviewing the collection of information. Send comments regarding this burden estimate or any other aspect of this collection of information, including suggestions for reducing this burden, to Washington Headquarters Services, Directorate for Information Operations and Reports, 1215 Jefferson Davis Highway, Suite 1204, Arlington, VA 22202-4302, and to the Office of Management and Budget, Paperwork Reduction Project (0704-0188), Washington, DC 20503.

1. AGENCY USE ONLY (Leave blank)

2. REPORT DATE

3. REPORT TYPE AND DATES COVERED

4. TITLE AND SUBTITLE

SIS PDR, February 24, 1994

5. FUNDING NUMBERS

6. AUTHOR(S)

A. Cummings

7. PERFORMING ORGANIZATION NAME(S) AND ADDRESS(ES)

California Institute of Technology
Pasadena, CA 91125

8. PERFORMING ORGANIZATION REPORT NUMBER

9. SPONSORING/MONITORING AGENCY NAME(S) AND ADDRESS(ES)

NASA - GSFC
Greenbelt, MD 20771

10. SPONSORING/MONITORING AGENCY REPORT NUMBER

11. SUPPLEMENTARY NOTES

12a. DISTRIBUTION/AVAILABILITY STATEMENT

12b. DISTRIBUTION CODE

13. ABSTRACT (Maximum 200 words)

Solar Isotope Spectrometer (SIS) Instrument of the Advanced Composition Explorer (ACE) Mission Preliminary Design Review Presentation Package.

14. SUBJECT TERMS

15. NUMBER OF PAGES
223

16. PRICE CODE

17. SECURITY CLASSIFICATION OF REPORT	18. SECURITY CLASSIFICATION OF THIS PAGE	19. SECURITY CLASSIFICATION OF ABSTRACT	20. LIMITATION OF ABSTRACT
UNCL	UNCL	UNCL	

NSN 7540-01-280-5500

Standard Form 298 (Rev. 2-89)
Prescribed by ANSI Std. Z39-18
298-102