Advanced Composition Explorer Mission

Cosmic Ray Isotope Spectrometer (CRIS)

Preliminary Design Review

Caltech

22–23 February 1994

(NASA-CR-195205) ADVANCED COMPOSITION EXPLORER MISSION. COSMIC RAY ISOTOPE SPECTROMETER (CRIS) PRELIMINARY DESIGN REVIEW, 22-23 FEBRUARY 1994 (California Inst. of Tech.) 274 p

N94-71723

Unclas

Z9/35 0208836

2/22–23/94

AGENDA for CRIS Preliminary Design Review (ver. 2/22/94)
2/22/94 - 2/23/94
102 IPAC, Caltech, Pasadena CA
Day 1 - Tuesday - February 22, 1994

	13:30	**Welcome & Meeting Logistics**	**Stone**
	13:40	**Introductions & Review Protocols**	**Swenson**
	13:50	**Incorporate Changes**	
1	14:00	**Experiment Objectives and Approach**	**Mewaldt**
		1.1 Particle Acceleration in the Heliosphere	
		1.2 Spectra of Energetic Oxygen Nuclei	
		1.3 Isotopic & Elemental Composition	
		1.4 Primary Scientific Objectives, Approach, and Capabilities	
		1.5 CRIS Sketch (side view)	
		1.6 Isotope Identification Technique	
		1.7 Example Raw Data from HIST/ISEE-3	
		1.8 Key Design/Performance Requirements	
		1.9 Additional CRIS Performance Requirements	
		1.10 CRIS Response	
		1.11 Collecting Power	
		1.12 Cosmic Ray Isotope Event Rates	
2	14:20	**Overview of Instrument Development Plans**	**Cummings**
		2.1 Instrument Development Organization	
		2.2 Division of Responsibilities by Institution	
		2.3 Division or Responsibilities by Experiment Element	
		2.4 Organization Chart	
		2.5 Work Breakdown Structure	
		2.6 CRIS Development Gantt Schedules	**Grumm**
		2.7 CRIS SOFT Hodoscope Gantt Schedule	
		2.8 CRIS Stack Detector Development Schedule	
		2.9 CRIS Mechanical Schedule	
		2.10 CRIS GSE Development Schedule	
		2.11 BB Electronic Development & Testing	
		2.12 ACE Phase C/D Master Schedule	
3	14:50	**Instrument Overview**	**Cook**
		3.1 Functional Block Diagram	
		3.2 Design Emphasizes Simplicity	
		3.3 Key Design Features, Packaging	
		3.4 Key Design Features, Electronics	
		3.5 Key Design Features, Redundancy	
		3.6 Key Design Features, Health Monitoring Built-in	
		3.7 Key Design Features, Flight Software	
	15:10	**BREAK**	

4	15:30	**Solid State Detectors**	**Wiedenbeck**
		4.1 Detector Overview, Single Groove Design	
		4.2 Double Groove Design	
		4.3 Functional Description	
		4.4 Fabrication Techniques	
		4.5 Requirements, Thickness Uniformity	
		4.6 Requirements, Continuous Bias	
		4.7 Requirements, Contamination Prevention	
		4.8 Requirements, Radiation Resistance	
		4.9 Requirements, Radiation Resistance (cont.)	
		4.10 Key Specifications	
		4.11 Phase B Detector Activities, Silicon Source Evaluation	
		4.12 Phase B Detector Activities, Prototype Detector Fabrication	
		4.13 Phase B Detector Activities, Tests of Prototypes at MSU Cyclotron	
		4.14 Phase B Detector Activities, LiD Detector Thickness Profiles	
		4.15 Phase B Detector Activities, Mass Resolution	
		4.16 Detector Fabrication and Testing, Detector Fabrication & Testing	
		4.17 Detector Fabrication and Testing, Silicon Detector Spares Approach	
		4.18 Detector Fabrication and Testing, Detector Testing Plan	
		4.19 Detector Fabrication and Testing, Planned Tests (cont.)	
		4.20 Calibration Plan, Detector Calibrations	
		4.21 Calibration Plan, Telescope Calibrations	
	16:30	**ADJOURN Day 1**	

AGENDA for CRIS Preliminary Design Review (ver. 2/22/94)
Day 2 - Wednesday - February 23, 1994

5	08:30	**Scintillating Optic Fiber Telescope (SOFT)**		**Binns**
		5.1	SOFT Team	
		5.2	SOFT Hodoscope, Top and Side Views	
		5.3	Fiber Output Format	
		5.4	Image Intensifier Assembly	
		5.5	Photo, SOFT MSU Instrument (Entry Window View)	
		5.6	Photo, SOFT MSU Instrument (Side View)	
		5.7	Photo, Camera Electronics Board	
		5.8	Spatial Resolution of Fiber Hodoscope for Iron Nuclei	
		5.9	Single Fiber Layer Detection Efficiency Measurements	
		5.10	Event Detection Efficiency	
		5.11	Photo, Silicon Event	
		5.12	Photo, Oxygen Event	
		5.13	Photo, Helium Event	
		5.14	Pixel Cluster Centroids Superimposed	
		5.15	Pixel Cluster Intensity Sums	
		5.16	SOFT Dynamic Range	
		5.17	Summary of Accomplishments at MSU 12/93	
		5.18	Long Duration Test of Fibers	
		5.19	Photo, Fiber Drawing Machines	
		5.20	Photo, Fiber Transfer Mechanism	
		5.21	Photo, Two Fiber Planes	
		5.22	SOFT Detector Block Diagram	
		5.23	SOFT Detector Video Timing Diagram	
		5.24R	SOFT High Voltages	
		5.25	SOFT Accelerator Configuration	
		5.26	SOFT Data Stream	
		5.27	SOFT Centroid Algorithm	
		5.28	SOFT Algorithm Details	
		5.29	SOFT Algorithm, More Details	
		5.30	SOFT Algorithm, One Last	
		5.31	SOFT Bit Rate & Data Modes	
		5.32	SOFT Command List	
		5.33	SOFT Calibration & Mapping	
		5.34	Environmental Testing Status	
		5.35	Environmental Testing Plans	
		5.36	Flight Procurement Status	
		5.37	Fabrication Flow Chart	
		5.38	Reliability and Quality Assurance Approach	
		5.38A	SOFT Procedure, Plans, and Specifications	
		5.39	Risk Reduction Approach	
		5.40	Summary	
	10:15	**BREAK**		
6	10:30	**Preliminary Electrical Design of Instrument**		**Cook**
		6.1	Block Diagram	
		6.2	Analog Electronics	
		6.3	Stack VLSI PHA Performance	
		6.4	CRIS ADC Characteristics	
		6.5	CRIS Discriminator Characteristics	
		6.6	Precision Pulse Height Analysis Chain	
		6.7	Preamp/Postamp	
		6.8	Amplifier Offset, Gate	
		6.9	Capacitor-Charging Amp	
		6.10	Programmable Current Source	
		6.11	Electronic Calibration Plans	
		6.12	Electronic Calibration Plans (cont.)	
		6.13	Logic/Software	

6.14 Logic Implementation
6.15 Logic Flow
6.16 µP System
6.17 Spacecraft Interfaces
6.18 Logic Pulse Command Interface
6.19 Logic Pulse Command Timing
6.20 Data Command Interface
6.21 Data Command Timing
6.22 Serial Digital Telemetry Interface
6.23 Serial Digital Interface Timing
6.24 Grounding Approach
6.25 CRIS Grounding Diagram
6.26 Power Supply Interface
6.27 EMI Considerations
6.28 Low Voltage Power Supply Block Diagram
6.29 Power Supply Voltages
6.30 CRIS Power Requirement and Estimate Summary
6.31 Power Estimate Worksheet
6.32 Power Estimate Worksheet (cont.)
6.33 CRIS Bias Supply Block Diagram
6.34 Modular versus Custom
6.35 Modular versus Custom (cont.)
6.36 Typical Interface, CRIS/SOFT
6.37 SCD Electrical, CRIS to SOFT (1 of 2)
6.38 SCD Electrical, CRIS to SOFT (2 of 2)
6.39 ICD Electrical, CRIS Instrument
6.40 ICD Electrical, CRIS Instrument (cont.)

12:00 **LUNCH**

Trexel

7 **13:00** **CRIS Structure Mechanical Design**

7.1 CRIS/ACE Interface Control Drawing
7.2 CRIS Structure Mechanical Design, Attachment Points
7.3 Observatory Layout Side View
7.4 FOV Limitations
7.5 Observatory Layout Top View
7.6 Box Structure
7.7 Section Through Box Wall
7.8R Box Structure, FEA & CG
7.9 Finite Element Analysis
7.10 Vibration Testing, Sine Survey
7.11R Vibration Testing, Sine Burst
7.12 Vibration Testing, Instrument Random
7.13 Card Cage Approach
7.14 Cross Section Through "SOFT "Area
7.15R Cross Section Thru Det. Module Stack with "SOFT" Fiber Plane Spacing
7.16R Cross Section Through Electronics Box
7.17 CRIS Layout
7.18 Detector Modules
7.19 Detector Modules (cont.)
7.20 Requirements for Detector Alignment
7.21R Detector Board Stack Outline
7.22 Engineering Detector Modules Mounted to PCB
7.23R Typical Engineering Detector Module
7.24 Purging Requirements
7.25 Purge System
7.26 Preliminary Purge Schematic
7.27 Weight Estimate
7.28 Preliminary Internal Thermal Drawing
7.29 Preliminary External Thermal Drawing

8	14:15	**Thermal Design**	**Williams**
		8.1 PDR Thermal Topics	
		8.2 ACE S/C Orientation	
		8.3 Thermal Control Design	
		8.4 CRIS Thermal Requirements	
		8.5 Component Requirements	
		8.6 CRIS Hot and Cold Case Environments	
		8.7 CRIS Power Dissipation	
		8.8 CRIS Preliminary Thermal Design Approach	
		8.9 CRIS Thermal Isolation	
		8.10 Preliminary Thermal Design Approach (cont)	
		8.11 CRIS Heater Types	
		8.12 CRIS On Orbit Model	
		8.13 CRIS Internal Model 1. Top Half	
		8.14 CRIS Internal SOFT Det. Model, SOFT #2 ON S/C Temperature 40 C	
		8.15 CRIS Internal Electronics and Detectors, SOFT #2 ON S/C Temp. 40 C	
		8.16 CRIS Internal Fiber Planes, SOFT #2 ON S/C Temp. 40 C	
		8.17 CRIS Internal SOFT Detector Model, SOFT #2 ON S/C Temp. -10 C	
		8.18 CRIS Internal Electronics and Detectors, SOFT #2 ON S/C Temp. -10 C	
		8.19 CRIS Internal Fiber Planes, SOFT #2 ON S/C Temp. -10C	
		8.20 CRIS Preliminary Thermal Results	
		8.21 Thermal Design Conclusions	
		8.22 Thermal Open Issues	
	15:00	**BREAK**	
9	1515	**Flight Software**	**Cook**
		9.1 Introduction	
		9.2 Functional Requirements	
		9.3 Functional Requirements (cont.)	
		9.4 CRIS Data Format	
		9.5 Event & Echo Format	
		9.6 CRIS Normal Event Format	
		9.7 Housekeeping Data Format	
		9.8 CRIS Count Rate & Housekeeping Data Summary	
		9.9 Software Processes & Interrupts	
		9.10 Flight Software Development	
		9.11 Flight Software Control	
		9.12 Event Data Flow Diagram	
		9.13 CRIS Memory Usage	
		9.14 CRIS CPU Usage	
		9.15 CRIS Command State	
		9.16 CRIS Command State (cont.)	
10	15:45	**Ground Support Equipment**	**Wiedenbeck**
		10.1 EGSE Functions, Spacecraft Interface Simulation	
		10.2 EGSE Functions, Process Data from Instrument	
		10.3 EGSE Functions, Limit Checking	
		10.4 EGSE Functions, Commanding	
		10.5 Bench Test Configuration	
		10.6 Accelerator Calibration Configuration	
		10.7 Configuration Onboard Spacecraft	
		10.8 EGSE Software	
		10.9 Instrument Shipping	
11	16:00	**Environmental Test & Cal**	**Mewaldt**
		11.1 Environmental Test and Calibration	
		11.2 CRIS Instrument Test Matrix	

12	16:20	**Design Provisions for Specialized Instrument Requirements**	**Cummings**
		12.1 Provisions for Preserving the Integrity of Sensitive Elements	
		12.2 Plans & Provisions for Detector Replacements Before Launch	
		12.3 Plans & Provisions for Direct Access Before Launch	
		12.4 Plans & Provisions for the Use of Red-Tag/Green-Tag Items	
		12.5 Plans & Provisions for Calibrating in Flight	
		12.6 System Safety Considerations Identified for This Design	
		12.7 Operational Constraints Dictated by the Design Chosen	
13	16:35	**Parts, Materials, and Processes**	**Grumm**
		13.1 Electronic Parts	
		13.2 CRIS/SIS Parts (1 of 2)	
		13.3 CRIS/SIS Parts (2 of 2)	
		13.4 CRIS/SIS Parts (1 of 2)	
		13.5 CRIS/SIS Parts (2 of 2)	
		13.6 SOFT Parts List (1 of 5)	
		13.7 SOFT Parts List (2 of 5)	
		13.8 SOFT Parts List (3 of 5)	
		13.9 SOFT Parts List (4 of 5)	
		13.10 SOFT Parts List (5 of 5)	
		13.11 Radiation Effects	
		13.12 Electronic Parts List Review Summary	
		13.13 Materials	
		13.14 Preliminary Materials List	
		13.15 Electronic Fabrication Materials (1 of 2)	
		13.16 Electronic Fabrication Materials (2 of 2)	
		13.17 Usage List, Metals (GSFC), (1 of 2)	
		13.18 Usage List, Metals (GSFC), (2 of 2)	
		13.19 Usage List, Non-Metallics, (1 of 2)	
		13.20 Usage List, Non-Metallics, (2 of 2)	
		13.21 Usage List, SOFT Materials (1 of 3)	
		13.22 Usage List, SOFT Materials (2 of 3)	
		13.23 Usage List, SOFT Materials (3 of 3)	
		13.24 Electronic Fabrication Process List	
		13.25 Process List for Mechanical Parts	
14	16:50	**Reliability**	**Cook**
		14.1 Identification and Control of Limited-Life Items	
		14.2 EEE Parts Deratings/Worst Case Analyses	
		14.3 Failure Modes and Effects Analysis of Interfaces	
		14.4 Provisions for Reviewing/Evaluating Alerts	
		14.5 Parts & Materials Sparing Philosophy	
		14.6 Parts Storage Provisions	
		14.7 Configuration Control Practices	
		14.8 Configuration Control Practices (cont.)	
		14.9 Discrepant Item control & Failure Reporting Plans	
		14.10 Workmanship and Inspection Practices	
	17:10	**Summary and Wrap-Up**	**Swenson**
	17:30	**ADJOURN Day 2**	
		(This completes CRIS material. SIS PDR starts next day.)	

CRIS PDR

Section 1

Experiment Objectives and Approach

2/22–23/94

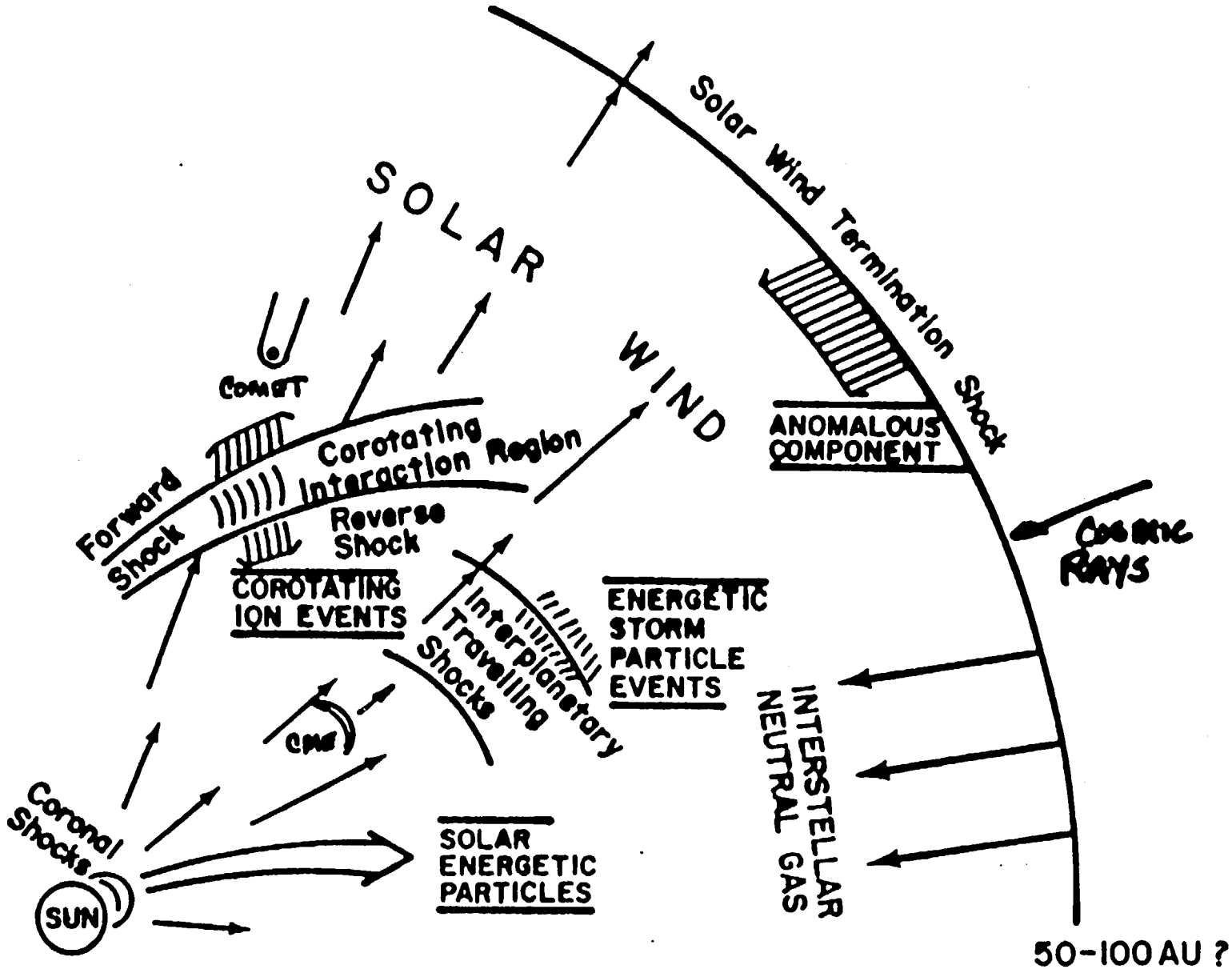

PARTICLE ACCELERATION IN THE HELIOSPHERE

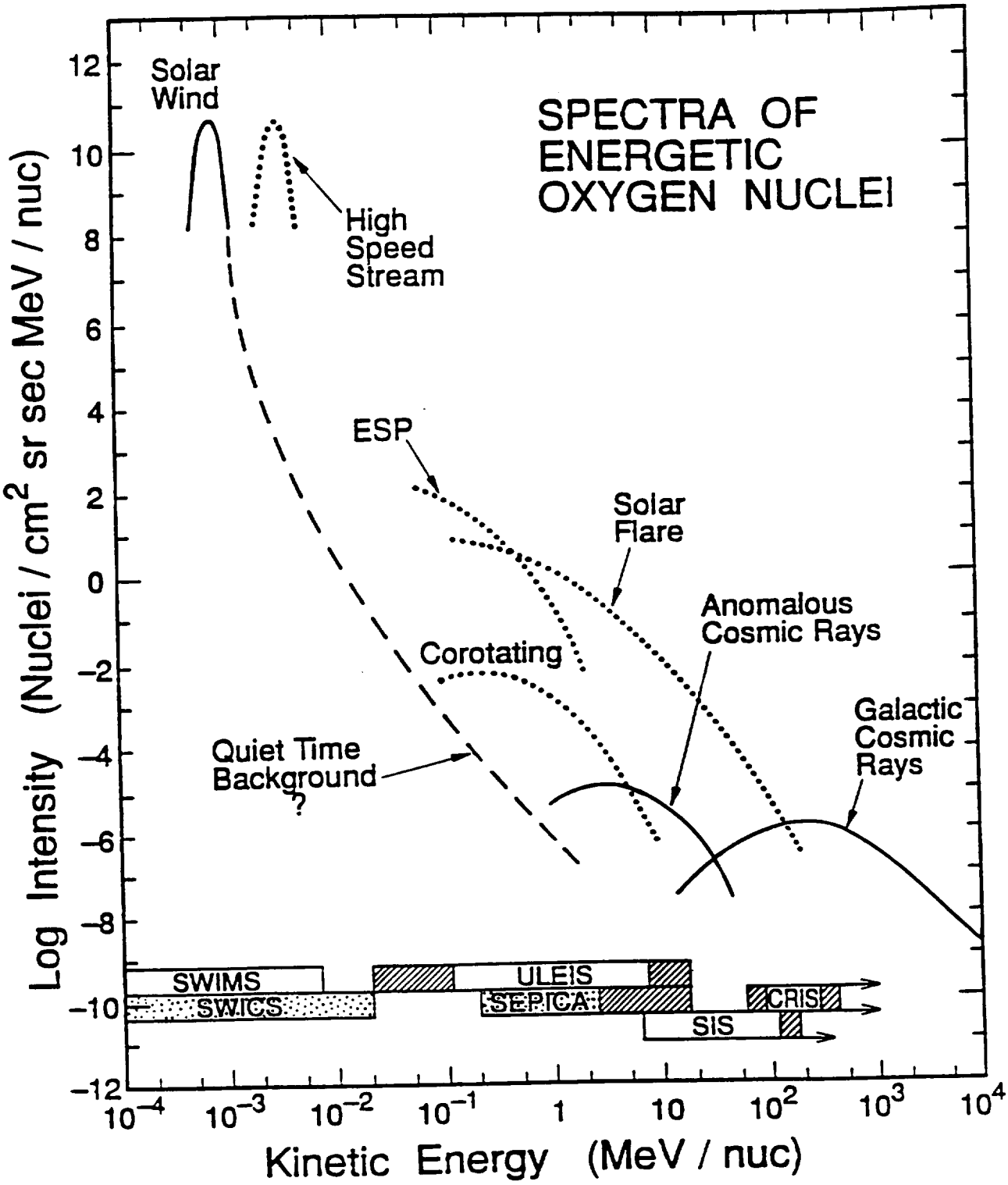
SPECTRA OF
ENERGETIC
OXYGEN NUCLEI
Solar
Wind
High
Speed
Stream
ESP
Solar
Flare
Anomalous
Cosmic Rays
Corotating
Galactic
Cosmic
Rays
Quiet Time
Background
?
SWIMS
SWICS
ULEIS
SEPICA
CRIS
SIS
Log Intensity (Nuclei / cm^2 sr sec MeV / nuc)
Kinetic Energy (MeV / nuc)
12
10
8
6
4
2
0
−2
−4
−6
−8
−10
−12
10^{-4}
10^{-3}
10^{-2}
10^{-1}
1
10
10^{2}
10^{3}
10^{4}

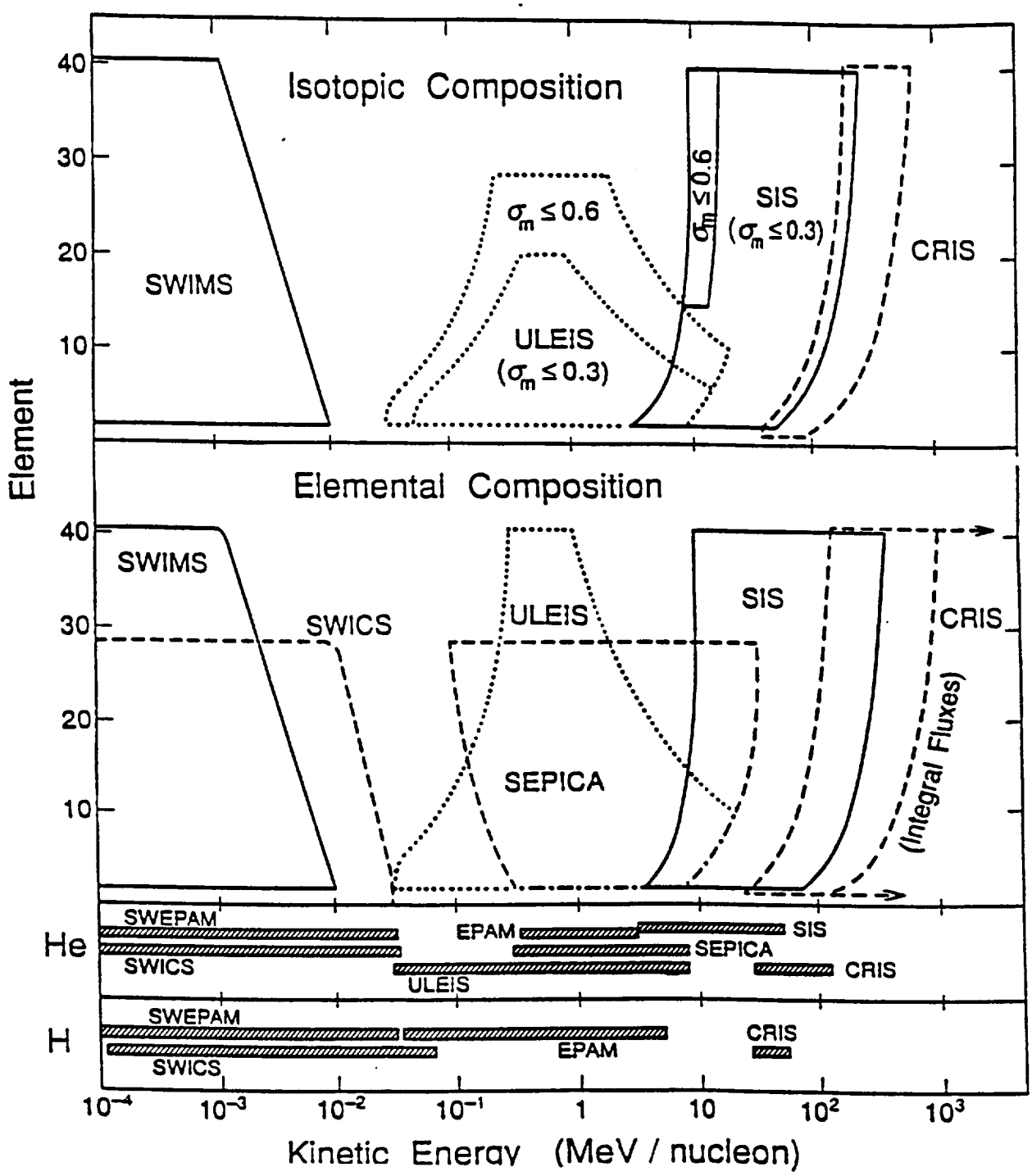
Isotopic Composition
Elemental Composition
Element
SWIMS
ULEIS
($\sigma_m \leq 0.3$)
$\sigma_m \leq 0.6$
$\sigma_m \leq 0.6$
SIS
($\sigma_m \leq 0.3$)
CRIS
SWICS
SEPICA
(Integral Fluxes)
He
H
SWEPAM
EPAM
SIS
SEPICA
SWICS
ULEIS
CRIS
SWEPAM
CRIS
EPAM
SWICS
Kinetic Energy (MeV / nucleon)

The Cosmic Ray Isotope Spectrometer (CRIS)

Primary Scientific Objectives

- Nucleosynthisis of cosmic ray source material
  - Isotopic composition differences from solar system material
- Measurement of cosmic ray "life-time" in the Galaxy
  - Based on abundances of radioactive "clock" nuclei (^{10}Be, ^{26}Al, ^{36}Cl)
- Measurement of cosmic ray acceleration time-scales
  - using Fe, Ni, Co electron capture isotopes

Approach

- Four independent telescopes composed of large-area silicon detectors
- Large-area Scintillating Optical Fiber Trajectory (SOFT) system
- Mass identification technique proven in space and accelerator experiments

Unique Measurement Capabilities

- Isotopic composition of all elements from He to Zn (Z=2 to 30)
  - Typical Mass resolution of ~0.2 amu
  - Kinetic energies from ~50 to 500 MeV/nuc
  - ~300 cm^2sr collecting power
- Identification of rare isotopes with >10x better collecting power
- Measurement of neutron-decay protons in solar flares
- Measurement of cosmic ray spectra critical to assessing radiation dangers for manned space flight

Cosmic Ray Isotope Spectrometer (CRIS)

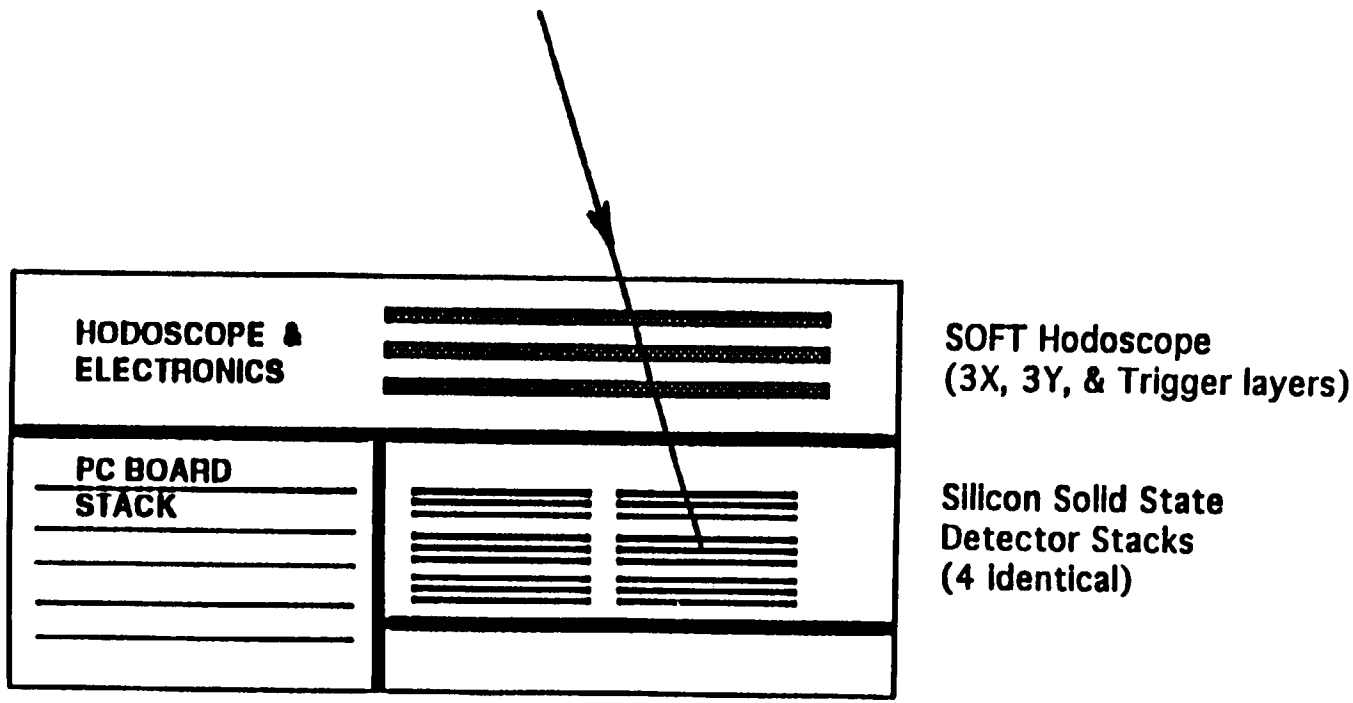

$A\Omega \simeq 300\ cm^2 sr$

$E \sim 50$ to 500 MeV/nuc

$Z \approx 2$ to 30 $M \approx 3$ to 70

ISOTOPE IDENTIFICATION USING THE ΔE·E' TECHNIQUE

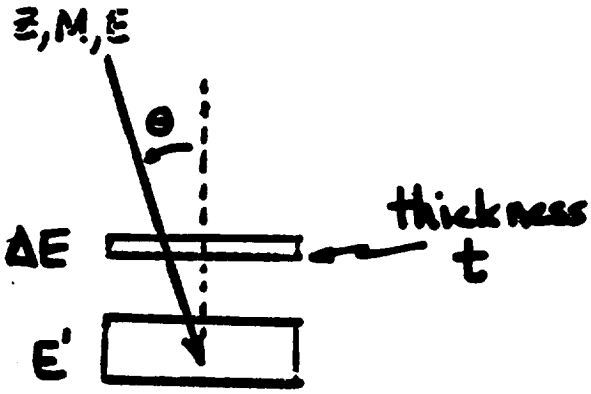

$$E' = E - \Delta E$$

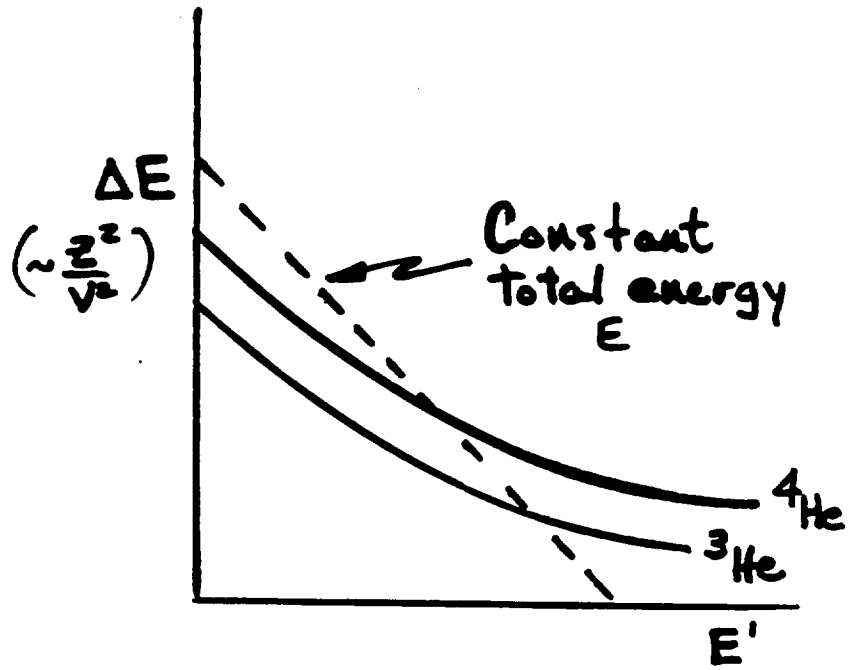

$$R(E, M, Z) = \frac{M}{Z^2} R_p(E/M)$$

$$R(E', M, Z) = R(E, M, Z) - t/\cos\theta$$

Solving for M

$$M = \frac{Z^2 t/\cos\theta}{R_p(E/M) - R_p(E'/M)}$$

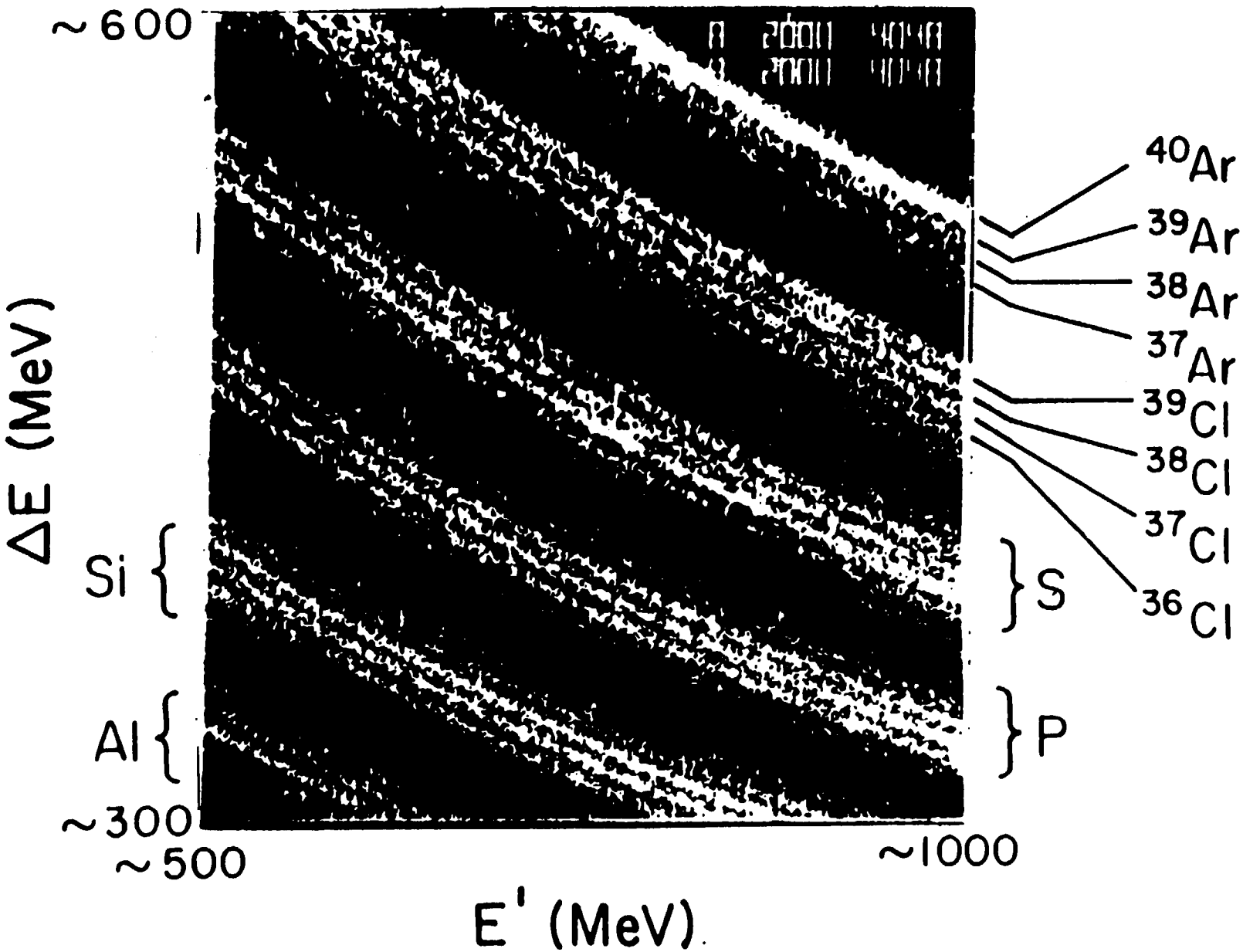
~600
ΔE (MeV)
Si
Al
~300
~500
~1000
E' (MeV)
40Ar
39Ar
38Ar
37Ar
39Cl
38Cl
37Cl
36Cl
S
P

Key Design/Performance Requirements for CRIS

	Requirement	Goal
Element range:	Be to Ni (Z = 4 to 28)	He to Zn (Z = 2 to 30)
Energy interval size for $_{14}$Si:	>100 MeV/nuc	>200 MeV/nuc
Charge resolution (rms)	$\delta Z \leq 0.1$ charge units	$\delta Z < 0.05$ cu
Mass resolution:	$\delta M \leq 0.2$ amu ($4 \leq Z 14$) $\delta M \leq 0.25$ amu ($15 \leq Z \leq 28$)	$\delta M \leq 0.15$ amu $\delta M \leq 0.25$ amu
Total kinetic energy resolution:	<2%	<1%
Geometry Factor:	>100 $cm^2 sr$	~200 $cm^2 sr$
Collecting Power (number of Si events/year suitable for isotope analysis @ solar min. conditions)	>5 x 10^4	~10^5
Measurement redundancy: (over primary energy range)	≥2 mass measurements	2 to 7 measurements
Operation in large solar flares:	not required	some data

Additional CRIS Performance Requirements

	Requirement	Goal
Hodoscope angular resolution:	≤0.1 deg @ 45 deg	
=> Position resolution	≤0.1 mm	≤0.06 mm
	<0.5 mm (for maps)	
Hodoscope redundancy:	Must verify st.-line trajectories	3 x, 3 y layers
Inactive material in FOV:	<0.1 g/cm^2	~0.07 g/cm^2
Event telemetry rate:	≥0.5/sec	~1/sec
Duty cycle (solar quiet time):	>90%	~100%
Pointing direction/accuracy	no requirement	each event
Field of View (primary)	45° half angle (four telescopes)	
(secondary)	60° half angle	

Commands: Ability to disable detectors, modify logic and analysis/readout priorities, and to adjust discriminators

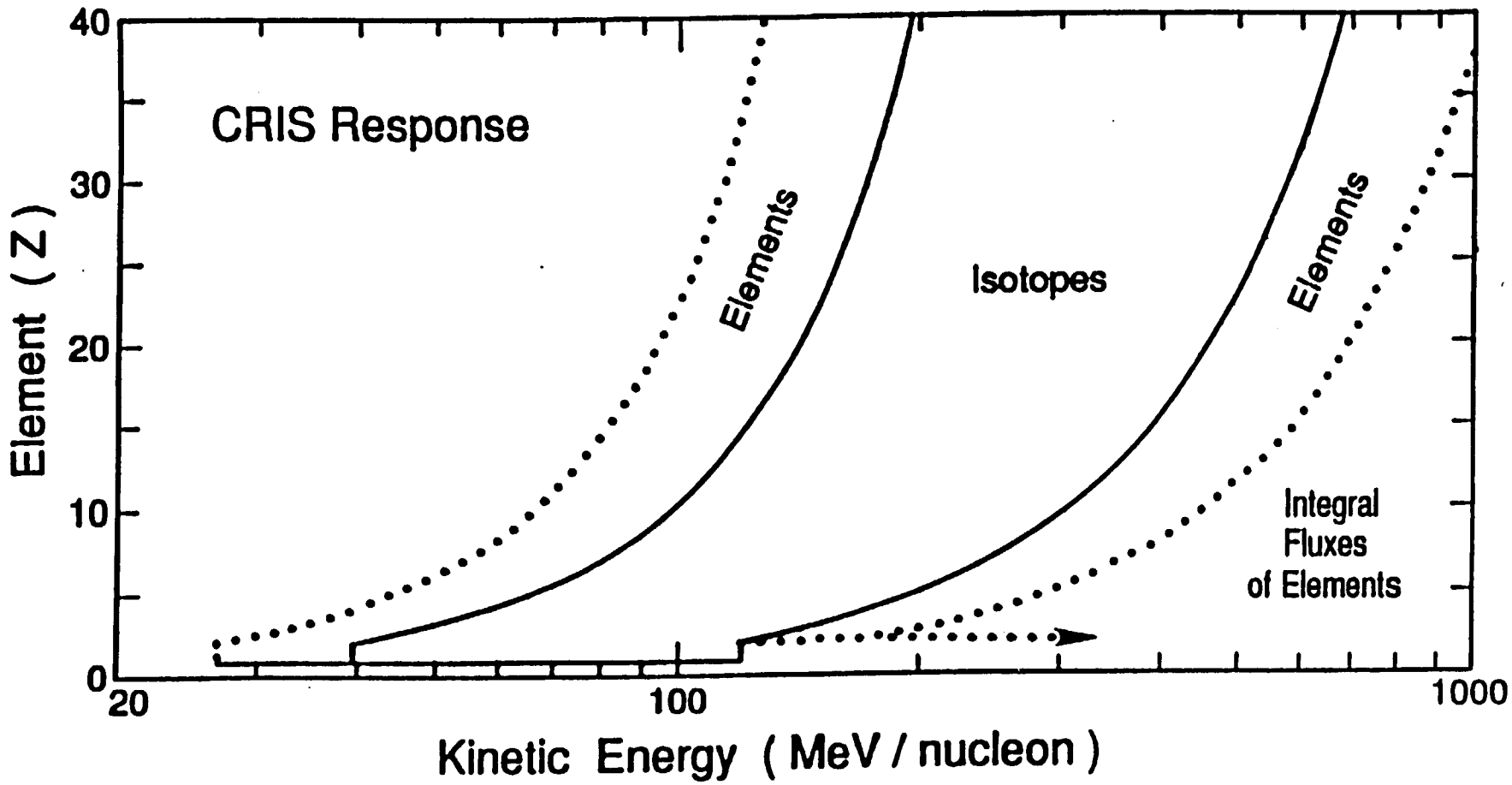
CRIS Response
Elements
Isotopes
Elements
Integral
Fluxes
of Elements
Element (Z)
40
30
20
10
0
20
100
1000
Kinetic Energy (MeV / nucleon)

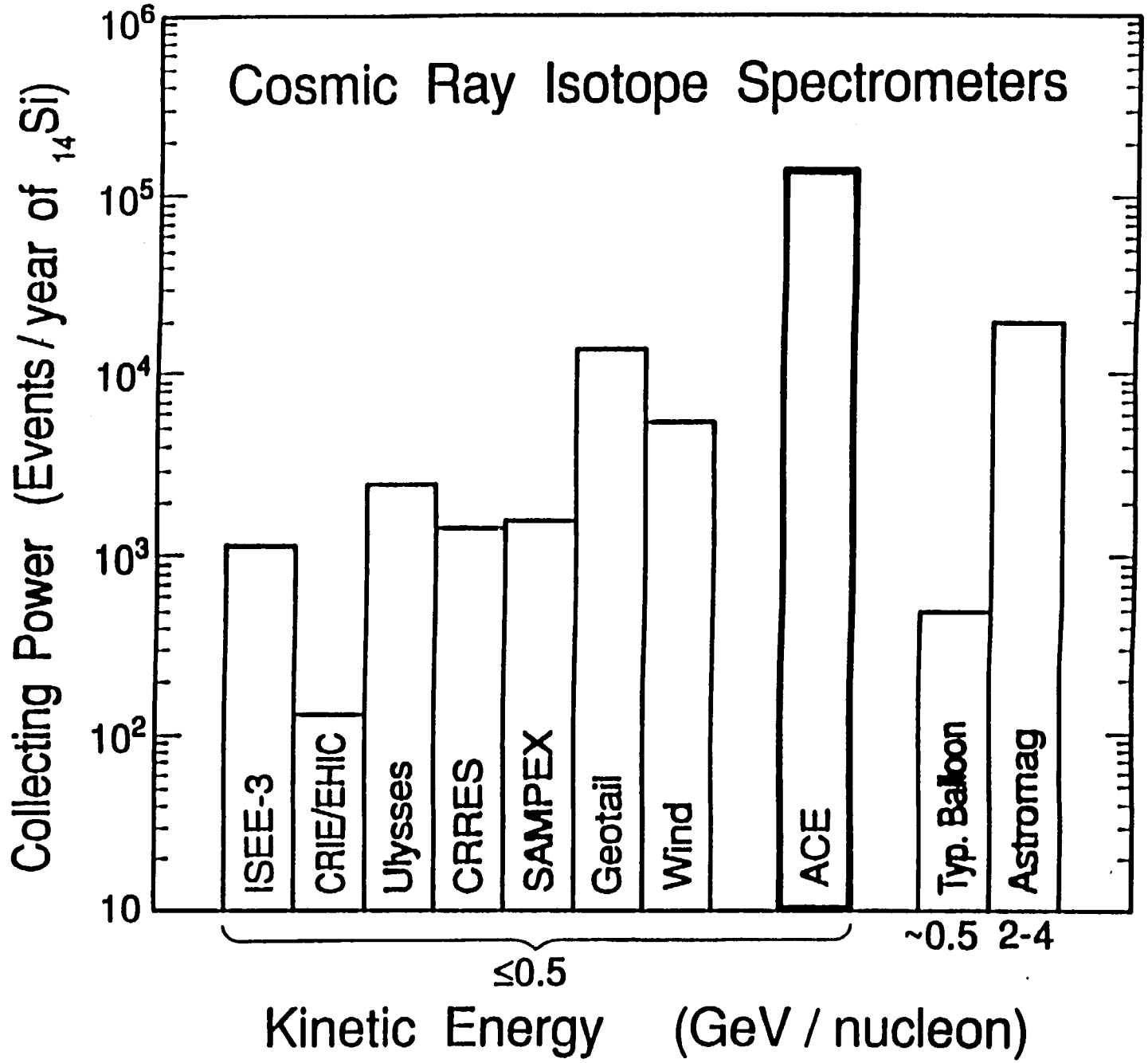
Cosmic Ray Isotope Spectrometers
Collecting Power (Events / year of $_{14}$Si)
10^6
10^5
10^4
10^3
10^2
10
ISEE-3
CRIE/EHIC
Ulysses
CRRES
SAMPEX
Geotail
Wind
ACE
Typ. Balloon
Astromag
≤0.5
~0.5
2-4
Kinetic Energy (GeV / nucleon)

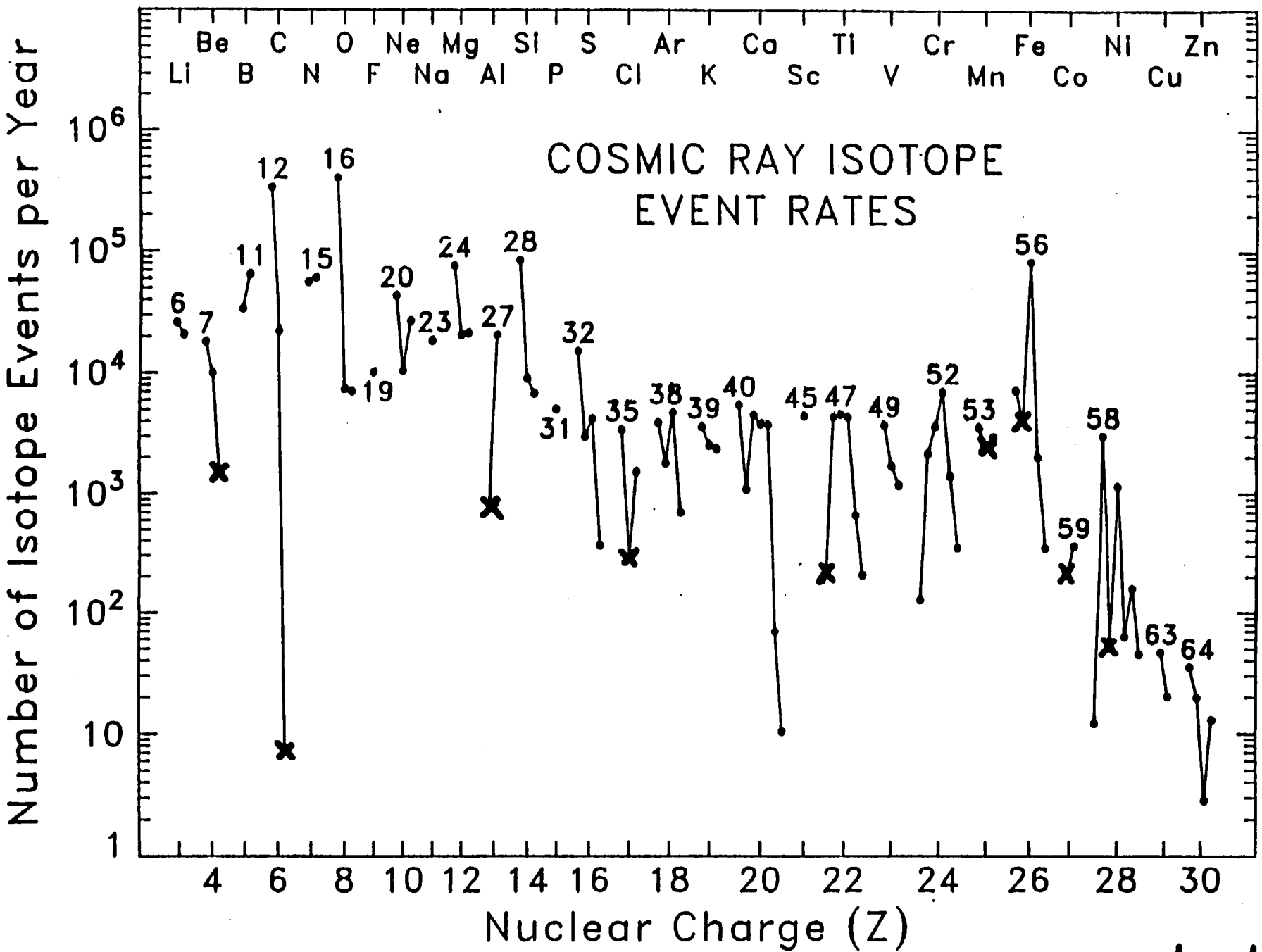

X ⇒ radioactive "clock"

CRIS PDR

Section 2

Overview of Instrument Development Plans

2/22–23/94

Overview of Instrument Development Plans

- **Instrument Development Organization**

  * **CRIS = Mech/Therm + SOFT System + Detectors + [illegible] + S/W + GSE**

* **Mech/Therm Design**	**GSFC 661/APL**	**von Rosenvinge/Williams**
* **Mechanical Fab (exc. SOFT)**	**GSFC 661**	**von Rosenvinge**
* **Mechanical Fab SOFT**	**Washington U.**	**Binns**
* **SOFT System**	**Washington U.**	**Binns**
* Detector Spec	JPL	Wiedenbeck
* Detector Fab	[illegible]	[illegible]
* Detector Test	**GSFC 661**	**von Rosenvinge**
* [illegible]	**Caltech**	**Cook**
* CRIS Software	**Caltech**	**Cook**
* GSE/Electrical	JPL	Wiedenbeck
* GSE/Mechanical	**GSFC 661**	**von Rosenvinge**
* **Assembly & Test**	**Caltech**	**Cook**
* **Instrument Level Calibration**	**Caltech**	**Mewaldt**

2/22–23/94

Overview of Instrument Development Plans (continued)

- Division of Responsibilities

Institution	Responsibilities
Caltech	Project management Stack VLSI design, procure, and test Flight software Stack detector design and procure Logic design Digital and analog board design, procure, and test Component level testing Instrument level environmental testing Instrument level Calibration S/C level testing and launch support Integration and test Technical support of design efforts at other institutions Specifications and management of procurements Analysis software
GSFC Code 661.0	Detector telescopes assembly and test Stack detector testing Detector contact design Instrument mechanical design, analysis, fabrication, (except SOFT) and test MGSE design, fabrication, and qualification Technical support of overall CRIS design effort
JPL	Quality assurance technical support Stack detector design Detector level accelerator tests EGSE design, assembly, and test including software Environmental test facilities Misc. technical support
APL	S/C to instrument thermal interface Internal thermal design Thermal blankets External instrument harness
Caltech subcontractors	Stack circuit VLSI design and fabrication Power supply design, fabrication, and test, including regulators and high voltage supplies
Washington University	SOFT system design, fab, and test

2/22–23/94

Overview of Instrument Development Plans (continued)

- Division of Responsibilities

Experiment Element	Specification & Functional Requirement	Design	Fab/ Assembly Or Procure-Ment	Functional Test Or Analysis	Qualification Test Or Analysis	Calibration	Quality / Config. Control	IDDP Input
Instrument level	CIT (and Co-Is)	CIT	N/A	CIT	CIT	CIT	CIT	CIT
SOFT Fiber System	Wash. U.	Wash. U.	Wash. U.	Wash. U.	Wash. U.	Wash. U.	Wash. U.	Wash. U.
SOFT Camera Electronics	Wash U.	Wash U.	Wash U./ Sub.	Wash U.	Wash U.	Wash U.	Wash U.	Wash U.
SOFT Image Intensifiers	Wash U.	Sub	Sub	Wash U.	Wash U.	Wash U.	Wash U.	Wash U.
SOFT High Voltage PS	Wash U.	Sub	Sub	Wash U.	Wash U.	Wash U.	Wash U.	Wash U.
Stack Detector	JPL	GSFC	Sub	**GSFC**	**GSFC**	**JPL/ GSFC**	GSFC	**JPL / GSFC**
Detector contacts	GSFC	GSFC	GSFC	GSFC	N/A	N/A	GSFC	GSFC
Telescope assembly	GSFC	GSFC	GSFC	GSFC	GSFC	N/A	GSFC	GSFC
Stack VLSI	CIT	CIT/Sub	Sub	CIT	CIT	CIT	CIT	CIT
EEE parts	CIT	N/A	CIT	CIT	N/A	N/A	CIT	CIT
Analog electronics	CIT	CIT/Sub	CIT/Sub	CIT	CIT	CIT	CIT	CIT
Digital electronics	CIT	CIT/Sub	CIT/Sub	CIT	CIT	CIT	CIT	CIT
Flight SW	CIT/ Wash. U.	CIT/ Wash. U.	CIT	CIT	CIT	CIT	CIT	CIT
Internal thermal control	CIT	GSFC/ APL	N/A	CIT (at board and part level)	**CIT/GSFC**	N/A	CIT	**GSFC**
Instrument housing	CIT	GSFC	GSFC	GSFC	GSFC (structural and dynamic analysis)	N/A	GSFC	GSFC
External thermal control	CIT	**GSFC/ APL**	**GSFC/ APL**	**GSFC/ APL (analysis)**	APL (at observatory level)	N/A	APL	**GSFC-part of IDDP**
Power supply	CIT/ Wash. U.	Sub	Sub	Sub	Sub (again at CIT)	N/A (instr. level)	Sub	Sub
MGSE	CIT/JPL	GSFC	GSFC	GSFC	GSFC	N/A	GSFC	GSFC
EGSE	CIT/JPL	JPL	JPL	JPL	JPL	N/A	JPL	JPL
EGSE S/W	CIT/JPL	JPL	N/A	JPL/CIT	JPL/CIT	N/A	JPL	JPL
Analysis S/W	CIT/JPL/ Wash. U.	CIT/JPL/ Wash. U.	CIT/JPL/ Wash. U.	CIT	CIT	N/A	CIT	CIT

2/22–23/94

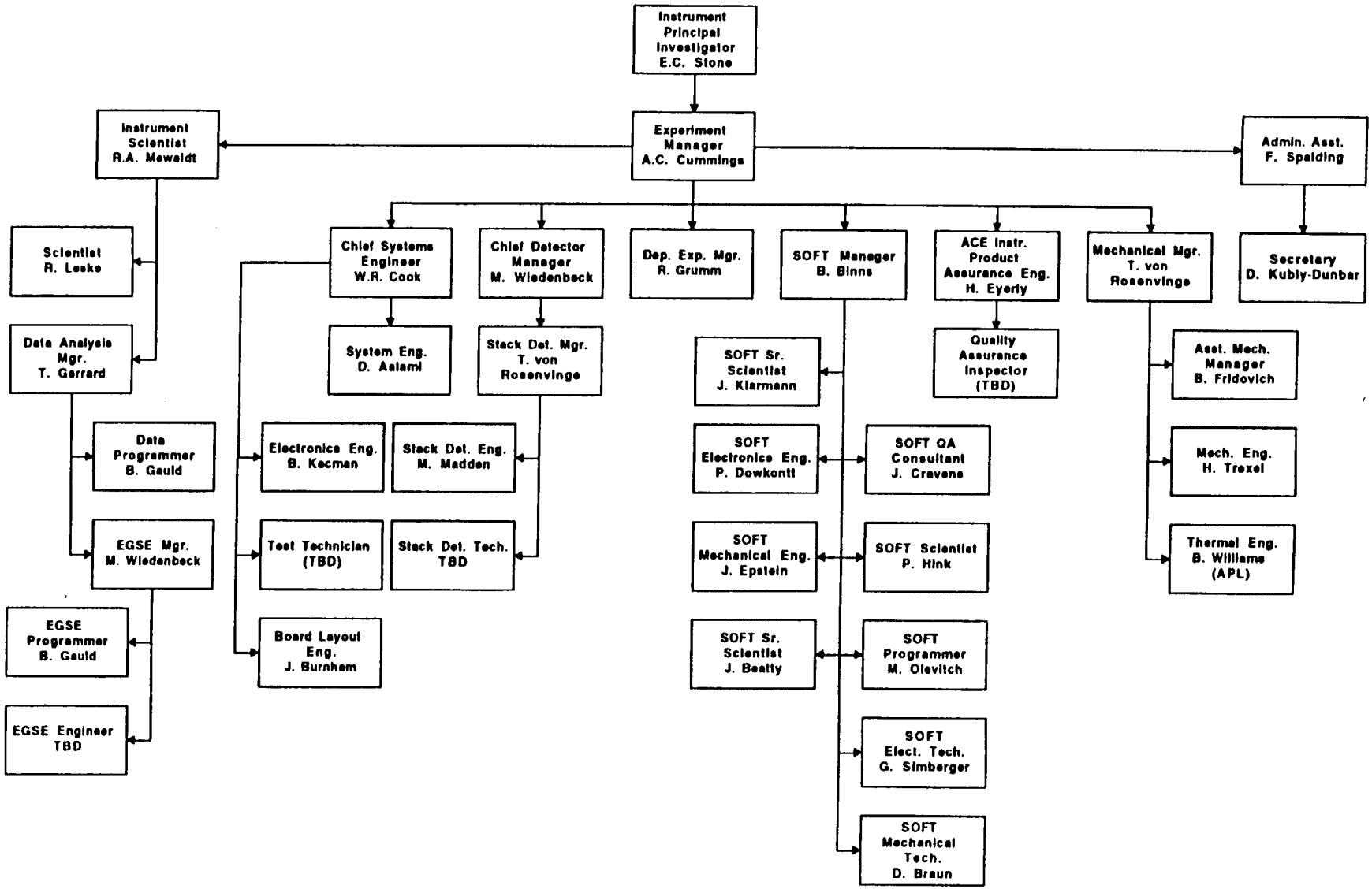

CRIS Organization Chart

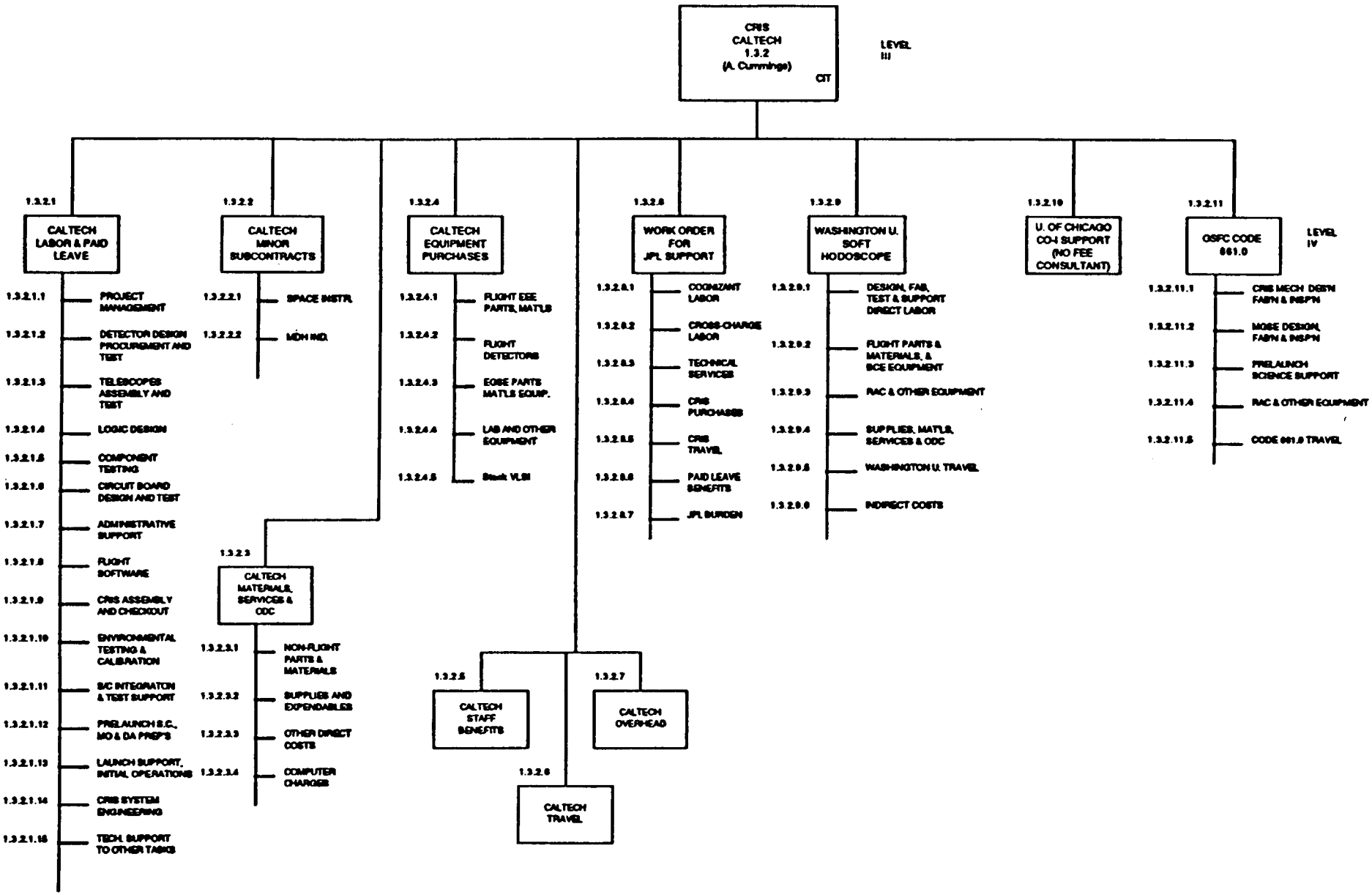
CRIS CALTECH 1.3.2 (A. Cummings) CIT
LEVEL III
1.3.2.1 CALTECH LABOR & PAID LEAVE
1.3.2.1.1 PROJECT MANAGEMENT
1.3.2.1.2 DETECTOR DESIGN PROCUREMENT AND TEST
1.3.2.1.3 TELESCOPES ASSEMBLY AND TEST
1.3.2.1.4 LOGIC DESIGN
1.3.2.1.5 COMPONENT TESTING
1.3.2.1.6 CIRCUIT BOARD DESIGN AND TEST
1.3.2.1.7 ADMINISTRATIVE SUPPORT
1.3.2.1.8 FLIGHT SOFTWARE
1.3.2.1.9 CRIS ASSEMBLY AND CHECKOUT
1.3.2.1.10 ENVIRONMENTAL TESTING & CALIBRATION
1.3.2.1.11 S/C INTEGRATON & TEST SUPPORT
1.3.2.1.12 PRELAUNCH S.C., MO & DA PREP'S
1.3.2.1.13 LAUNCH SUPPORT, INITIAL OPERATIONS
1.3.2.1.14 CRIS SYSTEM ENGINEERING
1.3.2.1.15 TECH. SUPPORT TO OTHER TASKS
1.3.2.2 CALTECH MINOR SUBCONTRACTS
1.3.2.2.1 SPACE INSTR.
1.3.2.2.2 MDH IND.
1.3.2.3 CALTECH MATERIALS, SERVICES & ODC
1.3.2.3.1 NON-FLIGHT PARTS & MATERIALS
1.3.2.3.2 SUPPLIES AND EXPENDABLES
1.3.2.3.3 OTHER DIRECT COSTS
1.3.2.3.4 COMPUTER CHARGES
1.3.2.4 CALTECH EQUIPMENT PURCHASES
1.3.2.4.1 FLIGHT EEE PARTS, MAT'LS
1.3.2.4.2 FLIGHT DETECTORS
1.3.2.4.3 EGSE PARTS MAT'LS EQUIP.
1.3.2.4.4 LAB AND OTHER EQUIPMENT
1.3.2.4.5 Stack VLSI
1.3.2.5 CALTECH STAFF BENEFITS
1.3.2.6 CALTECH TRAVEL
1.3.2.7 CALTECH OVERHEAD
1.3.2.8 WORK ORDER FOR JPL SUPPORT
1.3.2.8.1 COGNIZANT LABOR
1.3.2.8.2 CROSS-CHARGE LABOR
1.3.2.8.3 TECHNICAL SERVICES
1.3.2.8.4 CRIS PURCHASES
1.3.2.8.5 CRIS TRAVEL
1.3.2.8.6 PAID LEAVE BENEFITS
1.3.2.8.7 JPL BURDEN
1.3.2.9 WASHINGTON U. SOFT HODOSCOPE
1.3.2.9.1 DESIGN, FAB, TEST & SUPPORT DIRECT LABOR
1.3.2.9.2 FLIGHT PARTS & MATERIALS, & SCE EQUIPMENT
1.3.2.9.3 RAC & OTHER EQUIPMENT
1.3.2.9.4 SUPPLIES, MAT'LS, SERVICES & ODC
1.3.2.9.5 WASHINGTON U. TRAVEL
1.3.2.9.6 INDIRECT COSTS
1.3.2.10 U. OF CHICAGO CO-I SUPPORT (NO FEE CONSULTANT)
1.3.2.11 GSFC CODE 661.0
LEVEL IV
1.3.2.11.1 CRIS MECH DGSN FABN & INSP'N
1.3.2.11.2 MGSE DESIGN, FABN & INSP'N
1.3.2.11.3 PRELAUNCH SCIENCE SUPPORT
1.3.2.11.4 RAC & OTHER EQUIPMENT
1.3.2.11.5 CODE 661.0 TRAVEL

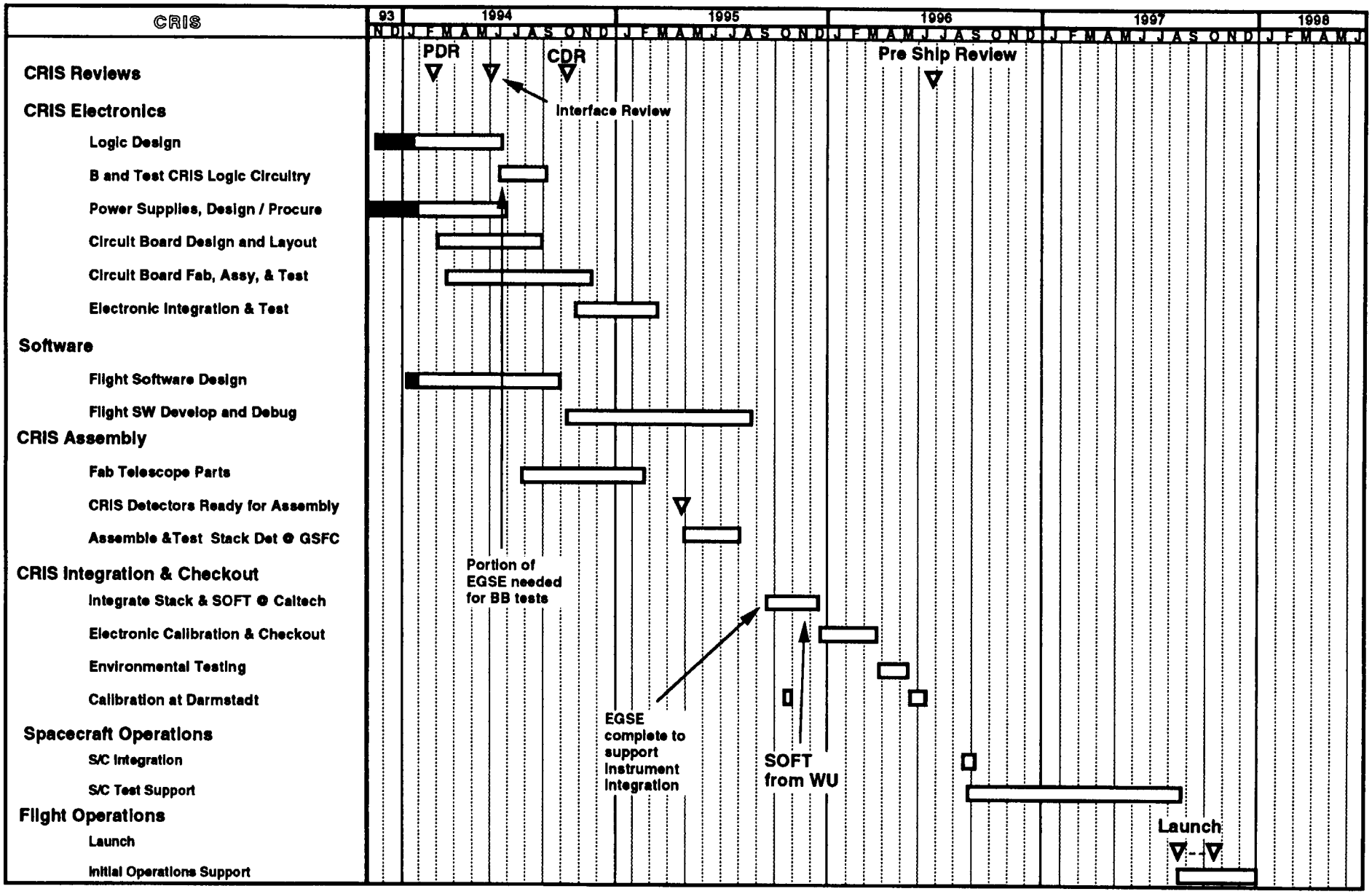

updated 2/3/94

CRIS Development Gantt Schedule

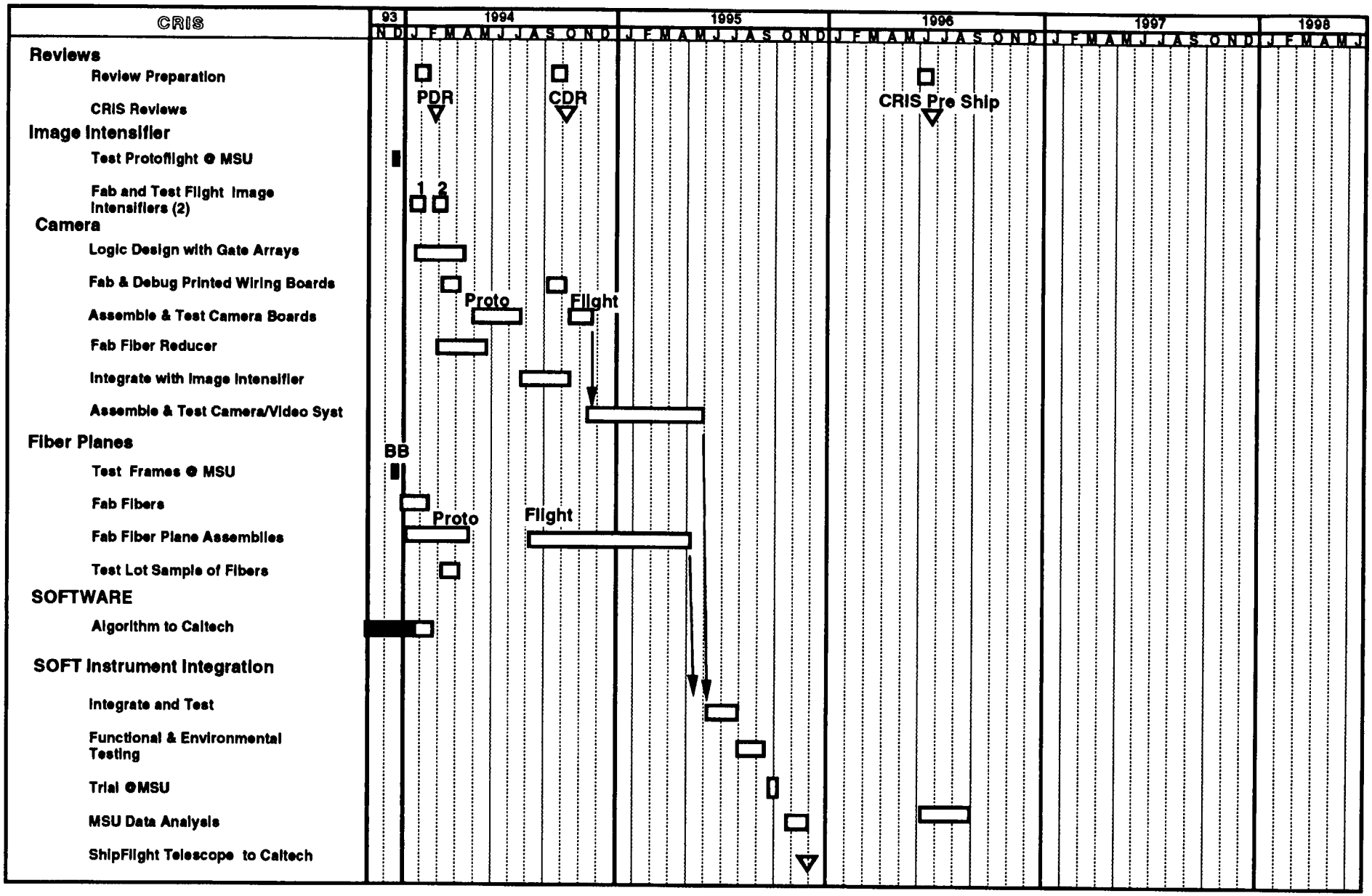

updated 2/3/94

CRIS SOFT Hodoscope Gantt Schedule

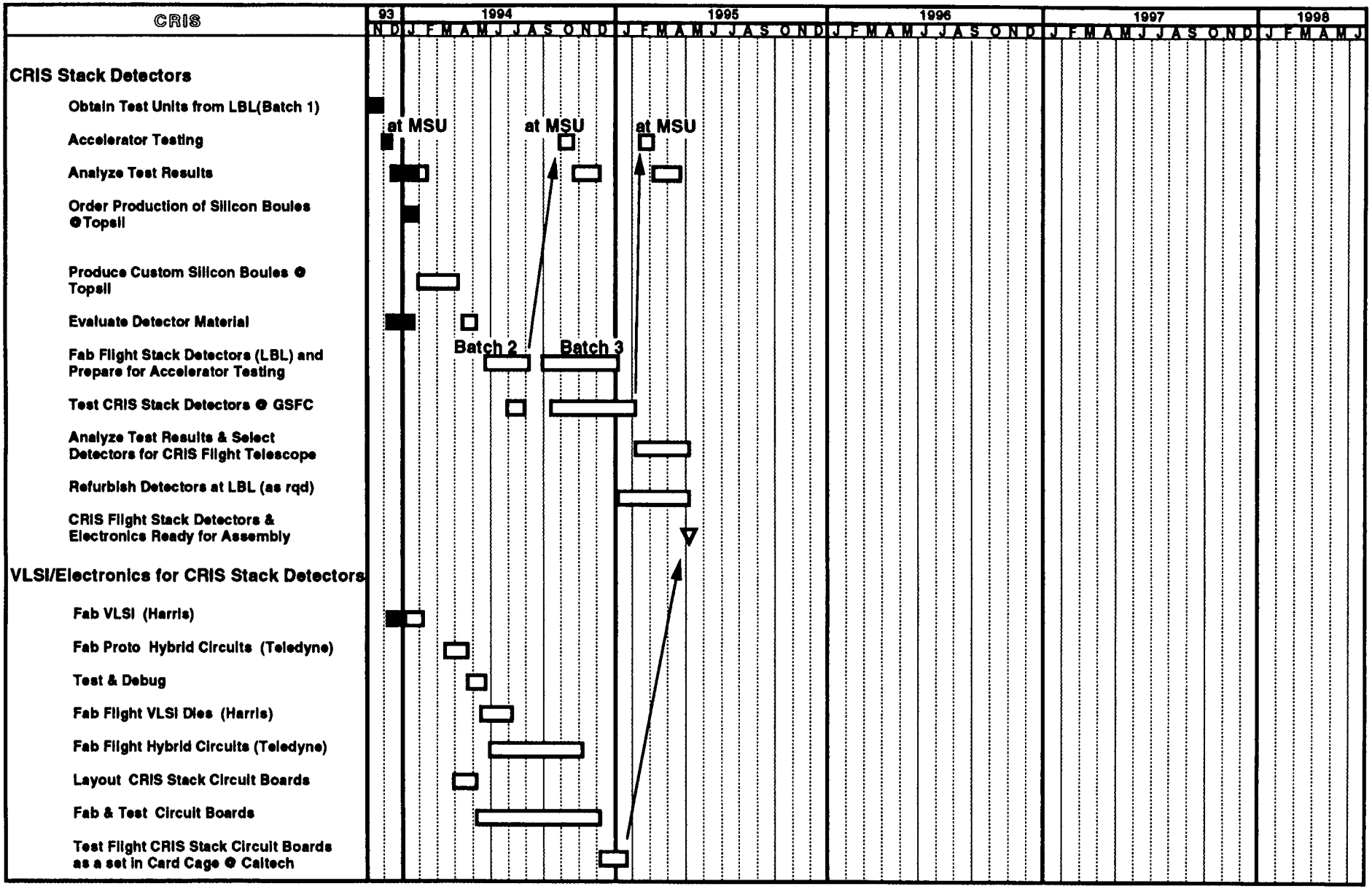

updated 2/7/94

CRIS Detector and Stack Development

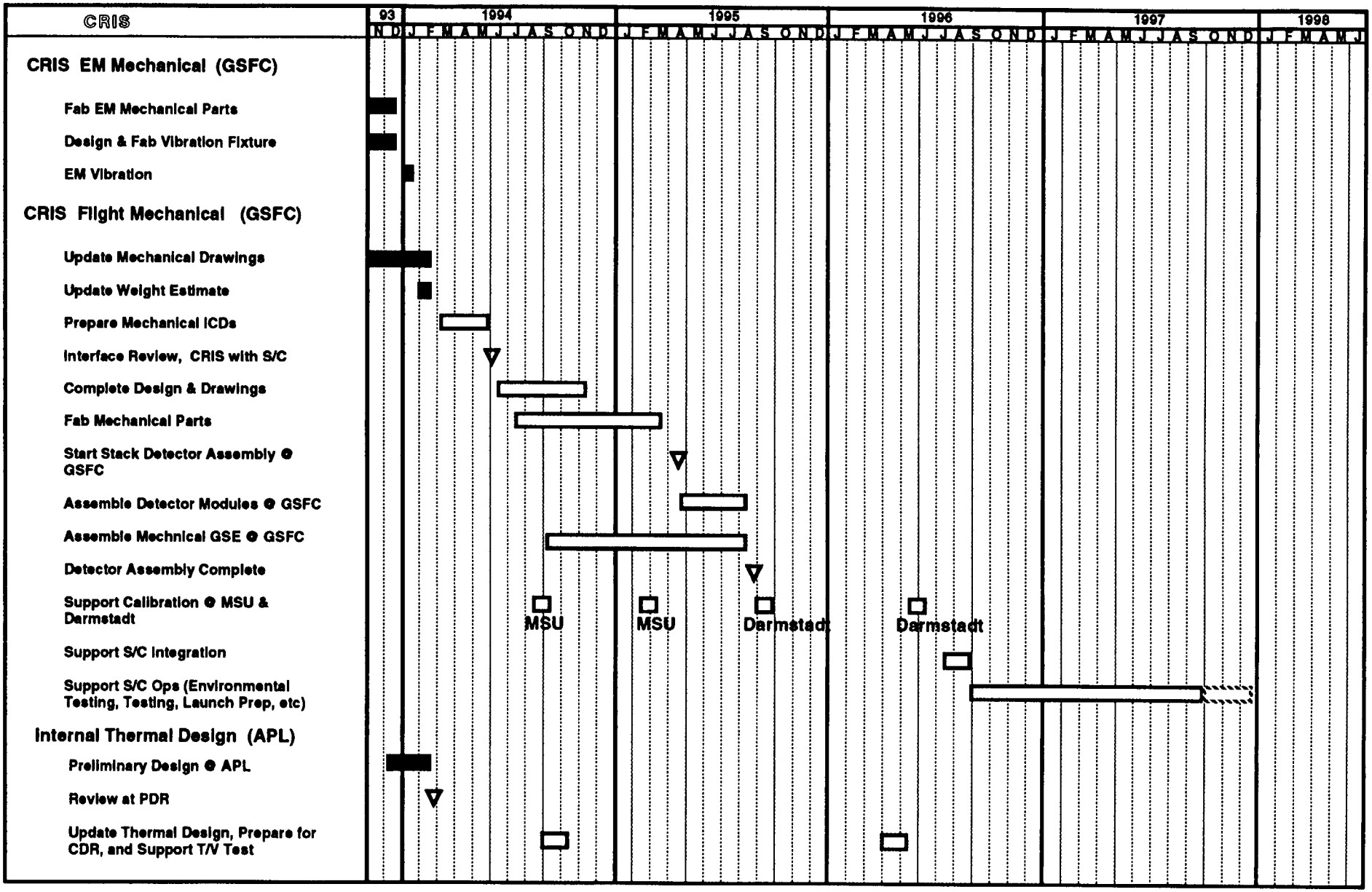

updated 1/28/94

CRIS Mechanical

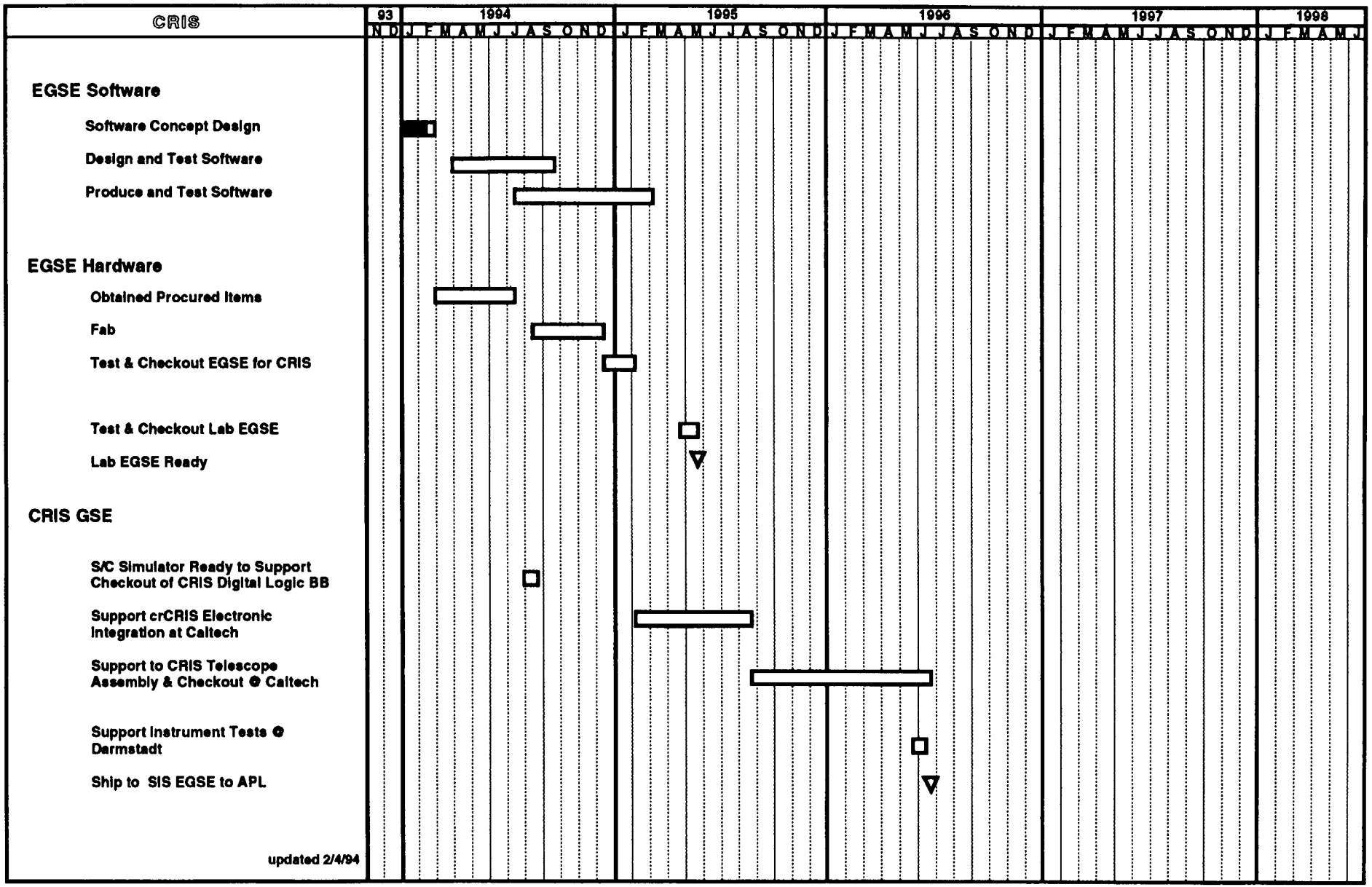

CRIS GSE Development

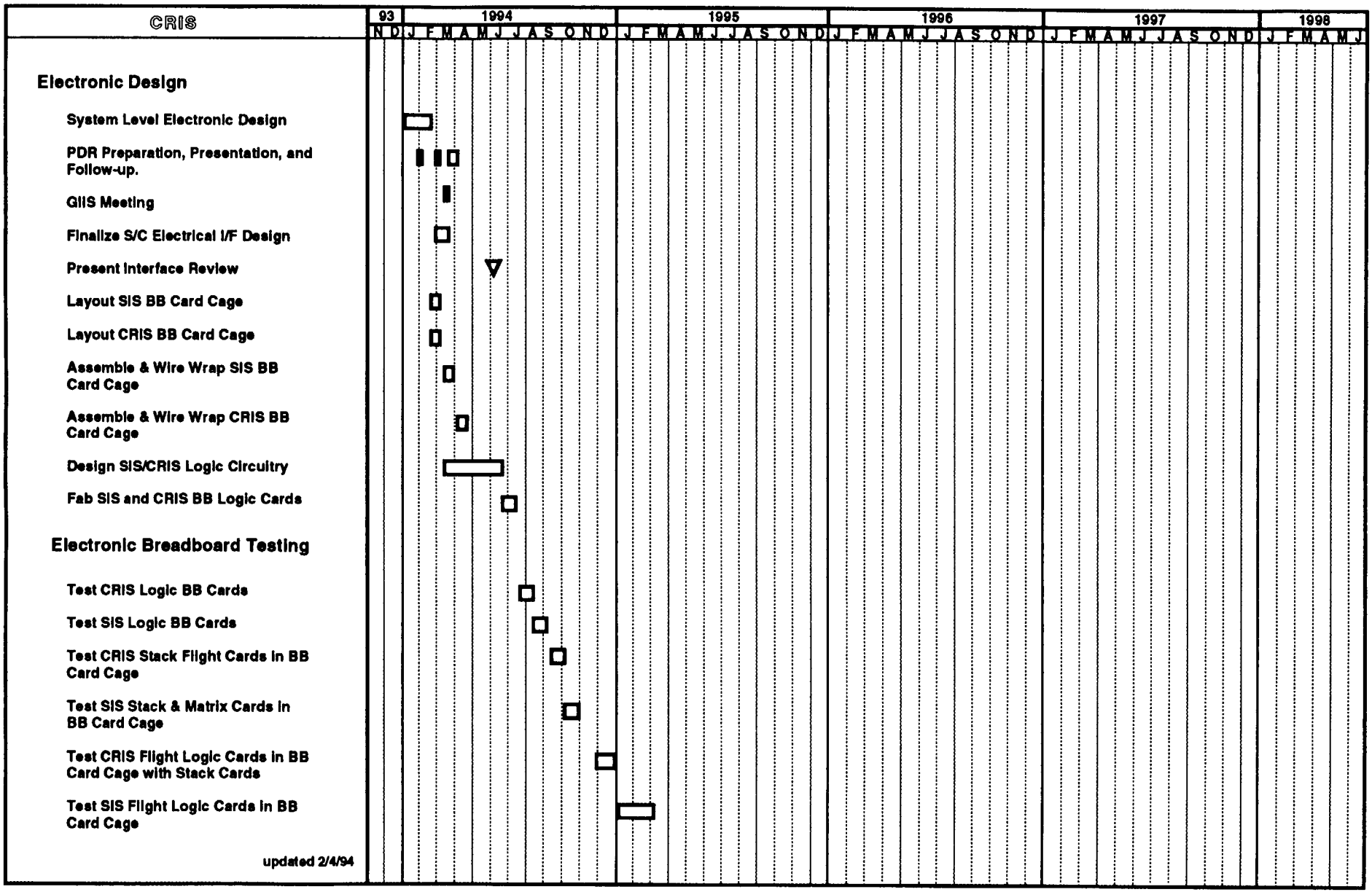

BB Electronic Development and Testing

ACE PHASE C/D MASTER SCHEDULE

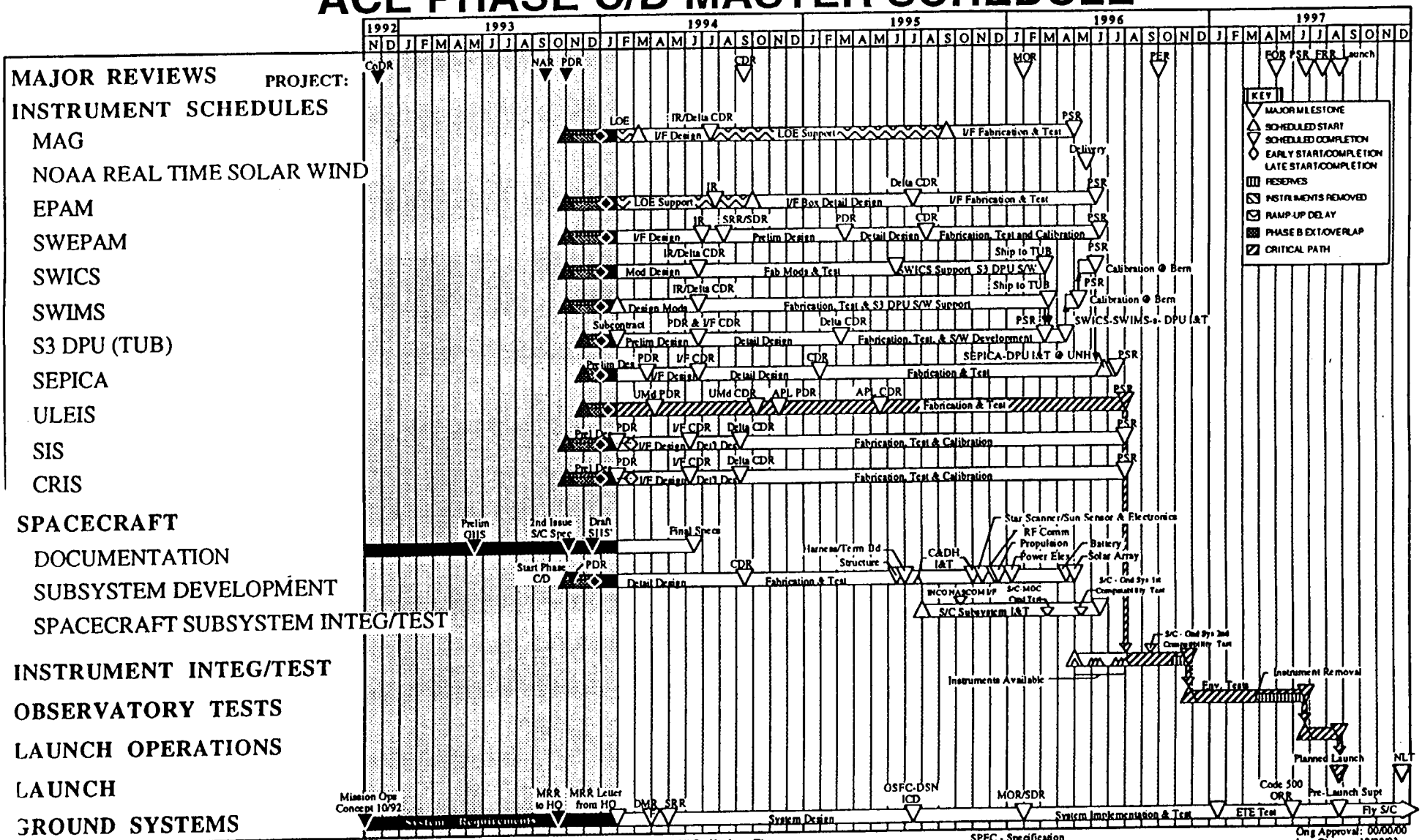

dard Space Flight Center
roval: Don Margolies

APL - Johns Hopkins Applied Physics Lab
ASSY - Assembly
CDR - Critical Design Review
C/O - Checkout
CoDR - Concept Design Review
CRIS - Cosmic Ray Isotope Spectrometer
DES - Design
DETL - Detail
DMR - Detailed Mission Requirements Document
DSN - Deep Space Network
ENG - Engineering
EPAM - Electron, Proton & Alpha-Particle Monitor

ETE - End-to-End
FAB - Fabrication
FOR - Flight Operations Review
FRR - Flight Readiness Review
OIIS - General Instrument Interface Specification
I&T - Integration and Test
I/F - Interface
IR - Inheritance Review
MAG - Magnetic Field Monitor
MOC - Mission Operations Center
MOR - Mission Operations Review
NAR - Non-Advocate Review

NLT - Not Later Than
ORR - Operational Readiness Review
PDR - Preliminary Design Review
PER - Pre-Environmental Review
PREL - Preliminary
PSR - Pre-Shipment Review
R - Release
SDR - System Design Review
S/C - Spacecraft
SIIS - Specific Instrument Interface Specification
SIS - Solar Isotope Spectrometer
SEPICA - Solar Energetic Particle Ionic Charge Analyzer

SPEC - Specification
SRR - System Requirements Review
S/W - Software
SWEPAM - Solar Wind Electron, Proton & Alpha Monitor
SWICS - Solar Wind Ion Composition Spectrometer
SWIMS - Solar Wind Ion Mass Spectrometer
S3 DPU - SWICS, SWIMS & SEPICA Data Processing Unit
TPOCC - Transportable Payload Operations Control Center
TUB - Technical University @ Braunschweig
ULEIS - Ultra Low Energy Isotope Spectrometer
UMd - University of Maryland
UNH - University of New Hampshire

CRIS PDR

Section 3

Instrument Overview

2/22–23/94

COSMIC-RAY ISOTOPE SPECTROMETER (CRIS)

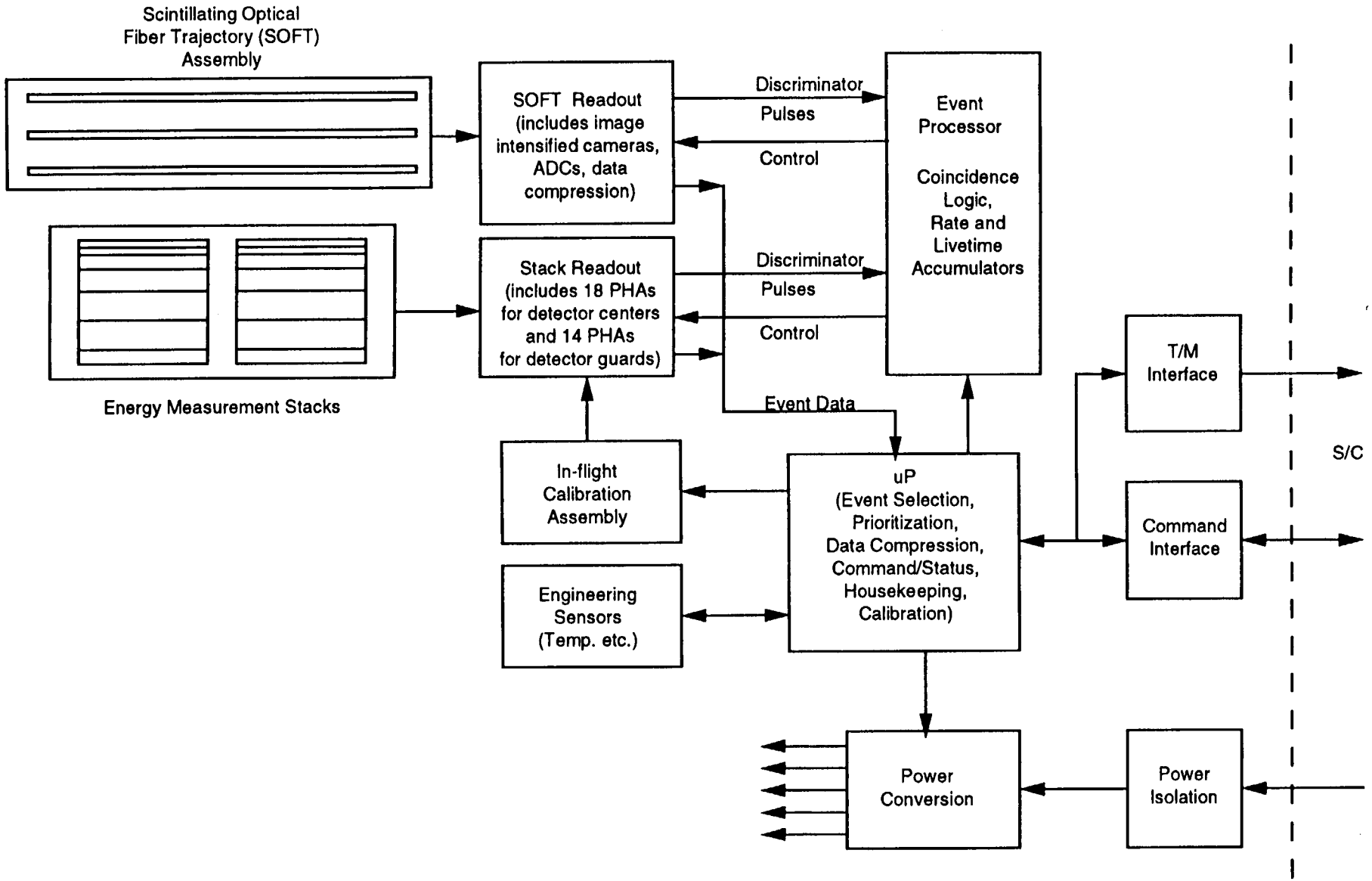

Instrument Overview (continued)

- Design Emphasizes Simplicity, Manufacturability, Reliability, and Serviceability
  - ∗ **Easy detector replacement**
  - ∗ **Easy electronics serviceability**
  - ∗ **Reliable detector contacts**
  - ∗ **Minimal internal wiring and harnessing**
  - ∗ **Minimal electronics parts types and count**
  - ∗ **Redundancy only in higher risk components and where "free"**
  - ∗ **Modular electronics design, exploiting CRIS/SIS commonality**
  - ∗ **Simple, yet thorough, self−test capability**
  - ∗ **Electronic calibration of front end electronics prior to system integration**

2/22−23/94

Instrument Overview (continued)

- Key Design Features
  - ∗ **Packaging**

    1. **SOFT is separate box with clean interface to main box**
    2. **In main box, a single card cage houses:**
       - **Silicon stack detectors**
       - **Stack detector electronics**
       - **Digital electronics**
       - **Low−voltage power supplies**
       - **High voltage power supplies**
    3. **Stack detectors are in modules attached to PWBs which contain associated pulse height analyzers (PHAs)**
    4. **All four stack detector PWBs are identical (each contains eight PHAs)**

2/22−23/94

Instrument Overview (continued)

- Key Design Features (continued)
  - * Electronics

1. Stack detector PHAs are each a single hybrid based on a custom VLSI chip
   - Prototype hybrid should be in test by PDR
   - Same hybrids used in SIS
2. Nearly all logic will be done with Actel gate arrays
   - Flight parts are in hand
   - Have good experience with Actel based design
3. Harris RTX2010 microprocessor selected and ordered in common buy
   - Flight parts due near PDR
   - Have extensive experience with nearly identical RTX2000
4. Microprocessor support parts (RAM & PROM) are selected and are same as those chosen by spacecraft
5. Forth selected for flight software
   - Many years of favorable experience
   - In–house expertise

2/22–23/94

Instrument Overview (continued)

- Key Design Features (continued)
  - * **Redundancy**
    1. **Two SOFT readout systems**
    2. **Three layers of fibers in SOFT**
    3. **Four stack HV supplies with separate on/off control**
    4. **Stack detectors organized into two independent sets of two stacks each**
    5. **Logic equations modifiable in flight to handle failed detectors**
    6. **Detector thresholds programmable in flight to handle marginal detectors (i.e., increased noise)**
    7. **HV and other electronics designed to tolerate detector failure**

2/22–23/94

Instrument Overview (continued)

- Key Design Features (continued)
  - ∗ **Improved Detector Health Monitoring via Built−in Leakage Current Measurements for all Detectors**
    1. **Provides better tracking of detector health before launch**
    2. **Combined with easier detector access will help ensure launch of healthy detectors**
    3. **Better diagnosis of possible post−launch detector problems**

Instrument Overview (continued)

- Key Design Features (continued)
  - * **Flight Software**
    1. **Forth running on RTX2010**
    2. **Resident operating system, fast**
    3. **Cross compilers, emulators not needed**
    4. **Many years of favorable experience**
       - **MACSYS**
       - **GRIP**
       - **GSEs**
    5. **Hardware and software designer is same person**

2/22–23/94

CRIS PDR

Section 4

Solid State Detectors

2/22–23/94

DETECTOR OVERVIEW

- **Detector Configurations**
  - Single Groove Design

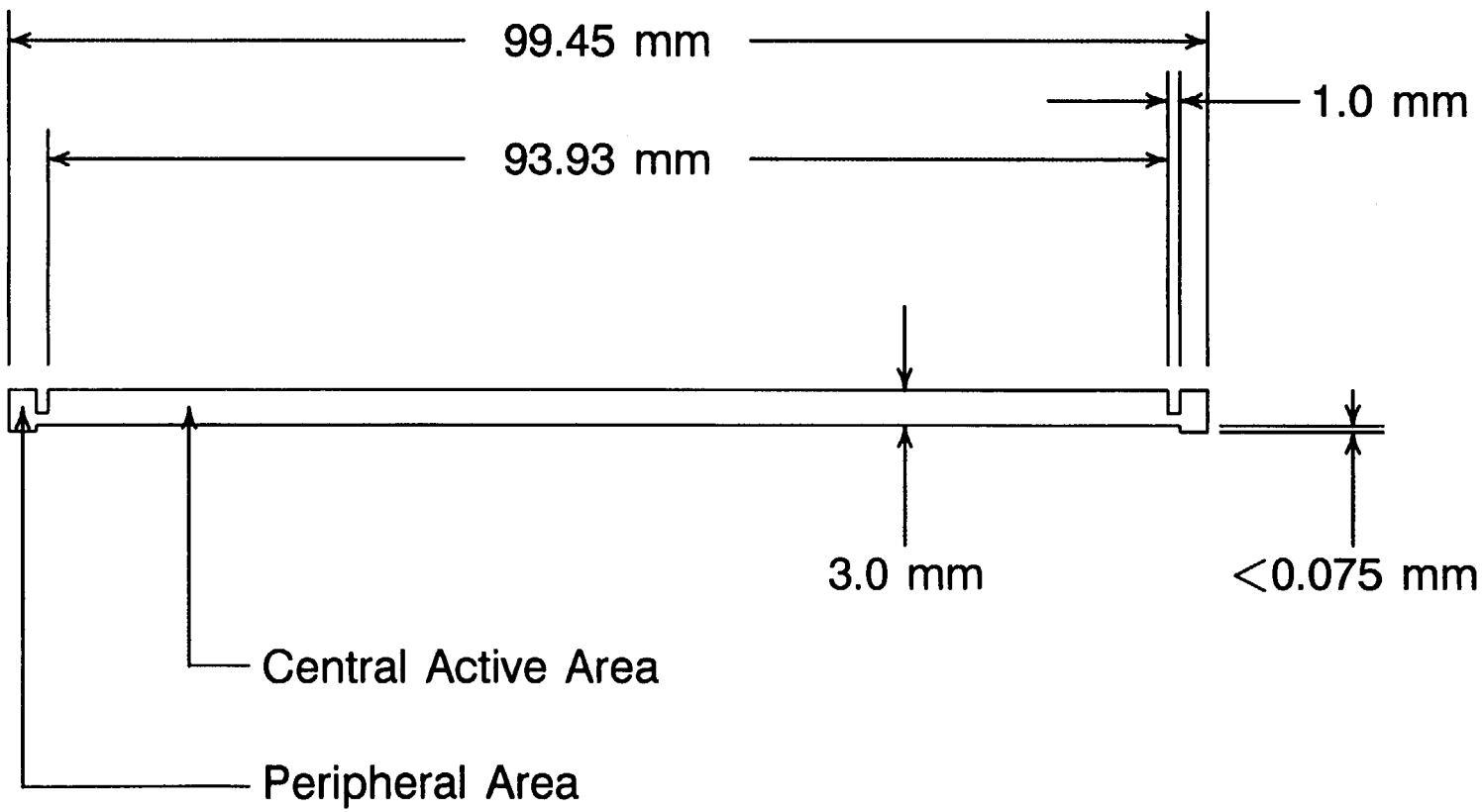

- **Detector Configurations (cont.)**
  - Double Groove Design

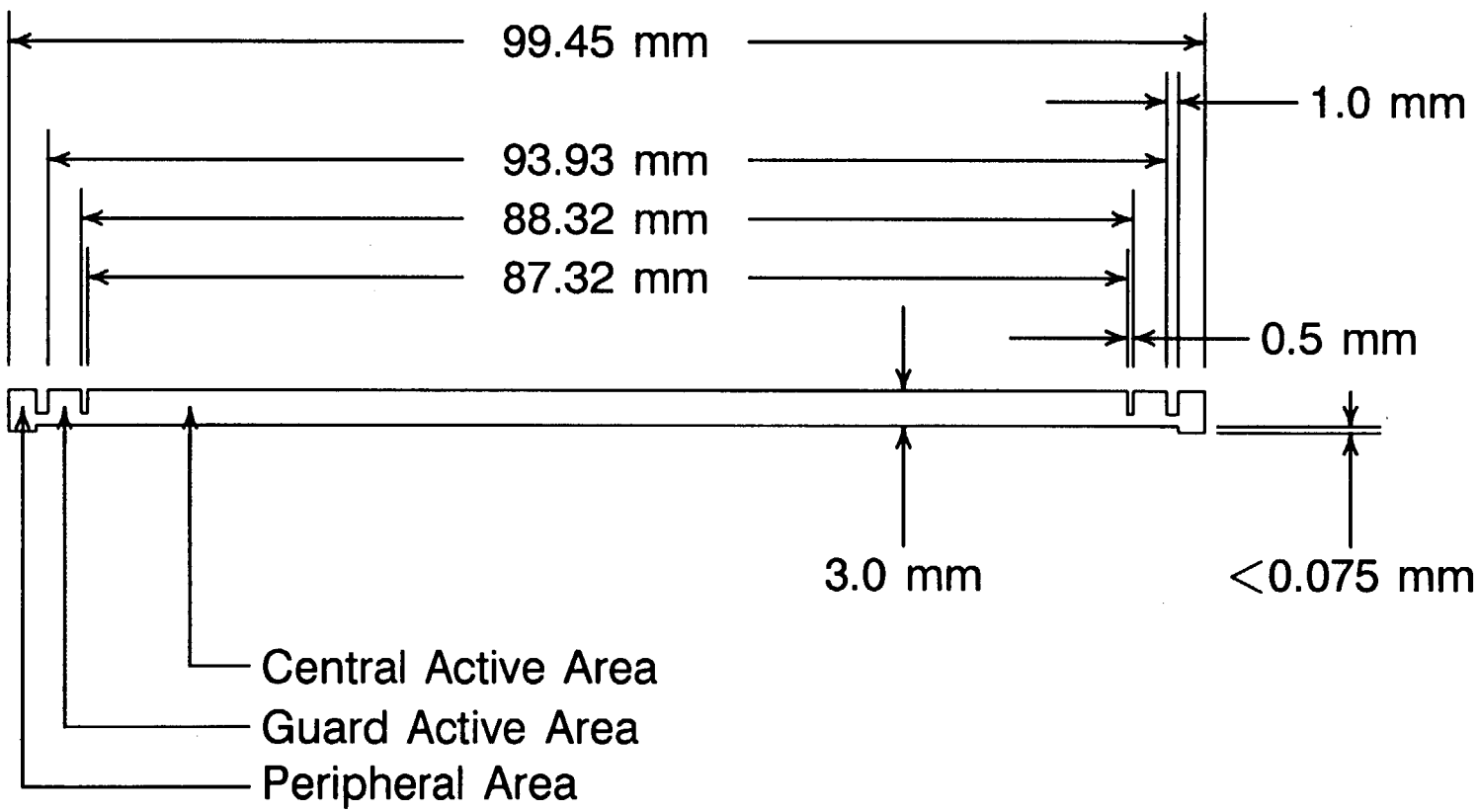

DETECTOR OVERVIEW (cont.)

- **Functional Description**
  - Ionization signal is proportional to energy loss, 3.6 eV per electron–hole pair
  - Current signal is dictated by electric field strength, mobility of electrons and holes, and distribution of energy deposition in the detector
  - Current is integrated to measure total ionization charge
  - Guard region provides an independent signal for particles at detector edge

DETECTOR OVERVIEW (cont.)

- **Fabrication Techniques**
  - Use "lithium drifted silicon" technology (LiD)
  - Lithium evaporated onto surface of silicon wafer
  - Electric field applied across the wafer at elevated temperatures causes Li to drift into the silicon lattice
  - Over a period of weeks the Li neutralizes impurities in the crystal, yielding essentially intrinsic silicon
  - Lithium-diffused surface ground down to minimize dead layer
  - Thin metal contacts evaporated onto surfaces

DETECTOR OVERVIEW (cont.)

- **Requirements**
  - Thickness Uniformity
    - a 0.1% thickness error will cause a mass error of 0.08 amu for ^{56}Fe
    - must be able to determine the thickness penetrated by each detected particle using a thickness map together with trajectory measurements made with SOFT
    - drives requirement for thickness gradients $\lesssim$0.1%/mm
  - Dead Layer Minimization
    - mass determination is most sensitive to ΔE energy loss near the boundary between detectors
    - need to minimize the thickness of inactive material at this interface
    - goal is to keep dead layer less than a few percent of the ΔE detector thickness

- **Requirements (cont.)**
  - Continuous Bias
    - at room temperature the lithium ions can continue to slowly diffuse around in the silicon lattice
    - lithium can precipitate out, becoming trapped at defects in the lattice and leaving the crystal partially decompensated; the result is that the bias voltage needed to fully deplete the detector will grow with time
    - loss of lithium compensation and increase of depletion voltage can be prevented by keeping bias on the detector; this causes a continued drifting of lithium ions to recompensate the crystal
    - this dictates a requirement that some bias be kept on the detector "nearly all the time", no more than 3 days unbiased in any 2 week period

- **Requirements (cont.)**
  - Contamination Prevention
    - ▷ detector operation is particularly sensitive to the chemistry of the detector surfaces
    - ▷ detector performance and longevity can be degraded by surface contamination
    - ▷ to keep surfaces clean, detectors are stored in a dry N_2 atmosphere
    - ▷ to prevent detector contamination in the laboratory or on the spacecraft, use of volatile chemicals nearby must be restricted, "if you can smell it, it is suspect"
    - ▷ instrument will be purged with dry N_2 whenever practical in the laboratory and on the spacecraft

- **Requirements (cont.)**
  - Radiation Resistance
    - ▷ detector response can shift under high radiation exposures
    - ▷ important parameter is fluence (particles/cm^2) rather than dose because deterioration is caused primarily by production of defects in the silicon lattice
    - ▷ fluences $>10^8$/cm^2 could affect instrument performance
    - ▷ LiD detectors flown on Voyagers-1 and -2 show no significant degradation over $>$16 yr, in spite of exposure to large solar flares early in the mission and to enhanced fluxes of anomalous cosmic rays in the outer heliosphere
    - ▷ LiD detectors from LBL flown on ISEE-3 survived large solar flares with no detectable change in response

- Radiation Resistance (cont.)
  - for accelerator calibration of detectors, will keep fluences $<10^6/\mathrm{cm}^2$ (corresponding to a dose of $\lesssim$400 rad for the heaviest nuclei of interest) by making sure that beam spot covers 1 cm^2 or more and that particle fluxes do not significantly exceed the rate at which we can collect data

KEY SPECIFICATIONS

Parameter	Value
Central Active Area	
1-groove design	69 cm^2
2-groove design	60 cm^2
Thickness	3.0±0.1 mm
Thickness Variation	<60 μm
Dead Layer Thickness	<50 μm
Dead Layer Variation	<10 μm
Depletion Voltage	<250V
Operating Voltage	400 V
Leakage Current (at 20°C)	<15 μA
Operating Temperature Range	−40 to 35C

PHASE B DETECTOR ACTIVITIES

- **Silicon Source Evaluation**
  - Silicon evaluation required because material similar to that previously used was unavailable at the start of Phase B
  - In early 1993, silicon with properties similar to that previously used became available in the size required for CRIS and was included in the evaluation
  - Silicon samples procured from 2 vendors: from Topsil, 3 different resistivity ranges were studied; from Wacker material of a single resistivity was investigated using a new gettering process recently developed at LBL
  - Only Topsil material of $\sim 2\,\mathrm{k}\Omega$-cm resistivity found to produce good detectors with a high yield—this is the material most similar to that previously used

PHASE B DETECTOR ACTIVITIES (cont.)

- **Prototype Detector Fabrication**
  - Four prototype LiDs of 10 cm diameter and 3 mm thickness fabricated by Jack Walton at LBL
  - Leakage current, noise, and alpha particle response were measured; the only anomaly found was leakage current larger than expected (30 μA rather than 15 μA per detector at room temperature)
  - Leakage current may be reduced by improved processing of detector surfaces; instrument design (bias supplies, thermal) is taking into account possible large detector leakage currents
  - Final processing steps (primarily thinning of dead layers) were omitted for original 4 prototypes; these steps are now being carried out for additional prototypes

PHASE B DETECTOR ACTIVITIES (cont.)

- **Tests of Prototypes at MSU Cyclotron**
  - Three prototype LiD detectors were tested with heavy ion beams ($_{14}$Si through $_{28}$Ni) at the Michigan State University cyclotron in November 1993
  - Developed capability for producing detector maps by doing a raster scan of detectors across a small-area (few cm^2) beam
  - Tested sensitivity of technique for dead layer mapping
  - Results obtained to date:
    - ▷ LiD thickness profiles
    - ▷ check of mass resolution
  - Analysis of MSU test data is still in progress

PHASE B DETECTOR ACTIVITIES (cont.)

- **LiD Detector Thickness Profiles**

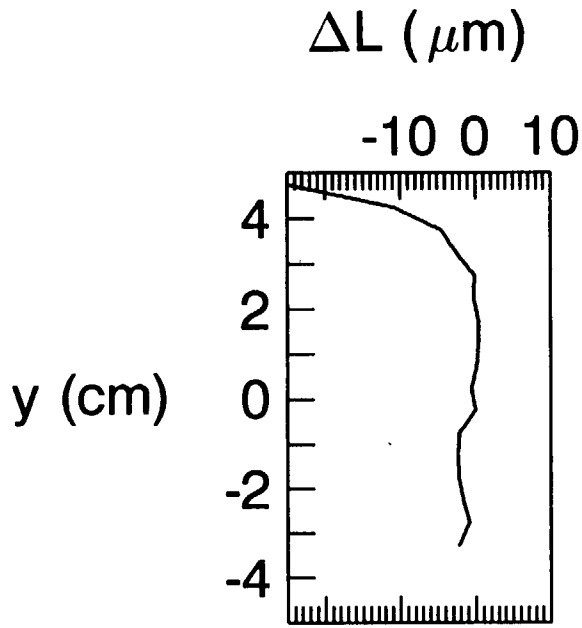

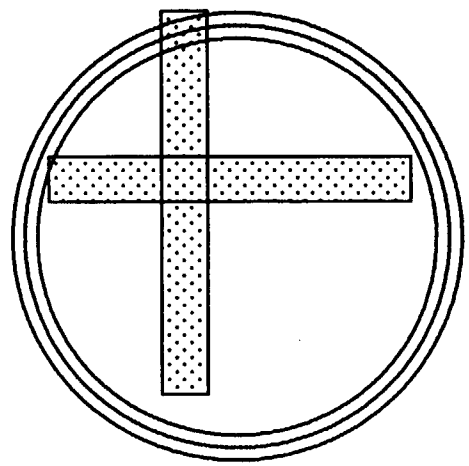

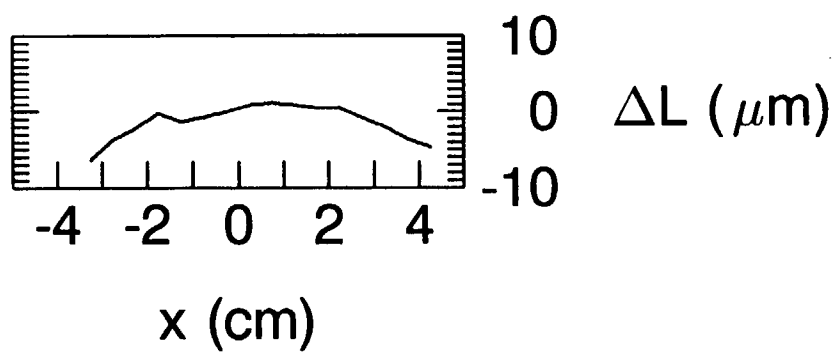

PHASE B DETECTOR ACTIVITIES (cont.)

- **Mass Resolution**
  - MSU tests using LiDs to measure ΔE

MSU Test November 1993

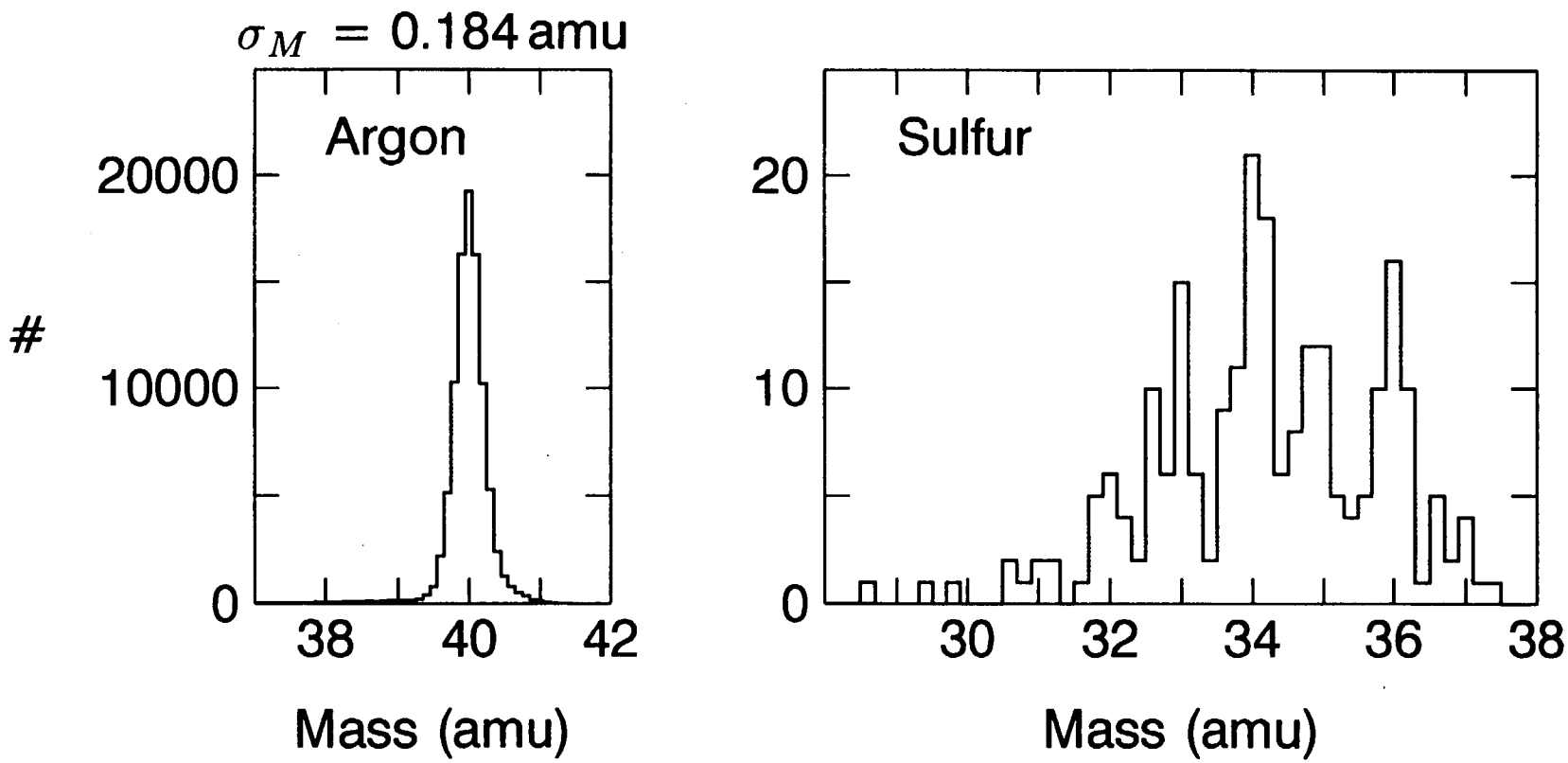

DETECTOR FABRICATION AND TESTING

- **Silicon Procurement**
  - Silicon crystal for flight detectors and spares has been ordered from Topsil
  - Specified characteristics are identical to those used for prototype LiD material
  - Topsil will provide resistivity data for entire length of crystal and will provide sample wafers to check suitability for detector fabrication

- **Detector Fabrication**
  - Detector fabrication will be done by Jack Walton's group at LBL under contract to NASA/GSFC
  - Detector deliveries will be phased to provide a reasonable match to testing capabilities

DETECTOR FABRICATION AND TESTING (cont.)

- **Silicon and Detector Spares Approach**
  - Silicon purchase assumes 50% yield in fabrication of good detectors, based on prior experience at LBL
  - Detector contract includes sufficient spare detectors for one complete extra stack plus $\sqrt{N}$ additional spares to allow selection of best detectors for stacks and to provide replacements in case of detector failures

DETECTOR FABRICATION AND TESTING (cont.)

- **Detector Testing Plan**
  - Preliminary measurements of noise, leakage current, alpha and beta particle response, and thickness will be made at LBL following fabrication—will serve as a baseline for comparison with future performance measurements
  - Detailed detector tests will be carried out at NASA/GSFC
  - Planned Tests
    - visual inspection under low power microscope and photography to identify and record any apparent manufacturing defects as basis for acceptance decision and for later reference
    - precise measurements of detector dimensions with a traveling microscope to determine compliance with specifications and for use in future data analysis
    - capacitance vs. bias voltage—check for nominal depletion behavior

- Planned Tests (cont.)
  - noise—check for compliance with specification and use as baseline for studying behavior over time and temperature
  - leakage current—check for compliance with specification and use as baseline for studying behavior over time and temperature
  - alpha particle response—check for full depletion, identify possible performance problems
  - beta particle response—rough check of dead layer thickness
  - life test (thermal vacuum)—check performance at temperature extremes, check for stable operation over extended period, identify marginal detectors

CALIBRATION PLAN

- **Detector Calibrations**
  - Will be carried out at Michigan State University cyclotron
  - Low energy beams can penetrate 2 to 3 detectors (depending on ion and energy)
  - Varying thickness of material in beam ahead of detectors produces ΔE–E' tracks
  - Derive physical thickness and dead layer thickness using off-line analysis
  - Spatial dependence ("maps") of thickness and dead layer using a multiwire proportional counter to measure the location at which particle impinges on the detector and using an automated 2D positioner to carry out a raster scan of the detector over the beam spot
  - Tests also help identify any anomalies in detector performance

CALIBRATION PLAN (cont.)

- **Telescope Calibrations**
  - Will be carried out at high energy heavy ion accelerator in Darmstadt, Germany
  - High energy beams can penetrate entire flight detector stacks
  - Achieve high throughput of calibration events by using special calibration mode of instrument and by selectively including or excluding SOFT from the coincidence
  - In first run, test performance in flight-like configuration (detector stack with flight electronics) over a wide range of parameters (ion, energy, incidence angle, event rate) to identify system problems and to help in planning final calibration run
  - In second run, calibrate completed flight instrument (including SOFT) to obtain detailed response functions that can be used in analysis of flight data

CRIS PDR

Section 5

SOFT System

2/22–23/94

CRIS-SOFT TEAM PHASE C/D

- Science
  - B. Binns
  - J. Klarmann
  - J. Beatty
  - P. Hink (begins 4/15/94)

- Fibers/Mechanical
  - J. Epstein-Engineer
  - D. Braun-Technician

- Electronics
  - P. Dowkontt-Engineer
  - G. Simberger-Technician
  - * H. Darlington (APL)-Technical Advisor, Camera analog and Image Intensifier

- Software
  - M. Olevitch-Computer Programmer

- Quality Assurance
  - *J. Cravens-Consultant

SOFT HODOSCOPE

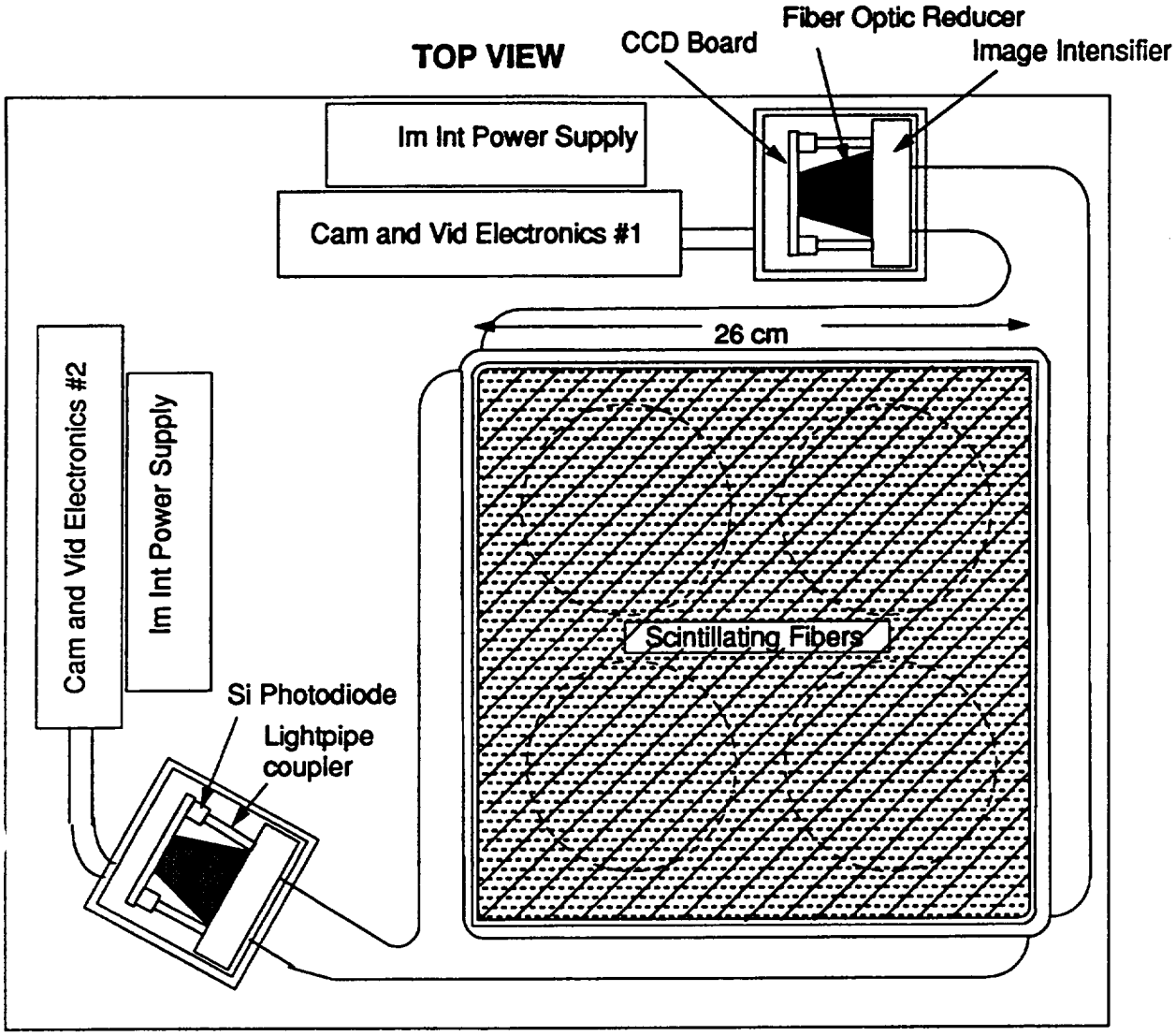

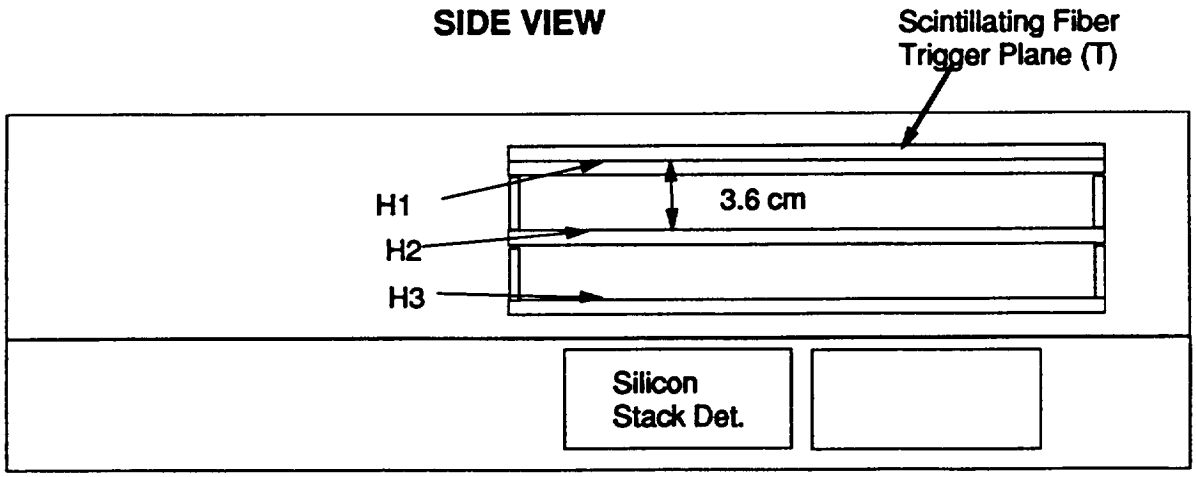

CRIS Instrument Cross-section. The SOFT hodoscope consists of three x,y fiber planes (H1, H2, and H3) and a trigger plane (T).

FIBER OUTPUT FORMAT

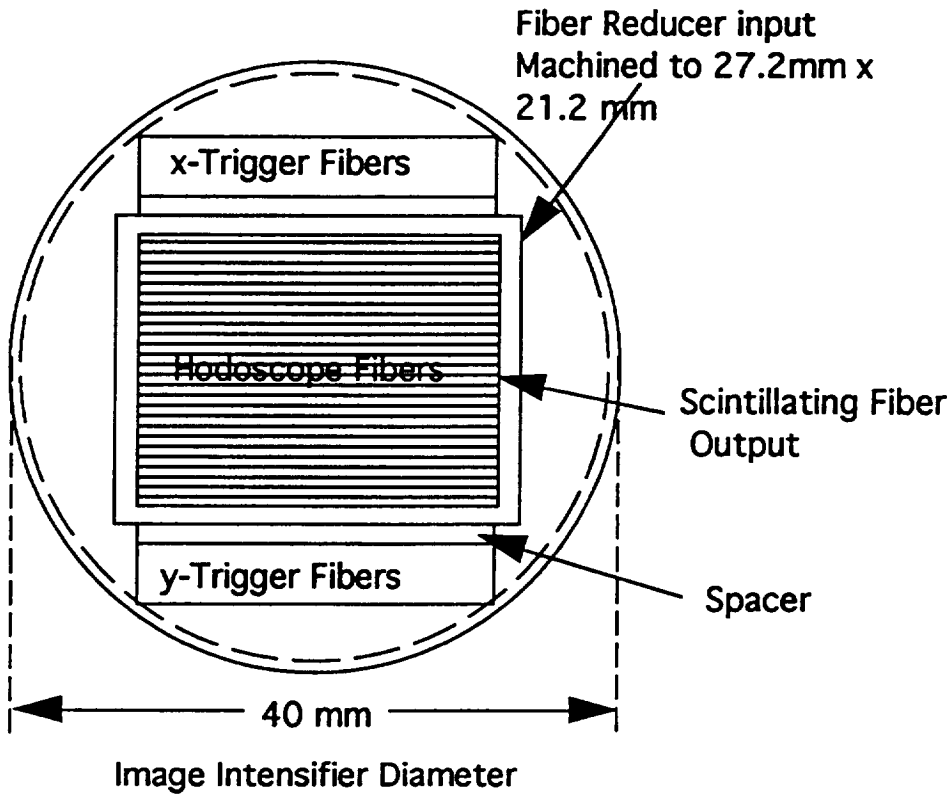

Hodoscope and Trigger fiber output formatting onto image intensifier

IMAGE INTENSIFIER ASSEMBLY

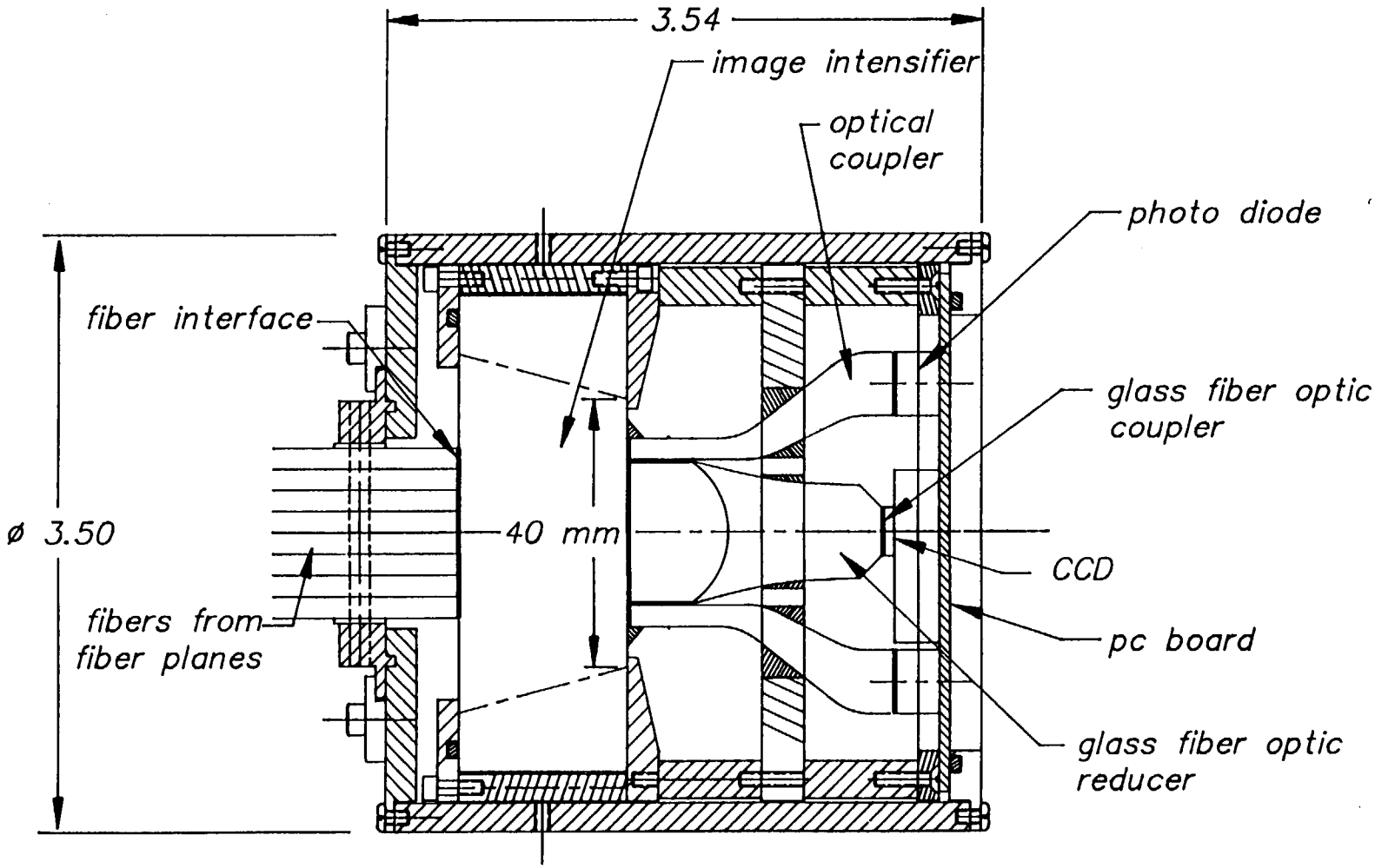

ORIGINAL PAGE
BLACK AND WHITE PHOTOGRAPH

SOFT MSU Instrument (Entry Window View)

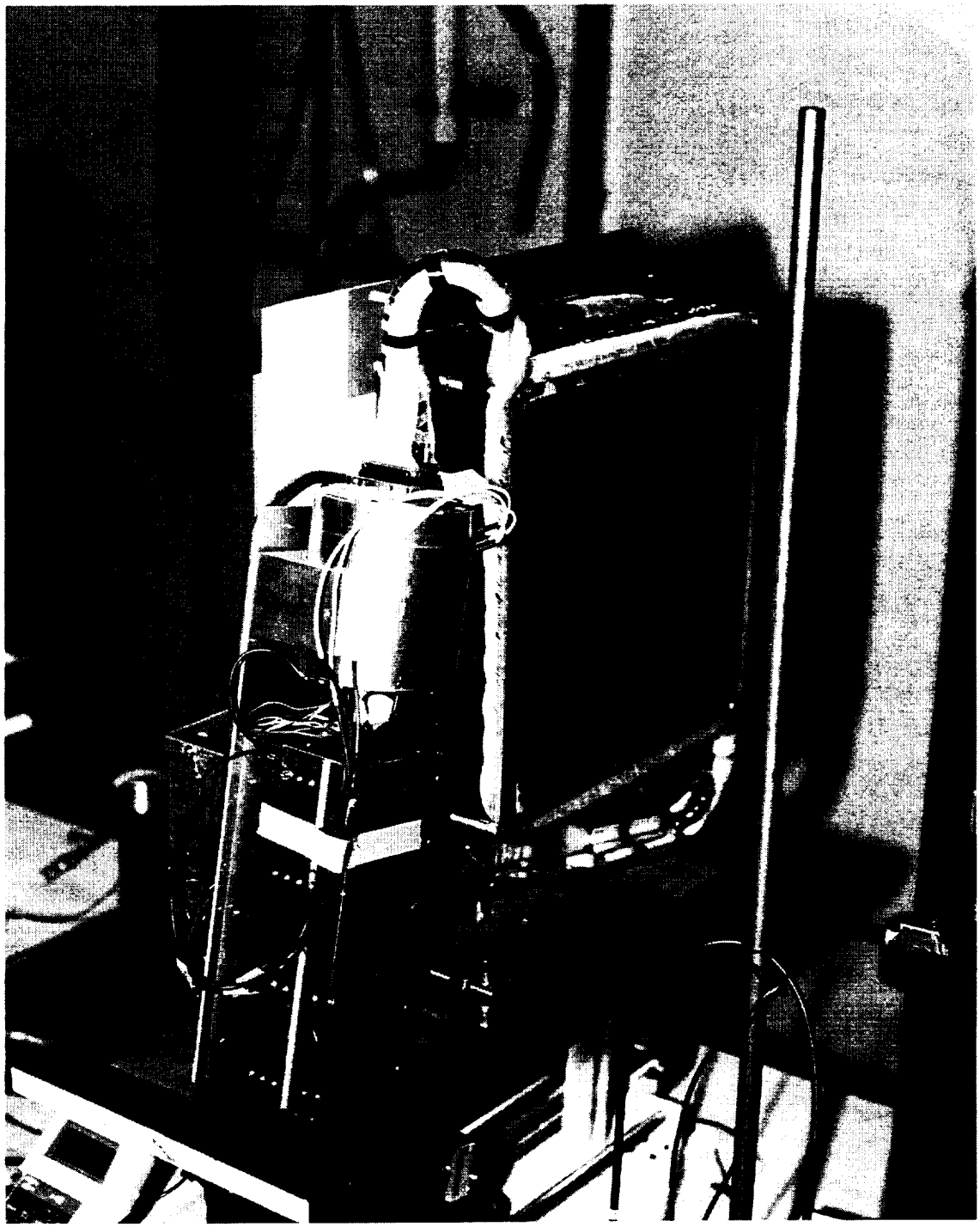

Shows outboard fiber trigger plane, fiber routing to image intensifier assembly, and CCD camera electronics.

ORIGINAL PAGE
BLACK AND WHITE PHOTOGRAPH

SOFT MSU Instrument (Side View)

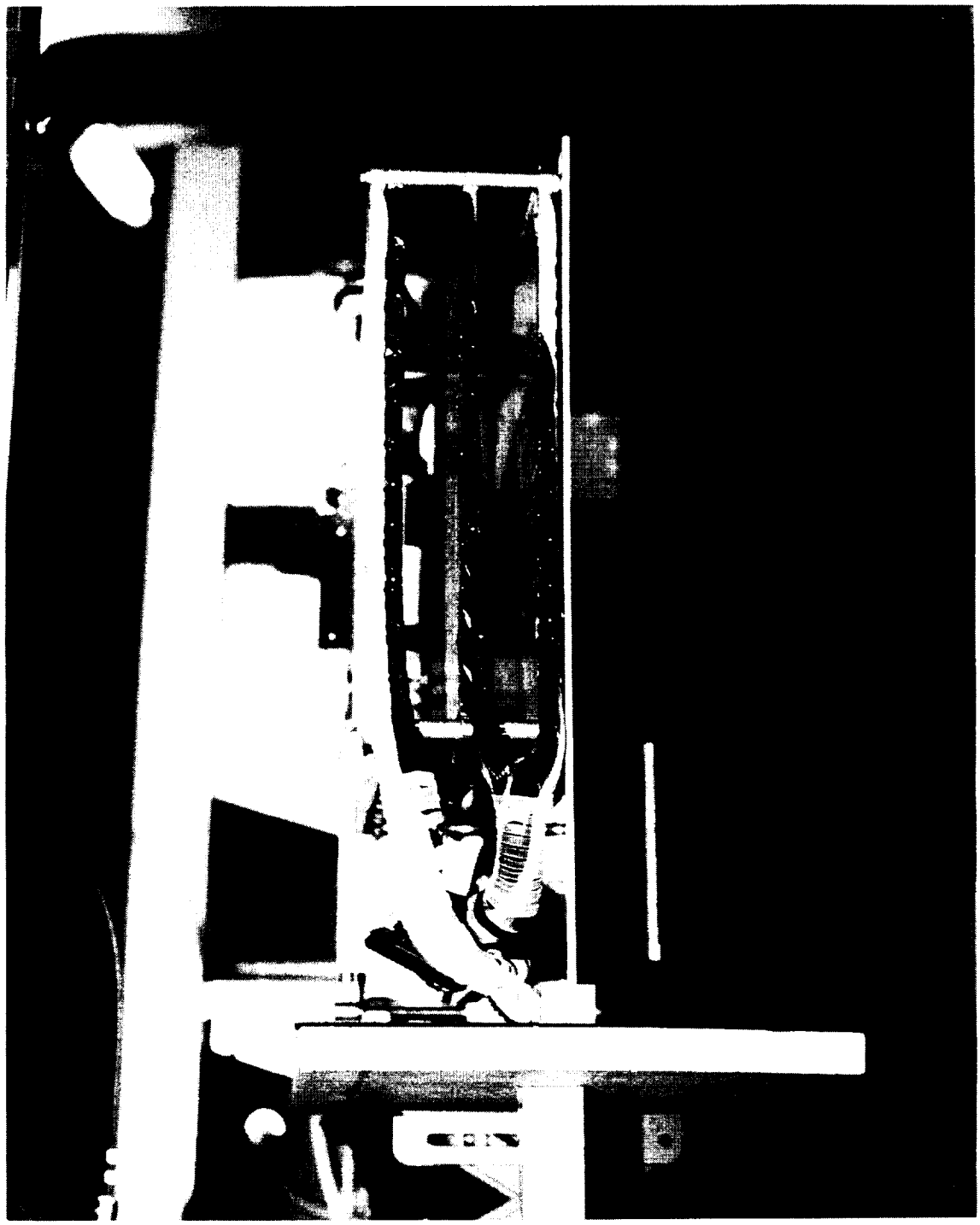

Shows four fiber planes T, H1, H2, and H3 (left to right).

Camera Electronics Boards

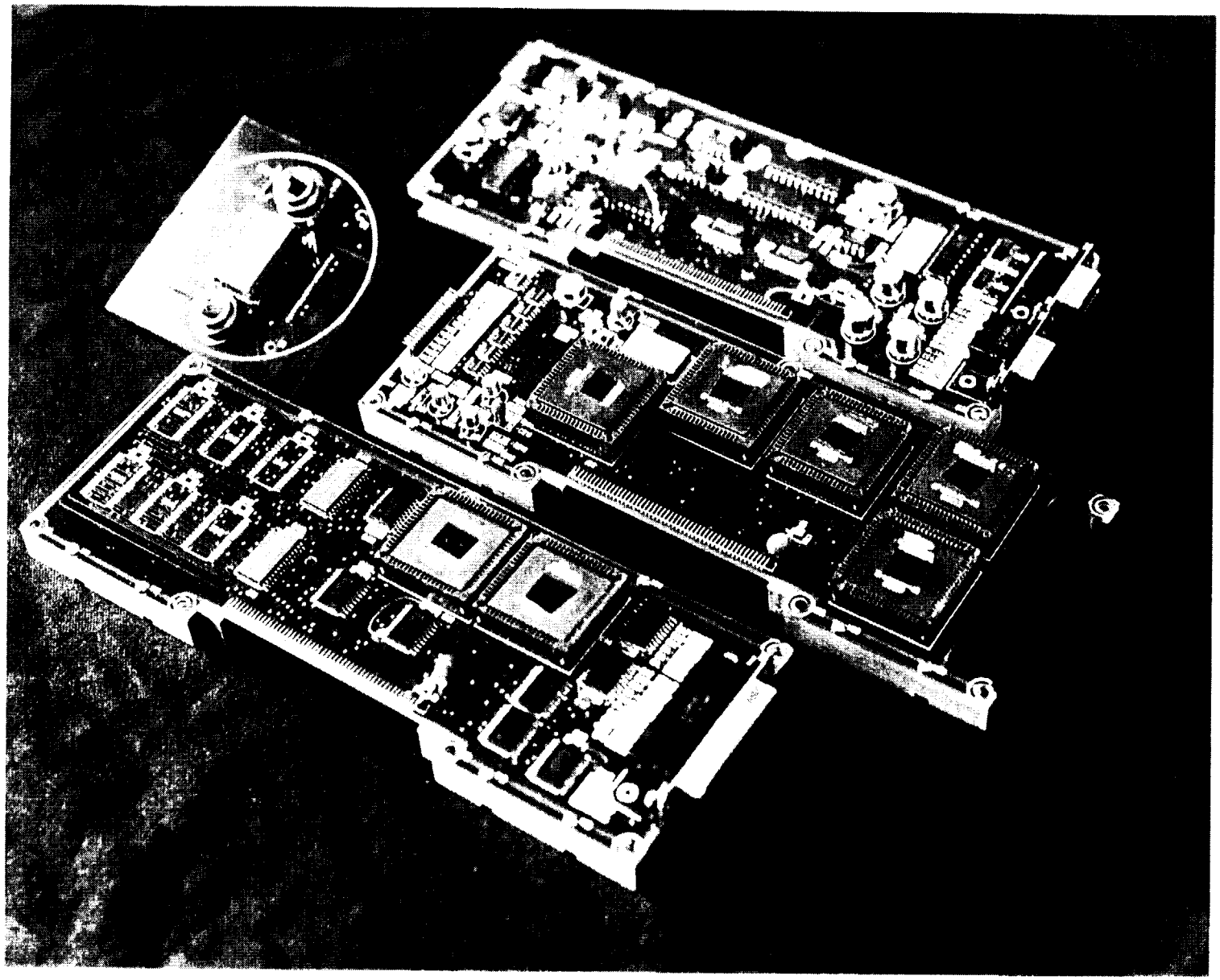

ORIGINAL PAGE
BLACK AND WHITE PHOTOGRAPH

SPATIAL RESOLUTION OF FIBER HODOSCOPE FOR IRON NUCLEI OBTAINED AT THE BEVALAC

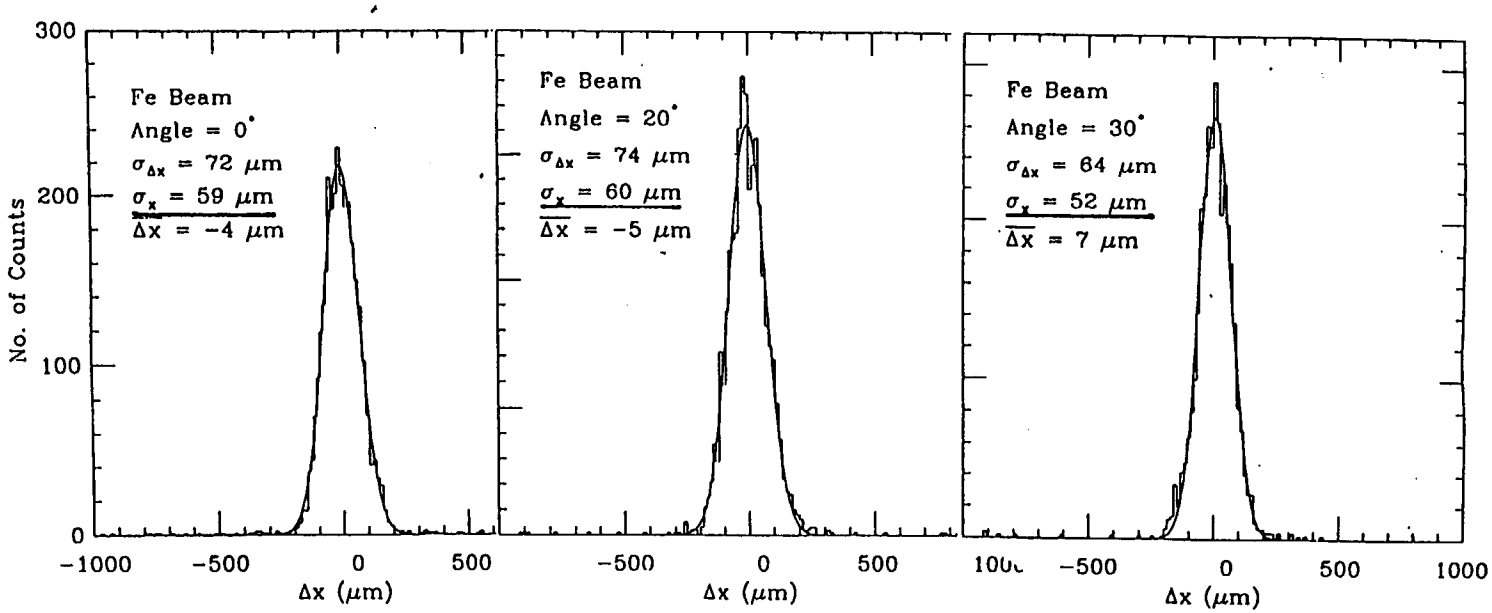

*Resolution obtained is ≤ 60μm. Resolution required for ACE for 0.10amu contribution to mass uncertainty at iron is 110 μm.

SINGLE FIBER LAYER DETECTION EFFICIENCY MEASUREMENTS

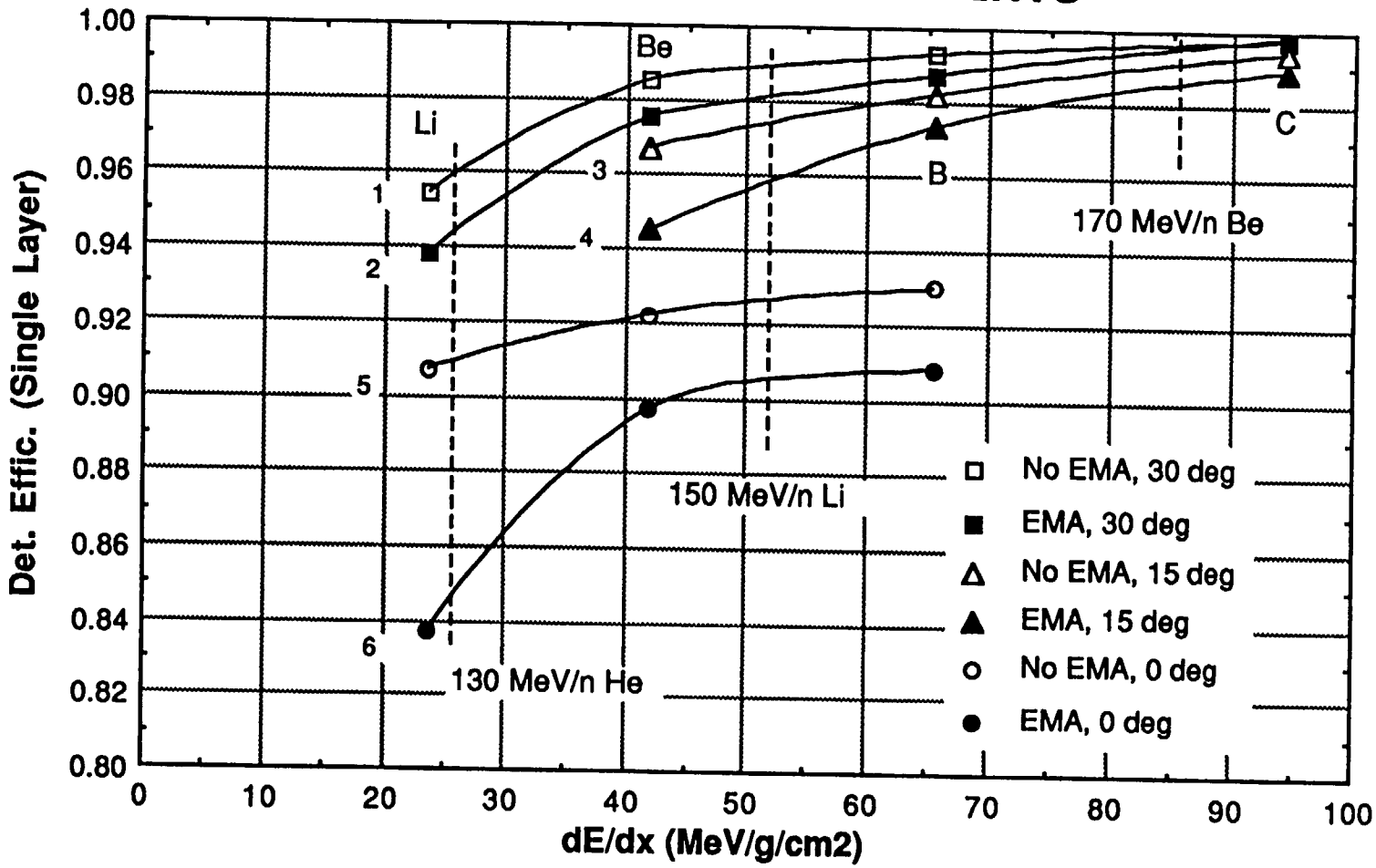

The detection efficiencies are taken from 660 MeV/n C, B, Be, and Li data for particles with angles 0, 15, and 30 degrees and for blackened fibers (EMA) and clear fibers (No EMA). The SOFT planes H1, H2, and H3 have EMA and T has no EMA.

EVENT DETECTION EFFICIENCIES (CALCULATED)

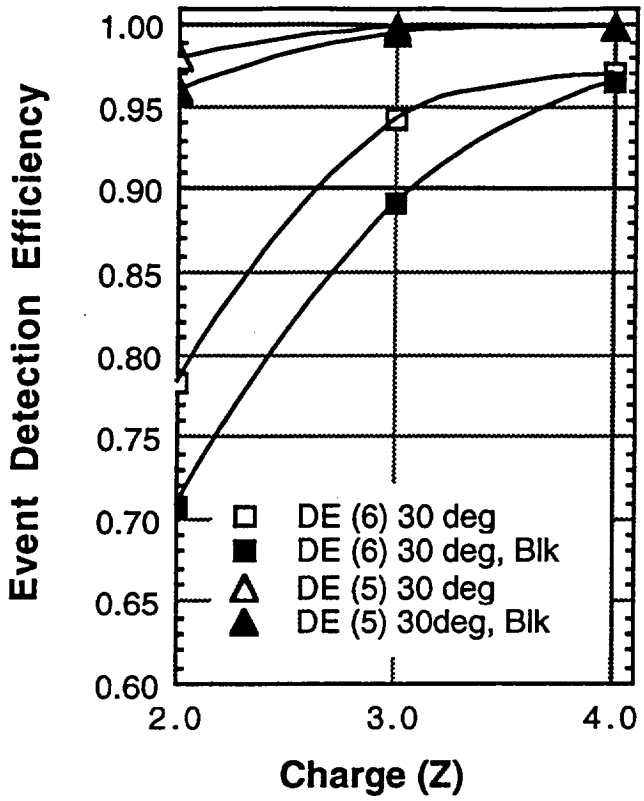

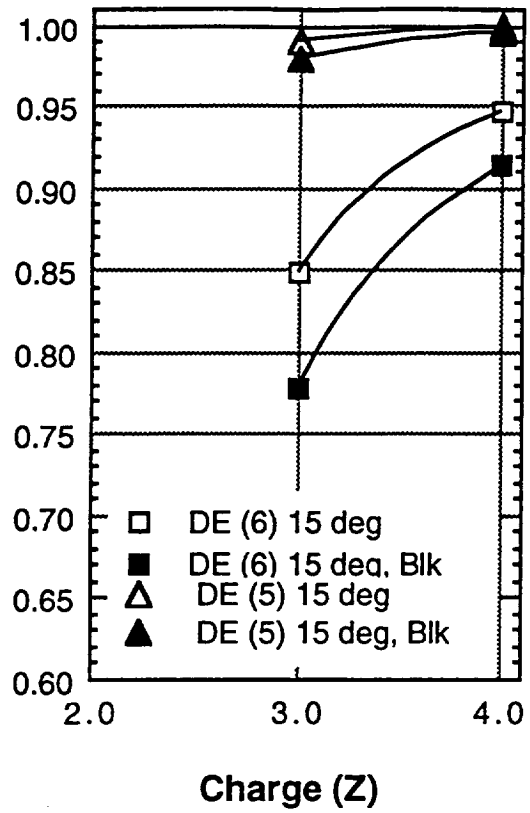

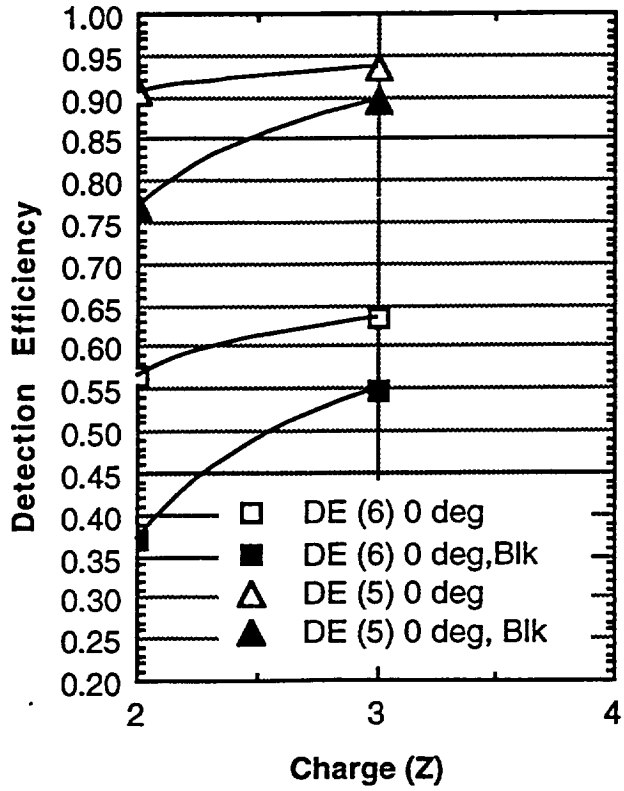

Silicon Event

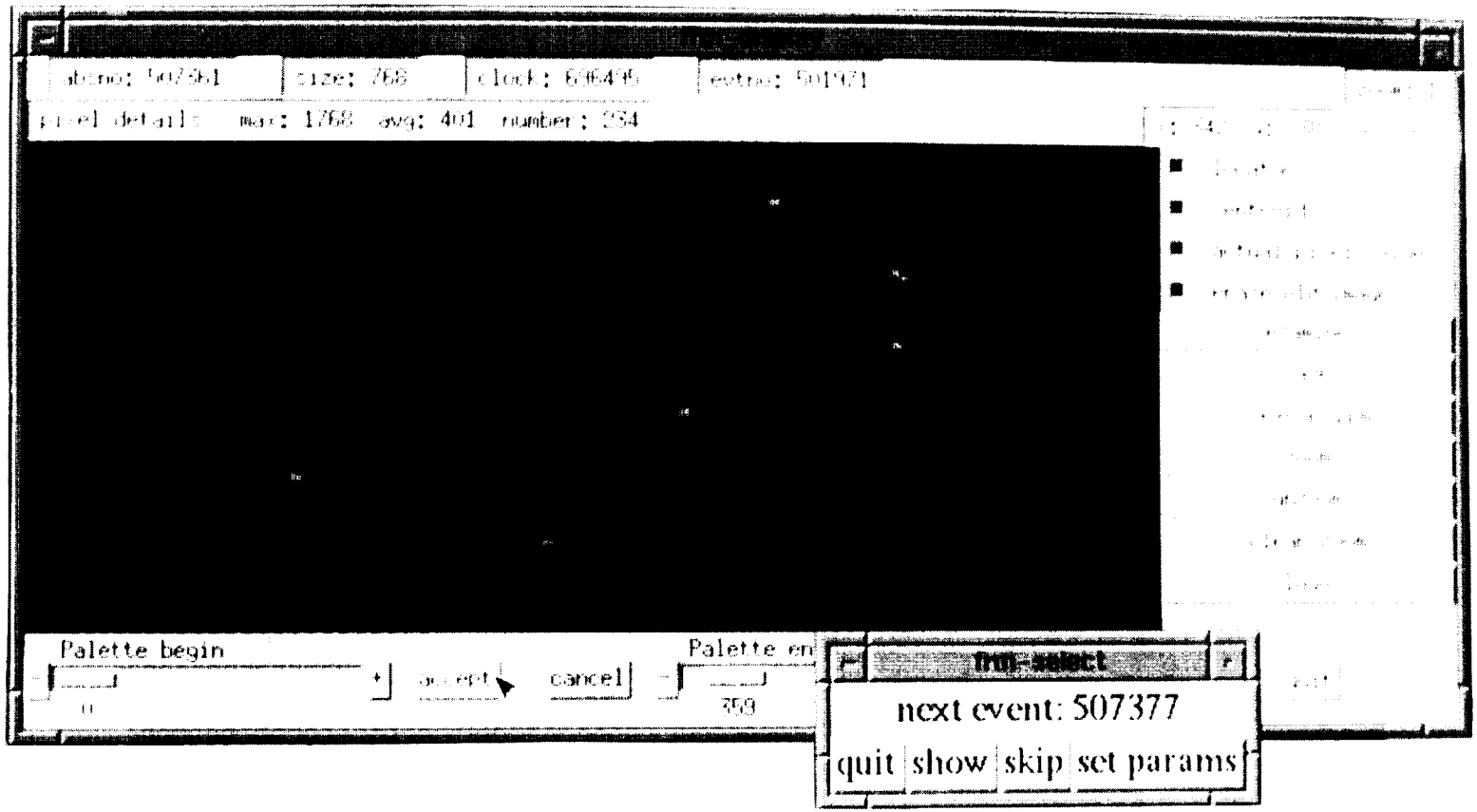

Silicon event (155 MeV/n) - The x's mark the pixel cluster centroids calculated in real time.

ORIGINAL PAGE
BLACK AND WHITE PHOTOGRAPH

Oxygen Event

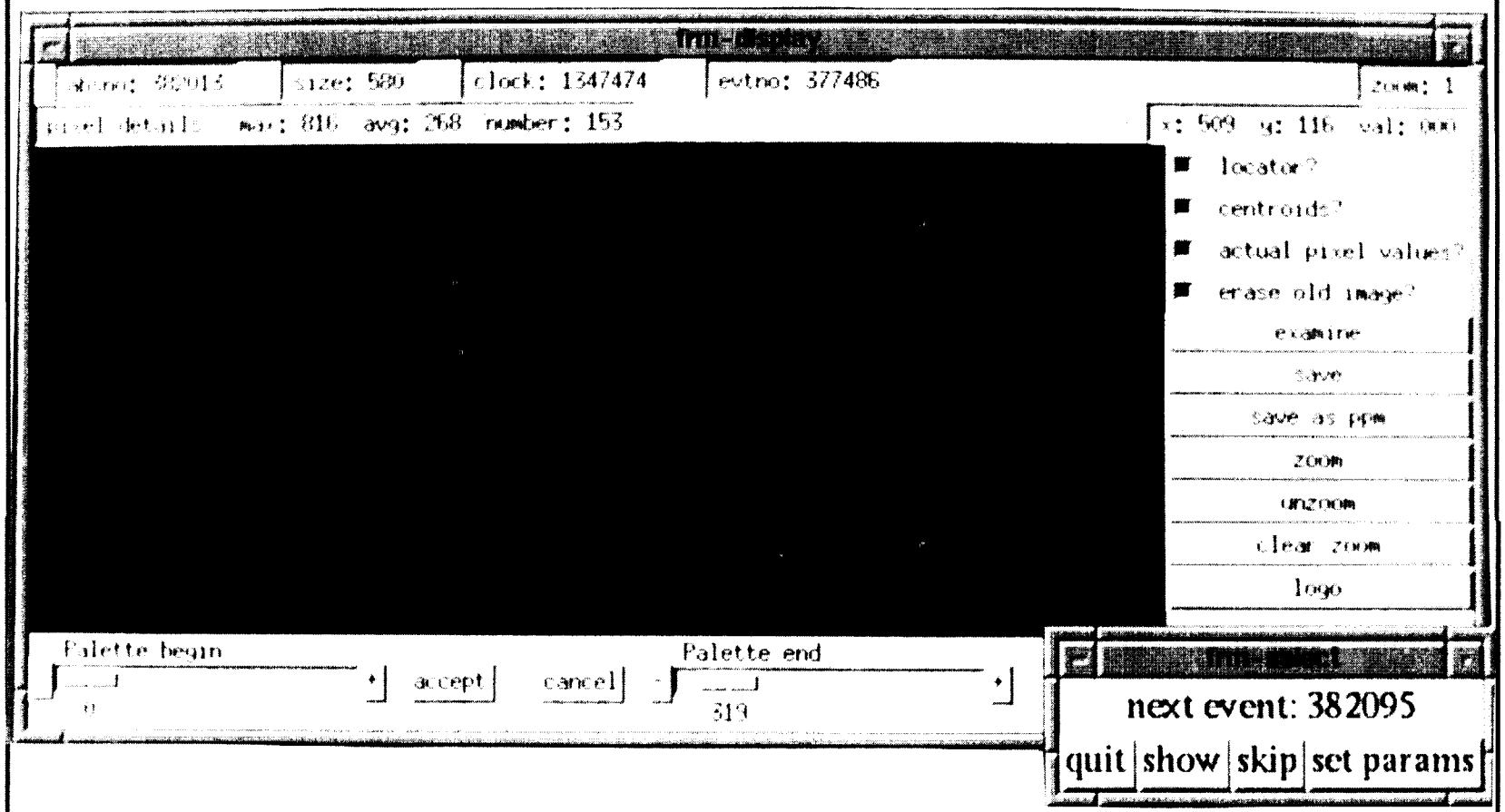

Oxygen event (155 MeV/n) - The x's mark the pixel cluster centroids calculated in real time.

ORIGINAL PAGE
BLACK AND WHITE PHOTOGRAPH

Helium Event

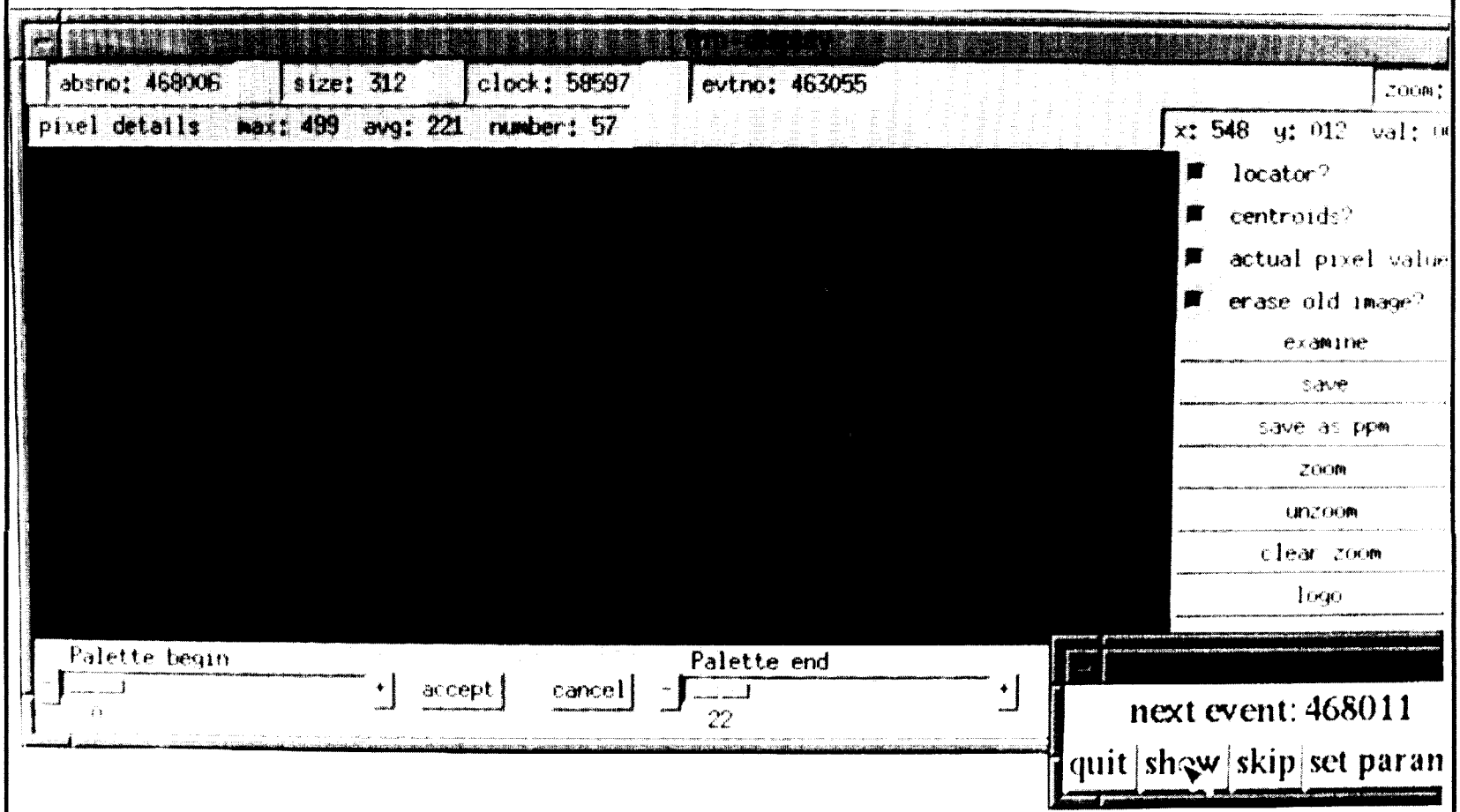

Helium event (155 MeV/n) - The x's mark the pixel cluster centroids calculated in real time.

ORIGINAL PAGE
BLACK AND WHITE PHOTOGRAPH

PIXEL CLUSTER CENTROIDS SUPERIMPOSED

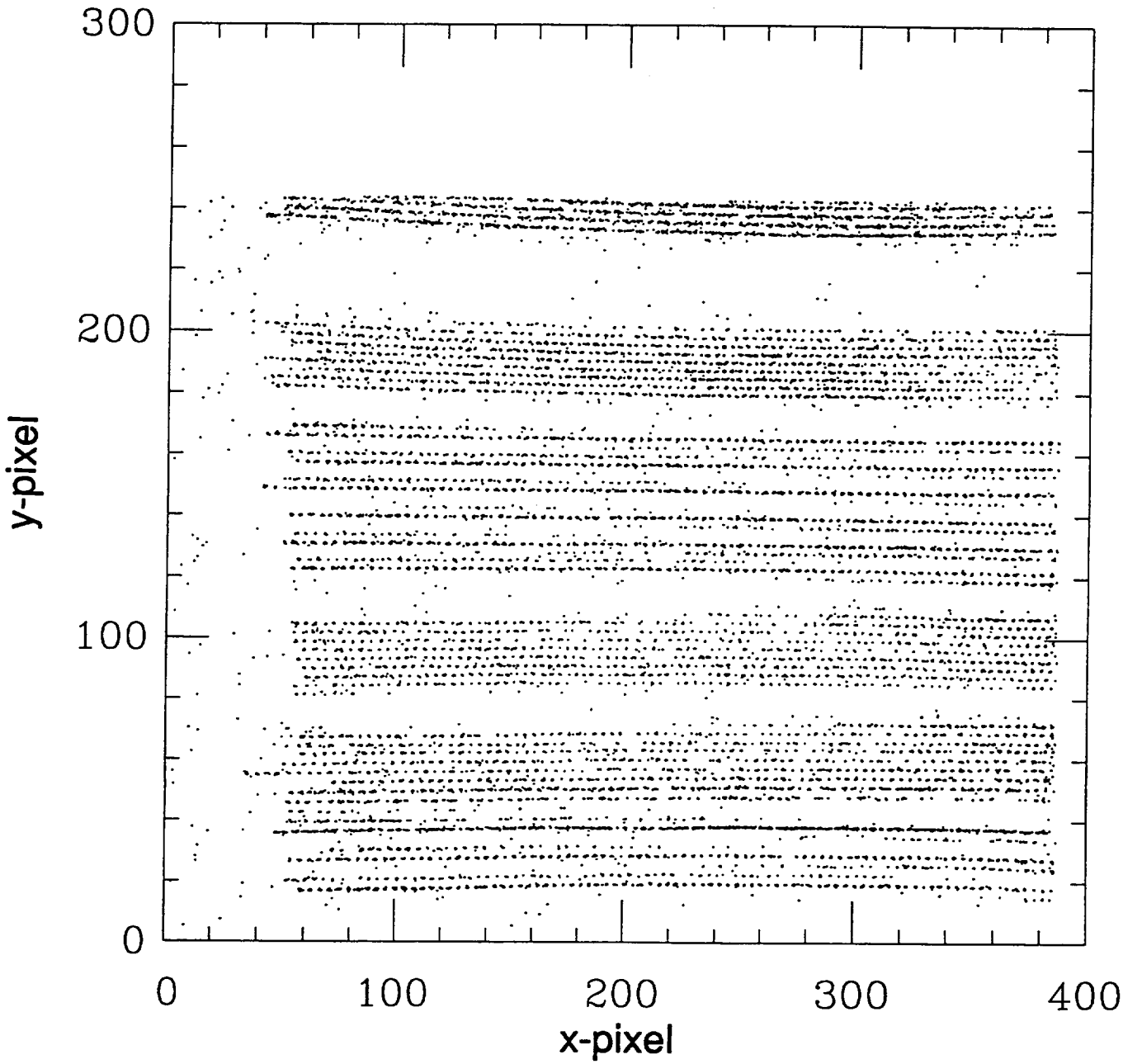

Pixel cluster centroids from many argon events are superimposed and plotted here in pixel coordinates (Data taken at MSU 6/93). The clean separation of centroids on individual tabs shows that there is very little possibility of confusion of position between tabs and also shows the excellent spatial resolution that is achieved with SOFT.

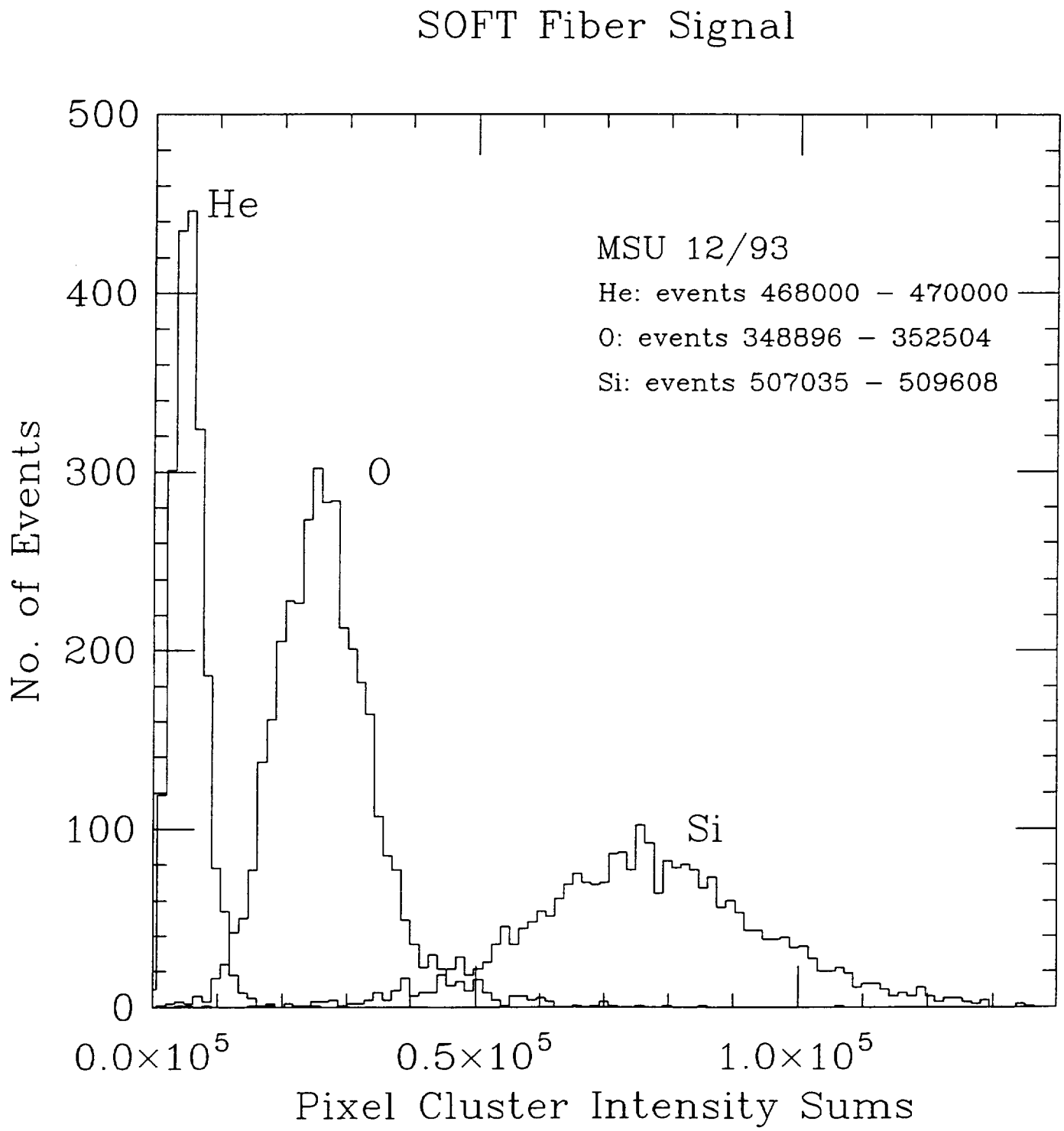
SOFT Fiber Signal
MSU 12/93
He: events 468000 – 470000
O: events 348896 – 352504
Si: events 507035 – 509608
He
O
Si
No. of Events
500
400
300
200
100
0
0.0×10^5
0.5×10^5
1.0×10^5
Pixel Cluster Intensity Sums

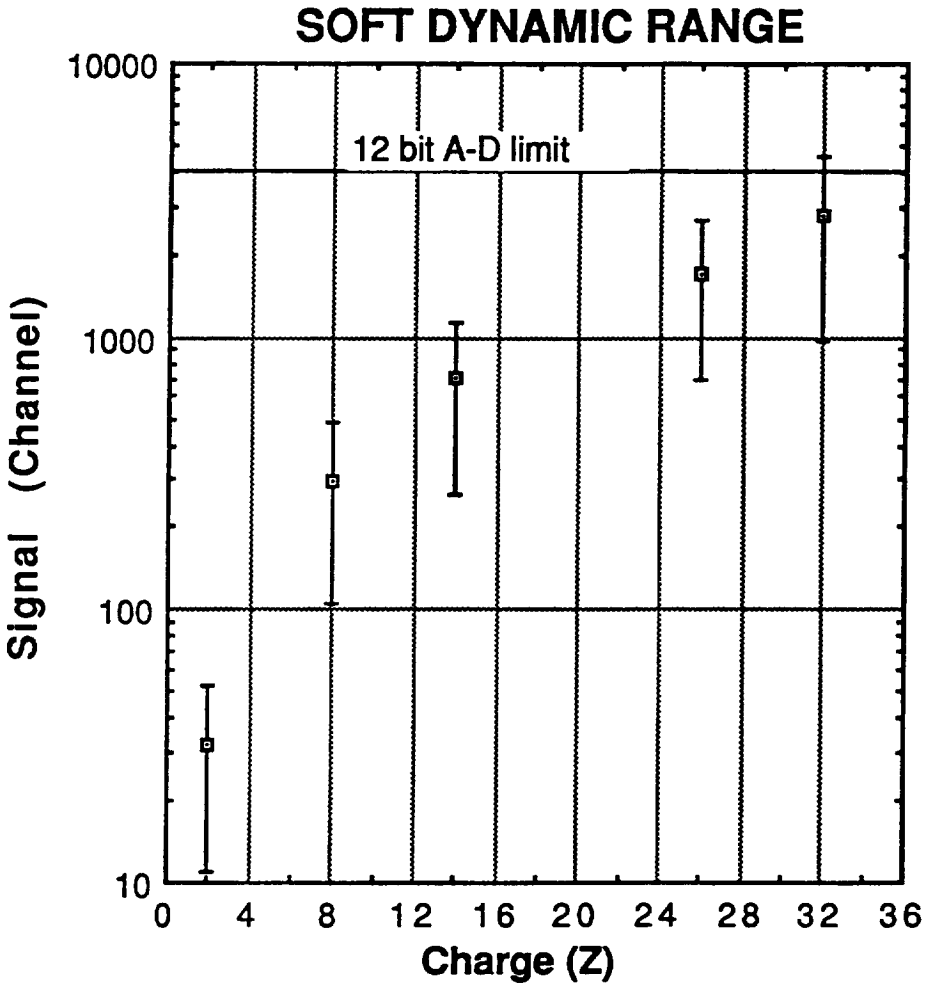

The data points plotted are the approximate signal expected for a particle at a typical energy and angle. The upper limits correspond to the expected signal for the lowest energy stopping particles (highest dE/dx) at a 45° angle that just penetrate through the first two stack detectors. The lower limits correspond to vertical particles with the highest energy that stop just before entering the last silicon wafer.

SUMMARY OF ACCOMPLISHMENTS

AT MSU 12/93

- Detection of He, O, Si, S with good efficiency.
- Operation of fast/slow camera clocking.
- Operation of CCD quick clear (200μs).
- Demonstration of centroid algorithm on-line.
- Determination of system dynamic range
- Problem identified
  --Determined that margin in system gain is less than desired. As result, plan to increase thickness of 1 MCP in image intensifier.
  --Minimal impact on instrument.

LONG DURATION TEST OF FIBERS

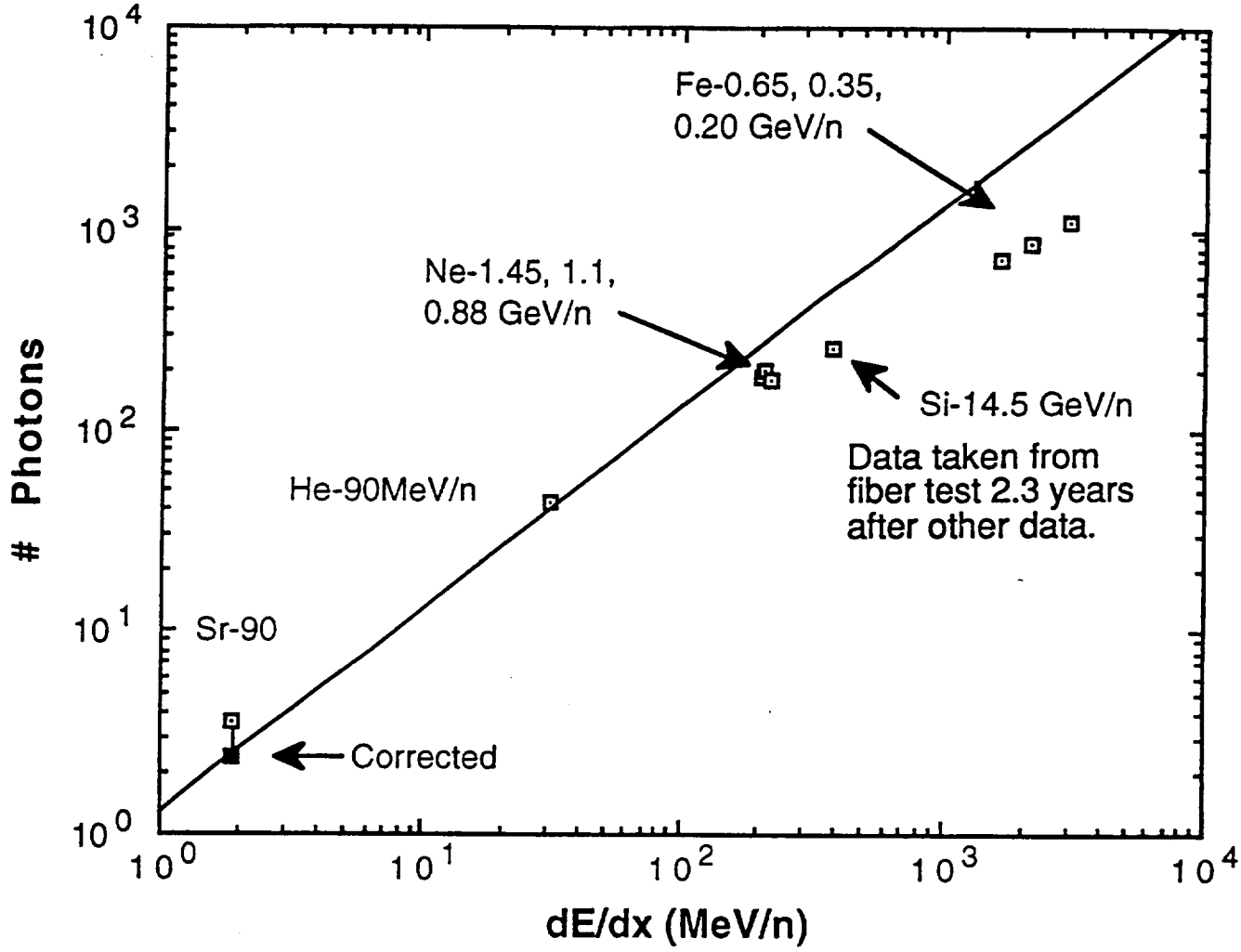

All data were taken using the same scintillating fiber ribbon. All data except the 14.5 GeV/n Si were taken at the Bevalac in Dec. 1989. The Si data was taken at Brookhaven in Mar. 1992. No significant degredation in light output was observed over this 2.3 year period.

ORIGINAL PAGE
BLACK AND WHITE PHOTOGRAPH

Fiber Drawing Machine

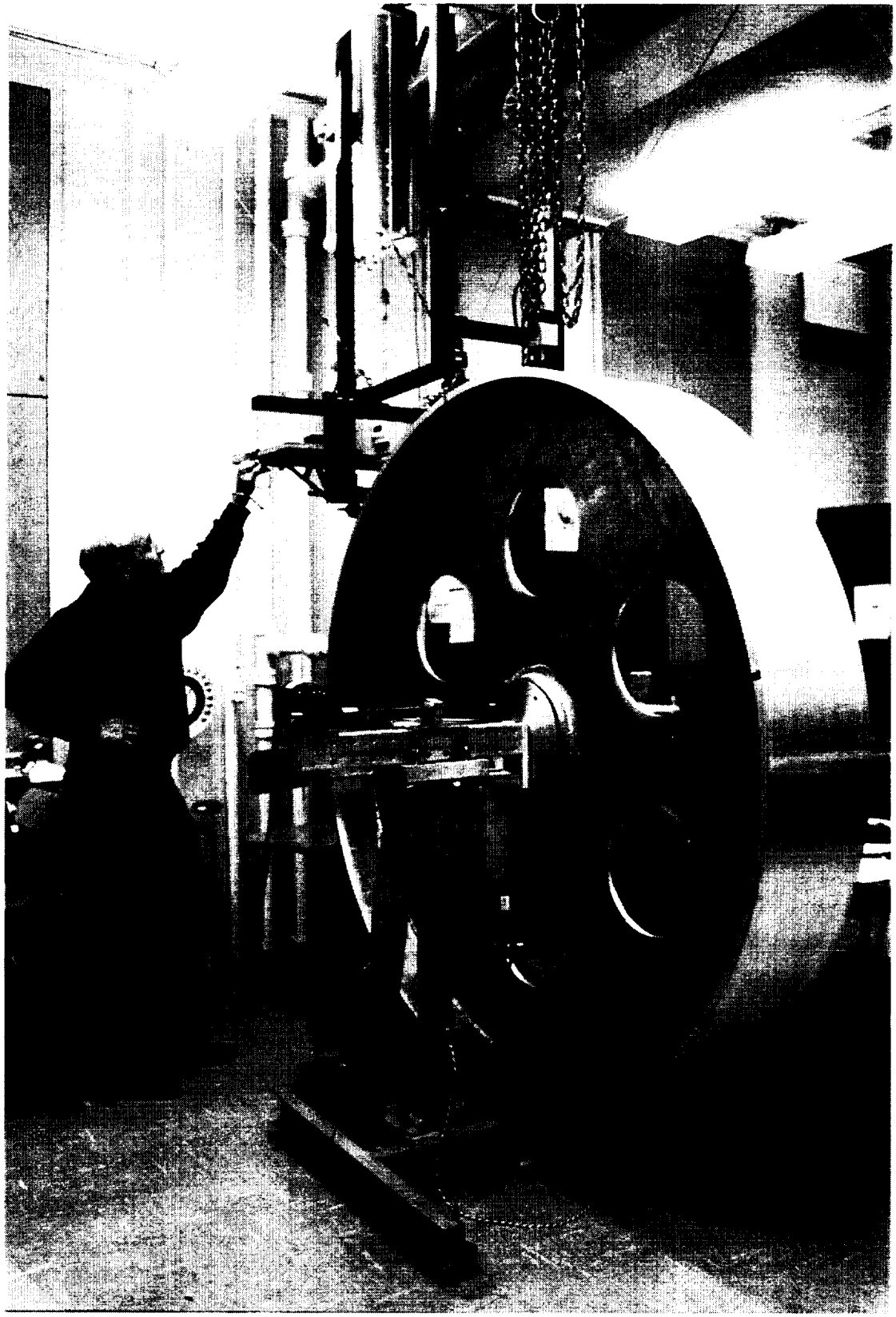

The fiber preform is placed in the drawing oven and fibers are drawn onto the large wheel.

Fiber Transfer Mechanism

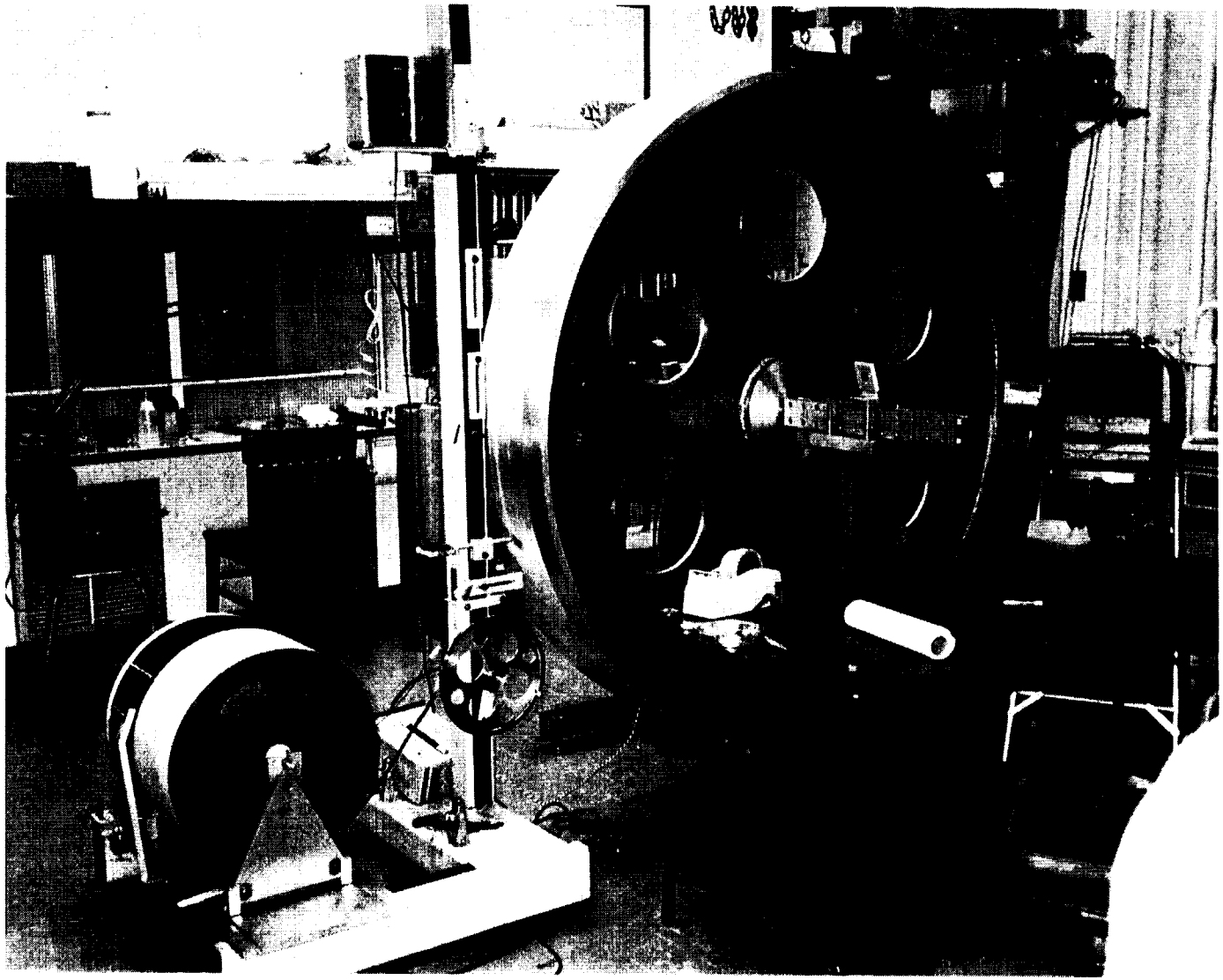

Shows fibers on large wheel being ttansferred onto small drum to form fiber layers. The black EMA coating is applied in the operation.

ORIGINAL PAGE
BLACK AND WHITE PHOTOGRAPH

SOFT Hodoscope Fiber Planes

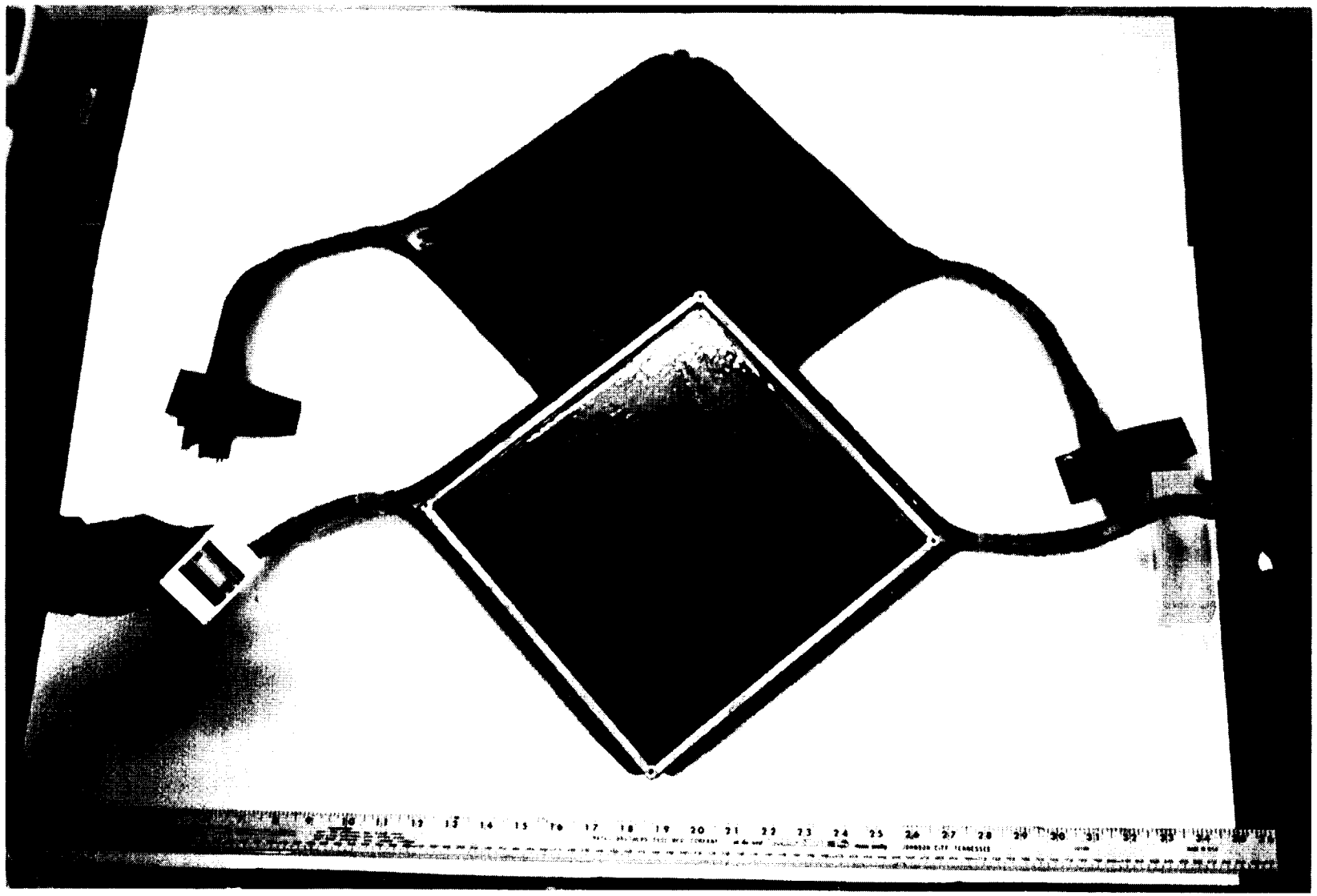

Two fiber planes, one viewed from fiber side and one viewed from Kapton substrate side.

ORIGINAL PAGE
BLACK AND WHITE PHOTOGRAPH

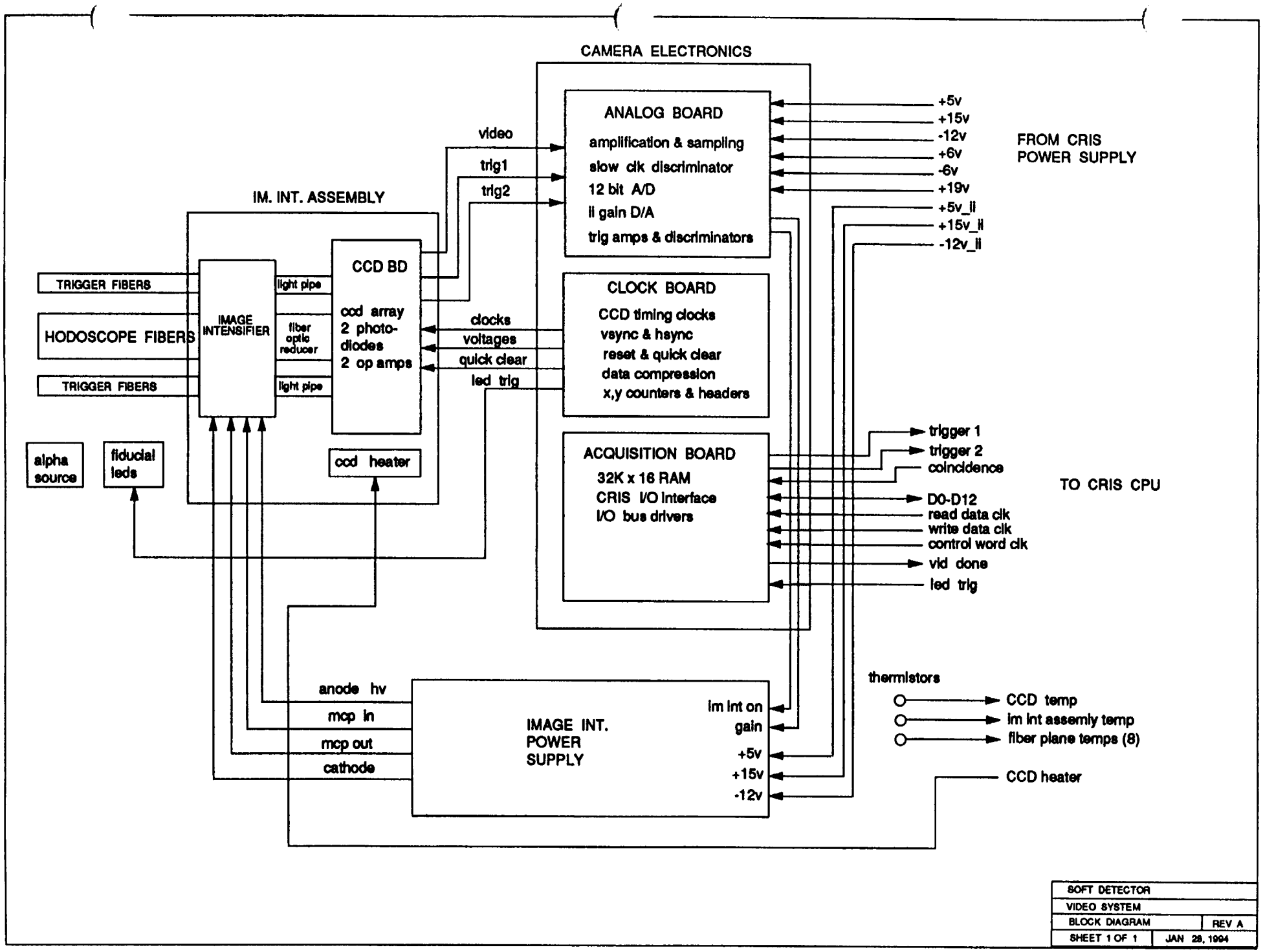
CAMERA ELECTRONICS
ANALOG BOARD
amplification & sampling
slow clk discriminator
12 bit A/D
li gain D/A
trig amps & discriminators
CLOCK BOARD
CCD timing clocks
vsync & hsync
reset & quick clear
data compression
x,y counters & headers
ACQUISITION BOARD
32K x 16 RAM
CRIS I/O interface
I/O bus drivers
video
trig1
trig2
clocks
voltages
quick clear
led trig
IM. INT. ASSEMBLY
TRIGGER FIBERS
HODOSCOPE FIBERS
TRIGGER FIBERS
IMAGE INTENSIFIER
light pipe
fiber optic reducer
light pipe
CCD BD
ccd array
2 photo-diodes
2 op amps
ccd heater
alpha source
fiducial leds
+5v
+15v
-12v
+6v
-6v
+19v
+5v_li
+15v_li
-12v_li
FROM CRIS POWER SUPPLY
trigger 1
trigger 2
coincidence
D0-D12
read data clk
write data clk
control word clk
vid done
led trig
TO CRIS CPU
anode hv
mcp in
mcp out
cathode
IMAGE INT. POWER SUPPLY
im int on
gain
+5v
+15v
-12v
thermistors
CCD temp
im int assemly temp
fiber plane temps (8)
CCD heater
SOFT DETECTOR
VIDEO SYSTEM
BLOCK DIAGRAM
REV A
SHEET 1 OF 1
JAN 28, 1994

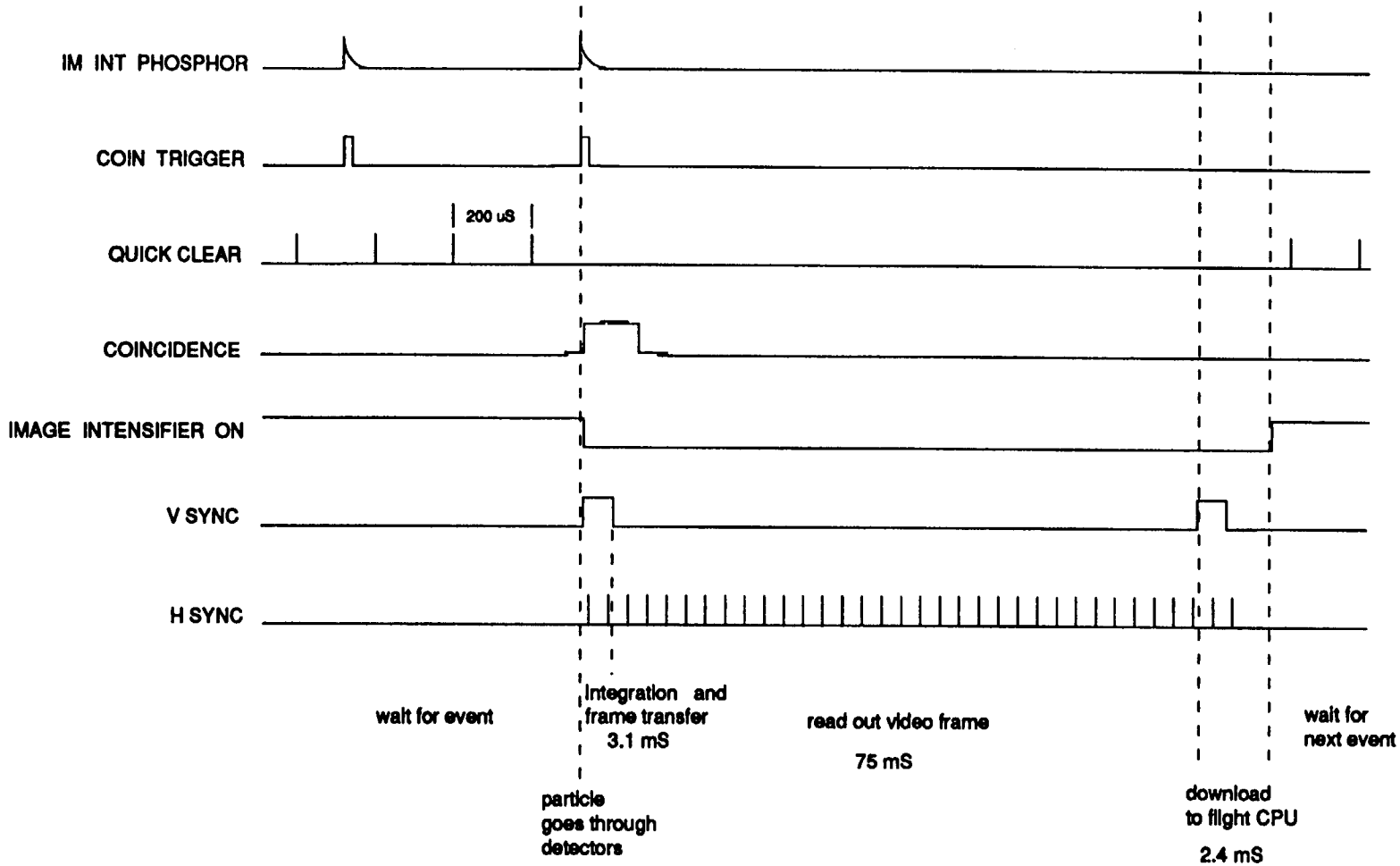

SOFT DETECTOR	
VIDEO TIMING DIAGRAM	
	REV. B
SHEET 1 OF 1	JAN 27, 1994

SOFT HIGH VOLTAGES

Image intensifier requires high voltages as follows:
(all voltages are wrt to MCP-out)

Photocathode	gated on: -2600, off:+2360V
MCP-in	-2400V
MCP-out	Ground
Anode	+5500V

SOFT Accelerator Configuration

(Bench Test Equipment)

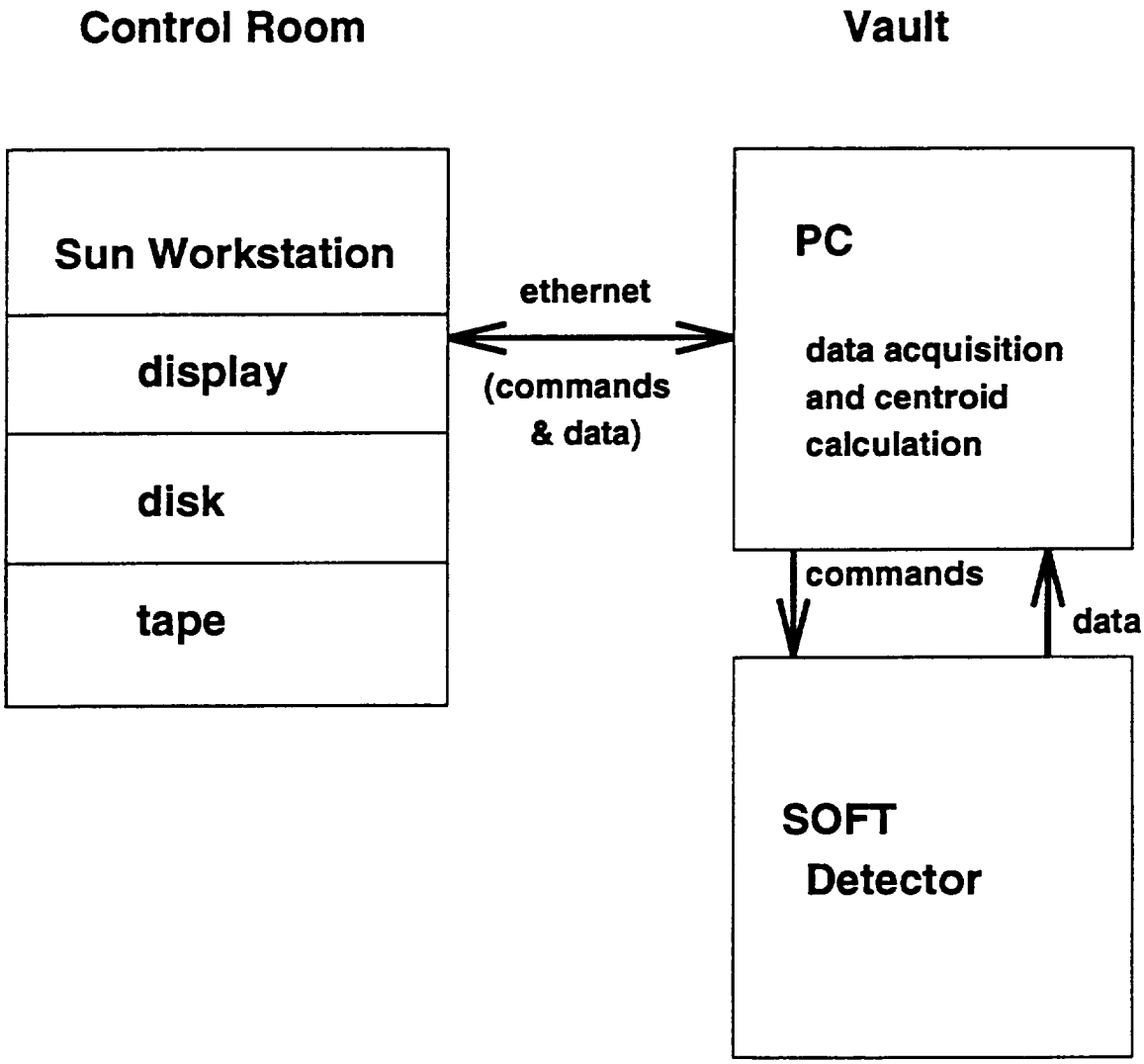

SOFT Data Stream

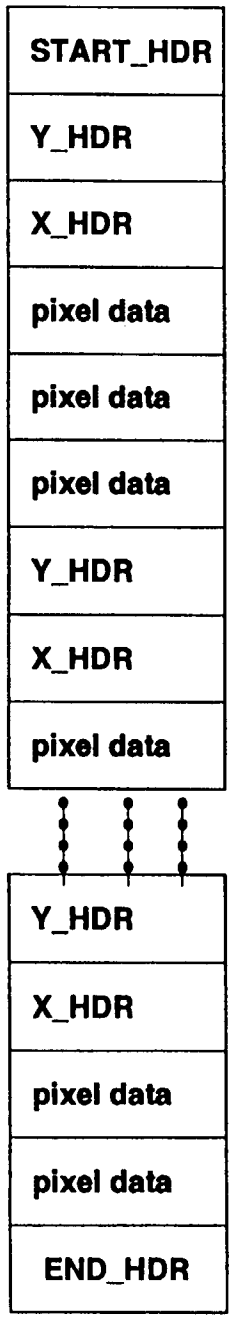

Diagram of the SOFT video data as supplied to the CRIS computer.

SOFT Centroid Algorithm

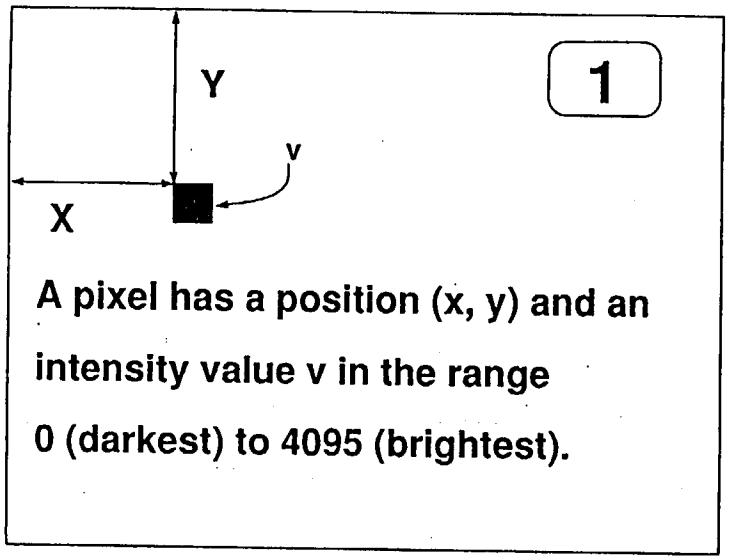

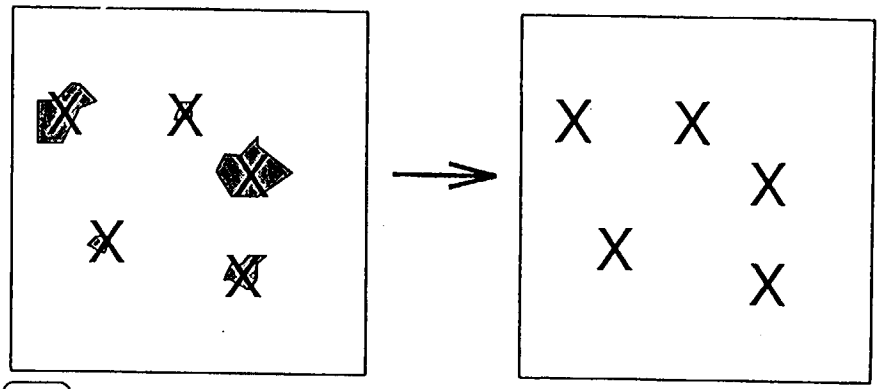

4 Determine centroid of each cluster.

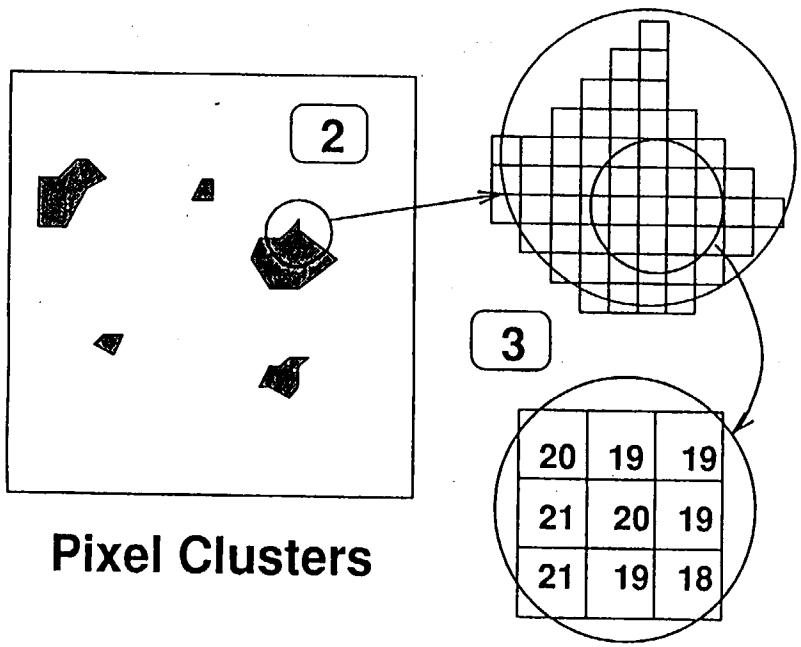

Pixel Clusters

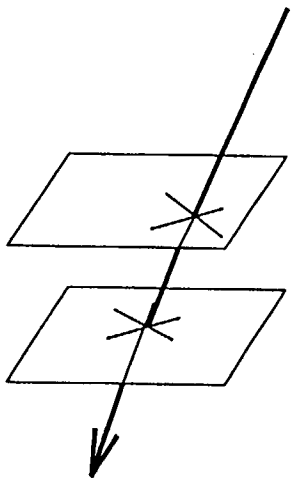

5 Calculate trajectory of particle.

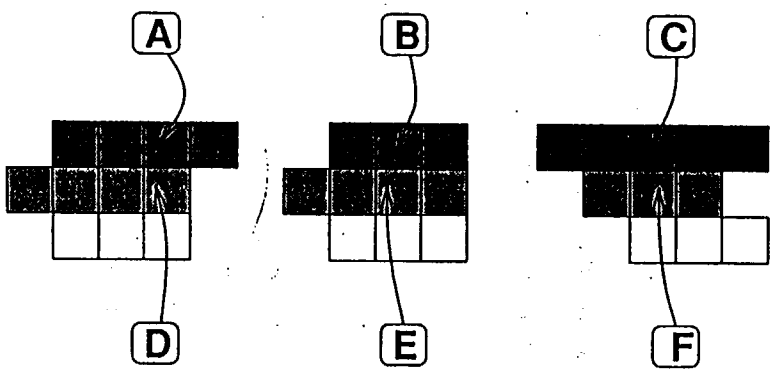

The pixel segments are received from the video system in the order A, B, C, D, E, F . . .

Algorithm Details

1) Each pixel segment is assigned to a cluster.

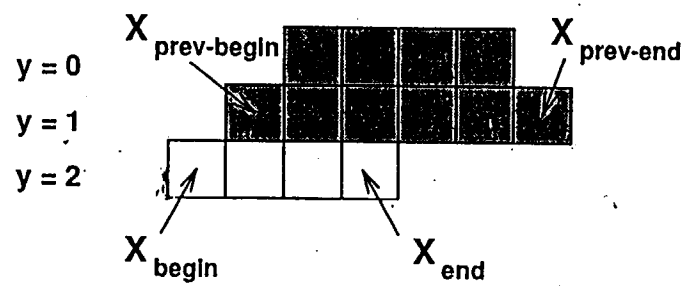

To be part of a cluster, we must have:

$Y - Y_{prev} = 1$

$X_{begin} <= X_{prev\text{-}end}$

$X_{end} >= X_{prev\text{-}begin}$

More Algorithm Details

2) Determine how many clusters the the pixel segment can be part of.

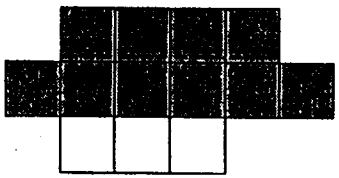

segment in 1 cluster

↓

add segment to cluster

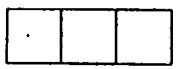

segment in 0 clusters

↓

start new cluster with this segment

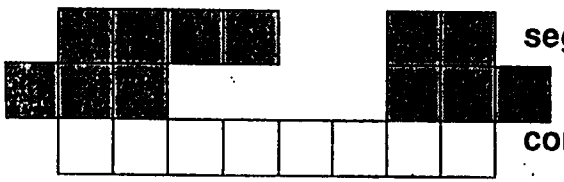

segment in 2 or more

↓

combine clusters into 1

Still More Algorithm Details

3) After a cluster "closes", delete those that are too small or too big.

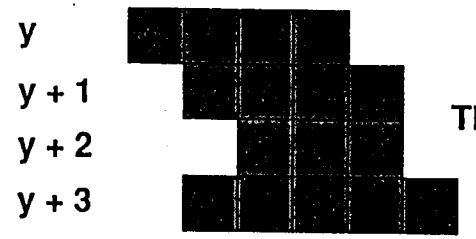

This cluster closes at this row.

This cluster closes at this row.

Closed, but has too few pixels.

One Last Algorithm Detail

4) Calculate the centroid and intensity for each cluster.

The centroid is calculated as follows:

```
for each pixel in the cluster {
   pixelsum = pixelsum + pixel value
   xsum     = xsum + (x coordinate X pixel value)
   ysum     = ysum + (y coordinate X pixel value)
}
x center = xsum / pixelsum
y center = ysum / pixelsum
```

The pixelsum is used as the intensity parameter for the cluster.

For example:

Y \ X	1	2	3	4
1		100	110	120
2		60	58	50
3		40	40	
4	10	10	10	

intensity = pixelsum = 100 + 110 + 120 +
60 + 58 + 50 +
40 + 40 +
10 + 10 + 10 = 608

xsum = (2x100) + (3x110) + (4x120) +
(2x60) + (3x58) + (4x50) +
(2x40) + (3x40) +
(1x10) + (2x10) + (3x10) = 1764

ysum = (1x100) + (1x110) + (1x120) +
(2x60 + (2x58) + (2x50) +
(3x40) + (3x40) + (4x10) + (4x10) + (4x10) = 1026

x centroid = 1764 / 608 = 2.9 ~ 3

y centroid = 1026 / 608 = 1.6 ~ 2

SOFT BIT RATE & DATA MODES

- Assume Flex format

- Normal Mode (NM)

--Number of bits/ cluster

x cluster	9 bits	
y cluster	8 bits	
Intens. param(encode)	7 bits	3 MSB; 4 bits, # of LSB
No. pixels(encode)	6 bits	3 MSB; 3 bits, # of LSB
Total/cluster	30 bits	

--Assume average of 8 clusters/event
Total video bits = 8x 30=240

--header information
Number of clusters 5 bits`

--*Total number of bits/event = 240 + 5 = 245bits*

- Diagnostic Mode #1 (DM1) (Auto 1 min/day)

--NM Data	245 bits
--Raw video data size	16 bits
--Number of clusters (relaxed cluster criteria)	8 bits

--Number of bits/cluster

x cluster	9 bits	
y cluster	8 bits	
No. pixels	7 bits	3 MSB; 4 bits, # of LSB
Cluster height	8 bits	
Cluster width	9 bits	
Maximum pixel int.	12 bits	
Average pixel int.	7 bits	3 MSB; 4 bits, # of LSB
Total bits/ cluster	60 bits	

Total bits for up to 25 brightest clusters
245+ (25x60) + 16 + 8 = 1769 bits/event

- Diagnostic Mode #2 (DM2) (Detailed)

--DM1 data	1769 bits
--Raw video data	63 kbytes (max); 2 kbyte (typ)
--*Total bytes*	*64kbytes (max); 2kbyte (typ)*

(1/28/94)

SOFT COMMAND LIST

1/31/94

1. Camera #1, #2 power on/off.
2. Image intensifier #1, #2 power on/off.
3. Enable/disable data collection in normal mode.
4. Set camera discriminator threshold level (0-255).
5. Set trigger 1 discriminator threshold level (0-255).
6. Set trigger 2 discriminator threshold level (0-255).
7. Set image intensifier gain level (0-255).
8. Enable/disable quick clear.
9. Set cluster acceptance criteria.
   - min number of pixels
   - max number of pixels
   - min number of rows
   - max number of segments
10. Mask damaged pixels and/or centroids.
11. Run electronic test.
12. Run fiducial LED test.
13. Run alpha source test.
14. Run in diagnostics mode 1 for N events (quick diagnostics).
15. Run in diagnostics mode 2 for N events (raw video data dump).

SOFT CALIBRATION & MAPPING

Ground Calibration

- LED's attached to fibers
  --System functional test; rough sensitivity test.

- Alpha sources (low activity Am-241; one or two sources)
  --Sources permanently affixed to 1 or 2 fibers; system gain monitor.

- Map absolute position using highly collimated Sr-90 source in laboratory. Expected accuracy ≤100μm.

- Map fiber plane coordinates onto CCD array using accelerator beam.

- Maps checked and referenced to Silicon detector coordinates with accelerator beam.

Flight Calibration

- LED's attached to fibers
  --System functional test; rough sensitivity test.

- Alpha sources (low activity Am-241; one or two sources) attached to fibers.
  --Monitor system gain.

- Cosmic Rays
  --Monitor fiber coordinate stability.

CD-2

ENVIRONMENTAL TESTING STATUS-SOFT

Image Intensifier Test	Date	Tube Type	Tube SN	Conditions	Results
Shake	1/15/92	Oversize Potting (10 cm diam)	2920605	No loading	No mechanical damage
	7/22/93	New tube, poor QE. (Diam 7.1 cm)	200316/2	Loaded with fiber optic at output; Conathane EN-11 potting used. Photocathode to front MCP separation 200 microns.	Partial failure--Photocathode slightly damaged. Inner 7% of area scratched.
	11/4/93	Repotted subspec tube (Diam 7.7 cm)	2920605-Repot	Dow Corning 93-500 potting used; less rigid potting.	No damage to photocathode.

Action Taken: Ordered new image intensifier with photocathode to front MCP separation 470 microns, potting diam increased.

Fiber Plane Tests	Date	Test Conditions	Results
Shake	3/6/92	Sine and random vibration	No mechanical damage.
T/V test	6/16/92	Cycled between -40 C to +40 C four times under vacuum	No delamination or wrinkling of fiber planes observed. Passed Test.

Radiation Damage Tests	Date	Test Conditions	Results
CCD	2/10/93	Irradiated two TH-7866 chips at JPL.	With 1 cm Al equivalent shielding, radiation damage for 5 year mission will be insignificant.
Optic Reducer and Coupler	6/4/92	Irradiated with 15 MeV protons, WU Cyclotron, 5 to 50 kRads	Non-rad hard fibers had small amount of darkening at 10 kRads. Shielding planned for camera will make damage insignificant.

SOFT ENVIRONMENTAL TESTING PLANS BEFORE CRIS INTEGRATION

Test	Date	Purpose
Fiber System Vacuum Test	Mar-94	Test entire system for operation in vacuum at room temperature
Shake test of Image Intensifier.	TBD	Probable test of image intensifier assembly using tube with one double thickness MCP.
Thermal Vac Test of Prototype SOFT system	Sep-94	Test full prototype SOFT instrument.
Shake test of Prototype SOFT System	Sept-Oct/1994	Test full prototype SOFT instrument.
Shake and T/V testing of Flight SOFT System	Aug-Sept/1995	Environmental testing of flight SOFT instrument.

FLIGHT PROCUREMENT STATUS

ITEM	VENDOR	STATUS	PLANS
CCD's (TH-7866)	Thomson	Purchased 4 flight CCD's; 5/93 (* See below)	
Image Intensifiers (MCP-240S)	Photek	Purchased 1 Im Int as flight spare. (**See below)	Would like more headroom on tube gain. Plan to purchase 3 more tubes; 2 flight and 1 spare with one double thickness MCP which gives higher gain. Order first of three in Feb-Mar.
High Voltage Power Supplies (Type 2402)	K & M Electronics	Presently designing and building prototype.	Prototype finished by June, 94; 2 flight units and spare by October, 94.
Fiber Reducers	Schott		Order four in March for delivery in May.
Photodiodes	UDT	Ordered one for delivery early Feb.	Evaluate and order flight p.d.'s in Mar.
Electronic components	Various	Have some connectors; Presently in 3rd round of approval cycle for most parts with JPL.	Order flight parts after approval by JPL.

*CCD is a 550 x 244 array and comes with a fiber optic coupler bonded to the CCD. Flight CCD's are from same lot as APL UVISI CCD's on the MSX spacecraft.

**Image intensifiers are essentially the same as those used on UVISI except for photocathode.

FABRIC(ON FLOW CHART

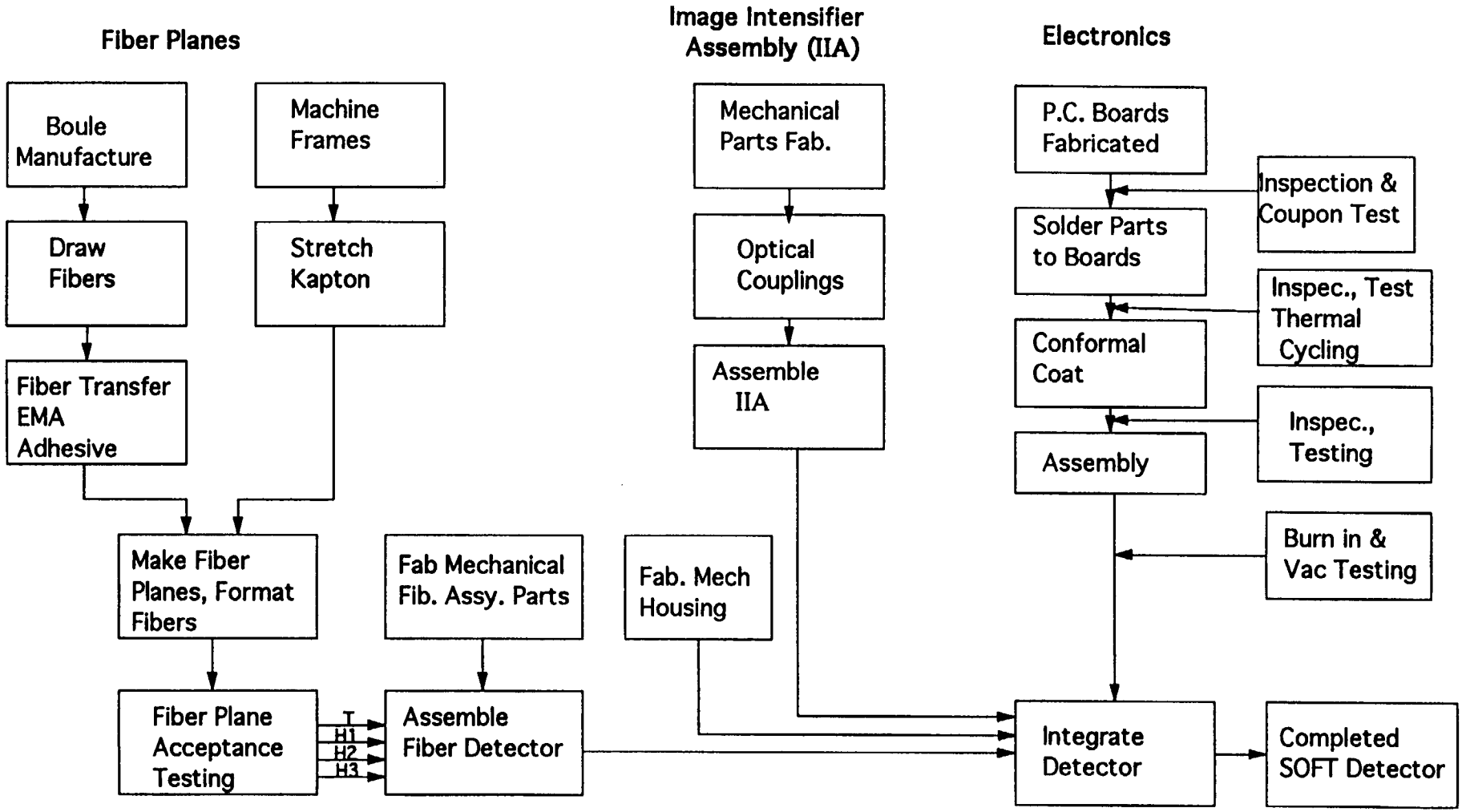

Reliability and Quality Assurance Approach

- Fiber Planes
  - --Maintain informal logbooks, production procedures, and test records.
  - --Fiber plane acceptance testing occurs after production.
  - --After passing acceptance tests, the use of each fiber plane will be recorded in a log that follows the plane.

- Flight equipment (Im Int, CCD's, HV Power Supplies, Fiber Reducers)
  - --before integration into detector, keep in locked, limited access cabinet.
  - --Each use of equipment is recorded on a log that follows the equipment.

- Electronics
  - --Established parts and subassembly documentation and tracking system.
  - --Engineer and Technician will attend JPL Soldering and QC Inspection School.
  - --Established ESD handling and storage procedures.

- Appropriate documents will be generated to implement our Quality Control.
  - --Processes
  - --Plans
  - --Procedures
  - --Specifications

- Mr. James Cravens, consultant, will assist us in defining and generating these documents.

SOFT Procedures, Plans and Specifications

PROCEDURES	PRELIMINARY	FINAL
Tinning of Electrical Components and Connectors Pins for SOFT	X	
Thermal Bonding of Components for SOFT	X	
Installation of Radiation Shielding for SOFT	X	
Spot Bonding of Components, Cables, and Harnesses for SOFT	X	
Cleaning of Electrical Assemblies for SOFT	X	
Swaging of Terminals on Printed Wiring Boards and Assemblies for SOFT		
Fabrication of Printed Wiring Board Assemblies for SOFT		
Verification Procedure for SOFT		
Conformal Coating of Printed Wiring Board for SOFT		
Electrical Testing of Individual Circuit Board for SOFT		
Electrical Testing of Major Sub-Assemblies for SOFT		
Electrical Testing of Complete SOFT Assembly		
PLANS		
SOFT Handling Plan		
SOFT Cleanliness Plan		
SOFT Verification Plan		
Fabrication and Assembly Flow Plan		
SPECIFICATION		
SOFT Verification Specification		

RISK REDUCTION APPROACH

- Purchase key flight equipment as early as possible
  - --CCD's purchased in Ph. B.
  - --Image Intensifier, purchased 1 in Ph. B.
  - --HVPS prototype design and fab initiated in Ph. B.
    - --Conformal coating most parts of supply in preference to full potting; reduces risk.
  - --Most electronic parts in 3rd round of approval by JPL.

- Fabricated fiber assembly prototype during Ph. B.

- Performed environmental testing on key components in Ph. B.
  - --Image Intensifiers-3 shake tests
  - --CCD's-Rad damage test by JPL
  - --Fibers-Shake test, Thermal Vac test
  - --Glass fiber reducers/couplers-Rad damage test.

- Performed key science tests in Phase B
  - --MSU tests 6/93 and 12/93

SUMMARY

- The CRIS instrument will be the first instrument flown in space to utilize a scintillating fiber hodoscope.

- SOFT detector successfully used in cosmic ray environment on high altitude balloon flight.

- Accelerator tests have demonstrated that
  - --SOFT has the required detection efficiency, dynamic range, and spatial resolution to achieve the CRIS objectives.
  - --CCD quick clear successfully implemented; essential to operate in cosmic ray environment.
  - --Centroid algorithm successfully demonstrated; essential to SOFT operation within available bit rate.

- Since SOFT is new to space flight, we have emphasized early environmental testing on subsystems.
  - --Identified image intensifier problem with shake.
  - --Believe that we have eliminated problem; may require one more shake of new tube to verify.

- Procurement of flight equipment (CCD's, HVPS, and Image Intensifiers) began in Phase B to reduce schedule risk.

- With present program, the SOFT hodoscope will meet the requirements of CRIS within cost and schedule.

CRIS PDR

Section 6

Preliminary Electrical Design of Instrument

2/22–23/94

COSMIC-RAY ISOTOPE SPECTROMETER (CRIS)

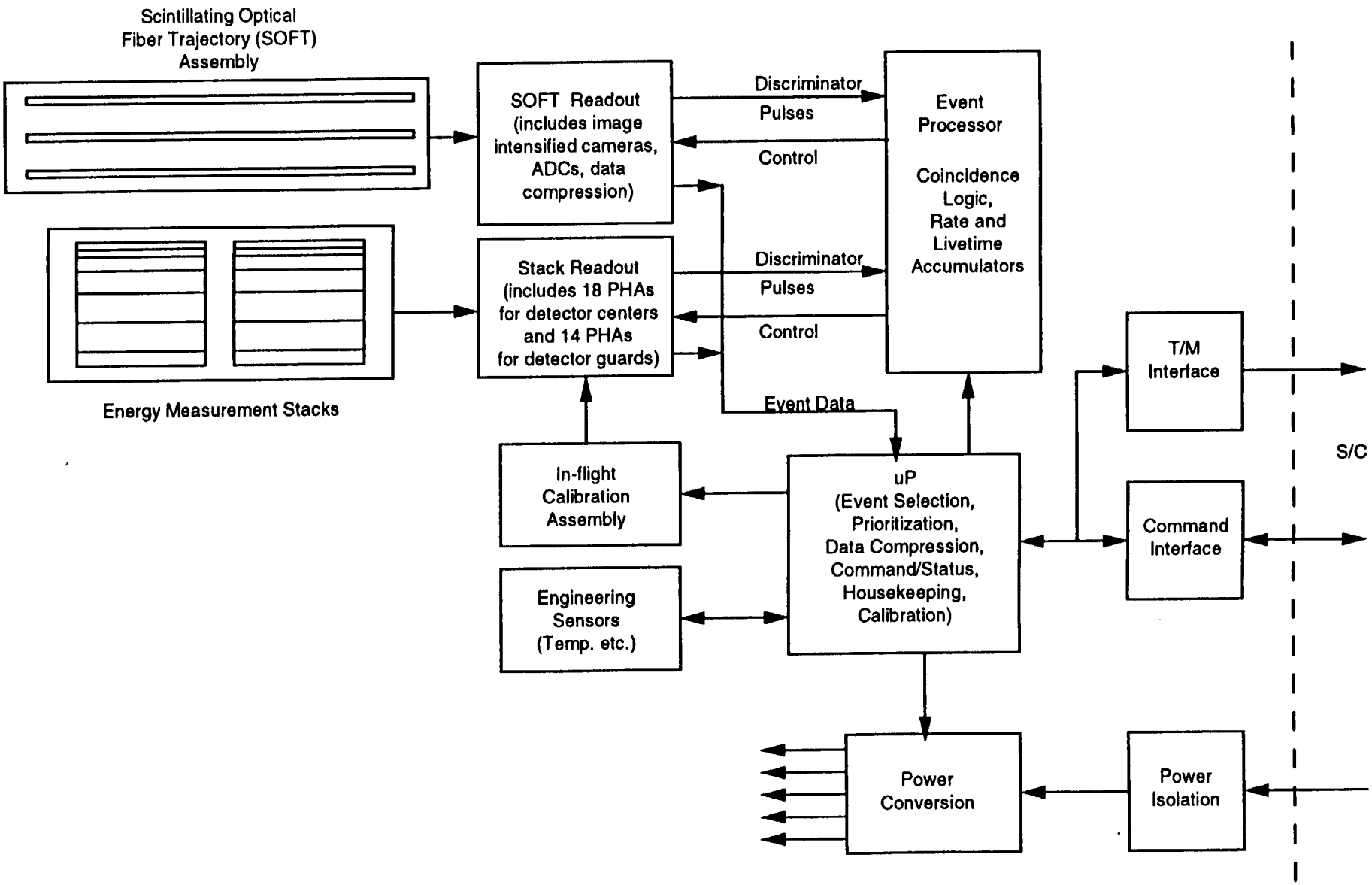

Preliminary Electrical Design of Instrument (continued)

- Analog Electronics -- Stack VLSI
  - ∗ **Approach**
    1. **Harris VLSI chip**
    2. **In Teledyne hybrid**
    3. **Works for all stack detectors in both CRIS & SIS**
  - ∗ **Expected performance**
    1. **Excellent -- see next chart**
    2. **Low power -- 40 mW per chip**
  - ∗ **Development status**
    1. **Should be testing prototype hybrid by PDR**
    2. **Complete design for all CRIS/SIS stack detectors done in Phase B**

2/22–23/94

Preliminary Electrical Design of Instrument (continued)

- Stack VLSI PHA Performance

	Goal	Expect
∗ Linearity	$< \pm 0.05\%$	$\pm 0.003\%$ typ; $\pm 0.01\%$ max
∗ Gain temp coeff	$< \pm 200$ ppm/^{0}C	± 20 ppm/^{0}C typ; ± 55 ppm/^{0}C max
∗ Offset temp coeff (-20^0C to $+40^0$C)	<2 ch	<0.4 ch
∗ Dynamic range	700	2000
∗ Gain error due to charge collection time	$\lesssim 0.2\%$	$\lesssim 0.2\%$
∗ Noise (rms), SIS T1	210 keV	123 keV
∗ Noise (rms), CRIS G34	50 keV	38 keV (cold)
∗ Quantization resolution	12 bits	12 bits
∗ Power (mW)	100	40

2/22–23/94

CRIS ADC Characteristics

Det.	Thk. (mm)	No. per tel.	No. per ADC	C (pF)	C_f (pF)	R_f (kΩ) ($\tau = 2\mu$s)	I_{typ} (μA) (20 C)	I_{max} (μA) (35 C)	Bias (V)	T_{hole} (ns)
E1	3	1	1	256	1000	2.00	15	60	400	469
E2	3	1	2	444	1000	2.00	30	120	400	469
E3	3	2	4	888	1500	1.33	60	240	400	469
E4	3	2	4	888	1500	1.33	60	240	400	469
E5	3	2	4	888	1500	1.33	60	240	400	469
E6	3	2	4	888	1500	1.33	60	240	400	469
E7	3	2	4	888	1500	1.33	60	240	400	469
E8	3	2	4	888	1500	1.33	60	240	400	469

Det.	No. of Chan.	Chan. Width (MeV)	F. S. ^{65}Zn (MeV)	Dyn. Range	"L" Thresh (MeV)	Max Proton ΔE	"M" Thresh (MeV)	"M" Thresh (ch.)	"M" Var. (ch.)	"H" Thresh (MeV)	"H" Thresh (ch.)	"H" Var. (ch.)
E1	4096	1.831	7500	2000	3.75	28	40	70	15	160	135	59
E2	4096	1.831	7500	2000	3.75	28	40	70	15	160	135	59
E3	4096	2.747	11250	2000	5.63	41	60	70	15	240	135	58
E4	4096	2.747	11250	2000	5.63	41	60	70	15	240	135	58
E5	4096	2.747	11250	2000	5.63	41	60	70	15	240	135	58
E6	4096	2.747	11250	2000	5.63	41	60	70	15	240	135	58
E7	4096	2.747	11250	2000	5.63	41	60	70	15	240	135	58
E8	4096	2.747	11250	2000	5.63	41	60	70	15	240	135	58

Notes:

I_{typ} and I_{max} values are per ADC, not per detector.
"M" discriminators picked so that H never triggers
"H" discriminators picked so that He never triggers
Assume ADC threshold corresponds to ch# 50
Assume at least ±33% variation (adjustability) in "M" and "H" thresholds
Assume single channel control of "M" levels; 2-channel control of "H" levels

CRIS Discriminator Characteristics

Signal	Cap (pf)	Imax (uA)	LLD (MeV)	ULD (MeV
G2	35	60	0.2 - 1.75	5
G3-G7	140	240	0.2 - 1.75	5
E9	512	120	0.2 - 1.75	5

Note: LLDs to be adjustable in flight in 50 keV steps (32 levels; 5 bits)

PRECISION PULSE HEIGHT ANALYSIS CHAIN

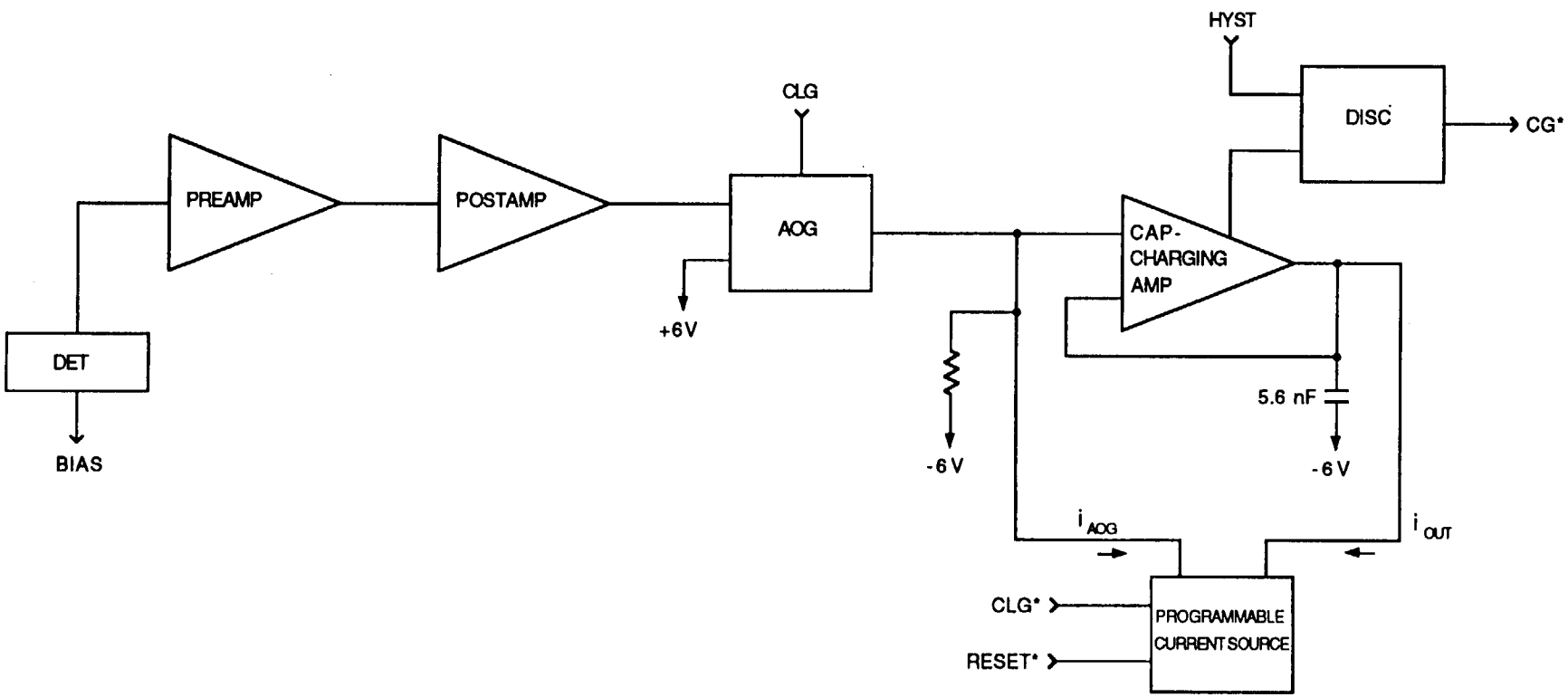

PREAMP, POSTAMP

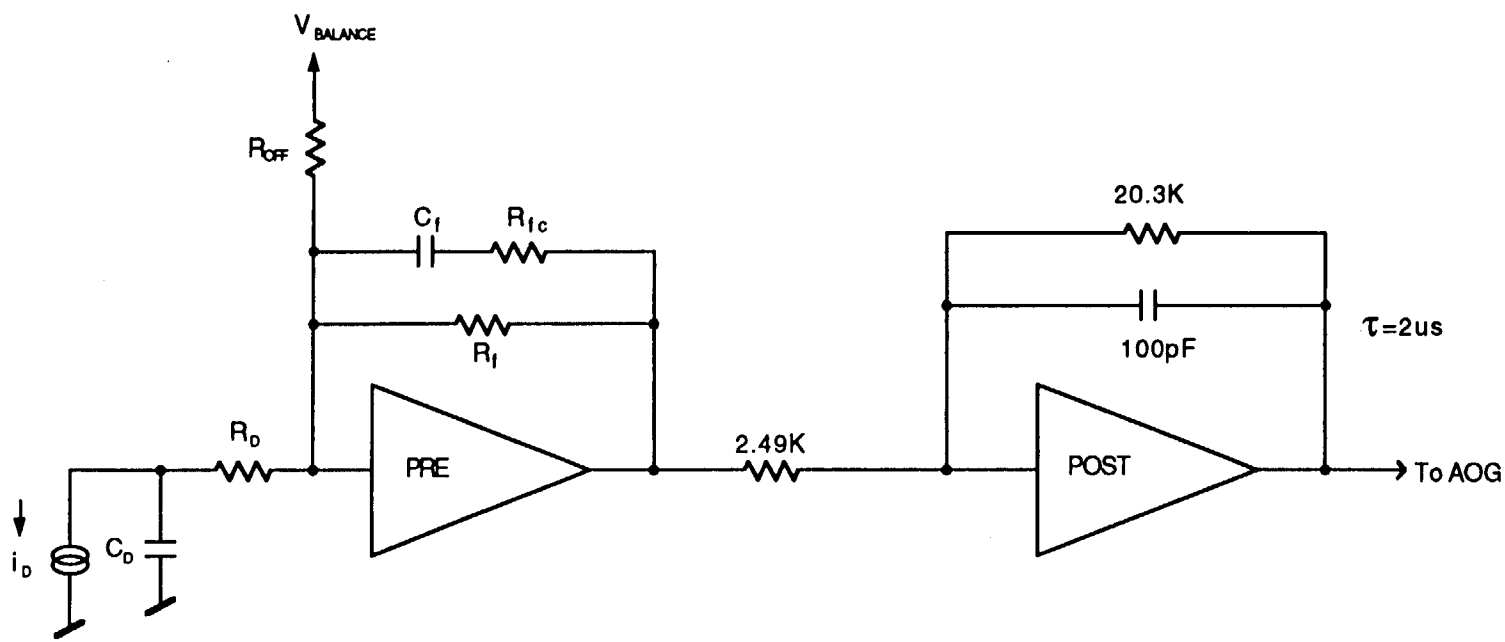

AMPLIFIER, OFFSET, GATE (AOG)

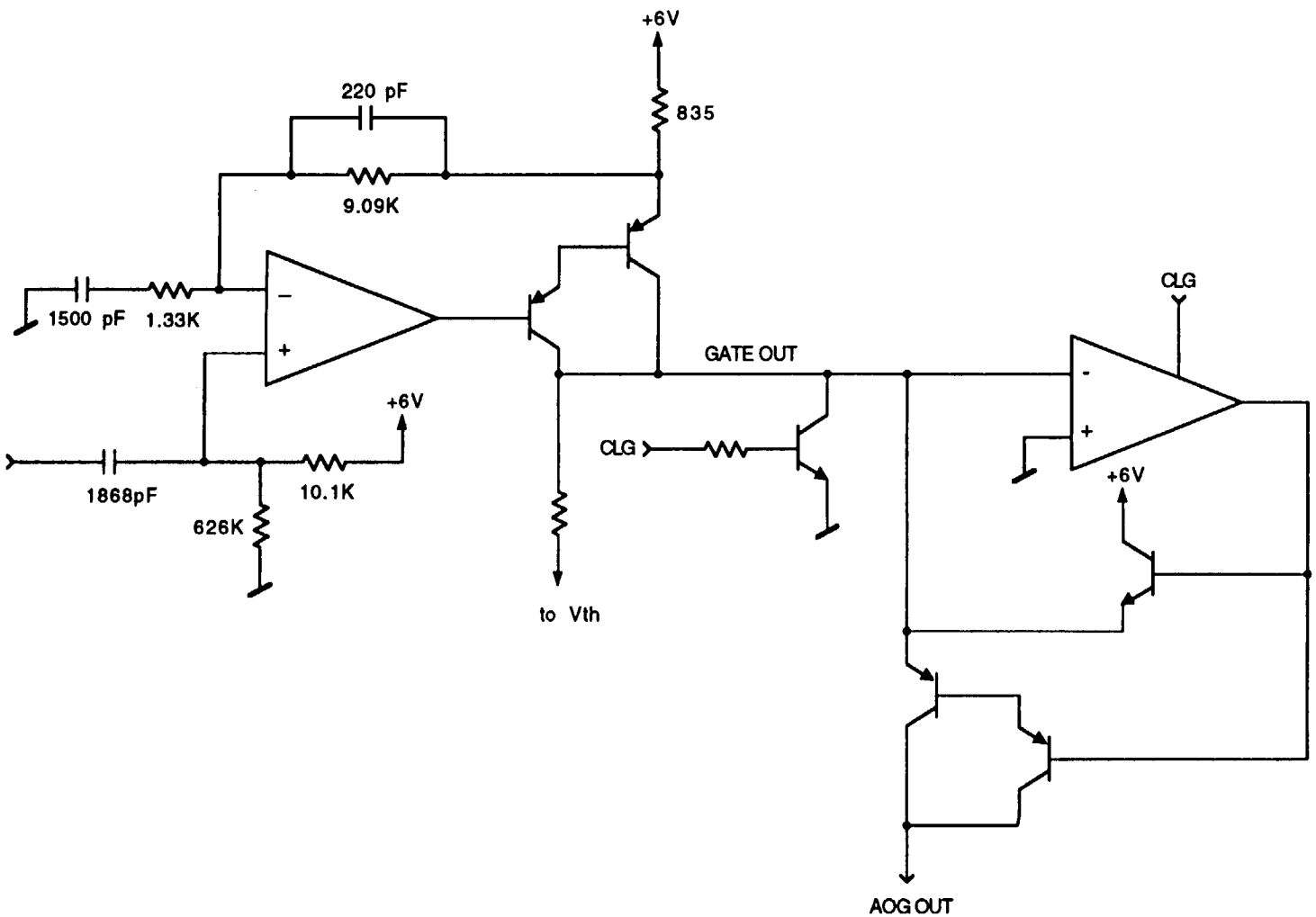

CAPACITOR-CHARGING AMP

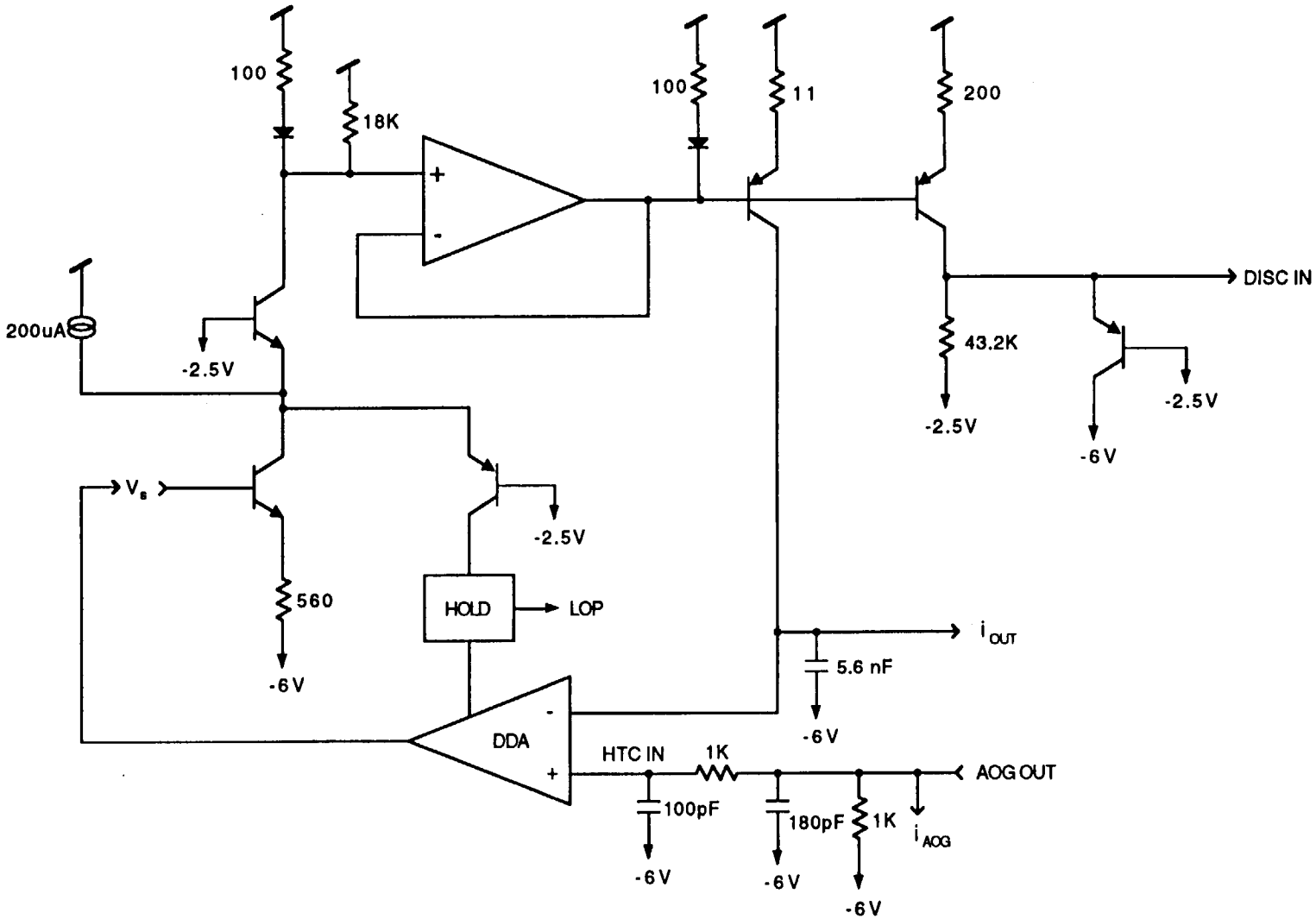

PROGRAMMABLE CURRENT SOURCE

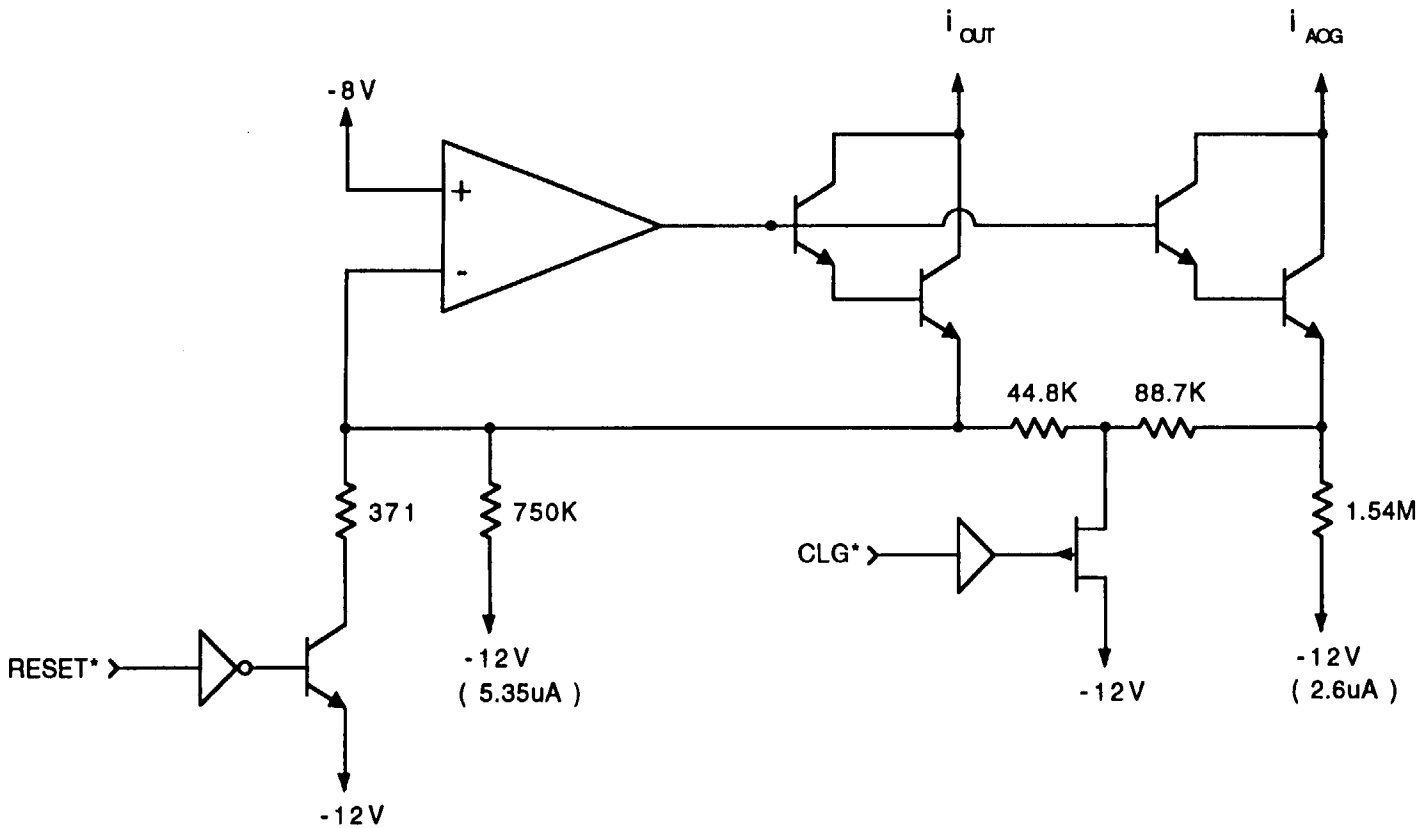

Preliminary Electrical Design of Instrument (continued)

- Electronic Calibration Plans
  - ∗ All stack detectors readout by similar PHA hybrids which are entirely self contained
  - ∗ Stack detector PHAs can and will be fully calibrated before installation on PWB, including:
    1. Threshold vs. threshold setting
    2. Noise
    3. Linearity
    4. Gain, including <u>absolute</u> gain
    5. Offset
    6. All at -20^0 C, $+20^0$ C, $+40^0$ C
  - ∗ Note that in past it was not possible to perform complete electronic calibration prior to PWB fab due to layout dependencies

2/22–23/94

Preliminary Electrical Design of Instrument (continued)

- Electronic Calibration Plans (continued)
  - ∗ **Entire electronic calibration of PHAs will be done at Teledyne using Caltech designed and supplied automatic test equipment**
  - ∗ **Calibration will be checked after PWB assembly with:**
    1. **External reference capacitor, test pulser, and detector simulator**
    2. **Built−in onboard test pulser and in−hybrid test capacitor**
  - ∗ **After system integration, calibration stability will be tracked by onboard test pulsers**
  - ∗ **Electronic and detector calibrations will be checked at heavy ion and in−flight data accelerator**

Preliminary Electrical Design of Instrument (continued)

- Logic/Software

  * Guiding Principles:

    1. Clock synchronous "state machine" approach for all logic

    2. "Front−end" control via dedicated state machine called "event processor"

    3. Simple, non−time critical interface between μP and front end

    4. Use of FORTH to program μP (RTX2010)
       Operating system in PROM
       Simple high level language, "standard"
       Eliminate emulation, cross compilers, development system

  * Heritage

    1. MACSYS = multi−channel (32) PHA system for accelerator calibrations

    2. GRIP = balloon−borne gamma−ray telescope

2/22−23/94

Preliminary Electrical Design of Instrument (continued)

- Logic Implementation
  - All logic to be done in Actel CMOS field programmable gate arrays
  - All flight parts, Actel A1020, are in hand
  - μP (RTX2010) has been ordered:
    1. Delivery soon, ~1 month
    2. RTX2000 is in hand as backup
  - PROM and RAM identified:
    1. IBM 32K x 8 RAM
    2. Harris 2K x 8 PROM (or UTMC 8K x 8 if available)
  - Heritage:
    1. Actel A1020: SAMPEX, GRIP
    2. RTX2000: MACSYS, GRIP

2/22–23/94

CRIS Logic Flow

Definitions

ADC = Logical "OR" of all ADC thresholds
E1A = Threshold of E1 detector in telescope A (similarly for E1B, E1C, E1D)
E2AB = Threshold of E2 detector pair in telescope half AB (similarly for E2CD, E9AB, E9CD)
GH = Logical "OR" of all high level guard discriminators
GL = Logical "OR" of all low level guard discriminators
HEn = Hydrogen timer expired
HeEn = Helium timer expired
Hodo = SOFT trigger
Hor = Logical "OR" of all "H" (high level) discriminator levels
Mor = Logical "OR" of all "M" (medium level) discriminator levels
* = Logical complement
+ = "OR"
. = "AND"

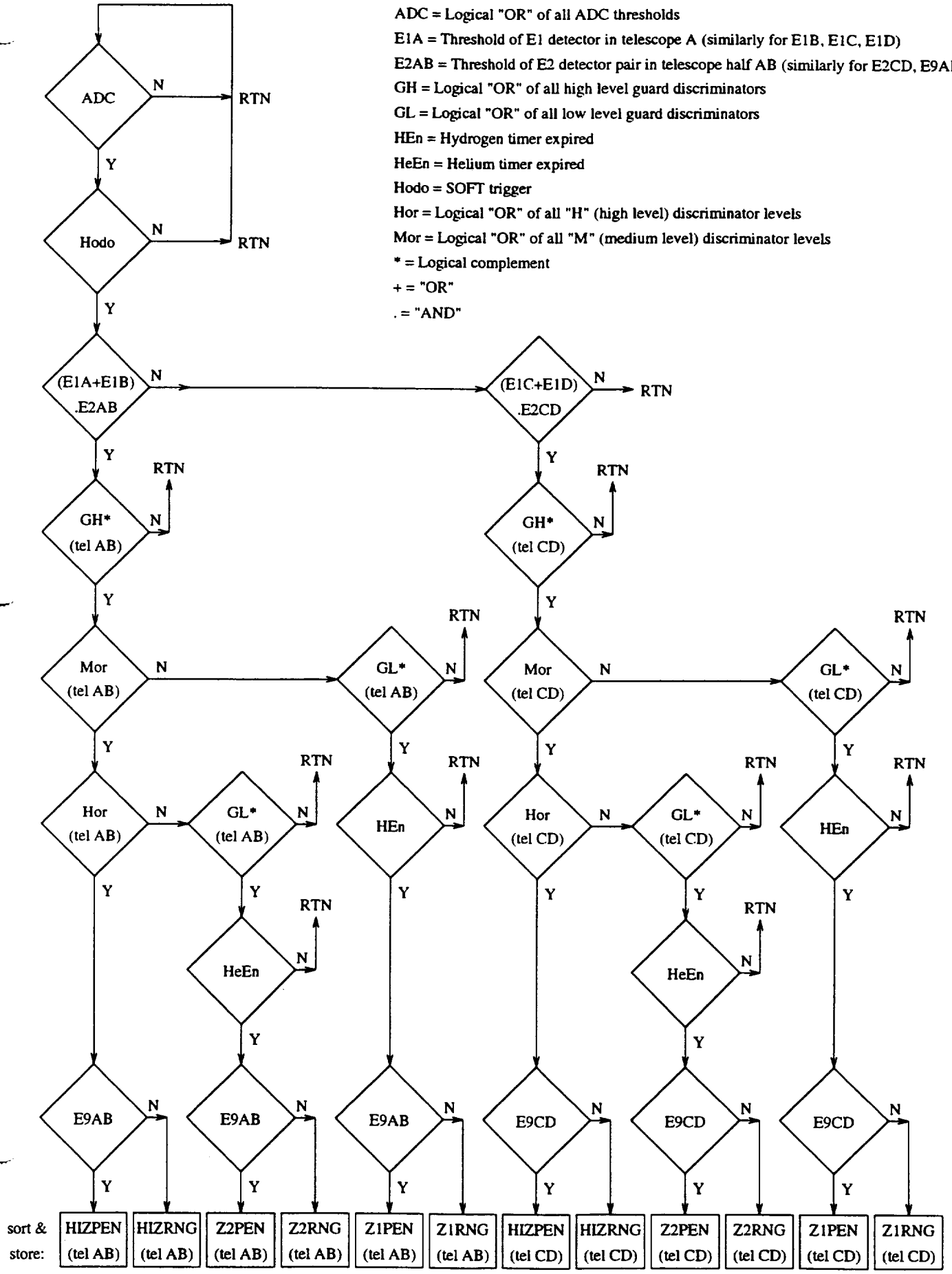

CRIS/SIS uP SYSTEM

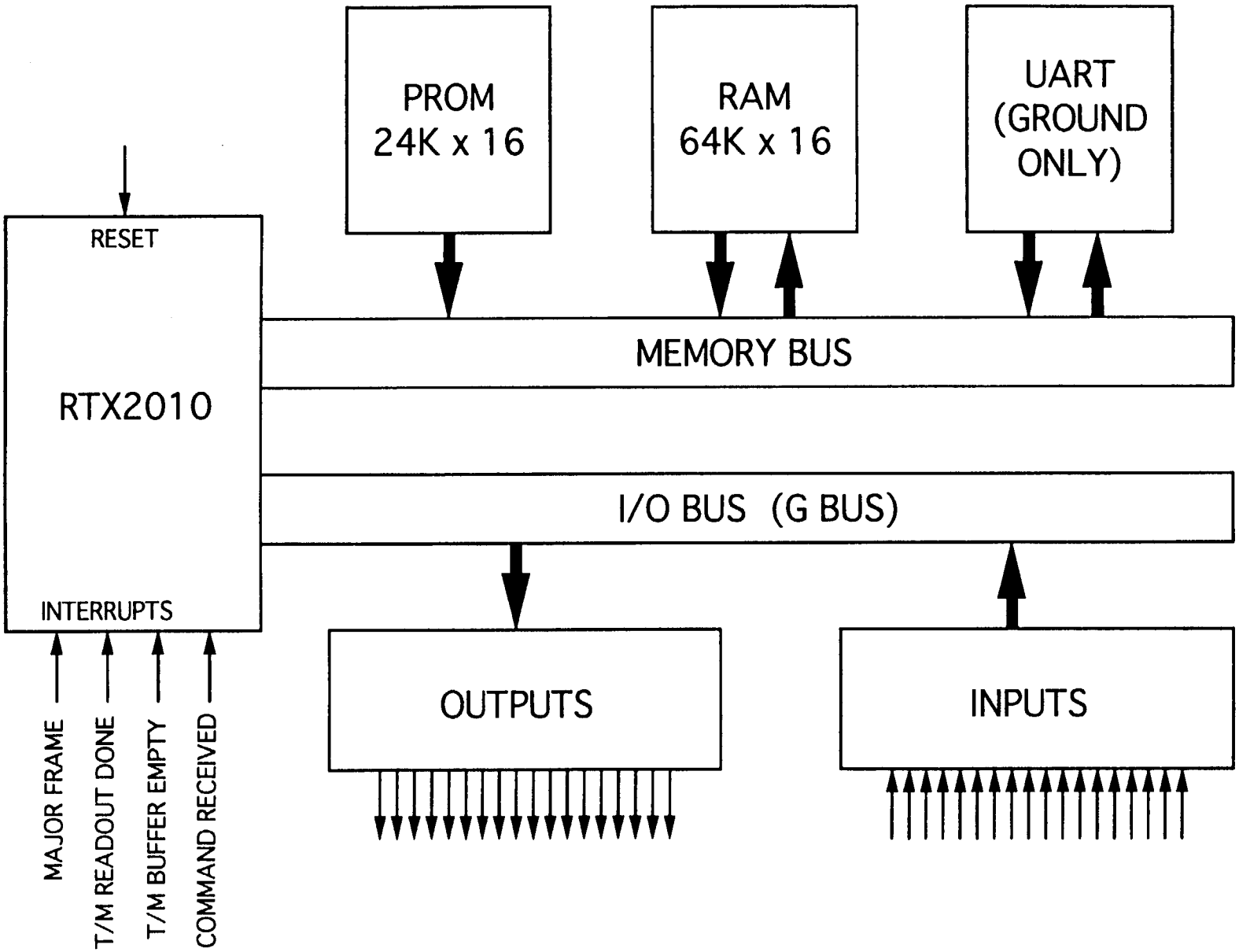

Preliminary Electrical Design of Instrument (continued)

- Spacecraft Interface
  - * Follows GIIS
  - * Except in grounding of chassis to secondary ground and spacecraft deck
  - * See grounding discussion

2/22–23/94

Logic Pulse Command Interface

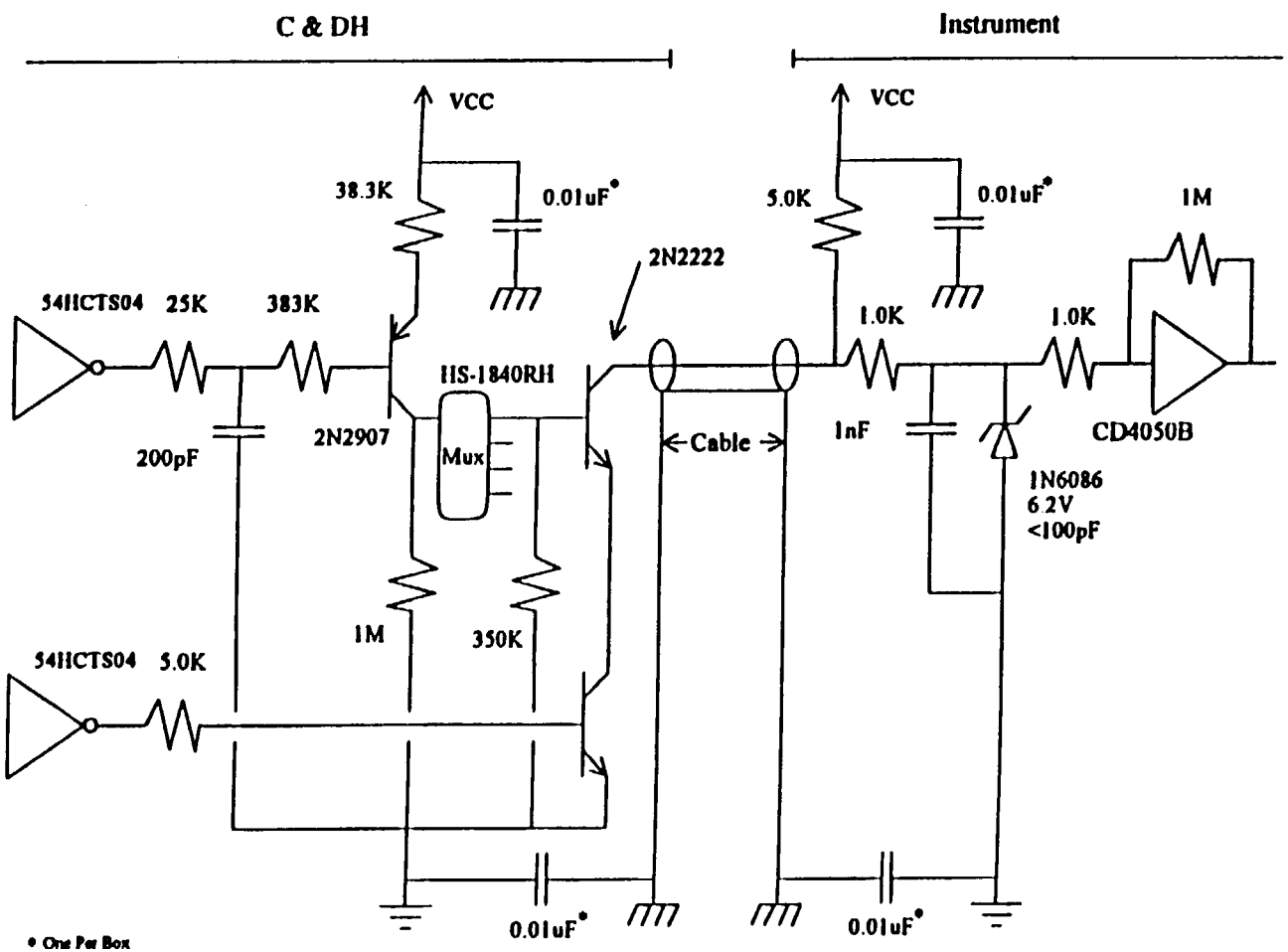

Logic Pulse Command Timing

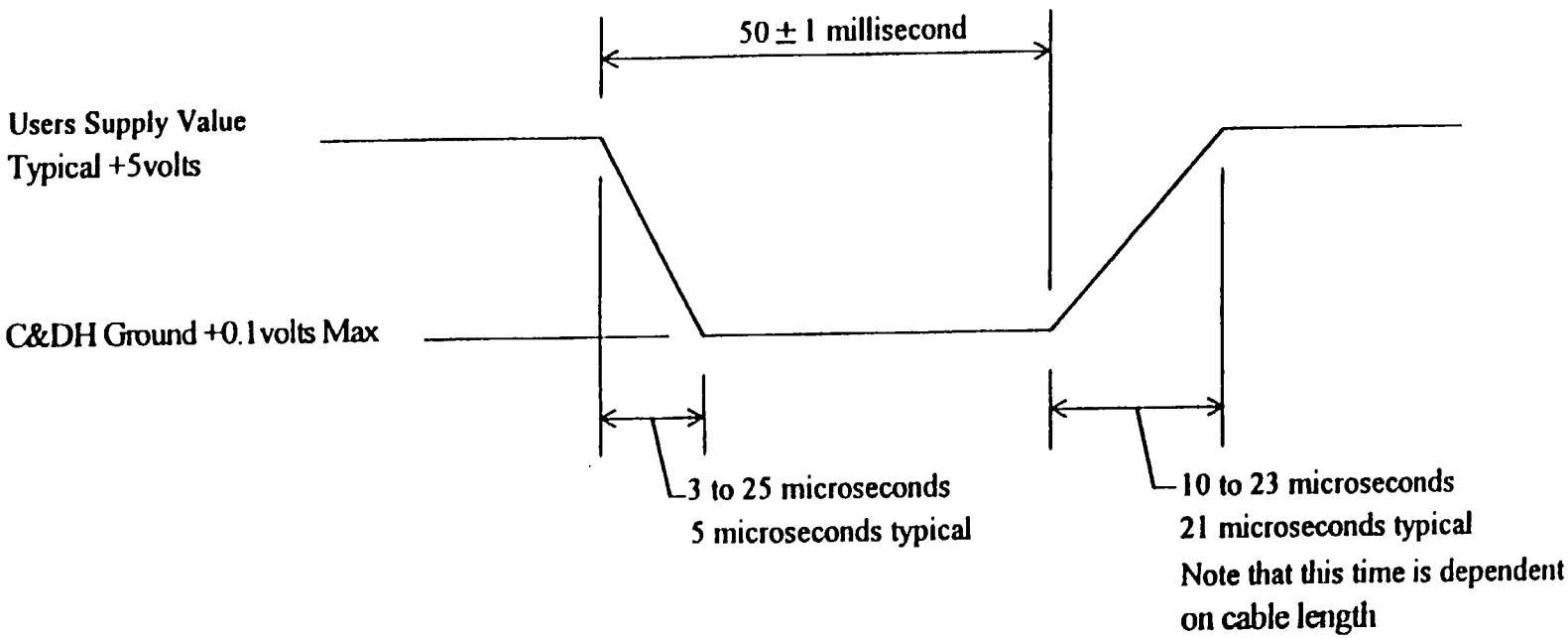

Data Command Interface

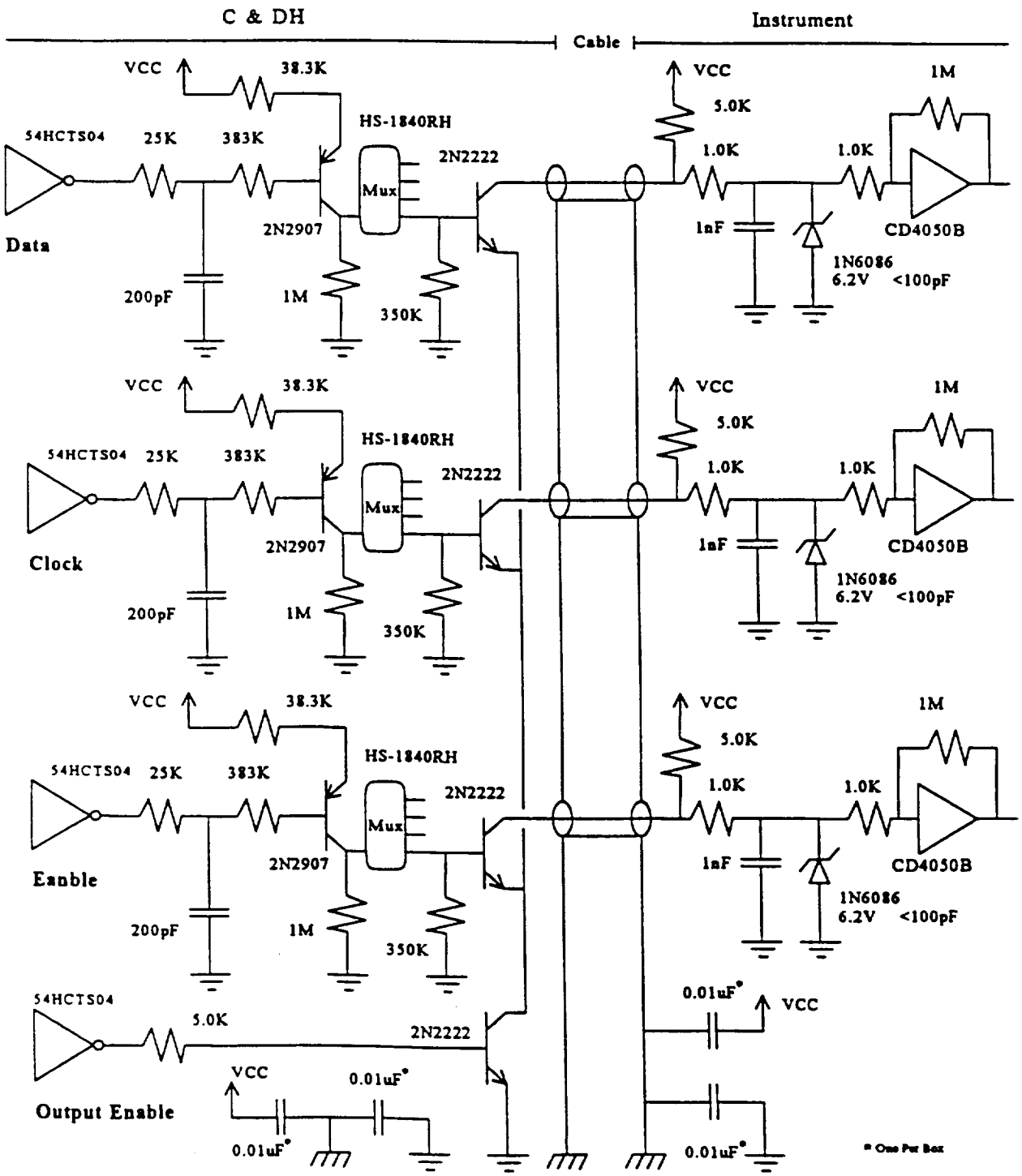

Data Command Timing

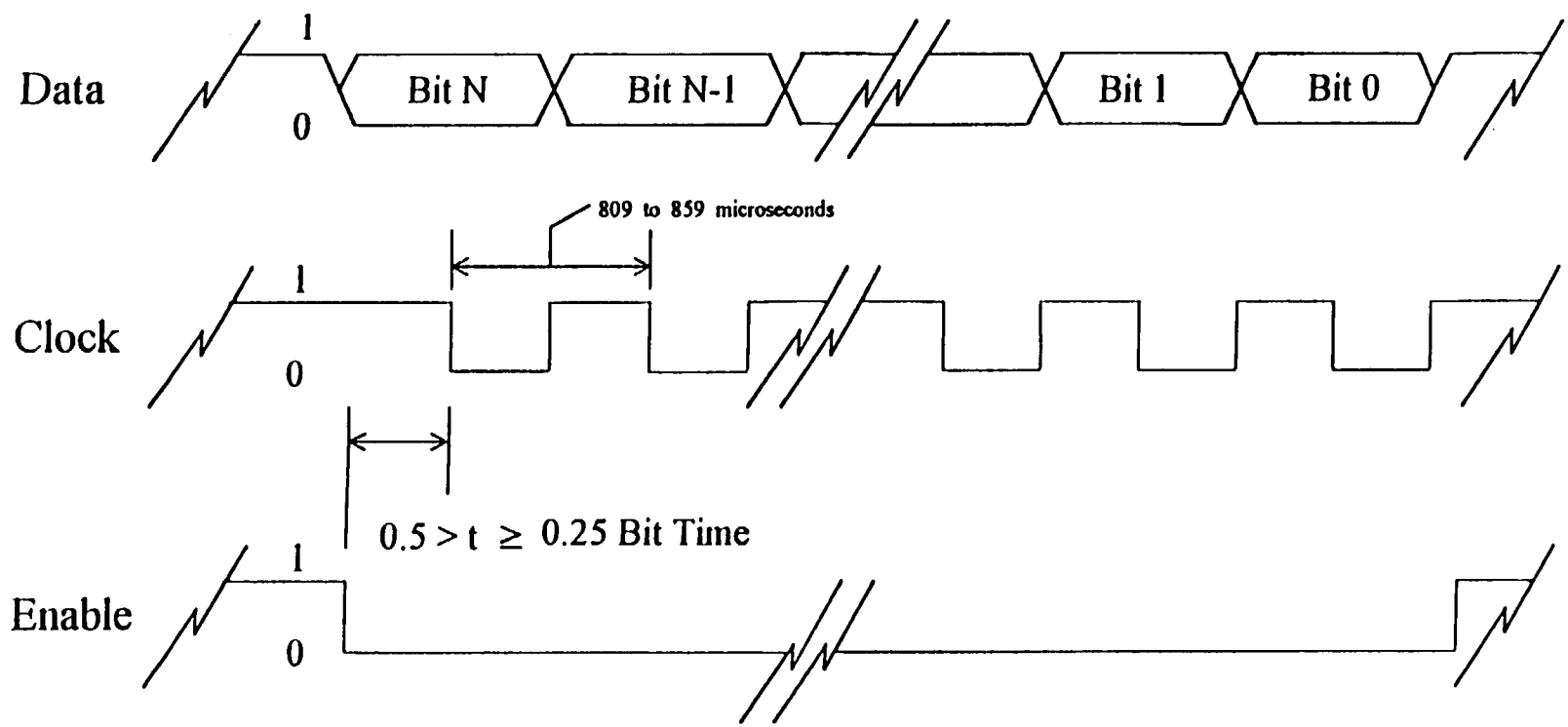

Serial Digital Telemetry Interface

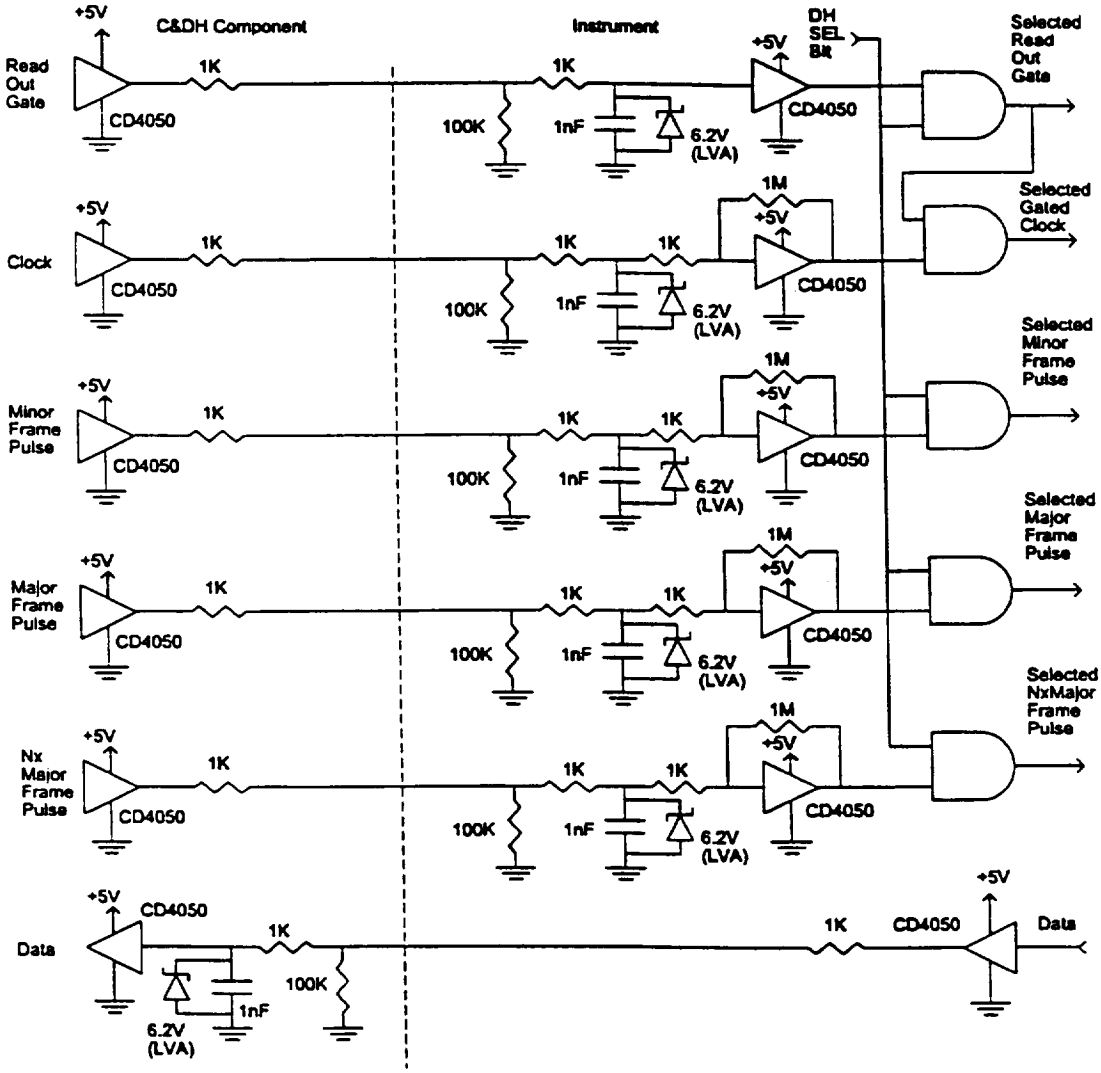

Notes:
1. An instrument may not require all types of frame pulses
2. Currently 2x and 8x Major Frame Pulses are available
3. The DH Select Bit is generated in an instrument from a Data or Logic Pulse Command and used to select one of two redundant spacecraft Serial Digital Telemetry, Sun Pulse, and Spin Clock interfaces to use.
4. The AND gates are shown to indicate that the equivalent data handling signals from each C&DH component should not be simply logically ORed together, but rather should be actively selected with the DH Select Bit.
5. An instrument may add a 1Meg ohm feedback resistor to the ROG interface if the ROG signal is used for more than gating the clock signal.

Serial Digital Interface Timing

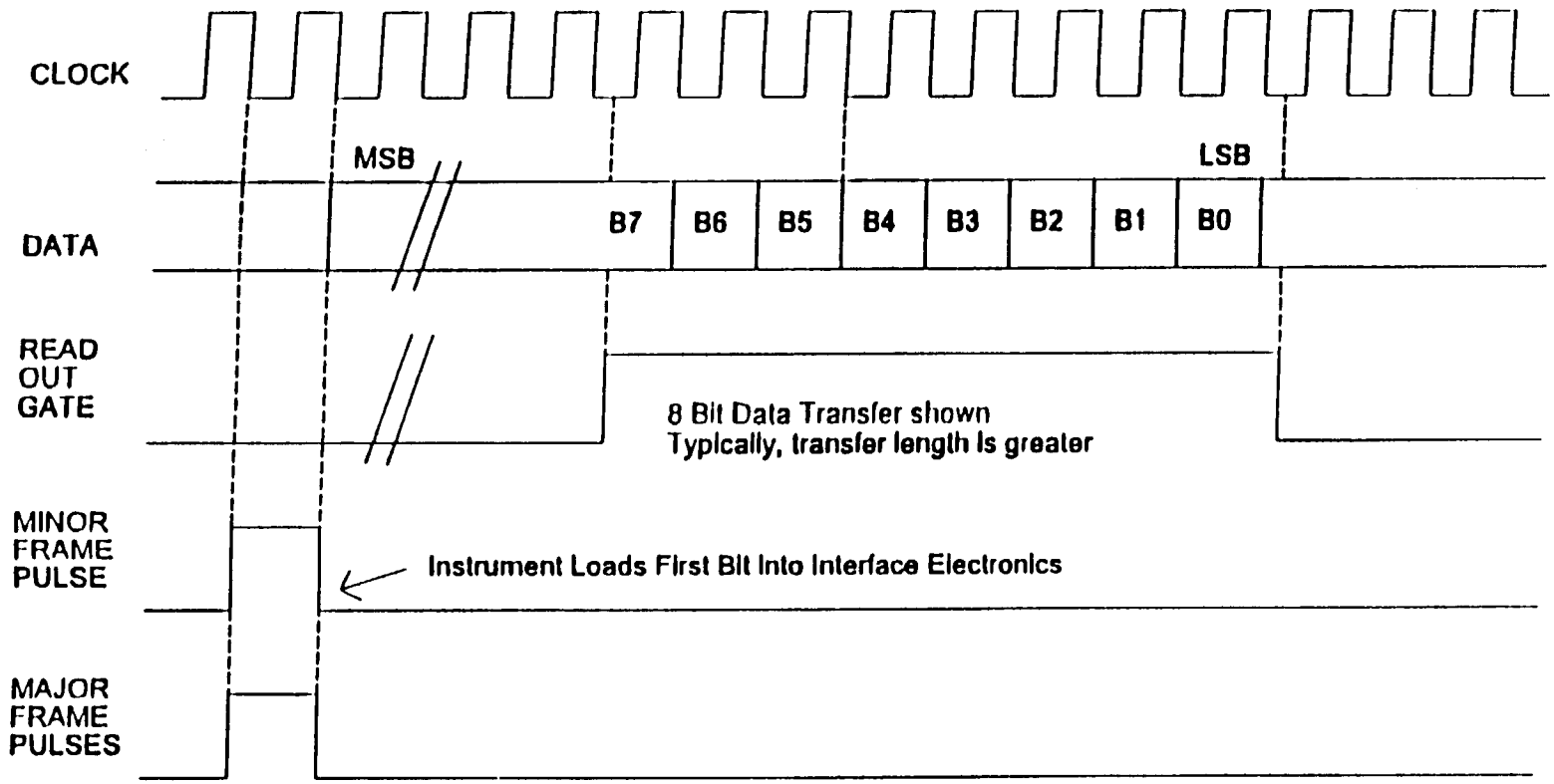

Notes:
1. Instrument loads first data bit TBD microseconds before the rising edge of the Read Out Gate; Initiate load of first bit after Minor Frame Pulse.
2. After first data bit, instrument loads next data bit on falling edge of clock, Data Handling Component reads on rising edge of clock. The data must be stable TBD microseconds before the rising edge of the clock signal.
3. Major frame pulses (1x, 2X, and 8x) not present every minor frame
4. Low = logic 0 = Ground; High = logic 1 = 5V

RF Conde
6/24/93

Preliminary Electrical Design of Instrument (continued)

- Grounding Approach
  - Chassis serves as shield for detectors
  - Chassis maintained as high quality ground
  - Logic and power supply designed to keep currents local; power supplies are shielded
  - Power supply secondaries grounded to chassis

CRIS GROUNDING DIAGRAM

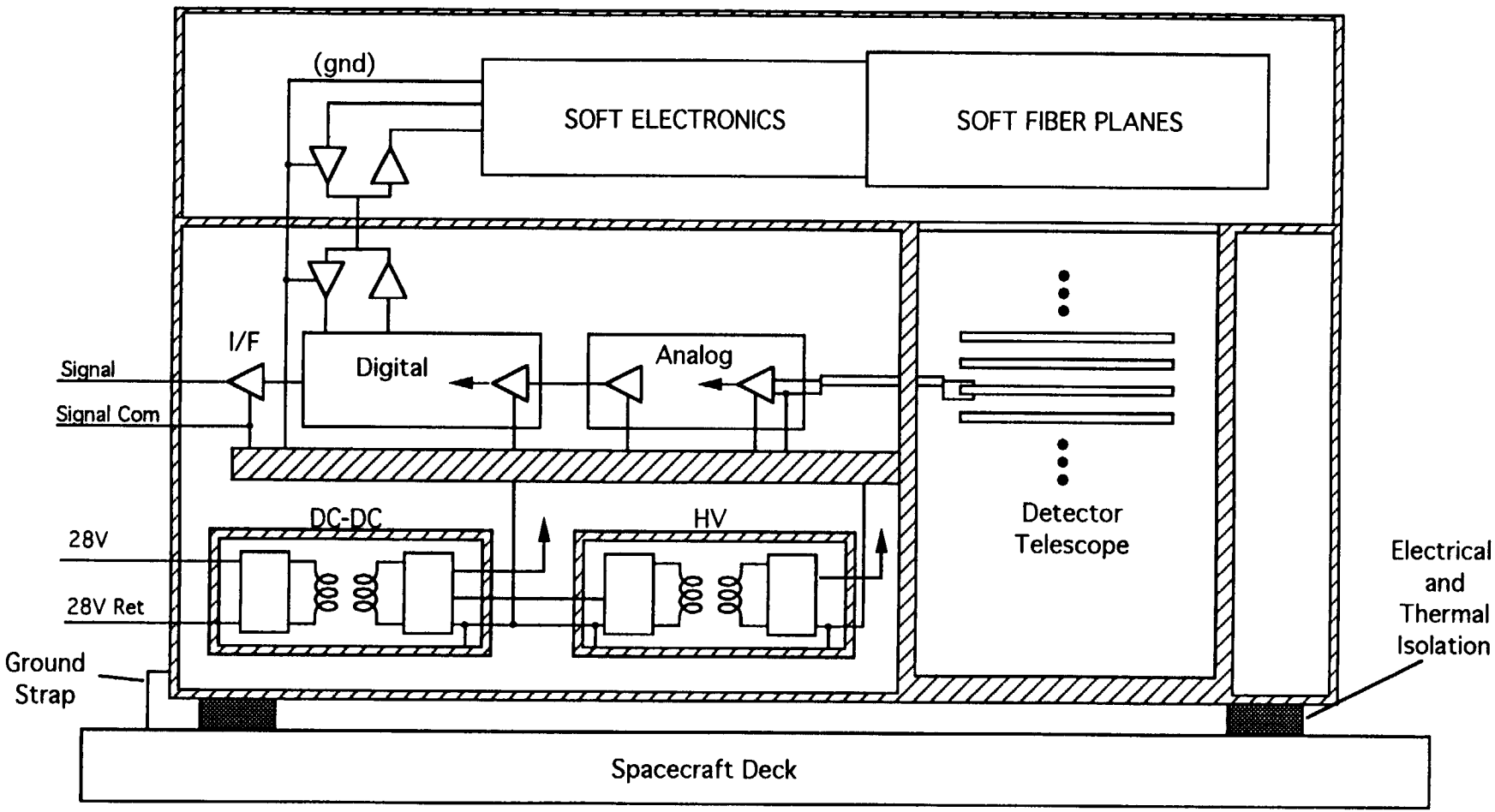

Note: All heater circuitry to be optically isolated from CRIS ground system.

CRIS & SIS POWER SUPPLY INTERFACE

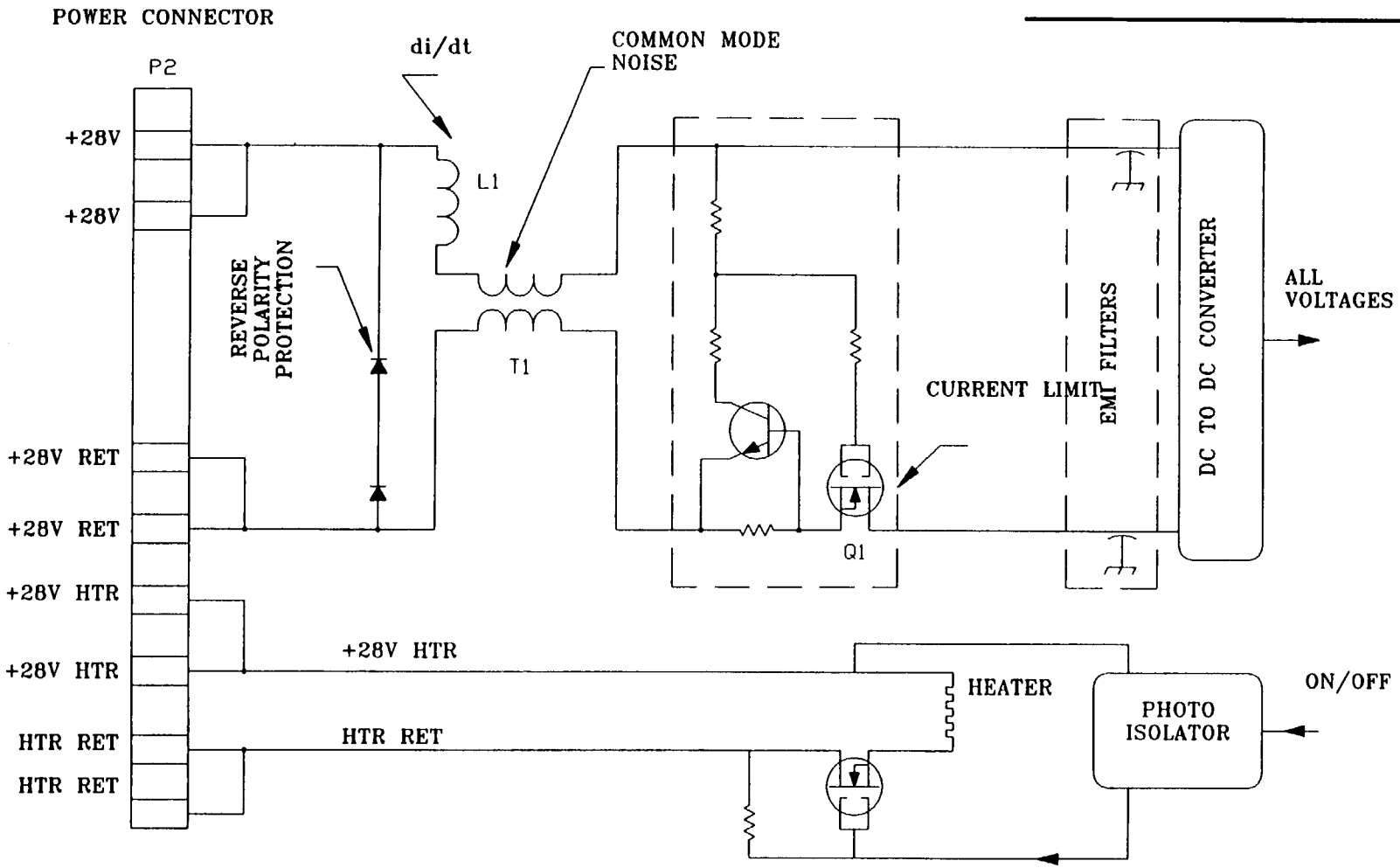

FILE=500001-5

EMI CONSIDERATIONS

1) L1 LIMITS INPUT CURRENT dI/dT

2) CURRENT LIMIT CKT AT INPUT LIMITS TURN ON SURGE,
PROVIDES SOFT TURN ON.

3) EMI FILTERS REDUCE CONDUCTED EMISSIONS,
REDUCE SUSCEPTIBILITY.

4) T1 REDUCES COMMON MODE NOISE.

5) POWER RETURN AND SIGNAL GND ARE ISOLATED.

6) INPUT DIODES PROVIDE REVERSE POLARITY PROTECTION,
PROVIDES CURRENT PATH FOR INPUT RELAY TURN OFF.

7) L1 COMBINED WITH INPUT CAPACITORS PROTECT AGAINST SPACECRAFT
BUS TRANSIENTS.

8) RADIATED EMISSIONS ARE MANAGED VIA SHIELDING AND WIRE ROUTING.

file=500001-6

BLOCK DIAGRAM LOW VOLTAGE POWER SUPPLY

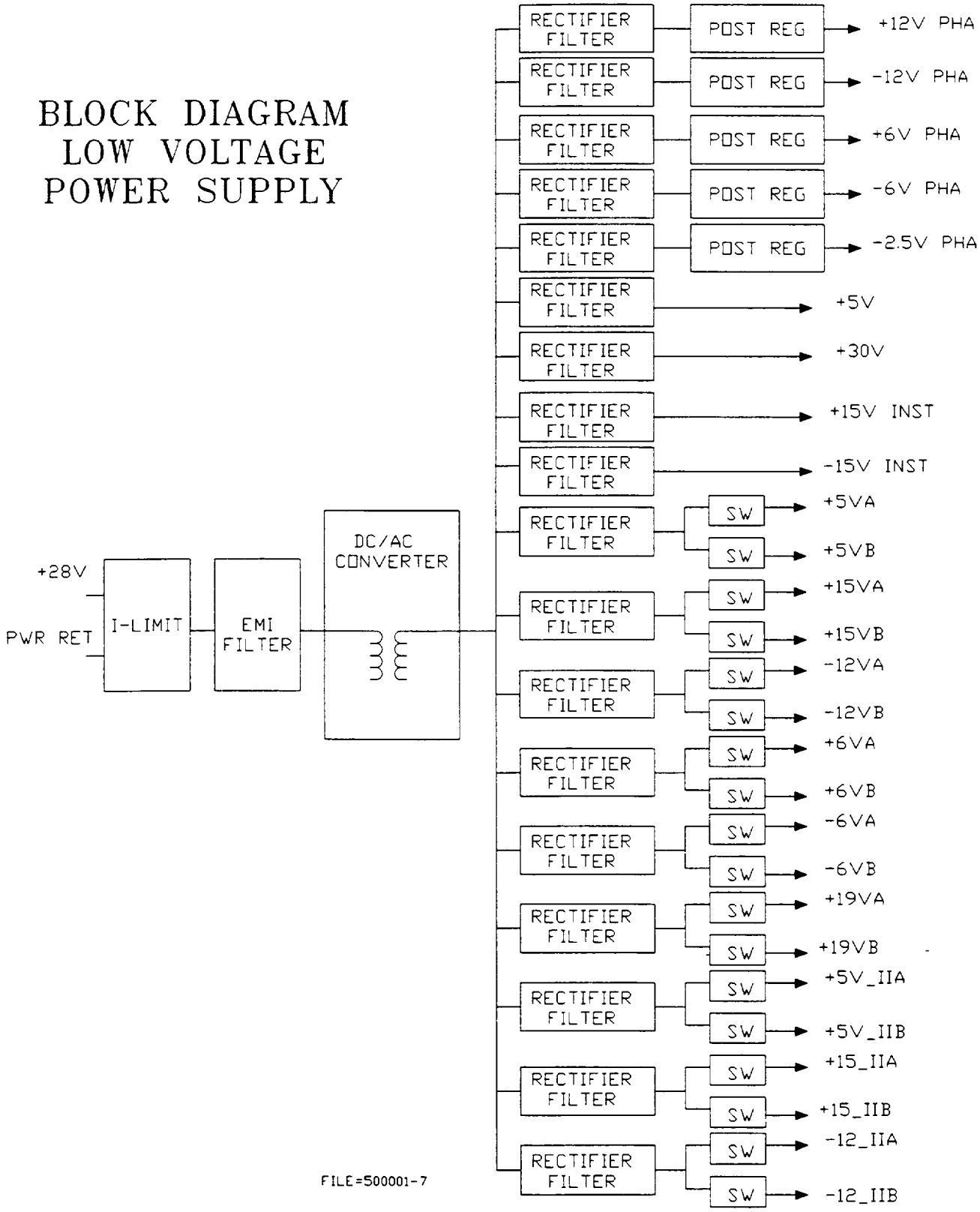

POWER SUPPLY VOLTAGES

CRIS

VOLTAGE	CURRENT (MA)	VOLTAGE	CURRENT (MA)
+12V PHA	36	+5 SOFT	540
-12V PHA	71	+15V SOFT	58
+6V PHA	3.5	-15V SOFT	31
-6V PHA	83	+6V SOFT	30
+5V (LOGIC & PHA)	660	-6V SOFT	22
-2.5V PHA	8.1	+19V SOFT	100
+30V HVBIAS	123.3	+5_II V SOFT	50
+15 V INST	25	+15_II SOFT	80
-15V INST	25	-12_II SOFT	10

FILE=500001-4

CRIS ESTIMATED POWER

	-25 C		0 C		25 C		35 C	
	Nominal	Peak	Nominal	Peak	Nominal	Peak	Nominal	Peak
Instrument	14.46	17.35	14.60	17.52	16.92	20.30	19.52	23.43
Heater, Supplemental	3.00	3.00	0	0	0	0	0	0
Total with Heater	17.46	20.35	14.60	17.52	16.92	20.30	19.52	23.43

Numbers do not include power for survival heater

CRIS POWER DISIGN GOAL

	-25 C		0 C		25 C		35 C	
	Nominal	Peak	Nominal	Peak	Nominal	Peak	Nominal	Peak
Instrument	17.50	21.60	20.50	24.60	20.50	24.60	***20.50***	***24.60***
Heater, Supplemental	3.00	3.00	0	0	0	0	0	0
Total with Heater	20.50	24.60	20.50	24.60	20.50	24.60	20.50	24.60

CRIS POWER REQUIREMENT

	-25 C		0 C		25 C		35 C	
	Nominal	Peak	Nominal	Peak	Nominal	Peak	Nominal	Peak
Instrument	18.50	22.80	21.50	25.80	21.50	25.80	***21.50***	***25.80***
Heater, Supplemental	3.00	3.00	0	0	0	0	0	0
Total with Heater	21.50	25.80	21.50	25.80	21.50	25.80	21.50	25.80

file=500003-1

power estimate worksheet CRIS

3-Feb-94

Pha volts		Current	Power	CRIS # of PHA	Nominal 25 deg C PHA pwr	Nominal -25 deg C	Nominal 0 deg C	Flare Max 25 deg C	Nominal +35 deg	Flare Max +35 deg C
	12	0.398	4.776	32	152.83					
	-12	0.557	6.684	32	213.89					
	6	1.914	11.484	32	367.49					
	-6	2.77	16.62	32	531.84					
	5	0.012	0.06	32	1.92					
	-2.5	0.277	-0.6925	32	-22.16					
total			38.9315		1245.81					

	pwr mw							
PHA	38.9315	32	1245.81	1245.808	1245.81	1494.97	1245.81	1494.97
Test pulsers	1	32	32.00	32	32.00	38.40	32.00	38.40
ADC CTRS	25	8	200.00	200	200.00	240.00	200.00	240.00
Logic	25	12	300.00	300	300.00	360.00	300.00	360.00
Processor	1000	1	1000.00	1000	1000.00	1200.00	1000.00	1200.00
Engr. Subsystem	110	1	110.00	110	110.00	132.00	110.00	132.00
Post Regulators	250	1	250.00	250	250.00	300.00	250.00	300.00
Detector Bias Supply	475	1	475.00	240.00	240.00	570.00	810.00	570.00
Detectors 60 x 60 uA	1620	1	1620.00	12.00	120.00	1620.00	3240.00	3240.00
Reference Generator	160	2	320.00	320	320.00	384.00	320.00	384.00
Clock (16 MHz)	300	1	300.00	300	300.00	360.00	300.00	360.00
Interface Circutis	25	1	25.00	25	25.00	30.00	25.00	30.00
Misc	750	1	750.00	750	750.00	900.00	750.00	900.00
			0.00	0	0.00	0.00	0.00	0.00
TOTAL Electronics			6627.81	4784.81	4892.81	7629.37	8582.81	9249.37
SOFT			6060.00	6060.00	6060.00	7272.00	6060.00	7272.00

Total Regulated PWR		12687.81	10844.81	10952.81	14901.37	14642.81	16521.37
Total Unregulated (Nominal)	75%	16917.08	14459.74	14603.74		19523.74	
Total Unregulated (Flare)	1.2				19868.49		22028.49

power estimate summary CRIS

	Nominal 25 deg C PHA pwr	-25 deg C	0 deg C	Flare Max 25 deg C	Nominal +35 deg	Flare Max +35 deg C
PHA's	1477.81	1477.81	1477.81	1773.37	1477.81	1773.37
Detectors	1620.00	12.00	120.00	1620.00	3240.00	3240.00
HVPS	475.00	240.00	240.00	570.00	810.00	570.00
LVPS	4229.27	3614.94	3650.94	4967.12	4880.94	5507.12
Electronic Boards	3055.00	3055.00	3055.00	3666.00	3055.00	3666.00
SOFT						
Image Intensifier PS	1500.00	1500.00	1500.00	1800.00	1500.00	1800.00
Camera Electronics	4200.00	4200.00	4200.00	5040.00	4200.00	5040.00
Image Intensifier Assembly	360.00	360.00	360.00	432.00	360.00	432.00
TOTAL	16917.08	14459.74	14603.74	19868.49	19523.74	22028.49

CRIS BIAS SUPPLY BLOCK DIAGRAM

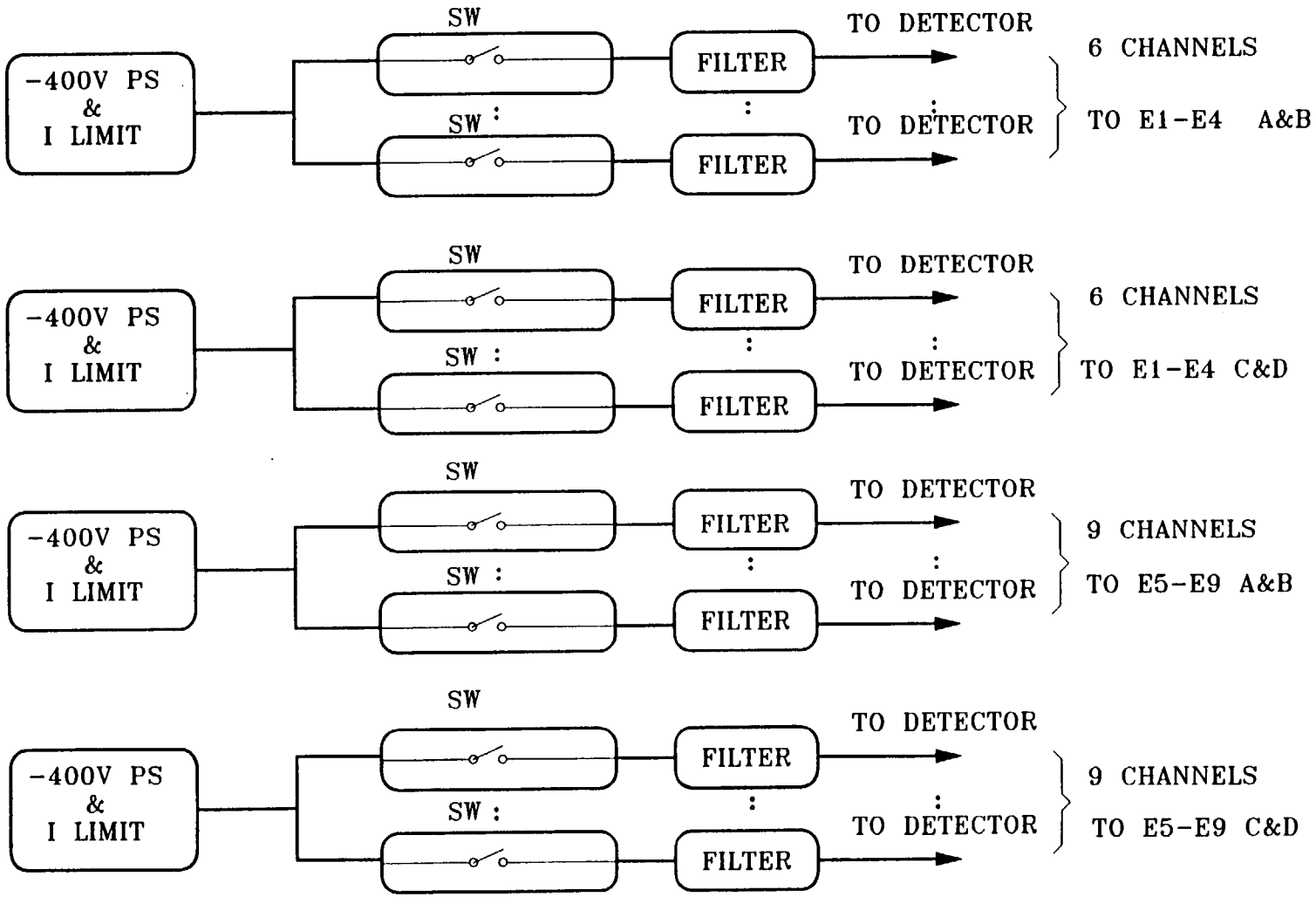

FILE=500001-1

MODULAR VS CUSTOM

- Each output requires 1 x 1 " area
- Standard voltages are available +5, 15,12,etc
- Modular supplies require additional input filters
- Modular supplies require additional output filters
- Modular designs do not provide special voltages such as -2.5V, +19V, and +30 V.
- For bias supplies require +60V, +120V, +230, and -400 V supplies anyhow

MODULAR VS CUSTOM

- Custom design originally by Colonel Mc Lyman of JPL
- Used on JPL magnetometer, TOMS, & several other instruments.
- Will use "Mc Lyman" custom design for all voltages.

file=50000503.cdr

TYPICAL INTERFACE

CRIS/SOFT

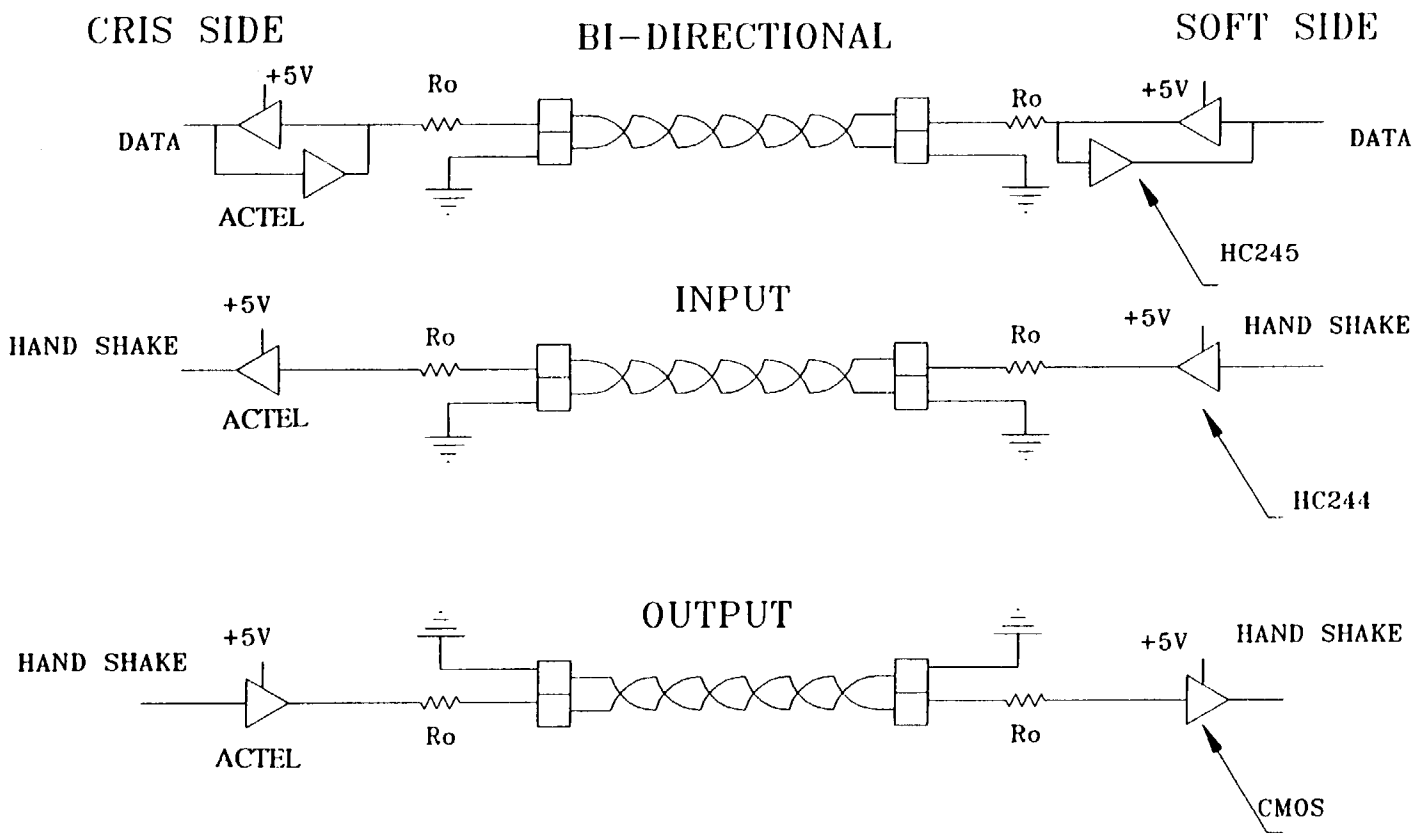

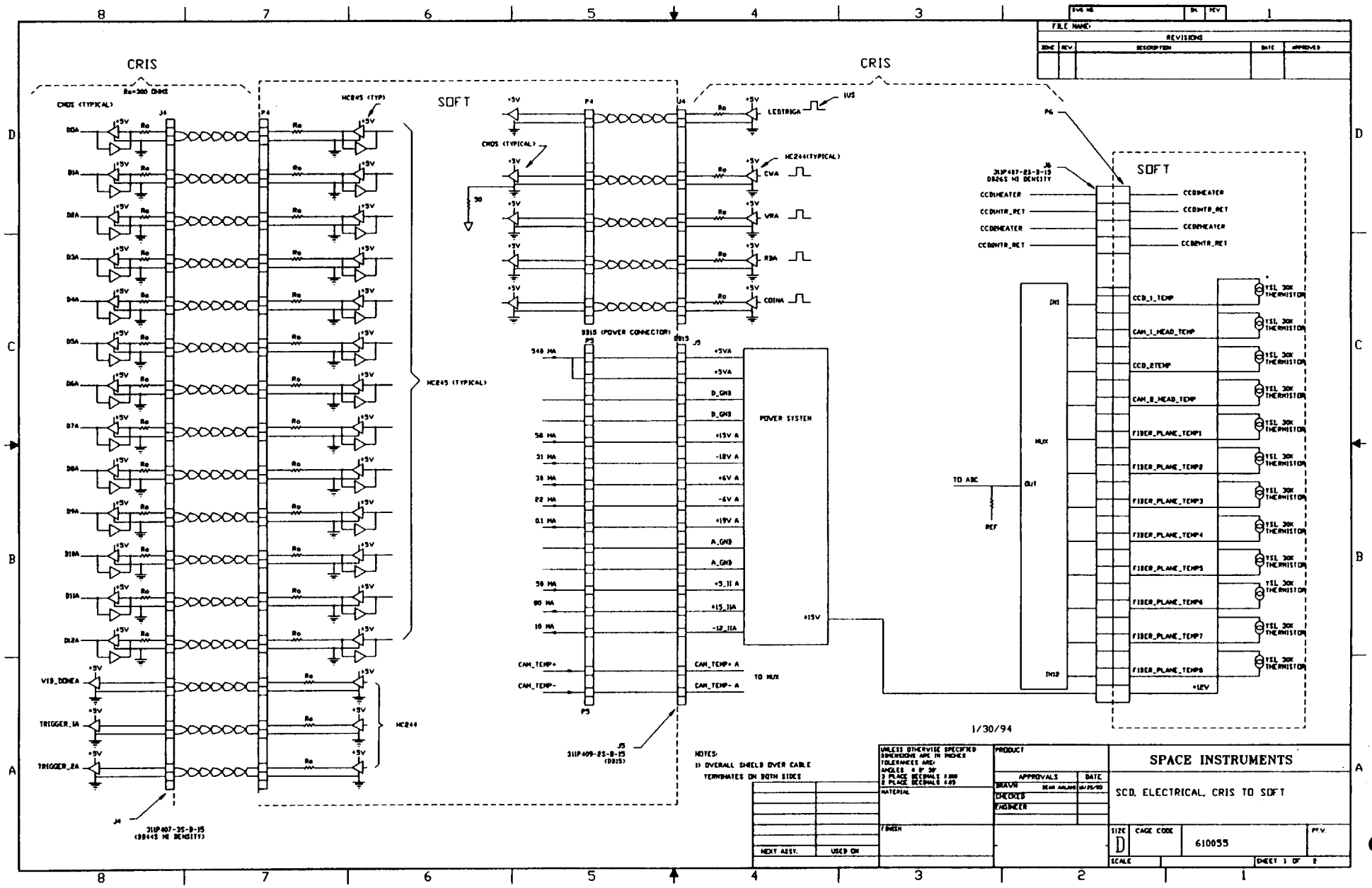
CRIS
SOFT
CRIS
SOFT
POWER SYSTEM
MUX
TO ADC
REF
TO MUX
SPACE INSTRUMENTS
SCD, ELECTRICAL, CRIS TO SOFT
1/30/94
NOTES:
1) OVERALL SHIELD OVER CABLE
TERMINATES ON BOTH SIDES

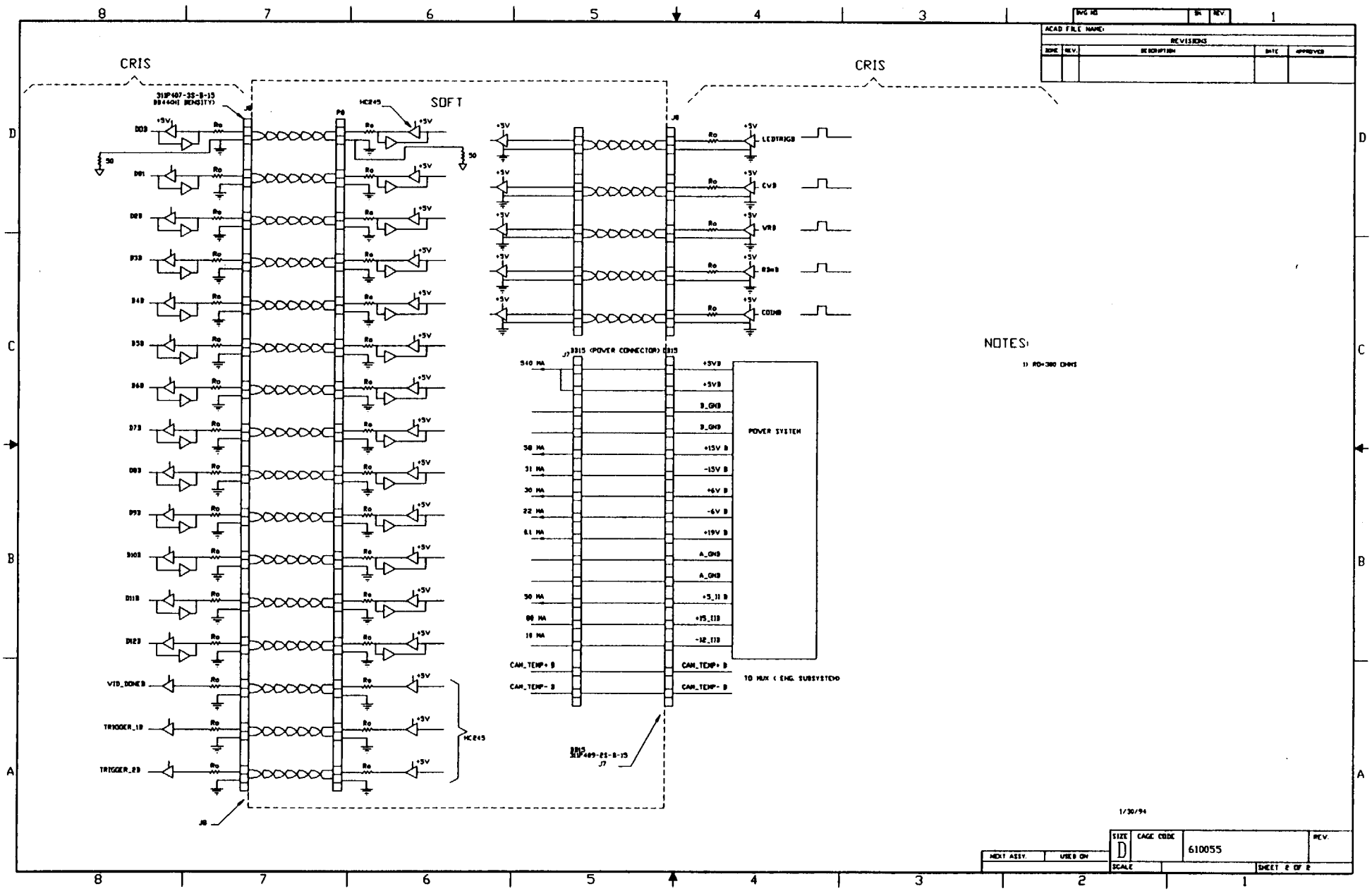
CRIS
SOFT
CRIS
HC245
LEDTRIGB
CVB
VRB
COIMB
POWER SYSTEM
TO MUX (ENG. SUBSYSTEM)
VID_DONEB
TRIGGER_1B
TRIGGER_2B
NOTES:
1) R0=300 OHMS
1/30/94
610055
SHEET 2 OF 2

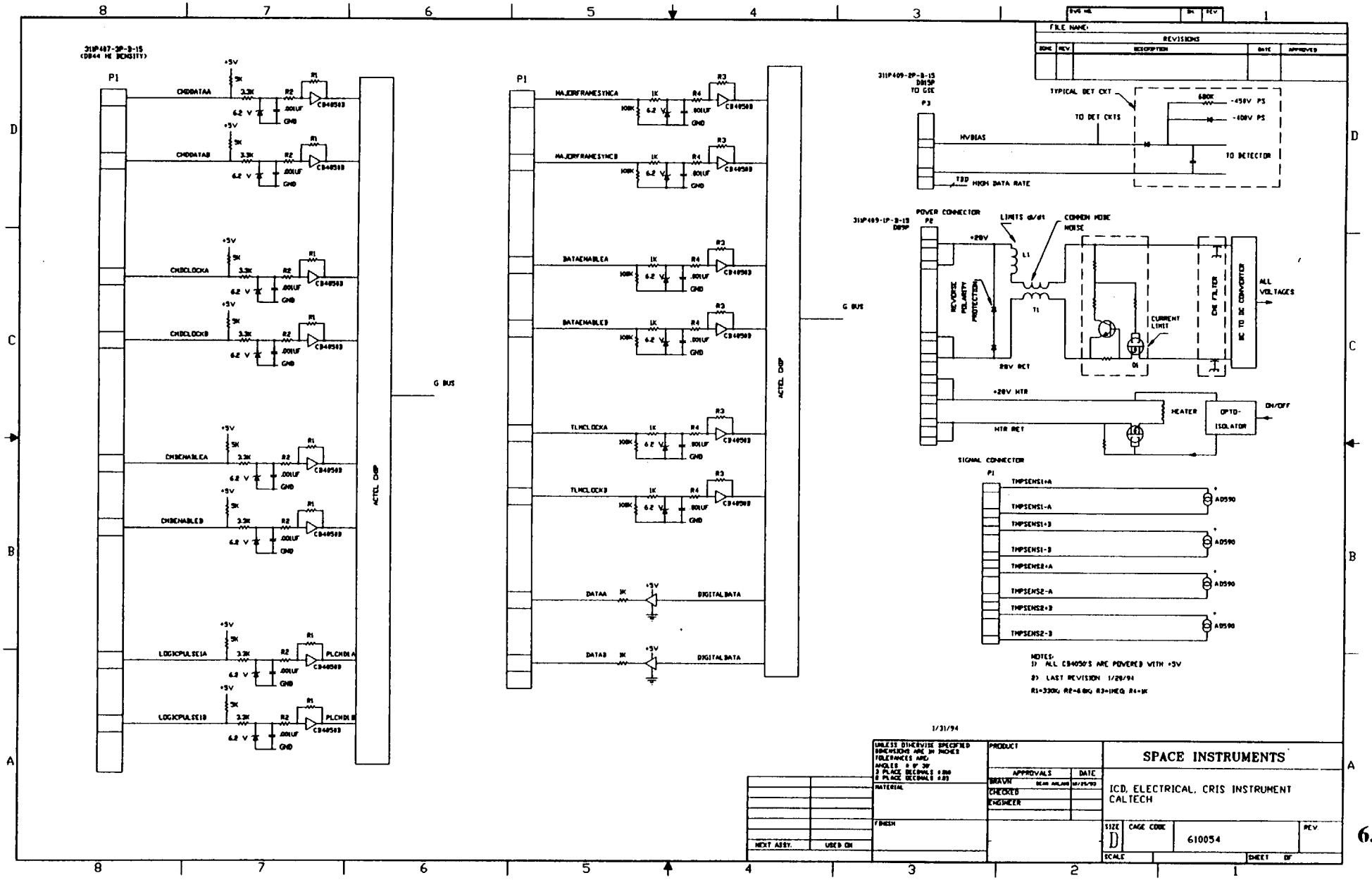
P1
CHDDATAA
CHDDATAB
CHDCLOCKA
CHDCLOCKB
CHDENABLEA
CHDENABLEB
LOGICPULSEIA
LOGICPULSEIB
PLCHDIA
PLCHDIB
CD4050B
ACTEL CHIP
G BUS
MAJORFRAMESYNCA
MAJORFRAMESYNCB
DATAENABLEA
DATAENABLEB
TLMCLOCKA
TLMCLOCKB
DATAA
DATAB
DIGITALDATA
TYPICAL DET CKT
TO DET CKTS
HVBIAS
TO DETECTOR
HIGH DATA RATE
POWER CONNECTOR
P2
LIMITS dB/dt
COMMON MODE NOISE
+28V
L1
T1
REVERSE POLARITY PROTECTION
CURRENT LIMIT
DC TO DC CONVERTER
ALL VOLTAGES
28V RET
+28V HTR
HTR RET
HEATER
OPTO-ISOLATOR
ON/OFF
SIGNAL CONNECTOR
THPSENS1+A
THPSENS1-A
THPSENS1+B
THPSENS1-B
THPSENS2+A
THPSENS2-A
THPSENS2+B
THPSENS2-B
AD590
NOTES:
1) ALL CD4050'S ARE POWERED WITH +5V
2) LAST REVISION 1/28/94
R1=330K; R2=6.8K; R3=1MEG; R4=1K
1/31/94
SPACE INSTRUMENTS
ICD, ELECTRICAL, CRIS INSTRUMENT
CALTECH
610054

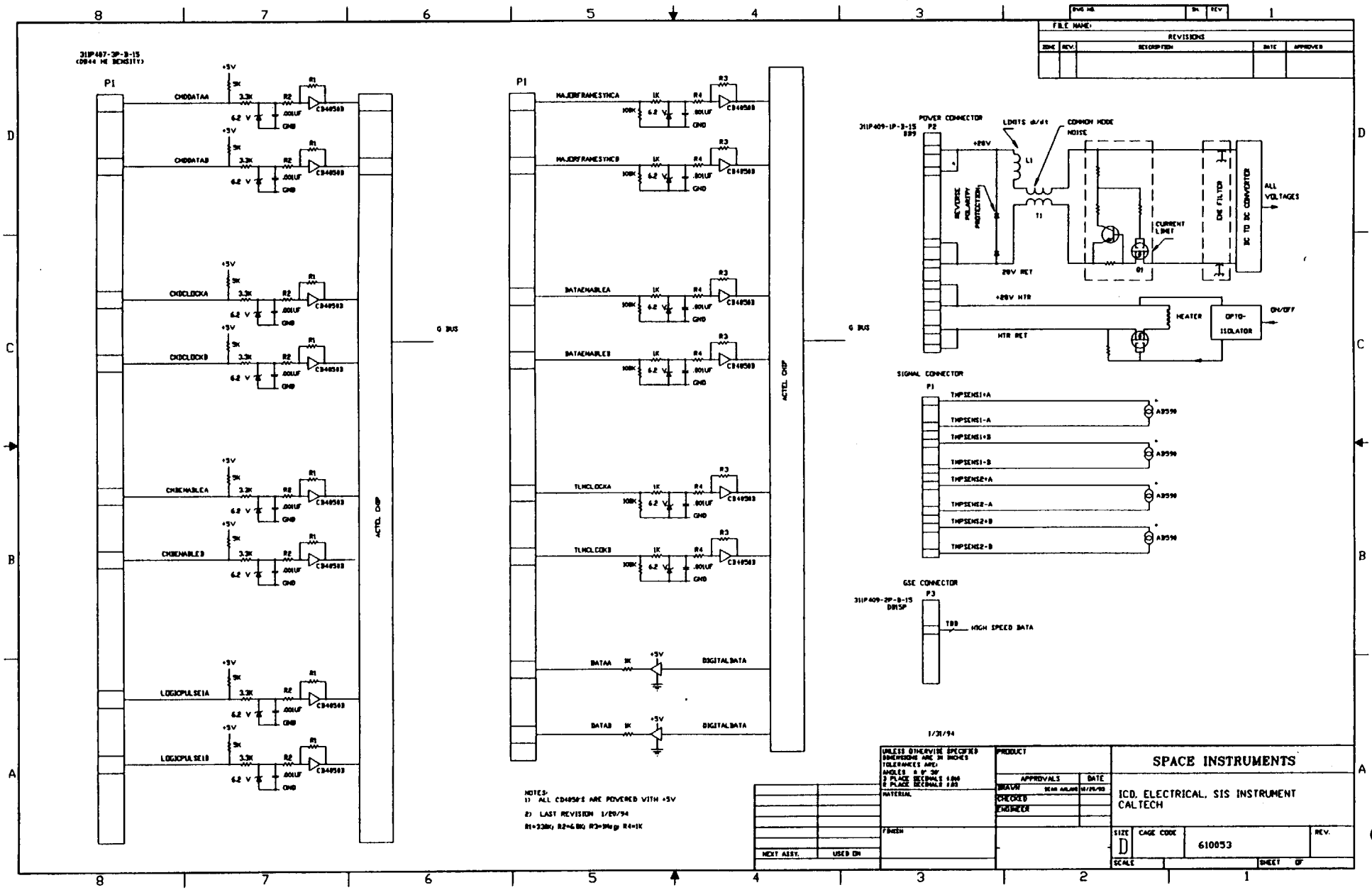
P1
CH0DATAA
CH0DATAB
CH0CLOCKA
CH0CLOCKB
CH0ENABLEA
CH0ENABLEB
LOGICPULSE1A
LOGICPULSE1B
ACTEL CHIP
G BUS
MAJORFRAMESYNCA
MAJORFRAMESYNCB
DATAENABLEA
DATAENABLEB
TLMCLOCKA
TLMCLOCKB
DATAA
DATAB
DIGITALDATA
POWER CONNECTOR
P2
+28V
LIMITS di/dt
COMMON MODE NOISE
L1
T1
REVERSE POLARITY PROTECTION
CURRENT LIMIT
Q1
EMI FILTER
DC TO DC CONVERTER
ALL VOLTAGES
28V RET
+28V HTR
HTR RET
HEATER
OPTO-ISOLATOR
ON/OFF
SIGNAL CONNECTOR
P1
TMPSENS1+A
TMPSENS1-A
TMPSENS1+B
TMPSENS1-B
TMPSENS2+A
TMPSENS2-A
TMPSENS2+B
TMPSENS2-B
A9590
GSE CONNECTOR
P3
TBD
HIGH SPEED DATA
NOTES:
1) ALL CD4050'S ARE POWERED WITH +5V
2) LAST REVISION 1/20/94
R1=33K; R2=6.8K; R3=1Meg; R4=1K
1/31/94
SPACE INSTRUMENTS
ICD, ELECTRICAL, SIS INSTRUMENT
CALTECH
610053
NEXT ASSY.
USED ON

CRIS PDR

Section 7

Preliminary Mechanical Design

2/22–23/94

CRIS STRUCTURE MECHANICAL DESIGN

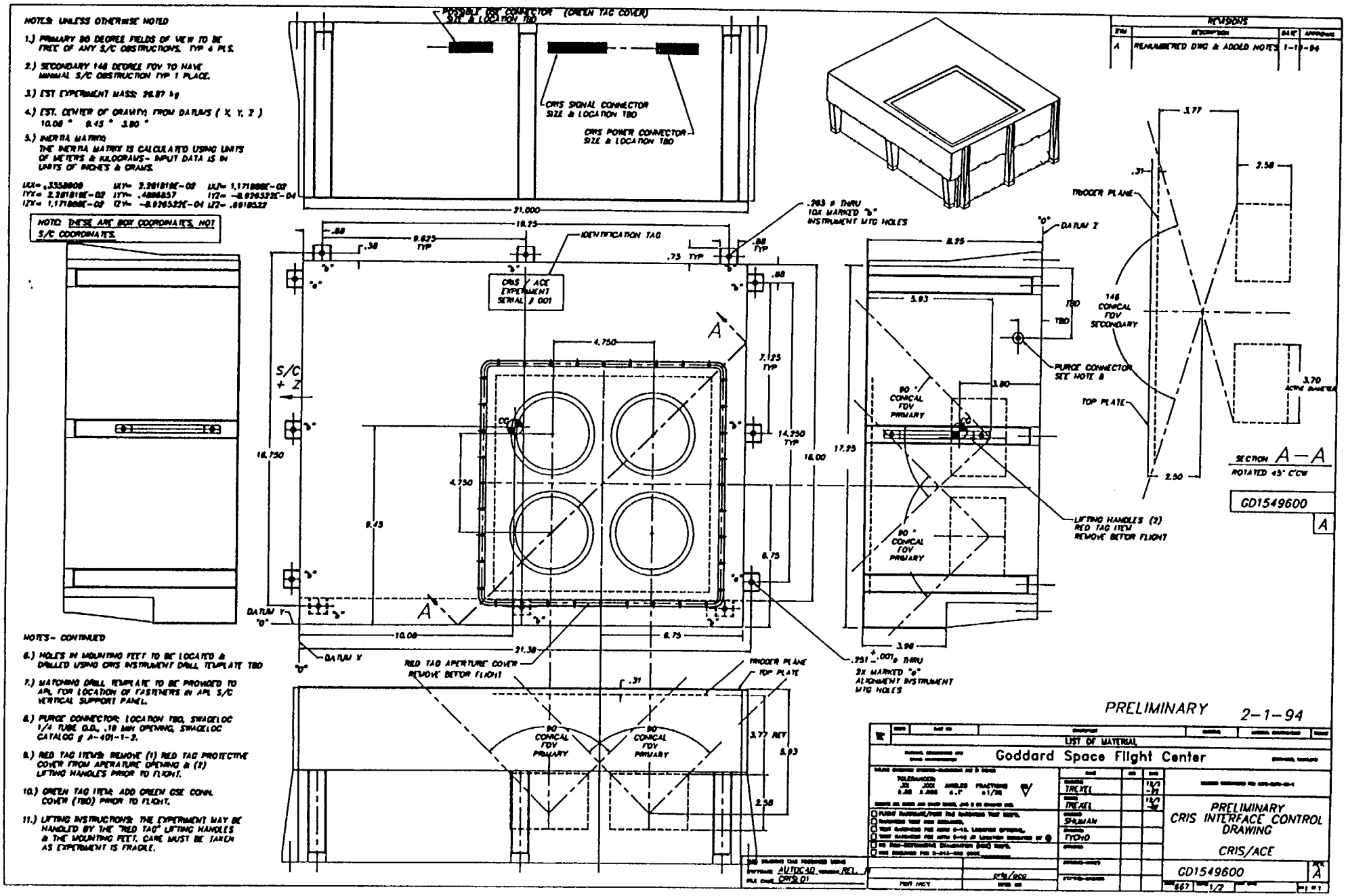

CRIS STRUCTURE MECHANICAL DESIGN

CRIS STRUCTURE MECHANICAL DESIGN, LOCATION, ALIGNMENT, AND FOV'S

- **Experiment located 45 degrees between -X and +Y axis**
- **Mounted to external vertical panel of S/C**
- **Attachment to S/C via (12) 1/4 - 28 mounting bolts**
- **Alignment provided by instrument to S/C jig plate with tightly toleranced holes**

CRIS STRUCTURE MECHANICAL DESIGN

Observatory Layout Side View
From C. Willey (APL)

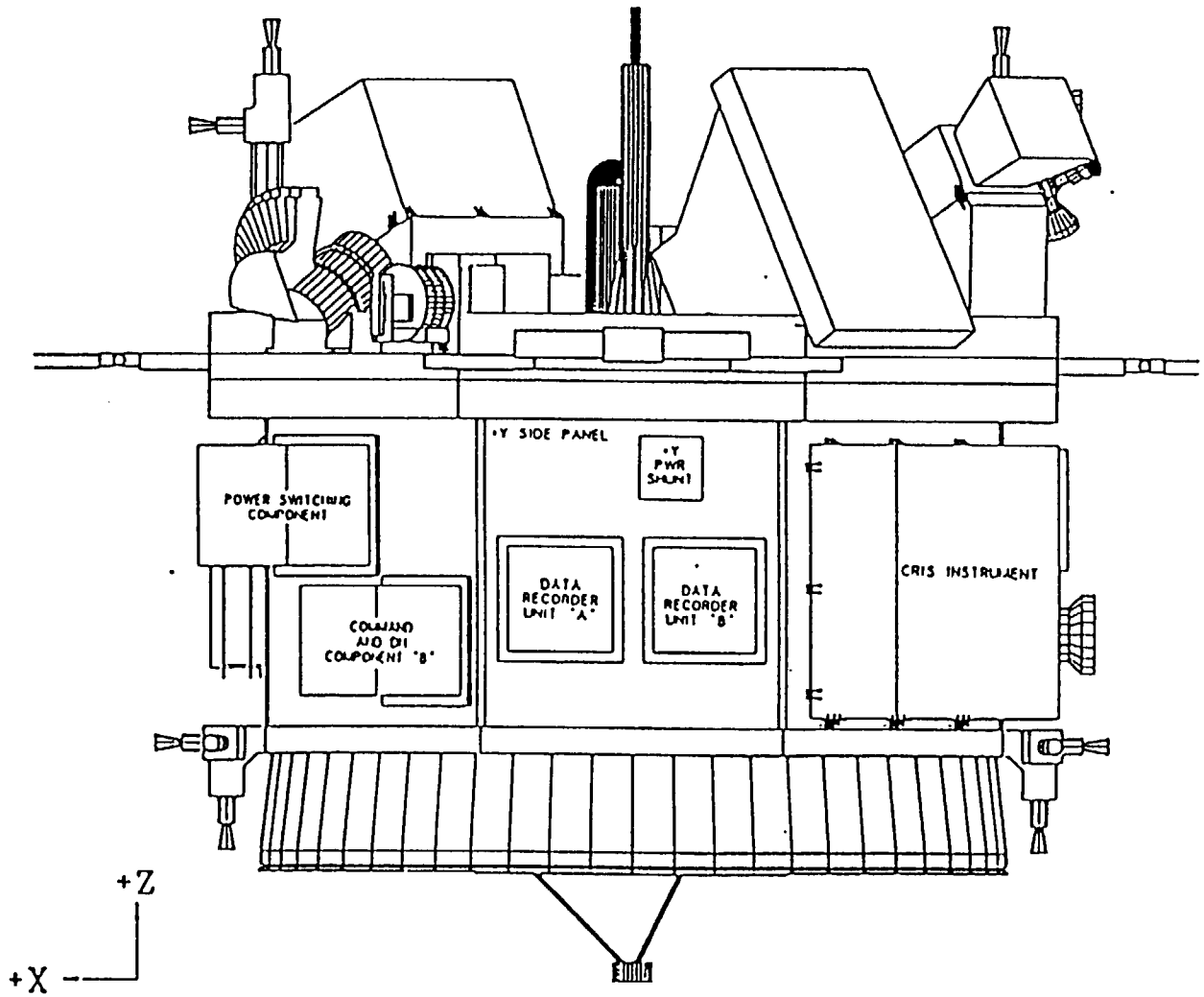

CRIS STRUCTURE MECHANICAL DESIGN

CRIS STRUCTURE MECHANICAL DESIGN, LOCATION, ALIGNMENT, AND FOV'S

- **FOV LIMITATIONS:**

  -Primary 90 degree field of view must be free of any S/C obstructions Typical 4 places.

  -Secondary 146 degree field of view may have minimal S/C obstruction. Typical 1 place.

CRIS STRUCTURE MECHANICAL DESIGN

Observatory Layout Top View
From C. Willey (APL)

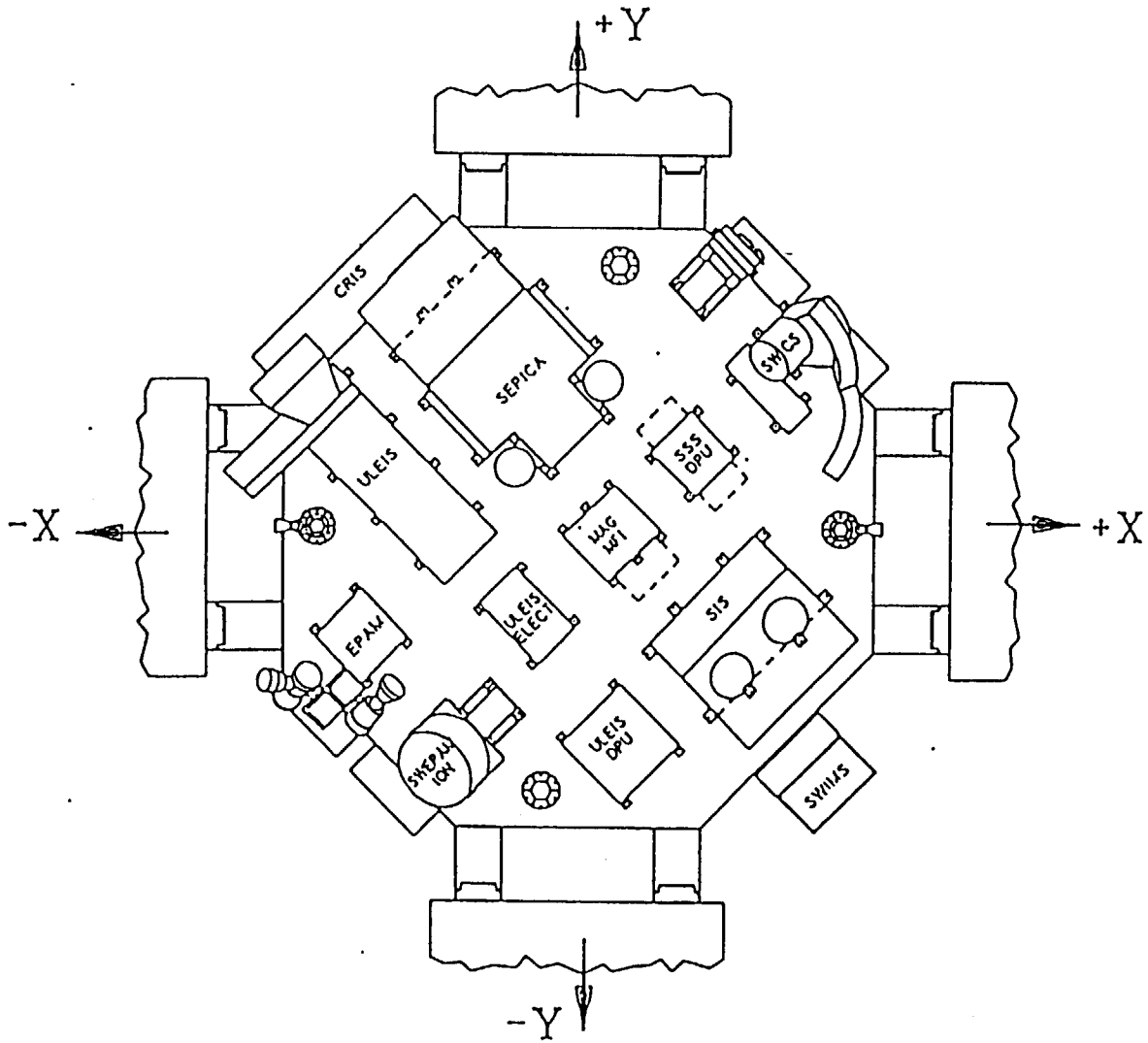

CRIS STRUCTURE MECHANICAL DESIGN

BOX STRUCTURE

- **Aluminum honeycomb B/P and mid-deck (soft B/P)**
- **Box external walls - ribbed milled interlocking panels for strength, light tightness, thermal conductivity, and electrical conductivity (RF shield continuity).**
- **Design heritage based on many previous similar experiments flown by Code 660 (GSFC)**

CRIS STRUCTURE MECHANICAL DESIGN

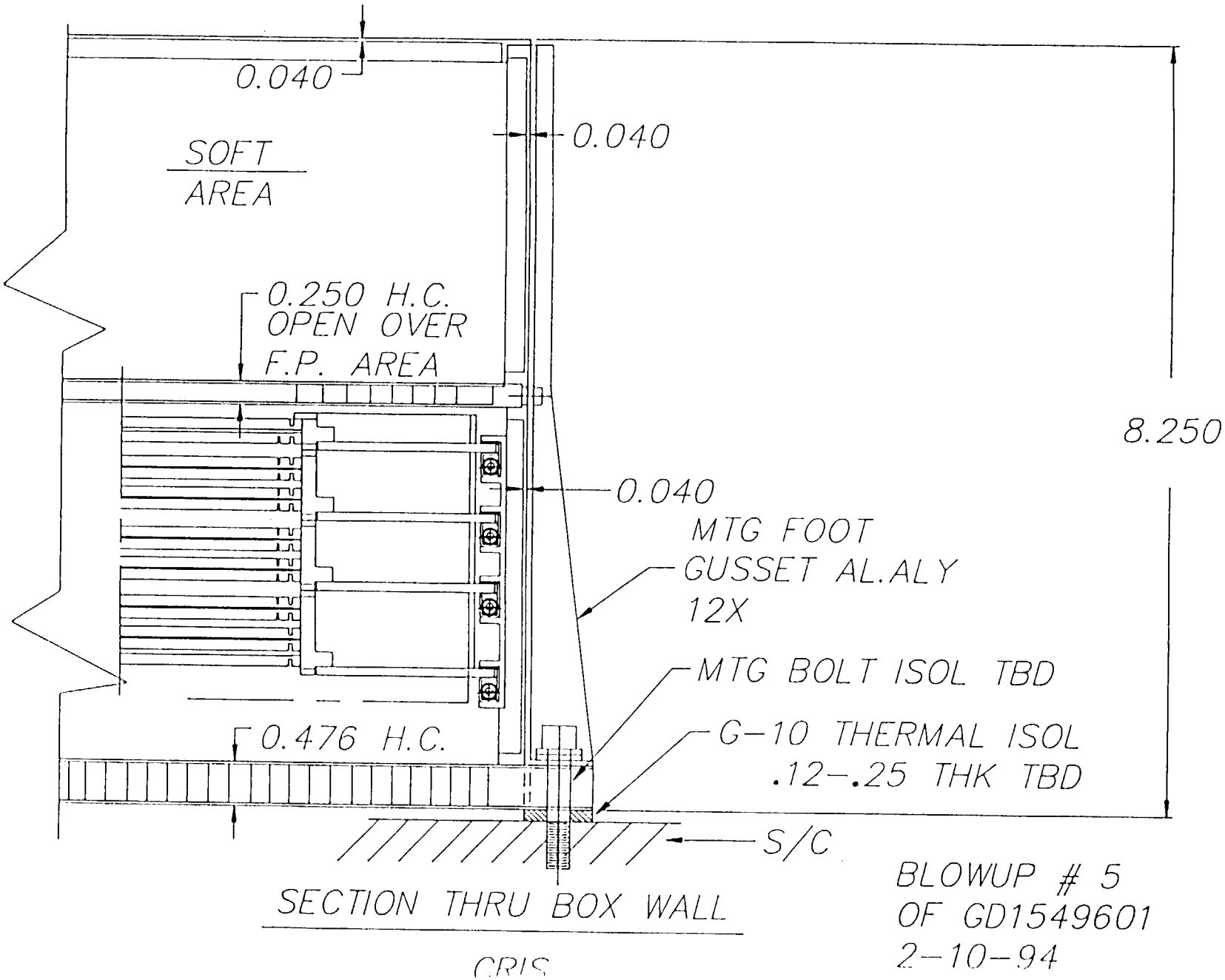

CRIS STRUCTURE MECHANICAL DESIGN

BOX STRUCTURE

- **Plan for (FEA) mechanical in-house analysis utilizing Pro-Engineer/COSMOS-M/Algor software**
- **Mass and center of gravity estimates shown on ICD drawing**

CRIS STRUCTURE MECHANICAL DESIGN

FINITE ELEMENT ANALYSIS

- **FEA of mechanical parts using in house analysis software (Pro-Engineer, COSMOS-M and Algor)**
- **Instrument box modeled for structural analysis**
- **Detector module housing modeled with detectors for structural analysis**
- **Printed circuit boards with lump sum masses to be modeled for frequency analysis**

CRIS STRUCTURE MECHANICAL DESIGN

VIBRATION TESTING

Test of ACE/CRIS instrument will be done to S/C proto-flight vibration levels

- **Instrument Sine Survey**

All Axes

Frequency (HZ)	Acceleration
10-2000	0.25 G

Sweep Rate = 4 OCT/MIN

CRIS STRUCTURE MECHANICAL DESIGN

VIBRATION TESTING

- **Instrument Sine Sweep**

Thrust Axis (Z)

Frequency (Hz)	Acceleration (zero to peak)
5 to 6.2	0.5 in. (double amplitude)
6.2 to 20	1.0 g
20 to 25	14.0 g
25 to 100	1.0 g

Sweep rate = 4 octaves/min

Lateral Axes (X,Y)

Frequency (Hz)	Acceleration (zero to peak)
5 to 6.2	0.5 in. (double amplitude)
6.2 to 60	1.0 g
60 to 80	2.0 g
80 to 100	7.5 g

Sweep rate = 4 octaves/min

CRIS STRUCTURE MECHANICAL DESIGN

VIBRATION TESTING

- **Instrument Random (3 Axes)**

Frequency (HZ)	PSD level
20	0.02 G2/HZ
20-100	+3.4 dB/OCT
100-300	0.12 G2/HZ
300-400	+3 dB/OCT
400-830	0.16 G2/HZ
830-2000	-3 dB/HZ
2000	0.066 G2/HZ

Overall Amplitude = 14.8 G RMS
Duration = 60 seconds

CRIS STRUCTURE MECHANICAL DESIGN

CARD CAGE APPROACH

- **Experiment incorporates removable board trays for detector module boards, electronic boards, and power supplies**
- **Locking card guides for each board with zero insertion force connectors**
- **Mother board/daughter board approach**
- **Vibration testing of (1) detector module with detector board prior to PDR**

CRIS STRUCTURE MECHANICAL DESIGN

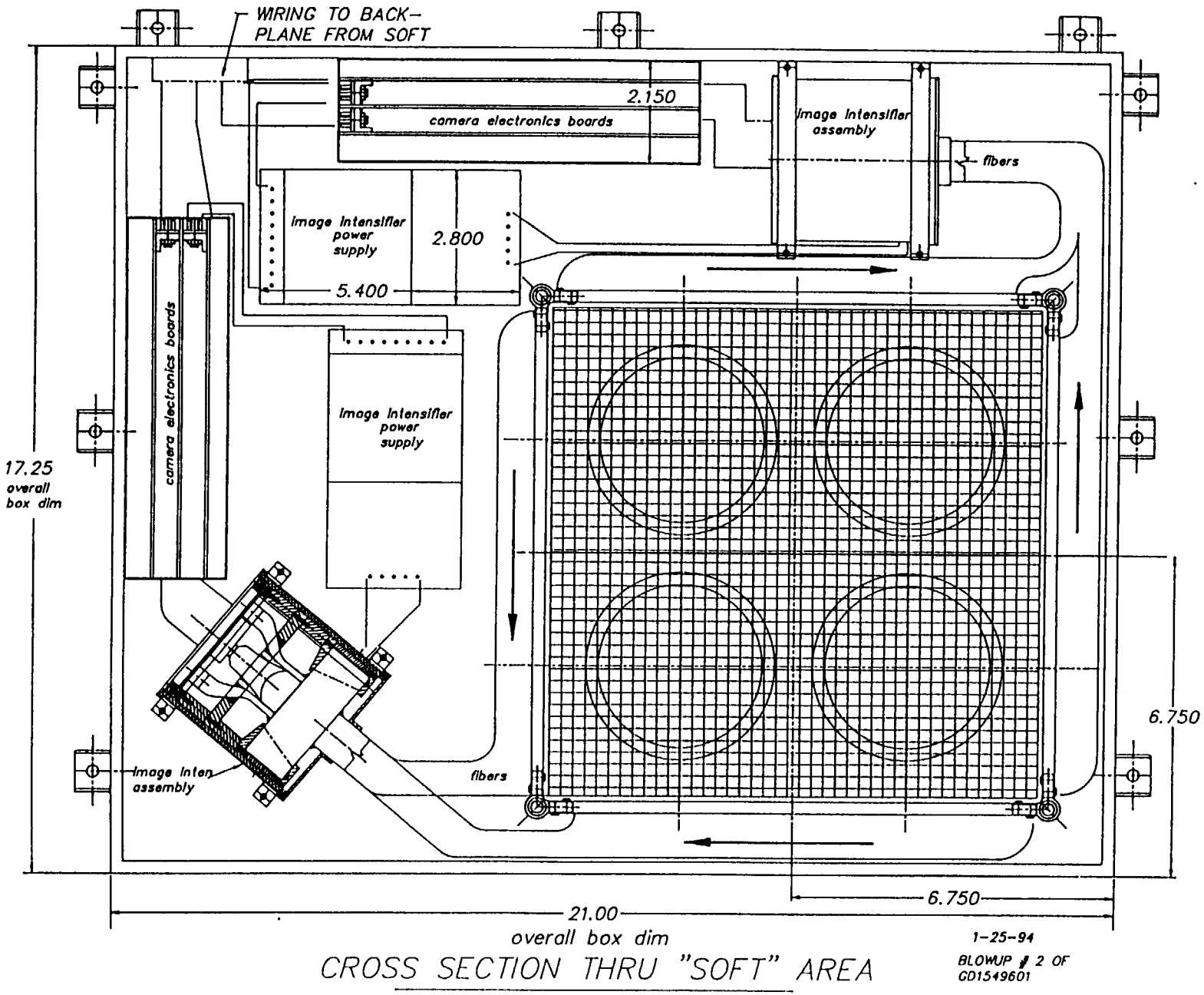

CROSS SECTION THRU "SOFT" AREA

CRIS STRUCTURE MECHANICAL DESIGN

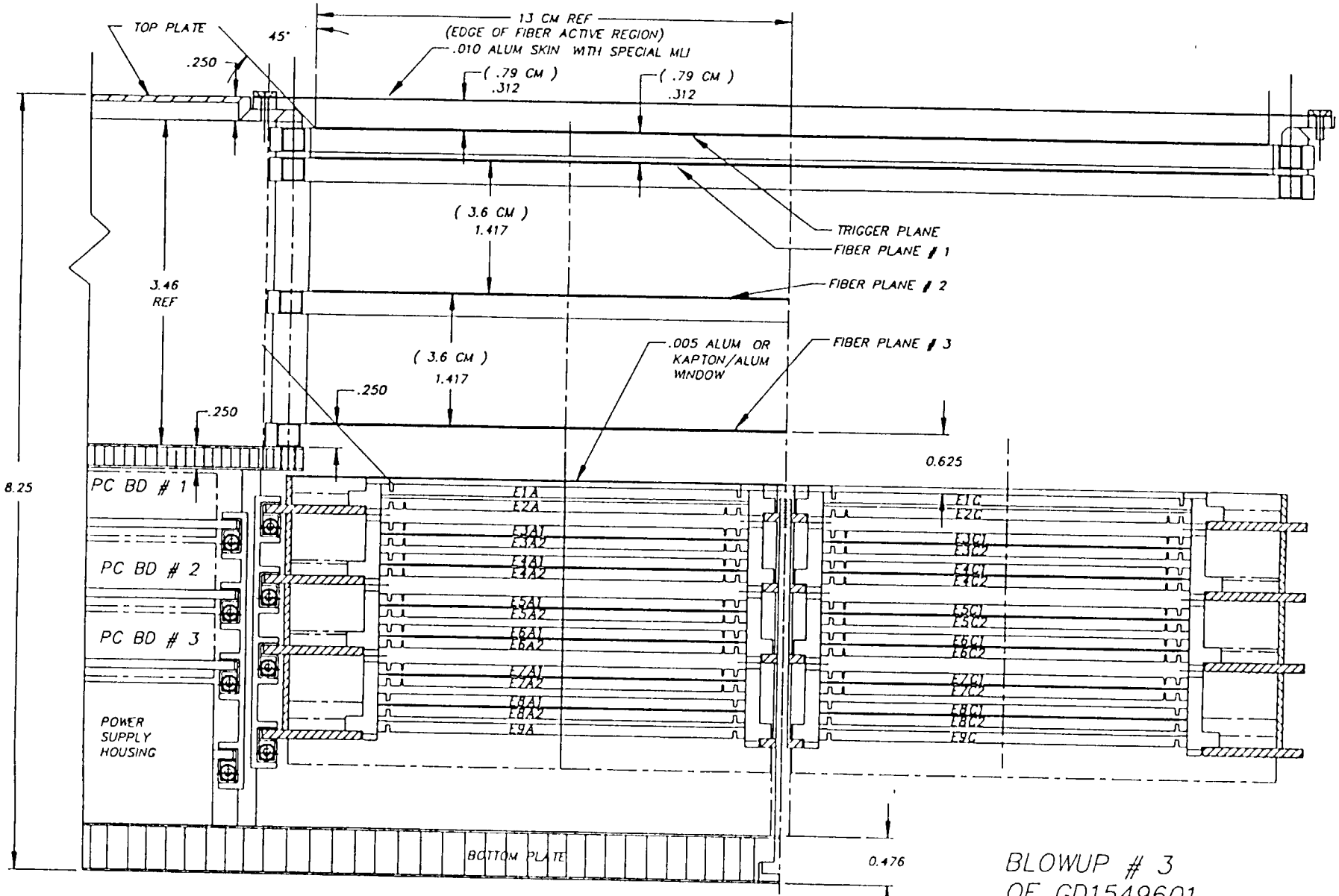

CROSS SECTION THRU DET. MODULE STACK
WITH "SOFT" FIBER PLANE SPACING

BLOWUP # 3
OF GD1549601
2-10-94

CRIS STRUCTURE MECHANICAL DESIGN

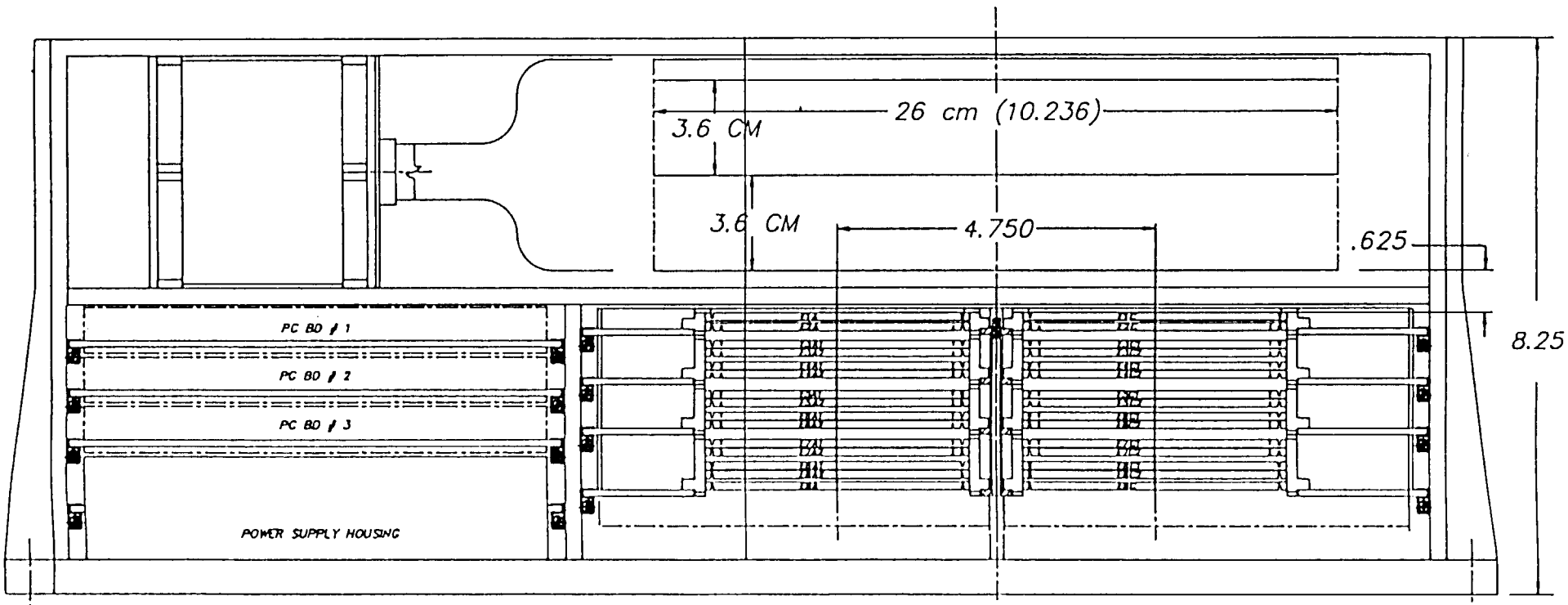

CROSS SECTION THRU ELECTRONICS BOX

BLOWUP # 1
OF GD1549601
2-10-94

CRIS STRUCTURE MECHANICAL DESIGN

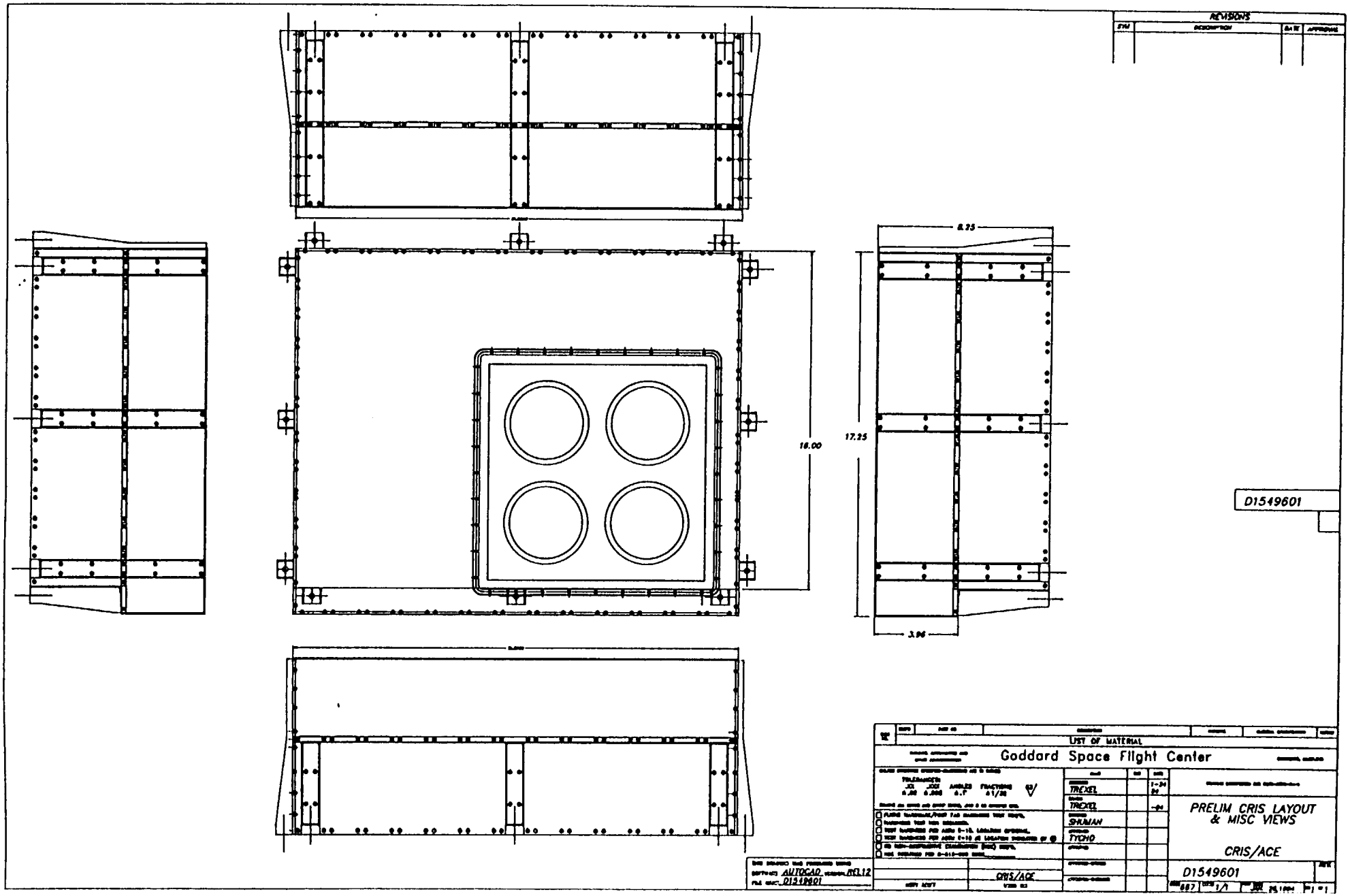

CRIS STRUCTURE MECHANICAL DESIGN

DETECTOR MODULES

- **(4) detector modules per detector board x (4) detector boards**
- **Total of 4 stacks of 15 LiD detectors**
- **Each detector module pinned to detector board**
- **Detector boards aligned to one another via zero insertion force connector alignment keys and alignment rods**

CRIS STRUCTURE MECHANICAL DESIGN

DETECTOR MODULES

- **Detector boards individually removable for detector replacement**
- **Detector boards incorporate all pre/post amplifiers and discrete components for their respective modules**

CRIS STRUCTURE MECHANICAL DESIGN

REQUIREMENTS FOR DETECTOR ALIGNMENT

	GOAL	ACCEPTABLE
• DETECTOR POSITION TOLERANCE	0.046"	0.092"
• DETECTOR ORIENTATION CO-PLANARITY	0.002"	0.007"
• DETECTOR AZIMUTHAL ORIENTATION	1.33°	3.4°

CRIS STRUCTURE MECHANICAL DESIGN

DETECTOR MODULES

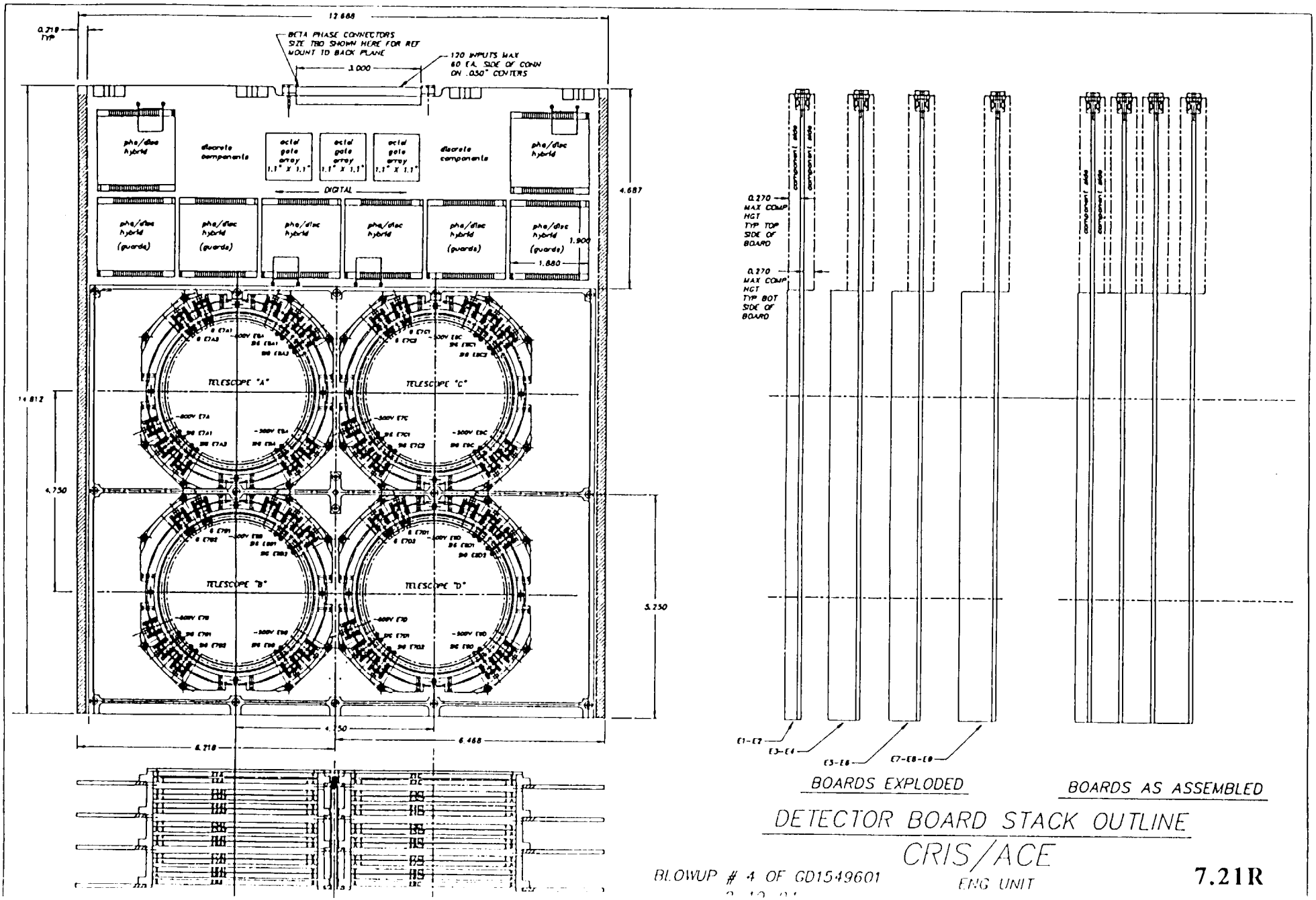

CRIS STRUCTURE MECHANICAL DESIGN

DETECTOR MODULES

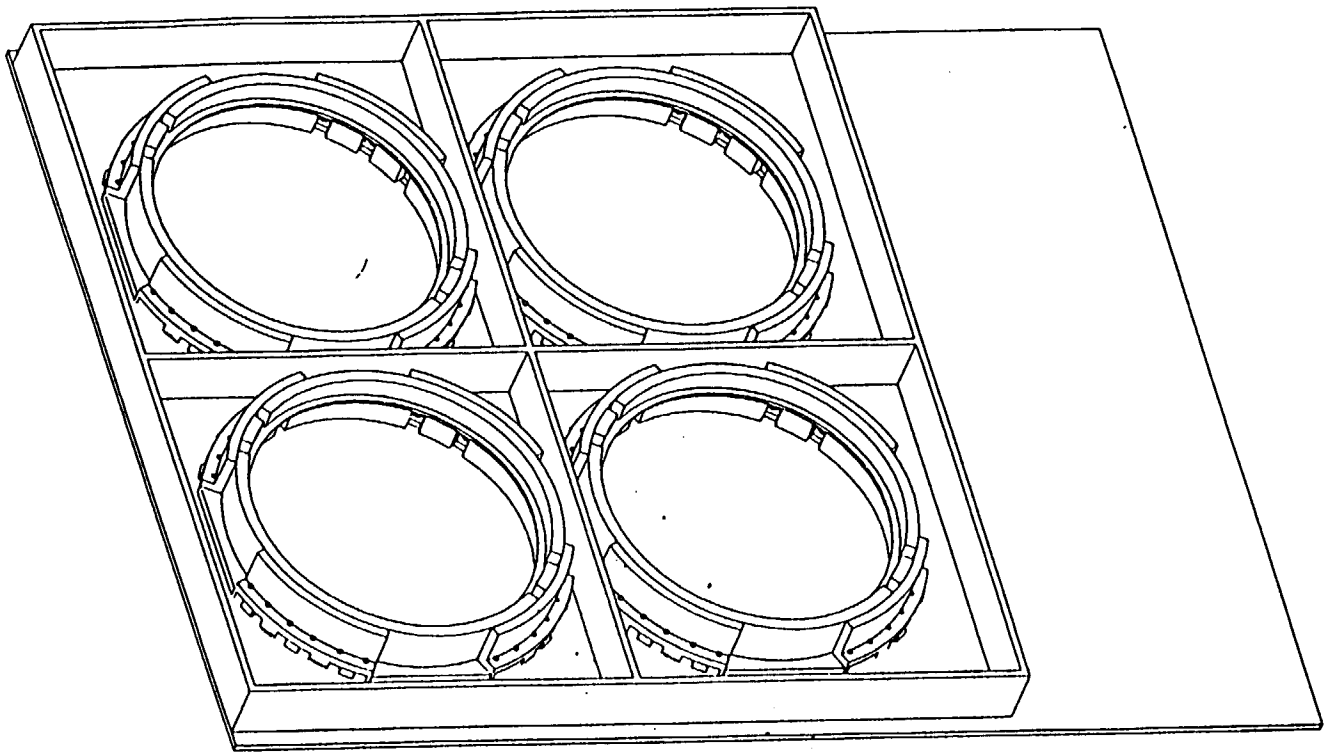

ENGINEERING DETECTOR MODULES MOUNTED TO PCB

CRIS STRUCTURE MECHANICAL DESIGN

DETECTOR MODULES

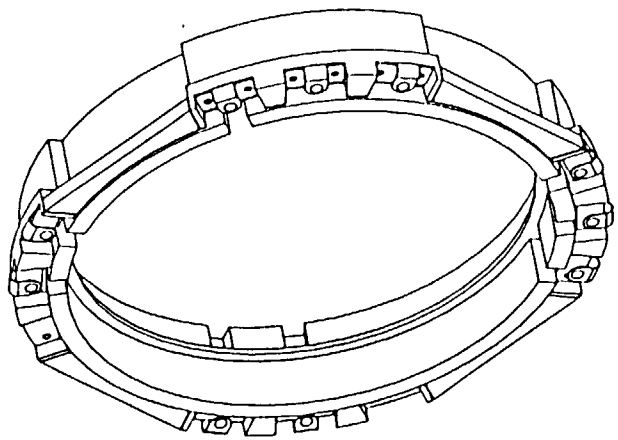

TYP ENGINEERING DETECTOR MODULE

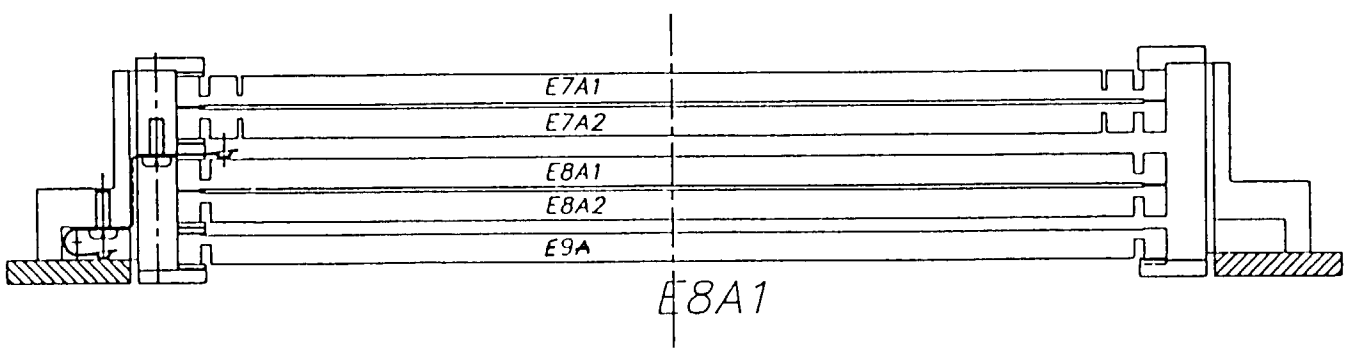

X-SECT THRU TYP CONTACT ARRANGEMENT

CRIS STRUCTURE MECHANICAL DESIGN

PURGING REQUIREMENTS

- Purge from S/C via 1/4 NPT connector and teflon tubing
- Internal manifold directs purge to detector modules and soft area
- In-line restrictors as required for proper flow rate
- Pressure: Nominal 3.5 psi
  Maximum 5.0 psi
- Flow rates: .018 cfm Total

CRIS STRUCTURE MECHANICAL DESIGN

Purging Requirements
Purge System
From C. Willey (APL)

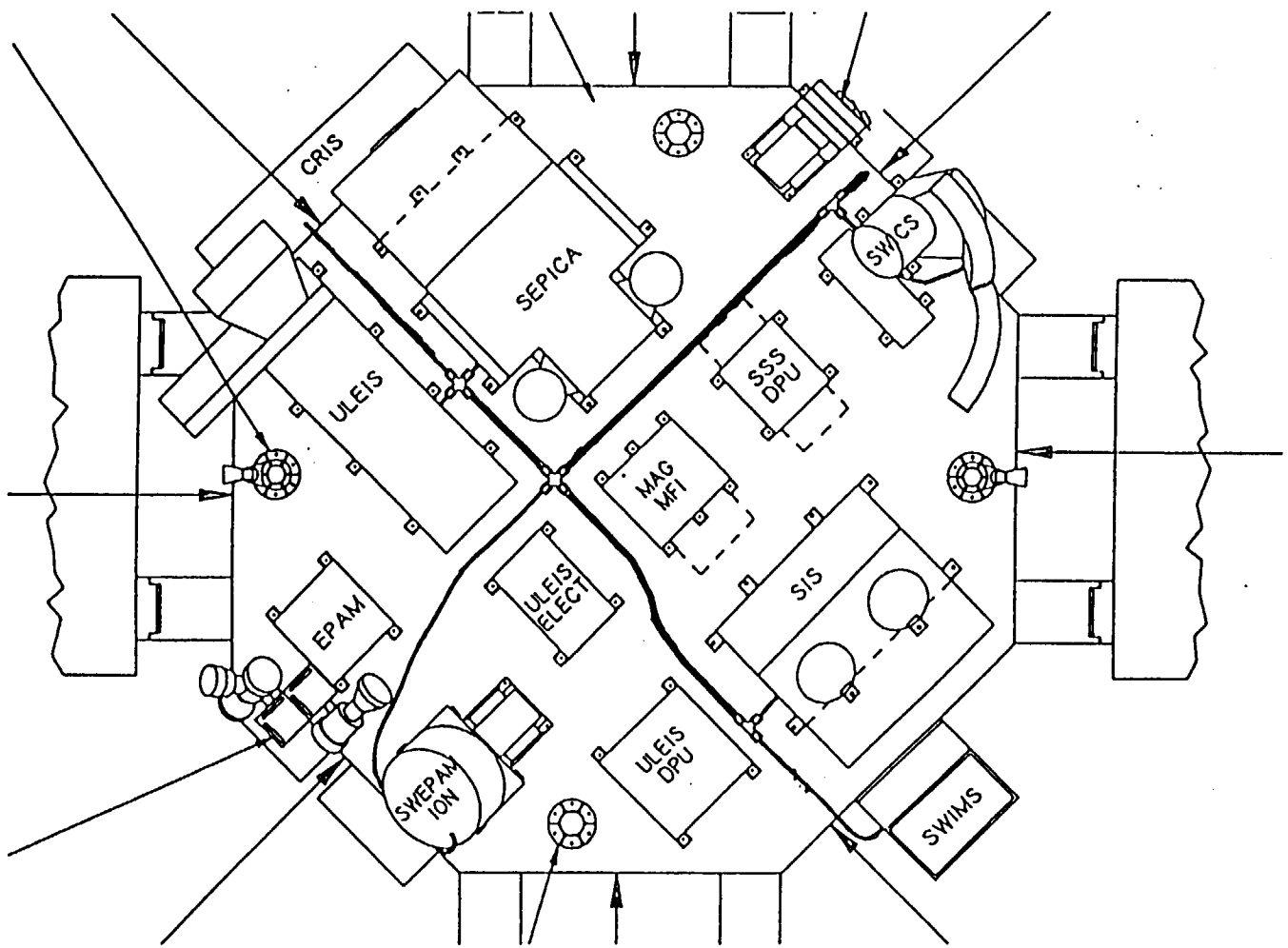

CRIS STRUCTURE MECHANICAL DESIGN

Preliminary Purge Schematic

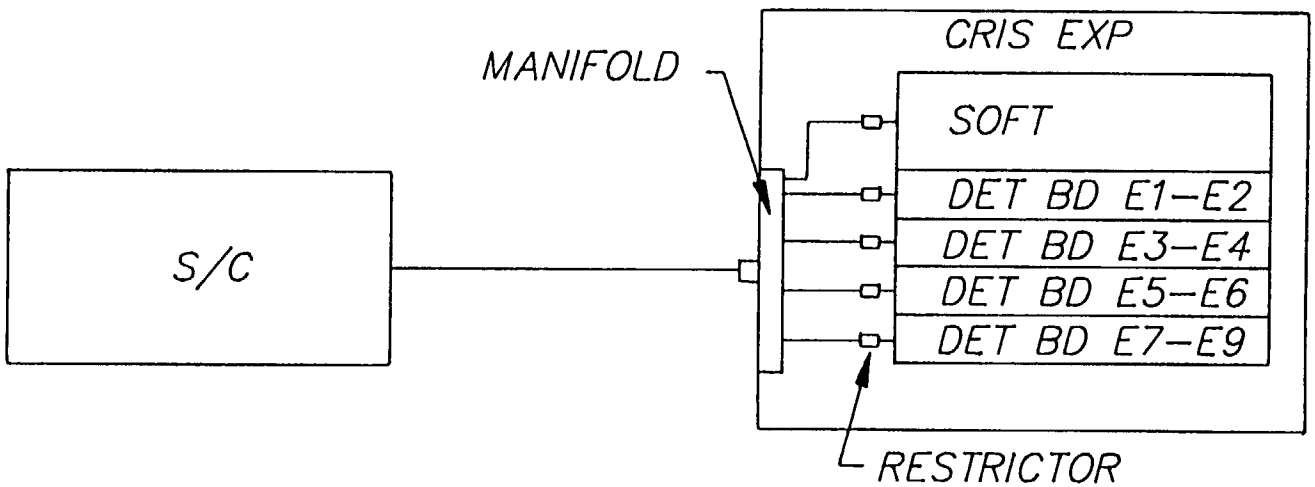

CRIS STRUCTURE MECHANICAL DESIGN
WEIGHT ESTIMATE

	grams
• **Soft**	
Fiber plane assembly	1140
Image intensifier assemblies (2)	2310
Power supplies	1000
Camera electronic board assys (2)	1710
• **Electronics Box Structure**	
Front, rear, right, left panels	2550
Top plate, mid deck & base plate	4130
Interior walls, card guides, windows, frames & misc hardware	1920
• **Telescopes**	
60 LiD detectors	3300
16 detector modules	1600
4 detector boards (detector portion only)	880
Detector boards isolation and support structure	690
• **Experiment Low & High Voltage**	
Power Supply	1700
• **Experiment Electronics**	3940
P/A, S/A, ADC Portion of detectors boards 3 digital boards, backplane, electronics parts & conformal coat and connectors	
CRIS estimated weight	26.87 Kg
CRIS allocated weight	31.00 Kg
CRIS under allocated weight by	4.13 Kg

CRIS STRUCTURE MECHANICAL DESIGN

CRIS Structure Mechanical Design
Preliminary Internal Thermal Drawing

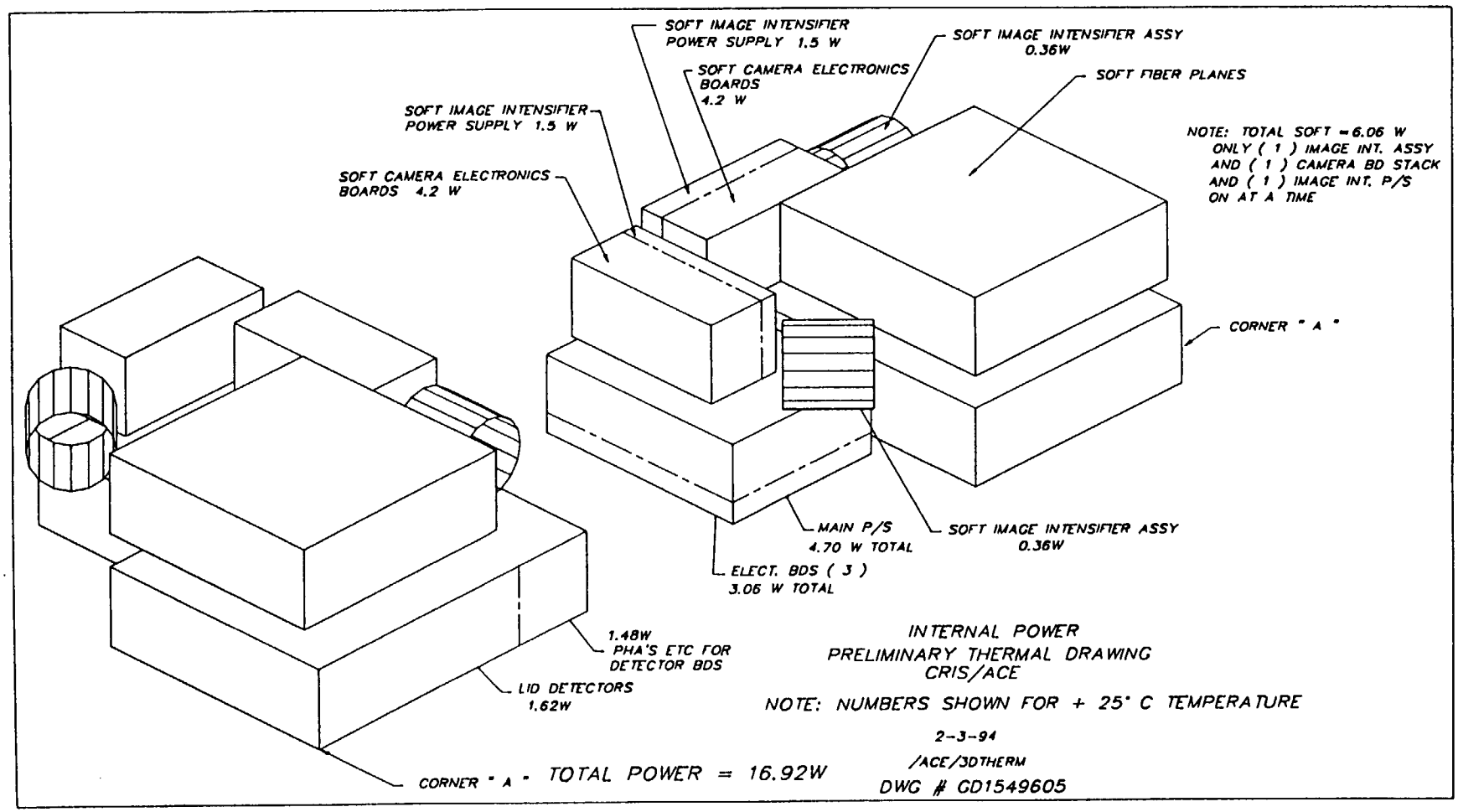

CRIS STRUCTURE MECHANICAL DESIGN

CRIS Structure Mechanical Design
Preliminary External Thermal Drawing

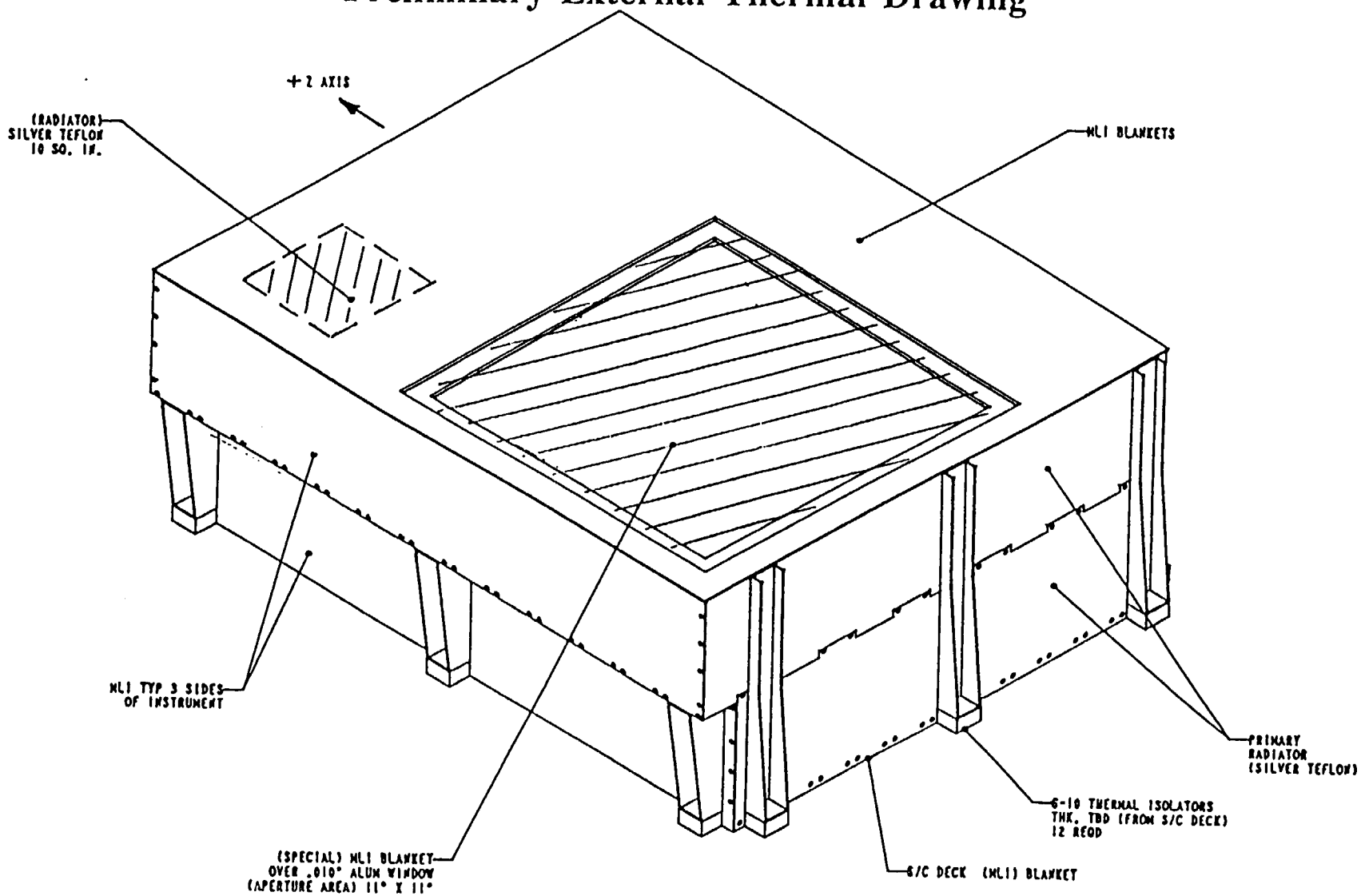

CRIS EXTERNAL COATINGS & BLANKETS DRAWING
6D1549604
1/25/94

CRIS PDR

Section 8

Thermal Design

2/22–23/94

PDR THERMAL TOPICS

- REQUIREMENTS
- ENVIRONMENTS
- THERMAL DESIGN APPROACH
- PRELIMINARY ANALYSIS RESULTS

ACE S/C ORIENTATION

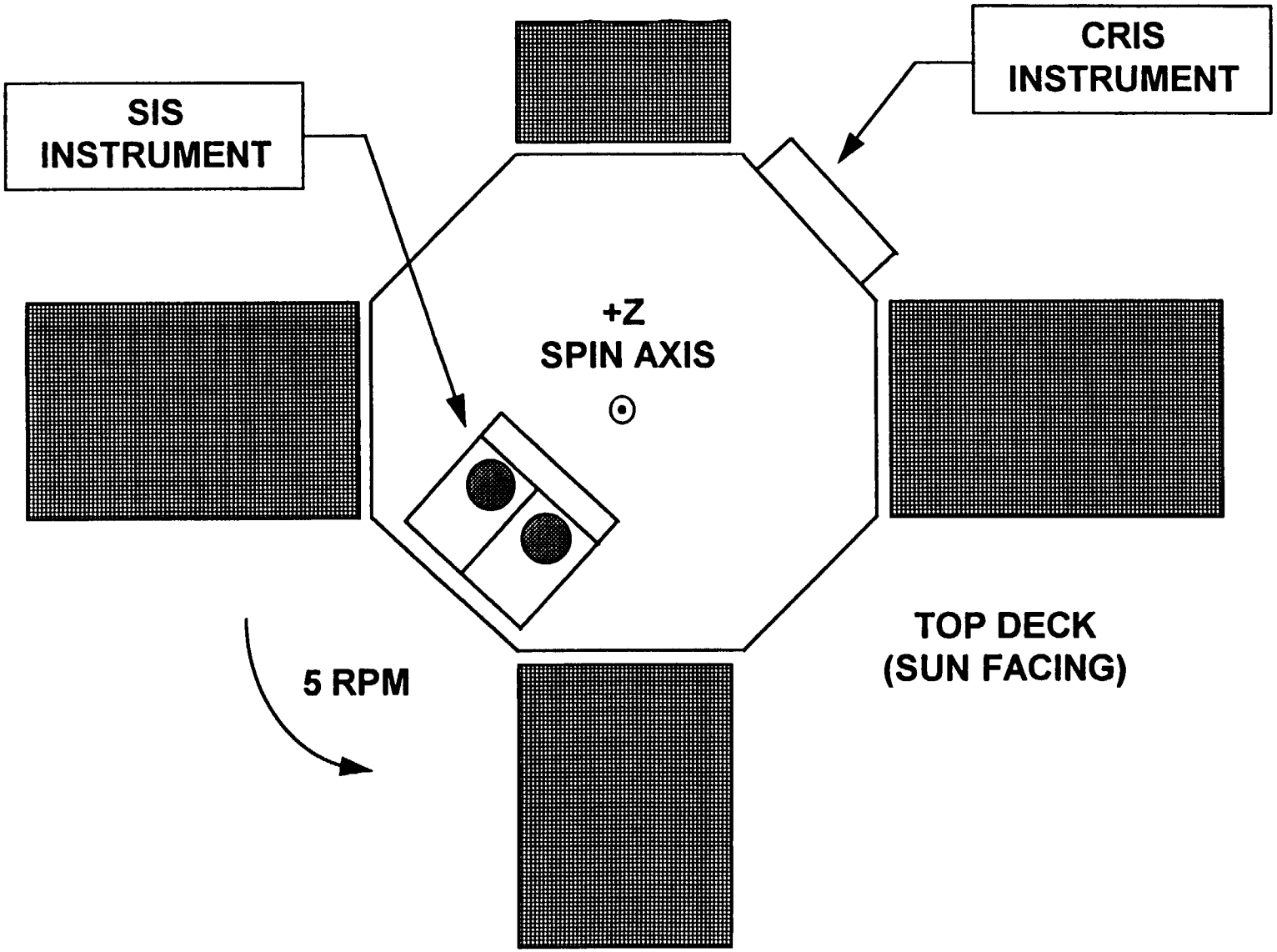

CRIS THERMAL CONTROL DESIGN

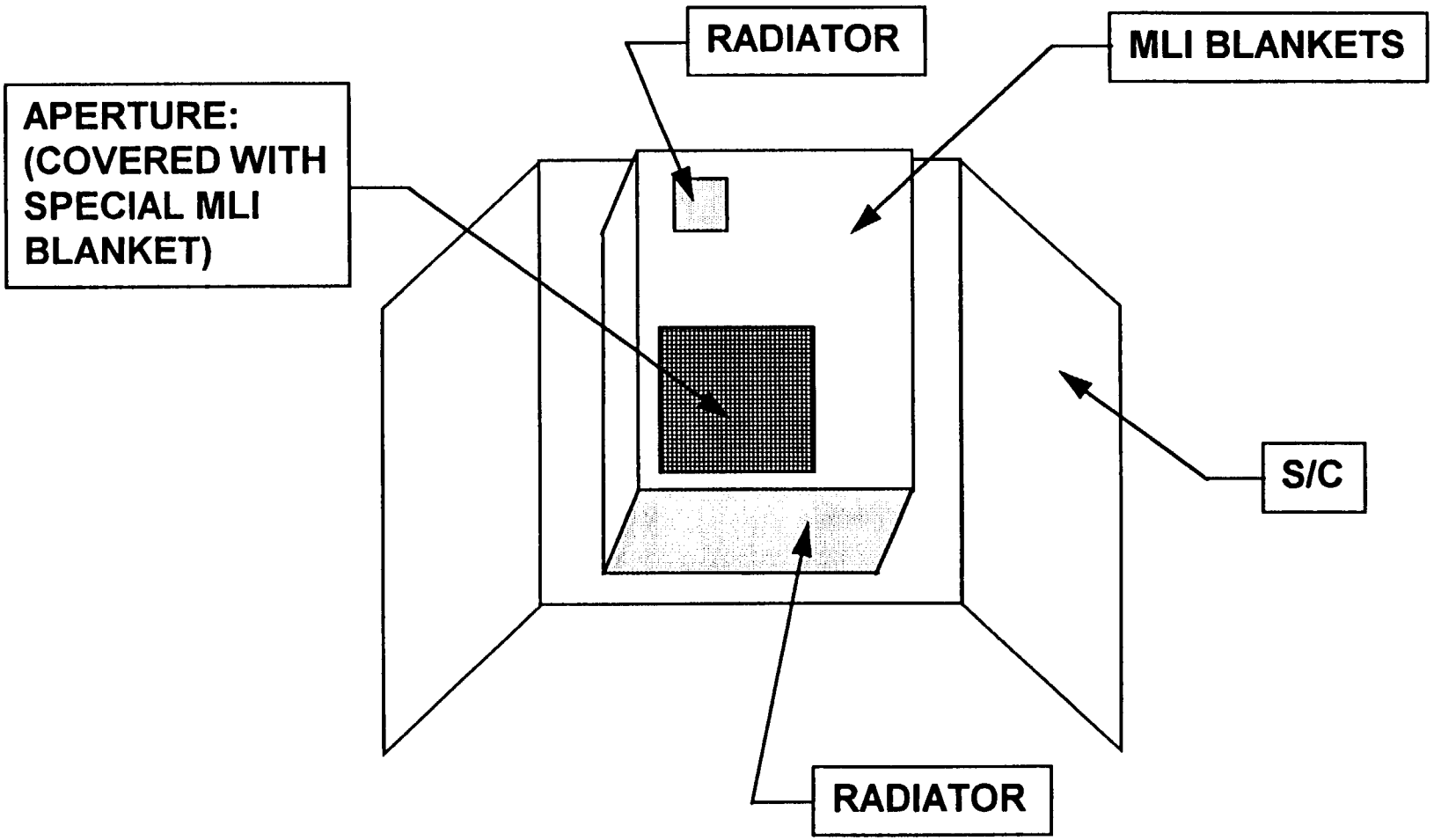

CRIS THERMAL REQUIREMENTS

- ACE S/C MAINTAINS +Z SPIN AXIS WITHIN 0 TO 20 DEGREE OF SUN. S/C SPINS AT 5 RPM ABOUT + Z AXIS.
- THERMALLY ISOLATE INSTRUMENT FROM SIDE PANEL WITH PANEL @ -10 TO +40 C.
- MAINTAIN BOXES WITHIN TEMPERATURE LIMITS FOR OPERATING AND NON-OPERATING MODES.
- HEATER POWER AVAILABLE FOR USE DURING LOW TEMPERATURE PERIODS.
- NO BOARDS THERMAL ANALYSIS WILL BE DONE.

COMPONENT REQUIREMENTS

COMPONENT	TEMPERATURE LIMITS (DEG. C)			
	Preferred Oper.	In-Spec. Oper.	Design/Test	Non-Operating
Image Intensifier P/S	-10 to + 10	-20 to + 10	-23 to + 40	-23 to + 40
Camera Electronics	-23 to + 55	-23 to + 55	-23 to + 55	-23 to + 60
Image Intens. Assy.	-20 to + 5	-23 to + 5	-23 to + 35	-23 to + 35
LiD Detectors	-10 to + 10	-25 to + 25	-35 to + 33	-35 to + 35
PHA Electronics	-10 to + 20	-20 to + 40	-23 to + 55	-23 to + 60
High Volt. P/S	-23 to + 55	-23 to + 55	-23 to + 55	-23 to + 60
Elect. Boards	-23 to + 55	-23 to + 55	-23 to + 55	-23 to + 60
Fiber Planes	-20 to + 10	-20 to + 25	-23 to + 35	-23 to + 35

HOT AND COLD CASE ENVIRONMENTS

	HOT CASE	COLD CASE
OPTICAL PROPERTIES	EOL	BOL
SOLAR CONSTANT	450 BTU/HR-FT^2	408 BTU/HR-FT^2
ALBEDO	0	0
EARTH SHINE	0	0
SUN ANGLE	0 TO 40	0 TO 40

CRIS POWER DISSIPATION

Component	Qave (W)
Image Intensifier P/S	1.5
Camera Electronics	4.2
Image Intens. Assy.	0.36
LiD Detector	1.62
PHA Electronics	1.43
High Volt. P/S	4.69
Elect. Boards	3.06

TOTAL (W)	**16.86**

CRIS PRELIMINARY THERMAL DESIGN APPROACH

- INSTRUMENT IS THERMALLY ISOLATED FROM SIDE PANEL WITH G-10 SPACERS.
- INSTRUMENT WILL REQUIRE 2 RADIATORS, ONE COVERING THE BOTTOM OF THE INSTRUMENT AND ONE OVER IMAGE INTENSIFIER ASSY #2.
- HEATERS USED TO MAINTAIN MINIMUM TEMPERATURES, AS NEEDED.
- RADIATORS ARE Ag-FEP.
- MLI COVERS REST OF INSTRUMENT. BETA CLOTH USED AS EXTERNAL SURFACE OF MLI.

CRIS THERMAL ISOLATION

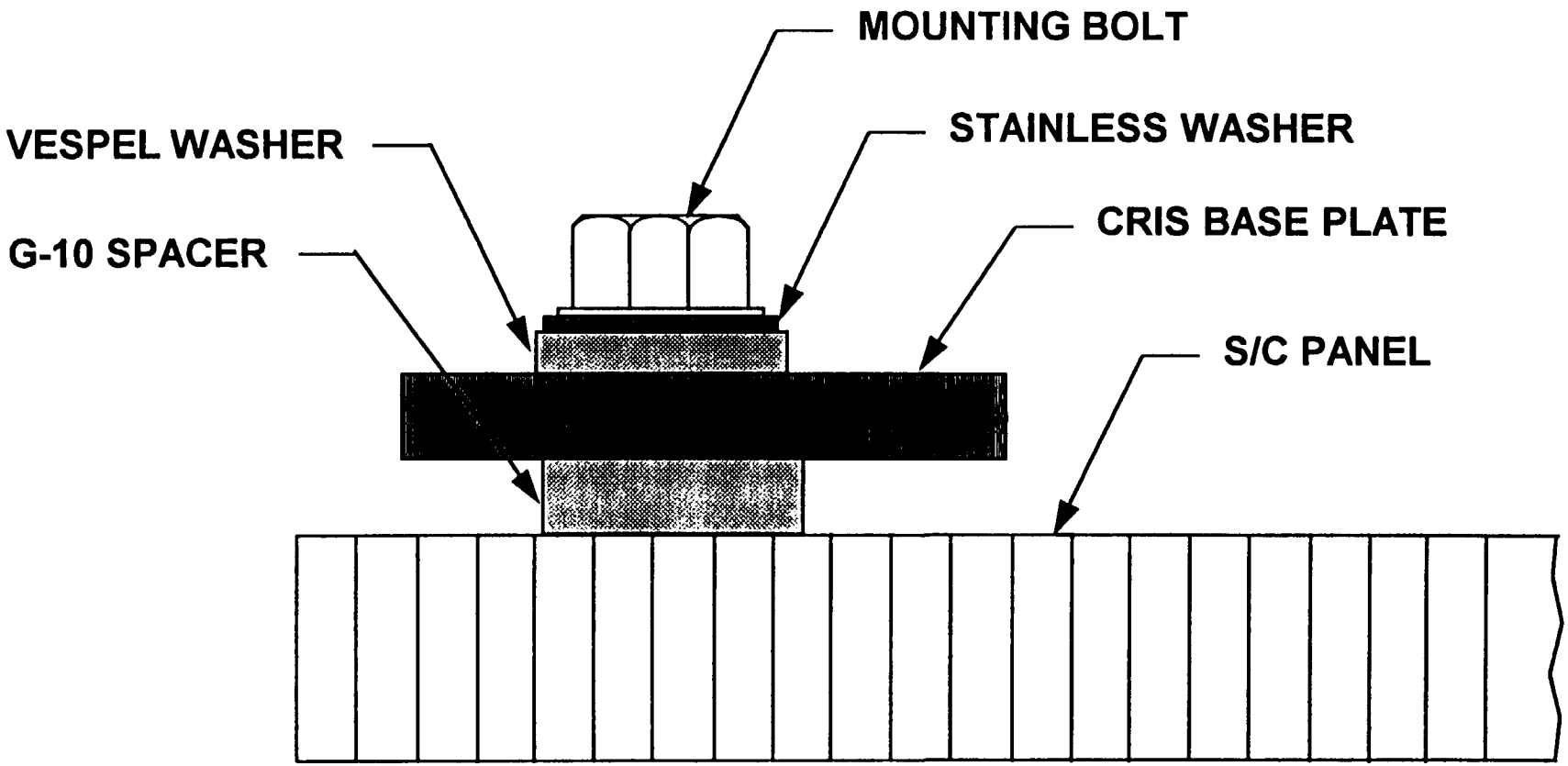

CRIS PRELIMINARY THERMAL DESIGN APPROACH (CONT'D)

- SPECIAL MLI OVER APERTURE CONSISTS OF 6 LAYERS OF CRINKLED ALUMINIZED 0.3 MIL KAPTON.
- INSIDE OF BOX MUST BE BLACK PAINT OR HIGH EMITTANCE SURFACES.
- IMAGE INTENSIFIER ASSY HOUSINGS ARE THERMALLY ISOLATED FROM MID-DECK, BUT THERMALLY TIED TO TOP COVER.
- ALL OTHER SOFT COMPONENTS ARE TIED TO MID-DECK.
- HIGH VOLTAGE P/S IS BOLTED TO BASE PLATE.
- BOX SIDES ARE COUPLED TOGETHER WELL.

CRIS HEATER TYPES

- Survival Heaters: Heaters mounted on instrument exterior. Power and circuits provided by S/C. Heaters defined by Instrument Thermal Engineer.

- Internal Operational Heaters: Heaters mounted inside of instrument for special heating purposes. Power is used from Instrument budget. Defined by PI or Instrument Thermal Engineer. (NOT APPLICABLE)

- Replacement Heaters: Heaters mounted to S/C deck. Power and circuits provided by S/C. Heaters maintain deck interface temperature when Instrument is off. Defined by S/C thermal Engineer.

- Additional Operational Heaters: Heaters mounted inside or outside, as design allows. Heaters used to control temperature of Instrument during normal operations, as needed. Power and circuits provided by S/C. Defined by Instrument Thermal Engineer.

CRIS ON ORBIT MODEL

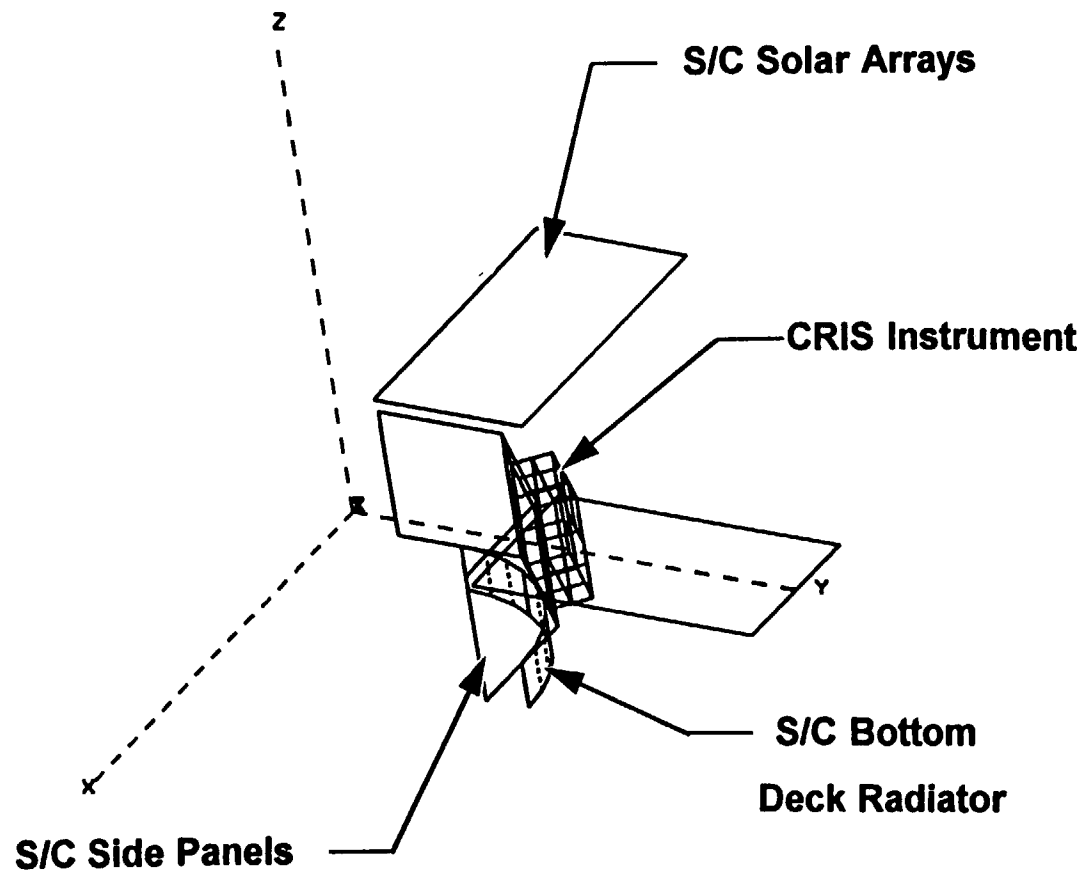

VIEW = 3-D
SCALE = 0.3922
NV = 1

CRIS INTERNAL MODEL 1, TOP HALF

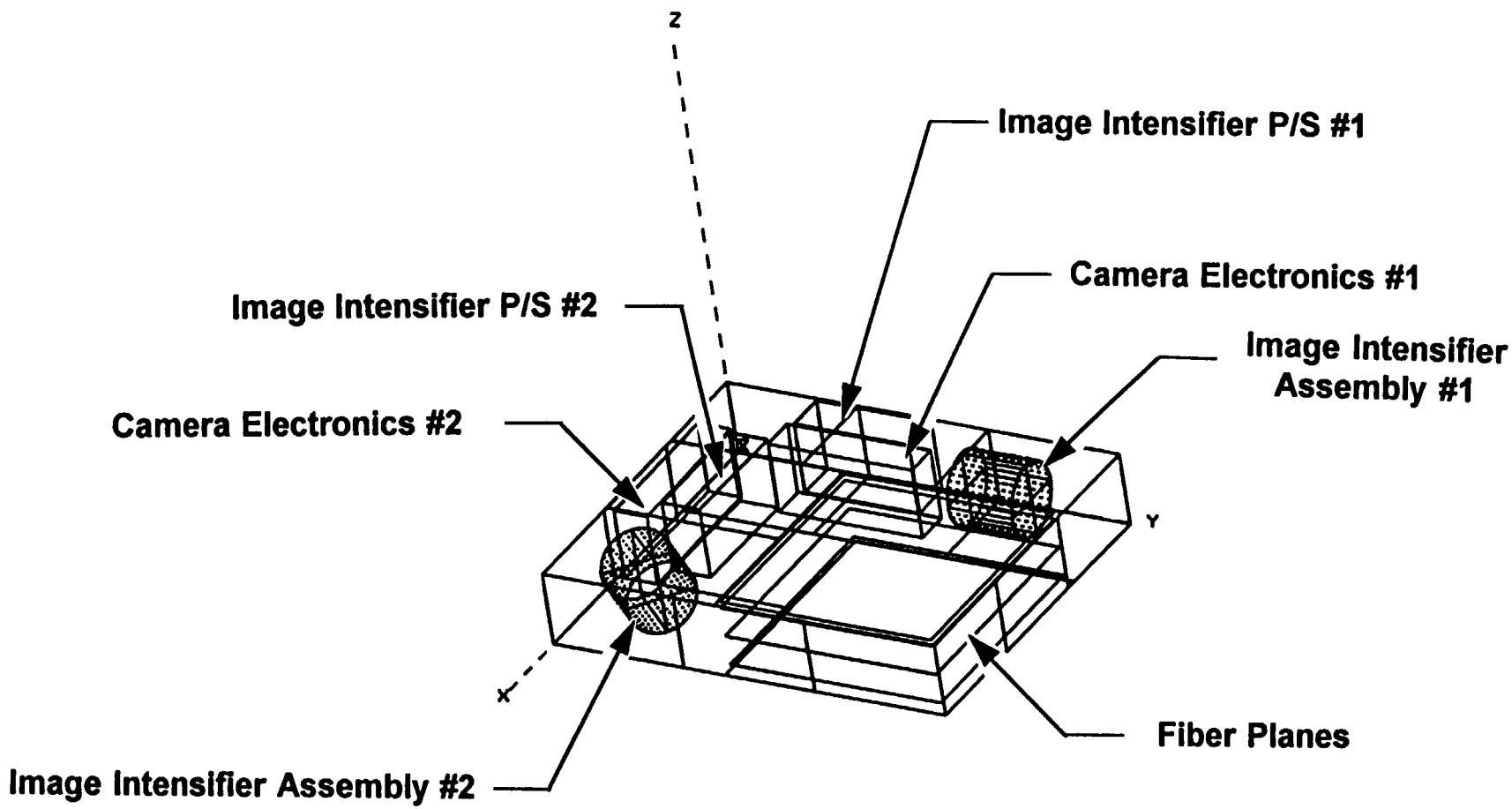

VIEW = 3-D
SCALE = 1.8209
NV = 1

CRIS INTERNAL SOFT DETECTOR MODEL
HOT CASE, SOFT #2 ON
S/C TEMPERATURE = 40 C

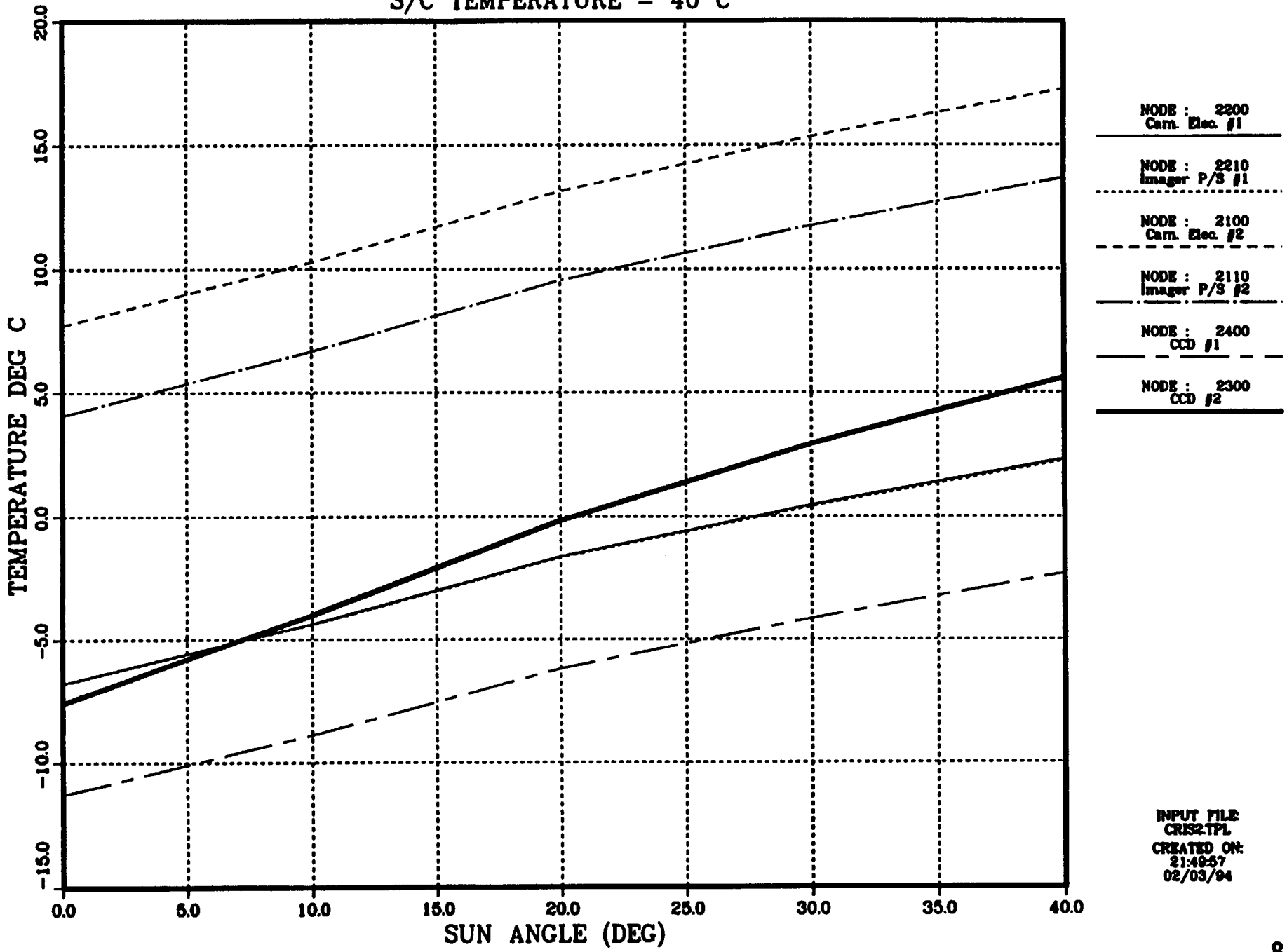

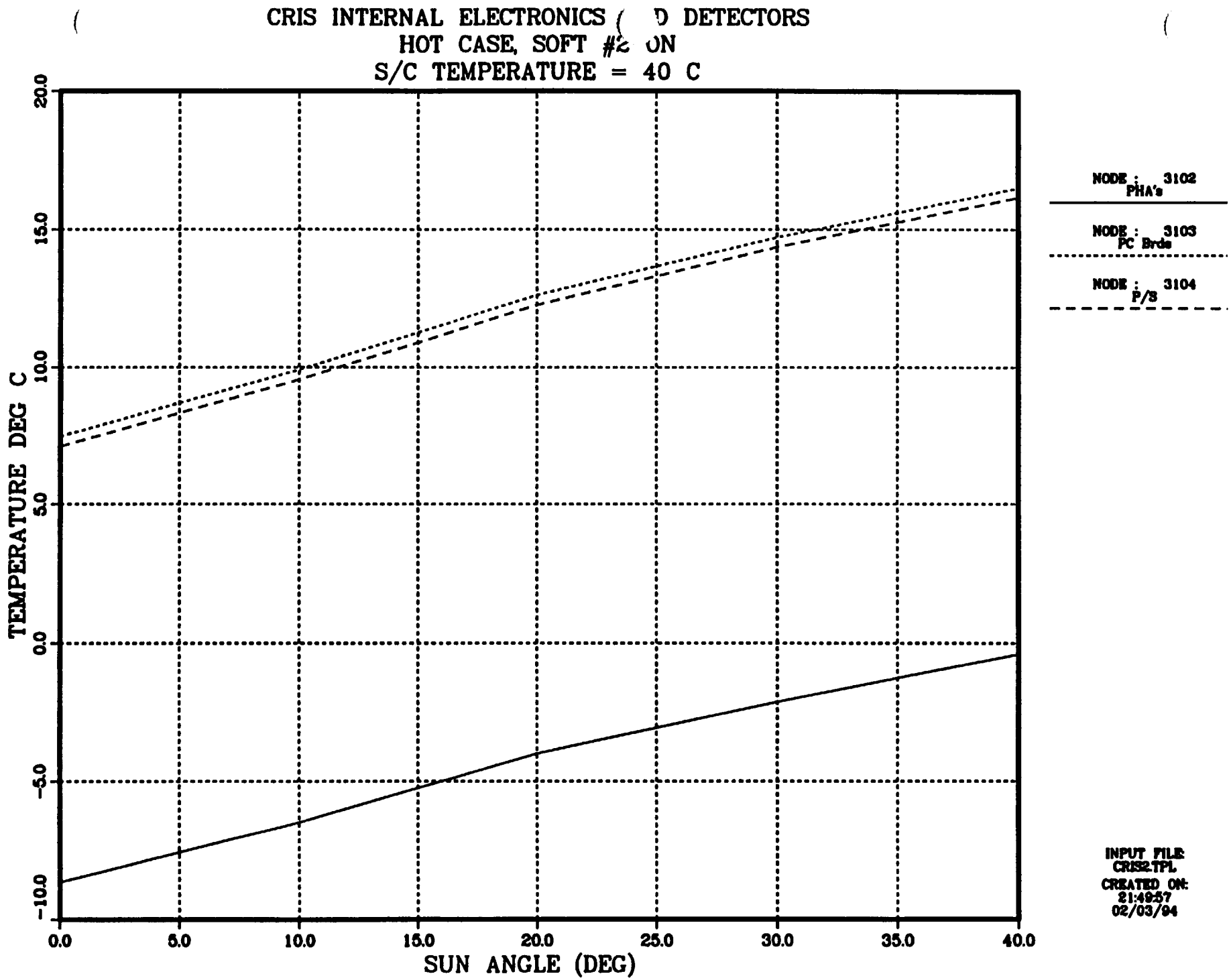
CRIS INTERNAL ELECTRONICS (D DETECTORS
HOT CASE, SOFT #2 ON
S/C TEMPERATURE = 40 C
TEMPERATURE DEG C
20.0
15.0
10.0
5.0
0.0
-5.0
-10.0
0.0
5.0
10.0
15.0
20.0
25.0
30.0
35.0
40.0
SUN ANGLE (DEG)
NODE : 3102
PHA's
NODE : 3103
PC Brds
NODE : 3104
P/S
INPUT FILE
CRIS2.TPL
CREATED ON:
21:49:57
02/03/94

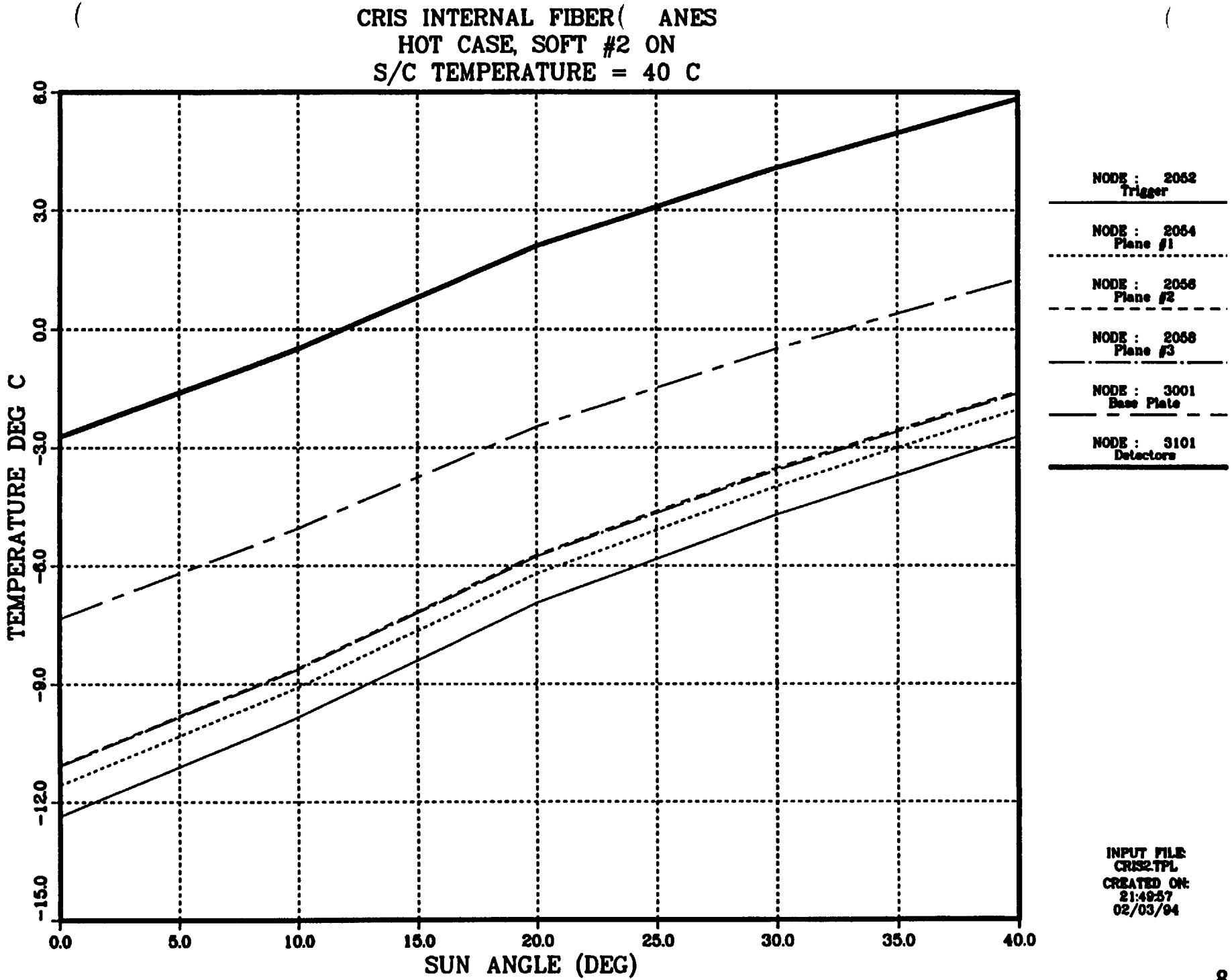
CRIS INTERNAL FIBER(ANES
HOT CASE, SOFT #2 ON
S/C TEMPERATURE = 40 C
TEMPERATURE DEG C
6.0
3.0
0.0
-3.0
-6.0
-9.0
-12.0
-15.0
0.0
5.0
10.0
15.0
20.0
25.0
30.0
35.0
40.0
SUN ANGLE (DEG)
NODE : 2052
Trigger
NODE : 2054
Plane #1
NODE : 2056
Plane #2
NODE : 2058
Plane #3
NODE : 3001
Base Plate
NODE : 3101
Detectors
INPUT FILE:
CRIS2.TPL
CREATED ON:
21:49:57
02/03/94

CRIS INTERNAL SOFT DETE( )R MODEL
COLD CASE, SOFT #2 ON
S/C TEMPERATURE = -10 C

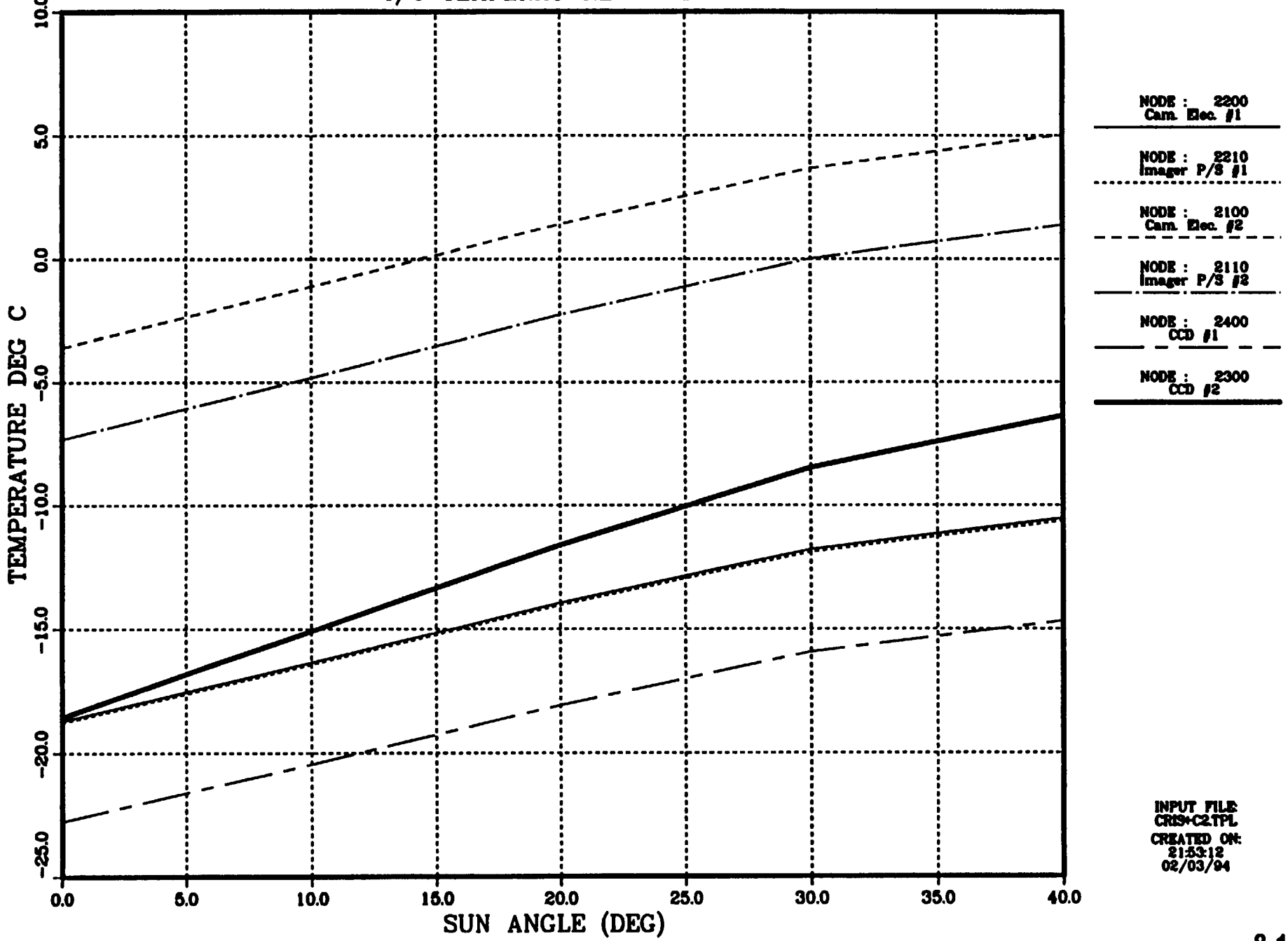

CD3

CRIS INTERNAL ELECTRONICS (D DETECTORS
COLD CASE, SOFT #2 ON
S/C TEMPERATURE = -10 C

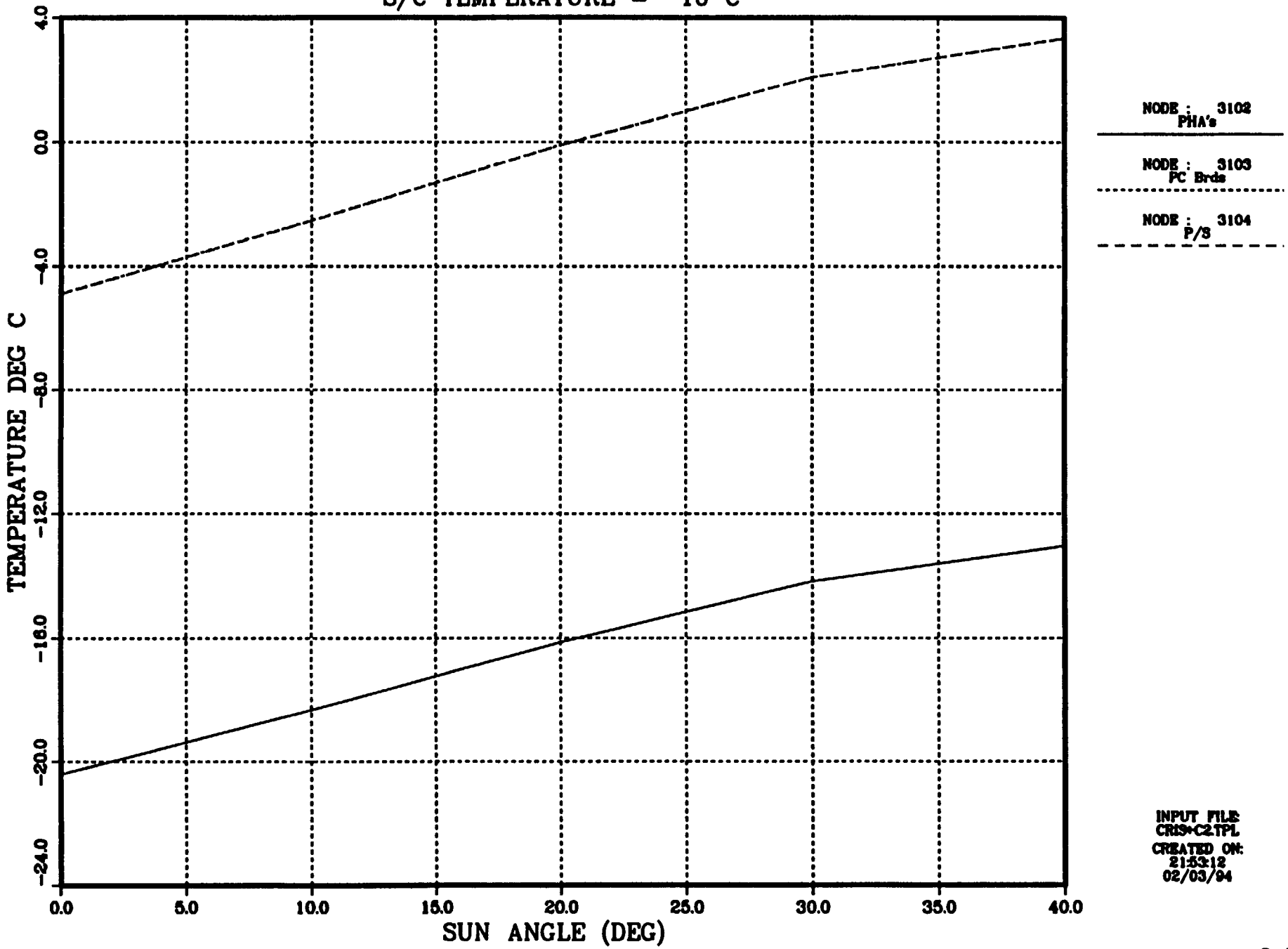

CRIS INTERNAL FIBER(ANES
COLD CASE, SOFT #2 ON
S/C TEMPERATURE = -10 C

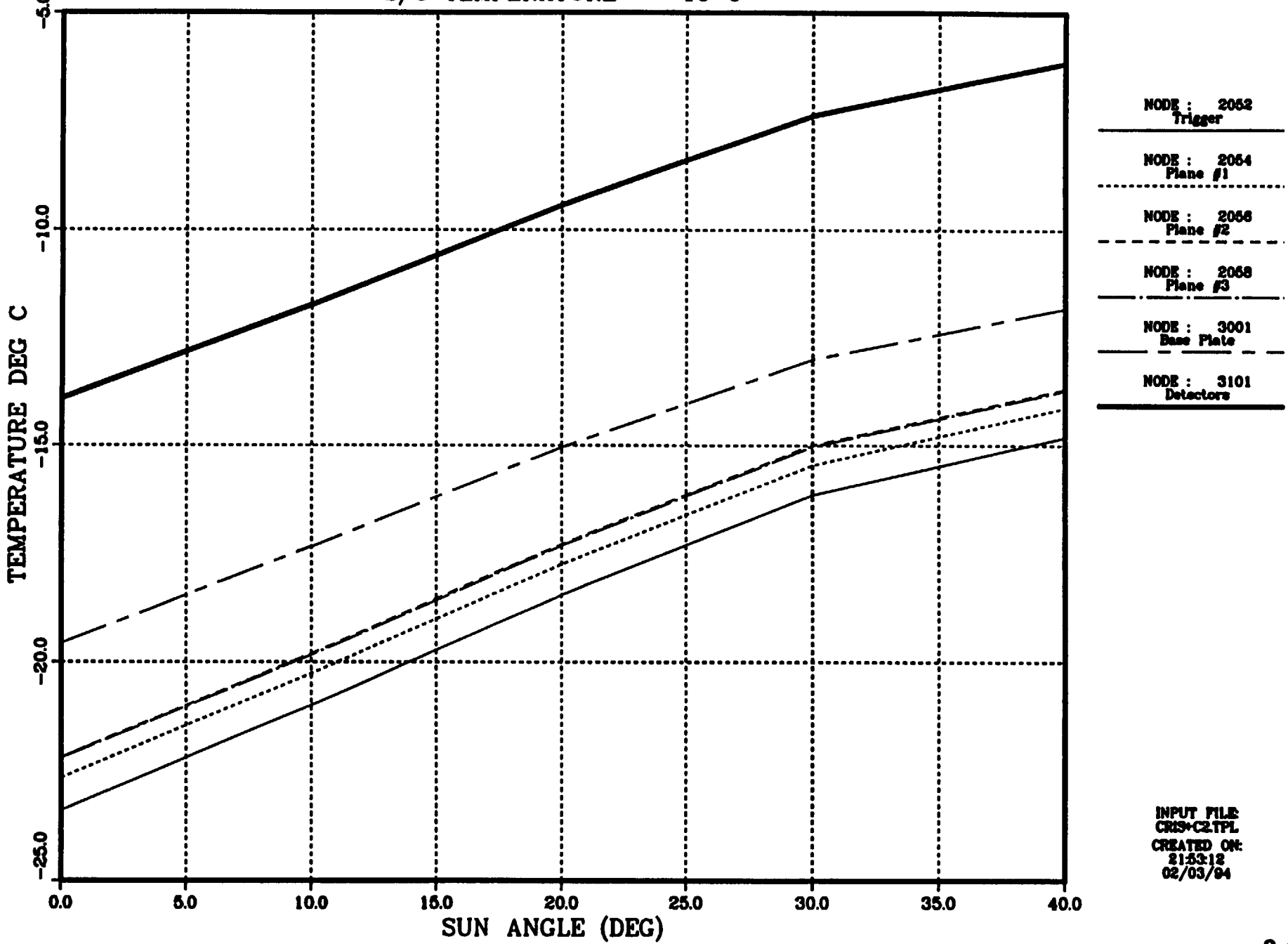

CRIS PRELIMINARY THERMAL RESULTS

• IMAGE INTENS. P/S:	-18 TO +10 C.	(+5/+0 C margin)
• CAMERA ELECTRONICS:	-18 TO +13 C.	(+5/+42 C margin)
• IMAGE INTENS. ASSY:	-23 TO 0 C.	(+0/+5 C margin)
• LiD DETECTORS:	-16 TO 2 C.	(+9/+23 C margin)
• PHA ELECTRONICS:	-20 TO -1 C.	(+3/+39 C margin)
• HIGH VOLT P/S:	-8 TO +13 C.	(+15/+42 C margin)
• ELECT. BOARDS:	-7 TO +13 C.	(+16/+42 C margin)
• FIBER PLANES:	-23 TO 7 C.	(-3/+18 C margin)

THERMAL DESIGN CONCLUSIONS

- INSTRUMENT CAN BE MAINTAINED WITHIN IN-SPEC. OPERATING TEMPERATURE RANGE. ATTEMPTING TO BRING COLD TEMPERATURES UP TO PREFERRED LEVELS USING HEATER POWER.

- INSTRUMENT REQUIRES APPROXIMATELY 3 WATTS OF HEATER POWER FOR COLD PERIODS TO SAFEGUARD LOWER TEMPERATURES.

- TWO DIFFERENT RADIATOR CONFIGURATIONS ARE UNDER INVESTIGATION. ATTEMPTING TO MINIMIZE HEATER POWER.

THERMAL OPEN ISSUES

- ADDITIONAL OPERATIONAL HEATER CIRCUITRY MUST BE WORKED OUT WITH THE SPACECRAFT TO ALLOW FOR HARNESSING AND RELAY CONNECTIONS.
- THERMAL BALANCE TESTING IS NOT PLANNED. HOW WILL THERMAL MODELING BE VERIFIED?
- THERMAL ISOLATION VERSUS ELECTRICAL CONDUCTION.

CRIS PDR

Section 9

Flight Software

2/22–23/94

Flight Software

- Introduction
  - ∗ RTX 2010 features:
    1. Fast:
       Executes Forth instructions at ~1.5 x clock rate
    2. Forth native
    3. G Bus:
       Separate I/O bus enhances speed and reliability
    4. Interrupts:
       On−chip interrupt prioritizer & timers
  - ∗ Forth features:
    1. Resident operating system + compiler
    2. No cross compiler or emulator needed
    3. Years of favorable experience

2/22−23/94

Flight Software (continued)

- Functional Requirements
  - * Collect event data from stack detector electronics and SOFT
  - * Analyze SOFT data to extract hit locations and energies for each fiber plane
  - * Sort events into different priority categories and maintain event counts for each category
  - * Select and format events for telemetry
  - * Collect rate data, housekeeping data, temperatures, power supply voltages, detector leakage currents, detector thresholds, and coincidence logic state
  - * Format housekeeping data and incorporate into telemetry
  - * Support intensive instrument functional self−test via pre−programmed stimulated event and command state sequences, including raw readout of SOFT data
  - * Support low−rate continuous self−test via stimulated events in normal (or existing) command state

2/22−23/94

Flight Software (continued)

- Functional Requirements (continued)
  - ∗ Support a high−rate data mode appropriate for accelerator calibrations
  - ∗ Receive, echo in telemetry, and execute commands to:
    1. Change command state
    2. Define new Forth "words", i.e., make minor adjustments to flight code
    3. Initiate memory dumps, self−test sequence, or other diagnostics
  - ∗ Maintain three copies of command tables in RAM with errors scrubbed and flagged in telemetry
  - ∗ Periodically reset watchdog timer
  - ∗ Have intelligent boot code which preserves command state when possible (i.e., after watchdog timeout)

2/22−23/94

Flight Software (continued)

- CRIS Data Format

  * T/M data rate:
    464 bits/sec = 464 bits/minor frame = 928 bytes/major frame
  * T/M data includes:
    1. Housekeeping at beginning of major frame; fixed length
    2. Events and command echoes follow, interspersed until next major frame; variable length
  * T/M multiplex cycle length:
    16 major frames = 256 minor frames (seconds)

Flight Software (continued)

- Event & Echo Format

  * Events are variable length, sometimes split across minor frames, except at instrument cycle boundaries

    1. Length ranges from 34 bytes to 128 bytes with SOFT diagnostic mode events of 256 bytes

    2. Readout synchronized to multiplex cycle length (16 major frames)

  * Command echoes are variable length, sometimes split across minor frames

    1. Length ranges from 6 to 80 bytes

    2. Occurs only in response to commands

    3. Software handling just like events

2/22–23/94

CRIS NORMAL EVENT FORMAT

Item #	Count	Bits	Description
Event Header			
1	1	4	Data Format ID
2	1	8	Frame Number at Event Time
3	1	8	Priority Class
4	1	1	AB Telescope Hit
5	1	1	CD Telescope Hit
6	1	1	SOFT Hit*
SOFT Hodoscope Data			
6	1	5	Number of SOFT Custers (N)**
7	N	9	SOFT Cluster x Centroids
8	N	8	SOFT Cluster y Centroids
9	N	7	SOFT Cluster Intensity Parameter†
10	N	6	SOFT Cluster Pixel Count†
AB Telescope Data (if hit)			
11	1	3	Range ID (R = number of last Si detector hit)
12	1	1	Hazard Bit
13	1	12	Guard Discriminator Bits
14	R	12	Stack Detector Pulse Heights
CD Telescope Data (if hit)			
			Analagous to Items 11 through 14, above

* SOFT data may be missing for some accelerator calibration events

** maximum number of SOFT clusters read out is a commandable parameter

† encoded as floating point value

Flight Software (continued)

- Housekeeping Data Format

  * 216 bits = 27 bytes at beginning of each major frame

    1. Multiplex counter; values 0 − 15
    2. Rates
    3. Command status
    4. LVPS voltages
    5. Temperatures
    6. Detector leakage currents

  * Multiplexing over 16 major frames

2/22−23/94

CRIS Count Rate and Housekeeping Data Summary

Type of Data	Number	# Bits
Rates		
Microprocessor Rates:		
grouped by charge interval, detector depth, hodoscope data quality, and telescope half	~100	~1200
Rate Scalers:		
9 detector groupings (E1A-E8)		
× 3 discriminator levels		
× 2 telescope halves		
54		
+ 7 guards and antis		
× 2 discriminator levels		
× 2 telescope halves		
28		
⇒ 82 singles, subcommed to 6		
+ 22 misc. rates, not subcommed	28	336
Voltages	18	180
Leakage Currents:		
9 detector groupings (E1A-E8)		
+ 7 guards and antis		
16		
× 2 telescope halves	32	320
Temperatures	32	320
Detector Thresholds	82	410
Coincidence Logic State (w/o SOFT)	124	124
SOFT Command State	6	27
Stack High Voltage On/Off	4	4
Software Parameters	~30	~480
Total # bits:		~3400

Complete readout in 256 frames (=secs)
⇒ Allot ~216 bits once every major frame (2.9% of T/M space)

Flight Software (continued)

- Software Processes & Interrupts
  - ∗ In round robin
    1. Transfer of data from sensors to raw event FIFO
    2. Compression and sorting of events into prioritized FIFOs
    3. Selection + transfer of events from prioritized FIFOs to T/M buffer
  - ∗ Interrupts

1. Commands	async	infrequent
2. T/M byte buffer empty	sync	800 μsec
3. T/M frame transfer done	sync	1 sec
4. Major frame	sync	16 sec

2/22–23/94

Flight Software (continued)

- Flight Software Development
  - Macintosh for file editing and storage; closely coupled with RTX system via high speed RS232
  - One comment per line maintained throughout development
  - Modification notes and dates at beginning of every file
  - Versions archived after each significant modification is debugged

2/22–23/94

Flight Software (continued)

- Flight Software Control
  - ∗ **Modification and debug notebook maintained by programmer**
  - ∗ **PROM log maintained throughout program**
  - ∗ **Source code for all software put in PROMs is archived and referenced in PROM log throughout entire program**
  - ∗ **Released flight code source will be under configuration control via bulletin board specification of versions and source code location**

2/22–23/94

CRIS FLIGHT SOFTWARE:
EVENT DATA FLOW DIAGRAM

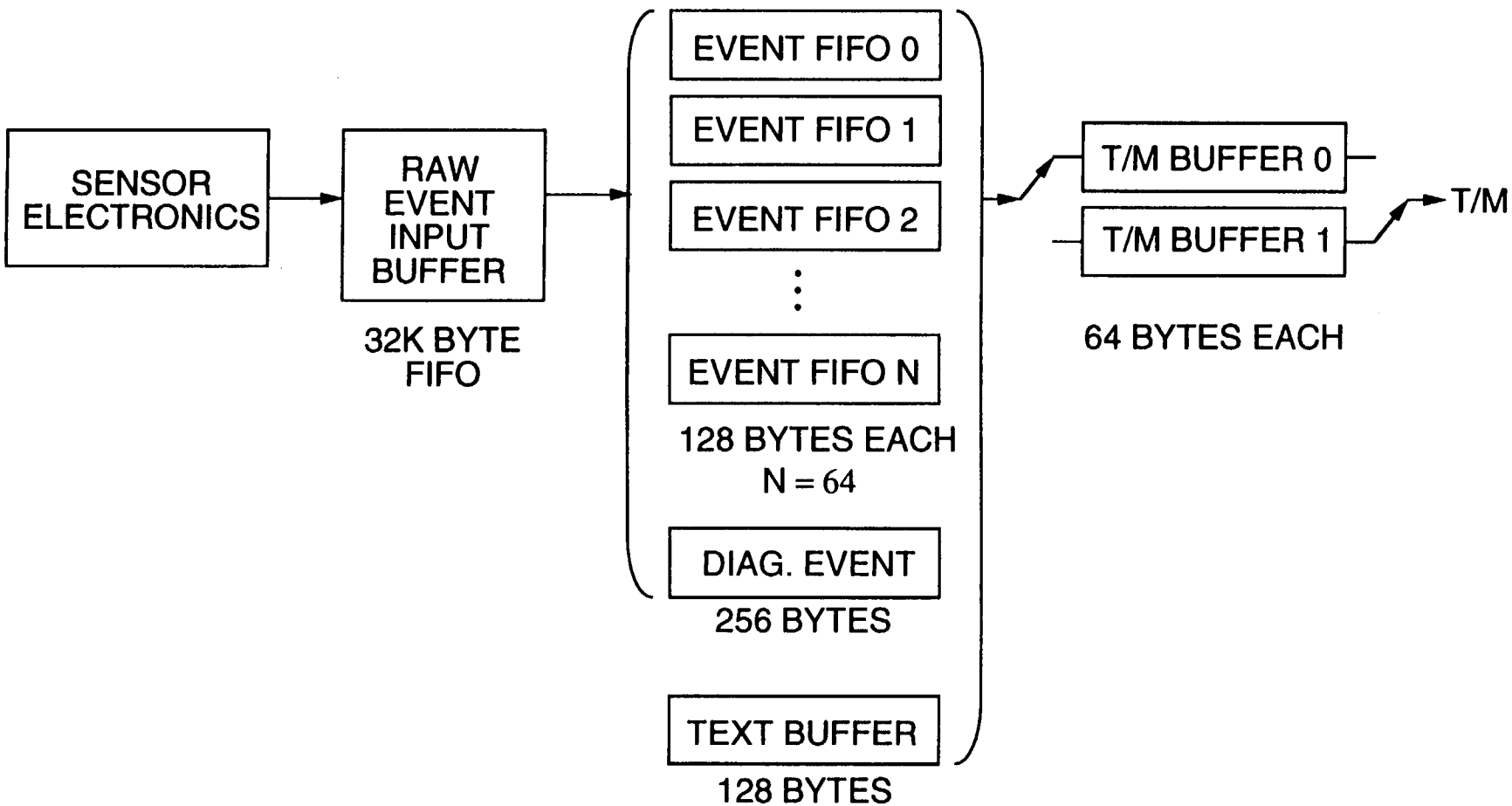

Flight Software (continued)

- CRIS Memory Usage (Kbytes)

	PROM		RAM	
∗ Forth operating system	12	(16)	4	(48)
∗ Telemetry buffers			0.25	
∗ Command tables	0.5	(32)	1.5	
∗ User code	16		16	
∗ Program load buffer			4	
∗ Raw event buffer			32	(80)
∗ Compressed event buffers			8	
TOTALS	28.5	(48)	65.75	(128)

(Estimated requirement is compared with allocation in parenthesis)

2/22–23/94

Flight Software (continued)

- CRIS CPU Usage (Kbytes)

	% CPU
∗ Transfer of raw data from stack PHAs & SOFT into raw event buffer in μP RAM (5 ms/ev * 2 ev/s = 10 ms/s)#	1
∗ Compression of raw event data, sorting of events into compressed event files (50 ms/ev * 2 ev/s = 100 ms/s)#	10
∗ Output T/M byte (~10 μs/byte * 58 bytes/s = 580 μs/s)#	0.06
∗ Housekeeping & rate servicing (~2 ms/s)#	0.2
TOTAL	~11

#(Assumes 4 MHz RTX clock)

2/22–23/94

Flight Software (continued)

- CRIS Command State
  - ∗ Default command state table in PROM, 3 copies loaded to RAM after power up; CRC calculated
  - ∗ Commands from S/C interact with CRIS mainly via modification of command table
  - ∗ Once every 256 seconds:
    1. Three command tables each checked for CRC
    2. Errors scrubbed and flagged in T/M data
    3. Correct table contents downloaded to hardware (Actel) registers
  - ∗ Watchdog timeout causes soft reboot which preserves existing command tables

2/22–23/94

Flight Software (continued)

- CRIS Command State (continued)

* Hardware Variables	No.	Bits ea.	Total Bits
PHA Enable	32	1	32
PHA Threshold DAC Settings	32	5	160
PHA "M" Level Disc Settings	32	5	160
PHA "H" Level Disc Settings	18	5	90
Coincidence Logic Control	92	1	92
Stack High Voltage ON/OFF	4	1	4
SOFT A/B Select	1	1	1
SOFT Intensifier ON/OFF	1	1	1
SOFT Camera ON/OFF	1	1	1
SOFT Internal	3	8	24
TOTALS	216		565

2/22–23/94

CRIS PDR

Section 10

Ground Support Equipment

2/22–23/94

CRIS EGSE FUNCTIONS

- **Support Testing of Instrument Components**
  - Solid state detectors
  - Pulse height analyzer hybrids
  - Instrument data processing unit (DPU)
- **Simulate Spacecraft Interfaces to Instrument**
  - Provide to instrument:
    - power
    - control signals
    - commands
  - Receive from instrument:
    - science data
    - analog housekeeping
  - Simulate both halves of S/C C&DH interface

CRIS EGSE FUNCTIONS (cont.)

- **Process Data from Instrument**
  - Various Sources
    - DPU through S/C interface
    - DPU through high speed calibration interface
    - S/C ground support system
    - playback of stored data (from disk or tape)
  - Store telemetry data to disk or tape
  - Maintain Logs
    - on time
    - voltage and current
    - commands sent/replies received
    - housekeeping and rates

- **Process Data from Instrument (cont.)**
  - Multiple Displays
    - housekeeping summaries
    - rate summaries
    - command status
    - event histograms & scatter plots
    - single event displays

- **Limit Checking, Alarms**
  - Input voltage and current
  - Detector leakage currents

CRIS EGSE FUNCTIONS (cont.)

- **Electronics testing with on board pulsers**
  - Select command states and calibration sequences
  - Collect and analyze instrument responses
  - Track thresholds and relative gains over time and identify changes

- **Commanding**
  - Support generation of command sequences
  - Check validity
  - Impose restrictions as appropriate

- **Bench Test Configuration**

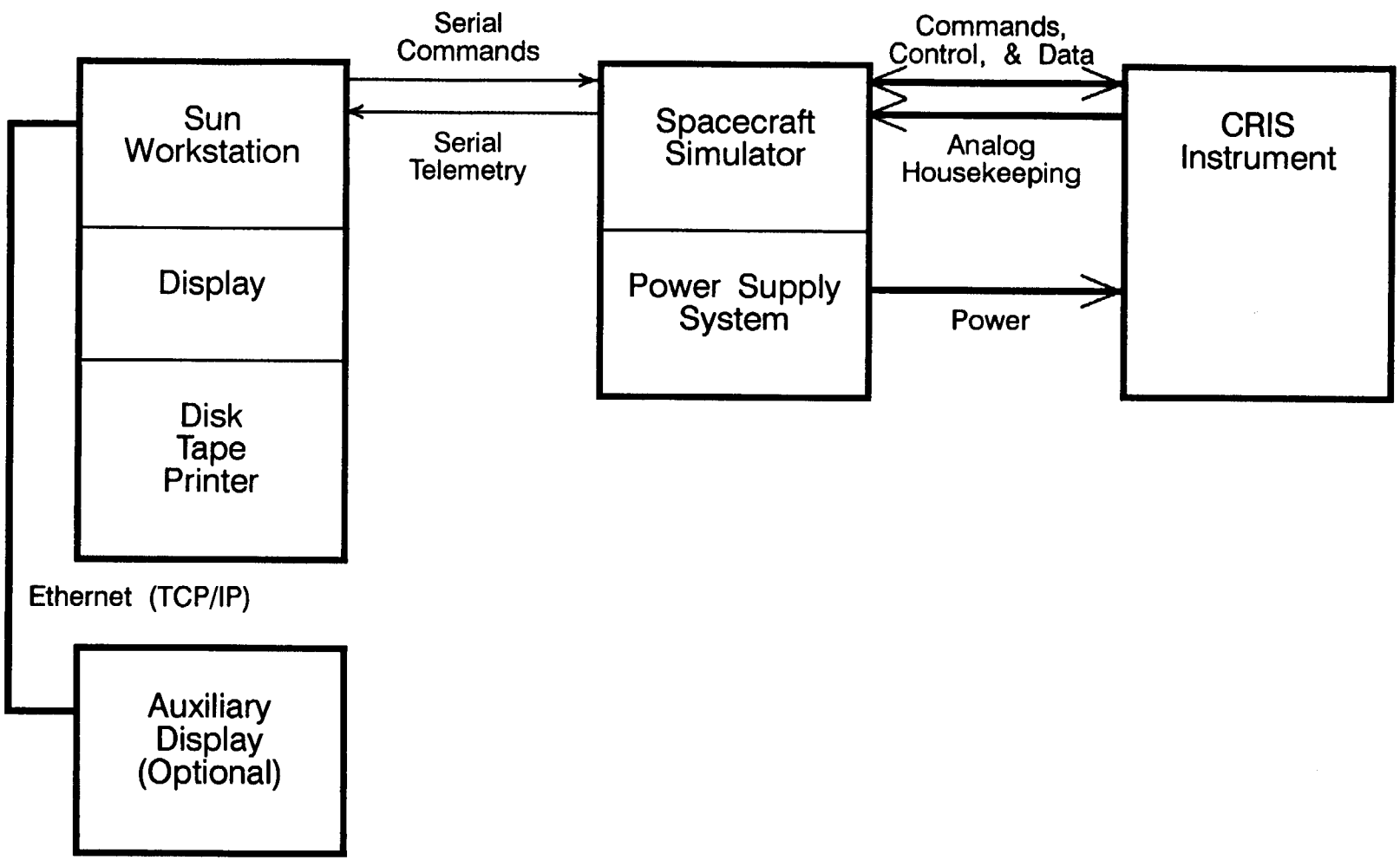

• Accelerator Calibration Configuration

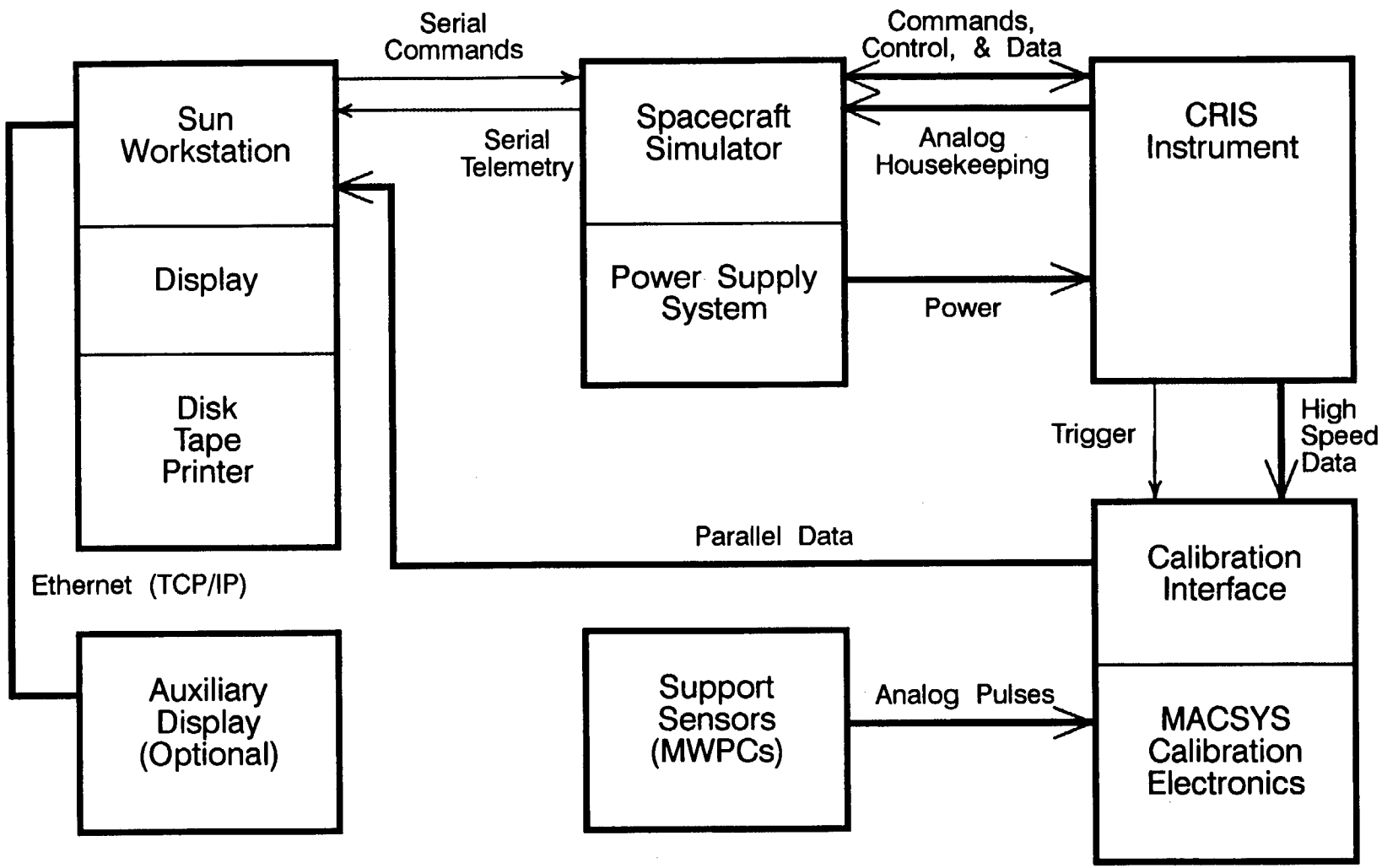

- **Configuration Onboard ACE Spacecraft**

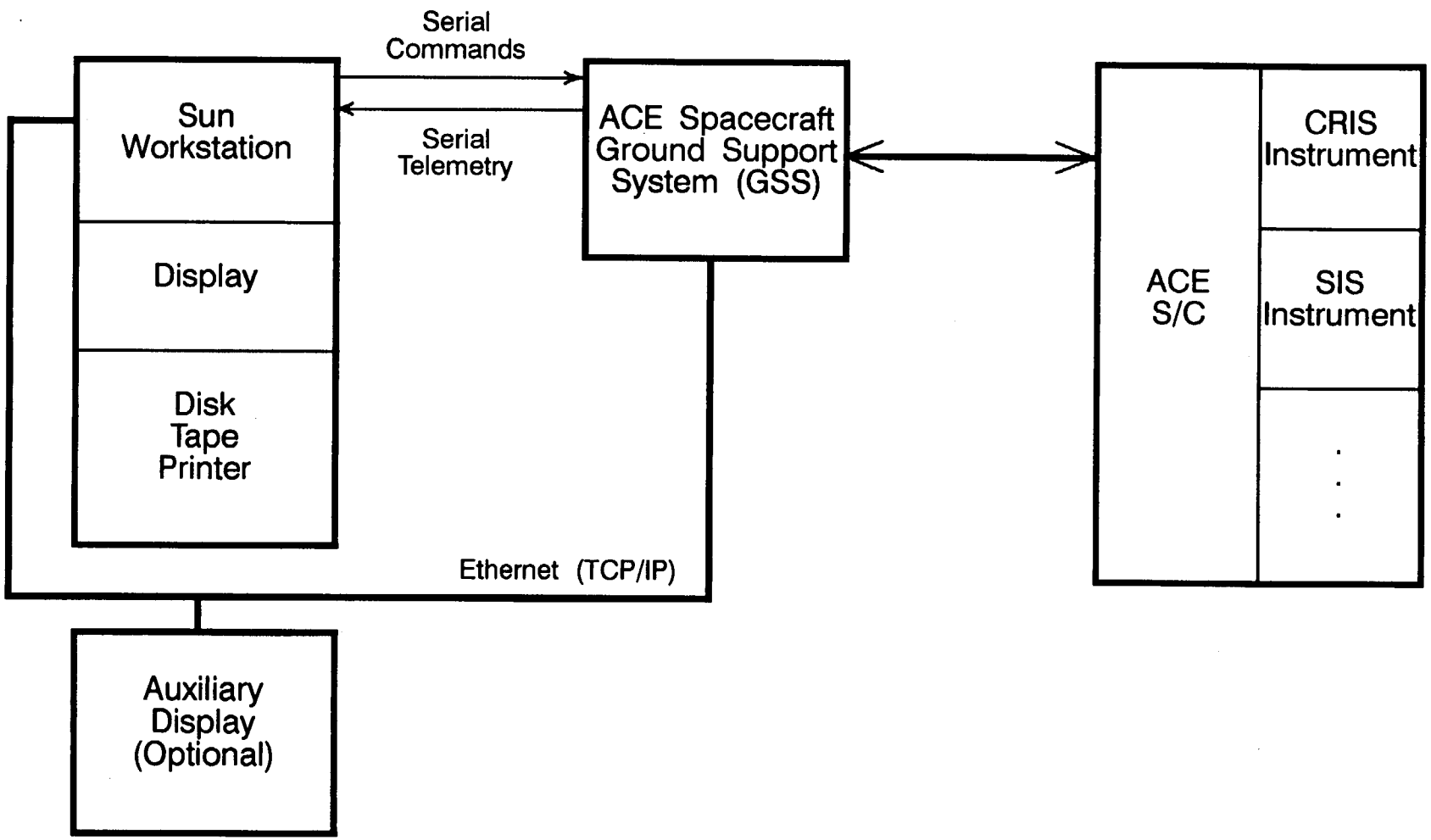

CRIS EGSE SOFTWARE

- **Implementation**
  - Unix operating system running on a Sun workstation
  - Application software written in Forth linked to X-Windows library for displays
- **Heritage**
  - General approach and Forth implementation based on previous Caltech and JPL satellite and balloon EGSEs
  - SOFT analysis uses algorithms developed by Washington University
- **Commonalty**
  - Very similar to SIS EGSE software except for details related to event formats and different type of trajectory sensor
  - CRIS and SIS software will be developed together

INSTRUMENT SHIPPING

- **Instrument Carrying Case will Have:**
  - Cushioning
  - Provision for dry nitrogen flush
  - Air-tight seal, capability for small internal positive pressure
  - ESD protection for instrument

- **Shipping**
  - Will consult with JPL shipping department to determine appropriate means for shipping instrument to domestic destinations and to Germany for calibration

CRIS PDR

Section 11

Environmental Test & Calibration

2/22–23/94

Environmental Test and Calibration of CRIS

Solid State Detector Calibration

- Thickness/response of all SIS detectors mapped in laboratory and at particle accelerator
- Maps can be verified with in-flight data ~monthly

SOFT Calibration

- Laboratory LED, alpha-particle, and Sr-90 calibration
- Accelerator calibration and mapping
- In-flight LEDs and alpha-sources monitor gain & sensitivity
- In-flight cosmic rays monitor stability

Electronic Calibration

- Amplifier/ADC circuitry calibrated prior to instrument assembly over full temperature range
- Built-in test pulsers provide verification of electronic stability during environmental testing and in-flight
- Calibrations can be verified in-flight (~monthly) by monitoring location of mass tracks

Accelerator Calibration

- Calibration of the full instrument in heavy ion beams at Darmstadt accelerator will provide final calibration/verification of:
  - Location of mass tracks
  - Trajectory algorithms
  - Mass resolution
  - Logic and priority systems

Environmental Test & Calibration (continued)

- CRIS Instrument Test Matrix

Test	CRIS	Electr./Sensor	Hodoscope	Power Supplies	Dig. Electr.
Primary Structure, Structural Analysis		A	A	A	A
Interface FMEAs[2]				A	A
Electron Part Stress Analysis		A	A	A	A
Transportation Temp/ Shock / Humidity	A				
Mass	T	T	T	T	T
Center of Gravity	T				
Moments of Inertia	T				
Pressure Profile[3]	A/T	A/T	A/T		
Electrical Interface Test		T	T	T	T
Comprehensive Performance Test[4]	T				
Acoustics	A/T				
Limited Performance Test	T				
Sine Vibration	T				
Limited Performance Test	T				
Random Vibration	T				
Limited Performance Test	T				
Comprehensive Performance Test	T				
EMC Conducted Emissions	T				
EMC Conducted Susceptibility	T				
EMC Radiated Emissions	T				
Comprehensive Performance Test	T				
Thermal Vac[5,6]	T				
Thermal Balance	A/T				
Comprehensive Performance Test	T				
240 Hour Failure Free Burn-In	T				

1. Table entries: T for test , A for analysis A/T for analysis and/or test
2. Failure modes and effects analysis (electrical)
3. Venting of boxes (typically by analysis)
4. First acceptance test
5. With concurrent comprehensive performance tests
6. Margin tests will be performed during separate temperature test, not during thermal vac

2/22–23/94

CRIS PDR

Section 12

Design Provisions for Specialized Instrument Requirements

2/22–23/94

Design Provisions for Specialized Instrument Requirements

- Provisions for Preserving the Integrity of Sensitive Elements

  * **Detectors**

    1. **Solid−state detectors stored under dry N_2 purge in laboratory**
    2. **Purged at instrument level until launch**
    3. **Stored under bias in laboratory and at instrument level (Caltech will supply battery pack to APL)**
    4. **Bias must be on 264 hours out of each 336 hour period**
    5. **Temperature of these devices will be kept below $+35^0$ C and above -40^0C**
    6. **Instrument will be shipped in sealed (dry N_2) container; shipping method TBD**
    7. **Temperature of SOFT detector must be kept below $+40^0$ C and above -23^0C**

  * **Protecting thermal control surfaces is TBD**

2/22−23/94

Design Provisions for Specialized Instrument Requirements (continued)

- Plans & Provisions for Detector Replacements Before Launch
  - ∗ Mechanical design permits relatively easy detector replacement
    1. Solid−state detector modules are on boards which slide in and out of a card cage
    2. Detector modules come off board without need for desoldering wires
    3. Will have entire spare modules available for fast replacement
    4. Individual detector replacement in module can be handled "off−line" on bench
    5. SOFT detector easily accessed by removal of cover
    6. Spare SOFT camera will be available for replacement
    7. Spare SOFT fiber frames will be available for replacement
  - ∗ Baseline is that we will not need to replace detectors after delivery to spacecraft

2/22−23/94

Design Provisions for Specialized Instrument Requirements (continued)

- Plans & Provisions for Direct Access Before Launch

  * GSE connector provided in case we need specialized checkout before launch

  * Detector replacement would require instrument coming off the spacecraft

    1. Solid−state detector replacement could be accomplished in one day
    2. SOFT camera electronics or high voltage power supply could be replaced in one day
    3. Replacement of SOFT CCD, image intensifiers, or fiber planes would require several days to make optical couplings secure
    4. Partial instrument disassembly might require re−qual

  * Baseline is that we will not need direct access after delivery

2/22−23/94

Design Provisions for Specialized Instrument Requirements (continued)

- **Plans & Provisions for the use of Red−Tag/Green−Tag Items**

  - ∗ **Red−Tag Items (must be removed before flight):**

    1. Lift handles will be provided for CRIS

  - ∗ **Green−Tag Items (must be utilized before launch):**

    1. Connection cables for LVDC connection

2/22−23/94

Design Provisions for Specialized Instrument Requirements (continued)

- Plans & Provisions for Calibrating In Flight
  - ∗ **In−flight calibrator for stack detector electronics**
    1. **Provides stimulus to signal processing electronics**
    2. **Provide functional check only**
  - ∗ **In−flight calibration for SOFT**
    1. **Flash LED's mounted on fibers**
    2. **Alpha sources mounted on fibers**
  - ∗ **Flight data calibration**
    1. **Solid−state and SOFT detector characteristics can be calibrated from flight data**

2/22−23/94

Design Provisions for Specialized Instrument Requirements (continued)

- System Safety Considerations Identified for This Design
  - ∗ Solid−state & SOFT detectors must be in darkness before bias is applied
  - ∗ Instrument must be outgassed for 24 hours before applying bias at vacuum
  - ∗ Instrument must be at "hard" vacuum before applying bias ($<10^{-5}$ torr)
  - ∗ Solid−state & SOFT detectors must not be exposed to contaminants
  - ∗ Instrument interior is sensitive to electrostatic discharge

2/22−23/94

Design Provisions for Specialized Instrument Requirements (continued)

- Operational Constraints Dictated for the Design Chosen
  - ∗ **CRIS post−launch turn on requirements:**
    1. **Turn on after 24 hour outgassing period and before 72 hours elapsed time**
    2. **Supply initial turn−on data to check instrument health**

CRIS PDR

Section 13

Parts, Materials, and Processes

2/22–23/94

CRIS Electronics Parts

- Preliminary parts information submitted to Kristan Evans (JPL Parts Reliability) as they are identified from 3 sources.
  - Caltech
    - Components on logic boards
    - Components included in hybrid circuits
  - Space Instruments (Dean Aalami)
    - Analog boards and power supplies
  - Washinton University (SOFT)
    - SOFT parts unique to CRIS
- JPL maintains parts list and database
  - CRIS and SIS lists are combined in single database
  - Hardcopy lists available first from JPL
  - Electronic access coming via Caltech bulletin board
- Phase B Funded Long Lead Parts
  - Parts that have been <u>delivered</u>
    - RTX2000 (backup for RTX2010)
    - Actel A1020
  - Parts <u>ordered</u>
    - RTX 2010 (due March 1, 1994)
- Common buys for SRAMS and PROMs being pursued

GENERIC	DESC	PROCUREMENT PART NO.	USER DESCRIPTION	MFR	STD/ NSTD	SPEC RTG	SEE RTG	TID RTG	COMMENTS
CDR	C	MIL-C-55081	FIXED, CERAMIC CHIP,		S	A			
CKS	C	MIL-C-123	FIXED, CERAMIC		S	A			
CSR	C	MIL-C-39003	TANTALUM, SOLID		S	A			
1N914	D	JANTX1N914	DIODE,	NATIONAL					
2N2222	Q	JANTXV2N2222A	XSISTOR						
2N3227	Q	JANTXV2N3227	XSISTOR, NPN SMALL SIG	MOTOROLA					
2N3251	Q	JANTXV2N3251	XSISTOR						
TN0104N2	Q	TN0104N2	FET, N-CH EM VERTICAL	SUPERTEX					
TP0104N2	Q	TP0104N2	FET, P-CH EM VERTICAL	SUPERTEX					
VN1304N2	Q	VN1304N2	FET, N-CH EM VERTICAL	SUPERTEX					
VP1304N2	Q	VP1304N2	FET, P-CH EM VERTICAL	SUPERTEX					
	R	TBD	NETWORK, 8 BIT R/2R, 100K	OHMTEK/TEC					
RCR	R	MIL-R-39008	FIXED,COMPOSITION,ER		S	A			
RM	R	MIL-R-55342	FIXED,FILM,CHIP,ER		S	A			
RN(X)	R	MIL-R-55182	FIXED,FILM,HIGH		S	A			
RWR	R	MIL-R-39007	FIXED,WIREWOUND,POWER,ER		S	A			
	U		PROM,SLOW, 256K						COMBINED CRIS & SIS.
54HC244	U	HC244WM OR							
A1020	U	A1020	FPGA	ACTEL		A	A	A	QTY 15 CRIS, 10 SIS. LET >= 22. NO LU >120. MATSUSHITA DIE.
HS508RH	U	HS-508RH/883S	MUX, 8 CHANNEL ANALOG	HARRIS					
HS565ARH	U	HS-565ARH	DAC, 12 BIT RAD HARD	HARRIS					
HS6617	U	HS-1-6617RH-8	PROM, 2Kx8, RAD HARD	HARRIS		A			COMBINED CRIS & SIS. NOTE PROCUREMENT NO.
IBM2568CRH	U	5962H9215303QXX	SRAM, 32Kx8, RAD HARD	IBM					COMBINED CRIS & SIS.

RATINGS : "A" = acceptable; "U" = unacceptable;
"UU" = unknown (no data or insufficient information to rate the part)

GENERIC	DESC	PROCUREMENT PART NO.	USER DESCRIPTION	MFR	STD/ NSTD	SPEC RTG	SEE RTG	TID RTG	COMMENTS
LM108	U	LM108							
MAS7001FB	U	MAS7001FB	FIFO, 512Kx9, RAD HARD	GECPLESSEY					P/N RECOMMENDATION NEEDED
MP7695	U	MP7695SD/883	ADC, 10 BIT, RAD HARD	MICROPOWER					
RTX2010	U	RTX2010RHR-8	MPROCESSOR, RAD HARD	HARRIS	S	A			COMBINED CRIS & SIS.
TBD	U		ASIC	UTMC					SIS ONLY. Matrix readout.
TBD	U		ASIC, ANALOG	HARRIS FST					COMBINED CRIS & SIS. Stack readout.
	Z	TBD	INDUCTOR, 3.9u R<0.4 OHM						
HCPL5631	Z	HCPL5631/883B	OPTOCOUPLER, RAD HARD	HP					

RATINGS : "A" = acceptable; "U" = unacceptable;
"UU" = unknown (no data or insufficient information to rate the part)

GENERIC	DESC	PROCUREMENT PART NO.	USER DESCRIPTION	MFR	STD/ NSTD	SPEC RTG	SEE RTG	TID RTG	COMMENTS
CDR	C	MIL-C-55081	FIXED, CERAMIC CHIP,		S	A			
CKS	C	MIL-C-123	FIXED, CERAMIC		S	A			
CSR	C	MIL-C-39003	TANTALUM, SOLID		S	A			
X7R	C	102H65WxxxPF	HIGH VOLTAGE, CERAMIC,	JOHANSEN	N	U			
1N3070	D	JANTXV1N3070	DIODE SWITCHING		S	A			
1N3600	D	JANTXV1N3600	DIODE		S	A			
1N5711	D	JANTXV1N5711	DIODE, SCHOTTKY BARRIER		S	A			
1N6080	D	JANTXV1N6080	DIODE, POWER		S	A			1N6081 OK TOO.
1N759A	D	JANTXV...	DIODE, 12 V ZENER		S	U			OBSOLETE. USE 1N6326 (SERIES 1N6312 THRU 1N6326).
2N2222A	Q	JANTXV2N2222A	XSISTOR, NPN SMALL SIGNAL		S	A	N/A	A	
2N2369A	Q	JANTXV2N2369A	XSISTOR, SMALL SIGNAL		S	A			VERIFY PART NO.
2N2484	Q	JANTXV2N2484	XSISTOR, NPN, LOW POWER		S	A			
2N2907A	Q	JANTXV2N2907A	XSISTOR, SMALL SIGNAL		S	A			VERIFY PART NO.
2N3251A	Q	JANTXV2N3251A	XSISTOR, SMALL SIGNAL		S	A			
2N3501	Q	JANTXV2N3501	XSISTOR, NPN HIGH VOLTAGE			A			BUY MIL-S-19500 QPL
2N3810	Q	JANTXV2N3810	XSISTOR, DUAL PNP		S	A			VERIFY DESCRIPTION
2N3811	Q	JANTXV2N3811	XSISTOR, DUAL PNP			A			
2N3934	Q	2N3934	DUAL JFET, N CHANNEL			A			HI-REL SPEC NEEDED. ALT JANTXV2N5546 (SOLITRON). VERIFY DESCRIPTION &
2N5096	Q	2N5096	XSISTOR, PNP HIGH VOLTAGE			A			BUY FROM PPC PRODUCTS &/OR SOLID STATE DEVICES. HI-REL SPEC NEEDED.
2N5097	Q	2N5097	XSISTOR, NPN HIGH VOLTAGE			A			BUY FROM PPC PRODUCTS &/OR SOLID STATE DEVICES. HI-REL SPEC NEEDED.
2N5416	Q	JANTXV2N5416	XSISTOR, PNP HIGH VOLTAGE			A			BUY MIL-S-19500 QPL
2N7314	Q	FRM9240	MOS, HI			A			NOTE PROCUREMENT NO. VERIFY DESCRIPTION & STYLE.
IRHF7130	Q	IRHF7130	XSISTOR, N CHANNEL,	INR		A			NOTE MFR AND DESCRIPTION
MOX-400-23	R	S-311-P-672	FIXED,FILM,HI VOLTAGE		S	A			

RATINGS : "A" = acceptable; "U" = unacceptable;
"UU" = unknown (no data or insufficient information to rate the part)

GENERIC	DESC	PROCUREMENT PART NO.	USER DESCRIPTION	MFR	STD/ NSTD	SPEC RTG	SEE RTG	TID RTG	COMMENTS
RCR	R	MIL-R-39008	FIXED,COMPOSITION,ER		S	A			
RM	R	MIL-R-55342	FIXED,FILM,CHIP,ER		S	A			
RN(X)	R	MIL-R-55182	FIXED,FILM,HIGH		S	A			
RWR	R	MIL-R-39007	FIXED,WIREWOUND,POWER,ER		S	A			
54HC14	U	M38510/65702BXX	SCHMITT-TRIGGER HEX	HARRIS	S	A	A	A	NO MOTOROLA TID DATA. USE HARRIS, NSC/TIX LML.
54HC244	U	M38510/65705BXX	3-STATE OCTAL BUFFER	HARRIS	S	A	A	A	NO MOTOROLA TID DATA. USE HARRIS, NSC/TIX LML.
54HC245	U	M38510/65503BXX	OCTAL TRANSCEIVER	HARRIS	S	A	A	A	NO MOTOROLA TID DATA. USE HARRIS, NSC/TIX LML.
54HC373	U	M38510/65403BXX	3-STATE OCTAL BUFFER	HARRIS	S	A	A	A	NO MOTOROLA TID DATA. USE HARRIS, NSC/TIX LML.
AD549LH	U	AD549LH/883B	OP AMP, LOW POWER, LOW		N	U			NOT DESC APPR.OK W/SCREENING.ALT BURR-BROWN OPA128(MEETS RAD), NSC
CD4007UB	U	M38510/05351BXX	INVERTER		S	A			BUY M38510
CD4049UB	U	M38510/05503BXX	HEX BUFFER		S	A			BUY M38510
CD4050B	U	M38510/0554BXX	HEX BUFFER		S	A			BUY M38510
HS3530	U	HS3530RH	OP AMP, LOW POWER, RH	HARRIS	N	U			NOT DESC APPR. OK W/SCREENING. ALT. LINEAR TECH RH LT1078,LT1079.
LM108A	U	M38510/10104BXX	OP AMP, LOW POWER		S	A			BUY M38510
LM139	U	M38510/11201BXX	COMPARATOR, QUAD, LOW		S	A			BUY M38510
311018-10xxxx	Z	GSFC S-311-P-18	THERMISTOR, NEG TC, 30K,	YSI	S	A			
311P409	Z	GSFC-S-311-P-4/0	CONNECTOR, POWER,CRIMP		S				
M28861	Z	MIL-F-28861/1	FILTER,ELECTROMAG		S	A			MIL-F-28861 AVAIABLE TO CLASS B
M39010/3	Z	MIL-C-39010	COIL,FIXED,RF,MICROMINIAT		S	A			ALERT 1991. BUY GRADE 2 FR "R" AND DO DPA ON LOT.

RATINGS : "A" = acceptable; "U" = unacceptable;
"UU" = unknown (no data or insufficient information to rate the part)

GENERIC	DESC	PROCUREMENT PART NO.	USER DESCRIPTION	MFR	STD/ NSTD	SPEC RTG	SEE RTG	TID RTG	COMMENTS
CAP, CERAMIC	C	TBD	0.01 UF, ?V, ?%	CASSINI		UU	N/A	A	MORE INFORMATION NEEDED (PART TYPE, VOLTAGE, PACKAGE, MFG, ETC.)
CAP, CERAMIC	C	TBD	0.022 UF, ?V, ?%	CASSINI		UU	N/A	A	MORE INFORMATION NEEDED (PART TYPE, VOLTAGE, PACKAGE, MFG, ETC.)
CAP, CERAMIC	C	TBD	0.1 UF, ?V, ?%	CASSINI		UU	N/A	A	MORE INFORMATION NEEDED (PART TYPE, VOLTAGE, PACKAGE, MFG, ETC.)
CAP, CERAMIC	C	TBD	0.2 UF, ?V, ?%	CASSINI		UU	N/A	A	MORE INFORMATION NEEDED (PART TYPE, VOLTAGE, PACKAGE, MFG, ETC.)
CAP, CERAMIC	C	TBD	10 PF, ?V, ?%	CASSINI		UU	N/A	A	MORE INFORMATION NEEDED (PART TYPE, VOLTAGE, PACKAGE, MFG, ETC.)
CAP, CERAMIC	C	TBD	100 PF, ?V, ?%	CASSINI		UU	N/A	A	MORE INFORMATION NEEDED (PART TYPE, VOLTAGE, PACKAGE, MFG, ETC.)
CAP, CERAMIC	C	TBD	15 PF, ?V, ?%	CASSINI		UU	N/A	A	MORE INFORMATION NEEDED (PART TYPE, VOLTAGE, PACKAGE, MFG, ETC.)
CAP, CERAMIC	C	TBD	2.2 PF, ?V, ?%	CASSINI		UU	N/A	A	MORE INFORMATION NEEDED (PART TYPE, VOLTAGE, PACKAGE, MFG, ETC.)
CAP, CERAMIC	C	TBD	22 PF, ?V, ?%	CASSINI		UU	N/A	A	MORE INFORMATION NEEDED (PART TYPE, VOLTAGE, PACKAGE, MFG, ETC.)
CAP, TANTALUM	C	TBD	1 UF, ?V, ?%	CASSINI		UU	N/A	A	MORE INFORMATION NEEDED (PART TYPE, VOLTAGE, PACKAGE, MFG, ETC.)
CAP, TANTALUM	C	TBD	10 UF, ?V, ?%	CASSINI		UU	N/A	A	MORE INFORMATION NEEDED (PART TYPE, VOLTAGE, PACKAGE, MFG, ETC.)
CAP, TANTALUM	C	TBD	15 UF, ?V, ?%	CASSINI		UU	N/A	A	MORE INFORMATION NEEDED (PART TYPE, VOLTAGE, PACKAGE, MFG, ETC.)
CAP, TANTALUM	C	TBD	4.7 UF, ?V, ?%	CASSINI		UU	N/A	A	MORE INFORMATION NEEDED (PART TYPE, VOLTAGE, PACKAGE, MFG, ETC.)
CAP, TANTALUM	C	TBD	47 UF, ?V, ?%	CASSINI		UU	N/A	A	MORE INFORMATION NEEDED (PART TYPE, VOLTAGE, PACKAGE, MFG, ETC.)
TBD	D	TBD	SI PHOTODIODES	ADV	N	UU	N/A	UU	NEED MORE INFORMATION.
2N2222A	Q	2N2222A/883B	XSISTOR, NPN SMALL SIGNAL	QPL	S	A	N/A	A	MOTOROLA, RAYTHEON, NSC ON MIL-S-19500 QPL.
2N2894	Q	2N2894JANTXV	SWITCHING XSISTOR	SOLID	S	A	N/A	A	BUY JANTXV IN HERMETIC PACKAGE FROM SOLID STATE DEVICES.
2N2907A	Q	2N2907A/883B	PNP SMALL SIGNAL XSISTOR	QPL	S	A	N/A	A	MOTOROLA, RAYTHEON, NSC ON MIL-S-19500 QPL.
SD211DE	Q	SD211DE	HS SPST ANALOG SWITCH	SILICONIX		A	A	UU	NEED TID INFO OR TEST.
RES	R	TBD	1 K, ?W, ?%	TBD		UU	N/A	A	Need more information.
RES	R	TBD	1.8 K, ?W, ?%	TBD		UU	N/A	A	Need more information.
RES	R	TBD	1.89 K, ?W, ?%	TBD		UU	N/A	A	Need more information.
RES	R	TBD	2 K, ?W, ?%	TBD		UU	N/A	A	Need more information.
RES	R	TBD	2.2 K, ?W, ?%	TBD		UU	N/A	A	Need more information.

RATINGS : "A" = acceptable; "U" = unacceptable;
"UU" = unknown (no data or insufficient information to rate the part)

GENERIC	DESC	PROCUREMENT PART NO.	USER DESCRIPTION	MFR	STD/ NSTD	SPEC RTG	SEE RTG	TID RTG	COMMENTS
RES	R	TBD	3.9 K, ?W, ?%	TBD		UU	N/A	A	Need more information.
RES	R	TBD	4.7 K, ?W, ?%	TBD		UU	N/A	A	Need more information.
RES	R	TBD	6.8 K, ?W, ?%	TBD		UU	N/A	A	Need more information.
RES	R	TBD	8.2 K, ?W, ?%	TBD		UU	N/A	A	Need more information.
RES	R	TBD	10 K, ?W, ?%	TBD		UU	N/A	A	Need more information.
RES	R	TBD	10 OM, ?W, ?%	TBD		UU	N/A	A	Need more information.
RES	R	TBD	11 K, ?W, ?%	TBD		UU	N/A	A	Need more information.
RES	R	TBD	15 K, ?W, ?%	TBD		UU	N/A	A	Need more information.
RES	R	TBD	15 OM, ?W, ?%	TBD		UU	N/A	A	Need more information.
RES	R	TBD	20 K, ?W, ?%	TBD		UU	N/A	A	Need more information.
RES	R	TBD	22 K, ?W, ?%	TBD		UU	N/A	A	Need more information.
RES	R	TBD	27 K, ?W, ?%	TBD		UU	N/A	A	Need more information.
RES	R	TBD	33 OM, ?W, ?%	TBD		UU	N/A	A	Need more information.
RES	R	TBD	47 K, ?W, ?%	TBD		UU	N/A	A	Need more information.
RES	R	TBD	51 OM, ?W, ?%	TBD		UU	N/A	A	Need more information.
RES	R	TBD	56 K, ?W, ?%	TBD		UU	N/A	A	Need more information.
RES	R	TBD	68 OM, ?W, ?%	TBD		UU	N/A	A	Need more information.
RES	R	TBD	82 K, ?W, ?%	TBD		UU	N/A	A	Need more information.
RES	R	TBD	100 K, ?W, ?%	TBD		UU	N/A	A	Need more information.
RES	R	TBD	100 OM, ?W, ?%	TBD		UU	N/A	A	Need more information.
RES	R	TBD	180 K, ?W, ?%	TBD		UU	N/A	A	Need more information.
RES	R	TBD	220 OM, ?W, ?%	TBD		UU	N/A	A	Need more information.
RES	R	TBD	225 OM, ?W, ?%	TBD		UU	N/A	A	Need more information.
RES	R	TBD	240 OM, ?W, ?%	TBD		UU	N/A	A	Need more information.

RATINGS : "A" = acceptable; "U" = unacceptable;
"UU" = unknown (no data or insufficient information to rate the part)

GENERIC	DESC	PROCUREMENT PART NO.	USER DESCRIPTION	MFR	STD/ NSTD	SPEC RTG	SEE RTG	TID RTG	COMMENTS
RES	R	TBD	330 K, ?W, ?%	TBD		UU	N/A	A	Need more information.
RES	R	TBD	330 OM, ?W, ?%	TBD		UU	N/A	A	Need more information.
RES	R	TBD	340 OM, ?W, ?%	TBD		UU	N/A	A	Need more information.
RES	R	TBD	355 OM, ?W, ?%	TBD		UU	N/A	A	Need more information.
RES	R	TBD	390 OM, ?W, ?%	TBD		UU	N/A	A	Need more information.
RES	R	TBD	510 OM, ?W, ?%	TBD		UU	N/A	A	Need more information.
RES	R	TBD	560 OM, ?W, ?%	TBD		UU	N/A	A	Need more information.
RES	R	TBD	620 OM, ?W, ?%	TBD		UU	N/A	A	Need more information.
RES	R	TBD	680 K, ?W, ?%	TBD		UU	N/A	A	Need more information.
RES	R	TBD	680 OM, ?W, ?%	TBD		UU	N/A	A	Need more information.
RES	R	TBD	820 OM, ?W, ?%	TBD		UU	N/A	A	Need more information.
RES	R	TBD	900 OM, ?W, ?%	TBD		UU	N/A	A	Need more information.
54HC00	U	54HCS00	QUAD 2 INPUT NAND GATE	HARRIS	S	A	A	A	NO MOTOROLA TID DATA. USE HARRIS, NSC/TIX LML.
54HC02	U	54HCS02MS	QUAD 2-INPUT NOR GATE	HARRIS	S	A	A	A	USE HARRIS.
54HC08	U	54HCS08	QUAD 2 INPUT AND GATE	HARRIS	S	A	A	A	NO MOTOROLA TID DATA. USE HARRIS, NSC/TIX LML.
54HC14AJ	U	54HCS14AJ	HEX SCHMITT TRIGGR INVRTR	HARRIS	S	A	A	A	NO MOTOROLA TID DATA. USE HARRIS, NSC/TIX LML.
54HC244J	U	54HCS244J	OCTAL NONINV BUS DRIVER	HARRIS	S	A	A	A	NO MOTOROLA TID DATA. USE HARRIS, NSC/TIX LML.
54HC245AJ	U	54HCS245AJ	OCTAL NONINVRT BUS TRNCVR	HARRIS	S	A	A	A	NO MOTOROLA TID DATA. USE HARRIS, NSC/TIX LML.
54HC374AJ	U	54HCS374AJ	OCTAL D FLIP FLOP	HARRIS	S	A	A	A	NO MOTOROLA TID DATA. USE HARRIS, NSC/TIX LML.
54HC74	U	54HCS74MS	DUAL-D FLIP FLOP W/SET/RE	HARRIS	S	A	A	A	USE HARRIS.
A1020	U	A1020	FPGA	ACTEL		A	A	A	Qty included with CRIS. LET >= 22. NO LU >120. MATSUSHITA DIE.
AD584TH	U	M38510/12801BGA	PRECISION VOLTAGE REF	ANALOG	S	A	N/A	A	TID 100K.
AD585	U	AD585SQ/883B	HS PREC S&H AMP	ANALOG	S	A	A	A	Upsets may not matter, new data in latches often (depends on use). TID
AD744	U	AD744TQ/883B	OP AMP, BIFET, PRECISION	ANALOG	S	A	N/A	UU	RAD GROUP TO RATE FOR TID. NO ALERTS.

RATINGS : "A" = acceptable; "U" = unacceptable;
"UU" = unknown (no data or insufficient information to rate the part)

GENERIC	DESC	PROCUREMENT PART NO.	USER DESCRIPTION	MFR	STD/ NSTD	SPEC RTG	SEE RTG	TID RTG	COMMENTS
AD7528	U	AD7528UQ/883B	DAC, CMOS DUAL BIT	MICRPOWER		U	U	A	TEMP RANGE CONCERN. LOW LET BUT NO LU. REC MPWR AD7533, ADI DAC08. TID
AD7533	U	AD7533	DAC, 10 BIT	MICROPOWER		U	U	U	TEMP RANGE CONCERN. LOW LET BUT NO LU. TID = 6K.
AD7672	U	AD7672	ADC, 12 BIT	MAXIM		U	U	A	No Mil temp pts avail. Rec. MX7672TQ05, TQ10, MX7572TQ05 or HI674A.TID
AD829	U	AD829SQ/883B	HS VIDEO OP AMP	ANALOG		A	N/A		RAD GROUP TO RATE FOR TID. NO ALERTS.
CLC505	U	CLC505	OP AMP	COMLINEAR			N/A	A	
LF157A	U	LF157A	OP AMPS	NATIONAL			N/A	A	TID 20K
LF442	U	LF442AMH/883B	OP AMP, DUAL LO PWR JFET	NATIONAL	S	A	N/A	UU	NO SMD DRAWING. ORDER WITH CSI.
LM106AH	U	LM106AH/883B	VOLTAGE COMPARATOR,HI SPD	NATIONAL	S	A	N/A	A	AVAILABLE PER SMD 8003701GX. VERIFY W/MFR SMD AVAIL. REC NSC LM111
LM117AH	U	M38510/11703B?X	VOLTAGE REGULATOR, ADJ	NATIONAL	S	A	N/A	A	RECOMMEND M38510/11703BXA.
MIC4427AJ	U	MIC4427AJ/883B	MOSFET DRIVER, DUAL HS	MICREL	S	A	?	UU	AVAIL PER SMD 5962-8850308P (MIC4427AJBQ/883B). SEB CONCERN?
MT5C2568	U	M38510/29313BXX	SRAM, 32Kx8 CMOS, RH	TBD			U	A	CHANGED FROM HS65647RH. USE IBM OR HARRIS. MICRON LETth<3. CMOS/EPI NO
OP15	U	OP15	OP AMPS	PMI			?	A	SEE PAPER. ROCKY KOGA (IEEE 93) HAS MUCH HEAVY ION DATA. COGE DECIDES.
TH7866	U	TH7866	CCD ARRAY	THOMSON		A	A	UU	UPSETS WILL OCCUR, MAY NOT BE A CONCERN.
53310/14-B07A	X	M55310/14-B07A	XTAL OSC, 10MHZ	MCCOY		A	?	UU	TID CONCERN. RECOMMEND BUYING FROM QTECH (NOT DALE). CHGD TO MCCOY.
TBD	Z	TBD	40mm IMAGE INTENSIFIER	PHOTEK		A	?	UU	
TBD	Z		ADHESIVE, SCOTCHWELD			A	N/A	A	
TBD	Z	63-15-0808-1671	ADHESIVE,CHO-THERM GASKET	CHROMETRIC		A	N/A	A	
TBD	Z	DB9S	CONNECTOR	TBD		A	N/A	A	
TBD	Z		CONNECTOR, 20 PIN SIP	TBD		A	N/A	A	
TBD	Z	WTB50PR9SY	CONNECTOR, 50 PIN DBL ROW	AIRBORN		A	N/A	A	
TBD	Z	WTB50SAD9SY	CONNECTOR, 50 PIN DBL ROW	AIRBORN		A	N/A	A	
TBD	Z	50-424-3188-220	CONNECTOR, CABLE RF MICRO	ITT		A	N/A	A	CONNECTOR, CABLE RF MICRO NANOHEX
TBD	Z	DBH44S	CONNECTOR, HI DENSITY 'D'	TBD		A	N/A	A	
TBD	Z	DBH15S	CONNECTOR, HI DENSITY 'D'	TBD		A	N/A	A	

RATINGS : "A" = acceptable; "U" = unacceptable;
"UU" = unknown (no data or insufficient information to rate the part)

GENERIC	DESC	PROCUREMENT PART NO.	USER DESCRIPTION	MFR	STD/ NSTD	SPEC RTG	SEE RTG	TID RTG	COMMENTS
TBD	Z	50-451-0000-220	CONNECTOR,BRDMT RF MICRO	ITT		A	N/A	A	CONNECTOR, BRDMOUNT RF MICRO NANOHEX
TBD	Z	50-453-0000-220	CONNECTOR,R/A BDMT RF MIC	ITT		A	N/A	A	CONNECTOR, R/A BRDMOUNT RF MICRO NANOHEX
TBD	Z	TBD	FIBER OPTIC REDUCER	SCHOTT		A	N/A	UU	
TBD	Z	TBD	IM INT POWER SUPPLY	K&M		A	N/A	UU	
TBD	Z	TBD	OPTIC REDUCER	WASH U.		A	N/A	UU	
TBD	Z		THERMABOND			?	N/A	A	

RATINGS : "A" = acceptable; "U" = unacceptable;
"UU" = unknown (no data or insufficient information to rate the part)

RADIATION EFFECTS

- CUSTOM VLSI

  1. Harris bipolar VLSI OK to 100 KRad
     - SEU unimportant

  2. CMOS matrix detector readout OK to >100 KRAD
     - No latchup due to EPI process
     - SEU unimportant

- µP SYSTEM

  1. Key Components
     - RTX2010, IBM 32K x 8 RAM, HARRIS 2K x 8 PROM
       - All rad hard to >100 KRAD
       - All latchup immune with very low SEU rates

  2. Actel glue logic
     - OK to> 100 KRad
     - No latchup
     - Has non-negligible SEU rate of ~ 0.002/day/module in JPL flare environment
     - Get less than 1 upset/10 days (assuming 50 modules used in address decoding, etc.)
     - Utilize watchdog timer to reboot if such infrequent upset causes µP crash
     - Command bits stored in Actel logic periodically refreshed from µP

- SI DETECTORS

  1. Electronics designed to handle post radiation leakage current increases

CRIS Electronics Parts List Review Status

- All parts are rated by JPL for reliability and radiation (TIS, SEE) and rated "A" acceptable or "U" unacceptable for the mission.
  - Preliminary lists in PDR package correspond to source
    - List entitled "CRIS/SIS CIT's" is list of logic and hybrid components from Caltech
    - List entitled "CRIS SIS DEAN'S" is list of analog and power supply components from Space Instruments
- Tradeoffs and Alternatives are being evaluated for unacceptable parts
- SOFT Parts (Washington University) are unique to CRIS

CRIS Materials

- Materials information submitted to John Repar (JPL) as material types are identified from 3 sources.
  - Caltech
  - GSFC Code 661
  - Washington University (SOFT)
- John maintains materials list
  - JPL produces hardcopy list
    - List on word processor (WORD 5.1)
  - Database to be implemented at Caltech
    - Electronic access via Caltech bulletin board planned
- Status
  - Informal reviews have been made:
    - At first cut there are no objectionable materials
    - Some materials require additional review
      - Some may require drawings indicating the application of the material

CRIS Preliminary Materials List

Materials List is in 4 sections (includes both CRIS & SIS materials):

- Includes both CRIS & SIS material
- Lists are in chronological bunches
  - Yet to be sorted

Sections are:

1. Materials Identification and Usage List, ACE
   - List of primarily electronic fabrication materials from Caltech
   - Items 71A thru 98
   - 2 pages
2. Materials Identification and Usage List, ACE, **Metals**
   - List of materials submitted by GSFC Code 660
   - 2 pages
3. Materials Identification and Usage List, ACE, **Non-Metallics**
   - List of materials submitted by GSFC Code 660
   - 2 pages
4. Materials Identification and Usage List, ACE, **CRIS/SOFT/WU**
   - List of materials used in SOFT
   - Submitted by Washington University (WU)
   - 3 pages

DOCUMENT NO.
DOCUMENT REV. LTR. No Change
ORIGINAL ISSUE DATE 1-27-94
REVISION DATE

MATERIAL IDENTIFICATION AND USAGE LIST

Advanced Composition Explorer (ACE)

NOMENCLATURE CIS/CRIS/CTI

PART/DWG NUMBER	REV LTR	NOMENCLATURE	MATERIAL IDENTIFICATION					NONMETALLIC MATERIAL			USAGE EVAL.						MUA STATUS	REMARKS (SPECIAL CURE, ETC)
			MAT'L CODE	MATERIAL DESCRIPTION	MATERIAL MFGR	MATERIAL SPEC	PROCESS SPEC	WT	THK	AREA	FLM	AGE	SCC	COR	TVS	TOX		
71A		Pin-Spring-Tubular, Slotted Cres.	50065	SS410		MS 16562-190							B	B				
72A		Transipad - T05	-	1001X-DAP	Milton Ross						-				-	-		
73A		Washer Laminated	52008	5722-9-1-AO AL 1100 202-4037	Seastrom								A	B				
74A		Wire, Shielded Twisted Pair	05275	Teflon Coated	Microdot						B				C	K		
75A		Cable Coax.	05378	C06C07CC PTFA/FEP	Gore						I				-	A		
76A		Wire, 26AWG, 1000V	-	5311-P13-XX	Raychem						-				-	-		
77A		Shrinkable Tubing	20427	Poly Vinyl Chrloride		MIL-T-47051					X				-	-		
78A		Laminated	52064	AL 1100	Seastrom	QQ-A-561							A	B				
79A		Sheet Transparent	61672	Lexan	GE	L-P-393					A				A	A		
80A		Aluminum Alloy	-	Chemical Conversion Coating			MIL-C-5541 Class 3				A		A	A	A	-		
81A		Heatsink	-	260-10SH5B BeCu/Br O/Brass	Wakefield						-		-	-				
82A		Heatsink	-	260-4SH18B BeCu/Br O/Brass	Wakefield						-		-	-				
83A		Core, Toroid	-	K6A-T14-5-20-7-5 Iron, Ferrite	TDK								-	-				
84A		Wire	85401	Magnet HPT Insulation		MIL-2-583 Type K Class 105					-				-	-		
85A		Wire	85401	Magnet, Heavy, Teflon, Insulation		MIL-2-583 Type K Class 105					-				-	-		

MATERIAL IDENTIFICATION AND USAGE LIST

Advanced Composition Explorer (ACE)

DOCUMENT NO.
DOCUMENT REV. L. No Change
ORIGINAL ISSUE DATE 1-27-94
REVISION DATE

NOMENCLATURE CIS/CRIS/CTI

PART/DWG NUMBER	REV LTR	NOMENCLATURE	MATERIAL IDENTIFICATION					NONMETALLIC MATERIAL			USAGE EVAL.						MUA STATUS	REMARKS (SPECIAL CURE, ETC)
			MAT'L CODE	MATERIAL DESCRIPTION	MATERIAL MFGR	MATERIAL SPEC	PROCESS SPEC	WT	THK	AREA	FLM	AGE	SCC	COR	TVS	TOX		
86A		Epoxy Semi Regid	-	Epoxy 13-54-1	Leepoxy						-				-	-		
87A		Tape	06525	Mylar Adhesive	Dupont						B				A	A		
88A		Tape	20881	Tape 200A Teflon, FEP	Dupont						A				A	-		
89A		Tape	20881	TFR FEP S24	Dupont						A				A	-		
90A		Tape	05822	Adhesive, Glass No. 69	3M						A				X	-		
91A		ETCHANT - Sodium	-	Tetraetch	Gore						-				-	-		
92		Ink, Marking	00030	Epoxy base Wornowink M-O-N/B3	Hysol						A				X	B		
93		Polyurethane Pottant	62237	Urathane 5753 LV	Furnane	PE Spec 42-1020-102					X				-	B		
94		Solder	10491	SN63 WRMAP 3		QQ-S-571							N	A				
95		Adhesive	05066	Scotchwild 2216	3M	PR Spec 42-0085					A				B	B		
96		Terminal, Bi-Furcated	10234	575-A Brass									A	A				
97		Plastic Sheet, Laminated, Unclad	20139	Epoxy/Fiberglass Type GEE		MIL-P-13949					-				A	K		
98		Polyurathane Pottant	20209	Uralane 5750 LV	Furnane	PE Spec 54-0011					X				B	A		

DOCUMENT NO.
DOCUMENT REV. LT. No Change
ORIGINAL ISSUE DATE 1-27-94
REVISION DATE

MATERIAL IDENTIFICATION AND USAGE LIST

Advanced Composition Explorer (ACE)

NOMENCLATURE CIS/CRIS/CTI

Metals

PART/DWG NUMBER	REV LTR	NOMENCLATURE	MATERIAL IDENTIFICATION					NONMETALLIC MATERIAL			USAGE EVAL.						MUA STATUS	REMARKS (SPECIAL CURE, ETC)
			MAT'L CODE	MATERIAL DESCRIPTION	MATERIAL MFGR	MATERIAL SPEC	PROCESS SPEC	WT	THK	AREA	FLM	AGE	SCC	COR	TVS	TOX		
1		Chassis, telescope housings	10022	AL 6061-T6				Grs 515					A	B				
		Baseplate, structure	10408	2024 T4 Alclad				320					U	B				
		Spacers		2011-T8				330										
		Washers	50210	5052				12					A	B				
2		Spring contacts, wavy washers	50960	Be Cu				52					A	A				
3		Terminals, solder lugs Terminals	10234	Brass Comp 22 Alloy 360				10					A	A				
4		Wire, contacts, conductors, plating	10311	Copper				115					N	A				
5		Plating contacts, housings, detectors, wires	10328	Gold Type III CL II				4					A	A				
6		Wire plating	10039	Silver				4					N	A				
7		Soldering	10491	Solder				35					N	A				
8		Screws, tie bolts Screws Screws	10419 10083 10431	SS 18-8, 316 300		AMS 5737		30 20 20					A A A	A A A				
9		Heliocoil inserts	10431	CRES 300				4					A	A				
10		Hybrid case, covers	-	Kovar				850					A	A				
11		Absorbers	30107	Tungsten, Mallory 2000				62					A	A				
12		Radiation spot shields	30141	Lead				6					A	A				

MATERIAL IDEN ATION AND USAGE LIST

Advanced Composition Explorer (ACE)

DOCUMENT NO.
DOCUMENT REV. LTR. No Change
ORIGINAL ISSUE DATE 1-27-94
REVISION DATE

NOMENCLATURE CIS/CRIS/CTI

Metals

PART/DWG NUMBER	REV LTR	NOMENCLATURE	MATERIAL IDENTIFICATION					NONMETALLIC MATERIAL			USAGE EVAL.						MUA STATUS	REMARKS (SPECIAL CURE, ETC)
			MAT'L CODE	MATERIAL DESCRIPTION	MATERIAL MFGR	MATERIAL SPEC	PROCESS SPEC	WT	THK	AREA	FLM	AGE	SCC	COR	TVS	TOX		
25		Insulation	05946	Kapton	Dupont			30			A				B	U		
26		Shoulder washers	20879	Phenolic				2			A				A	-		
27		Transformer impregnation	-	Conap, EN11	Conap			1			-				-	-		
28		PWB for bias supply	05660	Teflon/Fiberglass	Dupont			270			A				A	-		
29		Tiedowns	60439	Gudebrod 20D96 18D96	Gudebrod			4			X				A	-		
30		Conformal coating	20209	Uralane 5750	Furank			40			X				B	X		
31		Tape Bonding hybrids and flatpacks	65608	Ablefilm 517	Ablestik			4			-				B	-		
		Tape miscellaneous	06525	Mylar 253	Dupont			1			B				A	A		
		Tape miscellaneous	20881	Teflon FEP	Dupont			1			A				A	-		
		Tape miscellaneous	05822	Glass 3M-69	3M			1			A				X	-		
32		Spot bonding	62237	Uralane 5753 LV	Furank			-			X				-	B		

MATERIAL IDENTIFICATION AND USAGE LIST

Advanced Composition Explorer (ACE)

DOCUMENT NO.
DOCUMENT REV. LTR.
ORIGINAL ISSUE DATE 1-27-94
REVISION DATE

NOMENCLATURE SIS/CRIS/GSFC

Non-Metallics

PART/DWG NUMBER	REV LTR	NOMENCLATURE	MATERIAL IDENTIFICATION					NONMETALLIC MATERIAL			USAGE EVAL.						MUA STATUS	REMARKS (SPECIAL CURE, ETC)
			MAT'L CODE	MATERIAL DESCRIPTION	MATERIAL MFGR	MATERIAL SPEC	PROCESS SPEC	WT	THK	AREA	FLM	AGE	SCC	COR	TVS	TOX		
1		Adhesive/PWB	0007	EA 934WA	Hysol						A				B	B		7D @ RT
2		Adhesive/PWB	---	Eccobound 295/9	E&C						-				-	-		3HR @ 50C
3		Adhesive	67532	CV 1142							-				-	-		7D @ RT
4		ADH/RING/TELE	67532	CV 1142							-				-	-		7D @ RT
5		ADH/RING/TELE	67532	CV 1142							-				-	-		7D @ RT
6		Adhesive/PWB	---	CV 2946							-				-	-		7D @ RT
7		Honeycomb	---	FM-410-1							-				-	-		1.5HR @ 120C
8		Honeycomb	85439	FM-73/BR127							A				-	-		1HR @ 120C
9		Ink/PWB	---	Markem 7906							-				-	-		2HR @ 121C
10		TELE Internal HSG	68623	Delrin 507 & 601							-				-	-		
11		Thermal Control	---	Mylar/ ITO/VDA							-				-	-		
12		Thermal Control	---	Kapton/ ITO/VDA							-				-	-		
13		TELE Dust Cover	05946	Kapton Film							A				B	V		
14		Purge System	61407	Teflon Tubing							A				A	A		
15		Shrink Tubing	---	Kynar Fit-350							-				-	-		
16		Conformal Coating	20208	Uralene 5750 LV A/B							X				B	X		7D @ RT
17,18		Staking/Potting Thickener	62237	Uralene 5753 LV A/B Cab-O-Sil M-5							X				-	B		7D @ RT

MATERIAL IDENTIFIC...ON AND USAGE LIST

Advanced Composition Explorer (ACE)

DOCUMENT NO.
DOCUMENT REV. LTR.
ORIGINAL ISSUE DATE 1-27-94
REVISION DATE

NOMENCLATURE SIS/CRIS/GSFC

Non-Metallics

PART/DWG NUMBER	REV LTR	NOMENCLATURE	MATERIAL IDENTIFICATION					NONMETALLIC MATERIAL			USAGE EVAL.						MUA STATUS	REMARKS (SPECIAL CURE, ETC)
			MAT'L CODE	MATERIAL DESCRIPTION	MATERIAL MFGR	MATERIAL SPEC	PROCESS SPEC	WT	THK	AREA	FLM	AGE	SCC	COR	TVS	TOX		
19		Cable Ties	60439	18 DPTH (Lot 800X)							X				A	-		
20		Tape/PWB & Heaters	05295	Temp-R-K102							A				C	U		
21		Insulation	05379	Vespel SP-5							A				A	V		
22		PWB	05161	Polyimide Laminate							A				A	A		
23		Minco Heaters	06531	3M Y96							A				X	A		
24		Thermal Control Electrical Isolation	20139	G-10 Epoxy							-				A	K		
25		LEMT Foils	06190	Epon 828/ Versamid 140/ADH (1/1)/4 Silflake Silflake 135							X				B	A		7D @ RT
26		Thermal Control	65127	Silver/Teflon							A				A	-		

MATERIAL IDENTIFICATION AND USAGE LIST

Advanced Composition Explorer (ACE)

DOCUMENT NO.
DOCUMENT REV. LTR. No Change
ORIGINAL ISSUE DATE 1-27-94
REVISION DATE

NOMENCLATURE CRIS/SOFT/WU

Metals

PART/DWG NUMBER	REV LTR	NOMENCLATURE	MATERIAL IDENTIFICATION					NONMETALLIC MATERIAL			USAGE EVAL.						MUA STATUS	REMARKS (SPECIAL CURE, ETC)
			MAT'L CODE	MATERIAL DESCRIPTION	MATERIAL MFGR	MATERIAL SPEC	PROCESS SPEC	WT	THK	AREA	FLM	AGE	SCC	COR	TVS	TOX		
1		Optical Couplings, Image Intensifier Potting	60770	Dow Corning 93-500	Dow Corning			GRS TBD			-				B	-		
2		Im Im HVPS conformal coating	20209	Uralane 5750	Furane	PE Spec 54-0011		10			X				B	A		
3		Compound; also use to joint HV wires	62237	Uralane 5743	Furane	PE Spec 42-0020-102		100			X				-	B		
4		Adhesive	-	Insulcast 129 Epoxy	Permagile			2			-				-	-		
5		Adhesive	-	Ripley 4-65-2 Epoxy	Ripley			<0.03			-				-	-		
6		Plastic Sheet	-	FR Phenol				<0.6			-				-	-		
7		Plastic Sheet	20139	Epoxy/Fiberglass FR Type GF		MIL-P-13949		<15			-				A	K		
8		Wire	62532	Polyurethane coated		MW75-C class 130		<0.01			X				-	-		
9		Wire	05275	Teflon coated	Dupont			<1			B				C	K		
10		Insulation	00649	FEP	Dupont			<1			A				A	A		
11		Tape	-	Polyester Type 1316	3M			<0.03			-				-	-		
12		Insulation	-	Polyester #2540 Web	3M			<0.05			-				-	-		
13		Protective coating	-	Alodine		MIL-C-5541 Class 3		<0.001			A		A	A	A	-		
14		Ink	00030	Wornowink M-9-N Epoxy	Hysol			<0.001			A				X	B		

MATERIAL IDENTIFICATION AND USAGE LIST

Advanced Composition Explorer (ACE)

DOCUMENT NO.
DOCUMENT REV. LTR. No Change
ORIGINAL ISSUE DATE 1-27-94
REVISION DATE

NOMENCLATURE CRIS/SOFT/WU

Metals

PART/DWG NUMBER	REV LTR	NOMENCLATURE	MATERIAL IDENTIFICATION					NONMETALLIC MATERIAL			USAGE EVAL.						MUA STATUS	REMARKS (SPECIAL CURE, ETC)
			MAT'L CODE	MATERIAL DESCRIPTION	MATERIAL MFGR	MATERIAL SPEC	PROCESS SPEC	WT	THK	AREA	FLM	AGE	SCC	COR	TVS	TOX		
15		Optics	-	Fiber Optics DL				GRS TBD			-				-	-		
16		Seal	-	Indium/Bismuth eutectic				TBD					-	-				
17		-	-	Kovar				TBD					A	A				
18		Insulation	-	Alumina Al_2O_3				TBD			A				A	A		
19		Solder	-	Copper/Silver eutectic (melting point 850°C)				TBD			-				-	-		
20		Optics	-	Glass Fiber Optic Window Schott F/O Type 47				TBD			A				A	A		
21		Optics	-	Glass Frit	Corning			TBD			A				A	A		
22		Insulation	68623	Delrin	Dupont			TBD			-				-	-		
23		Boxes, holding fixtures	-	AL				TBD					-	-				
24		Fiber Frames, screws	10234	Brass				TBD					A	A				
25		Substrate for fibers	05946	Kapton	Dupont			TBD			A				B	V		
26		Fibers	-	Plastic Scintilator Fiber Cone, Polystyrene Base				TBD			-				-	-		
27		Fibers	-	PMMA Fiber-clad				TBD			-				-	-		
28		Adhesive	05289	EA 9321	Hysol			TBD			C				B	-		
29		Thermal coupling	67206	Thermal bond 4951	Therm-alloy			TBD			-				-	-		
30		Camera circuit boards	-	Copper clad circuit boards				TBD			-				-	-		
31		Camera circuit boards	-	Conformal coat (TBD)				TBD			-				-	-		

MATERIAL IDENTIFICATION AND USAGE LIST

Advanced Composition Explorer (ACE)

DOCUMENT NO.
DOCUMENT REV. LTR. No Change
ORIGINAL ISSUE DATE 1-27-94
REVISION DATE

NOMENCLATURE CRIS/SOFT/WU

Metals

PART/DWG NUMBER	REV LTR	NOMENCLATURE	MATERIAL IDENTIFICATION					NONMETALLIC MATERIAL			USAGE EVAL.						MUA STATUS	REMARKS (SPECIAL CURE, ETC)
			MAT'L CODE	MATERIAL DESCRIPTION	MATERIAL MFGR	MATERIAL SPEC	PROCESS SPEC	WT	THK	AREA	FLM	AGE	SCC	COR	TVS	TOX		
32		Screws	-	SS				GRS TBD					-	-				
33		Solder	-	Solder (TBD)				TBD					-	-				
34		Wire	05275	Teflon coated				TBD			B				C	K		
35		Coax	05275	Teflon coated				TBD			B				C	K		
36		Wire	-	Reynolds high voltage #175-8353	Reynolds			TBD			-				-	-		
94		Heat sink		Cho-Therm	Chomerics			TBD										
95		Heat sink	-	Therma-bond	Georgia Pacific			TBD			-				-	-		
96		Adhesive	05066	Scotch-weld 2216	3M			TBD			A				B	B		

CRIS Electronic Fabrication Process List

Process	Document / Specification
Fab & Inspection of multilayer boards	
Procurement documents being identified for all items	
Forming of leads on EEE parts	
Preparation and soldering of EEE parts to PWBs • tinning (and retinning) • hand solder • vapor phase reflow • IR reflow	*Specific process documents are being identified for all of the processes listed* *List to be complete by PDR*
Removal of surface mount and through hole mounted parts from PWBs	
Cleaning before and after soldering • Parts • PWBs	
Conformal coating • PWBs	
Spot Bonding of EEE parts and cables	
Installation of swage terminals	
Preparation and soldering of wires and coax to terminals	
"Chip-on-Board" processes	

CRIS Process List for Mechanical Parts

1.	Iridite per MIL-C-5541, Class 3	Review by J. Repar Complete
2.	Black Anodize per MIL-A-8625, Type R, Class 2	Review by J. Repar Complete
3.	Copper Flash per MIL-C-14550, Class 4	Review by J. Repar Complete
4.	Nickel Strike per QQ-N-290-, Class 2	Review by J. Repar Complete
5.	Gold Plate per MIL-G-45204, Type 1, Class 3	Review by J. Repar Complete
6.	Black Nickel per MIL-C-18317	Review by J. Repar Complete
7.	Passivate per MIL-S-5002	Review by J. Repar Complete

CRIS PDR

Section 14

Reliability

2/22–23/94

Reliability

- Identification and Control of Limited−Life Items

  * **Limited−life items:**

    1. **Preliminary review of all identified materials and processes indicates that no limited−life items are present**

  * **Control:**

    1. **All limited−life items that may have a useful life expectancy less than mission design will be controlled to ensure adequate life−time, e.g.,**

       Thermal surfaces
       Humidity controls
       Minimization of shelf life

2/22−23/94

Reliability (continued)

- EEE Parts Deratings
  - ∗ GSFC PPL 20 criteria are used for parts deratings
  - ∗ Exceptions are certain tantalum capacitors in the PHA hybrid, in which case 50% derating was used instead of 60% to avoid going to a bigger package size

I/F FMECA

Interfaces Analyzed
- Command
- Data/Telemetry

Preliminary Analysis
- Performed by C. Faulkner (JPL)

Conclusion (Based on Preliminary Design)

No single point failures were found the could propagate across the interface or cause the complete loss of communications with an instrument.

Comment
- Pay particular attention to the command enable lines associated with the redundant command interfaces during system design to make certain that a false enable on one will not disable the other command input.

Next Steps
- Update analysis based upon the final design
- Pay attention to the command enable design comment
- Complete analysis of power interfaces

Reliability (continued)

- Provisions for Reviewing/Evaluating Alerts
  - We provide parts and materials lists to PMO
  - PMO will have lists reviewed by JPL and enter into database
  - We rely on PMO to review/evaluate against Alerts
  - Action will depend on engineering judgement & cost and schedule impact

Reliability (continued)

- Parts & Materials Sparing Philosophy
  - ∗ **Detectors/modules: Discussed in Section 4**
  - ∗ **SOFT:**

    1. CCDs:
    Require 2 for flight and 1 for camera spare; have purchased 4

    2. Image intensifiers:
    Purchase 2 flight and 1 spare

    3. HV power supply
    Purchase 2 flight and 1 spare HVPS plus 1 prototype

    4. Fiber planes:
    Fab 1 spare trigger plane and 1 spare hodoscope plane

    5. Camera electronics:
    Fab 2 flight camera electronics and 1 spare
    Fab 1 additional set of PC boards

  - ∗ **Other EEE parts:**
    Minimum of $1+\sqrt{N}$, where N is the number of the parts of a given type used in the instrument.

2/22–23/94

Reliability (continued)

- Parts Storage Provisions
  - ∗ **Hybrids will be stored under dry N_2 purge in locked metal cabinet**
  - ∗ **Silicon detectors will be stored under bias in cabinets under dry N_2 purge**
  - ∗ **SOFT fiber planes will be stored in light tight, dust tight container at room temperature in a limited access area**
  - ∗ **Other EEE parts will be stored in ESD protecitve bags or boxes in locked, grounded metal cabinets**

Reliability (continued)

- Configuration Control Practices
  - * Will use the ACE Bulletin Board or database to post information about drawings
  - * A file will be set up for each institution/company making drawings
  - * Each file will contain drawing number, title, latest revision letter & date, whether or not there are red–line corrections on the drawing, and who to contact for more information
  - * Anyone can read the files, but data can only be entered by the Experiment Manager or the Deputy Experiment Manager
  - * All drawings will be under this internal configuration control; will start between PDR and CDR when files are established

2/22–23/94

Reliability (continued)

- Configuration Control Practices (continued)
  - ∗ **Configured Articles List and dates baselined (for "external" configuration control):**

1.	IFRD	at CDR
2.	EEE Parts List	at CDR
3.	Materials List	at CDR
4.	Processes List	at CDR
5.	Electrical ICD	at I/F CDR
6.	Mechanical ICD	at I/F CDR

  - ∗ **As changes to drawings come into Experiment Manager, they will be reviewed to see if any of the items under external configuration control are affected. If so, appropriate change requests will be made per the ACE Payload Configuration Management Plan document.**

2/22–23/94

Reliability (continued)

- Discrepant Item Control & Failure Reporting Plans
  - ∗ **Discrepant items will be handled via procedures in the CRIS IAIP.**
  - ∗ **Failure reporting will begin at the instrument level with the first application of power during the first environmental test**
  - ∗ **Failure reporting will be per the IAIP**

Reliability (continued)

- Workmanship & Inspection Practices

  * **Use standards from previous programs and/or NHB 5300.**

REPORT DOCUMENTATION PAGE

Form Approved
OMB No. 0704-0188

Public reporting burden for this collection of information is estimated to average 1 hour per response, including the time for reviewing instructions, searching existing data sources, gathering and maintaining the data needed, and completing and reviewing the collection of information. Send comments regarding this burden estimate or any other aspect of this collection of information, including suggestions for reducing this burden, to Washington Headquarters Services, Directorate for Information Operations and Reports, 1215 Jefferson Davis Highway, Suite 1204, Arlington, VA 22202-4302, and to the Office of Management and Budget, Paperwork Reduction Project (0704-0188), Washington, DC 20503.

1. AGENCY USE ONLY *(Leave blank)*

2. REPORT DATE

3. REPORT TYPE AND DATES COVERED

4. TITLE AND SUBTITLE

CRIS PDR, February 22-23, 1994

5. FUNDING NUMBERS

6. AUTHOR(S)

A. Cummings

7. PERFORMING ORGANIZATION NAME(S) AND ADDRESS(ES)

California Institute of Technology
Pasadena, CA 91125

8. PERFORMING ORGANIZATION REPORT NUMBER

9. SPONSORING/MONITORING AGENCY NAME(S) AND ADDRESS(ES)

NASA - GSFC
Greenbelt, MD 20771

10. SPONSORING/MONITORING AGENCY REPORT NUMBER

11. SUPPLEMENTARY NOTES

12a. DISTRIBUTION/AVAILABILITY STATEMENT

12b. DISTRIBUTION CODE

13. ABSTRACT *(Maximum 200 words)*

Cosmic Ray Isotope Spectrometer (CRIS) Instrument of the Advanced Composition Explorer (ACE) Mission Preliminary Design Review Presentation Package

14. SUBJECT TERMS

15. NUMBER OF PAGES
284

16. PRICE CODE

17. SECURITY CLASSIFICATION OF REPORT	18. SECURITY CLASSIFICATION OF THIS PAGE	19. SECURITY CLASSIFICATION OF ABSTRACT	20. LIMITATION OF ABSTRACT
UNCL	UNCL	UNCL	

NSN 7540-01-280-5500

Standard Form 298 (Rev. 2-89)
Prescribed by ANSI Std. Z39-18
298-102