NASA-RP-1324

Designing For Human Presence in Space

An Introduction to Environmental Control and Life Support Systems

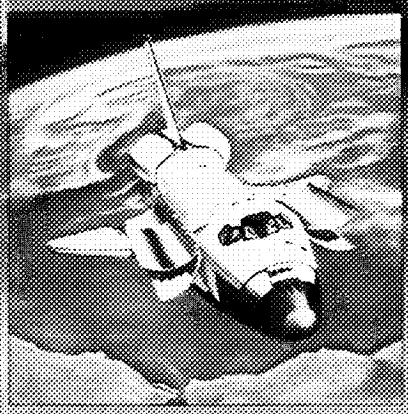

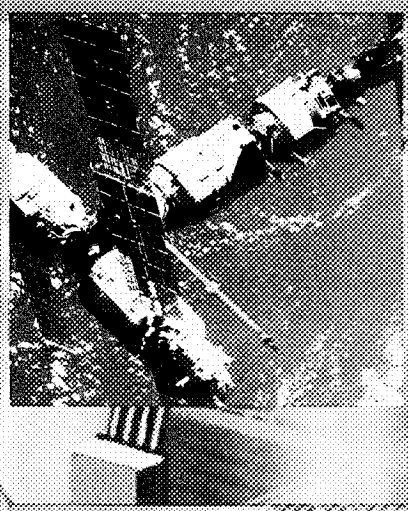

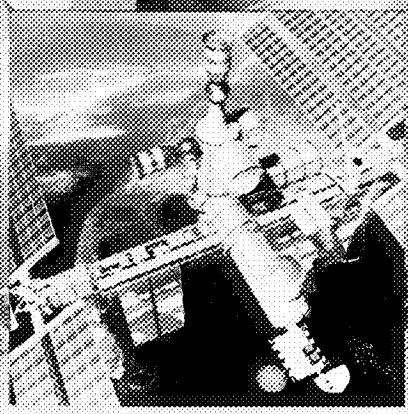

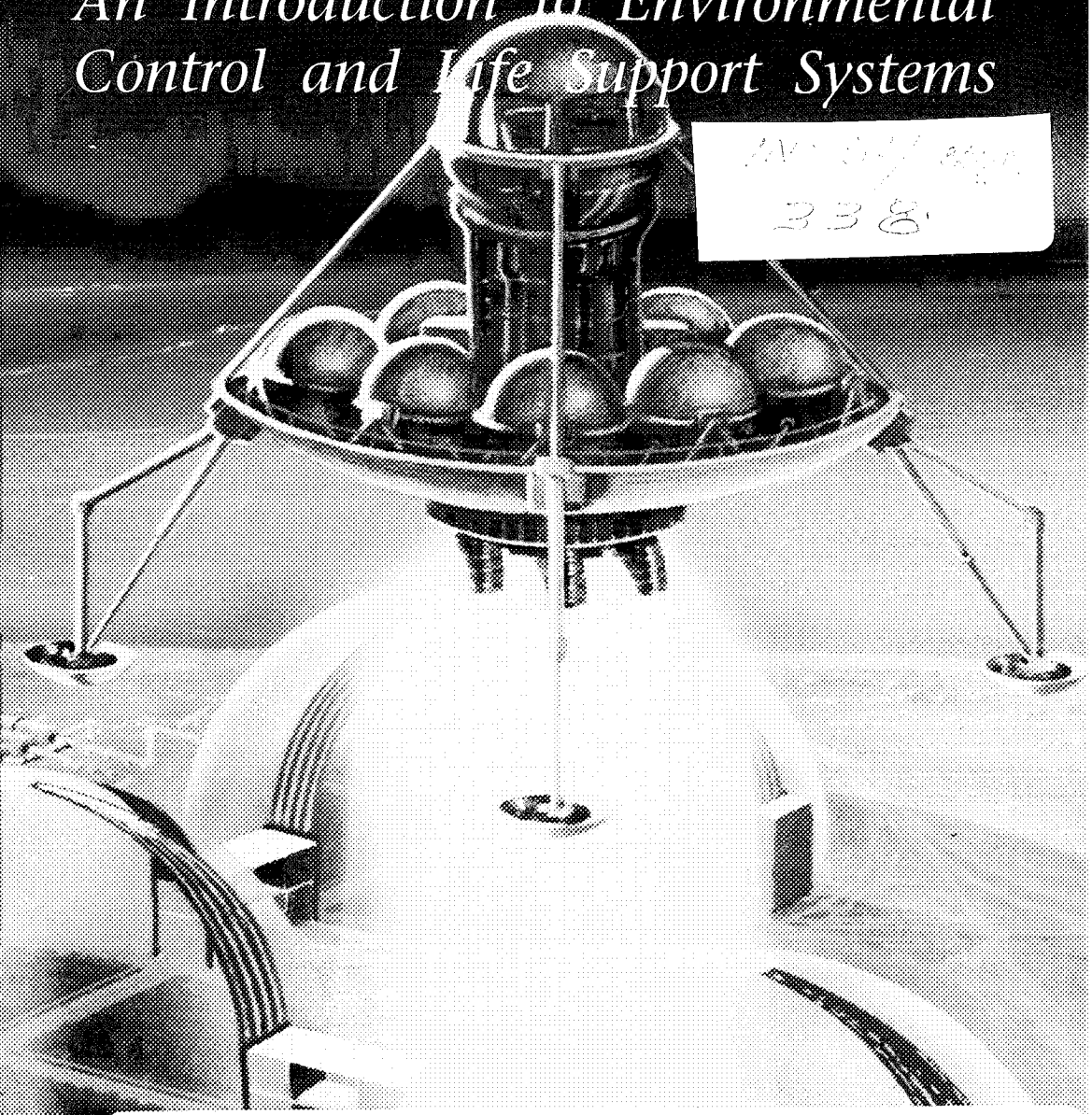

338

(NASA-RP-1324) DESIGNING FOR HUMAN PRESENCE IN SPACE: AN INTRODUCTION TO ENVIRONMENTAL CONTROL AND LIFE SUPPORT SYSTEMS (NASA) 355 p

N94-27437

Unclas

H1/54 0000338

NASA RP-1324

NASA
Reference
Publication
1324

1994

Designing for Human Presence in Space: An Introduction to Environmental Control and Life Support Systems

Paul O. Wieland
George C. Marshall Space Flight Center
Marshall Space Flight Center, Alabama

NASA

National Aeronautics and
Space Administration
Office of Management
Scientific and Technical
Information Program

"On the sea, (people) had to continually do more with less. And in the air even more severely so. Thus there were two completely different worlds which really fostered advanced engineering."*

"... Doing more with less does not mean trying to thin out any known piece of design. It does (mean using) an alternate piece of design which gets the same result. We have today, for instance, one communications satellite weighing one-quarter of a ton outperforming the transoceanic communications capability of 175,000 tons of copper cable."**

"Through improved materials and alternate systems—such as going from wired to wireless telegraphy—we can produce ever higher performance per each pound of material, minute of time, and watt of energy invested, accomplishing so much more with so relatively little resource per function, that we are able to sustain all humanity at a higher standard of living than heretofore experienced or dreamed of by any human."***

- R. Buckminster Fuller

* Transcript of RBF Address, University of Alaska, p. 1, April 20, 1972
** This is Your Grand Strategy, p. 23, February 4, 1968
*** My New Hexa-Pent Dome Designed for You to Live In, Popular Science, May 1972
(As edited by Popular Science)

PREFACE

"Designing for Human Presence in Space: An Introduction to Environmental Control and Life Support Systems" serves as an introduction to the NASA/MSFC process of designing an Environmental Control and Life Support System (ECLSS) for habitats to provide living and working quarters in space and on the Moon or other planets. This book documents the knowledge gained by experienced engineers and scientists, serves as a reference for basic information applicable to the ECLSS design process, and answers general questions related to ECLSS design, including:

What are the functions which an ECLSS must perform?

What factors are important when designing an ECLSS?

How is an ECLSS design verified and certified for flight?

How were ECLSS's designed for previous missions or applications?

What lessons have been learned regarding ECLSS designs?

How is the ECLSS for Space Station *Freedom* (S.S. *Freedom)* being designed?

What are the ECLSS considerations for missions beyond low Earth orbit?

What are the programmatic factors in the ECLSS design process?

While answering these questions, the requirements placed upon ECLSS's for different mission scenarios are discussed, the technical process of designing an ECLSS is described, the analytical and test methods are discussed, and the documentation required to coordinate the diverse activities that relate to ECLSS design is explained. The process of designing a space habitat ECLSS is quite involved and coordinating the diverse aspects is a major endeavor. This book provides insight into the ECLSS design process from both technical and programmatic aspects.

In part I, "Fundamentals of ECLSS Design," the role of ECLSS's in human exploration of space is introduced in chapter 1, the functions essential to support humans in space are described in chapter 2, general requirements and mission-specific design considerations are discussed in chapter 3, and the process of designing an ECLSS for a particular mission is described in chapter 4. Additional details are provided in appendices A through H.

In part II, "ECLSS Applications," examples of ECLSS's developed for terrestrial, submarine, airplane, and space habitat use are described in chapter 5; a detailed description of the design process is given in chapter 6 using S.S. *Freedom* as an example; and additional ECLSS design considerations for interplanetary missions and settlements on the Moon and other planets are discussed in chapter 7. General conclusions are given in chapter 8. Additional details are in appendices I and J.

The appendices contain more detailed information needed to understand the technical aspects of the design process. This information was placed in the appendices in order to allow the broader aspects to be addressed without innundating the reader with details. An extensive references and bibliography section identifies sources for further information.

Any work of this scope requires the involvement of many people, and the technical knowledge and expertise of civil service and contractor personnel were drawn upon during preparation of this book. The engineers and scientists of the Environmental Control and Life Support Branch/ED62 and other organizations at NASA/MSFC provided much information and many comments during the review process, and engineers with McDonnell Douglas Space Systems Company (MDSSC) and Sverdrup Technology (SvT) assisted with preparing the book as well as providing comments. The civil service personnel (from ED62 unless noted otherwise) are: Reginald Alexander (PD22), Allen Bacskay, Robert Bagdigian, Robyn Carrasquillo, Amy Cardno (EB42), Donald L. Carter, Kevin Depew, Margaret Elrod (PD24), Robert Erickson, Gerald Franks, Cynthia Frost (PT31), Thomas R. Galloway (CT12), Melissa Gard, Donald Holder, William R. Humphries (ED61), William R. Humphries Jr. (EB22), Paul Johnson (EP63), James Knox, Cindy McGriff, Kenneth Mitchell, Robert Morse (EL53), Kathryn Ogle, David Patterson, Jay Perry, Charles Ray, James Reuter, Barry Roberts, Monsi Roman, Richard G. Schunk, David Tabb (co-op student), Mary Traweek, Larry Turner, Sherry Walker (PD22), Douglas Westra (ED63), Wendy Williams, Michael Wright (summer student from the University of Minnesota, PD24), and Jay Wyatt (EL64). Comments on medical aspects were provided by Dr. Paul Hornyak, the JSC medical monitor for ECLSS testing for S.S. *Freedom* at MSFC. The contractor personnel are: Robert DaLee and Bryce Diamant (MDSSC) who contributed to chapters 4 and 7, prepared most of chapter 5, and contributed information in the appendices; and Mark Griffin and Wesley Coleman (SvT) who contributed portions of chapters 3 and 4 and information in the appendices (especially on designing the PLSS for the EVA suit). Roger von Jouanne (Boeing) provided information on the G-189A computer program. Charles Martin and Ken McCormick (MDSSC) provided several of the figures of U.S. and U.S.S.R./Russian space habitat ECLS systems. The cover art was designed by Becky Caneer (CN32) and the artist was Tom Buzbee (CN32). Editing was performed by Diane Stephanouk (MSI) and Judy Maples (DPTI).

Comments concerning this reference publication are invited and may be sent to Paul Wieland, NASA/MSFC/ED62, Marshall Space Flight Center, AL 35812.

P.O.W.

Use of SI Metric Units

The Office of Space Flight Metric Transition Plan (April 1991) states that the NASA program development process will aid in implementing metrication. In accordance with this, all units in this book are stated in International System (SI) metric and followed by U. S. customary units unless the SI unit is more commonly used. For more information on metric units see "The International System of Units: Physical Constants and Conversion Factors," NASA SP-7012, and "Preferred Metric Units for General Use by the Federal Government," Federal Standard 376B, January 27, 1993.

TABLE OF CONTENTS

Page

PART I—FUNDAMENTALS OF ECLSS DESIGN 1

1.0 INTRODUCTION—ECLS AND HUMAN SPACE FLIGHT 3

2.0 ECLS—PURPOSE AND FUNCTIONS 5

2.1 Atmosphere Revitalization 7
2.1.1 CO_2 Removal 8
2.1.2 CO_2 Reduction 9
2.1.3 O_2 Generation 9
2.1.4 Trace Contaminant Monitoring and Control 9
2.1.5 Microorganism Control 11
2.2 Atmosphere Control and Supply 11
2.2.1 Monitoring Major Constituents 12
2.2.2 Atmosphere Composition Control 13
2.2.3 Atmosphere Constituents Storage 13
2.2.4 Pressure Control 13
2.3 Temperature and Humidity Control 13
2.3.1 Temperature Control 14
2.3.2 Humidity Control 15
2.3.3 Ventilation 15
2.3.4 Equipment Cooling 15
2.4 Water Recovery and Management 15
2.4.1 Water Storage 16
2.4.2 Water Recovery 17
2.4.3 Water Quality Monitoring 17
2.4.4 Monitoring of Microorganisms 17
2.5 Waste Management 17
2.5.1 Metabolic Waste 18
2.5.2 Other Solid Waste 18
2.5.3 Liquid Waste 18
2.5.4 Gaseous Waste 19
2.6 Fire Detection and Suppression 19
2.6.1 Detection of Incipient Fires 19
2.6.2 Suppression of Fires 19
2.6.3 Cleanup After a Fire 20
2.7 Other functions 20
2.7.1 Food Storage and Preparation 20
2.7.2 Plant Growth Facility 21
2.7.3 Radiation Protection 21
2.7.4 External Dust Removal 21

TABLE OF CONTENTS (Continued)

Page

2.7.5 Thermally Conditioned Storage 21
2.7.6 Hyperbaric Chamber and Air Lock 22

3.0 ECLSS DESIGN CONSIDERATIONS 23

3.1 Technology Considerations 23
3.1.1 Technology Limitations 23
3.1.2 System Considerations 23
3.1.3 Designing for Quality 23
3.2 Human Requirements 24
3.2.1 Medical Requirements 24
3.2.1.1 Atmosphere Requirements 24
3.2.1.2 Water Quality Requirements 26
3.2.2 "Man-Systems" Requirements 27
3.2.3 Extravehicular Activity Requirements 27
3.3 Mission Requirements 29
3.3.1 Mission Profile 29
3.3.1.1 Crew Size 29
3.3.1.2 Mission Duration 30
3.3.1.3 Mission Location 30
3.3.1.4 Habitat Design 31
3.3.2 Mass Loop Closure 31
3.3.2.1 ECLSS Services Related to Loop Closure 32
3.3.2.2 Techniques for Loop Closure 32
3.3.2.2.1 Nonregenerable 33
3.3.2.2.2 Physicochemical Regenerable 33
3.3.2.3.3 Bioregenerable 33
3.3.3 Payload Requirements 34
3.3.4 Logistical Requirements 34
3.3.5 Requirements for Growth 34
3.4 System Requirements and Integration Factors 35
3.4.1 Integration of Subsystems and Assemblies 35
3.4.1.1 Atmosphere Revitalization Integration Concerns 36
3.4.1.2 Water Management Integration Concerns 37
3.4.2 Commonality of Components 39
3.4.3 Monitoring and Control 39
3.4.3.1 Instrumentation 39
3.4.3.2 Automation 40
3.4.4 Centralized Versus Distributed 40
3.4.5 Intersystem Integration and Synergisms 41

TABLE OF CONTENTS (Continued)

Page

3.5 Safety and Reliability Requirements 42
3.5.1 Designing for Safety 42
3.5.2 Designing for Reliability 43
3.5.3 Leak Detection 44
3.5.4 Hazardous Gases 44
3.5.5 Safe Haven/Contingency Operations 44
3.6 Test Requirements 44
3.6.1 Facility Requirements 45
3.6.2 Hazard Analyses 45
3.6.3 Human Test Requirements 45
3.6.3.1 Hardware Standards 45
3.6.3.2 Medical and Legal Aspects 46
3.7 Flight Requirements 46
3.7.1 Packaging 47
3.7.2 Specifications 47
3.7.3 Testing 47
3.8 Cost Considerations 47
3.8.1 DDT&E Costs 47
3.8.2 Life Cycle Costs 48
3.8.3 Design To Cost 48

4.0 ECLSS DESIGN AND DEVELOPMENT PROCESS: SYSTEMS ENGINEERING AND INTEGRATION 49

4.1 Process Organization 49
4.1.1 Development Phases 50
4.1.1.1 Phase A—Concept Study and Preliminary Analysis 50
4.1.1.2 Phase B—Preliminary Definition and Design 50
4.1.1.3 Phase C/D—Design/Development and Operation 52
4.1.2 Documentation 54
4.1.2.1 Requirements Documents 54
4.1.2.2 Interface Documents 55
4.1.2.3 Verification Documents 55
4.1.2.4 Design Support Documents 56
4.1.3 Organizational Roles and Relationships 56
4.1.3.1 Agency Roles and Relationships 58
4.1.3.2 MSFC Roles and Relationships 59
4.1.3.3 Government-Contractor Relationships 60
4.2 Design Basics 60
4.2.1 Information Resources 60
4.2.1.1 Data Bases 61
4.2.1.2 Conferences 61

TABLE OF CONTENTS (Continued)

Page

4.2.1.3 New Technologies 61
4.2.2 Technology Maturity 62
4.2.3 Technology Development Flow 62
4.3 Analysis Methods 64
4.3.1 Trade Studies 64
4.3.1.1 ECLS Systems Assessment Program 66
4.3.1.2 Life Support Systems Analysis Model 66
4.3.1.3 Other Trade Study Models 68
4.3.2 Process Models 68
4.3.2.1 Aspen Plus® 68
4.3.2.2 Other Process Models 69
4.3.3 Subsystem/System Models 69
4.3.3.1 G-189A 71
4.3.3.2 SINDA '85/FLUINT 72
4.3.3.3 CASE/A 73
4.3.3.4 TRASYS 76
4.4 Hardware and Software Development and Verification 76
4.4.1 Hardware Development and Verification 78
4.4.1.1 ECLSS Testing Phases 79
4.4.1.1.1 Development Testing 79
4.4.1.1.2 Qualification Testing 81
4.4.1.1.3 Acceptance Testing 81
4.4.1.2 ECLS Hardware and System Verification 81
4.4.1.2.1 Verification Tests 82
4.4.1.2.2 Verification Assessments 82
4.4.1.2.3 Verification Cross Reference Index 83
4.4.2 Software Development and Verification 83
4.4.2.1 Conceptual Phase 86
4.4.2.2 Requirements Phase 86
4.4.2.3 Design Phase 86
4.4.2.4 Implementation 86
4.4.2.5 Verification Phase 86
4.4.2.6 Validation Phase 87
4.4.2.7 System Integration Phase 87
4.4.2.8 Operations and Maintenance Phase 87
4.5 Safety Assurance 87
4.5.1 Safety Reviews 87
4.5.2 Criticality Ratings 88
4.5.3 Hazard Analyses 88
4.5.4 Fault Trees 91
4.5.5 Failure Modes and Effects Analyses and Critical Items 91

TABLE OF CONTENTS (Continued)

Page

PART II—ECLSS APPLICATIONS 95

5.0 HISTORICAL ECLS SYSTEMS 97

5.1 Terrestrial Applications 97
5.1.1 Aircraft ECLSS 98
5.1.2 Submarine ECLSS 100
5.2 U.S. Experience with Space Habitat ECLSS 101
5.2.1 Short Duration Missions 102
5.2.1.1 Mercury (1960 to 1963) 102
5.2.1.2 Gemini (1964 to 1966) 104
5.2.1.3 Apollo (1968 to 1972) 104
5.2.1.4 Space Shuttle Orbiter (1981 to present) 106
5.2.1.5 Spacelab (1983 to present) 107
5.2.2 Long Duration Missions 110
5.2.2.1 30-, 60-, and 90-Day Tests 111
5.2.2.2 SMEAT 112
5.2.2.3 *Skylab* (1973 to 1974) 114
5.3 U.S.S.R./Russian Experience with Space Habitat ECLSS 114
5.3.1 Short Duration Missions 116
5.3.1.1 Vostok (1960 to 1963) 116
5.3.1.2 Voskhod (1964 to 1965) 116
5.3.1.3 Soyuz/Soyuz T (1967 to present) 117
5.3.1.4 *Buran* Space Shuttle (1988 to present) 119
5.3.2 Long Duration Missions 119
5.3.2.1 Salyut Space Stations (1971 to present) 119
5.3.2.2 *Mir I* Space Station (1986 to present) 119

6.0 SPACE STATION *FREEDOM*—THE CHALLENGE OF LONG DURATION ECLSS 123

6.1 The Space Station *Freedom* Project 123
6.1.1 Programmatics 123
6.1.1.1 Program Phases 125
6.1.1.2 Work Packages—NASA Field Centers and Prime Contractors 128
6.1.1.3 Work Package 1 Description 129
6.1.1.4 ECLSS Programmatics 129
6.1.2 Documentation 129
6.1.2.1 Program Requirements Document 130
6.1.2.2 Program Definition and Requirements Document 131
6.1.2.3 Architectural Control Document 131
6.1.2.4 Functional Control Documents 132

TABLE OF CONTENTS (Continued)

Page

6.1.2.5 Interface Documents 132
6.1.2.5.1 Interface Control Documents 132
6.1.2.5.2 Interface Development Document 132
6.1.2.6 System Requirements Document 132
6.1.2.7 Prime Item Development Specifications 132
6.1.2.8 Software Documents 133
6.1.2.9 Baseline Configuration Document 133
6.1.2.10 Plans 133
6.1.2.10.1 Safety Plan 133
6.1.2.10.2 Reliability Plan 134
6.1.2.10.3 Master Verification Plan 134
6.1.2.11 Reports 134
6.1.2.12 Changes to Documents 134
6.2 Design Development and Verification 135
6.2.1 Analysis Methods 135
6.2.1.1 CASE/A 135
6.2.1.1.1 System-Level Analyses 136
6.2.1.1.2 Subsystem-Level Analyses 137
6.2.1.1.3 Assembly-Level Analyses 137
6.2.1.2 Aspen Plus® 138
6.2.1.3 TRASYS and SINDA '85 138
6.2.1.4 FLUINT 139
6.2.2 MSFC ECLSS Test Facilities 139
6.2.3 ECLSS Test Program and Hardware Selection 142
6.2.3.1 MSFC Testing 144
6.2.3.1.1 Phase 1 Tests 144
6.2.3.1.2 Phase 2 Tests 144
6.2.3.1.3 Phase 3 Tests 144
6.2.3.2 Contractor Testing 145
6.2.3.2.1 Comparison Tests 145
6.2.3.2.2 Concept Confirmation Tests 146
6.2.3.2.3 Intermodule Ventilation Tests 146
6.2.3.2.4 Predevelopment Operational System Test 146
6.2.3.2.5 Baseline Operational System Test 147
6.2.3.2.6 Manned Operational System Test 147
6.2.3.3 Test Results 147
6.2.3.3.1 Significant Results 147
6.2.3.3.2 Anomalies 149
6.2.3.3.3 Identification of Design Deficiencies 151
6.2.4 Chemical and Microorganism Analyses 151
6.2.4.1 Gas Analyses 151
6.2.4.2 Liquid Analyses 151

TABLE OF CONTENTS (Continued)

Page

6.2.4.3 Surface Analyses 152
6.2.4.4 Microorganism Analyses 152
6.2.4.4.1 Water Analyses 152
6.2.4.4.2 Surface Analyses 153
6.2.4.4.3 Atmosphere Analyses 153
6.2.5 Hardware Packaging 153

7.0 BEYOND LOW EARTH ORBIT—THE CHALLENGE OF REMOTE ECLS 157

7.1 Technical Challenges 157
7.1.1 Long-Term Reliability 157
7.1.2 Maintainability 157
7.1.3 Minimization of Expendables 158
7.1.4 Maximum Mass-Loop Closure 158
7.2 Biological Factors 159
7.2.1 Food Production 159
7.2.2 Microorganisms 160
7.3 Terrestrial Analogs and Testbeds 160
7.3.1 Antarctic High Base 161
7.3.2 Soviet/Russian BIOS Experiments 161
7.3.3 *Biosphere* 2 Experiment 161
7.4 Scenarios of Future Missions 162
7.4.1 Interplanetary Spacecraft 163
7.4.1.1 Lunar Transfer Vehicle 163
7.4.1.2 Lunar Excursion Vehicle 163
7.4.1.3 Mars Transfer Vehicle 163
7.4.1.4 Mars Excursion Vehicle 164
7.4.2 Planetary Bases 164
7.4.2.1 Lunar Habitat 166
7.4.2.2 Mars Habitat 166
7.4.3 In Situ Resources 166
7.4.4 Rovers—Pressurized and Unpressurized 166
7.5 Trade Studies 168
7.5.1 Hardware Selection/Prioritization of Development 168
7.5.2 Analysis Methods 168
7.5.2.1 NASA/MSFC and McDonnell Douglas Method 169
7.5.2.2 LISSA 172

8.0 CONCLUSION 175

TABLE OF CONTENTS (Continued)

Page

APPENDICES

A – Levels of Hardware and Software Complexity 177

B – Atmosphere Revitalization 181
B.1 – AR Requirements and Technology Options 183
B.2 – O_2 Storage and Generation 187
B.3 – CO_2 Removal 192
B.4 – CO_2 Reduction 199
B.5 – Trace Contaminant Control 202
B.6 – Trace Contaminants of Concern on S.S. *Freedom* 203
B.7 – Trace Contaminant Calculations for Assessing Combined Effects 204
B.8 – Trace Contaminant Monitoring 205
B.9 – Microorganism Monitoring and Control 206

C – Atmosphere Control and Supply 209
C.1 – ACS Requirements and Technology Options 211
C.2 – ACS Technology Options 215
C.3 – Monitoring Major Atmosphere Constituents 216

D – Temperature and Humidity Control 217
D.1 – THC Requirements and Technology Options 219
D.2 – THC Design Concepts 222
D.3 – Ventilation 225
D.4 – Equipment Cooling 225

E – Water Recovery and Management 227
E.1 – Water Requirements and Processing Technology Options 229
E.2 – Waste Water Processing 233
E.3 – Urine Processing 234

F – Waste Management 241
F.1 – Waste Management Requirements and Technology Options 243
F.2 – Waste Collection and Storage 245
F.3 – Limited Waste Processing for Storage 245
F.4 – Waste Processing for Mass Recovery 249

G – Fire Detection and Suppression 253
G.1 – FDS Requirements and Technology Options 255
G.2 – Fire Detection Methods 260
G.3 – Fire Suppression Methods 261

TABLE OF CONTENTS (Continued)

Page

H – Other ECLSS Functions 263
H.1 – Food Storage 265
H.2 – Plant Growth Facilities 268

I – Historical ECLS Systems on U.S. and U.S.S.R./Russian Space Habitats 279

J – Portable Life Support System Requirements and Design 291
J.1 – Portable Life Support System Requirements 293
J.2 – PLSS Design 293

K – Analyses Performed During Development of the ECLSS for S.S. *Freedom* 299

REFERENCES
Chapter 1 304
Chapter 2 304
Chapter 3 306
Chapter 4 309
Chapter 5 313
Chapter 6 314
Chapter 7 316
Bibliography 318
Index 345

LIST OF ILLUSTRATIONS

Figure	Title	Page
1.	Human needs and effluents mass balance	6
2.	ECLSS functions and subfunctions	7
3.	Atmosphere revitalization	8
4.	Physiological effects of oxygen concentrations	10
5.	Atmosphere control and supply	12
6.	Temperature and humidity control	14
7.	Water recovery and management	16
8.	Waste management	18
9.	Temperature and RH ranges for S.S. *Freedom*	25
10.	Integration of ECLS subsystems	36
11.	Potential space habitat ECLSS interfaces	41
12.	Typical NASA spacecraft ECLSS development process	51
13.	Typical NASA review board structure	53
14.	Simplified documentation tree	54
15.	Organizational relationships for ECLSS activities	57
16.	Technology development flow	63
17.	Software documentation flow	63
18.	TCCA design approach (simplified flowchart)	70
19.	ECLSS model file structure	71
20.	Simplified FLUINT model	74
21.	CASE/A model of a habitat ECLSS (conceptual)	76
22.	Example VCRI form	84

LIST OF ILLUSTRATIONS (Continued)

Figure	Title	Page
23.	Systems and software development process	85
24.	Process for determining criticality ratings	89
25.	Sample hazard report form	90
26.	Sample fault tree	92
27.	Sample FMEA report form	93
28.	Basic air cycle for a jet aircraft air conditioning system	99
29.	Schematic of a typical submarine ECLSS	100
30.	Schematic of the Mercury ECLSS	103
31.	Gemini ECLSS schematic	105
32.	Schematic diagram of the Apollo command module environmental control system	106
33.	Schematic diagram of the Apollo LEM environmental control system	107
34.	Orbiter atmosphere revitalization system	108
35.	Schematic of the orbiter water management system	108
36.	Orbiter waste management system	109
37.	Schematic diagram of the Spacelab cabin atmosphere loop	110
38.	Schematic diagram of the Spacelab avionics atmosphere loop	111
39.	ECLSS block diagram for the 90-day test	113
40.	Schematic diagram of the *Skylab* atmosphere control and conditioning system	115
41.	Schematic diagram of the Vostok atmosphere regeneration and conditioning system	117
42.	Schematic diagram of the Soyuz life support system	118
43.	*Salyut 7* ECLSS	121

LIST OF ILLUSTRATIONS (Continued)

Figure	Title	Page
44.	Space Station *Freedom* elements and participants	124
45.	"Power tower" space station with "racetrack" module configuration	126
46.	"Dual keel" space station with modules connected by nodes	127
47.	S.S. *Freedom's* documentation tree	130
48.	Documentation change request process	135
49.	The Manned Habitat Environmental Control and Life Support Test Facility	140
50.	Schematic of the MSFC ECLSS test facility	141
51.	ECLSS test program	143
52.	Sample anomaly log sheet	150
53.	WRM rack packaging	154
54.	ARS rack packaging	155
55.	Sample break-even plot	159
56.	Mars transfer and excursion vehicles (MTV and MEV)	164
57.	Mission phases for colonizing the Moon and Mars	165
58.	Concept of an early lunar base	167
59.	LISSA comparison of ECLSS configurations	173
B-1.	Static feed water electrolysis	189
B-2.	Solid polymer water electrolysis	190
B-3.	CO_2 electrolysis	190
B-4.	Schematic of water vapor electrolyisis	191
B-5.	Simplified schematic of a SAWD CO_2 removal assembly	194
B-6.	Simplified schematic of EDC electrochemical cell	195

LIST OF ILLUSTRATIONS (Continued)

Figure	Title	Page
B-7.	Schematic of four bed molecular seive CO_2 removal assembly	198
B-8.	Schematic of Sabatier reactor	200
B-9.	Schematic of carbon formation reactor	200
B-10.	Schematic of Bosch reactor	201
B-11.	Schematic of a trace contaminant removal assembly using a combination of approaches	202
C-1.	ACS function schematic for S.S. *Freedom*	212
C-2.	Schematic of a N_2H_4 to N_2 assembly	215
D-1.	Calculation of the heat and moisture from metabolic processes	221
D-2.	Typical condensing heat exchanger design concept	223
D-3.	Slurper bar operation	224
E-1.	Schematic of reverse osmosis process	234
E-2.	Schematic of multifiltration water processor	235
E-3.	VCD schematic	236
E-4.	TIMES schematic	237
E-5.	Schematic of the VAPCAR process	238
E-6.	Schematic of a water quality monitoring approach	239
F-1.	*Skylab* commode configuration	246
F-2.	*Skylab* waste collection bag configuration	247
F-3.	Orbiter commode and urinal configuration	248
F-4.	S.S. *Freedom* commode schematic	249
F-5.	S.S. *Freedom* urinal schematic	250
F-6.	Schematic of SCWO process	251

LIST OF ILLUSTRATIONS (Continued)

Figure	Title	Page
H-1.	*Skylab* coolant loop	266
H-2.	Vapor-compression refrigerator/freezer for S.S. *Freedom*	267
H-3.	The basic elements of a controlled ecological life support system	269
H-4.	Schematic of a hydroponic plant growth system	272
J-1.	PLSS design curve for LCVG water supply comfort temperature	295
J-2.	PLSS humidity design device for single-person metabolic water vapor loads (SI units)	296
J-3.	PLSS humidity design device for single-person metabolic water vapor loads (English units)	297

LIST OF TABLES

Table	Title	Page
1.	Allowable temperatures and relative humidities in U.S. space habitats	14
2.	Fire detection and suppression	19
3.	Levels of ECLSS mass loop closure	32
4.	Typical NASA phase C/D baseline design review milestones and objectives	52
5.	Technology maturity scale	62
6.	Generic trade study results matrix	64
7.	PUMP data input screen	77
8.	Simulation control data input screen	77
9.	Criticality ratings	88
10.	ECLS applications compared to space habitat ECLS functions	95
11.	Gas analyses	151
12.	Water analyses	152
13.	Microorganism analyses performed on water samples	153
14.	Description of trade study parameters	169
15.	Comparison of weight factors used to select ECLSS technologies for the LTV and MTV	170
16.	Qualitative parameter ratings for ECLSS technologies	171
17.	Potential mass advantages	173
18.	Potential power advantages	174
A-1.	Levels of hardware and software complexity	179
B-1.	Atmosphere composition specifications for U.S. space habitats	184
B-2.	Oxygen required/carbon dioxide produced	185
B-3.	Space Station *Freedom* respirable atmosphere requirements	185

LIST OF TABLES (Continued)

Table	Title	Page
B-4.	Atmosphere revitalization technologies	186
B-5.	Relative comparisons between CO_2 reduction combustion processes and CO_2 electrolysis	199
B-6.	180-day SMAC level priority compounds for S.S. *Freedom*	204
B-7.	Methods of detecting, identifying, and/or quantifying trace contaminants	205
B-8.	Methods of detecting, identifying, and/or enumerating microorganisms	206
C-1.	ACS design parameters for S.S. *Freedom* (SI units)	213
C-2.	ACS design parameters for S.S. *Freedom* (English units)	214
D-1.	THC limits for U.S. space habitats	220
D-2.	Metabolic rates per person	222
E-1.	Water usage requirements	230
E-2.	Water quality specification for S.S. *Freedom* (maximum contaminant levels)	231
E-3.	Atmosphere revitalization technologies	233
F-1.	Design parameters for waste management on S.S. *Freedom*	243
F-2.	Comparison of water oxidation methods	251
G-1.	FDS methods and requirements of U.S. space habitats	258
G-2.	Fire suppression methods	261
H-1.	Refrigerator and freezer requirements and methods in space habitats	265
I-1.	ECLSS on U.S. space habitats	281
I-2.	ECLSS on U.S.S.R./Russian space habitats	285

ABBREVIATIONS AND ACRONYMS

2BMS	Two-Bed Molecular Sieve (CO_2 removal assembly)
4BMS	Four-Bed Molecular Sieve (CO_2 removal assembly)
AC	Assembly Complete (S.S. *Freedom*) (later referred to as EMCC)
ACD	Architectural Control Document
ACRS	Advanced Carbon Reactor Subassembly (with Sabatier CO_2 reduction)
ACS	Atmosphere Control and Supply
AIChE	American Institute of Chemical Engineers
AM	Airlock Module
APM	Attached Pressurized Module for S.S. *Freedom*, ESA module
AR	Atmosphere Revitalization
ARC	Ames Research Center
ARS	Atmosphere Revitalization Subsystem
ASHRAE	American Society of Heating, Refrigeration, and Air Conditioning Engineers
ASME	American Society of Mechanical Engineers
B1 Spec	Subsystem prime item development specification conforming to MIL-STD-490A
B2 Spec	Component prime item development specification conforming to MIL-STD-490A
BAE	The Boeing Aerospace and Electronics Company
BETS	Boeing Engineering Trade Study
BL	BaseLine technology or approach
BOST	Baselined Operational System Test
Btu	British thermal units (energy unit in English units)
C	Temperature in degrees Celsius (SI metric unit)
CASE/A	Computer Aided System Engineering and Analysis (ECLS system-level analytical tool)
CDR	Critical Design Review
CDRA	Carbon Dioxide Removal Assembly
CEI Spec	Contract End Item Specification
CELSS	Controlled Ecological Life Support System
CFE	Contractor Furnished Equipment
CFR	Carbon Formation Reactor (CO_2 Reduction)
CH_4	Methane
CHM	Constructable Habitat Module
CHX	Condensing Heat eXchanger
CI	Configuration Inspection

CIL	Critical Items List
CL	Closed Loop (LISSA terminology)
CM	Command Module (Apollo)
	Configuration Management
CMIF	Core Module Integration Facility (former name for the Manned Habitat Environmental Control and Life Support System Test Facility at MSFC)
CMS	Core Module Simulator
CO	Carbon Monoxide
CO_2	Carbon Dioxide
CO_2 EL	Carbon Dioxide ELectrolysis (CO_2 reduction/O_2 generation assembly)
CO_2 EL/BD	Carbon Dioxide ELectrolysis and BoudouarD reactor (CO_2 reduction/O_2 generation/carbon formation assembly) (LISSA terminology)
COQ	Certificate Of Qualification
COSMIC	COmputer Software Management and Information Center
CR	CO_2 Removal (LISSA terminology)
CReA	CO_2 Reduction Assembly
CSA	Canadian Space Agency
dc	Direct current
DDT&E	Design, Development, Testing, and Evaluation
DRR	Design Readiness Review
DTC	Design To Cost
ECLS	Environmental Control and Life Support
ECLSS	Environmental Control and Life Support System
ECS	Environmental Control System
EDC	Electrochemical Depolarized Cell (CO_2 removal subsystem)
EEE	Electrical, Electronic, and Electromechanical parts standards
EIB	Electrical Interface Box
EMC	Electromagnetic Compatibility
EMCC	Eight-Man Crew Capability (S.S. *Freedom*)
EMCT	Extended duration Metabolic Control Test
EMI	Electromagnetic Interference
EMU	Extravehicular Mobility Unit
EPMR	Electric Power Margin Report
ESA	European Space Agency
ESAP	ECLS Systems Assessment Program (ECLSS-level analytical tool)
EVA	Extra-Vehicular Activity

F	Temperature in degrees Fahrenheit
FAR	Final Acceptance Review
FCI	Functional Configuration Inspection
FDS	Fire Detection and Suppression
Flow	Intramodule ventilation flow test
FLUINT	FLUid INTegrator (computer program based on SINDA '85)
FMEA	Failure Modes and Effects Analysis
FOP	Facility Operating Procedure
FORTRAN	FORmula TRANslation (computer programming language)
FRR	Flight Readiness Review
FSSR	Flight System Software Requirements
ft	Feet
G-189A	ECLS system-level analytical tool
g	Gravity (Earth normal, 9.81 m/s^2 (32.2 ft/s^2))
GC/MS	Gas Chromatograph/Mass Spectrometer
GN&C	Guidance, Navigation, and Control
h	Hours
HAB	HABitation module for S.S. *Freedom*
HEPA	High Efficiency Particulate Atmosphere (Air) filter
H_2	Hydrogen
H_2O	Water
H_2O_2	Hydrogen peroxide
HVAC	Heating, Ventilation, and Air Conditioning
IASLS	Institute for Advanced Studies in Life Support
ICD	Interface Control Document
ICES	International (formerly Intersociety) Conference on Environmental Systems
IDD	Interface Development Document
IMV	InterModule Ventilation
in situ	On site (Latin)
IPU	Integrated Plot Utility (part of CASE/A)
IR	Infrared Radiation
IRAD	Independent Research and Development
IRB	Institutional Review Board
IRN	Interface Revision Notice
ITCS	Internal Thermal Control System
IVA	IntraVehicular Activity

IWG	Interface Working Group
IX	Ion eXchange material (for water purification)
JEM	Japanese Experiment Module for S.S. *Freedom*
JPL	Jet Propulsion Laboratory
JSC	Johnson Space Center
JVIRD	Joint Verification and Integration Requirements Documents
kg	Kilogram
KSC	Kennedy Space Center
L	Liter (volume unit in SI metric)
LAB	LABoratory module for S.S. *Freedom*
lb	Pounds mass
LCC	Life Cycle Costs
LCVG	Liquid Cooled Ventilation Garment
LEM	Lunar Excursion Module (Apollo)
LEO	Low Earth Orbit
LeRC	Lewis Research Center
LEV	Lunar Excursion Vehicle
LiOH	Lithium Hydroxide (CO_2 removal, trace contaminant control) (frequently pronounced "lie-oh")
LISSA	LIfe Support Systems Analysis model
LLOX	Lunar Liquid OXygen facility
LTV	Lunar Transfer Vehicle
MCL	Maximum Contaminant Level of contaminants in water
MCT	Metabolic Control Test
MCV	Microbial Check Valve (for water purification)
MDSSC	McDonnell-Douglas Space Systems Corporation
min	Minutes
MF	Multi-Filtration (water recovery assembly)
mL	Milliliter
MO	MicroOrganism
MOST	"Manned" Operational System Test
MMU	"Manned" Maneuvering Unit
MPR	Mass Properties Report
MS	Mass Spectrometer or Mass Spectrometry
MSDS	Material Safety Data Sheet
MSFC	Marshall Space Flight Center

MTC	"Man-Tended" Capability (S.S. *Freedom*)
MTV	Mars Transfer Vehicle
MUA	Material Usage Agreement
MVP	Master Verification Plan
N_2	Nitrogen
NASA	National Aeronautics and Space Administration
NASA/HQ	NASA Headquarters
NASDA	National Space Development Agency (Japan)
NDIR	Non-Dispersive Infrared Radiation
NFPA	National Fire Protection Association
N_2H_2	Hydrazine
NSCORT	NASA Specialized Centers of Research and Training
NSF	National Science Foundation
NTU	Nephelometric Turbidity Unit
O_2	Oxygen
OL	Open Loop (LISSA terminology)
ORI	Operational Readiness Inspection
ORU	Orbital Replaceable Unit
OSHA	Occupational Safety and Health Administration
OWS	Orbital WorkShop (*Skylab*)
Pa	Pascal (metric unit of pressure) (N/m^2)
P/C	PhysicoChemical methods of performing ECLS functions
pCO_2	Partial pressure of carbon dioxide
PCWQM	Process Control Water Quality Monitor
PDR	Preliminary Design Review
	Program Design Review
	Project Design Review
PDRD	Program Definition and Requirements Document
PIRN	Preliminary Interface Revision Notice
PLSS	Portable Life Support System (for EVA suits)
ppm	Parts per million
PMC	Permanently-"Manned" Capability (S.S. *Freedom*)
pO_2	Partial pressure of oxygen
POST	Predevelopment Operational System Test
PRR	Preliminary Requirements Review
psia	Pounds per square inch absolute

Pt/Co	Platinum/cobalt method of determining the true color of water
P/V	PhotoVoltaic (solar cell power generation method)
QD	Quick Disconnect
RH	Relative Humidity
RID	Review Item Discrepancy
RO	Reverse Osmosis (water recovery method)
s	Second
SAR	Systems Acceptance Review
	Safety Assessment Report
SCUBA	Self-Contained Underwater Breathing Apparatus
SCWO	Super Critical Water Oxidation (mass recovery method)
SFE	Static Feed water Electrolysis (O_2 generation method)
	Subsystem Functional Element (for the LISSA model)
SINDA '85	Systems Integrated Numerical Differencing Analyzer (system-level analytical tool)
SMAC	Spacecraft Maximum Allowable Concentrations of trace contaminants
SPE	Solid Polymer water Electrolysis (O_2 generation method)
SRB	Safety Review Board
SRD	System Requirements Document
SR&QA	Safety, Reliability, and Quality Assurance
SRR	System Requirements Review
SSC	Stennis Space Center
S.S. *Freedom*	Space Station *Freedom*
SSWRD	Systems Software Requirements Document
STP	Standard Temperature and Pressure
SwRR	Software Requirements Review
TCC	Trace Contaminant Control
TCCA	Trace Contaminant Control Assembly
TCP	Test and Checkout Procedure
TCRSD	Test and Checkout Requirements and Specifications Document
THC	Temperature and Humidity Control
THCS	Temperature and Humidity Control Subsystem
TIMES	Thermoelectric Integrated Membrane Evaporation Subsystem (urine processing assembly)
TON	Threshold Odor Number
TRASYS	Thermal Radiation Analyzer System (computer program)
TRD	Test Requirements Document

TRL	Technology Readiness Level
TTN	Threshold Taste Number
U.S.	United States of America
U.S.S.R.	Union of Soviet Socialist Republics
UV	UltraViolet radiation
V	Volts
VAPCAR	See VPCAR
VCD	Vapor Compression and Distillation (urine processing assembly)
VCRI	Verification Cross Reference Index
VPCAR	Vapor Phase Catalytic Ammonia Removal (urine processing assembly)
VIRD	Verification and Integration Requirements Documents
VRSD	Verification Requirements and Specifications Document
W	Watt (energy unit in SI metric)
WM	Waste Management
WP	Work Package (S.S. *Freedom* program)
	Water Processor
WQM	Water Quality Monitor
WRM	Water Recovery and Management
WVE	Water Vapor Electrolysis (O_2 generation method)

PART I

FUNDAMENTALS OF ECLSS DESIGN

1.0 INTRODUCTION—ECLS AND HUMAN SPACE FLIGHT

Human exploration and utilization of space are on the verge of great advances as an international space station* is built and becomes operational in the 1990's. Missions to return to the Moon and to venture to Mars will follow in the 21st century and a permanent human presence in space beyond low Earth orbit (LEO) will result. An essential part of these missions is Environmental Control and Life Support (ECLS), in addition to the transfer vehicles, propulsion systems, habitats, and surface roving vehicles that will be required. The task of providing a healthy, productive living and working environment away from the Earth's biosphere becomes increasingly challenging as human exploration of space leads to voyages of longer duration and to more distant destinations. The ECLS system (ECLSS) provides the appropriate conditions for such an environment.

Various scenarios for these missions have been considered, placing a wide range of requirements on the ECLSS. Detailed studies of some long duration mission scenarios were performed as early as the 1960's and 1970's.[1-9]** Different mission scenarios are reflected in the ECLSS design. For example, a mission of short duration, such as during Project Mercury or a lunar surface rover, can use a very simple ECLSS that does not recover any of the metabolic byproducts (CO_2, waste water, etc.), whereas for a longer mission, such as the international space station or a mission to Mars, recycling mass is necessary to reduce resupply and storage requirements and cost. As these examples indicate, for different mission requirements, the most appropriate approach for performing the ECLS functions may be quite different, such that for some missions "open-loop" approaches with no recycling of mass are best, whereas for others, "closed-loop" ones are essential. For very long duration missions (on the order of years) maximum closure of the mass loops ultimately requires that solid waste be recycled and that food be grown from the organic waste, meaning that someday plants will become an integral part of the ECLS systems of habitats on the Moon, Mars, and elsewhere. These ECLS systems may, in the distant future, begin to approach the complexity of the Earth's biosphere, which has many "built-in" redundancies and can accommodate "subsystem" failures, such as drought, fire, or pollution, to a great extent, while maintaining the basic requirements for life to flourish.

The Earth itself has been compared to a spaceship[10] and the ECLS challenge for human space flight is to duplicate the critical functions of the intricate, interdependent processes that occur on the Earth. Atmosphere revitalization and water recovery are basic functions that are part of most scenarios for future human missions. Airborne contaminant control is extremely important for long duration missions since long-term exposure to even minute amounts of some chemicals can be deleterious to people. On the Earth, many of these functions are performed by plants and microorganisms which transform CO_2 into O_2 via photosynthesis and purify air via other metabolic reactions. Evaporation from the oceans is the major process for purifying water, but plants also purify water via transpiration. Microorganisms are also important for purifying water by transforming

*Subsequent to completion of the manuscript for this document the Space Station *Freedom* program was replaced by an international space station program including participation of Russia. References later in this document to Space Station *Freedom* are therefore for illustration purposes only.

**Superscript numbers in parentheses refer to documents listed in the References section. The references are numbered starting with (1) for each chapter and are grouped according to chapter in the References section.

PAGE 2 INTENTIONALLY BLANK

PRECEDING PAGE BLANK NOT FILMED

contaminants into usable or benign forms. Biological life support systems for space habitats are being studied, but they are not yet sufficiently well defined or understood, so we are dependent on our understanding of physical and chemical processes to support human life away from the Earth.

The general trend with advancing technology is toward doing more with less, as stated by R. Buckminster Fuller in the quotations preceding the Preface. This means developing and using technologies that are inherently more reliable, capable, and efficient than previously used technologies; reducing the use of expendables; and developing other means of minimizing the *total* mass, volume, power consumption, and cost of an ECLSS while ensuring safe operation. This requires creatively using the available technologies in the design of a system. In addition to the hardware and software performing the ECLS functions, an ECLSS involves spare parts, logistics resupply, and intersystem impacts. To obtain maximum performance from minimum resources, it is necessary to thoroughly understand the ECLS requirements for a particular mission, the capabilities and limitations of the available technologies, and methods of ensuring that the requirements will be met by the selected technologies. All of these aspects are discussed in the following chapters as well as many of the lessons that have been learned from previous programs.

2.0 ECLS—PURPOSE AND FUNCTIONS

Specific needs must be met in order to support life, and the purpose of an ECLSS is to provide these needs where the Earth's natural "life support system" cannot, such as in space. The basic needs are appropriate atmosphere composition and temperatures, which must be continually satisfied; sufficiently pure water, which must be provided every few hours; and food, which must be provided before the body's internal stores of energy are depleted. The maximum durations for which people can live without these basic needs are approximately 4 minutes without oxygen, 3 days without water, and up to 30 days without food.(1) Figure 1 lists typical values for the needs and effluents per person per day.(2) In addition to metabolic needs and effluents, wash water, including water for washing clothes and dishes, is included for completeness.

For short duration missions, it is not essential to recycle oxygen, water, or other mass since sufficient quantities can economically be taken along, without the complexity and cost of a recycling system. However, as missions become longer, functions such as O_2 recovery and recycling of waste water and solid waste become important to keep the resupply and storage requirements from becoming prohibitive. The need to recycle mass for long duration missions can be illustrated by a corollary with the Earth's biosphere. There are increasing concerns about the large percentage of U.S. municipal landfills that will reach capacity during the next few years. The question arises "Can we reduce the amounts of waste generated or convert the waste into usable products?" Due to limited locations that are suitable for waste disposal, efforts to reduce by design the amounts of waste generated, by making processes more efficient and eliminating unnecessary waste such as excess packaging, and to recycle waste products into usable products are becoming increasingly necessary. On long duration space missions, it is also necessary to ensure that processes are performed efficiently and to recycle as much of the mass as possible, not because there is nowhere to store or dispose of waste, but because it is expensive to replace discarded mass. And, also, because discarding mass in space increases orbital debris, and discarding mass on planetary surfaces may adversely affect scientific studies and lead to other problems.

The specific ECLS functions that are needed for a mission depend on the mission requirements. For this reason, the definition of an ECLSS will vary from one mission to another. As described in this chapter, the ECLS functions include: atmosphere revitalization, atmosphere control and supply, temperature and humidity control, water recovery and management, waste management, and fire detection and suppression. Other functions that may be considered part of the ECLSS include: food storage and preparation, plant growth facilities, radiation protection, external dust removal, thermally conditioned storage, and hyperbaric chambers and airlocks. These functions and their subfunctions are shown in figure 2.

When describing the equipment that performs the ECLS functions, specific terminology is used for different levels of complexity. Together, all of the equipment performing the ECLS functions constitute the ECLSS, which is made up of subsystems such as atmosphere revitalization and water recovery and management. The convention used in this book for identifying the complexity level of the hardware and software performing the different levels of functions is described in appendix A.

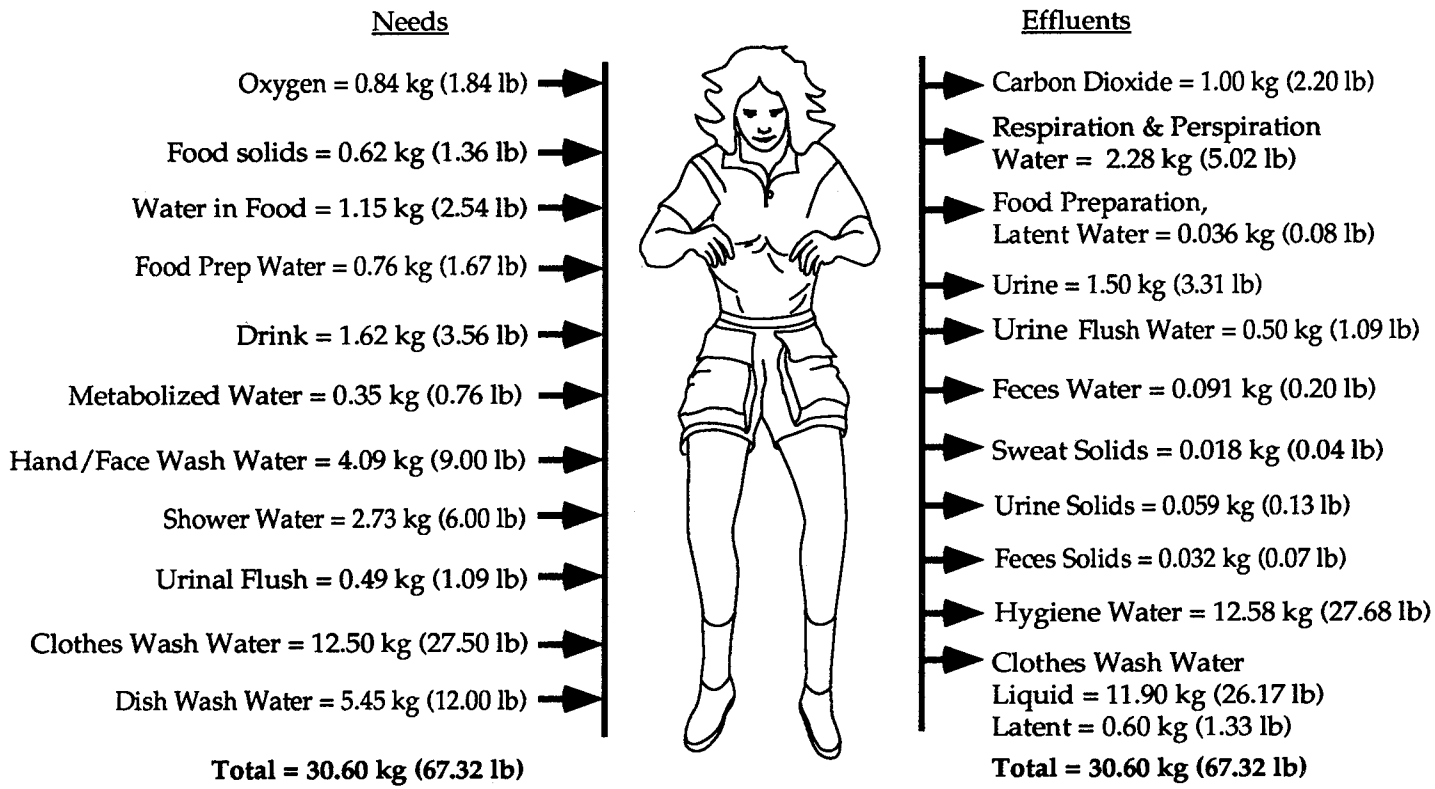

Note: These values are based on an average metabolic rate of 136.7 W/person (11,200 Btu/person/day) and a respiration quotient of 0.87. The values will be higher when activity levels are greater and for larger than average people. The respiration quotient is the molar ratio of CO_2 generated to O_2 consumed.

Figure 1. Human needs and effluents mass balance (per person per day).

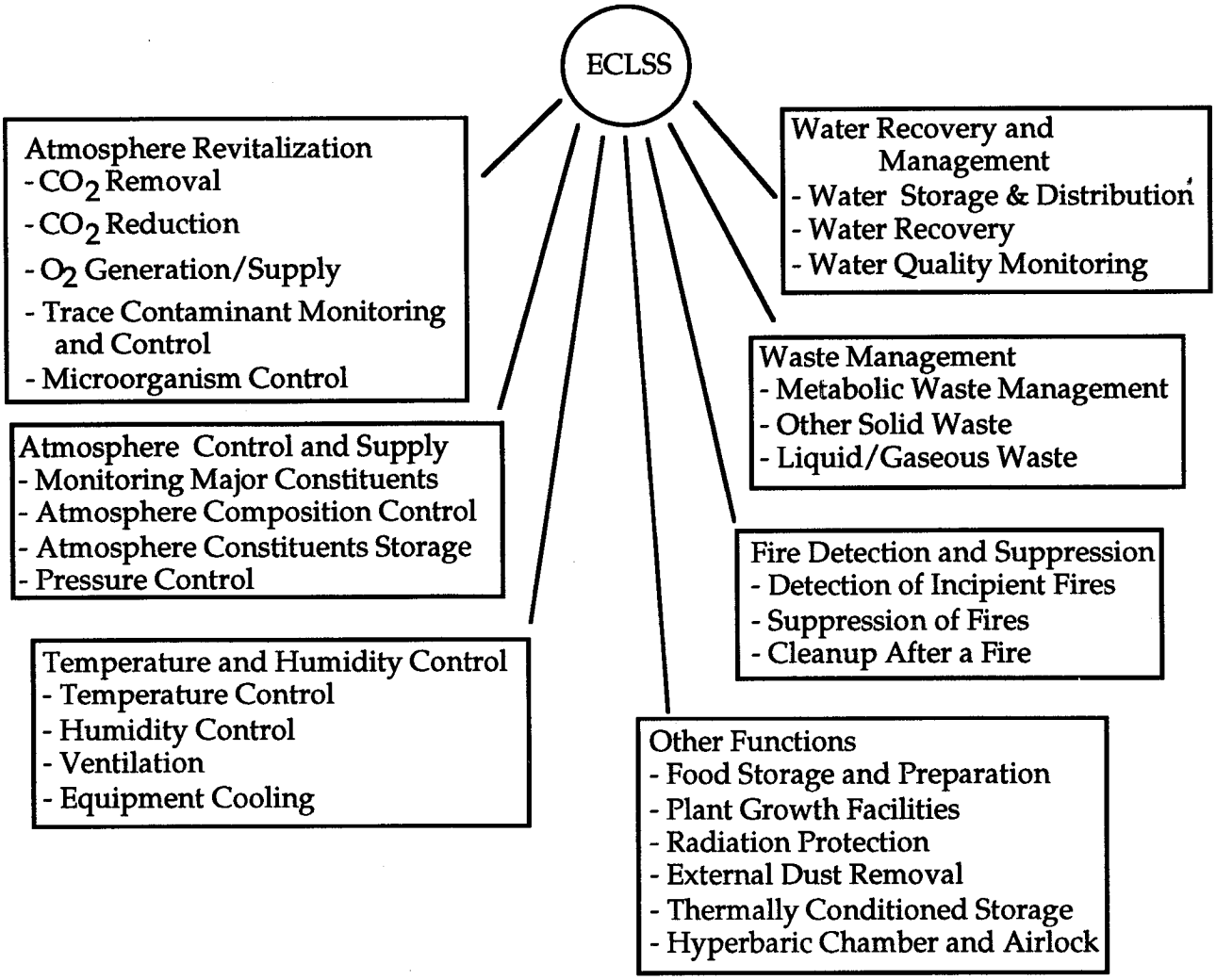

Figure 2. ECLSS functions and subfunctions.

2.1 Atmosphere Revitalization

The air surrounding the Earth is composed (by volume, for dry air) of 78.084 percent nitrogen, 20.948 percent oxygen, 0.934 percent argon, 0.0314 percent carbon dioxide, and minute quantities of other gases.[3,4] Water vapor is also present in amounts up to the saturation level. The degree of saturation (i.e., the relative humidity) depends upon temperature and pressure.[5] Additional components include trace contaminants, dust, and smoke particles. The components of concern with regard to space habitats are oxygen, carbon dioxide, nitrogen, water vapor, trace contaminants, dust, and smoke particles.

Oxygen is consumed by people and animals and is converted into carbon dioxide during the process of converting food into usable energy and body mass. It is, therefore, imperative to maintain a sufficiently high level (partial pressure) of oxygen and a sufficiently low level of carbon dioxide. The methods by which acceptable levels can be maintained are discussed in the following sections. It is necessary to minimize the amounts of trace contaminants, dust, and smoke particles in a space habitat atmosphere, due to health hazards and the possibility of damaging equipment.

Generally, the term "atmosphere" refers to the gas either surrounding a planet or contained within a sealed vessel such as a space habitat, and the term "air" refers to the specific composition of the Earth's atmosphere, especially the nitrogen, oxygen, carbon dioxide, and water vapor components. Therefore, the atmosphere of a space habitat may or may not be "air" and typically has not been. For consistency, the term "atmosphere" will be used throughout this document when referring to the breathable gas in space habitats.

The atmosphere compositions that have been used on U.S. space habitats are described in appendix B, along with atmosphere revitalization (AR) requirements and design information. As shown in figure 3, the functions that are required in order to revitalize the atmosphere in a closed-loop manner can be separated into CO_2 removal, O_2 generation, trace contaminant control, and recovery of O_2 from CO_2 (CO_2 reduction). Temperature and humidity control (discussed in section 2.3) is also required in order to provide the proper temperature and moisture levels, and filters (or some other means) of removing dust particles and microorganisms are required as well. Plants and microorganisms can perform many of the AR functions simultaneously and are being studied for use in space habitats. Such "bioregenerative" life support systems are discussed in appendix H.

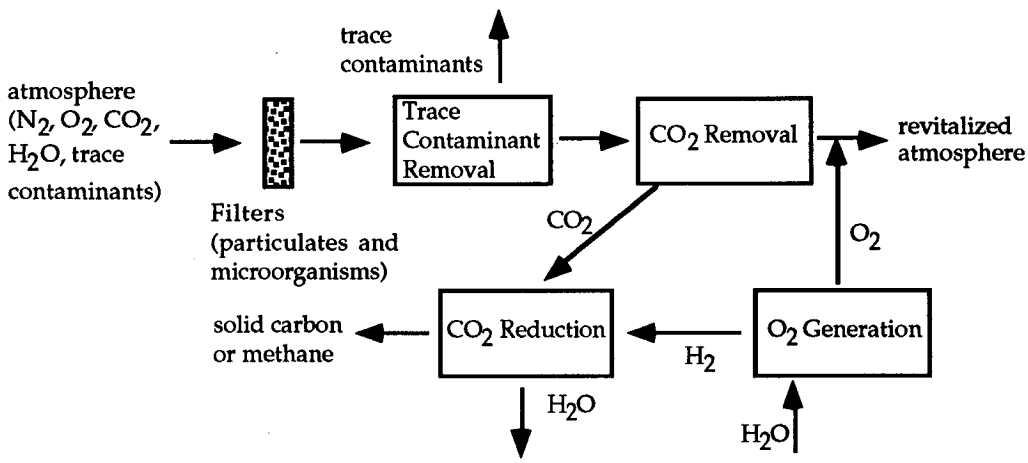

Figure 3. Atmosphere revitalization.

2.1.1 CO_2 Removal

The concentration of CO_2 must remain at a very low level in order to avoid adverse physiological effects. (See section 3.2.1.1 for the requirements.) Because CO_2 is generated during normal metabolic respiration at an average rate of 1 kg (2.2 lb) per person per day, in a closed volume, the level of CO_2 would quickly increase to unacceptable levels (greater than 1.6 kPa or 12 mmHg) without some method of removing it. Many different methods of removing CO_2 from the atmosphere have been considered for use on space habitats. These methods are based on absorption (chemical or electrochemical reaction with a sorbent material), adsorption (physical attraction to a sorbent material), membrane separation, or biological consumption. The method which has been used on most U.S. space habitats is absorption by lithium hydroxide (LiOH). In the process of absorbing CO_2, a nonreversible chemical reaction occurs which means that the LiOH must be periodically replaced with fresh material. This works well for short duration missions, but for missions lasting longer than about 2 weeks, the storage requirements of this nonregenerable method become prohibitive. For this reason, on *Skylab* a regenerable molecular sieve was used to adsorb CO_2. A molecular sieve (such as zeolite) has a crystalline structure with an extremely large surface area

due to microscopic pores. CO_2 is trapped in these pores, while O_2 and N_2 pass through.[3,6] Because no chemical reaction occurs the molecular sieve can repeatedly adsorb and desorb CO_2 (for example, by exposure to space vacuum as on *Skylab*, or by heating and reducing the pressure with a vacuum pump). This avoids the storage requirements of LiOH. Other regenerable methods which have been tested, although not yet used on a flight, include chemical or electrochemical absorption and desorption.

2.1.2 CO_2 Reduction

When CO_2 is vented overboard as on *Skylab*, there is no need to process it further. However, on longer duration missions, this loss of mass, particularly the O_2, will lead to increased storage or resupply requirements which will be expensive for missions such as S.S. *Freedom* and prohibitive for missions to the Moon or Mars. To recover this O_2, there are several methods which have been considered. These methods include reacting CO_2 with H_2 at high temperature in the presence of a catalyst to produce H_2O and either methane or solid carbon, direct electrochemical separation of O_2 from CO_2, or biological methods. So far, no U.S. space habitats have required recovery of the O_2 from CO_2, but two methods are being considered for use on S.S. *Freedom*: the Bosch reactor which produces solid carbon and H_2O, and the Sabatier reactor which produces methane and H_2O. Both of these methods react CO_2 with H_2 at relatively high temperatures (480 to 650 °C (900 to 1,200 °F)).

2.1.3 O_2 Generation

The concentration of O_2 must be maintained at a sufficiently high partial pressure—near the sea-level partial pressure of 21.4 kPa (3.1 psia)—to avoid adverse physiological effects such as decreased night vision, impaired memory and coordination, unconsciousness, convulsions, and death of nerve tissue. These effects can begin within a few seconds of O_2 deprivation, depending on the degree of hypoxia (lack of oxygen), so it is extremely vital to maintain an adequate O_2 supply. Higher partial pressures of O_2 (starting at about 32.4 kPa (4.7 psia)) can also lead to physiological problems such as lung irritation.[4] The acceptable and unacceptable ranges of O_2 percentages for a range of total atmospheric pressures are shown on figure 4.[7]

On all U.S. missions to date, the O_2 has been supplied from tanks which carried sufficient O_2 for the duration of the mission. For longer duration missions, the storage or resupply penalty is excessive, and some method of recovering O_2 from waste mass is required. For S.S. *Freedom*, the O_2 will initially be resupplied, but will later be generated by electrolysis of recovered waste water. Other methods include electrolysis of water vapor and electrolysis of CO_2. There are also biological methods for generating O_2, including algae or other microorganisms and higher plants such as salad vegetables.[8]

2.1.4 Trace Contaminant Monitoring and Control

The atmosphere of a space habitat does not have the volume, relative to contaminant sources, of the Earth's atmosphere and, as a result, does not have much buffering capacity to dilute contaminants. Because of this, even a small amount of a contaminant in a space habitat may result in a hazardous condition. It is, therefore, essential to closely monitor the amounts of contaminants in the space habitat atmosphere and to have effective methods of removing excess contaminants. The sources of trace contaminants include offgassing from materials, metabolic byproducts from the crew (feces, urine, perspiration, etc.), food preparation, housekeeping cleaners, and scientific experiments.

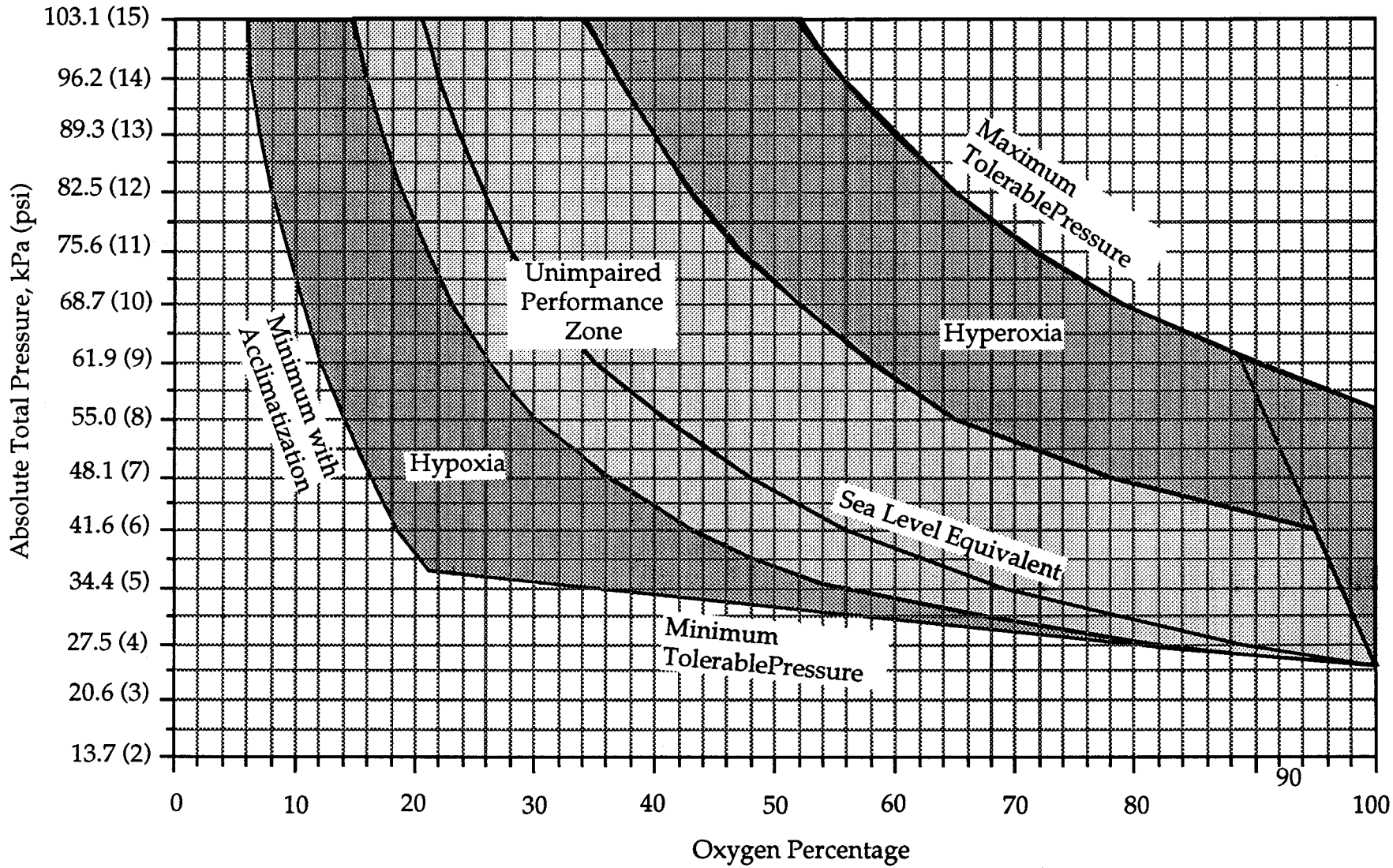

Note: Extracted from NASA-STD-3000 Vol. 1 Rev. A

Figure 4. Physiological effects of oxygen concentrations.

Passive contamination control, such as careful selection of materials to minimize offgassing and dust particle generation, can significantly reduce the amounts of contaminants which must be actively removed and is a necessary first step. However, active contamination control is necessary, and is increasingly important as mission durations become longer.

Various methods of trace contaminant monitoring are used on Earth, including gas chromatography/mass spectrometry (GC/MS), specific contaminant monitoring (e.g., combustible gas sensors), infrared (IR) dispersion/spectroscopy, and ultraviolet (UV) spectroscopy. For space habitat applications, a carbon monoxide (CO) sensor was used on Mercury spacecraft, gas detector tubes (containing compounds sensitive to specific contaminants) were used on *Skylab* to monitor CO and toluene diisocyanate (a product of polyurethane foam decomposition), and a CO monitor along with a GC/MS will be used on S.S. *Freedom* to monitor about 200 contaminants of concern. (Appendix B contains a listing of contaminants and a method of calculating the toxicity of contaminant mixtures.) Particulate levels will be monitored by a "nondispersive infrared" (NDIR) technique on *S.S. Freedom*. For Gemini, Apollo, the orbiter, and Spacelab, no on-orbit monitoring for trace contaminants was (or is) performed, but samples of the atmosphere were (or are) collected and returned to Earth for analysis.

Contaminants such as dust particles and trace gases are present in the Earth's atmosphere. Dust is removed by gravity and rainfall, and trace gases are transformed by physical, chemical, or biological processes. In space, gravity effects are minimal so other means of removing dust particles are needed. The usual methods are screens and high efficiency particulate atmosphere (HEPA) filters in the ventilation system. Other methods of dust removal are electrostatic precipitation and wiping surfaces where dust particles collect. Trace gases, which may be deleterious to the crew, must be actively removed by absorption, adsorption, or catalytic oxidation. For example, the liquid water formed in condensing heat exchangers absorbs water soluble contaminants (similar to the way rainfall absorbs contaminants); LiOH chemically absorbs acidic contaminants; activated charcoal physically adsorbs high molecular weight nonpolar organic contaminants; catalytic oxidation at ambient temperatures using platinum or palladium impregnated charcoal controls CO, H_2, and N_2H_2; and high temperature catalytic oxidation reactors (approximately 400 °C (750 °F)) with a palladium catalyst on alumina (Al_2O_3) control low molecular weight organic compounds such as CH_4 by reacting them with O_2 to form CO_2 and H_2O.

2.1.5 Microorganism Control

Microorganisms can spread very rapidly when present in the atmosphere of a space habitat due to forced convection ventilation and reduced gravity. Pathogenic microorganisms are of special concern. HEPA filters can be used to remove them from the atmosphere, depending on the pore size of the filters and the size of the microorganisms. These filters are placed at strategic locations in the ventilation system to ensure that microorganisms, and particulate contaminants, will be removed to maintain acceptable levels.

2.2 Atmosphere Control and Supply

The composition and pressure of the atmosphere of a space habitat is decided during the design process based on physiological, technical, and mission requirements. It is important to maintain the proper composition and pressure to ensure optimal performance of the crew and equipment. The partial pressure of O_2 must be sufficiently high to ensure proper absorption during respiration, so monitoring and controlling this level is extremely important. The total pressures of

space habitat atmospheres have varied from 34.5 kPa (5.0 psia) to 101.0 kPa (14.7 psia) with the pO_2 ranging from 21.4 kPa (3.1 psia) to 34.5 kPa (5.0 psia) for short-duration missions. Early U.S. space habitats used pure oxygen in space (at 34.5 kPa (5.0 psia)) and during testing, until the Apollo fire during a practice session on the launch pad in 1967 in which three astronauts died (Roger Chaffee, Gus Grissom, and Ed White).[9,10,11] While the 34.5 kPa (5.0 psia) pressure of pure O_2 does not pose a special fire hazard, during testing, the pressure was increased to 110.2 kPa (16.0 psia) to avoid overstressing the vehicle structure. With pure O_2 at 110.2 kPa (16.0 psia), fire can spread much more rapidly. Nitrogen serves to inhibit the flammability of oxygen, and, as a result of the fire, it was decided to use a mixture of 40 percent N_2 and 60 percent O_2 during prelaunch testing.[12] The orbiter atmosphere composition and pressure is closer to the Earth-normal conditions at sea level for reasons including safety and easier testing of equipment. When preparing for an EVA, the pressure is reduced to 70.3 kPa (10.2 psia) to ease the transition to the space suit pressure. S.S. *Freedom* is being designed with atmosphere conditions similar to the orbiter for the same reasons, and also because there are physiological reasons for including N_2 for long duration missions.[4] A simplified schematic of an atmosphere control and supply (ACS) system is shown in figure 5. System requirements and technology options are given in appendix C.

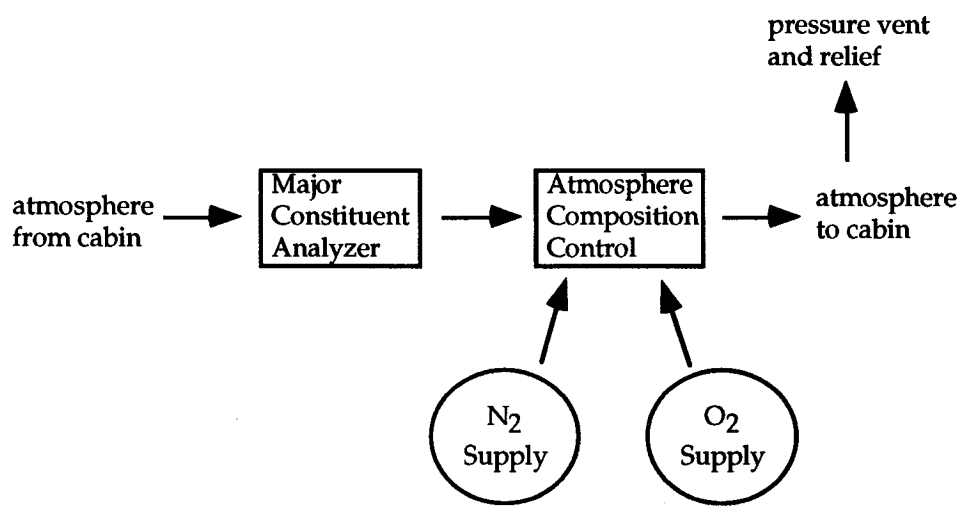

Figure 5. Atmosphere control and supply.

2.2.1 Monitoring Major Constituents

The major constituents of space habitat atmospheres are N_2, O_2, H_2O, and CO_2. Other gases such as H_2, CH_4, and CO may also be considered "major," due to the potential hazard they pose, even though they are present in small amounts. The most basic approach to monitoring the levels of these gases is to have separate analyzers for each gas (e.g., a specific O_2 sensor). Other methods such as mass spectrometry (MS) can monitor all of these gases. The MS, however, cannot distinguish between different compounds having the same molecular weight (e.g., N_2 and CO). To identify and quantify these compounds, additional, specific monitors are needed. Information from a trace contaminant monitor may also be useful in monitoring the major constituents. Such a combination of approaches provides the benefit of redundancy for this critical function.

2.2.2 Atmosphere Composition Control

Various methods of controlling the composition of the atmosphere have been used or considered. Control mechanisms can be either automatic, manual, or a combination of these, and may operate pneumatically, mechanically, or electromechanically. General approaches include "on demand" addition of makeup gases to counter leakage and periodic injection of makeup gases. The amounts of O_2 or N_2 added are determined by monitoring changes in total pressure and the O_2 partial pressure. To reduce the amounts of makeup gases which must be stored, the space habitat will become tighter, with the goal of eliminating leakage. This will affect atmosphere composition control by eliminating leakage or venting as acceptable methods of removing excess constituents. Instead, if the total pressure gets too high, atmosphere will need to be pumped to storage tanks, or if the level of a specific constituent is too high it will need to be selectively removed and stored.

2.2.3 Atmosphere Constituents Storage

There are several options for storage of the atmosphere constituent gases, O_2 and N_2. High pressure tanks have been used (on Mercury, Gemini, Apollo, *Skylab*, shuttle, and Spacelab) as well as cryogenic storage of liquefied gases (on Gemini, Apollo, and shuttle, and will be on S.S. *Freedom*). Nitrogen can also be stored as hydrazine (H_2N_2) and chemically released as needed. However, hydrazine is highly toxic, which is a major disadvantage. Also, H_2 is released, which is an advantage if it is needed for another process (such as propulsion), otherwise it may not be an advantage. Factors which must be considered when deciding which method is most appropriate for a particular mission include safety, reliability, the available volume, the amount of power required to compress or liquefy the gases, and whether this would be done in orbit or on the ground and resupplied. For a closed-loop system where O_2 is generated on demand, such as by electrolyzing water, the need for O_2 storage is reduced or eliminated, and only a small tank may be needed to accommodate fluctuations in production or demand.

2.2.4 Pressure Control

The capability to deal with out-of-specification pressures is critical to ensure that equipment operates properly and that excessive stresses do not occur in the habitat pressure shell. Maintaining constant total pressure is also important for physiological reasons, as is maintaining the specified partial pressures of O_2 and CO_2. Pressures below the design range affect the abilities of the temperature and humidity control subsystem to properly cool the habitat because of reduced heat capacity of the atmosphere. Underpressure situations can be dealt with by having makeup gases stored in tanks. Overpressure situations can be dealt with by compressing excess atmosphere for later use or by venting excess atmosphere to space. For habitats which return to Earth, the capability of repressurizing from the design pressure (if less than 101.3 kPa (14.7 psia)) to Earth-normal during reentry is necessary to avoid structural damage.

2.3 Temperature and Humidity Control

While people can survive in a relatively wide range of temperature and humidity conditions, the range which is comfortable for working and living is fairly narrow and depends on the level of activity.[4] "Ideal" temperatures range from 18 to 27 °C (65 to 80 °F) and "ideal" humidities range from dew points of 4 to 16 °C (40 to 60 °F) (relative humidities (RH) from 25 to 70 percent). Soviet experience in space indicates that temperatures below 19 °C (66 °F) with RH above 70 percent is

considered "cool" or "cold." Temperatures of 22 to 24 °C (72 to 75 °F) are considered comfortable.[14] Generally, heat and humidity need to be removed from the atmosphere to maintain acceptable conditions.

Heat is generally considered in terms of latent and sensible components. Sources of heat include electronics, lighting, and solar heating of the habitat, in addition to metabolic sources. Latent heat is removed by drying the atmosphere, and sensible heat is removed by cooling the atmosphere. One requirement is to prevent condensation from forming on windows, walls, or equipment. Some historical temperature limits for U.S. space habitats are shown in table 1. A simplified schematic of a temperature and humidity control (THC) system is shown in figure 6. THC requirements and technology options are described in appendix D.

Table 1. Allowable temperatures and relative humidities on U.S. space habitats.[15]

Space Habitat	Temperature Range	Relative Humidity Range
Apollo	21 to 24 °C (70 to 80 °F)	40 to 70 percent
Skylab	13 to 32 °C (55 to 90 °F)	25 to 85 percent
Orbiter	18.3 to 26.6 °C (65 to 80 °F)	25 to 85 percent
Spacelab	18 to 27 °C (64.4 to 80.6 °F)	25 to 70 percent
S.S. *Freedom*	18.3 to 26.6 °C (65 to 80 °F)	25 to 70 percent

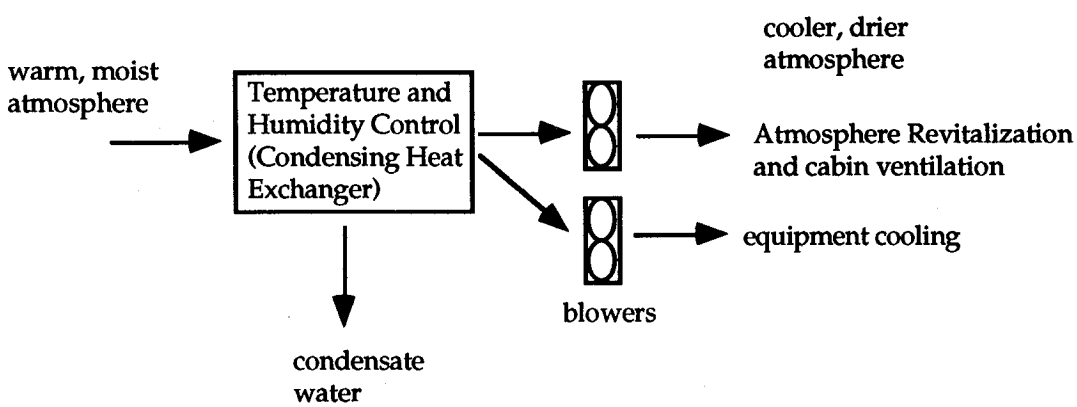

Figure 6. Temperature and humidity control.

2.3.1 Temperature Control

Excess heat is removed via ventilation (discussed in section 2.3.3) which moves the atmosphere through condensing heat exchangers, or by liquid- or atmosphere-cooled "cold plates" to which heat generating equipment is attached. This heat can then be disposed of by radiating it to space or by evaporating a liquid to space. For long duration missions radiating to space is preferred since the mass loss of evaporating a liquid to space would become prohibitive, unless excess liquid is available. For short duration missions or portable life support systems for extravehicular activities, however, evaporation may be the preferred method. Other methods suitable for specific applications include absorbing the waste heat by melting a compound such as wax, which would later be resolidified by radiating the heat to space or by another method, and, on the Moon or Mars, by conducting the waste heat to the ground. Unfortunately, the thermal conductivity of the lunar soil is extremely low[16] so extensive site preparation would be required, and the Martian atmosphere, at 0.5 to 1.0 kPa (5 to 10 millibars or 0.0725 to 0.145 psia), is too thin to be an effective heat sink. Ideally, "waste heat" would be recovered for heating water or some other use.

2.3.2 Humidity Control

Water vapor is essential at the appropriate levels (RH between 25 and 75 percent) to avoid adverse physiological effects. If the RH is too low, then throat and nasal tissues become dry; if too high, then perspiration does not provide proper cooling. The usual problem for space habitats is excess water vapor, which must be removed.[4]

Excess moisture can be removed by condensation, absorption, or adsorption. Typically, condensing heat exchangers are used to remove excess moisture while removing heat, with "slurper bars" or a wick-type device to remove the condensed water. (These methods are described in appendix D.) For short duration missions or EVA suits, however, absorption or adsorption may be acceptable methods, with the water recovered later.

2.3.3 Ventilation

Forced ventilation is essential in order to ensure good mixing of the atmosphere constituents for adequate removal of CO_2, water, and trace contaminants and to provide sufficient O_2 for metabolic requirements. Ventilation is also the primary method of removing heat. Ventilation flow rates are determined by medical requirements to avoid stagnant regions where the O_2 level may get too low or the CO_2 level too high, and by the requirements for heat rejection to accommodate the expected amount of waste heat generated by people, animals, equipment, and experiments. Another factor in selecting the ventilation rate is the total pressure. Lower total pressures require higher ventilation rates for the same amount of cooling capacity. The distribution system must be designed to ensure adequate flow across habitable volumes ("modules"), and the diffusers and return ducts must be positioned to avoid "short circuiting" of the flow. Intermodule ventilation (IMV) rates are largely driven by the need for CO_2 removal, when the assembly in one module must remove CO_2 generated in another module.

2.3.4 Equipment Cooling

The cooling of payloads is a special thermal control problem due to the need for forced convection. The natural convection of air on Earth due to the buoyancy of warm air in a gravity field is eliminated or reduced in space where microgravity (LEO or transfer missions) or reduced gravity (lunar and Martian missions) environments are encountered. Electrical equipment generates heat which must be removed, and one of two methods is generally used to do this: forced convection or "cold plates." Forced convection of the atmosphere over or through the equipment is an effective way to remove excess heat, provided the flow rates and temperatures are appropriate. For situations where forced convection may not be suitable, heat can be removed by conduction to liquid- or atmosphere-cooled cold plates to which the equipment is fastened. After the heat is removed from the equipment, it must then be removed from the cooling fluid. For forced convection, the heat must be removed by the temperature and humidity control subsystem (THCS), typically by a liquid-atmosphere heat exchanger. For liquid-cooled cold plates (and for the liquid coolant in the THCS), the heat must then be removed by radiating it to space.

2.4 Water Recovery and Management

Ensuring a clean supply of potable (drinking) water and water for washing is essential. Potable water has been provided on all human space missions, and, for most missions, the water

was stored in tanks that were filled prior to launch. The amount of water required for long duration missions makes this option undesirable due to the costs of resupplying the water. The longest U.S. mission on which stored water was used was *Skylab*, for which the entire water supply was launched with the habitat aboard the Saturn V launch vehicle. At a usage rate of 2.3 kg (5 lb) per person per day, the total quantity needed for the 171 days of operation with three astronauts was about 1,166 kg (2,565 lb). For missions of longer duration, having larger crews or having limited storage space, it would be prohibitive to store or resupply all of the water required. For this reason, on the orbiter, potable water is obtained from the fuel cells which are used to generate electricity by combining H_2 and O_2 to produce H_2O. This option is not available where H_2/O_2 fuel cells are not the preferred power source (such as on S.S. *Freedom*), so waste water must be purified for reuse. When recycling waste water, the potential for contamination is higher than when using stored water, and maintaining water quality becomes more difficult, especially with regard to microorganisms. A simplified schematic of a water recovery and management (WRM) system is shown in figure 7 (shown as a "single-loop" system). System requirements, including allowable concentrations for the anticipated contaminants, and technology options are described in appendix E.

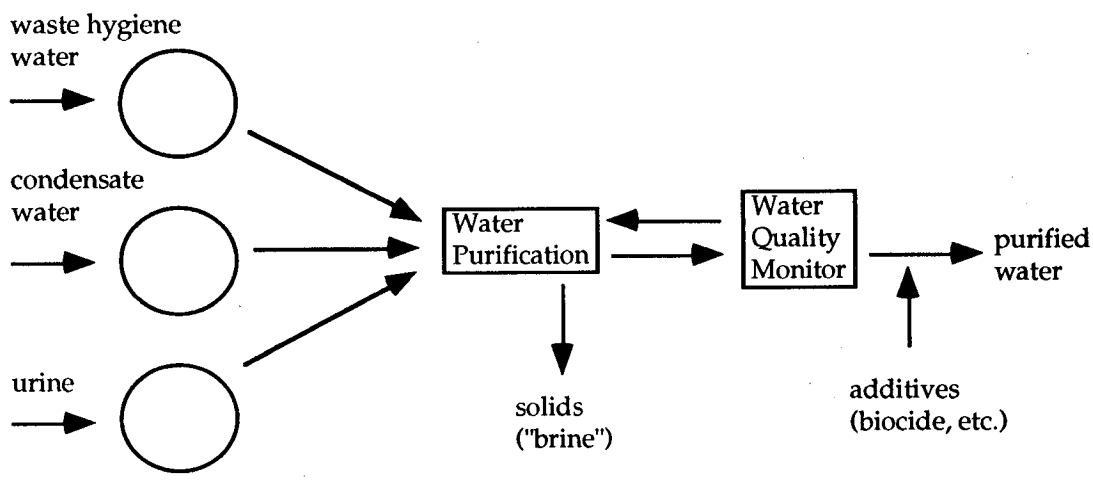

Figure 7. Water recovery and management.

2.4.1 Water Storage

When storing water—or any liquid—in microgravity, there are unique problems which must be addressed. Water can be stored in tanks, but without gravity to direct the water to the outlet, other methods must be used. Also, it is difficult to determine the quantity of water remaining in a tank. Several types of tanks have been used, including bladder tanks and bellows tanks. These tanks have successfully addressed the microgravity problems, but due to the stretching or flexing of the tank walls, they have lifetime limitations which may limit their suitability for long duration missions, although the bellows tanks to be used on S.S. *Freedom* have a design life of 10 years.

Storage systems require relatively simple biocide additives such as iodine, ozone, silver, or chlorine to maintain acceptable quality. Recycling systems, in addition, require more elaborate methods to remove particulates, organic molecules, microorganisms, and other trace compounds. Maintaining a clean water distribution system is critical so that contamination of purified water will not occur between the holding tank and the points of use.

2.4.2 Water Recovery

Several methods of purifying waste water have been considered for use on space habitats, including filtration, distillation, evaporation, absorption, adsorption, catalytic oxidation, and biological methods. The methods which are most developed and which were considered for use on S.S. *Freedom* are: multifiltration using a combination of particulate and microorganism filters and ion exchange resins to remove ionic and organic compounds; reverse osmosis (RO) which is essentially filtration through a semipermeable membrane in which the waste water passes through an "ultrafiltration" membrane prior to entering the RO unit; thermoelectrically induced evaporation through a membrane for recovering water from urine; and vapor compression and distillation of urine for recovering the water. Other technologies at lower levels of development include evaporation and vapor phase catalysis of impurities.

2.4.3 Water Quality Monitoring

Monitoring of the water quality is needed to ensure that the water purification process is providing water of acceptable quality. In general, process monitoring and control require tracking of a few key parameters to identify when certain events occur. The particular events depend on the subsystem technology used and include adsorption or resin bed breakthrough, membrane breakage, and iodine depletion. The parameters which indicate that these events have occurred include pH, conductivity, organic carbon, and iodine concentration. These parameters provide a general assessment of the water quality without requiring lengthy or unreliable analyses. (Appendix E lists S.S. *Freedom's* water quality specification.) Water quality monitoring requirements are formulated in close cooperation with medical specialists. The desired goal is to perform the minimum amount of on-orbit monitoring while ensuring crew safety.

2.4.4 Monitoring of Microorganisms

Of particular concern is monitoring of microorganisms. No flight-ready reliable automatic method to detect microorganisms at concentrations of 0 to 10 colony forming units (CFU)/100 mL is presently available. Standard methods such as plate counts are time consuming, requiring from 24 hours to 7 days to obtain results, and a relatively large volume of water must be stored for this period. Additional impacts are the large sample volumes required, expendables such as sampling equipment and growth media, fixed hardware such as incubators, disposal of nutrient-rich media following analysis, and the potential for contamination of the WRM subsystem during sample collection.

2.5 Waste Management

The wastes generated on a space habitat are of four general types: metabolic wastes consisting of moist solids including feces and vomitus, other solid wastes, liquid wastes including urine and waste hygiene water, and gaseous wastes.[17] In the past, these wastes were either stored for return to Earth or vented to space. For long duration missions, this mass loss becomes prohibitive, and methods are needed to recover usable products as much mass as possible. Some methods are specific for the type of waste, while others can process waste of virtually any type. A simplified schematic showing the sources and products of waste processing is shown in figure 8. Waste management (WM) requirements and technology options are described in appendix F.

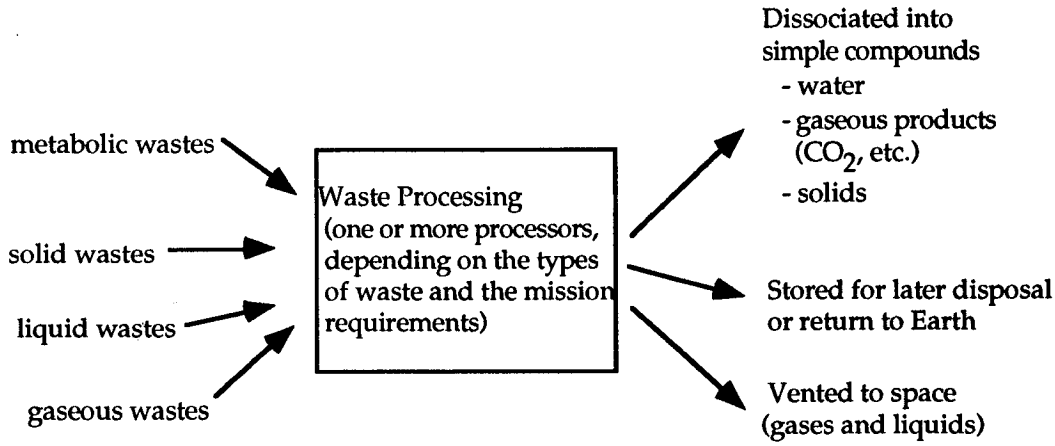

Figure 8. Waste management.

2.5.1. Metabolic Waste

The earliest Mercury program missions did not require provisions for metabolic (or any other) waste, since the durations were no more than a few hours. For the later Mercury missions, and for the Gemini and Apollo missions, feces were collected in bags and stored. On the orbiter, as on *Skylab*, commodes are used to collect, dehydrate, and store the feces. The reliability of the commode design, however, has been problematic, so bags are used as a backup. For S.S. *Freedom*, a redesigned commode is being developed which will compact and store the metabolic waste in a different manner, which is expected to be more reliable.

For more advanced missions, it will be necessary to recover for reuse the mass, both liquid and solid, of the metabolic waste. Water can be recovered by dehydration, but this process still leaves the solid portion of the feces. Ideally, this would be converted to fertilizer for plants which would provide a significant portion of the food requirements. Incineration or other oxidation processes can convert organic wastes to CO_2 and H_2O which can be processed by the AR subsystems, but these consume O_2 which must be generated at a significant cost in power consumption and would only be feasible if power is not a constraint.[18]

2.5.2 Other Solid Waste

Other solid wastes (fax paper, disposable dishes, etc.) consist primarily of paper and plastics, which, being organic materials, may be amenable to processing in a manner similar to that used for the solid portion of metabolic wastes. For short duration missions, storage for later disposal is acceptable, but for long duration missions, where resupply is difficult or impossible, recovery of the mass is essential. In some cases, reusable alternatives to disposables can reduce the amount of solid waste to be processed.

2.5.3 Liquid Waste

Sources of liquid wastes include urine and brine residues from some of the water processors. Oxidation methods for processing metabolic wastes can convert liquid wastes to usable products.

2.5.4 Gaseous Waste

Sources of gas waste include metabolic gaseous wastes (CH_4, H_2S, H_2, CO, and CO_2) and byproducts from various chemical processes. The gaseous wastes may be removed or transformed to H_2O and CO_2 by the atmospheric trace contaminant control assembly.

2.6 Fire Detection and Suppression

Fires on space habitats can be disastrous, and the potential for fires must be minimized.[19] Using materials which are fire resistant and designing a habitat and its systems to not propagate fire reduces the likelihood of a major fire. Even so, the possibility of a fire cannot be totally eliminated. It therefore becomes important to detect a fire as early as possible, preferably detecting the conditions that indicate a fire may occur. In the event that a fire does occur, appropriate methods of suppressing it must be provided. Methods of detecting, suppressing, and cleaning up after a fire are listed in table 2. Fire detection and suppression (FDS) requirements and technology options are described in appendix G.

Table 2. Fire detection and suppression.

Detection Methods: IR, UV, ion, particle
Detection Approach: centralized, distributed, or a combination
Suppression Methods: CO_2, N_2, H_2O, Halon
Suppression Approach: centralized, distributed, portable, or a combination
Options for Cleanup of Suppressant and Combustion Byproducts: sorption, conversion, vent to space

2.6.1 Detection of Incipient Fires

The sense of smell is a sensitive and reliable method of detecting a fire which is available on all human space missions. However, fires may occur during sleep periods, and, as space habitats become larger, not every module will be continually occupied. Therefore, reliable automatic methods are needed. These methods include flame detectors based on visible, infrared, and ultraviolet emissions, and smoke detectors based on detecting the particles emitted by burning materials. Due to spurious alarms by the fire detectors, there have been missions where the sense of smell was the only reliable method. Because of this, improvements are needed in discriminating between smoke particles and other particles. Some of the newer technologies developed to detect fires are ionization detectors, used on the orbiter and on Spacelab, and photoelectric flame detectors, planned for use on S.S. *Freedom.* Another promising method being developed uses an expansion chamber to detect condensation nuclei produced by particles given off by heated materials prior to combustion.[20,21]

2.6.2 Suppression of Fires

Fires can be suppressed by removing the oxidizer (by "suffocation") or the fuel (by shutting off the flow) and/or by removing the heat required for combustion to occur. On Earth, several methods are commonly used including water, foam, CO_2, and Halon. Some of these would not be suitable for use in space habitats—water because fires will usually be related to electrical failures, and foam because of cleanup problems (water and foam were provided for fire suppression on *Skylab*

but never used). Halon is provided on Spacelab and the orbiter. CO_2 was selected as the fire suppressant on S.S. *Freedom* for reasons including heat capacity and simplicity of cleanup. Other methods of fire suppression include N_2 and depressurization of the habitat.

2.6.3 Cleanup After a Fire

Any fire will create byproducts which may be hazardous. The degree of hazard depends upon the types of materials which burned, the temperature of the fire, and the type of suppressant used to extinguish the fire. Removing these byproducts from the breathable atmosphere is essential. The best method for cleaning up after a fire depends in part upon the severity of the fire and the amount of byproducts produced. For a severe fire which produces a lot of smoke particles, the best method may be to depressurize the affected modules by venting the contaminated atmosphere to space. For a smaller localized fire, some type of portable contamination control device may be able to remove most of the contaminants from the atmosphere so that the trace contaminant control assembly (TCCA) can safely remove the remaining contaminants. It would be possible to design the TCCA to perform the entire smoke removal function, however, this would mean that it would be far oversized for normal operations, requiring more volume, power, and weight than is likely to be available for this assembly. Surface contamination by potentially corrosive combustion byproducts may also result, depending on the material burned and the suppressant used. These byproducts will have to be removed without causing additional contamination by wiping the surfaces with a solvent or a neutralizing agent to prevent corrosion, or by another method.

2.7 Other Functions

Other functions are sometimes considered part of an ECLSS. Food storage and preparation facilities are necessary for any human space mission. Plant growth facilities will be included in the future as the techniques become more mature and as these functions become an integral part of space habitat design. Radiation protection and external dust removal will be important for missions to the Moon and Mars, and hyperbaric chambers will be needed for emergencies involving decompression sickness. Requirements and design information for these other functions are given in appendix H.

2.7.1 Food Storage and Preparation

For long duration missions, stored food must be preserved until needed and will either be dehydrated, refrigerated, or frozen. Dehydrated food requires only simple storage racks with few, if any, special requirements. Reconstituted food or food which cannot be dehydrated must be refrigerated, at 3 °C (38 °F), for short-term storage, or frozen, at –29 °C (–20 °F), for long-term storage. Several approaches can be used to achieve these temperatures. A simple method, used on *Skylab*, involved circulation of a coolant fluid between the refrigerator/freezer cabinet and a radiator outside the space habitat. The typical approach for ground-based applications is a vapor-compression cycle using a chlorinated fluorocarbon (CFC) refrigerant. This approach is being developed for S.S. *Freedom*, using Freon R13B1 refrigerant.[22] Due to environmental concerns with CFC refrigerants, because they destroy the ozone in the upper atmosphere, these will be banned in the near future, and alternative refrigerants are being developed which may be suitable for space habitat application. Another approach is Stirling cycle coolers, typically used for cryogenic applications. Versions which are suitable for moderate freezing and refrigerating temperatures are being investigated. A related technology, thermo-acoustic refrigeration, may also be suitable. A less efficient method, thermo-

electric refrigeration, has been used in space applications, and, with improvements, it may be suitable for food storage. These methods are discussed further in appendix H.

Other ECLS functions will be affected by the refrigerator/freezer design and by food preparation. The heat removed from the refrigerator and freezer compartments must ultimately be dissipated to space, either through the atmosphere or through a liquid coolant loop. For an atmosphere-cooled design, module ventilation and the THCS will be affected. For a liquid-cooled design, the other ECLSS functions will not be directly affected by the refrigerator design. However, for any design used, the module atmosphere will likely be used to defrost the refrigerator/freezer, resulting in short-term, periodic increases in the latent heat load on the THCS. Regarding food preparation, the TCCA will have to accommodate the trace gases released during cooking. Cleanup of dishes will impact the water recovery subsystem during washing of reusable dishes or the waste management subsystem if disposable dishes are used.

2.7.2 Plant Growth Facility

Some experiments to study the growth of plants in space have been performed, and more elaborate ones are planned for the near future.[23] These will lead to facilities for growing salad vegetables to supplement the stored food and will eventually lead to facilities which provide a major portion of the diet. Along with producing food, plants also remove CO_2 from and release O_2 into the atmosphere, which reduces the load on the AR subsystems. Plants can also absorb some trace contaminants, but may generate others, and can purify water via transpiration. Even if the plant facility is not considered part of the ECLSS, it will impact the ECLSS design due to the interchange of gases and water with the habitable environment. Design information is given in appendix H.

2.7.3 Radiation Protection

For missions more distant than geosynchronous Earth orbit, the Earth's magnetic field does not provide protection, and radiation from the Sun, especially during solar storms, and galactic cosmic radiation become serious threats. Onboard human-made sources can also be serious and must be identified and appropriate precautions taken. Because the crew and any animals (and possibly plants) must be protected to avoid serious consequences of exposure, including the possibility of permanent injury or death, the task of providing protection has been considered a part of ECLS. Protection is necessary for missions beyond LEO, and space habitats must incorporate methods of identifying and negating the effects of radiation. For lunar bases, placing a layer of soil over the habitats can provide effective protection. For long duration surface operations, other methods will be needed, such as a shielded compartment on a rover. For a mission to Mars, some type of "storm shelter" will be needed where the crew can be protected during solar storms. It will also be necessary to closely monitor solar activity to warn of storms in time for the crew to reach the storm shelter before the intense solar radiation, traveling at somewhat less than the speed of light, reaches the space habitat.[7]

2.7.4 External Dust Removal

During the Apollo lunar missions, the space suits used during the explorations of the lunar surface became coated with dust, which was very difficult to remove due to electrostatic attraction. This dust was then carried into the lunar excursion module (LEM). This was not a serious problem since the lunar gravity caused the loose dust to fall to the bottom of the LEM and because the mission lasted only a few days. Upon returning to orbit, the crew transferred to the command module

(CM) to return to Earth and relatively little dust was transferred. For longer duration missions, and ones where the landing habitat will be used in microgravity, the dust will present significant potential problems to the ECLSS, resulting in increased maintenance and reduced reliability of hardware. Methods of removing the dust before entering the habitat will be needed, as well as methods of cleaning hardware inside. No suitable methods are presently available. Whether or not this function is defined as part of the ECLSS, it will impact the ECLSS due to the effects of dust in the habitable environment.

2.7.5 Thermally Conditioned Storage

In addition to the refrigerators and freezers which are needed for food storage, thermally conditioned storage is also needed for such items as photographic film, medical/biological specimens, chemical reagents, perishable supplies, and contaminated materials. Some experiments also require cold storage of specimens. Some of these items require refrigeration temperatures of 3 °C (38 °F), while others require freezing temperatures at –26 °C (–15 °F) or –70 °C (–94 °F), or cryogenic temperatures at –183 °C (–297 °F). Some of the life sciences experiments and protein crystal growth experiments require "snap" freezing to –196 °C (–320 °F).

While these applications are not ECLS-related, the designs for the refrigerators and freezers required for food storage will be suitable for other applications for refrigeration and moderate freezing temperatures. For storage temperatures of –70 °C (–94 °F) and below, other approaches, such as the Stirling cycle refrigerator, will be required.

2.7.6 Hyperbaric Chamber and Air Lock

Unlike previous U.S. space habitats, the orbiter atmosphere is designed to operate at near Earth-normal sea-level conditions, with a total pressure of about 101.3 kPa (14.7 psia) and having N_2 as the largest component. S.S. *Freedom* will operate with the same conditions. For EVA's, the pressure suits operate at much lower pressures (about 34.45 kPa (5 psia)) with a lower partial pressure of N_2, so the potential exists during transition from the high-pressure habitat to the low-pressure suit for dissolved N_2 to form bubbles in body tissue and the blood stream, resulting in decompression sickness (the "bends") when an astronaut prepares for an EVA. The usual treatment is to subject the victim to high pressures in a hyperbaric chamber to redissolve the N_2. Then, after a time, the pressure is reduced slowly to return the individual to the habitat pressure. Breathing concentrated O_2 can accelerate the process, so the atmospheric conditions within the hyperbaric chamber are high levels of O_2 (up to 100 percent) at pressures up to 303.9 kPa (44.1 psia or 3 atmospheres).[4] Nitrogen and CO_2 must be at low levels or absent to avoid nitrogen narcosis or other adverse physiological effects which may occur at high pressures. Whether or not this function is defined as part of the ECLSS, it will impact the ECLSS due to the different atmosphere composition, which will affect the mass balance in the habitat.

The entrance procedure to a hyperbaric facility should require a minimum amount of time and would ideally be available whenever any person is performing an EVA. One way to provide this capability is to combine a hyperbaric chamber with an air lock (hyperbaric air lock). Since both have structural requirements to accommodate variable pressures and both require the capability of transferring atmospheric gases between the chamber or air lock and the habitat or tanks, this is a "natural" place for the hyperbaric chamber. Using an airlock as a hyperbaric chamber would also allow victims of decompression sickness to begin treatment more quickly, since they could enter directly into the hyperbaric airlock from an EVA.

3.0 ECLSS DESIGN CONSIDERATIONS

When designing an ECLSS for a specific mission scenario, there are constraining requirements which affect what the final design will include and how it will operate. Some constraints are related to the technologies, while others come from the human requirements, mission specific requirements, system requirements and integration factors, safety requirements, test requirements, flight requirements, and cost considerations. In general, simple designs are most reliable and easiest to operate. For safety reasons it is important to design in tolerance to failures, such that failure of one, or a few, components will not result in hazardous situations.

3.1 Technology Considerations

The primary consideration for the designer is to meet the specified requirements in the most appropriate manner. Many factors must be considered to accomplish this, including the capabilities and limitations of the available technologies, the impacts of particular technologies on the overall system, and ensuring the quality of the final product.

3.1.1 Technology Limitations

When a technique exists that can fulfill a required function while meeting the system-level requirements and all the safety, operational, and other considerations, the designers job is relatively simple—apply that technology to the present application. More often, however, there will be several alternative methods at various degrees of technical maturity, with none of them completely developed for the application. In this case, it is necessary to understand the inherent limitations of each method and determine how closely each can meet the specified requirements. If none are completely adequate, then the requirements may be revised to accommodate the best candidate. To a certain extent, this is a subjective process, since it may be possible to develop a technology so that it meets the specifications, but for various reasons, such as cost or schedule, it may not be desirable to make the effort when compared to revising the requirements.

3.1.2 System Considerations

The impacts of a particular technology on an overall system must be considered when designing an assembly using that technology. This may be in the form of impacts on other subsystems or assemblies of the ECLSS such as the temperature and humidity control subsystem, trace contaminant control assembly, or O_2 generation assembly, or on other systems such as the power generation system, data management system, or logistics resupply. It may be that using a particular technology in a subsystem results in higher use of resources for the ECLSS, but provides a benefit for another system (e.g., H_2 or O_2 for propulsion, or waste heat from another system for heating water) such that fewer resources are required overall. Such "intersystem synergisms" are very important for long duration missions.

3.1.3 Designing For Quality

One definition of ideal quality of a product is that it "delivers the target performance each time the product is used, under all intended operating conditions, and, throughout its intended life, with no harmful side effects."[1] The first step to ensure that this ideal is approached is to define the

requirements appropriately. That is, to make sure that the requirements are sufficient, necessary, and reasonable. By sufficient it is meant that all of the factors which must be addressed so that the product performs the required function are considered. By necessary it is meant that the defined requirements are indeed essential to performing the function. By reasonable it is meant that a requirement is physically possible and does not conflict with other requirements. In some cases the requirements may be intentionally overstated to account for unknown, potential effects and uncertainties. Medical requirements for water quality and allowable pCO_2 are examples where the requirements may be more stringent than necessary.

Goals are not the same as requirements, and this distinction is necessary to ensure well-written requirements. A goal is the result which is desired, whereas a requirement is something which is necessary to achieve a goal. Poorly stated and poorly thought out requirements, or goals stated as requirements, result in increased costs and a product which may not perform adequately. When developing a design to meet specific requirements, it is also important to consider whether the design makes sense overall. A design may meet specific requirements, but if the requirements are not adequately stated, then the design will be of poor quality.

3.2 Human Requirements

Human requirements address the physical needs (metabolic requirements) of the crew and, to a lesser extent, the psychological requirements. The metabolic requirements, discussed in chapter 2, are referred to as "medical requirements" and are further described in the following section. "Man-systems" requirements address ergonomic and psychological aspects. Spacesuits can be considered one-person space habitats and require their own ECLSS. The design requirements for spacesuits relate to habitat ECLSS's, but are distinct in significant ways. These human requirements are described below.[2,3]

3.2.1 Medical Requirements

The medical requirements of space habitat ECLSS's address the composition, temperature, and pressure of the atmosphere, including allowable levels of trace contaminants (referred to as spacecraft maximum allowable concentrations (SMAC) levels). These requirements also deal with potable water quality, including chemical and microorganism levels, which become more critical, and more challenging to control, for recycling systems than for storage systems.

3.2.1.1 Atmosphere Requirements

The basic requirement for the atmosphere is to provide oxygen at a partial pressure sufficient for metabolic needs. The temperature and relative humidity (RH) must be appropriate, and the levels of carbon dioxide and trace contaminants must be sufficiently low to avoid adverse effects. Additional requirements may also be imposed for other reasons, such as an inert gas component for fire hazard reduction.

The temperature and RH requirements have been similar for all space habitats (18.3 to 26.7 °C (65 to 80 °F) and 25- to 75-percent RH) and are related inversely, i.e., at higher temperatures, the RH must be lower to promote evaporative cooling, and, at lower temperatures, the RH must be higher to reduce heat loss from evaporative cooling in order to maintain comfortable conditions. These ranges are within the "comfort box" which is optimal for most people, where

metabolically generated heat is balanced by the sensible and latent heat losses.[2,3] Figure 9 shows, on a psychometric chart, the temperature and RH ranges allowed for S.S. *Freedom* operating at 101.3 kPa (14.7 psia).

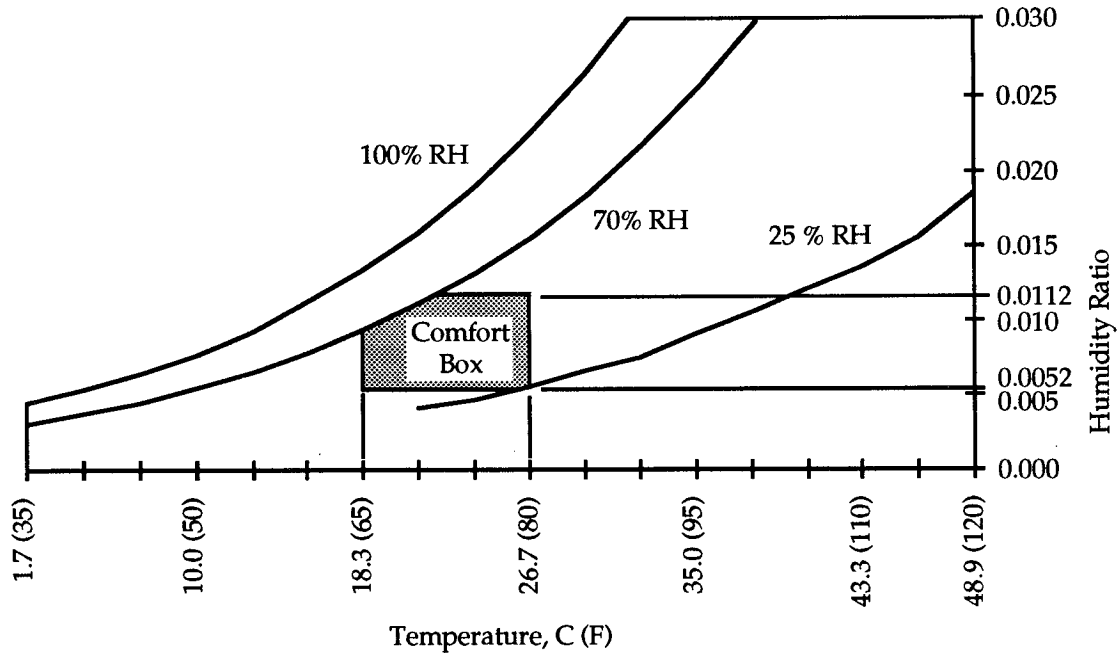

Figure 9. Temperature and RH ranges for S.S. *Freedom.*

The composition requirements are much more variable and dependent on the mission requirements discussed below. The minimum pO_2 allowable depends on the duration of exposure. For example, after 8 to 24 h at altitudes of 3,353 to 3,658 m (11,000 to 12,000 ft) where the pO_2 is about 13.75 kPa (2.0 psia), virtually everyone will experience altitude sickness (shortness of breath, headaches, insomnia, impaired ability to concentrate or perform complex tasks, and sometimes nausea and vomiting). A pO_2 of about 19 kPa (2.76 psia) is the minimum which allows proper respiration to occur. Sea-level pO_2 is about 21.4 kPa (3.1 psia). At higher levels (greater than 32.4 kPa (4.7 psia)), signs of lung irritation may be noticed after 12 to 72 h of exposure, although many people have been given O_2 in this pressure range for long periods without apparent harm.[1] The partial pressure of O_2 is constrained by a 30-percent upper limit to minimize flammability of materials and a minimum of 13.4 kPa (1.95 psia, the orbiter 2-h emergency specification) for life support.[4]

The physiological effects of high levels of CO_2 include increased respiration rate, heart rate, and blood flow to the brain; hearing losses; mental depression; headache; dizziness; nausea; decreased visual discrimination; and, ultimately, unconsciousness.[3] The atmospheric level of CO_2 is 0.0318 kPa (0.0046 psia or 0.239 mmHg).[5] The allowable level on space habitats ranges from a high of 1.01 kPa (0.147 psia or 7.6 mmHg), acceptable for a short duration mission such as the orbiter, to 0.40 kPa (0.058 psia or 3.0 mmHg), preferred for a long duration mission such as S.S. *Freedom.* During emergency conditions, up to 1.59 kPa (0.023 psia or 12 mmHg) is allowable for short periods.

The allowable levels of trace contaminants also depend upon the duration of the mission. The SMAC of numerous chemicals which may be present in a space habitat have been determined for

exposures of one day and seven days. Allowable levels for longer exposures are presently based on the Occupational Safety and Health Administration (OSHA) standards and other standards. The SMAC levels are currently being revised for exposure durations of 1 hour, 24 hours, 7 days, 30 days, and 180 days, by the medical group at the Johnson Space Center (JSC). The allowable levels for the contaminants expected on S.S. *Freedom* are listed in appendix B.

Early U.S. space missions were of very short duration, and the atmospheres were 100-percent O_2. Because of this, they could be at relatively low pressures (about 34.5 kPa or 5.0 psia). For intermediate duration missions such as *Skylab*, a mixed gas (O_2 and N_2) atmosphere was used, primarily for safety reasons, with a total pressure of 34.5 kPa (5.0 psia). For long durations, there are physiological as well as safety reasons for using an atmosphere with a composition and pressure near Earth's normal at sea level. A 101.3 kPa (14.7 psia) atmosphere with 78-percent N_2 also simplifies testing and verification of hardware, eliminating the need to test in altitude chambers with special atmospheres.

In the future, there may be a need to provide different conditions in different modules of a space habitat. On long duration missions, it may be necessary to grow food and so a "greenhouse" will be needed for the plants. The optimum atmosphere conditions for plants, however, are not the same as the optimum conditions for people. Plants prefer warm, humid air and some plants require an atmosphere composition different from that optimal for people and, therefore, require a separate chamber which is controlled to different conditions.(6)

3.2.1.2 Water Quality Requirements

Potable water must meet certain specifications for purity, as well as flavor and clarity. The water quality requirements have changed as mission scenarios establish different guidelines and as methods for storing or processing the water have changed. In addition to factors such as flavor and clarity, trace levels of organic and inorganic contaminants are of great concern. Certain contaminants are of greater concern for longer duration missions than for shorter ones due to the capacity of some compounds to accumulate in body tissues. Also of concern are microorganisms which can clog water lines and filters, and which may become pathogenic under some conditions. Human pathogens may also be present in crew members.

Early missions, during the Mercury and Gemini programs, relied on municipal water from Cocoa Beach, FL, with little, if any, additional processing performed. Since then, the quality of the water has received greater attention, especially when recycling of the water is considered. The specifications established for the water on S.S. *Freedom* are listed in appendix E. These specifications, for the most part, exceed those established by the Environmental Protection Agency for public drinking water in the U.S. The specifications for S.S. *Freedom's* purified water include physical parameters such as: total solids, total organic carbon, conductivity, color, taste, odor, pH, particulate size, turbidity, dissolved gas, and free gas. The list also includes requirements for 23 inorganic ions, some organic species, and bacteria, virus, yeast and mold, bactericide, and radiological levels.(7)

Very pure water has little flavor, and water generated by some processes (such as fuel cells) may have a metallic or other undesirable flavor. Additives can be used to provide a palatable flavor and to provide necessary nutrients. (The orange-flavored breakfast drink "Tang" was invented to flavor fuel cell water and provide nutrients for the Apollo astronauts.)(8)

Other factors which affect the design of a water purification and supply system include the need for periodic servicing and the need for recycling waste water and urine. The ground servicing received by the orbiter water storage and distribution system provides periods with no water in the plumbing and allows sterilization before flight. S.S. *Freedom's* water recovery system will not be drained on a regular basis, if at all, during the 30-year design life of the system. Therefore, chemical and microorganism levels may increase over time unless the system is capable of controlling these parameters.

3.2.2 "Man-Systems" Requirements

Related to the ECLS functions are "man-systems" requirements which are concerned with how the crew interacts with hardware. Proper design of hardware which must be operated or repaired by the crew can greatly simplify operating and maintenance procedures and make them safer to perform. Man-systems involves such considerations as workstation/display design, crew health care, personal hygiene, window and camera placement, and housekeeping and galley services. Man-systems also addresses such aspects as lighting, keyboard layout, the amount of pressure required to activate switches, graphics design, foot restraint design, color coordination, and clothing. Aspects such as maximum allowable temperatures of parts which may be touched, standardization of switches and connectors, temperatures of water at delivery locations, vibration allowances, and allowable noise levels are areas where "man-system" requirements relate to ECLS.

Examples of the relation with ECLS functions are the commodes/urinals, hand washers, and showers. Treatment and disposal of metabolic wastes and provision of purified water are considered ECLSS functions, while the interfaces to these functions with which the crew interact come under the auspices of man-systems.[9] These requirements affect the ECLSS design in several ways. Equipment must be repairable to the orbital replaceable unit (ORU) level, ORU's must be accessible and must be designed to be unambiguous as to position and method of fastening, controls must be readily accessible and must be operationally consistent for all subsystems, and operating procedures must be suitable for all crew members.

An example of an application of these requirements is the design of the commode. The seat and restraints must accommodate people with a range of sizes, from a 5th percentile Japanese female to a 95th percentile American male, and hold them securely and comfortably in position. The controls must be accessible and operable for all users. The procedure for operating the commode must be straightforward and require minimal time to perform.[9]

3.2.3 Extravehicular Activity Support Requirements

When designing the portable life support system (PLSS) for an extravehicular mobility unit (EMU) (spacesuit), many of the same questions must be addressed as when designing an ECLSS for a habitat, such as "Should it be open loop or closed loop? regenerable or nonregenerable?" In addition, there are intermediate options not available for the habitat ECLSS. For the Gemini missions, an umbilical was used to bring O_2 and water directly from the space habitat. Another option is to have the PLSS be regenerable by the habitat ECLSS. This would reduce the mass, volume, and power consumption of the PLSS while maintaining the benefits of a regenerable system. As a result, the design of the EMU and its PLSS will directly affect the design of the habitat ECLSS. Another factor is that each time someone uses an airlock, some atmosphere is lost. Even when airlock atmosphere is pumped into the habitat or a storage tank, some residual gases remain and will be lost to space. These losses can be minimized by using a minimum-volume airlock.

To allow for maximum mobility and movement for the astronaut while in the suit, the pressure must be relatively low (approximately 34.5 kPa or 5.0 psia for the current suits). When the habitat atmosphere pressure is also low, there are no medical problems associated with transferring from the habitat to the suit. This was the situation for Mercury, Gemini, Apollo, and *Skylab*. Also, if the atmosphere does not contain a high level of inert gases (N_2), medical problems will be avoided. However, when the habitat atmosphere is near Earth-normal conditions at sea level, as with the Orbiter and S.S. *Freedom*, then care must be taken to avoid the situation where inert gases (primarily N_2) dissolved in the body fluids at the higher pressure come out of solution at the lower suit pressure. The effects of such "effervescence" of inert gases can be a painful, severe condition known as "the bends" or decompression sickness, which can be incapacitating or fatal.[3] Incipient symptoms usually appear as joint pain which is reportedly overlooked by active individuals and noticed when the focus of attention shifts from the task at hand.

To avoid these conditions, two approaches have been used, neither of which will totally eliminate the risk of the bends:

(1) Maintain the habitat atmosphere at a low level of inert gas

(2) Remove the dissolved inert gases gradually prior to entering the low-pressure condition.

For the Gemini, Apollo, and *Skylab* missions, the space habitat atmosphere was pure O_2 or included inert gases at a low enough partial pressure that decompression sickness was not a problem. For higher pressure habitats containing an inert component at a higher partial pressure in the atmosphere (such as the orbiter or S.S. *Freedom*), two approaches can be used individually or in combination: (1) reduce the habitat pressure or (2) "prebreathe" with concentrated O_2 for a period of time sufficient to eliminate the inert gases dissolved in body tissues. Both of these may affect the ECLSS operation, especially reduced pressure which affects heat transfer, ventilation, and adsorption processes.

The approach used for operations from the orbiter is to expose the entire space habitat, crew, electronics, and cabin payloads to a 70.3 kPa (10.2 psia) environment for a period of hours prior to an EVA. This greatly reduces the prebreathe time required and enhances the amount of productive time for the crew members who perform the EVA. The reduced prebreathe time comes at the expense of lower atmosphere cooling capacity in the cabin and avionics ventilation loops, however. Some of the lost cooling capacity is absorbed by the water loops through the elevated temperatures of cold plate mounted electronics, and some of the capacity is regained by operating the atmosphere loops at elevated temperatures during the period of reduced cabin pressure. Using an airlock to isolate the person during the prebreathe period prior to EVA is an option which would allow the habitat to remain at normal pressure, but makes the person unavailable for most tasks during that time.

A variation on this approach, to be used on S.S. *Freedom*, uses a two-chamber airlock configuration which minimizes the impact on the habitat ECLSS. The inner chamber is normally at 101.3 kPa (14.7 psia), and the outer chamber is normally at 3.5 kPa (0.5 psia), and they are sized such that the pressure equalizes at 70.3 kPa (10.2 psia). This provides a chamber separate from the habitat where astronauts can prebreathe without affecting the habitat ECLSS. The inner chamber is large enough to store the EMU's and "manned" maneuvering units (MMU's) and provides a place where the astronauts can perform tasks during the prebreathe period. The outer chamber is small enough to serve as a minimum-volume airlock for two astronauts with an ORU. The atmosphere is

pumped into the inner chamber so that only a minimal amount of atmosphere is lost and the inner chamber is at equilibrium with the habitat. Only the outer chamber is exposed to space vacuum.

A third approach is to use a higher pressure EVA suit. Several concepts for high-pressure suits are being investigated, most involving a "hard shell" for much of the suit.[10,11,12] Developing such a suit is a technical challenge due to requirements for flexibility in the gloves and elsewhere. The flexibility is inversely proportional to the pressure, i.e., at higher pressures flexibility is less. The greater the flexibility the less exertion is required to grasp tools, etc., and the easier it is to move about, therefore, the duration of an EVA can be longer without excessively tiring the astronaut. The present goal is 70.3 kPa (10.2 psia) which would eliminate prebreathe requirements from a 101.3 kPa (14.7 psia) near Earth-normal atmosphere. Such a suit would allow for more rapid EVA's which may be necessary in an emergency.

3.3 Mission Requirements

Requirements are also imposed on the ECLSS design by the mission scenarios. These requirements are derived from the mission profile (number of people, duration of mission, etc.), the degree of "loop closure" (defined in section 3.3.2), the services to be provided, payload requirements, and life cycle costs. Another factor is the volume available for hardware and storage of expendables. For those missions which involve repeated use of the same habitat over an extended period of time, upgraded hardware and software can easily replace the originals if the accommodations, or "scars," (fluid interfaces, etc.) necessary to support the replacements are incorporated into the initial design. Planning for such "growth" will become more important as habitat lifetimes increase.

3.3.1 Mission Profile

The ECLSS requirements are directly related to the mission profile. The example mentioned in chapter 1, Project Mercury versus S.S. *Freedom*, illustrates major distinctions in ECLSS requirements related to mission duration. There are also more subtle mission differences which affect the ECLSS design. Sizing of the ECLSS is generally related to the number of "man-days" of anticipated operation, which is the product of the number of people and the mission duration in days. There are other effects which are due solely to the number of people and effects due solely to the mission duration. The ability, or the lack thereof, to resupply consumables is another important factor in designing an ECLSS. Habitat design factors, such as the presence of pseudo or real gravity, also impact the ECLSS design. These factors are discussed below.

3.3.1.1 Crew Size

The crew size is a multiplier of the metabolic requirements. However, the effects on hardware design and, therefore, mass, power consumption, and volume are not necessarily linear relationships with the crew size. An example is an assembly such as the electrochemical depolarized cell (EDC) for CO_2 removal or the static feed electrolyzer (SFE) for O_2 generation which can be tailored to different crew sizes by adding or removing the electrochemical cells while the peripheral equipment (valves, blowers, etc.) remain the same. Thus, an ECLSS having a relatively modest increase in mass, power consumption, and volume may accommodate a significantly larger crew.[13] Economies of scale also result from lower relative percentages of the total system being required for expendables. For example, to support a crew of four people perhaps 10 percent of the mass of the ECLSS

will consist of expendables such as filters and cartridges. However, for the same technologies to support a crew of 16 people, perhaps only 5 percent of the mass will consist of expendables.

3.3.1.2 Mission Duration

As mission durations increase, factors such as reliability and maintainability become increasingly important. The reliability of the ECLSS for a 2-year mission to Mars would obviously have to be much greater than for a 2-week mission in LEO. Otherwise, the amount of crew time required for maintenance and the amounts of spares required would be prohibitive. In addition, hardware must be readily maintainable for those times when components must be repaired or replaced. Another factor which becomes increasingly important is the use of expendables. For long duration missions, those technologies which require fewer expendables than the alternative technologies become much more attractive. Because of this, regenerable systems for water processing and atmosphere revitalization are usually preferable to nonregenerable ones, with the break-even points beginning around 2 weeks. (See section 7.5 for more information on trade studies.) The orbiter is an example of this. The initial orbiters use LiOH for CO_2 removal and are limited to missions of about 10 days with a full crew, due primarily to storage limitations. The modifications to make extended duration orbiters (EDO) capable of missions of 16 days or more include replacing the expendable LiOH CO_2 removal assembly with a regenerable solid amine capable of thousands of regenerations.[14,15] (Section 7.4.1 further discusses the effects of mission duration on ECLSS design.) For missions lasting months or years, recovery of solid wastes can reduce storage and resupply requirements. Even for a lunar or Mars base, however, there may be applications where nonregenerable systems are preferable as, for example, with rover habitats or EVA suits.

3.3.1.3 Mission Location

With the exception of the Apollo program lunar missions, all human space flights have been in LEO. This close proximity to Earth affects the ECLSS design by relaxing some requirements relating to resupply, reliability, and contingency operations. Expendables can be readily resupplied (although for a long mission this becomes expensive) and, in the event of a critical nonrepairable failure or other emergency, the mission can be aborted and the crew returned to Earth.

For the Apollo lunar missions, the duration was limited to 2 weeks, which was short enough that all necessary supplies could economically be taken along. All hardware, including ECLS subsystems and instrumentation, had to operate reliably for only this 2-week period. The available responses to emergency conditions were limited, but proved to be adequate. The one mission where a critical failure occurred (the rupture of an O_2 tank on *Apollo 13*) left the habitat partially disabled, but the trajectory was planned such that the habitat would return to Earth after a partial orbit of the Moon, and very little propellant was required for the abort and return.

Future lunar and Mars missions will be of much longer duration and will include transfer vehicles and surface habitats. Because of the difficulties of resupplying expendables and the inability to abort and return quickly to the Earth, the ECLSS will have to be "robust" and be able to provide minimal functions, at least, until return or rescue. Because reliance on expendables lowers "robustness" due to the need for accessible storage areas and crew involvement to replace components, minimization of the use of expendables is essential for safety and reliability reasons as well as resupply cost.

Initially, it is likely that the ECLSS for lunar and Mars transfer vehicles and habitats will be similar to the ECLSS on S.S. *Freedom.* But the Moon and Mars also provide the opportunity to resupply mass losses by processing in situ resources. Atmospheric gases which are lost through leakage or EVA's may be obtained from the lunar soil (O_2 from oxides, and possibly H_2O as ice) or the Martian atmosphere (O_2 from the CO_2) and soil (H_2O). These soils may also provide a growing medium for plants, as well as some of the nutrients needed. Other resources may also be available, but it may be preferable in most applications to continue recycling the mass already in the ECLSS rather than to open the mass loop by, for example, venting CO_2 on the Moon and recovering O_2 from the soil. In situ materials may also be suitable for processing into components such as filters and other applications, thereby reducing the need for storage volume or resupply from Earth.

3.3.1.4 Habitat Design

Several aspects of the overall habitat design and configuration affect the ECLSS design. Factors such as the number and size of habitable modules, the amount of atmosphere loss via leakage and EVA's, and the allowable interconnections between ECLS subsystems in different modules must be considered. One of the most significant is the presence or lack of gravity or pseudogravity. On the Moon or Mars, gravity is always present, of course, but for a lunar or Martian transfer vehicle, we have a choice of microgravity or of providing pseudogravity by rotating the habitat (centrifugal force) or by constant thrust (as with ion drives or other low-thrust propulsion). For crew health reasons, it may be necessary to provide pseudogravity for the Mars transfer vehicle. The trip to the Moon is of sufficiently short duration (about 4 days) that detrimental effects due to microgravity on crew health are not considered significant. In the presence of gravity or pseudogravity, ECLSS components such as water storage tanks can be much simpler and, therefore, more reliable. Monitoring of the fluid quantities can be simplified, and liquid/gas separators can be designed to use gravity. On the other hand, pumps may need to be more powerful to overcome the potential energy due to gravity. Also, dust and dirt may accumulate on surfaces and in difficult-to-access places since the ventilation flows would not automatically carry all loose particles and objects to the filters.

Many technologies applicable to ECLS require significant amounts of power. Because of this, it may not be feasible to use them even when they have significant advantages over alternative technologies, unless power consumption is not considered a major constraint. The relative significance of power consumption as a factor is dependent, partly, on the type of power generation system used. Some of the alternatives are photovoltaic, solar dynamic, radioisotope thermoelectric generator, and nuclear reactors. In general, when a low power density system is used (such as photovoltaic) power consumption is a major constraining factor, whereas when a high power density system is used (such as a nuclear reactor) power consumption is less of a constraint.

3.3.2 Mass Loop Closure

The extent of reclamation of water and recovery of O_2, or mass loop closure, desirable for a given mission depends on the scope of the mission (crew size, duration, and distance from a resupply depot), the services to be provided (hand washer, shower, dish washer, clothes washer, etc.), and the technologies available to perform the functions. Reclamation becomes important when the resupply volumes and masses reach levels beyond that which can reasonably be expected to travel with the crew in the space habitat, ahead of the crew in an advance supply camp established before the main expedition, or following the crew in resupply ships. Closing the mass loop to reclaim the useful products from waste streams minimizes the volume and mass of both the amount of

supplies required and the unrecovered waste generated by the crew for a given mission scenario. Progressive levels of closure and the types of missions for which they are suitable are shown in table 3. Decisions must be made as to the extent to which O_2, H_2O, and other consumables will be recycled, based on mission duration and other factors.

Table 3. Levels of ECLSS mass loop closure.[16]

Level of Closure	Description of Closure	Mission Scenarios/Duration
Totally Closed	Closed except for losses due to leaks, EVA's, etc. (e.g., biological life support)	Lunar colony, Mars colony/permanent
Solid Waste Recycling	Recovery of solid waste (e.g., for use as fertilizer for plants)	Lunar base, Mars base/decades
Food Production	Fresh food grown to supplement stored food	Evolutionary S.S. *Freedom*/ decades, Mars mission/years (no resupply)
O_2 Recycling	O_2 recovered for reuse	S.S. *Freedom*/years
Water Recycling	Water recovered for reuse	S.S. *Freedom*/years
Totally Open, Using Regenerable Techniques	Reduced expendables (e.g., use of molecular sieve instead of LiOH for CO_2 removal)	*Skylab*/months, extended duration orbiter, rover habitat/weeks
Totally Open, Using Nonregenerable Techniques	All mass brought along or resupplied with no reuse (waste vented or stored)	Mercury, Gemini, Apollo, Orbiter/days

3.3.2.1 ECLSS Services Related to Loop Closure

The types of services to be provided may have significant impacts on the ECLSS design, especially with regard to water recovery, and affect the ability to close the mass loop. Services such as hand washers and whole body showers will likely be included in any long duration mission and recycling of the waste water will be necessary. Additional services such as clothes washers and dish washers will be needed unless disposable clothes and dishes are used. The types of soaps or detergents used for washing must be compatible with the water processing subsystem. The additional volume of water which must be processed to provide these services also affects the design of the water processing subsystem with regard to expendables usage and processing capacity. The requirements for services to be provided on a mission need to be determined sufficiently early in the development phase so that integration factors and other design impacts can be appropriately addressed.

3.3.2.2 Techniques for Loop Closure

The techniques for performing the ECLSS functions may be either nonregenerable or regenerable. Bioregenerable techniques are being developed and will be available for future missions. Regenerable techniques may also be used for open loop systems such as the molecular sieve for CO_2 removal and humidity control on *Skylab* which had an open loop ECLSS.

3.3.2.2.1 Nonregenerable

Nonregenerable techniques typically perform the ECLSS functions by using physicochemical (P/C) processes which are comparatively fast, simple, and reliable, but which require periodic replacement of expendable components such as filters and cartridges, which must be stored for the entire mission or resupplied. In general, these methods require less volume, mass, and power for the subsystem, but because they use expendable components, the total mass and volume for missions longer than about 2 weeks is usually greater than for regenerable techniques. The lower mass, volume, and power requirements of the processes make them advantageous for short duration missions, but these processes are difficult or impractical to reverse (i.e., regenerate for reuse). Nonregenerable systems use comparatively simple hardware, less subject to mechanical failure, and the active substances are always fresh for the expendables, such as filters, LiOH cartridges, or batteries, provided they are properly stored. They also typically have low power requirements, but high lifetime mass and volume requirements. Therefore, the overall impacts are typically greater on long duration missions than for regenerable methods, although there are situations where nonregenerable methods are suited to long duration missions.

For example, to close the water loop on S.S. *Freedom*, multifiltration will be used to purify the waste water. This technique is nonregenerable, since the filtration cartridges must be replaced after they have reached their capacity to absorb contaminants. But the mass and volume of the expendables is significantly less than for the water which is being recycled. Recycling of water saves approximately 1,125 kg (2,478 lb) per person per 90-day resupply period.(17) For a crew of four people, the mass savings is 4,500 kg (9,900 lb) every 90 days.

3.3.2.2.2 Physicochemical Regenerable

The same functions performed by regenerable systems generally utilize slower, less efficient processes which have the advantage of being more easily regenerated. Regenerable systems often use substances and hardware subject to a given life cycle limitation. For example, absorption media may oxidize or physically break down, reducing the system performance over time, so some replacement of expendable components may be required, but the replacement period may be on the order of months or years, as compared to hours or days between replacement of expendables for nonregenerable methods. The advantages of regenerable methods for long duration missions include lower *total system/mission* mass and volume requirements. For example, the savings achieved by using a molecular sieve CO_2 removal and humidity control device on *Skylab* instead of LiOH amounted to 9 kg (19.2 lb) per person per day. For the 171 days of operation with a crew of three people, the total mass saved was approximately 4,664 kg (10,270 lb).

3.3.2.2.3 Bioregenerable

Recovery of solid mass requires that plants be grown so that the carbon can be recycled to food. Initially, plants will be grown hydroponically (without soil) and, therefore, will require nutrients in the water solution. Solid wastes will need to be converted into nutrients that can be provided to the plants. Several methods involving oxidation are being considered for doing this which convert organic waste into CO_2 and water vapor leaving trace compounds as residue. The CO_2 and water vapor can be used directly by plants, while the residue will need to be processed to provide the trace nutrients that the plants need to grow properly. On the Moon or Mars, plants may be grown in soil, and it may be simpler to compost the solid wastes or obtain nutrients from the in situ soil.(18)

3.3.3 Payload Requirements

Payload requirements placed on the ECLSS may include providing an inert gas for purging hazardous gases from an experiment, habitable environments to house payloads for crew access, water supply for experiment reactions, plant growth requirements, and cooling of payloads with atmosphere or water. The specific requirements vary as much as the types of activities performed by the payloads vary. For example, payloads involving furnaces place significant demands on the THCS, and payloads involving animals affect the ARS.

3.3.4 Logistical Requirements

The issues relating to logistical requirements for resupply and maintenance of ECLSS hardware have been mentioned in the preceding sections. Items such as filters and sorbent beds which must be replaced periodically, pumps, and other ORU's which must be replaced when they fail, and factors such as intersystem synergisms all affect the logistical requirements. Designing the system to minimize the number of parts which must be periodically replaced and using standardized parts as much as possible to reduce the number of different ORU's which must be stored, and to allow for "cannibalizing" one piece of equipment to keep a critical function operating, reduces the logistical resupply requirements. Taking advantage of intersystem synergisms can also reduce the logistics requirements.

For example, for the orbiter, the logistics of using nonregenerable LiOH for CO_2 removal and storing sufficient LiOH for the duration of the mission along with the impact on the crew activity schedule of periodically replacing the LiOH cartridges must be weighed against the mass, power consumption, and volume of a regenerable CO_2 removal system. For missions longer than about 2 weeks, the storage requirements become greater than the available volume, and using a regenerable method becomes essential. As another example, the production of potable water on the orbiter by a fuel-cell power system drawing from an expendable supply of cryogenic O_2 and H_2 creates a surplus of potable water which is dumped overboard periodically for the current missions. The use of other methods for power generation would not provide potable water, so water would need to be stored or resupplied. The surplus water will be used to resupply S.S. *Freedom* to makeup for the inefficiencies in the water reclamation processes. Longer duration and more distant missions will not be able to take advantage of such synergisms, but will require either a tremendous mass of water to be lifted from the Earth, water to be extracted from the lunar or Martian soil, or a water reclamation system using physicochemical processes and/or plants to purify for reuse the waste water produced by the crew.

3.3.5 Requirements for Growth

Missions which involve a one-time use of a habitat or multiple uses over a relatively short period of time may use the same hardware throughout the mission. For missions of longer durations, such as S.S. *Freedom*, configuration changes will be made, such as adding habitation and laboratory modules, and changes will be made in the types of activities to be performed. Also, it is likely that technical advances will result in improved technologies which will better perform the required functions. To incorporate new technologies in a cost-effective manner, the initial habitat must be designed to be adaptable by incorporating the hardware and software interfaces ("hooks and scars") needed by the more advanced technologies. Accommodating such "growth" is a new feature in the design process and requires anticipating the requirements of future technologies to ensure that such aspects as fluid and electrical interfaces, data and control requirements, and thermal control

needs of the future are designed into the initial habitat. This requires a change in the design philosophy as it has been practiced. S.S. *Freedom* is the first U.S. space habitat where the need to accommodate such growth is significant.

3.4 System Requirements and Integration Factors

In addition to the human and mission requirements, the requirements of the ECLSS need to be addressed. These include total mass, total power consumption, total volume, expendables and resupply requirements, maintenance requirements, and interface requirements with other systems such as data management. These aspects are dependent on the requirements of the individual technologies, but are not necessarily the sum of the subsystem requirements. How the subsystems are designed and integrated are critical factors which affect the system requirements. For example, if components such as valves and pumps are designed so that a few designs are shared by different subsystems, then the requirements for spares can be reduced. Such commonality of components also reduces the time required for maintenance and simplifies inventory requirements. System requirements also include the instrumentation to monitor and control the ECLSS. On a higher level, there may be opportunities to integrate parts of the ECLSS with other systems in ways which reduce the overall mission resupply and storage needs by taking advantage of intersystem synergisms.

3.4.1 Integration of Subsystems and Assemblies

The ECLS subsystems and assemblies will inherently need to be integrated. A simplified example of the types of integration necessary for a system which produces potable and hygiene water from waste water, and recovers O_2 from CO_2 is shown in figure 10. The high degree of closure of the water and O_2 loops requires the different functions to be highly integrated.

To close the water loop, waste water is collected from sources such as humidity condensate from the condensing heat exchanger (CHX), byproduct water from the CO_2 reduction assembly, waste hygiene water, and urine. The condensate and CO_2 reduction byproduct water are processed into potable water, and the waste hygiene water (from showers, clothes washers, hand washers, etc.) and urine are processed into hygiene water. Depending on the requirements, separate potable and hygiene water loops may be combined into a single water loop. Early in the design process for S.S. *Freedom* it was planned to have separate potable and hygiene water loops (as shown in fig. 10), with a slightly less stringent specification for the hygiene water. Due to the availability of excess potable quality water from the orbiter fuel cells, it was decided to use this water as the primary source of drinking water (partly due to psychological reasons). The potable and hygiene water processing was combined, which reduced the number of water processors required, and reduced the mass, volume, power consumption, and complexity of the water recovery system. The quality of the water from the combined processing meets or exceeds the potable water specification, so this water may safely be used for drinking.

To close the O_2 loop, metabolically generated CO_2 must first be separated from the atmosphere. To recover the O_2, the CO_2 must be reacted with H_2 to form water and either CH_4 or solid carbon depending on the process used. The H_2 is produced by electrolyzing water which also produces O_2. As shown in figure 10, the O_2 loop assemblies are also integrated with a TCCA to form the complete atmosphere revitalization portion of the ECLSS. This is the concept for the completed S.S. *Freedom* (eight-man crew capability (EMCC)) ECLSS. Due to power consumption

requirements and space limitations, the build-up phases of S.S. *Freedom* (MTC and PMC) will not include O_2 generation or CO_2 reduction. CO_2 will be vented overboard and O_2 will be provided from cryogenic storage tanks resupplied every 6 months.

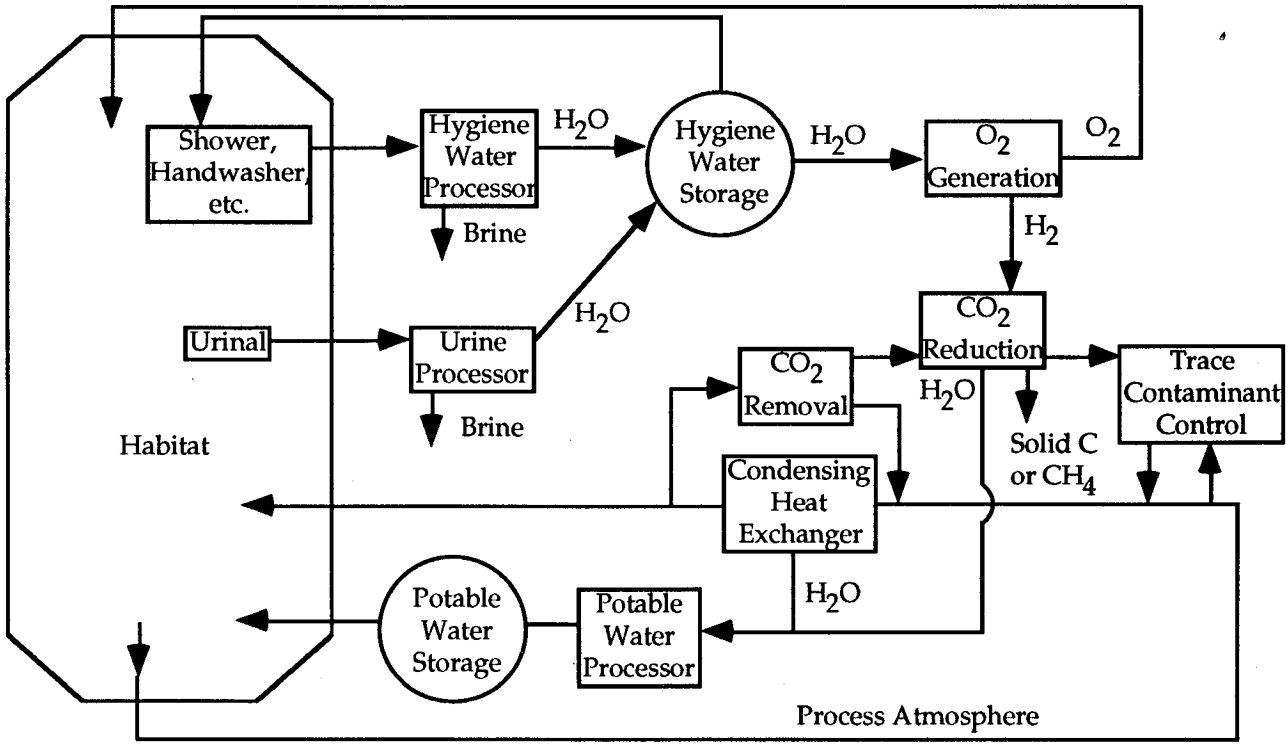

Figure 10. Integration of ECLS subsystems.

In the future, biological components, such as "salad machines" and biological water processors, will be integrated with P/C systems. Such hybrid systems have additional integration concerns such as the effects of providing waste water to plants and maintaining optimum humidity and CO_2 levels for the plant chambers and for the habitable module.

Depending upon the technologies selected, there may be varying levels of integration. The degree to which the subsystems are integrated is a design decision based on balancing the advantages and disadvantages of specific integration configurations. Benefits include reductions in packaging volume and interface plumbing, timelining of operation to minimize peak power usage, and making use of synergistic operations. The benefits of higher level coupling of subsystems must be weighed against the potential for one or a few failures to shut down the system. Other possible disadvantages may be more complex maintenance and operation or higher development costs.

3.4.1.1 Atmosphere Revitalization Integration Concerns

Integration concerns relating to atmosphere revitalization include the purity of gas streams, ensuring proper connections between the assemblies of the AR subsystem, balancing the consumption of O_2 by its production, and synergistic effects.

Gas Stream Purity – The performance of several of the technologies relating to atmosphere revitalization is dependent upon the purity of the input gas streams. The CO_2 reduction technologies especially are affected by certain types of impurities such as nitrogen or trace contaminants. For a device such as the Bosch reactor which combines CO_2 with H_2 to produce H_2O and solid carbon, the effect of N_2 in the input CO_2 is an increase in reactor pressure which requires that excess pressure be periodically vented, decreasing the performance of the device. The Sabatier reactor, since it is not closed as is the Bosch, does not have this problem, but there is a possibility of ammonia being produced along with H_2O and CH_4. To minimize the possibility for these effects to occur, the CO_2 stream from the CO_2 removal device must contain only those gases which will either contribute to the desired reactions or which are also the end products of the desired reactions. Some CO_2 removal devices such as those using molecular sieves may have inert gases or trace contaminants in the concentrated CO_2. These contaminants may react in undesirable ways and so must be minimized.

Appropriate Connections – Of the technologies available for CO_2 removal, some prefer that the inlet atmosphere be cool, while others prefer that it be warm. For example, a CO_2 removal device using molecular sieves performs better when the inlet atmosphere is cool, so locating the inlet duct downstream of the condensing heat exchanger of the THC subsystem is preferred. A device using electrochemical or chemical absorption performs better at warmer temperatures which promote the chemical reactions, so locating the inlet duct upstream of the condensing heat exchanger is preferred. Also, to reduce the amount of contaminants which are absorbed by the condensate water, it is beneficial to have the inlet duct to the TCCA upstream of the condensing heat exchanger.

Pressure regulation of fluid streams is also important. For example, the concentrated CO_2 from the CO_2 removal assembly may be stored at several times the ambient pressure and well above the pressure required by the CO_2 reduction assembly. Pressure regulators are required to ensure that the CO_2 reduction assembly does not become over pressurized.

O_2 Consumption – The primary design drivers for sizing the oxygen generation or supply assembly are the metabolic requirements of the crew and any experimental animals. Additional consumers of O_2 include some of the CO_2 removal methods such as EDC and devices for solid mass recovery based on oxidation. To ensure that sufficient O_2 will be available, it is essential to include the requirements for these other O_2 consumers in the O_2 supply requirements.

Synergistic Effects – The benefits of synergistic effects can be realized between the ECLSS and other systems and also between subsystems of the ECLSS (discussed further in section 3.4.4). For example, the Sabatier CO_2 reduction device produces methane which can be used by the propulsion system as a fuel or can be used by solid mass recovery devices using oxidation processes. Oxygen generation by water electrolysis also generates H_2 which can be used for propulsion or by some CO_2 removal and CO_2 reduction devices. Such an increase in the level of integration can reduce the resupply requirements significantly. The potential for a failure to adversely impact a connected system or assembly must be considered and addressed to ensure safe and reliable operation of critical functions.

3.4.1.2 Water Management Integration Concerns

Integration concerns relating to water management include ensuring that water losses are balanced by water gains, understanding the sources and types of contaminants which may be in

waste water, cleansing the water supply in the event of contamination of the subsystem, and control of microorganisms.

Water Balance – Maintaining a truly 100-percent efficient water recycling subsystem is virtually impossible. Net water input into a closed-loop water recycling subsystem typically comes from open-loop food supply, that is, food consumed by the crew inherently has some water contained in it, and from the normal metabolic processes of the crew which convert a portion of the food solids to water. Additional inputs may come from water quality monitors or pretreatment devices which often add water-based reagents to the subsystem. The effects of these inputs are typically offset by inefficiencies in the water reclamation process. Distillation-based urine processors and membrane-based hygiene water processors typically recover only 80 to 95 percent of the water contained within the waste water processed; the actual water recovery efficiency is dependent on the processor design and waste water type, and must be selected based on optimization of power, mass, and volume. When the losses due to water recovery inefficiencies are greater than the water inputs, then a net negative water balance will result, and additional water will need to be supplied. Conversely, if water recovery efficiencies are high enough, provisions will be required to handle excess water. Complicating the management of the water balance is the reality that day-to-day variations in crew metabolic and activity levels may result in short-term water deficits or surpluses. Water balance management is further complicated in a system incorporating separate potable and hygiene water loops. In such a two-loop system, net transfer of water between the loops must be considered. For example, as the ratio of urine to perspiration and respiration increases, a net transfer of water from the potable loop to the hygiene loop will occur. If the ratio decreases, the opposite would occur. A single-loop system avoids this problem, but requires that all water be purified to potable specifications, which may require more power or consumables than a two-loop system.

Waste Water Quality – One of the most significant factors in determining the design of a water recovery system is the contaminant load of the incoming waste water. Contaminants can generally be classified as physical, chemical, and microbiological. Physical contaminants include particulates such as skin cells, hair, lint, and precipitated solids. Chemical contaminants include inorganic metals (iron, magnesium, nickel, etc.), nonmetals (chloride, sulfate, ammonia, etc.), and organic compounds (fatty acids, aldehydes, ketones, alcohols, etc.). Microbiological contaminants include various species of bacteria, viruses, and protozoa. Although a full accounting of all waste water contaminants by species and quantity is impossible because of analytical limitations and the inherent variability in waste water contaminant loads, important types of contaminants typically drive the design of water recovery systems and, therefore, must be understood early in the design effort. For example, cleansing agents used in the shower and laundry have been shown to significantly impact the performance of water recovery systems, therefore, the selection of cleansing agents must be done with consideration of both water reclamation and man-systems performance requirements. Similarly, low molecular mass, volatile organic compounds such as ethanol, which is commonly used as an ingredient in cleaning wipes, require special treatment provisions in the water recovery system, and their use in a space habitat must be carefully considered. The ability of a water recovery system to effectively remove potentially hazardous chemicals must be considered when evaluating the acceptability of bringing such chemicals into a space habitat with payloads.

Contamination Recovery – As mission durations increase, the likelihood that a water subsystem will become contaminated in some fashion increases. Depending on the safety and mission criticality of the water supply for a given mission, provisions may be required to restore the cleanliness of a contaminated water subsystem in-flight. Such provisions must be considered early in the design effort to ensure compatibility with the overall water system design and in-flight

resources. Safeguards to protect the water system from contamination are also an important part of the overall architecture. Isolated, backup water supplies may also be required depending on mission scenarios.

Microorganism Control – The control of microorganisms presents a unique challenge, especially in long duration missions, because of the potential for microorganisms to adapt over time. Robust control mechanisms must be included. In general, using a multiple barrier approach, in which two or more different microorganism control mechanisms are incorporated, provides increased assurance by reducing the likelihood that any microorganism will develop a resistance to the control scheme as a whole. However, "upsets" may still occur, and appropriate countermeasures to recover from such events must be addressed.

Methods of controlling the growth of microorganisms include chemical biocides (iodine, chlorine, etc.), UV radiation, hydrogen peroxide (H_2O_2), ozone (O_3), chlorate, and hypochlorite. Microorganisms are of increasing concern as mission durations increase due to greater potential for growth of pathogenic microorganisms and the formation of biofilms which can lead to clogging of filters and tubing. The species of greatest concern are listed in appendix E.[19,20,21]

3.4.2 Commonality of Components

Inventories of spare parts can be minimized if the number of different ORU components is kept to a minimum. This involves designing valves, motors, blowers, pumps, filters, and other components such that they can be used on different ECLS subsystems. Design for commonality can also be applied to monitoring and control instrumentation, software controllers, and control panels. The benefits of such commonality include reduced cost, simplified maintenance, easier tracking of inventory parts, easier upgrading of hardware, and operational benefits.

Typically, the different assemblies and subsystems which make up an ECLSS are designed and fabricated by several suppliers who are more focused on optimizing their assembly or subsystem. It is up to the system designers to ensure that the overall system is optimized. Commonality of components is part of this process, but requires a broader perspective than is typically applied, since it involves understanding and evaluating subsystem requirements and operation, system integration, system operational requirements, maintenance requirements, and logistics factors.

3.4.3 Monitoring and Control

Ideally, the ECLSS would operate without any interaction from the crew except for occasional maintenance. Such "transparent" operation requires sufficient instrumentation with high reliability and the capability for self-calibration so that all critical factors can be monitored, high-quality hardware designs which allow for automated monitoring and control and the hardware and software capability for autonomous operation.

3.4.3.1 Instrumentation

In order to properly control the operation of the ECLSS, instrumentation is required to monitor the performance of the subsystems and the conditions in the habitat. Factors such as pressures (gas and liquid), partial pressures (gases), temperatures (gas, liquid, and surface), flow rates (gas and liquid), and compositions (gas and liquid) need to be monitored continuously or periodically to

determine whether the subsystems and system are performing properly. When conditions change that require the ECLSS to operate at a different performance level, such as when additional people are in the habitat, the need for increased performance can then be detected, and the system controller automatically adjusts the operation to accommodate the increased load. Monitoring also is intended to alert the crew in the event of a failure so that appropriate action can be taken. As mission durations increase, the demands on instrumentation capabilities also increase, especially with regard to maintaining proper calibration. Instruments will need to be designed with the capability to be recalibrated or to be self-calibrating, in addition to being replaceable.[22-31]

3.4.3.2 Automation

For systems such as the ECLSS which require many sensors to provide data on the operation of the system, the total amount of data can be overwhelming for a person monitoring the system. A self-operating or "transparent" system allows the crew to perform more valuable tasks. An intelligent system which can detect and locate faults or components that are beginning to fail and can alert the crew when maintenance is needed would provide this transparent operation. The capability of automatically bypassing a failed component so the system will continue operating would provide additional time for repairs. One approach to automate control and diagnosis of the ECLSS for S.S. *Freedom* relies on "model-based reasoning" in which sensor data are compared with predictions from a computer model of the ECLSS to identify when the performance does not match the specifications and to alert the crew as to the location of a problem or potential problem.[32] Another area in which automation can provide benefits is selecting the most important measurements at a given moment so that only essential information is displayed on a monitoring screen. This eases the task of monitoring the ECLSS and can also aid automated controllers which could then alert the crew of unusual situations and could identify critical information for rapid response to avoid life-threatening situations.[33]

3.4.4 Centralized Versus Distributed

The physical and functional distribution of the ECLS equipment is important to the overall ECLSS design. Safety and operational requirements, as well as constraints on mass, volume, and power consumption, must be considered when determining the optimal distribution. Other factors to consider include reliability, redundancy, and maintainability requirements. A system may be physically or functionally centralized at one location, or distributed to several locations. Thus, there are four possibilities: physically and functionally centralized, physically and functionally distributed, physically centralized and functionally distributed, and physically distributed and functionally centralized.

As an example, fire suppression is a function that must be available throughout a habitat. A system having one tank of suppressant that is piped throughout the habitat is physically centralized and functionally distributed. A system in which each rack or potential fire location has a separate tank of suppressant is physically and functionally distributed. As another example, for a multiple-module habitat, water purification may be performed in one module with waste water collected from all modules and piped to the processor (physically centralized, functionally distributed), or there may be a separate water processor in each module (physically and functionally distributed). A third example is CO_2 removal, which typically is performed by a device which is centrally located and draws atmosphere from the ventilation duct of the THC subsystem. CO_2 removal can thus be considered to be physically and functionally centralized.[34-36]

3.4.5 Intersystem Integration and Synergisms

The ECLSS is but one part of an overall vehicle or habitat and must interact with other systems. The systems with which the ECLSS may interact are indicated in figure 11. The ECLSS may interact with some of these systems for any mission scenario (the data management system, for example), while interaction with others will depend upon the mission scenario (experiments, for example). The connections with the electrical power system, thermal control system, EVA system, data management system, and biological experiments are obvious. The relation with the communications and tracking system and the guidance, navigation, and control (GN&C) system are less obvious. The communications system is necessary to transmit commands remotely, as, for example, to turn on systems which are shut down or to put the ECLSS into a "standby" operational mode during periods when, for example, a space station or lunar habitat is unoccupied.

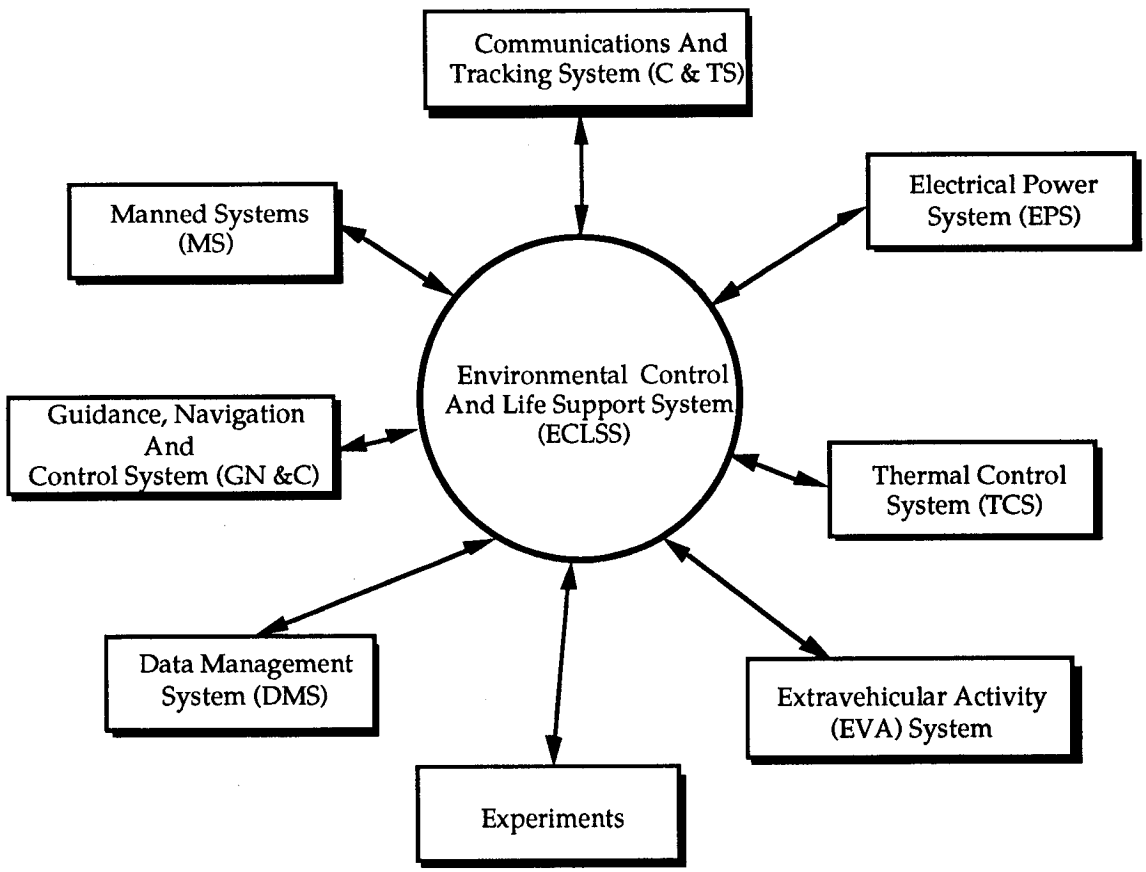

Figure 11. Potential space habitat ECLSS interfaces.

There may be situations where the ECLSS may receive mass from or provide mass to another system, thereby reducing the overall mission resupply and storage requirements. The potential for doing this depends on the capabilities of the technologies used in the ECLSS and the other systems, and on the mission scenario. One example of this intersystem synergism is using the methane produced by the Sabatier CO_2 reduction subsystem as a fuel for propulsion in a GN&C system. Excess water may also be provided to experiments to reduce the payload resupply penalties. If the mission scenario can tolerate losing this mass, then such synergism could be advantageous.

The goal to keep in mind is minimizing the *total system/mission* mass, power consumption, volume, and resupply and storage requirements. This must be balanced with safety and maintainability requirements, and other factors which may depend on the mission scenario.

3.5 Safety and Reliability Requirements

Ideally, any system will be completely reliable for the duration of a mission, will not involve the use or processing of any hazardous substances, will be operational even if components fail, and will be completely safe to operate. In reality, components do fail, hazardous substances may be involved, the failure of a component may result in the total failure of the system, and inherent hazards may be unavoidable. It is important to identify and understand potential safety concerns and the effects of component and operational failures. There are several ways in which requirements for safety can be met. Some technologies are inherently safer than others, and the safer ones can be selected. When a potentially unsafe technology must be used, it can be designed to minimize the effects of the unsafe condition. Redundancy, repair, or replacement of key components, assemblies, subsystems, or systems can be used to ensure continued delivery of life-critical functions. To identify all possible failure modes and the effects of hardware and software failures, a failure modes and effects analysis (FMEA) is performed. FMEA's are discussed further in section 4.4.4.

3.5.1 Designing for Safety

To a great extent, safety can, and has to be, designed into the hardware and software. This is done by using factors of safety, designing equipment to be fail-operational or fail-safe, and ensuring that the equipment is operationally safe.

Factors of safety are "multiplicative constants applied to maximum expected or limit loads that occur during any phase of the hardware use" and "account for uncertainties in load definitions, materials, properties, dimensional discrepancies, etc."[37] During the qualification process, testing is performed at a level exceeding the expected operating limits to ensure that the factor of safety is sufficient.

During the *Apollo 13* mission, a major mishap occurred which resulted in loss of mission and very nearly resulted in loss of life. An oxygen tank, which supplied O_2 to the ECLSS and the fuel cells, ruptured in a catastrophic manner.[38,39] Design changes had been made that raised the permissible voltage to the heaters in the O_2 tanks from 28 to 65 Vdc, but the thermostatic switches on the heaters were not modified to suit this change. During operation, a thermostatic switch failed which led to the heaters in the tank raising the temperature and, therefore, the pressure. The factor of safety was exceeded and the tank exploded. Jury rigging the ECLSS in the lunar excursion module was necessary for the crew to survive until they returned to Earth.

This example illustrates that failure of even one critical part of a design can be catastrophic if the design is not fail-operational or fail-safe. Fail-operational is defined as "the ability to sustain a failure and retain full operational capability." Fail-safe is "the ability to sustain a failure and retain the capability for safe crew and (mission) operations."[37] The *Apollo 13* ECLSS could have been made fail-safe or fail-operational by several methods: a separate redundant thermostatic switch could have been used; the heater controller could have been designed to shut off the heater in the

event of a failure; a relief valve could have relieved pressure from the tank; or a redundant O_2 tank could have provided the necessary O_2. The importance of designing the ECLSS to be fail-operational or fail-safe cannot be overemphasized.

Such factors as the sharpness of edges, the allowable temperatures of parts which may be touched, and the level of noise which may be generated also relate to safety. Allowable levels are specified based on the physical tolerances of people. Man-systems requirements address some of these factors, and detailed descriptions of permissible levels are described in the man-systems integration standards.(9) Other man-system factors affect the design and operation of controls, safety aspects of maintenance operations, and startup and shutdown procedures.

3.5.2 Designing for Reliability

Reliability requirements are generally defined at the system or subsystem level. Allocating these high-level requirements to the assembly and component levels can be done by using probability laws to determine the reliabilities of the lower-level subunits which make up a higher-level unit so that the higher-level reliability requirements are met. The reliability requirements of the lower-level units do not need to be identical, and optimizing the requirements based on the masses of the units can minimize the total mass of the spares.

Two approaches can be used to ensure that the requirements for reliability are met:

(1) A system can be designed for a given mission duration with little or no capability for repair. Redundant hardware is used in the event of failure of primary hardware, with spares provided for only the most critical components. This approach is more suited for short duration human missions and robotic missions.

(2) A system can be designed to be repaired and maintained indefinitely. Spares are provided for all critical components, and redundancy is used to maintain critical functions while the primary hardware is being repaired or replaced. This approach is essential for some aspects of long duration missions.

For most long duration missions a combination of these approaches will be best. Components such as ducting, plumbing, and, possibly, heat exchangers can be designed to perform for the duration of a mission without failing, so that only a few spares need to be provided. Components such as fans, pumps, and valves can be designed to be repaired or replaced. A limiting factor for the number of spares that can be provided is the total mass and volume of the spares. The design of a maintainable system must ensure that allocations of spare parts do not exceed program constraints for launch mass and volume as well as for crew time for maintenance.

For a system designed to be repaired, the recovery from a failure occurs in four steps:

(1) Detection of the failure

(2) Isolation (location and disengagement) of the failed component

(3) Repair of the failure

(4) Restoration of the failed function.

The use of redundant backup units that can be started quickly provides a level of failure tolerance which allows time for failed components to be repaired. Because most ECLS functions are "life critical," the capability to tolerate single failures and continue performing is essential, and the capability to tolerate two or three failures is highly desirable to ensure that reliability requirements are met.[40,41]

3.5.3 Leak Detection

ECLSS's involve the movement and transformation of numerous fluids, both liquid and gaseous. Numerous tanks and much tubing and ducting (with joints, fittings, and valves) is inherently a part of an ECLSS. These components provide many potential sites of leaks, which at best reduce the performance of the ECLSS and at worst are potentially life threatening. Detecting leaks early, while they are small, is essential in order to ensure proper operation of an ECLSS. Design of an ECLSS for accessibility aids in locating and repairing leaks. Leaks in the pressure shell (due to meteoroid penetration or other factors) also impact the ECLSS due to increased loss of atmospheric gases. Automated methods, such as acoustic sensors, can greatly aid in the detection and isolation of leaks.

3.5.4 Hazardous Gases

Hazardous gases which may be used, produced, or processed by ECLS subsystems include explosive gases such as H_2 and CH_4 and toxic gases such as CO and trace contaminants to be removed by the TCCA. All of these are of great concern and the utmost care must be taken to minimize their occurrence when possible, or to incorporate appropriate safety features when the gases are necessary products or inputs to ECLS subsystems. The ECLSS design must anticipate the effects of exposure to hazardous gases, to ensure that none of the equipment will be detrimentally affected by exposure. Oxygen is potentially a hazardous gas, since it supports combustion. The level of O_2 must be continually monitored to ensure that it stays within the design range.

3.5.5 Safe Haven/Contingency Operations

Many types of failures may lead to partial disabling of a space habitat and lead to a "safe haven" condition where operations are reduced to the minimum for survival until the crew can be rescued or can escape in an emergency habitat. Since the ECLSS is critical for this, the capability to continue at least minimal ECLS functions for the period of time required for rescue or escape is essential. Because of the possibility that one or more pressurized modules will be inaccessible, it is necessary to distribute the ECLSS and have redundant subsystems in different modules. Because of the possibility of losing some resources, such as reductions in the amount of available power or loss of data management, backup ECLS subsystems may need to be nonregenerable technologies requiring manual operation. Because less trained people may have to operate these subsystems, they must be designed to be simple to operate. The purpose is to ensure survival until rescue or escape.

3.6 Test Requirements

Rigorous testing is required during development to verify acceptable performance of the ECLS subsystems and the integrated system. This requires facilities which can support independent

development, performance, qualification, and acceptance testing of each assembly, as well as integrated testing in flight-like configurations. In addition to the physical requirements, prior to each test a hazard analysis must be performed to ensure that safety requirements are met. Testing that involves human subjects has additional requirements regarding hardware standards and medical aspects.

3.6.1 Facility Requirements

The test facility requires the basic utilities such as adequate power, water, and gases. In addition, factors such as the amount of space available in which to work, data recording equipment and computers, and facilities for collecting and processing gas and liquid samples are important. For simulating the flight conditions, a chamber capable of being sealed and of sufficient size is needed, as well as the means to control the hardware and record data from outside the chamber while it is sealed are needed. Before testing is allowed to begin, an operational readiness inspection (ORI) is performed to ensure that equipment is properly connected, that safety requirements are met, and that other considerations are satisfied.

3.6.2 Hazard Analyses

Before beginning each test, the potential hazards must be evaluated and reviewed by a team which considers hazards inherent in the hardware or test setup and hazards which may result from failures of the hardware or test facility. Hazards are rated by their level of "criticality" with a Criticality 1 hazard being most severe. (This is discussed further in chapter 4.) They are also classified according to whether people or equipment will be affected by the occurrence of the hazard. If a hazard cannot be eliminated, then efforts must be made to minimize the likelihood of it occurring. For example, when testing CO_2 removal assemblies in a closed chamber, there is a possibility of CO_2 accumulating because of leaks and reaching levels that may be hazardous to people entering the chamber after the test. Possible methods of addressing this hazard include CO_2 sensors which would warn of excessive levels or ventilating the chamber prior to allowing access.

3.6.3 Human Test Requirements

The ECLSS hardware will eventually be tested with people. By this point in the test program, the hardware design will have matured to a level near that of flight hardware. The standards for fabrication of hardware intended for testing with people are more stringent than for prototype hardware, and the hardware must be rigorously designed and fabricated. Materials must be acceptable and compatible with the operation of the hardware and with other materials. Medical aspects, such as the atmosphere and water quality specifications discussed in appendices A and E, must also be addressed as well as legal aspects.

3.6.3.1 Hardware Standards

Hardware intended for human testing must meet higher standards than hardware that is not. This includes the man-systems aspects such as touch temperatures and the sharpness of edges, and also includes the types of materials that may be used. A massive listing of materials is given in the "Materials Selection List for Space Hardware Systems."[42] For materials not in this list, a material safety data sheet (MSDS) is required which describes the material physical properties and any safety concerns. A materials usage agreement (MUA) is required to document that a previously unapproved material has been reviewed and approved for a specific application. There are other

standards such as the electrical, electronic, and electromechanical (EEE) specifications which must also be met by hardware intended for human testing. An example of the general specifications which must be met is the "Space Station Environmental Control and Life Support System Hardware General Specification"[43] developed during the S.S. *Freedom* program.

3.6.3.2 Medical and Legal Aspects

Medical and legal aspects must also be rigorously addressed, and, to ensure that requirements are met, an institutional review board (IRB) is formed according to the guidelines of the Department of Health and Human Services. The IRB is responsible to the NASA Associate Administrator for Life Sciences. The members of an IRB are selected by the NASA field center, and they report to the field center director or a designated delegate. The IRB is required "to have at least five members, with varying backgrounds to promote complete and adequate review of research activities. . . The IRB shall be able to ascertain the acceptability of proposed research in terms of institutional commitments and regulations, applicable law, and standards of professional conduct and practice."[44] Numerous reviews are held at key stages during the test preparations to ensure that medical and legal issues are addressed at the appropriate times. Specific responsibilities of the IRB are the following:

(1) Review proposed human research prior to approval or execution

(2) Assure that human subjects are given adequate information as part of the informed consent process

(3) Assure documentation of informed consent or waiver requests

(4) Assure that appropriate and adequate medical support is available during performance of human research experiments

(5) Assure that experimental risks have been addressed in the protocol and that safety precautions have been taken to minimize risks

(6) Notify the principle investigator(s) of approval/disapproval of the proposed human research

(7) Continue review of the human research appropriate to the degree of risk

(8) Observe the research if deemed necessary

(9) Maintain documentation of the IRB activities.[45]

3.7 Flight Requirements

After the hardware, software, and system has passed all of the development tests, the flight design must be finalized and a flight-qualifiable unit must be fabricated. The specifications to be met are extensive and include NASA and military standards concerning design, fabrication, testing, electronics, software, and other aspects. Qualification and acceptance tests are then required to validate the system for flight.

3.7.1 Packaging

Volume, mass, and energy consumption are basic characteristics which are minimized as much as possible. Appropriate packaging of the ECLS hardware can minimize volume, especially, and synergisms between assemblies packaged together can minimize all three characteristics. Another factor to consider is access for maintenance and replacement of ORU's. Man-systems requirements for accessibility are described in the man-systems integration standards manual[9] and include the requirement for an astronaut in a space suit to have access to the ECLS equipment for repairs.

3.7.2 Specifications

Flight specifications for hardware, software, and the overall system are similar to those for human testing. These specifications are to ensure that materials and systems are compatible. Generally, there are several pages of applicable documents which cover specifications for controlling stress corrosion cracking; standards concerning EEE parts; metallic materials usage; vacuum stability requirements; lubrication; wiring and cables; flammability, odors, and offgassing; electromagnetic emissions; cleanliness levels; human engineering; data and software protocols; and other aspects.

3.7.3 Testing

Before integration into the flight habitat, the system must be "qualified." Qualification tests demonstrate that adequate margins exist in the final product to assure that operational requirements are met. The qualification test levels are established to exceed the range of environments and stresses expected in any subsequent use ranging from acceptance testing at operational levels through mission applications. Following qualification testing, acceptance testing is performed as a final verification of the acceptability of the design. The purpose is to verify that all functions perform properly under normal conditions, so the severity of the test conditions is not as great as for qualification testing. (The verification process is discussed further in section 4.4.)

3.8 Cost Considerations

The costs to be considered when selecting technologies include development costs (the expense involved in bringing a technology to flight status) and the operational costs (the cost to keep the technology operating including the costs of spares and maintenance). These costs include direct and indirect costs. Direct costs include hardware procurement and manufacturing costs. Indirect costs are those such as support infrastructure including test facilities. The costs incurred to develop equipment to operational status are referred to as design, development, test, and evaluation (DDT&E) costs. Life-cycle costs include the costs to operate the equipment as well as the DDT&E costs. One approach to minimize cost is referred to as design-to-cost (DTC) where cost goals are established early in the system development process and are considered design objectives. These cost considerations are discussed in the following sections.

3.8.1 DDT&E Costs

The DDT&E costs are those required to develop a subsystem from a concept on paper to operational status. Typically, to develop an ECLS subsystem to qualify for flight costs millions of

dollars, sometimes tens of millions. Much of this expense is for testing and verifying that the performance meets the requirements and specifications. Additional costs are incurred to meet the rigorous standards regarding materials usage and design compatibility requirements.

3.8.2 Life-Cycle Costs

The life-cycle costs (LCC) are the total cost to the Government of acquiring and owning a system. The LCC includes the cost of "development of hardware and software, production, logistics support, and personnel costs through development, acquisition, operation, support, and, where applicable, disposal."[46] Operational costs are incurred by power consumption, expendable components, and maintenance requirements. Other factors, such as the amount of time required of astronauts to operate and service the system, also incur costs. To determine the total cost of a piece of equipment, all of these costs need to be considered.

3.8.3 Design To Cost

Frequently there is a mandated limit to the costs which can be incurred, and the DTC approach is being used more frequently during system development. This involves selecting technologies which can be developed at a cost within the allowable budget, and at times may lead to relaxing performance requirements so that costs can be minimized. Due to the conservatism in many requirements, it is possible to reduce them without jeopardizing safety requirements, but engineering judgment is required to ensure that safety is not compromised. The DTC approach allows the designer flexibility with regard to how mission objectives are to be met by:

(1) Specifying the performance needed, not the method to use

(2) Specifying a total time to operational capability, not detailed milestones

(3) Scheduling a program to permit several iterations, not requiring 100-percent success on the first attempt

Life-cycle cost analysis is the basis for selecting a DTC goal, which should be achievable but require critical examination of requirements, concepts, and designs.[46]

4.0 ECLSS DESIGN AND DEVELOPMENT PROCESS: SYSTEMS ENGINEERING AND INTEGRATION

Developing an ECLSS is an iterative process involving evaluation of technologies and system configurations, manual and computerized analyses, and hardware and software testing. Initially, simplified mission scenarios are evaluated for their requirements and constraints, such as mass limits due to launch vehicle limitations, and are later refined as more detailed information becomes available on the missions and the capabilities of the available technologies. Early evaluation involves top-level trade studies where simplified models of the candidate technologies are used to identify the most suitable technologies based on mission requirements. More detailed models of the technology processes are used in designing the hardware and are refined as the hardware maturity increases. As the mission scenario becomes further defined and the hardware process models are refined, this information is incorporated into a detailed system model to predict the performance of the overall system and to identify potential problems. Concurrent with computer model development, hardware testing refines the technologies and provides information for the models. As the hardware matures, the suitability for a particular mission can be more readily determined, and further development and testing is done to verify performance of the subsystems prior to integrated system-level testing. When more than one technology is available to perform a function, the most appropriate technology is selected, based on the results of testing and analysis. The software required to monitor and operate the hardware and to detect and locate faults is developed along with the hardware and undergoes a comparable evaluation and verification process. This verification is intended to identify deficiencies in the subsystem design and any system integration problems. Generally, much is learned about the hardware and software during integrated testing. (Lessons learned during S.S. *Freedom's* ECLSS development testing are discussed in chapter 6.)

As the design and development process advances, each aspect of the mission becomes defined in greater detail and ultimately results in a detailed mission scenario where all the aspects interplay and mesh into an optimum balance. This requires a thorough understanding of the mission and system requirements and constraints, as well as those of each component. This process advances best when the program is well organized and development can progress through well defined phases. Communication is also important, and documentation of requirements, specifications, test results, hardware and software capabilities, and other information is one way of ensuring that the required information is available. Safety and reliability are extremely important aspects, and ensuring that the systems and components will operate safely and reliably are prime objectives of the verification process. This chapter describes the various design phases and review milestones, discusses trade study methodologies, introduces computer analysis tools used to analyze ECLSS's, and elaborates on ECLSS hardware development, testing, and verification prior to flight. The Systems Engineering Handbook (MSFC-HDBK-1912) and the System Engineering Management Guide (Defense Systems Management College, Contract Number MDA 903-82-C-0339) contain more detailed description of the systems engineering process.

4.1 Process Organization

The space habitat ECLSS design process can range from being relatively simple to very complex, depending on the mission objectives and consequent life-support requirements as discussed in chapter 3. Regardless of the end product, a typical NASA spacecraft design progresses through a series of well-defined program phases in which specific design review milestones must be successfully met before the spacecraft is considered flight worthy. The ECLSS is one of many systems designed for a

space habitat, but needs special scrutinizing because of its many life critical functions. The phases of the development process, the documentation required to ensure good communication between the participants, and the relationships between the groups involved are discussed in the following sections.

4.1.1 Development Phases

Every NASA space habitat development program, including *Skylab*, the shuttle orbiter, and S.S. *Freedom*, is divided into distinct phases as depicted in figure 12. The major review milestones and documents are also indicated at the approximate time they would be performed or prepared. Some phases are performed in-house, while others are commonly contracted to companies who perform the work under NASA's guidance. More than one contractor may be selected for the early program study phases to broaden the initial design options before selection of the best proposal for the follow-on design and construction phases. When proposals from more than one contractor have features which are desirable and complementary, the contractors may be requested to work together so that the final design can incorporate the best aspects of each proposal. The following sections give an overview of the program phases with emphasis on the ECLSS design process. (The organizations involved with these different activities are identified in section 4.1.3.)

4.1.1.1 Phase A—Concept Study and Preliminary Analysis

Phase A is usually performed solely by NASA, although for major projects contractors may also participate. During this phase, the feasibility of a project is studied, top level objectives are identified, and the initial organizational groundwork is laid out. In order to assess the feasibility of a future program, concept studies and preliminary analyses must be performed, using manual and computer methods to evaluate options. Many questions are addressed during this phase. How does the vehicle design drive the ECLSS design and, likewise, how will the ECLSS design and its interfaces impact the overall vehicle configuration? What is the mission duration? How much power will be available? What is the expected crew size? What is the resupply period? Will the ECLSS need to be closed-loop or will a simpler open-loop design suffice? Can existing technologies be used or will new technology development programs be required? The answers to these and other top-level questions can help sketch out preliminary ECLSS design options during a phase A study.

4.1.1.2 Phase B—Preliminary Definition and Design

During phase B, the preliminary concepts developed during Phase A are iteratively reviewed and analyzed, and the capabilities of each concept are compared to the system requirements using trade study techniques (discussed in section 4.3.1). As the name implies, these studies are performed to trade two or more alternatives for accomplishing the same function. Trade studies are performed on the vehicle, system, subsystem, or assembly level to identify which alternatives are best, considering performance, resource requirements (power, weight, volume, etc.), synergism with other systems, safety, and cost. Concepts which satisfy performance and other requirements are identified and refined, and those which do not are eliminated if they cannot be improved to satisfy the requirements. Contractors may participate during phase B to broaden the concept base. The ultimate objectives of a phase B study are to establish vehicle and individual system requirements and designs to be carried forward into phase C/D. The primary review milestone in phase B is the system requirements review (SRR) which serves as the first critical requirements review. At the end of phase B, the contractors' baseline designs are compared, sometimes with an internal NASA design, and the best features of each design are usually merged into a single baseline which serves as a point of departure for the phase C/D activities.

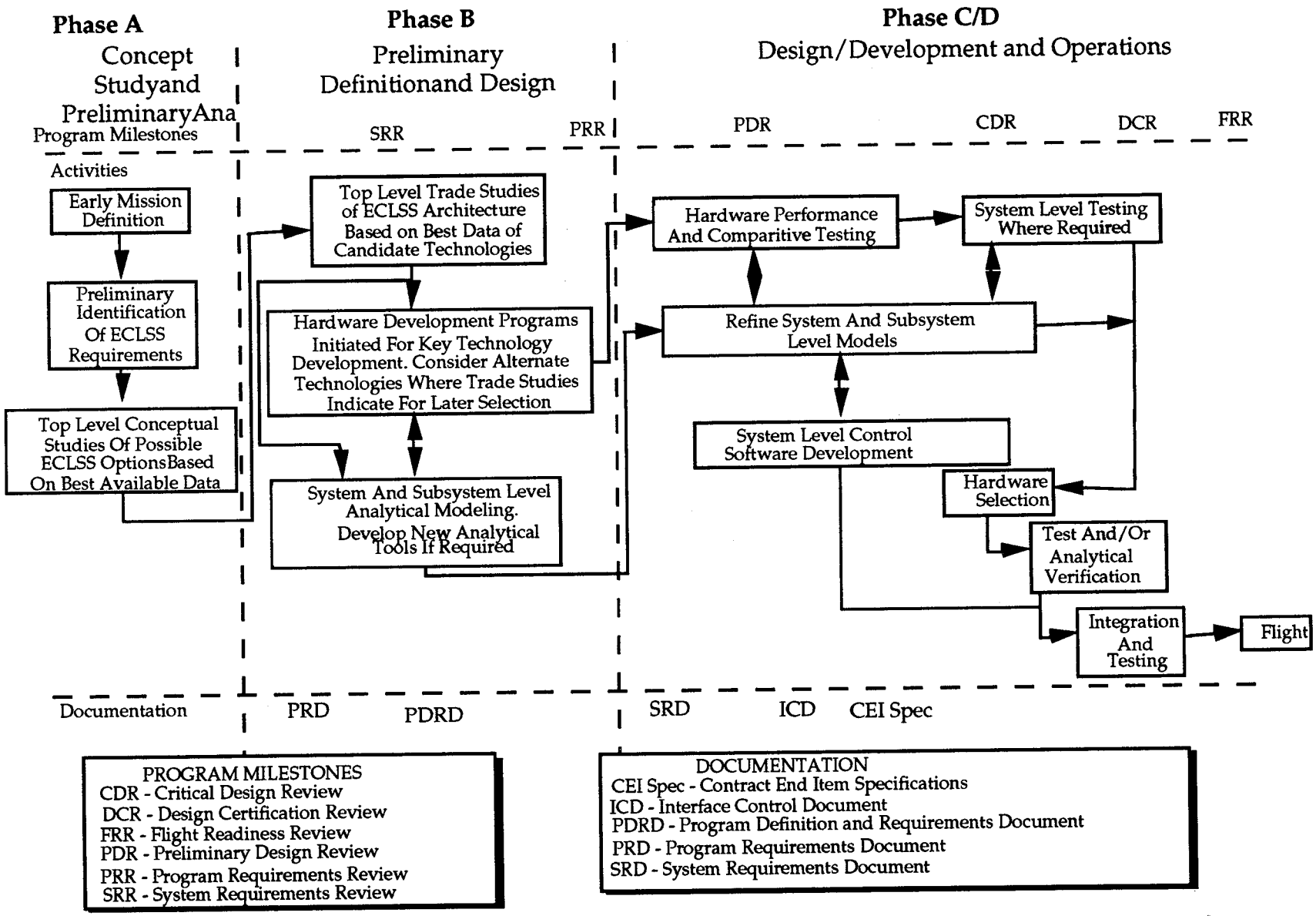

Figure 12. Typical NASA spacecraft ECLSS development process.

4.1.1.3 Phase C/D—Design/Development and Operation

Phases C and D are generally combined into phase C/D since the same contractor usually performs the design, development, and operations tasks. This is the final and most time-consuming phase of spacecraft development, and the "prime" contractor typically employs a group of subcontractors to perform many of the development tasks, while the prime performs the integration activities. The end result of phase C/D is the final design, fabrication, test and verification of the spacecraft. Phase C/D milestones and objectives are outlined in table 4.

Table 4. Typical NASA phase C/D baseline review milestones and objectives.

PROGRAM REQUIREMENTS REVIEW (PRR)	PRELIMINARY DESIGN REVIEW (PDR)	CRITICAL DESIGN REVIEW (CDR)	DESIGN CERTIFICATION REVIEW (DCR)	CONFIGURATION INSPECTION (CI)	FINAL ACCEPTANCE REVIEW (FAR)
Establish: • Configuration Concepts & Requirements • Qualification Approach • Systems Requirements Baseline • Safety Assessment Plans • Determination Of Required Support (Logistics, Transportability, Etc.)	Establish: • Basic Design Approach • Compatible Design/ Requirements • Test Planning • Safety Assessment • Commonality • Producibility • Baseline Part I Contract End Item (CEI) Specification	Establish: • Design Configuration • System Compatibility • Reliability Assessment • Maintainability Assessment • Safety Assessment • Approved Design Baseline • Producibility • Authorize Release Of Baselined Design	• Assure Design And Performance Meets Requirements Specifications	• Establish That Configuration Complies With Design Documentation (As-Built vs. As-Designed) • Baseline Part II CEI Specification	• Establish That Functional Performance Complies With CEI Specification • Baseline Part II CEI Specification

Extracted From MMI 8010.5A, Attachment B, December 14, 1989

Of chief importance early in phase C/D is the program requirements review (PRR) which establishes baseline systems requirements. It is extremely critical to complete the PRR early to assure that individual spacecraft systems engineers, such as those designing the ECLSS, understand the interface requirements between systems. A typical milestone review board structure is shown in figure 13. Once requirements are baselined, a written change request (CR) must be submitted and approved by a change order board to revise the respective requirements document.

The preliminary design review (PDR) provides an opportunity to review the basic design approach and assure that the design is compatible with all requirements. PDR's may be performed for the various systems involved with spacecraft design, such as the ECLSS, or, for large projects, for project phases such as MTC and PMC for S.S. *Freedom*. Discrepancies between the design and the requirements are documented on a review item discrepancy (RID) form and forwarded to the prime contractor for review. The prime contractor has the responsibility to answer the RID which is then forwarded to a review board for approval as shown in figure 13. If the RID response is disapproved by the board, it is returned to the contractor for further action. This cycle continues until all RID's have been dispositioned, with the end result being a well reviewed, enhanced design leading into the next milestone. For a major project, the process of answering and "closing" RID's may take several months. At the PDR milestone, the design is expected to be at least 50 percent complete and design drawings at least 10 percent complete.

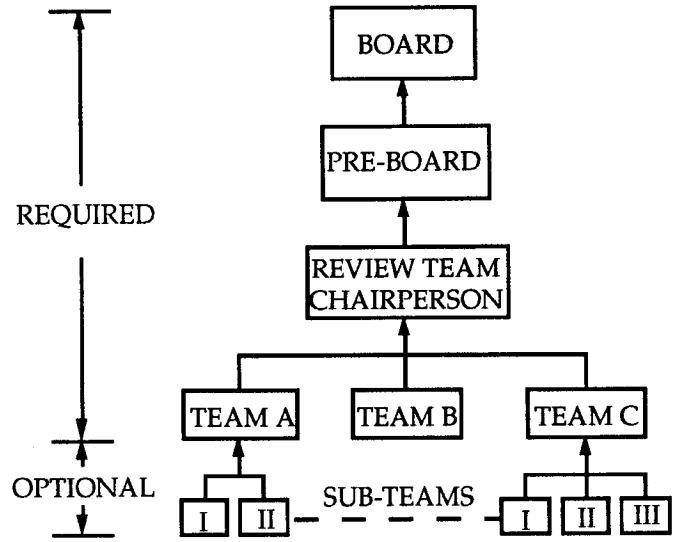

Extracted From MMI 8010.5A, Attachment B, December 14, 1989

Figure 13. Typical NASA review board structure.

The last critical evaluation occurs at the critical design review (CDR). This review marks the final opportunity to change a design drawing before fabrication of flight hardware begins. Detailed designs are compared again with the program requirements documents. The RID process is repeated to make final design and documentation improvements. Safety assessments, as well as test and verification plans, are checked against their respective requirements documents. Spacecraft integration plans and procedures are closely reviewed to uncover potential shortcomings of the integration process. At the CDR milestone, the design and drawings should be 90 to 95 percent complete.

After flight hardware manufacturing has been completed, a design certification review (DCR) is held to assure that the spacecraft design and performance meets all requirements and specifications. Flight hardware manufacturing records are reviewed, and qualification test reports are compared against the qualification test plans. In addition to performance testing, qualification testing usually includes thermal/vacuum, vibration, and electrical interference testing. Requirements compliance reports and engineering analysis reports also assist in the verification process. Certificates of qualification (COQ's) are issued for each flight component to certify compliance with the qualification test requirements. Upon completion of the DCR, flight hardware is shipped to the launch site for further integrated testing prior to flight.

A configuration inspection (CI) certifies that the integrated flight systems and operations comply with the design documentation. Integrated systems are compared with engineering orders, drawings, and system schematics. The CI review is held at the integration/launch complex before transfer of responsibility from the prime contractor to NASA.

The final acceptance review (FAR) establishes that the spacecraft functional performance complies with the contract end item (CEI) specification. Acceptance data packages are reviewed for each serial-numbered major hardware component (both flight and spares). Mass properties reports and system design handbooks are received along with a host of other paperwork necessary to certify flight worthiness of the spacecraft.

The final portion of phase C/D is the operation in flight. This will either verify the correctness of the design for the application or will identify aspects of the design or design process which are deficient. Either way, much can be learned, and the results of flight operation are generally documented in "lessons learned" publications.[1–4] Lessons learned may relate to program control, design, man-machine interfaces, flight operations, ground operations, safety, reliability, and quality assurance. These lessons include designing parts so that they cannot be installed incorrectly, ensuring materials compatibilities, reviewing systems and subsystems jointly by development/engineering and operations personnel early in the planning cycle, and providing operational flexibility in design, even if efficiency must be reduced.[5]

4.1.2 Documentation

Ensuring that all factors of the program during all phases of the design and development process are communicated to the participants is a major challenge. Communication is largely achieved by documenting the technical and programmatic requirements, design architecture, interface requirements, safety and reliability requirements, and verification requirements for system hardware and software. Development testing and the results of tests must also be documented. The names used to identify particular types of documents may vary somewhat from program to program, but the functions they perform are common to all programs. The top-level (level I) requirements document is usually called the program requirements document (PRD), and it establishes the general program objectives and requirements. Other, more specific, documents are then derived from the PRD. A simplified "documentation tree" is shown in figure 14. In general, documentation can be grouped into four categories: requirements, interfaces, verification, and design support. These categories are described in the following sections. The documentation for the S.S. *Freedom* program is described further in chapter 6.

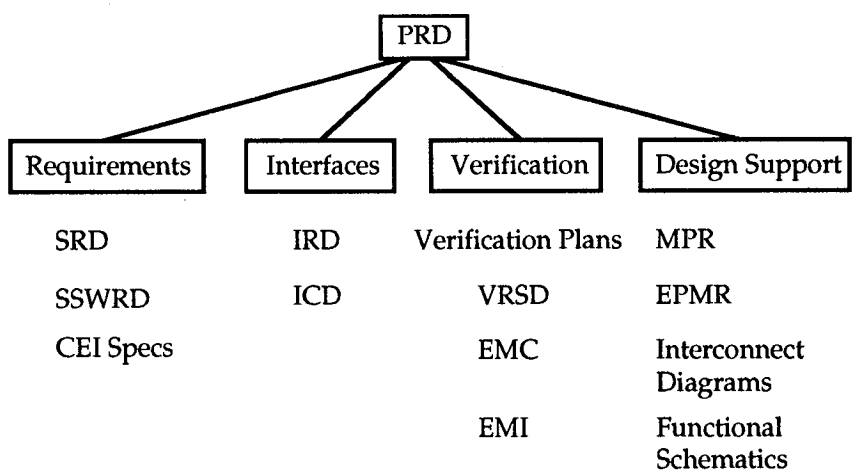

Figure 14. Simplified documentation tree.

4.1.2.1 Requirements Documents

The system requirements document (SRD) provides the system-level guidelines and restrictions for a project, without defining design solutions. Typically, the SRD is initially released at PRR and is baselined, or approved by all participants, prior to PDR. An SRD may be at level II, level III, or other levels of a program, depending on the size of the program and the management structure. The lower-level SRD's may be similar to, or the same as, the end-item specifications, described below.

The systems software requirements document (SSWRD) defines the system requirements which must be satisfied by the software. The SSWRD is initially prepared during phase A and contains broad, high-level requirements on aspects such as total data handling capacity, computer speed, mass storage, memory requirements, and processor capabilities. The SSWRD is revised and expanded as a program proceeds. The inputs to the SSWRD come from the SRD and derived requirements identified during analysis of system functions, subsystem and payload requirements, and overall performance requirements.

The contract end item specifications (CEI Specs) provide the specifications for each end-item based on the higher-level requirements. There are two parts to the CEI Specs. Part I specifies technical requirements for the performance, design, and verification of the CEI, establishing the baseline design requirements. Part II specifies the exact configuration requirements for the production, quality control, acceptance verification, and preparation for delivery of the CEI, establishing the baseline product configuration. To ensure that the CEI meets the requirements, an index referred to as the verification cross reference index is used to verify compliance and is included with the CEI Spec. This index is described in section 4.1.2.3.

4.1.2.2 Interface Documents

When connecting end-items, such as assemblies or components, the fluid, electrical, and other interfaces must be compatible to ensure that the overall systems will function properly. Communication between the groups working on both sides of an interface is essential and the specific characteristics of each interface connection must be agreed upon.

The interface requirements document (IRD) establishes the specific functional and performance requirements for the interfaces and provides the means to assess whether the requirements are being met by the end-item designs. In some cases, an SRD may be used in lieu of an IRD.

A more detailed document, the interface control document (ICD), contains descriptions of the end-items being connected and detailed plans for meeting the interface requirements as specified in the IRD. ICD's are prepared at the system level to ensure that different systems such as the ECLSS and the power distribution system interconnect properly, and also at a lower level internal to a system, referred to as a component level ICD. Typically, the ICD is initially released at PDR and is baselined at CDR.

4.1.2.3 Verification Documents

To ensure that hardware and software are designed and perform properly, meeting all requirements and specifications, the planning policies, activities, requirements, and organization necessary to perform the verification operations are documented in the verification plan. This plan addresses flight and ground support equipment at all test sites, the launch site, on-orbit servicing, post-servicing, and the communication ground system. Typically, the verification plan is initially released in the PRR and PDR data packages, and is baselined at CDR, with updates as required. Other verification plans deal with more specific aspects such as safety and interface verification. The verification process is described in section 4.4.

The verification requirements and specifications document (VRSD) includes all requirements and specifications for verifying the payload, its subsystems, the ground system, and servicing, and identifies whether assessment or test is required for verification. These requirements are then used for

preparing verification procedures. Typically, the VRSD is initially released in the PRR, PDR, and CDR data packages and is baselined 90 days prior to starting the applicable verification phase, with updates as required.

Electromagnetic effects are present with any electronic equipment and the potential for interferences which may adversely affect performance must be minimized. Effects may also include power lines causing nearby unshielded data lines to indicate erroneous data. To ensure compliance with the requirements and specification relating to EM effects, the electromagnetic compatibility (EMC) test plan describes the methods, test conditions, and procedures to be used to demonstrate EMC. Electromagnetic interference (EMI) is also evaluated, both the performance of equipment subjected to EMI and the EMI produced by a piece of equipment. The EMC and EMI test plans must be approved prior to beginning testing.

4.1.2.4 Design Support Documents

Parameters which are typically of concern when designing spacecraft include mass and power consumption. To accurately account for these parameters, reports which list the mass and power consumption of all hardware to the ORU level are provided regularly during the design and development process. Diagrams and schematics are used during the design process to ensure that the equipment is correctly connected.

The mass properties report (MPR) lists the current mass and other mass properties, and also lists information about the mass properties controls and margins. This information is used to verify integration requirements and as in/out to other analyses. Typically, the MPR is initially released on the 15th of the month after "Authority to Proceed" plus 60 days, with updates quarterly and during reviews.

The electrical power margin report (EPMR) describes the electrical power and energy requirements using power load and timeline information. The requirements for individual ORU's and for subsystems and systems are compared with the allocations or power system capacity.

Functional interconnect diagrams show the functional interconnections involving electrical and fluid systems, and are used for systems analysis and troubleshooting during design and operation. The plumbing and electrical cabling which connect assemblies and subsystems are depicted. Diagrams for electrical and mechanical connections are usually prepared separately with appropriate cross references. End-to-end system functional schematics are similar, but show greater detail, including all switches, controls, valves, relays, sensors, regulators, and pumps, indicated by symbols.

4.1.3 Organizational Roles and Relationships

Many organizations are involved with the planning, design, development, testing, verification, and operation of an ECLSS. These include various groups (Codes) at NASA/HQ that provide funding for research and development, the NASA field centers where the technical work is performed or monitored (if performed by a contractor), and contractors who perform much of the detailed design and development work with oversight from the NASA field centers. The NASA relationships regarding ECLSS activities are shown in figure 15. (This figure is now out of date. During 1993, organization changes were made that reassigned the codes at NASA/HQ and the responsibilities of the field centers. A new Code U, Office of Life and Microgravity Sciences and Applications, is now responsible for many of the roles that were assigned to Code S and the former Code R. The changes have not yet been

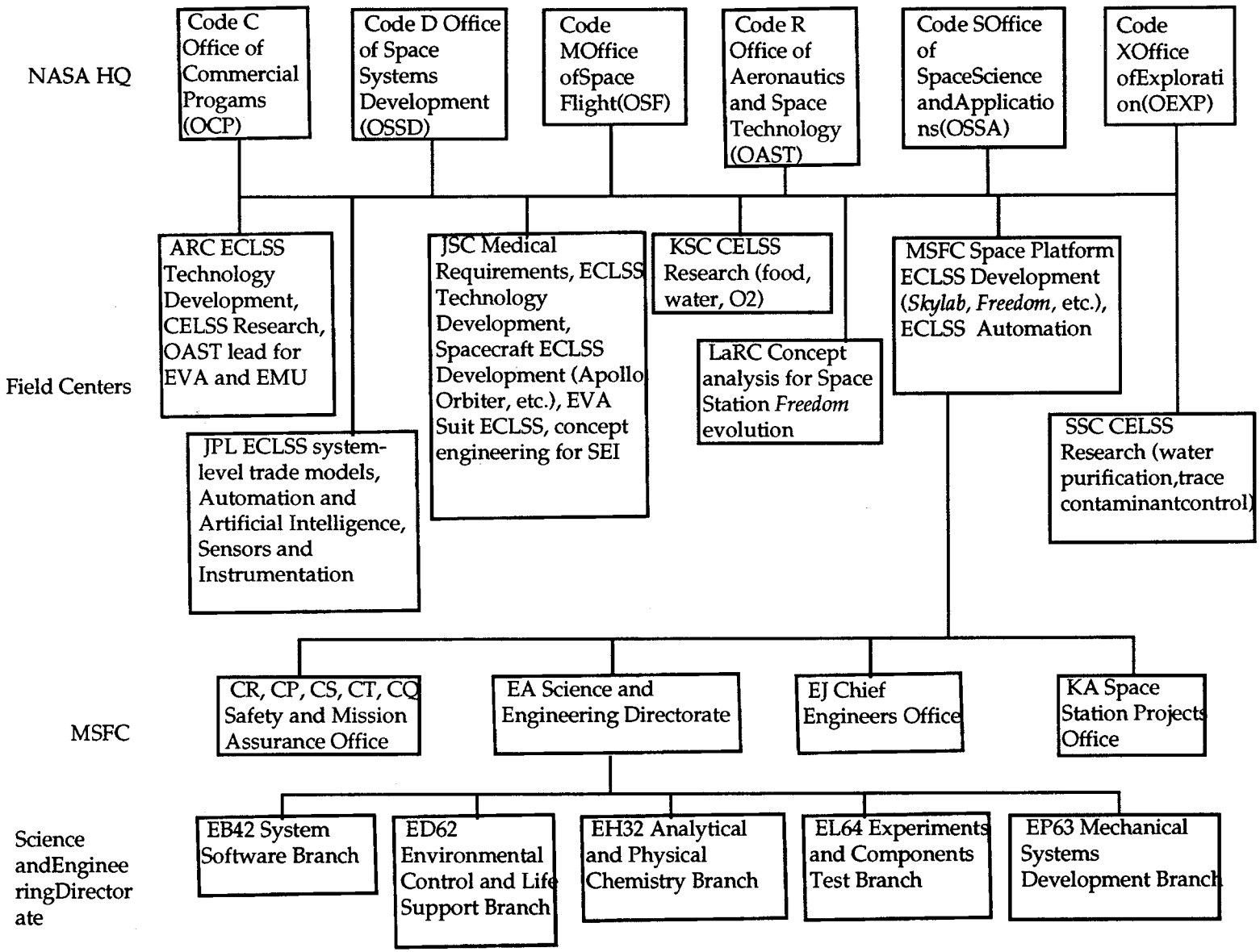

Figure 15. Organizational relationships for ECLSS activities.

completed.) Some programs, such as Spacelab and S.S. *Freedom*, also involve international cooperation. In these cases, specific roles and responsibilities are defined by agreements between the participating nations.

4.1.3.1 Agency Roles and Relationships

Funding for ECLSS activities comes from several Codes (or offices) at NASA HQ, each of which sponsors specific research. The Codes have fairly distinct responsibilities and the types of ECLS activities funded vary, depending on the level of development, from concept development (low technical maturity) through flight hardware development (high technical maturity). The Codes and the activities which relate to ECLSS are the following:

Code C (Office of Commercial Programs, OCP) funds technology development activities through the Small Business Innovation Research (SBIR) program. This program has led to the development of several technologies which will be used on S.S. *Freedom* initially or as it evolves.

Code D (Office of Space Systems Development, OSSD) funds activities related to development of space systems such as S.S. *Freedom.* MSFC, in its role as developer of the ECLSS for S.S. *Freedom,* receives most of the funding for this activity.

Code M (Office of Space Flight, OSF) funds Earth-to-orbit and orbit-to-orbit flight programs such as the space shuttle program, and programs to utilize Spacelab and S.S. *Freedom.* Specific areas of interest relating to ECLSS include water recovery and management and cryogenic supply, storage, and handling.

Code R (Office of Aeronautics and Space Technology, OAST) funds activities for which the application may be many years in the future (e.g., evolution of S.S. *Freedom,* lunar base, or Mars mission activities) but which require a long lead time to ensure adequate development by the time the programs are funded. These activities are typically performed at ARC and JSC, with regard to ECLSS. Some Code R activities are performed at MSFC and KSC.[6,7]

Code S (Office of Space Science and Applications, OSSA) funds life support activities through the Life Sciences Division. These activities include the bioregenerative life support activities at ARC, KSC, and SSC, and medical activities through JSC such as determining the effects of long-term microgravity on humans. Specific areas of interest relating to ECLSS include real-time environmental monitoring and control, regenerative life support, thermal control systems, microbial decontamination methods, biological life support (CELSS), and dust protection.

Code X (Office of Exploration, OEXP) funds activities which support exploration of the solar system via the Space Exploration Initiative (SEI). Specific areas of interest relating to ECLSS include regenerative life support including sensors, controls, physicochemical processes, and bioregenerative systems; cryogenic fluid management, storage, and transfer; radiation protection; EVA systems; and microgravity countermeasures/ artificial gravity.

ECLSS activities at the field centers are separated, roughly, as indicated in figure 15, although some overlap occurs. In general, research activities are performed at ARC, JSC, KSC, and SSC; while application development is performed at MSFC (especially for space habitat applications, *Skylab* and S.S. *Freedom*), although the ECLSS for Apollo and the orbiter was developed by JSC. The medical requirements regarding atmosphere and water quality are determined by medical personnel at JSC.

ARC is the lead field center for OAST for EVA/EMU research and has a major role in regenerative life support development. LaRC performs concept analysis and planning for the evolution of S.S. *Freedom.* JSC is the lead field center for the space shuttle program and for SEI overall mission concept engineering and analysis, and planning related to SEI planetary surface systems, and has a major role in regenerative life support and EVA systems. JPL has a substantial role in artificial intelligence and the development of microsensors, and is developing trade study models for evaluating the ECLS technology options for lunar and Mars missions. KSC has a limited role in human support technology in the area of bioregenerative life support. SSC has a minor role in OSSA life science research relating to bioregenerative life support.(7) Once the basic concepts are demonstrated and the capabilities and requirements are identified, integrating selected technologies into an ECLSS is performed at MSFC for space "platforms" (i.e., space habitats) and at JSC for space vehicles. Research to automate ECLSS operation and monitoring is being done at MSFC and JPL.

4.1.3.2 MSFC Roles and Relationships

Early concepts for many missions are initially developed in the Program Development (PD) office at MSFC. Phase A studies are typically performed by or through this office, including studies of ECLSS concepts for manned missions. Upon approval for further development, the PD work is transferred to a project office and the Science and Engineering Directorate for continued development.

As the field center responsible for developing the ECLSS for S.S. *Freedom,* MSFC has several roles including developing and modifying ECLS technologies into a reliable and maintainable integrated system, testing and assessing the candidate technologies and selecting the best technologies for use on S.S. *Freedom,* improving computer models of ECLS technologies and systems, and assessing flight ECLSS's. Several organizations at MSFC are involved with the ECLSS activities, as shown in figure 15. Coordination and management of the overall project is performed by the Space Station Projects Office (code KA). Within the Science and Engineering Directorate (code EA), technical oversight is managed through the Chief Engineers Office (code EJ), with specific activities being performed by several branches within EA. Safety aspects are managed by the Safety and Mission Assurance Office.

The roles and responsibilities of the branches in EA are as follows:

EB42 Software development/verification; evaluation of electrical, components, controllers, and wiring

ED62 Overall system design responsibility, hardware development/verification, requirements evaluation/ review, test program oversight, design review, contractor oversight

EH32 Chemical analyses of liquid and gas samples from hardware testing and evaluation of contractor analyses, evaluation of the effects of microorganisms (biofilm formation, materials corrosion, etc.)

EL64 Operation of the "Manned Habitat Environmental Control and Life Support Test Facility," planning and performance of the in-house test program

EP63 Evaluation of mechanical systems aspects of the hardware design.

All of these groups work closely together to ensure that all aspects of the ECLSS development process are adequately addressed. The interrelationships can be illustrated by the following sequence: ED62 develops test objectives and plans, EL64 prepares test procedures and performs tests in coordination with ED62, test results are evaluated by ED62 and design change recommendations are made, EB42 prepares software based on hardware performance and operation capabilities, EH32 analyzes gas and water samples or monitors the analyses performed by contractors, and EP63 evaluates the mechanical systems aspects of the hardware and troubleshoots mechanical problems.

4.1.3.3 Government-Contractor Relationships

Contractors are involved with almost every aspect of the process of designing an ECLSS. Many of the technologies are conceived and developed by contractors, and for major programs, such as those involving human space flight, contractors support government activities to design, evaluate, and build a spacecraft. Also, for many major programs which involve numerous companies, a "prime" contractor is hired to coordinate the activities of the "subcontractors." Other tasks which contractors may perform include computer analyses of ECLS subsystems or system designs, test planning and performance of tests, software development, and chemical analyses of gas and liquid samples.

4.2 Design Basics

In order to design an ECLSS, information is needed on the available technologies which may meet the specified requirements. Initially, information is needed on the technical maturity of the technologies which are available to perform the ECLS functions and on the interface requirements of those technologies, such as fluid states, compositions, pressures, temperatures, and flow rates; electrical power requirements; heat rejection requirements; and data and control requirements. This information is then used in trade studies (discussed in section 4.3.1) to evaluate preliminary system configurations and to identify those technologies likely to be able to meet the medical, mission, and other requirements. It may also be determined that the requirements are not achievable with the available technologies and that the requirements must be adjusted, such as allowing a higher pCO_2 than initially required or permitting some venting of gases or liquids overboard when the initial goal was no venting. Sources of information, the technology maturity scale, and the technology development process are discussed in the following sections.

4.2.1 Information Resources

Up-to-date information is essential to designers when evaluating technology options and design concepts. Literature searches of journals and industry publications, such as catalogs and reports, can provide much of the information needed. To aid in locating information, several data bases are specifically oriented toward ECLS. Other sources of current information include papers presented at conferences. References which provide information on analysis techniques and technology options are also important. Comprehensive documents such as "Analytical Methods for Space Vehicle Atmospheric Control Processes,"[8] published in 1962, and "Trade-Off Study and Conceptual Designs of Regenerative Advanced Integrated Life Support Systems (AILSS),"[9] published in 1968, are still useful. Standard engineering reference works are also good sources of information. (See the bibliography for a listing of additional useful works.)

4.2.1.1 Data Bases

Basic information on ECLS technologies and instrumentation technologies applicable to ECLS is essential in performing trade studies and evaluating the suitability of technologies for a specific application. Data bases specifically dealing with ECLS information include ones developed by MDSSC for MSFC containing information on technologies which can perform the ECLS functions, including those which are not yet available but which may be developed for future missions, and a data base of instrumentation technologies.[10] A more comprehensive database is the "Life Support Data Base" being developed by ARC. The information in the MSFC data bases is included, and in addition, this data base has information on chemical properties, chemical exposure limits, material properties, and mission scenarios. (Information on how to access this data base can be obtained from Mark Ballin at ARC, phone 415-604-3210.)[11,12]

4.2.1.2 Conferences

Current information is available from professional society conferences such as the International Conference on Environmental Systems (ICES) (sponsored by SAE, AIAA, ASME, the Aerospace Medical Association, and AIChE) or the International Conference on Life Support and Biospheric Sciences (sponsored by NASA/MSFC, IASLS, the former USSR (now Siberian) Academy of Sciences: Institute of Biophysics, the Consortium for Space Life Sciences, and other groups), which are dedicated to ECLS topics, and the AIAA Space Programs and Technologies Conference or the World Space Congress, which include some sessions applicable to ECLS. There are also ECLS meetings and workshops sponsored by NASA which are focused on specific aspects such as instrumentation or systems analysis.[13,14]

4.2.1.3 New Technologies

Development of new technologies is very important in order to meet the ECLS challenges of future missions. Where do the ideas come from? Who develops new technologies? Where can information about them be obtained? Many of the research activities are reported in journals and at conferences, but concepts which are only in the formulation stage are not generally reported.

To find out about new concepts and to stimulate new ideas, NASA publicizes descriptions of technology needs and solicits ideas on how to meet those needs. Requests for proposals are publicized in the Commerce and Business Daily, a government publication. Companies respond with proposals describing how they can meet the request. Once each year the Small Business Innovation Research (SBIR) Program Solicitation publicizes the technical needs of NASA to meet program and research goals. The statements of technology needs are prepared by the groups which have the needs, for example the technology needs for the ECLSS for S.S. *Freedom* are prepared by ED62. The purpose of the SBIR program is to solicit proposals for innovative concepts from small businesses.[15] Another important means of publicizing NASA's needs and obtaining information on new concepts is special meetings such as the OAST sponsored meeting on Life Support In Situ Sensors for Long Duration Human Space Missions, held at JPL on November 6 and 7, 1991. At such meetings, the technical challenges and specific needs are presented and discussed with government, industry, and academic researchers, and concepts which may meet the needs are presented by the researchers. Informal discussions at the conferences mentioned in section 4.2.1.2 are another means to learn of ideas which are not yet published.

Development of new technologies is performed by NASA at the field centers and is performed by companies under contract to NASA. Funding for these activities comes from NASA HQ offices (OAST, OSSA, etc.) and discretionary funds at the field centers. SBIR funds are separate from other research funds, being a percentage (one-half percent) of NASA's total research budget. Several SBIR proposals which were funded have resulted in hardware which is being developed for use on S.S. *Freedom.* University researchers receive funding from a variety of sources including NASA. There are also selected universities which are funded by NASA through the NASA Specialized Centers of Research and Training (NSCORT) program to perform research in specific areas.[15] Purdue University in Indiana is the NSCORT for bioregenerative life support research. Others are focused on gravitational biology or environmental health. Major companies also perform extensive research activities referred to as Independent Research and Development (IRAD) programs. Frequently the emphases of these programs is correlated with NASA's stated technology needs and the resulting technologies are developed for flight programs.

4.2.2 Technology Maturity

Technology readiness can be measured on a maturity scale as shown in table 5. Rarely would a technology with a technology readiness level (TRL) less than 5 be considered viable during a spacecraft design phase due to the time required to bring it to flight status.

Table 5. Technology maturity scale.

TRL Number	Description of Technology Maturity
1	Basic principles observed and reported
2	Conceptual design formulated
3	Conceptual design tested analytically or experimentally
4	Critical function demonstrated
5	Components tested in a relevant environment
6	Prototype tested in a relevant environment
7	Validation model demonstrated in a relevant environment
8	Design qualified for flight

4.2.3 Technology Development Flow

Technology development requires careful technical and fiscal planning. Hardware performance requirements, viable technology candidates, development contracts, and technology test programs must be identified, and the planning must fall within budgetary constraints. An example of how a technology development program might proceed, illustrated in figure 16, begins with identifying the top-level requirements which the technologies must meet. The requirements to be met depend somewhat on the capabilities of the available technologies. For example, it may be desirable to set the CO_2 requirement at 0.066 kPa (0.0097 psia, 0.50 mmHg), but if no technology is capable of achieving less than 0.40 kPa (0.058 psia, 3.0 mmHg) in a reasonable manner then that requirement is unrealistic. Once the initial requirements have been determined, the available technologies are evaluated and the most promising candidates selected for further development. The selection process involves testing in appropriate configurations and environments. As greater understanding is gained, improvements in the hardware lead to more flight-like designs which are tested in flight-like configurations. At each step, the best alternatives are selected for continued development until the final selections are made.

When technologies or approaches which were used on previous programs are not suitable for the program being developed, then a vigorous ECLSS technology development program will be required to develop the new methods or approaches required. The increased closure of the mass loop for S.S. *Freedom* is an example of this, since no U.S. space habitat has required purification of waste water or recovery of O_2 from CO_2. Spacelab, however, was designed to use existing technologies where possible so that very small investments into new technologies were required. Most of the Spacelab ECLSS hardware was identical to, or a derivative of, orbiter ECLSS hardware.

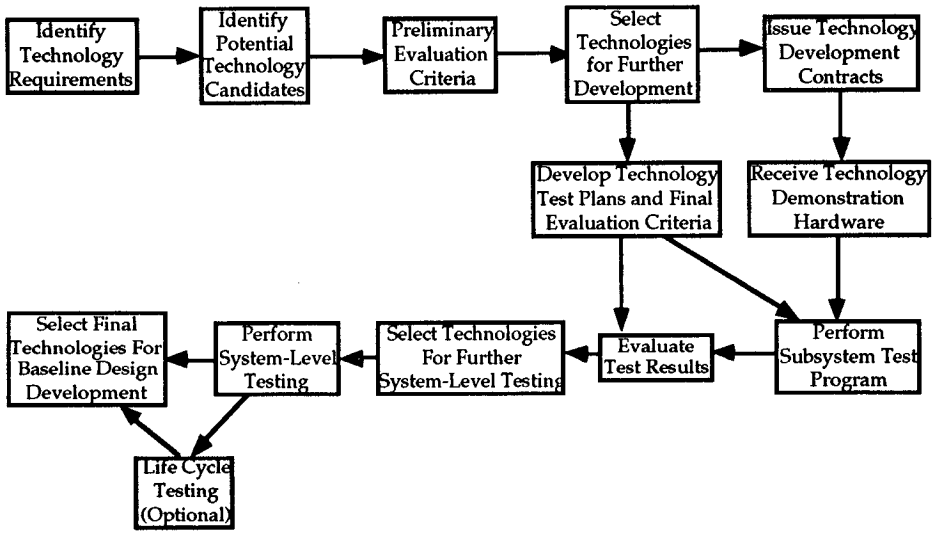

Figure 16. Technology development flow.

Software development is dependent on the hardware development and so typically lags (as shown in figure 23). The hardware must be sufficiently developed that operationally it is similar to flight hardware before the software to operate it can be written. Typically the TRL must be greater than 6. The software development flow can be shown by the documentation flow in figure 17. The requirements and specifications must be thoroughly understood before the software can be written.[17]

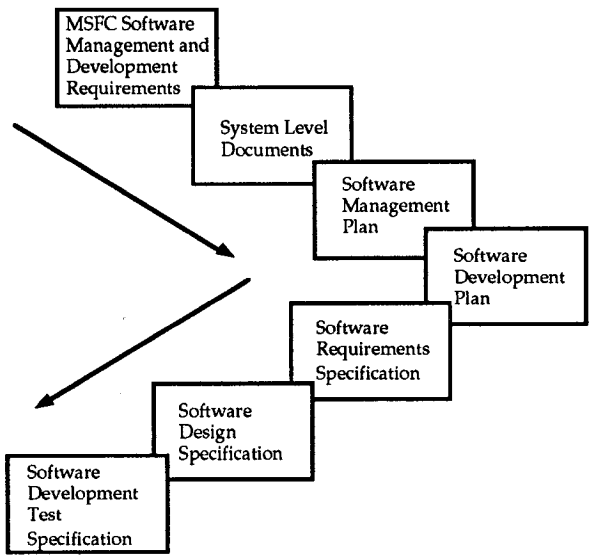

Figure 17. Software documentation flow.

4.3 Analysis Methods

Choices are inherently part of the engineering design process, between including or not including particular functions, between technologies to perform a particular function, regarding the requirements to be met, and numerous other aspects. Analysis techniques, both manual and computerized, are important tools which aid in making these choices. These techniques do not replace engineering and scientific judgment, but help to ensure that all pertinent aspects are considered, from system interfaces to detailed operation of specific processes, and speed the process of performing computational and repetitive analytical tasks. The analytical tools described below have been developed over the past two decades and have evolved with recent computer advances, especially in the area of graphical user interfaces and general ease of use. Analysis techniques are discussed under the following categories: trade studies, process models, and subsystem/system models.

4.3.1 Trade Studies

Trade studies are performed to make selections between two or more alternatives. The alternatives may be different technologies for performing a function or different configurations of a system or may involve other situations where choices must be made. There are two general approaches which can be used, depending on the amount of information available. The "advantage/disadvantage" method can be used when the options are not well described or when it is difficult to quantify how well each option satisfies the selection criteria. The "weighted factors" method can be used when much information is known and the alternatives are well characterized. Trade studies involve qualitative as well as quantitative information to help choose between the alternate approaches. Factors such as safety or complexity may be difficult to rate quantitatively, and it may be necessary to use ranges such as high, medium, or low. A matrix of the type of output from a trade study is shown in table 6.

Table 6. Generic trade study results matrix.

	Power	Mass	Volume	Resupply Mass	Safety	Design Maturity	System Level Synergism	Complexity	Cost
Alternative No. 1	#	#	#	#	med	high	high	high	$
Alternative No. 2	#	#	#	#	low	low	low	med	$
Alternative No. 3	#	#	#	#	high	med	high	low	$

Trade studies can be performed by "manual" techniques or by analytical techniques using computers. Usually a combination of these is used. Computerized methods tend to use the weighted factors approach and, therefore, are limited to trading between options which involve mature technologies (TRL higher than 5). In addition, the weighting factors tend to be subjective, and may be biased due to nontechnical reasons, so the results may not be as objective as they appear.

Trade studies may use input from computer modeling (discussed in section 4.3.3), hardware testing, vendor catalog data, previous space flight data, and/or engineering judgment. The desired end result is to select the best possible design solution given the particular vehicle ECLSS requirements as described in chapter 3. Many factors must be considered, including technical sophistication, costs to develop and operate the system, interface requirements, intersystem integration, and logistics requirements.

The advantage/disadvantage approach involves simply listing the significant criteria and determining how each option compares with the other options for each criterion. This approach usually cannot definitively select the best option, but can be used to narrow the field of options for further development, or can indicate which aspects of a particular option need to be improved to make it more favorable. In situations when it is necessary to make a selection based on this approach, even if the "best" option cannot be selected, at least a "better" option can be.

The weighted factors approach requires that sufficient information be known about the options to compare them quantitatively. Factors such as mass, power consumption, volume, and resupply needs can be stated quantitatively provided that the options are sufficiently flight-like that reasonable estimates can be made for flight versions. Complexity or ease of use can be compared by counting the number of parts or control devices, respectively, although it is usually possible to redesign to reduce the numbers of parts or control devices, providing that the time and funds are available. Safety is more subjective, partly due to the ability to redesign for greater safety in many cases, and partly due to psychological aspects, such as concern about the presence of hydrogen even when the quantity involved is well below hazardous levels.

The steps in a trade study can be defined as follows:

(1) Derive the relevant life support system functional requirements from a given mission scenario

(2) Develop a tradeoff decision methodology consisting of a set of evaluation criteria and, for the weighted factors approach, corresponding weighting functions (i.e., decide which factors are most important)

(3) Synthesize a set of options to be evaluated

(4) Model and analyze each option to generate data to quantitatively score each option, for the weighted factors approach

(5) Evaluate each option, and repeat as necessary to optimize the selection.[18,19]

It is necessary to make certain assumptions about a mission scenario in order to perform meaningful trade studies. For example, because many ECLS technologies require expendables, it must be determined how many days of contingency supplies to provide, which affects the mass and volume requirements. The option which trades "best" may depend upon the contingency period selected. For this reason, the assumptions which are made and their rationales should be clearly documented.

Trade studies are performed to evaluate the applicability for a mission scenario of available technologies or methods of performing a particular function or group of functions. They serve to guide development by identifying the most promising approaches for further development based on the available information. Early in the design process, only limited information may be available so the early trade studies are top level, treating subsystems or systems as black boxes with inputs and outputs which, it is hoped, are reasonable approximations of what the actual values will be. Two trade study computer models are described here.

4.3.1.1 ECLSS's Assessment Program

The ECLSS's Assessment Program (ESAP) is a spreadsheet program developed at MSFC for performing initial evaluations of the candidate technologies available for S.S. *Freedom*. The primary use of this program is to determine the mass balances for different ECLS configurations. Individual assemblies are treated as "black boxes," and the mass requirements and outputs of the individual assemblies are used to estimate the overall system mass flows for a given set of steady-state conditions. One version of this program tracks requirements for consumables (CONSUME) for fluid systems. The program provides "a rapid mass balance assessment of all major space station fluids users, including any or all of the following:

- Various open- and closed-loop ECLSS configurations
- Variable EVA requirements, including open- and closed-loop EMU suits
- Impact of orbiter visits
- Animal loads
- Experiment fluids
- O_2/H_2, hydrazine, and resistojet propulsion systems."[20]

The program consists of a single spreadsheet which provides an overall mass balance for user-specified resupply intervals. The interactions between a wide range of ECLSS configurations, EVA requirements, experiment and animal loads, orbiter visits, and propulsion requirements, and their impacts on the overall fluid resupply needs can be determined.[20] A later version of this program can perform transient analyses of the fluid flows (TRANCONS) based on a user-specified timeline of metabolic activity and the variables for CONSUME. This program is used to examine fluids storage and transfer needs, resupply concepts, and to compare options.[21]

4.3.1.2 Life Support Systems Analysis Model

The life support systems analysis model (LISSA) (formerly called the generic modular flow schematic (GMFS) model) was developed at JPL to provide a means of evaluating the technology options for the SEI missions, but is capable of evaluating other scenarios such as space stations. LISSA is used to trade different options based on mission guidelines, such as the mission duration, resupply interval, power availability, and number of people. A fairly high level of detail (TRL of 5 or greater) of the alternative technologies is required to obtain reliable results. Extensive data is required on the performance of the technology options to be considered in order to use scaling factors to determine mass, volume, and power requirements for subsystems sized for the mission crew sizes. Several processing steps are involved. The scenario conditions are initially entered in a form that can generate an Aspen Plus® (described in section 4.3.2) flowsheet for calculating the steady-state conditions of the fluid streams. The stream parameters are then used in an iterative process to size the ECLSS equipment based on the user defined mission requirements regarding CO_2 levels, water usage, and other factors. The output from the Aspen flowsheet is then automatically entered into a three-dimensional Lotus 1-2-3® spreadsheet which performs the sizing calculations. The results can then be plotted in order to perform trade studies, weighing the options under identical conditions.

As described by the developers, the LISSA tool is "capable of encompassing all functional elements of a physical/chemical life support system (LSS). The GMFS can be implemented to synthesize, model, analyze, and quantitatively compare many configurations of LSS's, from a simple, completely open-loop to a very complex closed-loop. The GMFS model is coded in Aspen, a state-of-the-art chemical process simulation program, to accurately compute material, heat, and power flow quantities for every stream in each of the subsystem functional elements (SFE's) in the chosen configuration of a life support system. The GMFS approach integrates the various SFE's and subsystems in a hierarchical and modular fashion facilitating rapid substitutions and reconfigurations of a life support system. The comprehensive Aspen® material and energy balance output is transferred to a systems and technology assessment spreadsheet (Lotus 1-2-3®) for rigorous system analysis and trade studies."(14)

In order to compare different concepts, the following information must be known:

"1. Detailed definition of the terrestrial manned mission

2. Choice of system assessment parameters (e.g., weight, power, volume, lift-off weight, lift-off volume, cost)

3. System configurations to be compared for a system trade study

4. Technology candidates to be compared for a technology trade study

5. System performance parameters to be studied for sensitivity (habitat, temperature, pressure, humidity, carbon dioxide level, etc.)."(14)

The validity of the input data must be considered, especially when dealing with technologies of various technical maturities. A seven level scale is used to identify the validity of the data:

"1. Measurement

2. Calculated from a dimensioned drawing with known materials of construction

3. Estimated from scaling procedure using data from 1 and/or 2

4. Estimated from high validity data for similar equipment

5. Estimated from detailed paper design for nonexistent hardware

6. Unvalidated third-party estimates

7. 'Engineering judgment'."(14)

The LISSA tool is most useful during phase A and B studies to determine a preliminary design which meets the mission requirements. The ability to evaluate system impacts allows selection of the subsystem technologies which produce the best overall system. Additional analysis using a system-level analysis tool (described in section 4.3.3) to predict transient conditions is required in order to refine the preliminary design.

4.3.1.3 Other Trade Study Models

Another computer program for trade studies was developed at LaRC. This program compares candidate technologies and ranks the options based on the design requirements.[23] Aerospace companies also have their own trade study models used for their in-house studies or for contracted work. The Boeing Engineering Trade Study (BETS) is one such model that has been used for evaluating ECLS options for long duration planetary missions.[24] Details of these models are usually considered proprietary, and the models are generally not available for direct use by NASA. Another model which was developed to perform trade study analyses is the Life Support Operations Program which was developed by Lockheed for JSC to evaluate the EMU PLSS.[25]

4.3.2 Process Models

For trade study models, specific subsystems are generally not much more than black boxes with controlled inputs and outputs. In order to adequately model the processes occurring within a subsystem, more specialized and detailed models are required. Since chemical processes are the main method of performing the ECLS functions, programs such as Aspen Plus® are used for these models. Other models are specially written for specific applications which cannot be adequately modeled by more generalized programs. These are discussed in the following sections.

4.3.2.1 Aspen Plus®

Aspen Plus® (Aspen) is used to model any type of process involving a continuous flow of materials and energy from one processing unit to another.[26] It was developed in the early 1980's for applications requiring modeling of vapor-liquid processes typical of those encountered in the chemical and petroleum industries. Aspen uses specific component blocks which represent the physicochemical processes of a specific system. The level of detail used in the calculation scheme for each component block can be specified by the user, depending upon the desired complexity of the process. Aspen is used mainly where processes are thermodynamically driven, and it has a vast chemical data base along with numerous physical properties equations included within the software package to model these processes.

Aspen is used in space habitat design to model processes on the microscopic or detailed phenomenological level. The software programs used for system level design are generally inadequate to physically model this level of detail. The Aspen model could describe a whole chemical process such as removal of airborne contaminants through the use of a catalytic oxidizer, or one part of a process such as temperature effects on a particular chemical reaction. Aspen is currently a pseudo-steady-state analysis tool, and multiple simulations must be run in order to evaluate transient responses.

Aspen has been used to examine several unique problems with respect to the design of S.S. *Freedom's* ECLSS. Each of the studies required the use of Aspen because of the detailed chemical and thermodynamic nature of the problems. These include the following:

(1) The contaminant carryover of airborne species into the product water within the condensing heat exchanger

(2) The chemistry (chemical byproducts) involved with the pretreatment of urine prior to distillation

(3) Specific operating characteristics with respect to the effects of buildup of recycle solids concentration on the urine distillation efficiency

(4) Capability of activated charcoal to remove specific contaminants from the habitat atmosphere.

4.3.2.2 Other Process Models

Special models of specific processes are developed when commercially available software is not suited to modeling the specific case. Good models can reduce the amount of time required to characterize contamination control technologies and select the most appropriate technology for a given application.

An example is transient trace contaminant control involving a complex series of oxidation and absorption chemical reactions under transient conditions. Efforts to develop the theoretical understanding required to model these reactions began in the 1960's[27-29] which led to models of adsorption and low temperature catalytic oxidation processes in the mid-1970's.[30,31] Improvements in the 1980's simplified data entry (by using spreadsheet software) and added the capabilities to calculate the degree of toxic hazards, quantify the absorption of contaminants by humidity condensation, and manipulate output data. As shown in figure 18 for the latest model, the input data consists of contaminant generation data and performance data on the selected removal techniques. Physical data such as sorbent bed length and temperature are also required. Output data include sorbent bed size, process stream flow rate, removal rates for each device, the total amounts of contaminants removed, the removal efficiencies, and the projected concentrations of contaminants in the habitat atmosphere as a function of time.[32]

Another example is particulate filtration which involves filters whose characteristics change as particulates build up. The pressure drop through a filter is a function of the mass loading, and so over time the pressure drop will increase as the openings in the filter become clogged. Models written in FORTRAN 77 were developed for these transient processes.[32,33]

4.3.3 Subsystem/System Models

Mathematical modeling has proven to be an accurate, economical method of predicting integrated ECLSS performance. System level models are useful in order to accomplish the following:

(1) Predict system ability to meet the design requirements

(2) Predict functional interfaces between individual components

(3) Size fluid accumulation devices

(4) Study alternate component technologies

(5) Uncover potential interface problems or test plan deficiencies before expensive test programs are implemented.

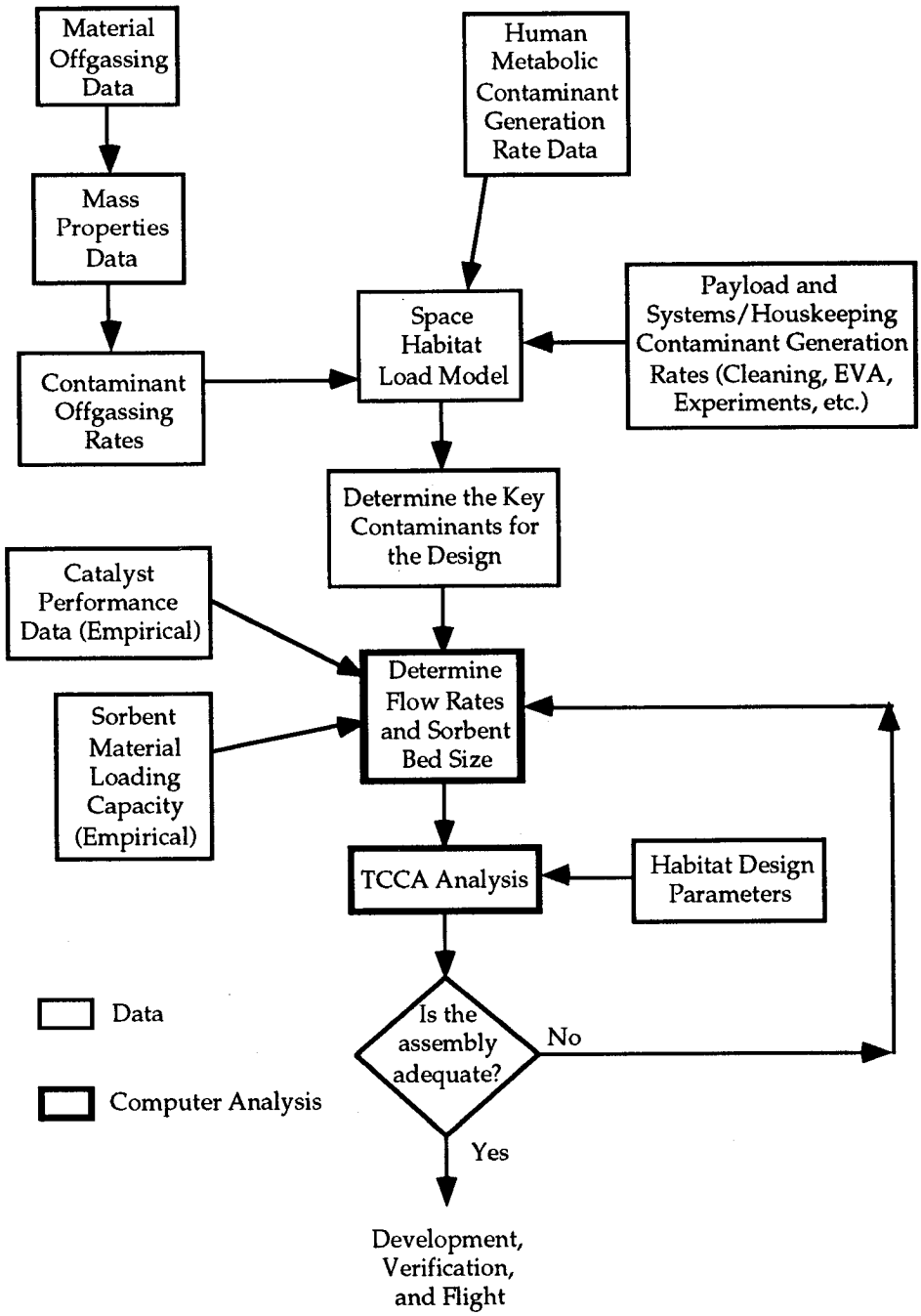

Figure 18. TCCA design approach (simplified flowchart).

The four computer software programs most widely used for system-level ECLSS modeling are G-189A, SINDA'85/FLUINT, CASE/A, and TRASYS. Each is capable of simulating true transient characteristics of a given system. The basic file structure of each of these consists of input data and logic which may include user-defined equations to describe processes, operations by the main program and subroutines, and output in the form of files or plots. The details vary, but the general approach is similar to that shown in figure 19. The programs are available through NASA's Computer Software Management and Information Center (COSMIC) (telephone 706-542-3265), or through Network Analysis Associates (P.O. Box 8007, Fountain Valley, CA 92708).

C-2.

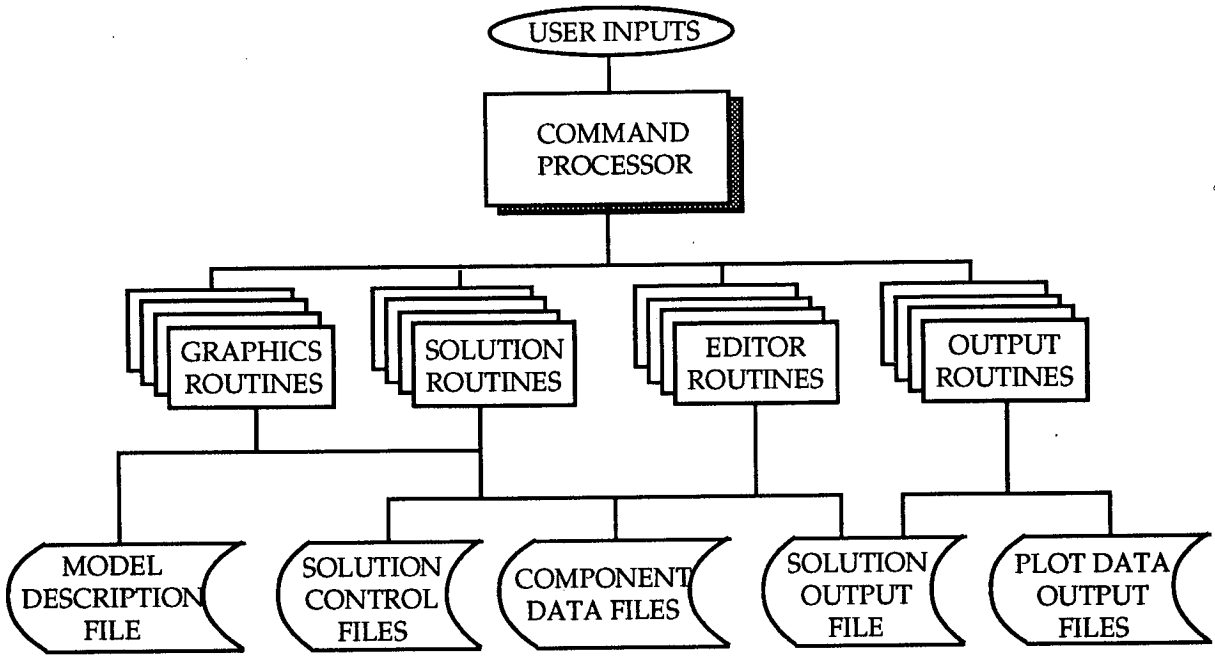

Figure 19. ECLSS model file structure.

4.3.3.1 G-189A

G-189A is a generalized environmental and thermal control program for modeling the steady-state and transient performance of an ECLSS. The heat and mass flows between the subsystems and assemblies can be evaluated, and the effects on an ECLSS of specific conditions or equipment configurations can be determined. The program is flexible and allows components to be rearranged or replaced to perform tradeoff studies between alternative configurations. For a selected configuration, G-189A can be used to establish test conditions, predict system performance, and study failure mode conditions, and is capable of supporting flight operations.[34]

An ECLSS model is constructed from individual "components" which are connected via liquid or gas streams. Components can represent the heat and mass transfers associated with people, heat exchangers, and pumps. By connecting the basic components appropriately, the assemblies and subsystems which make up an ECLSS can be modeled, which can then be connected to model an entire ECLSS. Subroutines of the basic components or of combined components which are used to construct an ECLSS model include the following simulations:

(1) Habitat simulation using the Cabin subroutine which models heat and mass transfer to and from walls and equipment; accounts for heat transfer through the pressure shell (including solar heating effects); determines mass balance calculations to account for removal, generation, and leakage rates; and predicts habitat temperature and the total and partial gas pressures.

(2) Human simulation using the Metabolic Man subroutine to compute CO_2 generation, H_2O generation, and O_2 consumption based on environmental temperature and composition conditions. It also computes body temperature, skin and under garment temperatures, and the total heat storage, which is used to determine the extent to which a person may be impaired by undesirable environmental conditions. The Suits subroutine is a simplified

version of Metabolic Man which does not consider the environmental effects and computes only CO_2 generation, H_2O generation, and O_2 consumption rates and gas temperature rise.

(3) General thermal control and piping equipment simulations are performed using the subroutines named Space Radiator, Heat Exchanger, Pipe, Duct, Fan or Blower, Automatic Controller, Gas Mix, Liquid Mix, Generalized Split, Tank, and Flowmeter.

(4) Assembly simulations are performed using the following subroutines:

Trace Contaminant Control—Catalytic burner and adsorption bed subroutines
CO_2 Collection—Hydrogen depolarized CO_2 concentrator, two-stage carbonation cell, and adsorption bed subroutines
CO_2 Reduction—Sabatier reactor and Bosch reactor subroutines
H_2O Recovery—Urine electrolytic pretreatment, air evaporation, and vapor compression/distillation subroutines.

These component subroutines use heat and mass transfer and chemical reaction equations to compute the mass and energy balances for steady-state and transient conditions. Subroutines also allow a flow stream to be divided into separately identifiable constituent flows to determine mass and thermal balances. Additional subroutines can be created using FORTRAN code. Utility subroutines perform interpolations and psychrometric calculations, and display the results as plots.

Examples of energy balances which can be modeled include balancing the heat generated by the components in a habitat with the total heat load imposed on the habitat heat exchanger, and balancing the sum of the individual heat loads on a liquid coolant system with the heat rejection rate of space radiators. An example of a mass balance which can be modeled is balancing the water vapor and CO_2 generation rates from the crew with the habitat leakage, gas supply, and equipment removal rates.

4.3.3.2 SINDA'85/FLUINT

The Systems Improved Numerical Differencing Analyzer and Fluid Integrator (SINDA'85/FLUINT) program was originally developed in the 1960's as a general thermal analyzer with the name Chrysler Integrated Numerical Differencing Analyzer (CINDA).[35] The name was changed to SINDA as enhancements were added including fluid flow network solution capabilities, updated solution algorithms, and broadened input facilities. The fluid flow modeling capabilities were enhanced with the addition of FLUINT. Other improvements have also been made resulting in the present version.[36,37]

SINDA'85/FLUINT is designed to solve lumped parameter representations of physical problems governed by diffusion-type equations. Physical systems are described and modeled using a resistor-capacitor network representation. SINDA'85 and FLUINT are actually two halves of one program which share one processor and one processor library. The SINDA'85 portion of the program is applied to solving thermal network problems, while the FLUINT portion is designed to analyze fluid flow networks. Though heat transfer and fluid flow analyses are the goals of this program, it may also be applied to modeling electrical networks and other systems which can be represented by a lumped-parameter network.

An input file written in a FORTRAN-like SINDA language must be prepared by the user to describe the physical system to be modeled. The input file is divided into specific blocks containing information designating the mathematical structure of the thermal or flow model, the working fluid or

material, input conditions and constraints, user controlled logic, and output control. This input file provides the capability to describe any system in a transient or steady-state mode using a network of paths and junctions. Junctions, called NODES in SINDA, represent points to which characteristics such as temperature and capacitance may be attributed. The paths, called CONDUCTORS, describe energy transport paths between NODES. In FLUINT, LUMPS are points having properties such as temperature, pressure, and volume, while PATHS represent fluid flow paths between LUMPS. The characteristics of these NODES and CONDUCTORS (LUMPS and PATHS) may be altered during the simulation through use of user-controlled logic blocks. Input locations exist for the user to call upon default fluid descriptions or to provide a customized description. These inputs may range from a simple real-gas description to two-phase fluid behavior. To provide more realistic simulations of many problems, a SINDA model may be linked with a FLUINT model to address fluid flow problems in which there is also heat transfer.

For ECLSS modeling, SINDA'85/FLUINT provides for both steady-state and transient modeling of systems while tracking information such as temperature, pressure, heat transfer rate, and flow rate at discrete points throughout the system. The program allows the user to adjust system input states and characteristics in order to assess differing ECLSS design alternatives in an efficient fashion. The use of user-specified logic within the input file allows models to be customized to simulate a particular system.

Figure 20 shows the layout of a typical FLUINT model. PATHS, in the form of tubes and connectors, are used to join the LUMPS, in the form of junctions and tanks, to represent the hydraulic pressure drop characteristics of the atmosphere distribution system. Models like this allow different atmosphere control schemes, such as fixed flow versus variable flow, and different damper placement schemes to be evaluated.

4.3.3.3 CASE/A

The computer-aided system engineering and analysis (CASE/A) computer tool evolved from G-189A and has many similarities with regard to how a model is conceived and constructed. It also incorporates features of SINDA'85/FLUINT. A major difference is the graphical user interface for model construction and an improved data management system. These added features simplify the creation of models and aid in processing the data. User inputs defining the system configuration being modeled are processed by the central command processor using various routines. Files are created which describe the model, contain information on how the solution is to be determined and data on the components of the model, contain the output data, and plots of the output data. Recent enhancements to the user interface commands and program initialization code have further increased the capabilities of CASE/A.[38]

CASE/A consists of the following fundamental parts:

(1) The schematic management system

(2) The data base management system

(3) The simulation control and execution system.

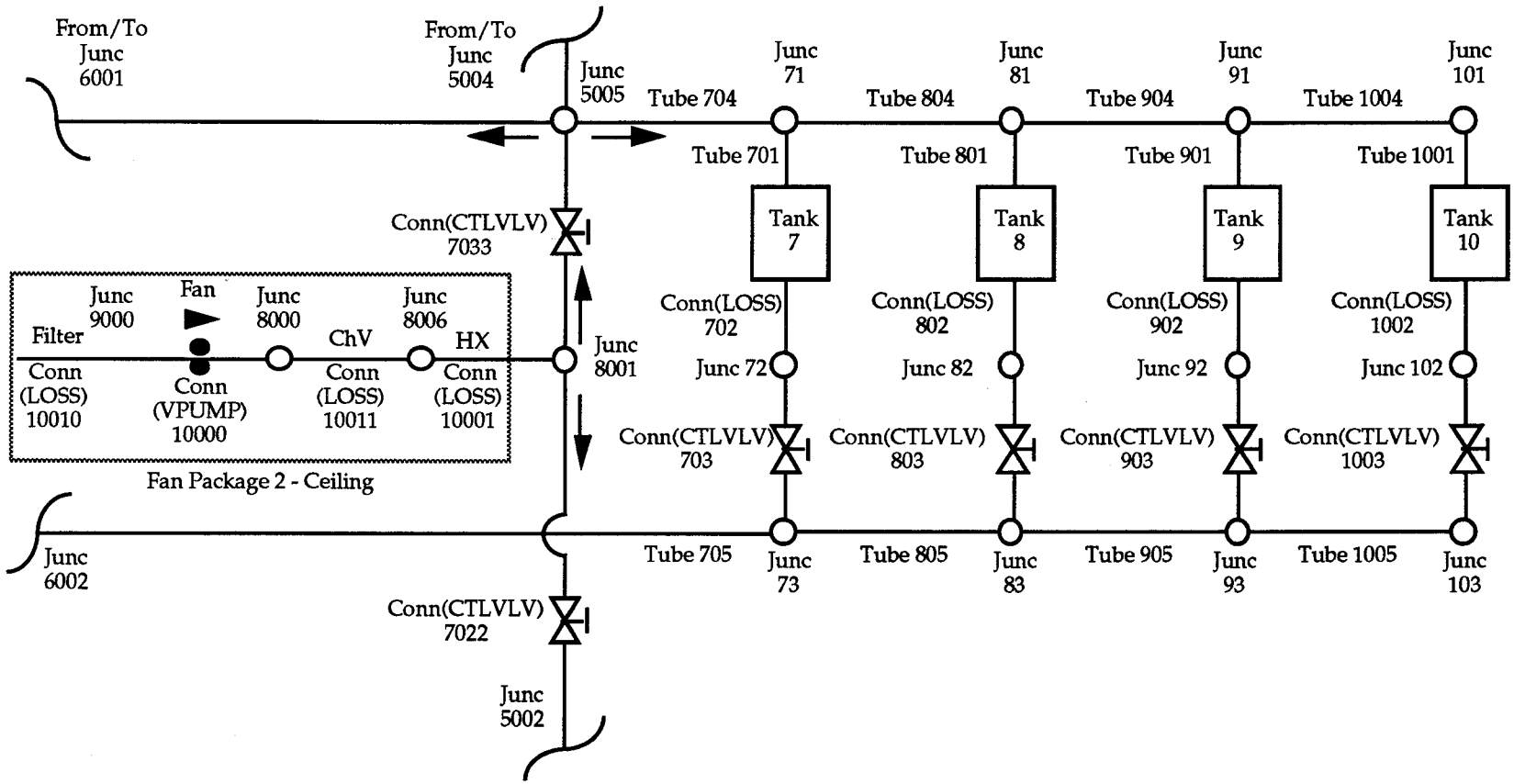

Figure 20. Simplified FLUINT model.

The schematic management system allows the user to graphically construct a system model by arranging icons representing system components such as pumps, adsorption beds, and water separators, and connecting the components with physical fluid streams. Version 4.1 contains 51 fully coded and documented default component routines. New components can be added by the user through the blackbox component option. The database management system supports the storage and manipulation of component data, output data, and solution control data through interactive edit screens. The simulation control and execution system initiates and controls the iterative solution process. Simulation time and diagnostic messages are displayed.

In addition to these primary functions, the program provides the following other important functional areas:

(1) Model output management

(2) System utility commands

(3) User operations logic capability.

The model output management system provides tabular and graphical output capability. Complete fluid constituent mass fraction and properties data, such as mass flow, pressure, temperature, specific heat, density, and viscosity, are generated at user-selected output intervals and stored for reference. The integrated plot utility (IPU) provides plotting capability for all data output. System utility commands are provided to enable the user to operate more efficiently in the CASE/A environment. The user is able to customize a simulation through optional control logic coded in FORTRAN. This user-developed code is compiled and linked with a CASE/A model and enables the user to control and timeline component operating parameters during various phases of the iterative solution process.

CASE/A provides transient tracking of the flow stream constituents and determination of their thermodynamic state throughout an ECLSS simulation, performing heat transfer, chemical reaction, mass and energy balances, and system pressure drop analyses based on user-specified operating conditions. The program tracks each constituent through all combination and decomposition states while maintaining a mass and energy balance on the overall system. This allows rapid assessment of ECLSS designs, the impact of alternate technologies, and impacts due to changes in metabolic forcing functions, consumables usage, and system control considerations.

A typical CASE/A model is shown in figure 21. Each component, or "icon," in the model has performance attributes associated with it. For instance, a pump would have a flow rate or a performance curve as an input parameter which is set by the engineer. These data reside in a CASE/A data base and can be accessed through input screens as shown in table 7. CASE/A performs calculations using U.S. customary units (as shown), but has the capability of converting input and output data from or to metric units. The transient behavior of a model is controlled through FORTRAN code, using the CASE/A structure, which directs the simulation solution control code in CASE/A. For example, changes can be made in the number of people in a module or the heat load on a cold plate, or LiOH cartridges can be replaced, based on given timelines. Simulation control parameters are set in the simulation control input screen shown in table 8. Documentation for CASE/A is available through the MSFC Documentation Repository as well as from COSMIC.

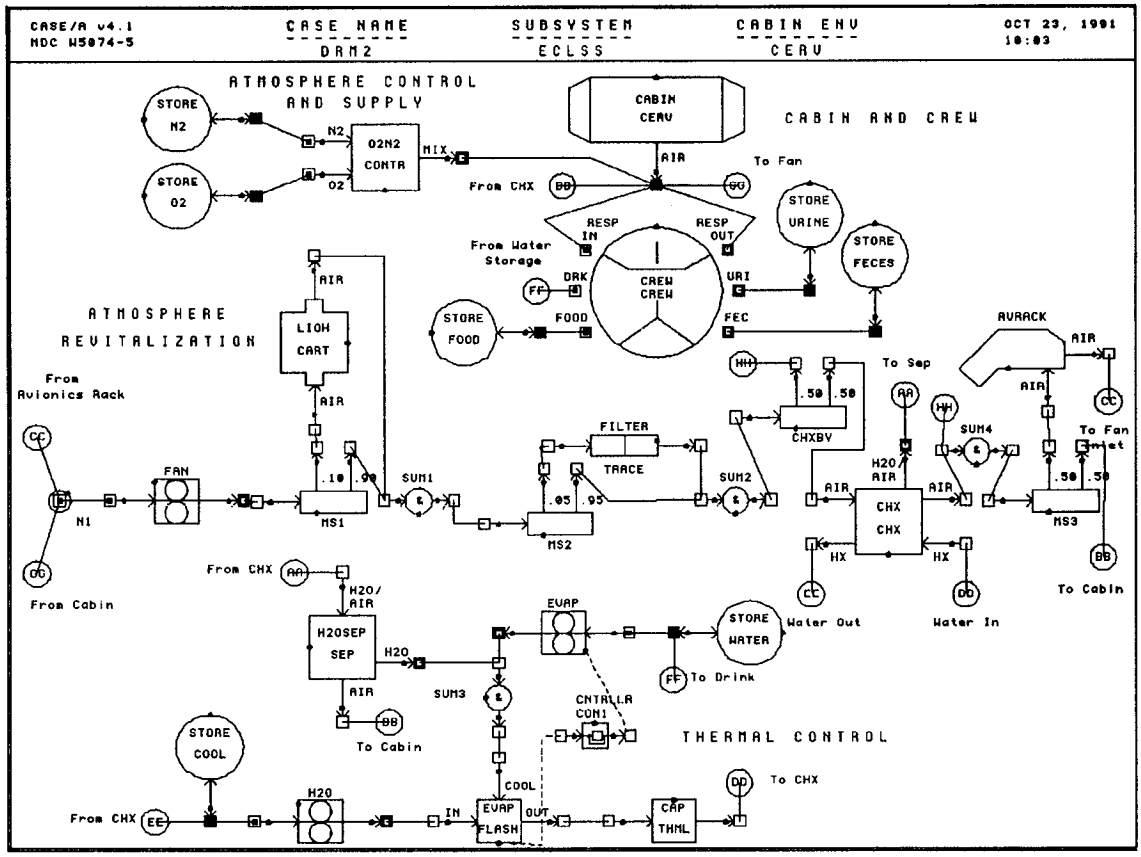

Figure 21. CASE/A model of a habitat ECLSS (conceptual).

4.3.3.4 TRASYS

The thermal radiation analyzer system (TRASYS) is a modularized computer program for computing the total thermal radiation environment of a spacecraft. Exterior and interior radiation is modeled, and conductor values are calculated to represent the radiation transfers. These values are then used to calculate transient heat loads. The radiation conductors account for the radiation interchange between a network of nodes that make up the geometric model defined by the user. The results are typically used as input data to SINDA for calculating the overall energy balance including radiation, convection, and conduction.(39)

4.4 Hardware and Software Development and Verification

An ECLSS is composed of hardware subsystems, assemblies, and components in a configuration that performs the required ECLS functions. A system also includes the software that monitors and controls the operation of the hardware. Development of a system is an iterative process that involves testing and refining the hardware and software designs through successive levels of technical maturity. Software development lags hardware development because the hardware must be developed to a sufficiently flight-like TRL before the software can be prepared. Hardware typically is at a TRL greater than 5 before being considered for use in a flight system, so the technology has been through a considerable amount of testing, albeit independent testing, prior to system development testing at MSFC. The hardware testing required to develop and verify an ECLSS is described in section 4.4.1 and software development and verification are discussed in section 4.4.2.

Table 7. PUMP data input screen.

CASE NAME: DRM2 | PUMP EDIT SCREEN | LAST UPDATED: 880502
SUBSYSTEM: ECLSS COMPONENT: FAN | RECORD NUMBER: 000035

** GENERAL INPUT DATA **		** THERMAL CHARACTERISTICS DATA**		**CENTRIFUGAL PUMP OPTION CONSTANTS**		
10 MASS FLOWRATE (LBM/HR)	1,500.000	22 SHEL-ENV CONVCT (BTU/H/F)	0.200	35 FLOW DAMPING FACT (0<X<1)		0.10000000
11 INLET PRESSURE (PSIA)	0.000	23 SHEL-ENV RADIAT FAE (FT2)	0.800	13 CHARCTRISTIC CURVE CON A0		0.00000E+00
12 OUTLET PRESSURE (PSIA)	14.750	24 SHEL-ENV CONDCT (BTU/H/F)	1.000	14 CHARCTRISTIC CURVE CON A1		0.00000E+00
18 IMPELLER EFFICIENCY (0<X<1)	0.700	25 MASS-SHEL COND (BTU/H/F)	1.000	15 CHARCTRISTIC CURVE CON A2		0.00000E+00
19 MOTOR EFFICIENCY (0<X<1)	0.700	26 WALL-MASS COND (BTU/H/F)	50.000	16 CHARCTRISTIC CURVE CON A3		0.00000E+00
20 SPECIFIED MOTR QFLAG (0=N,1=Y)	0.000	27 FLUID-WALL EFFECT (0<X<1)	0.900	17 CHARCTRISTIC CURVE CON A4		0.00000E+00
21 SPECIFIED MOTR QLOAD (BTU/HR)	0.000	28 THERMAL CAPACTNCE (BTU/F)	0.000	36 **OPEN INPUT LOCATION**		0.000
34 FLUID CODE(0=?,2-50=CNSTIT #)	0.000	29 INITIAL MASS TEMP (F)	75.000	7 POWER	(WATTS)	242.227
32 ** OPEN INPUT LOCATION **	0.000	30 THERMAL RELAX CRITERIA	0.0000100	8 WEIGHT	(LBM)	0.000
33 ** OPEN INPUT LOCATION **	0.000	31 THERMAL SOLUTN MAX COUNT	100.000	9 VOLUME	(FT^3)	0.000

** BENCHMARK DATA **	MIN	NOM	MAX
PUMP INLET PRESS (PSIA)	14.6236	14.6399	14,6745
PUMP OUTLET PRESS (PSIA)	14.7500	14.7500	14.7500
PUMP PRESS RISE (PSIA)	0.0755	0.1101	0.1264
PUMP FLOW RATE (LBM/HR)	1,500.0000	1,500.0000	1,500.0000
PUMP POWER (WATTS)	173.4749	252.3981	290.4403

** OUTPUT DATA **	
37 MAX CAPACITY FLOW RATE (LBM/HR)	1,500.000
38 PRESENT PRESSURE RISE (PSID)	0.000
39 PRESENT FLOW CONVERGENCE FLAG	0.000
40 PRESENT MASS TEMPERATURE (F)	0.000
41 PRESENT SHELL TEMPERATURE (F)	0.000
42 ** OPEN OUTPUT LOCATION **	0.000

Table 8. Simulation control data input screen.

CASE NAME: DRM 2 | CONTROL EDIT SCREEN | LAST UPDATED: 901115
RECORD NUMBER: 000065

TIME UNIT FLAG (1=Hr,2=Min,3-Sec)	1	PRESS SOLTN,0=Fdbk 1=Mtrx	1.
START TIME (Hr, Min, or Sec)	0.000	IITIAL PRESSURES, Psia	14.700
STOP TIME (Hr, Min, or Sec)	24.000	FLOW DMP FAC:M=G*dP,0<x<1	0.000E+00
TIME STEP (Hr,Min,or Sec)	0.05000	SPECIFIED PROPS CNSTTNT #	0.
OUTPUT INTERVAL(H,M,orS)	0.05000	SPECIFIED CP, Btu/Lb/F	0.000E+00
CONVERGENCE CRITERION, 0<x<1	0.100E-02	SPECIFIED DENSITY, Lb/Ft3	0.000E+00
MAX SOLUTION ITERATIONS	100	SPECIFIED VISC, Lb/Ft/H	0.000E+00
NUMBER OF CONSTITUENTS, x<50	9	SPECIFIED CV, Btu/Lb/F	0.000E+00

ECLSS hardware and software designs are developed in conjunction with the system level design through the CDR. At the CDR, ECLSS hardware and software designs are thoroughly reviewed by NASA and selected contractors. If NASA approves the design at CDR, then the hardware vendors begin manufacturing the hardware and software coding is initiated. Problems with the design that are not identified until CDR can have significant schedule and cost impacts, so it is important to identify problems well before CDR if possible. Any changes to the design are made through the RID process described in section 4.1.1.3.

ECLSS technology requirements vary with the complexity of the space habitat and its intended mission requirements. A mission to Mars would require a more complex, regenerative type ECLSS than a transfer vehicle intended to shuttle astronauts between a space station in LEO and lunar orbit. The latter vehicle would probably use existing open loop ECLSS hardware to minimize cost, yet still meet mission requirements.

Component hardware design is an integral part of the overall ECLSS design process. Hardware is designed based on specifications discussed in chapter 3. The fidelity of the specifications increases as the system design matures. Most often, the hardware design and manufacturing is performed by a vendor specializing in a particular field, such as fans, pumps, heat exchangers, valves, or sensors. Documentation of requirements and specifications must be sufficiently detailed to ensure that all hardware is designed and fabricated appropriately. Any changes in requirements or specifications that affect hardware design and fabrication must be reflected in the documentation and communicated to all groups involved, within NASA and among contractors.

Relatively simple components such as fluid line quick disconnects, valves, sensors, and LiOH canisters, can be designed, manufactured, and delivered rather quickly. These components have few system interfaces and are unlikely to be affected by system changes.

More complex hardware, such as specific ECLS assemblies, requires much more time to design, build, and test. As a result, these items have considerable procurement lead times ranging from months to years. Depending on the maturity of the hardware technology, the design may begin with an engineering breadboard that must be tested to verify the principle of operation. After breadboard testing, the hardware must be optimized with regard to resource requirements, which involves considerable analysis and/or testing. Complex hardware usually requires equally complex software to control its intended function, as discussed in section 4.4.2. Finally, the technology must be packaged to fit the volume in the habitat that has been allocated for that particular function. Flight hardware must be qualified and accepted by testing before integration into the system for final testing. Delays in long-lead items can significantly extend the overall program schedule and increase costs.

4.4.1 Hardware Development and Verification

The early ECLS technology development is usually performed by one of the research centers as discussed in section 4.1.3 or by a contractor. When a flight program has been approved and funded, the available technologies (TRL>5) are identified during the phase A studies and evaluated during phase B. The phase B evaluations include independent testing to verify that the specific ECLS functions can be performed and limited integrated testing to identify any major integration problems. This testing is intended to determine if the technologies being considered are sufficiently mature and to identify any technology development needs such as better fluid controls between assemblies or improved filters to prevent contamination of key components. Early recognition of the need for technology development is

critical as it is expensive to develop new technology in phase C/D, even if it will be highly beneficial to the system. If the need is not recognized early, the designer will be forced because of money limitations into using old technology which may not perform as well.

A test is an operation which verifies that functional parameters are within specified limits. Nonfunctional parameters such as weight and volume are also verified by test. Prior to performing any tests, it is necessary to clearly state the purpose of each test, the facility utilities to be provided, and any special procedures to be followed. Test plans are prepared by the design group before performing tests and describe in detail what the goals of a test are and, in general, how the tests are to be performed and methods of recording results. The critical parameters are defined, and specifications concerning any intended variations are given. For parameters which are to be varied, the durations and tolerances to be allowed are also stated. Documents regarding the test facility operation and the testing of hardware are prepared by the test group and include the facility operations plan (FOP), the test requirements document (TRD), and the test and checkout procedure (TCP).

Based on the information in the test plan, the test group prepares a detailed test procedure, which describes what is to be done at each step required to start, perform, and stop the test. This includes information on activating the facility support equipment and the test hardware. The procedure is very detailed and specific, including information on which valves are to be operated and when, and when specific measurements are to be recorded and their allowable tolerances. Quality control personnel certify that each step is completed as written and in sequence, unless documented on a procedure deviation sheet and signed by the test engineer, safety representative, and other interested parties.

From each test, a large amount of raw data is gathered which must be analyzed to determine the performance of the hardware/software. It is important to record sufficient data to perform trouble-shooting of any failures and to identify the cause of any anomalies. After the data are evaluated and understood, a detailed report on each test or series of tests is prepared by the test and design groups, either separately or jointly, to document the results.

4.4.1.1 ECLSS Testing Phases

Testing is essential during the development process to understand the performance capabilities of hardware, to identify interface requirements, to determine the specific software requirements, and to evaluate impacts on other hardware. The testing progresses through development, qualification, and acceptance phases. Prior to being considered for use in an ECLSS, the individual assembly and subsystem technologies have been through considerable development testing of their own, to verify the theoretical concepts and to identify and address any technical difficulties such as material compatibility problems. Development testing at the system level evaluates the operation and performance of the assemblies and subsystems when integrated, to identify any system-level compatibility problems, any interface requirements not evident during independent testing, and any additional technology development needed.

4.4.1.1.1 Development Testing

Development testing is performed to determine the feasibility or applicability of a technique or to "fine tune" designs. It is intended to validate design concepts and to assist in the evolution of designs from the conceptual phase to the operational phase. One objective is to identify problems early in the

system design process so that corrective actions can be taken prior to qualification testing. Development testing is further divided into independent testing, integrated testing, human-in-the-loop testing, life testing, and flight testing of microgravity-sensitive components.

Independent testing of individual subsystem and assemblies is performed to checkout and verify the operation of the hardware and to ensure that the facility provides the appropriate fluid, electrical, and data communication interfaces. This is typically performed on a test "bench" prior to installing the hardware in a chamber for integrated testing.

Integrated testing is performed to evaluate the operation of assemblies and subsystems together in a simulated flight environment. Subsystems and assemblies may be functionally integrated on a test bench or may be installed in a chamber for tests requiring simulated metabolic activity.

Human-in-the-loop testing ranges from processing of waste water generated by human activity (perspiration, respiration, wash water, etc.) referred to as "donor mode" testing, to evaluate hardware performance; to testing where people taste or consume processed water, referred to as "recipient mode" testing, to evaluate the acceptability of the purified water; to testing where people live in a sealed chamber and are dependent on the ECLSS for purified water and revitalized atmosphere. Sealed chamber tests are ultimately necessary for verification of metabolic mass balance assumptions and proof testing of an ECLSS hardware configuration. This requirement involves rather detailed control of atmosphere and water systems which are contained to a high degree as separated volumes from the ambient environment. Ideally, the test enclosure is designed as a pressure vessel or vacuum chamber. Sealed clean rooms have been used for metabolic evaluation testing at MSFC and ARC, while the testing program for crew training and metabolic evaluation testing at JSC has used a 6.1-m (20-ft) diameter cylindrical vertical vacuum chamber facility. The facility at MSFC includes a core module simulator (CMS) approximately the size of the modules originally planned for S.S. *Freedom* (4.6 m (15 ft) diameter by 13.4 m (44 ft) length). The CMS is a vacuum-rated chamber which is suitable for human testing. Additional human-rated chambers will be used for the closed chamber testing for S.S. *Freedom* at MSFC. Test subject safety must be assured by compliance with all applicable safety, reliability, and quality assurance (SR&QA) requirements, and a board including medical personnel reviews all test plans and procedures before testing. Human-in-the-loop testing today is more involved than during the testing at LaRC in the early 1970's (described in section 5.2.2.1), when the rules and requirements were not as stringent as they are today. The medical and safety requirements to be met are discussed in chapter 3.

Metabolic loads in reduced gravity environments will not match the levels during ground testing when the body experiences stresses due to gravity in addition to the stresses of a particular exercise. Typically, ground testing has emphasized leg exercise to generate significant metabolic levels due to the customary nature of these exercises. Legs, however, will be the least important contributors of work in microgravity environments. Arms, wrists, and fingers will be used to manipulate objects in the reduced gravity of space.

Life testing is necessary to ensure that the ECLSS will perform for the intended mission duration. Verification that critical components, especially moving parts and regenerable sorbent materials, can perform properly for the design lifetime is essential. Life testing consists of operating an assembly, subsystem, or system under flight-like conditions for a period of time sufficient to verify that lifetime requirements will be met.

Flight testing is necessary to ensure that processes and components that may be sensitive to gravity, especially those which involve storage and transport of liquids or separation of liquids and gases, will perform properly in microgravity. In many cases, convection cooling of electronic components must also be verified by flight testing, since natural convection during ground testing eliminates "dead air" spots where the forced convection on orbit may be inadequate. Potentially, natural convection during ground testing provides sufficient cooling to meet specifications, but the forced convection is insufficient and the part fails on orbit.

Ideally, such flight testing would be performed early in phase B. This can save time, effort, and money, since much more testing may be needed on the ground to address concerns which may turn out to be nonissues in microgravity, and also because there may be microgravity effects which were not previously identified. Flight testing can include flights on NASA's KC-135 airplane which can simulate microgravity for several minutes while flying a parabolic arc path. When longer periods of microgravity are necessary, sounding rockets flying suborbital paths for 15 min or more may be used when the test can be totally automated. For even longer durations or when complete automation is not feasible or desirable, flight tests can be performed on the orbiter or in Spacelab.

4.4.1.1.2 Qualification Testing

Qualification testing is performed on hardware identical to the flight hardware and is used to determine whether the hardware can perform its required functions under the worst-case environments and stresses anticipated. Qualification testing is intended to verify the design against extreme design requirement ranges outside the normal operational ranges. These tests push the hardware to the limit in an effort to uncover potential design flaws. Any failure during this testing halts the test, and after the failure is resolved, the entire qualification test must be rerun.

4.4.1.1.3 Acceptance Testing

Acceptance testing is performed under normal operating conditions to checkout the actual flight hardware and to ensure that it performs properly. Any failure during this testing halts the test, and after the failure is resolved, the entire acceptance test must be rerun. Upon successful completion of acceptance testing, hardware units become part of the flight inventory.

4.4.1.2 ECLS Hardware and System Verification

Verification is intended to ensure that a flight system meets its design and performance requirements and specifications. Verifications occur at all levels of development and integration, and the verification requirements come from the documents described in section 4.1.2.3 and the test and checkout requirements and specifications document (TCRSD). The objectives of verification are to do the following:

(1) Provide system-wide visibility with regard to compliance of delivered hardware and software with all specified requirements at the equipment, subsystem, and system levels

(2) Define requirements and methods of verification at all levels

(3) Direct attention to any situations where requirements and/or design intent are not being met or verified.

Verification is a cooperative effort between quality assurance, safety, engineering, integration and test, operations, configuration management, and the hardware subcontractors. For each hardware item, which may be at the subsystem, assembly, or component level, a CEI Spec is required. Section 3 of the CEI Spec identifies the performance, physical, reliability, maintainability, operational, safety, logistics, interface, and other requirements to be met. Section 4 identifies verification methods, the verification requirements for each phase of a program, the form for ensuring that requirements are properly verified, and the test support requirements.[40] Details regarding the verification process vary from program to program, but the general process, as described in the following paragraphs, is common to most programs. In addition to verification during the development, qualification, and acceptance phases discussed above, verification typically also includes testing of integrated systems, during prelaunch checkout, flight operations, and post flight. The verification cross reference index (VCRI) identifies the type of verification to be performed for each hardware item during each of these phases.

The verification process consists of tests and assessments. The main categories of testing of any spacecraft flight hardware are environmental and functional. Environmental testing includes thermal-vacuum, acoustic, modal, and vibration testing. Assessment categories include analysis, demonstration, similarity, inspection, and review of records. These are described in the following paragraphs.

4.4.1.2.1 Verification Tests

Environmental testing is performed to ensure that the systems will function as designed when exposed to the flight environment. For systems which will be exposed to space, the thermal-vacuum tests evaluate operation during hot and cold conditions at near-space vacuum. For ECLS equipment which will operate within a controlled environment the conditions of the thermal-vacuum test simulate the design environment for the item. Acoustic tests demonstrate the ability to withstand the acoustic and vibration effects imposed during launch and ascent. Modal tests are used to gather information on the hardware modal characteristics (resonant frequencies and damping characteristics) for systems dynamics analysis. Vibration tests apply dynamic loads typical of the operating environment to demonstrate the ability to withstand loads imposed during launch and ascent. Other tests are performed regarding leaks, pressure, humidity, and other aspects.

Functional testing is performed to ensure that the systems (hardware and software) will perform as designed under specified, ambient conditions. Functional tests are performed after each environmental test to ensure that no degradation has occurred due to the environmental test.

4.4.1.2.2 Verification Assessments

Verification by analysis uses analytical simulation to verify compliance to a requirement. An analysis is a technical design evaluation that quantitatively assures compliance with design and performance requirements. Techniques may include modeling, computer simulations, and other systems engineering tools.

For verification by demonstration, compliance with requirements is shown by demonstration. One example is verification of accessibility to hardware interfaces by the crew for on-orbit removal or replacement of equipment, which would appropriately be verified by demonstration.

Verification by similarity assesses the compliance to requirements by review of prior test data or hardware configuration and application. Verification by similarity is a comparison process where proof is shown that an article is similar or identical in design and manufacturing processes to another article

previously qualified to equivalent or more stringent criteria. This method is appropriate where the hardware item is similar in design and manufacturing process to another hardware item which has previously been qualified to equivalent or more stringent specifications. This method is mostly used at the component level.

Verification by inspection is used to ensure compliance to drawings, wire coding, and material specifications. Inspection is simply a visual examination to verify construction features, workmanship, and physical condition. After an environmental test, an inspection is performed to ensure that no visible damage to the hardware occurred during the test.

Verification by review of records is used to ensure that procedures were performed as required, that equipment performs properly, and that any problems identified during development have been corrected. Records that may be reviewed include test reports, discrepancy reports, computer analyses, approvals by SR&QA, and other reports.

4.4.1.2.3 Verification Cross Reference Index

A VCRI is used to ensure that each design and performance requirement is adequately verified for each verification phase. Each requirement in section 3 of the specification document must be individually verified, and the method of verification stated on the VCRI, as shown in the sample VCRI in figure 22. The details of the VCRI vary for different programs depending on which features are most appropriate, but all VCRI's list all of the requirements in section 3 of the specification document and list the verification method to be used during each verification phase.

A verification review board reviews the VCRI, including the requirements, verifiable parameters or criteria, and the proposed verification methods and levels. Upon approval by the board, the verification items are sorted and assembled into verification baseline documents for system, subsystem, and equipment levels. For each requirement to be verified, a verification procedure document must be generated. These documents may be test procedures, a technical memorandum specifying an analytical model, or a check list for similarity or inspection. After these documents are approved, verification by assessment or test is initiated. The report which covers the verification of a particular requirement is then identified in the verification matrix document. This report could take the form of a test report, analysis report, similarity analysis report, or inspection report.

4.4.2 Software Development and Verification

The software development process is closely related to the hardware and systems development process, as illustrated in figure 23. Typically, software development lags hardware development by about half of a review cycle. This is because the hardware and system functions need to be determined before software can be developed for them. The hardware and software are brought together for integrated testing and acceptance. Similar to the hardware development process, software development progresses through the following phases:

(1) Conceptual

(2) Requirements

(3) Design

CEI Nomenclature/Number	VERIFICATION CROSS REFERENCE INDEX	Spec No. _____ Dated _____ Page _____

REQUIREMENTS FOR VERIFICATION

VERIFICATION METHOD:
1. Similarity
2. Analysis
3. Inspection
4. Demonstration
5. Review of Records
6. Test
   a. Environmental
   b. Functional

N/A - Not Applicable

VERIFICATION PHASE:
A. Development
B. Qualification
C. Acceptance
D. Integrated System
E. Prelaunch Checkout
F. Flight Operations
G. Postflight

Section 3.0 Performance/ Design Requirement Reference	Verification Methods for Each Phase								Comments
	N/A	A	B	C	D	E	F	G	

Figure 22. Example VCRI form.

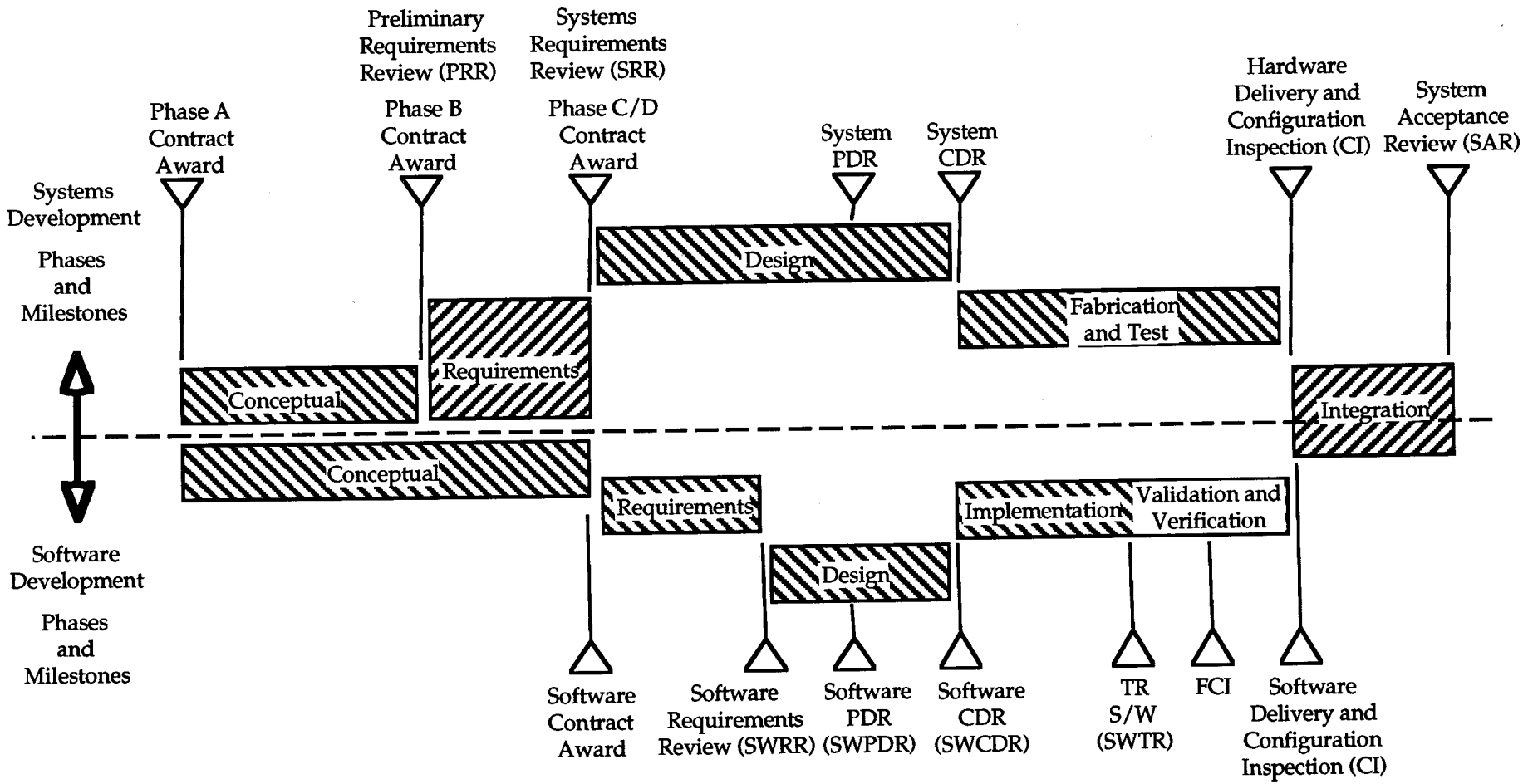

Figure 23. Systems and software development process.

(4) Implementation

(5) Verification

(6) Validation

(7) System integration

(8) Operations and maintenance.

Not all of the phases are applicable, depending upon factors such as system size, complexity, or the availability of off-the-shelf software. For example, if off-the-shelf software is used, the design and implementation phases may be skipped if the software closely matches the requirements.[41]

4.4.2.1 Conceptual Phase

The system conceptual phase begins at the inception of the project and completes when the PRR is held. During this phase, software and system concepts are developed in conjunction with one another. An initial allocation of functions to hardware or software is made, and the preliminary software configuration end items are identified.

4.4.2.2 Requirements Phase

The requirements phase follows the conceptual phase and extends through the software requirements review (SwRR). The system requirements are allocated to hardware, software, and operational requirements. The software requirements are then placed in a software requirements specification and are normally partitioned by function.

4.4.2.3 Design Phase

The design phase begins after the SwRR and concludes with a software design baseline at the CDR. The PDR is an intermediate milestone during this phase. While the requirements specify the system's capabilities, the design specifies how these capabilities will be achieved.

4.4.2.4 Implementation

The software is implemented after the software CDR. Implementation involves coding, debugging, unit testing, and software integration testing. At the conclusion of implementation and prior to the start of the verification phase, a software test review may be scheduled to assure readiness to test the software.

4.4.2.5 Verification Phase

The verification phase is performed by a group separate from those who implement the software. Verification involves testing with emphasis on conformance to software requirements. The software is tested in a facility which simulates a closed-loop system using as much system or prototype hardware as feasible. Logic paths, operating modes, and reasonable failure modes are verified. The verification phase concludes with the functional configuration inspection (FCI), which reviews the verification test results to assure functional conformance of the software to requirements.

4.4.2.6 Validation Phase

Validation goes beyond verification by incorporating more hardware into testing. During validation the system is tested with emphasis on system hardware/software compatibility and on subsystem performance within the system environment. The validation phase concludes with the final software delivery and the configuration inspection (CI).

4.4.2.7 System Integration Phase

System integration provides a final systems level test of the software. Testing is guided by the software/system acceptance test specification. The objective is to ensure systems level hardware/software integration and compatibility. Therefore, testing is conducted at the highest possible level and simulates onboard flight tests as closely as is permitted by the limits of safety and practicality. System integration can be considered a higher-level validation or an extension of the validation process. The system integration phase ends with the systems acceptance review (SAR).

4.4.2.8 Operations and Maintenance Phase

The operations and maintenance phase is the final phase, and it continues for the life of the project. Configuration and change control processes are maintained throughout this phase. Post-flight software evaluation reports are generated to provide summaries of the software's performance during each mission and include recommended changes for future flights.

4.5 Safety Assurance

Safety is very important from early in the development process through flight, and numerous safety reviews are performed to ensure that safety requirements are met.[42] As part of the review process, the criticalities of potential failures are determined, and hazard analyses are performed to ensure that all reasonable precautions against hazards have been taken. Fault trees are then constructed to determine the causes and effects relating to the hazards. To identify potential failures of the hardware and software, and to determine the effects of the failures, failure modes and effects analyses are performed for each.

4.5.1 Safety Reviews

Safety reviews are performed at key steps or regular intervals such as bimonthly, in the design and development process to ensure that hardware and software is designed to operate safely and to ensure that test facilities can perform tests in a safe manner. The safety review process functions to integrate safety hazard analyses and risk assessments. A safety review board (SRB) provides "overall integration of the safety program through the review of all . . . reported hazards, the performance of the integrated hazard analysis and recommendations . . . on the disposition of reported hazards. . . . The process for conducting the reviews consists of the evaluation of the progressive hazard analysis results such as the preliminary hazard analysis, system hazard analysis, subsystem hazard analysis, and operations and support hazard analysis." [43]

4.5.2 Criticality Ratings

Potential failures are rated according to the severity of the effects of the failure. The categories and their definitions are listed in table 9. A flow chart of the process for determining the criticality rating of a hardware item is shown in figure 24.

Table 9. Criticality ratings.

Category	Definition
1	Single failure point that could result in injury or loss of life
2	Single failure point that could result in the loss of a mission or test, or suspension of test operations or damage to the test facility
1R	Redundant hardware items, all of which if failed could result in category 1 effects
2R	Redundant hardware items, all of which if failed could result in category 2 effects
3	All other failures

4.5.3 Hazard Analyses

It is essential that potential hazards be identified to ensure that appropriate measures are taken to avoid or minimize the effects of their occurrence. Hazards include hardware or software errors, unsafe designs, and facility inadequacies. Hazard analyses are performed to determine "potential sources of danger and recommended resolutions in a timely manner for those conditions found in either the hardware/ software systems, the person-machine relationship, or both, which cause loss of personnel capability, loss of system, or loss of life or injury to the public." Before performing a test, the hardware and test facility are evaluated for any potential hazards to the test personnel, the test facility, and the hardware. The results are reviewed by a board and must be approved prior to performing the test. A sample hazard analysis report form is shown in figure 25. A safety assessment report (SAR) summarizes "the results of hazard analyses and risk assessments."[43]

Hazards are resolved by the following actions in the order of precedence indicated:

(1) Eliminate the hazard

(2) Design for minimization of the hazard

(3) Incorporate safety devices where hazards cannot be eliminated by design

(4) Use warning devices where it is not possible to preclude the existence or occurrence of a known hazard

(5) Develop special procedures to counter hazardous conditions where safety or warning devices cannot reduce the magnitude of a hazard

(6) Provide protective clothing to minimize the effects of a hazard.[44]

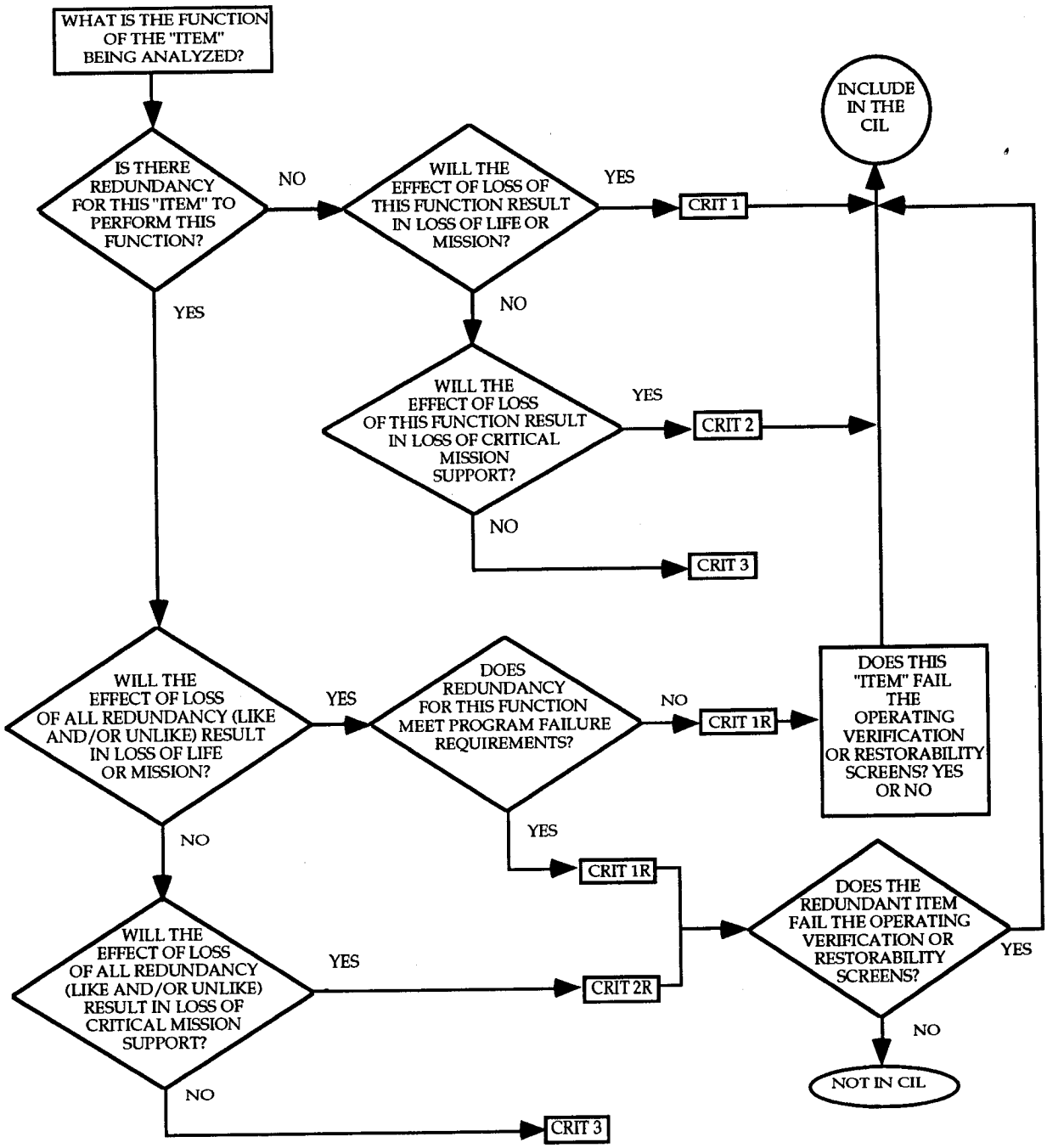

Figure 24. Process for determining criticality ratings.

FIELDS FOR SPACE STATION HAZARD DATA BASE

1) Hazard Title 2) Hazard ID No:
3) Revision Date: __/__/__
4) System: _____ Subsystem: _____
Operation: _____
5) Risk Index: Severity _____ Likelihood of Occurrence _____
a) Cause __ b) Controls __ c) History __ d) Methods __ e) Time __
6) Hazard Description:
7) Program Phase(s):
a) DDT&E__ Manufacturing__ Test__ Packaging__ Transportation and Handling __ Storage__
b) Pre-launch (launch pad activities and Payload Manifesting)__ System Checkout and Installation__ Countdown__
c) Launch__
d) Flight__
e) Orbital Assembly & Checkout__
f) On-orbit Operation__
i. Space Station Flight Operation__ Proximity__ Docking/Undocking__ Orbit Maintenance__ MSC Operation__ Contingency__
ii. Space Station IVA Operation__
iia. Man-Tended__ Start-up__ Normal__ Shutdown__ Maintenance/Resupply__ Restoration & Checkout__ Off-normal Activities__
iib. Permanently Manned__ Start-up__ Normal__ Shutdown__ Maintenance/Resupply__ Restoration & Checkout__ Off-normal Activities__
iic. Assembly Complete__
iii. Space Station EVA Operation__
iiia. Man-Tended__ Assembly__ Maintenance/Repair & Checkout__ Retrieval__
iiib. Permanently Manned__ Assembly__ Maintenance/Repair & Checkout__ Retrieval__
iiic. Assembly Complete__
iv. Return__ Normal__ Rescue__ Contingency__
v. Landing__ Normal__ Contingency__
vi. Post Landing__ Checkout__ Refurbishment__ Upgrading/Modernizing__ Decommissioning__
8) Hazard Cause(s):
9) Worst Case Hazard Effect:
10) Interfaces:
WP1__ WP2__WP3__WP4__CSA__ESA__NASDA__STS__Ground__Other__
11) Detection and Warning Method(s):

Figure 25. Sample hazard report form.

12) Safety Requirement(s):
13) Control Method(s):
14) Method for Verification of Control(s):
15) Status of Open Work:
16) Reference(s):
17) Remarks:
18) Hazardous Materials:
19) Release and Closure Status:
    Hazard Status: Open___ Closed___
    Closure Classification: Eliminated__ Controlled__
    Accepted Risk__

NOTE: As a minimum, all data items except 10 and 17 are to be included in the hazard reporting system.

Figure 25. Sample hazard report form (continued).

4.5.4 Fault Trees

Fault trees are usually derived from hazard analyses, starting with an undesired event and identifying all potential causes. Fault trees include environmental effects, human errors, and hardware or software failures. An undesired event may be the result of a single failure, a series of failures that must occur in sequence, or multiple failures which must occur simultaneously. A fault tree analysis "is a graphic representation of a logical thought process used to analyze an undesired event. Using inductive logic, all causes that can lead to the undesired, or top, event are listed on an inverted 'tree.' These causes then become events for which causes are listed. This analysis is continued to determine all of the events and combinations of events that can lead to the top event."[43] A fault tree shows the cause and effect relationships in a form such that when a failure occurs the possible effects and the likely cause(s) of that failure can be readily identified. This information can then be used to remedy the failure or work around it. Fault trees are used qualitatively to determine the causes of undesired events, and quantitatively to determine the probabilities of particular events occurring, based on the probability of failures which lead to the events. A sample fault tree is shown in figure 26.

4.5.5 Failure Modes and Effects Analyses and Critical Items

An approach which is distinctly different from, but complementary to, fault trees is the failure modes and effects analysis (FMEA). Rather than the top-down approach of looking at an undesired event and determining what may cause it to occur, FMEA's consider each possible failure of each hardware item or software command. Potential severities of the effects are indicated by the criticality ratings assigned to each effect. An FMEA is used "to verify that all safety-critical hardware has been addressed in the hazard analyses." A sample FMEA report form is shown in figure 27.[45]

Based on the results of a FMEA, a critical items list (CIL) is prepared which lists the criticality 1 and 2 single-failure points and redundant items in life-essential applications. The CIL is used when hardware specifications and certification requirements are being established; during planning of manufacturing, inspection, and tests; and during preparation of on-orbit maintenance procedures and mission rules.[44]

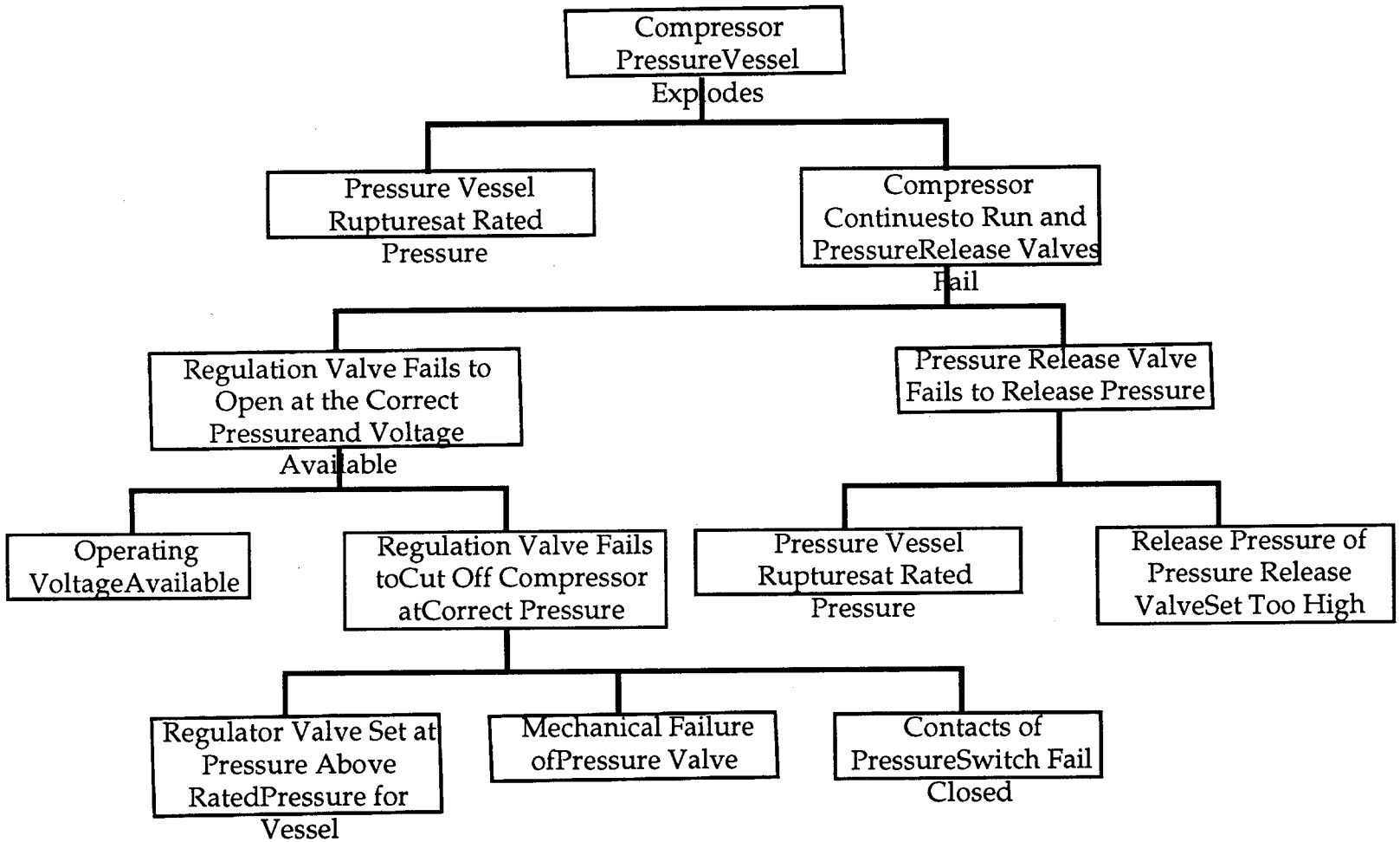

Figure 26. Sample fault tree.

FMEA NO. _____ DOCUMENT NO. _____
CRITICAL ITEM: (YES/NO)_____ DOC REV DATE _____
ITEM NAME: CRITICALITY CATEGORY:
PART NUMBER: CRITICALITY DURING MAINTENANCE:
QUANTITY: FAILURE EFFECT PHASE:
HARDWARE LOCATION _____ (A) PRELAUNCH
SYSTEM: _____ (B) TRANSPORTATION
SUBSYSTEM: _____ (C) ASSEMBLY
REFERENCE DESIGNATOR: _____ (D) PERMANENTLY MANNED
HARDWARE CAPABILITY
(INCLUDING REDUNDANCY) IS FUNCTION RESTORABLE ON-ORBIT?
OPERATING VERIFICATION: ORU LEVEL:
(A) CHECKOUT: NAME PN
(1) PRELAUNCH _____ ORU FAILURE DETECTABILITY
(2) ONORBIT _____ EVA REQUIRED (YES/NO)
(B) DETECTABILITY _____
(APPROPRIATE MISSION PHASE(S))

CONTRACTOR	NASA
PREPARED BY: DES. REL.	APPROVED BY: DES REL.

FUNCTION:
FAILURE MODE:
FAILURE CAUSE(S):
FAILURE DETECTION/ VERIFICATION: CORRECTION ACTION: (A) SHORT TERM
(B) LONG TERM
TIME TO EFFECT:
FAILURE EFFECT ON: (A) CREW/SSPE
(B) MISSION SUPPORT
(C) SYSTEM
(D) INTERFACES
**RATIONALE FOR ACCEPTABILITY:
(A) DESIGN
(B) TEST
(C) INSPECTION
(D) FAILURE HISTORY
(E) OPERATIONS
(F) MAINTAINABILITY
**NOTE: RATIONALE FOR ACCEPTABILITY IS APPLICABLE TO CIL ITEMS ONLY
REMARKS/HAZARDS:
REFERENCE DOCUMENTS:

Figure 27. Sample FMEA report form.

PART II
ECLSS APPLICATIONS

PAGE 94 INTENTIONALLY BLANK

PRECEDING PAGE BLANK NOT FILMED

5.0 HISTORICAL ECLS SYSTEMS

Life support systems are required for sustaining life whenever a person is separated from some critical part of the natural environment, and they have been used for many years for terrestrial, marine, and aerospace applications. These include applications such as firefighter's suits, SCUBA diving equipment, and medical life support systems, and in office buildings, aircraft, and submarines. The specific ECLS functions required for each of these applications is indicated in table 10 in comparison with the six basic space habitat ECLS functions discussed in chapter 2. The acronym, ECLSS, is usually used to denote a system that controls the life support and environmental conditioning functions inside a sealed, isolated volume. Occupants of the volume must be protected from a hazardous external environment and provided with the necessities for sustaining life. The term ECLSS usually carries the connotation of a space habitat system, however, there are two nonspace examples where the term ECLSS can be applied appropriately. The first is the cabin of a passenger airplane, which must protect passengers from the low-pressure, low-temperature environment present at high altitudes. The second example is submarines, where the crew must be protected from the cold temperatures and high pressures of the deep ocean.

Table 10. ECLS applications compared to space habitat ECLS functions.

Application	ACS	AR	THC	FDS	WRM	WM
Firefighters Suits	x		x			
SCUBA	x		x			
Medical Life Support	x		x			x
Office Buildings	x		x	x	x	x
Aircraft	x		x	x	x	x
Submarines	x	x	x	x	x	x

With the development of human space flight, the knowledge needed to support human life while isolated from the Earth's biosphere has increased. Each successive program to send people into space has built and improved upon the last, learning from the successes and failures experienced on each mission. As crew size, mission duration, and mission complexity have increased, the space habitat ECLSS has been adapted and improved, based on lessons learned from the past. Where can examples of ECLSS's be found in everyday life? What is the development history of the ECLSS, and how has this been affected by past experiences? What do actual working space habitat ECLSS's look like? This chapter answers these questions by discussing terrestrial ECLS applications and the development of ECLSS for the U.S. and U.S.S.R. space habitats.

5.1 Terrestrial Applications

ECLSS's were developed for Earth applications well before designs for space habitats were ever conceived. Examples of ECLSS's are found wherever humans are required to survive in a hazardous or isolated environment, where the resources necessary for survival are not naturally present. One example is the equipment used by firefighters which allows them to work under extremely hazardous conditions. Gas masks are used to remove trace contaminants and toxic gases from the atmosphere, and are used where sufficient oxygen is present for breathing. Where sufficient oxygen

PRECEDING PAGE BLANK NOT FILMED

PAGE 96 INTENTIONALLY BLANK

is not available, portable breathing masks and compressed air tanks are used. Insulated clothing or actively cooled garments are used to regulate body temperature and provide protection from the intense heat of fires.

Another example is the self-contained underwater breathing apparatus (SCUBA) worn by underwater divers. Humans are unable to survive under water for extended periods of time without the aid of SCUBA gear, which consists primarily of a breathing mask and a tank of compressed air, similar to firefighters' equipment. For thermal control, wet suits are used to maintain appropriate body temperatures in cool water (10 to 30 °C (50 to 86 °F)), and dry suits are used in colder water (less than 10 °C (<50 °F)).

Medical life support equipment includes respirators and equipment to provide elevated levels of O_2, methods of regulating body temperature, devices for direct feeding via intravenous injection, and methods of removing metabolic wastes such as by kidney machines. Much of the medical life support equipment is very specialized and is not likely to be included in a space habitat except for medical purposes. However, many of the technologies were developed for space applications and may be suitable for space habitat ECLS use (such as sensors or filtration methods).

An ECLSS provides environmental control in addition to the life support functions described above. Environmental control includes the control of environmental temperature, humidity, airflow, and atmosphere composition. The heating, ventilation, and air conditioning (HVAC) system found in an office building is an example of an environmental control system. The HVAC system heats and cools the building, maintaining air temperature within a range comfortable to the occupants; and circulates air, keeping it fresh by maintaining an even oxygen and carbon dioxide distribution throughout the building. Without an HVAC system, a large building occupied by hundreds of people may have areas where the working conditions would be intolerable, and high concentrations of CO_2 and trace contaminants could build up to unhealthy levels. Buildings also include water distribution systems and methods for removing waste water and solid wastes. In addition, buildings typically contain methods for detecting and suppressing fires.

5.1.1 Aircraft ECLSS

An aircraft cabin protects passengers from the low pressures and temperatures of the upper atmosphere, yet an aircraft ECLSS is normally referred to as simply an "environmental control system" (ECS), with no reference to life support. Although passenger life could not be sustained without some type of cabin atmosphere control, not all of the basic life support functions discussed in chapter 2 are required, since the aircraft has access to an "infinite" supply of air and can land in the event of a life threatening situation.

The primary function of an aircraft ECS is to regulate the temperature and pressure of the cabin atmosphere. Many jet aircraft perform these functions using a basic air cycle system. Hot, high-pressure air is bled off the jet engine compressor and sent through one or more heat exchangers, which use ram air to cool the compressed air to a temperature above the desired ambient, about 65.5 °C (150 °F) for the MD-11 passenger airliner. Ram air is air scooped up outside the aircraft as it "rams" through the atmosphere, with its temperature dependent on aircraft altitude. If cabin cooling is desired, the compressed stream is then passed through a turbine and expanded, cooling the air to a temperature below cabin ambient. Air temperature decreases as it performs work on the turbine, which in turn operates a fan and compressor that are connected to the turbine on a shaft. A fraction of the hot air available at the turbine inlet is bypassed around the turbine, depending

on the amount of cabin cooling required. If cabin heating is required, a large fraction of the hot air stream will bypass the turbine so that the mixed air temperature downstream of the turbine will be above cabin temperature. A water separator is also included to keep water from entering the cabin. The basic air cycle design for an aircraft air conditioning system is shown in figure 28. Variations of this general design are found on many types of jet aircraft. Pressure is controlled by pressure regulation valves, which are not shown in the diagram. Many aircraft carry tanks of emergency oxygen that become available to passengers if cabin pressure can not be maintained within required limits.

Other ECLSS functions are not required due to the short duration of most flights. Water is carried in tanks for drinking and hygiene purposes, and human waste is stored in tanks. Waste collection tanks on an MD-11 passenger jet, for example, are maintained at low pressure to suck waste from the commode. The pressures are sufficiently low that liquid waste boils, for venting overboard. Fire detection and suppression is provided, but an airplane will normally land if a fire starts. Smoke detectors and portable extinguishers are included on most aircraft.

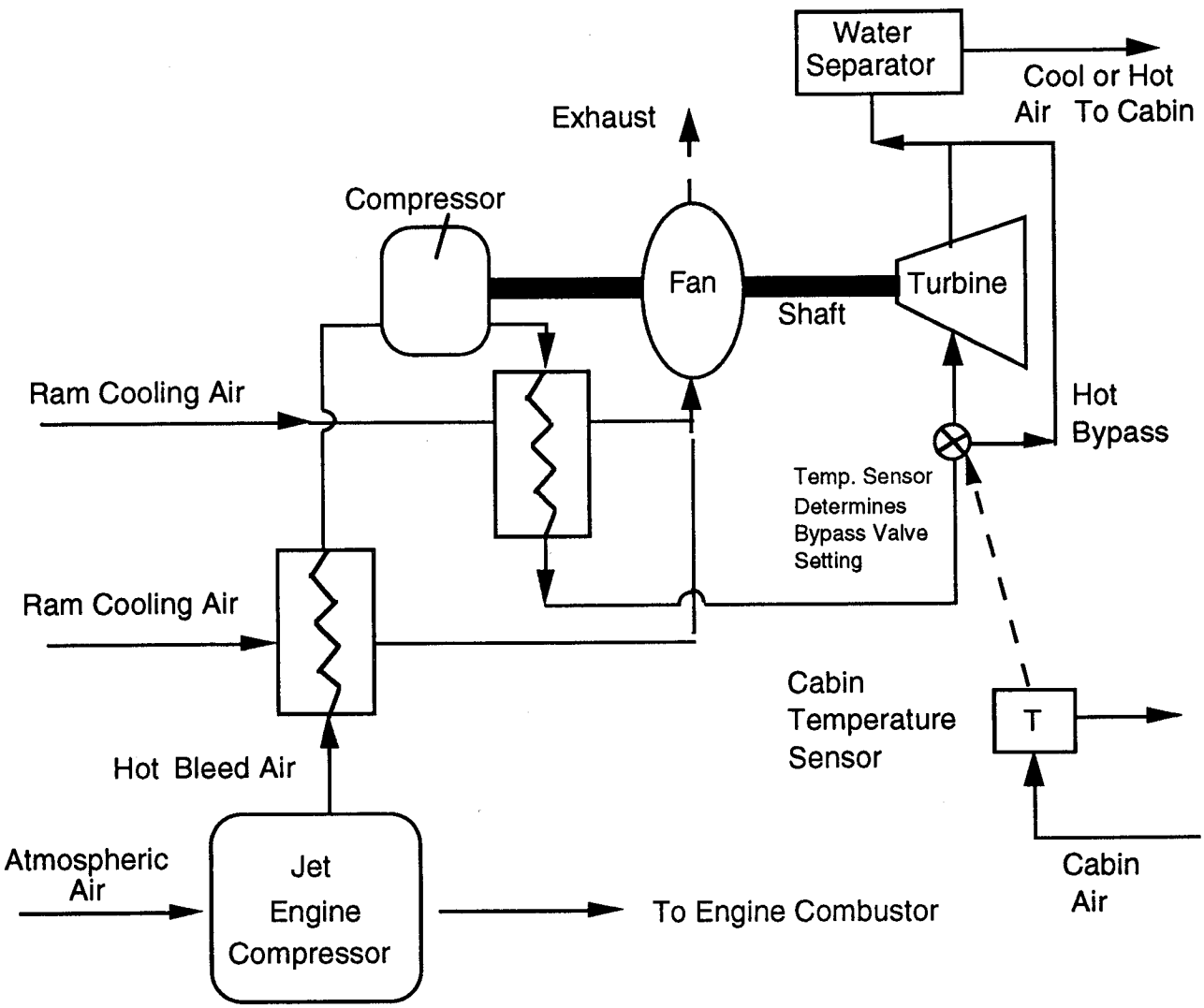

Figure 28. Basic air cycle for a jet aircraft air conditioning system.

5.1.2 Submarine ECLSS

Many of the design principles, requirements, and technologies used in space habitat ECLSS were originally developed for submarines. Submarines, the closest terrestrial analogs to space habitats, are surrounded by an underwater environment nearly as uninhabitable to humans as outer space. Inside the isolated, sealed volume of a submarine, the crew must survive with limited supplies in an environment maintained by a mechanical ECLSS, shown in figure 29.

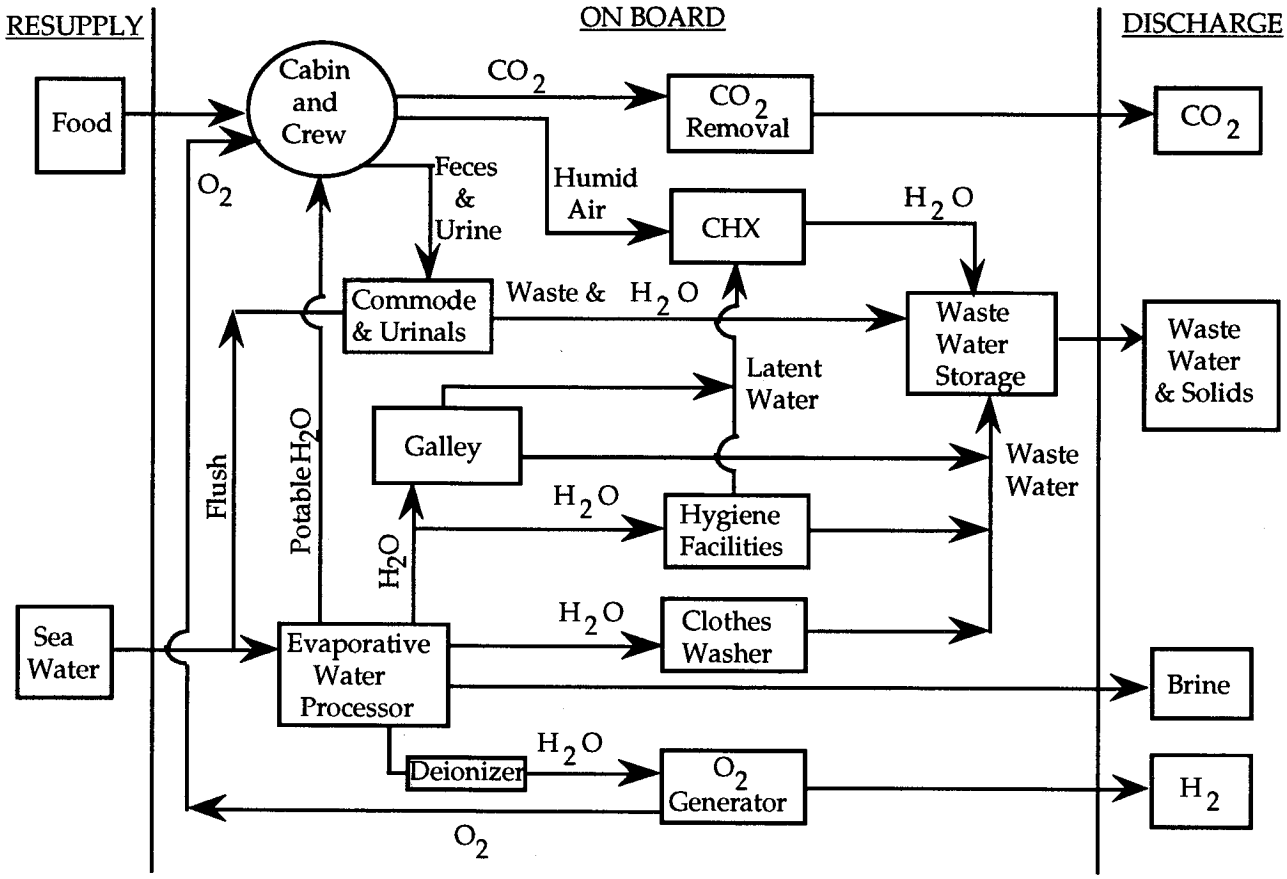

Figure 29. Schematic of a typical submarine ECLSS.

Like space habitats, submarines are relatively small vehicles largely isolated from the biosphere. The six basic ECLS functions must be performed, but the requirements placed on the equipment are quite different in certain respects. For nuclear powered submarines, for example, the power available is far greater than for a space habitat powered by fuel cells or P/V arrays. Other differences include gravitational effects that provide natural convection of the atmosphere and gravity-assisted separation of liquids and gases, crew medical and habitability needs, maintainability requirements (subsystems are usually high-maintenance), instrumentation, and equipment performance monitoring.(1)

While the internal environments of submarines and space habitats are quite similar, there are several external factors that simplify submarine ECLSS design. The first is the abundance of water surrounding the submarine, available as an in situ resource. Seawater is used directly for the commode and urinal flush. Potable water for drinking, personal hygiene, food preparation and other

galley needs, and clothes washing is recovered from seawater by distillation. Potable water is also used to produce oxygen by water electrolysis. Given an "infinite" water supply, electrolysis is the logical method for providing oxygen instead of carrying oxygen tanks. Waste handling is also facilitated by the availability of seawater. Waste water, brine, and waste gases are discharged into the surrounding seawater with minimal contamination penalties. Seawater disperses and breaks down waste, eventually returning each constituent to its natural state. Other trash is ground, compacted, and discharged overboard. Venting is more complex and hazardous for a space habitat, where extensive discharging can lead to long-term external contamination difficulties and orbital debris problems.

Gravity is one of the most important differences which simplifies designing a submarine ECLSS compared to that for an orbiting space habitat. There are added complexities that complicate designing hardware for use in microgravity. Fluid phase separation is difficult without gravity, which provides the force for separating fluids of different densities, such as liquids from gases. Gravity is not available to provide pressurized water based on the height of a column of stored water. Water storage and distribution systems in microgravity use bellows or bladder tanks compressed by pressurized gases to expel water to distribution points at the required pressures. Extra ventilation fans are also required to compensate for the lack of natural convection in microgravity. Collecting human fecal matter and urine is also significantly more involved in the absence of gravity. Forced convection is one method to duplicate the effects of gravity for this application.

Another difference between submarine and space habitat ECLSS is that submarines do not need to carry stores of nitrogen. Nitrogen and other pressurized gases that comprise a space habitat atmosphere gradually leak into the low-pressure vacuum of space. Sources of oxygen and nitrogen must be available to make up this leakage. Submarines have little problem with gas leakage, since the surrounding hydrostatic pressure is higher than the internal atmospheric pressure. Oxygen must still be continually supplied because of metabolic consumption, but nitrogen is only supplied when the submarine exchanges air at the surface. Frequent ventilation with the surface atmosphere greatly reduces trace contaminant buildup inside the submarine, although trace contaminant control is needed while a submarine is submerged.

The capability to surface has other advantages not shared by space habitats. Equipment reliability and safety requirements need not be as stringent for submarines. If the ECLSS sustains a life-threatening failure, the submarine can simply surface and return to port for repairs. Also, resupply of a vital consumable, such as food, does not depend on the readiness and successful launch of a resupply rocket. When consumables resupply becomes necessary, a submarine depends largely on itself to reach port or a rendezvous point with resupply vessels.

Similarities between submarine and spacecraft ECLSS's include manual and automatic methods for fire detection and suppression, the use of regenerable sorbents or expendable LiOH canisters for CO_2 removal, and temperature and humidity control using condensing heat exchangers with water as the working fluid.

5.2 U.S. Experience with Space Habitat ECLSS

The ECLS systems for the earliest space "habitats" were relatively simple since they were for missions with durations from 15 min to a few hours. They consisted of open-loop methods of providing O_2 and removing CO_2 and provided thermal control. Prior to sending people into space,

animals were launched in the space habitat to verify the systems and to ensure that animals could survive in space. The first animal placed in Earth orbit was a female Eskimo dog named Laika, launched on *Sputnik II* by the Soviet Union on November 3, 1957. A typical ECLSS design was that used by the United States to sustain a monkey named Gordo, who rode a ballistic path through space in the nose cone of a Jupiter missile in December 1958. Including the monkey, his life support system, and ancillary equipment, the whole unit weighed only 13.5 kg (29.8 lb). Carbon dioxide was absorbed by pellets of baralyme, and the breathing gas was compressed oxygen from a tank. Temperature control was partially achieved by insulating layers of metal foil and fiber glass, and water vapor was absorbed by a porous material. The waste management system consisted of clothing the monkey in a diaper. Gordo was provided neither food nor water.(2)

After the initial missions with animals verified the ability to sustain animals in space, support of humans in space was the next ECLSS goal. Over the past 30 years, the ECLS systems to support humans have increased in capability and complexity as missions increased in duration and distance from Earth, and as crew sizes have increased from one to two to three to as many as seven. The ECLSS has been adapted to many different types of space missions and has continued to evolve using lessons from successes and failures of the past. Life support systems have succeeded in supporting human life on the Moon and for mission durations of more than a year.

Human space flight in the U.S. began with Alan Shepard's 15-min suborbital flight aboard the *Freedom 7* Mercury-Redstone 3 spacecraft on May 5, 1961. U.S. ECLSS design has come a long way since that first Mercury flight. Life support methods have proven successful for both short duration missions of several days and long duration missions lasting weeks to months. Today, 30 years after Mercury, the U.S. is planning to launch another "*Freedom,*" but this time it is a space station designed to remain in orbit for 30 years. The experience base from which the space station and other future ECLSS designs are being developed comes from a variety of spacecraft programs, each with its own challenges and refinements to ECLSS design.

5.2.1 Short Duration Missions

Space habitats developed for short missions of several hours to several days have always been designed with an open-loop ECLSS supplied with enough resources to last the full mission duration. In an open-loop design, tanks of nitrogen, oxygen, and water are the only onboard fluid resources. There is no resupply from Earth, and no waste processing for recovery of oxygen and water. All waste is vented or stored for return to Earth. Open systems are easier to design than closed systems, but are impractical for long mission durations due to the high cost of resupplying expendables. Except for *Skylab*, all U.S. spacecraft have been designed for short mission durations of 15 days or less, including Mercury, Gemini, Apollo, the Orbiter, and Spacelab. The missions and certain ECLSS features of these space habitats are discussed in the following sections. Table I-1 in appendix I provides more detail on the primary ECLSS design features for each of these vehicles.

5.2.1.1 Mercury (1960 to 1963)

Objectives of the Mercury project were to place manned spacecraft in Earth orbit, test human reactions in orbit and the possibilities of manual spacecraft control by the pilot, and to safely recover astronauts and capsules from space.

Mercury was a pressurized one-man capsule in the shape of a bell, with 1.56 m^3 (55 ft^3) of habitable space for the astronaut.(3) The Mercury ECLSS can be described by separating the system

into pressure suit and cabin subsystems. The pressure suit subsystem was primarily responsible for revitalizing the astronaut's atmosphere supply and for controlling the astronaut's temperature and humidity level. The cabin subsystem controlled cabin ventilation, cabin temperature (the cabin heat exchanger did not remove water vapor), and atmospheric pressure.(4) The space suit was normally unpressurized during flight. If necessary, the astronaut could pressurize his suit by lowering the helmet visor.(3) The water used for the early Mercury missions came from the public water system in Cocoa Beach, Florida, with no additional treatment. Figure 30 is a schematic of the Mercury ECLSS.

There were six manned Mercury flights. The shortest was Alan Shepard's 15-min suborbital flight, and the longest was Gordon Cooper's 34-h 20-min flight, which was the last Mercury mission.

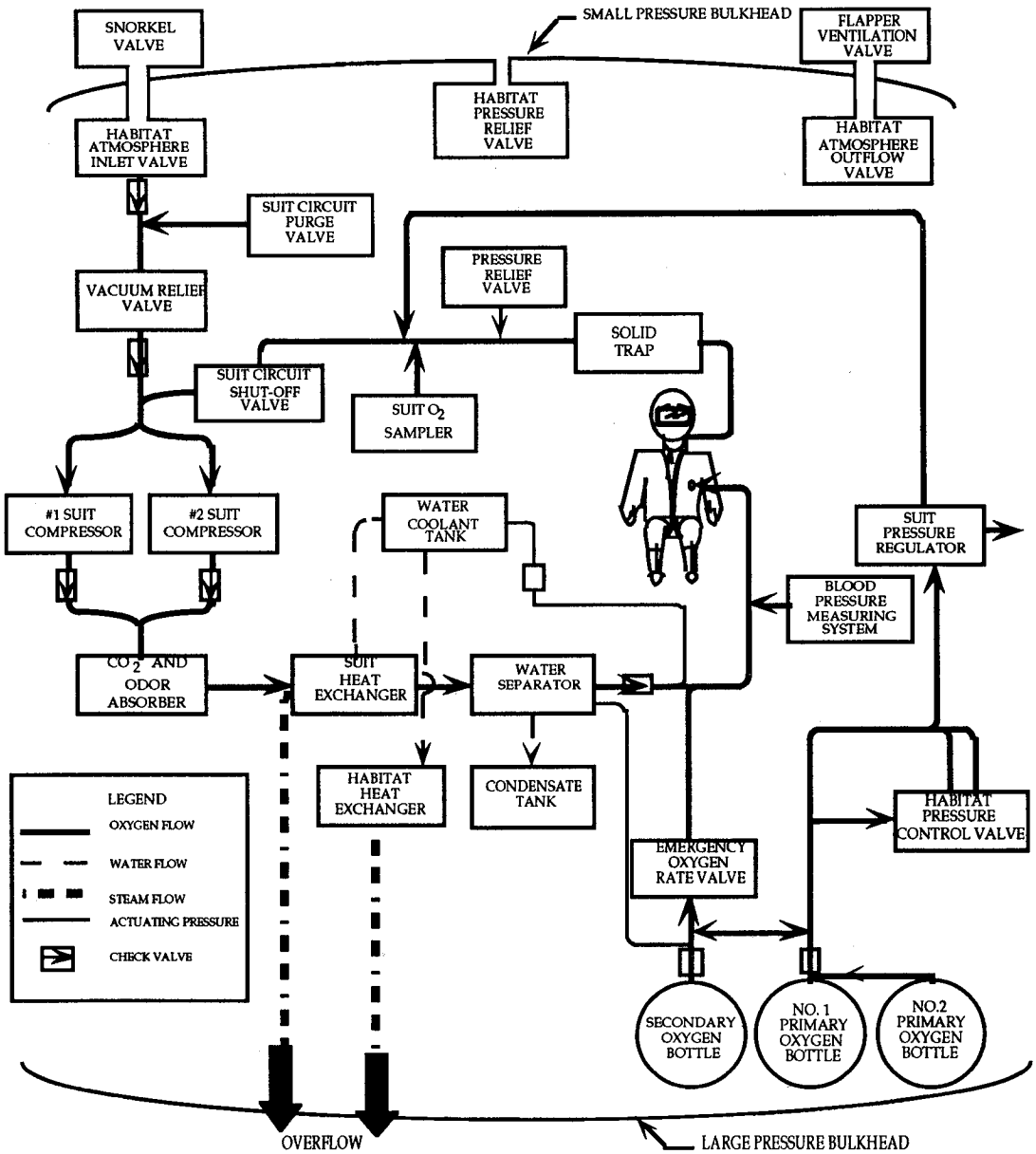

Figure 30. Schematic of the Mercury ECLSS.

5.2.1.2 Gemini (1964 to 1966)

The Gemini project, an extension of the Mercury project, was the second phase of the U.S. plan to land people on the Moon. Its objectives were to test crew and spacecraft behavior for a nonstop 14-day mission in LEO, develop the capability to rendezvous and dock with other spacecraft, perform extravehicular activities, develop methods for controlling spacecraft reentry flight paths, and provide a basis for scientific experimentation.

The Gemini capsule had 2.26 m^3 (80 ft^3) of habitable space for two astronauts.(3) Similar to Mercury, the Gemini ECLSS was divided into the pressure suit and cabin subsystems, both of which performed the same basic functions each performed for the Mercury capsule. Gemini improvements over the Mercury ECLSS included supercritical oxygen storage instead of high-pressure storage, which reduced storage tank weight and volume; an integrated heat exchanger/water separator instead of a separate heat exchanger and mechanically activated sponge-type water separator, which increased reliability and reduced power and weight; and modular construction and improved placement of ECLSS components for ease of maintenance. For the Gemini missions, supplemental chlorine was added to the water before launch. Figure 31 is a schematic of the Gemini ECLSS.

There were 10 manned Gemini flights. The shortest flight lasted 4 h and 53 min, the longest was 13 days 18 h 35 min.

5.2.1.3 Apollo (1968 to 1972)

"This nation should commit itself to achieving the goal, before this decade is out, of landing a man on the Moon and returning him safely to the Earth. . . In a very real sense, it will not be one man going to the Moon—if we make this judgement affirmatively, it will be an entire nation. For all of us must work to put him there."(5) With these words, in a speech before Congress on May 25, 1961, President John F. Kennedy established the goal which would result in the Apollo project and a series of lunar exploration missions.

The objectives of the Apollo project could be stated simply—to land people on the Moon and return them safely to the Earth, to explore the Moon from the lunar surface and from lunar orbit, and to demonstrate that people can live and work in an alien environment. The experiences of the Mercury and Gemini projects verified the basic capabilities required to accomplish the Apollo objectives; to realize these objectives, however, required the development of ECLS and other systems that were more complex than any previously developed.

The complete Apollo space vehicle included two separate life support systems, one on the command module (CM) and one on the lunar excursion module (LEM). Apollo, like Mercury and Gemini, had separate pressure suit and cabin ECLSS subsystems in both the CM and LEM. The Apollo CM was a pressurized conical capsule with 5.9 m^3 (210.0 ft^3) of habitable volume for three astronauts.(3) The CM ECLSS occupied 0.25 m^3 (9.0 ft^3) of the cabin, and was capable of operating for 14 days.(2) Figure 32 is a schematic of the Apollo CM ECLSS. Potable water from fuel cells and oxygen were supplied from the Apollo service module, which was attached to the base of the CM. Use of potable water produced by fuel cells reduced the amount (weight) of water that was launched. Safety was increased by using a 60/40-percent O_2/N_2 habitat gas mixture during prelaunch and launch periods, although the suit circuit remained at 100 percent oxygen.

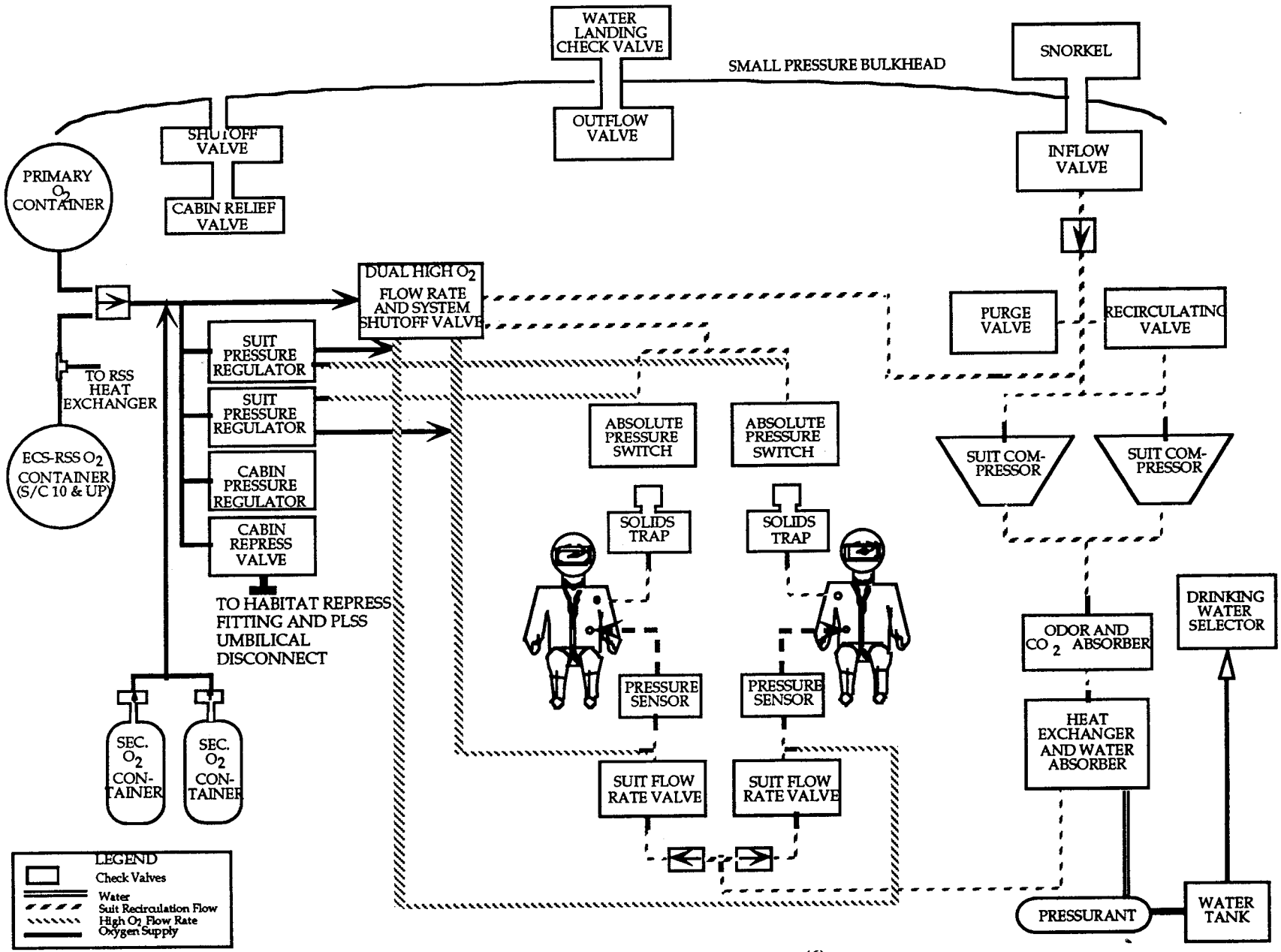

Figure 31. Gemini ECLSS schematic.(6)

The ascent stage of the Apollo LEM was a pressurized vehicle for two astronauts with 4.5 m^3 (158.9 ft^3) of habitable space.[3] A third astronaut remained in the CM in circumlunar parking orbit until the ascent module returned from the Moon. Unlike the CM, for the LEM potable water was stored in tanks instead of being produced by fuel cells, no overboard venting of urine on the lunar surface was allowed, and iodine was used as a bactericide instead of chlorine to avoid corrosion problems anticipated between chlorine and the LEM sintered nickel sublimator plates. For the CM, chlorine in the form of sodium hypochlorite was added to the water every 24 h to maintain a concentration greater than 0.5 mg/L. Figure 33 is a schematic of the LEM ECLSS.

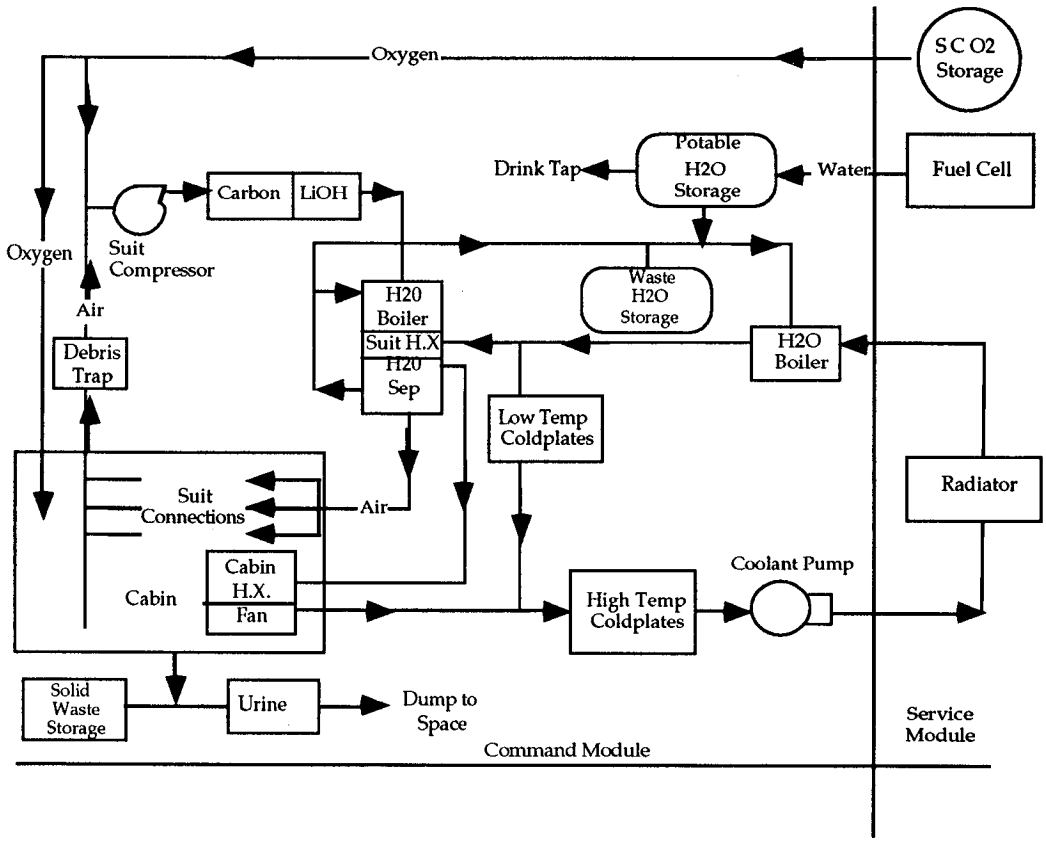

Figure 32. Schematic diagram of the Apollo CM environmental control system.[7]

There were 11 manned Apollo flights, including 6 missions to the Moon. *Apollo 13* was the shortest mission at 5 days 22 h 55 min due to the rupture of an oxygen tank. The last Apollo mission, *Apollo 17*, was the longest at 12 days 13 h 52 min, which included over 3 days on the Moon.

5.2.1.4 Space Shuttle Orbiter (1981 to present)

An objective of the space shuttle program is to provide a reusable transport that increases accessibility to space at a relatively low cost. The space shuttle includes an orbiter, an external fuel tank, and two solid rocket boosters. Shuttle missions support private and commercial ventures in space, including the construction of S.S. *Freedom.*

Shaped like a delta wing airplane, the orbiter is designed to carry an average crew of seven for a nominal mission of 7 days in a total habitable volume of 74 m^3 (2615 ft^3).[2]

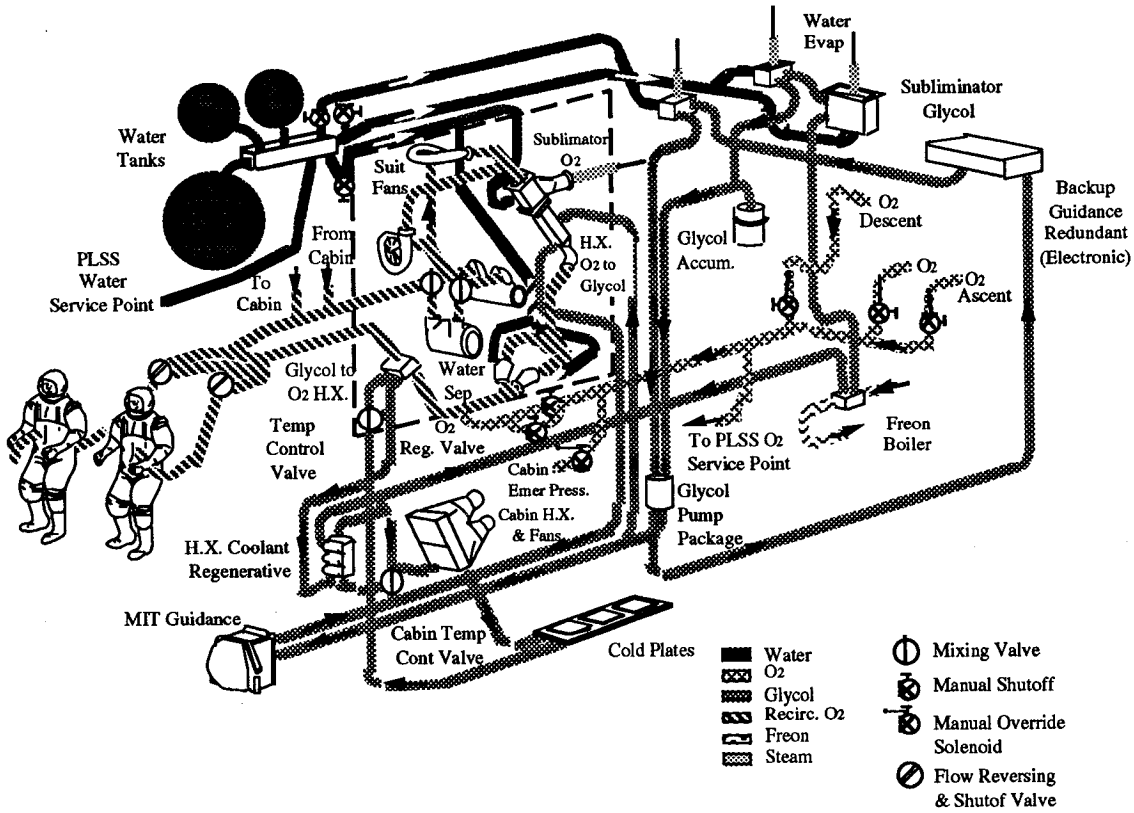

Figure 33. Schematic diagram of the Apollo LEM environmental control system.(7)

The orbiter is the first U.S. space habitat to use a standard sea-level atmosphere—a gas mixture of 22-percent oxygen and 78-percent nitrogen at a total pressure of 101 kPa (14.7 psi). Other orbiter ECLSS innovations included Halon 1301 fire suppressant, microbial check valves to passively adjust iodine concentration in the potable water supply on a continuous basis instead of periodic iodine injection by the crew, and a commode for fecal collection and storage instead of simple bag collection. Figure 34 is a schematic of the atmosphere revitalization system, figure 35 is a schematic of the water management system, and figure 36 is a schematic of the waste management system.

There have been over 54 orbiter missions from the April 12, 1981, launch of the space shuttle *Columbia* (STS-1) through April 1993.

5.2.1.5 Spacelab (1983 to present)

The cylindrical Spacelab laboratory module, located in the orbiter cargo bay during a Spacelab mission, provides a pressurized shirt-sleeve environment for performing experiments in microgravity. There are two types of pressurized Spacelab modules, the primary difference being module length. Most of the Spacelab ECLSS is very similar to the orbiter system, although Spacelab does not process potable water or metabolic waste, and depends on the orbiter for its metabolic oxygen supply and heat removal. Cabin atmosphere is exchanged with the orbiter through the Spacelab transfer tunnel. An avionics atmosphere loop, separate from the cabin atmosphere loop, is used for cooling rack-mounted instrumentation. Figure 37 is a schematic of the Spacelab cabin atmosphere loop, and figure 38 is a schematic of the avionics atmosphere loop.

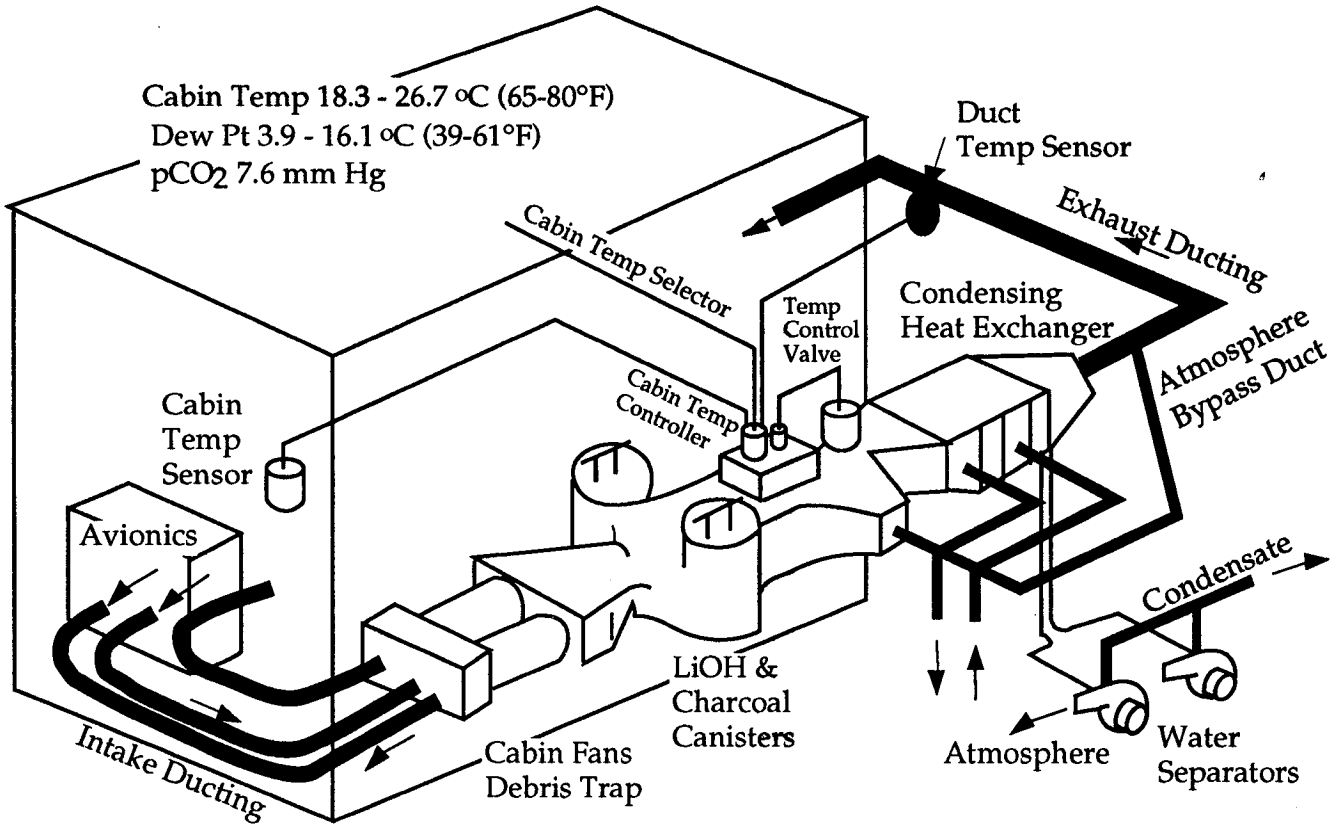

Figure 34. Orbiter atmosphere revitalization system.

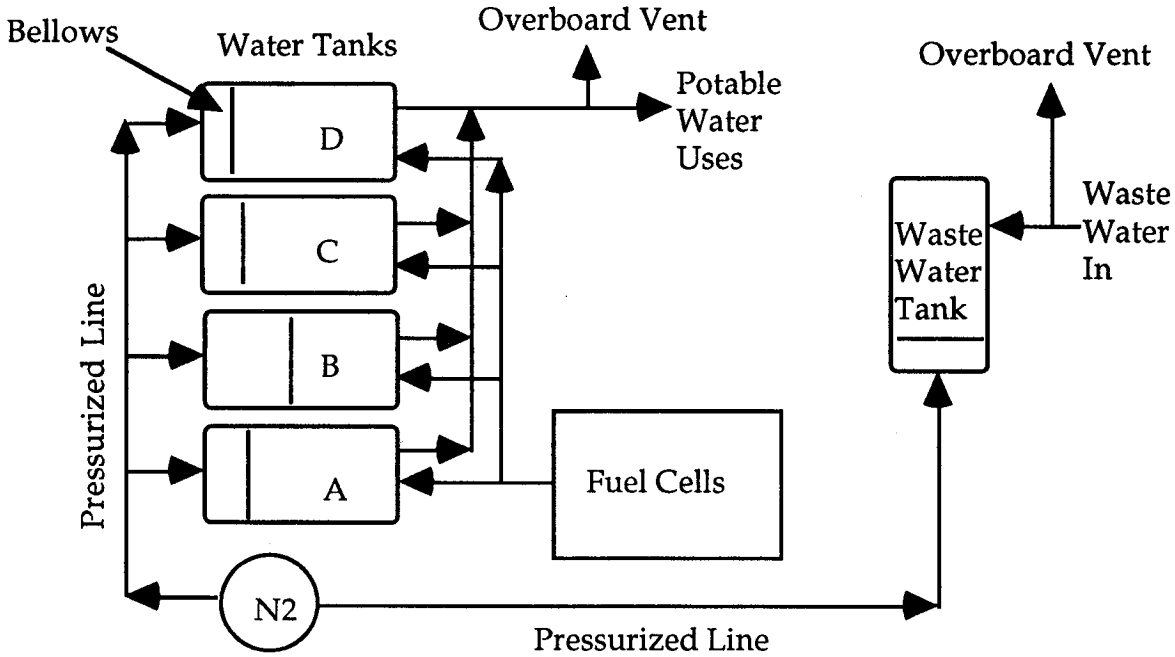

Figure 35. Schematic of the orbiter water management system.

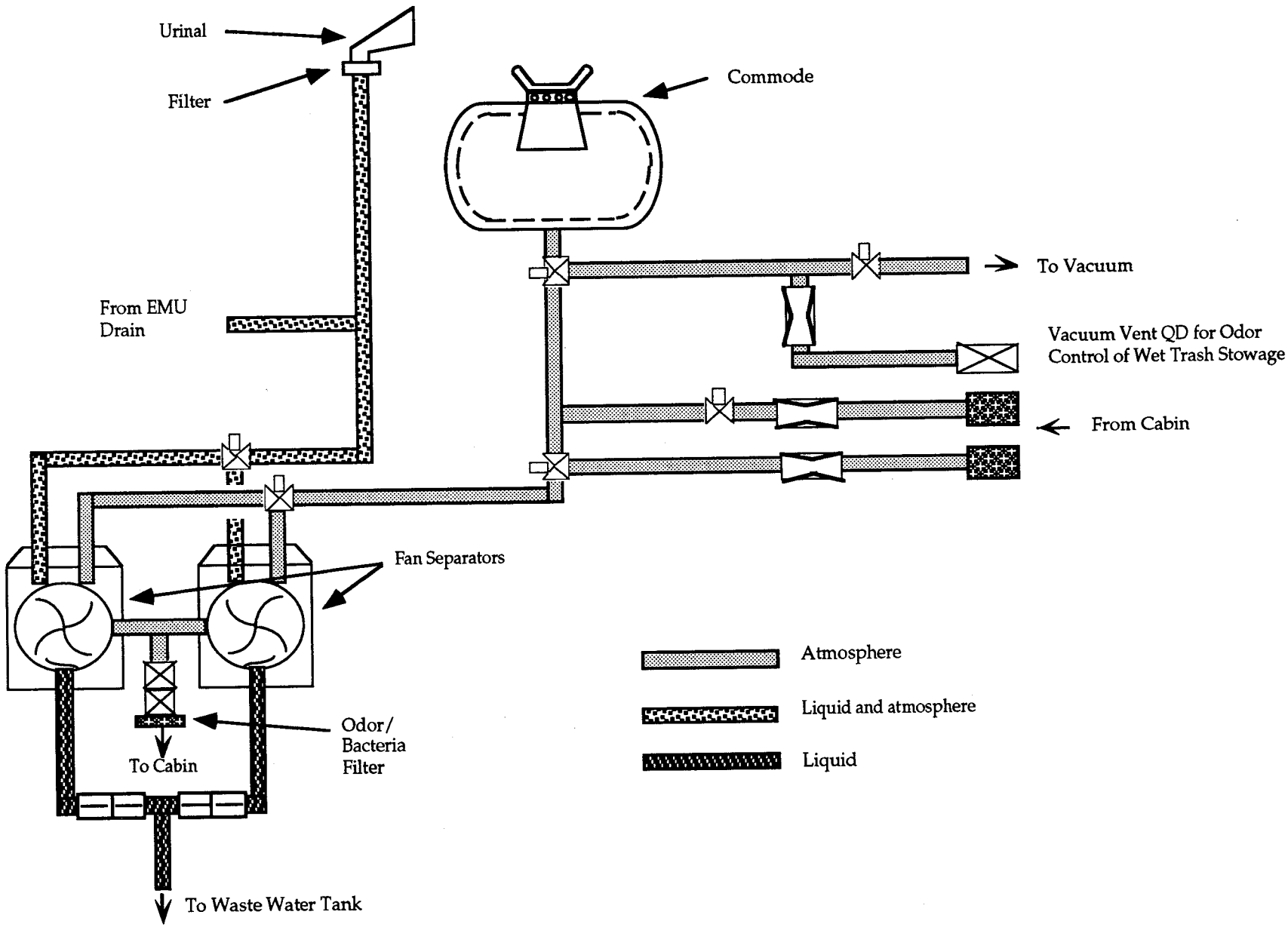

Figure 36. Orbiter waste management system.

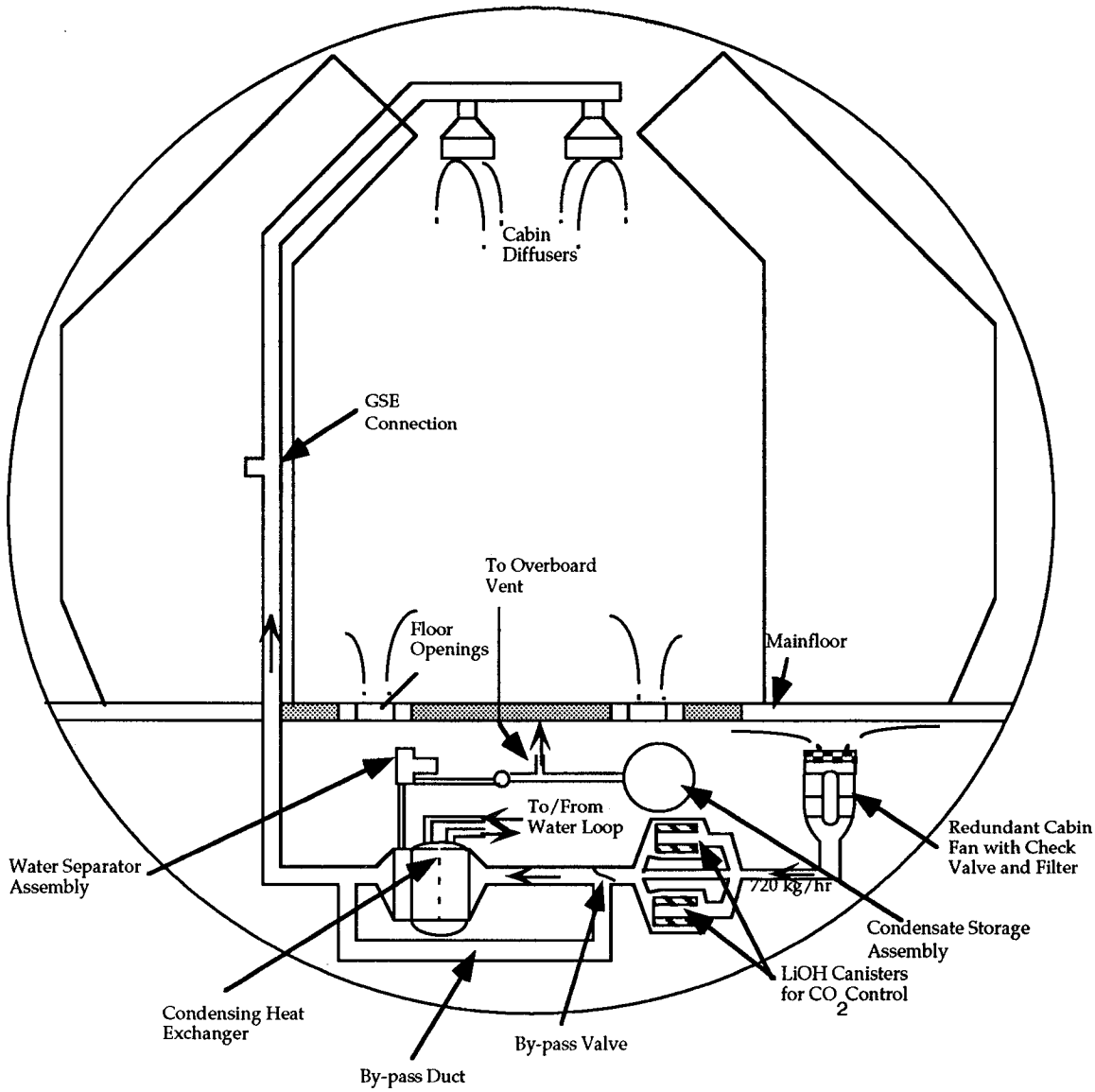

Figure 37. Schematic diagram of the Spacelab cabin atmosphere loop.[11]

Spacelab can remain operational throughout an orbiter mission. There have been 10 Spacelab missions using pressurized modules from the November 28, 1983, launch of *Spacelab 1* (SL-1) through May 1993.

5.2.2 Long Duration Missions

The requirements for long duration missions are much more demanding than for short duration missions. Missions lasting months or years require vast amounts of oxygen, water, and food to sustain the crew. The only way to reduce the unacceptable weight and volume penalties associated with consumables storage is to provide a means for regenerating consumables from waste products. A closed-loop ECLSS, by definition, regenerates waste to recover useful fluids, dramatically reducing consumables resupply. Pragmatism demands that space habitats designed for long duration missions employ a closed-loop ECLSS. Many extended duration missions will go to distant destinations, such as

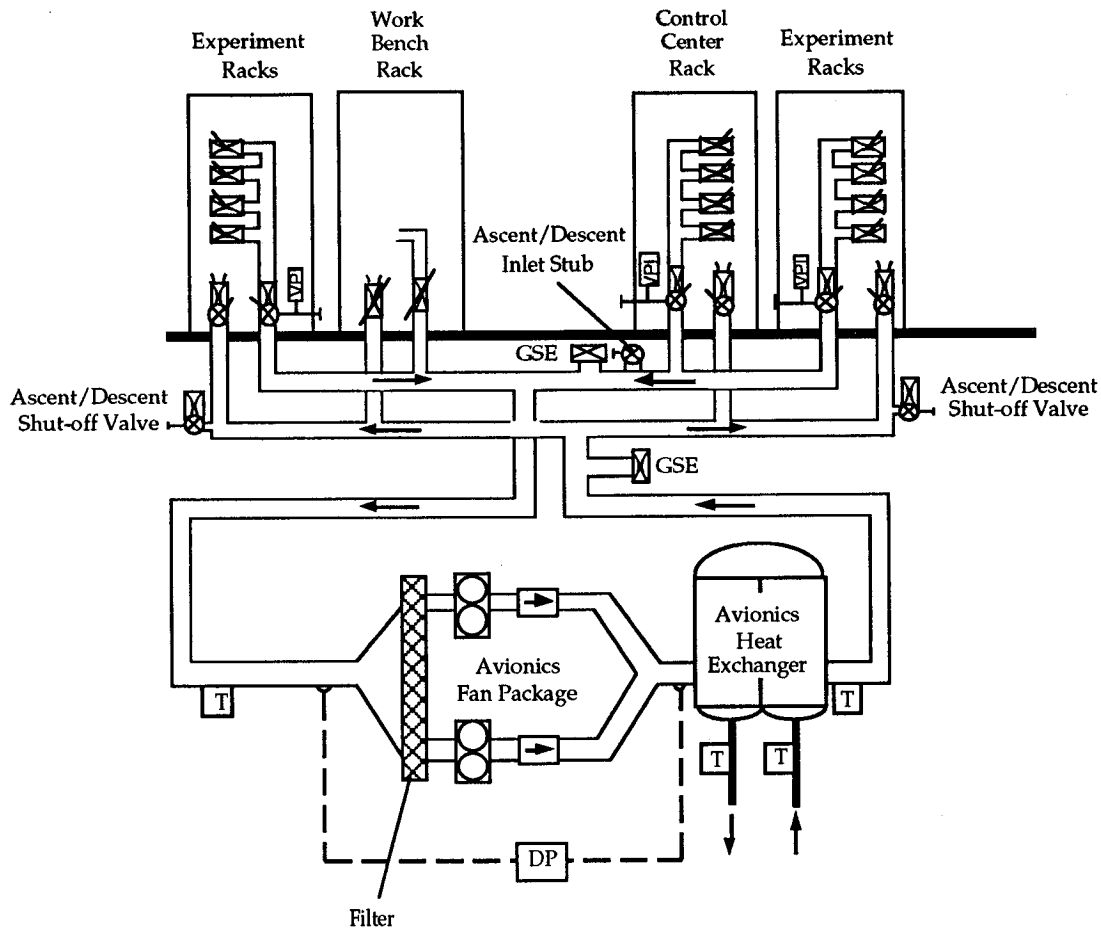

Figure 38. Schematic diagram of the Spacelab avionics atmosphere loop.(11)

Mars and beyond, placing tighter constraints on ECLSS design than missions where the habitat remains in Earth orbit. System reliability and safety, critical factors for any space mission, become extremely vital parameters for long duration missions. Failure of a life critical ECLSS function can not be compensated for by a speedy emergency return to Earth.

The U.S. has limited experience with long duration space missions, and no experience with closed-loop ECLSS other than through testing performed on Earth. This experience is discussed in the following sections.

5.2.2.1 30-, 60-, and 90-Day Tests

A series of closed-door habitat tests were performed from the mid 1960's through 1970 in the McDonnell Douglas space station simulator for the NASA Langley Research Center. These tests provided much of the U.S. knowledge on the performance of a regenerative ECLSS in a closed, isolated environment with people.

There were three primary tests of 30, 60, and 90 days, respectively, during which people were housed for an entire test period inside a sealed cylinder 3.7 m (12 ft) in diameter and 12.2 m (40 ft) long.

For each test, the crew was provided with an initial supply of air and water, but not enough to last for the entire test period. ECLSS equipment in the chamber was responsible for regenerating the atmosphere and water supply with no resupply backup. Figure 39 is a schematic of the ECLSS showing how the assemblies were connected. The tests were conducted in order of increasing duration to incrementally build up to the 90 day test, with each successive test incorporating equipment upgrades and/or redesigns. From each test, progressively more data were collected on ECLSS equipment performance, crew psychological and physiological conditions, and characteristics of the human-machine interfaces.

Overall objectives of the test program included the following:

(1) Operating regenerable life support systems for 90 consecutive days without resupply

(2) Determining power requirements and material and thermal balances for the chamber

(3) Assessing the ability to operate, maintain, and repair equipment

(4) Attaining a microbial and chemical balance in a closed environment

(5) Obtaining data on psychological and physiological effects of long-term confinement

(6) Maintaining water quality standards provided by the National Academy of Sciences.

All of these objectives were achieved during the 90-day test. The regenerative ECLSS operated continuously for the full 90 days, successfully regenerating both the atmosphere and water supply. More than 908 kg (2,000 lb) of waste water was recovered, purified into potable water, and consumed. In addition, 4,994 kg (11,000 lb) of recovered water was used for the clothes washer, personal hygiene, and housekeeping. About 386 kg (850 lb) of oxygen was also recovered, a large percentage of which was consumed by the crew. The crew successfully operated, maintained, and repaired equipment. There were no detrimental effects to crew psychological or physiological health resulting from the 90-day confinement period.

5.2.2.2 SMEAT

During the development of *Skylab*, the *Skylab* medical experiments altitude test (SMEAT) "was conducted both to test preparations for the mission and to observe, using a *Skylab* atmosphere and facilities at Earth's gravity, any physiological changes in crewmembers."[9] The test began on July 26, 1972, and simulated an entire *Skylab* mission, with a crew of three spending 56 days in a 6.1-m (20-ft) diameter sealed chamber at JSC. A major objective was to obtain baseline biomedical data for several experiments to be performed on *Skylab*, and a Medical Operations Team was formed to ensure that medical matters were properly addressed. In addition, all equipment intended for use on *Skylab*, including the ECLS equipment, was verified. The ECLSS consisted of the following five separate subsystems:

(1) Atmosphere distribution and humidity control

(2) Two-gas control (oxygen and nitrogen)

(3) Gas analysis

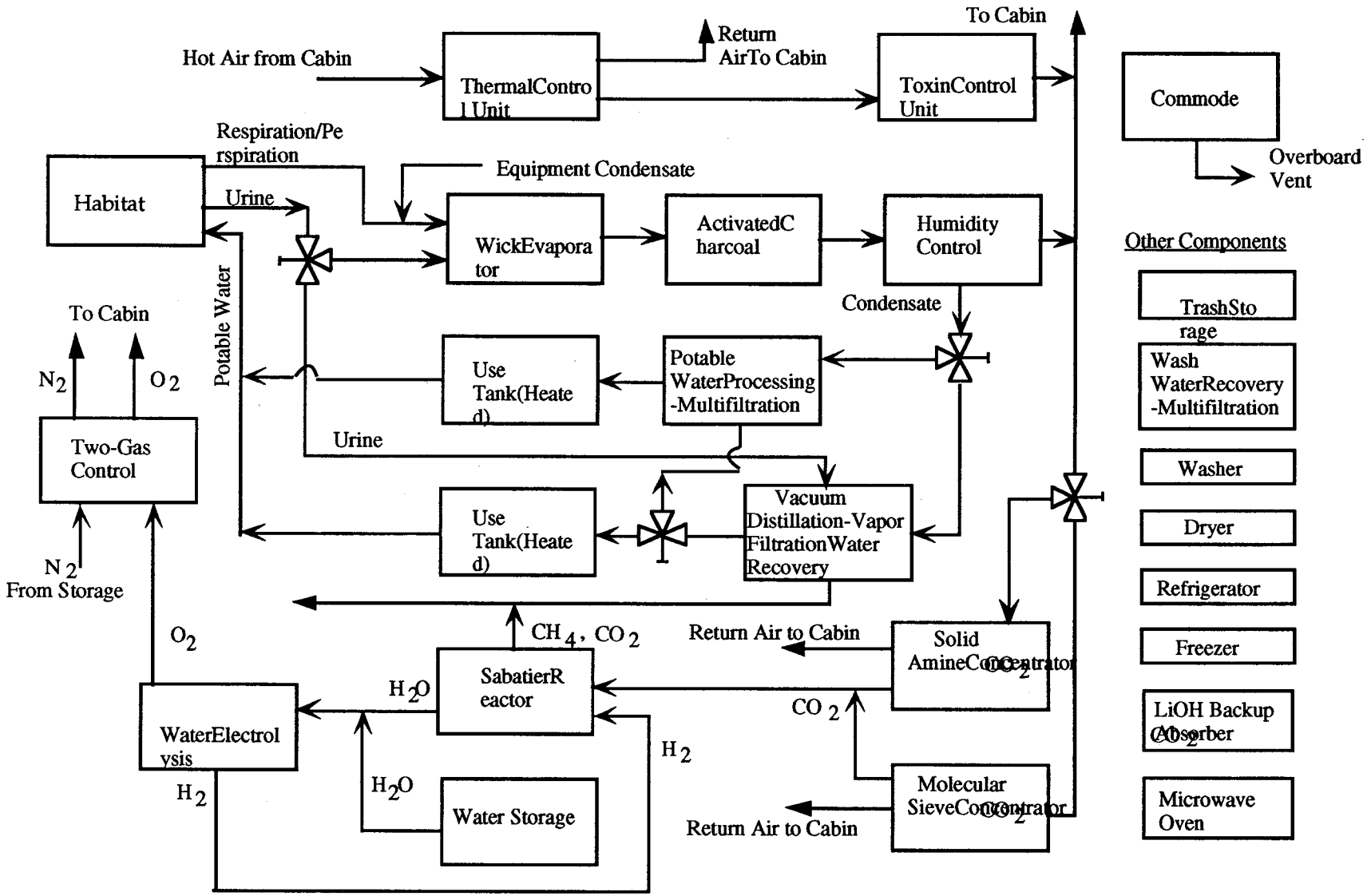

Figure 39. ECLSS block diagram for the 90-day test.

(4) Carbon dioxide removal

(5) Vacuum holding.

In addition, there were waste management, water distribution, and fire suppression subsystems. One difference from the *Skylab* ECLSS was that LiOH was used for CO_2 removal. It was found that when stored unbagged the LiOH "elements" swelled unacceptably, with the result that they would not fit properly in the environmental control system. It was also suspected that LiOH dust contributed to nasal irritation, although this was never definitively proven and was not a serious problem. For the *Skylab* missions, a regenerable molecular sieve was used for CO_2 removal instead of LiOH, partly due to the SMEAT experience with LiOH. The contributions of the SMEAT program include increased experience with the operating procedures, baseline biomedical data, identification of needed hardware redesign and improvement, identification of data collection and handling problems, and crew aspects where improvements can be made such as diet selection.

5.2.2.3 *Skylab* (1973 to 1974)

Skylab was the first U.S. space habitat designed for missions of a month or longer, with three missions lasting 28, 59, and 84 days, respectively; and has provided the only U.S. data on extended duration human spaceflight. The objectives of *Skylab*, the first U.S. space station, were to study the effects of long-duration space flight on humans; study the Earth, Sun, and stars; and perform experiments in a microgravity environment. [10]

Skylab was a three-person laboratory with a total habitable volume of 361 m^3 (12,750 ft^3).[3] The crew lived and worked in the two-level orbital workshop (OWS), although most of the ECLSS equipment was located in the airlock module (AM). The atmosphere control and conditioning system was distributed between the *Skylab* sections as shown in figure 40. Although the chamber tests using closed-loop techniques proved successful, *Skylab* employed an open-loop ECLSS, which greatly simplified ECLSS design, but required a much larger on-orbit supply of consumables. Some new ECLSS techniques used on *Skylab* included a mixed O_2/N_2 atmosphere, a two-canister molecular sieve instead of LiOH canisters to remove CO_2, a method for monitoring iodine concentration in the water supply, the storage of urine samples in a freezer for analysis on Earth, and ultraviolet fire detectors. Crew senses had always been sufficient for detecting fires on the small space habitats preceding *Skylab*, but the large volume of *Skylab* made it impossible for the crew to continuously monitor all areas of the habitat. Potable water sufficient for all three *Skylab* missions (2,724 kg or 6,000 lb) was launched with the OWS, and iodine was used as a disinfectant.

Between missions, *Skylab* was unoccupied and the atmosphere was depressurized to 13.8 kPa (2.0 psi) and allowed to decay down to 3.45 kPa (0.5 psi) until the next group of astronauts arrived. Depressurization removed trace contaminants from the habitat and reduced the chance of fire between missions.

5.3 U.S.S.R./Russian Experience with Space Habitat ECLSS

The U.S.S.R./Russia has far more experience with human space flight than all other nations combined, particularly in the realm of long duration missions. Several cosmonauts have completed stays in space of well over 100 days, some as long as a year. Since 1971 eight space stations have been launched, including the currently orbiting *Salyut 7* and *Mir 1* stations.

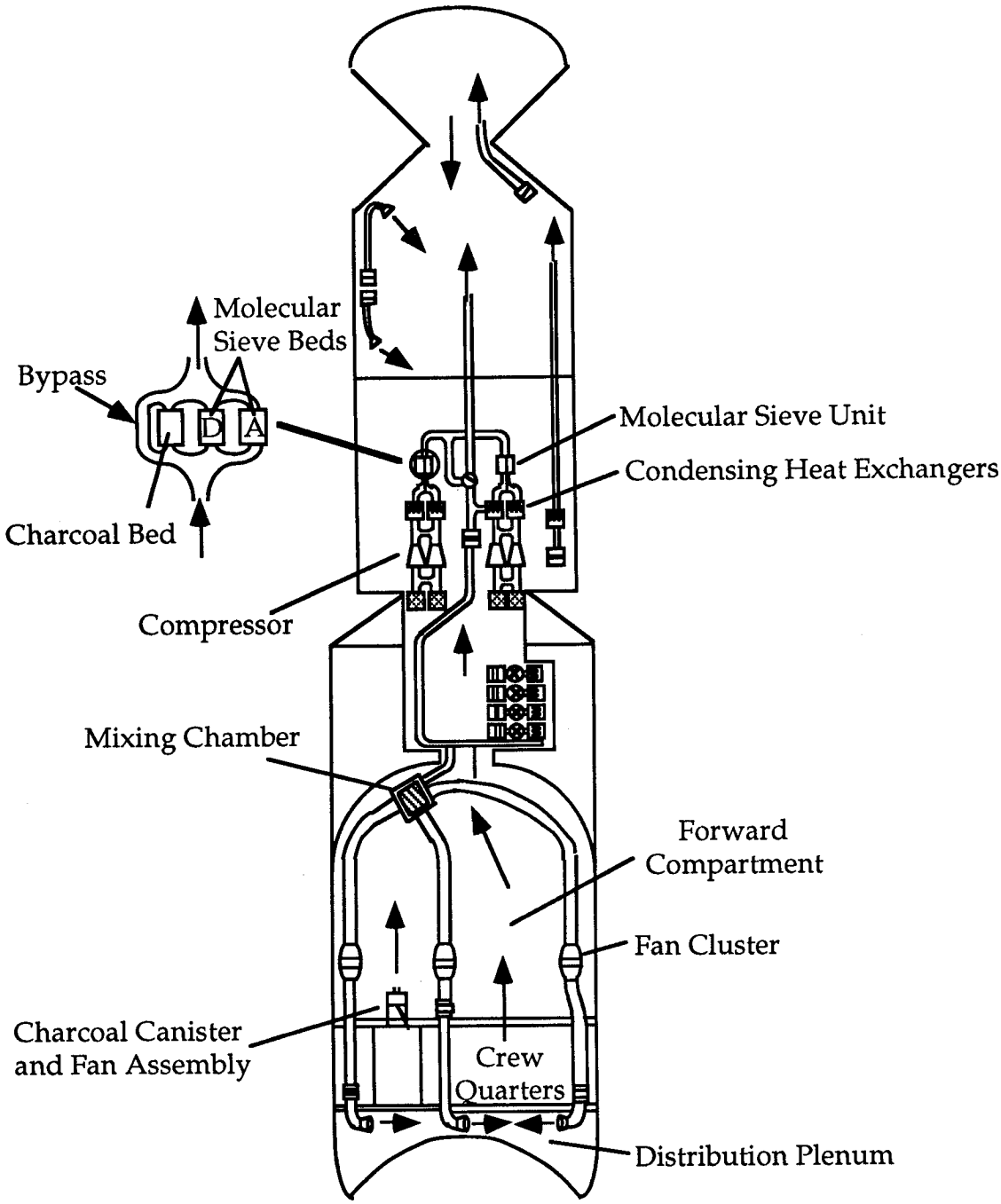

Figure 40. Schematic diagram of the *Skylab* atmosphere control and conditioning system. (The square section containing the molecular sieve units is the AM. The bottom half of the drawing is the OWS.)[10]

Table 2 of appendix I describes ECLSS designs on the Soviet Vostok, Voskhod, Soyuz, Salyut, and *Mir 1* spacecraft. In Russian, the ECLSS is referred to as the Sistema Obespecheniya Zhiznedeyatel'nosti (SOZh), meaning "life support supply system." Evident from table 2, Western knowledge of Soviet/Russian space systems design is currently incomplete.

5.3.1 Short Duration Missions

The first person in space was Yuri Alexeyevitch Gagarin, a Soviet Air Force pilot. Launched into Earth orbit aboard a Vostok capsule by an A-1 rocket on April 12, 1961, Gagarin made one orbit of the Earth, completing the 108-min mission with little difficulty. Given the choice of landing with the Vostok craft or parachuting down separately, Gagarin ejected from the capsule, touching down in a snow-covered field 805 km (500 miles) southeast of Moscow.(2) This was the first flight in what has continued to be a vigorous Soviet/Russian program of human space missions. The U.S.S.R., like the U.S., began its space program using short duration spacecraft designed with open-loop ECLSS. Short duration, open-loop ECLSS missions continued without significant abatement until *Salyut 6*, the first space habitat to experiment with closed-loop techniques. The Vostok, Voskhod, and Soyuz spacecraft laid the groundwork for such advances in Soviet ECLSS design.

5.3.1.1 Vostok (1960 to 1963)

The one-person spherical Vostok, with a habitable volume of roughly 2 to 3 m^3 (6.6 to 9.8 ft^3), was the first spacecraft to carry a person into space. The objectives of the Vostok program were to test human behavior under microgravity and high acceleration and deceleration levels of 8 to 10 gravities (g), test and further develop ground-controlled automatic spacecraft guidance, and make astronomical and geophysical observations.(3)

The Vostok ECLSS was a simple semi-closed system with a 101.3 kPa (14.7 psi) atmosphere. Cabin ECLSS equipment was responsible for CO_2 removal and odor and humidity control, in addition to control of cabin ventilation, temperature, and atmosphere supply.(12) The cosmonaut wore a space suit ventilated by cabin atmosphere which did not have the capability for atmosphere purification or humidity control. In an emergency, the suit could be supplied oxygen from tanks mounted on the Vostok exterior. Lowering the helmet visor pressurized the suit, isolating it from the cabin.(13) Figure 41 is a schematic of the Vostok ECLSS cabin atmosphere loop.

There were six manned Vostok missions. The shortest was Gagarin's 108-min flight, and the longest was almost 5 days. A provision for emergencies was made on Vostok, Voskhod, and Soyuz spacecraft by designing the ECLSS for a maximum of 12 days.

5.3.1.2 Voskhod (1964 to 1965)

The spherical Voskhod capsule was basically an improved version of the Vostok, with a rearranged interior to accommodate three cosmonauts. To help make room for the cosmonauts, Voskhod became the first spacecraft in which the crew did not wear space suits. Objectives of the Voskhod program were to gather data on group crews and study human behavior outside the capsule.(3) *Voskhod 2* was equipped with one space suit and an inflatable decompression chamber from which the first space walk was performed. There were two manned Voskhod missions.

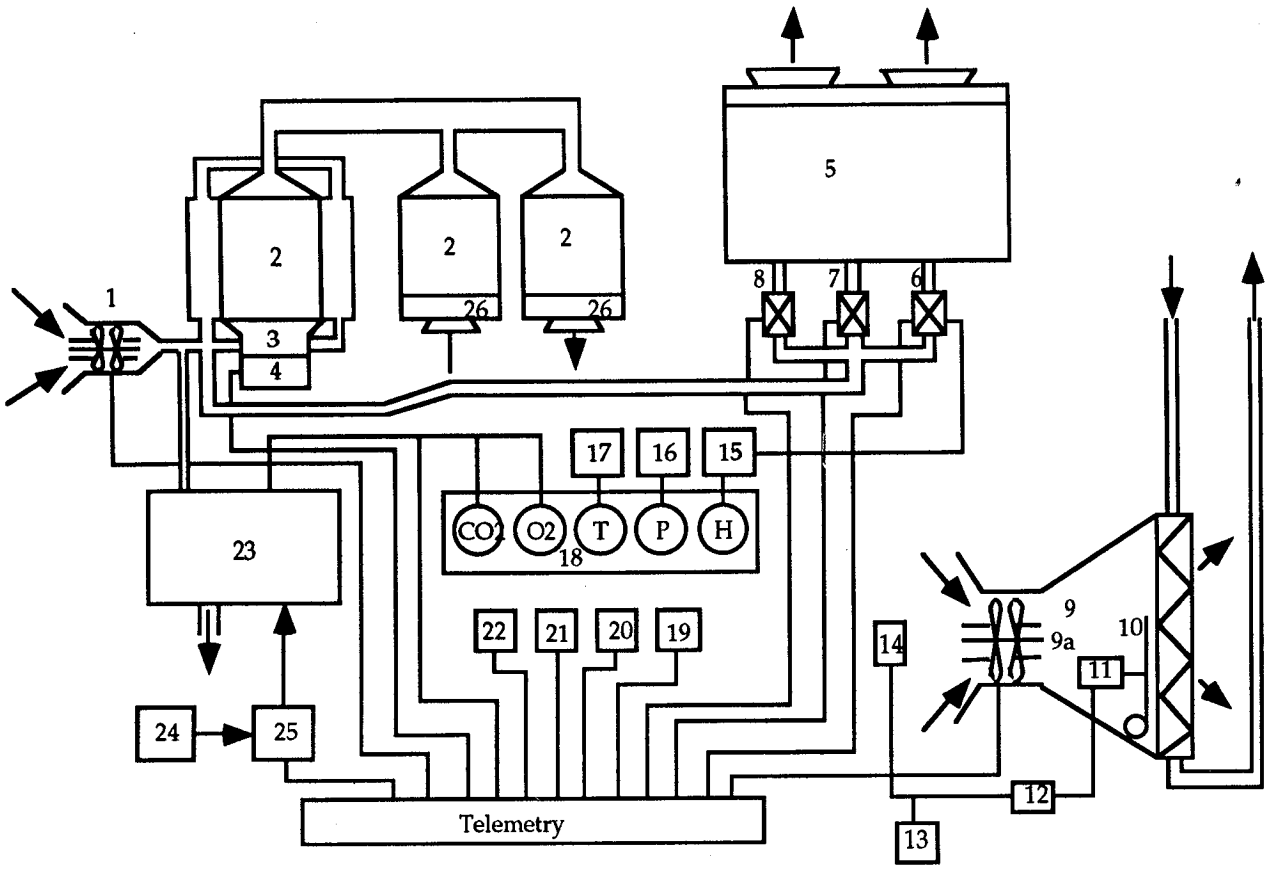

(1) Ventilator with electric motor
(2), (3), (4) Regenerator with regulating device
(5) Moisture absorber
(6) Automatic Valve
(7), (8) Valves with a manual actuator
(9) Liquid-air heat exchanger
(9a) Ventilator with electric motor
(10), (11), (12), (13), (14) Automatic temperature regulator
(15) Humidity measuring device
(16) Pressure sensor
(17) Thermometer
(18) Sensor panel
(19), (20) Humidity measuring device
(21) Thermometer
(22) Pressure sensor
(23), (24), (25) Automatic oxygen and carbon dioxide gas analyzer
(26) Filters for dust and harmful impurities

Figure 41. Schematic diagram of the Vostok atmosphere regeneration and conditioning system.[12]

5.3.1.3 Soyuz/Soyuz T (1967 to present)

Soyuz ("union") was primarily designed for docking with other space vehicles. Objectives of the Soyuz program were to perfect docking and crew transfer between capsules and Salyut stations, practice vehicle orbital transfer, and perform scientific observations and experiments.[3]

Designed for 7-day missions, the Soyuz was a three-person vehicle with two pressurized compartments, one for living and working and the other for descent. Figure 42 is a schematic of the Soyuz ECLSS. Soyuz cosmonauts did not wear pressurized suits until after an accident on *Soyuz 11*, in which all three crewmen died after a pressure vent valve failed and the spacecraft depressurized. After *Soyuz 11*, the crew was reduced to two to make room for pressurized suits. These were the first Soviet space suits designed for air regeneration. The Vostok and Voskhod suits had featured open cycle ventilation.[12]

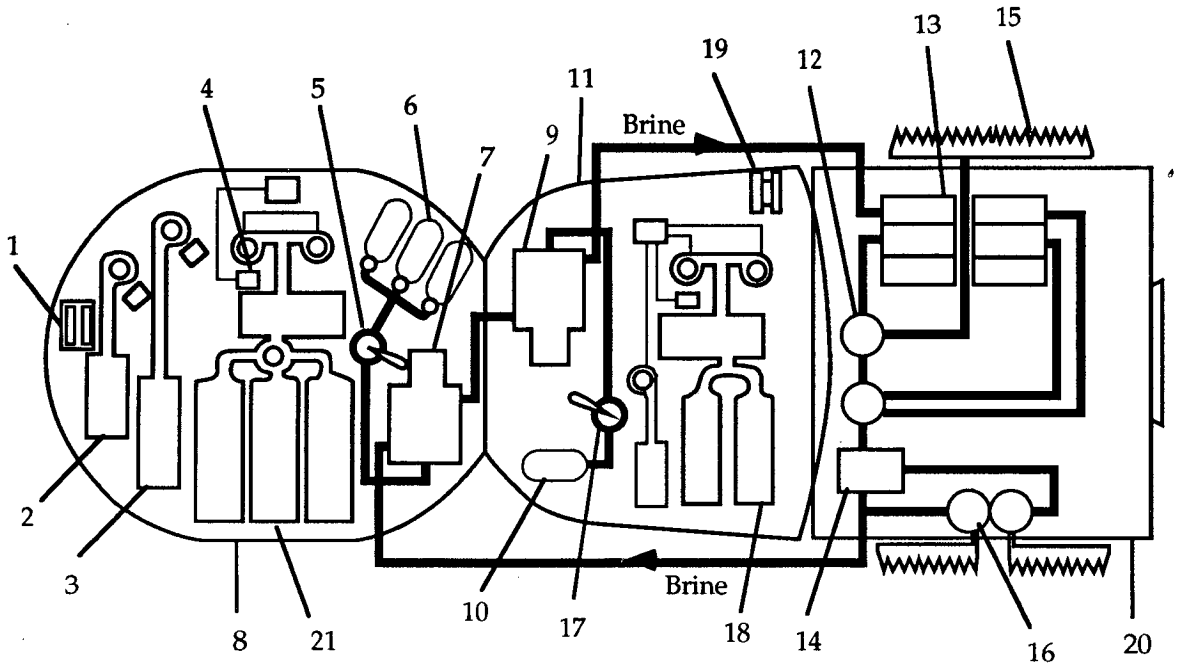

(1) Compressed Air for Leakage Makeup
(2) LiOH for Topping CO_2 Removal
(3) KO_2 Oxygen Supply and Primary CO_2 Removal Beds
(4) Flowmeter and Fans
(5) Manual Pump
(6) H_2O Storage Tanks
(7) Condensing Heat Exchanger with wick-type H_2O separator
(8) Flight Module
(9) Condensing Heat Exchanger with wick-type H_2O separator
(10) H_2O Storage Tank
(11) Landing Module
(12) Temperature Control Valves
(13) Equipment Cooler (Primary and Topping)
(14) Primary Heat Exchanger
(15) Primary Space Radiator
(16) Sequencing Space Radiators
(17) Manual Pump
(18) Trace Contaminant Control Bed
(19) Pressure Relief Valve
(20) Equipment Module
(21) KO_2 Beds for Oxygen Supply and Trace Contaminant Removal with Activated Charcoal and Bacteria Filter

Figure 42. Schematic diagram of the Soyuz life support system.[15]

The hermetically sealed Soyuz cabin was designed for zero leakage. Stores of gas for cabin repressurization and leakage makeup were considered unnecessary, and were not included on Soyuz. This was a contributing factor in the death of the *Soyuz 11* cosmonauts. U.S. spacecraft were designed to allow a small amount of leakage that was made up by stores of gas. The atmosphere leakage rate of approximately 1 kg/day (2.2 lb/day) on Apollo was a Soviet concern during planning of the Apollo-Soyuz mission.[14]

Soyuz T, the modified version of Soyuz that retains the same basic size and shape of the Soyuz craft, has a redesigned interior to accommodate three space-suited cosmonauts. Soyuz spacecraft are still used to ferry cosmonauts to and from the orbiting *Mir 1* space station.

5.3.1.4 Buran Space Shuttle (1988 to present)

The objectives and physical appearance of the Buran space shuttle are very similar to the U.S. space shuttle. The Buran was launched for the first and only time on November 15, 1988. This orbiter, operated without a pilot on board, was built with no life support system, full avionics system, or fuel cell power system. A second shuttle, being built with an ECLSS, was scheduled for an unmanned mission in 1991. Due to the political changes which led to the end of the U.S.S.R. this flight has not yet occurred.

5.3.2 Long Duration Missions

The U.S.S.R./Russia has extensive experience with long duration space flight, including missions where an individual cosmonaut has remained in orbit for a full year. A strong, ongoing presence in Earth orbit for the past 20 years has resulted in considerable data from research activities aboard the Salyut and Mir space stations. The *Mir I* station incorporates many improvements to past space station designs, including some of the first flight experience with closed-loop ECLSS technologies. Research continues towards complete loop closure, including terrestrial experimentation with biological life support systems, otherwise known as controlled ecological life support systems (CELSS). Russian planners hope to make use of closed-loop technologies on missions to Mars. Although Russian space habitats have yet to travel beyond Earth orbit, the life sciences knowledge and ECLSS design experience gained by Russian engineers and scientists will help make these Mars expeditions possible.

5.3.2.1 Salyut Space Stations (1971 to present)

Salyut was the first space habitat designed for extended missions in space, and thus became the world's first space station. Since the beginning of the Salyut program, seven Salyut stations have been placed in orbit. These stations have provided a base for long-term space research and experimentation. With the overriding goal of establishing a permanent presence in space, Salyut was considered the cornerstone of Soviet policy aimed at establishing human colonies on the Moon and Mars.

Salyut, designed for a crew of five, consists of three inseparable modules with a total usable volume of about 100 m^3 (3,530 ft^3).[3] Each successive Salyut improved on the previous station, although the basic configuration remained the same. *Salyut 6*, considered a second generation space station, incorporated the most significant changes relative to its predecessor. The ECLSS had remained predominantly the same on the Salyut stations until *Salyut 6,* when a water regeneration system was added to recover condensate and wash water. Figure 43 is a schematic of the *Salyut 7* ECLSS, which is very similar to the *Salyut 6* design.

5.3.2.2 *Mir I* Space Station (1986 to present)

The Mir (peace) space station, currently in Earth orbit, is the third generation of Soviet orbital stations, although the design of its core is basically similar to *Salyut 7*. Mir, designed for a crew of six in a habitable volume of about 150 m^3 (5300 ft^3),[16] is the first space station designed to accommodate growth by modules. The Kvant astrophysics laboratory is one such module attached to one of the four lateral ports on Mir.

The Mir ECLSS includes several improvements over the *Salyut 7* system. Oxygen is produced by water electrolysis instead of by nonregenerable cartridges of potassium superoxide, and carbon dioxide is removed by a four-bed molecular sieve system and vented to space instead of being removed by chemical reaction inside oxygen regenerators and lithium hydroxide canisters.[17] As Mir continues to develop, more regenerative ECLSS technologies will be added, such as a CO_2 reduction. Urine water is recovered by a distillation process, and the purified water is used for generating O_2.

One of the more interesting stories concerning *Mir 1* relates to attempts to recycle water for showering. Shortly after the crew began using the shower, they began complaining that there was insufficient water. This was attributed to less condensate being collected than anticipated. After much study, it was concluded that the materials on *Mir 1* were absorbing humidity from the atmosphere! Testing of the materials showed that some could absorb more than their own weight in water, so the total capacity was significant. Sound/thermal insulation was especially capable of absorbing large quantities of water. The potential effects of this are more than just a shortage of water until the materials become saturated. Wet insulation does not perform the way it is intended, so the thermal balance could be affected. Also, the wet materials provide places for microorganisms to grow and, in this case, heterotrophs fed on the adhesive, which resulted in the material coming loose, and autotrophs formed a green slime! Changes were made to reduce the amount of microorganism growth by drying the insulation material using fans and wiping surfaces with bactericidal solutions.[18]

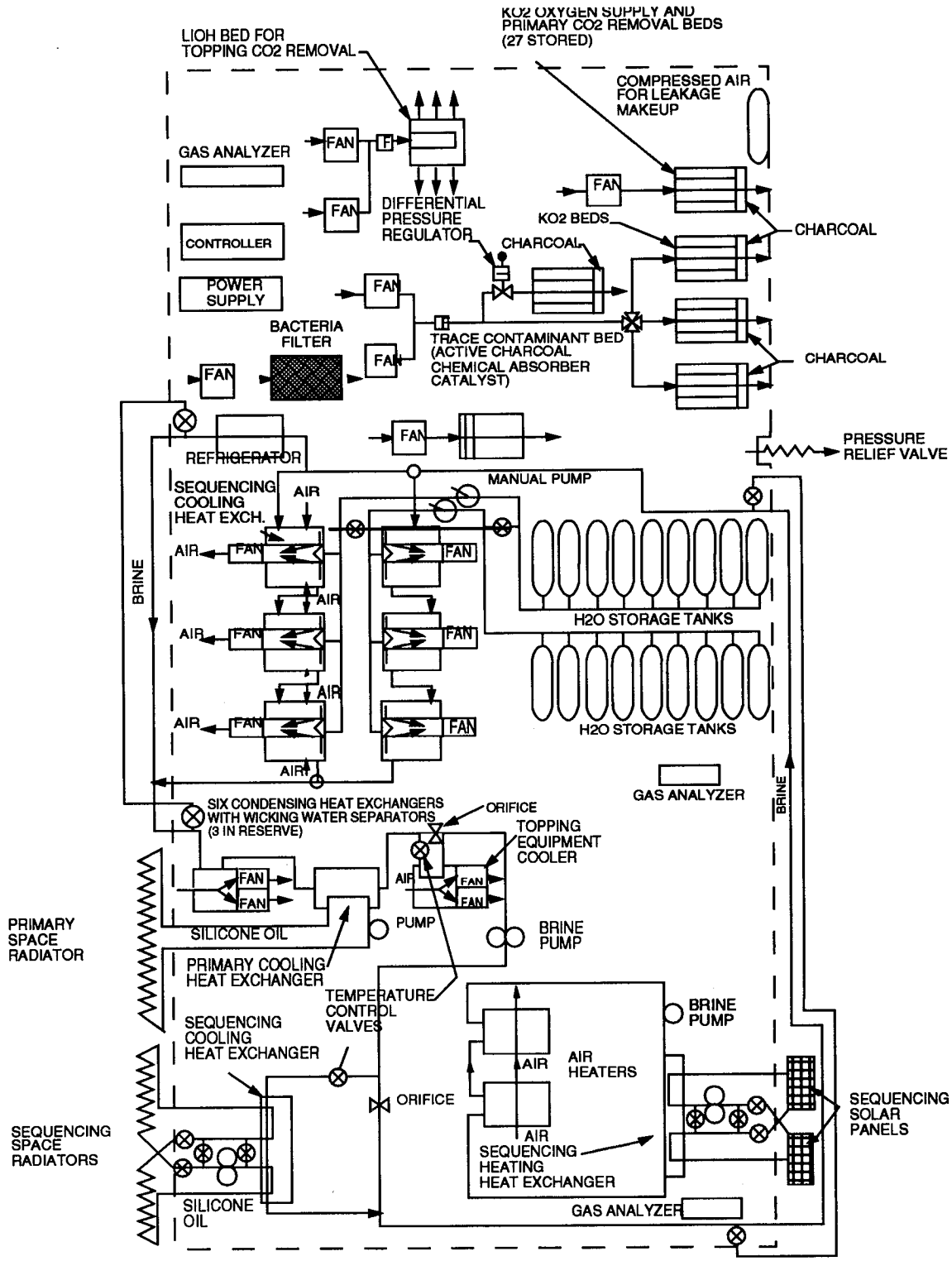

Figure 43. *Salyut 7* ECLSS.

6.0 SPACE STATION *FREEDOM**—THE CHALLENGE OF LONG DURATION ECLSS

With the decision by President Reagan and the Congress in 1984 to proceed with S.S. *Freedom*,* the United States officially initiated the most ambitious space project since the Apollo missions to the Moon. In some ways S.S. *Freedom* is more ambitious than Apollo due to requirements for long duration operation. Aspects that make designing S.S. *Freedom's* ECLSS more challenging relate to this long (30 years) operational lifetime. While resupply is an option in LEO, it is expensive and, therefore, recycling of water and minimizing the use of expendables are essential, and recovering atmospheric O_2 is highly desirable.

The development of S.S. *Freedom's* ECLSS will be used as an example of the design process. All of the steps outlined in the preceding chapters (trade studies, system models, subsystem models, hardware development, independent subsystem testing, integrated testing, verification, and qualification) are described for this program. The overall description is rather idealized, however. The actual program experienced difficulties that are to be avoided when possible, specifically, a repetitive process with a series of redesigns (called "scrub," "turbo" team, and "restructuring" activities) that went beyond the normal iterative design process. This resulted in overlap of activities which would normally be performed during more distinct phases. What follows is a description of the "ideal" design and development process.

6.1 The S.S. *Freedom* Project

The magnitude of the S.S. *Freedom* project is large in the number of activities being performed in parallel and in the geographic distance between these activities. Figure 44 illustrates the participants and the activities for which they are responsible. Coordination of these activities, including those by the international partners, requires a programmatic and organizational structure through which the participants can communicate effectively in order to make informed decisions about priorities and the appropriate levels of effort to ensure that all essential activities are performed when needed. Documentation of all activities is necessary to ensure that the component parts, which are designed and fabricated at diverse locations, will work together properly when integrated. These aspects are discussed in the following sections.

6.1.1 Programmatics

Any flight program goes through several distinct phases, as discussed in chapter 4. The specific phases for S.S. *Freedom* are described below. Because of the magnitude of the S.S. *Freedom* project, the work was divided between NASA Centers to a much greater degree than for previous projects. There are three major management levels. Level 1 is at NASA Headquarters, level 2 is the S.S. *Freedom* Project Office at Reston, Virginia, and level 3 is at each of the participating NASA field centers. Establishing a separate project office to oversee the entire project was a change from the usual practice of designating a lead center for a project. The responsibility for developing different portions of S.S. *Freedom* was divided into four work packages, which were assigned to different NASA field centers. The field centers then awarded contracts to companies for the design and development work, serving in oversight roles to ensure that the requirements are met or that, where necessary, the program requirements are changed in appropriate ways.

* After completion of this manuscript, programmatic changes in 1993 resulted in a major redesign, and the new space station configuration was not called *Freedom*.

PRECEDING PAGE BLANK NOT FILMED

PAGE 122 INTENTIONALLY BLANK

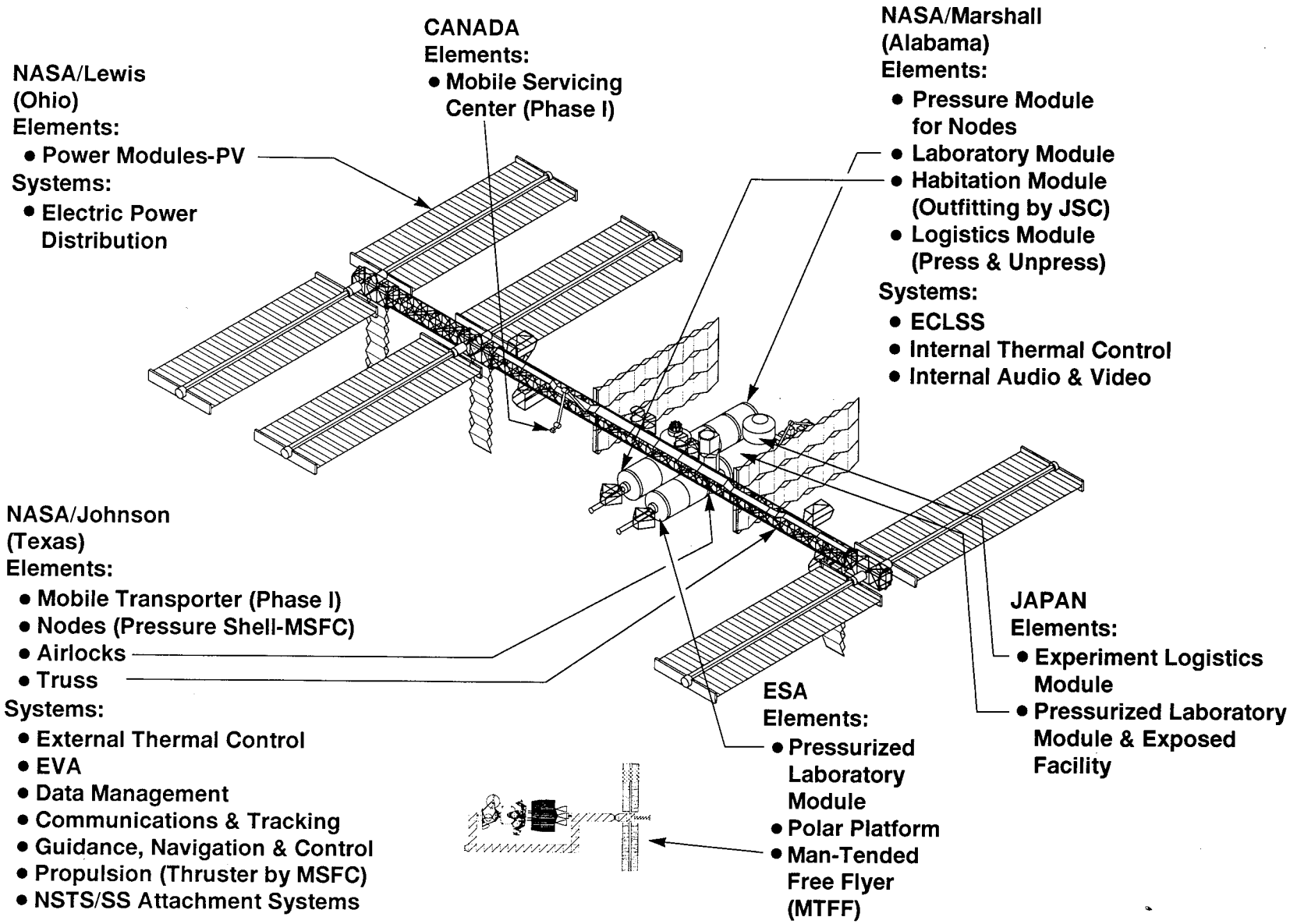

Figure 44. Space Station *Freedom* elements and participants.

6.1.1.1 Program Phases

Concepts for permanently occupied Earth-orbiting space stations were proposed as long ago as the 1950's. It was not until *Skylab*, however, that the U.S. developed a space station concept to operational status. For S.S. *Freedom*, the phase A concept was developed during the "skunkworks" held at JSC in 1984, which evolved from studies performed at MSFC and JSC and by contractors.[1,2] Various concepts were considered and evaluated with regard to design feasibility, operations, payload accommodations, assembly on orbit, technical feasibility, and other factors. The result was a reference configuration for performing further, more detailed, studies. The reference configuration was termed the "power tower," since the solar arrays for generating power were located at one end of a truss, while the pressurized modules were located at the other end. The modules had docking ports and integrated airlocks and were attached in a "racetrack" configuration, with two habitation (HAB) modules, two laboratory (LAB) modules, and a logistics resupply (LOG) module as shown in figure 45.[3]

Further studies during phase B led to significant changes to the reference configuration, resulting in a configuration called the "dual keel." This shifted the modules to the center of the truss with solar arrays on each end to reduce vibration-induced accelerations in the modules and added "nodes" with docking ports and airlocks to connect larger modules. This configuration significantly increased the usable volume in the modules, which provided more room for the ECLSS as well as payloads. In addition, two transverse keels were added to enable payloads and experiments to be attached away from the modules. This configuration is shown in figure 46.

During phase C/D, additional changes were made for technical reasons, such as reducing the lengths of the U.S. LAB and HAB modules ("A" modules) from 13.4 m (44 ft) to 8.2 m (27 ft) to reduce the mass to within the orbiter lift capacity, and due to funding limitations, such as eliminating the dual keel and the role of NASA/GSFC with regard to attached payloads. The capability for addition of another LAB and HAB module ("B" modules) at a later time was maintained so that the volume of the 13.4-m (44-ft) modules could be achieved later, providing more volume for experiments and ECLS equipment.

These changes to the configuration, changes to the activities to be performed on S.S. *Freedom,* and changes in the construction scenario affect the ECLSS. Configuration changes reduced the amount of power by eliminating one set of P/V arrays, so ECLS approaches that use less power must be used. In some cases, this resulted in opening the mass loop, such as eliminating CO_2 reduction and venting CO_2 overboard, for the early phases of S.S. *Freedom's* lifetime. Early plans for S.S. *Freedom* included multi-mission roles including biological and materials science experimentation, astronomy and Earth observation, and satellite servicing and preparation for deep space missions. Reducing the size of the initial complex led to postponing or eliminating some of these roles, such as satellite servicing and preparation for deep space missions. Therefore, fewer EVA's will be required, which will reduce the atmosphere loss and have other effects on the ECLSS. The ECLS requirements and capabilities are greatly affected by the construction phases. Early plans called for permanent habitation of S.S. *Freedom* without having a period of "man-tended" operation. Modifications to this plan led to the following phases of construction and ECLS capabilities:

Man-tended capability (MTC), when half of the truss, one set of P/V arrays, one node, and the LAB A module are in place, and activities are performed only while an orbiter is docked. The orbiter provides all ECLS functions during this phase.

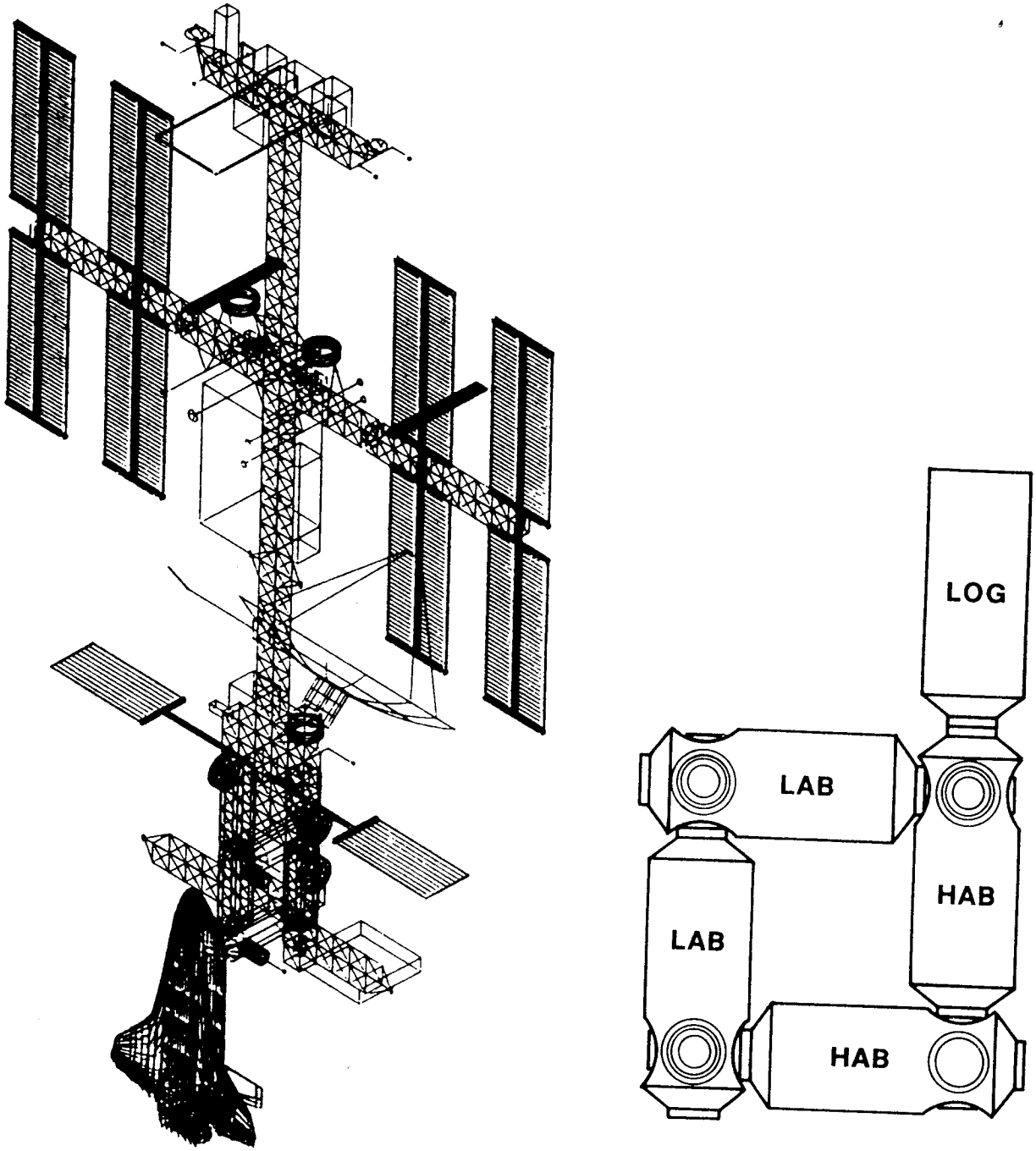

Figure 45. "Power tower" space station with "racetrack" module configuration.

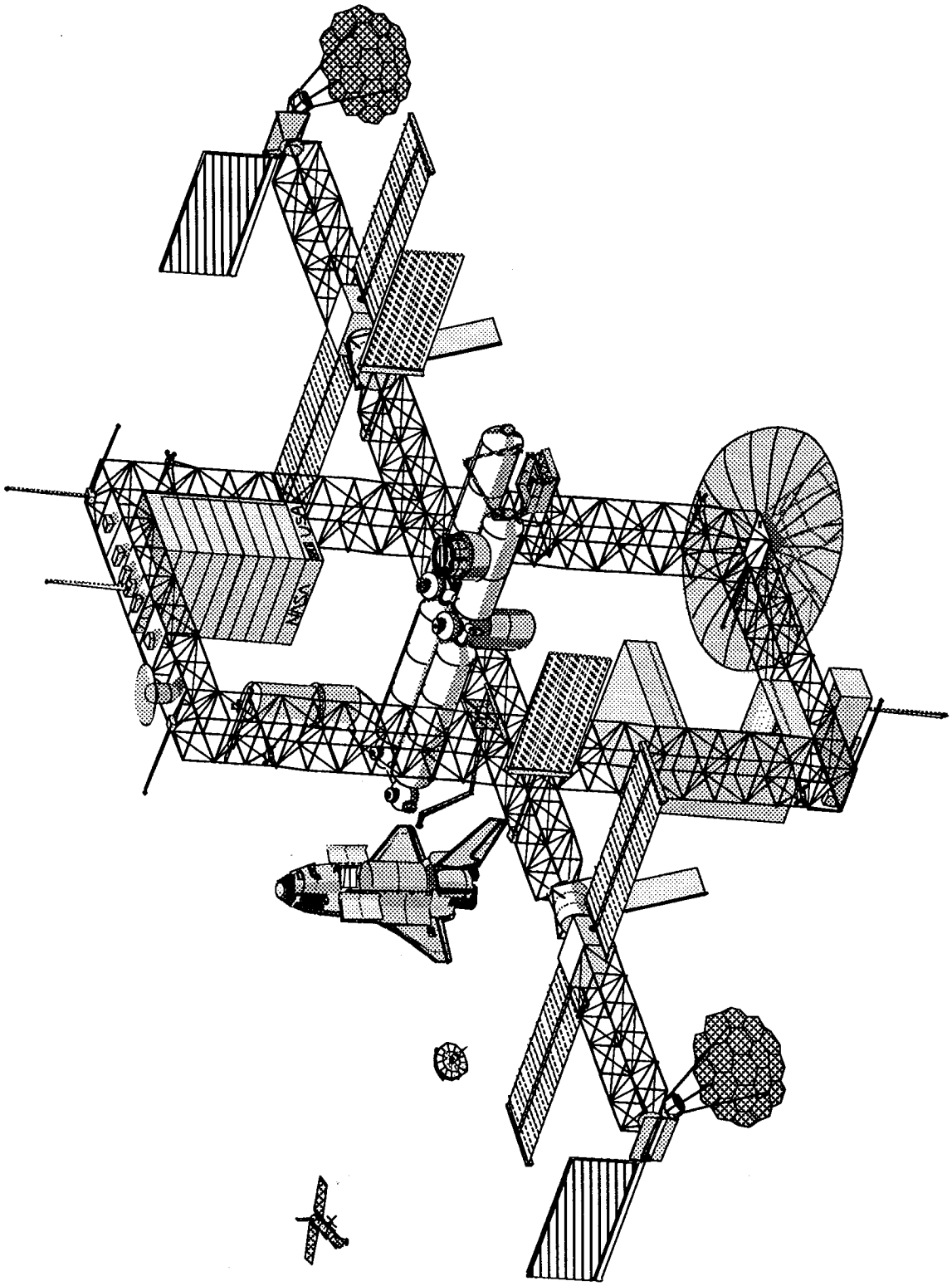

Figure 46. "Dual keel" space station with modules connected by nodes.

Permanently manned capability (PMC) when the remainder of the truss and P/V arrays, lab modules from the international participants, an airlock, HAB A module, and return vehicle are added to allow permanent habitation by four people. ECLS equipment is located in the HAB A module. The water loop is closed at this phase, and CO_2 removal, trace contaminant control, atmosphere control and supply, and fire detection and suppression capabilities are provided. CO_2 is vented to space or used for propulsion, so CO_2 reduction is not performed, and O_2 is provided from cryogenic tanks, so O_2 generation is not required. Potable water is provided from the orbiter fuel cells during resupply missions, since the fuel cells produce more water than is required during an orbiter mission.

Eight-man crew capability (EMCC), when the U.S. LAB and HAB "B" modules and additional power generation capacity are installed, is not presently part of the funded program. The capability of upgrading to this configuration is part of the PMC configuration. Additional ECLS equipment is located in the HAB B module, and for EMCC the O_2-loop is closed, thereby reducing the resupply requirements for O_2.

The ECLSS designer must be aware of program changes and the construction phases of a habitat that affect the ECLSS in order to ensure that the ECLSS will perform as needed during all phases of operation.

6.1.1.2 Work Packages—NASA Field Centers and Prime Contractors

Development and construction of S.S. *Freedom* is divided into four work packages (WP) which were assigned to four different NASA field centers. As shown in figure 44, these are the following:

1. WP1 at MSFC—pressurized modules, pressure shells for nodes, logistics modules, ECLSS, internal thermal control, internal audio and video

2. WP2 at JSC—truss, airlock, node outfitting, external thermal control, EVA support, data management, communications and tracking, GN&C, propulsion, shuttle/S.S. *Freedom* interface, ACRV, CHeCS

3. WP3 at GSFC—attached payload accomodations and the telerobotic servicer (deleted from the program)

4. WP4 at LeRC—power modules (PV), electrical power distribution.

The role of GSFC was deleted during the review process in order to reduce costs. The *Columbus* attached module is the responsibility of the European Space Agency (ESA), the Japanese Experiment Module (JEM) is the responsibility of the National Space Development Agency (NASDA) of Japan, and the attached manipulator arm for moving modules and payloads externally is the responsibility of the Canadian Space Agency (CSA). In addition, ESA is providing a man-tended free flyer (MTFF) which will co-orbit with S.S. *Freedom.*

Much of the design and development work is performed by contractors, and each Center has selected a "prime" contractor to select subcontractors and coordinate their efforts. The prime contractors are the following:

1. WP1 – Boeing Aerospace and Electronics Company

2. WP2 – McDonnell Douglas Space Systems Company

3. WP4 – Rockwell International.

WP1 includes the ECLSS and "the contracted effort for WP1 includes the effort and resources required for the analysis, design, development, fabrication, assembly, verification, and acceptance required to deliver to the Government the WP1 (contractor) end items."[4]

6.1.1.3 Work Package 1 Description

As described in the program definition and requirements document, WP1 "is responsible for the design, development, test, evaluation, production, and delivery of the habitation module (HAB), laboratory module, and logistics module (LOG)," as well as the distributed systems, including the ECLSS. In addition, this work package will provide the necessary management, integration, and test to ensure that the objectives of WP1 are met."[4]

6.1.1.4 ECLSS Programmatics

The ECLSS development program includes activities by MSFC, Boeing, and the subcontractors. The roles of each are the following:

1. MSFC oversees Boeing (including periodic evaluations of Boeing's performance), determines performance requirements, provides test facilities, ensures tests provide sufficient data to accurately determine the suitability of hardware

2. Boeing designs hardware, oversees subcontractors, performs analyses and testing of subcontractor hardware, outfits the modules

3. Subcontractors design, build, and test subsystem and assembly hardware.

The prime contractor is evaluated periodically (monthly, mid-term, etc.) in 8 to 10 ECLS areas depending on current activities. Some areas such as ECLSS design and test support are evaluated each time, while other areas such as design review participation are evaluated as applicable. A lead engineer in ED62 is responsible for ensuring that the ECLS evaluations are performed and for reporting the results to the MSFC chief engineer for S.S. *Freedom*. The MSFC chief engineer reviews the evaluations with the Boeing chief engineer, and any problems are addressed. The mid-term evaluations occur every 6 months, and improvements or declines over the reporting period are considered when determining the monetary award for Boeing, which has a "cost plus award" contract.

6.1.2 Documentation

The documentation for the S.S. *Freedom* program is considerable, and it is not necessarily easy to understand the relationships between the documents. This is partly because of new documentation which was not required for previous programs and partly due to documentation requirements which are program dependent. For S.S. *Freedom*, specifications are required to follow military standards as described in MIL-STD-490A,[5] which uses different terminology (B2 rather

than CEI spec) or has other differences from the documentation used on previous NASA programs. A documentation tree of the major documents for the S.S. *Freedom* program is shown in figure 47 and described in the following sections.

Documentation flows in a waterfall fashion from the top (level I) document, the program requirements document (PRD). Level II documents derived from the PRD, include the program definition and requirements document (PDRD) and a series of architectural control documents (ACD's). Other level II documents include function control documents (FCD's), interface control documents (ICD's), interface development documents (IDD's), verification and integration requirements documents (VIRD's), and flight system software requirements (FSSR's) documents. The baseline configuration documents (BCD's) are also level II documents. The level III documents include the systems requirement document (SRD) and the B1 and B2 specifications. A separate specification applies to each subsystem (B1) and each assembly (B2).[5] These documents are accepted by all participants and are intended to guide and coordinate the various activities. After the documents are "baselined" they come under the control of the configuration management process. Changes to the documents can be made but must be approved by review boards. This documentation and the change process are described below.

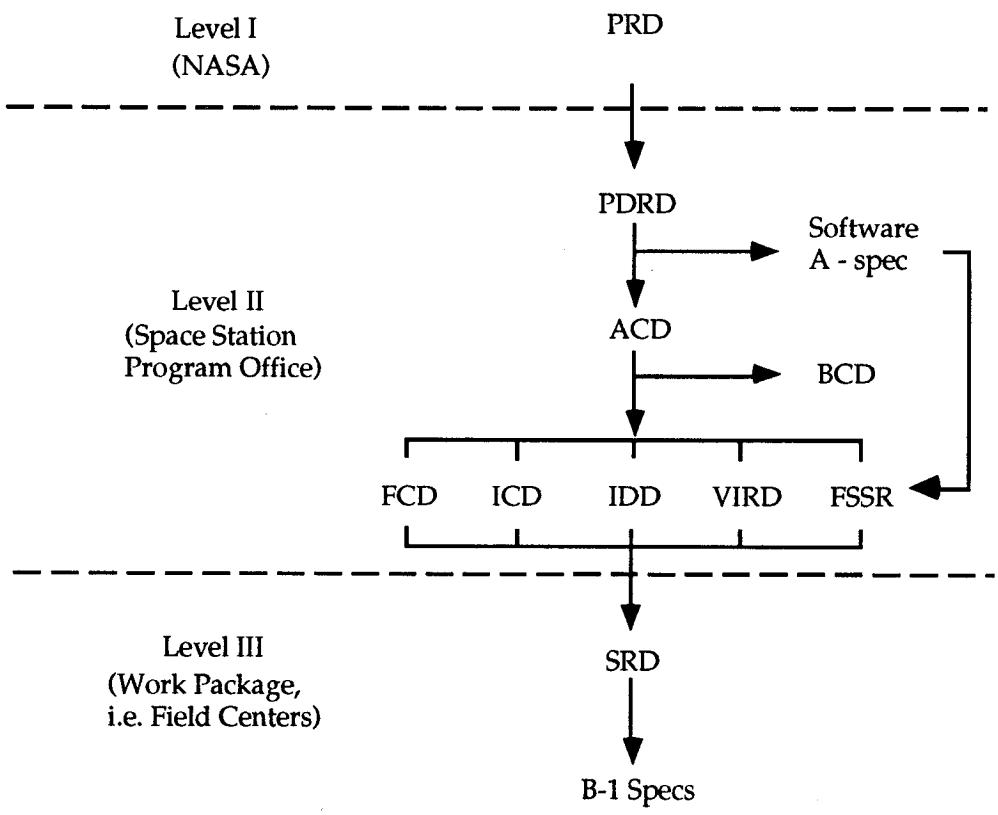

Figure 47. S.S. *Freedom's* documentation tree.

6.1.2.1 Program Requirements Document

The PRD establishes "the objectives, requirements, budgets, and milestones (stated as requirements) controlled by level I of the space station program (SSP). The PRD addresses both technical and management requirements."[6]

"The PRD defines SSP level I requirements necessary to establish level II detailed requirements to design, develop, and establish the operational capability of the ground and space systems that comprise the space station (SS). Level I requirements are established and approved by the Associate Administrator for the Office of Space Station (AA-OSS)."[6]

6.1.2.2 Program Definition and Requirements Document

The PDRD documents "program requirements, directives, and procedures controlled by the NASA Space Station Program Manager (level II)." "All participants in the (space station program), including international participants, must adhere to the requirements of this document. If it is deemed the requirements should be waived, deviated from, or changed, the proper waiver, deviations, or change request—accompanied by full justification—must be submitted to the proper management level in accordance with established procedures."[7] In addition, since there are international participants involved, there are also joint PDRD's which specifically address program requirements involving the participants.

6.1.2.3 Architectural Control Document

The purpose of the ECLSS ACD is defined as establishing the architecture and providing "the means by which the S.S. *Freedom* integrator and ECLSS architect accomplish the following goals concerning the ECLSS:

A. Describe the functions which the system is required to perform and the methods which the integrator has chosen to accomplish these functions. The description includes interactions with elements and other systems of the space station.

B. Establish the requirements which shall enable the system architects to provide system components that meet the requirements of the element architects and which allow the element architects to install these components in their elements.

C. Establish the requirements which the integrator and/or system architect place on users of components produced by the system architect.

D. Establish the requirements which the integrator and/or system architect place on users of the system.

In addition, this document establishes the requirements which do the following:

A. Control distributed systems common items for United States provided systems.

B. Control interchangeability of orbit replaceable units (ORU's) among systems provided by the National Aeronautics and Space Administration (NASA) and international partners."[8]

The ACD is actually a series of documents regarding aspects such as man-systems, EVA, thermal control, GN&C, data management, ECLS, and electric power. Joint ACD's specifically address architecture aspects involving the international participants.

6.1.2.4 Functional Control Documents

The FCD's "define the support structure required to implement each of the key functions for operating and maintaining" S.S. *Freedom*. One example is the management and integration (M&I) FCD which establishes "the ground system requirements to manage and integrate the operation, maintenance, and utilization of" S.S. *Freedom* and "describes the capabilities required to perform the M&I functions and establishes the framework for developing these capabilities. . . The M&I FCD defines the required capabilities, deliverables, interfaces, and roles and responsibilities. . . This includes . . . the management and integration of the operation and maintenance of the ground and flight systems during the assembly . . . and post-assembly (post-PMC) phases."(9)

6.1.2.5 Interface Documents

To ensure that S.S. *Freedom* can be assembled properly after manufacturing of the various parts by different contractors, level II is responsible for controlling the interfaces between elements, subelements, and systems. The documentation used includes ICD's and IDD's.

6.1.2.5.1 Interface Control Documents

ICD's define "the physical, functional, and environmental interfaces." There are many ICD's due to the different elements, subelements, and systems which must connect. Examples include "Common Berthing Mechanism to Pressurized Elements," "International Standard Payload Rack to NASA/ESA/NASDA Modules," "Rack to Pressurized Logistics Modules," "Space Station Manned Base to Japanese Experiment Module (JEM)," and "Space Station Manned Base to Columbus Attached Pressurized Module."(10)

6.1.2.5.2 Interface Development Document

The purpose of the IDD "is to document the agreed-to hardware and software interfaces between work package 01 (ECLSS) components and" components of other work packages. This can be considered as a special ICD for equipment that is manufactured by one work package for delivery to, and installation by, another work package. Separate IDD's are prepared for each subsystem or assembly which interfaces with components which are part of another work package, such as CO_2 storage tanks or the fire detection and suppression subsystem which interface with the power distribution and data management systems to power and control the valves and detectors.(11)

6.1.2.6 System Requirements Document

The SRD provides the overall program definition for work package 01, managed by MSFC, and "defines the requirements, responsibilities, and procedures to be used by all offices of the S.S. *Freedom* in the application of configuration management to the S.S. *Freedom*." Detailed configuration management procedures are also described in this document.(12)

6.1.2.7 Prime Item Development Specifications

PIDS's are prepared by the prime contractor for level III and define the requirements for specific hardware items. The PIDS must conform to military standard MIL-STD-490A and meet the specification type B1, which describe the performance and design requirements, operational and logistics requirements, design constraints and standards, principal interfaces, and other

specifications. There is a separate B1 Spec for each assembly or subsystem, such as the carbon dioxide removal assembly, the fire detection and suppression subsystem, or the atmosphere revitalization subsystem.[13]

6.1.2.8 Software Documents

Software requirements, definition, and verification are described in the software A-specification, which defines top-level software requirements, and the FSSR's, which define high-level system capability requirements and detailed software requirements derived from the high-level requirements. With regard to ECLSS software, the FSSR "establishes the allocation of the ECLSS functional requirements to software and specifies the requirements that the software must satisfy to support or perform the ECLSS functions."[12] The FSSR establishes the software qualification requirements and provides the software requirements derived from the B1 Specs, including external interface and capability requirements, internal interface descriptions, and other software requirements. Section 3 of the FSSR, "System Engineering Requirements," is divided into four major sections. Section 3.1 contains the system software requirements and includes information that applies to all succeeding paragraphs. Sections 3.2 through 3.4 "document the detailed . . . system software requirements for software resident in standard data processors (SDP's), multiplexer/ demultiplexers (MDM's), and firmware controllers, respectively."[14]

6.1.2.9 Baseline Configuration Document

Another level II document is the baseline configuration document (BCD) which will document the "as-built" configuration of S.S. *Freedom*. The BCD "addresses the functions of each element" and "describes the general arrangement requirements of the integrated space station and each flight element." "The BCD is complementary to the distributed systems . . . ACD's" and the BCD, with the ACD's, will be used to plan changes and additions to S.S. *Freedom* after the PMC phase. [15]

6.1.2.10 Plans

Guidelines for how the design, development, and manufacturing processes are performed are used to ensure that the end products are safe and reliable and that their safety, reliability, and performance can be verified. These guidelines, or plans, provide detailed descriptions of the approaches or controls to be used.

6.1.2.10.1 Safety Plan

The purpose of the safety effort "is to assure both system and industrial safety, which encompasses all safety aspects of flight crew safety; safety of ground personnel; and safety of products, facilities, equipment, and the environment." The purpose of the safety plan "is to describe the management and technical controls required to eliminate or control mishap potential in space and ground operations of (WP01) by timely hazard identification and implementation of applicable safety requirements and controls. . . . The primary means of achieving this goal is through fault tolerant systems on orbit and strict control of work place hazards which could threaten personnel or property on the ground. Other goals involve specific fulfillment of all safety requirements of the system requirements document (SRD)."[16]

Preparation of FMEA's and CIL's are part of the safety effort, and guidelines for preparing these documents are described in "Instructions for Preparation of Failure Modes and Effects

Analysis and Critical Items List for Space Station" (SSP 30234, Rev. A). Guidelines for performing safety analyses and risk assessments are described in "Safety Analysis and Risk Assessment Requirements Document" (SSP 30309, Rev. B).

6.1.2.10.2 Reliability Plan

The reliability plan "describes the approach to accomplish the reliability tasks required by SS-SRD-0001 for WP01, Phase C/D of the Space Station *Freedom* Program (SSFP). The plan includes description of: task planning and controls; functional organizational structure; reliability analytical and control functions; and (a) plan for control of EEE parts. Also provided is a matrix of SS-SRD-0001 reliability tasks with the corresponding implementing procedure title and number."(17)

6.1.2.10.3 Master Verification Plan

The master verification plan (MVP) "details the verification of the systems, subsystems, components, and software of ground and flight equipment . . . The plan defines the verification activity to be performed . . ." The MVP "provides planning (guidelines, program relationships and implementation plans) for verification of WP01 elements: U.S. Laboratory (USL), Habitation Element (HAB), Logistics Element (LE), Nodes, Airlock Systems (AL), and Gas Conditioning Assembly (GCA). It defines the phased verification program to be accomplished relative to each end item." The verification plan takes into account "crew safety, integrity of flight hardware and software, and mission assurance."(18) Other verification documents include VIRD's and joint VIRD's with the international participants.

6.1.2.11 Reports

As the design and development process proceeds, it is essential that reports document the progress and status of each aspect. For example, as hardware technical maturity approaches flight versions, the mass and power requirements can be more accurately determined.(19) This allows program management to compare the actual values with earlier estimates and identify potential problems. Information relating to safety and reliability concerns is vital to ensure that any problems are resolved. This information is essential also for controlling costs and for optimum scheduling of activities.

6.1.2.12 Changes to Documents

The process of making changes to program documents must ensure that all participants who use the documents are aware of the changes, and it must ensure that any changes are consistent with other aspects of the design and development process. A simplified flowchart of the change request process is shown in figure 48. A change request (CR) is originated by a NASA (or support contractor) engineer due to technical or programmatic reasons. The CR is then reviewed by the chief engineer and others at the work package center (level III). Upon acceptance it is then submitted to configuration management (CM) at level II for evaluation, which also distributes the CR to other work package centers for evaluation. The evaluations are then reviewed at level II and, if approved, CM issues a change notice to revise the level II documents (PDRD, ACD, etc.). Since these changes affect level III documents which are based on the level II documents, each work package center issues change directives to update the affected level III documents (B1 Spec, etc.). Depending on the extent of impact on the program and design, it may require several months for a CR to go through the entire change process and for the affected documents to be updated.

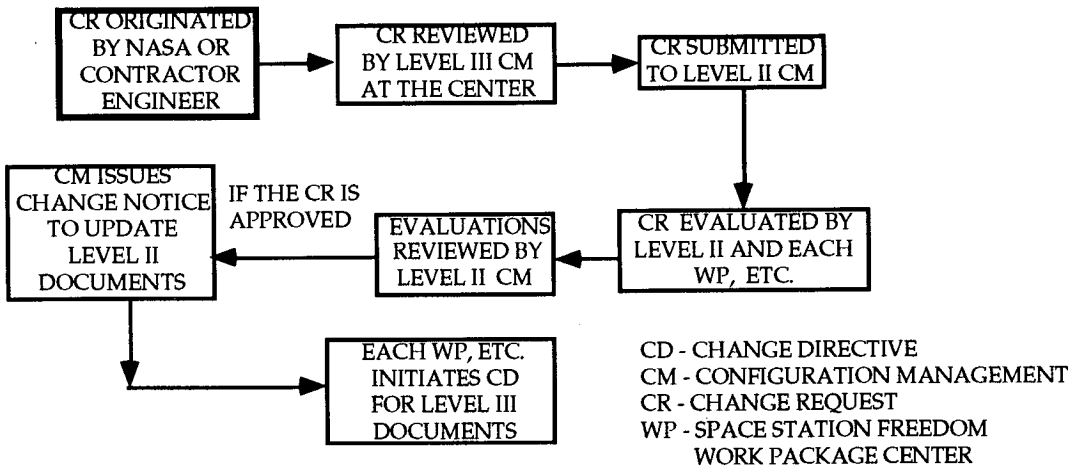

Figure 48. Documentation change request process.

Changes to ICD's are made through a somewhat different process. A preliminary interface revision notice (PIRN) is prepared and sent to an interface working group (IWG) for evaluation. The IWG must agree to the change before an interface revision notice (IRN) is approved for changing the ICD.

6.2 Design Development and Verification

Developing and verifying the subsystem and system designs involve both computer analysis and hardware testing, as described in chapter 4. The primary computer models for system-level analysis are CASE/A and G189A. Other models are used for specific subsystems such as the trace contaminant load model. An extensive program of testing successive generations of hardware has been performed by MSFC and by Boeing, as prime contractor. This includes independent testing of alternative technologies and integrated system testing. The final phase of testing will include sealed chamber tests with people, which will simulate the on-orbit operation of the ECLSS.

6.2.1 Analysis Methods

Several of the analysis methods described in chapter 4 are being used for developing S.S. *Freedom's* ECLSS. The primary system-level model being used by MSFC is CASE/A, which is also being used for some of the detailed modeling such as the CO_2 removal assembly, the 4BMS. The primary system-level model used by Boeing, the prime contractor, is G-189A.

6.2.1.1 CASE/A

CASE/A has been used for a number of system, subsystem, and assembly level analyses for S.S. *Freedom*. System-level analyses typically investigate more than one ECLS subsystem, evaluating subsystem interfaces and integrated ECLSS performance. Subsystem analyses are limited to a single subsystem, but incorporate multiple assemblies to evaluate assembly interfaces and integrated subsystem performance. Assembly analyses investigate the performance of particular assemblies, for the purpose of design optimization or inter-assembly interface analyses. One study of each type is discussed in detail in the following sections as examples; other analyses are described in appendix K.

6.2.1.1.1 System-Level Analyses

System-level analyses using CASE/A have included many intermodule ventilation (IMV) studies. One series of studies investigated the capability of the IMV to circulate the habitat atmosphere so that the centralized carbon dioxide removal assembly (CDRA) can maintain the atmospheric CO_2 levels below the specified partial pressure. This is a system-level study, since it examines the interaction of the temperature and humidity control (THC), atmosphere control and supply (ACS), and atmosphere revitalization (AR) subsystems. The configuration modeled consists of one habitation module, one laboratory module, four nodes connecting the modules, a crew of eight people, and the ECLS hardware that makes up the THC, ACS, and AR subsystems. The THC consists of a condensing heat exchanger (CHX), water separator, thermal bus, and associated valves and pipes. The ACS model simulates the addition of O_2 and N_2 to control O_2 partial pressure and total pressure. The AR consists of models of CO_2 reduction, molecular sieve CO_2 removal, and static feed water electrolysis O_2 generation assemblies. Ventilation in different flow patterns was modeled.

The design issues addressed relate to the control methodology, flow distribution, and optimum sequencing of the subsystems. Specific issues include determining the optimum sizes for fluid accumulator tanks. Data from hardware testing were used to verify the component models used to build the system model. The temperature control algorithm controlling the fraction of the atmosphere bypassing the CHX uses the proportional/integral/derivative (PID) approach, since the ventilation flows continuously but only a fraction flows through the CHX or the AR subsystem. For the molecular sieve model, mass transfer and heat transfer were modeled using networks representing the characteristics of the sorbent beds, and the bed temperatures and CO_2 accumulator pressure were calculated. The results showed good correlation with the test data. For the CHX model, mass transfer calculations were based on a two-step process to separate the sensible and latent (condensing) sections. An iterative calculation process is used which assumes that moisture is removed at a constant dry bulb temperature, and sensible heat is removed at a constant moisture content until the required dew point is reached at the outlet temperature. Vendor data were used to verify the model, with good correlation.[20]

Three areas of concern identified by these analyses are CO_2 accumulator sizing and flow control, THC requirements, and O_2/N_2 control. Analysis of the CO_2 accumulator sizing and flow control was performed to ensure that the required flow rate to the Bosch could be maintained while keeping the accumulator pressure between 136 kPa (19.7 psia) and 620 kPa (104.7 psia). It was found that the accumulator pressure would exceed 620 kPa (104.7 psia), which is the maximum limit for the vacuum pump. Increasing the tank size by 50 percent would reduce the maximum pressure to within the allowable limits and avoid returning CO_2 to the habitat atmosphere.

The need to place THC hardware in the nodes connecting the modules was evaluated for two different flow patterns and with other variable parameters. Results indicated that the present THC configuration could not maintain the required temperature and RH in the nodes. Changes in duct configuration, addition of CHX's to the nodes, or similar changes will be required to ensure that the temperature and RH in the nodes remain within acceptable ranges.

The control approach proposed for maintaining appropriate O_2/N_2 levels relies on the O_2 generation assembly to provide the needed O_2, which is different than for previous space habitats which relied on storage tanks. As a result, the O_2 generator must be able to respond to transient

conditions. The effects on pO_2 and total pressure of varying levels of crew activity, crew location, and atmosphere leakage were evaluated, and it was found that the pO_2 fluctuated between the upper and lower limits every 100 h. The possibility exists for the total pressure to exceed the set point when a sensor indicates that the pressure is low and N_2 is added leading to the pO_2 being too low such that O_2 is added at a higher rate. To avoid this situation, the set point for the total pressure can be offset to compensate for possible O_2 addition.[20]

6.2.1.1.2 Subsystem-Level Analyses

As part of the analysis of the THC subsystem, a study using CASE/A was conducted to determine the optimum design of the CHX and temperature control methodology in the nodes containing a cupola. A cupola is an observation area which extends from the node roughly in the shape of a cylinder. The cupola area requires a dedicated cooling atmosphere flow from the common node CHX and fan. Options considered are:

1. Isolating a section of the CHX for dedicated cupola cooling

2. Redirecting a controlled portion of the general cooling atmosphere to the cupola depending on the cupola heat load

3. Depending on the node atmosphere temperature control for cupola atmosphere temperature control.

6.2.1.1.3 Assembly-Level Analyses

An example of the utility of CASE/A for detailed assembly level analyses is the CO_2 accumulator sizing study.[21] In the closed-loop AR subsystem (delayed to EMCC as a result of the 1990 restructure), CO_2 is stored in an accumulator following desorption from the CDRA molecular sieve material. The CO_2 is subsequently processed by the CO_2 reduction assembly (CReA) with hydrogen to recover the O_2 in the form of water. The desorption flow rate varies greatly over the adsorb/desorb cycle; the CReA, however, requires a relatively constant CO_2 flow. The intermediate accumulator serves as a buffer, and must be appropriately sized to provide a steady flow to the CReA. This study used a detailed CDRA CASE/A model to simulate the cyclic variation in the desorption flow based on current cabin CO_2 partial pressure (which changes depending on crew activities) linked to an accumulator model to determine the required volume of the accumulator.

The molecular sieve CDRA is modeled by dividing the sorbent beds into 20 "elements" which each contain three mass diffusion nodes and two free gas nodes, representing penetration of the molecular sieve pellets by CO_2 and flow past the exterior of the pellets, respectively. This network of nodes allows for modeling of:

1. Gas-to-adsorbent transfer at the pellet surface

2. Diffusion within the pellets

3. Diffusion between pellets.

A differential in the partial pressure between two adjacent nodes represents a driving force for mass transfer from the node with a higher concentration to the node with a lower concentration. The amount of gas transferred depends on the mass transfer coefficient, carrier gas volumetric flow rate, and concentration of the adsorbate at the pellet surface and in the free stream. Heat transfer is modeled in a similar manner, based on the characteristics of the bed elements, canister, outer insulation, and free gas stream. The mass and thermal networks are connected through the net heat of adsorption/desorption of CO_2 to and from the bed.

Model results were compared with test data to verify the accuracy of the numerical techniques and to determine the values for parameters not easily derived theoretically. Input data for pCO_2, temperature, pressure, and flow rates of the process gas stream were matched to test conditions and the outputs compared with test data. The computed values for molecular sieve bed temperature and CO_2 accumulator pressure match the test data very closely.[20]

6.2.1.2 Aspen Plus®

For thermodynamic analyses such as vapor/liquid equilibrium studies, Aspen has been used to evaluate contaminant removal by a CHX.[22] Similar studies were performed at ARC and MSFC and obtained similar results regarding the removal of NH_3. Since NH_3 in water forms ammonium ions, which are basic, and CO_2 forms carbonic acid, the removal of NH_3 from the process atmosphere by a CHX is related to acid-base reactions and is a function of the CO_2 partial pressure. As the pCO_2 level increases, the amount of NH_3 removed from the atmosphere increases also. For pCO_2 levels greater than 0.133 kPa (1.0 mmHg) almost all of the NH_3 is removed from the atmosphere by the CHX, which is the situation at the levels expected on S.S. *Freedom* (greater than 0.400 kPa, 3.0 mmHg). Studies of the removal of alcohols and other contaminant compounds can also be performed using Aspen, utilizing the extensive data base of chemical properties information.

6.2.1.3 TRASYS and SINDA '85

Heat transfer through the walls of the pressurized modules will affect the ECLSS with regard to requirements to avoid humidity condensation on walls and equipment. To estimate the minimum module wall temperature and determine whether condensation would occur, TRASYS and SINDA '85 programs were used to model the module structure and the thermal environment. The cross section of a module was modeled including meteoroid/debris shields, longerons, the ring frame, titanium brackets, the pressure shell, multilayer insulation (MLI), and avionics racks. TRASYS was used to calculate radiation, orbital fluxes, and view factors for the heat transfer calculations. The maximum dewpoint temperature at which condensation could occur was assumed to be 14.4 °C (58 °F). Locations where the sidewall temperature dropped below this temperature were considered to be condensation sites. Results of the analyses show that the minimum sidewall temperature for the analysis configuration would be 15.0 °C (58.5 °F), which is –17.5 °C (0.5 °F) above the maximum dewpoint temperature. A parametric analysis was then performed to evaluate the sensitivity of the model to input parameters for the atmosphere temperature in the avionics rack, module sidewall emissivity, MLI emissivity, and orbit angle. Results of the parametric analysis show that the minimum sidewall temperature is strongly dependent on the atmosphere temperature in the rack, such that an increase of –17.2 °C (1 °F) results in a sidewall temperature increase of approximately –17.2 °C (1 °F). This indicates that added margin to ensure that condensation does not occur can be obtained by increasing the atmosphere temperature in the rack.[23]

6.2.1.4 FLUINT

Ventilation on S.S. *Freedom* will be provided by forced convection, and the movement and conditioning of the atmosphere will be performed by the THCS. To evaluate the ventilation scheme, a model of the THCS, including the ducting and diffusers, was prepared using FLUINT. Information required includes the atmosphere properties (pressure, molecular weight, conductivity, viscosity, and specific heat), friction loss coefficients in the ventilation system (diffusers, valves, bends, filters, etc.), heat loads, and the ducting network. The model simulates a single module and calculates the atmosphere temperature, flow rates from the diffuser faces and to the return filters, and pressure throughout the THCS. Different conditions such as operation at reduced pressure or higher heat loads can be studied by making minor modifications to the input data. Other configurations of ducting and other THCS equipment can be studied by making appropriate changes to the model, although extensive changes will essentially involve creating an entirely new model.(24)

6.2.2 MSFC ECLSS Test Facilities

The ECLSS test facility at MSFC, referred to as the Manned Habitat Environmental Control and Life Support Test Facility, is a 1,858 m^2 (20,000 ft^2) high bay in the north end of MSFC/building 4755, shown in figure 49. The facility has the capability of operating as a clean room, although for much of the testing this is not necessary. The facility has the capability of developing ECLSS's from assemblies having TRL's of 5 or higher. As shown in figure 50, the facility includes the following features:

1. Core module simulator
2. End-use equipment facility
3. Monitoring and control room
4. Gas and liquid sample analysis lab
5. Predevelopment operational system test facility
6. Assembly checkout and evaluation area
7. Intramodule ventilation test facility.

The core module simulator (CMS) is the primary habitat simulator and is 4.6 m (15 ft) in diameter and 12.2 m (40 ft) long. The CMS is capable of operating at ambient or reduced pressures, such as 70.3 kPa (10.2 psia).

The end-use equipment facility (EEF), located near the CMS, is a sealed room used to collect waste water for realistic testing of the water purification equipment. The EEF includes exercise equipment to generate perspiration and respiration moisture from volunteers for collection by CHX's, microwave ovens and other cooking equipment to generate cooking moisture and fumes, and a shower and clothes and dish washers to generate hygiene waste water. Prior to the EEF, the water purification equipment was tested using artificial waste water made by adding to pure water the compounds typically found in waste water. This is suitable for initial testing, but real waste water contains additional compounds in different or varying relative proportions which may

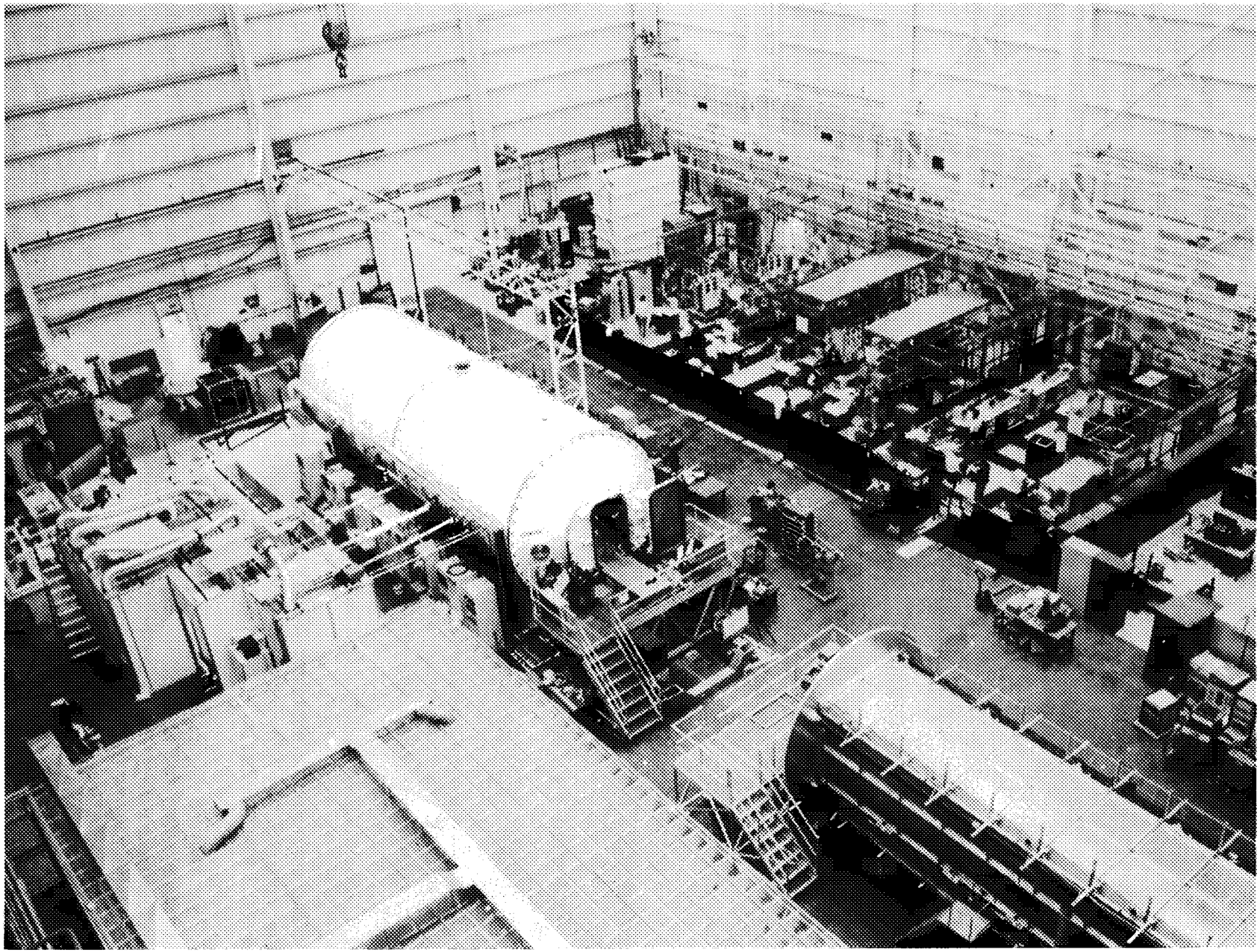

Figure 49. The Manned Habitat Environmental Control and Life Support Test Facility.

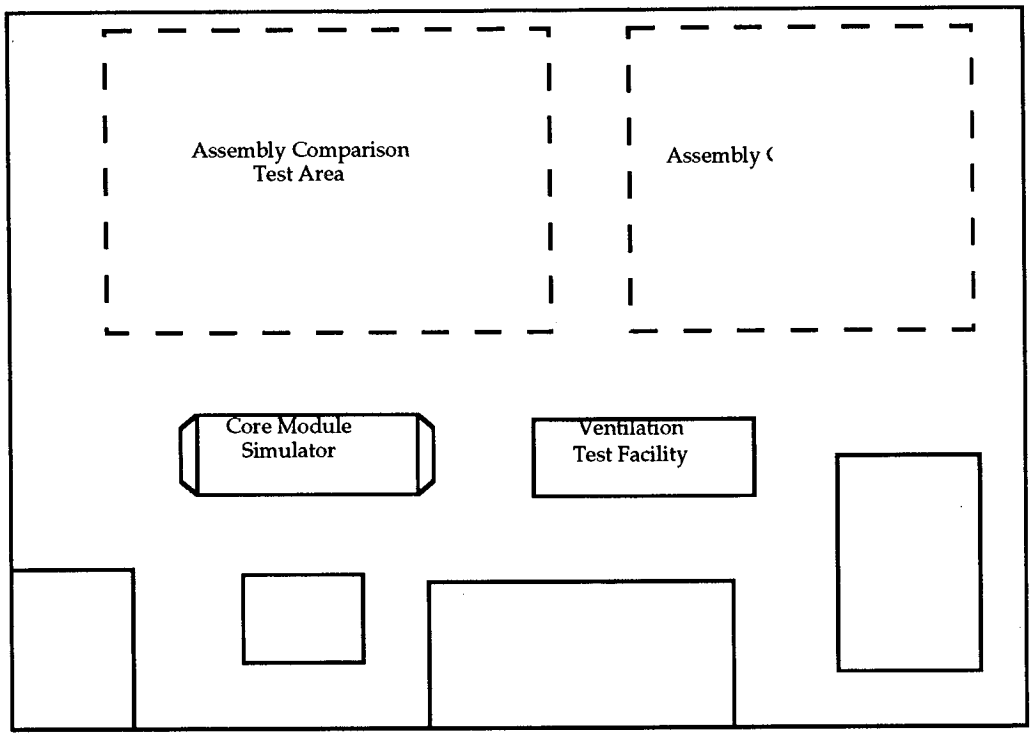

Figure 50. Schematic of the MSFC ECLSS test facility.

affect the ability of a particular water purification technology to process the water. For example, it was found that certain soaps can clog some of the water processors so restrictions on the types of soap allowed will be needed.

The monitoring and control room contains the computer controllers and displays to operate the equipment and perform the tests performed in the CMS. Data are recorded at another location connected via fiber optic cables. Video displays allow observation of the interior of the CMS during closed-door testing. The operation and performance of the equipment being tested can be closely monitored and any problems identified quickly.

The gas and liquid sample analysis lab contains the analysis equipment necessary to perform initial evaluations of fluid samples to monitor the performance of the ECLS equipment being tested. Equipment includes GC/MS and microscopes for biological analyses. More thorough characterization of fluid samples is performed at the chemical and biological analysis laboratories at Boeing's facility in Huntsville, Alabama.

The predevelopment operational system test (POST) facility is a clean room configured for integrated testing of ECLS equipment. It was built by Boeing for the POST described in section 6.2.3.

The assembly checkout and evaluation area was configured for comparison testing of the candidate ECLS technologies for S.S. *Freedom*. For that testing, 11 assemblies were tested simultaneously, each with its own monitoring and control computer and the necessary facility support, including hoods with combustible gas sensors over the assemblies which use or produce hydrogen or other combustible gases.

The intramodule ventilation test facility duplicates the interior passageway of a S.S. *Freedom* module and the diffusers for atmosphere circulation. This facility was specifically constructed for testing of intramodule ventilation concepts to ensure that all open areas will be properly ventilated.

The ECLS test facility has the following capabilities:

1. Independent testing of ECLS technologies, including the capabilities for simultaneous comparison testing and life testing (27 different subsystems have been tested, many simultaneously)

2. Integrated testing of O_2 recovery and water purification technologies

3. Instrumentation and data acquisition system to support simultaneous testing (with fiber optic link to main computer storage)

4. Closed-door chamber testing at ambient and reduced pressures with metabolic simulator of human respiration

5. Human-in-the-loop testing of water recovery using waste water collected in the EEF. Also, IRB validated facility and procedures.

6. Extensive facility for analyzing gas and liquid samples and performing microbial analyses, dedicated to ECLSS

7. Process research such as molecular sieve characterization for analytical modeling

8. Testing of habitat ventilation concepts.

6.2.3 ECLSS Test Program and Hardware Selection

Development of the ECLS technologies is typically performed by JSC, ARC, and others. Development of the ECLS *systems* which incorporate these subsystems and assemblies is primarily performed by MSFC. Some technology development is also performed by MSFC to address technology deficiencies, problems, and concerns identified during system testing.

Testing by MSFC includes independent and integrated testing of preprototype versions of subsystems to gather preliminary data for evaluation and to develop computer models of the subsystems and how they function in a system. Several combinations of subsystems were tested to gather data on the advantages and disadvantages of different combinations of subsystems. The results of these early tests were used to make improvements for the next generation of hardware. The prime contractor (Boeing) was then selected by MSFC, and the improved versions were tested by Boeing at MSFC facilities. These tests included comparison tests of alternative subsystems of comparable technical maturity, and performing the same function, to determine which were best able to meet the requirements. The selected subsystems were then tested in an integrated system configuration. Flight-like versions will be used during the sealed chamber testing with people. After completion of the development tests and selection and optimization of designs, flight versions will be fabricated for qualification and acceptance testing, discussed in chapter 4. The ECLSS test program schedule is shown in figure 51.

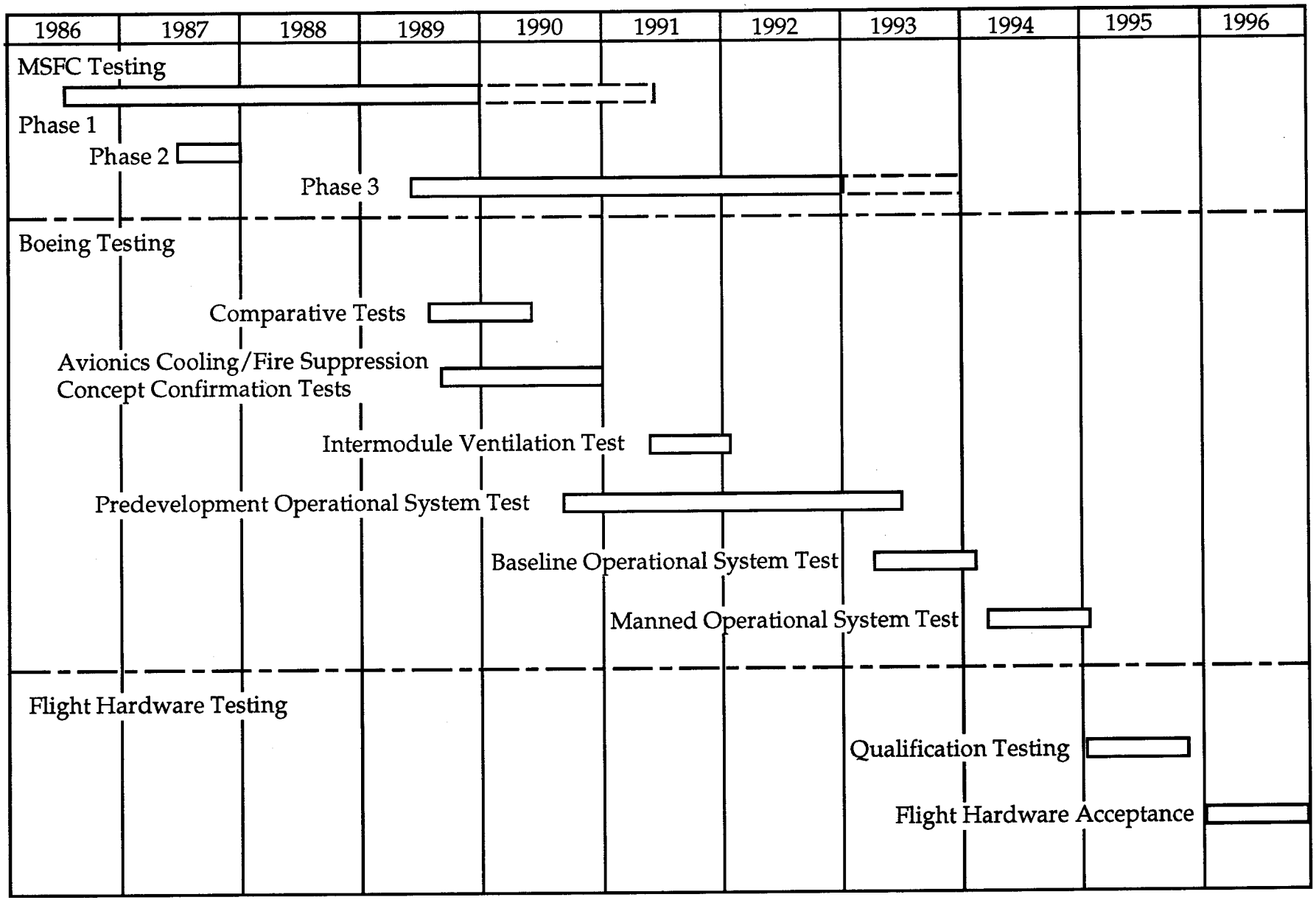

Figure 51. ECLSS test program.

6.2.3.1 MSFC Testing

Testing of preprototype assemblies for S.S. *Freedom* began in 1986. The independent assembly testing is termed "phase 1," integrated testing of the atmosphere revitalization subsystems is termed "phase 2," and integrated testing of the AR and water recovery subsystems is termed "phase 3." The results of this series of tests is documented in the references 3, 4, and 5. Summary descriptions of the test objectives, set up, and results are in the following sections.

6.2.3.1.1 Phase 1 Tests

Before performing integrated testing, the subsystems and assemblies were tested individually to verify facility requirements, interfaces, operating procedures, performance characteristics, and other factors. The phase 1 tests were generally of short duration, lasting no more than a few days. Individual test stands were used to provide the necessary facility support requirements. For assemblies involving the use of H_2, such as the O_2 generation and CO_2 reduction assemblies, special hoods and combustible gas sensors were placed over each assembly to detect and warn of leaks.

6.2.3.1.2 Phase 2 Tests

The phase 2 test is divided into two parts: the simplified integrated test (SIT) which lasted 52 h beginning on June 9, 1987, with 42 h of integrated operation; and the extended duration metabolic control test (EMCT) which ran for 150 h beginning November 18, 1987, with 148 h of integrated operation. The results and lessons learned are described in detail in reports.[25,26] Selected lessons learned are listed in section 6.2.2.3.1. Prior to initiation of the tests, safety reviews and hazard analyses were performed to ensure that the facility and equipment could be operated safely.

The primary purpose of the SIT was to evaluate the atmosphere revitalization subsystem and verify the test facility. Prototype regenerative AR assemblies of the 4BMS for CO_2 removal, Sabatier for CO_2 reduction, SFE for oxygen generation, and TCCA for trace contaminant control were tested in an integrated configuration. Included in this phase of testing was a urine reclamation assembly, the TIMES, used to provide feedwater to the SFE. The assemblies were installed in the CMS and operated with the CMS door open. Temperature and humidity control were provided by a CHX and ventilation by a blower and ducting, all located in the CMS under the flooring. Monitoring and control equipment was located outside of the CMS.

The primary purpose of the EMCT was to evaluate the integrated operation of the same assemblies as used in the SIT, but during closed-door operation of the CMS in order to evaluate the mass balance between the assemblies. In addition, an oxygen concentrator simulated metabolic oxygen consumption.

6.2.3.1.3 Phase 3 Tests

The phase 3 test, beginning in 1989, is divided into several parts: the phase 3 SIT of the AR assemblies and water recovery tests (WRT's), including human-in-the-loop testing. The AR assemblies tested were the same as for the phase 2 tests with the exception that the Sabatier was replaced with the Bosch for CO_2 reduction.[27] For the WRT's, the assemblies tested were the TIMES, VCD, reverse osmosis, multifiltration, and volatile gas removal. The WRT's

were divided into several parts representing progressive refinements in the level of integrated system simulation.[28,29] Initial stages involved people as donors of waste waters, and later stages involved people as recipients of processed water. Hygiene water was used for hand washing, showering, and clothes laundering; and potable water was tasted. For the WRT's, separate water loops were initially used for potable and hygiene water. When the configuration was changed for S.S. *Freedom* to combine the water loops, later tests were performed using the combined configuration.

Although the same assemblies were used as for phase 2, except for the Sabatier, the test was performed in a different location in building 4755 which required disconnecting and storing the hardware while the facility modifications were made. Gas and water samples were collected in duplicate for analysis by two different labs. For the SIT, samples were analyzed by Boeing and MSFC. For the WRT, samples were analyzed by Boeing, CH_2M Hill, Battelle Memorial Institute, and Research Triangle Institute laboratories. Not all of the labs analyzed all of the samples.

Whereas the SIT did not use human test subjects, the WRT included human volunteers who showered in the EEF, donated urine, and tasted reclaimed water. In particular, prototype potable and hygiene water reclamation assemblies were integrated with end-use equipment and operated with humans-in-the-loop. The effects that human variables have on the various waste waters to be processed are extremely difficult to predict and impossible to reproduce artificially. Although synthetically prepared, or "ersatz," waste waters have proven useful in early development testing, they are generally poor representations of the complex "real" waste waters that they are intended to simulate.[28]

6.2.3.2 Contractor Testing

Much of the development testing for subsystem technologies is performed by subcontractors for the prime contractor (Boeing), while testing to assess the suitability of specific technologies and to assess system configurations is performed by Boeing. This includes testing to make the final hardware selections, system tests, and ventilation tests described briefly in the following sections and in greater detail in the "Environmental Control and Life Support System Development Plan."[30] Additional tests to address specific development aspects such as conditioning the O_2 and N_2 from the cryogenic storage tanks prior to distribution are also planned. The test program is presently in progress and results are available from only the earliest tests.

6.2.3.2.1 Comparison Tests

Before selecting the technologies to be used on S.S. *Freedom*, versions of the candidate assemblies of similar technical maturity were tested under the same conditions at the same facility (MSFC). The results of these comparison tests were used to make the final selections and are documented in "Space Station *Freedom* Environmental Control and Life Support System Regenerative Subsystem Selection."[31] The test results led to selection of the Sabatier for CO_2 reduction, the static feed water electrolysis (SFWE) assembly for O_2 generation, multifiltration for potable water processing and hygiene water processing (the potable and hygiene water loops were to be processed separately for the configuration at that time), the VCD assembly for urine processing, and the 4BMS for CO_2 removal (this selection had been made prior to the comparison test).[31]

6.2.3.2.2 Concept Confirmation Tests

Avionics cooling and fire suppression concepts were evaluated by the concept confirmation test using a mockup of five racks. The technical feasibility, performance, and control capabilities of the baseline concepts were determined.[32] The avionics cooling test included bench testing of the avionics fan to map the fan performance and rack testing to determine airflow and velocity profiles in the distribution ducts, pressure measurements in the ducts and racks, flow patterns and flow control, and noise levels. The fire suppression tests included evaluation of the dispersion of CO_2 throughout the racks, the concentrations and time to reach the required concentration, control of CO_2 release from a central tank, and noise levels.

Avionics cooling was changed from the centralized system tested to distributed individual rack systems. This was done for reasons relating to volume constraints, since the centralized system required ducting between racks and a central blower and other equipment, rather than to results of this testing. The fire suppression concept tested used a "piccolo tube" (a duct with holes along its length) to disperse CO_2 from the bottom and rear of a rack. Test results showed that insufficient CO_2 was reaching the top of the rack to meet the requirements. As a result, the design was modified so that each tube extends to the top portion of a rack. Additional tests showed that this design satisfied the requirements.[33]

This testing was performed with the racks in an upright orientation. Since CO_2 is heavier than air, there is some settling which may affect the test results and, so, additional testing is needed with the racks oriented horizontally (on their backs) to minimize gravitational effects.

6.2.3.2.3 Intermodule Ventilation Tests

The intermodule ventilation (IMV) test will evaluate the cabin atmosphere ventilation design with regard to intra- and intermodule mixing and will identify any ventilation short-circuiting. This is important to ensure that no CO_2 or trace contaminant buildup occurs in localized areas which may pose a hazard to the crew. Module mockups of the main U.S. elements with simulators for the attached pressurized elements such as the airlock, JEM, and *Columbus* APM will be used. Flow characteristics will be determined by a combination of atmosphere velocity measurements, trace gas mapping, and acoustic measurements. The test will be performed for configurations representing each phase of the construction of S.S. *Freedom*: man-tended capability (MTC), permanently manned capability (PMC), and eight-man crew capability (EMCC).

6.2.3.2.4 Predevelopment Operational System Test

The primary goal of the predevelopment operational system test (POST) program is "to develop and test an integrated single string ECLSS baseline concept with predevelopment equipment that is sized to meet space station requirements." Tests will be performed at nominal, off-nominal, and contingency conditions and parameters. "The POST is conducted in three stages: (1) a flow test which utilizes the cabin air THC subassembly, (2) atmosphere revitalization (AR) components, cabin air THC, and water recovery management (WRM) hardware to complete the single-string ECLSS, and (3) a test which evaluates the avionics air cooling and fire detection and suppression subassemblies. Both open and closed loop atmosphere revitalization are tested to demonstrate EMCC scarring."[30]

6.2.3.2.5 Baseline Operational System Test

The baseline operational system test (BOST) is "a performance/operational evaluation of a single-string integrated ECLSS in a full-scale HAB/LAB volume simulator . . . conducted using flight qualifiable (man-rated) hardware. This test uses an appropriate level of man-systems hardware so that actual human loads upon the ECLSS can be achieved. At a minimum, the man-systems hardware for BOST includes a shower and commode. Although closed-loop atmosphere revitalization is deferred until EMCC, both open- and closed-loop configurations are included in the test. . . Acoustic noise levels will be measured, and the steps taken to insure safe acoustic levels for" later manned testing.(30)

The test will be performed for configurations representing each phase of the buildup of S.S. *Freedom*: MTC, PMC, and EMCC, and will be run at nominal, off-nominal, and contingency conditions.

6.2.3.2.6 Manned Operational System Test

For the manned operational system test (MOST), a crew quarters will be attached to the BOST configuration for closed-door testing with four people inside who will be isolated for the duration of the test. The living quarters will include a shower, galley, and waste management subsystem. A laundry facility will be external to the simulator and will provide waste water to complete the waste water load on the ECLSS. The test will be performed with two configurations: PMC, with the atmosphere loop open and the water loop closed, will be for 90 days; and EMCC, with both the atmosphere and water loops closed, will be for 30 days. The MSFC IRB will be involved in the medical, legal, and safety aspects of testing with people.(30)

6.2.3.3 Test Results

The results of the tests provide information about the performance capabilities of the subsystems and the system configuration, design or technology limitations and deficiencies, and integration issues. The knowledge gained from a test is then used to improve the subsystem or system design. The significant results from the tests described above which have been completed are discussed in the following sections. The anomalies which occurred during testing and the design deficiencies identified are also discussed below.

6.2.3.3.1 Significant Results

At each step of the test process, significant results have been obtained. In many cases, the expectations for performance and capability have been verified, but also information has been gathered which is used to make improvements in the hardware, and in the software controlling the hardware. The results of the tests completed to date are documented in comprehensive test reports.(25–28) Representative results are described below.

<u>Phase 1 Tests</u>

Demonstrated operation of the hardware and verified facility capability to operate the equipment. Facility provisions such as chilled water for liquid coolant loops, electrical power supplies and connections, data acquisition and equipment monitoring and control, and gas supplies were

verified. Operating procedures and gas and liquid sample collection procedures were also developed and verified.

Phase 2 Simplified Integrated Test

Results of the testing demonstrated the ability of the tested assemblies to be operated together, and the capability of the facility to support the testing. Aspects of the hardware design, facility support, test procedures, instrumentation, and sample collection where improvements can be made were identified. The lessons learned include:

- Sterilization of the water storage tanks and the plumbing lines prior to testing is essential. Vents on the storage tanks should preclude the introduction of microorganisms from the atmosphere.

- Routine analyses of the total solids content of the pretreated urine supply, brine, and product water are needed to eliminate the need to make engineering assumptions regarding the overall water recovery.

- A water trap is needed in the Sabatier outlet vent line to remove moisture from the product gas prior to measurement of the flow, since the flow sensor reading is affected by the presence of condensed moisture.

- Collection of gas samples into the Sabatier must be performed slowly to avoid inadvertently shutting down the Sabatier.

- Dry bulb temperature sensors are needed on the H_2/O_2 outlet lines from the SFE to facilitate calculation of the output gas relative humidities.

- To avoid leakage of ambient air into the concentrated CO_2 of the 4BMS during desorption, joints and valves must provide good seals.

- Temperature sensors must be located so that heat conduction through valves and tubes does not lead to erroneous readings of fluid temperatures. This was especially noticed during testing of the 4BMS.[25]

Phase 2 Extended Duration Metabolic Control Test

Prior to the EMCT, the 4BMS was modified to eliminate the five-way valves (*Skylab* vintage) on the CO_2 sorbent beds, since those valves were not designed for the hot gases during desorption. Other potential leak sites were also sealed. Dry bulb temperature sensors were added to the SFE outlet lines. A short-term metabolic control test (MCT) was performed to evaluate the modifications prior to the EMCT. During the MCT, the CMS atmosphere temperature experienced fluctuations consistent with the 4BMS cycles due to the outlet duct from the 4BMS exhausting directly into the CMS. This duct was rerouted to the ventilation duct upstream of the CHX prior to the EMCT. Results from the EMCT include demonstration of integrated operation for 148 h. There were only minor anomalies, except for the 4BMS internal controller, which failed and required that the 4BMS be commanded to advance through the cycles from the external controller. Within 24 h after beginning the EMCT, steady-state conditions were reached for CO_2 partial pressure and dewpoint of the CMS atmosphere, indicating that the 4BMS was performing properly. Several days

were required to determine whether the CMS atmosphere temperature and pressure had stabilized, since external factors such as facility chilled water supply temperature and barometric pressure appeared to be significant factors. Mass balance calculations showed discrepancies of 6 to 9 percent between assemblies, partly due to manual readings of the TIMES water tanks taken every hour after the data link failed early in the test. As a result, assumptions had to be made which may not have been accurate. Another source of uncertainty is that many of the gas streams were assumed to have constant compositions over the time intervals between sample collections. In several cases where continuous monitoring was also performed, there were discrepancies between the recorded data and the sample analyses. Improvements in determining the mass balance are needed. The results of the EMCT show that it is possible to operate and maintain an integrated ECLSS for an extended period, even with anomalies and failures.[26]

Phase 3 Simplified Integrated Test

Lessons learned include:

- A thorough leak check, preferably using helium, prior to testing is essential.
- Sensors and instrumentation must be thoroughly checked and calibrated prior to testing to ensure that assembly performance can be evaluated.
- It is essential to properly prepare for storage any hardware which will not be used for a period. The SFE was stored with recovered hygiene water after the phase 2 tests which may have led to temperature problems during phase 3.[27]

Phase 3 Water Recovery Tests

Lessons learned include:

- Possible chemical incompatibilities must be considered, such as between pretreated urine and other waste waters or cleansing agents and filtration membranes, including effects such as precipitation of solids.
- Ionic compounds are not readily removed by reverse osmosis membranes, possibly due to incompatibilities between two or more agents.
- Sorbent bed replacement based on on-line conductivity measurements may not be adequate due to poor correlation between conductivity and level of total organic carbon.
- It is important to provide a controlled atmosphere for collection of metabolically generated water vapor to minimize the influence of other sources of water vapor.[28]

6.2.3.3.2 Anomalies

The test program is very important because that is when the capabilities of the subsystems and system are determined, and also when model predictions are verified or shown to be incorrect and that analyses need refinement. The anomalies which occur during testing fall into the following categories:

1. Facility problems such as power interruptions

2. Equipment problems

3. Operational errors

4. Instrumentation failures

5. Problems with the technology or the assembly design.

Technology and design problems indicate that the technology or design may not be acceptable and, if not, then another technology or design must be selected for development. A sample anomaly log sheet is shown in figure 52.

SUBSYSTEM & ANOMALY NUMBER	ANOMALY DESCRIPTION	DATE DETECTED	ACTIONEE	DATE CLOSED OUT	ACTION TO RESOLVE ANOMALY
4BMS-1	Temperature in bed 2 not maintaining 400°F desorb temperature	3/10/87	Wieland Jackson	5/28/87	Temperature controller replaced with a new unit
4BMS-2	Excessive oxygen found in CO_2 outlet gas	5/27/87	Wieland Jackson	6/4/87	Leaks found & sealed (except leaks in 5-way Skylab valves, which require disassembling valves)
4BMS-3	Leakage through 5-way valves during desorption	6/12/87	Wieland Jackson	7/1/87	Modifications made to ducting & valves: hot air bypasses 5-way valves, & new 2-way valves provide seal during desorption
		7/7/87	Wieland Jackson	8/1/87	CO2 sorbent bed 5-way valves replaced with combination of 2-way valves
4BMS-4	O_2 sensor readings erratic	10/9/87	Wieland Worden	10/23/87	O_2 sensor (FO03) parts replaced
4BMS-5	N_2 use excessive, leaking into chamber	9/29/87	Wieland Worden	9/29/87	Connections at controlling solenoid & pilot valves tightened (front mounting panel replaced w/2 mounting bars to access valves)
4BMS-6	5-way "A" not sequencing properly, allowing H_2O to enter CO_2 sorbent bed	10/9/87	Wieland Worden	10/9/87	Insufficient clearance for pilot valve after remounting (4BMS-5), position adjusted to avoid contact with the frame
4BMS-7	Automatic advancing through cycle quit working (required manual advancing for remainder of MCT)	11/20/87	Wieland Worden	3/18/88	Connections checked & 2 diodes replaced; failure hasn't recurred but has been simulated

Figure 52. Sample anomaly log sheet.

6.2.3.3.3 Identification of Design Deficiencies

Many anomalies were related to aspects other than the primary technology performing the function. Some anomalies, however, are directly related to the technology and indicate potentially fatal deficiencies. For example, during testing of the CO_2 reduction subsystem being considered for S.S. *Freedom*, it was found that the performance of the Bosch was not quite as high as expected and, so, in order to process the required amount of CO_2, it would have to be larger than the available space in the rack. Because the rack could not be enlarged, this technology was removed from further consideration, even though it has other advantages. In other cases design deficiencies can be corrected and the technology successfully developed for flight.

6.2.4 Chemical and Microorganism Analyses

During the course of performing these tests, a large number of gas and liquid samples must be collected and thoroughly analyzed to ensure that the hardware is operating properly. For the water recovery testing (phase 3) described in paragraph 6.2.3.1.3, over 18,500 samples were collected and analyzed. To do this requires a large and sophisticated laboratory having the capability of quickly analyzing samples. This capability was provided by the Boeing facility in Huntsville.

Instrumentation includes several GC/MS devices, ion chromatographs, liquid chromatographs, Fourier transform infrared spectrometers, a gas chromatograph with atomic emission detector, other gas chromatographs to analyze for specific compounds of interest such as nonvolatile fatty acids and pesticides, microbiological analysis equipment including microscopes and incubation equipment, and instruments to measure total organic carbon concentrations. The types of analyses performed (the parameters and compounds of interest) are described below. The procedures used during collection and analysis of the samples and the controls used to ensure accurate analyses are described in "Analytical Control Test Plan and Microbiological Methods for Water Recovery Testing."[34]

6.2.4.1 Gas Analyses

The list of major constituents and contaminants for which analyses were performed on the gas (atmosphere) samples is given in table 11.

Table 11. Gas analyses.[34]

Major Constituents:	O_2, N_2, CO_2, H_2, CO, CH_4, NH_3, water vapor
Contaminants:	acetaldehyde, acrolein, benzaldehyde, benzene, carbon tetrachloride, chlordane, chloroform, dichlorobenzene, ethylbenzene, formaldehyde, heptachlor, lindane, methoxychlor, methylene chloride, nitrobenzene, oxychlordane, phenol, styrene, tolulene, and many other potential contaminants

6.2.4.2 Liquid Analyses

The list of properties and contaminants for which analyses were performed on the liquid (water) samples is given in table 12.

6.2.4.3 Surface Analyses

Surfaces of equipment and facility hardware were also analyzed for the properties and contaminants listed in tables 11 and 12 and the microorganisms listed in table 13.[34]

6.2.4.4 Microorganism Analyses

One of the objectives of the integrated testing of the hygiene and potable water subsystems during the water recovery systems test (phase 3) was to assess the capability for reclaimed water to meet the specifications for microorganisms on S.S. *Freedom.* A total of 1,035 water samples were collected for analysis over the course of the test. Analyses were performed using epifluorescence microscopes and other microscopes.

Table 12. Water analyses.[34]

Physical Parameters:	conductivity, color, dissolved gas, odor, particulates, pH, total solids, total dissolved solids, total suspended solids, turbidity
Inorganic Nonmetals:	alkalinity, ammonia, bromide, chloride, chlorine, fluoride, iodide, iodine, nitrate, nitrogen (total), phosphate, sulfate, sulfide, total carbon, total inorganic carbon
Inorganic Metals:	arsenic, barium, cadmium, calcium, chromium, copper, iron, lead, magnesium, manganese, mercury, nickel, potassium, selenium, silver, sodium, zinc
Organics:	total organic carbon, acid extractables, base/neutral extractables, volatiles, nonvolatiles, phenols, cyanide, halogenated hydrocarbons, organic acids, organic alcohols, pesticides, volatile fatty acids, nonvolatile fatty acids, semivolatile fatty acids
Miscellaneous:	urea, methylene blue active substances, nonyl (9-10), Na dodecylbenzylsulfate

6.2.4.4.1 Water Analyses

Before sample collection, 100 mL of water was purged from tubing connected to sample ports to eliminate "dead leg" water from contaminating the samples. Samples were refrigerated after collection and promptly transported to the laboratories performing the microbial analyses. Water samples were analyzed using standard cultural methods employing membrane filtration and spread plate techniques, and epifluorescence microscopy. Fatty acid methyl ester (FAME) and biochemical profiles were used for microorganism identification. Table 13 lists many of the microbial analyses performed during testing of the water purification assemblies.

Table 13. Microorganism analyses performed on water samples.

Heterotrophic Plate Count	Gram Positive Bacteria
Aero-Tolerant Eutrophic Mesophiles	Gram Negative Bacteria
Fecal Coliforms	Anaerobes (enumeration)
Yeast and Molds	Anaerobes (qualitative)
Total Count	Enterics
Legionella	

6.2.4.4.2 Surface Analyses

Microbial monitoring of the EEF surfaces was incorporated to the phase 3 of the water recovery test to assist in the process of proper contamination control, to insure maximum safety of the subjects exercising, and as a basis for future comparative analyses. The swab technique was employed, because at the time it offered the most effective way of recovering organisms from small and difficult to reach areas. The specimens are taken via a moist sterile Dacron swab and promptly transported to the laboratory for heterotrophic bacteria and yeast and mold analysis.

6.2.4.4.3 Atmosphere Analyses

Monitoring for microorganisms in the atmosphere of the EEF was incorporated in the phase 3 water recovery test to permit periodic assessment of atmosphere quality, to insure the maximum safety of the people exercising. Atmosphere monitoring also provided information on the effectiveness of the filters in the clean room; aided in the process of identifying contamination sources; and helped correlate bacterial and yeast and mold populations in atmosphere, water, and on surfaces. Atmosphere samples were collected with a centrifugal atmosphere sampler, a hand-held instrument based on the principle of centrifugation. Particles are collected from the atmosphere and impacted on a plastic nutritive medium strip for later enumeration of microorganisms.

6.2.5 Hardware Packaging

An important part of the design process is ensuring that the hardware will fit in the available space in the habitat. As mentioned above (section 6.2.3.3.3) the Bosch CO_2 reduction assembly was eliminated from consideration for initial use on S.S. *Freedom* partly because a unit sized for the 90-day resupply cycle for cartridge replacement was too large to fit in the available rack space. With an improved catalyst that reduces its size, the Bosch will be a viable method. The Bosch would also be a viable method for a mission that allows more volume, as may be the case for a lunar base. Man-systems requirements specify that equipment be repairable by an astronaut in a pressure suit, in case repairs must be made while a habitat is depressurized. This means that any fasteners for ORU's must be accessible and operable while an astronaut is wearing a pressurized glove. Schematics of the water processing rack and the ARS rack are shown in figures 53 and 54, respectively. While the hardware is densely packaged in the racks, there is sufficient room for ORU's to be removed and for internal ventilation.

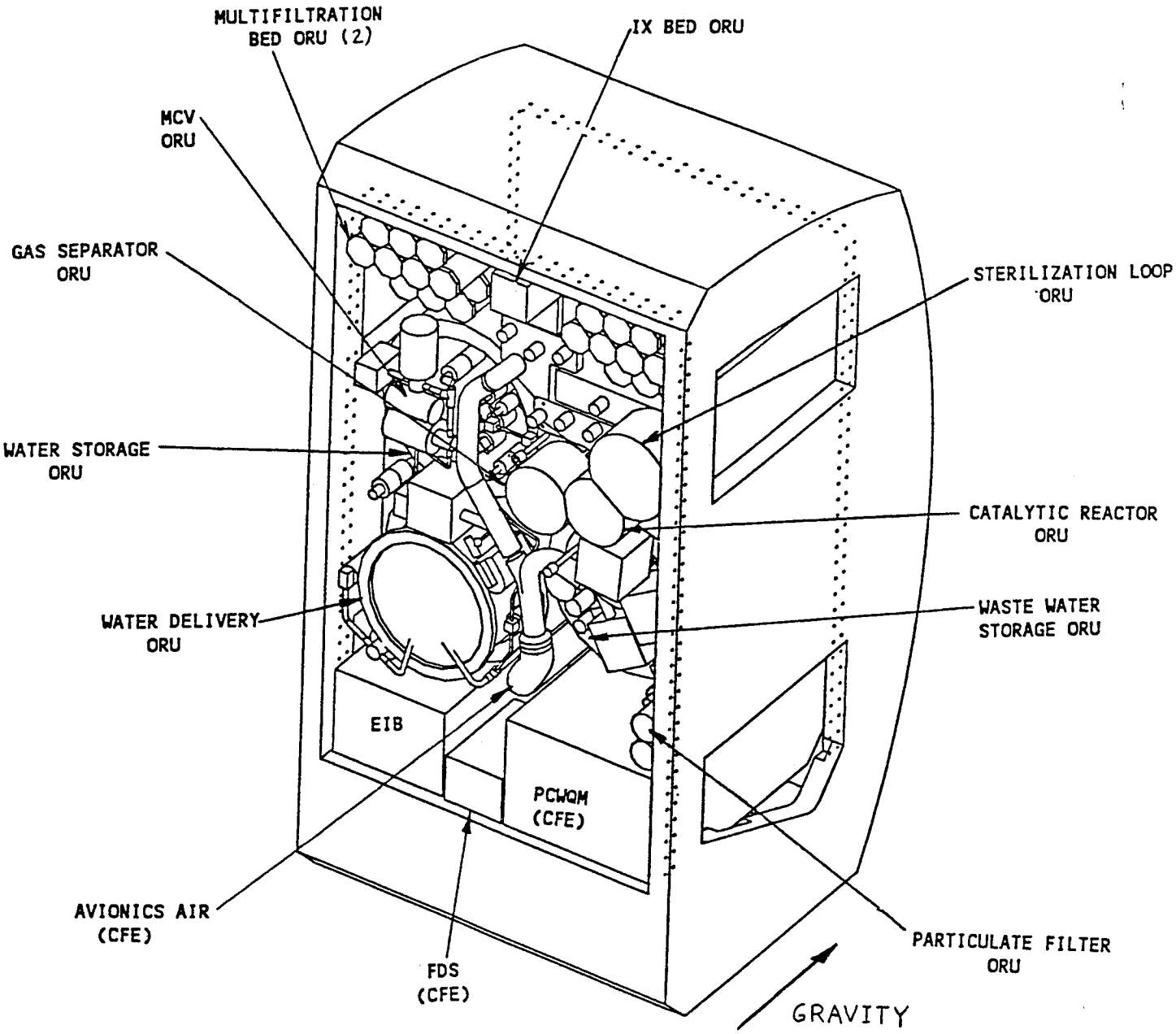

Figure 53. WRM rack packaging.

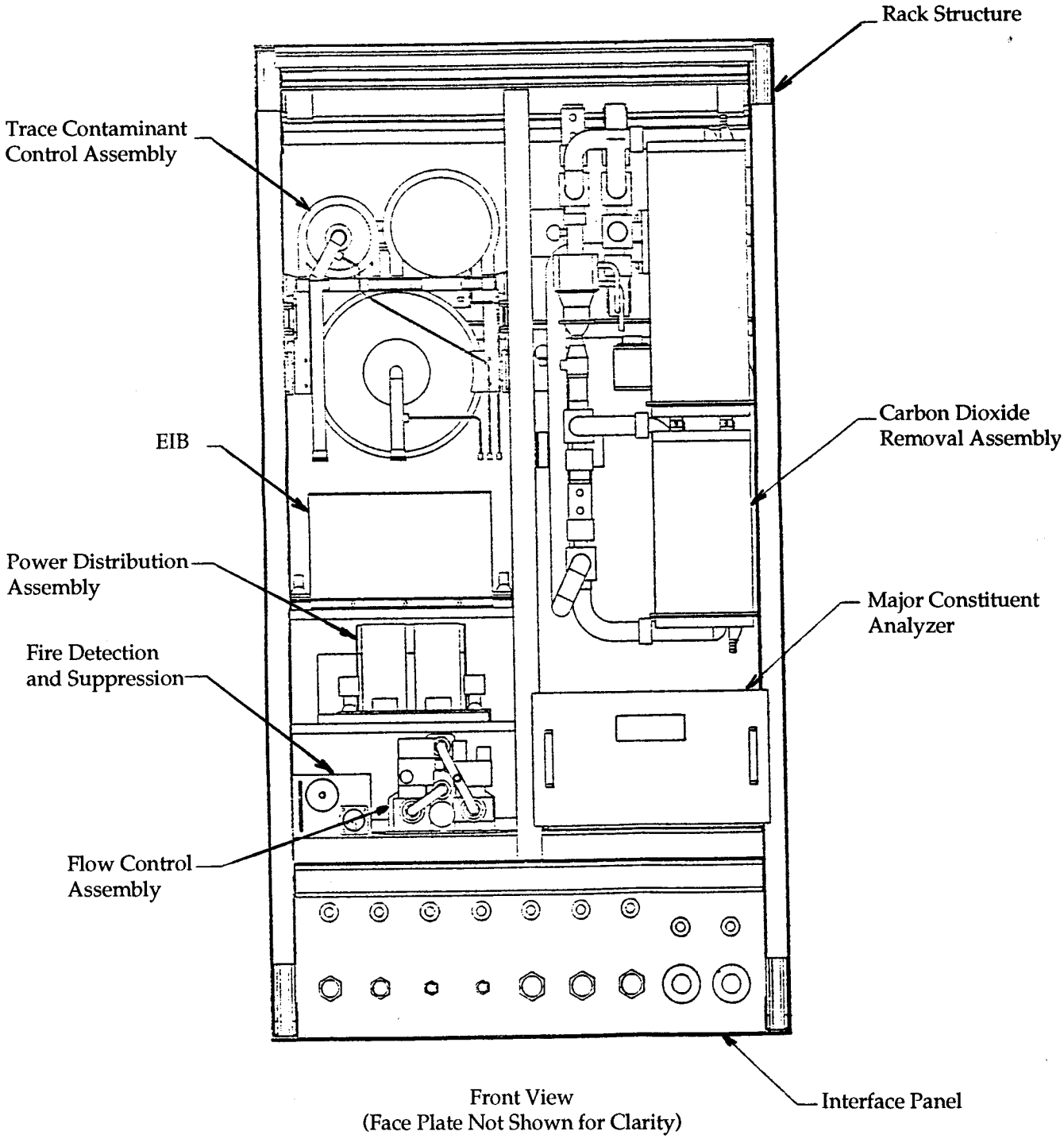

Figure 54. ARS rack packaging.

7.0 BEYOND LOW EARTH ORBIT—THE CHALLENGE OF REMOTE ECLS

After S.S. *Freedom* is operational, there are several options for further exploration of space. Plans are being made for human missions to establish a lunar base and to explore Mars. A key feature of these missions is that they involve spending long periods of time far from resupply sources. Two factors relating to the ECLSS immediately become more important: recycling of water and oxygen and reliability of the hardware and software. Other factors also become more important depending upon the mission scenarios, such as food production and waste management. These and other technical challenges will have to be effectively dealt with before long distance missions can be performed with a high degree of confidence. Biological factors such as the behavior of plants and microorganisms in space will have to be well understood, as well as the medical aspects of long-term exposure to microgravity and methods of protection against solar radiation. There are Earth-bound situations which are similar in some respects to long duration space missions. These are discussed below as well as mission scenarios which are representative of those being planned and their ECLS-related aspects. Trade studies comparing the available methods of performing the ECLS functions for specific missions will need to be performed and these are discussed below along with results of some preliminary studies.

7.1 Technical Challenges

For these future long duration missions for planetary exploration and habitation, the ECLSS must be highly efficient, reliable, and safe. The design of these future systems will depend on many factors, including mission requirements and timelines, technology readiness, and cost constraints. Numerous technical challenges must be successfully met in order to ensure a safe mission beyond LEO. One of the most important is ensuring the long-term reliability of the ECLSS to perform properly. Due to the cost of storing supplies or sending resupply vehicles long distances, factors such as ensuring that hardware can be maintained by the crew, minimizing the use of expendables, and recovering as much mass as possible acquire an importance far beyond that for previous missions.

7.1.1 Long-Term Reliability

Some components are inherently less reliable than others due to wear or other factors. Components such as pumps, blowers, and motors in general tend to wear out over time. In some cases there are alternative methods of performing a function. For example, there are several methods for separating liquids from gases, most of which involve rotating parts. For some applications, however, other methods may perform the task just as well, such as by using directed ultrasound which involves no moving parts. When methods which are inherently more reliable are not available, then methods of improving the reliability are needed such as improved bearings or better lubricants. The key is to design in reliability from the beginning.

7.1.2 Maintainability

When a part fails, it needs to be replaced or repaired. Therefore, those parts which are not inherently reliable must be accessible in order to minimize the amount of time required to replace or repair them. This is especially true for the ECLSS since only brief periods of nonoperation can be tolerated. Factors to consider include accessibility, ease of unfastening and fastening, ease of proper

PRECEDING PAGE BLANK NOT FILMED

PAGE 156 INTENTIONALLY BLANK

positioning, and reparability of parts so they can be reused. Also, the number of small parts which could float away and be lost should be kept to a minimum. Sensors and instruments usually require periodic calibration to ensure accurate readings and must be designed to be self-calibrating or to allow calibration during maintenance. Maintainability also must be designed in from the beginning.

7.1.3 Minimization of Expendables

Ideally, only processes which do not involve the use of expendables would be required. Unfortunately, this is not likely to be the case, and so it is necessary to plan for replacing filters, cartridges, reactors, sorbent materials, instrumentation, and other components. Careful selection of technologies can minimize the inherent amount of *total* expendables required, and careful design of hardware can ensure that the absolute minimum is achieved. For example, for CO_2 reduction there are several alternative concepts available. Ones which can pack the carbon to the greatest density will require less volume, so the reactor will be smaller. In addition, a decision must be made as to how much of the reactor will be included in the ORU. It may include the entire reactor housing or the ORU may be designed as an insert which consists of little more than the packed carbon. In this case, one factor to consider is whether any carbon could escape into the cabin atmosphere. If it is sufficiently dense this is not a problem. For less dense carbon, precautions will need to be taken to avoid having carbon particles floating in the atmosphere, which may add to the size of the ORU. The point is that minimizing expendables is also a factor of design and needs to be considered early in the design process.

7.1.4 Maximum Mass-Loop Closure

The costs associated with resupplying water and O_2 will far outweigh the costs of recycling them. Planetary ECLSS's will use some of the concepts proposed for S.S. *Freedom*, however, closing the mass loop further by growing plants, which convert some of the CO_2 to food while releasing O_2, will be cost effective for some missions. Recovering more of the solid waste, by incineration or by a super critical water oxidation (SCWO) assembly, will be cost effective for long-term settlements, but may not be cost effective for transfer vehicles or short-term bases. Once a mission scenario has been sufficiently defined, the maximum degree of mass-loop closure which is economical can be determined. This is done by evaluating the "break-even" points for the available technologies on a plot of mission duration versus cumulative mass. An example of such a plot is shown in figure 55. This plot compares five approaches to performing the ECLSS functions:

1. Nonregenerable physicochemical
2. Regenerable physicochemical with water recovery
3. Regenerable physicochemical with water and oxygen recovery
4. Hybrid physicochemical with biological
5. CELSS (completely biological).

The five approaches bound the range from a totally open mass loop to closed water, oxygen, and food loops. The relative initial mass (or cost) of each system is indicated by the height of each line at the left of the graph. For each approach, as the mission duration increases, the cumulative mass also increases due to resupplied expendables. There are points, however, where the lines

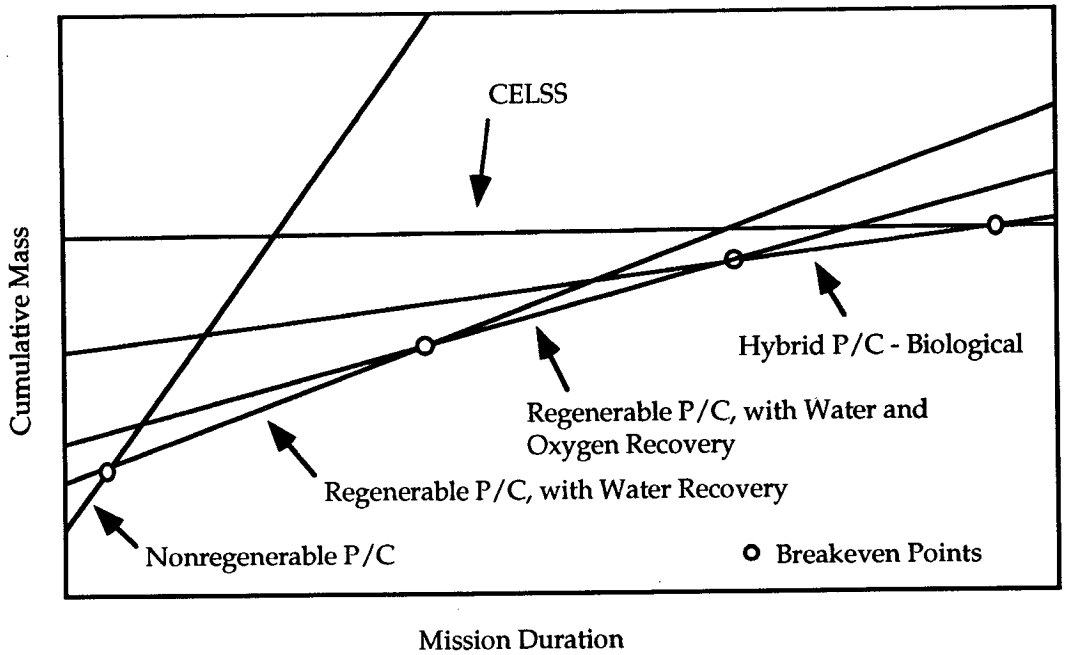

Figure 55. Sample break-even plot.

intersect, which indicates that as mission durations increase an increased level of closure will require less mass, and therefore have a lower *total* cost. In order to determine the break-even points with confidence, the candidate technologies must be well understood and have a high level of development maturity, the mission scenario must be sufficiently well defined with regard to the parameters which affect the break-even analysis, and any assumptions must be defined and understood. The trade study methods described in section 7.5 are used in preparing a breakeven plot.

7.2 Biological Factors

Biological factors such as physiological effects of spaceflight on people and, to a limited extent, microorganisms have been important from the beginning of human space flight. In the future, plants will be grown to produce fresh food for long duration missions. In addition, microorganisms will be of greater concern due to unknown effects of long-term exposure to microgravity and solar (and other) radiation on their behavior and development.

7.2.1 Food Production

Growing plants for food is an important way to further close the mass loop and reduce the dependence on resupply. In addition, plants reduce the load on the atmosphere revitalization subsystem by absorbing CO_2 and releasing O_2 and by absorbing trace contaminants from the atmosphere. Plants can also purify water via transpiration. Early experiments include the "salad machine" which will evaluate how plants grow in microgravity and test methods of ensuring that the proper nutrients are provided to the plants. The goal is to grow enough salad vegetables in this rack-size growth chamber to provide the crew on board S.S. *Freedom* with at least one salad each per week. While this is a small percentage of the diet, the fresh vegetables will be a welcome addition to the stored food. Larger scale plant chamber concepts are being evaluated through ground-based

experiments at KSC, ARC, and SSC, and the data are being acquired which will be necessary to design a space worthy facility capable of providing a significant portion of the diet.

7.2.2 Microorganisms

Microorganisms will be present in any inhabited spacecraft or habitat. The present approach is essentially to initially sterilize the ECLSS and to use a biocide in conjunction with heat (or UV, ozone, or radiation) to control the growth of microorganisms in water. Microorganisms in the atmosphere can be removed by HEPA filters. Microorganisms are beneficial in the digestive tract because they produce nutrients such as vitamin K that is synthesized by coliforms, folates, pyridoxine, and biotin, and they inhibit colonization of some pathogenic microorganisms. For growing plants, it may be necessary to duplicate the natural cycle where atmospheric N_2 is converted by microorganisms into a form that plants can use. The key is to establish a controlled balance where no single microorganism species is allowed to multiply beyond healthy limits and no beneficial species is entirely eradicated. Such a balance in a space habitat may be unstable, therefore, it will be necessary to maintain cultures of beneficial microorganisms to replace those which die out. Selection of materials affects microorganism growth, therefore, materials which can be degraded by microorganisms over the mission duration should not be used.

7.3 Terrestrial Analogs and Testbeds

In order to have confidence in the long term capabilities of an ECLSS, testing is necessary under similar conditions and constraints. There are several terrestrial analogs of various aspects of the conditions which will be faced by ECLSS's on long duration space missions. Some are based on P/C systems, while others are biological. Submarines (discussed in section 5.1.2) provide analogs for some aspects of long duration space missions.

The goal of research with biological life support systems is to learn how to optimize and control these systems to support human life in space with maximum safety, efficiency, and comfort. Many different types of plants and combinations of plants must be investigated under a variety of environmental conditions to optimize food production and atmosphere and water conditioning. Humans, along with waste and food processing systems, must be integrated with plants to complete CELSS optimization studies.

Extensive research with controlled environments must be performed on Earth before applying CELSS concepts to space environments. With the exception of microgravity effects, almost all other aspects of a CELSS can be simulated on Earth. CELSS research on Earth reduces the high costs, risks, and logistics penalties of space-based experimentation.

Most of the data generated from terrestrial CELSS testbeds comes from the Soviet Union/Russia's BIOS experiments in which people were sealed in large chambers with plants. U.S. research has been relatively limited, emphasizing selection of candidate crop species and definition of cultural and environmental conditions for maximum production of edible biomass per unit time per unit growth area. NASA is currently implementing a more extensive research program consisting of controlled plant growth chambers at JSC, KSC, and ARC. Several U.S. universities are also operating plant growth chambers, including Utah State University, Purdue University, and the University of Wisconsin. Additional terrestrial CELSS research is ongoing in other countries, such as France and Japan.[1,2,3]

7.3.1 Antarctic High Base

The harsh climate, cold temperatures, terrain, and isolation of Antarctica provide an environment on Earth that closely parallels the harsh, isolated conditions to be faced by humans on long duration missions in space. The Antarctic research project provides a unique and accessible testbed for developing advanced ECLSS for colonies on the Moon and Mars. On January 25, 1991, NASA and the National Science Foundation (NSF) signed an agreement to conduct life support research on Antarctica. NSF has operated a research post on Antarctica for almost 34 years and has gained considerable experience in maintaining human life in a harsh environment.(4)

7.3.2 Soviet/Russian BIOS Experiments

The Soviet Union/Russia has extensive CELSS research experience. Work began in the early 1960's with a project known as BIOS, located in Krasnoyarsk, Siberia. BIOS is an airtight steel chamber designed to simulate the isolated environmental conditions of a space habitat. The first BIOS "spaceship" for biological life support experimentation enclosed only a small volume of 12 m^3 (424 ft^3). BIOS has evolved to support much more elaborate research, and *BIOS 3* is a rectangular chamber with an area of 60 m^2 (646 ft^2) and a volume of 315 m^3 (11,123 ft^3). *BIOS 3* is divided into four equally-sized airtight compartments, two for growing higher plants, the third for algae cultures, and the fourth for a crew of three. Test durations have been as long as 180 days, with the crew living almost exclusively on water, O_2, and food produced by the plants.

Some of the conclusions from the BIOS experiments are:

1. Given the growing conditions of the experiment and 14 m^2 (151 ft^2) of growth area, higher plants were able to provide a sufficient output of oxygen and water in a closed environment to satisfy the requirements of three crewmen.

2. The set of crops studied can regenerate a nontoxic atmosphere for the crew.

3. Higher plant transpiration moisture condensate, after final purification and mineralization, completely satisfied the requirements of the crew for drinking water, as well as for sanitary and domestic water, in practically unlimited quantities.

4. Harmful incompatibilities may exist between system elements. For example, an incompatibility was observed between the algae and higher plants during stage three of the experiment. A secondary process of the microalgae culture technology apparently produced some unknown substance which killed some of the plants. If such incompatibilities are not identified and removed from the system before flight, crew safety will be in jeopardy.(5)

7.3.3 *Biosphere 2* Experiment

Space Biospheres Ventures, a private U.S. firm, has constructed a controlled ecological life support system in the Arizona desert. The system, called *Biosphere 2*, is completely enclosed and isolated from the environment of "Biosphere 1," the Earth. *Biosphere 2* attempts to simulate the complex, evolving nature of Earth's biosphere composed of various ecosystems operating in synergistic equilibrium. Research with *Biosphere 2* may provide much of the knowledge necessary to

construct similar systems for human life support on long-term space habitats or planetary colonies. Eight people, "Biospherians," were sealed inside *Biosphere 2* in the autumn of 1991 for a 2-year experiment.(6)

Biosphere 2 covers over 12,800 m^2 (3 acres), with an enclosed volume of about 198,240 m^3 (seven million cubic feet). The space frame and glass structure contain seven major biomes: a tropical rainforest, tropical savanna, marsh, ocean, desert, intensive agriculture, and a human habitat. The species inhabiting *Biosphere 2* include plants, fish, insects, animals, and eight people, and are intended to be self-supporting.

Biosphere 2 is primarily a biological life support system, with some augmentation from P/C methods to accommodate fluctuations in biological processes. Food for the Biospherians comes from photosynthetic plants and from animal products, such as goat milk, chicken eggs and meat, and fish. Animal and human waste is decomposed by microorganisms in a compost pile, then used as fertilizer for plants. Waste water in excess of the compost requirement is sterilized and used as irrigation water. The water cycle is completed with condensing coils that remove water vapor from the atmosphere produced by evaporation and plant transpiration.

Control of temperature and humidity involves conventional air conditioning technology, with water as the working fluid. Air handling units heat, cool, and dehumidify fan-driven air to maintain desired conditions. Pressure in the sealed environment must also be controlled to prevent large pressure gradients across the structure caused by the expansion or contraction of air that results from increases or decreases in temperature and by changes in barometric pressure. Two expandable chambers ("lungs") with a total volume of 42,480 m^3 (1.5 million cubic feet), allow expansion and contraction of the enclosed air volume. Electric generators supply all the power required by the environmental control system and other power-driven components. A computer network controls *Biosphere 2* and monitors system parameters with approximately 2,500 sensors.(6) Results of the *Biosphere 2* experiment will be important for understanding the requirements to develop a CELSS for space habitats and for identifying functions which require P/C augmentation.

7.4 Scenarios of Future Missions

Space missions envisioned for the coming decades include interplanetary travel and colonies on the Moon and Mars. To support these missions, the ECLSS and other space systems must be tailored to meet the needs and constraints particular to each mission. Some missions will include mitigating factors that simplify system design, while other missions will be much more complex. There is no single optimum design for a particular system that is best for all types of missions. The ECLSS for a planetary colony will have a different design than for an interplanetary spacecraft, just as the ECLSS for a transfer vehicle between the Earth and Moon will differ from the ECLSS for a spacecraft designed to travel between Earth and Mars. Gravity level, mission duration, length of resupply lines, mission timeframe, in situ resources, and limits on power, mass, and volume are the primary mission-dependent factors that affect ECLSS design. This section describes scenarios of potential future human missions to the Moon and Mars, and discusses the effects of mission characteristics on ECLSS design.

7.4.1 Interplanetary Spacecraft

The construction and operation of lunar and Mars colonies will rely on an interplanetary transportation system consisting of several types of spacecraft. These craft will bring up crew and supplies from Earth, then carry them between planets and orbiting space stations. An unmanned launch vehicle or the orbiter will carry payloads from the ground into Earth orbit, then a lunar or Mars transfer vehicle will carry the payload to the Moon or Mars, respectively. The purpose of the orbiter and the design of its ECLSS are discussed in chapter 5. ECLSS design issues for the other habitats in this hypothetical transportation system are discussed in the following paragraphs.

7.4.1.1 Lunar Transfer Vehicle

The lunar transfer vehicle (LTV) transports crew and cargo between an Earth-orbiting space station and lunar orbit. The LTV has interchangeable crew and cargo modules and is powered by a solar array and batteries or by fuel cells. The LTV crew module supports four crew members for 4 days on the translunar segment, and up to 7 additional days for return to the space station.(7)

Because LTV missions are short in duration and within close proximity to Earth, an open-loop P/C system may be the best choice for providing life support. With short duration missions, it is possible to carry enough gas and water supplies to last the entire mission without running into weight and volume limitations. Oxygen, nitrogen, and water are held in tanks that are resupplied at both ends of the mission. Carbon dioxide and waste water can be vented or stored for processing on the lunar colony or lunar space station.

7.4.1.2 Lunar Excursion Vehicle

The lunar excursion vehicle (LEV) transports four crew between the LTV in lunar orbit and the lunar surface. The LEV systems are quiescent, except for the 4 days required for descent and ascent operations and the 2 days during crew initial surface preparations and preparation for return to lunar orbit.

The LEV crew modules accommodate lunar and zero gravity operations. Similar to the LTV, the life support system on the LEV is a two-gas open-loop design, with hygiene facilities and accommodations for human solid waste management.(7)

7.4.1.3 Mars Transfer Vehicle

The Mars transfer vehicle (MTV) consists of a core vehicle and an expendable trans-Mars injection stage. This vehicle carries a crew and an excursion vehicle to Mars, and can return a crew to Earth. It contains an Apollo-like Earth crew capture vehicle for direct crew return to the surface or an aerobrake for rendezvous with an orbiting space station.(7)

The MTV has a regenerative, closed-loop life support system which is capable of supporting five crew for missions up to 3 years. A closed system is the most practical design for an MTV, which must travel for many months without resupply. Unless the MTV is extremely large, it will be impossible to carry all the food, water, and gas necessary for the mission. Regeneration of the atmosphere and water supplies will reduce storage problems, although considerable backup supplies of gas and water will probably still be required.

With a closed P/C system, food storage for missions lasting several months to several years will still involve significant weight and volume penalties. Designing the MTV with a CELSS may be the best way to maintain the food supply. The CELSS could serve as the primary system for life support, or as a supplementary system in an attached module.

7.4.1.4 Mars Excursion Vehicle

The Mars excursion vehicle (MEV) transports a crew of four and cargo from the MTV to the Mars surface. The MEV provides spartan crew accommodations and food for up to 30 days during habitat activation. The crew module provides consumables sufficient for landing and 2 days on the surface. Consumables required to sustain the crew while activating the habitat will be obtained from cargo and the initial habitat module.(7) Figure 56 is a conceptual drawing of a Mars transportation system, consisting of an MTV and MEV. The ECLSS for an MEV can be a simple open loop design where wastes are stored for transfer to the regenerative system on the MTV or Mars habitat.

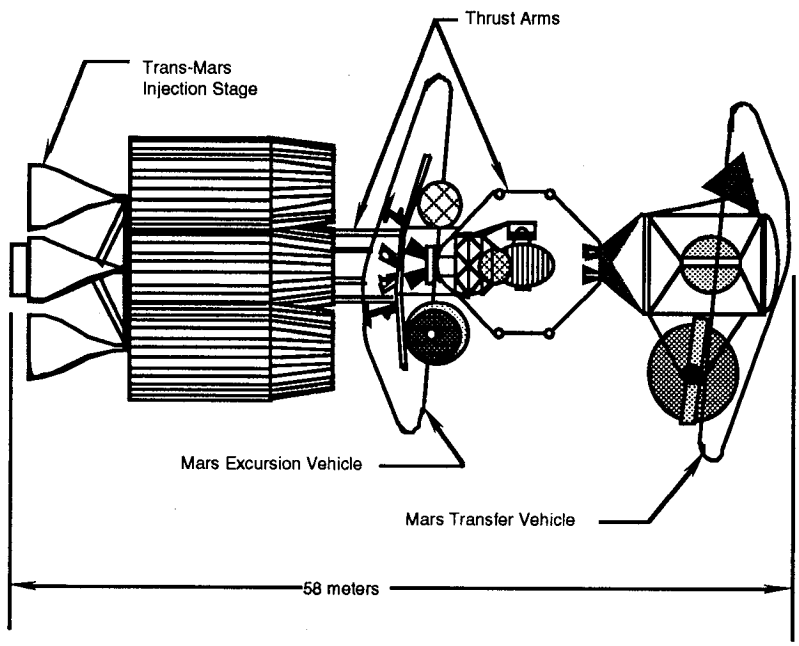

Figure 56. Mars transfer and excursion vehicles (MTV and MEV).(7)

7.4.2 Planetary Bases

Colonization of the solar system may begin with bases on Earth's Moon and Mars. These bases will begin as small, rather crude outposts designed to temporarily support a small expeditionary crew. Over several years, the bases may grow to be quite large, supporting large populations for many years. Figure 57 outlines potential build-up scenarios for lunar and Mars bases.

ECLSS's for planetary bases will likely evolve into hybrid systems that combine P/C and CELSS concepts. Early colonies will serve as testbeds for CELSS research, and may employ some CELSS functions as backup to the primary system. The large amount of space available on a mature colony is ideal for accommodating a CELSS with one or more large plant growth areas.

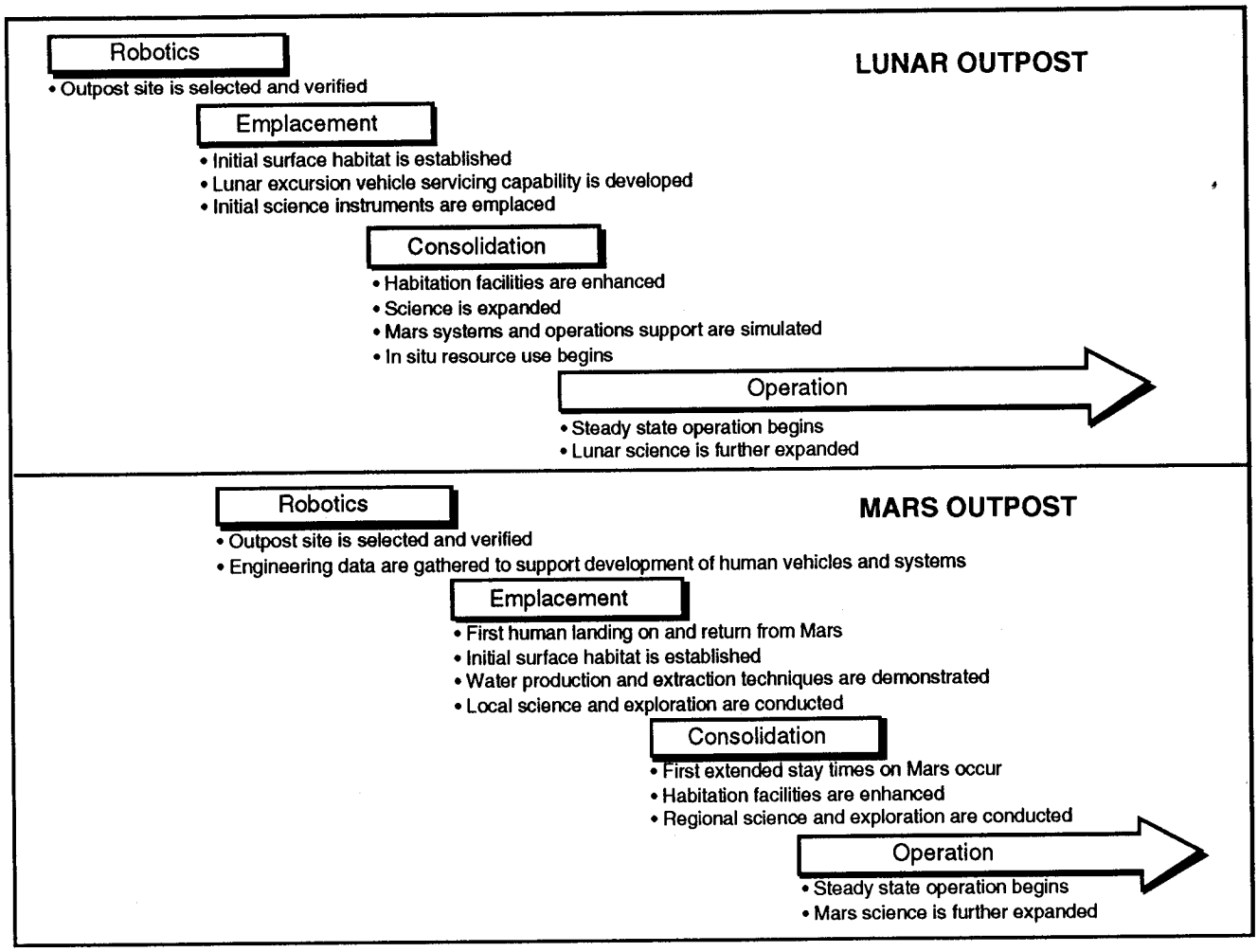

Figure 57. Mission phases for colonizing the Moon and Mars.(7)

Many of the limitations that apply to spacecraft will not apply to planetary habitats. A large colony powered by nuclear reactors or expansive solar arrays will not be as limited by volume and power as a space habitat. ECLSS design will also be simplified by the respective 1/6 and 1/3 gravity environments on the Moon and Mars. One advantage of gravity is the simplification of devices used to handle liquids and gases and the elimination of some gas/liquid separators. For example, the vapor compression distillation (VCD) urine processor used on S.S. *Freedom* can be simplified. Designed with a rotating drum to facilitate distillation, the VCD can be replaced in a gravitational environment by a more conventional distillation device with fewer moving parts. Condensing heat exchanger design is another case where simplifications are possible in a gravitational environment. Suction methods to remove water from a CHX can be replaced in favor of the gravity-reliant draining techniques used with conventional air conditioning systems.

In situ resource utilization is another advantage of a planetary ECLSS that will reduce resupply and foster colony autonomy. Use of in situ resources will increase as colonies mature and production plants are developed to extract useful materials on a large scale.

7.4.2.1 Lunar Habitat

Phase A studies of missions to establish a lunar habitat are being performed at MSFC and other NASA centers.[8] Various scenarios are being considered having crew sizes of four or more and durations from a few months to indefinite. For one scenario, the initial lunar habitat crew will be principally responsible for surveying and preparing the outpost site, and will live in a group of cylindrical modules supported by a P/C life support system. The initial habitat will be capable of supporting a crew of four for 30 days to 3 months, and will store and maintain a LEV. There will also be 6 months of contingency consumables on site. Before the next phase of habitat expansion, full safe haven and operational health maintenance facility (HMF) capabilities will be in place.

During the consolidation phase, the lunar habitat will be expanded by the addition of the constructible habitat module (CHM). The initial habitat, expanded with the CHM, will be able to support a crew of four for 6 months to 600 days. A lunar liquid oxygen (LLOX) facility will then be constructed to produce oxygen from lunar soil.[7] As the colony continues to expand, much of the P/C ECLSS hardware will be replaced by biological components. By the operation phase of the buildup scenario, large farms may have developed to support all the air, water, and food needs for hundreds of colonists. Figure 58 shows what a lunar base may look like during the early stages of development.

7.4.2.2 Mars Habitat

The evolution of a Mars habitat will follow the same path as lunar base buildup. Eventually, the habitat may be capable of supporting hundreds of colonists on a permanent basis by using facilities that produce hydrogen, oxygen, and water from Martian resources. In situ resource utilization on Mars will include the removal and reduction of CO_2 from the CO_2-rich Martian atmosphere. Water from the Martian poles may also prove a valuable natural resource.

Resupplying a Mars colony will be an extremely costly, lengthy process. Implementation of a CELSS will reduce resupply and enhance colony self-reliance. A large scale CELSS in conjunction with terraforming could ultimately transform Mars into an Earth-like planet.[9]

7.4.3 <u>In Situ Resources</u>

Lunar and Martian missions provide opportunities to use materials which are present in the soil or atmosphere. Processing these in situ resources may significantly reduce the amount of the resupply needs that must be brought from Earth, although recycling mass that is already in the system may be easier than processing in situ resources. Possible resources include O_2, water, and nutrients for plants. Other uses include radiation shielding for the habitats, construction materials, and fuel. In situ resources also include heat sinks and sources, and thermal protection such as by building underground on the Moon or Mars. Essentially, an in situ resource is any resource, physical or otherwise, which can be used to reduce the amount of materials which must be resupplied or stored.

7.4.4 <u>Rovers—Pressurized and Unpressurized</u>

Pressurized rover vehicles to transport people and equipment on the Moon or Mars require an ECLSS that performs some of the functions described in chapter 2. The specific functions required depend upon the mission durations and other factors. Unpressurized rovers may include equipment

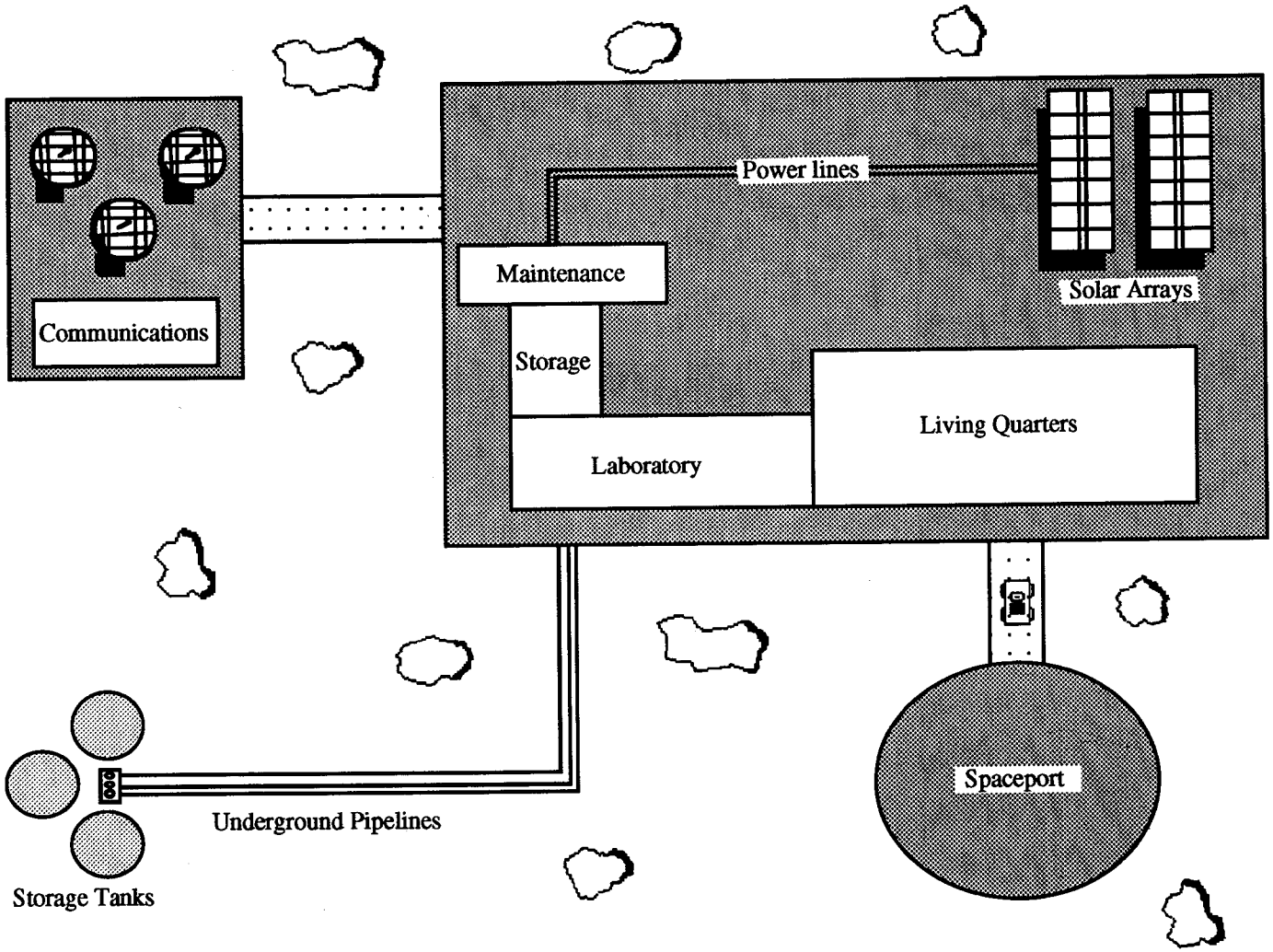

(Drawn by Stacie Guthery, MDSSC, 1990)

Figure 58. Concept of an early lunar base.

to perform some ECLSS functions such that, for example, space suit ECLSS's can be regenerated without returning to a habitat.[10]

7.5 Trade Studies

Future ECLSS's are unlikely to be 100-percent biological or 100-percent physicochemical. For a biological CELSS that regenerates the atmosphere and water, the biological components can perform many of the most important ECLSS functions, but cannot perform *all* ECLSS functions without the use of P/C hardware. For example, mechanical filters will still be needed to remove contaminants from the atmosphere and water, tanks will be required for fluid storage, pumps will be needed to move water between tanks and points of use such as hand washers and showers, and fans and heat exchangers will circulate and condition the atmosphere.

Currently, CELSS concepts are in the research stage. Until a CELSS can be realistically incorporated into a space habitat as a proven flight unit, life support systems will have to be designed with entirely physicochemical hardware. Although it may soon be possible to design a P/C ECLSS with biological redundancy to test CELSS concepts, near-term designs will focus on the use of better known and understood P/C methods.

When developing a P/C ECLSS for future missions, there are many existing and potential technologies which must be considered for performing each ECLSS function, such as CO_2 removal, urine processing, and oxygen generation. Selecting the technologies best suited for each mission well ahead of planned launch dates is vital to mission successes and to the efficiency and effectiveness of technology development programs. The selection procedure itself is an important factor in choosing the right technologies. A poor selection process will result in improper technology selections. There are two types of trade study methods (described in sections 7.5.2.1 and 7.5.2.2) that are used to select ECLSS technologies for future missions—NASA/MSFC and McDonnell Douglas method and NASA/JPL method.

7.5.1 Hardware Selection/Prioritization of Development

When planning for a future mission that has requirements not presently available, trade studies are performed in order to compare the most likely candidate methods and selecting those most capable of being developed to meet the requirements. This frequently involves evaluating the development potential of a technology that may be at a design maturity level of 4 or 5 and determining whether it could meet the requirements by the mission time, perhaps 10 years or more away. Some very promising ideas turn out to not be capable of meeting the requirements, so informed judgment is needed to make good selections. Once selections have been made, it often is necessary to prioritize the development of the technologies because of insufficient funding to pursue development of all of the technologies. This requires evaluating reasonable development times and addressing the ones with long lead times first. This, again, requires informed judgment to make good decisions. The trade study models discussed above can aid in making these decisions, but they are only as good as the information put into them and the accuracy of their algorithms.

7.5.2 Analysis Methods

The next major advance into space after S.S. *Freedom* will be to return to the Moon and to visit Mars. Two analyses, using different methods, were performed to evaluate the ECLSS requirements and to identify the technologies which will be best capable of meeting them. The methods and initial

results are discussed below. The first analysis was performed by MDSSC for MSFC and the second was performed by JPL.

7.5.2.1 NASA/MSFC and McDonnell Douglas Method[11]

Engineers from NASA/MSFC and McDonnell Douglas Space Systems Company (MDSSC) collaborated to develop a method for selecting P/C atmosphere revitalization (AR) and water processing (WP) technologies for future space missions. Only technologies with a TRL ≥ 4 were considered. Eight parameters were chosen to compare AR and WP technologies. Power consumption, mass, volume, and resupply weight are quantitative parameters, while development potential, emergency operation, reliability, and safety are qualitative parameters. A description of these parameters is given in table 14.

Table 14. Description of trade study parameters.

Trade Study Parameter	Parameter Description
Mass	Equipment mass. Mass also includes the impact of a technology on the mass of other system hardware. For example, the solid amine water desorbed (SAWD) CO_2 removal device outputs water vapor to the cabin atmosphere, which requires increasing the mass and volume of the cabin condensing heat exchanger (CHX). SAWD mass = SAWD + CHX mass increase. Power and volume values include similar impact considerations.
Power	Equipment power consumption.
Volume	Equipment volume.
Resupply	The mass of expendables that must be resupplied every 90 days. Resupply includes filters, chemicals, water, etc.
Development Potential	Development Potential indicates a technology's potential to improve with time. Technologies which are not well developed (low maturity) have the highest potential for improvement and optimization, and thus have the highest development potential.
Emergency Operation	Emergency Operation is an evaluation of how well a technology is expected to operate in a degraded/contingency environment. A score of "high" in this category indicates that the technology operates well under such conditions.
Reliability	Reliability is a measure of the amount of unscheduled maintenance and downtime expected for a technology during its operational lifetime (not including routine maintenance).
Safety	Safety indicates the chance that a technology will lend to or cause a hazardous condition. Although all flight hardware must be qualified as safe before flight, some technologies, due to characteristics such as high temperature and high pressure operation, can be considered more likely to cause an accident than others.

The eight parameters differ in relative importance depending on mission scenario. To reflect relative importance, a weighting factor must be assigned to each parameter for each mission scenario. Weighting factors are rather subjective, and were determined by averaging the opinions of

NASA and MDSSC engineers.[11] A sample of these weight factors is given in table 15, which lists the eight weight factors for the lunar transfer vehicle and Mars transfer vehicle mission scenarios, including some rationale on why each weight factor value was chosen.

Table 15. Comparison of weight factors used to select ECLSS technologies for the LTV and MTV.

Category	LTV Weight Factor	MTV Weight Factor	Comparison of Lunar Transfer Vehicle and Mars Transfer Vehicle
Power Consumption	24	16	Power consumption, mass, and volume are all limited for interplanetary spacecraft. Weight factors are similar, but the MTV values are lower due to a higher resupply factor. The sum of the weight factors is 100.
Mass	28	18	
Volume	23	18	
Resupply	25	48	Resupply of an MTV is more difficult than for an LTV due to much greater resupply distance.
Development Potential	low	medium	The MTV will probably be built 5 to 15 years later than the LTV. Technology will have more time to develop for incorporation into the MTV.
Emergency Operation	medium	high	The capability to operate under degraded conditions is more important for an MTV where rescue is virtually impossible in the event of an emergency.
Reliability	high	high	Extremely critical to all missions beyond Earth orbit.
Safety	high	high	Extremely critical to all missions beyond Earth orbit.

The four quantitative parameters are assigned numerical weight factors, with the four weight factors adding to 100 for each mission. Using a computer program developed by MDSSC, these weight factors are applied to weight, power, volume, and resupply data to determine the best technologies from a quantitative standpoint. Analogous numerical data for the four qualitative parameters is often unavailable. Assigning numerical scores to each technology for these parameters was considered far too subjective, therefore each technology receives a rating of "high," "medium," or "low" in those four areas as shown in table 16. For simplicity and consistency, and because the four parameters do not require numerical factoring into the computer program, each parameter is also assigned a weight factor of simply "high," "medium," or "low" for each mission.

Technologies are selected for each mission scenario based on a confluence of the following information:

1. A technology comparison computer program was developed to determine technology superiority on quantitative (power, weight, volume, resupply) merit alone. The program calculates a total score for each combination of three technologies required for the AR (CO_2 removal, CO_2 reduction, O_2 generation) and WP (urine recovery, hygiene and potable water processing) subsystems. Technologies are not compared individually, as in

Table 16. Qualitative parameter ratings for ECLSS technologies.

COMPONENT NAME	SUBTYPE	DEVELOPMENT POTENTIAL	EMERGENCY OPERATION	RELIABILITY	SAFETY
BOSCH	CO_2 REDUCTION	HIGH	MED	MED	MED
SABATIER	CO_2 REDUCTION	LOW	HIGH	HIGH	MED
CO_2 ELECTROLYSIS	CO_2 REDUCTION	HIGH	MED	MED	LOW
ACRS	CO_2 REDUCTION	HIGH	MED	MED	MED
APC	CO_2 REMOVAL	HIGH	HIGH	MED	MED
2-BED MOLE SIEVE	CO_2 REMOVAL	HIGH	HIGH	HIGH	HIGH
4-BED MOLE SIEVE	CO_2 REMOVAL	LOW	MED	HIGH	HIGH
LiOH SYSTEM	CO_2 REMOVAL	LOW	HIGH	HIGH	HIGH
SAWD	CO_2 REMOVAL	MED	MED	MED	MED
EDC	CO_2 REMOVAL	MED	MED	MED	LOW
WVE	O_2 GENERATION	HIGH	MED	HIGH	MED
SPE-LIQUID FEED	O_2 GENERATION	MED	MED	MED	MED
CO_2 ELECTROLYSIS	O_2 GENERATION	HIGH	MED	MED	LOW
STATIC FEED (SFWES)	O_2 GENERATION	LOW	MED	HIGH	MED
REVERSE OSMOSIS	HYGIENE WATER	MED	HIGH	MED	HIGH
MULTIFILTRATION	HYGIENE WATER	MED	HIGH	HIGH	HIGH
REVERSE OSMOSIS	POTABLE WATER	MED	HIGH	MED	HIGH
MULTIFILTRATION	POTABLE WATER	MED	HIGH	HIGH	HIGH
ELECTRODEIONIZATION	POTABLE WATER	HIGH	HIGH	MED	HIGH
AIR EVAPORATION	URINE RECOVERY	HIGH	MED	HIGH	HIGH
TIMES	URINE RECOVERY	MED	HIGH	MED	HIGH
VCD	URINE RECOVERY	MED	HIGH	MED	HIGH
VPCAR	URINE RECOVERY	HIGH	HIGH	MED	MED

a CO_2 removal technology versus a CO_2 removal competitor, but are instead compared in groups of three. The program output is a list of AR and WP technology combinations in groups of three, listed in order of total score. A complete set of data is sometimes unavailable for some technologies. For these technologies the quantitative computer evaluation should be given a low priority in the selection process.

2. A score of "high," "medium," or "low" is determined subjectively for each technology for the qualitative parameters of safety, emergency operation, development potential, and reliability. The score for each parameter is considered with its corresponding mission weight factor to determine the most qualified technology. Technologies in the same functional area such as CO_2 removal and urine recovery are compared against each other individually.

3. There are additional qualitative factors that will influence technology selections. A few examples are:

C-3.

Bosch versus Sabatier – Sabatier increases water resupply and requires methane handling. Methane and unreduced CO_2 from the Sabatier must be stored or vented. Vented gases may pollute the lunar environment. Productive uses for these waste gases (propulsion, mining, etc.) will make Sabatier more attractive.

WVE versus SFWE and SPE – Water vapor electrolysis (WVE) does not penalize the hygiene water supply and helps control humidity.

VPCAR versus other urine processors – Preventing water system contamination may be a difficult task for extended duration missions. The vapor phase catalytic ammonia removal (VPCAR) urine processor appears to have the highest potential for keeping the water system decontaminated over a long period of time. VPCAR may also be capable of processing potable water, reducing WRM complexity by reducing the number of water processors.

7.5.2.2 LISSA

The LISSA computer analysis tool described in chapter 4 has been used to evaluate ECLS options for a Lunar outpost and human missions to Mars.[12,13] Evaluations were made of open-loop versus closed-loop ECLSS's and the available technologies for a closed-loop ECLSS were compared. For the open-loop versus closed-loop evaluation different degrees of loop closure and regenerable versus nonregenerable techniques were considered. The primary criteria for comparison are mass, power consumption, and volume. System configurations and alternative technologies were evaluated.

For a Mars expedition, system configurations evaluated were open-loop (OL) and CO_2 removal only (CR), considering systems for an orbiter and a lander. The OL system does not regenerate any life support material and atmosphere is vented to maintain appropriate CO_2 levels. The CR system includes a method for removing CO_2 from the atmosphere and O_2 is the makeup gas. The CL system regenerates O_2 and water consumed by the crew with variable levels of recovery efficiency. System specifications for crew metabolic inputs and outputs are required as well as mission specifications. For the Mars mission, an approach using a cargo vehicle to transport supplies and a later and faster crew transfer vehicle was evaluated. A crew of three was considered, with a total mission duration of 440 days. Once at Mars one person would remain in orbit while the other two descend to the surface for 30 days. The orbiter ECLSS may or may not be the same as the lander ECLSS.

Results can be graphically represented to readily compare mass, power consumption, volume, heating demand, and cooling demand. Comparisons were made for the total system, subsystems, supplies, CL, CL versus CR for short duration missions, and backup supply masses for CL. A representative plot of the types of comparisons produced is shown in figure 59. The trends show that as loop closure increases the mass decreases, while power consumption increases.

Technology trade studies for closed loop systems compared candidate technologies for each of the ECLS functions. Detailed information is needed to ensure that integration aspects are properly addressed, such as flow rates and other processing parameters, which do not necessarily have a linear relationship with crew size and hence cannot be scaled the same. Equipment lists with mass, power, and volume data on each part, process flow schematics, heat and material balances, and

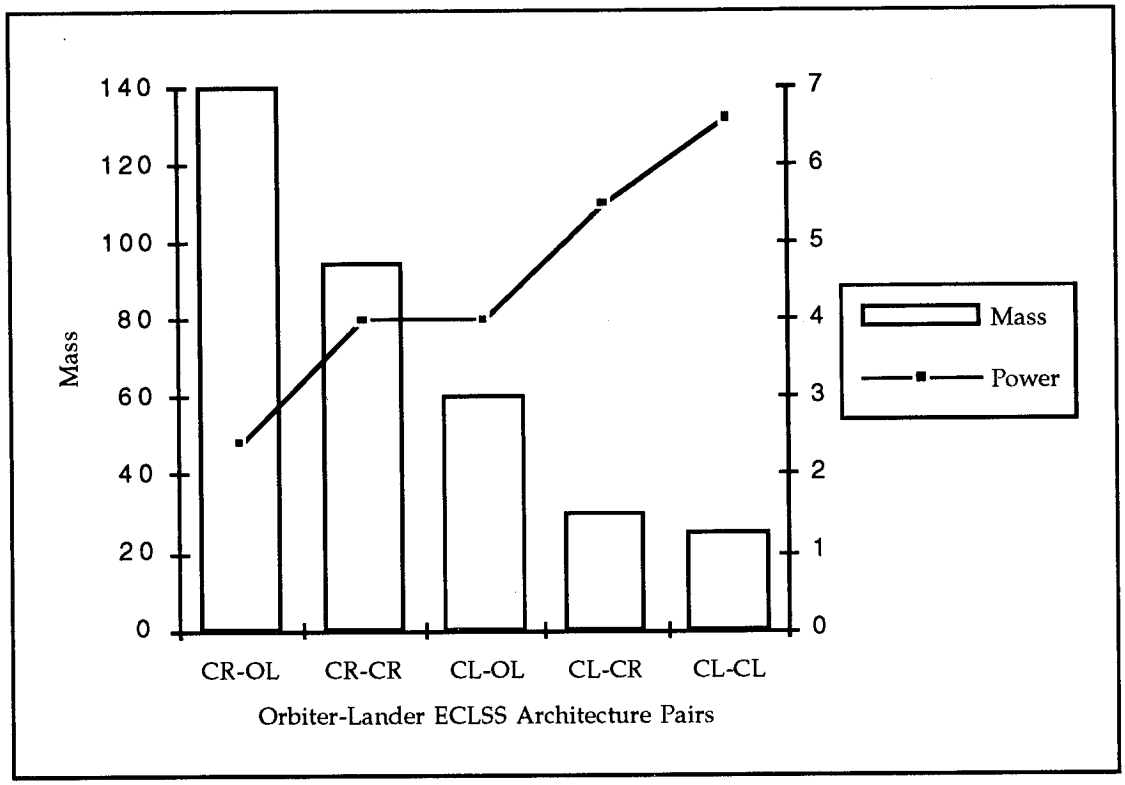

Figure 59. LISSA comparison of ECLSS configurations.

equipment drawings are needed for each process. Sufficient detail was available for the technologies considered for use on S.S. *Freedom* and a few other technologies. Based on the available data, the results of the study rank mass and power advantages compared with the technologies selected for use on S.S. *Freedom* (referred to as the baseline (BL) technologies). These results are shown in tables 17 and 18.

For short duration missions, nonregenerable methods such as LiOH could have mass and power advantages over regenerable oxygen generation methods. However, regenerable water processors will likely be advantageous for even short duration missions such as the Mars lander.[13]

Table 17. Potential mass advantages.

Potential Advantage Over BL, kg (lb)	Life Support Function	Technology	Validity Level
>908 (>2,000)	Hygiene Water Processing	MF	3 (same as BL)
272-363 (600-800)	CO_2 Reduction	ACRS CO_2 EL/BD	4 7
<318 (<700)	O_2 Generation	WVE	7
<91 (<200)	CO_2 Removal	2BMS APC	4 7

Table 18. Potential power advantages.

Potential Advantage Over BL, orbiter/lander, watts	Life Support Function	Technology	Validity Level
500/700	CO_2 Removal	APC 2BMS	7 4
200/300	CO_2 Reduction	CO_2 EL/BD	7
150/230	Hygiene Water Processing	MF	3
150/230	O_2 Generation	WVE	7
10/15	Urine Processor	VCD	3

8.0 CONCLUSION

Human exploration of space is advancing from short duration, nearby exploratory missions to long duration permanent space stations, exploration and settlement of the Moon, and interplanetary travel to Mars. To provide for the people who embark on these missions, the ECLSS's will need to become more sophisticated and be capable of providing more of the biological needs while requiring minimal resources in the form of resupplied expendables or make-up mass. The ECLSS for S.S. *Freedom* is a major step in this direction and will provide the foundation for the ECLSS's of future missions. The technologies that will perform the ECLS functions for these missions are being developed. The analysis tools needed for development of these ECLSS's are largely available and verified with test data, the facilities for hardware development and testing are available with regard to physicochemical systems, and the capability for analyzing the large quantities of water and atmosphere samples generated during testing are in place. For biological life support systems, research laboratory facilities are available, and facilities for developing a flight qualified system are being planned.

As the ECLSS's for space habitats advance from nonregenerable to regenerable, to closed water loop, to closed oxygen loop, to closed mass loop, they are following the trend described by Buckminster Fuller of doing more with less. The improved technologies and more efficient use of resources that result from this trend will have effects far beyond those directly related to human exploration of space. Increased capability, increased reliability, and reduced expendables resulting in reduced total system/mission mass, volume, and power consumption will allow the dream of permanent human presence in space to be realized, and contribute to a better life for all.

APPENDIX A

LEVELS OF HARDWARE AND SOFTWARE COMPLEXITY

PRECEDING PAGE BLANK NOT FILMED

PAGE 176 INTENTIONALLY BLANK

Historically, the naming convention for identifying a piece of hardware as a "component" or "assembly" or "subsystem" has had limited consistency from one program to another, and even between different organizations working on the same program. This situation can be confusing. The convention used in this book for naming different levels of complexity of hardware and software is shown in table A-1. This classification scheme is intended to clearly define, and distinguish between, the different hardware and software levels.

Table A-1. Levels of hardware and software complexity.

Level	Description	Examples
Complex	An entire vehicle or habitat.	Space Station *Freedom*, lunar base
Element	A major unit of a complex.	habitat module, power supply
System	A hardware/software grouping performing related functions across or within elements.	ECLS, data management, power distribution
Subsystem	A division of a system performing related functions.	atmosphere revitalization, water recovery and management
Assembly	A group of related units within a subsystem.	CO_2 removal, O_2 generation, water processing
Component	A functional unit within an assembly.	orbital replaceable units, pump, blower
Part	An indivisible unit.	tubing, bolt, sensor

Note: Intermediate levels, where two or more items are connected but not sufficiently to raise their status to the next level, are referred to as "groups."

Example:

Assembly Group—where two or more assemblies, with or without additional lower levels, are connected but do not make a complete subsystem, e.g., the O_2 generation assembly and the CO_2 reduction assembly may be combined into an assembly group.

PRECEDING PAGE BLANK NOT FILMED

PAGE 178 INTENTIONALLY BLANK

APPENDIX B

ATMOSPHERE REVITALIZATION

PAGE 180 INTENTIONALLY BLANK

PRECEDING PAGE BLANK NOT FILMED

B.1 – AR Requirements and Technology Options

Atmosphere revitalization requirements are based on medical requirements for O_2, CO_2, and water vapor levels to be within ranges that are physiologically acceptable. For safety, as well as medical reasons, an inert gas such as N_2 is necessary. For U.S. space habitats the atmosphere composition specifications are listed in table B-1, the oxygen consumption and carbon dioxide production rates for the orbiter and for S.S. *Freedom* are listed in table B-2, and the respirable atmosphere requirements for S.S. *Freedom* are listed in table B-3. Some of the technologies that have been used, or considered, for performing the AR functions are listed in table B-4. These technologies are briefly described in sections B.2 through B.6. This is not an exhaustive list, however, and other technologies may be better suited for a particular situation. For detailed descriptions there are several reports listed below and additional references throughout the appendices. Allowable trace contaminant levels are also specified for each mission and table B-1 lists the 180-day SMAC priority compounds for S.S. *Freedom.* A method for calculating the total toxicity of trace contaminants is described in section B.7. Methods of monitoring trace contaminants are described in section B.8. Methods of controlling the growth of microorganisms are described in section B.9.

When evaluating the options for performing a function the factors to be considered include:

Design loads
Operating requirements (power consumption, fluid and electrical interface, servicing, mass, and volume)
Safety
Maintainability and reliability
Resupply requirements (mass, volume)
Cost (development and operating)
Synergisms with, and impacts on, other assemblies/subsystems/systems
Emergency operation.

General References:

"ECLSS Integration Analysis: Advanced ECLSS Subsystem and Instrumentation Technology Study for the Space Exploration Initiative," MDC W5658, McDonnell Douglas Space Systems Company, NASA/MSFC Contract NAS8-36407, October 1990.

"Life Support and Habitability Manual," European Space Agency, ESA PSS-03-406 Issue 1 (August 1990).

Wydeven, Theodore: "A Survey of Some Regenerative Physico-Chemical Life Support Technology," NASA Technical Memorandum 101004, November 1988.

Purser, et al.: "Manned Spacecraft: Engineering Design and Operation." Chapter 15 "Life-Support Systems," by Robert E. Smylie and Maurice R. Reumont, Fairchild Publications, 1964.

Table B-1. Atmosphere composition specifications for U.S. space habitats.

	Pressure kPa(psia)	Oxygen kPa(psia)	Carbon Dioxide kPa(mmHg)	Dewpoint °C(°F)
Apollo	34.45(5.00)	34.45(5.00)		
Skylab	34.45(5.00)	22.74-26.87(3.30-3.90)[1a]	0.66(5.0)[1b]	7.8-15.6(46-60)[1c]
(degraded)		N/A	0.732(5.5)[1b]	N/A
Orbiter	101.2(14.7)	20.33-23.77(2.95-3.45)[2]	1.01(7.6)[3]	3.9-16.1(39-61)
(degraded)		18.60-24.80(2.70-3.60)[4]		
(fail safe)			1.33(10.0)[5]	
(EVA prep)	70.3(10.2)	18.26-19.29(2.65-2.80)[6]	1.01(7.6)[3]	3.9-16.1(39-61)
(emergency)	55.1(8.0)	13.44-16.88(1.95-2.45)	2.0(15.0)[7]	-17-28.9(0-84)[8]
S.S. *Freedom*[9]	101.2(14.7)	19.50-23.08(2.83-3.35)	0.40(3.0)	4.4-15.5(40-60)
(degraded)		16.54-23.77(2.40-3.45)	1.01(7.6)	1.7-21.1(35-70)
(safe haven)	101.2(14.7)	15.85-23.77(2.30-3.45)	1.60(12)	1.7-21.1(35-70)

Notes:

1. From MSFC Skylab Mission Report—Saturn Workshop, NASA TM X-64814, October 1974, (a.) p. 9–1, (b.) p. 9–12, (c.) p. 9–11.
2. From the ARPCS Description and Test History, Rockwell Int. Rpt. No: SEH-ITA-82-133, dated May 3, 1982, p. 3–2.
3. The nominal range is <5 mmHg but 7.6 is maximum for normal operation as documented in the Shuttle Operational Data Book, JSC 08934, Section 4.6.1.3.1, p. 4.6.1-12.
4. From Caution and Warning Limits as specified in the Space Shuttle Systems Handbook, Volume I, JSC 11174, Revision D, DCN-1, Orbiter Schematic page 6.1-2.
5. Ibid., Fail-safe operation.
6. From the Orbiter Flight Data File, EVA Checklist, JSC 17235, OV-102, BASIC, Revision D, (referenced in Coleman, W. D., "Documentation of Quick Turnaround ARPCS Model," Rockwell Int. Rpt No. SEH-ITA-83-084, dated March 21, 1983, p. 14, Figure 1.)
7. From Caution and Warning Limits as specified in the Space Shuttle Systems Handbook, Volume I, JSC 11174, Revision D, DCN-1, Orbiter Schematic page 6.1-2, Emergency operation, maximum of 2 hours.
8. Ibid., Emergency operation.
9. From Table XI, p. 62 of Space Station *Freedom* Program Definition and Requirements, SS-SRD-0001C, Section 3.0, System Requirements, dated April 17, 1990.

Table B-2. Oxygen required/carbon dioxide produced.

	Orbiter[1] kg/person/day			*Freedom*[2] kg/person/day		
	Min	Nominal	Max	Min	Nominal	Max
Oxygen Used	0.64	0.80	0.94	0.50	0.84	1.25
CO_2 Produced	0.76	0.96	1.17	0.65	1.00	1.50
	lb_m/person/day			lb_m/person day		
	Min	Nominal	Max	Min	Nominal	Max
Oxygen Used	1.40	1.76	2.08	1.10	1.84	2.76
CO_2 Produced	1.67	2.11	2.58	1.44	2.20	3.31

Notes:
1. From the Shuttle Operational Data Book, JSC 08934, Section 4.6, and Tables 4.6.1, 4.6.2, and 4.6.3.
2. From the ECLSS Architectural Control Document (ACD), SSP 30262, dated October 9, 1990, pp. 3-31, 34, 38 and 39.

Table B-3. Space Station *Freedom* respirable atmosphere requirements.

PARAMETER	UNITS	90-DAY OPERATIONAL	90-DAY DEGRADED	SAFE HAVEN	10.2 PSIA OPERATIONS
CO_2 Partial Pressure	Pa	400 max	1013 max	1600 max	1013 max
Temperature	K	291.5-299.9	291.5-299.9	288.7-302.6	299.1-299.9
Dew Point	K	277.6-288.7	274.8-294.3	274.8-294.3	277.6-288.7
Ventilation	m/s	0.076-0.203	0.051-0.508	0.050-1.016	0.076-0.203
O_2 Partial Pressure	kPa	19.5-23.1	16.5-23.7	15.8-23.7	17.6-20.0
Total Pressure	kPa	99.9-102.7	99.9-102.7	99.9-102.7	68.9-71.7
CO_2 Partial Pressure	mmHg	3.0 max	7.6 max	12 max	7.6 max
Temperature	°F	65-80	65-80	60-85	60-85
Dew Point	°F	40-60	35-70	35-70	40-60
Ventilation	ft/min	15-40	10-200	10-200	15-40
O_2 Partial Pressure	psia	2.83-3.35	2.4-3.45	2.3-3.45	2.55-2.9
Total Pressure	psia	14.5-14.9	14.5-14.9	14.5-14.9	10.0-10.4

Note: From SSP 30000 Section 3 Rev. K

Table B-4. Atmosphere revitalization technologies.

Function	Approach	Technology
Oxygen Storage/ Generation	Storage	High pressure gas
		Cryogenic liquid
		Chemical storage
	Generation	Static feed water electrolysis
		Solid polymer electrolysis
		CO_2 electrolysis
		Water vapor electrolysis
CO_2 Removal	Nonregenerable Absorption	Lithium hydroxide
		Sodasorb
		Superoxides
	Regenerable Absorption	Amines
		Electrochemical
		Metal oxides
		Carbonate
		Ion exchange electrodialysis
		Electroactive carrier
	Adsorption	Molecular sieves
	Membranes	Membranes
	Biochemical	Immobilized enzymes
CO_2 Reduction	Combustion with H_2	Sabatier
		Bosch
	Electrical	CO_2 electrolysis (see oxygen generation)
Trace Contaminant Control	Nonregenerable	LiOH
		Leakage to space
	Regenerable	Filtration
		Catalytic oxidation
		Activated carbon

B.2 – O_2 Storage and Generation

Oxygen can be stored as a gas under pressure or as a liquid at cryogenic temperatures. Each approach has advantages and disadvantages. Storage as a gas is relatively simple and reliable, but is heavier and larger than cryogenic storage for larger quantities. Chemical storage is another alternative, such as the superoxides used by the Russians. Several approaches have been developed or proposed for generating O_2 from products available in a space habitat, or from resources available on the Moon or Mars. Electrolysis is the usual approach for generating molecular oxygen from compounds containing oxygen. The most readily available oxygen-containing compounds are water and CO_2. These methods are summarized below.

Storage methods – Factors to consider when comparing these options include storage tank size, degree of control, and the distribution system.

High Pressure Gas – High pressure storage is highly reliable, and optimum for small amounts of fluid where the weight and volume savings of cryogenic techniques cannot be achieved. The greater the pressure, the thicker the wall of the tank must be, though, and, since at very high pressures gases become less compressible, the volume savings at high pressures are diminished. Thus, for increasing pressures, the tank volume passes through a minimum and then increases because of increased wall thickness to contain the high pressure.

Material compatibility is another aspect that must be considered. Titanium, for example, reacts with O_2 and is not an acceptable material for an O_2 tank. (Another gas that is incompatible with many materials is hydrogen. Many steel, nickel, and titanium alloys lose strength and ductility in the presence of H_2. Many stainless steels, copper alloys, aluminum alloys, magnesium, and pure titanium are negligibly affected.)

Cryogenic Liquid – For larger quantities of gases, storage as cryogenic fluids have several advantages:

1. Higher storage density, therefore lower volume for the same mass of fluid
2. Reduced container mass due to smaller volume and lower pressure
3. Increased safety due to the lower pressure
4. Use as refrigeration source.

The disadvantages of cryogenic storage are that it is sensitive to heat leaks from the surroundings and that fluid delivery in microgravity is more complex. Problem areas regarding anaylsis and design of cryogenic storage tanks are:

1. Adequate thermal insulation to minimize fluid boil-off or vent losses
2. Tank pressurization for single-phase fluid expulsion
3. Tank venting for pressure relief
4. Determining the qualtity of fluid remaining in the tank at any time during use.

Several approaches are possible for cryogenic storage including supercritical storage with thermal pressurization, compressed liquid storage, and two-phase storage with thermal pressurization.

Chemical Storage – Compounds that contain oxygen that can be released in a form suitable for breathing can be classed in three groups:

1. Alkali and alkaline earth peroxides, superoxides, and ozonides

2. Alkali and alkaline earth chlorates and perchlorates

3. Hydrogen peroxide.

In the first category are potassium and sodium superoxides. These compounds react with CO_2 and water, and release O_2. In the second category are chlorate candles. These have been used as an O_2 source on submarines. The principle of operation is the decomposition of sodium chlorate to sodium chloride and O_2. Hydrogen peroxide, the third category, requires two steps to produce the maximum amount of O_2. First it must be decomposed into O_2 and water, then the water must be electrolyzed.

<u>Oxygen generation methods</u> – These typically involve electrolysis of an O_2 containing compound, such as H_2O or CO_2. The chemical equations are:

$$1 \text{ mole } H_2O \longrightarrow 1/2 \text{ mole } O_2 + 1 \text{ mole } H_2$$
$$1 \text{ mole } CO_2 \longrightarrow 1 \text{ mole } C + 1 \text{ mole } O_2$$

Therefore, from each kilogram of H_2O, 0.89 kg of O_2 and 0.11 kg H_2 can be produced; and from each kg of CO_2, 0.73 kg of O_2 and 0.27 kg of O_2 can be produced.

Static Feed Water Electrolysis (SFWE) – The SFWE electrolyzes water to O_2 and H_2 by the following reactions:

anode (-)	:	$4OH^- \longrightarrow O_2 + 2H_2O + 4e^-$
cathode (+)	:	$4H_2O + 4e^- \longrightarrow 2H_2 + 4OH^-$
overall	:	$2H_2O \longrightarrow 2H_2 + O_2$

The process, shown schematically in figure B-1, involves the vaporization of water through a membrane into an aqueous KOH electrolyte. O_2 is generated at the anode and H_2 at the cathode. The outlet gases are saturated with water vapor. The electrolysis process is not 100-percent efficient and heat is generated, so the water supply is also used to control the temperature.

Solid Polymer Electrolysis (SPE) – The SPE electrolyzes water to O_2 and H_2 by the following reactions:

anode (-)	:	$2H_2O \longrightarrow 4H^+ + 4e^- + O_2$
cathode (+)	:	$4H^+ + 4e^- \longrightarrow 2H_2$
overall	:	$2H_2O \longrightarrow 2H_2 + O_2$

The process, shown schematically in figure B-2, uses a solid polymeric electrolyte (sulfonated perfluoro-polymer) to electrolyze liquid water. This method is somewhat more complex than the SFE due to the need for liquid/gas separators. There is some liquid water in the H_2 outlet and considerable water in the O_2 outlet, which is also used for temperature control.

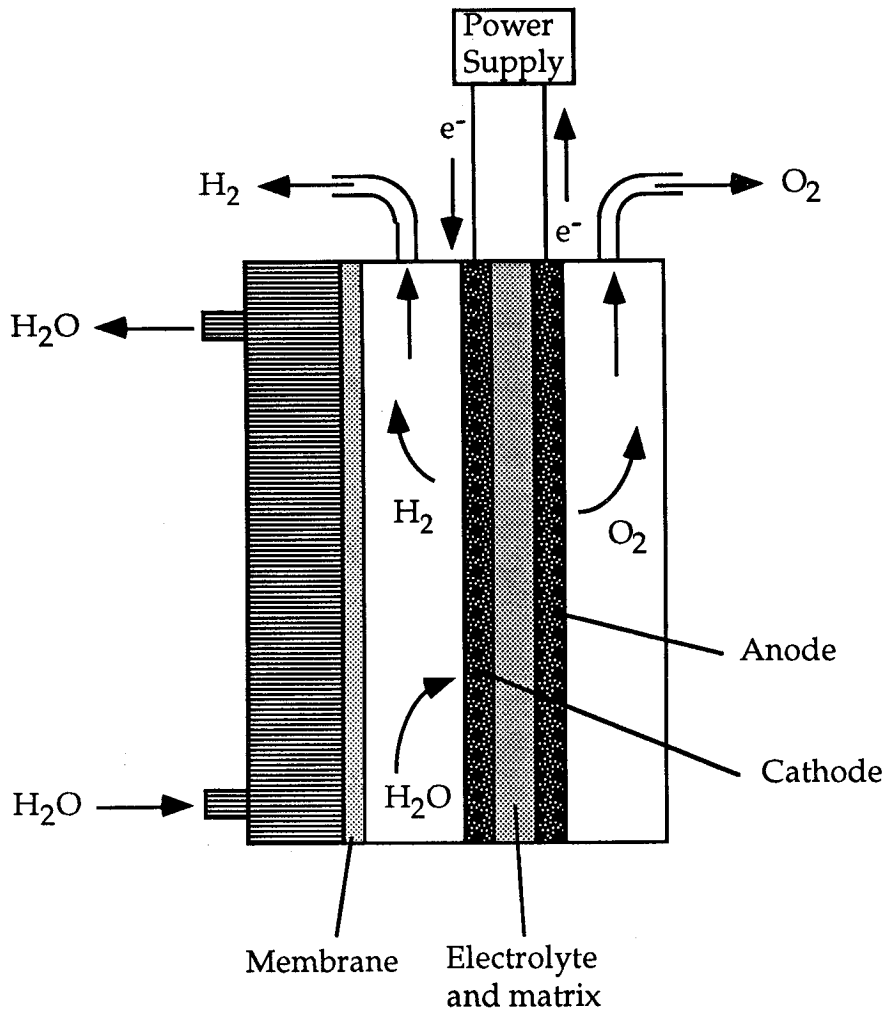

Figure B-1. Static feed water electrolysis.

CO_2 Electrolysis - CO_2 electrolysis recovers O_2 directly from CO_2 and is performed by the following reactions:

$$CO_2 + H_2O \longrightarrow CO + O_2 + H_2$$
$$2CO \longrightarrow C + CO_2$$

The process, shown schematically in figure B-3, combines the CO_2 reduction and O_2 generation functions. The overall Atmosphere Revitalization Subsystem may therefore be simpler and have lower mass, volume, and power consumption. A solid oxide electrolyzer decomposes CO_2 to O_2 and CO. The CO is then decomposed in a Boudouard reactor into solid carbon and CO_2, which is recycled to the electrolysis unit. Any water vapor in the input CO_2 is also electrolyzed, so the CO_2

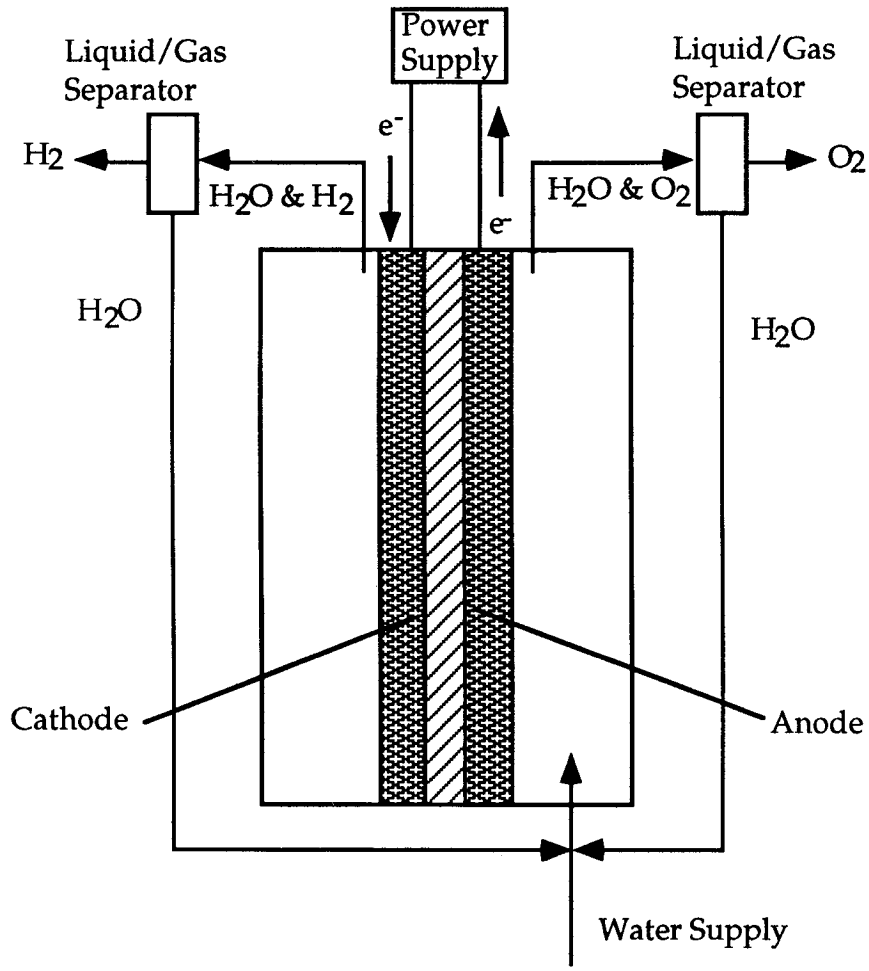

Figure B-2. Solid polymer water electrolysis.

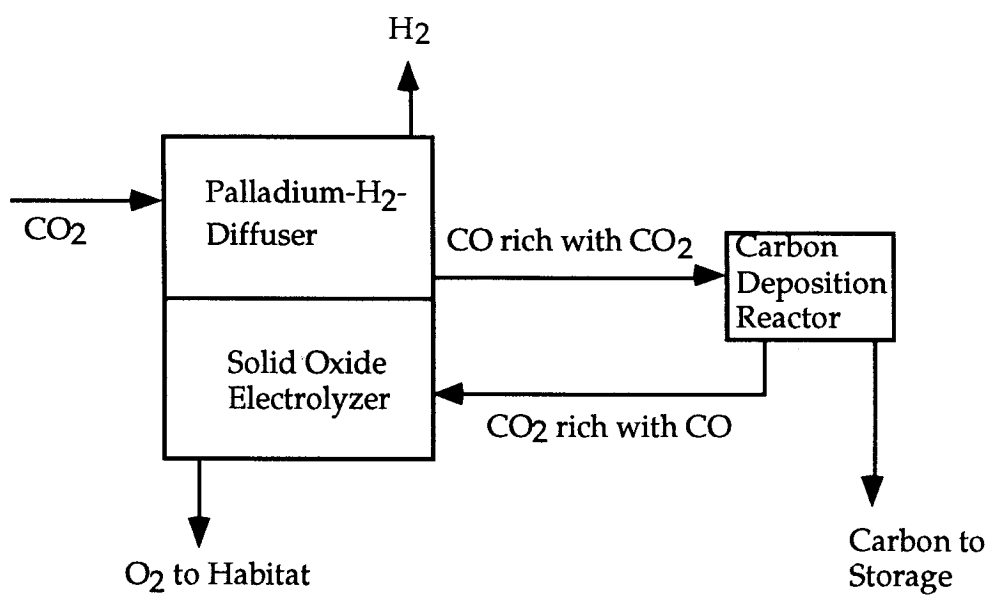

Figure B-3. CO_2 electrolysis.

does not need to be dry. The H_2 from H_2O electrolysis can either be used in another process or vented. The electrolysis reaction operates at very high temperatures (>871 °C or 1,600 °F) which presents problems for materials. The possibility of CO leakage is another hazard that must be minimized.

References:

Isenberg, Arnold O., and Cusick, Robert J.: "Carbon Dioxide Electrolysis with Solid Oxide Electrolyte Cells for Oxygen Recovery in Life Support Systems." SAE Paper No. 881040, 18th Intersociety Conference on Environmental Systems, San Francisco, CA, July 11–13, 1988.

Isenberg, Arnold O., and Verostko, Charles E.: "Carbon Dioxide and Water Vapor High Temperature Electrolysis." SAE Paper No. 891506, 19th Intersociety Conference on Environmental Systems, San Diego, CA, July 24–27, 1989.

Water Vapor Electrolysis – Water vapor in a habitat atmosphere can be directly electrolyzed to yield O_2 and H_2. As shown in figure B-4, an acid electrolyte on a microporous membrane is immobilized between an anode and a cathode. When a current is passed through the cell, water in the acid solution is electrolyzed and O_2 is released at the anode and H_2 at the cathode. The membrane prevents mixing of the O_2 and H_2. The process operates continuously, with O_2 returning to the habitat and H_2 separated for use or disposal. The simplicity of operation makes this an inherently reliable technique. It was not selected for S.S. *Freedom*, though, because, to generate sufficient oxygen, all of the water vapor would be removed from the atmosphere, especially if other processes consumed O_2 (e.g., EDC for CO_2 removal).

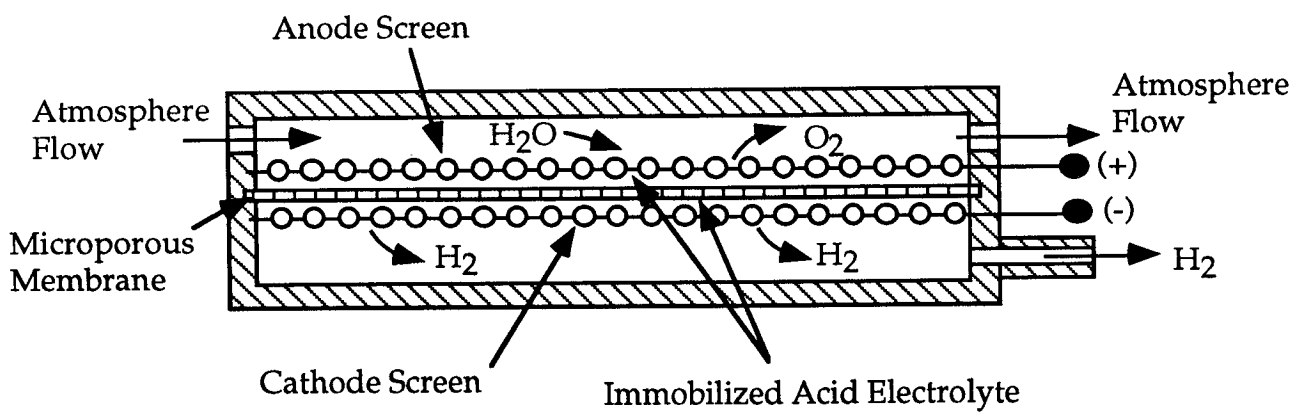

Figure B-4. Schematic of water vapor electrolysis.

References:

Celino, V.A., and Wydeven, Theodore: "Development Status of the Water Vapor Electrolysis System." Paper No. 71-Av-24, SAE/ASME/AIAA Life Support and Environmental Control Conference, San Francisco, CA, July 12–14, 1971.

B.3 – CO_2 Removal

Many technologies have been proposed for removing CO_2 from space habitat atmospheres, and each has advantages and disadvantages for different mission scenarios and requirements. For detailed descriptions of the technologies there are several reports listed in the Bibliography. Brief descriptions of the approaches are given below, including non-regenerable absorption, regenerable absorption, adsorption, membrane, biochemical, and biological.

For both absorption and adsorption a sorbate (gas or liquid) is held by the sorbent material (liquid or solid). The distinction is that with absorption there is a physical or chemical change in the sorbent such that the size increases (for example, a sponge swells as it absorbs water) or the chemical structure is changed. With adsorption the sorbent remains unchanged. (For more complete definitions see any good chemistry or physics handbook or Douglas Ruthven, "Principles of Adsorption and Adsorption Processes," John Wiley, New York, NY, 1984.)

Nonregenerable Absorption Processes – These methods are suitable only for open-loop operation, since the sorbent cannot be regenerated. Differences in CO_2 capacity, handling requirements, and other factors must be considered for these processes. Some of the compounds listed below are caustic (e.g., some of the superoxides) that makes handling more complex, or produce fine particles (e.g., LiOH) that must be filtered from the atmosphere.

Lithium hydroxide (LiOH) removes CO_2, trace contaminants, and odors from the atmosphere. This method has been used for all U.S. space habitats from Mercury through the shuttle orbiter, with the exception of *Skylab* which used a molecular sieve.

The basic reaction is $2LiOH + CO_2 \longrightarrow Li_2CO_3 + H_2O$ + heat.
The theoretical capacity of LiOH for CO_2 is 0.92 kg CO_2/kg sorbent.

Sodasorb is a mixture of calcium hydroxide ($Ca(OH)_2$) (95 percent by dry weight) with sodium-, potassium-, and barium-hydroxides as "activators." A water content of 12 to 19 percent is usual and water is necessary for the reactions that consume CO_2. A series of reactions occurs whereby CO_2 goes into solution and forms carbonic acid, which then reacts with hydroxide to form sodium carbonate and regenerate the water consumed earlier. The sodium carbonate reacts with the hydrated lime to form calcium carbonate and regenerate caustic soda and caustic potash.

The theoretical capacity of sodasorb for CO_2 is 0.488 kg CO_2/kg sorbent.

Superoxides, such as potassium superoxide (KO_2) (also sodium superoxide), react with moisture in the atmosphere to produce O_2 and potassium hydroxide (KOH^-). The KOH^- then absorbs the CO_2 in the atmosphere. The chemical equilibria are complex and depend on the levels of moisture and CO_2 and the temperature in the sorbent bed. The sum of the reactions is

$$4KO_2 + 3H_2O + 2\,CO_2 \longrightarrow 2(K_2CO_3 \bullet 3/2\,H_2O) + 3O_2 + \text{heat.}$$

The theoretical capacity of KO_2 for CO_2 is 0.309 kg CO_2/kg sorbent and 0.388 kg O_2/kg sorbent are produced.

The highly reactive character of superoxides gives them the ability to absorb CO_2, remove odors, and sterilize the atmosphere, but also creates handling problems. Superoxides are hygroscopic and react with water (vapor or liquid) to release oxygen and heat, sufficient to ignite combustible materials. KO_2 also irritates the eyes and respiratory tract. Despite these drawbacks, the U.S.S.R. successfully used KO_2 on many missions.

References:

Wydeven, Theodore: "A Survey of Some Regenerative Physico-Chemical Life Support Technology." NASA Technical Memorandum 101004, ARC, November 1988.

Hultman, Mark M.: "Comparison of Life Support Oxygen Generation and Carbon Dioxide Removal Subsystems." Study No. LS-34, Hamilton Standard, April 16, 1984.

Regenerable Absorption Processes – These methods are suitable for closed-loop operation. The sorbent usually considered for space habitat use is an amine. Submarines have used a liquid amine (monoethanolamine or MEA) for CO_2 removal since the 1950's. For application in microgravity a solid amine is necessary. During the absorption and desorption processes the sorbent material (usually in the form of pellets or beads) expands and contracts. Because of this, the container holding the sorbent must be designed to expand and contract while firmly holding the pellets in place, so that channels do not form through the "bed" and allow the atmosphere to pass through without the CO_2 being removed.

Amines – Amines are weak-base ion exchange resins, such as diethylenetriamine (Amberlite IRA-45) and triethylenetetramine (Diaion WA-21). The amine is polymerized onto porous polystyrene divinylbenzene substrate. The resin absorbs CO_2 by first combining with water to form a hydrated amine which then reacts with CO_2 to form a bicarbonate. Some contaminants (e.g., copper) degrade performance of the IRA-45, although other contaminants are absorbed (aldehydes, alcohols, ketones, etc.) and returned to the atmosphere stream, resulting in no degradation. A simplified schematic of the solid amine water desorbed (SAWD) assembly is shown in figure B-5. For this assembly the CO_2 is desorbed by injecting steam into the sorbent beds. Two beds are included so that while one is absorbing CO_2, the other is being desorbed of CO_2. Another version uses amines in the form of a thin coating of polyethyleneimine (PEI) on a substrate of acrylic ester. An advantage of PEI is that CO_2 can be desorbed by vacuum, such as exposure to space, although the efficiency is usually lower than with steam desorption. Where it is not desired to recover O_2 from the CO_2 this method may be the best choice.

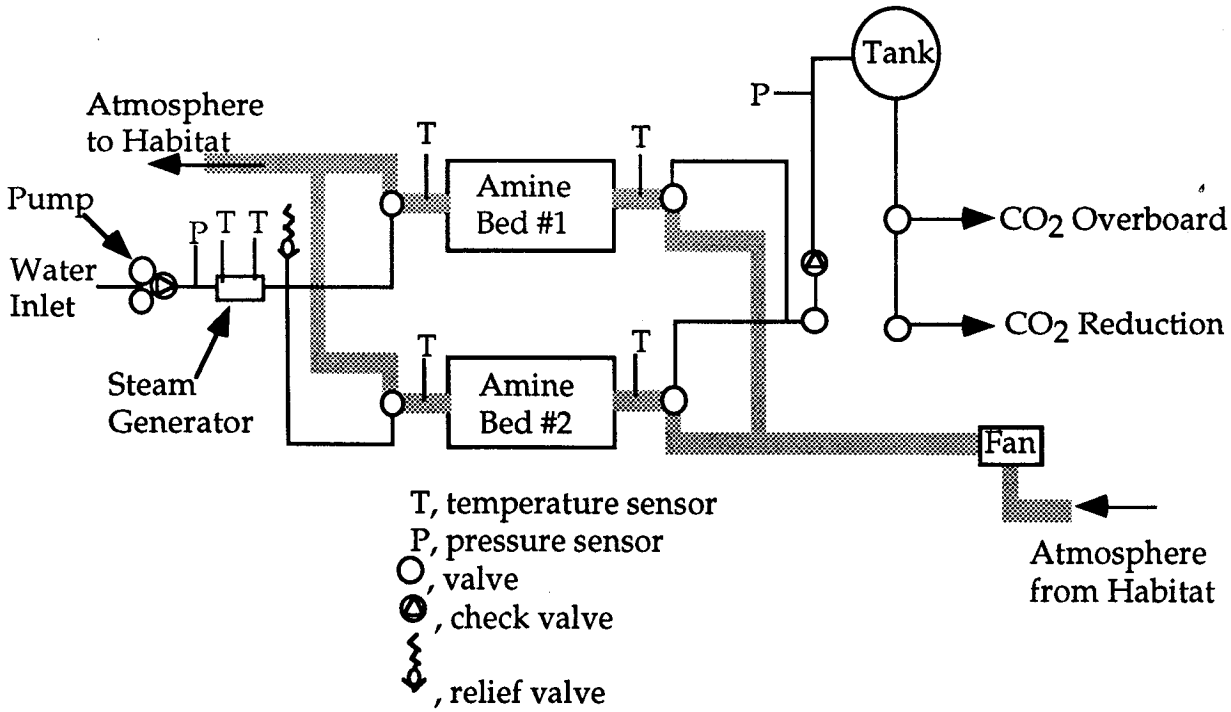

Figure B-5. Simplified schematic of a SAWD CO_2 removal assembly.

References:

Boehm, Albert M., and Cusick, Robert J.: "A Regenerable Solid Amine CO_2 Concentrator for Space Station." SAE Paper No. 820847, 12th Intersociety Conference on Environmental Systems, San Diego, CA, July 19–21, 1982.

Dresser, Kenneth J., and Cusick, Robert J.: "Development of Solid Amine CO_2 Control Systems for Extended Duration Missions." SAE Paper No. 840937, 14th Intersociety Conference on Environmental Systems, San Diego, CA, July 16–19, 1984.

Heppner, D.B., and Schubert, F.H.: "Electrochemical and Steam-Desorbed Amine CO_2 Concentration: Subsystem Comparison." SAE Paper No. 831120, 13th Intersociety Conference on Environmental Systems, San Francisco, CA, July 11–13, 1983.

Nalette, Timothy A., and Cusick, Robert J.: "Development of a Regenerable Humidity and CO_2 Control System for an Advanced EMU." SAE Paper No. 871471, 17th Intersociety Conference on Environmental Systems, Seattle, WA, July 13–15, 1987.

Otsuji, K., Hanabusa, O., Etoh, T., and Minemoto, M.: "Air Revitalization System Study for Japanese Space Station." SAE Paper No. 881112, 18th Intersociety Conference on Environmental Systems, San Francisco, CA, July 11–13, 1988.

Verostko, C. E.: "Solid Amine IRA-45 Carbon Dioxide (CO_2)/Contaminant Removal Studies." JSC 19129, CSD-SS-076, Johnson Space Center, Crew Systems Division, April 23, 1984.

Electrochemical – Electrochemical CO_2 concentrators are essentially modified fuel cells that operate in the reverse direction electrochemically. Several concepts have been developed or considered for development, some that use H_2 (and generate electricity) (referred to as an electrochemical depolarized cell or EDC, shown in figure B-6) and others that do not use H_2 (and consume electricity) (referred to as an air polarized CO_2 concentrator or APC).

The reaction at the cathode is:

$$O_2 + 2H_2O + 4e^- \longrightarrow 4OH^-$$
$$2CO_2 + 4OH^- \longrightarrow 2H_2O + 2CO_3^=$$

CO_2 is transferred in the form of $CO_3^=$ to the anode side of the electrochemical cell where it reacts to form CO_2.

The reaction at the anode, when H_2 is used, is:

$$2H_2 + 4OH^- \longrightarrow 4H_2O + 4e^-$$
$$2CO_3^= + 2H_2O \longrightarrow 4OH^- + 2CO_2$$

The overall reaction is:

$$2CO_2 + O_2 + 2H_2 \longrightarrow 2CO_2 + 2H_2O + 4e^- + \text{heat}$$

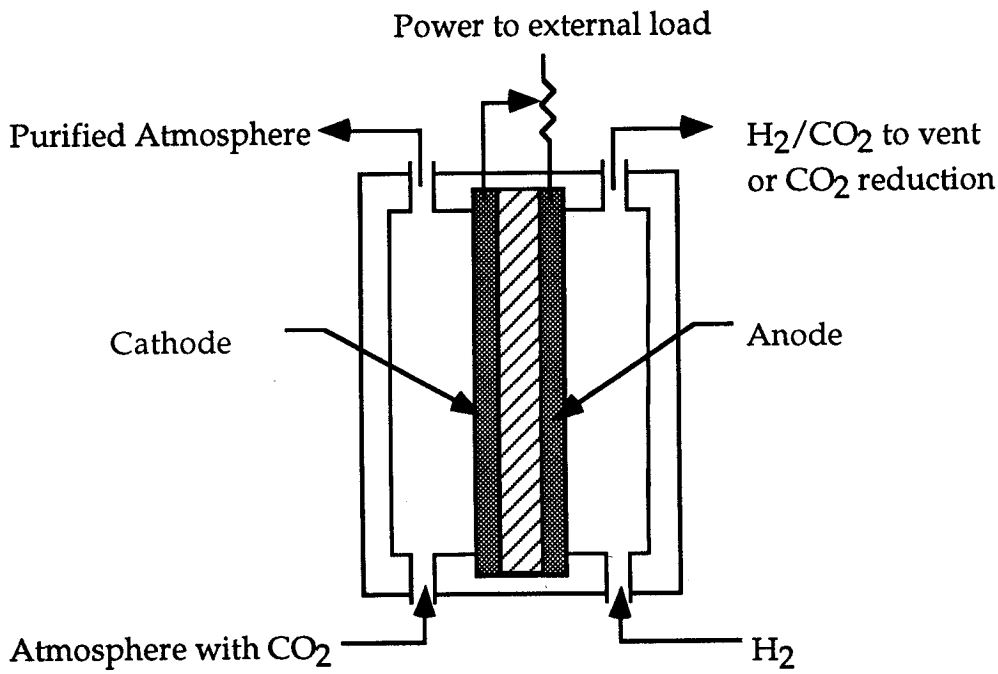

Figure B-6. Simplified schematic of EDC electrochemical cell.

The air polarized CO_2 concentrator (APC) variation of the EDC was developed to minimize safety concerns due to the use of H_2 by the EDC. Power consumption during operation without H_2 is considerably higher that with H_2, however. The capability to switch back and forth can reduce energy consumption, but doing so accelerates degradation of the electrode catalyst. The APC also requires an O_2/CO_2 separator, which increases mass, power consumption, volume, and complexity compared with the EDC.

References:

Boyda, Robert B., Lance, Nick, and Schwartz, Mary: "Electrochemical CO_2 Concentration for the Space Station Program." SAE Paper No. 851341, 15th Intersociety Conference on Environmental Systems, San Francisco, CA, July 15–17, 1985.

Boyda, R.B., and Hendrix, S.P.: "EDC Development and Testing for the Space Station Program." SAE Paper No. 860918, 16th Intersociety Conference on Environmental Systems, San Diego, CA, July 14–16, 1986.

Huebscher, R.G., and Babinsky, A.D.: "Electrochemical Concentration and Separation of Carbon Dioxide For Advanced Life Support Systems—Carbonation Cell System." SAE Paper No. 690640, National Aeronautic and Space Engineering and Manufacturing Meeting, Los Angeles, CA, October 6–10, 1969.

Lee, M.C., Sudar, Martin, and Cusick, R.J.: "Electrochemically Regenerable Carbon Dioxide/ Moisture Control Technology for an Advanced Extravehicular Mobility Unit." SAE Paper No. 871470, 17th Intersociety Conference on Environmental Systems, Seattle, WA, July 13–15, 1987.

Lee, M.C., Sudar, Martin, Beckstrom, P.S., and Cusick, R. J.: "Electrochemically Regenerable Metabolic CO_2 and Moisture Control System for an Advanced EMU Application." SAE No. 881061, 18th Intersociety Conference on Environmental Systems, San Francisco, CA, July 11–13, 1988.

Wynveen, Richard A., Schubert, Franz H., Kostell, George D., Hallick, Tim M., and Quattrone, Phil D.: "Electrochemical Concentration of Carbon Dioxide Aboard Spacecraft." paper No. 74-109, International Astronautical Federation, XXVth Congress, Amsterdam, September 30–October 5, 1974.

Metal Oxides – Metal oxides have been considered for use in space habitats and EMU suits. During a 1973 study a silver oxide formulation (80.3 percent Ag_2O, 10.4 percent KOH, and 9.3 percent Na_2SiO_3) was found to have the best overall characteristics (absorption capacity, strength, desorption characteristics, etc.). At a pCO_2 of 0.40 kPa (3 mmHg), the adsorption capacity is 0.12 kg-CO_2/kg-oxide. The energy required to desorb the CO_2 is 1.86×10^6 J/kg. Due to expansion and contraction during absorption and desorption, the metal oxide pellets structurally breakdown, and therefore have a limited life. The present goal is to attain 50 to 60 regenerations with 7- to 8-hour cycle times for EVA use. The regeneration temperature is dependent on the preparation process used to make the material. Earlier silver oxides required 247 °C (477 °F) for desorption, but this has been lowered to 140 °C (284 °F). Water is required for the absorption reaction and enhances the sorption capacity, reaction kinetics, and cycle life, so moisture in the process atmosphere is necessary and high humidity may be preferable.

References:

Colombo, G.V.: "Study of CO_2 Sorbents for Extravehicular Activity." MDC G4778, McDonnell Douglas Astronautics Company, NASA Contract NAS2-6959, NASA CR 114632, July 1973.

Carbonate – Potassium carbonate-bicarbonate has been considered for use in EMU suits. CO_2 is removed from the atmosphere by the following reversible reaction:

$$K_2CO_3 \text{ (solid)} + CO_2 \text{ (gas)} + H_2O \text{ (gas)} \longleftrightarrow 2KHCO_3 \text{ (solid)}$$

The potassium carbonate is gradually consumed therefore limiting the life of the process to about 90 cycles. The $KHCO_3$ reverts back to K_2CO_3 when heated to about 150 °C (302 °F).

References:

Patel, Pinakin S., and Baker, Bernard S.: "Development of a Prototype Regeneration Carbon Dioxide Absorber." Final Report (July 1976–August 1977), Energy Research Corporation, NASA Contract NAS2-9265, NASA CR-152063, August 1977.

Onischak, Michael: "Development of a Prototype Regenerable Carbon Dioxide Absorber." Energy Research Corporation, NASA Contract NAS2-8644, NASA CR-137919, September 10, 1976.

Ion-Exchange Electrodialysis – Ion-exchange electrodialysis uses an ion-exchange resin which reacts with CO_2 in the atmosphere to form carbonate ions. The resins are continuously regenerated by an electrical field imposed perpendicular to the flow path that causes the carbonate ions to move from the absorbing cell to the concentrating cell.

References:

Purser, et al.: "Manned Spacecraft: Engineering Design and Operation." Chapter 15, p. 151 by Smylie and Reumont, Fairchild Publications, 1964.

Electroactive Carrier – Electroactive CO_2 carriers are molecules that bind with CO_2 when in a reduced state and release CO_2 when in an oxidized state. Compounds that have been investigated include quinone and other ring compounds having an oxygen or nitrogen atom as a binding site and a redox active site. The concept is promising but there are fundamental problems such as sensitivity to O_2 present in the atmosphere.

References:

Bell, W. L., Miedaner, A., Smart, J. C., DuBois, D. L., and Verostko, C. E.: "Synthesis and Evaluation of Electroactive CO_2 Carriers." SAE paper No. 881078, 18th Intersociety Conference on Environmental Systems, San Francisco, CA, July 11–13, 1988.

Adsorption Processes – Adsorption processes are suitable for closed-loop operation and, because no chemical reactions occur, they are less susceptible to degradation than some of the absorption processes. "Poisoning" by trace contaminants or, in some cases, water can degrade performance over time, but these can usually be desorbed from the sorbent with heat or vacuum.

Molecular Sieves – Zeolite molecular sieves, the principle adsorbents used, have a greater affinity for water than for CO_2 and a desiccant (another Zeolite and/or silica gel) is used to dry the

atmosphere upstream of the Zeolite. The first use in space of a regenerable CO_2 removal assembly was on *Skylab* which used two zeolite molecular sieve materials (referred to as 13X and 5A) in a layered bed arrangement to remove excess moisture and CO_2 from the atmosphere. The sorbents were regenerated by venting to space, in the reverse direction so that water would not enter the CO_2 removal portion of the bed (the 5A material). For such open-loop operation the molecular sieve was also used for trace contaminant removal and humidity control. Continuous operation was achieved by cycling between two "beds" so that one could be desorbed while the other was adsorbing.

For closed-loop operation a somewhat more complex assembly is required. As shown in figure B-7, for continuous operation in a CO_2-save and water-save configuration, cycling between four "beds" of either desiccant or CO_2 sorbent are needed. The capacity of molecular sieves for CO_2 is temperature and pressure dependent. This allows the CO_2 to be desorbed by either increased temperature or reduced pressure or both, as indicated by the heaters and vacuum pump in figure B-7. The amount of CO_2 removed per 1/2 cycle for given temperature and pressure ranges and mass of sorbent can be calculated using adsorption isotherm test data (see NASA CR-2277) and the following equation:

CO_2 removed per 1/2 cycle = (capacity at adsorption temperature and pressure - capacity at desorption temperature and pressure) * mass of sorbent

Other types of molecular sieves have been used including carbon molecular sieves that do not preferentially adsorb water vapor. These materials allow the CO_2 removal assembly to be smaller, lighter, and simpler due to the elimination of the desiccant beds. Such an assembly is referred to as a two-bed molecular sieve (2BMS).

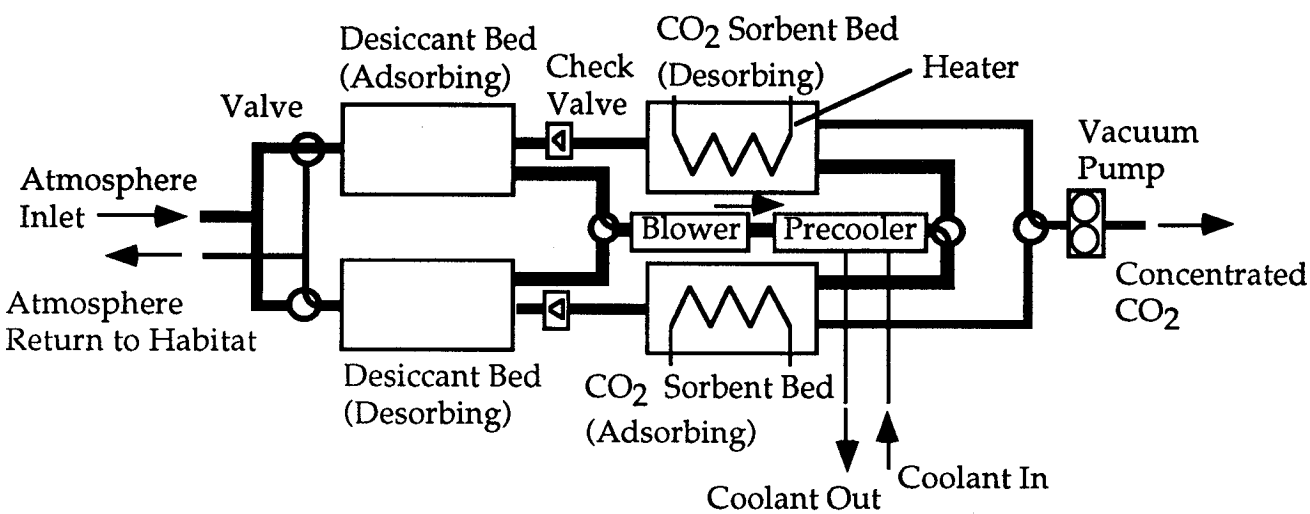

Figure B-7. Schematic of four-bed molecular sieve CO_2 removal assembly.

References:

Wright, R.M., Ruder, J.M., Dunn, V.B., and Hwang, K.C.: "Development of Design Information for Molecular-Sieve Type Regenerative CO_2-Removal Systems." AiResearch Manufacturing Company, NASA Contractor Report CR-2277, July 1973.

Kay, R.J., and Tom, R.: "Two-Bed Molecular Sieve Carbon Dioxide Removal System Feasibility Testing." SAE Paper No. 880993, 18th Intersociety Conference on Environmental Systems, San Francisco, CA, July 11–13, 1988.

Membrane – Membranes are used to remove CO_2 from natural gas, which may have a concentration from 4 percent up to 40 percent. To remove CO_2 at the low concentrations present in space habitat atmospheres this method will need to be refined much further. Techniques that have been proposed for improving membranes for space habitat use include impregnating polymeric membranes with zeolite powder.

References:

Personal communication with Harris Gold of Foster-Miller, Inc., Waltham, MA, 1988.

Biochemical – Enzymes immobilized in a matrix material have also been proposed as a method of concentrating CO_2 from a habitat atmosphere.

References:

Personal communication with Craig Chang of Allied Signal Inc., Engineered Materials Research Center, Des Plaines, IL, 1985.

B.4 - CO_2 Reduction

Several technologies have been proposed for processing the CO_2 removed from space habitat atmospheres to recover the O_2, and each has advantages and disadvantages for different mission scenarios and requirements. The approaches include combustion with H_2, CO_2 electrolysis, and biological methods. CO_2 electrolysis is described in Section B.2 and biological methods are described in appendix H. The combustion processes are briefly described below.

Combustion with H_2 – Combustion of CO_2 with H_2 produces H_2O and either CH_4 (Sabatier reaction) or solid carbon (Bosch reaction). By either reaction the process is exothermic and the water is electrolyzed to recover O_2. The CH_4 produced by the Sabatier can be further processed to produce solid carbon and H_2O. Relative comparisons, including CO_2 electrolysis, are listed in table B-5.

Table B-5. Relative comparisons between CO_2 reduction combustion processes and CO_2 electrolysis.

	Sabatier	**Sabatier with Carbon Formation Reactor**	**Bosch**	**CO_2 Electrolysis**
Form of carbon	Methane	Dense solid	Less dense solid	Solid
Size of hardware	Small	Large	Large	Small (1)
Startup time	Minutes	Hours	Hours	Hours
Cooldown time	Hours	Days	Days	Days
Operating temperature	593°C (1100°F)	482 to 816°C (900 to 1500°F)	538 to 704°C (1000 to 1300°F)	871°C (1600°F)
Mass recovery	Medium	High	High	High

Note: (1) CO_2 electrolysis performs the CO_2 reduction and O_2 generation functions.

Sabatier – The Sabatier reaction is exothermic and releases about 183 kJ/mole of CO_2 (78,760 Btu/lb mole). Use of a catalyst such as ruthenium enhances the reaction and improves efficiency. The Sabatier can operate continuously since there are no components that fill with solids. A schematic is shown in figure B-8. The CH_4 can be used for propulsion or other use, or it can be converted to H_2 and solid carbon by pyrolysis in a carbon formation reactor (CFR). The pyrolysis reaction is endothermic and consumes about 74.4 kJ/mole of methane (32,000 Btu/lb mole). A schematic is shown in figure B-9. Carbon is deposited in the CFR, which must be replaced periodically (the frequency of replacement depends upon the size of the reactor and the quantity of methane). The H_2 from the pyrolysis can be used by the Sabatier reaction and the water from the Sabatier can be electrolyzed to H_2 and O_2.

The reactions for each step are:

$$CO_2 + 4H_2 \longrightarrow CH_4 + 2H_2O \quad \text{(Sabatier)}$$
$$CH_4 \longrightarrow 2H_2 + C \quad \text{(pyrolysis)}$$
$$2H_2O \longrightarrow 2H_2 + O_2 \quad \text{(electrolysis)}$$

and yield the overall reaction: $CO_2 \longrightarrow C + O_2$

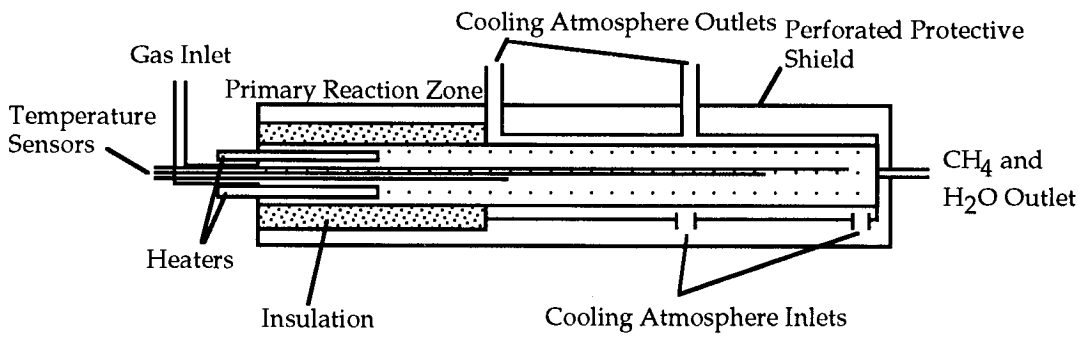

Figure B-8. Schematic of Sabatier reactor.

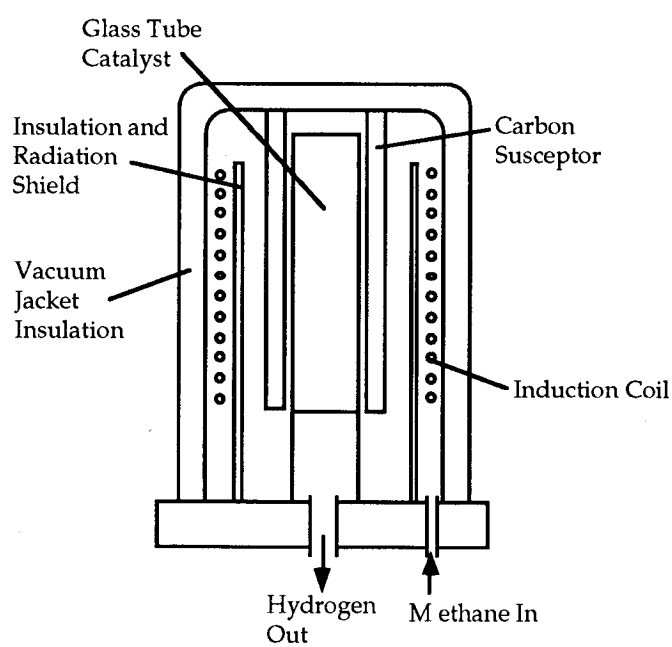

Figure B-9. Schematic of carbon formation reactor.

References:

Forsythe, Robert K., Versotko, Charles E., Cusick, Robert J., and Blakely, Robert L.: "A Study of Sabatier Reactor Operation in Zero 'G'." SAE Paper No. 840936, 14th Intersociety Conference on Environmental Systems, San Diego, CA, July 16–19, 1984.

Carrasquillo, Robyn L.: "Sabatier CO_2 Reduction Subsystem Performance Testing Report." MSFC Memo ED62(139-89), August 3, 1989.

Bosch – The Bosch reaction is exothermic and releases about 177 kJ/mole of CO_2 (76,000 Btu/lb mole). The overall reaction that occurs is:

$$CO_2 + 2H_2 \longrightarrow 2H_2O + \text{solid C} + \text{heat}$$

An iron catalyst in the form of steel wool is typically used to enhance the reaction, although other catalysts such as nickel or ruthenium have been evaluated. Improved catalysts would allow the size of the Bosch to be reduced. Because carbon is deposited on the catalyst, the cartridge containing the catalyst must be periodically replaced, as with the Sabatier/CFR. The reactor is shown schematically in figure B-10. Generally about 10 percent of the CO_2 is reacted in a single pass, therefore, it is necessary to recirculate the outlet gas back into the reactor.

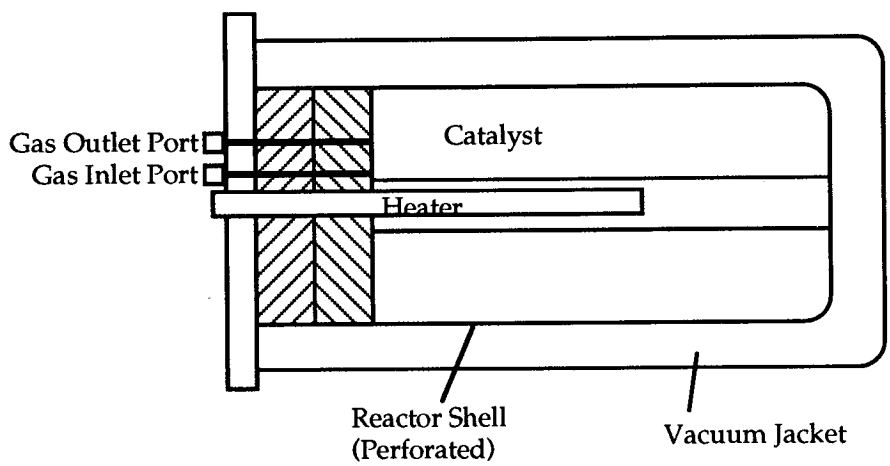

Figure B-10. Schematic of Bosch reactor.

References:

Holmes, R.F., King, C.D., and Keller, E.E.: "Bosch CO_2 Reduction System Development." General Dynamics, Report GDCA-DBD73-001, NASA/MSFC Contract NAS8-27276, January 1973.

Heppner, D.B., Hallick, T.M., Clark, D.C., and Quattrone, P.D.: "Bosch: An Alternate CO_2 Reduction Technology." ASME 79-ENAs-32, 9th Intersociety Conference on Environmental Systems, San Francisco, CA, July 16–19, 1979.

Sophonpanich, C., Manning, M.P., and Reid, R.C.: "Evaluation of Ru and Ru-Fe Alloys as Bosch Process Catalysts." SAE Paper No. 820875, 12th Intersociety Conference on Environmental Systems, San Diego, CA, July 19-21, 1982.

B.5 - Trace Contaminant Control

The first step to control trace contaminants is to minimize their generation and to control the types of contaminants produced. During the design phase, selecting materials to minimize offgassing and locating tanks and processing equipment where contaminant generation will be minimal, will reduce the amount of contaminants to be removed.

Active processes to remove contaminants may be specific for individual or specific classes of contaminants, or they may be more general and remove or transform several types of contaminants. Specific sorbents must be used in conjunction with other sorbents or processes. Regenerable processes must vent contaminants during regeneration. Nonregenerable processes must be periodically maintained.

Removal of trace contaminants from a habitat atmosphere can be achieved by several approaches, and usually a combination of approaches is used. Processes that are used include oxidation, adsorption, and adsorption, and for each of these there are several alternatives. Selection of the method depends on the type of contaminant, the amount of power available, constraints on expendables, and other factors. Organic contaminants can be oxidized to produce CO_2 and H_2O. Other contaminants either cannot be oxidized readily or produce compounds that are hazardous themselves. Typically, compounds that cannot be oxidized are removed by absorption or adsorption. A representative trace contaminant removal assembly is shown in figure B-11.

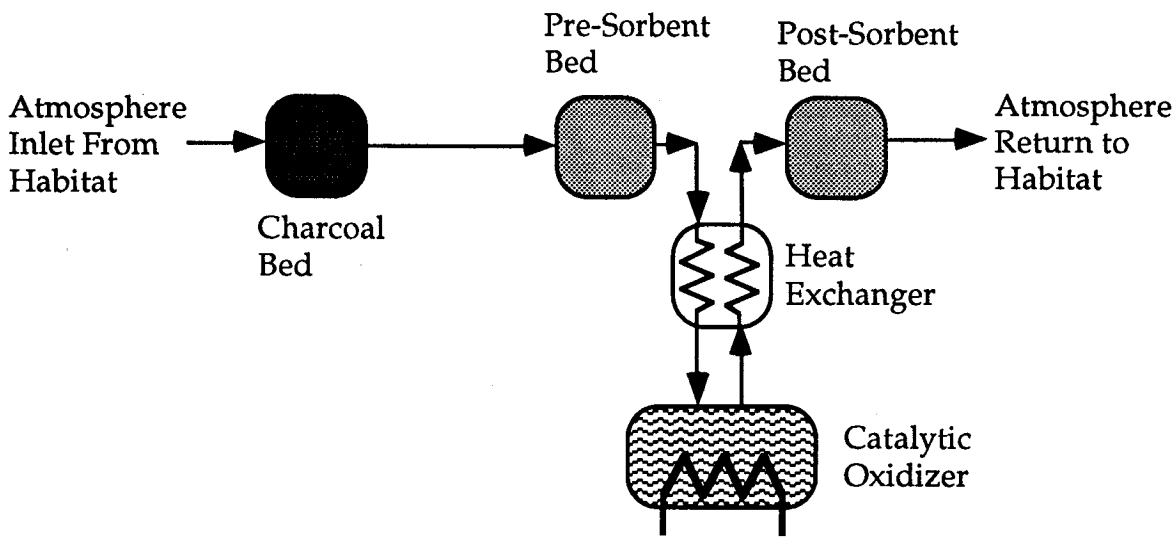

Figure B-11. Schematic of a trace contaminant removal assembly using a combination of approaches.

Methods of removing trace contaminants include:

Leakage To Space – For contaminants that are generated at low rates, the allowable leakage rate from a habitat may be sufficient to maintain acceptable concentrations. A disadvantage to this method is its poor response to sudden changes of contaminant level and the requirement for makeup gases. In cases of extreme contamination, however, it may be preferable to evacuate the contaminated atmosphere and replenish it from stored gases.

Filtration – Particulate contaminants and aerosols as small as 0.3 microns are effectively removed by high efficiency filters.

Catalytic Oxidation – Catalytic oxidation has been used on submarines and airplanes primarily to convert CO and H_2 to CO_2 and H_2O. Other contaminants are also oxidized depending on the temperature and the catalyst. Ideally the catalyst will provide complete oxidation with high efficiency at a low temperature, and it will oxidize a wide range of compounds and resist "poisoning" of the catalyst.

A catalytic oxidizer with platinum or palladium catalyst oxidizes CO, H_2, and N_2H_2 at ambient temperatures, or with palladium catalyst on alumina oxidizes low molecular weight compounds at higher temperatures (400 °C or 750 °F). Hopcalite (a coprecipitate of manganese and copper oxide) is a catalyst frequently used for oxidation of CO and H_2. It is ineffective in the presence of water vapor when the temperature is below 121 °C (250 °F) and some harmless gases (ammonia) can be oxidized to toxic ones (nitrogen oxides). Other catalysts have different characteristics which are better for specific situations. Low temperature catalysts are used to remove CO and H_2.

Activated Carbon with or without catalyst – Activated carbon adsorbs organic, toxic, and odoriferous contaminants and is used to remove high molecular weight non-polar organic contaminants. Acid treated carbon is used to remove NH_3. Chromate impregnated carbon is used to remove formaldehyde.

LiOH – LiOH is used to remove acid gases. As shown in figure B-11, LiOH is in the pre- and post-sorbent beds and removes acidic contaminants upstream and downstream of the catalytic oxidizer.

References:

Olcott, T. M.: "Development of a Sorber Trace Contaminant Control System Including Pre- and Post-sorbers for a Catalytic Oxidizer." NASA CR-2027, Lockheed Missiles and Space Company, Inc., Sunnyvale, CA, May 1972.

Robell, A.J., Arnold, C.R., Wheeler, A., Kersels, G.J., and Merrill, R.P.: "Trace Contaminant Adsorption and Sorbent Regeneration." NASA CR-1582, Lockheed Missiles and Space Company, Inc., Sunnyvale, CA, September 1970.

B.6 – Trace Contaminants of Concern on S.S. *Freedom*

Industrial standards for exposure to trace contaminants have been set by the Occupational Safety and Health Administration (OSHA) for 8 hour and unlimited exposure periods. The S.S. *Freedom* program spacecraft maximum allowable concentration (SMAC) values are set by the Medical Branch at JSC. SMAC values are documented in JSC 20584 "Spacecraft Maximum Allowable Concentrations for Airborne Contaminants," issued by the Medical Sciences Division of the Biomedical Operations and Research Branch, in May 1990. SMAC values currently match values shown in NHB 8060.1B, appendix D. These values will be updated when the SSF program approves 180-day SMAC values. JSC 20584 is to be revised every 6 months to reflect the updates in SMAC values.

Certain contaminants are of greater concern and drive the design of the trace contaminant control assembly due to their extreme toxicity or their prevalence. These include carbon monoxide, methane, ammonia, dichloromethene, chlorofluorocarbons in general, and low molecular weight alcohols. Table B-6 lists many of the contaminants of greatest concern.

Table B-6. 180-day SMAC level priority compounds for S.S. *Freedom.*

Methane	Chloroethene	Nitromethane
1,3-Butadiene	Methylene chloride	Indole
Methanol	Trichloroethene	Hydrogen
Formaldehyde	Freon 113	Carbon dioxide
Acrolein	2-Ethoxy ethanol	Carbon monoxide
Acetaldehyde	1,4-Epoxy-1,3-butadiene	Hydrazine
Methyl ethyl ketone	Trimethyl silanol	Nitrogen dioxide
Benzene	Octamethyltrisiloxane	Mercury
m-Xylene	Methylhydrazine	Ammonia

B.7 – Trace Contaminant Calculations for Assessing Combined Effects

Trace contaminants are divided into families which can create additive toxicological effects even when each individual toxic compound is present at concentrations below the SMAC. For each toxicological effect, a family of compounds has been identified. Concern for the toxicological effect due to the presence of more than one toxic compound in a family is addressed using threshold limits or T values for atmospheres containing a mixture of contaminants, and which are defined in JSC 20584, p.14, appendix as:

$$T = \sum_{i=1}^{n} \frac{C_i}{SMAC_i}$$ where n compounds are in the family,

C_i = The concentration of compound i in a family, and

$SMAC_i$ = The space habitat maximum allowable concentration of a particular toxic compound in a habitable atmosphere.

All T values should remain less than 1 in addition to individual toxic compounds remaining below their SMAC level. A specific toxic compound may have more than one toxicological effect. Where more than one toxicological effect is known, the compound will be included in more than one family.

S.S. *Freedom* is being designed to T values and SMAC's found in NHB 8060.1B. The primary difference between NHB 8060.1B and JSC 20584 T-value definitions lies with grouping of contaminants into families. NHB 8060.1B groups contaminant compounds according to chemical

functional class rather than toxic effect. The approach of JSC 20584 can result in a single compound contributing more than once to the overall T-value which is a summation of each group T-value. It is suggested that in this case, the primary toxic effect be considered in the calculations to prevent counting a compound twice.

B.8 – Trace Contaminant Monitoring

Trace contaminants are compounds that are present in low concentrations and that may be hazardous even at those low concentrations. It is therefore important to identify and quantify these compounds in a timely manner. There are two general categories of trace contaminant monitors: those that can monitor a wide range of contaminants and those that are specific as to compound or type of compound. A mass spectrometer (MS), for example, can distinguish between compounds having different molecular weights. Compounds that have the same molecular weight, such as CO and N_2, cannot be distinguished by a MS and another method is needed that can identify at least one of the compounds. Nondispersive infrared spectrometry is one approach to monitor CO. There are numerous methods for monitoring trace contaminants. Some of them are listed below. More information is available in the references listed below. Many of the methods require separation of the compounds by gas chromatography or another method.

Table B-7. Methods of detecting, identifying, and/or qauntifying trace contaminants.

Method	Detectable Compounds
Scanning magnetic mass spectrometer	universal(1)
Non-scanning magnetic mass spectrometer	universal
Ion trap mass spectrometer	universal
Ion trap MS/MS	universal
Time-of-flight mass spectrometer	high molecular weight
Direct deposition/Fourier transform infrared spectrometer	dipole compounds
Quadrupole fliter mass spectrometer	synthetic organic compounds
Ion mobility spectrometer	universal, except for hydrocarbons and ?
Thermal conductivity detector	universal
Ultrasonic detector	universal
CHEMFET/ISFET (Ion Sensing Field Effect Transistor)	H_2, H_2S, NH_3, CO
Non-dispersive infrared spectrometer	CO, CO_2, hydrocarbons
Surface acoustic wave	H_2,SO_2,H_2O
Metal oxide	CO, CH_4, combustible gas

Note:
(1) Methods that are "universal" cannot necessarily identify and qualtify all compounds due to limitations such as interference between compounds having the same molecular weight.

References:

"ECLSS Integration Analysis: Advanced ECLSS Subsystem and Instrumentation Technology Study for the Space Exploration Initiative." MDC W5658, McDonnell Douglas Space Systems Company, NASA/MSFC Contract NAS8-36407, October 1990.

Bodel, Itamar: "Spacecraft Trace Contaminant Monitor (TCM) Evaluation of Concepts." Report No. 67681, Arthur D. Little, Inc., Contract SK91N074 with McDonnell Douglas Space Systems Company, Contract NAS8-36407, with NASA/MSFC, February 14, 1992.

Palmer, Peter T., and Wong, Carla M.: "An Expert System/Ion Trap Mass Spectrometry Approach for Life Support Systems Monitoring." SAE Paper No. 921173, 22nd International Conference on Environmental Systems, Seattle, WA, July 13–16, 1992.

B.9 – Microorganism Monitoring and Control

Microorganisms are unavoidable in a habitat and some are beneficial. But they can also lead to corrosion of surfaces, clogging of tubing or filters, and other problems. Pathogenic microorganisms are of special concern. Monitoring the presence of microorganisms (type and population) is important to ensure that methods to control their growth are effective. Methods of disinfection include chemical disinfectants that can be used when cleaning surfaces and other sources of airborne microorganisms; ultraviolet light that can also disinfect surfaces or atmosphere, as well as water; and HEPA filters that can be used to remove microorganisms from the atmosphere, depending on the pore size of the filters and the size of the microorganisms. There are numerous methods for monitoring microorganisms and some of them are listed in table B-8. More information is available in the references listed below.

Table B-8. Methods of detecting, identifying, and/or enumerating microorganisms.

Method	Detectable Organisms
Adenosine Triphosphate (ATP)	living cells
Bactometer	all microorganisms
Biosensor	microorganisms and chemical compounds
DNA Probes	bacteria
Electron Particle Detection (EPD)	bacteria
Enzyme Immunosensors	antibodies, antigens
Epifluorescence Microscopy (EPM)	bacteria
Laser light scattering	all microorganisms
Microbial fuel cell	viable microorganisms, Gram positive, Gram negative
Microbial Load Monitoring (MLM)	microorganisms
Primary fluorescence	fluorescing bacteria
Pyrogen detection	Gram negative
Sceondary fluorescence	bacteria
Vitek ImmunoDiagnostic Assay System (VIDAS)	bacteria, fungi, viruses, metabolic products
Two-dimensional fluorescence spectroscopy	microorganisms
Volatile product detection	microorganisms
Polymerase Chain Reaction (PCR)	all organisms

References:

"ECLSS Integration Analysis: Advanced ECLSS Subsystem and Instrumentation Technology Study for the Space Exploration Initiative." MDC W5658, McDonnell Douglas Space Systems Company, NASA/MSFC Contract NAS8-36407, October 1990.

Rodgers, Elizabeth B., and Seale, D.B.: "Ecology and Monitoring of Microorganisms in a Small Closed System: Potential Benefits and Problems for Space Station." SAE Paper No. 891491, 19th Intersociety Conference on Environmental Systems, San Diego, CA, July 24–27, 1989.

APPENDIX C

ATMOSPHERE CONTROL AND SUPPLY

PRECEDING PAGE BLANK NOT FILMED

PAGE 208 INTENTIONALLY BLANK

C.1 – ACS Requirements and Technology Options

The atmosphere control and supply (ACS) subsystem involves storage, distribution, conditioning, and pressure control of the atmospheric gases; vent and relief capability; and habitat depressurization/repressurization. Sufficient quantities of O_2 and N_2 must be available, from storage or in situ sources on a planet, to make up for leakage and other losses. Methods of gas storage are described in appendix B. Another method for performing ACS functions is described in section C.2. A functional schematic of the ACS subsystem for S.S. *Freedom* is shown in figure C-1. The ACS design parameters for S.S. *Freedom* are listed in table C-1. Monitoring the "major constituents" of the atmosphere is an essential function so that the amounts of gases to be added can be determined. Methods of monitoring the major constituents are described in section C.3.

For S.S. *Freedom* the ACS will provide:

- O_2/N_2 pressure control including total pressure monitoring and controlled repressurization, hyperbaric operations
- Vent and relief including on-orbit positive pressure relief, redundant positive and negative pressure relief during orbiter transport, and controlled atmosphere depressurization
- O_2/N_2 distribution including internal distribution to attached elements and internal uses relating to the health care facility, and external penetrations for direct access to storage tanks
- Manual pressure equalization capability across hatches and remotely operable pressure equalization capability.

General References:

"Life Support and Habitability Manual," European Space Agency, ESA PSS-03-406 Issue 1 (August 1990).

"Analytical Methods for Space Vehicle Atmospheric Control Processes," AiResearch Manufacturing Company, Air Force Contract AF 33(6 6)-8323, Wright-Patterson Air Force Base, OH, ASD-TR-61-162, November 1962.

"Architectural Control Document. Environmental Control and Life Support," Space Station *Freedom* Program Office. Reston, VA, SSP 30262 Rev. E., 1993.

PRECEDING PAGE BLANK NOT FILMED

PAGE 210 INTENTIONALLY BLANK

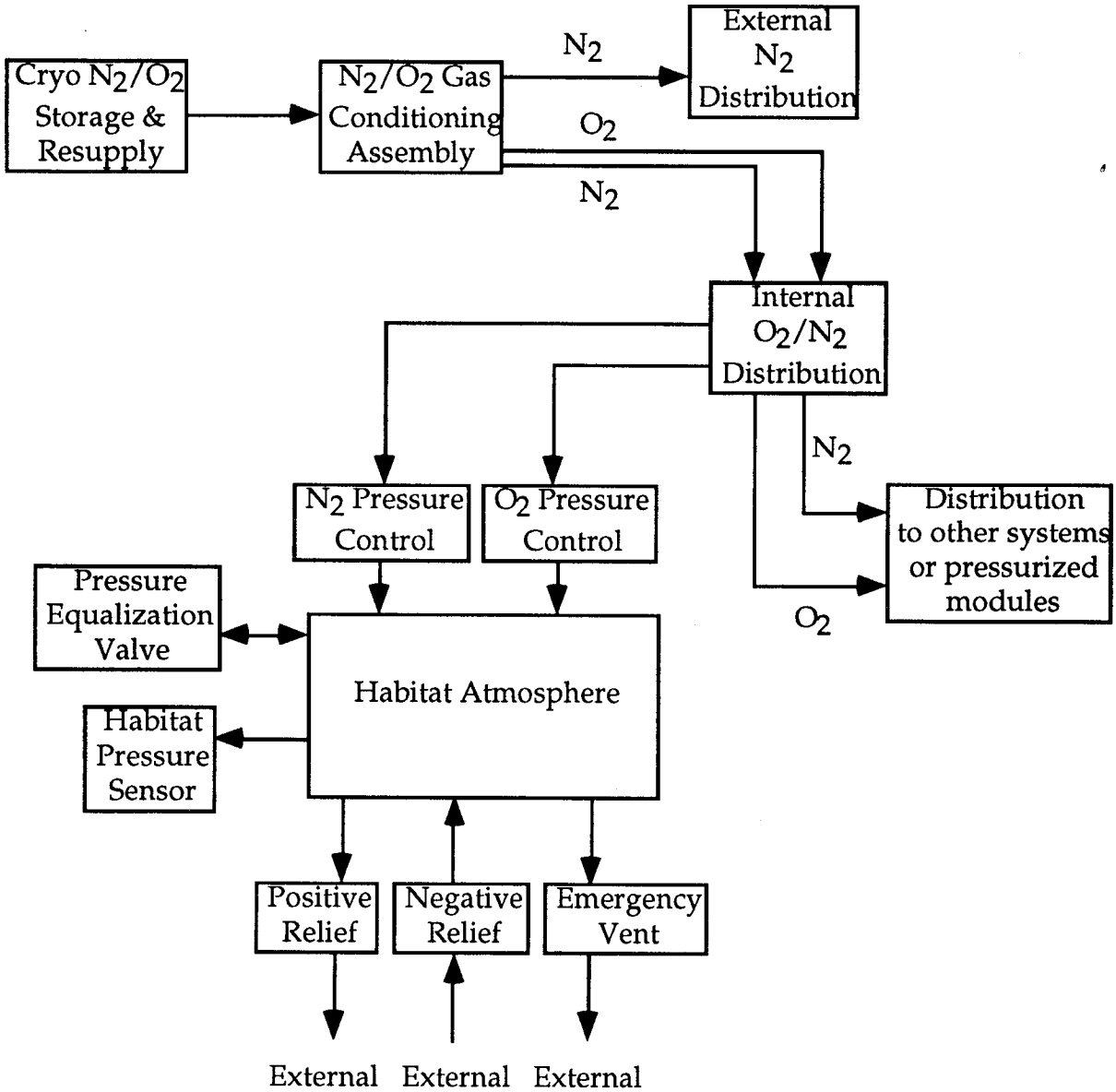

Figure C-1. ACS functional schematic for S.S. *Freedom.*

Table C-1. ACS design parameters for S.S. *Freedom* (SI units).

	Nominal	Range
Metabolic O_2 (kg/person-day)	0.84	0.5-1.25
Biological Specimen metabolic O_2 (kg/day)	1.08	N/A
Atmosphere Leakage (kg/element/day)	0.23	0-0.23
Airlock Gas Loss (percent of airlock gas/operation)	10	10-100
Airlock:		
equipment lock, empty shell (m^3)	26.2/26.5	N/A
crew lock, empty shell (m^3)	7.3/7.0	N/A
Airlock (EVA use only)		
Depressurization rate (kPa/min)	207-413	
Max. depressurization time (min)	10	N/A
Repressurization rate (kPa/min)	207-413	
Max. pressure (kPa)	101.2	N/A
Airlock (hyperbaric contingency use only)		
Max. pressure (kPa)	345	N/A
Max. O_2, at 2.8 atmospheres (%)	21	N/A
Max. use duration, single 2.8 atmospheres excursion (%)	7	N/A
Pressurization rate (kPa/min)	92.3	0.0-13.4
Depressurization rate (kPa/min)	186	0.0-27.0
Experiment Airlock:		
Volume (m^3)	3.4	N/A
Number of Cycles Per 90 days	12	0-15
Airlock Gas Loss (percent of airlock gas/operation)	10	5-10
Experiment Venting (kg/90 days)	65	N/A
U.S. Laboratory Element Volume, empty shell (m^3)	106	N/A
U.S. Habitation Element Volume, empty shell (m^3)	106	N/A
U.S. Logistics Element Volume, empty shell (m^3)	85.6	N/A
Nodes - each (m^3)	61.9	N/A
Columbus Laboratory Volume, empty shell (m^3)	141.5	N/A
JEM Laboratory Volume, empty shell (m^3)	128.7	N/A
JEM Logistics Module Volume, empty shell (m^3)	45.2	N/A
Pressurized Docking Adapter Volume (m^3)	8.5	N/A
Cupola Volume (m^3)	1.9	N/A
CBM Volume, Active Rigid (m^3)	0.57	N/A
CBM Volume, Passive Flex (m^3)	1.05	N/A

Table C-2. ACS design parameters for S.S. *Freedom* (English units).

Metabolic O_2 (lb/person-day)	1.84	1.1-2.76
Biological Specimen metabolic O_2 (lb/day)	2.38	N/A
Atmosphere Leakage (lb/element/day)	0.5	0-0.5
Airlock Gas Loss (percent of airlock gas/operation)	10	10-100
Airlock:		
equipment lock, empty shell (ft^3) (hatch inside/outside EL)	927/936	N/A
crew lock, empty shell (ft^3) (hatch inside/outside EL)	259/249	N/A
Airlock (EVA use only)		
Depressurization rate (psi/min)	30-60	
Max. depressurization time (rnin)	10	N/A
Repressurization rate (psi/min)	30-60	
Max. pressure (psi)	14.9	N/A
Airlock (hyperbaric contingency use only)		
Max. pressure (psia)	50	N/A
Max. O_2, at 2.8 atmospheres (%)	21	N/A
Max. use duration, single 2.8 atmospheres excursion (%)	7	N/A
Pressurization rate (psi/min)	13.4	0.0-13.4
Depressurization rate (psi/min)	27	0.0-27.0
Experiment Airlock:		
Volume (ft^3)	120	N/A
Number of Cycles Per 90 days	12	0-15
Airlock Gas Loss (percent of airlock gas/operation)	10	5-10
Experiment Venting (lbm per 90 days)	143	N/A
U.S. Laboratory Element Volume, empty shell (ft^3)	3745	N/A
U.S. Habitation Element Volume, empty shell (ft^3)	3745	N/A
U.S. Logistics Element Volume, empty shell (ft^3)	3024	N/A
Nodes - each (ft^3)	2186	N/A
Columbus Laboratory Volume, empty shell (ft^3)	5000	N/A
JEM Laboratory Volume, empty shell (ft^3)	4548	N/A
JEM Logistics Module Volume, empty shell (ft^3)	1596	N/A
Pressurized Docking Adapter Volume (ft^3)	300	N/A
Cupola Volume (ft^3)	67	N/A
CBM Volume, Active Rigid (ft^3)	20	N/A
CBM Volume, Passive Flex (ft^3)	37	N/A

C.2 – ACS Technology Options

Oxygen/Nitrogen Storage – Usually tanks are used to store gases, either in gas form under pressure or as cryogenic liquids. These methods are subject to leakage and boiloff, which must be considered when using them. An alternative approach is to store gases in a form that can be maintained at ambient temperature and pressure, to avoid leakage, yet be available when needed. For example, nitrogen can be stored as hydrazine. (This method can also be used to store hydrogen. Another method for storing hydrogen is in the form of metal hydrides (see NASA TM 4076).)

High Pressure Gas - (See appendix B.2)

Cryogenic Liquid - (See appendix B.2)

Hydrazine – N_2 (and H_2) can be stored as liquid hydrazine (N_2H_4) and catalytically dissociated as needed. Storing N_2 as hydrazine requires less volume than storing the same amount as a gas or cryogenic fluid. Liquid N_2H_4 is catalytically dissociated to a N_2 and H_2 gas mixture. This mixture is then separated using a polymer-electrochemical separator or a palladium/silver separator. The dissociation is exothermic (1.57 MJ/kg or 678 Btu/lb) and occurs by the following reactions:

$$N_2H_4 \longrightarrow 1/3\ N_2 + 4/3\ NH_3$$
$$4/3\ NH_3 \longrightarrow 2/3\ N_2 + 2\ H_2$$

overall reaction: $N_2H_4 \longrightarrow N_2 + 2H_2 + \text{heat}$

Ammonia (NH_3) results from the first dissociation and must be dissociated further to recover the nitrogen. A schematic showing the component parts of a hydrazine dissociation assembly is shown in figure C-2.

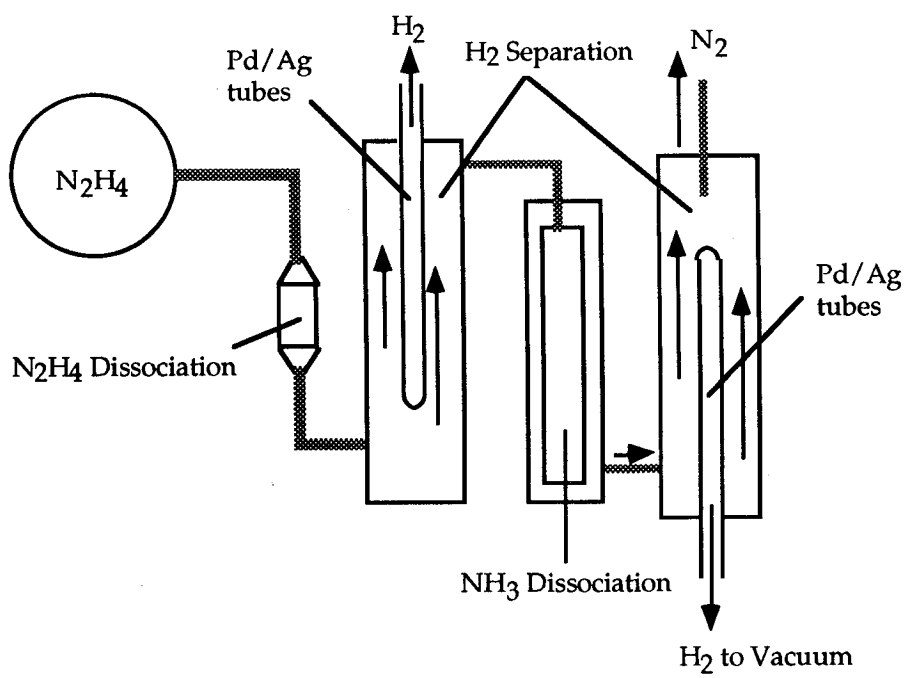

Figure C-2. Schematic of a N_2H_4 to N_2 assembly.

References:

Heppner, D.B., and Quattrone, P.D.: "Nitrogen Supply System Based on Hydrazine Dissociation." ASME Paper No. 81-ENAs-27, 11th Intersociety Conference on Environmental Systems, San Francisco, CA, July 13–15, 1981.

Perry, J.L.: "Rechargeable Metal Hydrides for Spacecraft Application." NASA Technical Memorandum 4076, September 1988.

C.3 – Monitoring Major Atmosphere Constituents

Many of the instruments used for monitoring trace contaminants listed in section B.8 are also able to monitor the major constituents. In addition, other methods for monitoring O_2 include potentiometric electrodes with O_2 sensitive coatings and solid zirconia sensors. One approach is to monitor the partial pressures of O_2, N_2, CO_2, water vapor, and H_2. The sum of the partial pressures yields the total pressure which can then be compared with a pressure sensor as a system check. The O_2 and N_2 measurements are then used to control the addition of these gases to make up for losses.

APPENDIX D

TEMPERATURE AND HUMIDITY CONTROL

D.1 – THC Requirements and Technology Options

Temperature and humidity must be maintained within certain limits in order to provide comfortable conditions. Figure 9 in chapter 3 shows, on a psychrometric chart, the allowable limits specified for S.S. *Freedom*. THC limits are listed in table D-1 for some US space habitats. Heat is generated by people, animals, lights, and equipment, and leaks in from outside due to solar and other radiation. A method of calculating the heat and moisture products of metabolic processes of the THC load for the Orbiter is shown in figure D-1. The metabolic rates for different activity levels are listed in table D-2. Temperature is partly controlled by surface coatings that absorb different amounts of heat depending on their characteristics. Temperature is controlled by removing heat from the atmosphere, generally with a heat exchanger. The heat is ultimately radiated to space by evaporating coolants to space, tube-and-fin radiators, or vapor-compression cycle heat pumps with radiators. There are two approaches to humidity control: (1) condensation of moisture from the atmosphere followed by phase separation, and (2) drying of the atmosphere with a desiccant. For most situations the first approach is preferred, due to the energy required to dry desiccants. Temperature control methods are described in section D.2. Humidity control and some methods for separating water from gas are also described in section D.2. Ventilation and equipment cooling are also functions of the THC subsystem and are described in sections D.3 and D.4, respectively.

References:

"Bioastronautics Data Book," Second Edition, NASA SP-3006, 1973.

Purser, Paul E., Faget, Maxime A., and Smith, Norman F.: "Manned Spacecraft: Engineering Design and Operation." Fairchild Publications, Inc., New York, 1964.

PRECEDING PAGE BLANK NOT FILMED PAGE 218 INTENTIONALLY BLANK

Table D-1. THC limits for U.S. space habitats.

	Press kPa	Temperature Degrees C	Relative Humidity %	Dewpoint Degrees C
Skylab	34.45	[1a]		7.8-15.6[1b]
(actual)	34.45	20.1-23.9[1a]		N/A-13.9[1c]
Shuttle	101.2	18.3-28.9[2]	5-95[3]	3.9-16.1
(nominal)	101.2	21.1[2]		
(avionics in)	101.2	4.4-35[2]		
(avionics out)	101.2	21.1-54.4[2]		
(emergency)	55.1	4.4-37.8[2]		-17.8-28.9[4]
Freedom[5]	101.2	18.3-26.7	25-75	4.4-15.6
(degraded)		18.3-26.7	25-75	1.7-21.1
(safe haven)	101.2	15.6-29.4	25-75	1.7-21.1
	psia	Degrees F	%	Degrees F
Skylab	5.00	[1a]		46-60[1b]
(actual)	5.00	69-75[1a]		N/A-57[1c]
Shuttle	14.7	65-84[2]	5-95[3]	39-61
(nominal)	14.7	70[2]		
(avionics in)	14.7	40-95[2]		
(avionics out)	14.7	70-130[2]		
(emergency)	8.0	40-100[2]		0-84[4]
Freedom[5]	14.7	65-80	25-75	40-60
(degraded)		65-80	25-75	35-70
(safe haven)	14.7	60-85	25-75	35-70

Notes:

1. From MSFC Skylab Mission Report—Saturn Workshop, NASA TM X-64814, October 1974, (a.) Crew selected setpoint +4/-2, p. 9-15, (b.) p. 9-11, (c.) p. 9-12.
2. Documented in the Shuttle Operational Data Book, JSC 08934, Section 4.6.1.3.1, p. 4.6.1-15. The nominal temperature extreme for 7 and 10 person ascent/entry phases is also given. For 7 people: 25 °C/16 °C (77 °F/61 °F) dewpoint; for 10 people: 27 °C/16 °C (80 °F/61 °F) dewpoint.
3. Ibid., p. 4.6.1-12.
4. From Caution and Warning Limits as specified in the Space Shuttle Systems Handbook, Volume I, JSC 11174, Revision D, DCN-1, Orbiter Schematic page 6.1-2, Emergency operation.
5. From Table XI, p. 62 of Space Station Freedom Program Definition and Requirements, SS-SRD-0001C, Section 3.0, System Requirements, dated April 17, 1990.

From the Shuttle Operational Data Book, JSC 08934, Table 4.6.1-13, p. 4.6.1–28:

For a given metabolic rate, MR, in W/person:

1. $QL = MR - 126 + (5 + MR/170)(T_{hab} - 15.5)$
   where QL = The latent heat load in W/person
   MR = The metabolic rate in W/person
   T_{hab} = The habitat temperature in degrees Celsius

2. $QL_{min} = 0.22\ MR + 1.38\ (T_{hab} - 15.5)$
   where QL_{min} = The minimum latent heat load possible in W/person

3. $Q_{CABIN\ LATENT} = \begin{cases} QL & \text{IF } QL >= QLMIN \\ QLMIN & \text{OR IF } QL < QLMIN \end{cases}$
   where $Q_{CABIN\ LATENT}$ = Heat load from condensation, (W/person)

4. $Q_{CABIN\ SENSIBLE} = MR - Q_{CABIN\ LATENT}$
   where $Q_{CABIN\ SENSIBLE}$ = Heat load from lowering the atmosphere temperature, (W/person)

For a given metabolic rate, MR, in Btu/person/hour:

1. $QL = MR - 430 + \left(10 + \frac{MR}{1000}\right)(T_{CAB} - 60)$
   where QL = The normally calculated latent heat load in Btu/person/hour,
   MR = The metabolic rate in Btu/hour per person,
   and T_{CAB} = The habitat temperature in degrees Fahrenheit.

2. $QLMIN = 0.22\ MR + 2.6(T_{CAB} - 60)$
   where QLMIN = The minimum latent heat load possible in Btu/person/hour

3. $Q_{CABIN\ LATENT} = \begin{cases} QL & \text{IF } QL >= QLMIN \\ QLMIN & \text{OR IF } QL < QLMIN \end{cases}$
   where $Q_{CABIN\ LATENT}$ = Heat load from condensation, (Btu/person/hour)

4. $Q_{CABIN\ SENSIBLE} = MR - Q_{CABIN\ LATENT}$
   where $Q_{CABIN\ SENSIBLE}$ = Heat load from lowering the atmosphere temperature, (Btu/person/hour)

Figure D-1. Calculation of the heat and moisture from metabolic processes.

Table D-2. Metabolic rates per person, W (Btu/h).[1,2]

Activity level	24-hour average	16-hour awake	8-hour asleep
Minimum	105.5 (360.0)	114.3 (390.0)	87.9 (300.0)
Nominal	131.0 (447.2)	152.6 (520.8)	87.9 (300.0)
Maximum	156.2 (533.3)	190.5 (650.0)	87.9 (300.0)

Notes:
(1) From the Shuttle Operational Data Book, JSC 08934.

(2) In the SSF program, the ECLSS ACD, SSP 30262, specifies a range of metabolic rates for a person on-orbit (pp. 3-30 and 3-33, Table 3-1 pp. 1 and 4 of 6) equivalent to 82 to 205 W (280 to 700 Btu/h) with a nominal value of 137 W (467 Btu/h). The values for missions of about a week could be expected to be higher than averages for missions of 90 days duration, and this is reflected in the requirements.

D.2 – THC Design Concepts

Primary THC functions include habitat atmosphere temperature and humidity control, atmosphere particulate and microorganism control, ventilation, avionics equipment cooling (sensible only), and may include thermally conditioned storage (refrigerators/freezers). Forced atmosphere circulation through condensing heat exchangers is the primary mechanism for conditioning the atmosphere in space habitats. This approach has been used on all modern day space habitats with a heat exchanger design similar to that shown in figure D-2. The "slurper bar" (fig. D-3) removes the condensed water from the atmosphere stream in zero-g. Due to the hydrophilic coating applied to the slurper bar surface, water tends to adhere to the surface and is sucked through the holes, along with atmosphere, by a centrifugal atmosphere/water separator. (Other types of liquid/gas separators include wicks to absorb and transfer liquids, and directed ultrasound to remove gases from liquids.) Atmosphere bypass control around the heat exchanger core, based on feedback from habitat atmosphere temperature sensors, regulates the habitat temperature. Humidity is passively regulated as a result of the atmosphere passing through the heat exchanger core. The upper bypass limit is usually set around 90 percent to maintain humidity levels within specification during low habitat heat load periods. Heat exchangers are sized to accommodate nominal heat loads at the lowest specified setpoint temperature (usually 18.3 °C (65 °F)).

The method of control for many temperature control systems (e.g., domestic HVAC) is frequently an on-off thermostat. This is suitable for a compressor-based system in which the compressor is either on or off. For space habitats where temperature control of the atmosphere is a continuous process, using a heat exchanger with continuous flow, a different approach is necessary. There are several continuous control schemes that control the temperature by altering the amount of atmosphere flow through the HX. One approach is proportional-integral (PI) control in which the measured temperature over time is compared with the set-point temperature. The PI algorithm uses instantaneous and longer term changes in measured temperature to continually adjust the bypass valve position, thereby maintaining the atmosphere temperature within the specified limits for a range of heat loads.

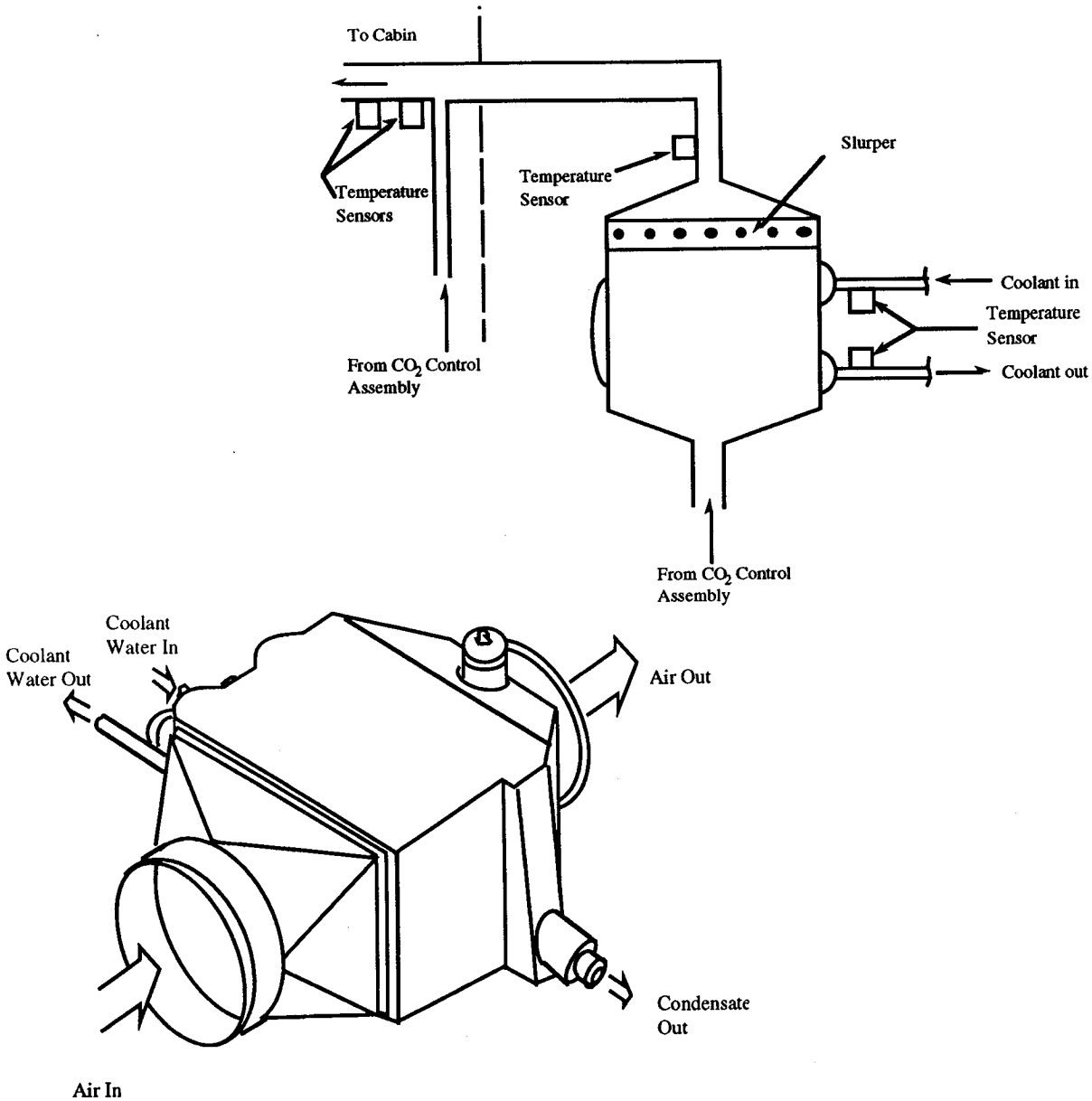

Figure D-2. Typical condensing heat exchanger design concept.

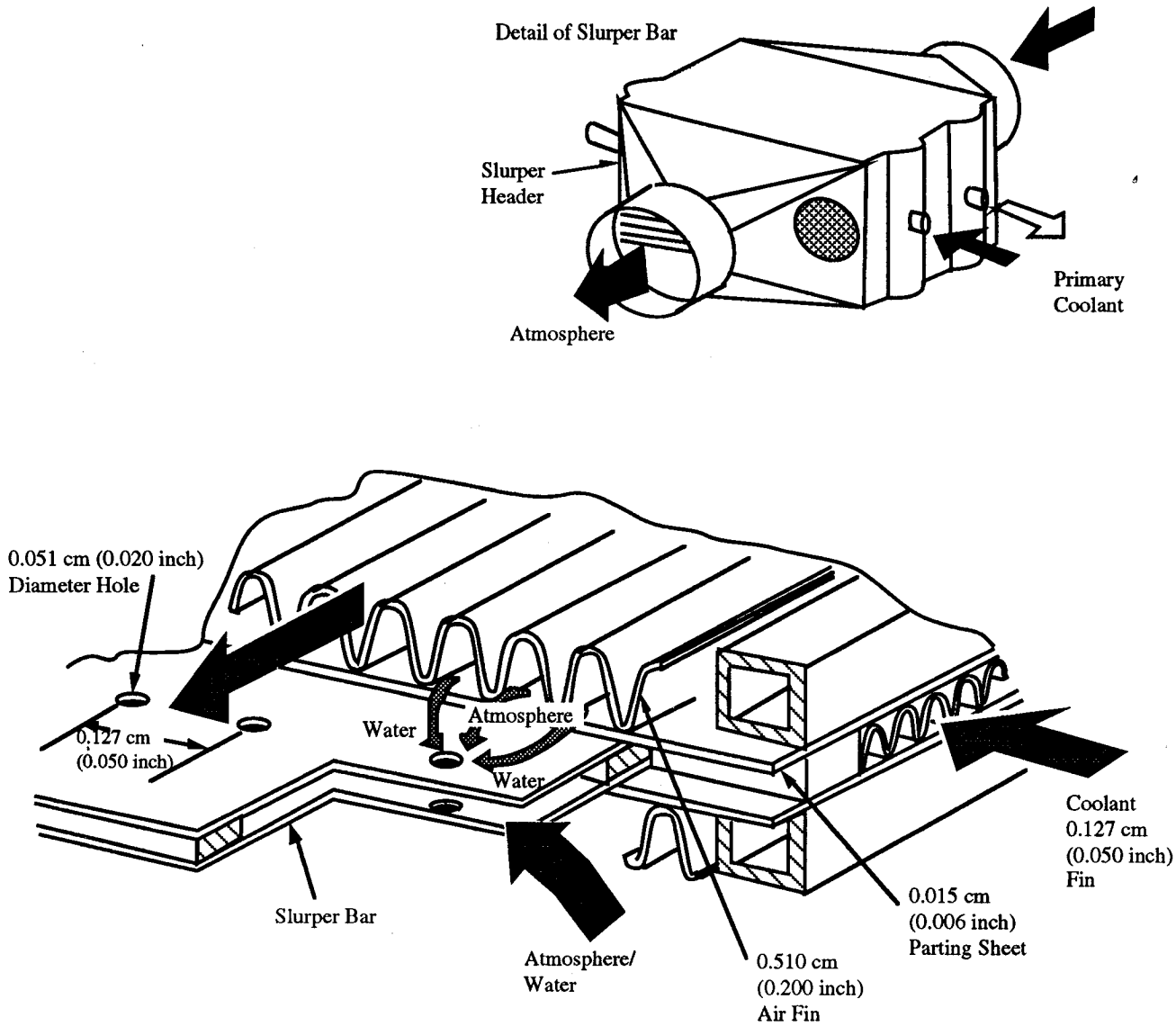

Figure D-3. Slurper bar operation.

Atmosphere particulate and microbial control can be performed by filters, electrostatic precipitators, and/or absorption medias. Mesh filters are generally employed to remove particulates from the atmosphere. The mesh size depends on the requirement for removal of a specified particle diameter, typically in the 0.5- to 300-micron size range. Microbial control techniques include activated charcoal absorbers or high efficiency particulate atmosphere (HEPA) filters. Under some conditions such as high humidity at ambient temperatures, activated charcoal can serve as a growth medium so HEPA filters are generally preferred to control airborne microorganisms.

References:

Haines, Roger W.: "Control Systems for Heating, Ventilation, and Air Conditioning." Van Nostrand-Reinhold Company, New York, 1987.

"Spacelab Environmental Control System Data Book." McDonnell Douglas, MDTSCO, Huntsville Operations, MDC H0375, vol. 2., May 1983.

"Airborne Particulate Matter in Spacecraft." NASA Conference Publication 2499, Proceedings of a panel discussion held at the Lunar and Planetary Institute, Houston, TX, July 23–24, 1987.

Liu, Y.H., Rubow, K.L., McMurry, P.H., Kotz, T.J., and Russo, D.: "Airborne Particulate Matter and Spacecraft Internal Environments." SAE Paper No. 911476, 21st International Conference on Environmental Systems, San Francisco, CA, July 15–18, 1991.

D.3 – Ventilation

Habitat ventilation is achieved by forced flow of the atmosphere. Atmosphere flow patterns in the habitat are a function of the diffuser design and location. These patterns can be analyzed using computational fluid dynamics (CFD) simulations with verification by test. Proper ventilation, especially in a microgravity environment, assures that no stagnant atmosphere pockets exist which could lead to buildup of carbon dioxide, particulate, and trace contaminant levels in the habitat. Medical doctors at JSC have set face atmosphere velocity requirements for space habitats to a maximum of 0.20 m/s (40 feet per minute (fpm)) to prevent atmosphere drafts. A lower design requirement of 0.08 m/s (15 fpm) is customary for control of the CO_2 level in the habitat. Design engineers have the option to use auxiliary ventilation fans in the habitat to meet these requirements.

D.4 – Equipment Cooling

Electrical equipment in racks or avionics bays require cooling either by forced atmosphere convection or by conductance to a cold plate which is maintained by a circulating fluid loop. The atmosphere convection option is a function of the ECLSS THC. Multiple options exist for avionics atmosphere cooling and trade studies must be performed to determine the best option for a particular space habitat design. A single fan/heat exchanger system with supply and return ducts routed to and from all racks and/or equipment bays is the most common approach. A liquid cooling loop is used at the heat exchanger interface to remove the waste heat from the avionics atmosphere stream. This system usually offers the lowest resource requirements (power, weight, and volume), but it can be a challenge to balance the atmosphere flows properly, especially with complicated distribution networks with varying heat loads. An alternative to this approach is a distributed system with dedicated rack fans/heat exchangers each tied separately to the same liquid cooling loop for waste heat removal. Each separate package can be sized to handle the expected heat load, offering flexibility and eliminating the atmosphere balancing problem. Past trade studies have shown that this approach results in slightly higher resource requirements for the situations evaluated.

APPENDIX E

WATER RECOVERY AND MANAGEMENT

PRECEDING PAGE BLANK NOT FILMED

PAGE 226 INTENTIONALLY BLANK

E.1 – Water Requirements and Processing Technology Options

Purification of waste water involves collecting and storing the waste water for processing, and monitoring the quality of the processed water to ensure that it meets the specifications. Water usage requirements are listed in table E-1 for the orbiter and S.S. *Freedom*. The water quality specification for S.S. *Freedom* (maximum contaminant levels) is listed in table E-2. Some of the technologies that have been used or considered for performing the WRM functions are listed in table E-3. These technologies are briefly described in sections E.2 through E.6. This is not an exhaustive list, however, and other technologies may be better suited for a particular situation. For detailed descriptions there are several reports listed below and additional references throughout the appendices.

When evaluating the options for performing a function, the factors to be considered include:

Design loads
Operating requirements (power consumption, fluid and electrical interface, servicing, mass, and volume)
Safety
Maintainability and reliability
Resupply requirements (mass, volume)
Cost (development and operating)
Synergisms with, and impacts on, other assemblies/subsystems/systems
Emergency operation.

General References:

"ECLSS Integration Analysis: Advanced ECLSS Subsystem and Instrumentation Technology Study for the Space Exploration Initiative." MDC W5658, McDonnell Douglas Space Systems Company, NASA/MSFC Contract NAS8-36407, October 1990.

"Life Support and Habitability Manual." European Space Agency, ESA PSS-03-406 Issue 1 (August 1990).

Wydeven, Theodore: "A Survey of Some Regenerative Physico-Chemical Life Support Technology." NASA Technical Memorandum 101004, November 1988.

Purser, et al.: "Manned Spacecraft: Engineering Design and Operation." Chapter 15 "Life-Support Systems," by Robert E. Smylie and Maurice R. Reumont, Fairchild Publications, 1964.

PAGE 228 INTENTIONALLY BLANK

PRECEDING PAGE BLANK NOT FILMED

Table E-1. Water usage requirements.

	Orbiter[1] kg/person day			*Freedom*[2] kg/person day		
	Min	Nominal	Max	Min	Nominal	Max
Shower				1.82	2.72	2.72 (PMC)
				3.63	5.45	5.45 (AC)
Handwash				3.63	4.09	4.54
Food Prep	0.73	0.89	1.22	0.40	0.79	0.91
Drink	0.27	1.70	3.57	0.21	1.62	1.77
Commode/Urinal				0.00	0.49	0.73
Laundry				N/A	12.5	12.5
Oral hygiene				0.00	0.40	0.40
	lb_m/person day			lb_m/person day		
	Min	Nominal	Max	Min	Nominal	Max
Shower				4.00	6.00	6.00 (PMC)
				8.00	12.00	12.00 (AC)
Handwash				8.00	9.00	10.00
Food Prep	1.60	1.96	2.70	0.88	1.75	2.00
Drink	0.60	3.74	7.86	0.46	3.56	3.90
Commode/Urinal				0.00	1.09	1.67
Laundry				N/A	27.5	27.5
Oral hygiene				0.00	0.80	0.80

Notes:
1. From the Shuttle Operational Data Book, JSC 09934, Section 4.6, and Tables 4.6.1, 4.6.2, and 4.6.3.
2. From the ECLSS ACD, SSP 30262, dated October 9, 1990

Table E-2. Water quality specification for S.S. *Freedom.*
(maximum contaminant levels)

	Potable	Hygiene
Physical Parameters		
Total Solids (mg/L)	100	500
Color, True (Pt/Co units)	15	15
Taste (TTN)	3	N/A
Odor (TON)	3	3
Particulates (max size, microns)	40	40
pH	6.0-8.5	5.0-8.5
Turbidity (NTU)	1	1
Dissolved Gas (free @ 37 °C)	(a)	N/A
Free Gas (@ STP)	(a)	(a)
Inorganic Constituents (mg/L) (b) (e)		
Ammonia	0.5	0.5
Arsenic	0.01	0.01
Barium	1.0	1.0
Cadmium	0.005	0.005
Calcium	30	30
Chlorine (total, includes chloride)	200	200
Chromium	0.05	0.05
Copper	1.0	1.0
Iodine (total, includes organic iodine)	15	15
Iron	0.3	0.3
Lead	0.05	0.05
Magnesium	50	50
Manganese	0.05	0.05
Mercury	0.002	0.002
Nickel	0.05	0.05
Nitrate (NO_3-N)	10	10
Potassium	340	340
Selenium	0.01	0.01
Silver	0.05	0.05
Sulfate	250	250
Sulfide	0.05	0.05
Zinc	5.0	5.0
Bactericide (mg/L)		
Residual Iodine (minimum)	0.5	0.5
Residual Iodine (maximum)	4.0	6.0
Aesthetics (mg/L)		
Cations	30	N/A
Anions	30	N/A
CO_2	15	N/A

Table E-2. Water quality specification for S.S. *Freedom* (continued).
(maximum contaminant levels)

	Potable	Hygiene
Physical Parameters		
Microbial		
Bacteria (CFU/100 mL)	1	1
Total Count	1	1
Anaerobes	1	1
Coliform	1	1
Virus (PFU/100 mL)	1	1
Teast and Molds	1	1
Radioactive Constituents (pCi/L)	(c)	(c)
Organic Parameters (μg/L) (b)		
Total Acids	500	500
Cyanide	200	200
Halogenated Hydrocarbons	10	10
Total Phenols	1	1
Total Alcohols	500	500
Total Organic Carbon (TOC)	500	10,000
Uncharacterized TOC (UTOC) (d)	100	1,000

Organic Constituents (mg/L) (b) (e)

(a) No detectable gas using a volumetric gas vs. fluid measurement system. Excludes CO_2 used for aesthetic purposes.
(b) Each parameter/constituent MCL must be considered individually and independently of others.
(c) The maximum contaminant levels for radioactive constituents in potable and hygiene water are to conform with Nuclear Regulatory Commission (NRC) regulations (10CFR20, et al.).
(d) UTOC equals TOC minus the sum of analyzed organic constituents expressed in equivalent TOC.
(e) In the event a quality parameter not listed in this table is projected, or found, to be present in the reclaimed water, the water quality manager from man-systems is to determine the MCL for that parameter.

Table E-3. Atmosphere revitalization technologies.

Function	Approach	Technology
Waste Water Processing	Storage	Tanks
	Filtration	Reverse osmosis
		Multifiltration
	Phase change processes	Evaporation
Urine Processing	Storage	(see under Waste Water Processing)
	Electrical	Electrodialysis
		Electrolysis fuel-cell
	Phase change processes	Evaporation (see under Waste Water Processing)
		VCD
		TIMES
		VAPCAR
Note: The processes listed under Waste Water Processing or Urine Processing can, in most cases, also be used to process urine or waste water, respectively.		
Water Quality Monitoring		
Disinfection Techniques	Chemical	Iodine, ozone, silver, etc.
	Thermal	Heat
	Light	UV with/without H_2O_2
	Mechanical	Filtration

E.2 – Waste Water Processing

For waste water collection the simplest approach is to collect it in a container which is then vented to space. This approach involves no storage or processing requirements and has been used on all U.S. space habitats except when samples are required for medical purposes. This method results in loss of mass and can result in contamination of external surfaces. Other options for hygiene water processing include storage for later disposal, membrane separation such as by reverse osmosis or ultrafiltration,

Storage – Unless waste water or urine is vented to space there will be a need to store it for later disposal or for processing. One difficulty in microgravity with tanks for liquid storage is retrieving the liquid without entrainment of gas. Some method of ensuring that the liquid does not include gas bubbles is necessary. Two approaches have been used or proposed: tanks with an expandable liner or a method of separating gas from liquid in a tank. Expandable liners include rubber bladders and metal bellows. Because there is flexing of the material it has a limited lifetime, and the tanks must be designed such that the lifetime is acceptable for a given purpose, mission duration, and/or resupply period. Another method is the use of directed ultrasound to separate gas from liquid. This method is not as well developed but has the potential of a much longer life and greater reliability, since there are no flexing components that may rupture.

Reverse Osmosis – With reverse osmosis, pressure forces a liquid through a semi-permeable membrane in the direction opposing osmotic pressures (i.e., from high salinity to low salinity solutions). The waste water input is pressurized to between 690 and 5,500 kPa (100 and 800 psi) and water selectively permeates the membrane. Ions, organic solids, and microorganisms remain on the input side of the membrane. As shown in figure E-1, waste water first passes through an ultrafiltration membrane to remove suspended solids and macromolecules and allow water and low molecular weight salts to pass through. The quality of the purified water is high, and the energy requirements are less than for phase change processes.

Multifiltration – Filtration through a series of "beds" containing sorbents and ion exchange resins can purify most waste water, though the technique was developed for purifying condensate from the heat exchanger into potable water. This is shown schematically in figure E-2. When the storage capacity of the first bed in the series is reached, the bed is removed and the next bed in line becomes the first bed and a fresh bed is added to the end. The process water must be sterilized (by heating and/or chemical treatment) to avoid microorganism growth.

Evaporation – Closed-loop evaporation from a wick saturated with pretreated waste water into a recycled gas atmosphere can recover 100 percent of the water. The gas is recycled in a closed system to prevent contamination of the habitat atmosphere. When the wick is saturated with solids it is allowed to dry and replaced. The dry wicks are stored for disposal.

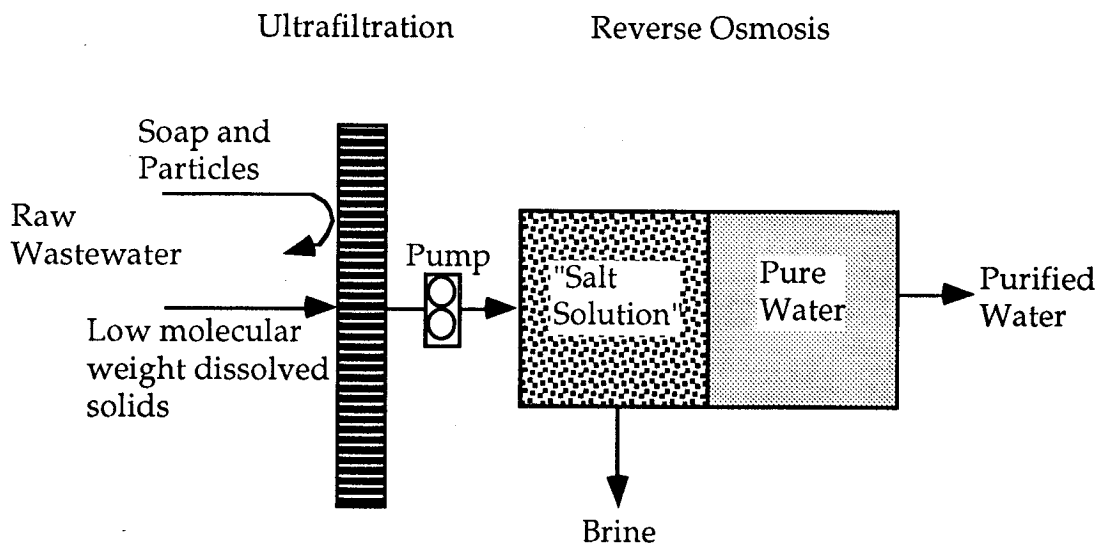

Figure E-1. Schematic of reverse osmosis process.

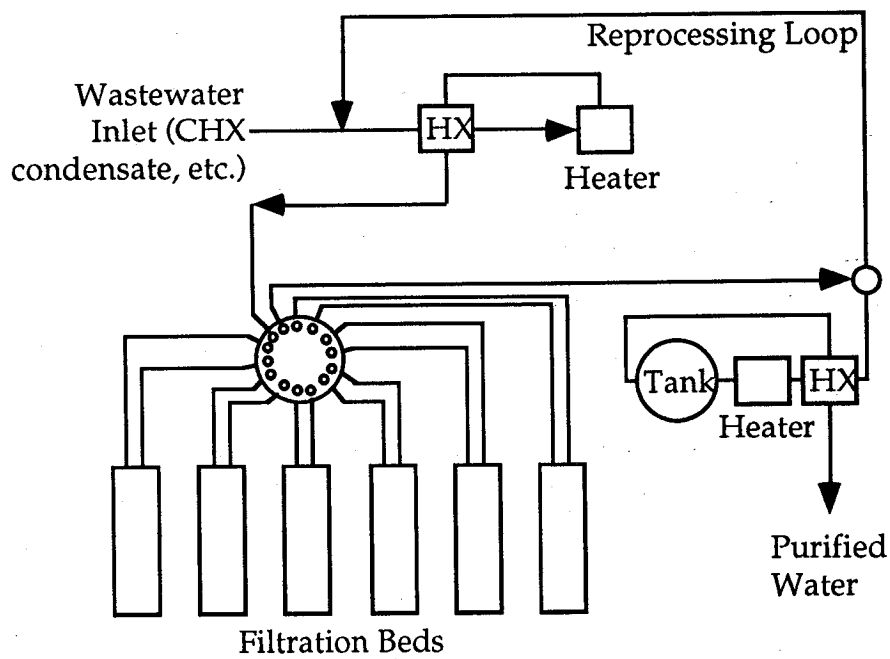

Figure E-2. Schematic of multifiltration water processor.

An alternative evaporation concept uses atmosphere from the habitat or avionics ventilation subsystem and a continuous wick that is indexed when a section is saturated with urine and/or waste water. The saturated section is then heated and exposed to reduced pressure to evaporate the water from the wick. The atmosphere/water vapor mixture then passes through a condensing heat exchanger where the water is removed, and the atmosphere flows through an odor/microbial filter before reentering the habitat atmosphere.

E.3 – Urine Processing

For urine collection the simplest approach is to collect it in a container which is then vented to space. This approach involves no storage or processing requirements and has been used on all U.S. space habitats except when samples are required for medical purposes. This method results in loss of mass and can result in contamination of external surfaces. Other options for urine processing include storage for later disposal (described under Waste Water Processing), evaporation (also described under Waste Water Processing), distillation such as by the vapor compression and distillation (VCD) method, and evaporation through a membrane such as by the thermoelectric integrated membrane evaporation system (TIMES). Each of these methods have different resupply and resource requirements and these, and other, factors must be considered when selecting the method for a particular application.

Electrodialysis – Electrodialysis (or electrodeionization) uses an electrical current to induce migration of ionized particles perdendicular to the direction of fluid flow. Plastic membranes are used that are highly selective for the migration of cations or anions, which migrate toward the cathode or anode, respectively. During the migration, the cations are collected in compartments having an anion-transport membrane on the cathode side, and similarly for the anions. Low power requirements make this an attractive method, but additional treatment is needed to remove nonionized organic compounds and microorganisms.

Electrolysis Fuel-Cell – Urine can be electrolyzed to produce O_2 and H_2 which can then be combined in a fuel cell to produce electricity and potable water. Electrolysis requires 5.51 kW-h/kg (2.50 kW-h/lb) of water and fuel cells produce 2.86 kW-h/kg (0.77 kW-h/lb). Therefore the net power consumption is 3.81 kW-h/kg (1.73 kW-h/lb).

Vapor Compression and Distillation (VCD) – Waste water flows into a rotating drum at reduced pressure (4.82 kPa or 0.7 psia) where the water evaporates. The vapor is then compressed and condenses on the outside of the drum, as shown in figure E-3. The heat of vaporization is transferred through the drum wall during condensation, thereby recovering the thermal energy required for evaporation inside the drum. This method uses about 20 percent of the energy usually required to evaporate water. More than 96 percent of the water can be recovered, with the remainder containing over 50 percent solids from the urine or other waste water and discarded as a brine. The quality of the condensed water depends on the presence of volatile organics and ammonia that condense with the water. Pretreatment of waste water (e.g. with an acid) stabilizes urea (to prevent ammonia from forming) and posttreatment may also be necessary. Noncondensible gases can build up and periodic evacuation of the evaporator must be done to maintain efficiency, which drops as the pressure increases.

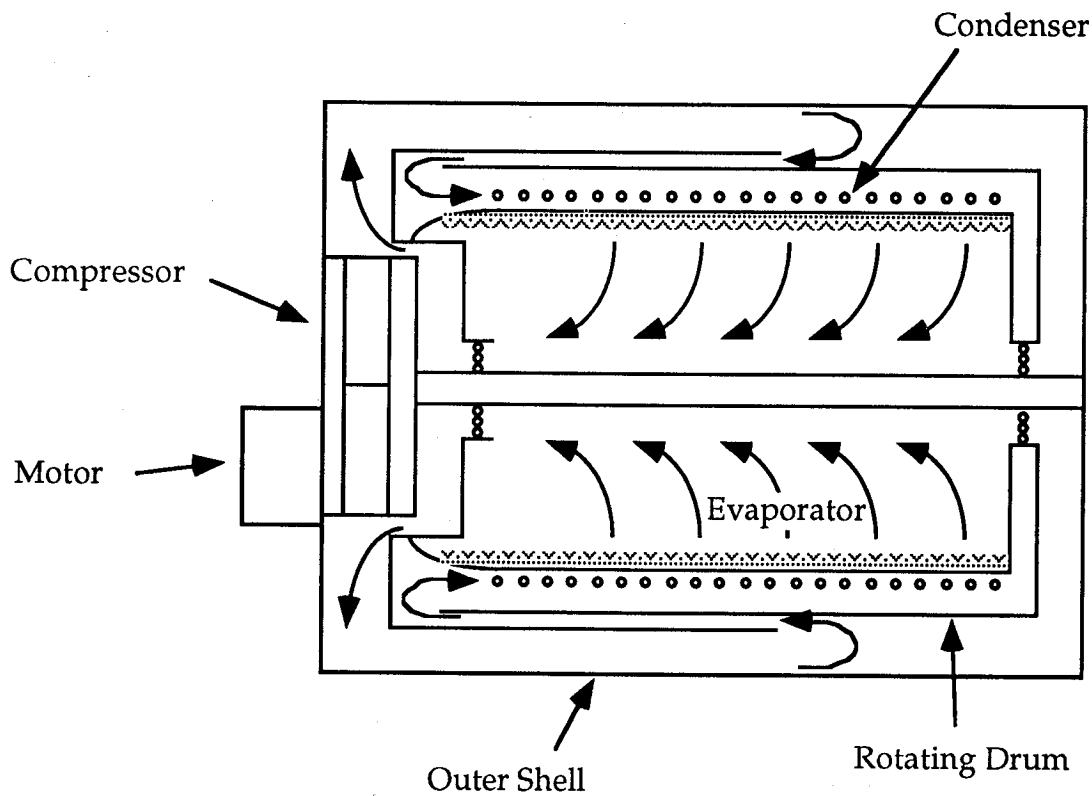

Figure E-3. VCD schematic.

Thermoelectric Integrated Membrane Evaporation Subsystem (TIMES) – Waste water is heated to 66 °C (151 °F) in a heat exchanger, as shown in figure E-4, before being pumped through a hollow fiber membrane with reduced pressure (17.02 kPa or 2.47 psia) on the outside of the membrane to facilitate evaporation. A thermoelectric heat pump transfers heat from the condensor to the evaporator. Up to 93 percent of the water can be recovered, with the remainder

containing over 38 percent solids from the urine or other waste water and discarded as a brine. This method uses about 25 percent of the energy usually required to evaporate water. The quality of the condensed water depends on the presence of volatile organics and ammonia that condense with the water. Pretreatment of waste water (e.g. with an acid) stabilizes urea (to prevent ammonia from forming) and posttreatment may also be necessary.

Vapor Phase Catalytic Ammonia Removal (VAPCAR) – A method of processing waste water that does not require pre- and posttreatment of the water, and therefore does not use the expendables that the VCD and TIMES require, is VAPCAR. This method combines vaporization with high-temperature catalytic oxidation of the volatile impurities that vaporize along with the water. Evaporation occurs through hollow fiber membranes, similar to the TIMES, made of a perfluorinated ion-exchange polymer. Two catalyst beds then oxidize ammonia to nitrous oxide (N_2O) and N_2, and volatile hydrocarbons to CO_2 and H_2O; and catalytically decompose N_2O to N_2 and O_2, respectively. This is shown schematically in figure E-5. A catalyst of 0.5-percent platinum on alumina pellets oxidizes ammonia at 250 °C (482 °F) and a catalyst of 0.5-percent ruthenium on alumina pellets decomposes N_2O at 450 °C (842 °F). The high temperature of the process ensures that the purified water is sterile. The overall water quality is higher for the VAPCAR than for the VCD or TIMES.

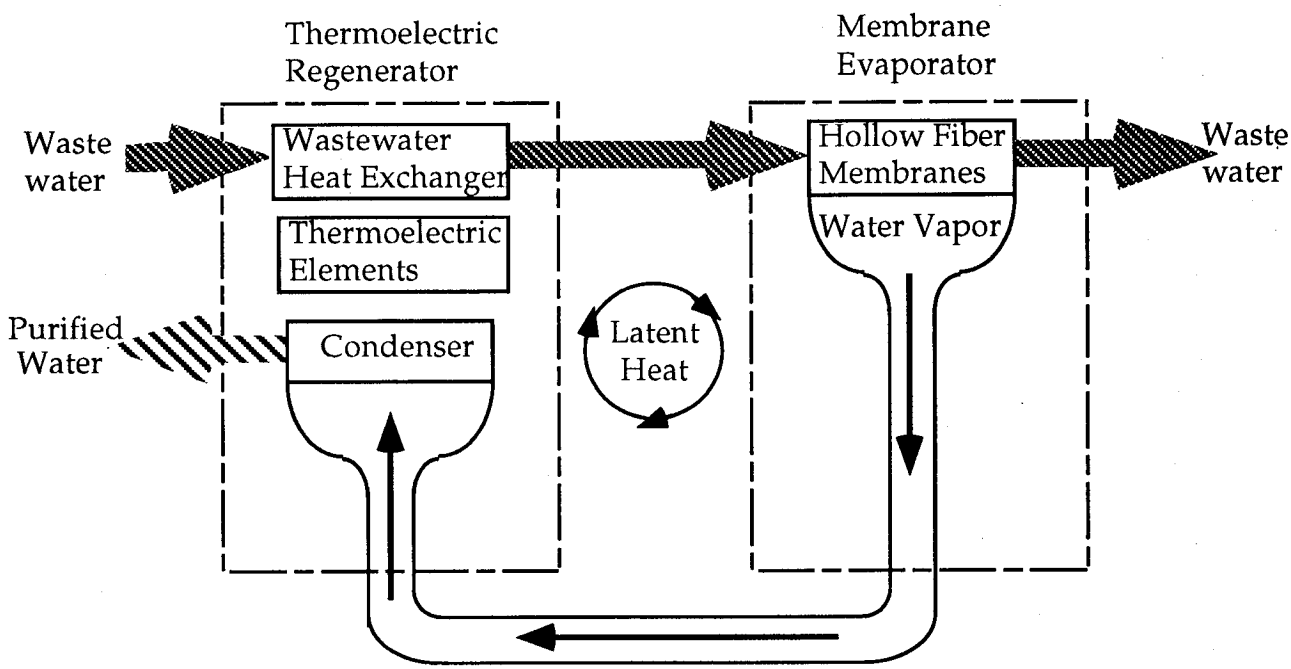

Figure E-4. TIMES schematic.

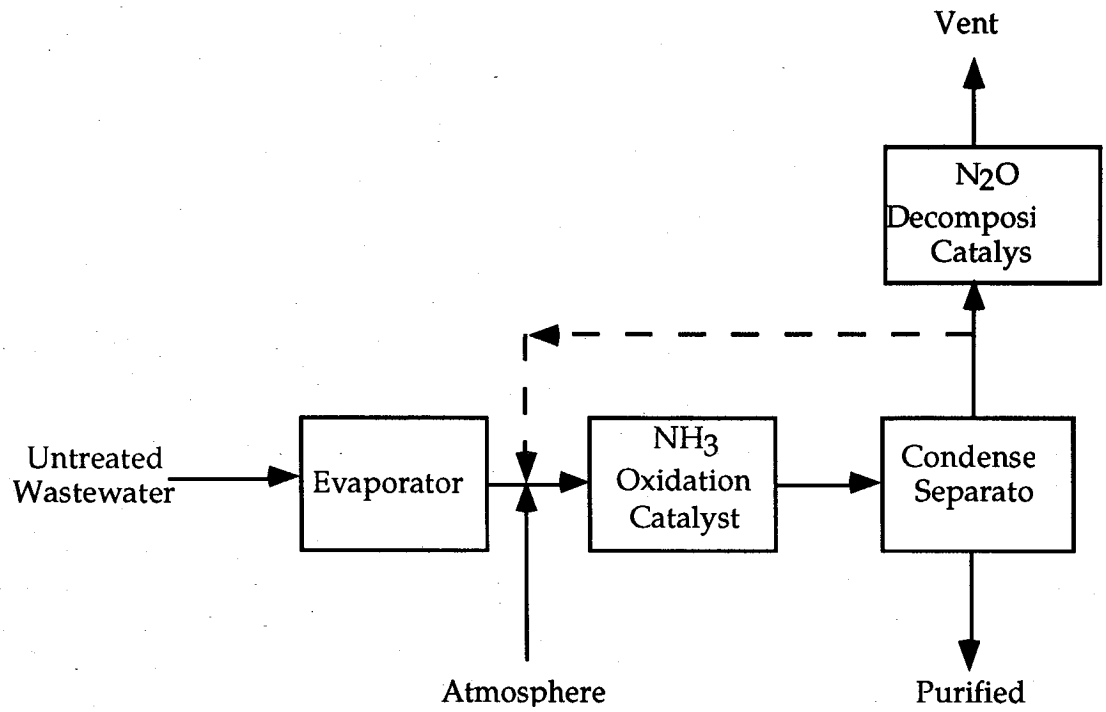

Figure E-5. Schematic of the VAPCAR process.

References:

Baer-Peckham, D.L.: "Urine Processing Trade Study." Boeing presentation to MSFC, September 13, 1985.

Budininkas, P., and Rasouli, F.: "Catalytic Distillation Water Recovery Subsystem." NASA CR-177382, Final Report, Ames Research Center, September 1985.

Budininkas, P., Rasouli, F., and Wydeven, T.: "Development of a Water Recovery Subsystem Based on Vapor Phase Catalytic Ammonia Removal (VAPCAR)." SAE Paper No. 860985, 16th Intersociety Conference on Environmental Systems, San Diego, CA, July 14–16, 1986.

Purser, et al.: "Manned Spacecraft: Engineering Design and Operation." Chapter 15 "Life-Support Systems," by Robert E. Smylie and Maurice R. Reumont, Fairchild Publications, 1964.

Ray, Rod: "Membrane-Based Water- and Energy-Recovery Systems for the Manned Space Station." SAE Paper No. 851345, 15th Intersociety Conference on Environmental Systems, San Francisco, CA, July 15–17, 1985.

Reysa, R.P., Olcott, T., Price, D. F., and Gaddis, J. L.: "Hyperfiltration Wash Water Recovery Subsystem—Design and Test Results." SAE Paper No. 831112, 13th Intersociety Conference on Environmental Systems, San Francisco, CA, July 11–13, 1983.

Schubert, F.H.: "Phase Change Water Recovery Techniques: Vapor Compression Distillation and Thermoelectric/Membrane Concepts." ASME Paper No. 831122, 13th Intersociety Conference on Environmental Systems, San Francisco, CA, July 11–13, 1983.

Thompson, C.D., Ellis, G.S., and Schubert, F.H.: "Preprototype Vapor Compression Distillation Subsystem Development." SAE Paper No. 81-ENAs-25, 11th Intersociety Conference on Environmental Systems, San Francisco, CA, July 13–15, 1981.

Winkler, H. E., and Roebelen, G. J., Jr.: "Development of a Preprototype Thermoelectric Integrated Membrane Evaporation Subsystem for Water Recovery." ASME Paper No. 80-ENAs-46, 10th Intersociety Conference on Environmental Systems, San Diego, CA, July 14–17, 1980.

Winkler, H. Eugene, Verostko, Charles E. V., and Dehner, Gerard F.: "Urine Pretreatment for Waste Water Processing Systems." SAE Paper No. 831113, 13th Intersociety Conference on Environmental Systems, San Francisco, CA, July 11–13, 1983.

Wydeven, Theodore: "A Survey of Some Regenerative Physico-Chemical Life Support Technology." NASA Technical Memorandum 101004, Ames Research Center, November 1988.

Zdankiewicz, E. M., and Price, D. F.: "Phase Change Water Processing for Space Station." SAE Paper No. 851346, 15th Intersociety Conference on Environmental Systems, San Francisco, CA, July 15–17, 1985.

Water Quality Monitoring – Monitoring the water for all of the compounds listed in table E-2 would be difficult to do in a space habitat such as S.S. *Freedom.* Instead, some characteristics can be monitored as indicators of the overall quality and if they are within specification it can be assumed that the processing equipment is removing all of the contaminants adequately. Characteristics that can be more readily monitored include conductivity, pH, total organic carbon, temperature, and biocide concentration. This is shown schematically in figure E-6. The water used for measurements requiring calibration with chemical standards is not returned to the water supply so that the standards do not contaminate the water supply. Generally, less than one percent of the water is required for these measurements.

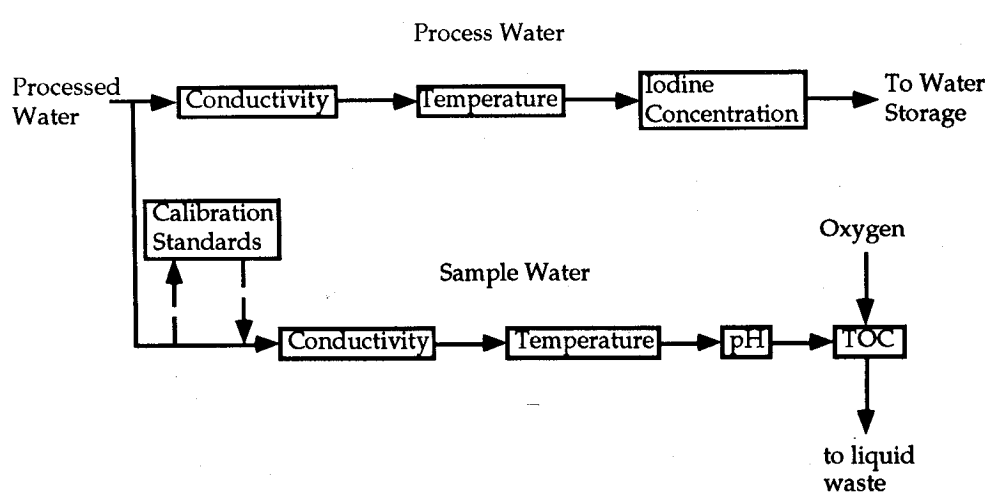

Figure E-6. Schematic of a water quality monitoring approach.

References:

Jeffers, E.L., and Novotny, J.: "Process Control Water Quality Monitor for Space Station *Freedom*—Development Update." SAE Paper No. 921264, 22nd International Conference on Environmental Systems, Seattle, WA, July 13–16, 1992.

West, S. J., Frant, M.S., and Ross, J.W., Jr.: "Development of a Water Quality Monitor for Spacecraft Application." ASME Paper No. 76-ENAs-10, Intersociety Conference on Environmental Systems, San Diego, CA, July 12–15, 1976.

Ejzak, E.M., and Price, D.F.: "Water Quality Monitor for Recovered Spacecraft Water." SAE Paper No. 851347, 15th Intersociety Conference on Environmental Systems, San Francisco, CA, July 15–17, 1985.

Disinfection Techniques – Control of microorganism growth is essential to avoid biofilm formation and the growth of pathogens. There are several approaches that are generally used in combination for maximum effect. These approaches are chemical (iodine, ozone, silver, chlorine), thermal, UV light (with H_2O_2 for organic contaminants), and mechanical filtration of microorganisms and particles. Chlorine is not generally used for space habitats due to corrosion problems and the high levels required. The references below provide additional information.

References:

Bank, H.L., John, J., Schmehl, M.K., and Dratch, R. J.: "Bactericidal Effectiveness of Modulated UV Light." Applied and Environmental Microbiology, vol. 56, No. 12, p. 3888–3889, December 1990.

Colombo, G.V., Greenley, D.R., Putnam, D.F., and Sauer, R.L.: "Advanced Microbial Check Valve Development." SAE Paper No. 81-ENAs-45, 11th Intersociety Conference on Environmental Systems, San Francisco, CA, July 13–15, 1981.

Harris, George D., Adams, V. Dean, Sorensen, Darwin L., and Curtis, Michael S.: "Ultraviolet Inactivation of Selected Bacteria and Viruses with Photoreactivation of the Bacteria." Water Resources, vol. 21, No. 6, p. 687–692, 1987.

Simonetti, N., Simonetti, G., Bougnol, F., and Scalzo, M.: "Electrochemical AG^+ for Preservative Use." Applied and Environmental Microbiology, vol. 58, No. 12, p. 3834–3836, December 1992.

Weir, Barbara A., and Sundstrom, Donald W.: "Rate of Destruction of Trichloroethylene by UV Light Catalyzed Oxidation with Hydrogen Peroxide." AIChE Annual Meeting, San Francisco, CA, November 1989.

Zukovs, G., Kollar, J., Monteith, H.D., Ho, K.W.A., and Ross, S.A.: "Disinfection of Low Quality Waste Waters by Ultraviolet Light Irradiation." Journal WPCF, vol. 58, No. 3, p. 199–206, March 1986.

Appendix F

Waste Management

F.1 – Waste Management Requirements and Technology Options

When designing a waste management subsystem, the types of waste (liquid, gas, solid, or metabolic) to be dealt with, and the amounts of each waste, must be determined. The availability of power, resupply, and storage volume are key factors which must be considered. For longer duration missions especially, "human factors" considerations such as ease of use and maintainability become very important.

Requirements can be grouped into the following categories:

1. Interface requirements including structural, electrical, fluid, and odor requirements
2. Performance requirements including quantities and types of waste to be processed
3. Operational (flight and ground) requirements including procedures, man-systems aspects, noise level, and safety requirements
4. Environmental requirements including temperature, pressure, RH, acceleration, and vibration requirements
5. General requirements including leakage, maintainability, and transportability.

Performance requirements address the collection, processing, and storage of waste, which may include feces, wash water, EVA wastes, vomitus, menses, and associated paper wastes (tissue, etc.). Ensuring that contamination of the crew compartment does not occur is a major requirement.

The density of metabolic waste (feces, vomitus, menses, etc.) is assumed to be the same as water (1 g/cm^3, 62.4 lb/ft^3). The mass of metabolic waste generated per person per day is shown in table F-1. The volume of metabolic waste can therefore be approximated.

Table F-1. Design parameters for waste management on S.S. *Freedom.* (From the ECLSS ACD SSP 30262 Rev. D July 1991.)

	(kg/person-day)	(lb/person-day)
Urine Solids, dry	0.06	0.13
Fecal Solids, dry	0.03	0.07
Shower/Handwash water, solids	0.01	0.02
Fecal, water	0.01	0.20
Sweat Solids	0.02	0.04
Washwater Solids	0.08	0.17

An atmosphere flow is necessary (approximately 0.0142 m^3/s (30 ft^3/m) for feces, 0.0038 m^3/s (8 ft^3/m) for urine) to ensure that the waste enters the storage compartment properly and to control odors.

PRECEDING PAGE BLANK NOT FILMED

PAGE 242 INTENTIONALLY BLANK

Tradeoffs between the different approaches are generally based on the following criteria:

design risk
design simplicity
cost
servicability
contingency operating modes
noise
mass
power consumption
similarity to "home" environment.
reliability
safety
ease of operation
waste recycling capability
training requirements
body stabilization
expendables consumption
bacteria and odor control

Other criteria such as the ability to accommodate increased use on occasion or at a later time may also be important.

Problems which have been encountered on previous flights of waste collection systems include the following:

generation of fecal dust and particulate matter
unpleasant odor
lack of compaction capability
corrosion
buildup of urine solids
noise
excessive crew involvement and cleanup
component failures.

Many concepts have been considered, including approaches which simply collect and store waste with no further processing, those which involve limited processing such as dehydration to compact the waste or to recover the water, and those which involve significant processing to recover essentially all of the mass. Methods of treating metabolic waste include freezing, heat sterilization, desiccation, incineration, and chemical treatment. These are discussed in sections F.2 through F.4.

References:

Purser, et al.: "Manned Spacecraft: Engineering Design and Operation." Chapter 15 "Life-Support Systems," by Robert E. Smylie and Maurice R. Reumont, Fairchild Publications, 1964.

"Improved Orbiter Waste Collection System Study, Appendix D, Final Report." McDonnell-Douglas Astronautics Co., contract NAS9-17181, NASA CR-171833, undated.

McDonnell Douglas Astronautics Company, MDC H1360.

F.2 – Waste Collection and Storage

The approach for metabolic waste collection first used for space habitats was bags which were taped to the buttocks for feces collection. There are inherent difficulties with this method relating to awkwardness of use and the potential for waste matter to escape from the bags prior to sealing. A biocide in a sealed packet is included in the bag and must be broken (by applying pressure) after the bag has been used and sealed, and the biocide mixed with the waste by kneading. Microorganisms would otherwise produce gases that would make storage more complicated. Advantages to this method are that no power is required, there are few reliability concerns, and no atmosphere is lost due to dehydration to space. Bags are used as the backup method on the orbiter and will be the backup method on S.S. *Freedom* for those times when the commode is not functioning or otherwise not available for use.

References:

"Apollo Operations Handbook, Block II Spacecraft," vol. 1, SM2A-03-BLOCK II-(1), changed April 15, 1971.

Johnston, Richard S., Dietlin, Lawrence F., M.D., and Berry, Charles A. B., M. D., Managing Editors: "Biomedical Results of Apollo." NASA SP-368, section VI chapter 2, 1975.

Purser, et al.: "Manned Spacecraft: Engineering Design and Operation." Chapter 15 "Life-Support Systems," by Robert E. Smylie and Maurice R. Reumont, Fairchild Publications, 1964.

F.3 – Limited Waste Processing for Storage

For long duration missions, methods which are easier to use than bags are necessary. These generally involve use of a device which resembles, from the users viewpoint, a standard commode, although the inner workings of the commode can vary considerably. A study performed in 1984 by McDonnell-Douglas for JSC considered 15 different concepts. The *Skylab* commode shown in figures F-1 and F-2 is one of these concepts. This approach still uses a bag to collect the waste. The advantage is that it is easier to use. Atmosphere flow ensures that the feces stays in the bag until it is sealed automatically. The sealed bag is then removed and placed in a processor which is exposed to space vacuum to dehydrate the waste, making it much more compact. Urine was vented to space except for samples collected for medical research.

For the orbiter, a commode which does not require the use of bags was developed, shown in figure F-3. Instead, fecal matter is collected in a tank and a "slinger" device compresses the waste against the wall. After use, the lid is sealed and the feces is dehydrated by exposure to space vacuum. The tank is sized to accommodate the expected amount of metabolic waste for an entire mission, up to 14 days with crews as large as 7 people, so no on-orbit servicing is required. Urine is vented to space.

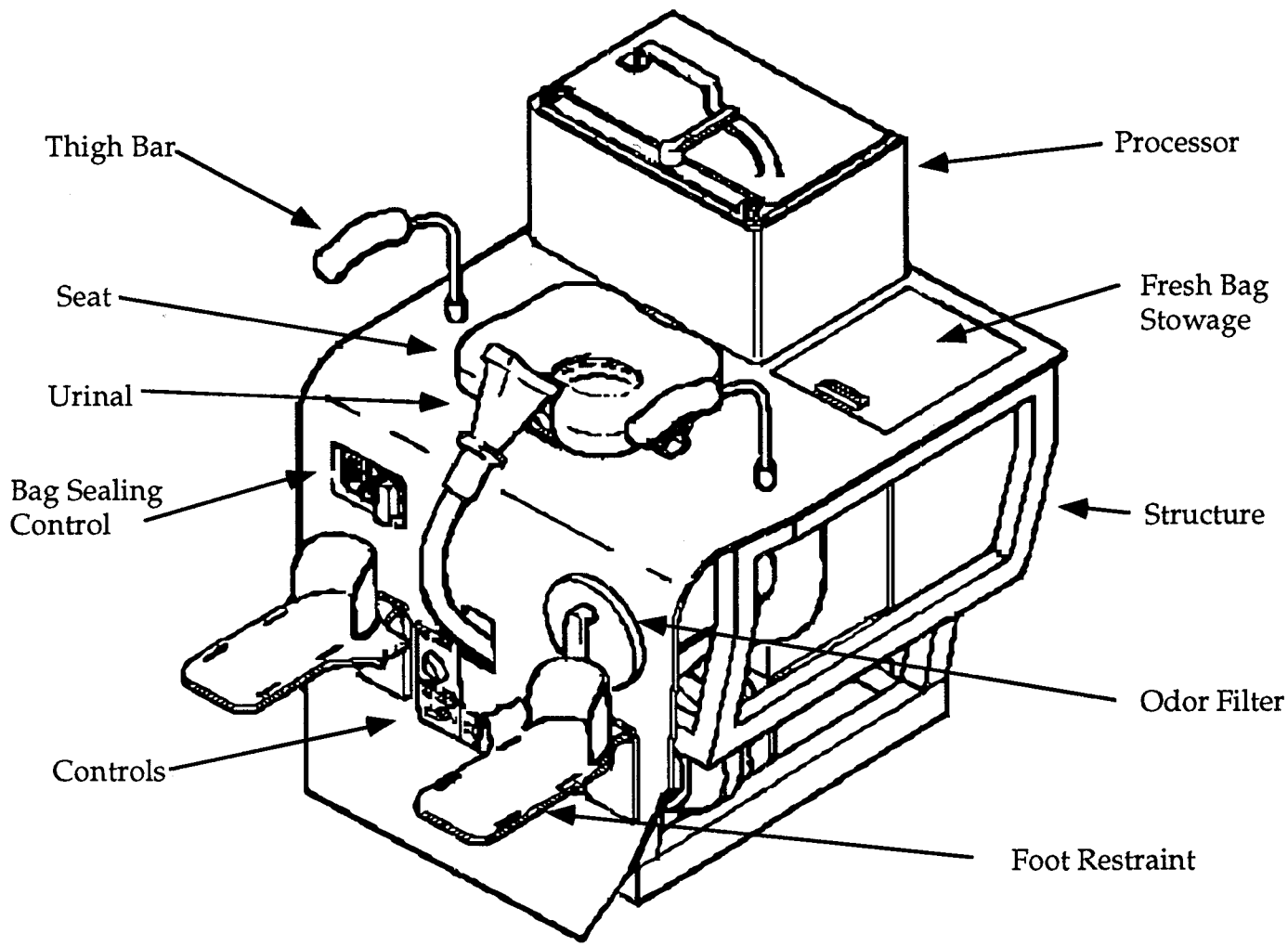

Figure F-1. *Skylab* commode configuration.

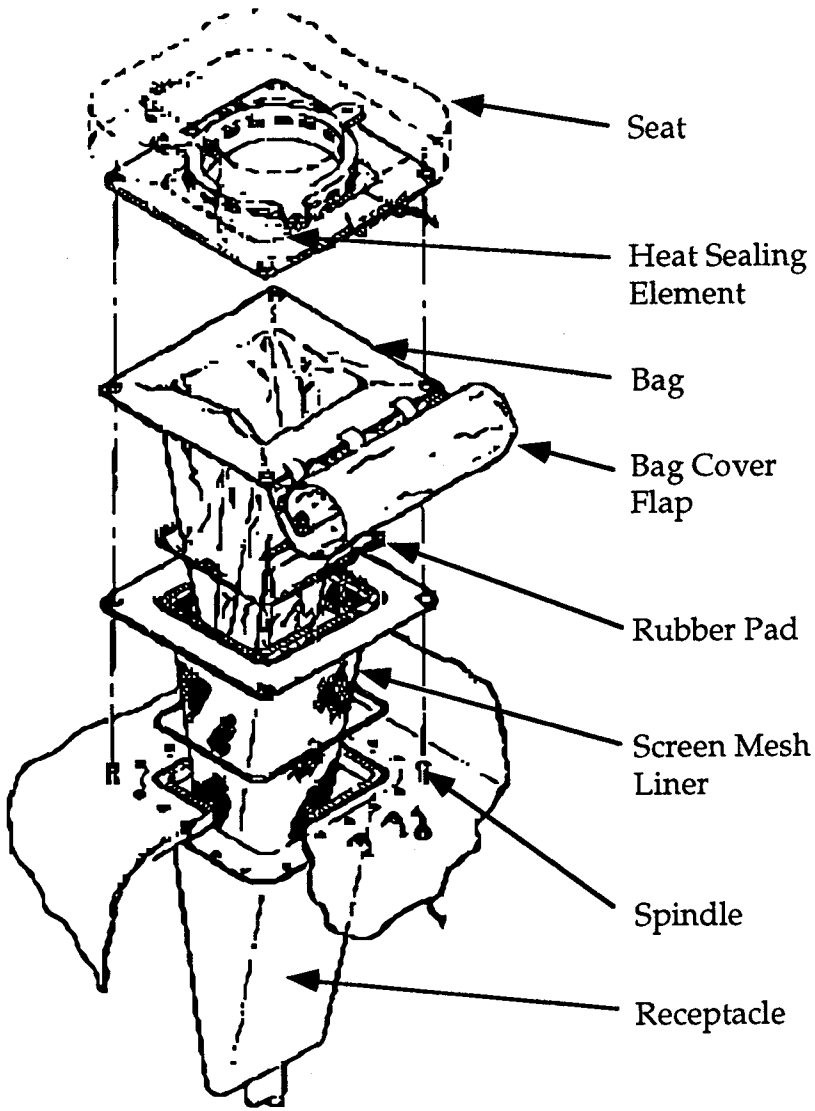

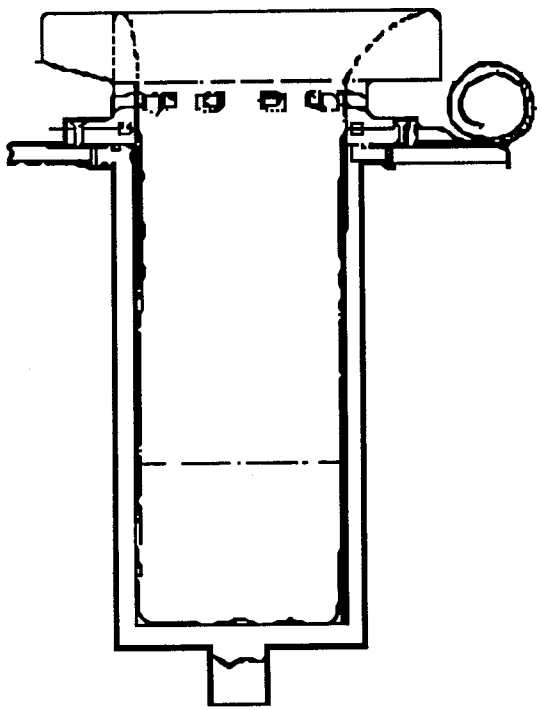

Figure F-2. *Skylab* waste collection bag configuration.

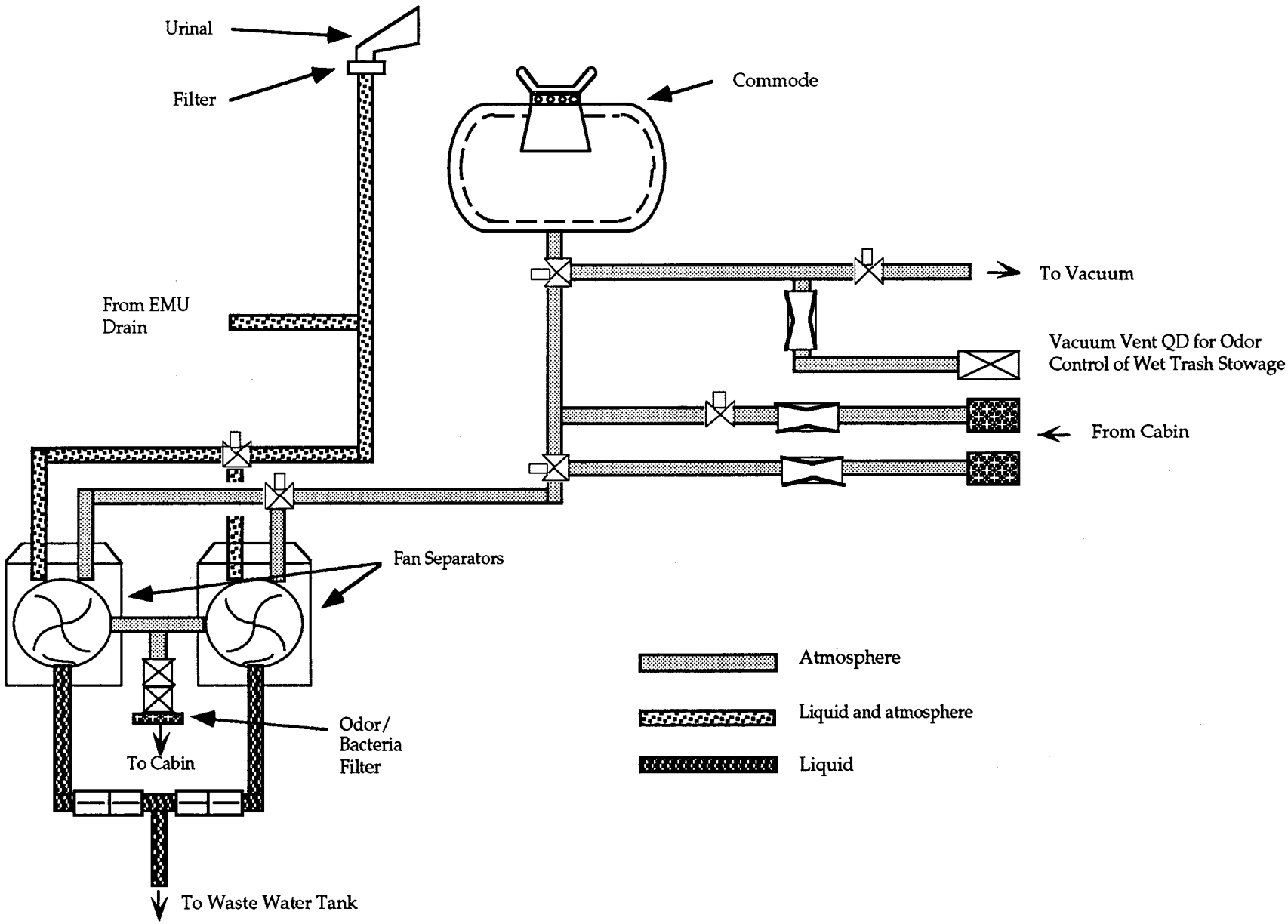

Figure F-3. Orbiter commode and urinal configuration.

For S.S. *Freedom*, it will be necessary to service the commode on-orbit. General requirements discourage venting overboard, and the commode is designed to be serviced with no exposure to space vacuum. The design selected makes use of bags, similar to the *Skylab* commode, however, the bags are sealed and compressed automatically. As shown in figure F-4, after each use a piston compresses each bag and waste into a canister which is sized to accommodate a crew of four for a week. Once each week the canister is replaced and the filled canister stored for return to Earth at the 90-day resupply intervals. The waste is not dehydrated, so no venting occurs. As shown in figure F-5, urine is collected and processed to recover the water for reuse, either as hygiene/potable water or for electrolysis to generate oxygen. The urine is treated prior to entering the liquid/gas separator to minimize microorganism growth and odors and to prevent fouling.

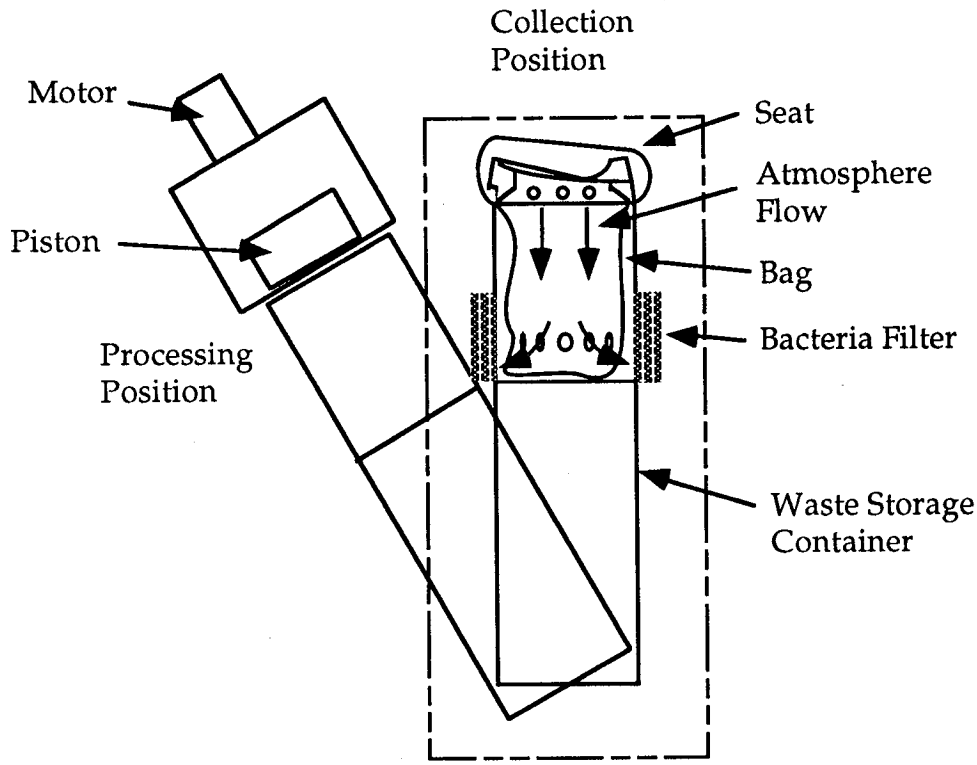

Figure F-4. S.S. *Freedom* commode schematic.

F.4 – Waste Processing for Mass Recovery

Methods of recovering the water and solids are being investigated in order to reduce resupply requirements. For recovery of the water in metabolic wastes relatively simple dehydration techniques can be used. Recovering the solids require some form of oxidation to convert the organic components into CO_2, H_2, and H_2O. Methods which have been considered include electrochemical incineration, water oxidation, and biological processes (see also appendix H).

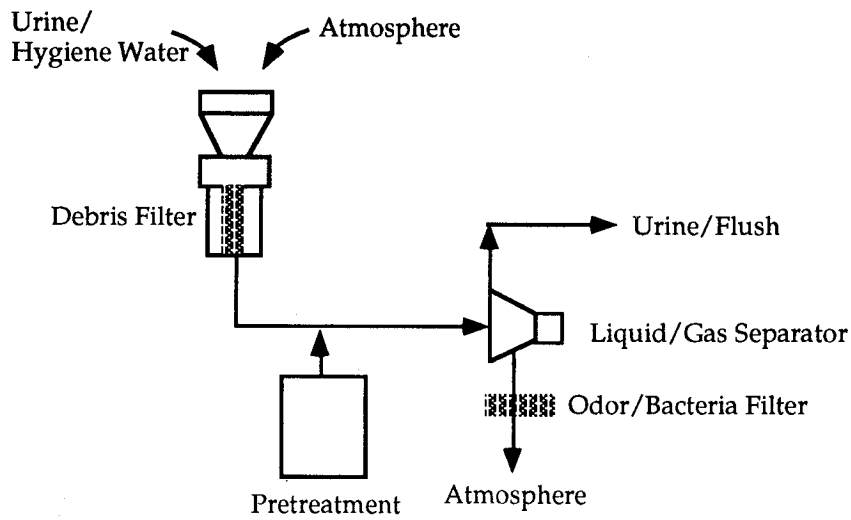

Figure F-5. S.S. *Freedom* urinal schematic.

Incineration – Electrochemical incineration is a method to electrolyze organic matter (solid and liquid) at relatively low temperatures, less than 100 °C (212 °F) for most compounds of interest. An advantage is that no CO or NO is produced, only CO_2, H_2, and N_2. Some Cl_2 may be produced depending on the composition of the waste. This method is presently at a low level of technical maturity for space habitat application.

Reference:

Bockris, J. O'M., "The Electrical Incineration of Human Wastes in Confined Spaces," Proposal to NASA, Texas A&M University, College Station, TX, March 1989.

Water Oxidation – Development of water oxidation for treatment of hazardous wastes in water has been performed since the early 1960's. The water oxidation methods are compared in table F-2. Two general approaches are subcritical and supercritical. The critical point of water occurs at 374.15 °C (705.47 °F) and 22.12 MPa (3210 psia) and the operating conditions for these two approaches are below and above the critical point conditions, respectively. Moist (solid or liquid) waste is oxidized to produce CO_2 and H_2O, as shown in figure F-6. These processes consume O_2 and there are some materials problems due to the high temperatures and pressures involved, but the ability to process liquid, gaseous, and solid wastes is a strong advantage.

References:

Dietrich, M. J., Randall, T.L., and Canney, P.J.: "Wet Air Oxidation of Hazardous Organics in Wastewater." Environmental Progress, vol. 4, No. 3, August 1985.

Hong, Glenn T., Fowler, Patrick K., Killilea, William R., and Swallow, Kathleen C.: "Supercritical Water Oxidation: Treatment of Human Waste and System Configuration Tradeoff Study." SAE Paper No. 871444, 17th Intersociety Conference on Environmental Systems, Seattle, WA, July 13–15, 1987.

Johnson, C.C., and Wydeven, T.: "Wet Oxidation of a Spacecraft Model Waste." SAE Paper No.851372, 15th Intersociety Conference on Environmental Systems, San Francisco, CA, July 15–17, 1985.

Shuler, M.L.: "Waste Treatment Options for Use in Closed Systems." Paper No. 79-1409, Fourth Princeton/AIAA Conference on Space Manufacturing Facilities, Princeton, NJ, May 14–17, 1979.

Table F-2. Comparison of water oxidation methods.

	Subcritical		Supercritical	
	Without Catalyst	With Catalyst	Low Temperature	High Temperature
Temperature, °C (°F)	260 to 320 (500 to 608)	250 to 300 (482 to 572)	375 to 500 (7,070 to 932)	550 to 700 (1,022 to 1292)
Pressure, MPa (kpsia)	8.3 to 11.8 (57.2 to 81.3)	4.4 to 8.8 (30.3 to 60.6)	24.5 (168.8)	24.5 (168.8)
Time, h	1 to 2	0.5 to 1	0.5 to 1	a few seconds
Organic Carbon	incomplete oxidation (<90 percent)	complete oxidation	complete oxidation	complete oxidation
Form of Nitrogen	NH_3 (in liquid form)	N_2	70 percent NH_3 (in liquid form) 30 percent N_2	N_2

Revised from a presentation by Burt Shah (Boeing) at the Waste Processing in Space for Advanced Life Support Conference, September 11–13, 1990, Ames Research Center, Moffett Field, CA.

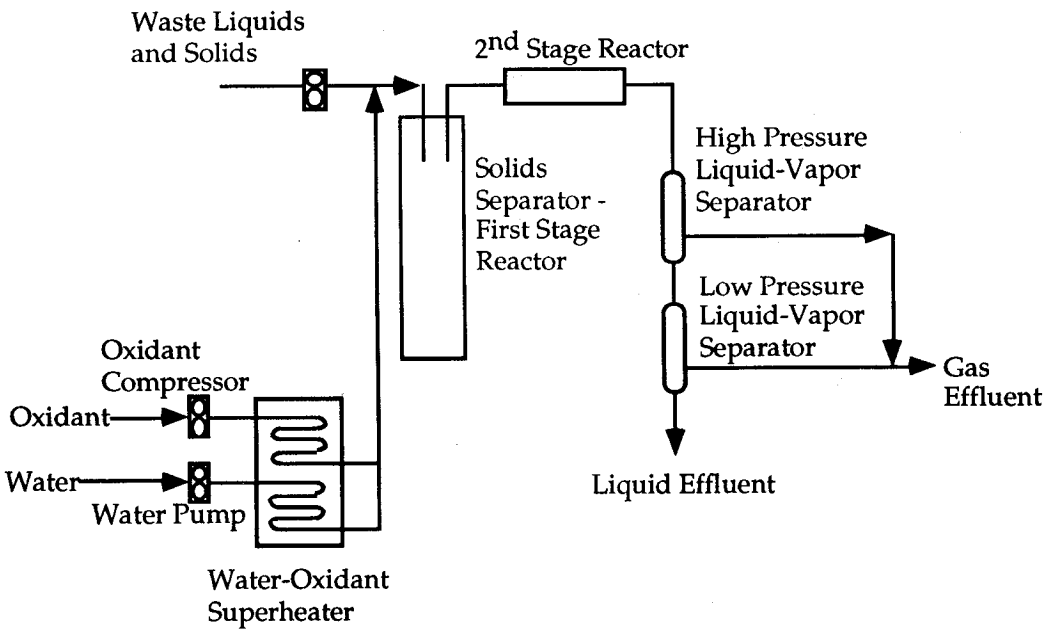

Figure F-6. Schematic of SCWO process.

Appendix G

Fire Detection and Suppression

PRECEDING PAGE BLANK NOT FILMED

PAGE 252 INTENTIONALLY BLANK

G.1 – Fire Detection and Suppression (FDS) Requirements and Technology Options

In microgravity, fires have different characteristics than on Earth. When there is no atmosphere flow, the rate of flame-spread is lower in microgravity, although with ventilation the spread rates are comparable to fires on Earth. The slow rate of heat and mass transport of fire "signatures" results in increased response times. Flame characteristics are different, and may be steady (nonflickering) low temperature flames, affecting the radiant identification of fires. Other differences relate to the characteristics of smoke and aerosol particle size, size distribution, and density. Unusual hazards may occur such as radial expulsion of molten particles (instead of dripping).

The FDS subsystem detects fires throughout the space habitat, notifies the crew by an alarm when a fire occurs, and provides a means to extinguish a fire. It must be compatible with the ECLSS, nontoxic, and not produce toxic byproducts. The FDS subsystem is usually considered as a combination of two basic portions: the fire detection components and the fire suppression components.

The fire detection components of the FDS system are designed to detect fires by monitoring for open flames and/or products of combustion. It is imperative that detection is prompt to provide sufficient time for the crew to initiate suppression procedures, or take safe egress prior to being affected by the fire. Detection is provided for enclosed volumes containing powered equipment and for open areas. Detection is typically accomplished using ionization or photoelectric smoke detectors and flame detectors. Smoke detectors are used to sense incipient fires and the products of combustion, and are placed in strategic locations to assure detection redundancy and determination of fire location. Smoke detectors are placed in avionics atmosphere ducts to sample atmosphere which has been routed through avionics equipment, and in open areas to monitor habitat atmosphere. Flame detectors are utilized to detect flaming fires in open areas of the habitat. These detectors monitor flicker rates and signature emissions in the ultraviolet and infrared range while being "blind" to solar radiation. Flame detectors are mounted in locations such that they can view the largest area possible. Detectors also have the responsibility of notifying the crew of a hazard condition through the alarm system. Detection was by the crew by smell or observation, the smoke or fire detectors did not activate.

The choices concerning the fire suppression components of the FDS system are less clear than the detection components and rely more on the use of trade studies. The primary method of suppression is performed by either a distributed or centralized suppressant system. Trade studies assessing system resource requirements (mass, power consumption, and volume), in conjunction with control difficulties, are performed to assist in decisions between these two types of systems. Distributed systems are typically designed with an independent means or source for fire suppression contained within each enclosed volume requiring suppression capabilities. To accomplish this, a bottle of suppressant (CO_2, Halon 1301, N_2, etc.) is placed in each enclosed volume and linked to an activation system. Centralized systems rely on a centrally located suppressant storage tank which supplies a number of locations via a distribution network. Suppression systems are typically arranged to perform in either an automated or a manually activated mode. Trade studies are also used to aid in the selection of the suppressant to be used in the system. The suppressant must be assessed on its effectiveness, toxicity, commonality, and ECLSS compatibility. Secondary suppression is customarily accomplished with portable extinguishers similar to those used on Earth.

PRECEDING PAGE BLANK NOT FILMED

PAGE 254 INTENTIONALLY BLANK

These extinguishers may be applied to powered equipment or to open areas. As a last resort, fires may be suppressed by venting the habitat atmosphere to space. This is an undesirable alternative due to its impacts on atmosphere resupply capabilities.

Such a life critical system requires sufficient trade studies to insure proper system selection in accordance with space habitat and mission requirements. Analyses are performed to properly size the system and to assess system performance relative to design requirements. Proper reviews of control logic and fire fighting schemes are also needed to insure the quickest, most effective, and safest procedures are being used. In the final stage, the system must be tested to verify that it will perform as anticipated and provide the crew with proper safety.

Requirements placed on the FDS subsystem relate to the following aspects:

(1) Automatic versus manual operation

(2) Sensitivity of detection (e.g., an alarm obscuration level of 0.5 percent/m or 42.5E6 particle/m^3 (0.5 percent/ft or 1.5E9 particles/ft^3))

(3) Degree of failure tolerance

(4) Distributed versus centralized

(5) The volume that suppressant must be released into at one time

(6) Requirements to release suppressant (cues, confirmation, etc.)

(7) Removal of airflow and power (including manual override capability).

Questions that must be considered to determine the "strategic locations" for detectors include:

(1) How "isolated" is a rack, standoff, or other enclosed volume (degree of mixing of the atmosphere)?

(2) What degree of filtering is in-line with the detector? (Do not put a detector downstream of submicron filters or smoke may be removed before reaching the detector.)

The baseline FDS system requirements for S.S. *Freedom* are outlined in the "Space Station *Freedom* Program Definition and Requirements," SS-SRD-0001D, section 3.0: System Requirements. The requirements presented in the system requirements document (SRD) are top level and fundamental in their directions. The requirements set forth in the Prime Item Development Specification Type B1 for the Fire Detection and Suppression Subsystem are more specific and detail expectations of system and component performance.

<u>SRD FDS Baseline requirements</u>:

"• The FDS system shall support an alarm to assure the crew has the potential for safe egress from the affected element prior to being adversely affected by the fire hazard.

- The FDS system shall provide the Data Management System (DMS) with notification of fires and fire location.

- The FDS system shall provide the capability for extinguishing any fire or surface combustion.

- The suppression capability shall be restored after discharge.

- Extinguishing agents shall be nontoxic and minimize the production of toxic and corrosive by-products.

- The FDS system shall have the capability for remote detection as well as the ability to remotely activate fire fighting suppressant in all elements.

- The FDS system shall have the capability of on-board suppressant quantity verification."

Selected FDS B1 specifications:

"• The smoke detector shall detect particles of 0.3 microns or larger with a response time of less than five seconds.

- The flame detector shall have the sensitivity to detect a kerosene pan fire of one square foot at a distance of fifty feet and shall detect ultraviolet, infrared, and visible wavelengths that indicate combustion with a response time of less than 150 msec.

- The flame detector shall be blind to solar radiation.

- The distribution system shall be capable of delivering 1 lbm/sec of carbon dioxide at nominal operating pressure and allow access to all supply tank residual gas.

- The fire suppression system shall be capable of two sequential releases to the largest enclosed powered volume.

- The fire suppression system shall contain enough suppressant to provide oxygen dilution to 10.5 percent by volume concentration of suppressant to 33 percent of an elements racks."

Table G-1. FDS methods and requirements of U.S. space habitats.

Space Habitat	Detection Method	Suppression Method	Requirements/ Capabilities
Mercury [1]	Crew Senses	• Water from the food rehydration gun • Depressurize habitat	N/A*
Gemini [1]	Crew Senses	• Water from the food rehydration gun • Depressurize habitat	N/A*
Apollo [1]	Crew Senses	• Portable Aqueous gel extinguishers • Water from the food rehydration gun • Depressurize habitat	Extinguishers capable of expelling 0.06 m^3 of foam in 30 s.
Skylab [1]	Ultraviolet Detectors	• Portable Aqueous gel extinguishers • Depressurize habitat	Extinguishers capable of expelling 0.06 m^3 of foam in 30 s.
Orbiter/ Spacelab [1]	Ionization Smoke Sensors	• Distributed rack/subfloor mounted Halon bottles with distribution lines • Portable Halon extinguishers • Depressurize habitat	Detection of smoke levels in excess of 2.5 mg/m^3 of atmosphere and/or rate of change of smoke concentration exceeding 0.03 mg/m^3 s. [2] Total flooding with a 6-percent mean concentration in less than 10 s and a 10 min hold time. [2]
S.S. *Freedom* [3]	Photoelectric Smoke Detectors Ultraviolet, Infrared, & Visible Sensors	• Centralized CO_2 Distribution System • Portable CO_2 extinguishers	Detection of smoke particles 0.3 microns or larger. UV, IR, visible light sensitive flame detector. Suppressant delivery rate of 1.0 lbm/sec at nominal pressure. Oxygen dilution to 10.5 percent by volume in 33 percent of an element's racks.

* For these space habitats the FDS system was not yet a sophisticated portion of the ECLS system.

Notes for Table G-1:

1. Diamant, Bryce L., "Past and Present Environmental Control and Life Support Systems on Manned Spacecraft." SAE Paper No. 901210. 20th Intersociety Conference on Environmental Systems, Williamsburg, July 9–12, 1990, appendix table 1.

2. Spacelab Payload Accommodation Handbook Appendix C—Environmental Control Interface Definition. SLP/2104-3. NASA Marshall Space Flight Center Spacelab Program Office. Marshall Space Flight Center, AL, 1986, pp. C4-31 to C4-36.

3. Prime Item Development Specification, Type B1, for ECLSS: Fire Detection and Suppression Subsystem. S683-29573, Space Station *Freedom* Project Office. Marshall Space Flight Center, AL, October 1991.

A majority of the type B-1 specifications are based on the performance capabilities of an individual component, such as a smoke detector, or established programmatic regulations. Others are derived requirements aimed at defining desired system performance. The B-1 specification requiring an oxygen dilution to 10.5 percent by volume is an example of a requirement which has been derived. This requirement is based on National Fire Protection Association recommendations and has been determined as outlined in the NFPA 12 *Standard on Carbon Dioxide Extinguishing Systems*. The carbon dioxide concentration level of 50 percent is based upon the suggested quantity (actually 49 percent) to suppress an ethylene fire as listed in table 2-3.2.1, *Minimum Carbon Dioxide Concentrations for Extinguishment*, of the NFPA 12. Ethylene is used to represent a variety of unsaturated hydrocarbons such as those generated by the pyrolysis of plastic materials. This design quantity is arrived at through calculations based upon a maximum residual oxygen value of 12.4 percent in conjunction with the NFPA recommended 20-percent safety factor. The calculation is as follows:

$$\%CO_2 = \frac{21\text{-}12.4}{21} \times 100$$

$$\%CO_2 = 41.0\% \quad \text{(minimum } CO_2\text{)}$$

$$\%CO_2 = 1.2 \times 41.0\% \quad \text{(20\% safety factor)}$$

$$\%CO_2 = 49.0\% \quad \text{(design } CO_2\text{)} \quad .$$

The quantities listed by the NFPA are derived for ground based systems which operate in standard 101.2 kPa (14.7 psia) conditions with an atmosphere oxygen content of 21 percent. The design concentration of 49.0 percent (approximately 50 percent) by volume would reduce the oxygen content from 21 percent to 10.5 percent. The centralized system is then required to contain sufficient suppressant to achieve this concentration level in 33 percent of an elements racks.

G.2 – Fire Detection Methods

Two approaches can be used to detect fires: smoke particles or gases given off by a fire can be detected, and the energy released during combustion can be detected. There are several methods for either approach. Some of these are described below.

Smoke detectors:

Photoelectric – This type of detector includes obscuration detectors based on the attenuation of light due to the smoke particles, light scattering detectors based on the scattering of light due to the smoke particles, and condensation nuclei counters in which water vapor is condensed on the particles thereby increasing their size and making them easier to detect.

Ionization – This type of detector uses a radiation source to ionize atmosphere molecules in a chamber with electrodes. A voltage is applied to the electrodes and the ionized molecules accelerate toward them. Upon reaching the electrodes a small current is generated. When there is smoke, the particles attach to the ions which increases their mass and reduces their velocity. Due to convective flow through the detector, more ions are carried out of the chamber, fewer impact the electrodes, and a smaller current is generated.

Energy detectors:

UV – Ultraviolet (UV) radiation (0.18 to 0.26 μm) is emitted by a fire and can be detected when they pass through UV glass and strike a cathode. The cathode emits electrons that are drawn to an anode, thereby generating a current that is monitored.

Visible – Visible detectors monitor 0.4 to 0.7 μm wavelength radiation. A light-sensitive photocell monitors the visible radiant energy of a flame. False alarms due to sunlight and artificial light are avoided by monitoring flame flicker.

IR – Infrared (IR) radiation (0.7 to 5 μm) is emitted by fires and by many other sources as well. Because of this, IR detectors are designed to monitor the flicker (varying energy) of a flame. Most IR flame detectors are photoconductive type.

Note: UV, visible, and IR radiation detectors are often used in combination to minimize false alarms.

Thermal – The heat generated by a fire or preceeding combustion can be monitored directly by thermisters and resistance temperature devices (RTD).

References:

Fuhs, Susan, Raymond Hu, John McLin, and Mark Armstrong: "Design of the Fire Detection System for Space Station *Freedom*." International Conference on Life Support and Biospherics, University of Alabama in Huntsville, February 18–20, 1992.

Friedman, Robert, and Kurt R. Sacksteder: "Fire Behavior and Risk Analysis in Spacecraft." American Society of Mechanical Engineers, Winter Annual Meeting, November 28 to December 3, 1988.

"System and Design Trade Study: Space Station *Freedom* Work Package 01, Fire Detection Assembly," Report No. 90-63506, Allied-Signal Aerospace Company, March 9, 1990.

G.3 – Fire Suppression Methods

Several methods are available for suppressing fires, including water, foam, CO_2, N_2, Halon and depressurizing the habitat. Since fires are likely to be caused by electrical short circuits or overheated resistors or wires, water is not likely to be an effective suppressant. For the early missions the food rehydration gun was also to serve as a fire extinguisher. Depressurization was also available to extinguish fires. For the Apollo and *Skylab* missions a portable aqueous gel (hydroxymethyl cellulose) extinguisher was provided. The space shuttle orbiter and Spacelab have Halon 1301 extinguishers. These methods are compared in table G-2. Oxygen dilution, heat removal, and chemical extinguishment are the mechanisms whereby fires are extinguished. The heat of vaporization is an indication of the amount of heat that can be removed. The liquid density is an indication of the storage volume requirements for each method. The volume fraction required to extinguish a hydrogen fire is an indication of the amount of suppressant that will be needed, in a relative manner since the actual amount varies depending on the type of fire and other factors.

Table G-2. Fire suppression methods.

	Mechanism			Heat of Vaporization kJ/kg (Btu/lb)	Liquid Density kg/m^3 (lb$_m$/ft^3)	Volume Fraction Required (for H_2)
	Oxygen Dilution	Heat Removal	Chemical Extinguishment			
Nitrogen	x	x	-	N/A	237 (14.8)	0.75
Carbon Dioxide	x	x	-	149 (64)	758 (47.3)	0.62
Halon 1301	x	x	x	112 (48)	1570 (98)	0.20
Depressurization	x	-	-	-	-	
Foam	x	x	x	N/A	N/A	N/A
Water	x	x	-	2442 (1050)	1000 (64.2)	N/A

Advantages and disadvantages of each method relate to the types of fires that can be extinguished, any toxic compounds produced by the suppressant, and cleanup after a fire, in addition to the basic factors of mass, volume, power consumption, safety, and reliability. Water is not a good suppressant for electrical fires. Nitrogen is not regenerable, which may not be critical in some situations. Halon produces toxic byproducts that are difficult to cleanup. Carbon dioxide is toxic at high concentrations. Depressurization results in loss of atmospheric gases. Foam is difficult to clean up. Advantages of CO_2 include the ability to be removed from the atmosphere by the atmosphere revitalization CO_2 removal assembly. Halon is highly effective at suppressing flammable liquid and electrical fires. Water is readily available from the WRM subsystem. Depressurization removes the combustion byproducts. Nitrogen is already the largest component of the atmosphere. Foam can suppress most types of fires.

References:

Friedman, Robert, and Urban, David: "Spacecraft Fire Safety Research and Technology." Lewis Research Center presentation, July 1, 1992.

"Flammability, Odor, and Offgassing Requirements and Test Procedures for Materials in Environments that Support Combustion," NASA NHB8060.1C.

Appendix H

Other ECLSS Functions

H.1 – Food Storage

Refrigerators and freezers are used in space habitats for storage of food, pharmaceuticals, reagents, and experiment samples. Design options include vapor compression cycle, atmosphere refrigeration cycle, or thermoelectric cooling.

The refrigerator and freezer temperature requirements for space habitats and the cooling methods that have been used are shown in table H-1 for several applications. In addition, requirements relating to fluid, power, and data interfaces; physical features; and functional characteristics also must be met.

Table H-1. Refrigerator and freezer requirements and methods in space habitats.

	Refrigerator, °C (°F)	Freezer, °C (°F)	Cooling Method
Skylab	3.33 (38)	-23.3 (-10)	coolant loop to space radiator
Orbiter	3.33 (38)	-	vapor-compression, atmosphere cooled
Spacelab	3.33 (38)	-	vapor-compression, atmosphere cooled
S.S. *Freedom* – food	3.33 (38)	-28.9 (-20)	vapor-compression, liquid cooled
S.S. *Freedom* – lab freezer	-	-56.7 (-70)	Stirling cycle
S.S. *Freedom* - snap freezer	-	-195.5 (-320)	Stirling cycle
S.S. *Freedom* - cryogenic freezer	-	-182.8 (-297)	Stirling cycle

For *Skylab*, cooling was performed by circulating Coolanol 15 through the refrigerators and other areas where cooling was required such as the drinking water supply. During the unmanned period the heat dissipation load was as much as 586 W (2,000 Btu/h) and was somewhat higher while occupied. An octagonal external radiator dissipated the heat to space. The coolant loop is shown schematically in figure H-1, taken from "MSFC Skylab Mission Report—Saturn Workshop," NASA TM X-64814, October 1974.

For the orbiter, Spacelab, and S.S. *Freedom*, versions of the commonly used vapor-compression refrigeration units were or will be used. The expected heat load for the refrigerator/freezer on S.S. *Freedom* is approximately 293 W (1,000 Btu/h). The refrigeration unit for S.S. *Freedom* is shown schematically in figure H-2, taken from a report by the manufacturer, Lockheed Missles and Space Company, dated March 15, 1991. A major distinction between the orbiter/Spacelab and S.S. *Freedom* refrigerators is the method of transporting the heat from the compressor. On the orbiter and Spacelab, heat is transferred to the atmosphere, which is cooled by a THCS which then transfers the heat to a liquid coolant loop. On S.S. *Freedom* the heat will be transferred directly to a liquid coolant loop.

For the low temperature freezers on S.S. *Freedom* a Stirling cycle heat pump with helium as the working fluid will be used. This approach has fewer moving parts, has low vibration, uses non-toxic working fluids such as helium (rather than CFC's), and can cool to cryogenic temperatures due to the use of helium. Typical lifetimes of Stirling cycle cryocoolers are 500 to 2,500 hours due to excessive wear with the usual configurations. Efforts to produce Stirling cycle cryocoolers with design lives of 10 years or more are presently underway.

PAGE 264 INTENTIONALLY BLANK
PRECEDING PAGE BLANK NOT FILMED

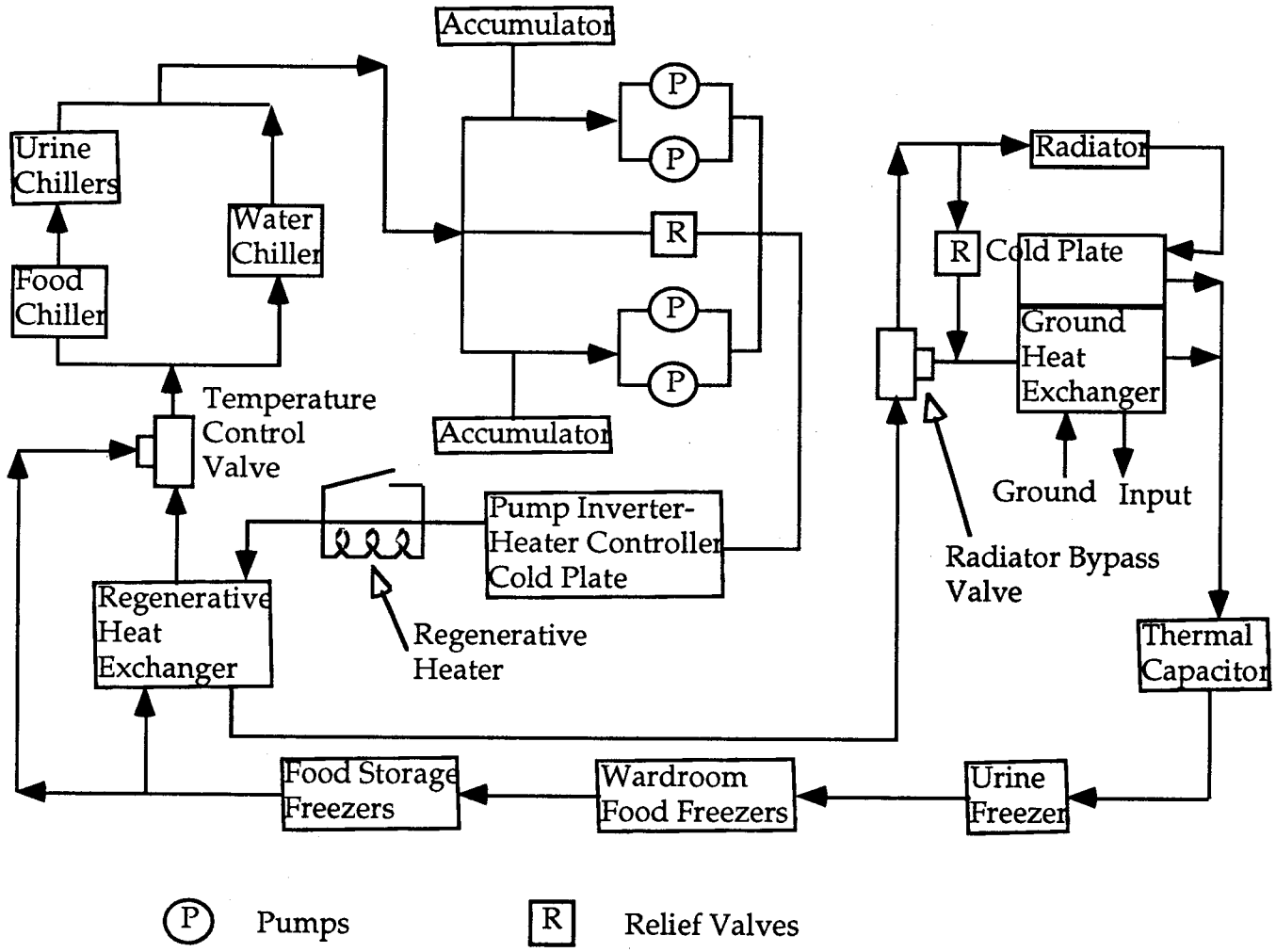

Figure H-1. *Skylab* coolant loop.

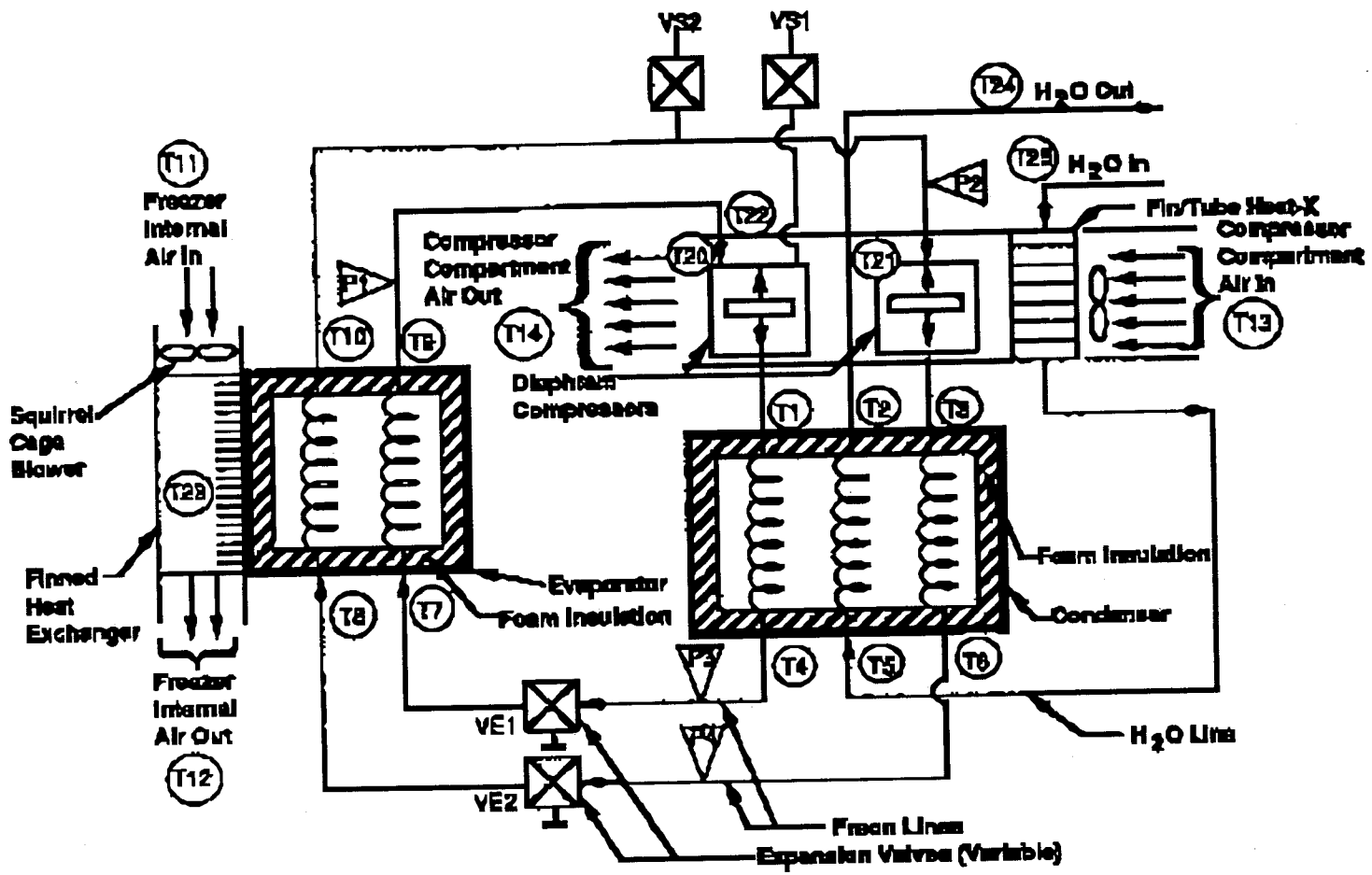

Legend
T1 - T14, Fluid Temperature Sensors
T15, T16, Inside Freezer Walls (not shown)
T17, T18, Outside Freezer Walls (not shown)
T19, Ambient Atmosphere (not shown)
VS1, VS2 Schrader Valves

P1 - P4 Pressure Sensors
VE1, VE2, Expansion Valves, Variable
T20, T21 Compressor Temperatures
T22, Motor Temperature
T23, Evaporator Fin Temperature
T24, T25, Water In/Out Temperatures

Figure H-2. Vapor-compression refrigerator/freezer for S.S. *Freedom.*

In addition to mechanical heat pumps, thermoelectric heat pumps may be suitable for some applications. These devices are thermocouples commonly made of bismuth telluride and use the Peltier effect to cool to as low as –50 °C (–58 °F). Potential advantages include solid state operation with inherent reliability since there are no moving parts, precision temperature control, localized cooling, compact packaging, and fast response times. Devices of this type can also generate electricity and have been used on spacecraft, including Apollo Lunar experiments, for this purpose.

Another method is thermoacoustic refrigeration "which uses resonant high amplitude sound in inert gases to pump heat." This approach to pumping heat was first developed in the 1980's and unlike traditional "reversible" heat pumps, the thermoacoustic approach uses the irreversibilities to produce the proper phasing to achieve refrigeration. The sound generator is the only moving part, resulting in a device which is inherently reliable. Testing of the concept as a cryogenic cooler has been performed aboard the space shuttle *Discovery*, and a refrigerator version is being developed.

The requirements for cold storage of food and other items can be met by several methods, including direct coolant loops to a space radiator, vapor-compression devices, thermoacoustic devices, and thermoelectric devices.

References:

Barinaga, Marcia: "Acoustic Fridge Takes to Space." Science, vol. 255, p. 534.

Garrett, Steven L., and Thomas J. Hofler: "Thermoacoustic Refrigeration." Technology 2001: The Second National Technology Transfer Conference and Exposition, San Jose, CA, NASA Conference Publication xxxx, December 5, 1991.

Henderson, Breck W.: "U.S. Industry Close to Producing Long-Life Space Cooling System." Aviation Week and Space Technology, April 6, 1992, p. 41 to 43.

Thermo Electron Technologies Corp. brochure, Waltham, MA.

H.2 – Plant Growth Facilities

In pursuit of a 100-percent closed, reliable ECLSS, the focus of life support research has begun to shift from P/C systems towards the development of biological life support systems (BLSS). BLS systems, on which this chapter will concentrate, use living organisms to perform life support functions instead of machines. BLS systems require some P/C components and system trade studies are being performed to determine the mechanical technologies best suited for future planetary and interplanetary missions. Tandem development of biological and physical/chemical life support systems will lead to hybrid life support systems that combine the best features of both approaches.

H.2.1 Biological Life Support Systems

An ideal life support system might mirror the ecological processes on Earth, relying on natural bioregenerative processes to recycle waste and provide food, air, and water. Earth's ecology is controlled naturally by the vast resources and powerful dynamics of the land, water, and atmosphere, and by extremely complex relationships between an enormous variety of interdependent

living organisms. Engineering a scaled-down version of this complex ecological system into a space habitat or planetary colony is a difficult task. An efficient biological system requires the careful selection of organisms which can perform life support functions while being ecologically compatible with other organisms in the system and with the human crew. In the absence of natural terrestrial forces, maintaining the health and productivity of this system requires stringent control of system processes and interfaces. Without proper control mechanisms the system becomes unstable and unbalanced. Some organisms will grow in abundance, while others will decline, resulting in imbalances in the food, water, and atmosphere supplies. Development of control schemes to achieve stable, highly productive BLS systems over the long-term is one of the primary engineering problems facing BLSS researchers.

An engineered BLSS where the ecology is strictly controlled to operate within a limited, enclosed environment and within certain environmental parameters is commonly known as a Controlled Ecological Life Support System (CELSS). CELSS operation is based on photosynthetic organisms, such as plants or algae, to produce food, oxygen, and potable water, and to remove carbon dioxide exhaled by the crew. Physical subsystems will be required to support these biological processes, including temperature and humidity control hardware, a food processing system to convert biomass (plant growth) into edible food and a waste processing system to convert waste products, including waste water, into useful resources. The integration of CELSS components with the human crew is diagrammed in figure H-3. Each CELSS component and the interactions between components must be rigidly controlled to maintain a stable, productive, and efficient system.

Benefits of a CELSS over entirely physicochemical (P/C) systems are primarily related to psychological and logistical factors. A CELSS provides a much more Earth-like environment than P/C systems, and is therefore more psychologically satisfying to the crew. In addition, a CELSS produces fresh fruit and vegetables, lending variety and palatability to the diet. The logistical advantage is that a CELSS can produce all the ingredients necessary for human survival with almost no resupply. A small quantity of liquid and solid waste will be nonrecyclable, and some organisms that die will have to be replaced, but overall resupply requirements will be significantly lower than for P/C systems. (As illustrated in figure 55.)

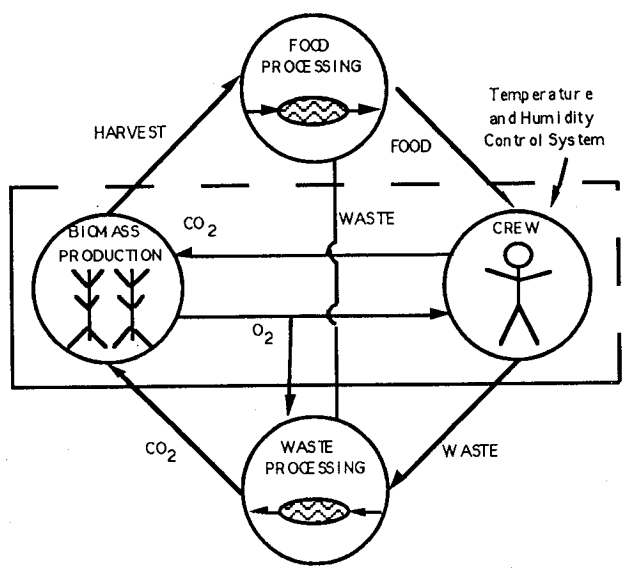

Figure H-3. The basic elements of a controlled ecological life support system.

H.2.2 Plant Growth and Food Generation

Human food production is an important benefit of a CELSS not provided by conventional P/C systems. The plant (and/or algal) growth system is the largest component of a CELSS. Primarily responsible for food production, the plant growth system also provides for oxygen production, CO_2 removal, and liquid and solid waste treatment. Maintaining healthy, highly productive plants is extremely vital to crew health and survival.

Several diets have been proposed to satisfy human nutritional requirements and to provide an interesting variety of fresh foods. All of these diets include several staple crops, such as rice, wheat, corn, beans, and potatoes. Other proposed foods include broccoli, spinach, lettuce, peas, peanuts, turnip greens, tomatoes, onions, carrots, and beets. Fruits may also be included, such as strawberries, raspberries, and pineapples. Further research is required to determine which species and combinations of species are best. Studies may in fact prove that a vegetarian diet alone is not enough to maintain health for extended periods. Nutrients from animals, fish, or other living organisms may also be required.

CELSS research has concentrated on the photosynthetic production of food using higher plants. Many of the factors that affect plant growth on Earth will also affect growth in a space environment, including growth area, light intensity and wavelengths, photoperiod, the plant root environment, CO_2 concentration, temperature, humidity, radiation, and reduced gravity. In space, control of these parameters will not be provided by nature, but must instead be engineered into the system.

H.2.2.1 Growth Area

A CELSS farm must be large enough to produce the quantity of food required by the crew, yet small enough to fit within the volume constraints dictated by each mission. The size of a CELSS farm can be reduced by minimizing the plant growth area required to support each person. Plant growth experiments suggest the minimum growth area required to support one person will range between 13 and 50 m^2/person (140 to 538 ft^2/person).(1)

Minimizing growth area requires maximizing plant productivity, measured in yield per unit area. Yield per unit area can be increased by optimizing plant density. Planting many seeds in a small area is ideal for increasing yields as long as plant relationships are synergistic. An example of such synergism is the thick canopy of leaves created by high density planting, which has been shown to increase light absorption efficiency, and thus photosynthetic efficiency, for a given area of plant growth.(2) Density reaches a maximum when synergistic behavior starts to be replaced by destructive behavior, where plants compete for available resources.

H.2.2.2 Lighting

Light from either lamps or solar radiation is a necessary resource if photosynthesis is to occur. Plant growth rate increases with increasing photon flux; however, as flux increases, each successive unit of flux is used less efficiently.(2) While maximum irradiance is desirable, irradiance levels will be limited by heat and power constraints. Because these constraints may be more difficult to overcome than constraints on other factors affecting plant growth, lighting may be the primary factor limiting CELSS productivity.

The maximum irradiation available from lamps is limited by heat and power requirements. High efficiency, high intensity discharge electric lamps work well in terrestrial greenhouses where sufficient volume is available to prevent hot lamps from burning plants. In the small volume of a space-based CELSS, high intensity lamps are thermally impractical. Lamps that are less efficient at converting electricity to light, such as fluorescent lamps, generate lower thermal loads, but do not provide the light intensity required to optimize growth for many species being considered for CELSS.[3] A 1986 study found that 76 kW of electrical power is needed to grow enough food to support four crewmen using current lamp technology.[4] This lamp power demand, coupled with the support systems load, resulted in a total demand of nearly 100 kW. Such high power requirements may represent an unreasonable percentage of the total power available on a space habitat or planetary base.

Power consumption can be reduced by using solar energy, which can be distributed to plants using windows, mirrors, fiber optics, or a combination of these devices. The main problem with using sunlight is that some missions will face long periods of darkness, such as the 14-Earth-day night experienced by a nonpolar lunar base. Such missions may require a combination of sunlight and lamp light to maintain photosynthesis while minimizing power consumption.

Photoperiod, the amount of time a plant is irradiated each day, must be optimized to achieve maximum yields. Continuous exposure to light promotes fast growth in most cases, but does not always lead to the highest yields. In addition to optimizing photoperiod for individual species, photoperiod should be modified for each phase of plant development. Salisbury and Bugbee have demonstrated that yield can be increased by optimizing environmental conditions, including photoperiod, for each stage of the wheat life cycle (six stages were identified).[2]

H.2.2.3 The Root Environment

In space, mineral-enriched dirt will not be available as a natural resource in which to grow plants. Transportation costs, potential problems with microbiological contamination, and the handling difficulties introduced during planting and harvesting make dirt and other types of solid substrates unattractive. A plant can grow without a solid rooting media as long as nutrients are supplied in some manner. In most cases structural support is also required to assist plant growth. Two methods proposed for growing plants in space are hydroponics and aeroponics.

In hydroponic systems, plants are grown with their roots in an aerated, circulating liquid nutrient solution that provides nutrients, oxygen, and water. An advantage of liquid nutrient solutions over solid substrates is that much of the solution can be recovered and reused. Hydroponic systems include a growth support structure to carry the nutrient solution and hold plants in place. Figure H-4 depicts a hydroponic system with several plants immersed in a nutrient solution. The nutrient solution must remain in contact with plant root tissue to prevent dehydration and nutrient starvation, a difficult task in microgravity. Hydroponics systems are best suited for a low gravity environment, such as on the Moon or Mars, where natural liquid/gas separation helps ensure that roots are immersed in liquid.

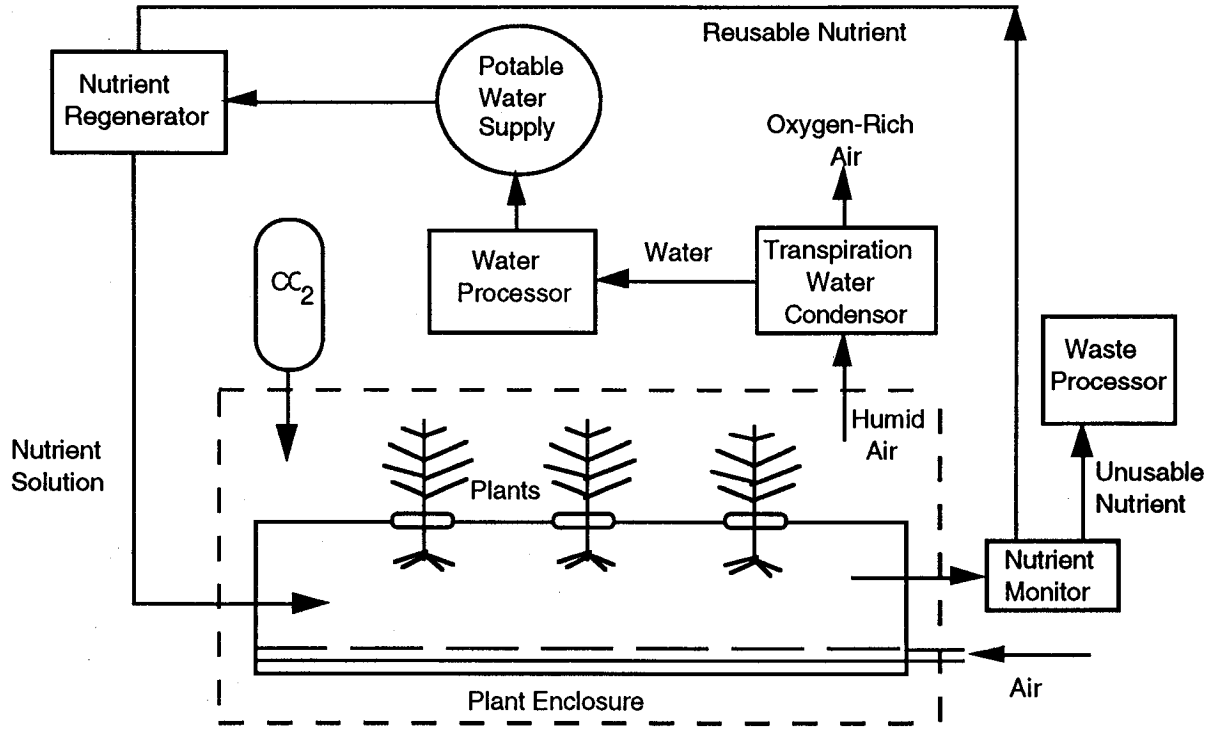

Figure H-4. Schematic of a hydroponic plant growth system.[3]

Aeroponics is similar to hydroponics, except the nutrient solution is sprayed on the plant roots as a mist or foam instead of circulated around the roots as a liquid. As with hydroponics, an aeroponic system in a microgravity environment must be designed to provide total enclosure of the root system to prevent nutrient solution from escaping into the atmosphere.[3]

H.2.2.4 The Gas Environment

On Earth, where gas ratios (O_2/CO_2, O_2/N_2, etc.) are relatively constant, changing these ratios is both difficult and impractical. In a controlled space environment, where all atmospheric gases are added, gas ratios can be optimized to produce maximum yields. Yields are greatly increased by increasing CO_2 concentration around the plant leaves from the ambient value of 320 ppm to several times that value.[5] The maximum concentration for optimum growth will depend on the plant, and may change for each stage of the life cycle. Upper limits for most plants have yet to be determined, but there is a threshold beyond which plant growth may be reduced. This depends, partly, on other environmental factors such as temperature and light levels, and the complexity of the plant community.[6] Reducing O_2 pressure is another way to increase the efficiency of photosynthesis. Further research into the manipulation of these and other gases may lead to new methods for maximizing food production.

H.2.2.5 Temperature and Humidity

Temperature and humidity can also be controlled to maximize plant yields. Optimizing temperature and humidity depends not only on plant species, but also on other control parameters, such as CO_2 concentration, irradiance level, and photoperiod. High temperatures (25 °C, 77 °F), in conjunction with long photoperiods, have been shown to promote rapid growth rates and short life

cycles in wheat, but also lead to poor pollination and reduced yields. Cooler temperatures (20 °C, 68 °F) tend to increase yields, but slow growth rates and lengthen the plant life-cycle. As with many other factors, temperature should be optimized for each phase of the life cycle to obtain the best yields per unit time.(2)

Relative humidity must be optimized to maintain efficient transpiration rates. If humidity is too high, water transpiration rates decrease, reducing leaf cooling capacity. A low cooling capacity can result in unacceptably high leaf temperatures when irradiance levels are high. Low transpiration rates have also been shown to hamper mineral absorption from nutrient solutions, particularly if CO_2 concentration in the plant growth chamber is high. High light intensity and long photoperiods may be the norm for a CELSS plant growth chamber to achieve maximum yields.

Temperature and humidity will be controlled by physical components, such as heat exchangers and fans. One of the largest heat loads will be generated by the plant irradiance source, particularly if the source is high intensity lamps. The temperature and humidity control subsystem must be properly sized to prevent irradiance and other heat loads from hindering plant growth or burning plants.

H.2.2.6 Reduced Gravity and Radiation

Reduced gravity and high levels of harmful radiation are two new problems never before faced by Earth-based plant growth systems. Very little is known about the growth patterns of living organisms in reduced gravity environments. Gravity strengths in the inner solar system range from almost zero g on orbiting space stations and interplanetary spacecraft to 1/3 g on Mars. During its life cycle a CELSS plant may experience transitions between several gravity levels, as would occur during transportation between the Earth and Mars. There are no known methods for simulating these reduced gravity fields on Earth, other than using aircraft or sounding rockets to create microgravity environments lasting only several minutes. Meaningful experimentation with plant growth in reduced gravity will require much longer exposure periods of days to months. Most of the current knowledge on the long term effects of reduced gravity comes from Soviet microgravity experimentation performed on space stations or satellites. In addition to biological effects, reduced gravity will also affect physical factors, such as plant support and the nutrient solution/plant root interface. The effects of vibrational and acceleration forces should also be investigated.

Galactic radiation is another problem where the effects on plants are not fully understood. Among the potential problems are reduced yields and genetic effects on subsequent generations. On Earth, most harmful cosmic radiation is blocked by the atmosphere. This will not be the case in space, where artificial methods are required to protect living organisms from radiation poisoning. The amount of radiation shielding necessary to sustain healthy plants can be determined from experiments on Earth, where high radiation levels and radiation storms (caused by solar flares) are relatively easy to simulate. Radiation dose limits for plants are generally higher than for humans, but exceeding these limits will have the same deadly results.

H.2.2.7 Microorganisms

Uncontrolled activity of microorganisms can be extremely damaging to the operation of a closed system. The prevention of excessive microorganism growth is required for maintaining system health, although it is both undesirable and impossible to create a completely sterile environment. In both humans and plants some microbial interaction is beneficial, and in some cases

even necessary. Similar to other CELSS components, a controlled balance must be achieved where no single microbe species is allowed to grow beyond healthy limits and no beneficial species is entirely eradicated.

Plants are particularly susceptible to diseases caused by microorganisms. A method for monitoring and evaluating microbial population in the plant growth system must be included in a CELSS to help avoid widespread death of the plants that perform key CELSS functions. Redundancy will also be required to guard against disease and other problems, such as insect infestations and mechanical failures.

H.2.2.7.1 Microorganisms in Space Habitats

Microorganisms (MO's), i.e., bacteria, yeast, fungi, protozoa, and viruses, are ubiquitous in and on the human body. From birth, people live in a microbial biosphere composed of innumerable microorganisms representing types, variants, strains, species, genera, etc. The composition of this microbial environment is dynamic. Numerous additions and deletions, both qualitative and quantitative, constantly take place. Therefore, MO's will be present in spacecraft designed for transporting and housing humans. The presence of MO's and their effects on the ECLSS must be factored early into the design process to ensure that potential detrimental effects of MO's are avoided or minimized, and that potential beneficial effects are recognized and encouraged. For missions of relatively short duration simple approaches to limit MO growth can be used. These often involve the use of expendable biocides. For longer duration missions, however, the goal is to eliminate the use of expendables and so other methods must be used to maintain acceptable MO populations.

H.2.2.7.2 - Effects of Microorganisms

Microorganisms may be divided into two groups according to their activities: the harmful ones and the useful ones. The first kind, the pathogenic microorganisms, cause disease merely because they are able to grow on or in the bodies of humans, animals or plants and unfortunately damage the host in greatly varying degree. Of more than 1,700 known kinds of bacteria, about 70 are known to causes disease in humans beings, and of these only a dozen or so are, as a rule, considered dangerous.

The second kind live in the outside world and are normally harmless to humans. In nature these type of microorganisms (saprophytic or saprozoic) are important in decomposing plants and animals so that the components can be used to make new plants and animals (biomass). In this role MO's may be used to recycle waste matter, in conjunction with a plant growth facility for growing food. Useful MO's are used in food processing and alcohol production. Yeast, molds, and bacteria are used to manufacture, among other things, alcohol, lactic acid, butter, cheese, solvents, and antibiotics.

Formation of biofilms, an adhesion of microorganisms to moist surfaces, is another concern for longer duration space flights. Bacteria tend to attach to surfaces in nature, where they are protected from the environment by secreting an adhesive polymer called a glycocalyx. Biofilms can be of benefit when the microorganisms attached are able to remove substances diluted in the water that can be harmful to humans. On the other hand, they can clog filters and tubing and induce corrosion of materials. The glycocalyx can also provide protection against biocides providing a protected environment to pathogenic organisms.

The normal distribution of MO's in the environment will affect the ECLSS design. Of greatest concern are pathogenic MO's, which could incapacitate the crew, or lead to death, in extreme cases. Data collected from previous space missions suggest that bacteria tend to be exchanged between crew members. Therefore, microbial cross-contamination between humans should also be considered when assessing risk of health problems in a close environment. Harmless microorganisms that are considered normal flora to one crew member may suddenly become a health threat to another crew member due to microbial mutations, adaptation and/or population shifts.

H.2.2.7.3 Monitoring Microorganisms

Detecting MO's at low concentrations in the water and atmosphere and on surfaces is important in order to monitor the populations and identify changes in growth rates and relative populations. Changes of these types would indicate that a steady-state balance is not being maintained and may serve as an early warning that the ECLSS is not performing properly and needs to be checked (perhaps a biocide unit needs to be replaced or perhaps the ECLSS design is deficient). To ensure that an acceptable balance is maintained among the MO populations it is necessary to monitor the populations. Detection and identification of MO's is generally a time consuming and tedious process, not suited to application on spacecraft, where information may be needed within hours, or else "real-time." Current microbial monitoring techniques do not meet all the requirements needed to be installed as part of a spacecraft hardware. Some of these requirement incudes high sensitivity, small or no crew intervention, small amount of expendables used, low detection time, amount of speciation, small volume, low weight, and a small power requirement. A microbial monitor design for a spacecraft will be a project that will take time to be developed due to the uniqueness of the requirements.

H.2.3 Atmosphere Regeneration

The three primary atmosphere regeneration functions are CO_2 removal, oxygen generation, and toxic trace gas removal. P/C systems can perform all these functions, but the advantage of a CELSS is that the same functions can be performed with food production as a by-product. However, because complete crop failure is always possible, total dependence on a CELSS for atmosphere regeneration is unlikely. Until reliability is removed as an uncertainty, a CELSS will probably operate with a P/C system backup.

Carbon dioxide removal and oxygen production are both natural processes of photosynthesis. One problem introduced when plants are used for these two purposes is that, because the rates of production and intake of O_2 and CO_2 differ between plants and humans, some O_2 is lost. Humans produce about 0.85 moles of CO_2 per mole of O_2 consumed, while plants consume about 0.95 moles of CO_2 to produce one mole of O_2. This translates into 0.1 moles of O_2 lost between the time a human inhales and a plant "exhales."(7) Another problem with a CELSS atmosphere regenerator concerns the removal of trace gases. While beneficial trace gas removal is a natural process for most plants, many of these same plants produce trace gases that will require removal by some other device.

The use of in-situ resources on planetary bases will also affect ECLSS design. Extracting O_2 from lunar soil will reduce dependence on the CELSS O_2 recovery function; however, with no apparent carbon resources on the moon, CO_2 supply will be in short supply. This will not be the case for a Mars base, where CO_2 is readily available from the Martian atmosphere.

H.2.4 Water Recovery

A CELSS can contribute significantly to water recovery because plants act as natural water purification devices. Plant roots take in water, some of which is then transpired as water vapor from the leaves. Transpiration water can be condensed and collected for drinking water. In a hydroponic plant growth system the quality of the nutrient solution water may be low, yet the transpiration water recovered is potable in many cases. Depending on chemical composition, waste water in a plant-based recovery system may have to be treated before and/or after plant processing before it is considered fit to drink.

H.2.5 Waste Processing

Some of the solid and liquid wastes (feces and urine) produced by humans cannot be directly used by plants without some form of processing. Plants will also produce waste in the form of inedible biomass. To help complete CELSS closure, a waste processor will be required to break down human and plant waste to recover useful constituents, such as CO_2, nitrogenous compounds, and nutrient salts. In the terrestrial ecosystem, waste processing is performed by microbes that ingest organic material and produce water and carbon dioxide; however, biological waste treatment systems will probably be too large for use in space. A physical/chemical oxidation process, such as supercritical water oxidation (SCWO), appears more attractive. SCWO involves the rapid oxidation of aqueous wastes in a reactor maintained above the critical temperature and pressure of water. The properties of water under these conditions make it relatively easy to separate salts from the waste stream. SCWO products include clean water, nitrogen and nitrogen oxides, and CO_2.[8]

References:

1. Salisbury, F.B., and Bugbee, B.G.: "Wheat Farming in a Lunar Base." In *Lunar Bases and Space Activities of the 21st Century*, Houston, TX, Lunar and Planetary Institute, 1986, p.635–645.

2. Salisbury, F.B., and Bugbee, B.G.: "Plant Productivity in Controlled Environments." From the proceedings of the XXII International Horticultural Congress/83rd ASHS Annual Meeting, Davis, CA, August 15, 1986. Also published as part of a special insert to "HortScience," vol. 23(2), April 1988.

3. Olson, R.L., Oleson, M.W., and Slavin, T.J.: "CELSS for Advanced Manned Mission." From the proceedings of the XXII International Horticultural Congress/83rd ASHS Annual Meeting, Davis, CA, August 15, 1986. Also published as part of a special insert to "HortScience," vol. 23(2), April 1988.

4. Oleson, M.W., and Olson, R.L.: "Controlled Ecological Life Support Systems (CELSS): Conceptual Design Option Study." NASA CR 177421, NASA/ARC, Moffett Field, CA, 1986.

5. Tremor, John W., and MacElroy, Robert D.: "Report of the First Planning Workshop for CELSS Flight Experimentation." NASA Conference Publication 10020, NASA/ARC, Moffett Field, CA, March 1987.

6. Bazzaz, Fakhri A., and Fajer, Eric D.: "Plant Life in a CO_2-Rich World." Scientific American, January 1992, p. 68–74.

7. Langhans, R.W., and Dreesen, D.R.: "Challenges to Plant Growing in Space." From the proceedings of the XXII International Horticultural Congress/83rd ASHS Annual Meeting, Davis, CA, August 15, 1986. Also published as part of a special insert to "HortScience," vol. 23(2), April 1988.

8. Slavin, T.J., Liening, F.A., and Oleson, M.W.: "CELSS Waste Management Systems Evaluation." SAE No. 860997, 16th Intersociety Conference on Environmental Systems, San Diego, CA, July 14–16, 1986.

Appendix I

Historical ECLSS's for U.S. and U.S.S.R./Russian Space Habitats

PRECEDING PAGE BLANK NOT FILMED

PAGE 278 INTENTIONALLY BLANK

Table I-1. ECLSS on U.S. space habitats.

Subsystem	Mercury	Gemini	Apollo CM	Apollo LM	Skylab	Orbiter	Spacelab	S. S. Freedom
Atmosphere Revitalization								
CO_2 Removal	Two lithium hydroxide (LiOH) canisters operating in parallel. Airflow is through only one canister. After the first canister becomes spent, airflow is diverted through the second parallel canister, and the spent canister is replaced.	Similar to Mercury design.	Similar to Mercury design.	Similar to Mercury design.	2 canister molecular sieve. Each canister was regenerative, containing Zeolite 5A for CO_2 removal and Zeolite 13X for water removal. CO_2 was vacuum desorbed to space.	Similar to Mercury design.	Similar to Mercury design. 8 canisters are included on each mission.	Four-bed molecular sieve. Includes two regenerative desiccant beds to remove water and two regenerative Zeolite 5A molecular sieve beds to remove CO_2. CO_2 is heat and pressure desorbed to an accumulator before being fed to a Sabatier reactor.
Gas Recovery/ Generation	None	None	None	None	None	None	None	Sabatier reactor for CO_2 reduction. Static Feed Water Electrolysis (SFWE) for oxygen generation. The SFWE uses a KOH electrolyte.
Trace Contaminant Control	Activated charcoal located in the LiOH canisters upstream of the LiOH. Filters removed airborne particulates.	Similar to Mercury design.	Similar to Mercury design.	Similar to Mercury design.	Activated charcoal canister located in the molecular sieve unit. Filters removed airborne particulates. Venting of atmosphere between missions helped avoid long term contaminant buildup.	Activated charcoal downstream of the LiOH. CO is converted to CO_2 by an ambient temperature catalytic oxidizer (ATCO). Filters remove airborne particulates.	Activated charcoal canister located in the transfer tunnel between Spacelab and the Orbiter. CO is converted to CO_2 by an ambient temperature catalytic oxidizer (ATCO). Filters remove airborne particulates.	Activated charcoal with a high temperature catalytic oxidizer. Filters remove airborne particulates.
Trace Contaminant Monitoring	Carbon monoxide sensor.[1]	No on-orbit monitoring.	No on-orbit monitoring.	No on-orbit monitoring.	A system using Draeger tubes monitored the buildup of CO and other trace contaminants of major concern [2]	No on-orbit monitoring.	No on-orbit monitoring.	A carbon monoxide monitor and a Gas chromatograph/mass spectrometer (GCMS) for detecting the 200 contaminants defined in NHB 8060.1B.

NOTE: Numbers in brackets refer to References at the end of Appendix I.

PRECEDING PAGE BLANK NOT FILMED
PAGE 280 INTENTIONALLY BLANK

Table I-1. ECLSS on U.S. space habitats (continued).

Subsystem	Mercury	Gemini	Apollo CM	Apollo LM	Skylab	Orbiter	Spacelab	S.S Freedom
Water Recovery and Management								
Water Supply Quality	Potable only.	Potable only.	Potable only.	Potable only.	Potable only.	Potable only.	Not applicable.	Potable only.
Water Processing	None. Vent waste water.	None. Vent waste water.	None. Store waste water and vent excess, or send excess to evaporators for additional cooling.	None. Store waste water. No overboard dumping of wastes on lunar surface.	None. Store waste water in tanks and vent waste when tanks are full.	None. Store waste water in a tank and vent waste when tank is full.	Not applicable.	Urine - Vapor compression distillation (VCD). Potable and Hygiene Water - Multifiltration using sorbent beds.
Water Monitoring	No on-orbit monitoring.	No on-orbit monitoring.	No on-orbit monitoring.	No on-orbit monitoring.	Iodine sampler. Water samples fixed with a linear starch reagent and compared to photographic standards.	No on-orbit monitoring.	Not applicable.	On-line TOC, pH, iodine concentration, and conductivity monitor for each water processor. Off-line batch microbial and chemical monitoring using mass spectrometry, filter cultures, and gas, liquid, and ion chromatography
Water Storage and Distribution	One tank with a flexible bladder. Squeezing an air bulb pressurized the bladder to deliver water (sphygmomanometer). Tank was filled before launch. [3]	One 7.3 liter tank containing a bladder pressurized with oxygen to deliver water. Tank was filled before launch. When tank became empty it was refilled from reserves in the service module, which separated from the main spacecraft before reentry.	Fuel cell byproduct was the principle source of potable water. Byproduct was routed to the potable tank or sent to the waste tank if the potable tank was full. Palladium and silver removed dissolved H_2. Potable tank used a bladder pressurized by oxygen to deliver water.	Three (4 on Apollo 15, 16, 17) potable tanks, each with a bladder pressurized by nitrogen to deliver water. Tanks were filled before launch. Potable water was also used to cool spacecraft and extravehicular mobility units.	Ten cylindrical 600 lb. capacity stainless steel tanks fitted with pressurized steel bellows to deliver the water. One 26 lb. capacity portable tank. Tanks were filled before launch. [2]	Four 168 lb. capacity stainless steel tanks fitted with metal bellows pressurized by N_2. Drinking water is from the fuel cell byproduct.	Not applicable.	Tank design similar to the Orbiter, except air is used instead of N_2 to pressurize the metal bellows.

NOTE: Numbers in brackets refer to References at the end of Appendix I.

Table I-1. ECLSS on U.S. space habitats (continued).

Subsystem	Mercury	Gemini	Apollo CM	Apollo LM	Skylab	Orbiter	Spacelab	S.S. Freedom
Water System Microbial Control	Water quality depended on the quality of the public water system in Cocoa Beach, Fl. Bacteria control depended on the residual disinfectant (chlorine) in the public supply.[4]	Chlorine added to the water before launch.	Chlorine at a concentration of 0.5 mg/liter maintained by adding (syringe injection) 22 ml of sodium hypochlorite solution every 24 hours.	Iodine added before launch. No on-orbit biocide addition. A pre-flight analysis was performed to predict when the iodine concentration would fall below 0.5 mg/liter during each mission. When this predicted time was reached during the mission a bacteria filter was added upstream of the water dispenser.	Iodine maintained between 0.5 and 6.0 mg/liter by periodic injection of a 30 g/l potassium iodide solution.	Iodine from microbial check valves (MCV). MCV passively adjusts iodine concentration between 1 and 2 mg/l.	Not applicable.	Iodine from microbial check valves. Heat sterilization at 120°C for 20 minutes is planned as part of the water processing cycle.
Temperature and Humidity Control								
Atmosphere Temperature and Humidity Control	Separate suit and cabin condensing heat exchangers (CHX). Mechanically activated sponge water separator removed water from the CHX. Condensate rejected to water boiler for heat rejection. Pilot regulated suit and cabin temperature by manually adjusting water flow rate through the suit and cabin HX's with a needle valve.[5]	Separate suit and cabin CHX's. Wicks removed water from the CHX by capillary action. Manual throttling of O_2/Coolant flow rate in suit loop to control temperature. Heat transport loop with MCS-198 coolant was primary method for heat rejection. [6]	Suit CHX was primary method for cabin temperature and humidity control. Wicks removed water from the CHX by capillary action. Water/ethylene glycol coolant.	Water circulated through pressure garment assembly to cool astronaut. Water/ethylene glycol coolant.	Four CHX's, two operating at all times. Coolanol 15 coolant.	Centralized cabin liquid/air CHX using water coolant. Air bypass ratio around CHX is adjusted to control temperature. Condensate removed by slurper bar and centrifugal separator.	Similar to Orbiter design.	Similar to Orbiter design.
Cabin Ventilation	Cabin fan	Cabin fan	Cabin fans. The fans were noisy, so the crew only operated them during short specified periods. [7]	Cabin fan	3 ventilation ducts with 4 fans each. Air distributed from circular diffusers with dampers mounted flush with the floor, and from rectangular outlets with dampers and adjustable flow vanes. 3 portable fans with adjustable diffusers.	Cabin fan with ventilation ducts.	Cabin fan	Cabin fans and separate local area ventilation fans.

C-4

NOTE: Numbers in brackets refer to References at the end of Appendix I.

Table I-1. ECLSS on U.S. space habitats (continued).

Subsystem	Mercury	Gemini	Apollo CM	Apollo LM	Skylab	Orbiter	Spacelab	S.S Freedom
Equipment Cooling	Cold plates and air cooling. Cabin gas absorbs heat generated by equipment and is cooled when it passes through the cabin CHX.	Similar to Mercury.	Similar to Mercury.	Similar to Mercury.	Similar to Mercury.	Air cooling, cold plates, air/liquid equipment dedicated HX's. Avionics air loop separate from cabin loop, except in aft flight deck.	Air cooling, cold plates, liquid/liquid equipment dedicated HX's. Avionics air loop is separate from cabin loop. Flow control valves set manually before flight.	Air cooling, cold plates, and equipment dedicated HX's. Avionics air loop is separate from cabin loop in the Habitation and Laboratory modules, but combined with cabin loop in nodes and Logistics module. Air flow is controlled automatically.
Atmosphere Control and Supply								
Atmosphere Composition	100% O_2 at 5 psia (34.5 kPa)	100% O_2 at 5 psia (34.5 kPa)	100% O_2 at 5 psia (34.5 kPa). 60% O_2, 40% N_2 atm. during launch.	100% O_2 at 5 psia (34.5 kPa)	Mixed O_2/N_2 at 5 psia (34.5 kPa) total pressure. 72% O_2, 28% N_2 by volume.	Mixed O_2/N_2 at 14.7 psia (101 kPa) total pressure. 21.7% O_2, 78.3% N_2.	Mixed O_2/N_2 at 14.7 psia (101 kPa) total pressure. 21.7% O_2, 78.3% N_2.	Mixed O_2/N_2 at 14.7 psia (101 kPa) total pressure. 21.5% O_2, 78.5% N_2 volume.
Gas Storage	O_2 stored as a gas at 7500 psi (51.7 MPa) in two 1.8 kg. capacity tanks. The tanks were made of 4340 carbon steel with electroless nickel plating. One tank was the primary supply, the other was backup.[5]	O_2 stored as a supercritical cryogenic fluid at 850 psi (5.86 MPa) in one spherical tank. There was a separate tank to supply the fuel cells. Two secondary cylindrical 5000 psi O_2 bottles. For emergencies there was also one small O_2 bottle attached under each ejectable seat. [6]	O_2 stored as a supercritical cryogenic fluid at 900 psi (6.20 MPa) and 180°C in two 145 kg capacity spherical Inconel Dewar tanks. The tanks were common for the ECLS and power systems. The tanks were discarded during reentry, when O_2 was supplied from a 1.7 kg capacity surge tank.[7]	21.8 kg of O_2 stored as a gas at 2700 psi (18.6 MPa) in the descent stage. In the ascent stage O_2 was stored as a supercritical cryogenic fluid at 850 psi (5.86 MPa) in two Inconel bottles. [7]	O_2 and N_2 stored as gases at 3000 psi (20.7 MPa) in six bottles each, for a total of 2779 kg of O_2 and 741 kg of N_2.	N_2 and O_2 stored as gases at 3300 psi (22.8 MPa). 4 spherical N_2 tanks and 1 emergency O_2 tank. Metabolic O_2 is supplied by the Power Reactant Storage and Distribution System, which uses supercritical cryogenic storage tanks.	N_2 stored as a gas at 3300 psi (22.8 MPa) in a spherical tank. N_2 is for leakage makeup and scientific airlock operation. O_2 source is a 100 psi (689 kPa) line from the Orbiter.	Cryogenic stores of O_2 and N_2.

NOTE: Numbers in brackets refer to References at the end of Appendix I.

Table I-1. ECLSS on U.S. space habitats (continued).

Subsystem	Mercury	Gemini	Apollo CM	Apollo LM	Skylab	Orbiter	Spacelab	S.S. Freedom
Waste Management								
Fecal/Urine Handling	In-suit urine collection bag stored urine until end of mission. No provisions for fecal handling. No provisions for urine handling on first Mercury mission.	Feces were collected in bags and stored. Bags taped to buttocks. Urine was collected using the urine transfer system, which consisted of a rubber cuff connected to a flexible bag. Urine could be directed to the boiler tank to assist with spacecraft heat rejection.	Feces were collected in bags and stored. Bags taped to buttocks. Bag was kneaded to mix a liquid bactericide with the feces. Before Apollo 12 urine was collected using the urine transfer system, which consisted of a rubber cuff connected to a flexible bag. After Apollo 12 the urine receptacle assembly was used, which did not contact the crewman. Urine vented. [7]	Fecal containment system was identical to Apollo Command Module system. Primary difference from CM waste management system was no overboard dumping of urine on lunar surface.	Feces were collected in gas permeable bags attached under a form-fitting seat, then vacuum dried and stored. Urine was collected using individual receivers, tubing, and disposable collection bags. [2]	Commode/ Urinal - Feces are collected in the commode storage container, where they are vacuum dried, and held. A vane compactor facilitates fecal storage and containment. Urine is sent to a waste water tank which is vented when full.	Utilizes Orbiter facilities.	Commode/ Urinal- Feces are collected in a bag and compacted in a cylindrical canister for biodegradation. Urine is sent to the VCD to be recovered as potable water.
Fire Detection and Suppression								
Suppressant	Water from the food rehydration gun. [8] Capability to depressurize cabin by manually opening cabin outflow valve.	Similar to Mercury design. Maximum of 3 cabin depresses could be accommodated by the on-board oxygen supply.	Water from the food rehydration gun and a portable aqueous gel (hydroxy-methyl cellulose) extinguisher, which could expel 0.06 m^3 of foam in 30 sec. Capability to depressurize cabin.	Similar to Apollo CM design.	Portable aqueous gel (hydroxy-methyl cellulose) extinguishers, which could expel 0.06 m^3 of foam in 30 sec. [9] Capability to depressurize cabin.	Halon 1301. One Halon tank with distribution lines in each avionics bay. Three portable Halon extinguishers. Capability to depressurize cabin.	Halon 1301. A Halon bottle with distribution lines located in each equipment rack. Two portable Halon extinguishers. Capability to depressurize cabin.	CO_2. Centralized CO_2 bottles with distribution lines to powered equipment racks. Portable CO_2 extinguishers. Capability to depressurize cabin.
Detection	Crew senses [8]	Crew senses	Crew senses	Crew senses	Ultraviolet detectors	Ionization smoke sensors	Ionization smoke sensors	Photoelectric smoke detectors and UV/IR/Visual flame detectors.

NOTE: Numbers in brackets refer to References at the end of Appendix I.

Table I-2. ECLSS on Soviet/Russian space habitats.

Subsystem	Vostok	Voskhod	Soyuz	Salyut	Mir I
Atmosphere Revitalization					
CO_2 Removal	CO_2 is removed through reaction with KOH in the oxygen regenerator (forming potassium carbonate and water).[3]	Similar to Vostok design.	Similar to Vostok design. In addition, LiOH beds are used to absorb about 20% of the CO_2.[10]	Similar to Soyuz design.	Four-bed molecular sieve. Two regenerative silica gel desiccant beds and two regenerative molecular sieve beds containing an adsorbent similar to Zeolite 5A. LiCl canisters used as backup. [11]
Gas Recovery/ Generation	Nonregenerative chemical cartridges of potassium super oxide (KO_2). KO_2 is reacted with water to produce O_2 and KOH.[3]	Similar to Vostok design.	Similar to Vostok design.	Similar to Vostok design.	Some CO_2 reduction for experimental purposes, but most of the collected CO_2 is vacuum desorbed overboard. Water electrolysis using a KOH electrolyte for oxygen generation. Electrolysis water is from recovered urine supplemented by onboard stores. [11]
Trace Contaminant Control	Activated charcoal and filters. Contaminants also removed through reaction with constituents in the oxygen regenerator.[3]	Similar to Vostok design.	Similar to Vostok design.	Activated charcoal, high efficiency fiberglass filter, and catalytic chemical absorbents. Oxygen regenerator also removes contaminants. [12]	Regenerated charcoal beds and catalytic oxidizers. Charcoal beds regenerated by vacuum for 6 hours once every 10 days. Impurities vented. [11]
Trace Contaminant Monitoring	Gas analyzer determined percent composition of oxygen and carbon dioxide in cabin atmosphere. No other on-orbit atmosphere monitoring.[3]	Similar to Vostok design.	Similar to Vostok design.	Similar to Vostok design. Several gas analyzers distributed around the station. [12]	Similar to Salyut design.
Water Recovery and Management					
Water Supply Quality	Potable only.	Potable only.	Potable only.	Potable only.	Potable, hygiene, and electrolysis grade. [11]
Water Processing	None	None	None	Salyut 6,7 - Potable water is recovered from condensate. Waste water is pumped into storage columns containing ion exchange resins and activated charcoal, then sent through filters containing fragmented dolomite, artificial silicates, and salt. Minerals are then added, including calcium, magnesium, bicarbonate, chloride, and sulfate. [12]	Three water purification systems: 1. Condensate recovered by the same process used on Salyut 6,7. 2. Hygiene/kitchen water recovered by a system of filters and ion exchange resins. 3. Electrolysis water recovered from urine by vapor diffusion distillation. [11]

NOTE: Numbers in brackets refer to References at the end of Appendix I.

Table I-2. ECLSS on Soviet/Russian space habitats (continued).

Subsystem	Vostok	Voskhod	Soyuz	Salyut	Mir I
Water Monitoring	**	**	**	**	Measurements taken by water analyzers include pH and salinity. [11]
Water Storage and Distribution	Water held in a container made of two layers of elastic polyethylene film. Container was hermetically sealed inside a metal cylinder. Low pressure created by the crewman's mouth was enough to induce water flow from the polyethylene container. Each crewman was allotted 2.2 l/day of water.[3]	Similar to Vostok design.	Similar to Vostok design.	Rodnik ("spring") system filters water supplied from tanks with a total volume of over 400 liters.[12]	Similar to Salyut design. Tanks use pressurized bladders to deliver water. [11]
Water Supply Microbial Control	Silver preparation added to water, which was boiled before launch. [3]	Similar to Vostok design.	Similar to Vostok design.	Water is heated and ionic silver is introduced electrolytically to achieve a concentration of 0.2 mg/l.[12]	Similar to Salyut design.
Temperature and Humidity Control					
Atmosphere Temperature and Humidity Control	Liquid-air condensing heat exchanger. Condensate trapped by porous wicks between the heat exchanger tubes. Temperature adjusted by automatic regulation of air flow rate through heat exchanger. Cosmonaut could set temperature and humidity of craft. Temperature range was between 12 and 25°C, and relative humidity.was between 30 and 70%. Humidity was controlled primarily by a dehumidifier containing a silica gel drying agent impregnated with lithium chloride and activated carbon. Dehumidifier operated cyclically. Air inlet to dehumidifier opened after humidity rose above 70%. Air inlet automatically closed when humidity reached 35 ± 5%. [13]	Similar to Vostok design.	Liquid-air condensing heat exchanger. Temperature adjusted by automatic regulation of air flow rate through heat exchanger. Liquid coolant was a water/glycol mixture. Cosmonaut could set temperature and humidity of craft. Temperature range was between 12 and 25°C, and relative humidity.was between 30 and 70%. Humidity was controlled primarily by the condensing heat exchanger. Condensate was trapped by porous wicks between the heat exchanger tubes. The primary role of the chemical water absorbents became control of the oxygen production rate of the O_2 regenerator. [3]	Liquid-air condensing heat exchanger. Temperature could be set by cosmonaut between 15 and 25°C. Coolant was an antifreeze-type fireproof liquid. Porous wicks trapped moisture between tubes of the heat exchanger. Condensate was collected in a moisture trap and periodically pumped out manually by the cosmonauts. [14]	Liquid-air condensing heat exchanger. Two internal thermal control loops charged with "Temp" (alcohol and water mixture) coolant - a cooling loop and a heating loop. A redundant piping system is included with each loop. Loop temperature is controlled automatically. [11]
Equipment Cooling	**	**	**	**	Avionics is cooled by heat exchangers and by air pulled from the cabin. Each method provides about 50% of the cooling. A condensator, with freon as the working fluid, removes moisture that condenses on the equipment. [11]

** Information limited or unavailable.

NOTE: Numbers in brackets refer to References at the end of Appendix I.

Table I-2. ECLSS on Soviet/Russian space habitats (continued).

Subsystem	Vostok	Voskhod	Soyuz	Salyut	Mir I
Cabin Ventilation	Cabin fan	Cabin fan	Cabin fan	Cabin fans. Cosmonauts could control air flow rate between 0.1 and 0.8 m/sec. [12]	Fans pull air through ducts to exchange gas between modules. [15]
Atmosphere Control and Supply					
Atmosphere Composition	Sea-level atmosphere - O_2/N_2 mixture at 14.7 psi (101 kPa).	Sea-level atmosphere - O_2/N_2 mixture at 14.7 psi (101 kPa).	Sea-level atmosphere. O_2/N_2 mixture at a total pressure between 13.7 and 16.4 psi (94.4 and 113 kPa), with ppO_2 between 2.7 and 3.9 psi (10.5 and 15.2 kPa).	Sea-level atmosphere. O_2/N_2 mixture at a total pressure between 13.5 and 16 psi (93.1 and 110 kPa), with ppO_2 between 3.0 and 3.8 psi (20.5 and 25.9 kPa).	Sea-level atmosphere. Up to 78% N_2, 21-40% O_2. Maximum ppO_2 is 6.8 psi (46.9 kPa).
Gas Storage	Oxygen supply stored chemically. Emergency tanks of high pressure oxygen and air for suit ventilation and cosmonaut breathing. Cosmonaut's suit could be pressurized if the cabin depressurized. No nitrogen storage. Cabin hermetic seal was designed for zero leakage.[14]	Similar to Vostok design.	Aside from the chemical oxygen regenerators, there was no additional gas storage. Complete reliance on the cabin hermetic seal to prevent leakage and depressurization. [16]	Oxygen supply stored chemically. Cylinders of compressed air for leakage makeup. No separate N_2 or O_2 storage. [12]	Backup oxygen stored chemically as $NaClO_3$. N_2 is stored as a high pressure gas. [11]
Waste Management					
Fecal/Urine Handling	Urine and feces entrained in an air stream and collected. Design of the urine/feces receiving unit permitted simultaneous collection of urine and feces even when clothed in a space suit.	Similar to Vostok design.	Similar to Vostok design.	Feces are collected in hermetically sealed metal or plastic containers, which are ejected to space about once a week. The urine collector, separate from the main commode, is a cup-and-tube device with a disposable plastic insert and filter.	Commode for urine and excrement collection. Urine sent to the recovery processor after passing through an air/liquid separator.
Fire Detection and Suppression					
Suppressant	**	**	**	**	Portable extinguishers. Crew can open valves to extinguish fires in inaccessible areas. [11]
Detection	**	**	**	CO_2 detectors doubled as smoke detectors.[12]	Optical sensors. [11]

** Information limited or unavailable.

NOTE: Numbers in brackets refer to References at the end of Appendix I.

References:

1. Silvestri, Goffredo, et al.: *Quest for Space*. New York, NY, Crescent Books, 1986.

2. Hopson, G. D., Littles, J.W., and Patterson, W.C.: "Skylab Environmental Control and Life Support Systems." ASME Paper 71-AV-14, Life Support and Environmental Control Conference, San Francisco, CA, July 12–14, 1971.

3. Calvin, Melvin, and Gazenko, Oleg G., eds.: *Foundations of Space Biology and Medicine*. Volume 3, NASA N76-26831, 32, 34, 36, and 37, Washington, DC, 1975.

4. Willis, Charles E., and Schultz, John R.: "Spacecraft Water System Disinfection Technology: Past, Present, and Future Needs." SAE Paper No. 871487, 17th Intersociety Conference on Environmental Systems, Seattle, WA, July 13–15, 1987.

5. Samonski, Frank H., Jr.: "Technical History of the Environmental Control System for Project Mercury." NASA TN D-4126, Washington, DC, 1967.

6. Watkins, Harold D.: "Basic Gemini ECS Keyed to 14-Day Flight." *Aviation Week & Space Technology* , August 19, 1963, p. 52–69.

7. "Biomedical Results of Apollo," NASA Lyndon B. Johnson Space Center, N76-12690, 91, 93, 94, Houston, TX, 1975.

8. Mackowski, Maura J.: "Safety on the Space Station." *Space World*, March 1987, p. 22–24.

9. "Skylab Operational Data Book," MSFC-01549, December 1970.

10. Hamilton Standard, "Final Report—Soviet Space Life Support Systems," U.S. Government Contract 85-N987400-000, Windsor Locks, CT, November 1985.

11. Bluth, B.J., and Helppie, Martha: *Soviet Space Stations as Analogs*, Second edition, Report under NASA Grant NAGW-659, Washington, DC, 1987.

12. Volynkin, Yu. M., and Yazdovskiy, V.I.: "The First Manned Space Flights." N63-15658, Translated by the Air Force Systems Command Foreign Technology Division, Wright-Patterson AFB, OH, 1962.

13. Pochkayev, I., Serebrov, A., and Ul'yanov, V.: "Special Feature: The Mir Space Station." *U.S.S.R. Space Life Sciences Digest*, Issue 10, 1987.

14. Gil'berg, L.A.: "Living and Working in Space." NASA Technical Translation. NASA TT F-17075, Washington, DC, July 1976.

15. Voronin, G.I., Guenin, A.M., and Fomin, A.G.: "Physiological and Hygienical Evaluation of Life Support Systems of the Vostok and Voskhod Spacecraft." Bjurstedt, Hilding, ed. *Proceedings of the Second International Symposium of Basic Environmental Problems of Man in Space*, New York, Springer-Verlag, 1967.

16. Loginov, Sergei N., Associate Professor for the Department of Life Support Systems, College of Cosmonautics, Moscow Aviation Institute, Lecture at the University of Alabama in Huntsville, June 25–27, 1990.

Appendix J

Portable Life Support System Requirements and Design

J.1 – Portable Life Support System Requirements

Due to the EVA experience from the Space Shuttle program, the requirements for the space suit for S.S. *Freedom* include a higher operating pressure to minimize EVA prebreathe time and eliminate the 70.3 kPa (10.2 psia) habitat pressure period prior to each EVA. Requirements for early technology demonstrator hardware proposed for a regenerative portable life support system (PLSS) were established in the mid 1980's. These requirements generally assumed an average astronaut metabolic rate of 264 to 293 W (900 to 1,000 Btu/h) for a 4- to 5-h EVA system. In 1987, the highest metabolic rate from post-flight analyses of shuttle suit lithium hydroxide (LiOH) canisters was approximately 469 W (1,600 Btu/h). This maximum rate was found for the EVA following the repair of the Solar Maximum Satellite in which a manual satellite spinup was performed by "Ox" Van Hoften.(1)

The requirements given in the mid 1980's in the JSC suit development program for H_2O vapor and CO_2 removal from the circulating atmosphere were derived based on relationships developed by Hamilton Standard:

$$M_{CO_2}\ (g/h) = 31.8 + 201.4 * MRK\ (g/h) \qquad \text{J-1 (SI)}$$

$$M_{H_2O}\ (g/h) = 31.8 + 356.3 * MRK\ (g/h) \qquad \text{J-2 (SI)}$$

where:

M_{CO_2} = the metabolic CO_2 production rate (g/h)
M_{H_2O} = the metabolic H_2O consumption rate (g/h)
MRK = Metabolic Rate (kW)

Or, in English units:

$$M_{CO_2}\ (lb_m/h) = 0.07 + 0.13 * MRK\ (lb_m/h) \qquad \text{J-1 (English)}$$

$$M_{H_2O}\ (lb_m/h) = 0.07 + 0.23 * MRK\ (lb_m/h) \qquad \text{J-2 (English)}$$

where:

M_{CO_2} = the metabolic CO_2 production rate (lb_m/h)
M_{H_2O} = the metabolic H_2O consumption rate (lb_m/h)
MRK = Metabolic Rate (Btu/h) / 1,000 (Btu/h).

The PLSS must be designed with an average removal capacity of 0.091 kg/h (0.2 lb_m/h) of CO_2 and 0.136 kg/h (0.3 lb_m/h) of H_2O for an average metabolic rate of 293 W (1,000 Btu/h). These quantities should be multiplied by the intended duration of EVA to give overall removal capacity requirements. In addition, transient periods of less than 1 hour with metabolic rates of up to 586 W (2,000 Btu/h) should be used as a design removal rate for performance specifications for short periods during an EVA.

J.2 – PLSS Design

Equipment verification testing must simulate the high transient rate and also test the overall capacity. Tests can be run with a period of simulated high metabolic rate followed by a period of simulated low metabolic rate. This will prevent premature expenditure of the PLSS test hardware removal capacity. In addition, it should be noted that the CO_2 production of a person will respond in 2 to 30 s to changes in work levels while the response in atmosphere moisture production may be from 2 to 30 min after the change in activity level.

PAGE 292 INTENTIONALLY BLANK

PRECEDING PAGE BLANK NOT FILMED

The experience in the shuttle EVA program results in several facts noteworthy here. An undergarment used in the shuttle EVA suit, called the liquid cooling ventilation garment (LCVG) resembles thermal underwear with small plastic water tubes woven into the fabric. The LCVG also contains larger plastic tubes which distribute cooling atmosphere to the inside areas around the wrists and ankles of a suited crewman. The LCVG used in the shuttle program retains much of the moisture generated by metabolic activity. This moisture is never collected in the PLSS atmosphere drying system. The requirement for moisture removal (equation J-2) is for that portion expected on the atmosphere loop from experience in 4- to 5-h EVA periods in the Shuttle program.

Thermal comfort of EVA crewmembers is attained by adjusting the water supply temperature to the LCVG. Increasing work level requires a decreased supply water temperature. Thus a cooling curve of LCVG supply water temperature versus metabolic rate is constructed. The thermal comfort of EVA test subjects was tested at JSC in two series of testing (May 1985 through August 1986 and December 1986 through March 1987). As of 1990, there had been no further testing of automated cooling for EVA suit design. The first series of testing identified a cooling curve best suited to the average test subject.(2) The second test series was performed in the 3.35-m (11-ft) chamber facility in Building 7 at JSC.(3) A shuttle suit was custom fitted to each test subject. Two end points were chosen by test subjects as offsets to the baseline curve to provide comfortable working conditions in a flight-like suit under a wide range of metabolic activity levels. The results of the second test series yielded a second, improved curve. The second test simulated flight-like conditions somewhat more accurately and was expected to yield a more reliable result. This curve is shown in Figure J-1.(4) The comfort curve was also used in the first integrated testing of a regenerable PLSS performed in 1989 and 1990.(5)

The design of a PLSS will be constrained by some requirements which can be chosen and others which must be derived. An example of this arose in efforts to determine minimum fan flow requirements in a PLSS for the S.S. *Freedom* program. Calculations and experimentation in the JSC integrated PLSS Breadboard test demonstrated that the minimum fan flow required for suit ventilation was limited by humidity control rather than CO_2 washout. Efforts to minimize suit fan flowrate and the suit dewpoint to prevent the fogging of a visor must result in a tradeoff. A variable speed fan was chosen to accomplish the optimization for a range of cases.

Two examples are shown graphically in figure J-2. In example 1, the water production (to the atmosphere loop) for an average EVA period is 0.14 kg/h (0.3 lbm/h) and a fan flow of 0.17 m^3/s (6 acfm) has been chosen. The top graph in the figure shows the water vapor pressure change in the space suit assembly (SSA) will be 1.79 kPa (0.26 psia). The bottom graph in the figure shows the dewpoint requirement in the supply atmosphere is a function of the SSA outlet atmosphere dewpoint limit. For an outlet limit of 23.9 °C (75 °F), a supply atmosphere dewpoint of less than 9.2 °C (48.5 °F) is required. In example 2, a maximum water production (to the atmosphere loop) of 0.24 kg/h (0.53 lbm/h) corresponding to an assumed maximum EVA metabolic rate of 586 W (2,000 Btu/h) is used with an assumed increase in fan flow up to 0.28 m^3/s (10 acfm). The resulting change in pH_2O in the SSA atmosphere is 1.93 kPa (0.28 psia). The outlet dewpoint limit of 23.9 °C (75 °F) is again assumed and yields a dewpoint requirement in the supply atmosphere of less than 7.2 °C (45 °F).

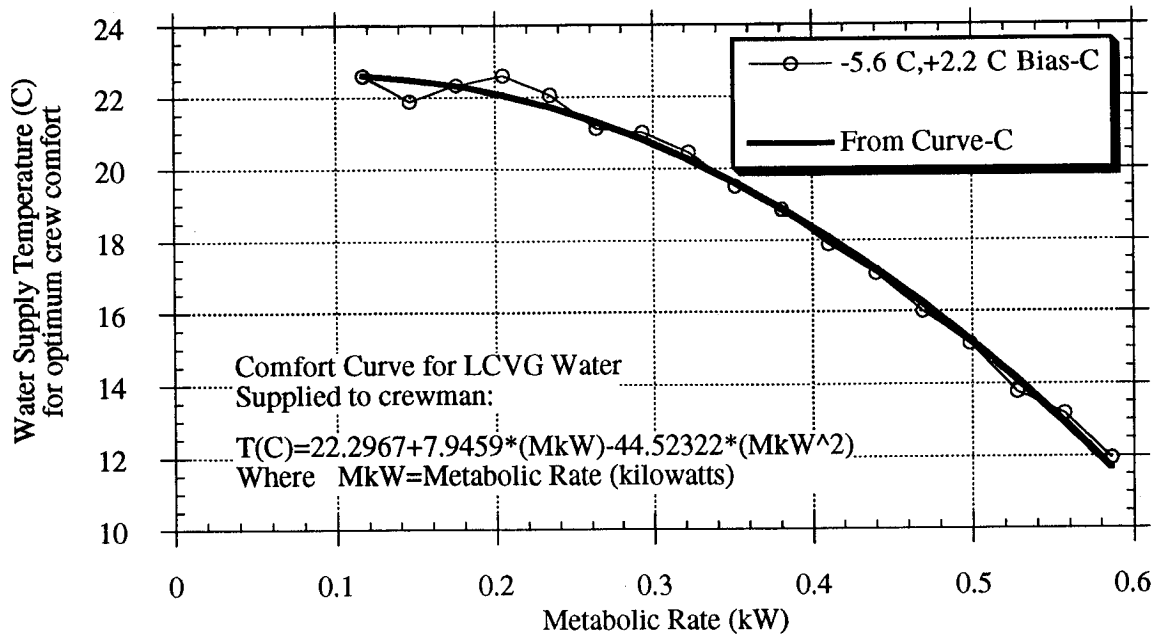

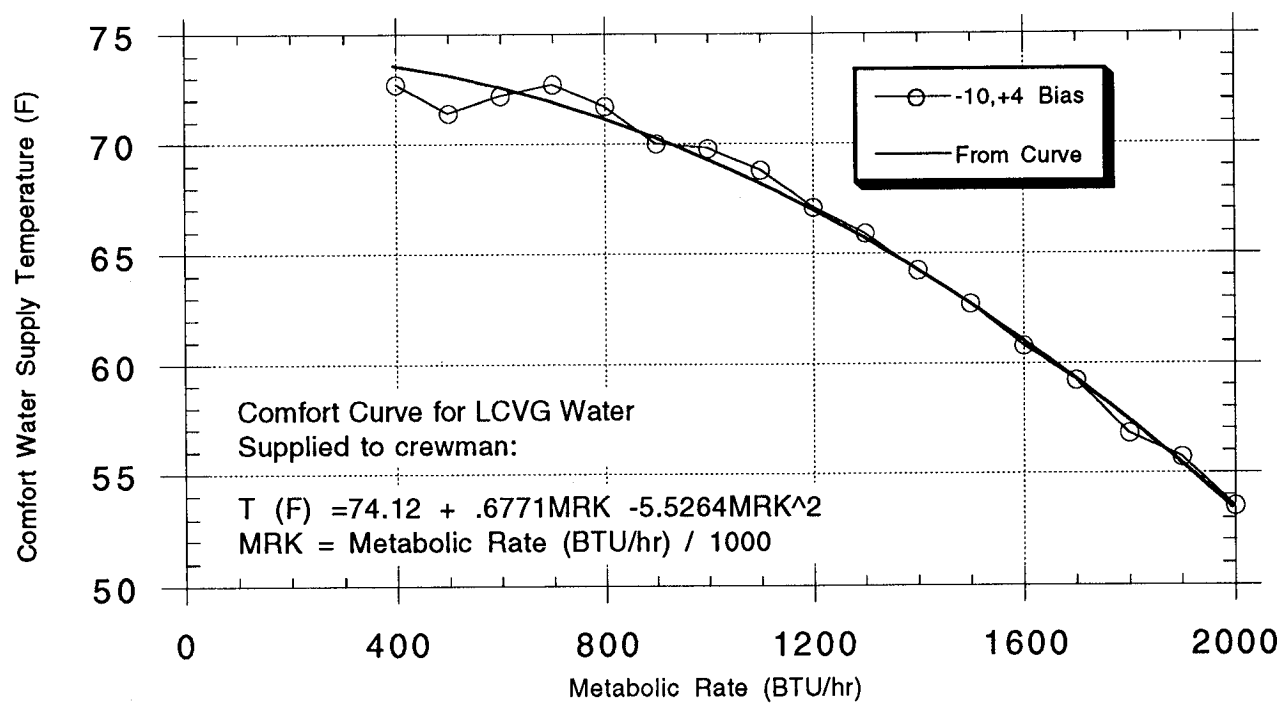

Figure J-1. PLSS design curve for LCVG water supply comfort temperature.

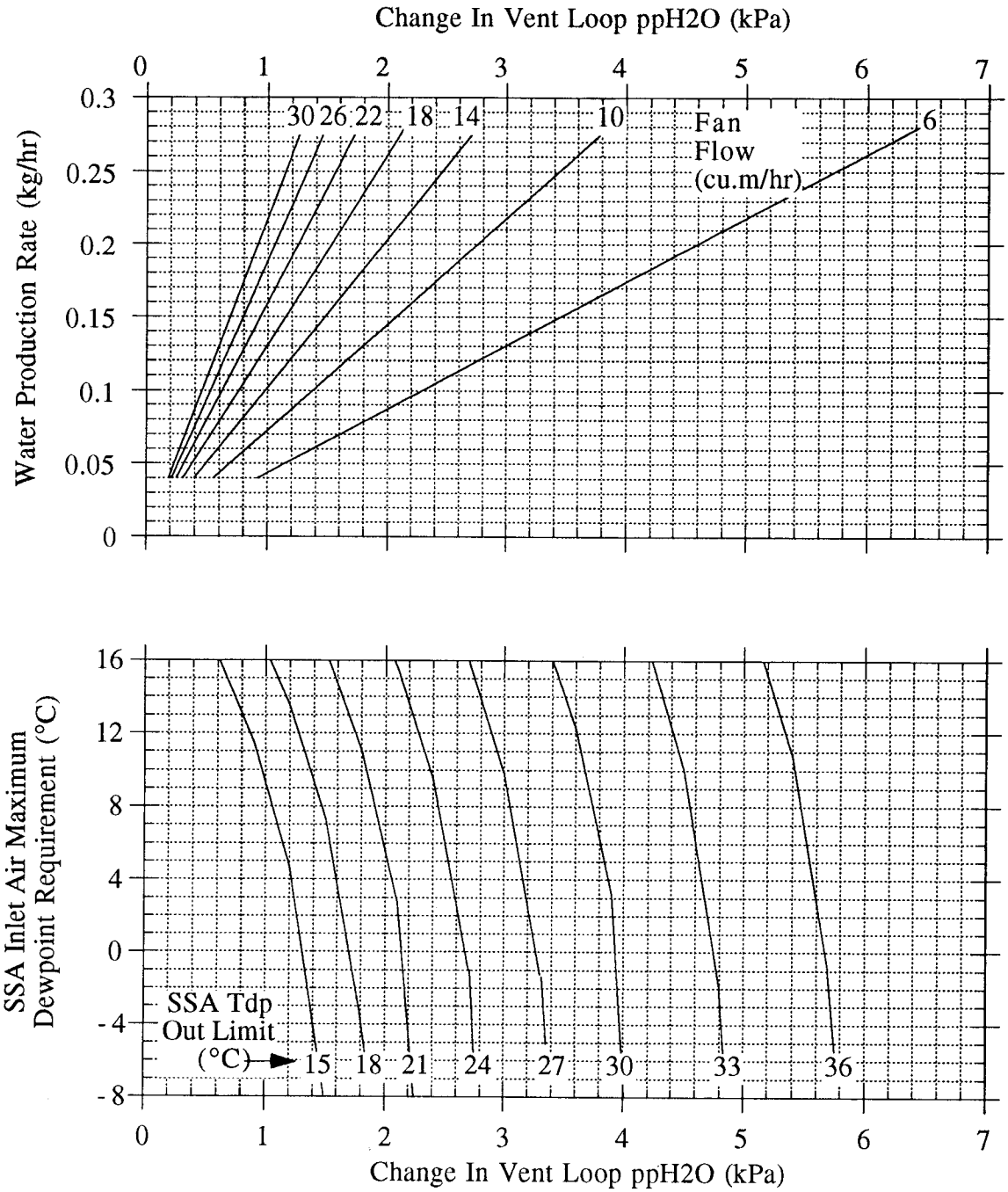

Figure J-2. PLSS humidity design device for single person metabolic water vapor loads (SI units).

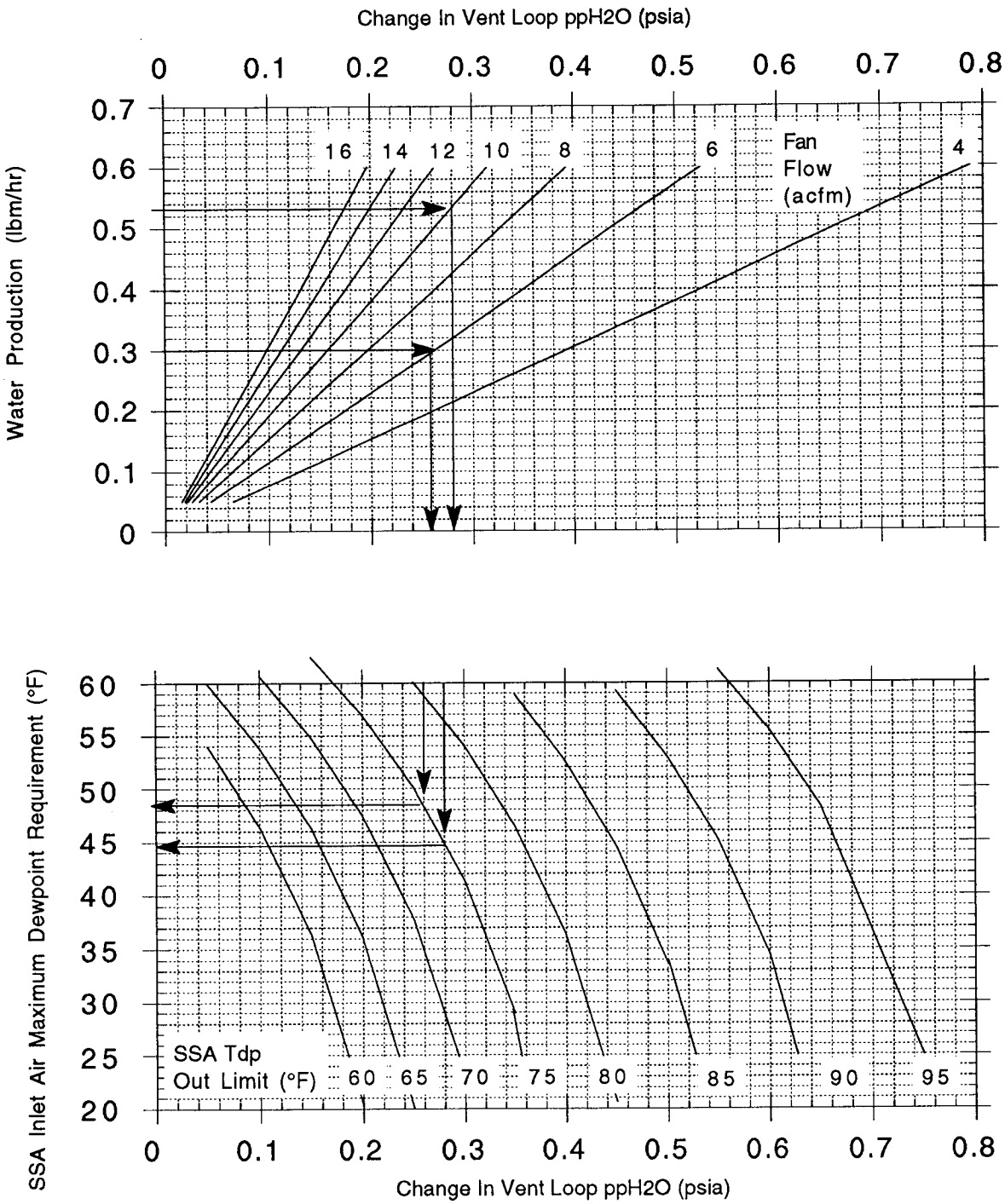

Figure J-3. PLSS humidity design device for single-person metabolic water vapor loads (English Units).

References:

1. Personal communication between Wes Coleman, Lead Engineer, PLSS Breadboard testing, Rockwell International and Mike Lawson, Crew and Thermal Systems Division, NASA/JSC, 1991.

2. Iovine, J.V.: "The Building 37 Liquid Cooling Garment Automatic Thermal Control Test Summary." Lockheed Engineering and Management Services Company Report No. LEMSCO-23523, January 1987.

3. Dunaway, B.: "Automatic Liquid and Ventilation Cooling Garment Control Algorithm Final Test Report." CTSD-SS-176, Rockwell Rpt No. SSS87-221, November 22, 1988.

4. Dunaway, B.: "Automatic Liquid and Ventilation Cooling Garment Control Algorithm Final Test Report." CTSD-SS-176, Rockwell International Report No. SSS-87-221, November 22, 1988, figure 4-4, p. 39.

5. Coleman, W. and Reynolds, D.: "Portable Life Support System Breadboard (PLSSBB) Test Plan." JSC 23743, CTSD-SS-317, Figure 4-1, p. 46.

Appendix K

Analyses Performed During Development of the ECLSS for S.S. *Freedom*

This appendix provides short descriptions of some of the detailed analyses conducted in support of the the S.S. *Freedom* Program.

Title: Space Station Restuctured Man-Tended Capability Trace Contaminant Control Subassembly (TCCS) Analysis

Ref: Perry, Jay, MSFC memo ED62(33-91), April 2, 1991

The potential options available for controlling airborne contamination onboard S.S. *Freedom* during man-tended capability (MTC) operation and beyond were analyzed to determine the most effective option over the lifetime of S.S. *Freedom*. Options considered include using the orbiter ambient temperature catalytic oxidizer (ATCO) alone and in combination with a Spacelab-like scrubber, a S.S. *Freedom* trace contaminant control assembly (TCCA) charcoal bed, and a complete S.S. *Freedom* TCCA.

The analysis results showed that the ATCO/Spacelab scrubber and ATCO/S.S. *Freedom* TCCA options perform the best, with the ATCO/S.S. *Freedom* TCCA option providing the most complete and effective airborne contamination control for all phases of the S.S. *Freedom* life. Use of the S.S. *Freedom* TCCA during MTC may require some operational considerations to reduce power consumption such as operating the high temperature catalytic oxidizer on a periodic basis rather than continuously. Detailed conclusions and recommendations are contained in the report.

Title: Analysis Report of the Proposed S.S. *Freedom* CO_2 Removal Assembly Carbon Dioxide Accumulator Sizing

Ref: Knox, James, MSFC memo ED62(187-89), November 22, 1989

The proposed volume of the CO_2 accumulator was evaluated for its capacity to buffer the fluctuations in CO_2 from the four-bed molecular sieve CO_2 removal assembly. The fluctuations result directly from variations in the desorption flowrate over each half-cycle and indirectly from fluctuations in habitat pCO_2 due to variations in crew activity. The CO_2 accumulator must, according to specifications, buffer these fluctuations such that the CO_2 flow to the CO_2 reduction assembly stays within 20 percent of the average flowrate (4.0 kg/day or 8.8 lb/day during normal conditions and 8.0 kg/day or 17.6 lb/day during emergency conditions).

Results from computer analysis indicate that the proposed volume of 0.028 m^3 (1.0 ft^3) is insufficient. A 0.043 m^3 (1.5 ft^3) accumulator was found to be sufficient in all cases except safehaven, for which a 0.085 m^3 (3.0 ft^3) accumulator was required, unless venting of CO_2 overboard is allowed during safehaven.

PAGE 300 INTENTIONALLY BLANK

PRECEDING PAGE BLANK NOT FILMED

Title: CO_2 Accumulator Sizing and Flow Study

Ref: Knox, James, MSFC memo ED62(129-90), August 27, 1990

A CO_2 accumulator sizing and flow control study was performed to determine the required CO_2 accumulator size and to recommend the flow control logic for the CO_2 input to the Bosch CO_2 reduction assembly. This study was a continuation of an earlier study which concluded that the proposed 0.028 m^3 (1.0 ft^3) accumulator was undersized. The present study evaluated the impact of using a 0.035 m^3 (1.25 ft^3) or smaller accumulator and the modifed CO_2 removal assembly half-cycle time of 90 minutes. Results indicate that for the proposed 90-minute half-cycle time a 0.028 m^3 (1.0 ft^3) accumulator would be acceptable, or that by using a 0.035 m^3 (1.25 ft^3) tank the vacuum pump power requirements would decrease.

Title: CO_2 Control Impacts Resulting from the Elimination of the Racetrack Module Configuration

Ref: Knox, James, MSFC memo ED62(23-91), March 11, 1991

The impact of eliminating "resource nodes" three and four from the Eight-Man Crew Capability (EMCC) S.S. *Freedom* configuration on the ability to control CO_2 by Intermodule Ventilation (IMV) was evaluated. Specifically, the ability of the atmosphere revitalization subsystems in the HAB-B and LAB-B modules to maintain CO_2 concentrations within the specified levels with parallel IMV flow throughout S.S. *Freedom*. Parallel flow is considered since series flow is not possible without nodes three and four to provide a "racetrack" pattern. Steady-state mass balance analyses were performed for nominal crew location scenarios as well as for scenarios of two or three people in the European Space Agency module, Columbus. The effect of increased IMV atmosphere flow rate was considered, as was the effect of increased CO_2 removal capability.

Results indicate that parallel IMV flow is disadvantageous to the overall CO_2 levels. For the nominal crew location scenario, the highest average pCO_2 level in Columbus increased from 2.92 mmHg with series flow to 3.01 mmHg with parallel flow. Although this is not significantly above the specified level of 3.0 mmHg, it does not allow a margin to account for errors due to simplifying assumptions made here. For the worst case crew location scenarios, the average pCO_2 increased from 3.05 mmHg with series flow to 3.21 mmHg with parallel flow.

Two methods of reducing pCO_2 were evaluated: increasing the IMV flow rate and increasing the CO_2 removal capability. For the worst case scenario, increasing the flow rate from 3.96 to 5.10 m^3/s (140 to 180 cfm) decreased the highest average pCO_2 from 3.21 to 3.13 mmHg. This approach is not recommended due to the increased power consumption required and the marginal improvement. Increasing the CO_2 removal capability from a four-person level to a five-person level at 2.8 mmHg, however, decreased the highest average pCO_2 for the same scenario to 2.65 mmHg.

Title: Analysis of SSF THC Subsystem Assuming Use of Spacelab Flight-Rated Hardware

Ref: Hennessey, Judi, Sverdrup Technology, Inc. Contract NAS8-37814, report 652-002-91-020, August 12, 1991

The function of the THCS is to provide for the control of the habitat atmosphere temperature, humidity, ventilation, atmosphere particulate and microorganisms levels, intermodule ventilation, equipment cooling, and refrigerators and freezers for food storage. Excess heat is transferred to the internal thermal control system (ITCS) via atmosphere-to-water heat exchangers. The objective of this analysis is to evaluate the feasibility of using the Spacelab flight-qualified hardware for the THCS applications on S.S. *Freedom*. CASE/A was used to analyze the three major phases of assembly of S.S. *Freedom*, MTC, PMC, and EMCC, expanding on an earlier study. The results show that the Spacelab heat exchanger could control the habitat environment to maintain the temperature and humidity levels within the comfort range. The biggest problem is in regard to some failure scenarios.

Title: Space Station ECLSS Distribution/Loop Closure

Ref: Frederick, P.W., MSFC memo EP45(85-137), December 4, 1985

Optimal distribution of ECLSS equipment within the Space Station modules and the degree of mass-loop closure were determined. The major factors which affected the distribution scheme were safety and the weight/volume resource requirements. The distribution of several of the ECLSS groups is required by the program requirements, such as fire detection and suppression; module repressurization; and vent, relief, and dump capability. In addition, all studies have concluded that ventilation and temperature control should be functionally and physically distributed due to excessive duct size required to centralize. The resource requirements of centralized vs. distributed configurations were determined regarding mass and volume. The distributed configuration is lighter and evenly distributes the ECLSS among the modules, which also promotes commonality and may reduce manufacturing costs, makes it easier to integrate additional modules, and provides ECLSS capability in each module.

The optimal degree of closure of the oxygen and water loops was evaluated by considering a range of closure alternatives. Synergistic effects such as providing CO_2 for propulsion in resistojets, were also considered. A closed loop O_2 recovery and water reclamation system is recommended, with potential non-ECLSS synergism to be further investigated.

REFERENCES

Chapter 1 – Introduction—ECLS and Human Space Flight

1. Year 1967: The Enclopedia News Annual, "To the Moon and Beyond," pp. 243–246, Year; Inc. New York, NY, 1966.

2. "Design Criteria Handbook: Environmental/Thermal Control and Life Support System Space Station Prototype," Hamilton Standard, Windsor Locks, Connecticut, Document No. 9, Revision A, November 14, 1970.

3. Willis, N.C., Jr., Samonski, F.H., Jr., Flugel, Charles, and Tremblay, Paul: "System Features of a Space Station Prototype Environmental Thermal Control and Life Support System." ASME, paper number 71-Av-22, Life Support and Environmental Control Conference, San Francisco, CA, July 12–14, 1971.

4. Willis, N.C., Jr., and Neel, J.M.: "Space Station Prototype Environmental/Thermal Control and Life Support System—A Current Overview." ASME, paper number A72-39143, Environmental Control and Life Support Systems Conference, San Francisco, CA, August 14–16, 1972.

5. "Space Station Prototype: Environmental Control/Life Support System, Experience Report," Hamilton Standard, Document Number 166, NASA/JSC Contract NAS9-10273, October 1973.

6. "Thermal Control and Life Support Subsystems: Parametric Data for Space Station," Hamilton Standard, NASA/JSC Contract NAS9-14782, March 1977.

7. Brose, H.F.: "A Regenerative Life Support System for Space Operations Center (SOC)—A Probable First Flight Application." ASME, paper number 81-ENAs-12, Intersociety Conference on Environmental Systems, San Francisco, CA, July 13–15, 1981.

8. "Comparison of Regenerative and Non-Regenerative Life Support Systems for Space Operations Center (SOC) Missions," Life Systems, Inc., TR-467, July 2, 1980.

9. "Space Operations Center System Analysis: Requirements for a Space Operations Center," Boeing Aerospace Company, Boeing Document Number D180-26495-2, NASA/JSC contract NAS9-16151, Contractor Report Number 160944 Rev. A, January 1982.

10. Fuller, R. Buckminster, "Operating Manual for Spaceship Earth," Southern Illinois University Press, 1969.

Chapter 2 – ECLS—Purpose and Functions

1. von Tiesenhausen, Georg: "Human Exploration of the Other Worlds." Presentation at the Annual Business Meeting of the Institute for Advanced Studies in Life Support, Huntsville, AL, October 25, 1990.

2. "Environmental Control and Life Support System Architectural Control Document," SSP 30262 Revision D, July 1991.

3. "ASHRAE Handbook: 1985 Fundamentals," American Society of Heating, Refrigerating and Air-Conditioning Engineers, Inc., Atlanta, GA, 1985.

4. "Bioastronautics Data Book," Second edition, NASA SP-3006, 1973.

5. Perry, Robert H., and Chilton, Cecil H., eds.: "Chemical Engineers' Handbook." Fifth edition, McGraw-Hill Book Company, New York, NY, 1973.

6. Ruthven, Douglas M.: "Principles of Adsorption and Adsorption Processes." John Wiley & Sons, New York, 1984.

7. "Man-Systems Integration Standard," NASA-STD-3000, vol. 1, Rev. A, March 1987.

8. "Bioregenerative Systems," NASA, SP-165, 1968.

9. Brooks, Courtney G., and Ertel, Ivan D.: "The Apollo Spacecraft, A Chronology," vol. III, NASA SP-4009, 1976.

10. Ertel, Ivan D., Newkirk, Roland W., and Brooks, Courtney G.: "The Apollo Spacecraft, A Chronology," vol. IV, NASA SP-4009, 1978.

11. Compton, William David: "Where No Man Has Gone Before: A History of Apollo Lunar Exploration Missions," NASA SP-4214, 1989.

12. Booker, P.J., Frewer, G.C., and Pardoe, G.K.C.: "Project Apollo: The Way to the Moon." American Elsevier Publishing Company, Inc., New York, NY, 1969.

13. "Report of Apollo 204 Review Board," NASA TM-84105, April 5, 1967.

14. "Results of Medical Research Performed on the 'Salyut-6'-'Soyuz' Space Station Complex," USSR Space Life Sciences Digest, Issue 13, p. 33–34, NASA Contractor Report 3922(15), Contract NASW-3676, September 1987.

15. "Environmental Control and Life Support Systems (ECLSS) Historical Data Summary," McDonnell Douglas Space Systems Company, Huntsville Division, MDC 92W5010, June, 1992.

16. Cremers, Birkebak, and White, "Lunar Soil Properties," "Thermal Characteristics of the Lunar Surface Layer," International Journal of Heat and Mass Transfer, May 1972.

17. Wydeven, Theodore, and Golub, Morton A.: "Generation Rates and Chemical Compositions of Waste Streams in a Typical Crewed Habitat." NASA/Ames Research Center, NASA TM 102799, August 1990.

18. Hong, Glenn T., Fowler, Patrick K., Killilea, William R., and Swallow, Kathleen C.: "Supercritical Water Oxidation: Treatment of Human Waste and System Configuration Tradeoff Study." Paper No. 871444, 17th Intersociety Conference on Environmental Systems, Seattle, WA, July 13–15, 1987.

19. "Spacecraft Fire Safety," NASA Conference Publication 2476, Proceedings of a workshop held at Lewis Research Center, August 20–21, 1986.

20. "Incipient Combustion Monitor for Zero Gravity Environments," SBIR Phase I Final Report, ADA Technologies, Inc. ADA Report No. 25990F01, NASA/MSFC Contract NAS8-38439, August 27, 1990.

21. Bricker, R.W., "Test Results From a Comparative Evaluation of a Condensation Nuclei Fire Detector." NASA CR 3874, 1985.

22. Zelon, Jon, Saiz, John, and Glaser, Peter: "Development of the Space Station *Freedom* Refrigerator/Freezer and Freezer." SAE Paper No. 901300, 20th International Conference on Environmental Systems, Williamsburg, VA, July 9–12, 1990.

23. Kliss, M. and MacElroy, R.D.: "Salad Machine: A Vegetable Production Unit for Long Duration Space Missions." SAE Paper No. 901280, 20th International Conference on Environmental Systems, Williamsburg, VA, July 9–12, 1990.

Chapter 3 – ECLSS Design Considerations

1. Phadke, Madhav S.: "Quality Engineering Using Robust Design." Prentice Hall, New Jersey, AT&T Bell Laboratories, 1989.

2. Waligora, J.M., coordinator, "Physiological Basis for Spacecraft Environment Limits." NASA Reference Publication 1045, November 1979.

3. "Bioastronautics Data Book," Second edition, NASA SP-3006, 1973.

4. "Shuttle Operational Data Book," vol. 1, Rev. E, JSC-08934, April 4, 1990.

5. "ASHRAE Handbook: 1985 Fundamentals," American Society of Heating, Refrigerating and Air-Conditioning Engineers, Inc., Atlanta, GA, 1985.

6. Powell, Ferolyn T., Sudar, Martin, Timm, Marc, and Yost, Bruce: "Atmosphere Control for Plant Growth Flight Experiments." Paper No. 891587, 19th Intersociety Conference on Environmental Systems, San Diego, CA, July 24–26, 1989.

7. "Space Station *Freedom* Program Level III Systems Requirements Document," SS-SRD-0001C, Section 3.0: System Requirements, Table XXX, pp. 158 and 159, April 17, 1990.

8. Gurovskiy, N.N., ed., "Results of Medical Research Performed on the 'Salyut-6'—'Soyuz' Space Station Complex." Space Medicine, Moscow: Nauka, 1986. (Abstract in "U.S.S.R. Space Life Sciences Digest," Issue 13, pages 33 and 34, September 1987, NASA Contractor Report 3922(15)).

9. "Man-Systems Integration Standard," NASA-STD-3000, March 1987.

10. Klaus, David M., and West, Philip R.: "Performance Evaluation of Advanced Space Suit Concepts for Space Station." Paper No. 891591, 19th Intersociety Conference on Environmental Systems, San Diego, CA, July 24–26, 1989.

11. West, Philip R., and Trausch, Stephanie V.: "Performance Evaluation of Candidate Space Suit Elements for the Next Generation Orbital EMU." SAE Paper No. 921344, 22nd International Conference on Environmental Systems, Seattle, WA, July 13–16, 1992.

12. Jacobs, Gilda, and Vykukal, Hubert: "Advanced Space Suit Structures and Materials." SAE Paper No. 901429, 20th International Conference on Environmental Systems, Williamsburg, VA, July 9–12, 1990.

13. Larkins, J.T., and Kovach, A.J.: "Static Feed Water Electrolysis System for Space Station O_2 and H_2 Generation." Paper No. 851339, 15th Intersociety Conference on Environmental Systems, San Francisco, CA, July 15–17, 1985.

14. Winkler, H. Eugene, Ouellette, Fred A., Chen, P.J., and Smith, Gail S.: "The Extended Duration Orbiter Regenerable CO_2 Removal System." SAE Paper No. 901292, 20th International Conference on Environmental Systems, Williamsburg, VA, July 9–12, 1990.

15. Germany, D.M.: "Extended Duration Orbiter." AIAA Paper No. 90-3533-CP, American Institute of Aeronautics and Astronautics Space Programs and Technologies Conference, Huntsville, AL, September 25–28, 1990.

16. Wieland, Paul O., and Humphries, William R.: "ECLSS Development for Future Space Missions," AIAA Paper No. 90-3728, American Institute of Aeronautics and Astronautics Space Programs and Technologies Conference, Huntsville, AL, September 25–28, 1990.

17. Humphries, W.R., Reuter, J.R., and Schunk, R.G.: "Space Station Environmental Control and Life Support System Distribution and Loop Closure Studies." SAE Paper No. 860942, 16th Intersociety Conference on Environmental Systems, San Diego, CA, July 14–16, 1986.

18. Ming, D.W., and Henninger, D.L., eds.: "Lunar Base Agriculture: Soils for Plant Growth." American Society of Agronomy, Inc., Crop Science Society of America, Inc., and Soil Science Society of America, Inc., Madison, WI, 1989.

19. Atlas, Ronald M., and Bartha, Richard: "Microbial Ecology: Fundamentals and Applications." Second edition, The Benjamin/Cummings Publishing Company, Inc., Menlo Park, CA, 1987.

20. Rodgers, E.: "The Ecology of Micro-Organisms in a Small Closed System: Potential Benefits and Problems for Space Station." Marshall Space Flight Center, NASA TM-86563, October 1986.

21. Rodgers, E.B., Obenhuber, D.C., and Huff, T.L.: "Microbial Biofilm Studies of the Environmental Control and Life Support System Water Recovery Test for Space Station *Freedom*." Marshall Space Flight Center, NASA TM-103579, April 1992.

22. Ehntholt, Daniel J., Bodek, Itamar, Valentine, James R., Trabanino, Rudy, Vincze, Johanna, and Sauer, Richard L.: "A Volatile Organics Concentrator for Use in Monitoring Space Station Water Quality." SAE Paper No. 901352, 20th International Conference on Environmental Systems, Williamsburg, VA, July 9–12, 1990.

23. Godec, Richard: "New Total Organic Carbon Analyzer," SAE Paper No. 901354, 20th International Conference on Environmental Systems, Williamsburg, VA, July 9–12, 1990.

24. Niu, William, Rotheram, Mary, Denker, Wally, and Davidson, Laarni: "The Development of an Atmosphere Composition Monitor for the Environmental Control and Life Support System." SAE Paper No. 921149, 22nd International Conference on Environmental Systems, Seattle, WA, July 13–16, 1992.

25. Shah, Burt H., and Franks, Gerald D.: "Application of Draeger Tubes for Selected Contaminants on Space Station Freedom." SAE Paper No. 921150, 22nd International Conference on Environmental Systems, Seattle, WA, July 13–16, 1992.

26. Moore, Kevin C., Knox, John, and Stanton, Craig: "Pressure, Composition, and Temperature Control of Cabin Atmosphere on Space Station *Freedom*." SAE Paper No. 921216, 22nd International Conference on Environmental Systems, Seattle, WA, July 13–16, 1992.

27. Dougherty, Dale, and Novotny, John.: "Continuous Monitoring of Effluent Iodine Levels of Space Station Water Using Solid State Technology." SAE Paper No. 921265, 22nd International Conference on Environmental Systems, Seattle, WA, July 13–16, 1992.

28. Bodek, Itamar, Ehntholt, Daniel, Stolkl, Thomas, Trabanino, Rudy, Hinsdale, Lloyd, Webb, Johanna, and Sauer, Richard: "The Development and Testing of a Volatile Organics Concentrator for Use in Monitoring Space Station Water Quality." SAE Paper No. 921266, 22nd International Conference on Environmental Systems, Seattle, WA, July 13–16, 1992.

29. Carter, Donald L., Cole, Harold, Harbercom, Mark, and Griffith, Guy: "Determination of Organic Carbon and Ionic Accountability of Various Waste and Product Waters Derived from ECLSS Water Recovery Tests and Spacelab Humidity Condensate." SAE Paper No. 921313, 22nd International Conference on Environmental Systems, Seattle, WA, July 13–16, 1992.

30. Bao, Jinjun, Diamant, Bryce L., Wieland, Paul, and Humphries, William R.: "ECLSS Instrumentation Technology Development for the Space Exploration Initiative." SAE Paper No. 911358, 21st International Conference on Environmental Systems, San Francisco, CA, July 15–18, 1991.

31. Voecks, Gerald E., and Seshan, P.K.: "Real-Time, In-Situ Sensors and Controls for Life Support Operations." SAE Paper No. 911356, 21st International Conference on Environmental Systems, San Francisco, CA, July 15–18, 1991.

32. "Environmental Control and Life Support System Advanced Automation Project: 1990 Annual Report," Boeing Computer Services Artificial Intelligence Center, NASA/MSFC Contract NAS8-37200, November 30, 1990.

33. Doyle, Richard, Chien, Steve, Fayyad, Usama, and Porta, Harry: "Attention Focusing and Anomaly Detection in Real-Time Systems Monitoring." NASA/Air Force, Space Operations, Applications, and Research (SOAR) Symposium, Houston, TX, August 1992.

34. Humphries, William R., Reuter, James L., and Schunk, Richard G.: "Space Station Environmental Control and Life Support System Distribution and Loop Closure Studies." Paper No. 860942, 16th Intersociety Conference on Environmental Systems, San Diego, CA, July 14–16, 1986.

35. Reuter, J.L., Turner, L.D., and Humphries, W.R.: "Preliminary Design of the Space Station Environmental Control and Life Support System." SAE No. 881031, 18th Intersociety Conference on Environmental Systems, San Francisco, CA, July 11–13, 1988.

36. Boehm, Albert M., and Behrend, Albert F., Jr.: "Space Station Environmental Control and Life Support System Architecture: Centralized Versus Distributed." Intersociety Conference on Environmental Systems, 1984(?)

37. "Space Station Freedom Program Glossary," Preliminary SSP 30235, May 23, 1991.

38. Cortright, Edgar M.: "Apollo Expeditions to the Moon." NASA SP-350, GPO, 1975.

39. Cooper, Henry S.F., Jr.: "Thirteen: The Flight That Failed." The Dial Press, New York, NY, 1973.

40. "Engineering Design Handbook: Reliability Prediction," Department of the Army, AMCP 706-197, January 1976.

41. Doty: "Reliability for the Technologies." Industrial Press, New York, NY, 1985.

42. "Materials Selection List for Space Hardware Systems," MSFC-HDBK-527.

43. "Space Station Environmental Control and Life Support System Hardware General Specification," MSFC-SPEC-1438, Marshall Space Flight Center, 1987.

44. "Protection of Human Subjects," Part 46 of the Code of Federal Regulations Title 45 Public Welfare, Department of Health and Human Services, National Institutes of Health, Office for Protection From Research Risks, 45 CFR 46, Revised March 8, 1983.

45. "Institutional Review Board (IRB) for Environmental Control and Life Support System (ECLSS) Human Research Tests," MSFC, Management Announcement MA 1150.1A, October 30, 1990.

46. "System Engineering Management Guide," Lockheed Missiles and Space Company, Contract Number MDA 903-82-C-0339, Defense Systems Management College, Fort Belvior, VA, 1983.

Chapter 4 – ECLSS Design and Development: Systems Engineering and Integration

1. Schneider, William C.: "Skylab Lessons Learned as Applicable to a Large Space Station," NASA TM X-73073, April 1976.

2. Winkler, Eugene H.: "Shuttle Orbiter Environmental Control and Life Support System—Flight Experience." SAE Paper No. 921348, 22nd International Conference on Environmental Systems, Seattle, WA, July 13–16, 1992.

3. Prince, Norman R., et al.: "Challenges in the Development of the Orbiter Atmospheric Revitalization Subsystem." Space Shuttle Technical Conference, June 28–30, 1983, NASA Conference Publication 2342, Part 1, 1985.

4. Lautenbach, P., Vossloh, D., Ord, G.R., and Walleshauser, J.J.: "The Spacelab ASCS and Its Orbiter Common Hardware Flight Performance." Proceedings of the International Symposium on Environmental and Thermal Systems for Space Vehicles, Toulouse, France, October 4–7, 1983, ESA SP-200, December 1983.

5. "Lessons Learned for Application to Space Station," Grumman, Report 911474, July 1988.

6. Mitchell, Kenneth L.: "Environmental Control and Life Support Technology Development Activities at MSFC: 1985–1991." NASA/MSFC/ED62, unnumbered memo, May 1991.

7. "1991 Integrated Technology Plan for the Civil Space Program," NASA Office of Aeronautics and Space Technology, Washington, DC, 1991.

8. "Analytical Methods for Space Vehicle Atmospheric Control Processes," AiResearch Manufacturing Company, Air Force Contract AF 33(6 6)-8323, Wright-Patterson Air Force Base, OH, ASD-TR-61-162, November 1962.

9. "Trade-Off Study and Conceptual Designs of Regenerative Advanced Integrated Life Support Systems (AILSS)," Hamilton Standard, NASA Contract NAS1-7905, Langley Research Center, NASA CR-1458, 1968.

10. "ECLSS Integration Analysis: Advanced ECLSS Subsystem and Instrumentation Technology Study for the Space Exploration Initiative," McDonnell Douglas Space Systems Company, Huntsville Division, MDC W5658, NASA/MSFC Contract NAS8-36407, October 1990.

11. "Life Support Database System: Build 1 Release User Manual," NASA Ames Research Center, June 1, 1991.

12. Likens, William C.: "The Life Support Database System," SAE Paper No. 911321, 21st International Conference on Environmental Systems, San Francisco, CA, July 15–18, 1991.

13. "Life Support Systems Analysis Workshop," proceedings, NASA Office of Aeronautics, Exploration, and Technology, Milwaukee, WI, June 25–27, 1991.

14. Farrall, Joseph F., Seshan, P.K., and Rohatgi, Naresh K.: "Human Life Support During Interplanetary Travel and Domicile, Part II: Generic Modular Flow Schematic Modeling." SAE Paper No. 911322, 21st International Conference on Environmental Systems, San Francisco, CA, July 15–18, 1991.

15. "Small Business Innovation Research Program Solicitation," NASA SBIR 91-1, Closing Date: August 8, 1991.

16. "NASA Research Announcement Soliciting Proposals for NASA Specialized Centers of Research and Training," Office of Space Science and Applications, NRA 90-OSSA-6, February 9, 1990.

17. "MSFC Software Management and Development Requirements," NASA/MSFC, MM 8075.1, 1991 (revised 1993).

18. Bilardo, Vincent J., Jr.: "A Generic Trade Study Methodology for the System Analysis of Regenerative Life Support Systems." SAE Paper No. 911320, 21st International Conference on Environmental Systems, San Francisco, CA, July 15–18, 1991.

19. "System Analysis Plan," Rev. 1, NASA/ARC, Advanced Life Support Division, June 1990.

20. Reuter, Jim: "Consumables Tracking Program for Space Station Fluids," NASA/MSFC memo for record EL84(85-87), November 5, 1987.

21. Reuter, Jim: "Consumables Tracking Program for Space Station Fluids," NASA/MSFC memo for record EL84(92-87), November 19, 1987.

22. Seshan, P.K.: "Regenerative Life Support Systems Analysis and Assessment." JPL Presentation to SSTAC Ad Hoc Review, NASA/ARC, April 25, 1991.

23. Hall, John B., Jr., Sage, Karen H., and Pickett, Shelby J.: "Manned Space Station Environmental Control and Life Support System Computer-Aided Technology Assessment Program." SAE Paper No. 840957, 14th Intersociety Conference on Environmental Systems, San Diego, CA, July 1984.

24. "Life Support Technology Definition Study for Long Duration Planetary Missions: Draft Mission Planner's LSS Guidebook," Boeing Aerospace & Electronics, Seattle, WA, NASA/JSC Contract NAS9-18040, June 1989.

25. Iovine, John V.: "Computer Program Documentation: Life Support Options Performance Program Users Guide and Reference Manual." Lockheed Engineering and Management Services Company, Houston, TX, LEMSCO-23607, January 1987.

26. "Aspen Plus User Guide," Aspen Technology, Inc., Cambridge, MA, August 1988.

27. "Design and Fabrication of a Trace Contaminant Removal System for Apollo," Phase I Report, NASA/JSC Contract NAS9-3415, Lockheed Missiles and Space Company, Inc., Sunnyvale, CA, March 15, 1965.

28. Ibid., Phase II Report, November 15, 1965.

29. Ibid., Phase III Report, April 14, 1966.

30. Olcott, T.M.: "Development of a Sorber Trace Contaminant Control System Including Pre- and Post-sorbers for a Catalytic Oxidizer." NASA CR-2027, Lockheed Missiles and Space Company, Inc., Sunnyvale, CA, May 1972.

31. Lamparter, R.A., and Yee, R.Q.: "A Generalized Computer Program for Trace Contaminant Control." LMSC-D564045, NASA/MSFC Contract NAS8-32400, Lockheed Missiles and Space Company, Inc., Sunnyvale, CA, September 1, 1977.

32. Perry, J.L.: "Computerized Atmospheric Trace Contaminant Control Simulation for Manned Spacecraft." NASA Technical Memorandum, NASA TM-108409, June 1993.

33. Leban, Mark I.: "Documentation for Space Station Particulate Contaminant Control Program." Lockheed Missiles and Space Company, Inc., Sunnyvale, CA, NASA/MSFC Contract NAS8-36406, November 4, 1986.

34. Barker, R.S., Blakely, R.L., Hamill, T.D., and Nicol, S.W.: "G189A Generalized Environmental/Thermal Control and Life Support Systems Computer Program—Program Manual." McDonnell Douglas Astronautics Company, Huntington Beach, CA, MDAC-G2444, NASA/JSC Contract NAS9-10330, September 1971.

35. "SINDA/FLUINT Systems Improved Numerical Differencing Analyzer and Fluid Integrator, Version 2.4, User's Manual," Martin Marietta Astronautics Group, Denver, CO, MCR-91-1393, December 1991.

36. "SINDA User's Manual," Lockheed Engineering and Management Services Company, Houston, TX, Document No. 14690-H001-R0-00, March 1983.

37. "SINDA85/FLUINT User's Manual," Martin Marietta Company, Denver Aerospace, MCR-86-594, November 1987.

38. "ECLSS Integration Analysis: Computer Aided System Engineering and Analysis (CASE/A) User's Manual—ECLSS Series," Version 4.1, McDonnell Douglas Space Systems Company, MDC-W5074-5, NASA/MSFC Contract NAS8-36407, October 1990.

39. "Thermal Radiation Analyzer System (TRASYS) User's Manual," Lockheed Enginering and Management Services Company, LEMSCO-22641, NASA/JSC Contract NAS9-17900, JSC-22964, April 1988.

40. "Standard Contractor Configuration Management Requirements MSFC Programs," MM 8040.12A, March 31, 1981.

41. "MSFC Software Management and Development Requirements Manual," NASA/MSFC, MM 8075.1, 1991 (revised 1993).

42. "Safety Policy and Requirements for Payloads Using the Space Transportation System (STS)," NASA, NHB 1700.7A, December 9, 1980.

43. "Safety Analysis and Risk Assessment Requirements Document," Space Station Freedom Program Office, SSP 30309, Revision B, October 1991.

44. "Space Station Freedom Program Definition and Requirements, SEC 9 Product Assurance Requirements," SS-SRD-0001, April 17, 1990.

45. "Instructions For Preparation of Failure Modes and Effects Analyses and Critical Items Lists for Space Station," SSP30234, Revision A, June 30, 1988.

Chapter 5 – Historical ECLS Systems

1. Mitchell, Kenneth L.: "ECLSS Trip Report on Visits to U.S. Submarine Base at Groton and Philadelphia Naval Yard." NASA/MSFC memo ED62(37-91), April 10, 1991.

2. Sharpe, Mitchell R.: "Living in Space." Garden City, NY, Doubleday & Company, Inc., 1969.

3. Silvestri, Goffredo, et. al.: "Quest for Space." New York, NY, Crescent Books, 1986.

4. Samonski, Frank H. Jr.: "Technical History of the Environmental Control System for Project Mercury." NASA TN D-4126, Washington, DC, 1967.

5. "Public Papers of the Presidents," May 25, 1961.

6. Watkins, Harold D.: "Basic Gemini ECS Keyed to 14-Day Flight." Aviation Week & Space Technology, August 19, 1963, pp. 52–69.

7. "ECS Elements for LEM Nearing Delivery," Aviation Week and Space Technology, May 30, 1966.

8. Jackson, J.K., et al.: "Test Report, Test Results—Operational Ninety-Day Manned Test of a Regenerative Life Support System." NASA CR-111881, May 1971.

9. "*Skylab* Medical Experiments Altitude Test (SMEAT)," JSC, NASA TM X-58115, October 1973.

10. Hopson, G.D., Littles, J.W., and Patterson, W.C.: "Skylab Environmental Control and Life Support Systems." ASME Paper 71-AV-14. Life Support and Environmental Control Conference, San Francisco, CA, July 12–14, 1971.

11. "Spacelab Payload Accommodation Handbook Appendix C—Environmental Control Interface Definition." NASA Marshall Space Flight Center Spacelab Program Office. Marshall Space Flight Center, AL, SLP/2104-3, 1986.

12. Calvin, Melvin, and Gazenko, Oleg G., eds.: "Foundations of Space Biology and Medicine, Volume 3." NASA N76-26831, pp. 32, 34, 36, and 37, Washington, DC, 1975.

13. Gilberg, L.A.: "Living and Working in Space." NASA Technical Translation. NASA TT F-17075. Washington, DC, July 1976.

14. Ezell, Edward C. and Ezell, Linda N.: "The Partnership—A History of the Apollo-Soyuz Test Project." The NASA Historical Series, Washington, DC, 1978, NASA SP-4209.

15. Hamilton Standard: "Final Report—Soviet Space Life Support Systems." U.S. Government Contract 85-N987400-000, Windsor Locks, CT, November 1985.

16. Bluth, B.J.: "Soviet Mir Space Station Complex." A Presentation, Space Station *Freedom* Program Office, Reston, VA, April 1989.

17. Library of Congress, Congressional Research Service: "Soviet Space Programs, 1981-87, Part 1." Washington, DC, 1988

18. Aksamentov, Valery, Moscow Aviation Institute, Senior Research Fellow at the University of Alabama in Huntsville, personal communication, 1992.

Chapter 6 – Space Station *Freedom*—The Challenge of Long Duration ECLS

1. "Space Operations Center System Analysis: Final Report," Volume 1, D180-26495-1, July 1981; Volume 2, Rev. A, D180-26495-2, January 1982; Volume 3, Rev. A, D180-26495-3, January 1982; Volume 4, D180-26495-4, July 1981; Boeing Aerospace Company, NASA/JSC Contract NAS9-16151.

2. Brose, H.F.: "A Regenerative Life Support System for Space Operations Center (SOC)—A Probable First Flight Application." Paper No. 81-ENAs-12, American Society of Mechanical Engineers, 111th Intersociety Conference on Environmental Systems, San Francisco, CA, July 13–15, 1981.

3. "Space Station Work Package and Design Implications," NASA/MSFC/PD01, November 8, 1984.

4. "Space Station Program Definition and Requirements," SSP 30000 Sec. 2 Part 2, Rev. C, pp. 1-6 and 1-1, October 15, 1985.

5. "Military Standard Specification Practices," MIL-STD-490A, Department of Defense, June 4, 1985.

6. "Program Requirements Document," SSP3000, June 9, 1992.

7. "Program Definition and Requirements Documents," SSP30000, numerous dates for subdocuments.

8. "Environmental Control and Life Support System Architectural Control Document," Rev. D, SSP30262, June 23, 1992.

9. "Space Station *Freedom* Program Management and Integration Functional Control Document," SSP30556, June 14, 1991.

10. "Space Station *Freedom* Program Interface Control Document Space Station Manned Base to Columbus Attached Pressurized Module (APM)," SSP 42001B, December 1, 1991.

11. "Space Station *Freedom* Program Environmental Control and Life Support System (ECLSS) Detector Assembly Interface Development Document IDD," SSP-41074, June 30, 1992.

12. "Space Station *Freedom* Program Definition and Requirements, Section 3: Systems Requirements," SS-SRD-0001D, September 11, 1991.

13. "Prime Item Development Specification, Type B1, for the Environmental Control and Life Support System Atmosphere Revitalization Subsystem," Boeing Defense and Space Group, S683-29548A, February 21, 1992.

14. "Flight System Software Requirements," SSM 12310.

15. "Baseline Configuration Document," SSP 30255, Rec. C, July 15, 1988.

16. "WP01 Space Station *Freedom* Program, Safety Plan, Issue B," Boeing, D683-10079-1, August 6, 1991.

17. "WP01 Space Station *Freedom* Program, Reliability Plan, Issue A," Boeing, D683-10047-1, December 8, 1989.

18. "WP01 Space Station *Freedom* Program, Master Verification Plan, Issue C," Boeing, D683-10072-1, May 15, 1992.

19. "WP01 Space Station *Freedom* Program, Mass Properties Report," Boeing, D683-10275-23, August 15, 1992.

20. Bacskay, A.S., and Knox, J.C.: "System Level Design Analyses for the Space Station Environmental Control and Life Support System." SAE Paper No. 891500, 19th Intersociety Conference on Environmental Systems, San Diego, CA, July 24–27, 1989.

21. Knox, James C.: "Analysis Report of the Proposed Space Station *Freedom* CO_2 Removal Assembly Carbon Dioxide Accumulator Sizing." NASA/MSFC memo ED62(187-89), November 22, 1989.

22. Turner, Kim: "Space Station ECLSS Condensing Heat Exchanger Contaminant Removal." NASA/MSFC memo ED62(159-90), January 10, 1991.

23. Gimlin, Wayne: "Thermal Analysis of the Meteoroid/Debris (M/D) Shield Attachment Scheme for Determination of the Minimum Sidewall Temperature of the Space Station *Freedom* Laboratory Module," NASA/MSFC memo ED63(92-39), July 2, 1992.

24. Waters, Ronald: "Analysis Model of Space Station *Freedom* Environmental Control and Life Support System Temperature and Humidity Control Cabin Air Loop." NASA/MSFC memo ED62(50-91), May 22, 1991.

25. Schunk, Richard G., et al: "Space Station ECLSS Simplified Integrated Test Final Report." MSFC, NASA TM-100363, March 1989.

26. Schunk, Richard G., et al: "Space Station CMIF Extended Duration Metabolic Control Test Final Report." MSFC, NASA TM-100362, March 1989.

27. Roberts, Barry C., et al: "Space Station *Freedom* Environmental Control and Life Support System Phase III Simplified Integrated Test, Detail Test Report." MSFC, NASA Technical Memorandum 4204, May 1990.

28. Bagdigian, R.M., et al.: "Space Station *Freedom* Environmental Control and Life Support System Phase III Water Recovery Test Stages 1A, 2A, and 3A Final Report." NASA Technical Memorandum, NASA TM-103564, January 1992.

29. Bagdigian, Robert M.: "Protocol for the Participation of Human Research Subjects in the Environmental Control and Life Support System Phase III Test Program: Water Recovery Test Stages 1A, 2A, 3A, 1B, 2B, 3B, and 6." NASA/MSFC/ED62, 1989.

30. "Environmental Control and Life Support Development Plan," Boeing, D683-10141-6, October 30, 1991.

31. Carrasquillo, R.L., et al.: "Space Station *Freedom* Environmental Control and Life Support System Regenerative Subsystem Selection." NASA/MSFC, NASA Technical Memorandum 4340, February 1992.

32. "Avionics Air/Fire Suppression Copncept Confirmation Test Plan," Boeing, D683-10323-1, 1989.

33. "CO_2 Dispersion Tube Bench Test," Boeing, D683-80005-1, November 26, 1990.

34. "Analytical Control Test Plan and Microbiological Methods for Water Recovery Testing," Version 3.1, Ion Systems, Inc., NASA/MSFC Contract NAS8-38250, August 23, 1991.

Chapter 7 – Beyond Low Earth Orbit—The Challenge of Remote ECLS

1. Tamponnet, Christian, Colasson, Marie, and Pastor, Miguel: "European Involvement in CELSS: Definition of a Closed Ecological Systems Test Bed." SAE Paper No. 921200, 22nd International Conference on Environmental Systems, Seattle, WA, July 13–16, 1992.

2. Sato, Kozo, Midorikawa, Yoshinori, Ashida, Akira, and Nitta, Keiji: "A Trade Study Method for Determining the Design Parameter of CELSS Subsystems." SAE Paper No. 921198, 22nd International Conference on Environmental Systems, Seattle, WA, July 13–16, 1992.

3. Nishizaki, Shinji, and Muramatu, Susumu: "A Study of a Food Production System for CELSS in Space." SAE Paper No. 921240, 22nd International Conference on Environmental Systems, Seattle, WA, July 13–16, 1992.

4. "NASA, NSF to Develop Antarctic Space Analog," AIAA Student Journal, Volume 29(2), the American Institute of Aeronautics and Astronautics, Summer 1991.

5. Gitelson, I.I., et. al.: "Problems of Space Biology, Volume 28, Experimental Ecological Systems Including Man." N76-30812, NASA Technical Translation F-16993, June 1976.

6. Dempster, William F.: "Biosphere II: Design of a Closed, Manned Terrestrial Ecosystem." SAE No. 881096, 18th Intersociety Conference on Environmental Systems, San Francisco, CA, July 11–13, 1988.

7. "Report of the 90-Day Study on Human Exploration of the Moon and Mars," NASA, November 1989.

8. Dall-Bauman, Liese, Edeen, Marybeth, and Brown, Mariann: "Conceptual Designs for Lunar Base Life Support Systems." SAE Paper No. 911325, 21st International Conference on Environmental Systems, San Francisco, CA, July 15–18, 1991.

9. Darrach, Brad, and Petranek, Steve: "Mars," *Life*, vol. 14, No. 5, May 1991.

10. "America at the Threshold," Report of the Synthesis Group on America's Space Exploration Initiative, Thomas P. Stafford, Chairman, May 1991, p. 76–79.

11. Diamant, B.L., Bao, J., and Martin, C.E.: "Advanced ECLSS Subsystem and Instrumentation Technology Study for the Space Exploration Initiative." McDonnell Douglas Space Systems Co. Report No. W5658, NASA/MSFC Contract NAS8-36407, October 1990.

12. Seshan, P.K., Farrall, Joseph F., and Rohatgi, Naresh K.: "Human Life Support During Interplanetary Travel and Domicile, Part III: Mars Expedition System Trade Study." SAE Paper No. 911323, 21st International Conference on Environmental Systems, San Francisco, CA, July 15–18, 1991.

13. Rohatgi, Naresh K., Farrall, Joseph F., and Seshan, P.K.: "Human Life Support During Interplanetary Travel and Domicile, Part IV: Mars Expedition Technology Trade Study." SAE Paper No. 911324, 21st International Conference on Environmental Systems, San Francisco, CA, July 15–18, 1991.

GENERAL BIBLIOGRAPHY

"America at the Threshold," Report of the Synthesis Group on America's Space Exploration Initiative, p. 76–79, Thomas P. Stafford, Chairman, May 1991.

Avallone, Eugene A., and Baumeister, Theodore III: "Marks' Standard Handbook for Mechânical Engineers." 9th edition, McGraw-Hill Book Company, New York, NY, 1987.

Cassidy, W.B., ed.: "Bioengineering and Cabin Ecology," vol. 20, Washington, DC, American Astronautical Society, 1969.

Cavendish, Marshall: "Out of This World." London, Marshall Cavendish Books Limited, 1985.

Conners, Mary N., Harrison, Albert A., and Akins, Faren R.: "Living Aloft: Human Requirements for Extended Spaceflight." NASA SP-483, Ames Research Center, 1985.

Hansen, C. Frederick: "Molecular Physics of Equilibrium Gases: A Handbook for Engineers." NASA SP-3096, 1976.

"Human Factors in Long-Duration Spaceflight," Space Science Board, National Academy of Sciences, Washington, DC, 1972.

Johnston, Richard S., Dietlein, Lawrence S., and Berry, Charles A., managing editors: "Biomedical Results of Apollo," Richard L. Sauer, and George K. Jorgensen, Section VI—Systems, Chapter 2—Waste Management System, NASA SP-368, 1975.

Martin, C.E., and McCormick, A. K. III: "The Apollo Missions: A Summary Report With Emphasis on Environmental Control and Life Support Systems (ECLSS)." McDonnell Douglas Space Systems Company, Huntsville, AL, MDC 92W5009, May 1992.

McCormick, A.K. III, and Martin, C.E.: "Environmental Control and Life Support Systems (ECLSS) Historical Data Summary." McDonnell Douglas Space Systems Company, Huntsville, AL, MDC 92W5010, June 1992.

Napolitano, L. G., ed.: "Space Stations Present and Future." Pergamon Press, New York, NY, 1976.

Nicogossian, Arnauld E., ed. "Space Physiology and Medicine." Second edition, Lea & Febiger, Philadelphia, PA, 1989.

Purser, Paul E., Faget, Maxime A., and Smith, Norman F.: "Manned Spacecraft: Engineering Design and Operation." Fairchild Publications, Inc., New York, NY, 1964.

Ride, Sally K.: "Leadership and America's Future in Space," NASA, August 1987.

"Systems Engineering Handbook," Marshall Space Flight Center, MSFC-HDBK-1912, May 1991.

"Technology 2000," Symposia Proceedings, November 27–28, 1990, Washington, DC, NASA Conference Publication 3109, 1991.

Van Wylen, Gordon J., and Sonntag, Richard E.: "Fundamentals of Classical Thermodynamics." Third edition, John Wiley and Sons, New York, NY, 1986.

Historical ECLS Systems

"Biomedical Results of Apollo," NASA Johnson Space Center, NASA SP-368, N76-12690, 91, 93, 94, Houston, 1975.

"Environmental Control and Life Support Development Plan," Draft 6, Boeing Defense and Space Group, DR SE35-006, D683-10141-6, NASA/MSFC contract NAS8-50000, August 30, 1991.

"Initial Spacelab Verification Flight Test Report—Volume II Environmental Control Subsystem," McDonnell Douglas, Document No. H0843, September 1984.

"MSFC *Skylab* Crew Systems Mission Evaluation," NASA TM X-64825, August 1974.

"MSFC *Skylab* Mission Report—Saturn Workshop," NASA TM X-64814, October 1974.

"MSFC *Skylab* Thermal and Environmental Control System Mission Evaluation," NASA TM X-64822, June 1974.

"Shuttle Operational Data Book," vol. 1, Rev. E, JSC-08934, April 4, 1990.

"*Skylab* Lessons Learned As Applicable to a Large Space Station," NASA TM X-73073, April 1976.

"*Skylab* Operational Data Book," MSFC-01549, December 1970.

"Spacelab Verification Plan," ERNO, PL-ER-0027, Issue 1, January 13, 1977.

"Spacelab Life Sciences 1 Integrated Payload Verification Plan," NASA, JSC-19003C, January 26, 1984.

"Space Shuttle (STS-9) Final Flight Evaluation Report Volume II—Spacelab Systems," April 30, 1984.

Belew, Leland F., and Stuhlinger, Ernst: "*Skylab*—A Guidebook," NASA, EP-107, 1973.

Faget, Max: "Manned Space Flight." Holt, Rinehart and Winston, Inc., New York, NY, 1965.

Feoktistov, K.P.: "Scientific Orbital Complex," NASA TM-7628, Washington, DC, August 1980.

Gartner, Richard: "Spacelab Environmental Control/Life Support System—Design Safety." IAF Paper A75-020, 26th International Astronautical Congress, Lisbon, Portugal, 21–27 September 1975.

Heitchue, Regis D. Jr., ed.: "Space Systems Technology." Reinhold Book Corp., New York, NY, 1968.

Holder, William G., and Siuru, William D. Jr.: "*Skylab* Pioneer Space Station." Rand McNally & Company, Chicago, IL, 1974.

Hopson, George D.: "*Skylab* Life Support and Habitability System Requirements and Implementation." A71-41976, 22nd International Astronautical Congress, Brussels, Belgium, September 20–25, 1971.

Hughes, D.F., Owens, W.L., and Young, R.W.: "Apollo Command and Service Module Environmental Control System—Mission Performance and Experience." ASME Paper 73-ENAS-29. Intersociety Conference on Environmental Systems, San Diego, CA, July 16–19, 1973.

Linford, R.M.F.: "Experiments with the *Skylab* Fire Detectors in Zero Gravity." *Space Simulation.* Proceedings of the Sixth Space Simulation Symposium, 1–3 May, 1972. NASA Scientific and Technical Information Office, Washington, DC, 1972. NASA SP-298, pp. 41–55.

Popma, D.C.: "Environmental Control System Development for Manned Spacecraft—1960–1973." ASME 74-ENAs-50, Intersociety Conference on Environmental Systems, Seattle, WA, July 29–August 1, 1974.

Samonski, Frank H. Jr., Ross, James M., and Nicolello, Henry: "Environmental Control System of Apollo Spacecraft Worked O.K. Thanks to Redesigned Hardware." The SAE Journal, May 1970, pp. 42-45.

Schneider, William C.: "*Skylab* Lessons Learned as Applicable to a Large Space Station." NASA TM X-73073, April 1976.

Swenson, Loyd S. Jr., Grimwood, James M., and Alexander, Charles C.: "This New Ocean. A History of Project Mercury." The NASA Historical Series., NASA SP-4201, Washington, DC, 1966.

Mission Scenarios/Future ECLSS Needs

Bilardo, Vincent J.: "A Generic Trade Study Methodology for the System Analysis of Regenerative Life Support Systems." SAE Paper No. 911320, 21st International Conference on Environmental Systems, San Francisco, CA, July 15–18, 1991.

Diamant, Bryce L.: "Establishing a Permanent Colony on the Surface of Earth's Moon. A Logistics Profile." B.S. Thesis, University of Virginia, 1988.

Diamant, Bryce L., and Humphries, W.R.: "Past and Present Environmental Control and Life Support Systems on Manned Spacecraft." SAE Paper No. 901210, 20th International Conference on Environmental Systems, Williamsburg, VA, July 9–12, 1990.

Doll, Susan C., and Case, Carl: "Life Support Function and Technology Analysis for Future Missions." SAE Paper No. 901216, 20th International Conference on Environmental Systems, Williamsburg, VA, July 9–12, 1990.

Hightower, Mark: "Recycling and Resource Reduction for Long Duration Space Habitation." SAE Paper No. 921121, 22nd International Conference on Environmental Systems, Seattle, WA, July 13–16, 1992.

Huttenbach, R.C.: "Life Support—Future Trends and Developments." SAE Paper No. 891549, 19th Intersociety Conference on Environmental Systems, San Diego, CA, July 24–27, 1989.

"Lunar Outpost Life Support System: Functional Requirements Document," Revision 2, Ames Research Center, Advanced Life Support Division, 90-SAS-R-002, June 1991.

"Manned Mars Missions Working Group Papers," Workshop at Marshall Space Flight Center, June 10-14, 1985, NASA M002, June 1986.

Nitta, Keiji: "Life Support Concept in Lunar Base." SAE Paper No. 911431, 21st International Conference on Environmental Systems, San Francisco, CA, July 15–18, 1991.

O'Handley, Douglas A.: "Human Pathway to the Solar System in the 21st Century." SAE Paper No. 891430, 19th Intersociety Conference on Environmental Systems, San Diego, CA, July 24–27, 1989.

Quattrone, P.D.: "Extended Mission Life Support Systems." Case for Mars Conference, Boulder, CO, April 30, 1981.

Rummel, John D.: "Life Support for Lunar and Mars Missions." SAE Paper No. 911372, 21st International Conference on Environmental Systems, San Francisco, CA, July 15–18, 1991.

Shuey, M.A.: "A Projection of Future Manned Spacecraft Environmental Control Systems." Proceedings of the Spacecraft Thermal and Environmental Control Systems Symposium, Munich, Germany, October 10–12, 1978 (ESA SP-139, November 1978).

Slavin, Tom, Meyer, Paul, Reysa, Richard, and Price, Don F.: "Life Support Definition Study for Long Duration Planetary Missions." SAE Paper No. 891505, 19th Intersociety Conference on Environmental Systems, San Diego, CA, July 24–27, 1989.

"Space Resources and Space Settlements," NASA SP-428, 1979.

"Space Settlements: A Design Study," NASA SP-413, 1977.

Williams, David E., and Cerna, Peter J.: "Expanded Capabilities of the Extended Duration Orbiter (EDO)." SAE Paper No. 901290, 20th International Conference on Environmental Systems, Williamsburg, VA, July 9–12, 1990.

Winkler, H. Eugene, Brasseaux, Hubert J. Jr., North, Jeffery D., and Orlando, Samuel P.: "The Extended Duration Orbiter Waste Collection System." SAE Paper No. 901291, 20th International Conference on Environmental Systems, Williamsburg, VA, July 9–12, 1990.

Zubrin, Robert, and Adelman, Benjamin: "The Direct Route to Mars," Final Frontier, vol. 5, No. 4, July/August 1992.

Space Station *Freedom*

Bacskay, A.S., and DaLee, R.C.: "Space Station *Freedom* ECLSS Design Configuration: A Post-Restructure Update." SAE Paper No. 911414, 21st International Conference on Environmental Systems, San Francisco, CA, July 15–18, 1991.

Bagdigian, R.M, and Mortazavi, P.L.: "Status of the Space Station Water Reclamation and Management Subsystem Design Concept." SAE Paper No. 871510, 17th Intersociety Conference on Environmental Systems, Seattle, WA, July 13–15, 1987.

Breeding, R.E., and Brose, H.F.: "Space Station Life Support Systems—Status Report." IAF paper 84-162, 35th International Astronautical Congress, Lausanne, Switzerland, October 7–13, 1984.

Brose, H.F.: "Environmental Control and Life Support (ECLS) Design Optimization Approach." Space Station: Policy, Planning, and Utilization, Proceedings of the Symposium, Arlington, VA, July 18–20, 1983.

Humphries, William R., Reuter, James L., and Schunk, Richard G.: "Space Station Environmental Control and Life Support System Distribution and Loop Closure Studies." SAE Paper No. 860942, 16th Intersociety Conference on Environmental Systems, San Diego, CA, July 14–16, 1986.

Humphries, W.R., Reuter, J.L., and Schunk, R.G.: "Space Station *Freedom* Environmental Control and Life Support System Design—A Status Report," SAE Paper No. 901211, 20th International Conference on Environmental Systems, Williamsburg, VA, July 9–12, 1990.

Lin, C.H.: "Space Station Environmental Control and Life Support System Preliminary Conceptual Design." JSC-17727, Doc. No. CSD-SS-059, September 1982.

Mackowski, Maura J.: "Safety on the Space Station." Space World, March 1987, pp. 22-24.

Mark, Hans: "The Space Station: A Personal Journey." Duke University Press, Durham, NC, 1987.

Ray, C.D., Ogle, K.Y., Tipps, R.W., Carrasquillo, R.L., and Wieland, P.: "The Space Station Air Revitalization Subsystem Design Concept." SAE Paper No. 871448, 17th Intersociety Conference on Environmental Systems, Seattle, WA, July 13–15, 1987.

Sargent, Donald H.: "System Level Water Balance for Space Station *Freedom*." SAE Paper No. 901213, 20th International Conference on Environmental Systems, Williamsburg, VA, July 9–12, 1990.

Simpson, Theodore R., ed.: "The Space Station: An Idea Whose Time Has Come." IEEE Press, The Institute of Electrical and Electronic Engineers, Inc., New York, NY, 1985.

"Space Station ECLSS and Thermal Control," SAE International, SP-875, July 1991.

"Space Station Environmental/Thermal Control and Life Support Systems," SAE International, SP-829, 1990.

"Space Station and Advanced EVA Technologies," SAE International, SP-830, 1990.

"Space Station and Advanced EVA," SAE International, SP-872, 1991.

"Space Station Program Configuration Description Document Environmental Control and Life Support Systems," Boeing, NASA/MSFC Contract NAS8-36526, document number D483-50004-6, June 6, 1985.

Stuster, Jack W.: "Space Station Habitability Recommendations Based on a Systematic Comparative Analysis of Analogous Conditions." NASA Contractor Report 3943, Contract NAS2-11690, September 1986.

General ECLSS

"Advanced Environmental/Thermal Control and Life Support Systems," SAE International, SP-831, 1990.

Anderson, J.L.: "Technology for Human Self-Sufficiency in Space." SAE Paper No. 881013, 18th Intersociety Conference on Environmental Systems, July 13–15, 1987.

Bangham, Mike, and Humphries, Randy: "Microgravity Sensitivities for Space Station ECLSS Subsystems." SAE Paper No. 891483, 19th Intersociety Conference on Environmental Systems, San Diego, CA, July 24–27, 1989.

Bilardo, Vincent, ed.: "In-House Life Support Technology Review Databook." NASA/ARC, 90-SAS-R-003, Rev. 2, January 23, 1991.

Couch, H.T., Auman, J.W., and Falvey, T.: "Advanced Regenerative Life Support for Space Exploration." SAE Paper No. 911500, 21st International Conference on Environmental Systems, San Francisco, CA, July 15–18, 1991.

Diamant, B.L., and Humphries, W.R.: "Past and Present Environmental Control and Life Support Systems on Manned Spacecraft." SAE Paper No. 901210, 20th International Conference on Environmental Systems, Williamsburg, VA, July 9–12, 1990.

"Environmental Control Systems Selection for Manned Space Vehicles," AiResearch Manufacturing Company, Air Force Contract AF 33(6 6)-8323, Wright-Patterson Air Force Base, OH, ASD-TR-61-240, 1962.

Heinerwaldel, Karl-Otto, and Kring, Gunter: "Design of the Environmental Control and Life Support System for the COLUMBUS Pressurized Module." SAE Paper No. 891531, 19th Intersociety Conference on Environmental Systems, San Diego, CA, July 24–27, 1989.

"Life Support and Habitability Manual," European Space Agency, Noordwijk, The Netherlands, ESA PSS-03-406, Issue 1, August 1991.

"MSFC *Skylab* Crew Systems Mission Evaluation," NASA TM X-64825, August 1974.

"MSFC *Skylab* Mission Report—Saturn Workshop," NASA TM X-64814, October 1974.

Powell, F.T., Wynveen, R.A., and Lin. C.: "Environmental Control and Life Support Technologies for Advanced Manned Space Missions." SAE Paper No. 860994, 16th Intersociety Conference on Environmental Systems, San Diego, CA, July 14–16, 1986.

Preiss, Helmut, Savage, Chris, and Tan, G.: "Recent Regenerative ECLSS Technology Developments in Europe," SAE Paper No. 921332, 22nd International Conference on Environmental Systems, Seattle, WA, July 13–16, 1992.

"Reliability, Maintainability, and Supportability Guidebook," Second edition, SAE International, M-102/92, 1992.

Shadle, Tracy, and Dalley, Thomas J.: "U. S. Navy Submarine Life Support Systems," SAE Paper No. 911329, 21st International Conference on Environmental Systems, San Francisco, CA, July 15–18, 1991.

"Space Vehicle Environmental Control Requirements Based on Equipment and Physiological Criteria," AiResearch Manufacturing Company, Air Force Contract AF 33(6 6)-8323, Wright-Patterson Air Force Base, OH, ASD-TR-61-161, 1962.

Sribnik, Frederick, Augusti, Ronald, and Glastris, Ernest G.: "Life Support for a Physically Isolated Underground Habitat." SAE Paper No. 901229, 20th International Conference on Environmental Systems, Williamsburg, VA, July 9–12, 1990.

Swider, Joseph E., Jr., and Galluccio, Richard: "Space Shuttle Environmental Control and Life Support System (ECLSS)." SAE Paper No. 821420, Aerospace Congress and Exposition, Anaheim, CA, October 25–28, 1982.

"Synthesis, Integration, and Optimization of Space Vehicle Environmental Control Systems," AiResearch Manufacturing Company, Air Force Contract AF 33(6 6)-8323, Wright-Patterson Air Force Base, OH, ASD-TR-61-176, 1962.

"Trade-Off Study and Conceptual Designs of Regenerative Advanced Integrated Life Support Systems (AILSS)." Hamilton Standard, NASA Contract NAS1-7905, Langley Research Center, NASA CR-1458, 1968.

Wydeven, Theodore: "A Survey of Some Regenerative Physico-Chemical Life Support Technology," NASA TM 101004, November 1988.

Analysis and Computer Modeling

Bacskay, Allen, and Knox, James C.: "Space Station ECLSS Design Activities." SAE Paper No. 891500, 19th Intersociety Conference on Environmental Systems, San Diego, CA, July 24–27, 1989.

Bangham, M.E., DaLee, R.C., and Reuter, J.R.: "Environmental Control and Life Support Systems Analyses Analytical Techniques." SAE Paper No. 891480, 19th Intersociety Conference on Environmental Systems, San Diego, CA, July 24–27, 1989.

Barker, Robert S., and van Jouanne, Roger: "Preliminary G189A Computer Program Modeling of the Space Station ECLSS." SAE Paper No. 891499, 19th Intersociety Conference on Environmental Systems, San Diego, CA, July 24–27, 1989.

Blakely, R.L., and Taylor, B.N.: "Computer Analysis Techniques for Sapcecraft Adsorption Beds." McDonnell Douglas Astronautics Company, Huntington Beach, CA, March 1969.

Carroll, T.: "Verifiaction Analysis for the Computer-Aided System Engineering and Analysis (CASE/A) Static Feed Water Electrolysis (SFWE) Routine." McDonnell Douglas Space Systems Company, Huntsville, AL, May, 1989.

"Computer Aided System Engineering and Analysis (CASE/A) User's Manual—ECLSS Series," McDonnell Douglas Space Systems Company, Huntsville Division, MDC W5074-5, NASA/MSFC Contract NAS8-36407, October 1990.

DaLee, Robert C., Knox, James C., and Bacskay, Allen S.: "Computer-Aided System Engineering and Analysis (CASE/A) Modeling Package for ECLS Systems—An Overview." SAE Paper No. 901267, 20th International Conference on Environmental Systems, Williamsburg, VA, July 9–12, 1990.

Drysdale, Alan E., Wheeler, Ray M., Fresa, Mark, and Thomas, Mark M.: "OCAM—A CELSS Modeling Tool, Description and Results." SAE Paper No. 921241, 22nd International Conference on Environmental Systems, Seattle, WA, July 13–16, 1992.

Ferrall, Joseph P., Seshan, P.K., and Rohatgi. N.K.: "Human Life Support During Interplanetary Travel and Domicile—Part II: Generic Modular Flow Schematic Modeling." SAE Paper No. 911322, 21st International Conference on Environmental Systems, San Francisco, CA, July 15–18, 1991.

Hall, J.B., Jr., Pickett, S.J., and Sage, K.H.: "Manned Space Station Environmental Control and Life Support System Computer-Aided Technology Assessment Program." SAE Paper No. 840957, 14th Intersociety Conference on Environmental Systems, San Diego, CA, July 1984.

Holland, Charles D., and Liapis, Athanasios I.: "Computer Methods for Solving Dynamic Separation Problems." McGraw-Hill, Inc., New York, NY, 1983.

Knox, James C.: "CO_2 Removal Sizing Study." MSFC memo ED62(128-90), April 14, 1990.

Knox, James C.: "Impact of Locating an AR Subsystem in Node 3." MSFC memo ED62(178-90), December 17, 1990.

Knox, James C.: "CO_2 Control Impacts Resulting from the Elimination of the Racetrack Module Configuration." MSFC memo ED62(23-91), March 11, 1991.

Knox, James C., and Gilley, Scott D.: "Evaluation of the Carbon Dioxide Removal Assembly Performance Requirements for SSF in the MTC Through PMC Configurations." SAE Paper No. 921231, 22nd International Conference on Environmental Systems, Seattle, WA, July 13–16, 1992.

Schrike, Reiner, and Preiss, Helmut: "Requirements for ECLSS Simulation Software." SAE Paper No. 901372, 20th International Conference on Environmental Systems, Williamsburg, VA, July 9–12, 1990.

Tripp, T.C.: "Verification Analysis for the Computer Aided System Engineering and Analysis (CASE/A) Molecular Sieve (MOLSIEVE) Routine." McDonnell Douglas Space Systems Company, Huntsville, AL, January 1989.

von Jouanne, Roger G., Sitler, Glenn A., and Barker, Robert S.: "G189A Dew Point Analysis for Space Station Freedom." SAE Paper No. 921227, 22nd International Conference on Environmental Systems, Seattle, WA, July 13–16, 1992.

Testing of ECLS Systems

Aten, Laurie Anne, Crump, William J., Sauer, Richard L., and Bagdigian, Robert M.: "A Systems Approach to Water Recovery Testing for Space Life Support: Initial Biomedical Results from the ECLSS Water Recovery Test and Plans For Testbed Utilization." SAE Paper No. 921210, 22nd International Conference on Environmental Systems, Seattle, WA, July 13–16, 1992.

Bagdigian, R.M., et al.: "Space Station *Freedom* Environmental Control and Life Support System Phase III Water Recovery Test Stages 1A, 2A, and 3A Final Report." NASA TM-103564, January 1992.

Bagdigian, Robert M., Traweek, Mary S., and Griffith, Guy K.: "Phase III Water Recovery Testing at MSFC: Partially Closed Loop Results and Lessons Learned." SAE Paper No. 911375, 21st International Conference on Environmental Systems, San Francisco, CA, July 15–18, 1991.

Buitekant, Alan, and Roberts, Barry C.: "Facility for Generating Crew Waste Water Products for ECLSS Testing." SAE Paper No. 901254, 20th International Conference on Environmental Systems, Williamsburg, VA, July 9–12, 1990.

Carrasquillo, R.L., et al.: "Space Station *Freedom* Environmental Control and Life Support System Regenerative Subsystem Selection." NASA TM 4340, February 1992.

Carrasquillo, Robyn, Ogle, Kathryn, McGriff, Cindy, Holder, Don, and Carter, Layne: "ECLSS Regenerative Systems Comparative Testing and Selection." SAE Paper No. 911415, 21st International Conference on Environmental Systems, San Francisco, CA, July 15–18, 1991.

Ezell, Tim G., and Long, David A.: "Phase III Environmental Control and Life Support System Test Bed Design." SAE Paper No. 891553, 19th Intersociety Conference on Environmental Systems, San Diego, CA, July 24–27, 1989.

Ezell, Timothy G., and Long, David A.: "Test Bed Design for Evaluating the Space Station ECLSS Water Recovery System." SAE Paper No. 901253, 20th International Conference on Environmental Systems, Williamsburg, VA, July 9–12, 1990.

Holder, Donald W., and Bagdigian, Robert M.: "Phase III Integrated Water Recovery Testing at MSFC: Closed Hygiene and Potable Loop Test Results and Lessons Learned." SAE Paper

No. 921117, 22nd International Conference on Environmental Systems, Seattle, WA, July 13–16, 1992.

Jackson, J.K., et al.: "Test Report, Test Results—Operational 90-Day Manned Test of a Regenerative Life Support System." NASA CR-111881, May 1971.

Mohamadinejad, Habib, and Bacskay, Allen S.: "Water Recovery and Management Test Support Modeling for Space Station Freedom." SAE Paper No. 901214, 20th International Conference on Environmental Systems, Williamsburg, VA, July 9–12, 1990.

"Program Operational Summary—Operational 90-Day Manned Test of a Regenerative Life Support System." NASA CR-1835.

Roberts, B.C., et al.. "Space Station *Freedom* Environmental Control and Life Support System Phase III Simplified Integrated Test Detailed Report."NASA TM 4204, May 1990.

Roman, M.C., and Minton, S.A.: "Microbiology Report for Phase III Stage A Water Recovery Test." NASA TM-103584, June 1992.

Roman, M.C., and Minton, S.A.: "Microbiology Report for Stage 4/5 Water Recovery Test." NASA TM-103584, June 1992.

Schunk, R.G., et al.: "Space Station CMIF Extended Duration Metabolic Control Test Final Report." NASA TM-108405, May 1993.

Schunk, R.G., et al.: "Space Station ECLSS Simplified Integrated Test Final Report." NASA TM-100363, March 1989.

Schunk, R. Gregory, et al.: "CMIF ECLS System Test Findings." SAE Paper No. 891552, 19th Intersociety Conference on Environmental Systems, San Diego, CA, July 24–27, 1989.

Springer, Darlene: "Space Station Environmental Control and Life Support System Test Facility at Marshall Space Flight Center." SAE Paper No. 891555, 19th Intersociety Conference on Environmental Systems, San Diego, CA, July 24–27, 1989.

"Test Report, Final Test Plan and Procedure—Operational 90-Day Manned Test of a Regenerative Life Support System." NASA CR-111882, May 1971.

Thomas, Dale, and Crump, William: "The Use of Humans in ECLSS Testing: NASA Requirements," SAE Paper No. 901251, 20th International Conference on Environmental Systems, Williamsburg, VA, July 9–12, 1990.

Testing Involving Human Test Subjects

"Human Research Planning and Approval," Ames Research Center Management Manual, AMM 7170-1, January 3, 1984.

"Human Research Policy and Procedures Committee," Johnson Space Center Management Directive No. 1152.13, December 17, 1987.

"Human Research Policy and Procedures Committee Handbook for Shuttle/ Spacelab Human Research Investigations," Johnson Space Center, September 1984.

"Human Research Policy and Procedures for Space Flight Investigations," Space and Life Sciences Directorate, Medical Sciences Division, NASA/JSC, JSC-20483, March 1988.

"Protection of Human Research Subjects," NASA Management Instruction 7100.8A, November 18, 1986.

Biological Life Support Systems

"Final Report: Microbiological Wastewater Conversion in CELSS," Department of Environmental Engineering Sciences, University of Florida, Gainesville, FL, NASA Grant No. NAG10-0048, July, 1990.

"Final Report: Development of a Prototype Experiment for Treating CELSS and PCELSS Wastes to Produce Nutrients for Plant Growth," Department of Chemical Engineering, Massachusetts Institute of Technology, contract N84-18341, Ames Research Center, December 31, 1983.

Andre, Marcel: "Growth of Plants at Reduced Pressures." SAE Paper No. 911487, 21st International Conference on Environmental Systems, San Francisco, CA, July 15–18, 1991.

"Biotechnology," NASA SP-205, 1971.

Blackwell, C.C.: "Control System Design Concepts." SAE Paper No. 921196, 22nd International Conference on Environmental Systems, Seattle, WA, July 13–16, 1992.

Dreschel, T.W., Wheeler, R.M., Hinkle, C.R., Sager, J.C., and Knott, W.M.: "Investigating Combustion as a Method of Processing Inedible Biomass Produced in NASA's Biomass Production Chamber." Kennedy Space Center, FL, NASA TM 103821, May 1991.

Firth, Penelope L., and Averner, Maurice M.: "Beyond the Breakeven Point: Controlled Ecological Life Support System (CELSS) for Human Exploration Missions." SAE Paper No. 901363, 20th International Conference on Environmental Systems, Williamsburg, VA, July 9–12, 1990.

Fortson, R.E., Sager, J.C., Bledsoe, J.O., Wheeler, R.M., and Knott, W.M.: "Current Performance of the NASA Biomass Production Chamber." Paper No. 92-4001, 1992 International Summer Meeting, The American Society of Agricultural Engineers, Charlotte, NC, June 21–24, 1992.

Gitelson, I.I.: "Long-Term Experiments on Man's Stay in Biological Life-Support System." SAE Paper No. 901261, 20th International Conference on Environmental Systems, Williamsburg, VA, July 9–12, 1990.

Gustavino, Stephen R.: "A Study of the Effects of Bioregenerative Technology on a Regenerative Life Support System." SAE Paper No. 911509, 21st International Conference on Environmental Systems, San Francisco, CA, July 15–18, 1991.

Henninger, Donald L., and Tri, Terry O.: "Controlled Ecological Life Support Systems Human-Rated Test Facility: An Overview." SAE Paper No. 932241, 23rd International Conference on Environmental Systems, Colarado Springs, CO, July 12–15, 1993.

Huttenbach, Robin C., Pratt, Martin L., and Bucke, Chris: "An Evolutionary Approach to the Development of a CELSS Based Air Revitalisation." SAE Paper No. 860968, 16th Intersociety Conference on Environmental Systems, San Diego, CA, July 14–16, 1986.

Langhans, R.W., and Dreesen, D.R.: "Challenges to Plant Growing in Space." From the proceedings of the 22nd International Horticultural Congress/83rd ASHS Annual Meeting, Davis, CA, August 15, 1986. Also published as part of a special insert to "HortScience," vol. 23(2), April 1988.

Mankamyer, M.M., and Gustavino, S.R.: "Application of Bioregenerative Subsystems to an ECLSS for a Manned Mars Sprint Mission." SAE Paper No. 891504, 19th Intersociety Conference on Environmental Systems, San Diego, CA, July 24–27, 1989.

Olson, R.L., Gustan, E.A., and Vinopal, T.J.: "CELSS Transportation Analysis." COSPAR, Workshops on Life Sciences and Space Research XXI, Graz, Austria, June 25–July 7, 1984, Advances in Space Research (ISSN 0273-1177), vol. 4, no. 12, 1984.

Olson, R.L., Oleson, M.W., and Slavin, T.J.: "CELSS for Advanced Manned Mission." From the proceedings of the 22nd International Horticultural Congress/83rd ASHS Annual Meeting, Davis, CA, August 15, 1986. Also published as part of a special insert to "HortScience," vol. 23(2), April 1988.

Oleson, M.W., and Olson, R.L.: "Controlled Ecological Life Support Systems (CELSS): Conceptual Design Option Study." NASA CR 177421, NASA/ARC, Moffett Field, CA, 1986.

Perchurkin, N.S.: "Biological Stability of Closed Ecological Systems." SAE Paper No. 911327, 21st International Conference on Environmental Systems, San Francisco, CA, July 15–18, 1991.

Prince, Ralph P., Knott, William M., and Sager, John C.: "Design and Performance of the KSC Biomass Production Chamber." SAE Paper No. 871437, 17th Intersociety Conference on Environmental Systems, Seattle, WA, July 13–15, 1987.

"Regenerative Life Support Systems and Processes," SAE International, SP-873, July 1991.

Rummel, J., and Averner, M.: "Bioregenerative Life Support: The Initial CELSS Reference Configuration." SAE Paper No. 911420, 21st International Conference on Environmental Systems, San Francisco, CA, July 15–18, 1991.

Sager, J.C., Hargrove, C.R., Prince, R.P., and Knott, W.M.: "CELSS Atmospheric Control System." Paper No. 88-4018, 1988 International Summer Meeting, American Society of Agricultural Engineers, Rapid City, SD, June 26–29, 1988.

Salisbury, F.B., and Bugbee, B.G.: "Wheat Farming in a Lunar Base." In *Lunar Bases and Space Activities of the 21st Century*. Houston, TX: Lunar and Planetary Institute, 1986, pp. 635–645.

Salisbury, F.B., and Bugbee, B.G.: "Plant Productivity in Controlled Environments." From the proceedings of the 22nd International Horticultural Congress/83rd ASHS Annual Meeting, Davis, CA, August 15, 1986. Also published as part of a special insert to HortScience, vol. 23(2), April 1988.

Sato, Kozo, et al.: "A Trade Study Method for Determining the Design Parameter of CELSS Subsystems." SAE Paper No. 921198, 22nd International Conference on Environmental Systems, Seattle, WA, July 13–16, 1992.

Schwartzkopf, Steven H., and Cullingford, Hatice S.: "Conceptual Design for a Lunar Base CELSS," SAE Paper No. 901278, 20th International Conference on Environmental Systems, Williamsburg, VA, July 9–12, 1990.

Shuler, M.L.: "Waste Treatment Options for Use in Closed Systems." American Institute of Aeronautics and Astronautics, 1979.

Shuler, M. L., Nafis, D., and Sze, E.: "The Potential Role of Aerobic Biological Waste Treatment in Regenerative Life Support Systems." ASME, 81-ENAs-20, 11th Intersociety Conference on Environmental Systems, July 13–15, 1981.

Shuler, M.L., Lee, S., and Rollins, S.: "The Feasibility of an Activated Sludge—Ultrafiltration Unit for Use in Closed Ecological Life Support Systems; Experimental System and Preliminary Results." American Chemical Society, September 1982.

Slavin, T.J., Liening, F.A., and Oleson, M.W.: "CELSS Waste Management Systems Evaluation." SAE No. 860997, 16th Intersociety Conference on Environmental Systems, San Diego, CA, July 14–16, 1986.

Soo, Young, Lee, S., and Shuler, Michael L.: "Aerobic Biological Waste treatment in Regenerative Life Support Systems." Paper No. 85e, AIChE, Annual Meeting, Washington, DC, October 30–November 4, 1983.

Tremor, John W., and MacElroy, Robert D.: "Report of the First Planning Workshop for CELSS Flight Experimentation." NASA Conference Publication 10020, NASA ARC, Moffett Field, CA, March 1987.

Wheeler, Raymond M., Corey, Kenneth A., Sager, John C., and Knott, William M.: "Gas Exchange Characteristics of Wheat Stands Grown in a Closed, Controlled Environment." Crop Science, vol. 33, No. 1, January–February 1993.

Wheeler, Raymond M.: "Gas-exchange Measurements Using a Large, Closed Plant Growth Chamber." HortScience, vol. 27(7), July 1992.

Wheeler, R.M., Mackowiak, C.L., Dreschel, T.W., Sager, J.C., Prince, R.P., Knott, W.M., Hinkle, C.R., and Strayer, R.F.: "System Development and Early Biological Tests in NASA's Biomass Production Chamber." NASA TM 103494, March 1990.

Wheeler, R.M., Mackowiak, C.L., Sager, J.C., Corey, K.A., Dreschel, T.W., Vieus, B.A., Knott, W.M., Prince, R.P., and Hinkle, C.R.: "Crop Tests in NASA's Biomass Production Chamber, A Review of the First Four Years of Operation." International Life Support and Biospherics Conference, Huntsville, AL, February 18–20, 1992.

Wolverton, B.C.: "Higher Plants for Recycling Human Waste Into Food, Potable Water, and Revitalized Air in a Closed Life Support System." National Space Technologies Laboratory, Earth Resources Lab Report No. 192, August 1980.

Wright, Bruce D., and Garcia, Albert III: "CELSS Engineering: Proportional Control of CO_2 Using Higher Plants." SAE Paper No. 891573, 19th Intersociety Conference on Environmental Systems, San Diego, CA, July 24–27, 1989.

Wydeven, T.: "Composition and Analysis of a Model Waste Stream for a CELSS." Ames Research Center, NASA TM 84368, September 1983.

Yendler, Boris S.: "An Approach to the Functional Optimization of the CELSS Test Facility." SAE Paper No. 921199, 22nd International Conference on Environmental Systems, Seattle, WA, July 13–16, 1992.

Microorganism Monitoring and Control

Baune, J., and Baune, M.: "Microbiological Contamination Control in the COLUMBUS Project." SAE Paper No. 891534, 19th Intersociety Conference on Environmental Systems, San Diego, CA, July 24–27, 1989.

Bej, Asim K., Mahbubani, Meena H., Miller, Richard, DiCesare, Joseph L., Haff, Lawrence, and Atlas, Ronald M.: "Multiplex PCR Amplification and Immobilized Capture Probes for Detection of Bacterial Pathogens and Indicators in Water." Molecular and Cellular Probes, vol. 4, 1990, pp. 353–365.

Borass, Martin E., Seale, D.B., and Rodgers, Elizabeth B.: "A Model of Biofilm Growth on a Non-Nutritive, Solid-Air Interface." SAE Paper No. 891492, 19th Intersociety Conference on Environmental Systems, San Diego, CA, July 24–27, 1989.

Boyle, Michael, Ford, Tim, Maki, Jim, and Mitchell, Ralph: "The Survival of Opportunistic Pathogenic Microorganisms Under Nutrient Starvation Conditions." SAE Paper No. 901381, 20th International Conference on Environmental Systems, Williamsburg, VA, July 9–12, 1990.

Cioletti, Louis A., et al.: "Microbiology Facilities Aboard Space Station *Freedom* (SSF)." SAE Paper No. 901262, 20th International Conference on Environmental Systems, Williamsburg, VA, July 9–12, 1990.

Koenig, David W., Mallary, Laura L., and Pierson, Duane L.: "Disinfectants for Spacecraft Applications: An Overview." SAE Paper No. 911516, 21st International Conference on Environmental Systems, San Francisco, CA, July 15–18, 1991.

Mitchell, R., and Ford, T.: "Health and Corrosion Consequences of Microfouling in Water Reclamation Systems." SAE Paper No. 911519, 21st International Conference on Environmental Systems, San Francisco, CA, July 15–18, 1991.

Mullis, Kary B.: "The Unusual Origin of the Polymerase Chain Reaction." Scientific American, April 1990, p. 56–65.

Rodgers, Elizabeth B., and Seale, D.B.: "Ecology and Monitoring of Microorganisms in a Small Closed System: Potential Benefits and Problems for Space Station." SAE Paper No. 891491, 19th Intersociety Conference on Environmental Systems, San Diego, CA, July 24–27, 1989.

Roman, Monzi, et al.: "Microbial Distribution in the ECLSS Water Recovery Test Conducted at NASA MSFC." SAE Paper No. 911377, 21st International Conference on Environmental Systems, San Francisco, CA, July 15–18, 1991.

Smithers, Gwenneth A., Rodgers, Elizabeth B., Obenhuber, Don C., and Huff, Timothy L.: "Aquatic Biofilms and Their Responses to Disinfection and Invading Species." SAE Paper No. 921211, 22nd International Conference on Environmental Systems, Seattle, WA, July 13–16, 1992.

Atmosphere Revitalization

"Atmospheric Control Systems for Space Vehicles," AiResearch Manufacturing Company, Air Force Contract AF 33(6 6)-8323, Wright-Patterson Air Force Base, OH, ASD-TDR-62-527, 1962.

Bond, Aleck C., Pohl, Henry O., Chaffee, Norman H., Guy, Walter W., Allton, Charles S., Johnston, Robert L., Castner, Willard L., and Stradling, Jack S.: "Design Guide for High Pressure Oxygen Systems." NASA Reference Publication 1113, 1983.

Boyda, R.B., Lee, M.G., and Bunnell, C.T.: "Optimization of the Bosch CO_2 Reduction Process." SAE Paper No. 911451, 21st International Conference on Environmental Systems, San Francisco, CA, July 15–18, 1991.

Boynton, C.K., and Colling, A.K. Jr.: "Solid Amine CO_2 Removal System for Submarine Application." SAE Paper No. 831131, 13th Intersociety Conference on Environmental Systems, San Francisco, CA, July 1983.

"CO_2: Chemical, Biochemical, and Physiological Aspects," NASA SP-188, 1969.

Colombo, G.V.: "Study of CO_2 Sorbents for Extravehicular Activity." MDC G4778, McDonnell Douglas Astronautics Company, NASA Contract NAS2-6959, NASA CR 114632, July 1973.

Coull, Tom: "Skylab Regenerable Carbon Dioxide Removal System." ASME 72-ENAv-4, Environmental Control and Life Support Systems Conference, San Francisco, CA, August 14–16, 1972.

Heppner, D.B., and Schubert, F.H.: "Electrochemical and Steam-Desorbed Amine CO_2 Concentration: Subsystem Comparison." SAE Paper No. 831120, 13th Intersociety Conference on Environmental Systems, San Francisco, CA, July 11–13, 1983.

Kammermeyer, Karl, ed.: "Atmosphere in Space Cabins and Closed Environments." Meredith Publishing Company, New York, NY, 1966.

Kast, Timothy P., Nacheff-Benedict, Maurena, and Cusick, Robert J.: "Characterization of Metal Oxide Absorbants for Regenerative Carbon Dioxide and Water Vapor." SAE Paper No. 901431, 20th International Conference on Environmental Systems, Williamsburg, VA, July 9–12, 1990.

Key, C.F.: "Compatibility of Materials with Liquid Oxygen—Volume 1." NASA TM X-64711, October 1, 1972.

Key, C.F., Austin, J.G., and Bransford, J.W.: "Flammability of Materials in Gaseous Oxygen Environments." NASA TM X-64783, September 1973.

Knox, J.C., and Gilley, S.D.: "Evaluation of the Carbon Dioxide Removal Assembly requirements for the Space Station *Freedom* in the Manned Tended Capability and Permanently Manned Capability Configurations." SAE Paper No. 921231, 22nd International Conference on Environmental Systems, Seattle, WA, July 13–16, 1992.

Kuse, Ronald J.: "Preliminary Evaluation of a Membrane Gas Separation Unit for Space Station Freedom Atmosphere Revitalization Subsystem." Intersociety Conference on Environmental Systems, 1990.

Littman, J., Hwang, K.C., Fukunaga, P., and Wernick, M.: "A Study on the Properties of Solid Adsorbents for the Design of Regenerative CO_2 Removal Systems—Final Report." AiResearch Manufacturing Company, report 67-1751, NASA Contract NAS 9-3541, February 1968.

Martin, T., Leppard, C.J., and Stickland, R.J.R.: "Submarine Air Purification Equipment." Symposium on Naval Submarines, May 17–20, 1983, London, England.

McConnaughey, W.E., Crecelius, S.B., and Crofford, W.N. III: "Removal of CO_2 From Submarine Atmospheres by Amine Resins: A Feasibility Study." Naval Research Laboratory, Washington, DC, NRL Report 5022, November 12, 1957.

McElroy, James F., Molter, Trent M., and Roy, R.J.: "SPE Water Electrolyzers for Closed Environment Life Support." SAE Paper No. 911453, 21st International Conference on Environmental Systems, San Francisco, CA, July 15–18, 1991.

Perry, J.L.: "Rechargeable Metal Hydrides for Spacecraft Application." NASA TM 4076, September 1988.

Trusch, R.B.: "Carbon Dioxide Control in Spacecraft by Regenerable Adsorbents." Report TP6702T, Hamilton Standard, Windsor Locks, CT, undated.

Wright, R.M., Ruder, J.M., Dunn. V.B., and Hwang, K.C.: "Development of Design Information for Molecular-Sieve Type Regenerative CO_2-Removal Systems." AiResearch Manufacturing Company, NASA CR-2277, July 1973.

Internal Contamination

Atwater, J.E., and Holtsnider, J.: "Airborne Trace Organic Contaminant Removal Using Thermally Regenerable Multi-Media Layered Sorbents." SAE Paper No. 911540, 21st International Conference on Environmental Systems, San Francisco, CA, July 15–18, 1991.

Bedard, Michael J., and Johnson, Lynne H.: "Bench and System-Level Testing of a Predevelopment Stand-Alone Major Constituent Analyzer for Space Station *Freedom*." SAE Paper No. 93xxxx, 23rd International Conference on Environmental Systems, Colarado Springs, CO, July 12–15, 1993.

Brokenshire, John, et al.: "A Volatile Organic Analyzer for Space Station: Description and Evaluation of Gas Chromatography/Ion Mobility Spectrometer." SAE Paper No. 921385, 22nd Interna-tional Conference on Environmental Systems, Seattle, WA, July 13–16, 1992.

Campbell, William A., Jr., and Marriott, Richard S.: "Outgassing Data for Selected Spacecraft Materials." NASA Reference Publication 1124 Revised, August 1987.

Eknes, E., Jakobsen, K., Padbury, E.H., and Syversen, T.: "Monitoring of Xylene, Tolulene, Carbon Dioxide, Carbon Monoxide and Hydrocarbons Using a Photoacoustic Infrared Spectroscopy Method," SAE Paper No. 921337, 22nd International Conference on Environmental Systems, Seattle, WA, July 13–16, 1992.

Klingele, S.: "ECLS Contamination Monitoring Strategies and Technologies." SAE Paper No. 911464, 21st International Conference on Environmental Systems, San Francisco, CA, July 15–18, 1991.

Leban, Mark I., and Wagner, Phil A.: "Space Station Gaseous Trace Contaminant Load Model." SAE Paper No. 891513, 19th Intersociety Conference on Environmental Systems, San Diego, CA, July 24–27, 1989.

Lienemann, Ken, Spearing, Scott, Heck, Greg, and Perry, Jay: "Response to an Open Cabin Spill of Toxic Materials in the Space Station *Freedom*." SAE Paper No. 891515, 19th Intersociety Conference on Environmental Systems, San Diego, CA, July 24–27, 1989.

Perry, J.L.: "Computerized Atmospheric Trace Contaminant Control Simulation for Manned Spacecraft." NASA TM-108409, June 1993.

Robell, A.J., Arnold, C.R., Wheeler, A., Kersels, G.J., and Merrill, R.P.: "Trace Contaminant Adsorption and Sorbent Regeneration." NASA CR-1582, Lockheed Missiles and Space Company, Inc., Sunnyvale, CA, September 1970.

Schulz, Jon R.: "The Challenge of Internal Contamination in Spacecraft, Stations, and Planetary Bases." SAE Paper No. 891512, 19th Intersociety Conference on Environmental Systems, San Diego, CA, July 24–27, 1989.

Water Recovery

Budininkas, P.: "Four-Man Rated Dual Catalyst System for the Recovery of Water from Urine." NASA CR-152227, Final Report, Ames Research Center, November 1978.

Budininkas, P., Rasouli, F., and Rabadi, N.: "Development of a Condenser for the Dual Catalyst Water Recovery System." NASA CR-166487, Final Report, Ames Research Center, March 1983.

Budininkas, P., and Rasouli, F.: "Catalytic Distillation Water Recovery Subsystem." NASA CR-177382, Final Report, Ames Research Center, September 1985.

Budininkas, P., Quattrone, P., and Leban, M.: "Water Recovery by Catalytic Treatment of Urine Vapor." ASME Paper No. 80-ENAs-16, 10th Intersociety Conference on Environmental Systems, San Diego, CA, July 14–17, 1980.

Colombo, Gerald V., and Sauer, Richard L.: "Review of Water Disinfection Techniques." SAE Paper No. 871488, 17th Intersociety Conference on Environmental Systems, Seattle, WA, July 13–15, 1987.

Dean, W.C.: "Zero Gravity Phase Separator Technologies—Past, Present, Future." SAE Paper No. 921160, 22nd International Conference on Environmental Systems, Seattle, WA, July 13–16, 1992.

Flynn, Michael, Amo, Carl, Fisher, John, and Hightower, Mark: "Water Reclamation Technologies for Future Long Range Missions." SAE Paper No. 921351, 22nd International Conference on Environmental Systems, Seattle, WA, July 13–16, 1992.

Hitchens, G. Duncan, et al.: "Electrooxidation of Organics in Waste Waters." SAE Paper No. 901312, 20th International Conference on Environmental Systems, Williamsburg, VA, July 9–12, 1990.

Holland, Peter J., et al.: "Recovering Potable Water from Wastewater in Space Platforms by Lypophilization." SAE Paper No. 921323, 22nd International Conference on Environmental Systems, Seattle, WA, July 13–16, 1992.

Janik, Scott: "Biologically Reclaiming Water." SAE Paper No. 921124, 22nd International Conference on Environmental Systems, Seattle, WA, July 13–16, 1992.

Macler, Bruce A., Janik, Daniel S., and Benson, Brian L.: "Quality Assessment of Plant Transpiration Water." SAE Paper No. 901230, 20th International Conference on Environmental Systems, Williamsburg, VA, July 9–12, 1990.

Mitani, Kenji, et. al.: "Water Recycling Systems for CELSS Environment in Space." SAE Paper No. 901208, 20th International Conference on Environmental Systems, Williamsburg, VA, July 9–12, 1990.

Rogers, Tom D., et al.: "Water Purification, Microbiological Control, Sterilization and Organic Waste Decomposition Using an Electrochemical Advanced Ozonation Process." SAE Paper No.

921234, 22nd International Conference on Environmental Systems, Seattle, WA, July 13–16, 1992.

Schulz, J., et al.: "Contaminant Distribution in Water Recycle Systems." SAE Paper No. 921360, 22nd International Conference on Environmental Systems, Seattle, WA, July 13–16, 1992.

Willis, Charles E., and Schultz, John R.: "Spacecraft Water System Disinfection Technology: Past, Present, and Future Needs." SAE Paper No. 871487, 17th Intersociety Conference on Environmental Systems, Seattle, WA, July 13–15, 1987.

Water Quality Monitoring

Niu, William, et al.: "Water Quality Monitor Subassembly." SAE Paper No. 901426, 20th International Conference on Environmental Systems, Williamsburg, VA, July 9–12, 1990.

Schweickert, Randolph W., and Karr, Sandra E.: "Technical Review: Comparison of IC and CZE for Monitoring Ionic Water Contaminants." SAE Paper No. 911438, 21st International Conference on Environmental Systems, San Francisco, CA, July 15–18, 1991.

Smith, Damon S., Meir, M.P., and Howard, J.A., Jr.: "The Optical Water Quality Analyzer (OWQA) for the Crew Health Care System of Space Station *Freedom*." SAE Paper No. 911433, 21st International Conference on Environmental Systems, San Francisco, CA, July 15–18, 1991.

Thomas, Richard G.: "Review of National Research Council Reclaimed Water Quality and Monitoring Requirements Workshop." SAE Paper No. 901350, 20th International Conference on Environmental Systems, Williamsburg, VA, July 9–12, 1990.

"Spacecraft Water Quality: Maintenance and Monitoring," SAE International, SP-874, July 1991.

Fire Detection and Suppression

Bukowski, R.W.: "Techniques for Fire Detection." Spacecraft Fire Safety, Proceedings of a Workshop at NASA/LeRC, NASA Publication 2476, August 20–21, 1986.

Friedman, R., and Sacksteder, K.R.: "Fire Behavior and Risk Analysis in Spacecraft." NASA/LeRC, TM 100944, 1988.

Sacksteder, K.: "Microgravity Combustion Fundamentals." Spacecraft Fire Safety, Proceedings of a Workshop at NASA/LeRC, NASA Publication 2476, August 20–21, 1986.

Shaft, Carolyn: "Environmental Contingency Operations: Fire Scenario." SAE Paper No. 921411, 22nd International Conference on Environmental Systems, Seattle WA, July 13–16, 1992.

Thomas, Emory: "Fire Detection Problems in Microgravity—Fact or Fiction." SAE Paper No. 901215, 20th International Conference on Environmental Systems, Williamsburg, VA, July 9–12, 1990.

Temperature and Humidity Control

Allums, Steve L., Hastings, Leon J., and Ralston, James T.: "Experimental Evaluation of the *Skylab* Orbital Workshop Ventilation System Concept." MSFC, NASA TM X-64700, March 1972.

Beverly, William D., Dandridge, R.E., and Proden, R.D.: "A Preliminary Heat Flow Analysis for the U.S. Laboratory and Habitation Modules." SAE Paper No. 891460, 19th Intersociety Conference on Environmental Systems, San Diego, CA, July 24–27, 1989.

Lomax, Curtis: "Fusible Heat Sink Materials: An Evaluation of Alternatives." SAE Paper No. 911345, 21st International Conference on Environmental Systems, San Francisco, CA, July 15–18, 1991.

Martin, Charles E., and McCormick, Arthur K. III: "Air Handling and Atmosphere Conditioning Systems for Manned Spacecraft: A Design and Performance Data Survey." SAE Paper No. 921350, 22nd International Conference on Environmental Systems, Seattle, WA, July 13–16, 1992.

"MSFC *Skylab* Thermal and Environmental Control System Mission Evaluation," *Skylab* Program Office, MSFC, NASA TM X-64822, June 1974.

Poulin, Elizabeth C, and Horan, D. Clay: "High Conductance Thermal Interface Concept for Space Applications." SAE Paper No. 911340, 21st International Conference on Environmental Systems, San Francisco, CA, July 15–18, 1991.

"Temperature Control Systems for Space Vehicles," AiResearch Manufacturing Company, Air Force Contract AF 33(6 6)-8323, Wright-Patterson Air Force Base, OH, ASD-TDR-62-493, 1962.

"Thermal Control and Life Support Subsystems: Parametric Data for Space Station," Hamilton Standard, NASA/JSC Contract NAS9-14782, March 1977.

Thurman, Randall L., and McCall, Frank C.: "Design and Control of Space Station *Freedom* U. S. Laboratory Active Thermal Control System." SAE Paper No. 921109, 22nd International Conference on Environmental Systems, Seattle, WA, July 13–16, 1992.

Webb, Brent J.: "Advanced Thermal Management Systems for Lunar and Mars Mission Needs." SAE Paper No. 921363, 22nd International Conference on Environmental Systems, Seattle, WA, July 13–16, 1992.

Waste Management

"Waste Collection System Workbook," WCS 2102B, JSC, March 2, 1984.

"MSFC *Skylab* Mission Report—Saturn Workshop," TM X-64814, MSFC, October 1974.

"*Skylab* Program Operational Data Book, Volume IV, *Skylab*-I Performance Data, Revision A," MSC-01549, JSC, October 1972.

"Improved Orbiter Waste Collection System Study—Final Report," MDC H1360, McDonnell-Douglas Astronautics Co., NASA/JSC Contract NAS9-17181, NASA CR-171803, November 16, 1984.

Bockris, John O'M., Kaba, Lamine, and Hitchens, G. Duncan: "Electrochemical Incineration of Solid Waste." SAE Paper No. 891510, 19th Intersociety Conference on Environmental Systems, San Diego, CA, July 24–27, 1989.

Dietrich, M.J., Randall, T.L., and Canney, P.J.: "Wet Air Oxidation of Hazardous Organics in Wastewater." Environmental Progress, vol. 4, No. 3, August 1985.

Hall, John B., and Brewer, Dana: "Supercritical Water Oxidation: Concept Analysis for Evolutionary Space Station Application." SAE Paper No. 860993, 16th Intersociety Conference on Environmental Systems, San Diego, CA, July 14–16, 1986.

Holtzapple, Mark, and Little, Frank: "Comparison of Waste Combustion and Waste Electrolysis Systems Analysis." SAE Paper No. 891485, 19th Intersociety Conference on Environmental Systems, San Diego, CA, July 24–27, 1989.

Hong, Glenn T., Fowler, Patrick K., Killilea, William R., and Swallow, Kathleen C.: "Supercritical Water Oxidation: Treatment of Human Waste and System Configuration Tradeoff Study." SAE Paper No. 871444, 17th Intersociety Conference on Environmental Systems, Seattle, WA, July 13–15, 1987.

Lambe, Christopher A., et al.: "Waste Processing Aboard Manned Spacecraft." SAE Paper No. 891550, 19th Intersociety Conference on Environmental Systems, San Diego, CA, July 24–27, 1989.

Oleson, M., Slavin, T., Liening, F., and Olson, R.L.: "Controlled Ecological Life Support Systems (CELSS) Physicochemical Waste Management Systems Evaluation." Boeing Aerospace Company, NASA CR-177422,

Rethke, D.W., and Steele, J.W.: "Collection and Containment of Solid Human Waste for Space Station." SAE Paper No. 901393, 20th International Conference on Environmental Systems, Williamsburg, VA, July 9–12, 1990.

Shular, M.L.: "Waste Treatment Options for Use in Closed Systems." Paper No. 79-1409, Fourth Princeton/AIAA Conference on Space Manufacturing Facilities, May 14–17, 1979.

Suatsuga, Yasushi, Oguchi, Mitauo, and Nitta, Keiji: "A Survey of Catalysts for Wet-Oxidation Waste Management Process." SAE Paper No. 921401, 22nd International Conference on Environmental Systems, Seattle, WA, July 13–16, 1992.

Webley, Paul A., et al.: "Oxidation Kinetics of Model Compounds of Metabolic Waste in Supercritical Water." SAE Paper No. 901333, 20th International Conference on Environmental Systems, Williamsburg, VA, July 9–12, 1990.

Wydeven, Theodore, and Golub, Morton A.: "Generation Rates and Chemical Compositions of Waste Streams in a Typical Crewed Space Habitat." NASA Technical Memorandum 102799, August 1990.

Wydeven, Theodore, and Golub, Morton A.: "Waste Streams in a Typical Crewed Space Habitat: An Update." Draft NASA Technical Memorandum, August 1991.

Atmosphere Control and Supply

Casserly, D.M., and Russo, Dane: "Identifying Atmospheric Monitoring Needs for Space Station *Freedom*." SAE Paper No. 901383, 20th International Conference on Environmental Systems, Williamsburg, VA, July 9–12, 1990.

Hertel, Robert H., and Heppner, Richard A.: "Leak Detection for Space Station *Freedom* Lines." SAE Paper No. 891448, 19th Intersociety Conference on Environmental Systems, San Diego, CA, July 24–27, 1989.

Rogers, Katie: "Environmental Contingency Operations: Loss of Pressure Scenario." SAE Paper No. 921412, 22nd International Conference on Environmental Systems, Seattle, WA, July 13–16, 1992.

Rotheram, Mary A.: "Atmospheric Composition Monitor Assembly for Space Station *Freedom* Environmental Control and Life Support System." SAE Paper No. 891451, 19th Intersociety Conference on Environmental Systems, San Diego, CA, July 24–27, 1989.

Other ECLS Functions

Barinaga, Marcia: "Acoustic Fridge Takes to Space." Science, vol. 255, February 14, 1992. p. 534.

Castles, Stephen H., and Schein, Michael E.: "Development of a Space Qualified Surface Tension Confined Liquid Cryogen Cooler (STCLCC)." NASA/GSFC, undated.

Garrett, Steven L., and Hofler, Thomas J.: "Thermoacoustic Refrigeration." Technology 2001: The Second National Technology Transfer Conference and Exposition, San Jose, CA, NASA Conference Publication xxxx, December 5, 1991.

Henderson, Breck W.: "U.S. Industry Close to Producing Long-Life Space Cooling System." Aviation Week and Space Technology, April 6, 1992, p. 41–43.

James, David G.: "Space Station *Freedom* Airlock Depress/Repress Systems Design and Performance." SAE Paper No. 921378, 22nd International Conference on Environmental Systems, Seattle, WA, July 13–16, 1992.

Nealy, John E., Wilson, John W., and Townsend, Lawrence W.: "Preliminary Analyses of Space Radiation Protection for Lunar Base Surface Systems." SAE Paper No. 891487, 19th Intersociety Conference on Environmental Systems, San Diego, CA, July 24–27, 1989.

O'Conner, Leo: "Stirling Machines: Automotive Applications May Take a Back Seat To Household Chores." Mechanical Engineering, June 1992, p. 75–79.

Pilmanis, Andrew A.: "Hyperbaric Oxygen Therapy for Decompression Accidents—Potential Applications to Space Station Operation." SAE Paper No. 860927, 16th Intersociety Conference on Environmental Systems, San Diego, CA, July 14–16, 1986.

Swift, G. W.: "Thermoacoustic Engines." J. Acoust. Soc. Am., 84(4), 1988, pp. 1145–1180.

Townsend, L.W., Wilson, J.W., Shinn, Judy L., Neely, J.E., and Simonsen, Lisa C.: "Radiation Protection Provided by a Proposed Magnetic Shielding Concept for a Manned Mars Mission." SAE Paper No. 901343, 20th International Conference on Environmental Systems, Williamsburg, VA, July 9–12, 1990.

Vogt, Lorenz, Wenzel, Jurgen, and Svensson, Bengt: "Decompression Sickness Risks for European EVA." SAE Paper No. 891546, 19th Intersociety Conference on Environmental Systems, San Diego, CA, July 24–27, 1989.

Walker, G.: "Stirling Engines." Clarendon Press, Oxford, 1980.

Webb, James T., and Pilmanis. Andrew A.: "Pressure Thresholds for Subatmospheric Decompression Sickness and Venous Gas Bubbling." SAE Paper No. 911332, 21st International Conference on Environmental Systems, San Francisco, CA, July 15–18, 1991.

Wheatley, John C., Swift, Gregory W., and Migliori, Albert: "The Natural Heat Engine." Los Alamos Science, No. 14, Fall 1986.

Wurm, Jaroslav, Kinast, John A., Roose, Thomas R., and Staats, William R.: "Stirling and Vuilleumier Heat Pumps—Design and Applications." McGraw-Hill, Inc, New York, NY, 1991.

ECLSS Instrumentation and Automation

"Environmental Control and Life Support System Advanced Automation Project," 1990 Annual Report, Boeing Computer Services, Artificial Intelligence Center, NASA/MSFC Contract No. NAS8-37200, November 30, 1990.

Bao, Jinjun, Diamant, Bryce L., Wieland, Paul, and Humphries, William R.: "ECLSS Instrumentation Technology Development for the Space Exploration Initiative." SAE Paper No. 911358, 21st International Conference on Environmental Systems, San Francisco, CA, July 15–18, 1991.

Dewberry, B.S.: "Automation of the Environmental Control and Life Support System." NASA/MSFC, Technical Report, 1990.

Dewberry, B.S.: "Space Station *Freedom* ECLSS - A Step Toward Autonomous Regenerative Life Support Systems." NASA/MSFC, Technical Report, 1990.

Heppner, Dennis B., Khoury, Jim M., and Powell, Jim D.: "Control/Monitor Instrumentation for Environmental Control and Life Support Systems Aboard the Space Station." SAE Paper No. 861007, 16th Intersociety Conference on Environmental Systems, San Diego, CA, July 14–16, 1986.

Miller, Kellie, and Williams, George P.W., Jr.: "Model-Based Reasoning in SSF ECLSS." SAE Paper No. 921218, 22nd International Conference on Environmental Systems, Seattle, WA, July 13–16, 1992.

Overton, Edward B., Sherman, Robert W., Steele, Charles F., and Dharmasena, Hettihe P.: "Analytical Capabilities of a Micro-Chip Gas Chromatograph-Based Instrument for the Analysis of Volatile Organic Compounds." SAE Paper No. 891597, 19th Intersociety Conference on Environmental Systems, San Diego, CA, July 24–27, 1989.

Schlager, Kenneth J.: "On-Line Monitoring of Water Quality and Plant Nutrients in Space Applications Based on Photodiode Array Spectrometry." SAE Paper No. 911361, 21st International Conference on Environmental Systems, San Francisco, CA, July 15–18, 1991.

Schlager, Kenneth J.: "On-line Fluorometric Microbiological Analysis for Life Support Systems." SAE Paper No. 921174, 22nd International Conference on Environmental Systems, Seattle, WA, July 13–16, 1992.

Schwartzkopf, Steven H.: "Prioritizing Automation and Robotics Applications in Life Support System Design." SAE Paper No. 911398, 21st International Conference on Environmental Systems, San Francisco, CA, July 15–18, 1991.

Throop, David R.: "Knowledge Representation Requirements for Model Sharing Between Model Based Diagnosis, Sensor Placement, and Simulation in Process Flow Domains." SAE Paper No. 921219, 22nd International Conference on Environmental Systems, Seattle, WA, July 13–16, 1992.

Voecks, Gerald E., and Seshan, P.K.: "Real-time, In-situ Sensors and Controls for Life Support Operations." SAE Paper No. 911356, 21st International Conference on Environmental Systems, San Francisco, CA, July 15–18, 1991.

U.S.S.R./Russian Space Program

"A Permanently Operating, Manned Modular Orbital Complex of the Mir Type. Users Handbook," NASA Technical Translation, NASA TT-20468, Washington, DC, February 1989.

"First Soviet Shuttle Orbiter Grounded from Future Flights," Aviation Week & Space Technology, March 12, 1990, p. 20.

"Fuel, Sensors Limit Soyuz Maneuvering," Aviation Week and Space Technology, January 28, 1974, p. 36–41.

"The Spaceship Vostok," Translated by D. Koolbeck, N71-21324, Wright-Patterson AFB, OH, 1970.

"The Soyuz Life Support System," N72-29089, *Aviatsiia i Kosmonavtika,* No. 6, 1972, p. 46–47.

Adamovich, B.A.: "Life Support Systems for Manned Spaceflight." U.S.S.R. Report, Space, No. 9, 1981, JPRS-77488.

Aleksandrov, A.: "Salyut-7." NASA TM-77177, Washington, DC, December 1982.

Arenstein, Seth, ed.: "Soviet Aerospace" (A biweekly newsletter), Potomac, MD, Phillips Publishing, Inc., 1986–1989.

Baker, Wendy: "America In Space." Crescent Books, New York, NY, 1986.

Blagov, V.D.: "Mir—The New Generation Soviet Orbital Station." U.S.S.R. Report, Space, April 22, 1987, JPRS-USP-87-003.

Blaine, J.C.D.: "The End of an Era in Space Exploration. From International Rivalry to International Cooperation." San Diego, CA, American Astronautical Society, 1976.

Bluth, B.J., and Helppie, Martha: "Soviet Space Stations as Analogs" Second edition, report under NASA Grant NAGW-659, Washington, DC, 1987.

Bond, Aleck C., and Faget, Maxime A.: "Technologies of Manned Space Systems." Gordon and Breach, Science Publishers, Inc., New York, NY, 1965.

Ivakhnov, A.: "Life Support Systems Aboard the Soyuz 18–Salyut 4 Flight." NASA Technical Translation, NASA TT F-16500, Washington, DC, August 1975.

Ivakhnov, A.: "The Orbit of Mir." U.S.S.R. Report, Space, April 21, 1986, JPRS-USP-86-004.

Library of Congress, Legislative Reference Service, "Soviet Space Programs: Organization, Plans, Goals, and International Implications," Washington, DC, 1962.

Library of Congress, Congressional Research Service, "Soviet Space Programs, 1966–70," Washington, DC, 1971.

Library of Congress, Congressional Research Service, "Soviet Space Programs, 1976–80," Part 2, Washington, DC, 1984.

Loginov, Sergei N., Associate Professor for the Department of Life Support Systems, College of Cosmonautics, Moscow Aviation Institute, Lecture at the University of Alabama in Huntsville, June 25–27, 1990.

Mandrovsky, Boris: "The Second Man-in-Space Symposium and Problems of Voskhod 2 Life Support Systems." N65-32679, Washington, DC, Library of Congress Aerospace Technology Division Foreign Science Bulletin, vol. 1, No. 8, August 1965.

"Medical and Biological Aspects of Vostok 3 and Vostok 4 Spacecraft," N63-23523, Washington, DC, Library of Congress Aerospace Information Division, 1962.

"Mir Soviet Space Station (Press Release)," NASA Technical Translation TT-20512, Washington, DC, July 1989.

Pochkayev, I., Serebrov, A., and Ulyanov, V.: "Special Feature: The Mir Space Station." U.S.S.R. Space Life Sciences Digest, Issue 10, 1987.

Semyonov, Y.P.: "The Beginning of the Mir Station Active Operation." IAF paper IAF-87-84, 38th Congress of the International Astronautical Federation, Brighton, United Kingdom, October 10–17, 1987.

"U.S.S.R. Space Life Sciences Digest," Issue 13, 1987, p. 32–55.

Volynkin, Yu. M., and Yazdovskiy, V.I.: "The First Manned Space Flights." N63-15658, Translated by the Air Force Systems Command Foreign Technology Division, Wright-Patterson AFB, OH, 1962.

Voronin, G.I., Guenin, A.M., and Fomin, A.G.: "Physiological and Hygienical Evaluation of Life Support Systems of the Vostok and Voskhod Spacecraft." Bjurstedt, Hilding, ed, Proceedings of the Second International Symposium of Basic Environmental Problems of Man in Space, New York, Springer-Verlag, 1967.

Voronin, G.I., Genin, A.M., and Fomin, A.G.: "Physiological-Hygienic Evaluation of the Life Support Systems of the Vostok and Voskhod Spacecraft." N69-32059, In Problems of Space Biology. Volume 7, Washington, DC, Scripta Technica, Inc., May 1969, p. 179–180.

Zaloguyev, S.N. et. al.: "Sanitary and Hygienic Features of Cabin Environment in Salyut-7 Orbital Station." U.S.S.R. Report, Space Biology and Aerospace Medicine, vol. 18, No. 2, May 16, 1984. JPRS-USB-84-004.

Airlock 22
Aircraft ECLSS 98-99
Analogs 160-162
Analysis Methods 64-76,135-139, 168-174,324-326
Analysis Summaries 301-303
Anomalies during testing 149-150
Apollo 12, 104-106
Atmosphere 24
  Composition 7,*184,185*
  Control and Supply 11-13, 211-216,339
  Definition 8
  Monitoring 9,12
  Pressure Control 13
  Revitalization 7-11,36,183, *186*,332-334
Automation 40

Bioregenerative ECLSS 3,33, 159-160,268-277,328-331
BIOS 161
Biosphere 2 161-162
Breakeven 159

Carbon Dioxide 25,275
  Removal/Concentration 8, 192-199
  Reduction 9,199-201
CASE/A 70,73-77,135
CELSS (see Bioregenerative ECLSS)
Centralized vs Distributed 40
Chemical Analyses 151
  During Testing 151-153
  Gas 151
  Surface 152
  Water 151-152
Cold Plates 14
Commonality of Components 39
Computer Models 64-75
  Aspen Plus 68,138
  BETS 68
  CASE/A 70,73-77,135
  CONSUME 66
  ESAP 66
  FLUINT 72,139
  G-189A 70,71-,72
  GMFS 66
  LISSA 66-67,172
  Process Analysis 68-69
  SINDA 85 70,72-73,138
  System Analysis 136
  Trade Study 64-68,168-174
  TRANSCOM 66
  TRASYS 70,76,138
Condensing Heat Exchanger 14,15, 35,222-223
Cost 47-48
  DDT&E 47-48
  Design To Cost 48
  Development 47
  Life Cycle 48
  Operational 47
Critical Items 133
Criticality Ratings 88,*89*

Database 61
Design Process 49-93,62, 135-155,151
Development Phases 50-54
Documentation 54-56,129
  ACD 131
  B1 specification 130,259
  B2 specification 130
  BCD 133
  CEI Spec 55
  Changes to 134
  CIL 91,133
  FCD 132
  FMEA 91,133
  FSSR 133
  ICD 55,132
  IDD 132
  IRD 55
  Mass Properties Reports 134
  MVP 134

PAGE 344 INTENTIONALLY BLANK
PRECEDING PAGE BLANK NOT FILMED

PDRD 131
PID 132
PRD 130
SRD 54,132
SSWRD 55
Verification 55-56
VSRD 55
Dust 11
External 21
Particulates 11
Removal 11

ECLSS 5,33,39-41,323-324
Economies of Scale 29
Equipment Cooling 15,225
EVA/EMU suit 27-29
Expendables 158

Failure Analyses 91,*92*,*93*
Fault Tree 91
Fire 12,19-20,255-262
Cleanup after 20
Detection 19,260-261
Hazards 12
Suppression 19,261-262
Flight Considerations in Design 46-47
Qualification 47
Requirements 46-47
Test 81
Food 20,265-268
Freedom 123-155,322-323

Gemini 104
Gravity 101

Habitats 31,78
Hardware Development 49-93
Maturity 62
Selection 142,168
Standards 45
Verification 78,83
Hazard Analyses 45,88,*90*
Hazardous Gases 44
Heat 13-14
Latent 14
Removal (see Thermal Control)
Sensible 14
Human Tests 80
Humidity 24-25
Control 13,15,219-225,337
Hydrazine 215
Hyperbaric Chamber 22

Information Resources 60-62
In-Situ Resources 166
Instrumentation 39-40,340-341
Integration 35-39,87
Intersystem Synergisms23,41-42

Leak Detection 44
Level of Complexity 179
Logistics 34
Long Duration Tests 111-114

Maintainability 157
"Man-Systems" 27
Mass-loop Closure31-33,158-159
Techniques 32-33
Material Compatibility 87
Medical 46
Requirements 24
Reviews 46
Mercury 102-103
Metabolic Needs 5,*6*
Metric units iv
Microorganisms 11,17,151-153, 160,206-207,273-275,331-332
Mir 119-120
Mission Scenarios 3,162-168, 320-321
Profile 29-31
Requirements 29-35
Monitoring and Control 39-40
MSDS 45
MUA 45

Nitrogen 12,26,215
Nonregenerable ECLSS 33

Organizations and Roles 56-60
Oxygen 25
  Generation and Supply 9, 187-191

Packaging 47,153,*154*,*155*
Payload Requirements 34
Plants 21
  Atmosphere Regeneration 275
  Food 159
  Growth Facility 21,268
  Waste Processing 276
  Water Purification 276
Portable Life Support System 293-298
Program Development 49-60
  Phases 50-54,123,125
Programmatics 123

Quality 23-24

Radiation Protection 21
Refrigerator/Freezer 20-22, 265-268
Reliability 43-44,134,157
Requirements 24-47
  Documents 54-56
  Functional 5
  Medical 24-27
  Mission 29-35
  Safety 42
  Software 86
Reviews *51*,*52*
  Configuration Inspection 53
  Critical Design Review 53
  Design Certification Review 53
  Final Acceptance Review 53
  Flight Readiness Review *51*
  Preliminary Design Review 52
  Program Requirements 52
  System Requirements 50
Rovers (Surface Vehicles)166-168

Safe Haven ,44
Safety 42-44,87-93,133
  Reviews 87
  Requirements 133
Salyut 119,*121*
SCWO 158,250-251
Skylab 114,*115*
"Slurper Bars" 222-224
SMEAT 112
Software Development 83-87
Soyuz 117-118
Spacelab 107-110
Space Shuttle Orbiter 106-107
Specifications 47
Submarine ECLSS 100-101
Synergism (see Intersystem Synergism)
System Requirements 23
  for "Growth" 34
  for Integration 35
Systems Engineering 49

Technology Development 62
Technology Readiness Level 62
Temperature Requirements13,25, 219
  Thermal Control 13,14, 219-225,337
Testing 47,79,81,326-328
  Facilities 45,139-142
  Long duration 111-114
  Requirements 44-46
Tests (Space Station *Freedom* Program) 139-153
  BOST 147
  Concept confirmation 146
  IMV 146
  MOST 147
  Phase 1 144,147-148
  Phase 2 144,148-149

Phase 3 144-145,149
POST 146
Trace Contaminants 25-26
Monitoring and Control 9,11,202-206,334
Trade Studies 64-68,168-174

US Space Habitats 102-114, *281-285*
USSR/Russian Space Habitats 114-121,*286-288*,341-343

Ventilation 15,225
Verification 76
Hardware 78-83
Software 83-87
Voskhod 116
Vostok 116

Waste Management 17, 243-251,337-339
Gaseous Waste 18
Liquid Waste 18
Metabolic Waste 18
Other Solid Waste 18
Requirements 243
Waste Processing 245-251,276
Water 15-17,229-240
Management 15,37-39
Monitoring 17,239-240,336
Quality 17,26
Recovery 15,17,233-239, 276,335-336
Requirements 26,229,*230-232*
Storage 16,223
Waste Water Sources *16*,17,18

REPORT DOCUMENTATION PAGE

Form Approved
OMB No. 0704-0188

Public reporting burden for this collection of information is estimated to average 1 hour per response, including the time for reviewing instructions, searching existing data sources, gathering and maintaining the data needed, and completing and reviewing the collection of information. Send comments regarding this burden estimate or any other aspect of this collection of information, including suggestions for reducing this burden, to Washington Headquarters Services, Directorate for Information Operations and Reports, 1215 Jefferson Davis Highway, Suite 1204, Arlington, VA 22202-4302, and to the Office of Management and Budget, Paperwork Reduction Project (0704-0188), Washington, DC 20503.

1. AGENCY USE ONLY *(Leave blank)*

2. REPORT DATE
January 1994

3. REPORT TYPE AND DATES COVERED
Reference Publication

4. TITLE AND SUBTITLE
Designing for Human Presence in Space: An Introduction to Environmental Control and Life Support Systems

5. FUNDING NUMBERS

6. AUTHOR(S)
Paul Wieland

7. PERFORMING ORGANIZATION NAME(S) AND ADDRESS(ES)
George C. Marshall Space Flight Center
Marshall Space Flight Center, Alabama 35812

8. PERFORMING ORGANIZATION REPORT NUMBER
M-735

9. SPONSORING/MONITORING AGENCY NAME(S) AND ADDRESS(ES)
National Aeronautics and Space Administration
Washington, DC 20546

10. SPONSORING/MONITORING AGENCY REPORT NUMBER
NASA RP-1324

11. SUPPLEMENTARY NOTES
Prepared by Structures and Dynamics Laboratory, Science and Engineering Directorate.

12a. DISTRIBUTION/AVAILABILITY STATEMENT
Unclassified—Unlimited
Subject Category 54

12b. DISTRIBUTION CODE

13. ABSTRACT *(Maximum 200 words)*

Human exploration and utilization of space requires habitats to provide appropriate conditions for working and living. These conditions are provided by environmental control and life support systems (ECLSS) that ensure appropriate atmosphere composition, pressure, and temperature; manage and distribute water; process waste matter; provide fire detection and suppression; and other functions as necessary. The functions that are performed by ECLSS are described and basic information necessary to design an ECLSS is provided. Technical and programmatic aspects of designing and developing ECLSS for space habitats are described including descriptions of technologies, analysis methods, test requirements, program organization, documentation requirements, and the requirements imposed by medical, mission, safety, and system needs. The design and development process is described from initial trade studies through system-level analyses to support operation. ECLSS needs for future space habitats are also described. Extensive listings of references and related works provide sources for more detailed information on each aspect of ECLSS design and development.

14. SUBJECT TERMS
life support, ECLSS, systems design, systems analysis, testing, space habitats, Space Station *Freedom*

15. NUMBER OF PAGES
375

16. PRICE CODE
A16

17. SECURITY CLASSIFICATION OF REPORT
Unclassified

18. SECURITY CLASSIFICATION OF THIS PAGE
Unclassified

19. SECURITY CLASSIFICATION OF ABSTRACT
Unclassified

20. LIMITATION OF ABSTRACT
Unlimited

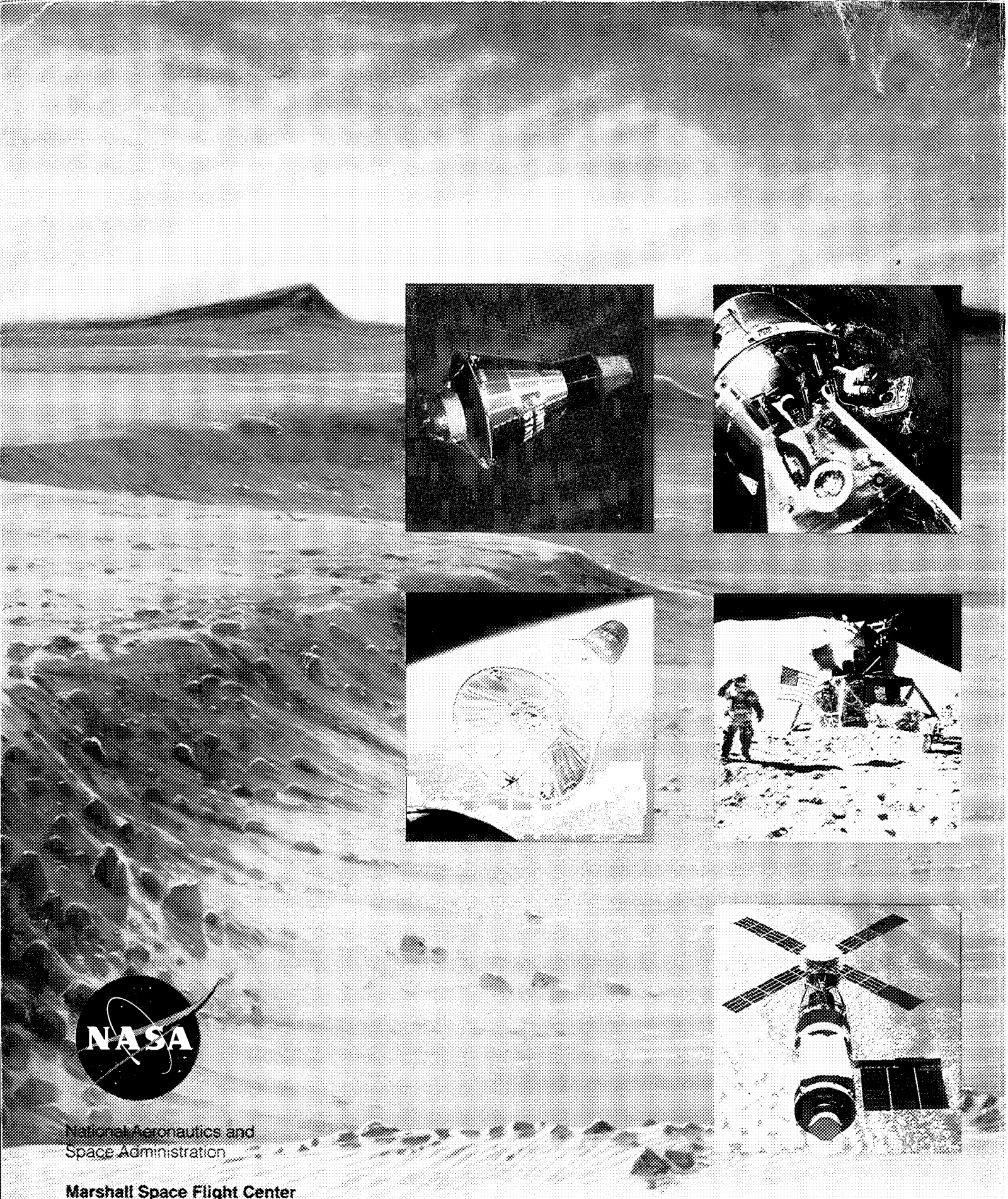

National Aeronautics and
Space Administration

Marshall Space Flight Center
Marshall Space Flight Center, Alabama

RP-1324