NASA
Technical
Memorandum

NASA TM-108441

TECHNICAL ASSESSMENT OF MIR-1 LIFE SUPPORT HARDWARE FOR THE INTERNATIONAL SPACE STATION

(NASA-TM-108441) TECHNICAL ASSESSMENT OF MIR-1 LIFE SUPPORT HARDWARE FOR THE INTERNATIONAL SPACE STATION (NASA. Marshall Space Flight Center) 183 p

N94-31380

Unclas

G3/54 0005429

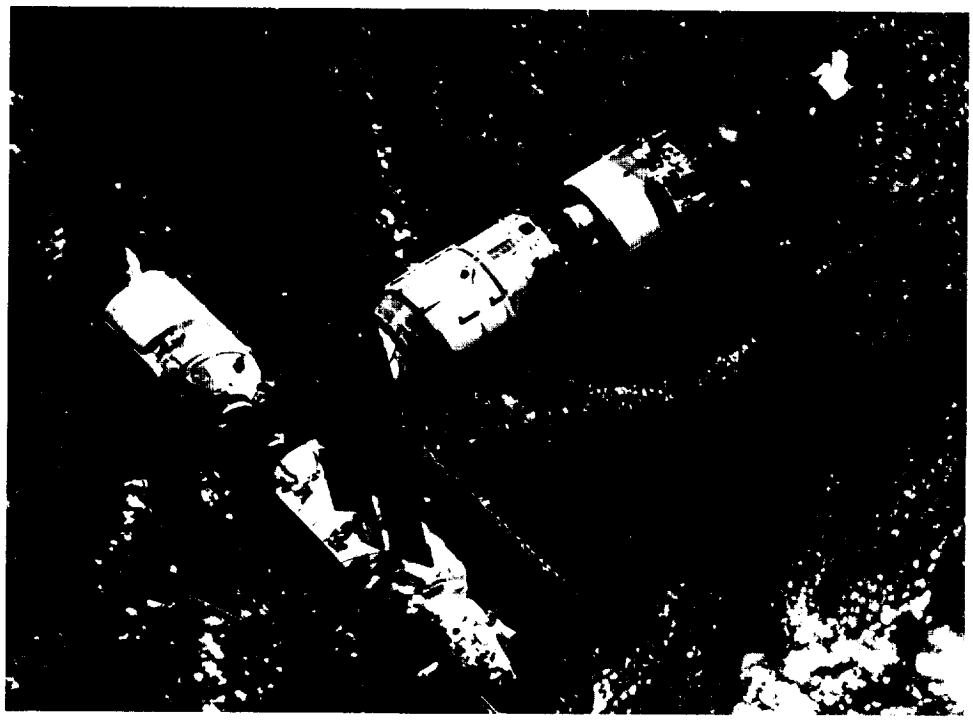

By K. L. Mitchell, R. M. Bagdigian, R. L. Carrasquillo,
D. L. Carter, G. D. Franks, D. W. Holder, Jr., C. F. Hutchens,
K. Y. Ogle, J. L. Perry, and C. D. Ray

Structures and Dynamics Laboratory
Science and Engineering Directorate

March 1994

National Aeronautics and
Space Administration

George C. Marshall Space Flight Center

MSFC - Form 3190 (Rev. May 1983)

ORIGINAL CONTAINS
COLOR ILLUSTRATIONS

NASA
Technical
Memorandum

NASA TM-108441

TECHNICAL ASSESSMENT OF MIR-1 LIFE SUPPORT HARDWARE FOR THE INTERNATIONAL SPACE STATION

By K. L. Mitchell, R. M. Bagdigian, R. L. Carrasquillo,
D. L. Carter, G. D. Franks, D. W. Holder, Jr., C. F. Hutchens,
K. Y. Ogle, J. L. Perry, and C. D. Ray

Structures and Dynamics Laboratory
Science and Engineering Directorate

March 1994

National Aeronautics and
Space Administration

George C. Marshall Space Flight Center

MSFC - Form 3190 (Rev. May 1983)

TABLE OF CONTENTS

1.0 INTRODUCTION 1
2.0 SPACE STATION LIFE SUPPORT SYSTEMS 3
2.1 U.S./Russian Life Support System Comparison 6
2.2 Comparison of Mir-1 and Mir-2 Life Support Systems 12
3.0 MIR-1 LIFE SUPPORT SYSTEMS TECHNICAL ASSESSMENT 18
3.1 Regenerative Life Support Systems 20
3.1.1 Atmosphere Revitalization System 21
3.1.1.1 Carbon Dioxide Removal System 30
3.1.1.2 Trace Contaminant Control System 39
3.1.1.3 Oxygen Generation System 67
3.1.1.4 Carbon Dioxide Reduction 80
3.1.2 Water Reclamation and Management Systems 88
3.1.2.1 Hygiene and Condensate Water Processors 108
3.1.2.2 Urine Processing System 140
3.2 Non-Regenerative Life Support Systems 155
3.2.1 Atmosphere Control and Supply 155
3.2.1.1 Atmosphere Monitoring 155
3.2.1.2 Oxygen/Nitrogen Storage 156
3.2.1.3 Total Pressure Control and Relief 157
3.2.1.4 Oxygen Partial Pressure Control 158
3.2.1.5 Extra-Vehicular Mobility Unit Support 158
3.2.2 Temperature and Humidity Control 160
3.2.2.1 Crew Comfort Requirements 160
3.2.2.2 Equipment Air Cooling 161
3.2.2.3 Refrigerators and Freezers 162
3.2.2.4 Intermodule Ventilation 163
3.2.3 Fire Detection and Suppression 164
3.2.3.1 Fire Detection 164
3.2.3.2 Fire Suppression 164
3.2.4 Waste Management 166
3.2.4.1 Fecal Collection and Storage 166
3.2.4.2 Urine Collection and Storage 167
4.0 SUMMARY 170

PRECEDING PAGE BLANK NOT FILMED

LIST OF FIGURES

2-1 Current Mir-1 Life Support 5
2-2 Space Station Noise Criteria 9
2-3 Mir-2 Planned Russian Life Support 11
2-4 Mir-1 Space Station Functional Schematic 15
2-5 U.S./Russian Space Station Schematic-Mir-2 16
2-6 U.S/Russian Space Station Schematic-Alpha 17
3-1 Overall Mir-1 Life Support Mass Balance 19
3-2 Mir-1 Atmosphere Revitalization System Schematic 23
3-3 U.S. Alpha Atmosphere Revitalization System Schematic 26
3-4 Mir-1 Carbon Dioxide Removal System Schematic 32
3-5 U.S. Carbon Dioxide Removal System Schematic 35
3-6 Mir-1 Microimpurity Adsorption Device Schematic 49
3-7 Photograph of Trace Contaminant Control Hardware Components 50
3-8 Expendable Charcoal Bed Dimensions (Radial Flow) 51
3-9 Regenerable Charcoal Bed Dimensions (Axial Flow) 51
3-10 Catalyst Bed Dimensions (Radial Flow) 51
3-11 Baseline Trace Contaminant Control Subassembly Process Flow Diagram 56
3-12 Cabin Toxic Hazard Index using Russian Contamination Control Hardware 62
3-13 Cabin Toxic Hazard Index using U.S. Alpha Space Station Contamination Control Hardware 63
3-14 Photograph of Mir-1 Oxygen Generation System 72
3-15 Mir-1 Electrolysis System Schematic 73
3-16 Photograph of U.S. Electrolyzer 74
3-17 Static Feed Electrolyzer 75
3-18 Crew Oxygen Requirement vs. Electrolysis Power on Mir 79
3-19 Mir-1 Carbon Dioxide Reduction System Schematic 82
3-20 U.S. Carbon Dioxide Reduction System Schematic 84
3-21 Mir-1 Water Systems 88
3-22 Comparison of Crew Member Water Balance 96
3-23 U.S. Space Station Water Balance-Basic Case 98
3-24 U.S. Space Station Water Balance-Extravehicular Activity Case 102
3-25 U.S. Space Station Water Balance-Animal Support Case 103
3-26 U.S. Space Station Water Balance-Oxygen Generation Case 104
3-27 U.S. Space Station Water Balance-Closed Oxygen Loop Case 105
3-28 U.S. Space Station Water Balance-No Laundry Case 106
3-29 Mir-1 Water Balance 107
3-30 Mir-1 Russian Condensate Water Processor Functional Schematic 112
3-31 Photograph of Mir-1 Condensate Water Processor 113
3-32 Russian Hygiene Water Processor Functional Schematic 118
3-33 Photograph of Russian Hygiene Water Processor 119
3-34 Alpha Space Station Water Processor Schematic 123
3-35 Russian Urine Processor Schematic 141
3-36 Photograph of Mir-1 Urine Processor 147
3-37 U.S. Urine Processor Schematic 149
3-38 Mir-1 Waste Management Schematic 168
3-39 U.S. Waste Management Schematic 169

LIST OF TABLES

2-1 Differences in U.S. and Russian Technologies 10
3-1 Mir-1 vs. NASA Atmosphere Design Requirements 29
3-2 U.S./Mir-1 CO_2 Removal System Comparison 36
3-3 Mir-1 CO_2 Removal System Advantages and Disadvantages 38
3-4 Charcoal Bed Life Verification Test Contaminants 46
3-5 Russian Spacecraft Air Quality Standards 47
3-6 Projected Mir-1 Flight Atmospheric Quality 48
3-7 Mir-1 Trace Contaminant Control System vs. NASA Contaminant Control Hardware Fact Sheet 52
3-8 Comparison of Russian and NASA spacecraft Air Quality Standards 61
3-9 Russian Vs. NASA Hardware Performance 64
3-9A Mir-1 Trace Contaminant Control Hardware Advantages and Disadvantages 66
3-10 Summary of Contaminants in Oxygen Produced by the Mir Electrolysis System 68
3-11 Oxygen Generation System Requirements 76
3-12 Alpha/Mir-1 Electrolyzer Comparison 77
3-13 Mir-1 Electrolyzer Advantages and Disadvantages 78
3-14 Russian/U.S. CO_2 Reduction System Comparison 85
3-15 Russian CO_2 Reduction System Advantages and Disadvantages 87
3-16 Comparison of Russian and U.S. Space Station Potable Water Quality Specifications 93
3-17 Comparison of Russian and U.S. Space Station Hygiene Water Quality Specifications 94
3-18 Technical Summary of Comparison Between Russian and Space Station Hardware 124
3-19 Mir-1 Water Processor Advantages/Disadvantages 139
3-20 Urine Condensate Water Quality Requirements Comparison 150
3-21 Comparison of Measured Urine Distillate Water Quality 153
3-22 Comparison of Russian and U.S. Urine Processor Requirements 153
3-23 Mir-1 Urine Processor Advantages and Disadvantages 154
3-24 Mir-1 Temperature and Humidity Control Requirements 160
3-25 Mir-1 Atmosphere Parameter Data 160
4-1 International Space Station Life Support Functions 174

1.0 INTRODUCTION

Over the past twelve months NASA has been progressively learning of the design and performance of the Russian life support systems utilized in their Mir space station. Primary activities were American technical information gathering meetings with the Russians in both the United States and in Russia. The primary Russian institutions represented in these meetings were NPO Energia, NIICHIMMASH, NAUKA, and the Institute for Biomedical Problems. The primary American representation in the various technical meetings consisted of life support representatives from NASA Headquarters, Ames Research Center, Johnson Space Center, Marshall Space Flight Center, Boeing Defense and Space Group, and Hamilton Standard, a division of United Technologies Corp. This report is the compilation of life support systems data obtained and evaluated by NASA/Marshall Space Flight Center in support of the Space Station Transition Team's assessment of cooperation with the Russians in space station activities.

In the fall of 1992, Space Station Freedom's Level I Program manager directed the Space Station Project Management at Marshall Space Flight Center to define and implement a plan of action to assess the benefits of the Mir-1 life support systems to the Freedom program. This activity was integrated with the overall space station redesign activities initiated in the Spring of 1993 and has continued in the transition period of instituting the Alpha or Alpha-prime space station options. The three primary tasks of the Marshall Space Flight Center activity were to:

1. Evaluate the operational Mir-1 life support technologies and understand if a) specific Russian systems could be directly utilized on the American space station and b) determine if Russian technology design information could prove useful in improving the current design of the planned American life support equipment.

2. Evaluate ongoing Russian life support technology development activities to determine areas of potential long-term application to the U. S. space station.

3. Utilize the expertise the Russians have gained with the long term operation of their space station life support systems to evaluate the benefits to the current U. S. space station program. (This particular task included the integration of the

Russian Mir-1 designs with the U. S. designs to support a crew of six .)

A significant contribution was made to this overall activity by Hamilton-Standard under Johnson Space Center NASA contract NAS9-18663 and documented in reference 1. Marshall Space Flight Center made extensive use of the data in this report and verified its information as well as performed comparative analysis of the U. S. designs with our understanding of the Russian designs.

Many individuals have contributed to this report and it is not possible to acknowledge them all. However, special recognition is given to the life support personnel at Boeing led by Mr. Harlan Brose, and to the NASA Level I personnel who coordinated a significant amount of the technical exchange meetings: Mr. Jeff Volosin (Booz-Allen & Hamilton), Mr. Don Gerke (Code D), Ms. Katya Varley (BDM, Russian translator), and Ms. Mary Cleave (Space Station Transition Team Coordinator). Also, the support of Mr. George Hopson and Mr. Dave Mobley (Marshall Space Flight Center Work Package 1 Project Manager and Chief Engineer, respectively) has been invaluable in obtaining permission for these technical exchanges.

The primary Russian individuals who were responsible for giving us insight to the Mir-1 life support designs and performance were Dr. Nikolai Samsonov (Director of NIICHIMMASH), Dr. Eduard Grigorov (Chief of Environmental Control and Life Support System at NPO-Energia), Dr. Evgeniy Zaitsev (Chief Life Support at NPO-Energia), Dr. Igor Tishin (Chief Designer at NAUKA) and Dr. Valery Bogomolov (Institute for Biomedical Problems).

2.0 SPACE STATION LIFE SUPPORT SYSTEMS

The U.S. and Russian space station programs define different functions under the architecture of life support systems. For the purposes of this document, only the life support functions defined under the U.S. space station program will be addressed. These include the six basic areas defined in Figure 2-1. The space station regenerative life support functions are normally associated with atmosphere revitalization and water recovery. The remaining four areas are non-regenerative functions.

The U.S. space station program has been designing for a nominal crew size of 4 during permanent occupancy with growth to a total crew size of 8. The Russian Mir space station has been designed for a nominal crew size of 2 with the ability to continuously support 3. The joint Russian/U.S. space station program being discussed has baselined a crew size of 3 to 6 people permanently on-board the space station.

In the following discussions assessing the Mir-1 life support systems, NASA has compared the Mir-1 designs with the current Alpha space station designs. In addition, the Mir-2 design improvements planned by the Russians are discussed to complete the technical assessment of life support systems planned for space station.

The Russian space program has maintained crews on long duration space flights nearly continuously over the past two decades. As a result, a strong emphasis has been placed on the development of regenerative life support systems. Without this capability, costs associated with resupplying expendables for atmosphere control and water for crew consumption and hygiene functions would have precluded the extensive human presence in space that has been achieved.

The core element of the Mir-1 space station was launched in 1985, and water reclamation systems, including both potable and hygiene water processors, became operational almost immediately. In 1987 a regenerative trace contaminant control system and carbon dioxide removal system were added to the Mir-1 life support designs. These were followed by an oxygen generation system (water electrolysis) in 1989 and urine processor in 1990. Among the current planned technology for regenerative systems, only a carbon dioxide reduction

system has not yet been operated in space. However, the Russians have built and extensively ground tested a flight design which will be utilized on Mir-2.

During the Mir-1 operations the regenerative systems have saved considerable logistics from being shipped to the space station. The recovery of condensate for potable water usage has saved 18 Progress water delivery missions to date. Processing over 2500 kilograms of urine onboard for use in the water electrolysis system to generate oxygen for life support has also significantly reduced logistics for oxygen resupply (savings of over 3,600 kilograms). Even more oxygen savings could have been achieved but due to the limitations of available electrical power for water electrolysis the unit has only been allowed to operate 750 days since 1989.

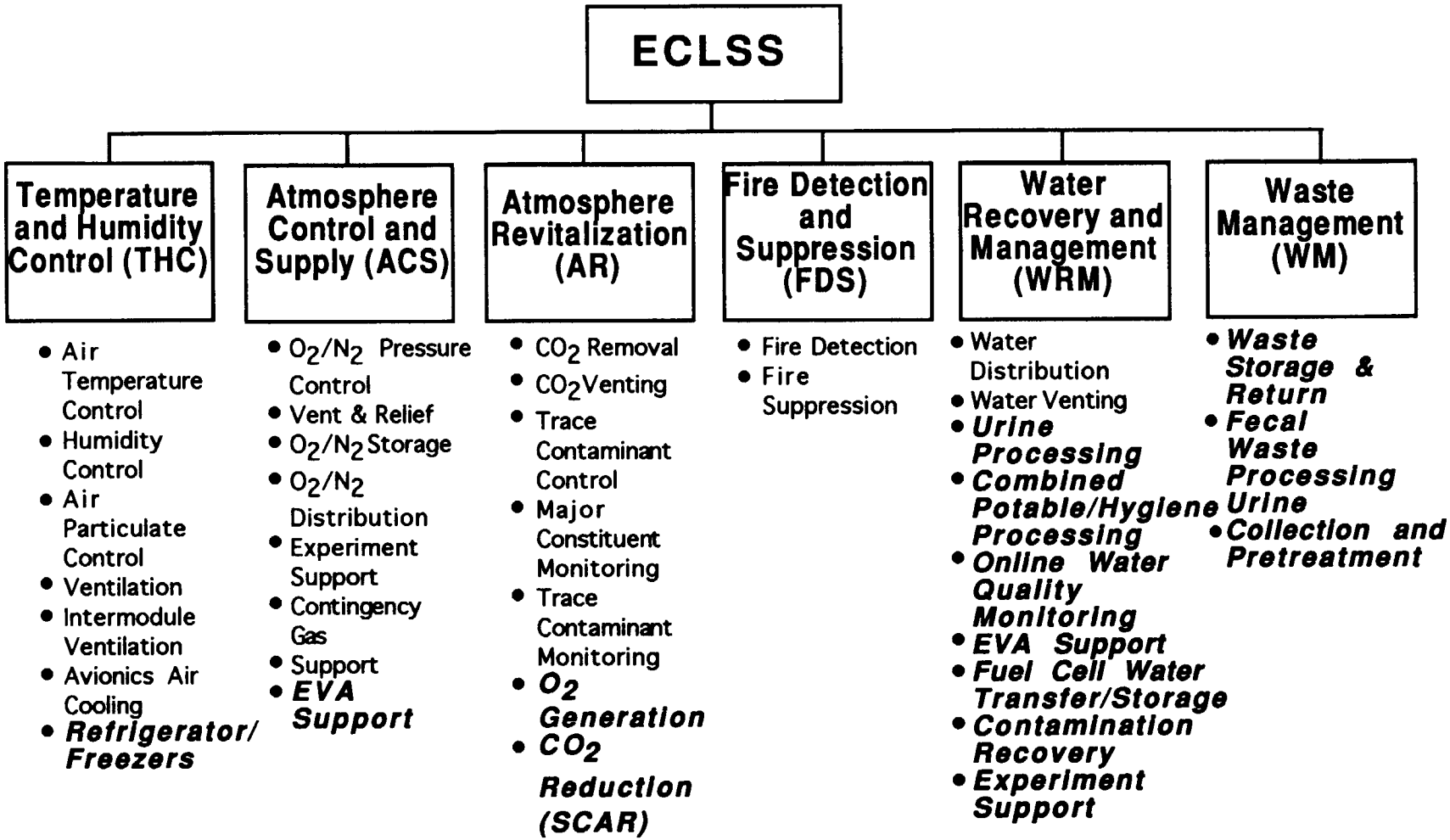

Bold and italicized indicates functions added at Permanently Human Presence, others are available at Human Presence Capability

Figure 2-1 Space Station Alpha Environmental Control and Life Support System (ECLSS) Functions

2.1 U.S./Russian Life Support System Comparison

There are as many areas of differences as there are similarities in the U.S. versus the Russian approach to life support systems on the space station. Major differences can be found in the design requirements (e.g., crew size, air/water quality, noise suppression, etc.), selected technologies, design implementation, and on-orbit measurement requirements.

A comparison of the air and water quality requirements for each program are given in Tables 3-1, 3-16 and 3-17. In general, the Russian requirements for air quality are more stringent than the U.S. design criteria and the opposite is true for the water quality standards. More discussion of the differences in these particular design requirements is given in section 3 (under atmosphere revitalization and water recovery, respectively).

The life support equipment is a primary source of noise on any space station. The U.S. program has required the habitable noise be controlled to the NC-50 criteria illustrated in Figure 2-2. This requires significant noise suppression designs be implemented and ground testing be performed to assure this design criteria is satisfied. The current Mir-1 environment is much noisier than this criteria and is considered unacceptable by the Russian cosmonauts and medical community (up to 75 dB levels experienced during the non-sleep periods).

The major differences in the life support technologies utilized on the U.S. versus the Russian space station are summarized in Table 2-1. The Mir-2 program is planning to upgrade the life support systems with some different technologies than those utilized on Mir-1. These are noted in Figure 2-3 and discussed further in later sections.

The U.S. designs have many more interfaces with computer controllers and data management systems than the current Russian designs which tend to be more manual control than automated.

Basic differences in the implementation of the life support architectures are evident when comparing the Russian and American space stations. A major difference is that Mir-1 has only one module providing the cabin humidity and air temperature control for the entire space station. Drag-through air ducting (intermodule

ventilation) is implemented to get conditioned air from one element to another. The U.S. space station requires that each element provide this function.

The U.S. space station provides avionics air cooling with separate equipment from the cabin air system. Mir-1 provides all equipment cooling with the cabin air system (no cold plates or separate air cooling loop for equipment cooling). The Mir-1 design would put considerable constraints on the allowable heat loads in an element (hence power constraints) to provide both equipment cooling and crew comfort.

The Mir-1 multiple module configuration does not provide any hard plumbing between elements to manage the water systems. Integration of the waste water processors to the waste water sources is done manually by the crew if the equipment is not co-located in the same module. The functional schematic of the Mir-1 modules is shown in the next section and illustrates the Russian integration approach. They strive to keep related functions in the same module. For example, the oxygen generation system (water electrolysis) is located in the same Kvant module as the urine processor (the nominal source for water to be electrolyzed) and the urinal. The potable water processor is located in the core module with the central humidity control system to collect and process the condensate. Also, the basic crew habitability functions such as the galley for food preparation is located next to the potable water system in the core module.

Maintenance of life support systems aboard Mir-1 is routine and takes up a considerable amount of crew time. Components are replaced based on statistical expectation of the failure rate. This reduces on-orbit failures, and as more ground testing is completed and the confidence level in the component is increased, the time between on-orbit replacement of that component is increased. There is a complete life support system operating on the ground at all times which helps troubleshooting and gathering the statistical data.

There is very little on-orbit monitoring of Mir-1 air and water quality when compared to what is planned for the U.S. space station. Some samples are brought to earth for periodic checks (approximately twice a year), but in general, the Russian approach is to prove their hardware performance on the ground before it is

launched. It is believed that the Russians do not have the technology to do the on-orbit air/water quality monitoring planned by the U.S. program. Details of each program's capabilities and experiences are discussed later in this report.

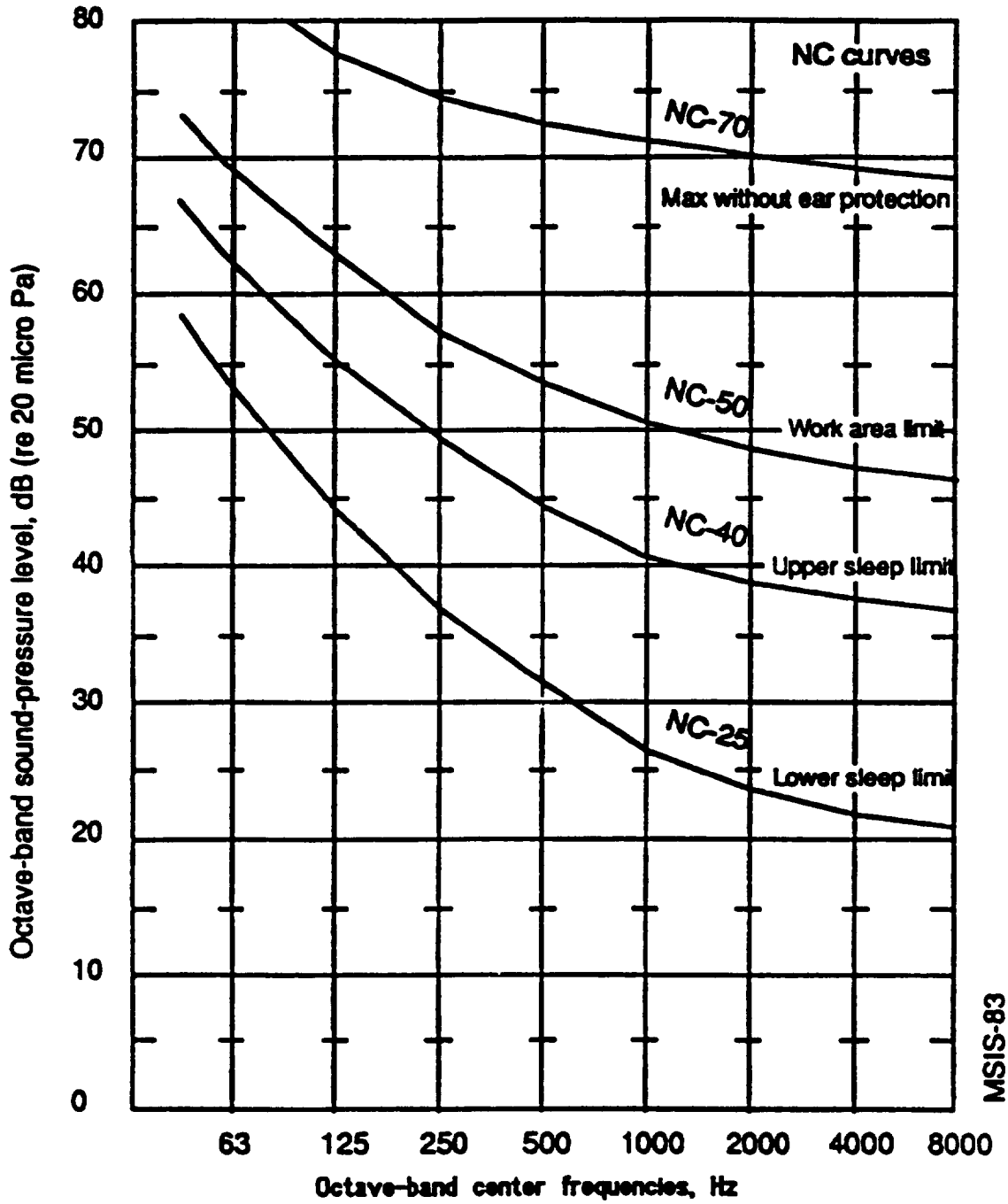

Figure 2-2 Noise Criteria

Table 2-1 Differences in U.S. and Russian Life Support Technologies

	Alpha	Mir-1
CO_2 Removal	Molecular Sieve	Solid Amine
Trace Contaminant Control	Non-regenerable beds; high temp. catalyst	Regenerative beds; low temp. catalyst
Oxygen Generation	Water electrolysis	Water electrolysis
CO_2 Reduction	Sabatier Reactor	Sabatier Reactor (not flown)
Water Processing	One water loop-processed to potable standards using multifiltration	-Two independent water loops-one for humidity condensate, one for hygiene water -Cleaned to different specifications, both using multifiltration
Urine Processing	Vapor Compression Distillation phase change	Wick evaporator - air evaporation
Temperature and Humidity Control	Distributed system	Centralized system
Fire Detection and Suppression	Distributed system	Portable fire extinguishers
Waste Management	Automated storage of fecal waste	Manual storage of fecal waste

Figure 2-3 Mir-2 Planned Russian Life Support

Mir-1	Mir-2	
	Core Module	**Life Support Module**
CO_2 Removal	Same as Mir-1	Molecular Sieve
Trace Contaminant Control	Same as Mir-1	High temperature catalyst with regenerable beds
Oxygen Generation	Same as Mir-1	Upgraded Mir-1
CO_2 Reduction		Same as Mir-1
Water Processing	Same as Mir-1	Same as Mir-1
Urine Processing		Upgraded Mir-1 system
Temperature and Humidity Control	Same as Mir-1	
Fire Detection and Suppression	Same as Mir-1	Same as Mir-1
Waste Management	Same as Mir-1	Same as Mir-1

2.2 Comparison of Mir-1 and Mir-2 Life Support Systems

When a joint NASA/Russian space station program is discussed, confusion sometimes arises because of what is planned for Mir-2 (joint program system) versus what is actually currently flown on Mir-1. Therefore, it is important to understand the differences in life support between the two Russian programs. Figures 2-4,2-5 and 2-6 compare the two Mir space station configurations and layout of life support equipment for each.

It should be noted (prior to discussing the differences) that Mir 2 will incorporate many of the same technologies and module integration approaches (co-located related functions, drag-through ducting, centralized humidity and cabin air temperature control, etc.) as Mir-1. Also, limited on-orbit monitoring of air and water quality is still planned.

The Mir-1 life support system has been designed for a nominal crew size of 2 to 3 people with up to 5 people during crew rotation. The Mir-2 is sized for a nominal crew of 3 to 4 with up to 6 total during crew rotation periods. Expendable equipment is utilized during crew rotation periods for CO_2 removal and oxygen supply since the regenerative systems are sized for nominal crew sizes.

The core module is the initial element launched for both the Mir-1 and Mir-2 space stations. It contains essential life support systems for immediate crew occupancy for long duration missions. Both Mir programs have the centralized humidity and cabin air temperature control function in this module. Mir-1 had a commode/urinal located in the core module but no urine processing capability was implemented until a second commode/urinal was launched in the Kvant-2 with the urine processor. Once the Kvant-2 was on-orbit, the core module commode/urinal became a back-up unit (was not normally utilized when urine processing was implemented). It appears the current Mir-2 program will implement a similar approach for the commode/urinal and urine processor functions to Mir-1. The second commode/urinal will arrive with a urine processor on-board the Mir-2 Service Module (often called the life support module).

No regenerative CO_2 removal system was utilized on the Mir-1 core module. This capability was integrated into the first Kvant module along with a regenerative trace contaminant control system. Mir-2

will integrate both of these regenerative functions into the core module.

The Mir-2 core module is planning to have an oxygen generation system onboard and another one in the service module. The source of water used for electrolysis to generate oxygen will come from the ground because no urine processor is located in the core module for Mir-2. Mir-1 had launched the initial oxygen generator in the first Kvant module and used ground-supplied water for electrolysis. Kvant-2 had a second unit (which became the primary unit) integrated with the urine processor also located in the Kvant-2. The urine processor aboard Mir-2 will include upgraded design features from the Mir-1 unit (a centrifugal evaporator and a thermoelectric heat pump). These design changes should increase the processing rate to handle a larger crew size and reduce the specific energy required to process urine.

All regenerative water systems associated with the crew hygiene functions (handwash and shower) were launched in the Kvant-2 module for Mir-1. Handwash facilities in the core module stored waste water and disposed of it via the Progress module until the Kvant-2 module arrived. A similar approach appears to be planned for the Mir 2 system. The service module will bring the regenerative hygiene water systems as well as a shower and handwash. No laundry system was used on Mir-1 or planned for Mir-2. All required clothing was stored onboard and thrown away after use.

The Russian logic for the planned Mir-2 core module life support equipment is not completely clear to Marshall Space Flight Center. There is a very strong functional relationship between equipment located in the core module and the service module (violates some of the basic Russian philosophy of co-locating related functions in the same module). If there is a significant period of time between when the service module will be delivered to orbit and when permanent crew occupancy is planned on Mir-2, many questions need addressing regarding the planned equipment layout for a joint program.

Mir-2 life support hardware will incorporate more computer control than the Mir-1 hardware. The CO_2 removal system, the trace contaminant removal system and the oxygen generation system will all be controlled from the on-board computer.

A carbon dioxide reduction system is being flown for the first time and will be included on the Mir-2 service module. The addition of this hardware will reduce the amount of water needed for resupply since it will deliver water for drinking and/or for oxygen generation. A description of this hardware is included below.

Also planned for the Mir-2 is a high-pressure oxygen compressor to take the output from the oxygen generator and compress it up to 400 atmospheres to fill the Extravehicular Mobility Unit storage tanks. This will reduce or eliminate the need for high pressure oxygen resupply to support Extra-Vehicular Activities. This compressor will be located in the service module.

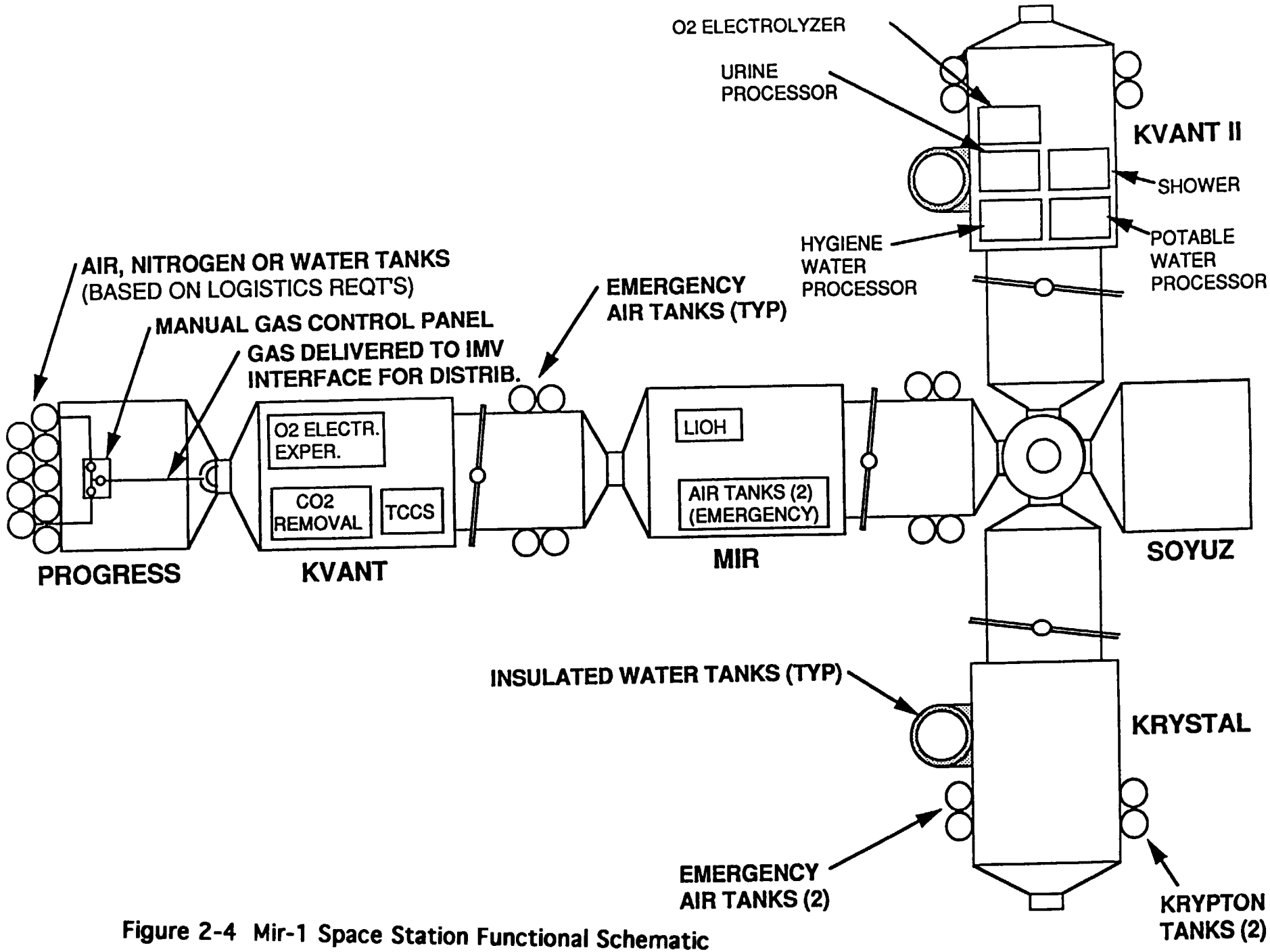

Figure 2-4 Mir-1 Space Station Functional Schematic

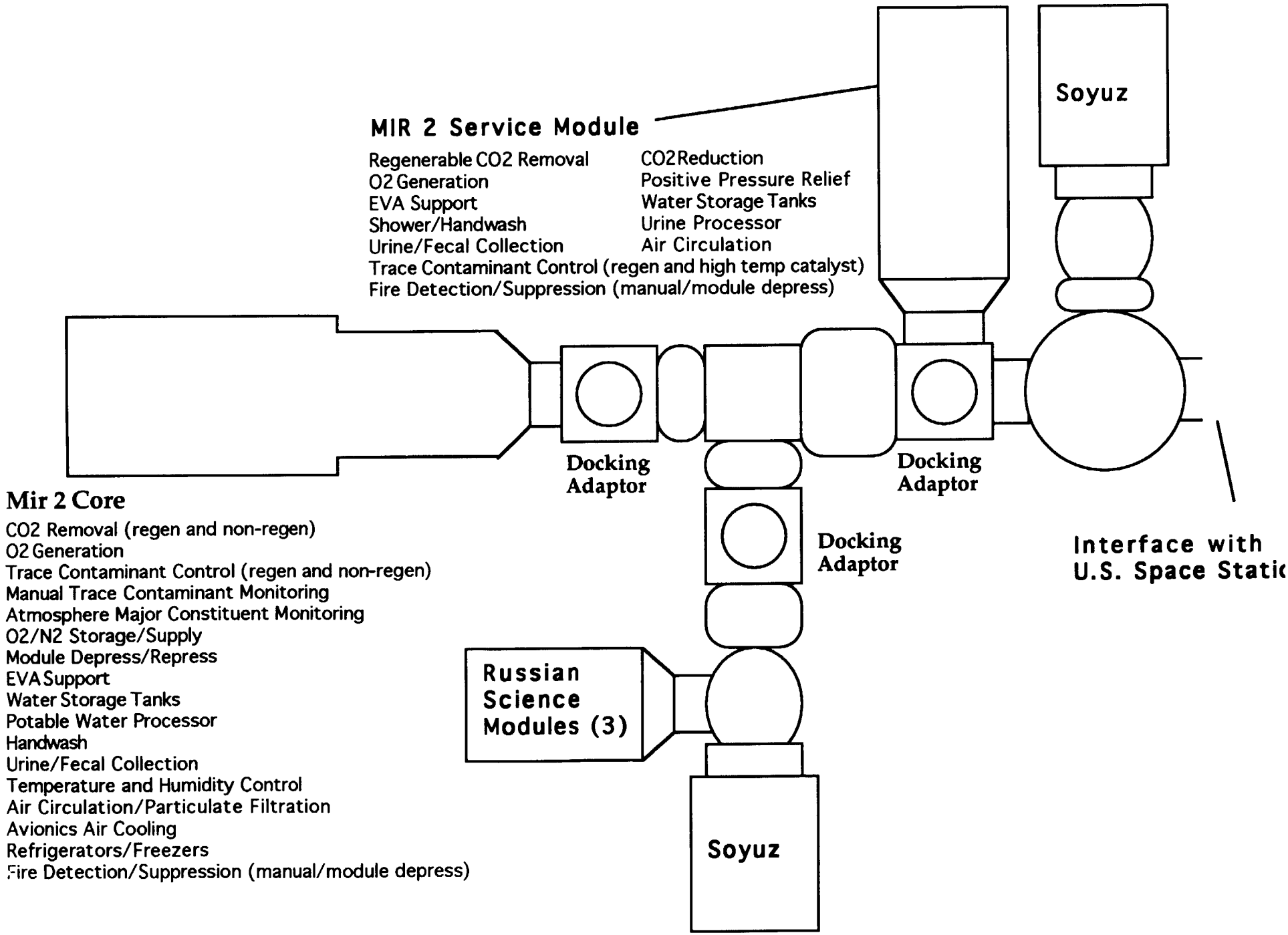

Figure 2-5 U.S./Russian Space Station Schematic-Mir-2

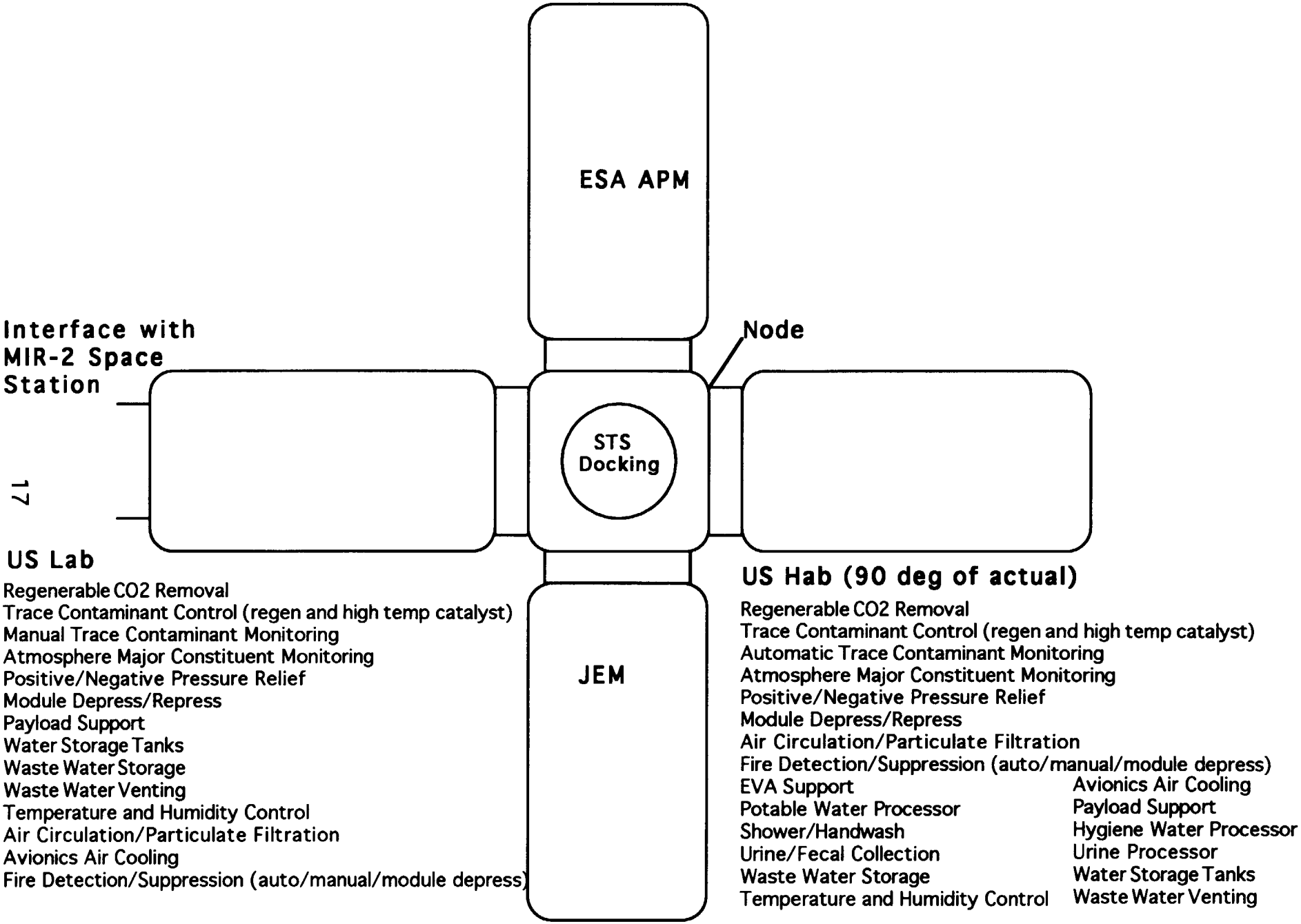

Figure 2-6 U.S./Russian Space Station Schematic-Alpha

3.0 MIR-1 LIFE SUPPORT SYSTEMS TECHNICAL ASSESSMENT

The Mir-1 life support subsystems will be divided into regenerative and non-regenerative subsystems. The regenerative subsystems include air revitalization and water reclamation subsystems. The non-regenerative subsystems include atmosphere pressure control, fire detection and suppression, temperature and humidity control and waste management.

The physical location of the Mir-1 life support equipment was discussed in section 2. The overall mass balance of the various life support consumables is summarized in Figure 3-1 for a three-person crew. This data was first published in reference 1 and verified in MSFC/Boeing meetings with the Russians in July, 1993. Note that a carbon dioxide reduction subsystem is shown in this schematic although none has been flown on Mir-1.

It should be noted that both the U.S. and Russian space stations are designed for nominal operation in a one atmosphere environment (760 mmHg or 14.7 psia). However, the Mir has a design specification for all materials to be compatible with a 40% oxygen concentration whereas the current specification for the U.S. space station will be 23.8% maximum (except for the EVA/Airlock requirements for a 10.2 psia operation which would have a maximum oxygen concentration of 30%). For both space stations the nominal oxygen concentration is expected to be around 21%.

A comparison of Russian versus American atmosphere design requirements is given in Table 3-1. The Mir-1 does not include any requirements for biological specimens and the U. S. station does. A discussion of each air revitalization subsystem on Mir-1 is enclosed and compares specific design requirements with the American space station standards and overall equipment performance.

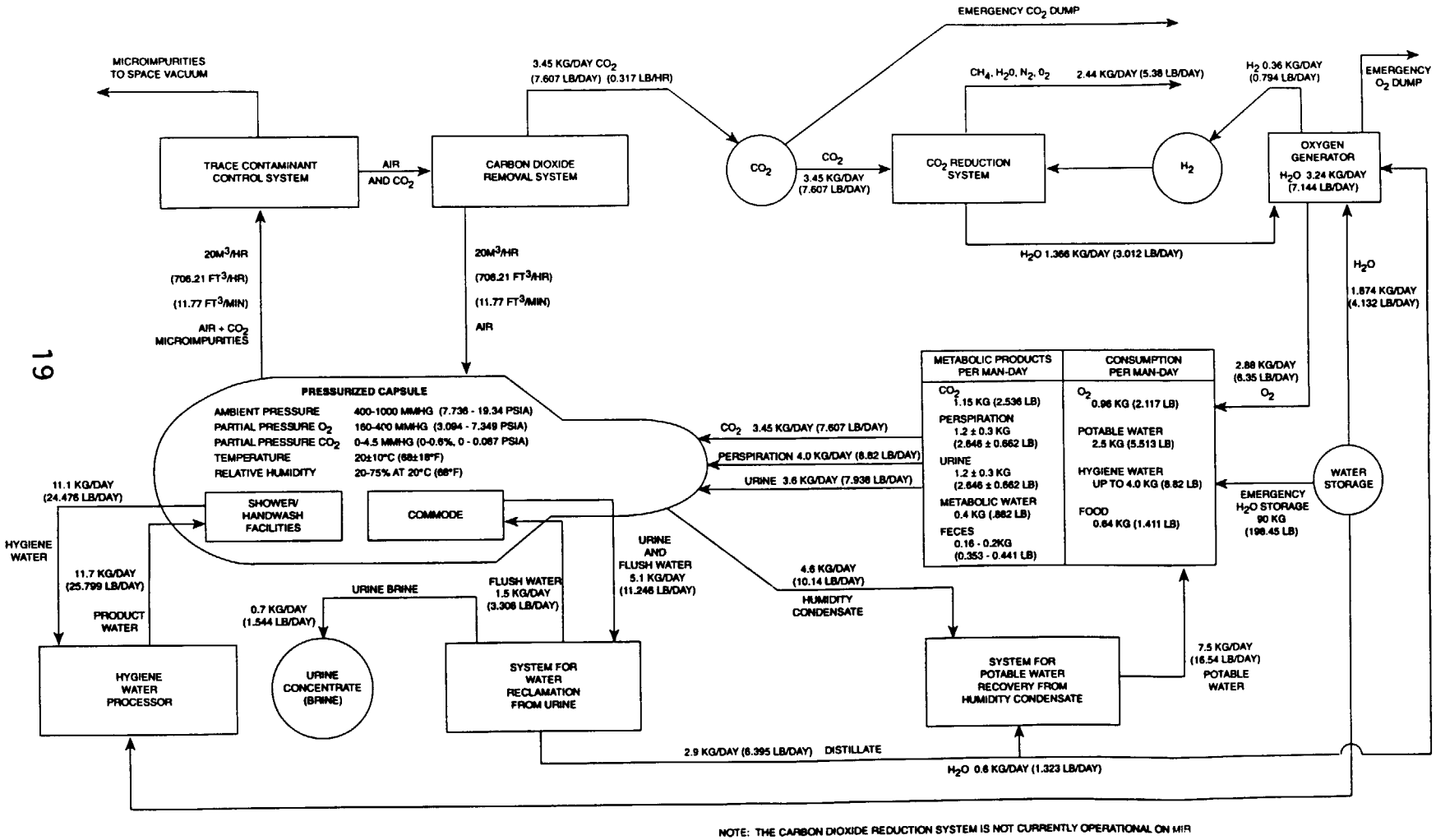

Figure 3-1 Overall Mir-1 Life Support Mass Balance

3.1 Regenerative Life Support Systems

The Mir-1 regenerative life support systems are designed for a three-person crew. Extended space flights have necessitated the development of physical/chemical processes for atmosphere purification, oxygen generation, and water reclamation to minimize resupply requirements.

For example, a three-person crew with regenerative life support systems can save over 13,000 kilograms (28,700 pounds) of resupply weight over one year compared to non-regenerative systems. However, more power is usually required for the regenerative systems.

For the Mir-1, the estimated average power for the regenerative systems is 1,400 watts (nominal 2-person crew). This power represents the total operating power during processing which is not usually required over a 24 hour period and is not necessarily done simultaneously with other regenerative processing. Therefore, the power level is the "worst case" for any specified period of time during the day. Details of each regenerative function are given in the following paragraphs.

3.1.1 Atmosphere Revitalization System

Russian Atmosphere Revitalization System

The Russian Mir-1 Atmosphere Revitalization Subsystems, shown in Figure 3-1, consist of equipment for CO_2 removal, oxygen generation, trace contaminant control, atmosphere monitoring and CO_2 reduction. The CO_2 reduction subsystem is not currently flying on Mir-1, but is planned for Mir-2 to reduce resupply of water to the station. The subsystem is considered flight ready and has been in development testing for over 17,000 hours.

On Mir-1, the CO_2 Removal and Trace Contaminant Control systems are located in the Kvant-1 module along with a backup oxygen generator. The primary oxygen generator is located in the Kvant-2 module so that it can get its feed water from the urine processor. If the backup oxygen generator is used, feedwater must be carried from Kvant-2 to Kvant-1. Since the cabin air cooling system is located in the Mir-1 core module, the CO_2 removal and trace contaminant control systems must take in normal cabin air for processing instead of conditioned air from the cooling system.

Referring to the schematic, cabin air containing carbon dioxide and microimpurities is drawn into the Trace Contaminant Control System at a rate of 20 m^3/hr where contaminants are removed by regenerable charcoal absorption and ambient temperature catalytic oxidation. The contaminants are desorbed to space vacuum during regeneration while the purified process air stream still containing CO_2 flows to the CO_2 Removal System. This system can remove CO_2 at a rate of 3.45 kg/day or the equivalent of 3 crew-member's CO_2 production. CO_2 is desorbed to space vacuum in the current Mir-1 configuration and the purified air is returned to the cabin. When a CO_2 Reduction System is added, the CO_2 will be concentrated and sent to an accumulator for subsequent reduction with hydrogen into methane and water.

The Oxygen Generator is fed urine distillate water and produces enough oxygen for 3 people and hydrogen. The hydrogen is vented in the current configuration, but would be sent to the CO_2 Reduction System in the closed oxygen loop scenario. Also with the closed loop system, the CO_2 reduction product water would be sent back to the oxygen generator as part of its feed water.

The hydrogen to carbon dioxide molar ratio fed to the CO_2 Reduction System would be 2.3:1 for a 3 crew-member system. At this ratio,

not all of the CO_2 would be reacted and the vent would be a combination of unreacted CO_2 and methane. According to the Russian Mir-1 mass balance, the vent would also contain some water vapor (15% of the water produced in the reaction) that for whatever reason would not be separated. The schematic also shows what appears to be a hydrogen storage tank to be used in the closed loop configuration. There has not been any discussion with the Russians to date on the safety implications of this component.

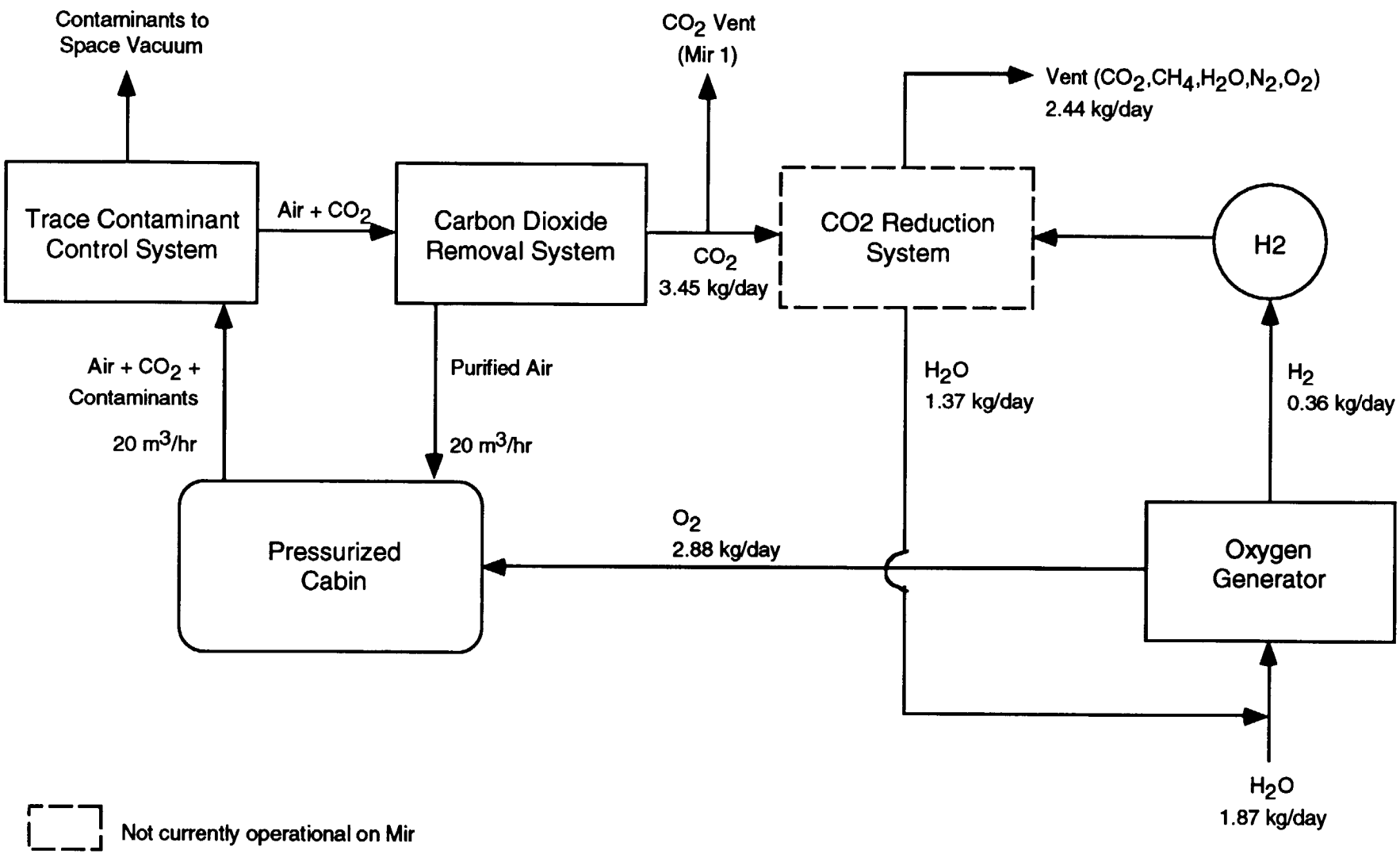

Figure 3-2 Mir-1 Atmosphere Revitalization System Schematic

Overview of U.S. Space Station Atmosphere Revitalization System

Figure 3-3 gives a block diagram of the Atmosphere Revitalization system for the U.S. Alpha space station. The baseline system consists of a Carbon Dioxide Removal Assembly, an Oxygen Generation Assembly, a Trace Contaminant Control Subassembly, and an Atmosphere Composition Monitoring Assembly. Architecturally, atmosphere monitoring is a function of atmosphere revitalization for the U.S. system, but not for Russian systems. Also shown with dotted lines is the hardware associated with carbon dioxide reduction that is to be scarred for in the current Alpha configuration. The Carbon Dioxide Removal Assembly, Trace Contaminant Control Subassembly, and the Major Constituent Analyzer (part of the Atmosphere Composition Monitoring Assembly) have all been through critical design reviews for the Space Station Freedom program. The other assemblies are in various phases of development.

The U. S. Laboratory module and the U. S. Habitation module are the two primary locations for the U. S. atmosphere revitalization equipment. The U.S. Laboratory will contain one atmosphere revitalization rack which will house a CO_2 Removal Assembly, a Trace Contaminant Control Subassembly, and a Major Constituent Analyzer. At the time of this writing, plans for the Alpha version of the U.S. space station call for the U.S. Habitation module to contain atmosphere revitalization equipment in two adjacent racks. One rack will contain another CO_2 Removal Assembly and Trace Contaminant Control Subassembly. The other rack will contain the complete Atmosphere Composition Monitoring Assembly and the Oxygen Generation Assembly.

Processed air from the module Temperature and Humidity Control System condensing heat exchanger is drawn into the inlet of the Carbon Dioxide Removal Assembly. The assembly removes 4 crew member's production of CO_2 in normal mode to support a 5.3 mmHg CO_2 crew member daily average cabin partial pressure requirement, or up to 8 crew member's production of CO_2 in degraded mode to support a 7.6 mmHg daily average requirement.

Removed CO_2 is vented to space vacuum (or sent to the CO_2 Reduction Assembly in the closed loop) while the purified process air is returned to the cabin air return duct upstream of the condensing heat exchanger. Unlike the Russian system which

connects the Trace Contaminant Control Subassembly air stream to the CO_2 Removal System air stream in a serial fashion, the U.S. Trace Contaminant Control Subassembly draws its process air directly from the cabin. Purified air exiting the unit is combined with the return air from the Carbon Dioxide Removal Assembly and sent back to the cabin via the cabin air return duct.

The Russian CO_2 removal system adsorption material is probably susceptible to particular trace contaminant gas poisoning and is protected by their integrated design. The U. S. material is not. Also, for a CO_2 reduction process their design could remove more impurities from the CO_2 gas stream which could poison the catalyst used in the processing.

The Oxygen Generation Assembly receives feed water from the water processor and generates enough oxygen for the needs of the crew and biological specimens, experiment ingestion, and normal atmosphere losses. The resulting hydrogen is either vented or (for oxygen loop closure) combined with the metabolic CO_2 in a Sabatier reactor. The product gas is a combination of unreacted CO_2, methane and a small amount of air from the reactant CO_2. This gas stream is vented to space. Product water from CO_2 reduction is sent to the potable water waste collection tank for processing in the potable water system.

The atmosphere monitor draws samples for analysis from each of the pressurized elements and from three sample ports on the Trace Contaminant Control System. A sample distribution system consisting of sample lines and valves controls the element sampling.

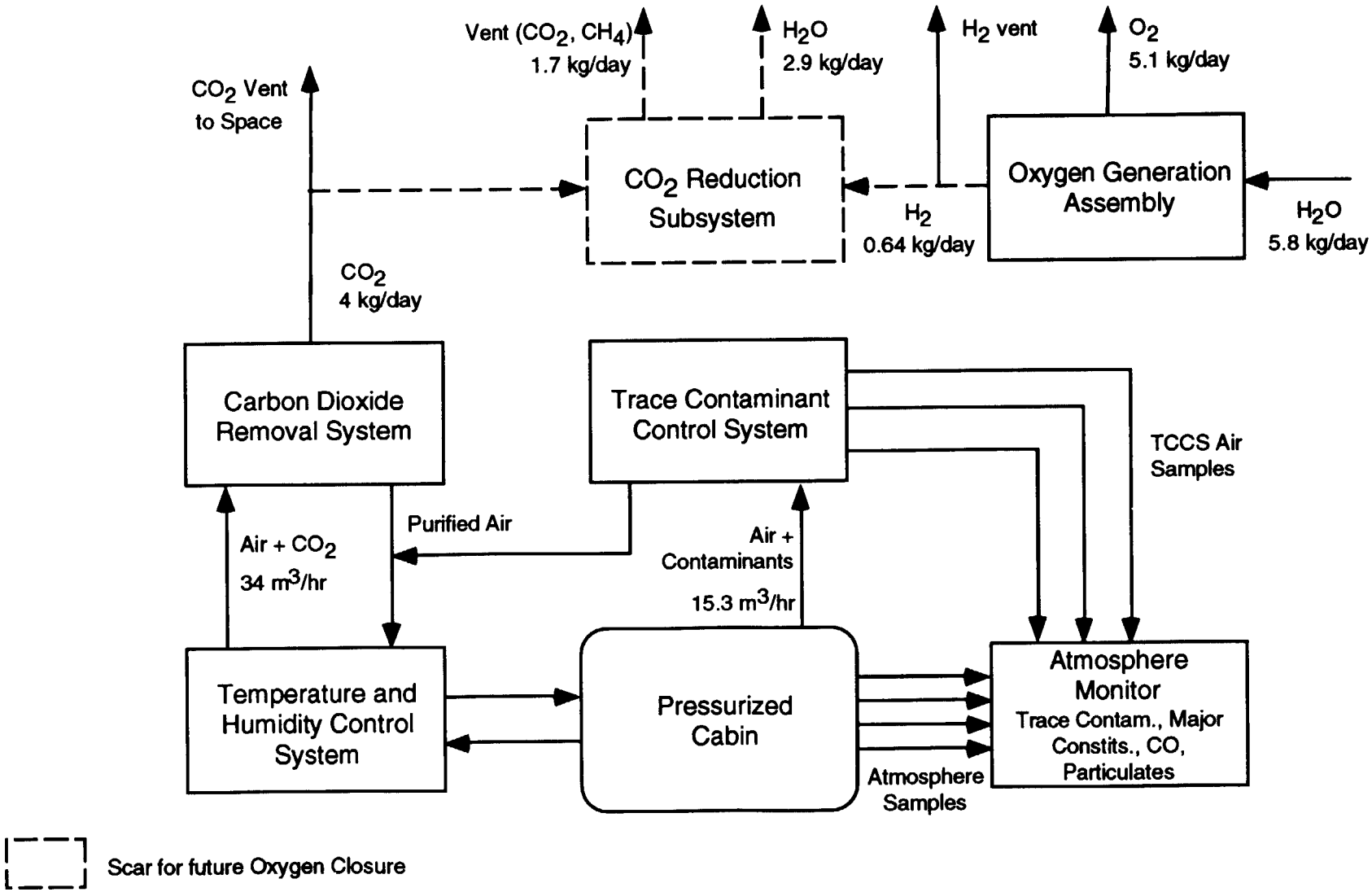

Figure 3-3 U.S. Alpha Atmosphere Revitalization System Schematic

Comparison of U.S. and Russian Atmosphere Requirements

Major differences exist between the U. S. and Russians regarding design criteria for developing life support equipment for atmosphere conditioning. Table 3-1 gives a comparison of the U.S. space station and Mir-1 atmosphere design requirements. In addition, some flight data ranges are given for Mir-1 when available. While both systems are designed for a nominal total pressure of 1 atmosphere, a wide range of 11.6 to 16.6 psia (600 to 860 mmHg) was given as the Russian requirement (Reference 2) This is compared to a 14.5 to 14.9 psia required U.S. space station control range. The actual Mir-1 flight data is narrower than the requirement (13.0 to 15.5 psia). It is not understood why these large variations are allowed and exactly how the pressure control system works on Mir-1.

The partial pressure of oxygen on Mir-1 has ranged between 2.6 to 3.3 psia according to flight data. The required range is 2.7 to 3.87 psia (140 to 200 mmHg). The maximum level for which Mir-1 materials are rated is 40% O_2. U.S. Space Station requirements for oxygen, in comparison, are more strict, with a maximum of 23% O_2 in a range of 2.83 to 3.35 psia.

Crew metabolic design requirements differ for the Mir-1 and Alpha space stations. U.S. oxygen supply requirements are based on a nominal 0.84 kg/day (1.84 lbm/day) per crew member oxygen consumption value as a design point while the Russians use 0.96 kg/day per crew member. Likewise, the Russian design point of 1.15 kg/day (2.53 lbm/day) per crew member for nominal CO_2 production is higher than the U.S. value of 1.0 kg/day (2.2 lbm/day) per crew member. When questioned, the Russians cite "flight data" as the basis for their O_2 and CO_2 metabolic numbers.

The current U.S. requirement for partial pressure of CO_2 in the atmosphere is a crew daily average of 5.3 mmHg with peak levels not to exceed 7.6 mmHg. This for a nominal crew size of four plus metabolic loads from biological specimens. In comparison, Mir-1 maximum CO_2 levels are 4.5 mmHg for up to 3 crew members and 7.6 mmHg for up to 5 crew members. Average values of CO_2 in Mir-1 flight data have been 3.5 to 4.5 mmHg. Speculation that the Russians allow the CO_2 levels to have excursions up to 27 mmHg (3% of atmosphere) for periods of less than one hour could not be verified in any discussions with the Russians.

The difference in Alpha and Mir-1 design criteria for spacecraft maximum allowable concentrations (SMACs) for trace gases in the habitable atmosphere are significant. Details are given in the trace contaminant control section of this report. SMACs for 32 contaminants have been "certified" as design criteria for Mir-1. Some additional compounds have been identified by the Institute of Biomedical Problems (IBMP) for designers to utilize in trace gas contaminant control systems but they have not been certified yet. In general, a comparison of the Alpha design criteria with the Mir-1 design criteria shows that the Russians have requirements for a cleaner atmosphere than the U.S.. Russian rationale for the specified values has not been presented to NASA to date. The Alpha space station design has over 200 compounds it has been using as design criteria for SMACs.

The Russian approach for the assessment of materials or equipment which generate many of the atmosphere contaminants has been discussed with NPO-Energia. They reviewed their methodology for toxicity assessments from the component/material level to the integrated space station operational level. This consisted primarily of significant ground testing (including system level testing of the flight modules) and correlating the test results to their previous data base of Mir-1 flight equipment and design margins with respect to satisfying the SMACs. Their methodology seemed good but no quantitative data has been supplied to NASA which indicated the actual level of atmosphere control achieved on Mir-1. Qualitative data regarding the types of contaminants found in the Mir-1 atmosphere have been given to NASA and are identified in the trace contaminant control section of this report.

It is not known whether there are maximum particulate and airborne microbial requirements for Mir-1. In comparison, NASA requirements specify particulate levels not to exceed 3,530,000 particles/m^3 (100,000 particles/ft^3) for particles greater than 0.5 microns, and an airborne microbial limit of 1000 colony forming units (CFU)/m^3. More discussions on requirements as they relate to specific Russian and U.S. hardware comparisons will follow in subsequent sections.

NASA and NPO-Energia have agreed that immediate attention needs to be given to a joint effort to define common design criteria for the habitable atmosphere. Both medical and engineering personnel would be involved.

Table 3-1 Mir-1 Vs. NASA Atmosphere Design Requirements

	MIR-1	NASA
Total Pressure	11.6-16.6 psia 13.0-15.5 (flt. data)	14.5-14.9 psia
ppO_2	2.7-3.87 psia 2.6-3.3 psia (flt.data)	2.83-3.35 psia
	max 40% concentration	maximum 23% concentration
O_2 consumption	0.96 kg/man-day	0.84 kg/man-day
CO_2 production	1.15 kg/man-day	1.0 kg/man-day
$ppCO_2$	4.5 mmHg (3 crew)	5.3 mmHg (4 crew)
	7.6 mmHg (5 crew)	7.6 mmHg peak (4 crew)
Trace contaminants	SMACs for 32 compounds	SMACs for >200 compounds
Particulates	unknown	<3,530,000 particles/m^3
Airborne microbes	unknown	<1,000 CFU/m^3

3.1.1.1 Carbon Dioxide Removal System

Russian CO_2 Removal System Description

The Russian CO_2 removal hardware on Mir-1 is a regenerable sorbent system consisting of two desiccant beds, three sorbent beds, an electric heater, a regenerative heat exchanger, a gas/liquid heat exchanger, a fan, a vacuum pump, and associated valves and plumbing. A system schematic is provided in Figure 3-4.

Cabin air is drawn into the system via one of the two desiccant beds in which most of the humidity is removed. The beds are packed with a sorbent material such as silica gel. Dry air leaves the desiccant bed at an increased temperature due to the energy released by water adsorption on the desiccant. The other desiccant bed is being regenerated at the same time by the heat of adsorption produced in the sorbent beds with additional heat from a regenerative heat exchanger and electric heaters located in the air stream. The regenerative heat exchanger removes heat from the air stream exiting the desiccant bed and transfers it to the air stream returning from the carbon dioxide sorbent bed. The air stream is further cooled by an air/liquid heat exchanger prior to entering the sorbent bed. The coolant is supplied to the heat exchanger from the vehicle's thermal control system.

A fan provides the air flow of 20 m^3/hr (11.77 ft^3/min) for the system. It is driven by a 27 VDC motor with an average power draw of 25 watts. The three carbon dioxide sorbent beds contain what is described by the Russians as a regenerable "solid amine" material.

NASA experience with this material shows its performance is significantly influenced by the moisture content of the air stream to effectively absorb CO_2 (i.e., the drier the air the less effective is the CO_2 removal). The Russian design basically dries the air prior to CO_2 removal with the desiccant bed. Therefore, the technology utilized by the Mir-1 system is either different than NASA's experience or the bed design is not efficient in saving water during CO_2 removal.

An absorbing canister receives system air flow to remove carbon dioxide for a 30-minute cycle. This provides one hour for the desorption of the carbon dioxide to space vacuum from the other two canisters. The sorbent beds are sequenced between adsorption and desorption by changing valve positions. At the completion of an adsorption period, and prior to exposing it to space vacuum, a canister is isolated from system air flow and the air trapped in the

bed is pumped back to the cabin by the ullage-save compressor. The ullage-save portion of the cycle takes only the first few minutes of the one hour desorption. This feature prevents the loss of atmosphere during every vacuum desorb cycle of the CO_2 sorbent beds.

Air leaving the adsorbing carbon dioxide canister is first preheated in the regenerative heat exchanger, then by an electric heater, rated at 250 watts, to allow effective water desorption of a desiccant bed. Water from the desiccant bed is returned to the cabin.

The NAS9-18663 report states that the Mir-1 CO_2 removal system is capable of removing up to 6.1 kg/day CO_2 which would correspond to a metabolic level of 5.3 crew members. However, the CO_2 level expected in the Mir-1 atmosphere for this removal rate was not defined. Discussions with the Russians revealed that when the crew size of Mir-1 exceeds 3 people, non-regenerative CO_2 removal canisters are utilized to complement the regenerative system. This implies the partial pressure of CO_2 could not be held at less than 7.6 mmHg for a 5 person crew only with the regenerative Mir-1 system.

The weight of the system is 140 kg (308 lbs), and it uses 300 watts of average power. On a per-kilogram basis, the specific energy is approximately 2.1 to 3.1 kilowatt-hr/kg of CO_2 removed. This system can be adapted for CO_2 concentration (for CO_2 reduction) with the addition of a vacuum compressor. It has been operational since April 1987 with no reported problems or failures and no significant degradation in performance. As a point of reference, in other Russian space flight vehicles, Soyuz and Buran, LiOH is used for CO_2 removal.

During the course of discussions with the Russians about CO_2 removal technology, it was learned that they are also developing a new CO_2 removal system for potential use on Mir-2. The description of the system sounds much like the four-bed molecular sieve technology that is baselined for the U.S. space station. It is said to operate on a 1.5 to 2 hour half cycle and use a thermal vacuum process at 200 ^{o}C (+/- 10 ^{o}C) for sorbent bed regeneration. The Russians are very interested in the U.S. technology and, in particular, the design for even temperature control within the sorbent beds.

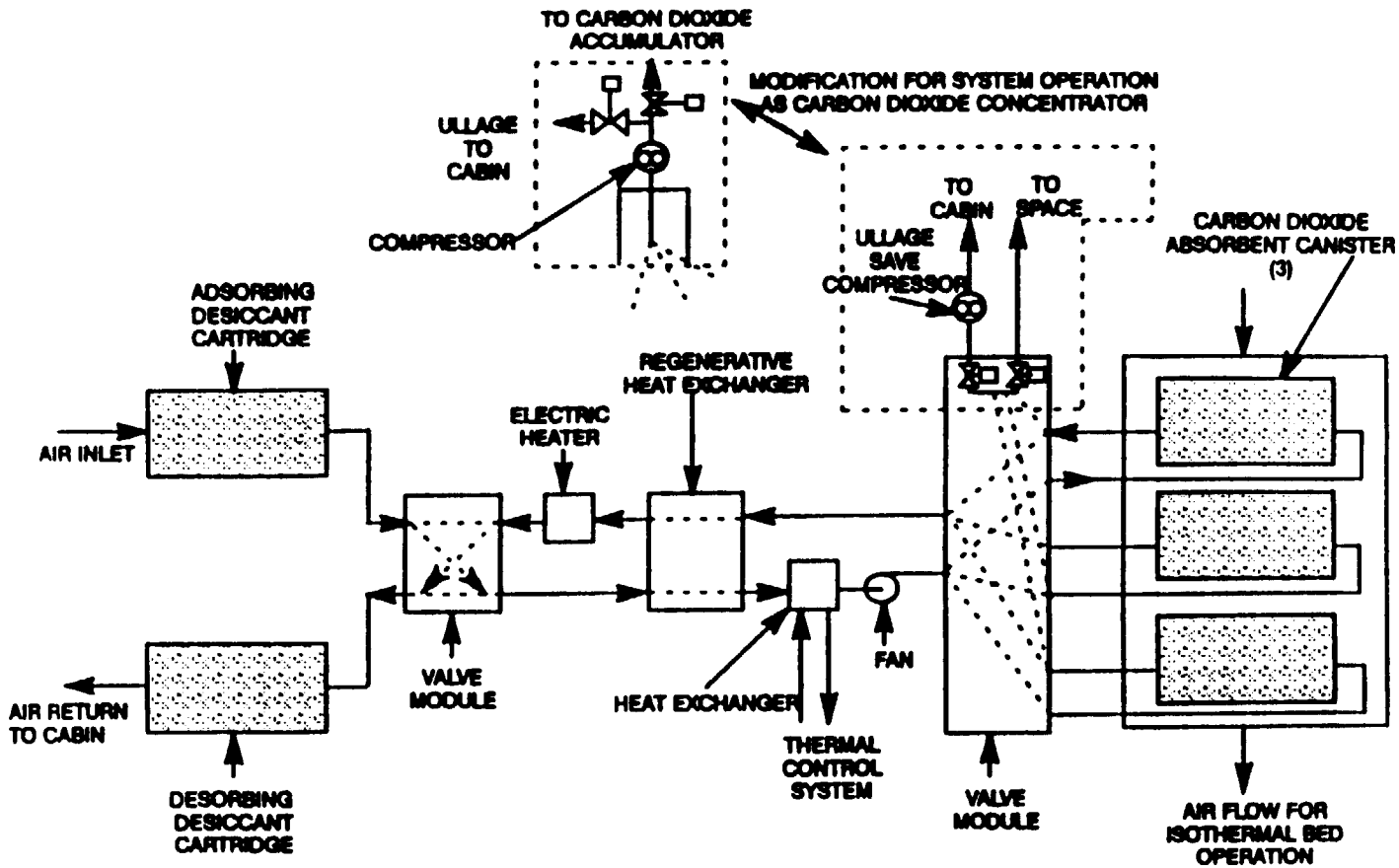

Figure 3-4 Mir-1 Carbon Dioxide Removal System Schematic

U.S. CO_2 Removal System Description

The baselined Carbon Dioxide Removal Assembly for space station Alpha utilizes a molecular sieve technology to remove carbon dioxide from the cabin atmosphere. Major components are similar to the Mir-1 system and consists of two desiccant beds, two adsorbent beds, a blower, a precooler, six selector valves, two check valves, and an air-save pump (or compressor). A schematic of the system is shown in Figure 3-5.

The Alpha design operates on 180-minute half-cycles. The blower, mounted downstream of the desiccant beds, draws module air laden with water vapor and carbon dioxide into the system from the exit of the condensing heat exchanger of the Temperature and Humidity Control system. The cool, wet air enters a desiccant bed where the water is absorbed so that it can be returned to the cabin air during the next half-cycle. The removal of water also protects the carbon dioxide adsorbent beds from water poisoning. The dry air is drawn into the blower and through the precooler. There the heat of compression, the heat generated by the blower motor, and the heat of adsorption generated in the desiccant bed are removed. The cool, dry air is then directed into an adsorbent bed where carbon dioxide is selectively removed and the air is heated as it passes through the hot bed material. Finally, the process air enters a second desiccant bed where it is re-humidified and cooled, driving off the water that was deposited there during the previous half cycle. The desiccant bed is thereby regenerated and the air is dumped back to the cabin air return duct.

As one adsorbent bed adsorbs carbon dioxide, the second bed is desorbed using thermal/pressure swing methodology. At the beginning of this process the ullage-save pump is activated to remove the residual air from the adsorbent canister and direct it back to the process air outlet. Next, the bed is exposed to space vacuum to facilitate carbon dioxide desorption. Heat generated by electric heaters imbedded in the adsorbent bed is applied to help drive off the carbon dioxide. Heat is also required to raise the bed temperature to 400 °F by the end of the half-cycle so that the air passing through it is hot enough to desorb the water vapor from the desiccant bed.

The system is scarred to accommodate closure of the oxygen loop by replacing the 2-stage pump with a larger, 4-stage vacuum compressor for CO_2 accumulation.

The Alpha CO_2 removal system operates on 120 VDC power. It weighs 181 kg (398 lbs), occupies 0.38 m^3 (13.5 ft^3), and its average power is 587 watts. It is designed to remove 4 kg (8.8 lb) CO_2 per day at an inlet $ppCO_2$ of 3.0 mmHg, or 8 kg (17.6 lb) CO_2 per day at an inlet $ppCO_2$ of 6.0 mmHg. These performance levels support station $ppCO_2$ requirements for crew plus biological specimens to meet station $ppCO_2$ normal and degraded levels of 5.3 mmHg and 7.6 mmHg, respectively.

It should be noted that the system is also designed to operate only in the high power demand mode in the sunlight portion of each orbit to take advantage of power available and reduce the required power during the battery discharge portion of the orbit (shadow of the earth). The reduced power is approximately 10% of the average operating power quoted above.

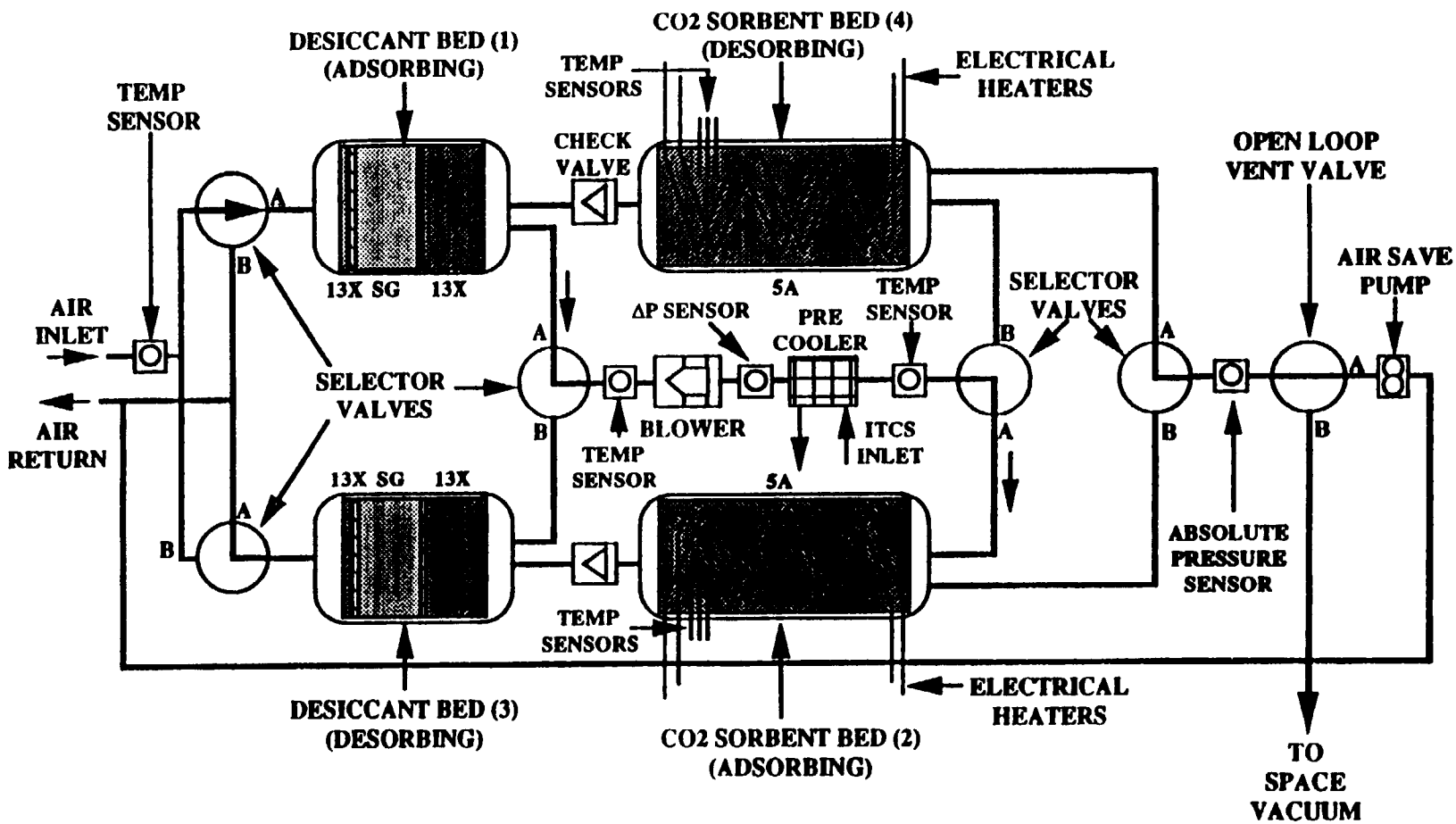

Figure 3-5 U.S. Carbon Dioxide Removal System Schematic

Comparison of Russian and U.S. CO_2 Removal Hardware

Table 3-2 gives a comparison of the Mir-1 and U.S. CO_2 removal hardware parameters.

Table 3-2 U.S./Mir-1 CO_2 Removal System Comparison

Parameter	Mir-1 System	U.S. System
Nominal crew size	2-3	4
Maximum crew size	5	8
Biological specimens	None	Yes
System weight, kg (lb)	140 (308)	181 (398)
System volume, m^3 (ft^3)	unknown	0.38 (13.5)
System power, watts	300	587
Specific Energy, kW hr/kg	2.1 - 3.1	3.5
Heat rejection, W		
to TCS	unknown	544
to avionics	unknown	-33
to cabin	unknown	76
System life, years	>3 years - sorbent beds	30
Desiccant type material	(silica gel assumed)	silica gel
Sorbent type material	"solid amine"	molecular sieve
Cycle time, minutes	90	360
Maintenance, person-hrs/yr	unknown	1.03
Design meets NASA Safety, Reliability &Quality requirements	No	Yes

The Alpha design is sized for a larger nominal crew; however, it is possible that the Mir-1 unit might be capable of supporting an additional person given a higher $ppCO_2$ limit. The Mir-1 does not design for biological specimens. System weights are comparable considering the crew sizing requirements and allowable CO_2 levels. System power requirements appear to favor the Russian unit. However, when converted to a specific energy based on CO_2 removal rate, it is comparable to the Alpha system. Also, the Mir-1 design would require more power during the battery discharge portion of the orbit.

Values for heat rejection are not known for the Mir-1 system. There would be some heat transferred to the thermal control system from the gas/liquid heat exchanger. The rest is assumed to go to the cabin cooling system since a separate avionics cooling system does not exist. The U.S. hardware is designed for an overall 30 year life, with some components expected to have limited life before this time period (pump - 11 years, desiccant/sorbent beds - 20 years).

All that is known of the Mir-1 system life expectancy is that the sorbent beds are designed to last longer than 3 years. In fact, they have lasted six years with no apparent degradation in performance.

Likewise, maintenance time on the Russian system and whether the unit is designed with specific orbital replacement units as with the U.S. hardware are still unknown.

The Mir-1 station contains only one regenerative CO_2 removal unit and it is understood that no spare or replacement parts are carried on-orbit. Failure tolerance is met by using non-regenerative systems (expendables) and the crew can remain on-orbit until the expendables are depleted or the regenerative system is repaired. In comparison, Alpha space station will contain two regenerable CO_2 removal units each capable of handling the entire crew load which meets one fault tolerance exclusive of maintenance or use of the Soyuz Assured Crew Rescue Vehicle (ACRV).

There is not enough data on actual Mir-1 CO_2 removal system performance to determine if it would meet U.S. station requirements. On-orbit $ppCO_2$ data plus correlating information on crew size and whereabouts (which module in relation to unit) or ground test data of the unit giving removal rate versus inlet $ppCO_2$ is needed to make such an assessment.

Table 3-3 presents a summary of perceived advantages and disadvantages in considering the Russian CO_2 removal hardware for use in the U.S. space station. Many remaining unknowns make a complete assessment impossible at this time. Hardware maturity and operational history are to the Mir-1 system's credit; however, the fact that the Russians are developing an alternate technology for Mir-2 that sounds much like the U.S. baselined molecular sieve system suggests that they believe the molecular sieve would be a better technology. For the latter reason it is not recommended that program funds be spent on further investigation of the current Mir-1 CO_2 removal system for potential space station use.

Table 3-3 Mir-1 CO_2 Removal System Advantages and Disadvantages

ADVANTAGES	NEUTRAL OR UNKNOWN	DISADVANTAGES
Hardware maturity	System weight and power neutral	System not properly packaged for U.S. racks or 120 VDC Alpha power system
Extensive ground testing	System performance unknown - actual flight data	Unknown capability to interface with CO2 reduction system
	System maintenance/lifetime unknown	Unlikely capability to meet U.S. requirements for on-orbit maintenance
		Russians are looking at molecular sieve technology to replace current system

3.1.1.2 Trace Contaminant Control System

Mir-1 Trace Contaminant Control System Design Description

Design Criteria

The Trace Contaminant Control System used onboard the Mir-1 space station since April 1987 employs both regenerable and expendable physical adsorption combined with ambient temperature catalytic oxidation technologies to remove cabin atmospheric contaminants at the rates shown in Table 3-4 in order to comply with the maximum allowable "specified" concentrations specified in Table 3-5. Medical rationale supporting these allowable limits has not been provided to the NASA. Compared to the NASA Spacecraft Maximum Allowable Concentrations (SMACs), the Mir-1 levels are much lower as shown in the comparison in Table 3-6. The ability of the Mir-1 equipment to meet these standards has not been demonstrated to NASA.

The Russian Trace Contaminant Control System beds are sized based on the removal rate data of Table 3-4. It is assumed that these removal rates are at the specified system flow rate. Additional data concerning charcoal loading are obtained from tests using classes of contaminants. Also, data from materials of construction are used to limit offgassing rates. With regard to charcoal performance data, nothing beyond those of Table 3-4 have been provided. These data, combined with the removal rate and flow rate data, allow determination of the bed sizes and their operational life. From these data, ground tests are conducted to determine the system's ability to comply with the SMAC limits of Table 3-5. As seen in Table 3-5, all concentrations, with the exception of acetic acid, are below the 360-day SMAC. Of the contaminants listed in Table 3-5, acetone and formaldehyde present the greatest challenge to the system. The results of Table 3-5 were used to predict the Mir-1 cabin trace contaminant concentration conditions. The validity of these predictions is unknown.

Other Mir-1 systems are considered in the design of the Russian Trace Contaminant Control System. Removal of trace contaminants via absorption into humidity condensate and spacecraft leakage are considered. This is different from the design philosophy for NASA's Trace Contaminant Control Subassembly which does not consider these removal routes in the basic design.

General Russian Trace Contaminant Control System Description

As shown in Figure 3-6, the Russian Trace Contaminant Control System is composed of five primary components - a blower, an expendable activated charcoal canister, two regenerable activated charcoal canisters, and an ambient temperature catalyst canister. The primary contamination removal canisters are shown by the photograph of Figure 3-7. The total system weighs approximately 74 kg (163 lb_m), of which approximately 34 kg (75.0 lb_m) is structural, and requires a nominal system power of 25 watts. During a regeneration cycle, the power required increases to 300 watts for four to five hours.

Annual specific power and resupply requirements for the system are 1.28 watt-hour/kg of air processed and 37,000 kg air processed/kg resupply. These numbers are based on bed life estimates of 3 to 5 years for the four charcoal and catalyst beds obtained from ground testing. Cabin air flows through the system at 20 m^3/h (11.8 ft^3/minute) producing a system pressure drop of 1,020 Pa (0.15 psi). The system is sized and the regeneration cycle frequency is set according to this flow rate and projected contaminant generation rates obtained from ground testing in a manned mockup. The system sizing also takes into account contaminant removal via absorption in humidity condensate and spacecraft leakage. (Reference 1,3)

Blower Description

Atmosphere flows directly from the cabin into the trace contaminant control system by suction produced by the blower. This blower is located upstream of the expendable charcoal bed. It requires a 27 VDC power supply and draws 25 watts during normal operations. The location of the blower with respect to the charcoal beds is unusual since energy losses from it may actually heat the air before it enters the expendable charcoal bed. This rise in temperature may be only a few degrees, but it can have a negative effect on the overall charcoal loading capacity. No flow rate adjustments are provided; however, the flow rate does fluctuate as a function of the available voltage on orbit. (Reference 1)

Expendable Charcoal Bed Description

The expendable charcoal canister, shown in the center portion of the photograph of Figure 3-7, removes contaminants with high boiling points and molecular weights greater than 120 grams/mole which

are typically difficult to desorb using a thermal/pressure swing process. These contaminants, if allowed to enter the regenerable charcoal canister, would reduce the number of regeneration cycles and, therefore, the life of the regenerable beds. This bed weighs approximately 6 kg (13.2 lb_m) and has an overall length of 22.5 cm (8.86 inches) and a diameter of 20.0 cm (7.87 inches). The bed flow is radial, as seen in Figure 3-8, through approximately 1.30 kg (2.87 lb_m) of activated charcoal which produces a pressure drop of 200 Pa (0.029 psi). This charcoal has been described as "synthetic". It is not clear whether the charcoal raw material is coconut shell, bone, peat, wood, or a simulated carbon. Bulk densities for these materials can range between 160 kg/m^3 (10 lb_m/ft^3) and 641 kg/m^3 (40 lb_m/ft^3) with synthetic charcoal being the most dense. Based on discussions with Russian designers, it is assumed that the material is obtained from some natural source so an average bulk density of 513 kg/m^3 (32 lb_m/ft^3) has been assumed for system performance analyses. No special chemicals, such as phosphoric acid to remove ammonia and chromate to remove formaldehyde, have been added to the charcoal to enhance its contaminant removal abilities. Based on manned ground tests in a space station mockup, the life of this bed has been projected to be 3 years. However, analysis of the hardware performance with respect to the spacecraft generation rates projected for the United States' space station indicates that the bed life may only be as long as one month.(Reference 1)

Regenerable Charcoal Bed Description

Low molecular weight, low boiling point contaminants are removed using two regenerable activated charcoal beds similar to the one shown in the right-hand portion of Figure 3-7. These beds weigh approximately 16 kg (35.3 lbm) each and have an overall length of 29.5 cm (11.6 inches) and diameter of 25.0 cm (9.84 inches). Each bed is filled with approximately 7.44 kg (16.4 lb_m) of untreated activated charcoal as shown in Figure 3-9. This charcoal is assumed to be the same material used in the expendable bed. The air flows axially through these beds with a pressure drop of 700 Pa (0.102 psi). Electric, nickel-chrome heaters with a total power rating of 138 watts each are mounted in each bed. During the regeneration phase, a bed is heated between 180°C (356°F) and 200°C (392°F) and then exposed to space vacuum. No air saving capability is provided during the regeneration cycle to minimize cabin air losses when the beds are isolated and vented to space vacuum. This capability was

not provided because it was claimed that overall space station leakage was extremely low causing the 1 liter (0.035 ft^3) air volume lost during each regeneration to be no problem to the atmospheric control and supply system.

The regeneration cycle for a single bed is set at one regeneration lasting 4 to 5 hours every 20 days. The cycle is staggered between the two beds to achieve an overall schedule of one regeneration every 10 days. This cycle, which is initiated manually, can be accelerated or decelerated depending on the cabin contamination conditions. Once the regeneration cycle is initiated by a crew member, the sequence of valve actuations and bed heatup control are accomplished automatically. When the Trace Contaminant Control System was first deployed on-board Mir-1, only one bed was in the adsorption mode at a time with the second bed in the desorption mode. As time passed, it became necessary to operate both beds simultaneously and manually initiate the regeneration of one bed at a time every 10 days. This approach may have been adopted to maximize the regenerable bed operational lifetime of 135 regeneration cycles over 5 years. A second reason for the change in regeneration cycle may be that the cabin air quality was not meeting the specification and more capacity was necessary to meet it.

Ambient Temperature Catalyst Canister Description

Downstream of the regenerable charcoal beds is a special catalyst canister which is designed to remove carbon monoxide and hydrogen from the cabin air . This canister, shown in the left-hand portion of Figure 3-7, has an overall length of 23.5 cm (9.25 inches) and diameter of 12.0 cm (4.72 inches). Air flow is radial, as shown in Figure 3-10, through the catalyst material resulting in a pressure drop of 120 Pa (0.0174 psi). The canister, which weighs 2.5 kg (5.51 lb_m), is filled with 0.513 kg (1.13 lb_m) of a special catalyst material designed to catalytically oxidize carbon monoxide and hydrogen at cabin air temperatures. Although the exact catalyst material formulation has not been provided, it is suspected that the material is platinum on granular activated alumina. This assumption is supported by the fact that the catalyst can be poisoned by ammonia and sulfur-containing compounds which is consistent with past NASA studies of ambient temperature catalysts. Since the catalyst is not well protected from these poisons by upstream beds, it must be replaced every 5 years. (Reference 1)

Russian System Flight Performance

Data concerning the performance of the Mir-1 Trace Contaminant Control System has not been provided in detail because it has been designated the property of Russian researchers and cannot be released. Although specifics are lacking, some information is available with respect to on-orbit performance. Cabin atmosphere samples are collected twice during each mission at approximately three month intervals using an adsorption concentrator and then analyzed on the ground. Three samples are taken during the day in different locations throughout the spacecraft. Acetone, methyl ethyl ketone, acetaldehyde, methanol, ethanol, isopropanol, ethyl acetate, toluene, pentane, hexane, and heptane have been reported in the samples. The actual concentrations are not available because of the restrictions placed on their release.

The samples have shown that the concentrations change significantly because of the type of crew activity, changes in life support system hardware effectiveness, experiment operations, and new equipment delivery. Acetone, acetaldehyde, and ethanol levels have been found to exceed acceptable levels periodically. With respect to odors, the Russians claim that there have been no complaints although the interior smells like a "country house". Exactly what this means is not clear. It may be pleasant but it is most likely unpleasant depending on how close the barn is to the house. The system outlet is also sampled by a special procedure which has not been specified. It is assumed that this procedure is manual.

It is not clear to NASA personnel how methane is controlled on-board Mir-1. It is produced by crew metabolism and will build up to concentrations above its lower explosive limit in air if not controlled. Numerous inquiries have not been adequately answered by the Russians. Without a high temperature catalytic oxidizer or sufficient atmospheric leakage, the methane levels should be high and exceed the SMAC criteria of 3,342 mg/m^3 for long duration missions. The Russians are obviously concerned since a high temperature catalytic oxidizer is planned for the Mir-2 space station.

Some data has indicated that the system has not performed as planned. For instance, initially, the regenerable beds were cycled through the thermal/vacuum process every 20 days on a 10-day,

staggered basis so that a bed was being regenerated every 10 days. As time passed, both beds have been regenerated every 10 days in a sequential process with one bed regenerating for 4 to 5 hours and then the other bed. This was initiated because the cabin was dirtier than expected. The cycle is determined by the cabin contamination load and adjusted accordingly. Also, it was revealed that flow has been directed through both regenerable beds simultaneously instead of one bed at a time. This is an obvious effort to increase capacity by splitting the flow between the beds and thus extending their life and the time between regeneration cycles.

The atmosphere flow rate through the Trace Contaminant Control System is not adjustable. It does fluctuate as a function of voltage available on orbit. No data management or fault detection and isolation interfaces are provided since the crew determines if the system operates properly. System operation is automated to a limited extent. Normal and regeneration operations are automated; however, the regeneration sequence is initiated directly by a crewmember who presses a button to begin the sequence.

The nature of the flight operations and control make the Mir-1 Trace Contaminant Control System easy to reconfigure in the event of a chemical leak or spill. It was noted during recent technical interchanges that leaks resulting from experiment operations and other sources onboard Mir-1 have been accommodated by accelerating the regeneration cycle of the Trace Contaminant Control System. No details concerning the nature and magnitude of these contingency events has been available.

Pre-flight manned element-level tests are conducted to determine trace contaminant levels in a particular module and to make the decision to fly or not. Tests have included up to 3 people for a duration of up to 1 year. Normally the test duration is 1 to 6 months. The ground test results are claimed to be highly accurate; however, no information concerning the fidelity of the mockup has been provided, particularly with respect to materials of construction, leakage, and other systems. To be as reliable as claimed, they should be exactly the same as those in the orbiting space station. The results from this testing have not been made available to NASA during any recent technical interchanges with the exception of data listed in Table 3-7.

During normal station operations, an identical system is operating on the ground concurrently with the flight unit. This approach allows for problems with the hardware to be anticipated and corrective actions implemented before a problem develops on-orbit. An additional new unit is kept on the ground and it is assumed it would replace the flight unit if it failed and was not repairable on-orbit.

General Observations

During recent technical interchanges, the personnel from NIICHIMMASH pointed out that surface area is the most important parameter for projecting contaminant generation rates. Although NASA agrees that surface area plays an important role, it is much more difficult to quantify than overall non-metallic material weight. For this reason, NASA hardware design is based on total mass of non-metallic materials inside a spacecraft.

A second point that the NIICHIMMASH personnel made was that NASA's system is too large. During a discussion of system sizing, it was stated that most of the contaminants on-board MIR-1 are removed in the humidity condensate. This would account for the smaller size for the Mir-1 hardware relative to the United States' space station hardware which is designed to handle an entire station contamination load with no assistance from absorption in humidity condensate. Likewise, the NIICHIMMASH personnel felt that the atmospheric quality standards that NASA is designing to are too low. This was interesting since the Russian air quality standards for Mir-1 are in many cases lower than NASA's proposed 180-day spacecraft maximum allowable concentrations. Based on this discussion, it may be assumed that the Mir-1 system does not necessarily comply with the air quality standards but merely does the best it can. This point is also supported since the Mir-2 configuration will include a second Trace Contaminant Control System which will include a high temperature catalytic oxidizer.

Table 3-4 Charcoal Bed Life Verification Test Contaminants

CONTAMINANT	FEED CONCENTRATION (mg/m^3)	REMOVAL RATE (mg/day)
	REGENERABLE CHARCOAL BED	
Cyclohexane	3.0	200.0
Ethyl Acetate	4.0	250.0
Benzene	2.0	0.45
Butanol	0.8	80.0
Acetone	1.0	27.0
Ethanol	10.0	250.0
Acetaldehyde	1.0	24.0
Methanol	1.0	3.0
Formaldehyde	0.3	10.0
Hydrogen sulfide	0.5	10.0
Nitrogen oxide	0.3	13.5
Ammonia	1.0	20.0
Ethylene Glycol	100.0	50.0
Methane	0.5 vol %	30.0
	EXPENDABLE CHARCOAL BED	
Isopropylbenzene	0.5	50.0
Toluene	2.0	66.0
	CATALYTIC REACTOR	
Carbon Monoxide	5.0	30.0
Hydrogen	0.5 vol %	1200.0 l/day

FAX from N. Samsonov 8/13/93

Table 3-5 Russian Spacecraft Air Quality Standards

CONTAMINANT	SPACECRAFT MAXIMUM ALLOWABLE CONCENTRATION (mg/m^3)					
	15-DAY	30-DAY	60-DAY	90-DAY	180-DAY	360-DAY
Methanol	*	*	*	*	*	0.2
Ethanol	*	*	*	*	*	10.0
n-butanol	*	*	*	*	*	0.8
Phenol	*	*	*	*	*	0.1
Ethylene glycol	100.0	*	*	*	*	10.0
Methanal	*	*	*	*	*	0.05
Ethanal	1.0	1.0	1.0	1.0	1.0	1.0
Benzene	*	*	*	*	*	2.0
Isopropylbenzene	*	*	*	*	*	0.5
Methylbenzene	*	*	*	*	*	8.0
Dimethylbenzene (o-, m-, p-)	*	*	*	*	*	5.0
Styrene	*	*	*	*	*	0.25
Ethyl acetate	*	*	*	4.0	4.0	4.0
n-butyl acetate	*	*	*	*	*	2.0
1,2-dichloroethane	*	*	*	*	*	0.5
Octafluoropropane	*	*	*	*	*	150.0
Cyclohexane	*	*	*	*	*	3.0
Methane	3,342.0	3,342.0	3,342.0	3,342.0	3,342.0	3,342.0
Heptane	*	*	*	*	*	10.0
Octane	*	*	*	*	*	10.0
Total hydrocarbon	100.0	50.0	50.0	50.0	20.0	20.0
2-propanone	5.0	3.0	1.0	1.0	1.0	1.0
2-butanone	*	*	*	*	*	0.25
Hydrogen sulfide	*	*	*	*	*	0.5
Nitric Oxide	0.4	0.4	0.4	0.4	0.1	0.1
Acetic acid	10.0	5.0	5.0	5.0	2.0	1.0
Ammonia	5.0	2.0	2.0	1.0	1.0	1.0
Hydrogen	1,677.0	1,677.0	1,677.0	1,677.0	1,677.0	1,677.0
Carbon monoxide	10.0	10.0	10.0	10.0	5.0	5.0
Hydrogen fluoride	*	*	*	*	*	0.05
Hydrogen chloride	*	*	*	*	*	0.05
Hydrogen cyanide	*	*	*	*	*	0.03

Table 3-6 Projected Mir-1 Flight Atmospheric Quality

CONTAMINANT	CONCENTRATION* (mg/m^3)
Ethanol	2.4
Methanol	NM
Ethylene Glycol	0.65
Butanol	NM
Aldehydes (excluding formaldehyde)	TRACE
Formaldehyde	NM
Benzene	0.22
Methyl benzene	0.8
Isopropyl benzene	ND
Ethyl Acetate	ND
Acetic Acid	3.0
Cylcohexane	ND
Methane	332.7
Ketones as acetone	TRACE
Hydrogen Sulfide	TRACE
Carbon monoxide	2
Hydrogen	NM
Ammonia	0.2
Nitrogen Oxide	ND

NM = not measured
ND = not detected

* Results from manned Mir mockup testing

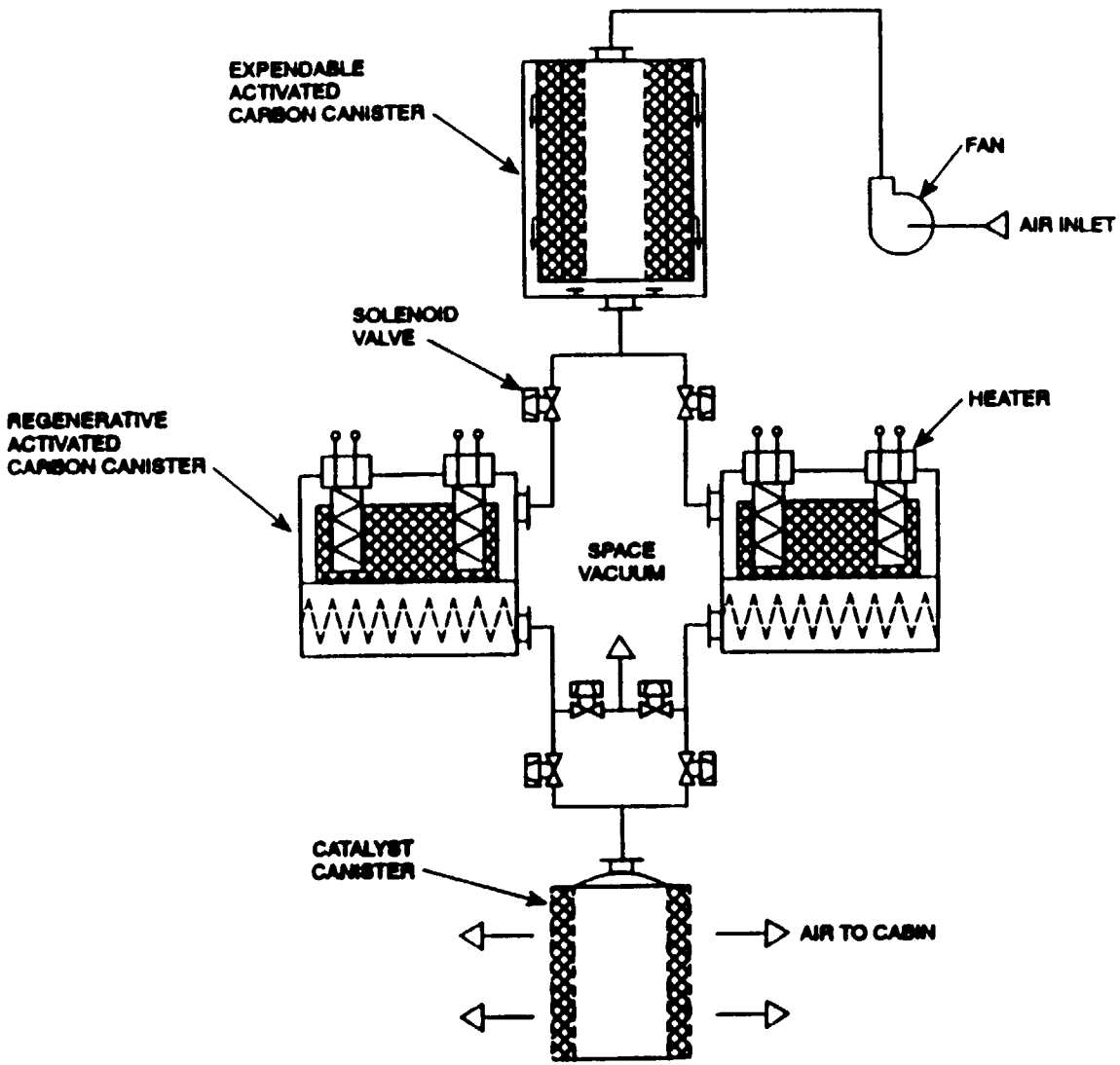

Figure 3-6 Mir-1 Microimpurity Adsorption Device Schematic

ORIGINAL PAGE
COLOR PHOTOGRAPH

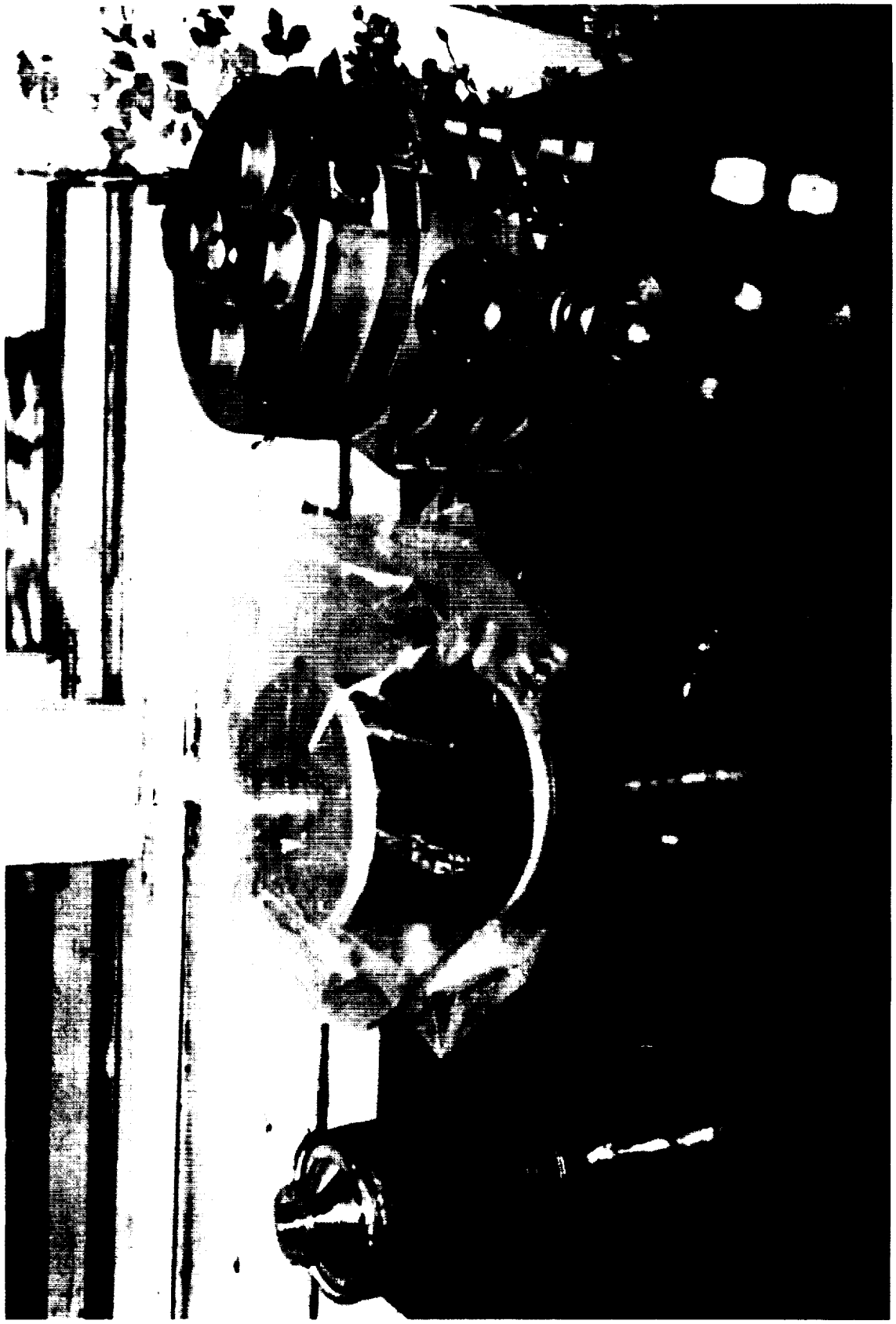

Figure 3-7 Photograph of Trace Contaminant Control Hardware Componets

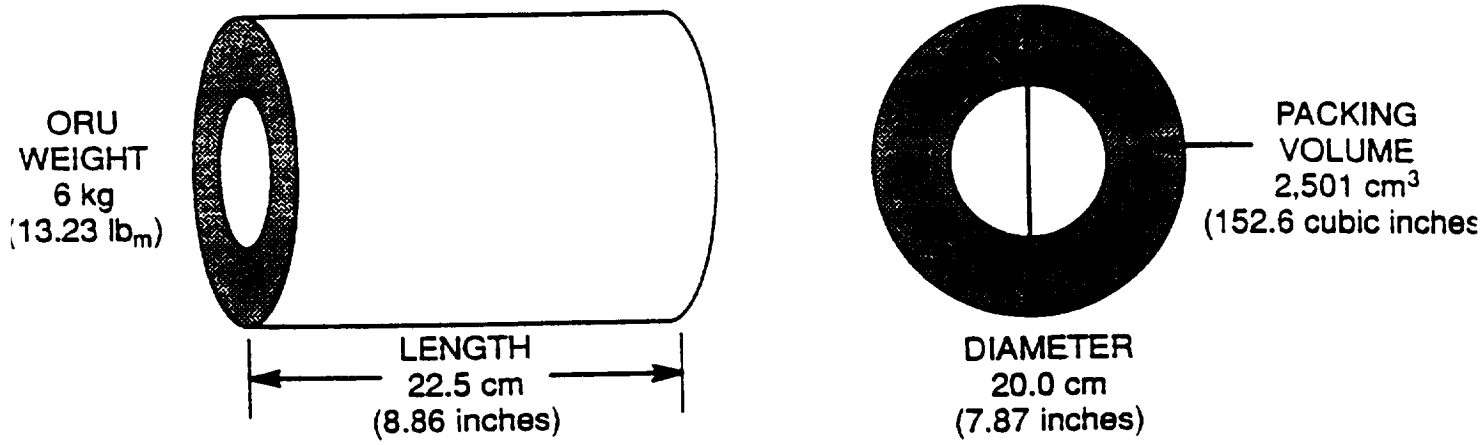

Figure 3-8 EXPENDABLE CHARCOAL BED DIMENSIONS (RADIAL FLOW)

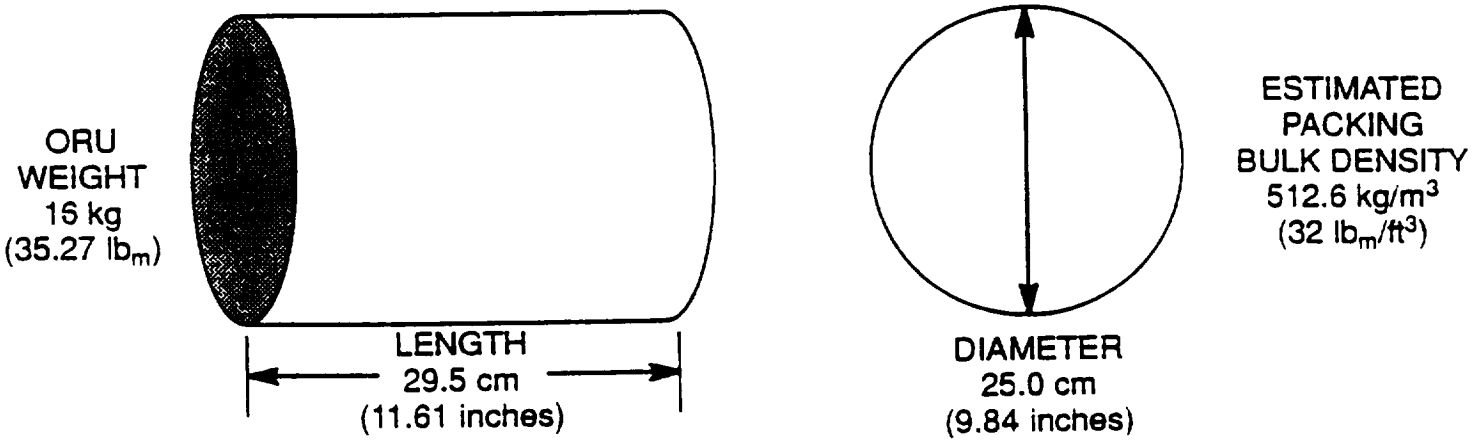

Figure 3-9 REGENERABLE CHARCOAL BED DIMENSIONS (AXIAL FLOW)

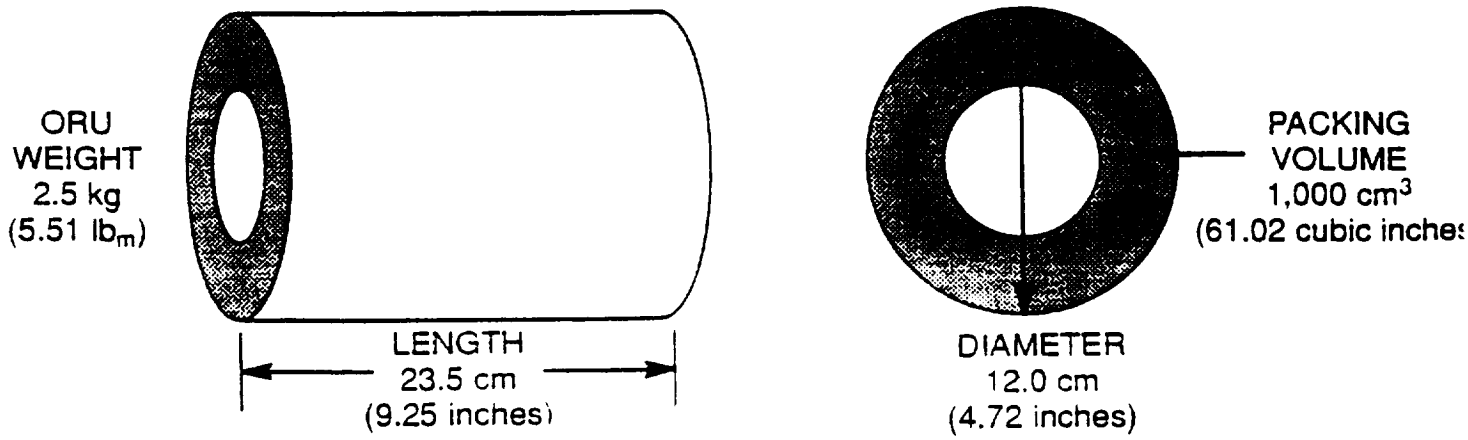

Figure 3-10 CATALYST BED DIMENSIONS (RADIAL FLOW)

Table 3-7 Mir-1 Trace Contaminant Control System Vs. NASA Contaminant Control Hardware Fact Sheet

CHARACTERISTIC	MIR 1	SPACE STATION
Crew Size	3	4
Total Volume Envelope	unknown	0.249 m^3
Flow Rate	20 m^3/h	15.3 m^3/hr (charcoal) 4.6 m^3/hr (cat. ox.)
System Pressure Drop	1,020 Pa	1,245.4 Pa
Total System Mass	< 74 kg	70 kg
Structural Mass	< 34 kg	16 kg
Blower Mass	unknown	2.9 kg
Flow Meter Mass	Not applicable	1.1 kg
Electrical Assembly Mass	unknown	1.6 kg
Expendable Bed Assembly Mass	6 kg	34 kg
Regenerative Bed Assembly Mass	16 kg each	Not applicable
Catalytic Reactor Assembly Mass	2.5 kg	11 kg
Power Supply	27 VDC	120 VDC
Average Power	25 W	157 W
Peak Power	300 W	197 W
Regeneration Heater Power	137.5 W each	Not applicable
Annual Specific Power	1.28 W-h/kg air	7.63 W-h/kg air
Annual Resupply Mass	5.7 kg/year	173 kg/year
Specific Resupply Mass	36,998.7 kg air/kg resupply	923.4 kg air/kg resupply
Annual Maintenance Hours	unknown	5 MMH/Y
Expendable Bed Life	3 years	90 days
Regenerable Bed Life	5 years	Not applicable
Catalyst Bed Life	5 years	180 days
System Design Life	10 years	10 years- 30 with maintenance
Charcoal Bulk Density	approx. 513 kg/m^3	490 kg/m^3
Expendable Charcoal Mass	1.30 kg (derived)	22.7 kg
Regenerable Charcoal Mass	7.44 kg (derived)	Not applicable
Catalyst Material	Unspecified mixed noble metals (?)	Palladium on alumina
Catalyst Support	Granular Alumina	3.175 mm alumina pellets
Catalyst Operating Temperature	Ambient	399-538°C
Catalyst Mass	0.513 kg (derived)	0.49 kg
Catalyst Volume	1000 cm^3	492 cm^3
Charcoal Impregnation	None	2 millimole of phosphoric acid/gram
Specific Design Contaminants	See attached table	Ammonia,dichloromethane, carbon monoxide, methane
Regeneration Cycle Time	4-5 hours/10 days/bed	Not applicable
Regeneration Temperature	180-200° C	Not applicable
System Monitoring	Manual procedure (unspecified)	Flow rate, blower speed, HTCO temp., grab samples

Alpha Trace Contaminant Control Subassembly Description

Alpha Trace Contaminant Control System Design Criteria

The SMACs for the Alpha design are specified in NASA document NHB 8060.1B. Updates to this design criteria have been in progress by the NASA toxicologists for the past 3 years to properly account for long duration exposures. The baseline criteria is only for 7 days. The data presented in Table 3-1 includes the "latest" NASA data for design. The generation rates used for designing the contaminant removal equipment are derived from NASA experience in past manned space flight programs (Skylab and Shuttle/Spacelab missions).

Metabolic contaminant generation rates are also considered in the design load model. The Trace Contaminant Control Subassembly design must control the contaminants generated by four crew-members.

As a design rule, the Trace Contaminant Control Subassembly must be capable of controlling the entire Alpha configuration contaminant load from material offgassing and crewmember metabolism for more than 90 days without expendable bed replacement. Primary design-driving contaminants are ammonia, dichloromethane, methane, and carbon monoxide.

General Trace Contaminant Control Subassembly Design Overview

The Alpha Trace Contaminant Control Subassembly to be used on-board the proposed international space station uses physical and chemical adsorption combined with high temperature catalytic oxidation to remove contaminants from the station atmosphere which are generated by normal material off-gassing, station operations, and crew metabolism.

Major components of the Trace Contaminant Control Subassembly are the charcoal bed assembly, catalytic oxidizer assembly, postsorbent bed assembly, blower assembly, flow meter assembly, and electrical interface assembly. These components are configured as shown in Figure 3.-11. The overall weight of the system is 70 kg (154 lb_m) and it occupies 0.249 m^3 (8.8 ft^3). Connected power is 120 VDC with an average power of 157 watts and a peak power of 197 watts.

The baseline Trace Contaminant Control Subassembly is designed to handle a minimum of a four person crew plus equipment-generated contaminants over a 90-day period without replacement. Two Trace Contaminant Control Subassemblies are on-board Alpha at all times. One unit is located in the Laboratory Module while the second is located in the Habitation Module. Only one of these units operate at any one time with the other available to satisfy program failure tolerance requirements.

Trace Contaminant Control Subassembly Functional Description

Cabin atmosphere enters the Trace Contaminant Control Subassembly from the front of the Atmospheric Revitalization Subsystem rack face at a flow rate of 15.3 m^3/h (9 ft^3/minute). This flow rate produces a total subassembly pressure drop of 1,250 Pa (0.18 psi). The process flow first enters the charcoal bed which weighs 34 kg (75 lb_m) and contains 22.7 kg (50 lb_m) of charcoal. This bed is 84 cm (33 inches) long and 34.6 cm (13.6 inches) in diameter.

The charcoal packing is specially treated with 2 millimoles of phosphoric acid per gram of charcoal to remove ammonia from the cabin air. This approach prevents ammonia from entering the catalytic oxidizer where it may produce nitric oxides. This bed has a life of approximately 90 days at the current design generation rate basis but may last a year or more if the rates are found to be conservative.

Specific contaminants targeted as design drivers for the charcoal bed are ammonia and dichloromethane. The charcoal is also very efficient for removing contaminants with high to moderate molecular weights.

From the charcoal bed, the process stream is drawn into the blower which weighs approximately 2.9 kg (6.4 lb_m) and requires 30-35 watts of power. After the blower, 30 percent of the initial 15.3 m^3/h is processed by the high temperature catalytic oxidizer. The remaining atmosphere flow enters a bypass. An orifice plate in the bypass leg regulates the flow through the system in combination with a feedback loop to the blower from the flow meter. This control loop maintains the proper flow rate through the catalytic oxidizer by controlling the blower impeller speed. The bypass and catalytic oxidizer process streams recombine downstream of the

post-sorbent bed assembly before being exhausted into the cabin Temperature and Humidity Control System upstream of the condensing heat exchanger assembly.

In the catalytic oxidizer flow leg, the air passes through the flow meter and then into the catalytic oxidizer assembly. The catalytic oxidizer assembly is composed of a recuperative heat exchanger, an electric heater, and a fixed bed catalytic reactor. The assembly weighs 11 kg (24.2 lb_m) and has a length of 48 cm (18.9 inches) and a diameter of 24 cm (9.4 inches). The heater requires 150 watts at full power and it cycles on and off at a 71% duty to maintain a catalytic reactor temperature of 400°C (750°F). A maximum catalyst bed temperature of 538°C (1000°F) can be achieved. Power is conserved through preheating the air with the recuperative heat exchanger. The heat exchanger is rated at 90% efficiency. The design driving contaminants for setting the flow rate and operating temperature for the reactor are methane and carbon monoxide. The catalyst is 0.5% palladium supported on 3.18 mm (0.125 inches) alumina pellets. Catalyst bed life is estimated to range from 6 months to up to three years depending on the rate of poisoning experienced.

After the catalytic oxidizer assembly, the process gas flows into the post-sorbent bed assembly. This bed is filled with 1.4 kg (3 lb_m) of granular lithium hydroxide. The overall weight of the bed is 4 kg (8.8 lb_m) with a length of 35.2 cm (13.8 inches) and a diameter of 14.8 cm (5.8 inches). Designed to remove acidic oxidation products resulting from the oxidation of halocarbon compounds, the bed life is estimated to range from three months to a year or more depending on the load.

Control of the Trace Contaminant Control Subassembly is completely automated with some manual override capabilities. Two control loops maintain the proper flow rate and oxidizer temperature. Fault detection and isolation software is provided which automatically assesses the health of the Trace Contaminant Control Subassembly with no crew intervention.

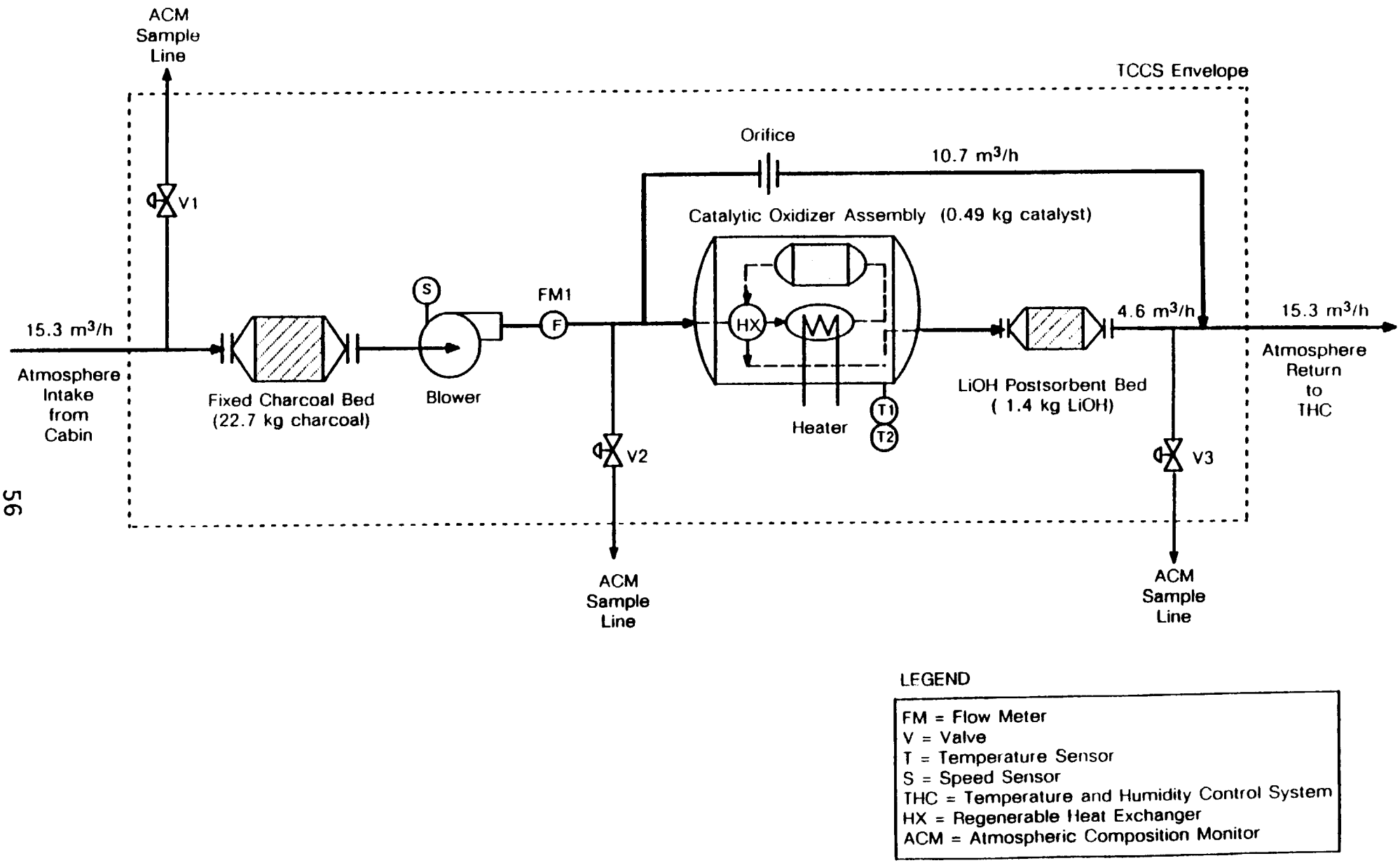

Figure 3-11 Baseline Trace Contaminant Control Subassembly Process Flow Diagram

Comparison of Russian and U. S. Trace Contaminant Control Hardware

Technical interchanges between NIICHIMMASH, NPO-Energia, and NASA personnel has been useful in learning more about the respective trace contaminant control systems. This information has shown that the two systems are very similar with respect to contamination control approach with some minor differences.

Direct comparison of system design parameters is provided by Table 3-7. As seen in this comparison, two major differences were noted during the technical interchange. The first is that the Russians do not use a high temperature catalytic reactor. They felt that it was risky because they were uncertain about the nature of the combustion products and its power requirement was not compatible with their station capabilities. They did think that the NASA system was best for overall control purposes and if they had the power they would like to explore its use further. This is further supported by the fact that Mir-2 will include a high temperature catalytic oxidizer. Since the Mir-1 system does not have a high temperature oxidizer, it is more energy efficient than NASA's hardware with a specific power requirement of 1.28 watt-hour/kg of air processed versus a NASA requirement of 7.63 watt-hour/kg of air processed.

The second difference is the Mir 1 system uses regenerable and expendable charcoal beds for controlling high and low molecular weight contaminants. Although this is more efficient from a logistics viewpoint, more power is required to regenerate the beds than the peak power for NASA's Trace Contaminant Control Subassembly. At their respective operating conditions, the Mir-1 Trace Contaminant Control System can process 37,000 kg of air/kg of resupply mass versus the 923 kg of air/kg of resupply mass for NASA's Trace Contaminant Control Subassembly. It must be noted that these operating conditions are based on completely separate sets of requirements and that a more accurate comparison should be based on the same contaminant generation rate basis, crew size, and spacecraft volume. Such a comparison is made below.

Other differences in the hardware design center on design requirements. The Russians believe that NASA's system is oversized. For the design requirements that were placed on the space station program, NASA's system sizing is appropriate;

however, these requirements may be overly conservative as shown by recent Spacelab flight data analysis. The result is a very robust NASA design which may have a much longer expendable life of 1 to 3 years than currently projected 3 to 6 months.

Air quality standard differences also exist. As seen in Table 3-8, most Russian SMACs are lower than NASA's. The Russians claim that the air quality requirements should be similar to those for working on the ground and that NASA's are too strict. However, this is inconsistent with the fact that Russian SMACs are lower than NASA's. The lower standards used by the Russians appear to be inconsistent with their equipment sizing. However, with the lack of definition for generation rate basis for their hardware design, it is highly likely that these standards are not met on-orbit.

Assessment of Using Mir Hardware on Alpha Space Station

Enough data was obtained during the technical interchange between NIICHIMMASH and NASA personnel to allow an analysis of the Russian hardware's performance versus the NASA space station design generation rate model. The current generation rate model for the permanently inhabited station phase was used to determine the Mir 1 system's ability to control contaminant concentrations adequately with respect to space station requirements over a typical 90-day mission phase. In addition, the analysis was conducted to account for contaminant removal by humidity condensate in one case and with no humidity condensate removal in the second case. As a comparison, a similar analysis of NASA's hardware was conducted. The results of the analysis are shown in Figures 3-12 and 3-13 and a listing of projected trace contaminant concentrations for each run are included in Table 3-9.

As seen in Figure 3-12, the Mir-1 system is not capable of meeting space station requirements unless the condensing heat exchanger contribution is considered. The steady rise in toxic hazard index (summation of the ratio of cabin concentration to SMACs for all contaminants) when the condensing heat exchanger removal contribution is not included is caused by the system's inability to control ammonia. This level rises to more than 11 by the end of 90 days and would continue to rise. By comparison, the toxic hazard index is maintained below 1.5 when ammonia is removed by the humidity condensate. NASA's Trace Contaminant Control Subassembly controls the toxic hazard index between 2.3 and 3.4 for the cases with and without the humidity condensate removal

contribution considered as shown by Figure 3-13. The slightly better overall control provided by the Mir-1 system with respect to NASA's Trace Contaminant Control Subassembly, a cabin toxic hazard index of 2.3 versus 1.5, with the humidity condensate contribution considered is directly attributed to the higher catalytic reactor flow rate of 20 m^3/h (11.8 ft^3/minute) for the Russian system which allows it to control carbon monoxide more effectively than NASA's catalytic oxidizer flow rate of 4.6 m^3/hr (2.7 ft^3/minute). The higher charcoal bed flow rate for the Mir-1 system also contributes to this result.

With respect to specific contaminants, the Mir-1 Trace Contaminant Control System does not control methane while NASA's is very effective in its control. Samples taken from Mir-1 have not indicated that methane is a problem; however, NIICHIMMASH personnel have appeared concerned about it and Mir-2 is adding this capability. On other design driving contaminants such as dichloromethane, ethanol, toluene, methyl ethyl ketone, and acetone, both the Russian and NASA hardware perform similarly as documented in Table 3-9. The Mir-1 trace contaminant control system controls dichloromethane slightly more effectively because of the higher system flow rate combined with the high per pass efficiency provided by the regenerable charcoal beds while NASA's system performance degrades over time until the charcoal bed is saturated and the bed is replaced. The Mir-1 system is not as effective as NASA's for controlling low molecular weight alcohols and formaldehyde. This is important since these compounds absorb into humidity condensate and are difficult to remove by the water processor causing a hidden increase in overall station consumables resupply requirements.

The Mir-1 expendable bed life for dichloromethane is 10 days versus the NASA hardware life of over 90 days using the current load model generation rates. Therefore, over a 90-day resupply period, the Mir-1 system would require a higher resupply mass than the current NASA subassembly of 54 kg (119 lb_m) versus 38 kg (83.8 lb_m). The annual resupply mass for charcoal is 216 kg (476 lb_m) while the annual resupply mass for NASA's charcoal and LiOH is 152 kg (335 lb_m). This changes the specific resupply mass requirement to 973 kg air processed/kg of resupply mass (973 lb_m air/lb_m resupply) for the Mir-1 Trace Contaminant Control System versus 1,060 kg air processed/kg of resupply mass (1,057.1 lb_m air/lb_m resupply) for NASA's Trace Contaminant Control Subassembly. Therefore, based

on the same design requirements and charcoal bed replacement rules as NASA's Trace Contaminant Control Subassembly, the Mir-1 Trace Contaminant Control System is not as economically attractive as NASA's.

Table 3-8. Comparison of Russian and NASA Spacecraft Air Quality Standards

TRACE CONTAMINANT	SPACECRAFT MAXIMUM ALLOWABLE CONCENTRATION (mg/m^3)											
	15-DAY		30-DAY		60-DAY		90-DAY		180-DAY		360-DAY	
	NASA	RUSSIA	NASA	RUSSIA	NASA	RUSSIA	NASA	RUSSIA	NASA	RUSSIA	NASA	RUSSIA
Methanol	9.0	*	9.0	*	*	*	*	*	9.0	*	*	0.2
Ethanol	93.5	*	*	*	*	*	*	*	*	*	*	10.0
n-butanol	120.7	*	*	*	*	*	*	*	*	*	*	0.8
Phenol	7.68	*	*	*	*	*	*	*	*	*	*	0.1
Ethylene glycol	126.3	100.0	*	*	*	*	*	*	*	*	*	10.0
Methanal	0.05	*	0.05	*	*	*	*	*	0.05	*	*	0.05
Ethanal	4.0	1.0	4.0	1.0	*	1.0	*	1.0	4.0	1.0	*	1.0
Benzene	0.32	*	*	*	*	*	*	*	*	*	*	2.0
Isopropylbenzene	73.3	*	*	*	*	*	*	*	*	*	*	0.5
Methylbenzene	60.0	*	60.0	*	*	*	*	*	60.0	*	*	8.0
Dimethylbenzene (o-, m-, p-)	220.0	*	220.0	*	*	*	*	*	220.0	*	*	5.0
Styrene	42.5	*	*	*	*	*	*	*	*	*	*	0.25
Ethyl acetate	179.3	*	*	*	*	*	*	4.0	*	4.0	*	4.0
n-butyl acetate	189.1	*	*	*	*	*	*	*	*	*	*	2.0
1,2-dichloroethane	43.1	*	*	*	*	*	*	*	*	*	*	0.5
Octafluoropropane	0.13	*	*	*	*	*	*	*	*	*	*	150.0
Cyclohexane	205.2	*	*	*	*	*	*	*	*	*	*	3.0
Methane	3,800.0	3,342.0	3,800.0	3,342.0	*	3,342.0	*	3,342.0	3,800.0	3,342.0	*	3,342.0
Heptane	204.5	*	*	*	*	*	*	*	*	*	*	10.0
Octane	348.9	*	*	*	*	*	*	*	*	*	*	10.0
Total hydrocarbon	*	100.0	*	50.0	*	50.0	*	50.0	*	20.0	*	20.0
2-propanone	710.4	5.0	*	3.0	*	1.0	*	1.0	*	1.0	*	1.0
2-butanone	30.0	*	30.0	*	*	*	*	*	30.0	*	*	0.25
Hydrogen sulfide	5.58	*	*	*	*	*	*	*	*	*	*	0.5
Nitric Oxide	6.08	0.4	*	0.4	*	0.4	*	0.4	*	0.1	*	0.1
Acetic acid	7.40	10.0	*	5.0	*	5.0	*	5.0	*	2.0	*	1.0
Ammonia	7.0	5.0	7.0	2.0	*	2.0	*	1.0	7.0	1.0	*	1.0
Hydrogen	340.0	1,677.0	340.0	1,677.0	*	1,677.0	*	1,677.0	340.0	1,677.0	*	1,677.0
Carbon monoxide	10.0	10.0	10.0	10.0	*	10.0	*	10.0	10.0	5.0	*	5.0
Hydrogen fluoride	0.50	*	*	*	*	*	*	*	*	*	*	0.05
Hydrogen chloride	1.49	*	*	*	*	*	*	*	*	*	*	0.05
Hydrogen cyanide	1.1	*	*	*	*	*	*	*	*	*	*	0.03

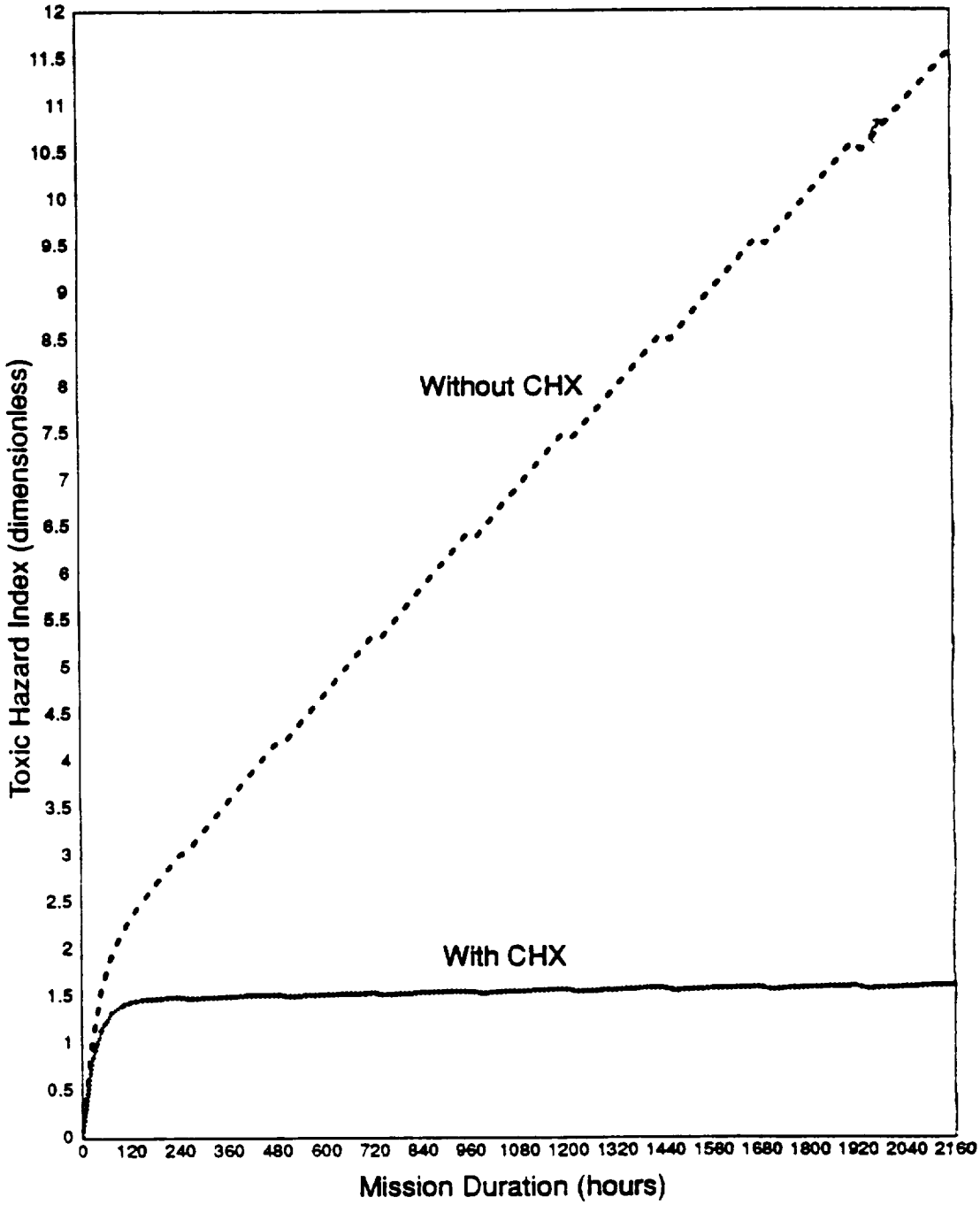

Figure 3-12 Cabin Toxic Hazard Index using Russian Contamination Control Hardware

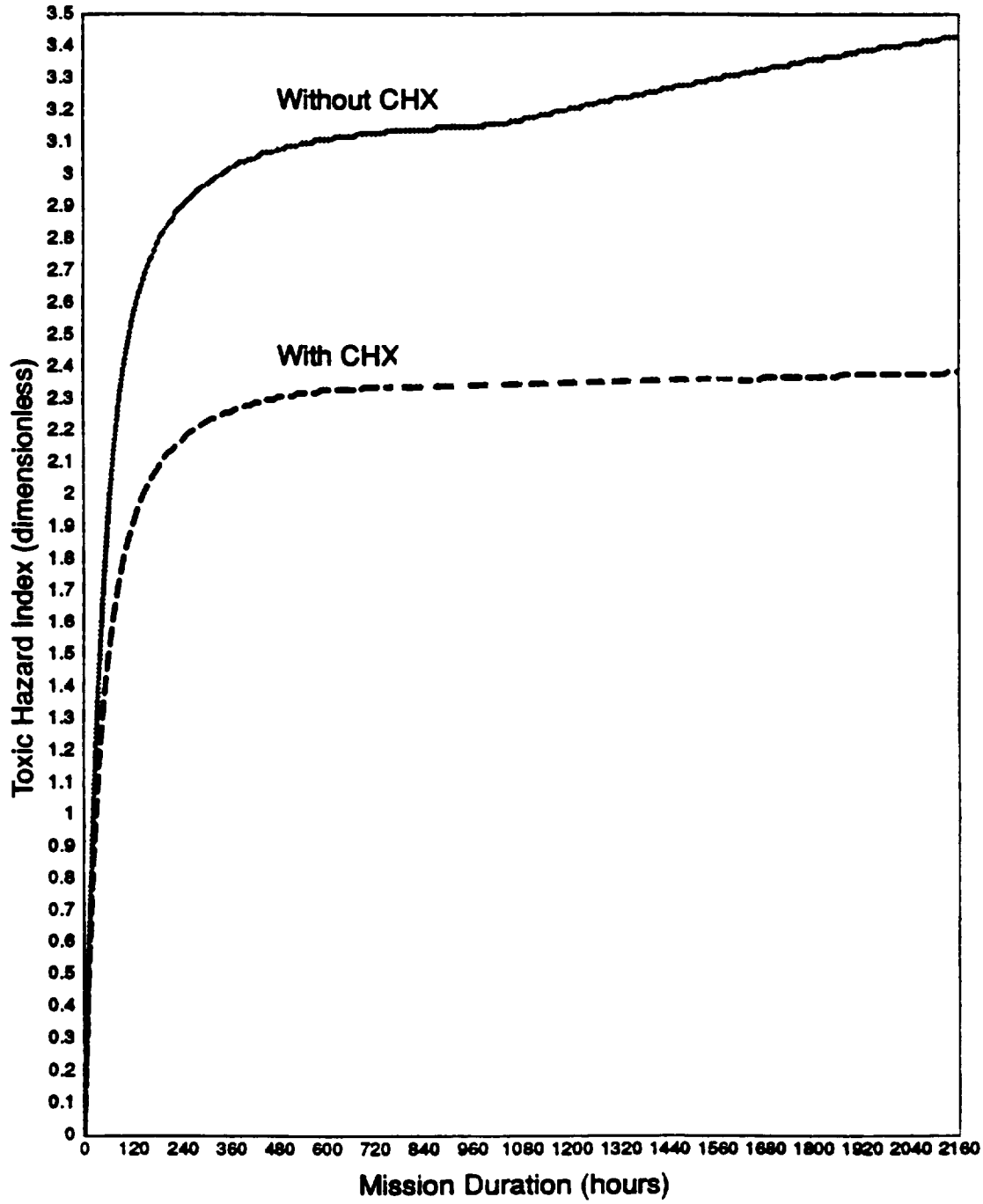

Figure 3-13 Cabin Toxic Hazard Index using U.S. Alpha Space Station Contamination Control Hardware

Table 3-9 Russian Vs. NASA Hardware Performance

CONTAMINANT	SMAC* (mg/m^3)	GENERATION (mg/day)	CABIN CONCENTRATION at 90 DAYS (mg/m^3)			
			RUSSIA W/CHX	NASA W/CHX	RUSSIA W/O CHX	NASA W/O CHX
1,2-ethanediol	127.0	9.89	0.00001	0.0001	0.02	0.03
Butanol	121.0	7205	11.7	14.0	15.3	19.8
Ethanol	94.0	5416	6.0	9.4	12.0	38.4
Methanol	52.4	730	1.4	1.2	20.8	7.4
Methanal	0.12	0.021	0.000002	0.000002	0.003	0.0002
Benzene	0.32	28.1	0.06	0.08	0.06	0.08
Isopropylbenzene	73.7	11.4	0.02	0.03	0.02	0.03
Methylbenzene	75.3	1407	3.0	3.9	3.0	3.9
Ethyl acetate	180.0	386	0.8	0.98	0.81	1.1
Dichloromethane	86.8	1819	4.3	17.4	4.3	17.6
1,1,2-trichloro-1,2,2-trifluoroethane	383.0	23940	50.8	65.8	50.8	65.8
Methane	1771.0	994	123.1	10.6	123.7	10.6
2-butanone	59.0	3917	2.3	2.5	8.3	10.8
2-propanone	712.5	4387	7.9	14.3	0.01	21.9
4-methyl-2-pentanone	82.0	1391	2.6	3.3	2.9	3.8
Hydrogen sulfide	2.8	0.45	0.01	0.003	0.06	0.005
Ethanoic acid	7.4	0.021	0.000006	0.000006	0.00004	0.00006
Ammonia	17.4	1288	0.02	0.02	160.4	3.5
Carbon Monoxide	28.6	1820	4.2	18.4	4.2	18.4
Hydrogen	247.3	131	0.3	1.3	0.3	1.3

* 7-DAY SMACs USED AS CURRENT REQUIREMENT

Conclusions of Mir-1 Trace Contaminant Control System Assessment

Based on the assessment of Mir 1 Trace Contaminant Control System versus the current NASA Trace Contaminant Control Subassembly, it is concluded that both are capable of providing adequate control of projected international space station contamination loads.

The NASA system is a more robust design with respect to broad spectrum control and it does not have to rely on other systems to meet the requirements placed on it. The Mir-1 system, however, relies on removal via absorption into humidity condensate to control many water soluble contaminants. This approach places part of the burden for trace contaminant control on the water processing hardware and represents a hidden increased logistics requirement.

NASA's Trace Contaminant Control Subassembly has other advantages over the Mir-1 system. It is evident that some contamination control problems have been occurring on-board Mir-1 because the regeneration cycle has been accelerated and Mir-2 will have a high temperature catalytic oxidizer. Verification of actual Mir-1 system performance remains difficult without the actual flight data.

Other advantages of NASA's Trace Contaminant Control Subassembly hardware over the Mir-1 system are its packaging, lower peak power requirement, and lack of external contamination problems. Although the regenerable system may appear to be more economical, the problems that external contamination may cause, such as degradation of solar arrays and insulation materials, are not fully characterized. The maturity of both systems is high but the additional testing and verification to which the Mir-1 system would have to be subjected in addition to packaging and power problems make it an undesirable choice for exclusive contamination control onboard the international space station. Table 3-9A summarizes the advantages and disadvantages of the Mir-1 Trace Contaminant Control hardware.

Table 3-9A Mir-1 Trace Contaminant Control Hardware Advantages and Disadvantages

DESIGN FACTOR	ADVANTAGE	DISADVANTAGE	COMMENTS
Weight	none	none	Both systems weigh 74 kg
Power	X	X	Lower average power/higher peak power
Volume		X	Packaging in a Rack may be a problem
Logistics		X	Small size of expend. bed plus poor efficiency may result in higher resupply requir.
Performance		X	Unknown Flight Performance Combined with ground test data showing poor per pass efficiency-also fidelity of mock-ups is unknown with respect to contamination production. Relies on removal in humidity condensate to supplement
Sizing		X	May be undersized-is not optimized for life purposes
Contaminants Controlled		X	Does not control CH_4 or NH_3
Development Maturity	X		Flight Experience

3.1.1.3 Oxygen Generation System

Russian Oxygen Generation System Description

Aboard Mir-I, oxygen for crew metabolic consumption is generated by a water electrolysis subsystem which was manufactured by NIICHIMMASH. The electrolysis system consists of (1) a circulating loop of electrolyte (potassium hydroxide) in which the electrolysis process and hydrogen and oxygen phase separation are accomplished, (2) a set of valves and regulators which control gas pressures and flows, (3) a purification canister which removes contaminants from generated oxygen and (4) sensors and a controller which monitor and control the process. The primary source of feed water for the electrolyzer is the Mir-1 urine processor. A photograph of the Mir-1 electrolysis subsystem is given in Figure 3-14 (cylindrical housing removed) and a schematic in Figure 3-15.

The electrolyte circulation loop includes a pump, an electrolysis cell stack, product gas/electrolyte mixture coolers, phase separators, and a tank for makeup water. Water from the tank enters the electrolyte stream which is pumped through both the anode and the cathode compartments of the electrolysis cell stack. Voltage applied across the cell stack results in the generation of oxygen and hydrogen. The two-phase mixtures leaving the cell stack (electrolyte/oxygen from the anode compartments and electrolyte/hydrogen from the cathode compartments) pass through the mixture coolers where waste heat is rejected to the Mir-1 thermal control loop and on to hydrophilic mixture separators. Electrolyte from the separators flows back to the electrolyte circulation loop. Oxygen and hydrogen from the separators pass through aerosol filters which remove any traces of electrolyte. The gases then leave the circulating loop and enter the pressurization block, which controls the product gas pressures and minimizes the differential pressure between them. On leaving the pressurization block, hydrogen is vented overboard and oxygen enters the purification canister which contains sorbants and an ambient temperature catalyst. The purified oxygen is dumped directly into the Mir-1 cabin atmosphere. The quality of the product oxygen is shown in Table 3-10.

The electrolysis system components, except for the oxygen purifier and the controller, are contained within a cylindrical housing. The lower section, below the tan colored sleeve, contains the

electrolysis cell stack, the coolers, and the phase separators. These components are electrically isolated from the housing by plastic film. Nitrogen at a pressure above maximum system operating pressure is maintained within the housing during system operation. This nitrogen charge is used to purge the system of oxygen and hydrogen gases after it is shut down. The upper section contains the circulating pump, water tank, aerosol filters, and pressure regulators. The housing around this region is not pressurized; it serves to contain the electrolyte if a leak occurs. The oxygen generator's packaging arrangement within the containment housing represents a safe and compact design. However, maintenance, other than purification canister replacement, is not possible in space.

NIICHIMMASH is working to improve their electrolyzer technology in several areas including (1) increasing current density, (2) increasing process temperature and (3) applying more active electrode catalysts in order to reduce cell voltage. However, these improvements will not be available for Mir-2. Therefore, the Mir-2 electrolyzer will utilize the same technology as the Mir-1 electrolyzer. The only significant difference between the two is that the Mir-2 system will be controlled by the on-board computer.

Table 3-10 Summary of Contaminants in Oxygen Produced by the Mir Electrolysis System

Contaminant	Units	Spec. Value	Sample Analysis
Acetone	mg/m^3	0.3	0.2
Aldehydes	mg/m^3	0.3	0.06
Fat acids	mg/m^3	0.5	0.1
Nitrogen oxides	mg/m^3	0.1	0.02
Ammonia and amines	mg/m^3	3.0	0.8
Carbon monoxide	mg/m^3	1.0	not detected
Alkaline KOH	mg/m^3	0.1	traces
Oxidizability	mg O_2/m^3	150	60
Water vapor	Pa (psi)	0.5	1467 (0.21)
Hydrogen	% vol.		0.25
Odor	point		1.0

Alpha Oxygen Generation Subsystem

The oxygen generation technology baselined for Alpha space station is the static feed electrolyzer manufactured by Life Systems, Inc. A photograph of a development unit is shown in Figure 3-16 and a schematic of the unit is given in Figure 3-17. The static feed electrolyzer consists of 6 orbital replaceable units: (1) a 24-cell electrolysis module, (2) a fluids control assembly, (3) a thermal control assembly, (4) a pressure control assembly, (5) combustible gas sensors, and (6) a controller. Feed water must meet Alpha potable water quality standards. Potassium hydroxide is the electrolyte.

Oxygen and hydrogen are produced in the cells of the electrolysis module. Each cell contains oxygen, hydrogen and water compartments as well as an electrolyte matrix/electrode assembly. The valves of the fluids control assembly control the periodic filling of the water tank and the supply of water to the thermal control assembly. The fluids control assembly also controls the automatic nitrogen purge which occurs upon system startup and shutdown.

The thermal control assembly supplies constant flow, controlled temperature water to the electrolysis module. This assembly contains a motor, a pump, and a motor-driven diverter valve which controls the flow through the heat exchanger.

The regulators of the pressure control assembly control the total system pressure and the oxygen to hydrogen differential pressure during normal mode operations. They also control pressurization and depressurization of the static feed electrolyzer during mode transitions. The purpose of the combustible gas sensors is to detect the presence of oxygen in the hydrogen outlet or of hydrogen in the oxygen outlet. There are triple-redundant sensors in each of the product gas lines.

The fluids control assembly, thermal control assembly, and pressure control assembly contain pressure and temperature sensors necessary to monitor their performance. The electrolysis module contains voltage and current sensors as well as temperature sensors. The system controller monitors the sensor output and controls system operation so that all measurements are maintained within specified limits. Any out-of-limit sensor reading will cause the controller to initiate an automatic shutdown of the system.

Comparison of the Mir/Alpha Oxygen Generation Subsystem

Requirements for the Alpha space station oxygen generation assembly are contained in Envelope Drawing 683-10011, Oxygen Generation Assembly. Table 3-11 presents a summary of pertinent requirements and the status of both the Mir-1 oxygen generation system and the static feed electrolyzer in meeting those requirements. The primary areas where the Mir-1 system is expected to fall short of U.S. requirements are fault detection and isolation and Crew Systems integration. These areas cannot be fully assessed based on the information available to date.

Table 3-12 shows a comparison of operating characteristics of the two systems. The required power is given for the nominal U.S. oxygen generation rate based on SSP 30262, ECLSS Architectural Control Document. The recent decision to operate the oxygen generation system only on the daylight side of the orbit will result in a higher operating power for both systems. However, the static feed electrolyzer will still be slightly more efficient than the Mir-1 system. This is due primarily to the higher operating temperature of the static feed electrolyzer.

The Mir-I electrolysis system is operable over a wide range of current densities, 500-2500 amps/m^2(47 to 232 ASF). The resulting range of oxygen production rates for continuous operation is 1.8 to 11.3 lbm/day with the nominal rate being 5.7 lbm/day. Cyclic operation will require higher rates of O_2 production. It is likely that both the Mir-1 system and the static feed electrolyzer will require additional electrolysis cells in order to meet the requirement for cyclic operation.

There is no regularly scheduled maintenance for either system. For the Mir-I electrolysis system only the controller and the purification canister can be replaced on orbit. The static feed electrolyzer consists of six orbital replaceable units. The fluids, thermal and pressure control assemblies are mounted on an interface plate on front of the cell stack and are readily accessible for maintenance.

The only expendable in the Mir-1 system is the purification canister, which has not yet had to be replaced. The current design of the

static feed electrolyzer contains no expendables; however, the addition of a deiodinator is being considered.

The Mir-I electrolysis system must be turned on and off and the current load must be selected by the crew or by operations support. Once the system has been started, its operation is automatic. According to all reports, it has proved highly reliable, having suffered no on-orbit failures in approximately 750 days of operation.

Potential safety concerns with any electrolysis system include leakage of hydrogen into the surroundings and cross-leakage of oxygen and hydrogen inside the electrolysis cells. Both of these systems are equipped with combustible gas sensors for detecting cross-leakage. Mir-1 also has hydrogen sensors installed in the vicinity of the electrolyzer. The Alpha space station air revitalization rack will provide a sample port for the major constituent analyzer which will be used to detect any hydrogen leakage from the static feed electrolyzer.

Table 3-13 is a summary of the advantages and disadvantages of the Mir-I system as it compares to the static feed electrolyzer. The advantages are not considered significant enough to warrant changing the Space Station baseline to the Mir -1 electrolyzer.

ORIGINAL PAGE
COLOR PHOTOGRAPH

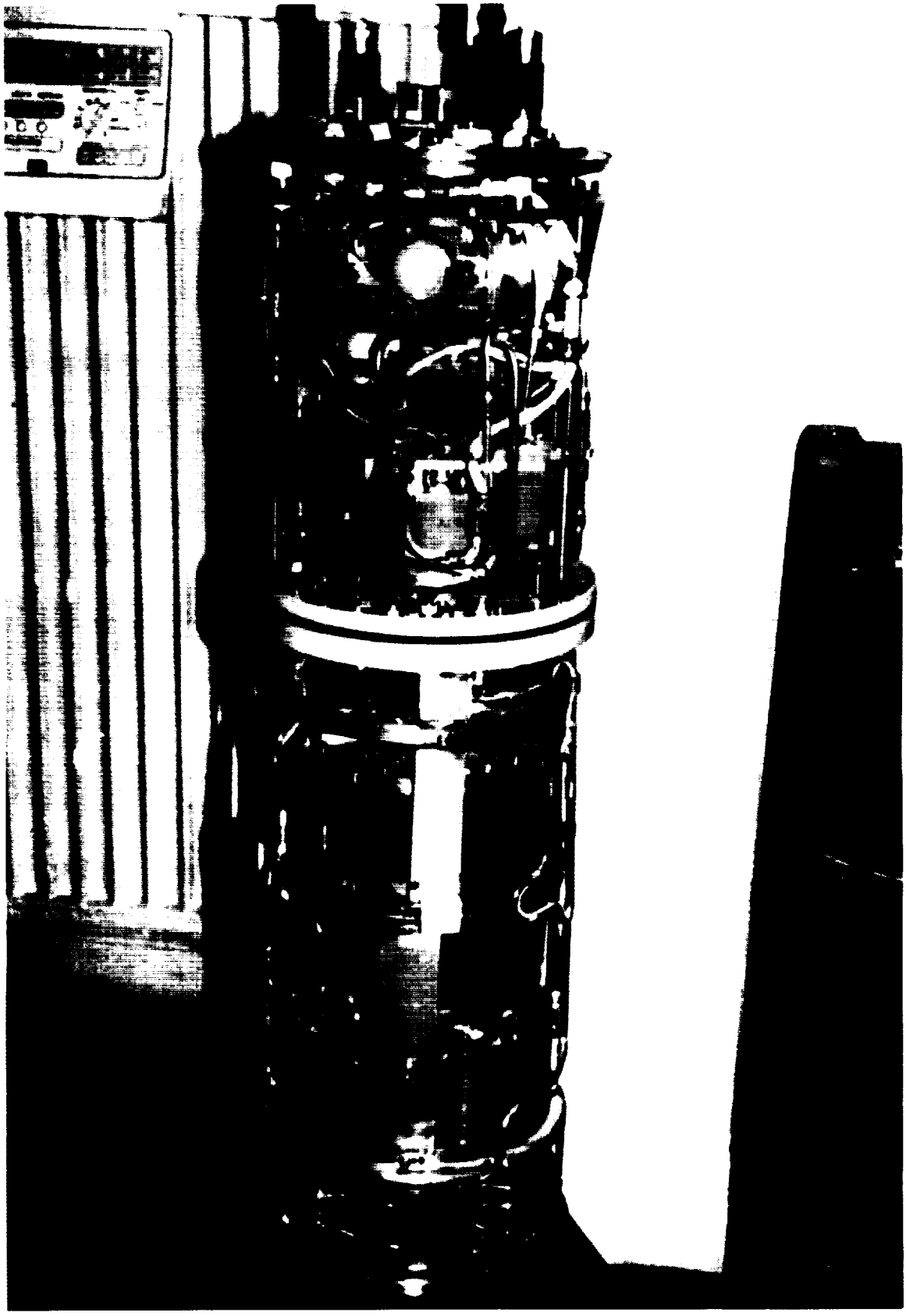

Figure 3-14 Photograph of Mir-1 Oxygen Generation System

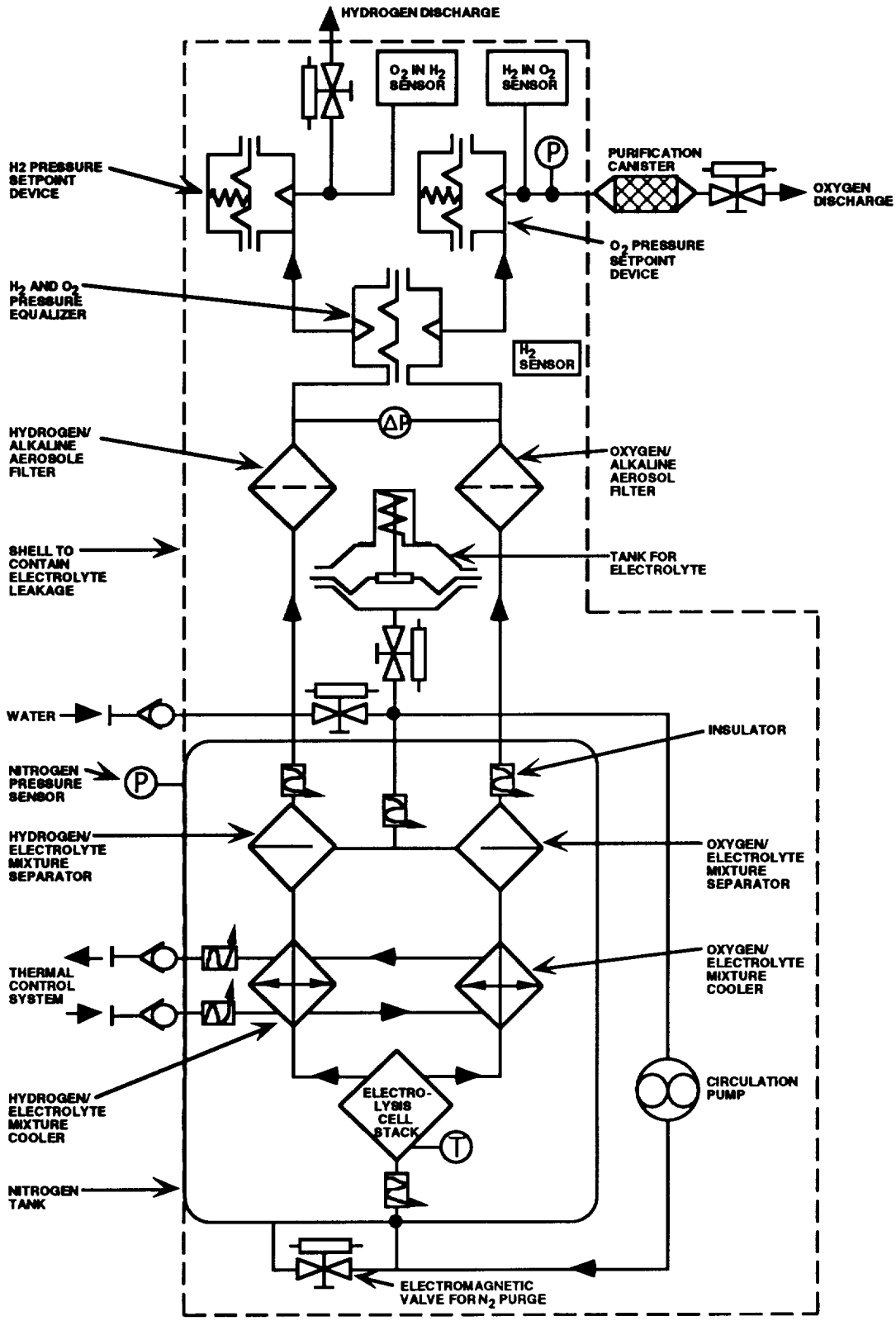

Figure 3-15 Mir-1 Electrolysis System Schematic

ORIGINAL PAGE
COLOR PHOTOGRAPH

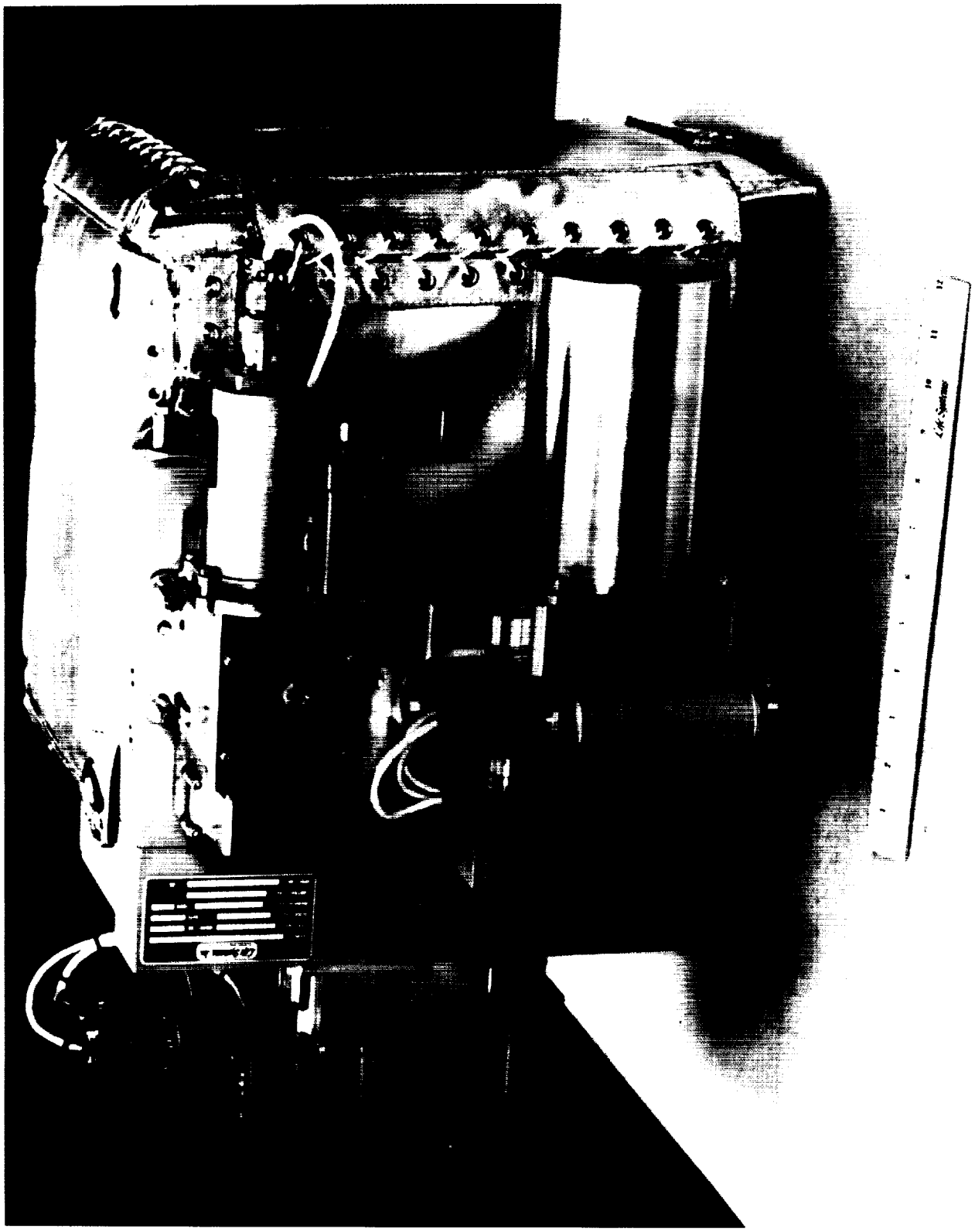

Figure 3-16 Photograph of U.S. Electrolyzer

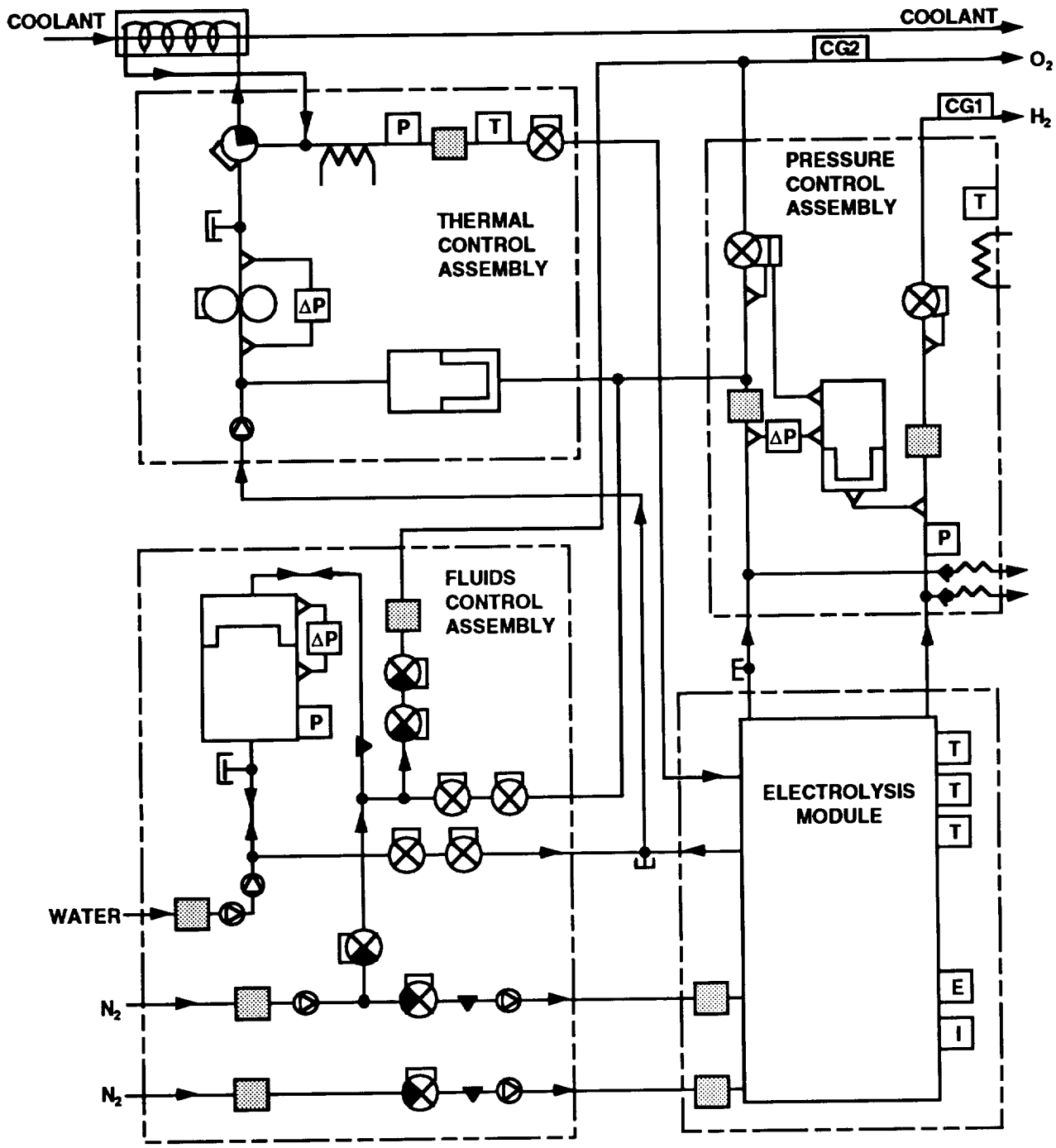

Figure 3-17 Static Feed Electrolyzer Schematic

Table 3-11 Oxygen Generation System Requirements

		Meets Requirement?	
Characteristic	**Space Station Requirement**	**Mir Electrolyzer**	**Static Feed Electrolyzer**
Performance	9.1 lbm/day O_2, nominal	Yes	Yes
	20±5 psia delivery pressure	Yes	Yes
	Continuous operation	Yes	Yes
Power	8.9 W hr/l	No	Yes
Heat rejection	400 W, average	unknown	Yes
Weight	93.4 kg	No	Yes
Interfaces:			
TCS	9°C, coolant inlet	Yes	Yes
	13°C, coolant outlet	No	Yes
power	120 V DC	No	Yes
data/control	1553 bus	unknown	Yes
nitrogen	105±15 psia	Yes	Yes
water	Hygiene quality	Yes	Yes
Expendable usage	N/A		
Packaging	≤ 8.4 ft^3	Yes	Yes
Maintenance:			
man hours	≤ 1.09 MMhr/Yr	Yes	Yes
accessibility	by removal of 1 access panel	Yes	Yes
tools required	from approved tool list	No	Yes
Fault detectionand isolation	sensors detect 96% of orbital replaceable unit faults	unknown	Yes
	sensors report orbital replaceable unit status to diagnostic software	unknown	Yes
	sensor faults shall be detectable	unknown	unknown
Reliability	per SSP-SRD-001, 2.1.10, A-E	unknown	unknown
Automation	DMS controlled	No	Yes
Safety considerations	45°C, max touch temp	Yes	Yes
Acoustic noise	NC-40	unknown	Yes
Hardware maturity	8 (operational in space)	Yes	No

Table 3-12 Alpha/Mir-1 Electrolyzer Comparison

Parameter	Mir	Space Station
Nominal O_2 generation rate, l/hr (lb/day)	81 (5.7)	129 (9.1)
Specific energy, W hr/l O_2 (kW hr/lb O_2)		
Cell stack		7.4 (2.5)
Assembly	10 (3.4)	8.6 (2.9)
Current density, amps/m^2 (amps/ft^2)	500-2500 (47-232)	1184-2152 (110-200)
O_2 delivery pressure, kPa (psig)	29 (4.2)	931-1276 (135-185)
Assembly weight, kg (lb)	147 (324)	73 (160)
Assembly volume, m^3 (ft^3)	0.24 (8.4)	0.1 (3.6)
Power @ Space Station nominal requirement, kW	1.3	1.1
Heat rejection, W		
to TCS loop	unknown	50
to avionics air	unknown	168
Feed water quality	urine processor output	potable quality
Design life (with maintenance), yrs	7	30
Maintenance, (person-hrs/yr)	unknown	1.1
Number of ORUs	3	6
Design meets Space Station SR&Q requirements	unknown	yes
Technical maturity	8 (operational on MIR)	6.1 (prototype tested at contractor facility)

Table 3-13 Mir-1 Electrolyzer Advantages and Disadvantages

Advantages	Disadvantages
Operates over a wide range of current densities	High system weight (324 lbm vs. 160 lbm for Alpha unit)
Rapid startup and shutdown; rapid change of production rate	Large system volume (8.8 ft^3 vs. 3.6 ft^3 for Alpha unit)
Technical maturity-Operational in space	High power (1300 W vs. 1100 W for Alpha unit)
	Not designed to Space Station Failure Detection and Isolation requirements
	Not designed to Space Station Crew Systems Integration requirements
	Limited on-orbit maintainability

Figure 3-18 Crew Oxygen Requirement vs. Electrolysis Power on Mir

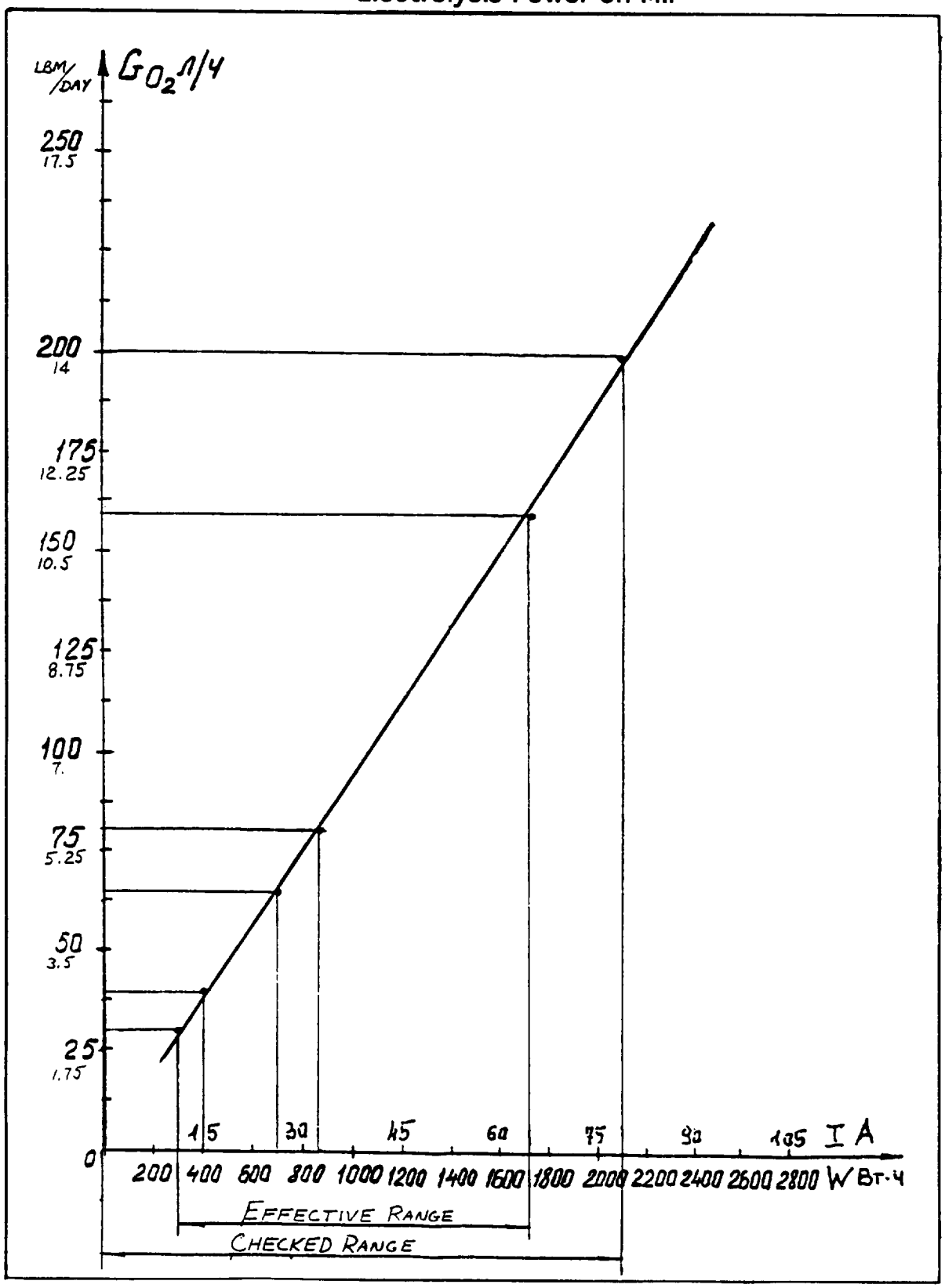

3.1.1.4 Carbon Dioxide Reduction

Russian CO_2 Reduction System Description

Although the Mir-1 station does not contain a Carbon Dioxide Reduction Assembly, the Russians have been developing a system for use on Mir-2. The technology is based on the Sabatier reaction and is shown schematically in Figure 3-19. The major components of this system include inlet valves and regulators, a gas purifier, a regenerative heat exchanger, the reactor, a condensing heat exchanger, and a phase separation subassembly. The reactor subassembly is housed inside the titanium carbon dioxide accumulation tank which maintains a pressure greater than that of the reaction chamber for safety purposes. The system is fed hydrogen from the water electrolysis system and carbon dioxide from the accumulator. The plumbing within the system designed to control the feed ratio allows for dumping inlet CO_2 or H_2 to space if necessary. The two gases are mixed in a static mixer and purified in an expendable sorbent canister prior to being sent to the catalyst bed. The purifier is designed to remove contaminants which are potential catalyst poisons. It is an expendable-packed bed containing 300 cm^3 (18.3 in^3) of a proprietary mixture of activated carbons and is designed for a life of one year.

Mixed gas-flow to the catalytic reactor is preheated by hot reaction products in a regenerative heat exchanger. The reactor is a stainless steel vessel containing 200 cm^3 (12.2 in^3) of a catalyst consisting of various co-precipitated noble metals (assumed to be primarily nickel and ruthenium based on discussions with Russian designers) on an alumina substrate which converts the CO_2 and hydrogen into methane and water. The conversion efficiency expected for this system is 99% of the lean reactant for a crew of three. It has been estimated that for a crew of eight the efficiency will be 96%.

The feed ratio used in ground testing has varied between 2.0 and 5.0 (H_2 to CO_2), but only one ratio will be used aboard Mir-2. Electric heaters (one rated at 250 watts and a maintenance heater rated at 50 watts) in the catalyst bed are utilized at start-up for 30 minutes until the reaction is initiated. Once operating, the bed temperature is maintained by the exothermic reaction, and the heaters are energized as required only during periods of low inlet gas flow (less than 50 liters/hr (1.77 ft^3/hr)). During nominal flow conditions, temperatures near the bed's inlet and outlet are about 400 °C (752 °F) and 200 °C (392 °F), respectively, without the use of heaters.

Reaction products, after initial cooling in the regenerative heat exchanger, are fully cooled to condense the water vapor in a liquid cooled heat exchanger. The liquid cooled heat exchanger is a stainless steel, tube-in-shell type, cooled by 100 l/hr (0.44 gal/min) of flow from the space station's thermal control system. A temperature sensor monitors the condensate and product gases leaving the reactor subassembly.

Condensate, methane, and unreacted gases leaving the catalytic reactor subassembly are fed to the phase separator subassembly. It includes a porous wall static separator, which operates with a diaphragm tank and a diaphragm pump. The separator uses suction of water through a hydrophilic porous wall to accomplish gas and liquid separation. The diaphragm tank has a capacity of 250 ml (0.55 lb), which requires approximately three hours to fill under nominal system flow. Limit switches at the extremes of the diaphragm's travel control a diaphragm pump to empty the tank. The pump operates for about 30 seconds to discharge the tank contents. Water is pumped to the vehicle's water supply system, and gas products are either vented to space or stored for use in the vehicle's orbital attitude control system. The quality of the product water is considered "potable" by the Russians, although no actual test data has been made available.

The weight of the system is 100 kg (220.5 lbs) including the CO_2 accumulator tank which weighs approximately 40 kg. Average power consumed is 0 watts for normal carbon dioxide flows, and 50 watts for low carbon dioxide flows.

The Russians believe their system will have a lifetime of greater than 25 years. Expendables are estimated to be 8 kg/yr (17.6 lbs). The sorbent canister and phase separator are designed to be replaced after one year. Clogging was said to be the life limiting factor for the phase separator. More than 10,000 system operating hours have accumulated during hardware development. In particular, integration of the CO_2 removal and reduction systems has been tested with a human in the loop for one full year.

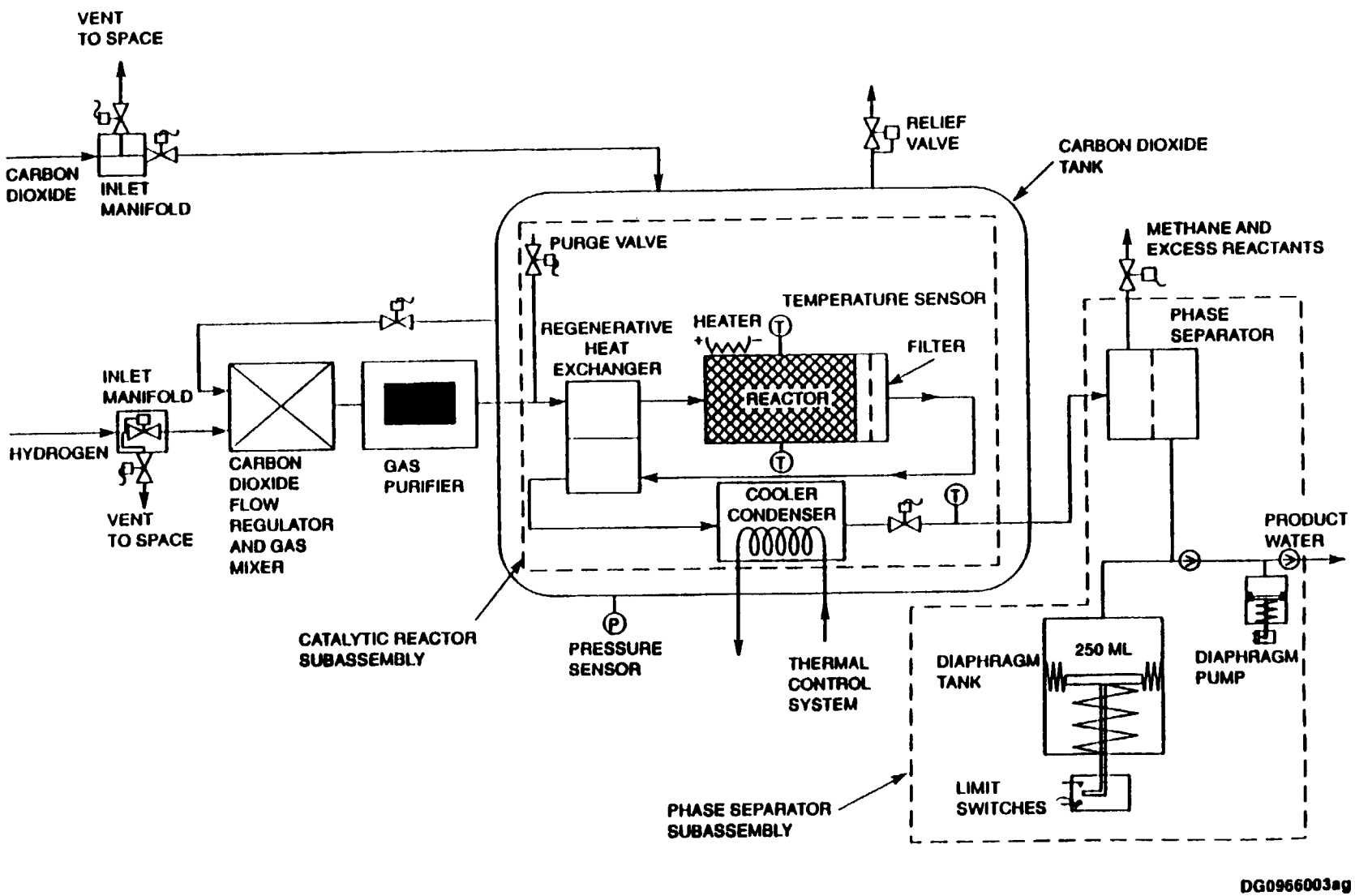

Figure 3-19 Mir-1 Carbon Dioxide Reduction System Schematic

U.S. CO_2 Reduction System Description

The U.S. space program has also baselined the Sabatier process for its oxygen closure efforts. Figure 3-20 shows a block diagram of a CO_2 Reduction System under development for potential future use on-board the Alpha space station. The major components include a fluids control assembly, the reactor, a condensing heat exchanger, a water removal assembly, and a blower. The system would accept carbon dioxide from the CO_2 Removal System accumulator and hydrogen from the oxygen generator at an approximate station ratio of 3.5:1 (H_2 to CO_2). The fluids control assembly mixes the gases and sends them to the inlet of the Sabatier reactor containing a ruthenium on alumina catalyst. The reactor is air cooled by the blower assembly to maintain proper temperatures to achieve the maximum conversion efficiency of reactants. Greater than 99% conversion efficiency of the lean reactant is a requirement for the system for an eight-person crew.

Reaction products (methane, water vapor, and unreacted carbon dioxide) are passed through a condensing heat exchanger which is supplied cooling water from the station thermal control system. Water vapor is condensed and removed by the water removal assembly while product gases are sent back to the fluids control assembly for venting overboard to space or possibly for use by station resistojets. A static type phase separator is being investigated for potential use in the water removal assembly. Product water is sent to the station water reclamation system. A triple redundant combustible gas assembly monitors the subsystem for hazardous gas leaks. Nitrogen supplied by the station is used to purge the system upon shutdown.

Preliminary resource requirements for the system are 41 kg (90 lbs.), approximately 0.057 m^3 (2 ft^3), 253 watts during startup, and 53 watts average power thereafter (less if a static separator is used). The design life is 30 years as a requirement for Alpha. It is not known at this time whether any of the components will require replacement before that time. The technical maturity of the hardware is at the predevelopment level. Endurance testing has been performed at the vendor.

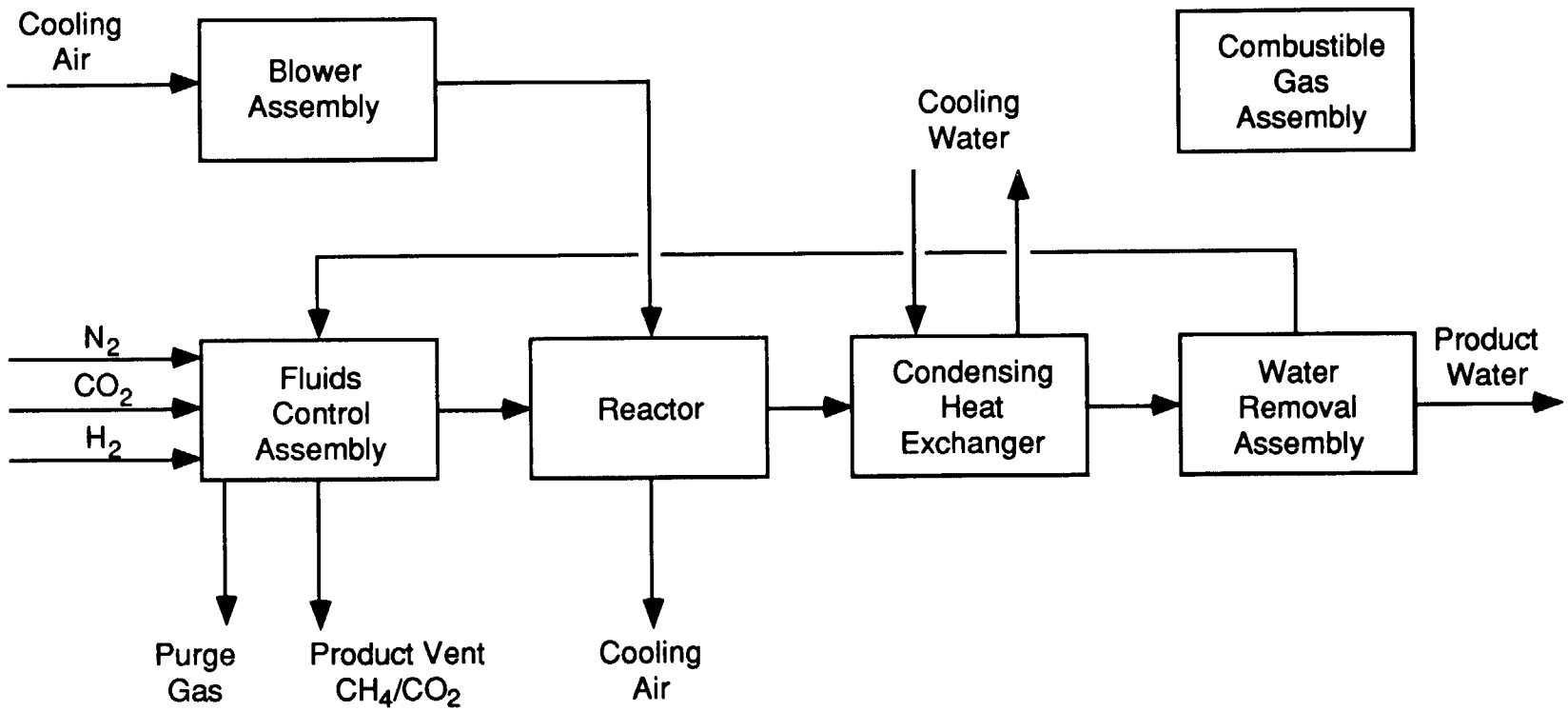

Figure 3-20 U.S. Carbon Dioxide Reduction System Schematic

Comparison of Russian and U.S. CO_2 Reduction Hardware

Table 3-14 gives a comparison of some parameters of the Russian and U.S. Carbon Dioxide Reduction Systems.

Table 3-14 Russian/U.S. CO_2 Reduction System Comparison

Parameter	Russian System	U.S. System
Nominal crew size	2-3	4
Maximum crew size	6	8
Biological specimens	No	Yes
System weight, kg (lb)	100 (220)	41 (90)
System volume, m^3 (ft^3)	unknown	.06 (2)
Average system power, watts	0 (50 watts for low flow)	53
Startup Power, watts	250	253
Heat rejection, W		
to thermal system	unknown	47
to avionics	unknown	104
Resupply, kg/yr. (lb/yr.)	8 (3.6)	To be determined
System life, years	>25 years 1 year for purifier 1 year for phase separator	30
Catalyst type	Noble metals (primarily Ni and Ru) on alumina	Ruthenium on alumina
Conversion efficiency	99% (3 person) 96% (8 person)	99%
Maintenance, person-hrs/yr	unknown	To be determined
Number of ORUs	unknown	6
Design meets SSF SR&Q requirements	unknown	Yes
Technical maturity	6.2	5.4

From what is known at this time, it appears that the two systems are very comparable. The U.S. system by design is sized for a slightly larger crew; however, Sabatier reactor designs can easily handle increased flowrates with a minimal drop in conversion efficiency. The Russian system weighs more primarily because it is

housed within the carbon dioxide accumulator tank. If the weight of the CO_2 accumulator tank is added to the U.S. system, the total weight would be approximately 55 kg. The envelope of the Russian system is not known. The U.S. system has a higher average power because of an active rather than passive water separator. If a passive separator is used (as is being investigated) then the average power would be nearly zero. The choice of a combined catalyst of nickel, ruthenium, and other noble metals for the Russian system is interesting. Nickel and ruthenium are both good methanation catalysts; however, U.S. designers have found that pure ruthenium has better selectivity and activity.

The Russian system does not actively cool the reactor. The U.S. design has an air cooled reactor to control the temperature profile and achieve maximum conversion efficiencies. Also, the exothermic Sabatier reaction will tend to "run away" unless the heat is removed. If the reactor temperature reaches about 593° C (1,100 °F) the Sabatier reaction reverses. It is possible that at the lower Russian system flowrates this phenomenon is not a problem. It is also quite possible that this is the reason for slightly reduced conversion efficiencies at higher reduction rates.

Table 3-15 summarizes the advantages and disadvantages of the Russian system given the information available. Again, the systems are so comparable that any advantage or disadvantage is minor in strength. Hardware maturity is seen as a slight advantage since the Russian system has reportedly undergone manned testing and is slated for flight on Mir-2. The passive separator is a technology that represents an advancement over current U.S. state of the art. However, the necessity of replacing the unit as often as once per year is a disadvantage.

Although test data is not available, reported conversion efficiencies for the Russian system are slightly less than those achieved by the U.S. preprototypes. The Russian system is also slightly heavier, but the estimate for the U.S. flight system based on preprototype technology may increase with design maturity. Finally, as with all other Russian systems, it is not expected that the Russian system would be equipped with the same fault detection and isolation capability as the U.S. system. In summary, based on the information that is available it is not recommended that the Russian CO_2 Reduction technology be pursued for U.S. station use. An exception would be the passive separator which may be of interest for the U.S. design.

Table 3-15 Russian CO_2 Reduction System Advantages and Disadvantages

ADVANTAGES	NEUTRAL OR UNKNOWN	DISADVANTAGES
Hardware maturity - slightly higher than U.S. system and has undergone manned testing	System volume unknown	Slightly higher weight
Passive water separator technology reduces continuous power to zero.	Resupply requirements are not known for U.S. system, but are probably comparable to Russian system.	Slightly reduced conversion efficiencies at CO_2 rates greater than 3 crew.
	System maintenance/lifetime unknown	Unknown capability to meet U.S. fault detection and isolation requirements

3.1.2 Water Reclamation and Management Systems

The MIR-1 water system is functionally divided into three separate reclamation loops which are supplemented by water supplied from the ground on-board Progress resupply vehicles. Each of the three reclamation loops are physically isolated from each other, although manual water transfer between loops is done as described below. A top-level functional schematic showing the transfers accommodated between the three loops is shown in Figure 3-21. A urine reclamation loop produces purified distillate which is used to supply the water electrolysis system for oxygen generation. Although provisions are included in the urine reclamation loop to process the distillate to potable water quality standards for drinking, consumption of product water from this loop has not occurred on-orbit. A second reclamation loop purifies cabin humidity condensate to potable water quality standards for drinking. A third reclamation loop purifies wastewater from a shower and handwasher for reuse in those devices. Design details regarding the processes in each of these loops are described in later sections.

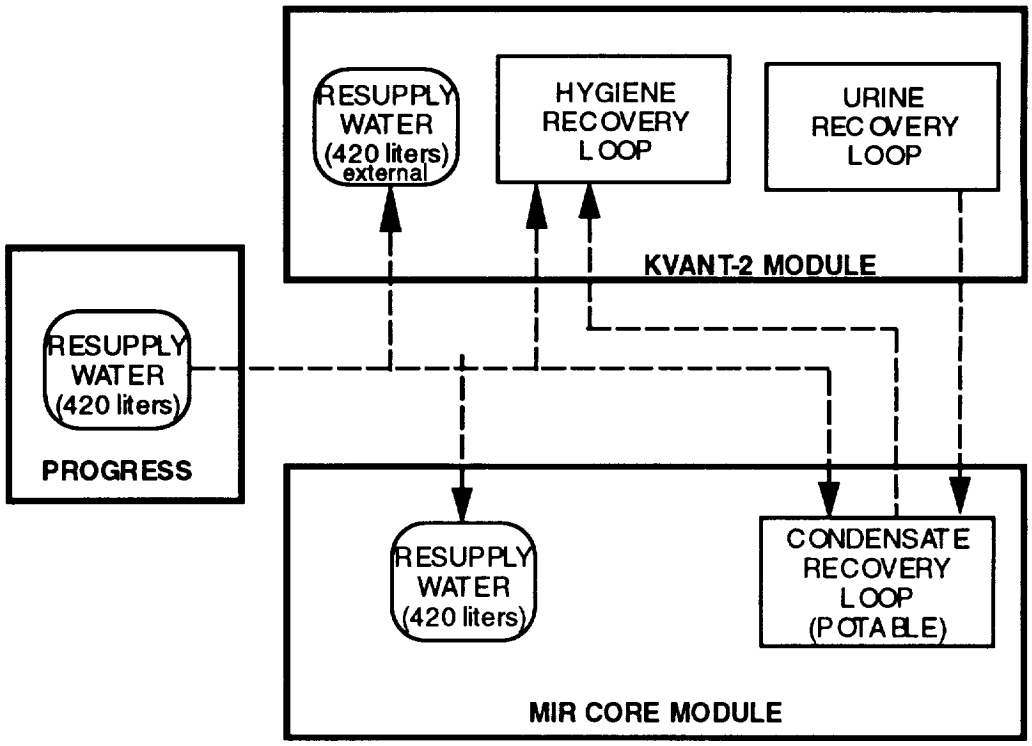

— — dashed lines denote manual water transfers typically conducted

Figure 3-21 Mir-1 Water Systems

Water systems are co-located with equipment to which they are interfaced. Urine recovery hardware is located in the Kvant-2 module and receives urine from the commode/urinal and supplies distillate to the oxygen generator which are also located in that module. Hygiene recovery hardware is located in the Kvant-2 module and interfaces with the shower and handwasher in that module.

Potable water reclamation hardware is located in the Mir-1 core module and receives an air/water mixture from the centralized temperature and humidity control system also located in that module. Reclaimed potable water is supplied to the crew at taps located with the processing hardware in the Mir-1 core. Tanks containing water resupplied from the ground are located in the Mir-1 core module and in the Progress vehicle.

Water is transferred, as needed, between the reclamation loops and ground-supply water tanks manually by the crew. There are no fixed plumbing connections linking the three reclamation loops nor the resupply water storage tanks. To transfer water, the crew fills a transferable tank (several of these tanks, which are common to tanks within the water processors, are stored empty on-orbit) at the desired transfer supply point and then manually carries the filled tank to the desired destination. These transfers are conducted to make-up for inefficiencies in the reclamation processes. For example, water losses from the hygiene reclamation loop have been reported to be as high as 10% due to evaporation into the cabin. To compensate for this unintended transfer of water from the hygiene to potable loops, the crew must periodically add water back into the hygiene loop.

Top-level comparisons of the overall architecture's of Mir-1 and U.S. space station water system architectures tend to cite the fact that Mir-1 has three separate water loops as a fundamental difference relative to the U.S. single-loop architecture. However, the manual transfer of water that is routinely conducted between the three Mir-1 water loops has an important implication to these comparisons. Although Mir-1's three loops are physically separated with no permanent, hard-plumbed connections between them, the routine transfer of water between the loops makes them functionally-combined in the same fundamental way as occurs in the U.S. single-loop architecture. The physical segregation of three loops in the Mir-1 provides no real functional isolation of the three water loops

from each other and increases the manual activities required on-orbit to keep the water inventories within the three loops properly balanced.

In defense of the Russian three-loop architecture, engineers from NIICHIMMASH have claimed that combining relatively clean humidity condensate with relatively dirty waste hygiene water would cause, through a dilution effect (since the adsorption capacity of a sorbent or resin is proportional to the concentration of contaminants in the liquid phase), an overall reduction in multifiltration efficiency and a subsequent increase in logistics penalties. Similar concerns were expressed within the U.S. program during the process of switching from a two-loop to a single-loop architecture. Integrated water recovery testing has shown that the combined unibed expendable rates (with fresh beds) for a hygiene processor and potable processor operated in a two-loop test was 1.14% (i.e., 1.14 lb of sorbent expended per 100 lbs of water processed). The expendable rate incurred for fresh unibeds during single-loop testing was 1.27 to 1.64%.

The crew can get potable water from either the condensate recovery loop or from the water resupply tanks. Approximately 80% of the crew's drinking water has been reported to have been provided from the condensate recovery loop and 20% from resupplied water. However, conflicting reports have been received from the Russians regarding this point. Some of the medical doctors have stated the cosmonauts will only drink water resupplied from earth. The Russian life support engineers state the cosmonauts are drinking the reclaimed water from condensate. NASA has requested the Russians define the total amount of water resupplied to Mir-1 over the past 4 years to clarify the issue but they have refused to supply this data to date.

Water Quality

The water quality standards established for reclaimed potable and hygiene water on-board the Mir-1 are listed in Tables 3-16 and 3-17. The standards established for the U.S. space station program are also shown for comparison. Compared to the Alpha space station standards, the Mir-1 standards are generally less comprehensive (fewer maximum contaminant levels are defined) and less restrictive (higher maximum contaminant levels are allowed).

Implications of the Mir-1 water quality specifications to the design of the reclamation systems are discussed in later sections.

Direct comparisons between Russian and U.S. water quality specifications are complicated in several areas. Although specifications for color, taste, odor, and turbidity are established in both programs, it is unclear whether the Russian units of measure used for each of these parameters are directly comparable to the U.S. units. Russian water quality data in these areas should therefore be interpreted with some caution until definitive information on Russian analytical methods can be obtained.

A more significant complication is related to the measures used to quantify the total concentration of organics present in water samples. In the U.S. program, total organic carbon (TOC) is used as the surrogate measure of the total concentration of organics in water, whereas in the Russian program, oxygen consumption is used. Both methods are based on the oxidation of organic compounds according to the general reaction:

$$\text{organics } (C_xH_yO_z) + \text{ oxidizer } (O_2) \rightarrow CO_2 + H_2O$$

An implicit assumption which is common to both methods is that all organics are completely converted to CO_2. The fundamental difference lies in what is actually measured. In TOC methods, the product CO_2 is measured. Reported TOC values reflect the mass fraction of measured CO_2 that is contributed by carbon (i.e., 12/44 = 0.27). In oxygen consumption measurements, the quantity of oxygen consumed in the oxidation reaction is measured and reported.

Ideally, direct comparisons of TOC and oxygen consumption measurements would be possible simply by using the stoichiometric relation between O_2 and CO_2 inherent in the reaction written above. However, this is possible only in the very simplest of cases. Contrary to the simple reaction listed above, organics that are present in reclaimed waters may contain additional elements other than carbon, hydrogen, and oxygen. Elements such as nitrogen and sulfur, along with ions such as chloride, all of which are typically present in water recycling systems can consume oxygen without producing CO_2. The presence of these elements in a water sample would therefore tend to make the concentration of organics inferred from oxygen consumption measurements higher than that inferred from TOC measurements. Additional complication is also derived

from the inaccuracies inherent in the assumption that complete oxidation to CO_2 is achieved in both methods. While the assumption of complete oxidation is generally accepted, the fact that the two methods are executed under different conditions (temperature, oxidizer type, reaction time, etc.) probably also contributes to the difficulty in trying to derive a universally applicable correlation between the two types of measurements. In cases where TOC values have been derived from oxygen consumption values, and vice versa, it should be remembered that the accuracy of such correlations are generally inversely proportional to the complexity of the water sample that is being measured.

Table 3-16. Comparison of Russian and U.S. Space Station Potable Water Quality Specifications

PARAMETERS	UNITS	RUSSIAN SPEC*	Space Station SPEC
Total Solids	mg/l		100
Color	Pt/Co units	20 (?)	15
Taste	TTN	2(?)	3
Odor	TON	2(?)	3
Particulates	microns		40
pH	pH units	6.0-9.5	6.0-8.5
Turbidity	NTU	1.5(?)	1
Dissolved Gas	@ 37 C		none
Free Gas	@STP		none
Ammonia	mg/l	2.0	0.5
Arsenic	mg/l		0.01
Barium	mg/l		1.0
Cadmium	mg/l		0.005
Calcium	mg/l	140	30
Chlorine (total)	mg/l	350	200
Chromium	mg/l		0.05
Copper	mg/l		1.0
Fluorine	mg/l	1.5	
Iodine (total)	mg/l		15
Iron	mg/l		0.3
Lead	mg/l		0.05
Magnesium	mg/l	85	50
Manganese	mg/l		0.05
Mercury	mg/l		0.002
Nickel	mg/l		0.05
Nitrate (NO3-N)	mg/l	10	10
Potassium	mg/l		340
Selenium	mg/l		0.01
Silver	mg/l	0.5	0.05
Sulfate	mg/l	500	250
Sulfide	mg/l		0.05
Zinc	mg/l		5.0
Total Hardness(Ca & Mg)	mg/l	7.0	
Residual Iodine	mg/l		0.5-4.0
Cations	mg/l		30
Anions	mg/l		30
Carbon Dioxide	mg/l		15
Total Bacteria	CFU/100 ml	10,000	1
Anaerobic Bacteria	CFU/100 ml		1
Coliform Bacteria	CFU/100 ml		1
Virus	PFU/100 ml		1
Yeasts and Molds	CFU/100 ml		1
Radioactive Constituents	pCi/l		per NRC regulat'ns
Total Acids	mg/l		500
Cyanide	mg/l		200
Halogen'd Hydrocarb's	mg/l		10
Total Phenols	mg/l		1
Total Alcohols	mg/l		500
Total Organic Carbon	mg/l	25,000	500
Uncharacterized total organic carbon	mg/l		100
Oxygen Consumption	mg/l	100	
Conductivity	micromho/cm		
Calcium (minimum)	mg/l	25	
Total Minerals (minimum)	mg/l	100	

Table 3-17. Comparison of Russian and U.S. Space Station Hygiene Water Quality Specifications

PARAMETERS	UNITS	RUSSIAN SPEC	Space Station SPEC
Total Solids	mg/l		500
Color	Pt/Co units		15
Taste	TTN		
Odor	TON	3(?)	3
Particulates	microns		40
pH	pH units	4.5- 9.5	5.0-8.5
Turbidity	NTU		1
Dissolved Gas	@ 37 C		
Free Gas	@STP		none
Ammonia	mg/l	10.0	0.5
Arsenic	mg/l		0.01
Barium	mg/l		1.0
Cadmium	mg/l		0.005
Calcium	mg/l		30
Chlorine (total)	mg/l	350	200
Chromium	mg/l		0.05
Copper	mg/l		1.0
Fluorine	mg/l		
Iodine (total)	mg/l		15
Iron	mg/l		0.3
Lead	mg/l		0.05
Magnesium	mg/l		50
Manganese	mg/l		0.05
Mercury	mg/l		0.002
Nickel	mg/l		0.05
Nitrate (NO3-N)	mg/l	10	10
Potassium	mg/l		340
Selenium	mg/l		0.01
Silver	mg/l	2	0.05
Sulfate	mg/l		250
Sulfide	mg/l		0.05
Zinc	mg/l		5.0
Total Hardness(Ca & Mg)	meq/l	7.0	
Residual Iodine	mg/l		0.5-6.0
Cations	mg/l		
Anions	mg/l		
Carbon Dioxide	mg/l		
Total Bacteria	CFU/100 ml	100,000	1
Anaerobic Bacteria	CFU/100 ml		1
Coliform Bacteria	CFU/100 ml		1
Virus	PFU/100 ml		1
Yeasts and Molds	CFU/100 ml		1
Radioactive Constituents	pCi/l		per NRC regulat'ns
Total Acids	mg/l		500
Cyanide	mg/l		200
Halogenated Hydrocarbons	mg/l		10
Total Phenols	mg/l		1
Total Alcohols	mg/l		500
Total Organic Carbon	mg/l	80,000	10,000
Uncharacterized total organic carbon	mg/l		1,000
Oxygen Consumption	mg/l	250	
Calcium (minimum)	mg/l		
Total Minerals (minimum)	mg/l		

Water Balance

As will be explained in later sections, the various water processing assemblies operating onboard Mir-1 have overall processing rates that differ from those of corresponding U.S. assemblies. These differences are due, in part, to the fact that Mir-1 assemblies are generally sized for a 3 person crew whereas U.S. assemblies are sized for a 4 person crew. These fundamental sizing differences are further magnified by the differences in overall water system architecture adopted in the U.S. and Russian programs. However, the differences in processing rates are also partly due to differences in the fundamental metabolic and cabin water balances baselined in the Russian and U.S. programs. A comparison of Russian and U.S. Space Station crewmember and cabin water balances is shown in Figure 3-22.

U.S Crewmember Water Balance, kg/person-day (lb/person-day)

Drinking	1.62 (3.56)
Food Water Content	1.15 (2.54)
Metabolized Water	0.35 (0.76)
Food Preparation	0.76 (1.67)
Total	3.88 (8.53)

Urine	1.5 (3.31)
Sweat and Respiration	2.3 (5.02)
Fecal Water	0.08 (0.20)
Total	3.88 (8.53)

U.S Cabin Water Balance, kg/person-day (lb/person-day)

Shower	2.7 (6.00)
Handwash	4.1 (9.00)
Laundry	12.5 (27.5)
Urinal Flush Water	0.5 (1.09)
Total	19.8 (43.59)

SHOWER
HANDWASH
LAUNDRY
URINAL

Waste Shower & H'wash	6.51 (14.33)
Waste Laundry	11.90 (26.17)
Urinal Flush Water	0.5 (1.09)
Latent	0.91 (2.0)
Total	19.8 (43.59)

MIR 1 Crewmember Water Balance, kg/person-day (lb/person-day)

Drinking	0.7 (1.54)
Food Water Content	0 (0)
Metabolized Water	0.3 (0.66)
Food Preparation	1.8 (3.96)**
Total	2.8 (6.16)

Urine	1.2 (2.64)
Sweat and Respiration	1.5 (3.30)
Fecal Water	0.1 (0.22)*
Total	2.8 (6.16)

MIR 1 Cabin Water Balance, kg/person-day (lb/person-day)

Shower	1.43 (3.14)
Handwash	2.60 (5.72)
Urinal Flush Water	0.5 (1.10)
Total	4.53 (9.96)

SHOWER
HANDWASH
URINAL

Waste Shower & H'wash	3.89 (8.55)**
Urinal Flush Water	0.5 (1.10)
Latent	0.14 (0.31)**
Total	4.53 (9.96)

* denotes assumed values
** denotes derived values

Figure 3-22 Comparison of Crewmember Water Balance

The water balance per crewmember that is used in the U.S. space station program includes potable water consumption and wastewater generation rates totaling 3.88 kg/person-day each. On the input side, a total of 1.5 kg/person-day is accounted for by the water content of the refrigerated food that is consumed by the crew and by the water that the crew generates metabolically. The remaining 2.38 kg/man-day must be provided by the Environmental Control and Life Support System. The U.S. cabin water balance includes a total of 19.8 kg/man-day for showering, handwashing, clotheswashing, and urinal flushing. Without a laundry, this total is reduced to 7.2 kg/person-day.

The crewmember water balance in the Russian space program includes potable water consumption and wastewater generation rates totaling 2.8 kg/person-day each. Whether or not there are any underlying physiological, operational, or medical differences in the U.S. and Russian programs to account for the fact that the Russian crewmember balance is less than that in the U.S. program by 1 kg/person-day is unknown. The Russian program also relies almost exclusively on dehydrated food supplies which must be fully reconstituted with water on-orbit. The reliance on dehydrated foodstuffs eliminates an indirect water source and, as will be discussed below, influences the overall Russian balance.

Russian cabin water balances also differ markedly from U.S. balances because of the lack of an on-board laundry and the reduced usage of water for showering (typically a single 10-liter shower is taken by each Russian crewmember per week whereas 5.5-liter showers are baselined for each U.S. crewmember every other day).

Representative water balances for the U.S. program are shown in Figures 3-23 through 3-28. Each of the U.S. balances that are shown reflect the following common features: 1) four crew members; 2) single-loop architecture in which a single quality of water (potable) is produced from all wastewaters and urine distillate combined and used to meet all water needs; 3) water processor and urine processor water recovery efficiencies of 100% and 91.5%, respectively, which reflect actual performance capabilities demonstrated during ground tests; 4) support requirements for a laundry are included (except in the no-laundry case shown in Figure 3-28); 5) utilization of stored fuel cell water is not factored into the balances.

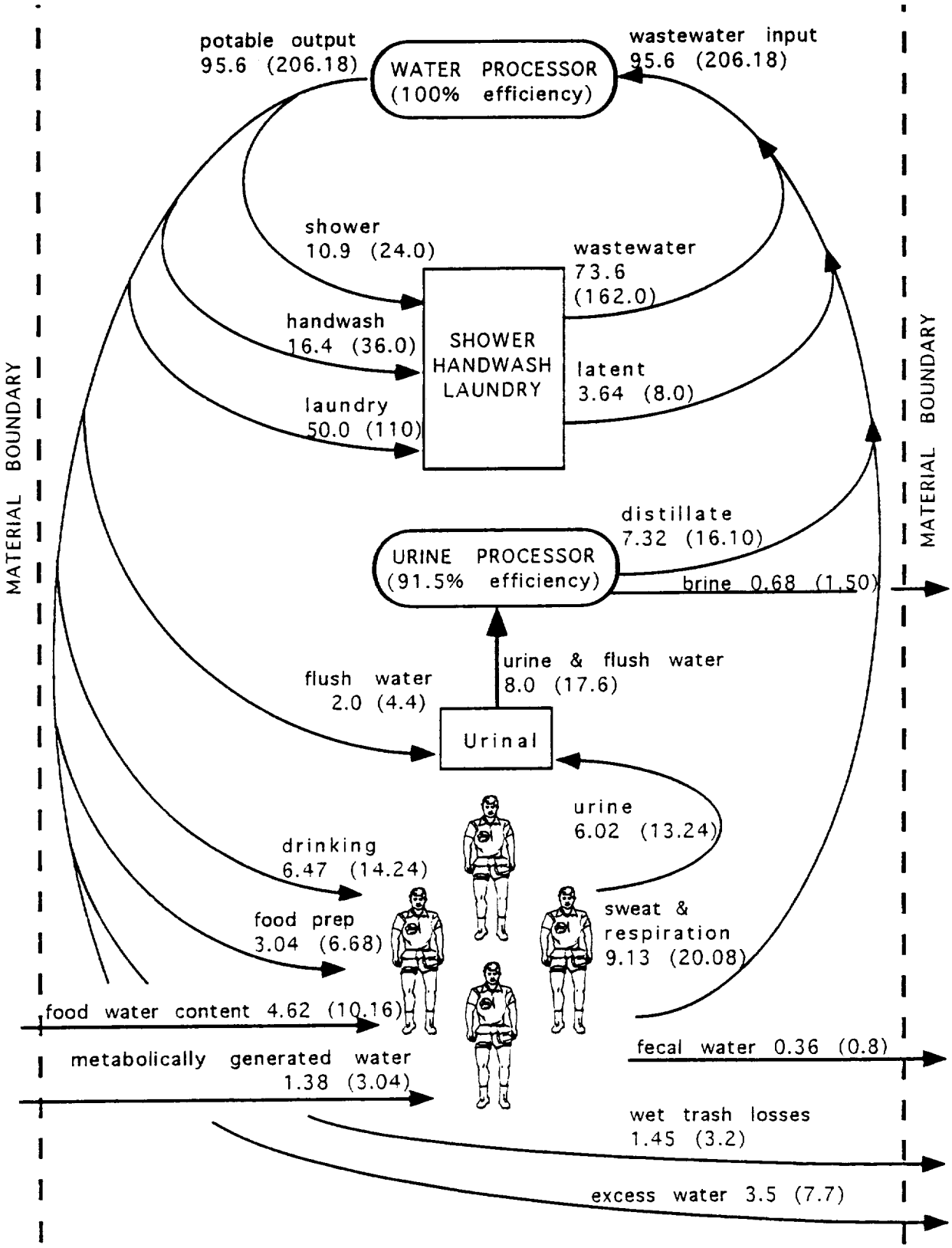

Figure 3-23. U.S. Space Station Water Balance, kg/day (lb/day) - Basic Case

The U.S. basic water balance case (Figure 3-23) includes a net input of 6.0 kg/day of water via food water and metabolic generation. This input is partially offset by wet trash, fecal, and urine brine water losses totaling 2.5 kg/day. The difference between overall inputs and outputs equals 3.5 kg/day and represents the daily water excess projected in this basic case.

Factors which impact the U.S. water balance are shown in Figures 3-24 through 3-28. The support of Extra Vehicular Activities (Figure 3-24) generally decreases the amount of excess water available, mostly through the loss of water through the Extra-Vehicular Mobility Unit's sublimator. However, the overall effect is generally small; in the case of 52 Extra Vehicular Activities per year, an overall water excess of 2.4 kg/day is still maintained. The provision of drinking water to animals (Figure 3-25) has an even smaller impact on the overall water balance since much of the water that is supplied to the animals is returned in the form of recoverable humidity condensate.

The greatest impact to the basic U.S. water balance occurs if regenerative oxygen generation is flown without carbon dioxide reduction (Figure 3-26). To support the generation of sufficient oxygen to meet the requirements for crewmember breathing, Extra-Vehicular Mobility Unit support, atmosphere leakage makeup, animal support, and experiment ingestion that were applicable to the Space Station Freedom program at Permanently-Manned Configuration requires 6.2 kg/day of water. Without carbon dioxide reduction, the water that is consumed for oxygen generation is not offset and results in an overall water deficit of 2.7 kg/day. Inclusion of carbon dioxide reduction (Figure 3-27) more than offsets this deficit and allows an overall water excess of 1.6 kg/day to be maintained.

Elimination of the laundry (Figure 3-28) significantly influences the processing capacity required for the water processor but has a very minimal impact on the overall water balance because of the water processor's 100% efficiency.

A likely Mir-1 water balance derived from the consideration of a variety of data sources is shown in Figure 3-29. Significant features of the derived Mir-1 balance are: 1) three crew members; 2) three-loop architecture in which urine is reclaimed for oxygen generation, waste hygiene is reclaimed for hygiene reuse, and humidity condensate is reclaimed for potable use; 3) condensate

processing, hygiene processing, and urine processing recovery efficiencies of 100%, 90%, and 80%, respectively, which reflect the most commonly reported efficiencies; 4) no laundry; 5) nominal use of ground-supplied water from the Rodnik system; 6) oxygen generation without carbon dioxide reduction is included.

Note that the Mir-1 water balance presented here reflects the best estimation resulting from the analysis of a variety of data sources. The accuracy with which this balance reflects actual Mir-1 experience can be judged by several values predicted by the balance. For example, the derived balance predicts that the total makeup water nominally required from the Rodnik water system is 3.3 kg/day for 3 crew. This prediction matches exactly the Rodnik water usage of 1.1 kg/man-day reported by NPO-Energia to the Space Station Transition Team. The predicted daily throughput of 4.9 kg/day for the condensate processor compares favorably with the reported average daily throughput of 4 kg/day. Similarly, the predicted daily throughput of 5.1 kg/day for the urine processor compares favorably to the reported "greater than 4.8 kg/day". It has generally been reported that urine processing completely meets the water needs for oxygen generation; the balance here predicts about a 10% deficit.

Despite these favorable comparisons between the balance's predictions and generally-reported data, an important discrepancy remains. The percentage of potable water (for drinking and food preparation) that is provided by reclaimed condensate is predicted to be only 60% (=(1.3+3.2)/(2.1+5.4)). However, it has widely been reported that Mir-1 crews get as much as 80-90% of their potable water from reclaimed condensate.

In order to predict that 80% of the crew's potable water comes from reclaimed condensate would require that one of two changes be made to the overall balance:

1) The total potable water supplied to the crew for drinking and food preparation could be assumed to be 5.6 kg/day rather than the 7.5 kg/day that has been reported. In this case, the balance around the crew member could be maintained by increasing the assumed food water content from zero to 1.9 kg/day. The net result of these changes would yield an 80% reliance on reclaimed condensate for potable use. However, the reliance on makeup water

from Rodnik stores would be reduced to 1.4 kg/day which is only slightly more than 40% of that reported by NPO-Energia.

2) With the sum of potable water for drinking and food preparation maintained at 7.5 kg/day as reported and food water content assumed to be as high as 1.5 kg/day, the crewmember balance could be maintained by increasing sweat and respiration output to 6.0 kg/day. This would increase the daily average throughput for the condensate processor to 6.4 kg/day which differs somewhat from the reported average of 4 kg/day but is still well within the reported range of 3 to 24 kg/day. The increased condensate processor throughput would make 6.0 kg/day of reclaimed condensate available for drinking and food preparation, thereby achieving 80% reliance. However, Rodnik water makeup in this case would be reduced to 1.8 kg/day, or 55% of the makeup water usage reported by NPO-Energia.

From this analysis it is concluded that the reported quantity of water nominally consumed from Rodnik stores and the percentage of the crew's potable water provided by reclaimed condensate appear to be discrepant with each other and with the best estimate of the overall balance as a whole. The cause for this apparent discrepancy is unknown and should be investigated further with the Russians.

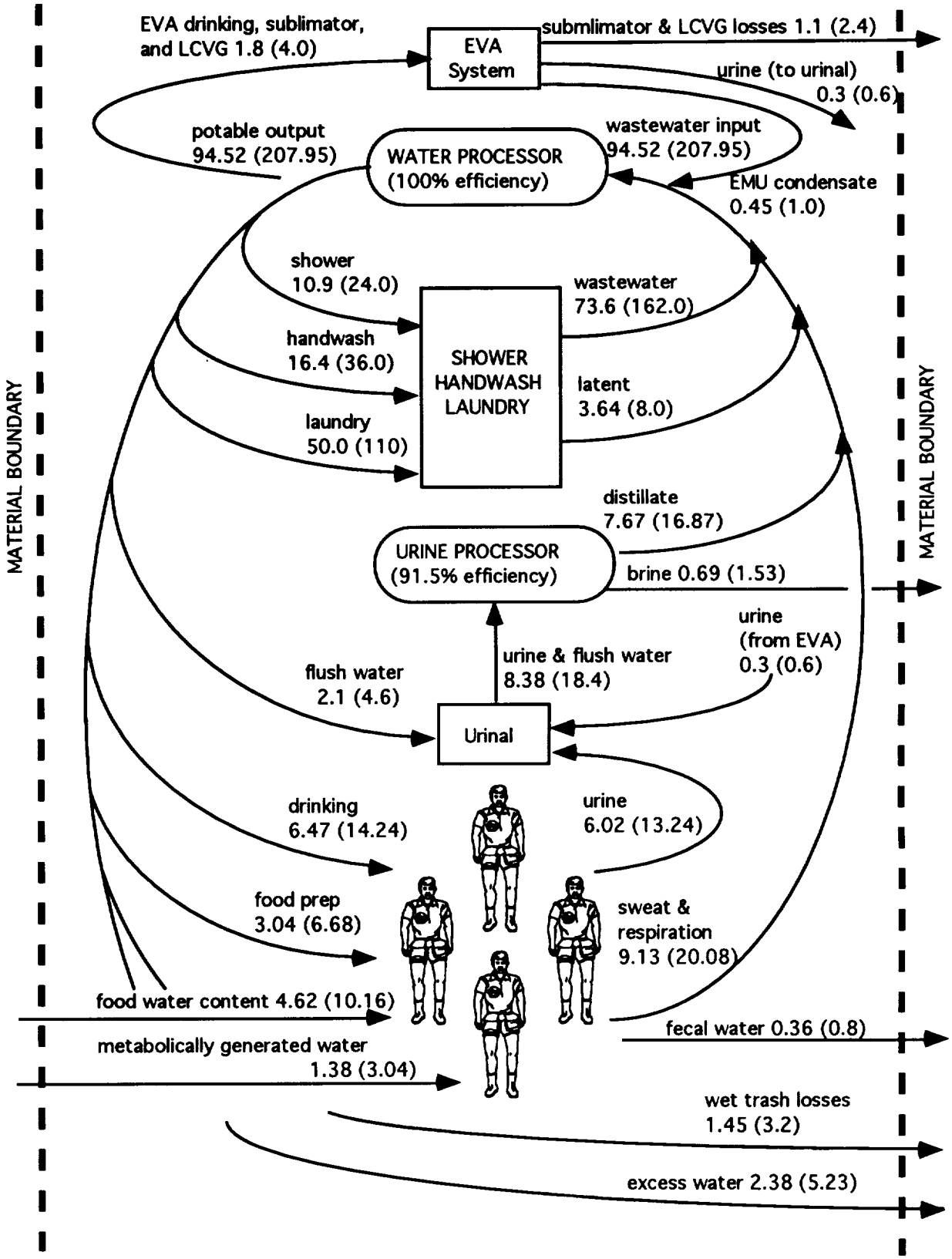

Figure 3-24 U.S. Space Station Water Balance, kg/day (lb/day) -Extravehicular Activity Case

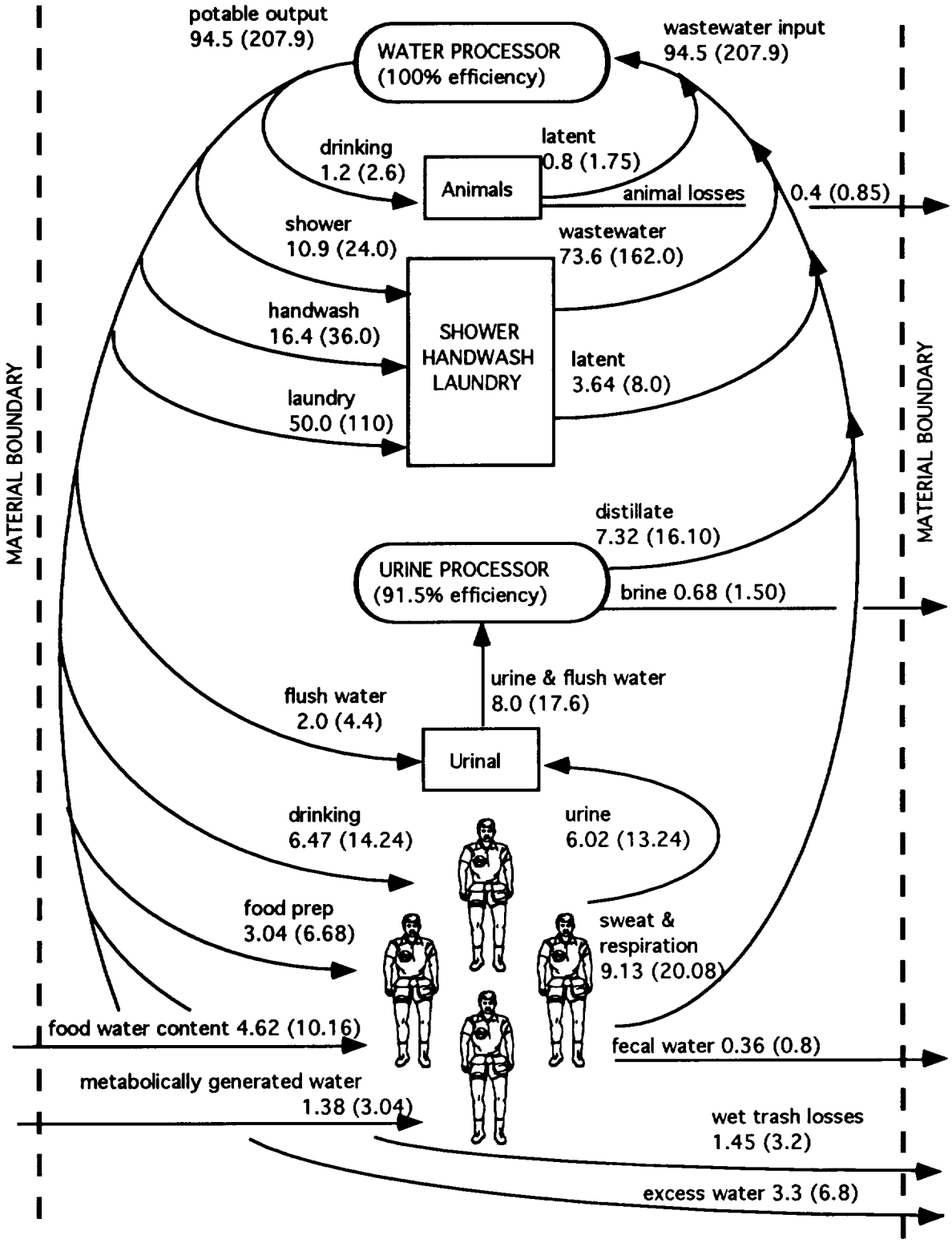

Figure 3-25 U.S. Space Station Water Balance, kg/day (lb/day) - Animal Support Case

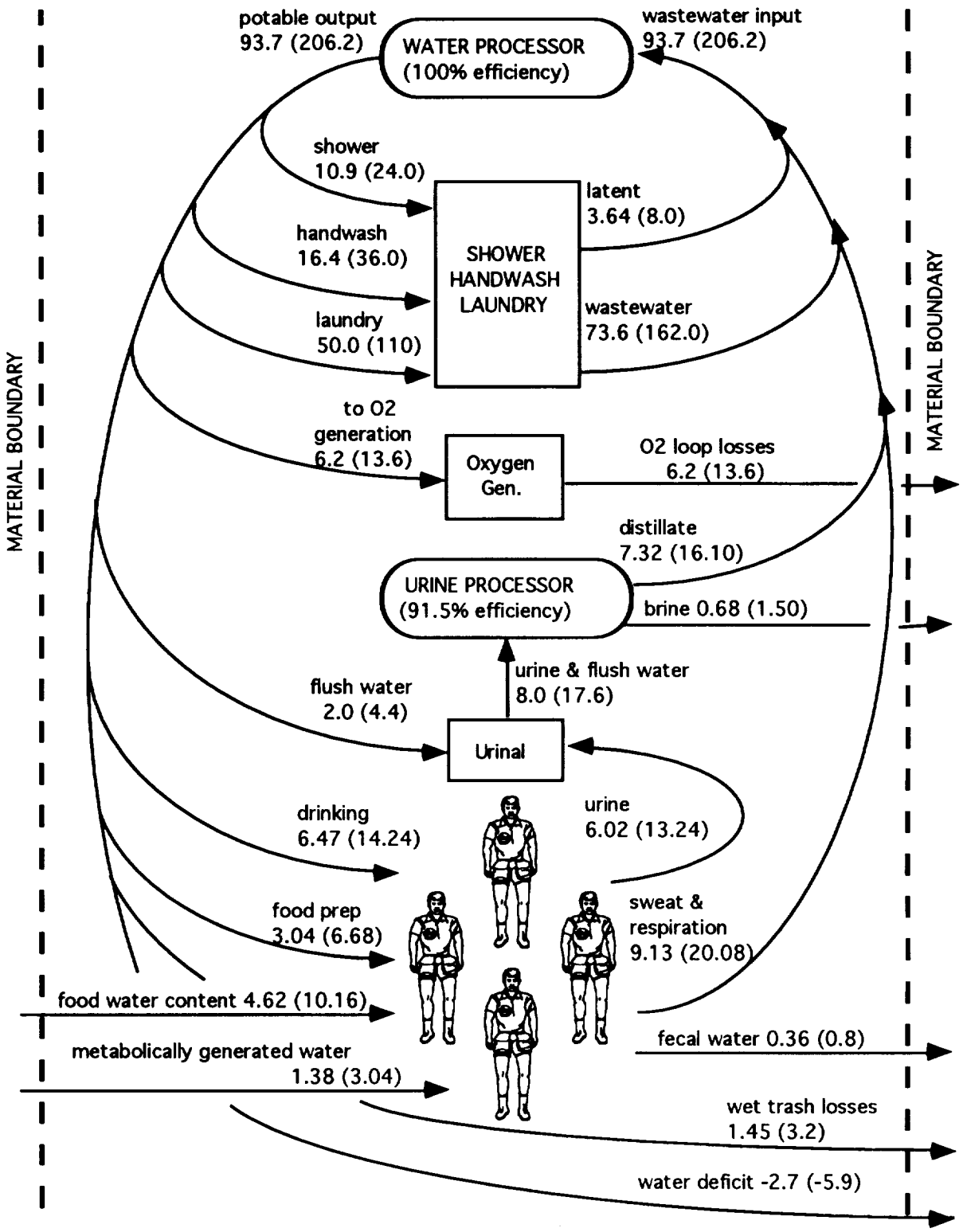

Figure 3-26 U.S. Space Station Water Balance, kg/day (lb/day) -Oxygen Generation Case

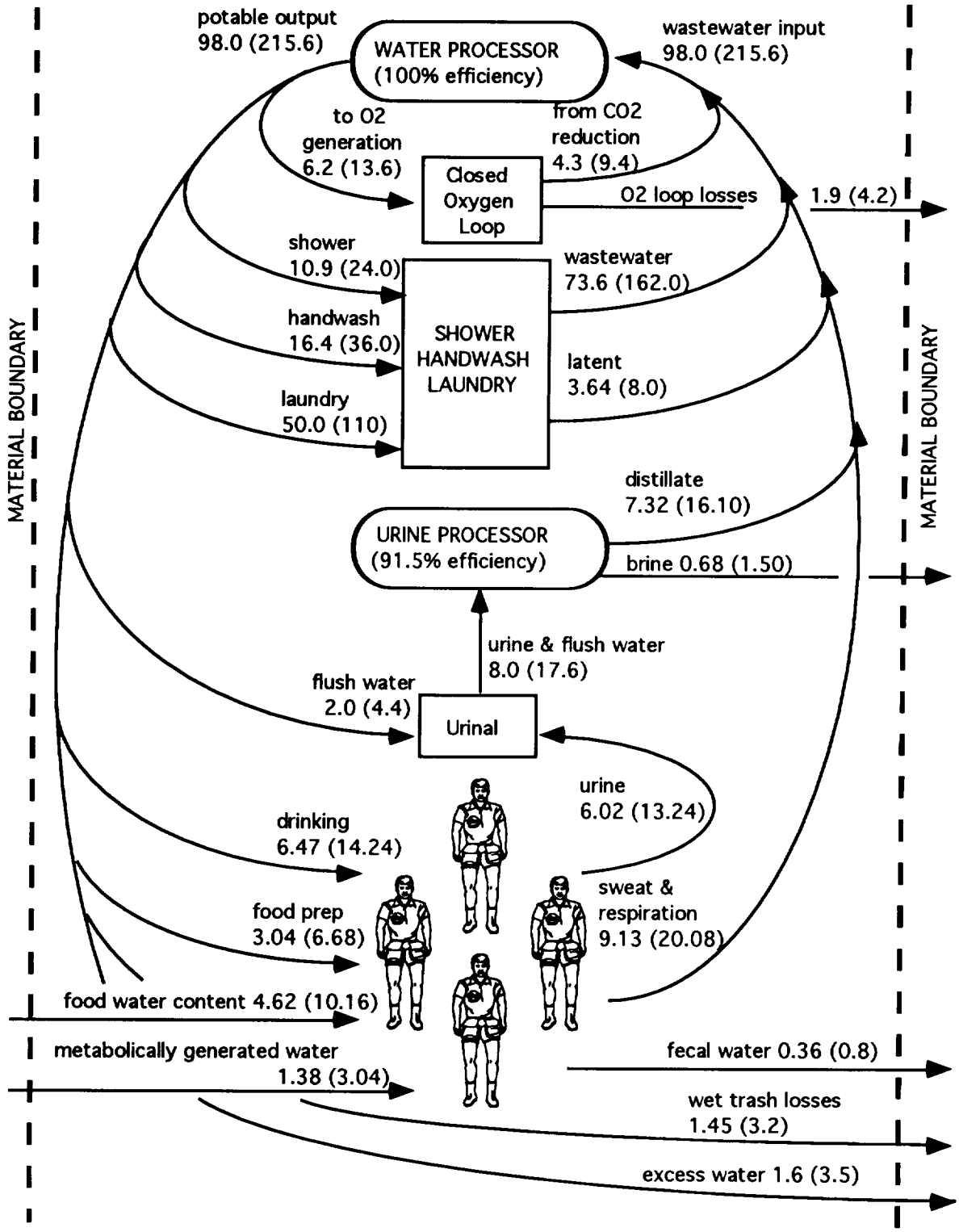

Figure 3-27 U.S. Space Station Water Balance, kg/day (lb/day) -Closed-Oxygen Loop Case

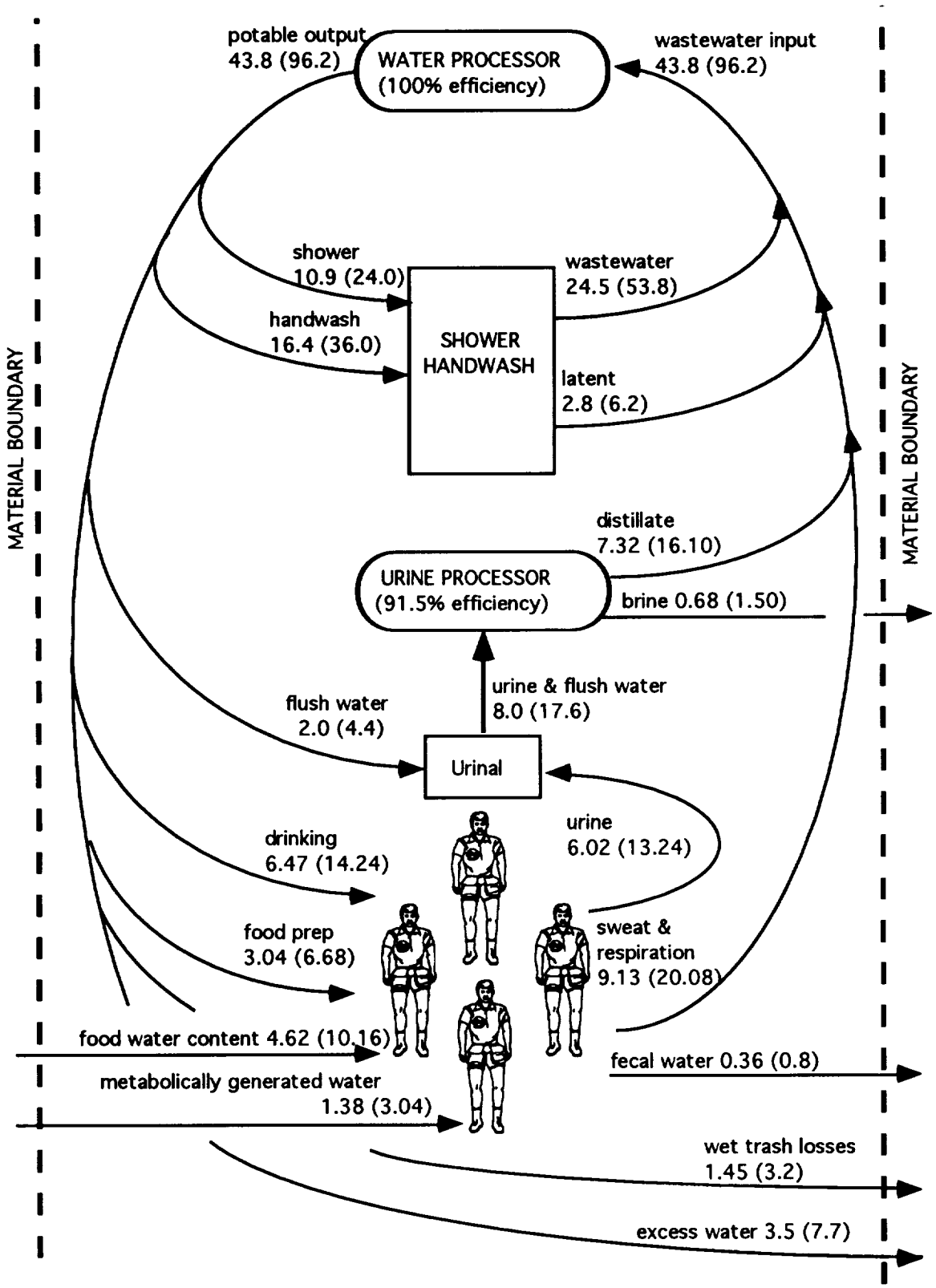

Figure 3-28 U.S. Space Station Water Balance, kg/day (lb/day) -No-Laundry Case

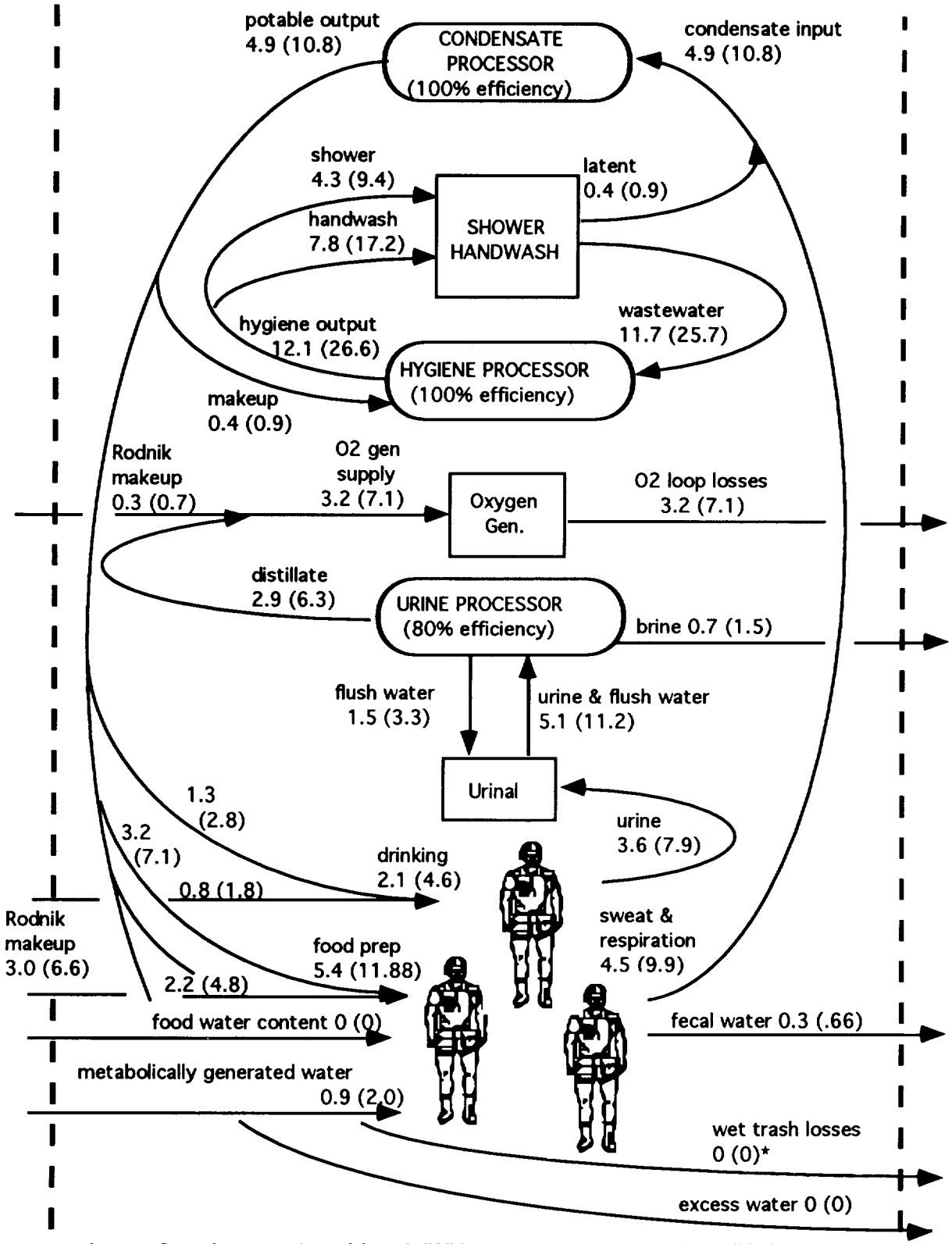

* unconfirmed assumption; although "0" losses are consistent w/overall balance, the likelihood that there actually are no losses is doubtful.

Figure 3-29 Mir-1 Water Balance, kg/day (lb/day)

3.1.2.1 Hygiene and Condensate Water Processors

As discussed previously, analysis has determined that the optimum approach to meet space station Water Reclamation and Management requirements is by utilizing a single loop water recovery system that processes all water to potable quality. Since the Russian Water Reclamation and Management system is essentially three water loops (urine processing to oxygen generation requirements, condensate processing to potable water standards, and hygiene waste water processing to hygiene standards) a comparison of the Russian hardware to space station Water Reclamation and Management requirements and design is extremely difficult. Though urine processing lends itself to a direct comparison between systems, a single processor in the Space Station design accomplished the same function as two processors in the Russian design. Therefore, in order to provide a comparison of the Russian and U.S. systems, it is necessary to discuss the Russian hygiene and condensate processors together, and compare their combined capabilities to those of the single loop water processor designed for the Alpha space station. The following sections will provide a brief description of the operation of the Russian hygiene and condensate processors and the space station single loop Water Processor, as well as a comparison of the Russian system with the space station requirements and design.

The following discussion is based on the requirement that the Water Reclamation and Management System reclaim clothes-wash water as a waste water source. This is despite the fact that the Alpha space station program has recently deleted the laundry system. The decision was made that the appropriate comparison would include waste clothes wash as a feed source since requirements for a Water Reclamation and Management design without waste clothes wash water (which accounts for half of the Water Processor's waste water) have not been developed and the capabilities of the current Water Processor are based on processing waste clothes wash water. The capabilities of the Russian hygiene processor have been modified where appropriate to account for waste clothes wash water, since the hardware is designed for processing only waste shower and handwash water. In most instances, the inclusion or deletion of the waste clothes wash does not affect the comparison of the Russian and U.S. hardware. Issues impacted by the deletion of

the laundry, especially those that affect the hardware comparison, will be addressed where applicable in the text.

Mir-1 Condensate Water Processor Description

The Condensate Water Processor produces 5 to 6 kg/day (11 to 13.2 lbs/day) of potable water from humidity condensate for a 3-person crew. The processor can be divided into three main sections; inlet air/water separation, water treatment, and water delivery. A schematic and photograph of the processor are provided as Figures 3-30 and 3-31 respectively. Interfaces for the processor include the temperature and humidity control system, from which an air/condensate mixture is provided, a 27 VDC power supply, a systems status output from the processor's controller, and a hot and cold potable water supply.

The processor receives an air/condensate mixture at a rate of 4 to 10 kg/minute (8.8 to 22 lbs/minute). This air/condensate mixture first passes through a 10 micron depth filter, which contains fibrous and granular materials for removal of particulates and chemical contaminants. The condensate is subsequently removed in a hydrophilic, static, porous plate separator. The separator consists of channels through which the air/condensate mixture flows. Condensate is removed along the length of each channel through hydrophilic pores. Sufficient channel length is provided to remove up to a 10% condensate mixture while allowing for a gradual degradation of the separator performance due to clogging of the pores from particulates or microbial growth. The effluent air is monitored with a liquid sensor to detect separator failure and is subsequently vented to the cabin. Condensate collects along the wall of the channels in either a ring or bubble formation and is drawn through the pores by the action of a diaphragm pump. Besides providing the negative pressure needed by the separator for condensate removal, the diaphragm cavity also functions to collect the condensate. Once the diaphragm cavity reaches the full setpoint of approximately 180 mls (0.05 gal), the pump motor is activated and expels the cavity volume over a 16 second time span. This cycle occurs approximately once every hour. After the discharge stroke is complete, the motor is turned off and a spring is utilized for the intake stroke, providing the suction for the air/condensate separator in the process.

Contaminant removal takes place in the multifiltration bed, which contains ion exchange resins, activated carbon media, and an ambient temperature catalyst for removal of low molecular weight alcohols. The specific type and arrangement of the various media in the multifiltration bed is proprietary. The ion exchange resins utilized by the Condensate Water Processor have been designed not to shrink as they are expended, thus avoiding the need to design a mechanism into the multifiltration bed that will continually compact the media. The use of an ambient temperature resin precludes the need for heating the water to achieve adequate oxidation. However, the catalyst is effective only for low molecular weight alcohols such as ethanol and methanol. These organics are oxidized to their respective organic acids, which are subsequently removed with ion exchange resins. Oxygen for the catalytic reaction is provided via a solid phase oxidant upstream of the catalyst media. The primary factor that determines when the multifiltration bed will be replaced is a total throughput of 450 kg (990 lbs) (based on the number of diaphragm pump cycles) though the bed will also be replaced if the effluent water quality is unacceptable. A conductivity sensor downstream of the multifiltration bed verifies that acceptable water quality is being produced (<150 micromhos/cm). Water that does not meet the conductivity requirement is diverted into a 10 liter (2.6 gal) bladder tank for storage. Water from this tank is reprocessed once the tank is full, which is determined based on the tank pressure. Water of acceptable quality is processed through a conditioning bed which serves to add magnesium, calcium and other minerals to the water for palatability. The conditioning bed also imparts silver (0.05 to 0.20 mg/liter) to the water for microbial control.

The effluent from the conditioning bed is stored in another 10 liter (2.6 gal) bladder tank until needed for drinking. A diaphragm pump identical to the feed pump is used to provide drinking water. The volume of water (25 to 250 ml at 25 ml increments) to be delivered is determined by the crew at the processor's control panel. The pump delivers the required volume through a regenerative heat exchanger and heated accumulator, which provides pasteurization temperature of 85°C (185°F). The heater must have been turned on for approximately 20 minutes before use to allow time for the heater to reach pasteurization temperature. Hot drinking water is taken directly from the heated accumulator, whereas cold water is passed back through the regenerative heat exchanger before delivery

to the crew. The choice of hot or cold water is also determined by the crew by simply opening the appropriate shutoff valve.

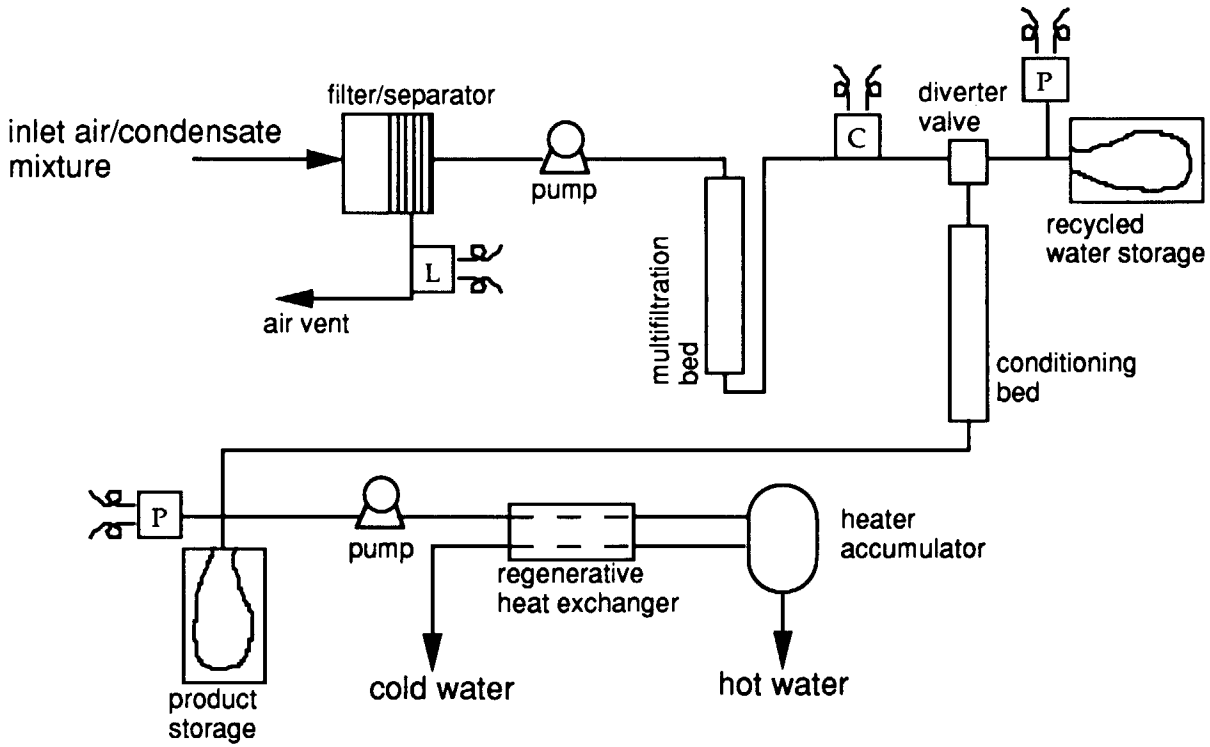

Figure 3-30 Mir-1 Russian Condensate Water Processor Functional Schematic

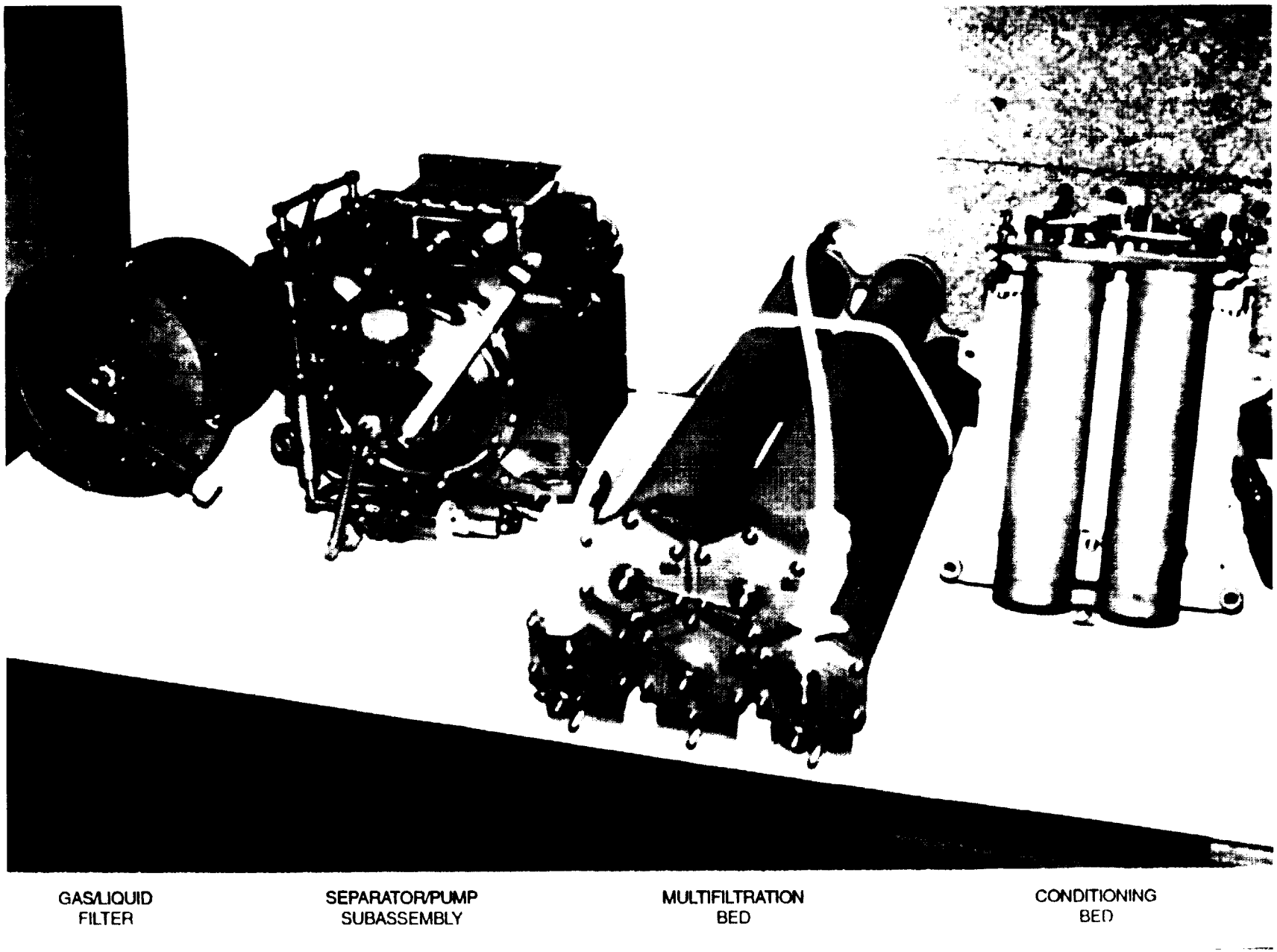

ORIGINAL PAGE
COLOR PHOTOGRAPH

Figure 3-31 Photograph of Mir-1 Condensate Water Processor Components

Mir-1 Hygiene Water Processor Description

The Russian Hygiene Water Processor reclaims water from shower and handwash waste waters for reuse as hygiene water. The system can be easily divided into four sections; inlet air/water separation, waste/product water storage, water treatment, and water delivery. A simplified schematic and photograph of the processor are shown in Figures 3-32 and 3-33 respectively.

A 90% air/10% waste water stream is received from the shower or handwash by the Hygiene Water Processor. The handwash and shower have separate inlets to the Hygiene Water Processor, each having a dedicated rotary air/water separator. The handwash and the shower separators are identical in design. Each uses a rotating drum to impart a centrifugal force onto the air/water mixture, which effectively forces the water to the inside diameter of the drum. The water is taken off the drum by a stationary pitot tube pointing in the direction of the water flow around the drum. The air is vented out through the center of the separator, with baffles located at the air vent to prevent water carry over into the air stream. The motive force to vent the air from the drum is provided by a fan located in the shower and handwash. The thickness of the water ring on the inside diameter of the drum is controlled by four pressure sensors. Based on the data from these sensors, a solenoid valve in the outlet water line is opened or closed to control the ring thickness.

In order for this design to provide 100% separation (as claimed by NIICHIMMASH), three design aspects of the separator must be tightly controlled. First, the pitot tube must have good hydrodynamic design to minimize turbulence caused by its protrusion into the water ring. Second, the water ring thickness must be controlled within a tight band, so that the pitot tube protrudes into the water the minimum amount necessary to keep the inlet submerged in the water ring at all times, and provide the least amount of disturbance to the air/water boundary. Third, and probably the most important factor that affects the separator's performance is the selection of a non-foaming cleansing agent. The Russians use a mixture of amine oxide-alkyldimethylbenzylammonium chloride as the cleansing agent for shower and handwash use. The cleansing agent is impregnated into clothes and mittens. This cleansing agent shows virtually no foaming, therefore, making it an excellent choice for use with this rotary separator design.

After the waste water has been separated from the air, it goes to the hygiene waste/product water storage tank. This is a uniquely designed bladder tank that stores waste water on one side of the tank's bladder and product water on the other side. Total capacity of the waste/product water storage tank is 30 liters (7.9 gal), which can be all waste water, all product water, or any combination of each. Pressure sensors in the inlet line and the distribution line monitor the status of the tank. An anti-microbial coating is located on the product side of the bladder to prevent biofouling, however, this coating, as well as the bladder material, are proprietary. It is not understood at this time if there is any mechanism or design characteristic of this tank that would prevent contamination of the product water if the bladder were to leak. NIICHIMMASH has stated that they have never had a leak in the tank in ground testing or on orbit.

When a sufficient quantity of waste water is in the tank, the waste water is ready to flow through the processing section of the Hygiene Water Processor. The section consists of two filters, a pump, two multifiltration beds, and a silver ionizer. The pump is a diaphragm, positive displacement pump. For the intake stroke, the pumps diaphragm is spring-loaded to draw the waste water out of the tank and pull it through the particulate filter. When the suction stroke reaches its limit, the pump motor is activated to drive the diaphragm through the discharge stroke of the pump. The total volume of waste water displaced by each stroke of the pump is 150 ml (0.04 gal). The pump's discharge stroke is controlled by a timer which activates it every 10 minutes, taking approximately 15 seconds to expel the 150 ml of waste water. The time it takes to fill the pump during the suction stroke is dependent on the particulate loading across the filter. As the filter loads and the flowrate through the filter decreases, the time to fill the pump increases. When this time approaches 10 minutes, a filter is installed parallel to the first, increasing the effective filter surface area and thereby increasing the flowrate. When the fill time increases again to the 10 minute setpoint, the first filter is replaced with the second filter and a new filter is installed in parallel.

The filter itself is a combination particulate/dissolved contaminant filter. It contains multilayers of filter and sorbent material, the composition of which is proprietary. One source is quoted as saying

the sorbent material removes up to 60% of the dissolved contaminants. (Reference 1)

The pump expels the waste water into the multifiltration beds. There are two identical multifiltration beds in series in the Hygiene Water Processor, each containing various sorbent and ion exchange resins. The ion exchange resins are also non-shrinking resins, as described in the discussion of the Russian condensate processor. The specific selection and arrangement of these sorbents and resins are proprietary. The multifiltration beds are changed out based on the conductivity of the second multifiltration bed effluent. When this conductivity reaches 100 micromhos/cm, the first bed in series is removed and the second bed is moved into the first position. A fresh bed is then installed in the second position.

After being cleaned by the filter and multifiltration bed, the water is then imparted with 0.5 to 1.5 mg/liter of silver as it passes through an electrolytic silver ionizer. The silver is used as a biocide to provide microbial control in the product water. The water is then sent to the product side of the storage tank until it is needed for hygiene use.

The crew can select either hot or room temperature hygiene water. If the crew selects room temperature water, then the cold water pump is turned on and delivers the water directly to the handwash or shower. The pumps are diaphragm type pumps, which have a similar design to the hygiene feed pump. If the crew selects hot water, then the cold water pump delivers 10 liters (2.6 gal) of water to a heated bladder tank. When the tank is full, the water is heated to the desired temperature of 37°C to 42°C (100 ^{o}F to 109°F), and pumped to the handwash or shower by the hot water pump. It takes approximately 40 minutes to heat this water to the desired temperature.

It is important to note that approximately 10% of the hygiene water is lost through evaporation during use. Because of this, regular input to the hygiene system of fresh water is necessary to keep the system at the required water levels. When considering hygiene water quality this is an important factor, since continuous makeup water serves to dilute contaminants, therefore improving the effective performance of the Hygiene Water Processor. If this processor were operated according to any protocol other than that of

the Russian's, the performance of the Hygiene Water Processor would be adversely affected.

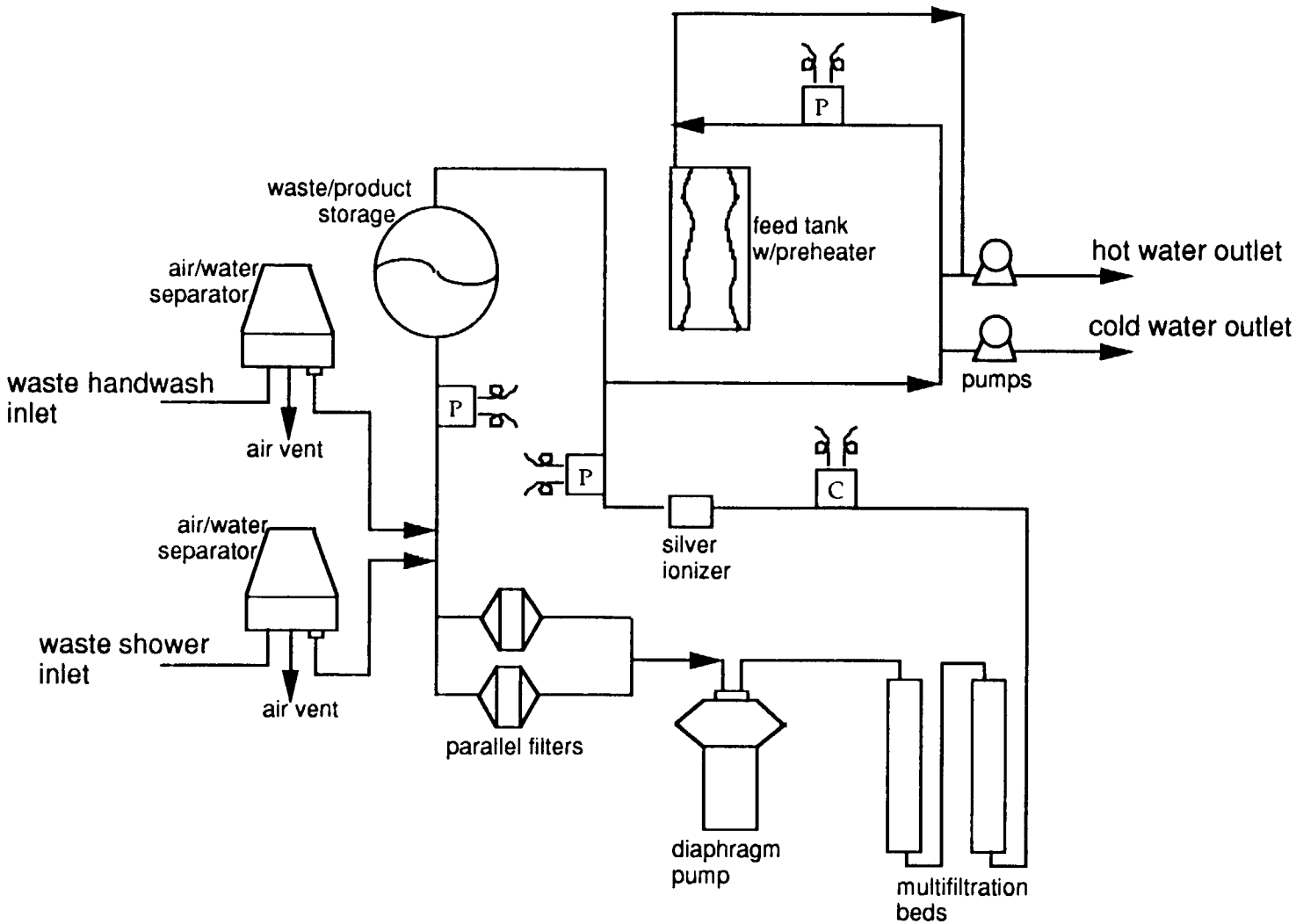

Figure 3-32 Russian Hygiene Water Processor Functional Schematic

ORIGINAL PAGE
COLOR PHOTOGRAPH

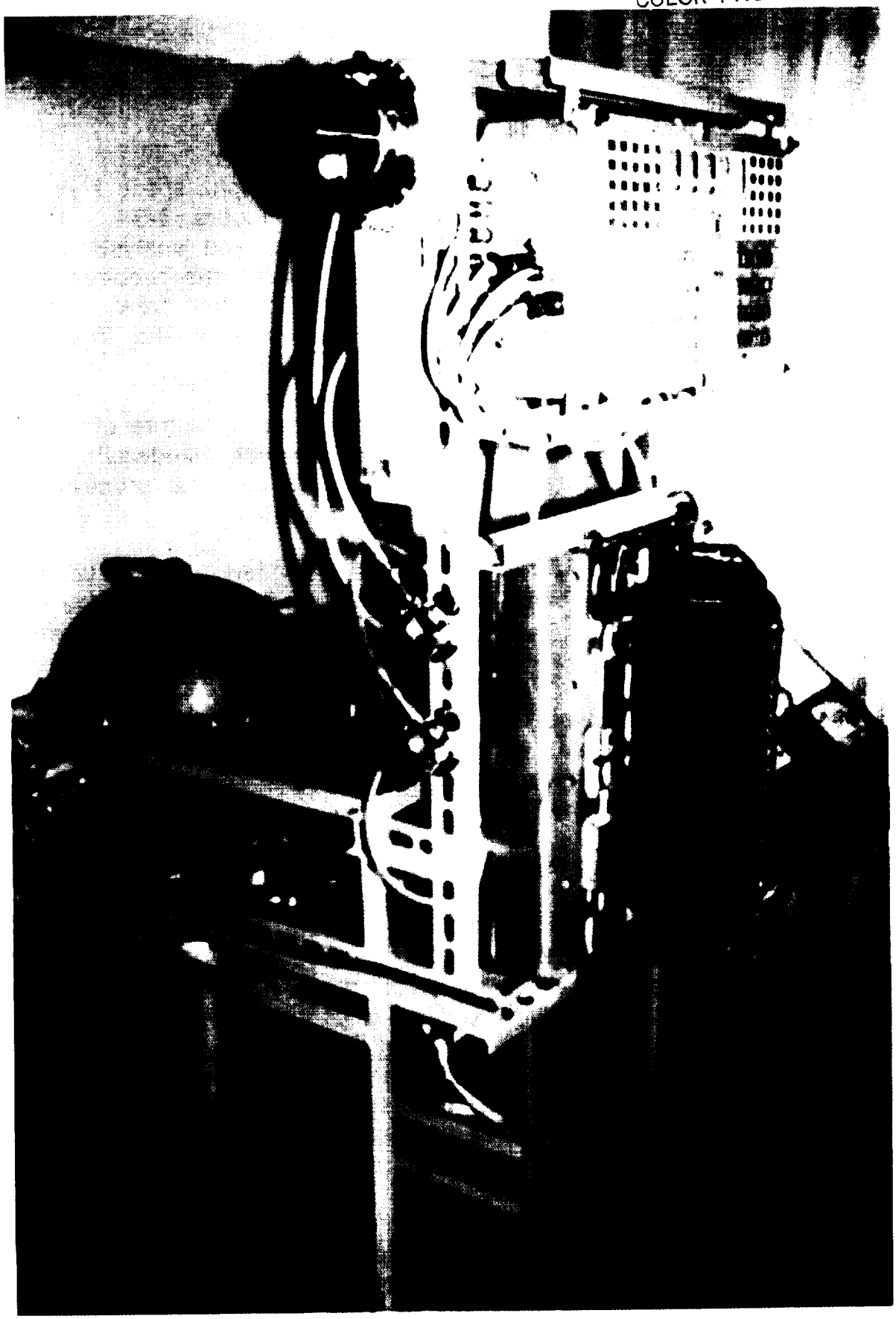

Figure 3-33 Photograph of Russian Hygiene Water Processor

U. S. Water Processor Description

The following provides a description of the U.S. Alpha space station single-loop Water Processor design shown in Figure 3-34. This processor has verified through various testing and analysis that with minor modifications it can successfully meet the requirement for delivery of potable water to the space station crew. This hardware will thus be used as a comparison with the Russian hardware in the discussion that follows.

The Water Processor produces potable water from a mixture of urine distillate, humidity condensate, and waste shower, handwash, and clothes-wash water for a 4-person crew. The nominal processing rate for the Water Processor is 6.8 kg/hour (15 lb/hour).

Waste input to the Water Processor is provided via the waste distribution bus, which operates at a pressure of 0 to 55 kPa gage (0 to 8 psig). Waste water from the bus is received by an inlet waste storage assembly, which consists of a waste storage tank, process pump, recirculating pump, and gas/liquid separator. The primary functions of this assembly are to provide the necessary back pressure on the waste bus, remove free gas from the waste water, provide waste water storage, and to process the waste water through the Water Processor.

Waste water initially passes through a 0.5 micron depth filter where contaminants are removed to prevent premature clogging of the multifiltration bed. Following the filter, waste water is processed through the unibed train. The unibed train contains two identical unibeds, each containing various adsorbents and ion exchange resins designed for removal of a particular group of contaminants expected in the waste water. Unibeds are designed to process 1,700 kg (3,750 lbs) of waste water, though testing has indicated that the currently designed unibed will exceed this throughput by approximately 35%. A conductivity sensor located at the outlet of the first unibed will be used to determine when the useful life of the unibed has been expended.

The multifiltration technology utilized in the unibeds is ineffective at removing low molecular weight, polar organics (e.g., ethanol, urea). To remove these organics, post treatment of the unibed effluent by a volatile removal assembly is required.

The volatile removal assembly includes two regenerative heat exchangers, an oxygen sparger, a preheater, a catalytic reactor, a back pressure regulator, a gas/liquid separator, and a polishing ion exchange bed. The influent is heated to a temperature of 129.4 ^{o}C (265 ^{o}F) by the heat exchangers and preheater and maintained at this temperature in the reactor. A stoichiometric excess of oxygen is also added to the process water. The high temperature functions to enhance the oxidation reaction and to sterilize the process water. In the reactor organics react with oxygen in the presence of a catalyst to form gaseous compounds (carbon dioxide, nitrous oxides, nitrogen, etc.) and/or organic compounds that can be easily removed by the polishing ion exchange bed. Effluent from the reactor passes back through the regenerative heat exchangers to reclaim heat generated in the reactor. The back pressure regulator is used to drop the pressure of the process stream to aid in the removal of excess oxygen and gaseous products of the oxidation reaction by the gas/liquid separator. Besides removing the organic contaminants, the polishing ion exchange bed contains iodinated resin that imparts a residual iodine level of 1 to 4 mg/liter to the product water for microbial control.

Product water quality is monitored by a Process Control and Water Quality Monitor. The Process Control and Water Quality Monitor monitors conductivity, iodine, pH, and Total Organic Carbon. If any of these parameters do not meet acceptable limits, the product water is diverted back to the inlet waste storage tank while analysis is performed to determine the reason for the failure. Acceptable water is stored in two 61.4 liter (18 gal) capacity bellows tanks that are maintained at a pressure between -10.3 and 3.4 kPa gage (-1.5 to 0.5 psig). A dual tank operation allows for one of the two tanks to be configured for use while the other is being filled.

Water delivery is accomplished with a delivery pump/accumulator assembly. The delivery pump draws product water from one of the two product water storage tanks and pumps it into the accumulator, which is maintained at a pressure of 103 to 207 kPa gage (15 to 30 psig) and has a capacity of 7.3 liter (2.1 gal). The assembly is capable of providing up to 818 kg/hr (1,800 lbs/hr) to the potable distribution bus for use by the crew.

Alpha Station Performance and Resource Requirements

Water quantity and water quality are the two primary performance requirements that drive the current space station Water Processor design. The space station single loop Water Processor is required to process 98.4 kg (216 lbs) of waste water/day (assumes a 4 person crew). This 98.4 kg is composed of 9.4 kg/day (20.7 lbs/day) of humidity condensate, 27.3 kg/day (60.1 lbs/day) of shower/handwash , 50.0 kg/day (110 lb/day) clotheswash, 8.8 kg/day (19.4 lb/day) of urine distillate, Extravehicular Mobility Unit waste water (3.2 liters/Extra-Vehicular Mobility Unit, 42 Extra-Vehicular Activities/year). In contrast, the Russian condensate processor only processes humidity condensate at a rate of 5 to 6 kg/day (11 to 13.2 lbs/day) and the Russian hygiene processor only processes shower/handwash water at a rate of 10 kg/day (22 lb/day) for three days each week. Because the required capacity of the Russian water system is only 10% of the capacity required for the U.S. space station, several performance measurements (launch weight, resupply/return weight, maintenance man-hours, and power) would be affected if the Russian hardware were required to meet the U.S. water quantity requirements.

This impact will be less significant when the deletion of the laundry is factored into the U.S. water quantity requirements, but even with this change the impact to the Russian hardware will be obvious. The same performance parameters listed above would also be affected if the Russian hardware had to meet the U.S. water quality requirement. The specific water quality requirements that drive the U.S. Water Processor design will be discussed later. The following sections will highlight the impact to the design of the Russian condensate and Hygiene Water Processors if they are required to meet the U.S. requirements for water quality and quantity. Table 3-18 provides a summary of the key requirements that were compared between each processor.

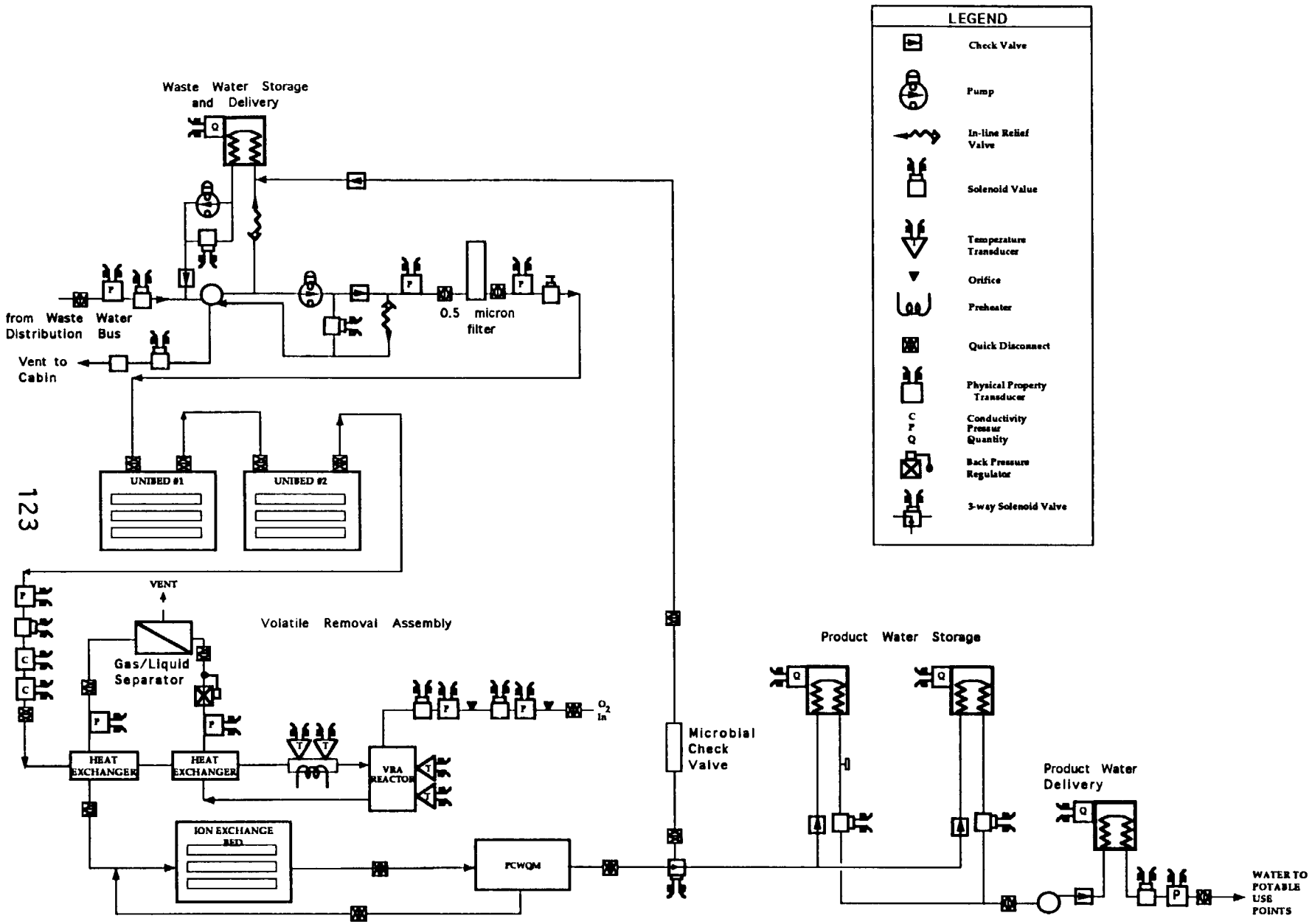

Figure 3-34 Alpha Space Station Water Processor Schematic

Table 3-18 Technical Summary of Comparison Between Russian and Space Station Hardware

Parameter	Condensate Processor	Hygiene Processor	Russian System	SS Water Processor
Launch Weight	120 kg (265 lb)	163 kg (359 lb)	283 kg (624 lb)	477 kg (1050 lb)*
Estimated Launch Weight	*182 kg (401 lb)*	*248 kg (547 lb)*	*430 kg (948 lb)*	
Launch Volume	0.36 m3 (13 ft3)	0.46 m3 (16 ft3)	0.82 m3 (29 ft3)	1.8 m3 (63.3 ft3)*
Specific Energy	4 W-hr/kg (1.8 W-hr/kg)	0.55 W-hr/kg (0.25 W-hr/lb)	2.4 W-hr/kg (1.1 W-hr/lb)	59 W-hr/kg (27 W-hr/lb)*
Estimated Specific Energy	*26.8 W-hr/kg (12.2 W-hr/lb)*	*35.3 W-hr/kg (16.0 W-hr/lb)*	*49.5 W-hr/kg (22.5 W-hr/lb)*	
Nominal Process Rate	0.21 kg/hr (0.46 lb/hr)	0.18 kg/hr (0.39 lb/hr)	0.39 kg/hr (0.86 lb/hr)	6.8 kg/hr (15 lb/hr)**
Maximum Process Rate	1.0 kg/hr (2.2 lb/hr)	1.8 kg/hr (4.0 lb/hr)	2.8 kg/hr (6.2 lb/hr)	6.8 kg/hr (15 lb/hr)**
Operating Pressure	0-98 kPa gage (0-14.2 psig)	0-186 kPa gage (0-27 psig)	NA	455-690 kPa (66-100 psig)*
Expendable Rate	100 kg/year (220 lb/year)	90 kg/yr (200 lb/yr)	190 kg/yr (420 lb/yr)	1340 kg/yr (2950 lb/yr)*
Estimated Expendable Rate	*220 kg/yr (485 lb/yr)*	*1610 kg/yr (3550 lb/yr)*	*1830 kg/yr (4030 lb/yr)*	
Maintenance Time	8 man-hours/year	2 man-hours/year	10 man-hours/year	12 man-hours/year**
Estimated Maintenance Time	*17 man-hours/year*	*24 man-hours/year*	*31 man-hours/year*	
Product Water Storage Capacity	10 kg (22 lb)	30 kg (66 lb)	40 kg (88 lb)	122 kg (270 lb)*
Waste Water Interface				
pressure	ambient	ambient	NA	0-55 kPa gage (0-8 psig)**
temperature	ambient	ambient	NA	65-113 deg F**
flow rate	0.2 kg/min (0.44 lb/min)	2 kg/min (4.4 lb/min)	2.2 kg/min (4.8 lb/min)	13.6 kg/min (30 lb/min)**
Product Water Interface				
pressure	98 kPa (14 psig)	186 kPa (27 psig)	NA	100-210 kPa (15-30 psig)**
temperature	ambient or 85 C (185 deg F)	ambient or 43 C (109 deg F)	NA	18-45 C (65-113 deg F)**
flow rate (ambient)	0.7 kg/min (1.5 lb/min)	0.75 kg/min (1.7 kg/min)	NA	13.6 kg/min (30 lb/min)**
flow rate (hot)	0.7 kg/min (1.5 lb/min)	1 kg/min (2.2 kg/min)	NA	

explanation of values is provided in the discussion
text and values in italics denotes parameters that estimate Russian hardware capabilities to meet SS requirements for water production
*based on available test data or performance analysis
**requirement for SS water processor design

Water Quality Differences

The water quality requirements imposed on the Russian condensate and hygiene processors are less stringent for several key parameters than those required by the U.S. single-loop Water Processor (see Table 3-16 and 3-17). Because of the difference in water quality requirements, the design of the two systems vary in some respects. The following discussion addresses key water quality requirements, highlighting those that are not met by the Russian condensate and hygiene processors and what modifications will be required to the processors in order to meet the Space Station requirements.

Of the physical parameters listed in the U.S. potable specification, four are not requirements for product water produced on the Mir-I space station. These include total solids, particulates, and free and dissolved gas. The U.S. requirement for total solids is most likely met by the Russian processors, while the particulate requirement can be easily met, if it is not already, by adding additional filtration to 40 microns. Uncertainty with the free gas requirement exists due to the lack of a degasser in either processor other than at the processor inlet. This is of most concern in the Condensate Water Processor due to the generation of gaseous by-products and the use of oxygen in the catalytic reaction. Carbon dioxide generated by the oxidation of organics should be in carbonate form at the pH levels present in the conditioning bed. The minerals added to the water by the conditioner form inorganic salts with the carbonate, preventing the carbon dioxide from returning to gaseous form. Excess oxygen from the catalyst is not removed by the processor, however, and is most likely present as free gas in the product water, along with any other gaseous by-products produced by the catalytic reaction. The Russian condensate processor probably achieves a more stable pH level than the U.S. processor due to the addition of minerals to the water for flavor, which thus provides a more pH-balanced potable water. This mineralizer, however, is used to provide potable water more suited to the taste of a Russian crew, and would likely be undesirable for space station crew members. There are no additives to the U.S. Water Processor product water.

Both the Russian and U.S. water systems utilize ion exchange media for removal of ionic contaminants, therefore similar water quality should be achieved in the area of ionic constituents. The exception is silver, which has a Space Station requirement of <0.05 mg/liter

but is used as a biocide in the Russian system at levels of 0.05 to 0.20 mg/liter in the potable water and 1.0 to 1.5 mg/liter in the hygiene water.

One of the most significant design drivers of the Alpha space station Water Processor is the TOC specification of 500 ug/liter. This specification requires the incorporation of a high temperature catalytic oxidation assembly for adequate removal of low molecular weight, polar organics from the space station single-loop waste stream. The Russian condensate processor utilizes an ambient temperature catalyst packed into its unibed for the removal of these organic species. An oxidant is added via a solid phase resin also located in the multifiltration bed.

Inconsistent data was provided by NIICHIMMASH as to the capability of their catalyst to meet the 500 ug/liter TOC specification. NIICHIMMASH stated that the TOC levels in their unibed effluent are nominally <100 ug/liter, far below their design requirement of 25,000 ug/liter. However, these values conflict with data provided by NPO Energia for flight potable water quality, which stated that TOC levels of 13.7 and 8.6 mg/liter were measured in two different water samples.

Additionally, technical experience with the U.S. hardware has shown that obtaining TOC levels of <100 ug/liter is difficult even at high temperatures (129°C).

Further confusion occurred because NIICHIMMASH stated that TOC levels of 100 ug/liter were also achieved in their hygiene processor (which has a TOC requirement of 80,000 ug/liter), despite the fact that the hygiene processor does not utilize the ambient temperature catalyst for removal of low molecular weight organics. When questioned about the removal of alcohols and urea, NIICHIMMASH stated that the urea is removed by an enzyme catalyst (at ambient temperature) and that alcohols are volatile and do not condense into the waste hygiene water in appreciable levels. When questioned about the removal of alcohols by the condensate processor phase separator, NIICHIMMASH stated that the alcohols are dissolved in the water and present in the waste humidity condensate.

These conflicting reports indicate that the Russian processors may not achieve the claimed TOC level. For the condensate processor to meet the Space Station specification for TOC, higher temperatures

will most likely be required. These modifications would significantly affect the processor's power requirement. The hygiene processor could potentially meet the hygiene TOC requirement of 10,000 ug/liter without further modification. Though alcohol levels will likely accumulate in the hygiene loop, the continuous loss of hygiene water via usage waste and the resultant make-up water could serve to effectively dilute hygiene water sufficiently to keep the TOC level below 10,000 ug/liter. Testing will be required to assess the actual effectiveness of the Russian condensate and hygiene processors at meeting the U.S. water quality requirement.

An additional water quality issue concerning the Russian hygiene processor is the use of Alpha space station soaps. The soap used on the Mir-I space station was carefully selected based on several parameters, including compatibility with the hygiene processor. One attribute of the soap is that it is non-foaming, in contrast to the soaps currently baselined for use on Alpha. A soap that foams could be potentially incompatible with the rotary separator employed by the Russian hygiene processor. Additional testing would also be required to verify that the Alpha soaps could be adequately removed by the hygiene processor. Incompatibilities would require that the hygiene processor technology be modified to remove these soaps or that they be replaced with the soap used in the Russian space program.

NIICHIMMASH readily admitted that neither their condensate nor Hygiene Water Processor could meet the U.S. microbial requirement of <1 CFU/100 ml. Product water sterilization is not required on Mir-I, accordingly, no sterilization heat treatment is utilized by either processor, though the condensate processor does provide pasteurization (at 85°C, 185°F). NIICHIMMASH stated that their potable product water normally contained 0 to 10 CFU/ml (0 to 1000 CFU/100 ml), while their hygiene processor ranged from 2000 to 5000 CFU/100 ml in the product water. A significant level of additional power would be required for the two processors to provide heat sterilization and thus meet the U.S. microbial requirement.

Power Comparison

The present average power requirements for the single-loop Alpha Water Processor are 600 W for processing and 300 W for standby. The Water Processor consumes an average of 297 W while

processing and 153.9 W while in standby. Based on the water quantity requirements discussed earlier as well as the Water Processor's 6.8 kg/hr (15 lb/hr) processing rate, the maximum specific energy allowed for the U.S. Water Processor is 117 W-hr/kg (53 W-hr/lb) water processed with the actual performance of the Water Processor design at 59 W-hr/kg (27 W-hr/lb) water processed. The Russian condensate and hygiene processors have specific energies of 4 W-hr/kg (1.8 W-hr/lb) water processed (not including pasteurization) and 0.55 W-hr/kg (0.25 W-hr/lb) water processed respectively. The Russian hardware shows a significant advantage in the area of power, however, most of this advantage is attained by not having to meet U.S. requirements.

The low power of the Russian Condensate Processor is achieved because of the unique pump design, the low capacity required, the less stringent Russian TOC and microbial specifications, and the fact that the pasteurizer power is not included. The feed and delivery pumps are diaphragm pumps that only require power to expel the water from the diaphragm cavity. Since they are operated on a time interval (approximately 16 seconds every hour), minimal power is used to pump water. An increase in the flowrate would require a decrease in this time interval and therefore an increase in the time the pump was powered. Since the only significant power contributors are the pumps, the assumption that an increase in capacity from 5 kg/day to 10.8 kg/day (11 to 23.8 lbs/day) would not affect the specific energy. The required specific energy for the pasteurizer was estimated by assuming all the water was delivered cold and the regenerative heat exchanger achieved the same efficiency as the U.S. Water Processor regenerative heat exchanger (97%). This gave an additional 10 W-hr/kg (4.5 W-hr/lb) of specific power, bringing the total specific power of the condensate processor at Space Station capacities to 14.8 W-hr/kg (6.7 W-hr/lb) water processed.

The low specific energy reported for the Hygiene Water Processor was achieved by averaging the specific energy used to process a 40 minute, 10 kg (22 lb) shower over 24 hours. NIICHIMMASH stated that 120 W-hr of power was consumed by taking a 40 minute, 10 kg shower, and processing the 9 kg (19.8 lb) of shower waste water left after evaporation. If this 120 W-hr is averaged over a day, NIICHIMMASH stated that the hygiene processor daily power was 5 W-hr. Dividing the 5 W-hr by the 9 kg processed gives the specific energy reported of 0.55 W-hr/kg (0.25 W-hr/lb) of water processed.

However, specific energy in this discussion is defined as the amount of energy necessary to process a unit of water. Using this definition, 120 W-hr should be used as the processing power required, not the 5 W-hr, which averages in time that the hygiene processor is not operating. This definition gives a specific energy for the Hygiene Water Processor of 13.3 W-hr/kg of water (6.0 W-hr/lb). As with the Condensate Water Processor, it was assumed an increase in production rate would have no affect on the Hygiene Processor specific energy.

These scaled estimates of the Russian Water Reclamation and Management System specific energy account for increasing the capacity of the hardware, but do not consider any increase in power that would be necessary to meet the U.S. water quality requirements. Both the Condensate and Hygiene Water Processors are unable to provide water meeting the microbial requirement of <1 CFU/100 ml and the condensate processor is potentially unable to meet the TOC requirement for potable water of <500 ppb (see the water quality discussion). Each Mir-1 system would have to be significantly modified to meet these requirements, and those modifications would require additional power.

In order to provide a rough estimate of what that additional power might be, several assumptions have to be made about the existing Russian hardware, as well as any additional hardware that would have to be added to meet the water quality specification. For example, the Condensate Processor would probably require a high temperature catalyst reactor similar to the one used in the Alpha Water Processor design to meet the microbial and TOC requirements. In order to operate at the higher temperatures, the Condensate Processor would also have to operate at a higher pressure. The feasibility of adding hardware and changing the operating conditions of the Condensate Processor can not be accurately assessed without performance test data of specific components in the system (pumps, bed and filter housings, etc.).

However, if feasible, it is estimated that an additional 12 W-Hr/kg (5.5 W-hr/lb) of water processed would be required for the Russian Condensate Processor to meet the U.S. water quality specification (12 W-hr/kg is required to maintain 132°C (265 ^{o}F) in the catalytic reactor). The hygiene processor would require a sterilizer to meet the microbial requirements at an estimated additional specific energy of 22 W-Hr/kg of water processed (10 W-hr/kg to raise the

water temperature after a regenerative heat exchanger to 132°C and 12 W hr/kg to maintain that temperature for a minimum of 20 minutes). With these additions, the Condensate Processor's adjusted specific energy is 26.8 W-hr/kg (12.2 W-hr/lb) and the Hygiene Processor's adjusted specific energy is 35.3 W-hr/kg (16.0 W-hr/lb).

Weighting the Condensate and Hygiene Processor's specific energy as a function of the quantity of water each processes and summing them gives a total adjusted water system specific energy of 34.5 W-hr/kg (15.7 W-hr/lb) of water processed. Before this can be compared to the Alpha Water Processor performance, system operational aspects must be factored in to the numbers. Because water must be stored and verified acceptable prior to use, the Water Processor must remain powered and hot in order to provide access to the product tanks and to provide a microbial barrier to protect the stored water from microbes upstream of the reactor. Of the 59 W-hr/kg (26.8 W-hr/lb) to operate the U.S. Water Processor, 15 W-hr/kg (6.8 W-hr/lb) can be attributed to having the Processor remain hot during standby. In order to meet the "verification-prior-to-use" requirement, the Russian hardware would have to remain hot as well. If we assume comparable efficiencies, an additional 15 W-hr/kg should be added to the system power to meet this operational requirement, resulting in a total Russian Water Reclamation and Management System specific energy of 49.5 W-hr/kg (22.5 W-hr/lb) water processed.

In summary, the Russian Condensate and Hygiene Processor's reported specific energies appear to give a significant advantage over the present Alpha Water Reclamation and Management System. However, if the Russian hardware were required to meet U.S. water quantity, water quality, and operational requirements, the Russian processors would require major hardware redesign, with the specific energy of the Russian system rising significantly (49.5 W-hr/kg) to within 10 W-hr/kg (4.5 W-hr/lb) of the present U.S. design (59 W-hr/kg). This 10 W-hr/kg savings is primarily the result of the unique pump design which provides an extremely efficient and reliable motive force for moving the waste water through each system.

Resupply/Return (Logistics Comparison)

The Russian Condensate Processor requires approximately 100 kg (220 lb) of resupply expendables per year to process 5 to 6 kg/day

(11 to 13.2 lb/day) of humidity condensate on the Mir-I space station, which calculates to 0.056 kg expendables/kg of water produced. Under Alpha space station conditions of 10.8 kg/day (23.8 lbs/day), the processor would require approximately 220 kg expendables/year (484 lb/year).

Likewise, the Russian Hygiene Processor requires approximately 90 kg (198 lb) expendables/year (0.057 kg expendable/liter of water produced), which corresponds to approximately 1,610 kg (3,540 lb) expendables/year on Space Station to process 87.4 kg/day (192 lb/day). The Mir-I hygiene resupply weight includes replacing the rotary separators every 18 days on Alpha (as opposed to once per year on Mir-I, where only 30 kg/week (66 lbs/week) of waste shower/handwash water is processed). It is anticipated that this component could be redesigned to be more robust under U.S. conditions, thus lessening the resupply penalty. It should also be noted that the hygiene resupply weight has been modified to account for the fact that the hygiene feed aboard Alpha is less contaminated than on Mir-I. Only waste shower/handwash water is processed on Mir-I, whereas on Alpha, waste clotheswash and urine distillate will also be processed. Since the additional waste streams tend to dilute the more contaminated shower/handwash waste water, the expected throughput for the Russian hygiene multifiltration bed is estimated to be approximately doubled on Alpha. No impact to the filter life is anticipated, however, because it is not expected that the waste shower/handwash water will be diluted significantly by the waste clotheswash with regard to macroscopic contamination removed via filtration.

No other modifications to the expendable weights were made, though NIICHIMMASH stated that they would expect a 10 to 20% decrease in the expendable life of the multifiltration bed if required to meet the U.S. potable water quality requirement. This impact occurs because the multifiltration beds are not replaced until their performance has degraded to the extent that they are no longer meeting the water quality requirement. Since the U.S. water quality requirements are more stringent that those on Mir-I, the effluent of the multifiltration beds would more quickly reach the water quality requirement on Alpha and thus have to be replaced sooner.

The summation of the Russian Condensate and Hygiene Processor resupply values is approximately **1,830 kg (4,026 lb) expendables/year** (0.051 kg expendables/liter of water produced),

compared to the U.S. requirement of **1,690 kg (3,718 lb) expendables/year** (0.047 kg expendables/liter of water produced) and the anticipated performance (based on ground testing) of the Alpha Water Processor of **1,340 kg (2,948 lb) expendables/year** (0.037 kg expendables/liter of water produced). The Alpha values for resupply should be qualified by stating that they do not include resupply weights for the Water Processor's rotary separator or recirculation pump. The design requirement for the Alpha Orbital Replacement Unit that contains the rotary separator, recirculation pump, waste storage tank, and associated sensors and valving is 2 years (orbital replaceable unit weight is 48 kg). However, neither the rotary separator nor the recirculation pump have been tested in order to verify that they will meet this requirement or significantly outperform the life of the Russian hygiene rotary separator. If the hygiene rotary separator were deleted from the resupply/return calculations, the resultant resupply value would be 1,020 kg (2,244 lb) expendables/year (0.029 kg expendables/liter of water produced).

The resupply values (in kg expendables/year) will be reduced approximately 50% for both the Russian and U.S. processors after the waste clotheswash water is deleted from the waste feed sources. The reduction in resupply occurs because the throughput for each expendable, which is the basis for determining expendable life, will be reduced to approximately one-half its previous throughput.

Discussions with NIICHIMMASH indicated that resupply weights are not a significant concern of the Russian space program. Additionally, there is no return penalty because expended components are simply loaded back onto Progress, which is consumed during re-entry in the earth's atmosphere.

<u>Maintenance Man-Hours Comparison</u>

NIICHIMMASH stated that their Condensate Processor required 8 man-hours/year of scheduled maintenance while processing at a rate of 5 kg/day (11 lb/day). Since expendable change-out is based on total throughput, the maintenance man-hours/year can be scaled up for a U.S. processing rate of 10.8 kg/day (23.8 lb/day). The corresponding value for utilizing the Russian Condensate Processor on Alpha space station would be 17.3 man-hours/year.

The Russian Hygiene Processor's filter and multifiltration bed each require 30 minutes to change out. With a total throughput for the

filter of 1,000 kg (2,200 lb) and 2,000 kg (4,400 lb) for the multifiltration bed, the corresponding value for Alpha space station application is 23.9 man-hours/year. The combined estimate for the Russian water processors' maintenance requirements is 31 man-hours/year, which far exceeds the requirement for the Alpha single loop processor of 12 man-hours/year. For the same reasons discussed in the Resupply/Return discussion, this estimate does not include the Russian Hygiene Processor's rotary separator, which requires changeout every 1,560 kg (3,432 lb) according to NIICHIMMASH. Assuming a minimum change-out period of 15 minutes, this translates to an additional 5 man-hours/year, which could be doubled if the change-out period is 30 minutes as is the case for the other hygiene expendables.

As with the resupply calculations, the basis for maintenance man-hours is the total throughput per expendable. Accordingly, the impact of deleting the waste clotheswash as a waste feed source is that expendables will function effectively twice as long, decreasing the maintenance man-hours by a factor of two for both the U.S. and Russian processors.

Several modifications would obviously be required for the Russian hardware to meet the U.S. requirement for maintenance man-hours. Design modifications to the rotary separator could lengthen its useful life, thus lessening the required maintenance man-hours. The on-orbit life of the separator is also based on ground test data. Once this component reaches a specified throughput, it is replaced. If allowed to operate to failure, the actual life of the component could be potentially greater, thus lessening both the maintenance man-hours and the resupply penalty. The philosophy of component replacement based on ground test data rather than on-orbit monitoring also applies to the condensate processor multifiltration bed and possibly the condensate filter. To lessen the maintenance man-hours on the multifiltration beds and filters would require that the units be resized to last longer (and thus be replaced less frequently), which would subsequently increase the processor weight and volume. Additional reductions in the maintenance man-hours may be achieved by redesigning the components in order to make them easier to replace.

Launch Weight Comparison

The reported launch mass by NIICHIMMASH for the Condensate and Hygiene Processors was 120 kg (264 lb) and 163 kg (359 lb), respectively. This compares to approximately 480 kg (1056 lb) for the Alpha Water Processor. Once again, the ability to have such low launch weights is a result of not having to meet U.S. requirements. Four primary requirements drive the U.S. Water Processor in the area of launch weights; water quantity, maintenance man-hours, verification of water quality prior to use, and launch environments. The effect of launch environments on the Russian hardware cannot be assessed because of a lack of information on the structural requirements for launching hardware with Russian launch vehicles.

The U.S. launch weight is greatly affected by the maintenance man-hr requirements. Approximately 30% of the U.S. Water Processor's launch weight is expendables. The expendables are sized to meet the maintenance man-hr requirement of 12 man-hr/year. If the Russian hardware was sized to meet this requirement, the mass of the condensate and hygiene processors would increase to 182 kg (400 lb) and 248 kg (546 lb) respectively.

Higher water quantity requirements as well as verification of the water quality prior-to-use results in an increased number of tanks with a larger capacity than those currently in the Russian hardware. This additional weight would bring the total weight of the Russian Condensate and Hygiene Water Processors close to if not over the present weight of the Space Station Water Processor.

Launch weights for the processors could be significantly reduced after deleting the requirement to process waste clotheswash water. Tank storage volumes for the U.S. Water Processor would be halved and expendable sizes may be reduced.

Interface Requirements Comparison

To incorporate the Russian hardware into the Alpha space station Water Reclamation and Management System, several key interface issues will have to be addressed. These issues arise because of differences in the design for the U.S. and the Russian space programs. The following discussion addresses these issues and what design modifications will be required to incorporate the

Russian hardware into the Alpha Water Reclamation and Management System.

The interface with the Temperature and Humidity Control System presents a potentially significant design issue. On Alpha, the Temperature and Humidity Control System removes humidity condensate from the cabin air and pumps it into the waste water distribution bus. This stream is mostly humidity condensate, containing less than 10% gas and is at a pressure of 34.5 kPa gage (5 psig). The Mir-I Temperature and Humidity Control System, however, delivers an air/condensate mixture to the Condensate Processor that is 90% free gas. The design of the gas/liquid separator dictates that this mixture contain no more than 10% condensate. As a result, the Alpha Temperature and Humidity Control interface with the Russian condensate processor is incompatible. Either the Alpha Temperature and Humidity Control will have to be redesigned to deliver a waste stream to the Condensate Processor of less than 10% condensate or the Condensate Processor inlet will have to be modified to accept humidity condensate with greater than 90% condensate.

The Russian Hygiene Processor also faces the same interface in that the Hygiene Processor's rotary separator is designed for a waste hygiene stream that contains no more than 10% liquid while the Alpha Water Processor is designed for 90% liquid from the Crew System's equipment. Once again, this is incompatible with the U.S. Water Processor and will necessitate a redesign of one of the processors or possibly a modification of the waste distribution bus.

There is no significant concern with potable water delivery for the Condensate Processor. Either the crew will have to go to the Condensate Processor to obtain their drinking water (as is done on Mir-I) or the outlet of the processor will have to be modified to include a distribution system capable of delivering the potable water to various points on the station.

In order to meet current U.S. on-line monitoring requirements, the Process Control and Water Quality Monitor would need to interface with the Condensate and Hygiene Water Processors' product water outlet. Since the Process Control and Water Quality Monitor operation is based on monitoring a continuous flow process stream of a much larger volume, potential difficulties arise from the fact that the Russian processors would provide sporadic flow (see processor descriptions) of insufficient volume for adequate Process

Control and Water Quality Monitor operation. The Process Control and Water Quality Monitor would have to be redesigned to monitor water that would be pumped for only 16 seconds out of every hour for the condensate processor and 15 seconds out of every 10 minutes for the hygiene processor. This sporadic flowrate could potentially affect the performance of the online sensors (conductivity and iodine) by creating a hysteresis effect.

Of more concern is the effect the processor flow setup would have on the total organic carbon monitor. Since continuous flow will not provide for the monitor's 15 minute TOC cycle, the 1 ml/min sample stream required by the TOC monitor will be pulled from the processor's product water storage. This would circumvent the objective of the Process Control and Water Quality Monitor as an on-line monitor, creating instead a batch monitor that would not reliably monitor sudden changes in the processor's performance.

An additional issue concerning the Process Control and Water Quality Monitor interface is the low volume processed by the Condensate Processor. As currently designed, the Process Control and Water Quality Monitor would sample over 13% of the Condensate Processor's process stream. To prevent losing a significant volume of water from the potable supply, the Condensate Processor would have to be modified to reprocess the sample waste stream. Not only would this require an additional interface for the processor, but the waste stream would impact the life of the processor's multifiltration beds and possibly require a bed redesign. An alternative solution is to increase the interval between samples, thus reducing the actual volume of potable water removed by also limiting the number of data points obtained on the water quality. Any of these changes would degrade the ability of the Process Control and Water Quality Monitor to provide accurate, real time monitoring.

The Russian processors require a 27 VDC power supply, which is not available on the Alpha space station. A converter would be required to convert the Alpha power to a source that can be utilized by the processor.

Reliability Comparison

An assessment of the Russian hygiene and condensate processors' ability to meet the present reliability requirements is difficult

because of the limited information available about the processors. It should be noted that the general philosophy which governs the reliability aspects of the Russian water system design are different from that of NASA. The Russian hardware reliability stems from years of ground and flight testing. Because of this ground and flight test experience, redundancy in the design is considered to be unnecessary and is therefore almost nonexistent.

Anecdotal evidence from the Russians indicates that no major failures in the hardware have occurred during operation. However, NASA requirements dictate that all critical functions (i.e. potable water for consumption) have to support a certain level of failure tolerance by providing redundant functional path to provide a backup for the function. Because of this difference in philosophy, it is obvious that redundancy requirements internal to a subsystem (i.e. instrumentation redundancy requirements) such as the Hygiene or Condensate Processors would not be met by the Russian hardware. However, it is conceivable that a water system could be designed using Russian hardware that provided station level redundancy similar to the way that the Alpha space station provides that redundancy now by using redundant water processing strings and stored water sources. However, as presently outfitted in the MIR-I, the Russian system would not meet the U.S. redundancy requirements. There are more specific reliability requirements that pertain to failure propagation and specific contingency scenarios (such as hardware tolerance to depressurization) which can not be addressed without more detailed information about the Russian hardware.

Summary

As stated in the introduction, a comparison of the Russian and U.S. hardware is difficult. The differences in the design requirements have resulted in hardware with specific characteristics. Therefore using the Russian hardware to meet the U.S. requirements will result in significant impact to the Russian hardware design. Specifically, U.S. requirements for water quality and water quantity would have the most impact to the Russian hardware design. Increases in power, resupply weight, maintenance man-hours, and launch weight would be incurred in order for the Russian processors to meet these requirements. Interface impacts would also be significant, resulting in the need to redesign either U.S. or Russian hardware to make them compatible. These modifications would negate the

advantages that initially indicated the desirability of the Russian hardware. A summary of the major advantages and disadvantages of the Mir-I water processors is shown in Table 3-19.

The Russian hardware design is inherently simple, utilizing extensive ground and flight testing to insure reliability. This approach is adequate for the Russian space program; however, it does not meet U.S. requirements for reliability and maintainability. Using Russian hardware would therefore either require significant modifications in the areas of redundancy, fault detection and isolation and packaging or the Alpha space station would have to alter its reliability and maintainability philosophy.

Table 3-19 Mir-1 Water Processors Advantages/Disadvantages

Advantages	Disadvantages
Systems have been operational on-orbit	Does not meet water quality Requirements without significant design modifications
Requires less specific power than Alpha space station Water Processor	Does not meet water quantity and operational requirements without significant design modifications
	Does not interface with existing Alpha space station systems without significant design modifications
	Has High Resupply and Maintenance penalty

3.1.2.2 Urine Processing System

Russian System Description

The Mir-1 Urine Processor reclaims water from urine. Although the product water has only been used to supply the Mir-1's electrolytic oxygen generator, it can also be used as make-up water for the Hygiene Water Processor or as potable water for crew consumption. The processor's functions include urine collection, pretreatment, and storage; urine distillation; and condensate post-treatment. It is designed for a crew of three and has been operating on Mir-1 for three years.

Urine is a complex aqueous solution containing a large number of organic and inorganic substances. Significant among these are urea [$(NH_2)_2CO$], at 13 to 20 g/l, sodium chloride at 8 to 12 g/l, and various acids at up to 3 g/l. The total level of contaminants is about 3% by weight. Urine decomposes at room temperature and without some preservation method, it becomes contaminated with bacteria, which also results in decomposition. At temperatures above 60°C (140°F), urea decomposes, resulting in the formation of ammonia and carbon dioxide. Also, urine stored without preservation experiences significant precipitation of solids.

The Mir-1 Urine Processor depends on distillation at atmospheric pressure to reclaim water from urine. Figure 3-35 is a schematic of the urine processor currently used on Mir-1. There are three separate parts of the subsystem labeled I, II and II in the figure. Part I is the urine collection system. It consists of the urinal and the urine pretreatment assembly and has a blower which is common with the fecal collector. Part II is the urine distillation unit and includes the evaporator, condenser, heater and brine tank. Part III is the post-treatment unit. It is identical to the humidity condensate processor discussed earlier.

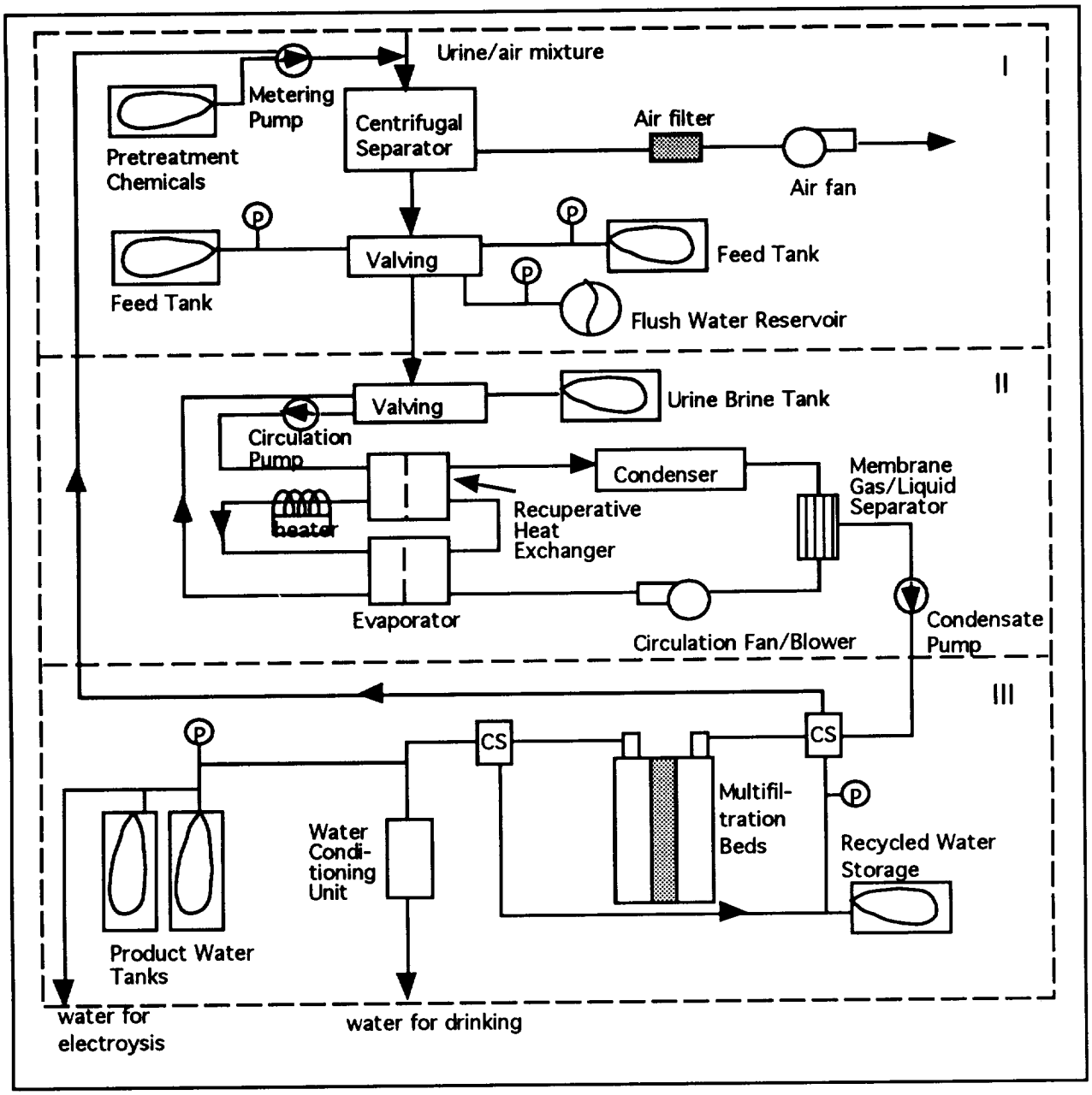

Figure 3-35 Russian Urine Processor Schematic

A urine/air mixture is drawn into the processor by air flow provided by a gas blower. Air flow for urine entrainment is in the range of 250 to 500 liter/minute (8.83 to 17.7 ft^3/minute). Simultaneously with receiving urine, a metered quantity of flush water and pretreatment chemicals are injected upstream of the centrifugal separator. The pretreatment chemicals are added to control odors and bacteria growth in the distillation unit and to prevent precipitates from accumulating and affecting the separator's

operation. The chemicals include a mixture of sulfuric acid and an oxidizer and are launched as a liquid solution.

The pretreatment tank has a capacity of 5 liters (1.32 gallons) and is replaced once every three months. The crew is protected from the pretreatment chemicals during replacement of the chemical tank by quick-disconnecting connectors which seal upon disassembly. The flush water is urine distillate stored in a tank in the post-treatment unit. The amount of flush water and pretreatment chemicals are metered into the stream based a set volume of either 50 ml flush water with one dose of pretreatment chemicals or 100 ml flush water with two doses of pretreatment chemicals. The pretreatment chemical pump is a diaphragm, positive displacement pump. The air which is separated from the inlet urine stream, re-enters the cabin through a carbon air filter which is replaced once every three months. The filter was designed for the blower on the fecal collector and the specification was for 30 days, but with the addition of the urine pretreatment, the filter lasts longer and no offensive odors have been reported. The filter can be changed after 30 days or when odors are noticed by the crew. The fan, separator, and pretreatment chemical pump are activated automatically by the signal from a limit switch when the urine funnel is removed from its stowage receptacle. The pretreatment pump stops after the appropriate volume of chemicals has been added. The fan and separator remain running until about 25 seconds after the funnel is stowed.

The centrifugal separator provides the necessary pressure head to pump the pretreated urine into one of the two bladder tanks, each with a capacity of 5 liters (1.32 gallons) used for urine feed tanks or receivers. The tanks operate at ambient pressure. Pressure sensors indicate when the tanks are full and empty and are supposed to have an unlimited life, although the sensors are changed out every 1.5 years for statistical reasons. A valve module contains valves and plumbing which direct the urine into the appropriate receiving tank and out of a receiving tank and into the distillation unit. The valves are titanium and polymer and have a design life of one year and are replaced after that.

There have not been any corrosion problems reported. Ground testing of the receiving tanks has proven that they can last up to five years, but due to the short period this system has been on-orbit, the tanks are replaced once every year to prevent failures. No failures of the

bladders have been reported. A one liter tank, designated as a urine receiver for flushing, is also filled with pretreated urine from the separator. At the end of a distillation cycle, urine from this tank is used to flush the concentrated urine from the distillation loop into the evaporated solution or brine tank to minimize evaporator fouling due to high levels of solids and contaminants in the brine. This also allows a urine receiver to be completely emptied during a distillation cycle, and a sufficient supply of urine is still available for flushing the loop. The centrifugal separator is the same as the inlet phase separator in the Hygiene Water Processor. It has a design life of one year, but ground testing has shown that it lasts longer in service, and has been replaced every 1.5 years.

The distillation unit (II in Figure 3-35) is composed of two loops: one of circulating urine to be evaporated and one of air used to aid the evaporation process. When either feed tank is full, the processor automatically starts the centrifugal circulation pump in the distillation unit which feeds the pretreated urine through a regenerative heat exchanger, a heater and into the evaporator at a rate of 60 l/hour. The pump has a design life of five years and has not been replaced. The urine circulation loop is approximately 0.8 liters.

In the air loop, a blower circulates the air at 100 l/min through the evaporator, the regenerative heat exchanger, a condenser, and a static phase separator. The air loop is connected to the cabin by a carbon filter.

The evaporator is the key interface component between the two loops. It consists of a stack of hydrophilic polymeric membranes with urine flowing on one side and air flowing on the other. Liquid water is drawn from the urine by capillary forces through the porous membranes and is evaporated into the air stream. Heat of vaporization is provided by insulated 360 W heaters which raise the temperature to between 50 to 52 °C (122 to 127 °F) and the evaporation is done at atmospheric pressure. There is a particulate filter integrated downstream of the evaporator to collect any solids which precipitate out of the circulating brine. The evaporator unit has a life of three months due to clogging of the membranes.

The heater is controlled based on the temperature of the urine entering the evaporator. Since the air is heated as it passes through the evaporator, some energy recovery is accomplished by

transferring heat from the air to the urine in the plate-fin type regenerative heat exchanger.

The air and water vapor, partially cooled in the regenerative heat exchanger, is cooled sufficiently in the condenser by the Mir-1 thermal control system to condense the water vapor. Coolant flow through the condenser is in the range of 3 to 4.8 l/min (0.79 to 1.3 gal/min).

The air with entrained water droplets passes to the static separator where the condensate is drawn through a porous wall by a diaphragm pump. The separator is very similar to the separator used at the inlet of the Condensate Processor. The air returns to the inlet of the blower. The separator includes an accumulator which collects 200 ml before pumping the water to the post-treatment unit by the condensate pump. The separator life is 600 liters of processed water which is a longer life than the Condensate Processor separator because of the relative cleanliness of the waters.

The distillation unit operates in cycles based on processing all of the urine in one of the feed tanks. As water is evaporated from the urine circulation loop into the air loop, urine is continuously drawn from the receiver to replace it. This process continues until the feed tank is empty. Urine remaining in the loop has a high concentration of contaminants, which are left behind in the remaining water while some volatiles pass through the membranes into the air loop. Prior to starting the next distillation cycle, the concentrated urine is flushed from the loop into the urine brine tank by the circulation pump. Valves are positioned in the valve modules such that flush flow goes from the flush water reservoir, through the pump, and into the brine tank. Approximately one urine circulation loop volume (0.8 liters) is flushed. The brine storage tank is a bladder tank with a capacity of 20 liters (5.3 gallons) and is replaced once every month. This capacity allows it to receive about 25 flushes from the circulating urine loop. When full, the bladder is removed from the tank's metal shell and is replaced with an empty bladder. The full bladders are placed in Mir 1's expendable resupply vehicle and burned with the vehicle on atmosphere reentry. Self-sealing quick-disconnectors are used to prevent spillage during the fluid disconnection and connection. This is an important safety precaution since the stored brine has a pH of approximately 2.

The distillate leaves the distillation unit via a diaphragm pump and is conditioned further by the post-treatment unit. The post-treatment unit consists of multifiltration beds, a water conditioning unit, a recycled water tank, a purified water tank, and conductivity sensors for water quality monitoring. Condensate entering the post-treatment unit passes through a conductivity sensor. It is directed to the recycled water tank if the conductivity is above 250 micro-mhos/cm (2.5×10^{-4} siemens/cm). Acceptable condensate is sent through the multifiltration bed to be purified. A second conductivity sensor evaluates purified water quality, and also directs high conductivity water to the recycled water tank. Water meeting the quality standard of 150 micro-mhos/cm (1.5×10^{-4} siemens/cm) is stored in the purified water container. Product water for use in the oxygen generator is taken directly from this tank. If the water is to be used as potable, it is passed through the conditioning unit, which adds minerals for taste and crew health and silver ions for microbial control. The water conditioning unit shown in Figure 3-35 is not installed since the water is used only for electrolysis, but the unit is stored on-orbit in case it is needed.

Approximately five liters of urine are processed each day, and if more is processed than is needed for electrolysis by the oxygen generator, the excess is loaded on Progress for disposal. Each product water tank holds 10 liters and water can be held in these tanks for up to three months.

All of the stationary plumbing in the urine processor is titanium tubing with some flexible lines which are either polyethylene or polyvinylchloride. Wetted surfaces exposed to urine are fabricated from titanium. Other wetted surfaces not exposed to urine are titanium or stainless steel. Non-wetted surfaces and structure are made from aluminum alloys. An electronic controller allows automatic operation, self-monitoring, and system status reporting to earth by telemetry. A control panel provides for system operation control and monitoring by the crew. All electrical components use 27 VDC power.

A photograph of the Mir-1 urine processor is shown in Figure 3-36. This photograph was taken at the Russian astronaut training center. System hardware is arranged as it is on Mir-1 within the frame at the center of the picture. Hardware in front and to the sides is to support training. The processor's control panel is visible at the top, and the tubes of the multifiltration bed are below it on the left side.

The two urine receivers are located below the multifiltration bed. A yellow urine inlet funnel with its flexible hose is visible at the lower right side of the system. The processor's module design, with major components connected by flexible hoses with self-sealing, quick disconnects, allows for easy hardware replacement for maintenance or design improvements. Components requiring electrical power or signals are connected by wiring harnesses with connectors.

The urine processor was installed in Kvant-2 in 1989 and has been in operation since January 1990. During the first 1.5 years of operation, more than 1,300 kg (2,870 lb) of urine have been processed. During this period, urine from the crew averaged 1.2 kg (2.65 lb) per man/day. Between January 15, 1990 and September 30, 1992, the amount of urine processed was 2,400 kg (5,290 lb). (Reference 1)

ORIGINAL PAGE
COLOR PHOTOGRAPH

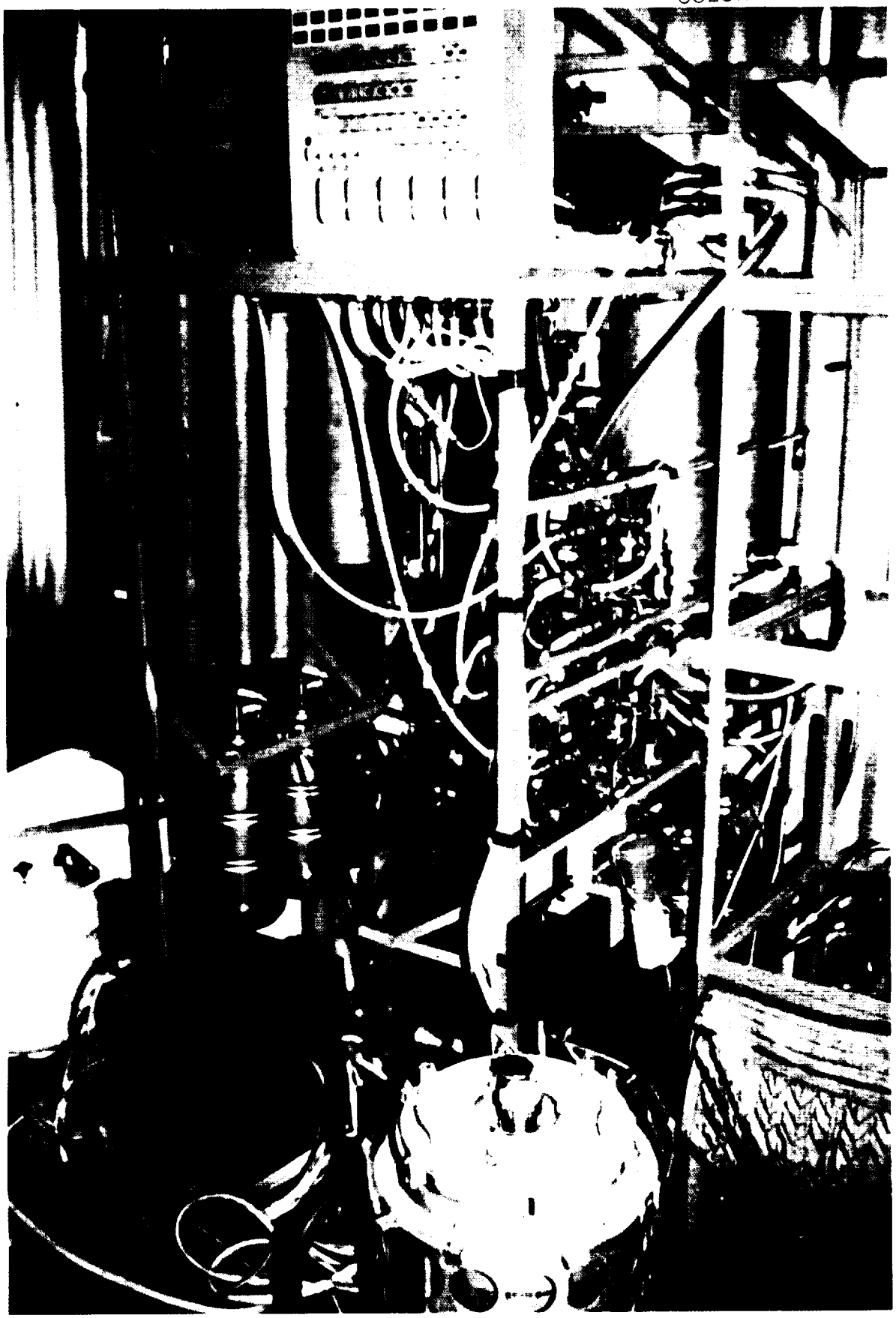

Figure 3-36 Photograph of Mir-1 Urine Processor

U. S. Urine Processor Description

The Russian Urine Processor phase change technology used for urine processing differs from the U. S. technology. The U.S. urine processor uses vapor compression distillation to reclaim water from urine at low pressure and ambient temperature. A schematic of the Vapor Compression Distillation System is shown in Figure 3-37. The wastewater is circulated through the distillation unit by a four section peristaltic fluids pump. The feed section of the pump discharges waste water to the inner surface of the evaporator drum at a higher rate than the distillation rate. The evaporator, condenser and condensate collector rotate to provide zero-gravity phase separation. The vapor is first compressed and then condensed. As the steam condenses, it directly transfers its latent heat across the thin metal drum to the film of waste water evaporating on the inside of the drum. The rotating drum helps keep the film thickness on the inside of the drum constant so the evaporation can be done more efficiently. The condensate collected in the condenser is pumped out of the distillation unit and passed through conductivity sensor. Water with a conductivity above the setpoint of 150 μmhos/cm is routed back to the recycle loop for reprocessing. Good quality condensate is delivered as distillate and is processed further by the water processor. The specifications for distillate are given in Table 3-20. Excess wastewater feed is returned to a 22 liter recycle filter tank (25 micron filter) by the second and third sections of the fluids pump. The recycle tank is replaced every 30 days for a four-person crew. Having two pump sections pumping water out allows the rate out to be greater than the rate in if necessary, which avoids flooding the still. The condenser/evaporator drum is rotated by a brushless direct current motor via a magnetic fluid sealed direct-drive coupling. The entire evaporation/compression/condensation process takes place at between 32 and 38 °C (90 and 100 °F) by operating the subsystem at 4.8 kPa (0.7 psia). Based on a control scheme of purging every 10 minutes, a purge valve is activated to remove non-condensable gases from the condenser. The purge pump used for evacuating the drum and purging the non-condensable gases is identical to the fluids pump, but operates at a higher speed due to the gases being pumped.

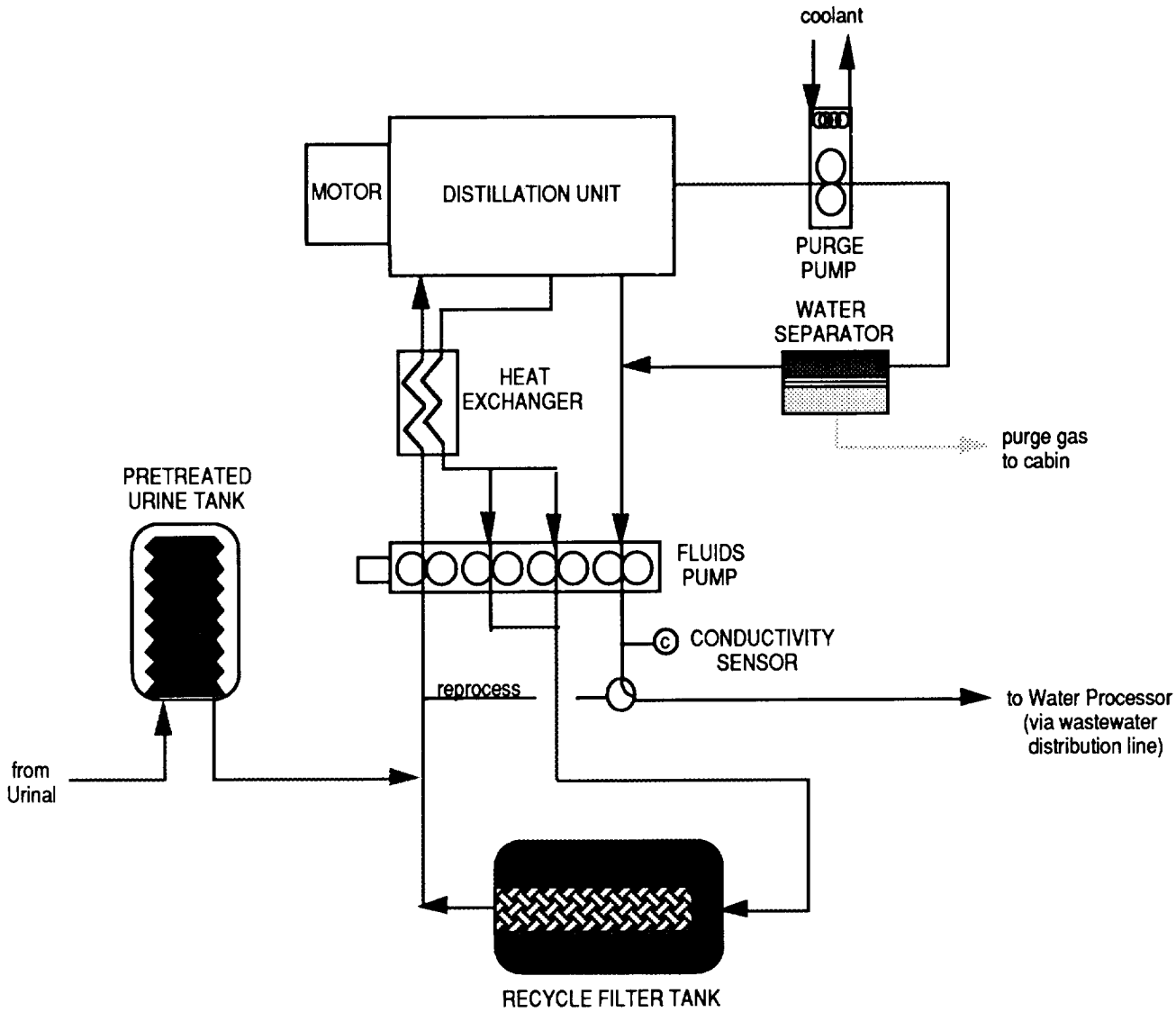

Figure 3-37 U.S. Urine Processor Schematic

Table 3-20 Urine Condensate Water Quality Requirements Comparison

	Alpha	Mir-1
Maximum Particle Size	100 microns	- -
Conductivity	150 μmhos/cm	250 μmhos/cm
pH	3-8	- -
Ammonia	≤ 3 mg/l	- -
Total Organic Carbon	≤ 50 mg/l	- -
Microbes	≤ 1000 CFU/100 ml	≤10,000 CFU/100ml
Content of Organic Substances	- -	0-5 mg O_2/l
Sodium Chloride	- -	0-0.2 mg/l

Comparison of American And Russian Urine Processors

Table 3-21 is a comparison of the water quality of the condensate leaving the two processors. The values of the Russian condensate are data taken at the exit of the distillation unit (II in Figure 3-35) so that a more direct comparison can be made and the values for the U.S. processor are averages over long ground testing of the hardware. There are fewer parameters measured on the Russian condensate, but since the stream must still be processed after leaving the urine processor, conductivity represents a good comparison. Only the parameters measured on the Russian hardware are compared here. The conductivity of the Russian distillate is higher than the U.S. However, it is still within a range reasonably polished by either the Russian or the U.S. Water Processor or polisher and therefore is of adequate quality.

Table 3-22 is a comparison of the Russian and U.S. Urine Processor requirements. The weight given for the Russian system of 190 kg (419 lb) includes the entire subsystem shown in Figure 3-36. To compare this to the weight of the U.S. subsystem, the weight of the polishing unit (Block III in Figure 3-35) is excluded. This leaves 142 kg (313 lb) which is very close to the weight of the U.S. Urine Processor.

The volume of the Russian Urine Processor, however is much more than that of the American Urine Processor. Part of the reason for this is the large amount of planned maintenance required on the

Russian unit which dictates more space in the packaging for easy access to the hardware components.

The interfaces of the two Urine Processors are very similar. The urinal is included in the Russian Urine Processor block including weight and power but in the U. S. system, the urinal is considered part of the Waste Management Subsystem. The American urinal interfaces with the feed tank of the American Urine Processor in an adjoining rack space and the Mir-1 urinal is integrated in a similar way.

The capacity of the Mir-1 Urine Processor is less than the U. S. system. It was designed for 3 people and is only marginally meeting that specification. This is probably due to the membrane degradation which causes a lower production rate.

The production rate of the Mir-1 urine processor is 5.5 lb/14-17 hours which is much less than the capability of the American urine processor of 4 lb/hour. It would take design changes involving more mass, volume and power to increase the capacity of the Russian urine processor. This can be compared to the U.S. capacity which is already more than sufficient for a four man crew.

The power used is significantly higher for the Mir-1 Urine Processor. The specific energy is 450 W-hr/kg urine compared to the U.S. Urine Processor of 168 W-hr/kg urine. This is due to the high energy necessary for the heaters in the Russian system.

The pretreatments for the two systems are similar. The pretreatment chemicals are both sulfuric acid and an oxidizer. The oxidizer used in the Russian system is unknown but is launched and dispensed as a liquid compared to the mono-persulfate salt used in the American design which is unstable a short time (2 weeks) after becoming a liquid and will probably be launched in a dry form. The pretreatment in both is used to prevent fouling of the separator. Neither separator has experienced foaming problems.

The Russian urine processor components are changed out periodically to avoid failure at a rate which would drive the crew-time and expendable rates much higher than the expected U. S. rates. The estimated maintenance man-hours for the Russian Urine processor is 40 man hours/year compared to 5 man-hours/year for the U.S. The 40 hours includes the post-treatment expendables, but that should

not be a significant part of the time spent since the beds should last nearly a year before being changed out. The following components are changed on the Mir-1 urine processor routinely:

- Feed tanks-once/year
- Urinal separator-once/1.5 years
- Air filters-once/23months-same filter as for fecal collection
- Evaporator membranes- once/3 months
- Static air/water separator-once/3 months or 600 liters of processed water
- Brine tank-once/month
- Pretreatment-once/3 months

Table 3-23 summarizes the advantages and disadvantages of the Mir-1 processor.

Table 3-21 Comparison of Measured Urine Distillate Water Quality

	Alpha	Mir-1
pH	4	4
Total Organic Carbon	17 mg/l	80 mg/l
Conductivity	50 micromhos/cm	130 micromhos/cm
Methanol	1.8 mg/l	3.0 mg/l
Ethanol	3.6 mg/l	10 mg/l
Ammonia	< 0.9 mg/l	1.0 mg/l
Acetic Acid	5.6 mg/l	20 mg/l
Calcium	0.06 mg/l	1.0 mg/l
Chlorides	1.12 mg/l	20 mg/l
Acetone	0.40 mg/l	10 mg/l
Acetaldehyde	not measured	8 mg/l
Urea	not detected	0.5 mg/l

Table 3-22 Comparison of Russian and U.S. Urine Processor Requirements

	Alpha	Mir-1
Mass	135 kg (298 lb)	190 kg (419 lb)
Volume	.37 m^3(13 ft^3)	1.5m^3(53 ft^3)
Power	120 VDC 335 W average 600 W peak 35 W standby	28 VDC 380 W average ---peak ---standby
Specific Energy	168 W-hr/kg (75 W-hr/lb)	450 W-hr/kg (205 W-hr/lb)
Capacity	8 l/day (18 lb/day)	9 l/day (20 lb/day)
Maintenance Man Hours	3 hours/year	40 hours/year
Expendables	0.06 kg/kg urine processed	0.3 kg/kg urine processed
% Water Recovery	91%	80%
System Operating Pressure	3.4-6.9 kPa (0.5-1 psia)	111-200 kPa (16-29 psia)
System Operating Temp	32-38 °C (90-100 °F)	52 °C (126 °F)

Table 3-23 Mir-1 Urine Processor Advantages and Disadvantages

ADVANTAGES	DISADVANTAGES
Currently operating in space	Higher weight, power, volume
Developed and operational pretreatment assembly	Lower capacity (3 crew maximum)
	Lower water recovery rate

The most promising concept could be the urine pretreatment being done on Mir-1. The chemicals are sulfuric acid and an oxidizer. If this pretreatment will work with the U.S. Urine Processor, it would be a fully designed and operational design which the U.S. does not currently have. Mir-1 has an operational urine separator and pretreatment unit which does not cause foaming, and does not seem to foul the separator. More information on this or an actual unit to test would be good.

3.2 Non-Regenerative Life Support Systems

Much less information is available on the Russian non-regenerative life support systems than the regenerative ones. For purposes of this report, non-regenerative life support functions are classified as atmosphere pressure control and supply, temperature/humidity control of the habitable atmosphere, fire detection and suppression, and metabolic waste management (see Figure 2-1).

Much more technical discussions are needed between the NASA/Russian life support engineers to better understand the Mir-1 capabilities in these areas and the overall integration of the two space station designs.

3.2.1 Atmosphere Control and Supply

Aboard Mir-I, both air revitalization and atmosphere control functions are provided by the Atmosphere Composition Control System. Oxygen and nitrogen resupply, when required, is delivered to orbit in high pressure tanks located on the Progress modules. The atmosphere control hardware in Mir-1 and the gas storage provisions on the Progress combine to provide the functional equivalent of the Alpha Atmosphere Control and Supply subsystem. This hardware provides cabin pressure monitoring and control, oxygen partial pressure control, O_2 and N_2 storage, pressure equalization between elements and Extra-Vehicular Mobility Unit support.

3.2.1.1 Atmosphere Monitoring

Mir-1 has instrumentation to monitor the atmosphere total pressure, the oxygen partial pressure, the cabin dry bulb temperature, the cabin humidity level, and the cabin CO_2 partial pressure level.

Absolute pressure is measured both by a manometer and by electrical transducers. The manometer has a range of 0 to 960 mmHg (0 to 18.6 psia) and an accuracy of ±2 mmHg (± 0.04 psia). Transducer range is 0 to 1,000 mmHg (0-19.3 psia) with an accuracy of ±30 mmHg (±0.6 psia). Oxygen partial pressure is also monitored but the accuracy of the sensor has not been defined to NASA.

None of the technology associated with the Russian atmosphere monitoring is completely understood by NASA. The Russians have indicated that the oxygen sensor is an electro-chemical device that

has a long life (no replacement or recalibration necessary on Mir-1 yet). NASA is not aware of any technology like this.

3.2.1.2 Oxygen/Nitrogen Storage

Oxygen and nitrogen are transported to orbit in the Progess modules. Currently each Progress can carry up to nine 20 liter tanks which can be filled to 250 atmospheres (3675 psia) with either oxygen, nitrogen or air. Gases are manifested on an as-needed basis.

This capacity is equivalent to approximately 6 kg of gas/tank or a total of 54 kg of gas delivery per Progress mission.

It is believed that air is delivered in these tanks when there is a planned EVA mission on-board Mir-1. These tanks are used to replenish on-board airlock bottles utilized to repressurize the airlock after each EVA. The airlock bottles are believed to be portable and carried from the airlock to the Progress for recharging.

It is also believed that the Progress gas can be transferred to Mir-1 tankage stored outside the pressurized area prior to the Progress being removed. The Russians do not "throw away" any resupplied gas.

The high pressure oxygen gas bottles required for servicing the Extra Vehicular Activity suit life support system are delivered to orbit inside the Progress and transferred to the airlock area. A total of 4 bottles (4 liters/bottle) are stored in the airlock at 400 atmospheres each. The bottle weight is 10 kg and the total oxygen per bottle is 20 kg. The Mir-2 design plans to have an on-board oxygen compressor which will compress oxygen generated by water electrolysis to 400 atmospheres to support the suit needs for high pressure oxygen.

The option of the Russians providing all of the international space station needs for oxygen and nitrogen gas resupply has been discussed and tentatively assumed to be the baseline. However, there are many questions remaining on their ability to provide this capability and the associated interfaces with the Alpha space station. Therefore, it is recommended that the U. S. program retain their baselined high pressure gas storage tanks until an acceptable baseline is defined with the Russians.

Key interface issues include total quantity of gases to be supplied per year, interfaces for transferring the gases from the Progress to the use point (payloads, etc.), supply pressures and temperatures of the gases.

3.2.1.3 Total Pressure Control and Relief

The Russian designs for the Mir modules regarding pressure control and relief have not been well defined to NASA. The total pressures experienced onboard the Mir have ranged from 600 mmHg (11.6 psia) to 860 mmHg (16.63 psia). This is considered a large variation and the reasons for such excursions have not been defined by the Russians. The core module of the Mir-1 is the primary location for the control of total pressure and pressure relief. However, it is unclear what actual "automatic" pressure relief exists in the Mir-1 design. Also, it is unclear whether pressure control (total and oxygen partial pressure) is performed automatically by sensors or manually by the crew.

NASA has requested several times from the Russians that actual Mir-1 atmosphere pressure profiles be provided but they have refused to provide such data.

The total atmosphere leakage per module is no more than 72 g/day (0.16 lbm/day) which is significantly below the 0.5 lbs/day specification for the Alpha modules.

The manner in which oxygen and nitrogen gas is distributed on-board Mir-1 is unknown. It is believed that nothing comparable to that planned for Alpha has ever been utilized on Mir-1 or planned for Mir-2.

Manual pressure equalization valves are provided in the hatches between all attached modules. It is believed that these valves also offer the only source for repressurizing a module if required. It is not clear if depressurization valves are located in the modules if it is desired to evacuate the atmosphere.

Based upon the many unknowns associated with the Mir designs for atmosphere control and supply, it is recommended this area receive immediate attention in the initial integration activities.

3.2.1.4 Oxygen Partial Pressure Control

The oxygen partial pressure on the Mir-1 has varied between 140 mmHg (minimum) to 200 mmHg (maximum) which is equivalent to 2.70 psia (minimum) to 3.87 psia (maximum). It is not known under what circumstances these variations have occurred. Also, it is not clear if there is automatic interaction between the oxygen partial pressure sensor and the introduction of oxygen into the atmosphere.

The relationship of the various sources of oxygen (O_2 generation system, bottled oxygen, and the lithium perchlorate "candles") to a control system have not been defined clearly by the Russians. It is believed that the majority of the time oxygen is introduced into the atmosphere manually by the crew.

The materials control program for Mir-1 assumes the oxygen concentration could reach 40% of the total atmosphere. However, the Russians say this condition has not ever been experienced on-board Mir-1.

3.2.1.5 Extra-Vehicular Mobility Unit Support

A docking module serves the Mir-1 as an airlock. The docking module atmosphere is not recovered. It is dumped to space for each Extra-Vehicular Activity operation. The airlock is repressurized with atmosphere from Mir-1 via a pressure equalization valve. This may be one of the reasons for the drop in Mir-1 atmosphere total pressure mentioned above from the nominal one atmosphere condition.

The Mir-1 Extra Vehicular Activity protocol does not require a long prebreathe period for the crew when the station atmosphere is 14.7 psia like the U. S. procedures. Approximately 25 minutes is used for prebreathe by the Russian cosmonauts prior to egressing the airlock. The U. S. requires at least 4 hours of pure oxygen breathing (on masks) or "campout in a 10.2 psia oxygen/nitrogen environment for 10 hours. One of the reasons for the shorter Russian time is their Extra Vehicular Activity suit pressure is slightly higher (1 psia higher) than the U.S. design which helps the cosmonaut avoid the bends due to the lower operating pressures.

This short prebreathe time results in a simpler airlock design than that envisioned for supporting the crew in a "campout" scenario.

Detail technical discussions have been occurring between the Russians and NASA to develop a common airlock design for Mir-2 which would support Extra Vehicular Activities with either the American suit or the Russian suit. This would include the common airlock having "campout" capability.

All of the details of the life support functions required for the joint Russian/U.S. space station will not be discussed in this document because they are not completely agreed upon yet. However, based upon technical discussions to date, nothing would prevent a common airlock approach for a joint station. Hence, the basic functions required on Alpha would be provided in the joint station program.

Also being developed for Mir-2 is an atmosphere evacuation system which will pump a major amount of the airlock atmosphere back into the Mir prior to airlocking in order to reduce atmosphere loss. This system will weigh 55 kg (121 lbm), will pump up to 30 M^3/hr (1,059 ft^3/hr), and will leave a residual pressure of 50 mmHg (1 psia). The peak power requirement is 1.2 kW.

3.2.2 Temperature and Humidity Control

Temperature and Humidity Control aboard Mir-1 is accomplished using a centralized condensing heat exchanger located in the Mir-1's core module. This unit is sized to handle all of the Mir-1's cabin air heat loads (both sensible and latent) for crew comfort and provides the cooling to avionics equipment after conditioning the habitable areas. The total amount of air processed by central heat exchanger fan is approximately 600 m^3/hr (351 ft^3/min). The crew comfort design requirements for the Mir-1 cabin air are shown in Table 3-24.

Table 3-24 Mir-1 Temperature and Humidity Control Requirements

Relative Humidity AT 20°C	30-70%
Temperature	18-28 °C
Air Flow Velocity	0.2-0.5 m/s (habitable area)

In addition, Table 3-25 shows atmosphere conditions actually recorded on-board Mir-1 over a 24 hour period on August 2, 1993. These are reported to be typical of the atmosphere on Mir-1.

Table 3-25 Mir-1 Atmosphere Parameter Data

Monitored Parameters	Units	Minimum	Maximum
Total pressure	mm Hg	754	755
Partial pressure of O_2	mm Hg	144	146
Partial pressure of CO_2	mm Hg	4.4	4.7
Partial pressure of water vapor	mm Hg	8.3	10.2
Relative Humidity	%	45	53
Temperature			
-in working environment	°C	20.8	21.4
-in transfer compartment	°C	15.3	18.9

3.2.2.1 Crew Comfort Requirements

The above requirements (Table 3-24) are levied on the crew habitation environment on Mir-1. The air flow velocity throughout the Station is not monitored. It is controlled by crew members, if required. The temperature is controlled by the crew to a temperature range. It is not clear if the cabin air temperature in the core module is selectable and automatically controlled with a by-pass around the cabin heat exchanger. It is believed that the crew manually adjusts the amount of air conditioned to meet their

comfort requirements. The average air temperature gradient in a habitable module is up to 4 °C.

The variation in average cabin air temperatures in the core module versus the Kvant or Krystal modules is unclear. Only intermodule ventilation is utilized to transfer heat from these remote modules back to the condensing heat exchanger in the core module. The flexibility of the Mir-1 to handle variable cabin air heat loads appears to be very limited. However, more information is required to understand the limitations this design approach has on crew comfort.

Humidity is controlled by the core module cabin condensing heat exchanger through which all module air is circulated and both latent and sensible heat loads are removed. The design heat loads for the Mir-1 are unknown. The heat exchanger is integrated with the Mir's thermal control system loop which utilizes Freon as the coolant for heat acquisition. The Russians report that no "serious" problems have been encountered on Mir-1 regarding humidity control for crew comfort. However, they did say that condensation has occurred in some areas of the Mir-1 where it was not desired. This implies that structural heat leaks may exist which allow the internal surface to be below the dew point of the atmosphere and condensation occurs.

3.2.2.2 Equipment Air Cooling

The avionics and other equipment is cooled completely by air cooling. No cold-plating is used for equipment cooling on Mir-1. The cabin air heat exchanger discussed under crew comfort is the same heat exchanger for removing equipment heat loads. The magnitude of total equipment heat loads is unknown but is believed to be in the 3 to 4 kilowatt range.

This Mir-1 design is different than that implemented on Alpha (which has equipment located either on cold plates or inside racks for primarily air cooling). The range of air temperatures available for equipment cooling are not currently understood. The air velocities in the equipment bay areas range from .05 to 2.5 m/sec.

The integration of multiple modules with variable heat loads and multiple equipment locations with only one centralized heat removal system is a complicated approach and one that is not clearly

understood by NASA. It seems to present serious operational constraints.

3.2.2.3 Refrigerators and Freezers

The Mir-1 does have a refrigerator and a freezer on-board. They are believed to be different than what is planned for Mir-2.

The Mir-1 refrigerator is integrated with the Mir-1 thermal control system fluid system where coolant is circulated around the cylindrical container housing fresh/perishable food. The volume of the refrigerator is 50 liters (1.77 ft^3) and keeps stored food at 2 to 8 °C. Fresh food brought up on the Progress is transferred to this unit.

The Mir-2 station will have a refrigerator which utilizes thermoelectrics for thermal conditioning. The average power per day for the unit is 120 watts with a maximum consumed power of 250 watts. It will keep food stored at 3.2 °C and have a 25 liter storage volume. The unit will be located in the core module.

In addition to this unit it is believed that the biomedical community will have a refrigerator unit for storing biospecimens or results of biological experiments. They have indicated this refrigerator unit will have two chambers each thermally conditioned with thermoelectrics. The volume of chamber 1 is 30 liters and chamber 2 is 1.5 liters. Each chamber can be thermostatically controlled to two different set points: 4 °C or 12 °C (±2 °C).

The MIr-1 station carried a freezer on-board the Krystal module for storing biological samples. However, the unit is believed to have been "an expendable" type design with a cryostat which is now depleted. Discussions with biomedical community indicate they plan to have a freezer on-board the Mir-2 which they refer to as an oxygen thermostat-refrigerator with a temperature control from +37 °C to -20 °C. More information is needed on what actual design is and whether it is an expendable and non-regenerable.

Overall, the Russians plans for refrigerator/freezers looks more limited than what has been planned for the Alpha option. Alpha has planned for 2,830 liters (100 ft^3)

3.2.2.4 Intermodule Ventilation

Similar to the Alpha design, the Russians use intermodule ventilation for atmosphere conditioning of modules attached to the Mir core module. These attached modules depend upon intermodule ventilation for cabin air temperature control, humidity control, CO2 control, trace contaminant control, oxygen partial pressure control, and removal of heat loads produced by equipment located in the adjacent modules. The intermodule ventilation is accomplished by fans which pull air through ducting to exchange atmosphere between modules.

The Mir-1 assumes an air exchange rate between modules of approximately 200 m^3/hr (117 ft^3/min) for maintaining proper atmosphere conditioning. The Alpha station is designing the intermodule ventilation rate for 240 m^3/hr (140 ft^3/min). The Mir-1 has approximately 15 separate fans to accomplish intermodule ventilation (each requiring 30 to 40 watts power).

It should be noted that the Russian Mir-1 design utilizes "drag-thru ducts" in the hatch openings between modules for intermodule ventilation. These ducts must be removed before the hatch can be closed. The Alpha utilizes a design which allows the hatches to be closed and still provides intermodule ventilation.

3.2.3 Fire Detection and Suppression

No fires have occurred on the Mir-1 space station. Smoke was detected once, but when the cosmonaut looked inside the panel, no identifiable fire source was found and it was suspected there had been a short.

The Russians use a strict materials review regarding flammability (standards and specifications) to reduce the risk of fire on orbit. This is referred to as a "passive" fire-fighting system. Smoke detectors are used to detect potential fires and portable fire extinguishers to suppress fires. These precautions are the "active" fire-fighting systems.

The flammability testing for screening of materials is done at 40% oxygen concentration level for conservatism (not necessarily an operational scenario that would occur).

3.2.3.1 Fire Detection

Mir-1 has twelve smoke sensors in the core module and five sensors in each Kvant and Krystal module. No sensors are in their airlock for Mir-1 or planned for the Mir-2 airlock. Technology design improvements are planned for the smoke sensors to be used on Mir-2 and fewer sensors (only 1 or 2) are to be utilized in any module.

No information has been made available on the smoke sensors technology. More detailed information will be forthcoming in the future as we develop a common approach to fire detection on the international program.

3.2.3.2 Fire Suppression

Portable fire extinguisher bottles are used to actively control fires on orbit. The suppressant uses a jet of foam which surrounds the fire and suffocates it. Specific chemical ingredients are to be provided by NPO-Energia. The composition of the foam is neutralized and thus is not an aggressive substance. Clean-up is performed with a dry piece of cloth. The Mir-1 does not have a centralized fire suppression system (only the portable bottles). There are two extinguishers on Mir-1, and one in Kvant-2. It is unknown if Kvant-1 has any.

Gas masks are also provided as part of the fire-fighting equipment. Ground testing and certification was performed for the fire extinguishers.

3.2.4 Waste Management

A single receiving unit provides separate collection and removal of urine and feces.(Reference 4) The urine collector operates similarly to that planned for the Alpha space station which is described earlier in the Urine Processing discussion. The Russian Waste Management System is shown in Figure 3-38. The technology used is similar to that used on Skylab. When the commode lid is opened, a limit switch is closed and the blower is started. The air is pulled from the cabin through the funnel and the commode seat to aid in removing the urine and feces from the body. The air is filtered through a carbon filter and is returned to the cabin.

3.2.4.1 Fecal Collection and Storage

The fecal collector works under a similar principle to that of the U.S. fecal collector but has significant mechanical differences. The Russian fecal collector has a replaceable bag which is inserted before each use. This bag has an internal fabric net inside to contain the feces. Cabin air is pulled through the bag during use and the bag is held in place by a ring at the top which fits under the seat. After each use, the entire bag is removed and the drawstrings at each end of the bag are drawn up and the bag is manually stored in the waste collector canister for storage and later expelled with the Progress and incinerated during Progress re-entry. While stored, the canister is vented through a carbon filter.

The U. S. system (Figure 3-39) works similarly in that air is pulled from the cabin through the seat, but a separate fan is used for the urine collection and fecal collection. The commode blower is turned on when the seat is lifted and runs for about 30 seconds after the seat has been stowed. The most significant difference in the two systems is the amount of manual handling of the fecal material. After use, the Russian system requires manual removal and stowage of the fecal bags. The U.S. system does this storage automatically. After each use, a piston is moved over the storage canister which is integral to the system. The piston compacts the bag at the bottom of the canister. After about 28 defecations, the canister is full; this is indicated by a signal to the crew. The canister is then removed, a filter lid is placed on it and the canister is stored for return to earth. The canister can be refurbished for continued use.

3.2.4.2 Urine Collection and Storage

Urine goes from the collection funnel through a urine separator similar to the one in the U. S. design, is pretreated and is sent to the urine processor. The most significant difference in this and the U. S. system is that of the pretreatment which is addressed earlier in the Urine Processing discussion.

There has been no fouling or foaming in the separator and the separator is replaced for statistical purposes so there have been no failures.

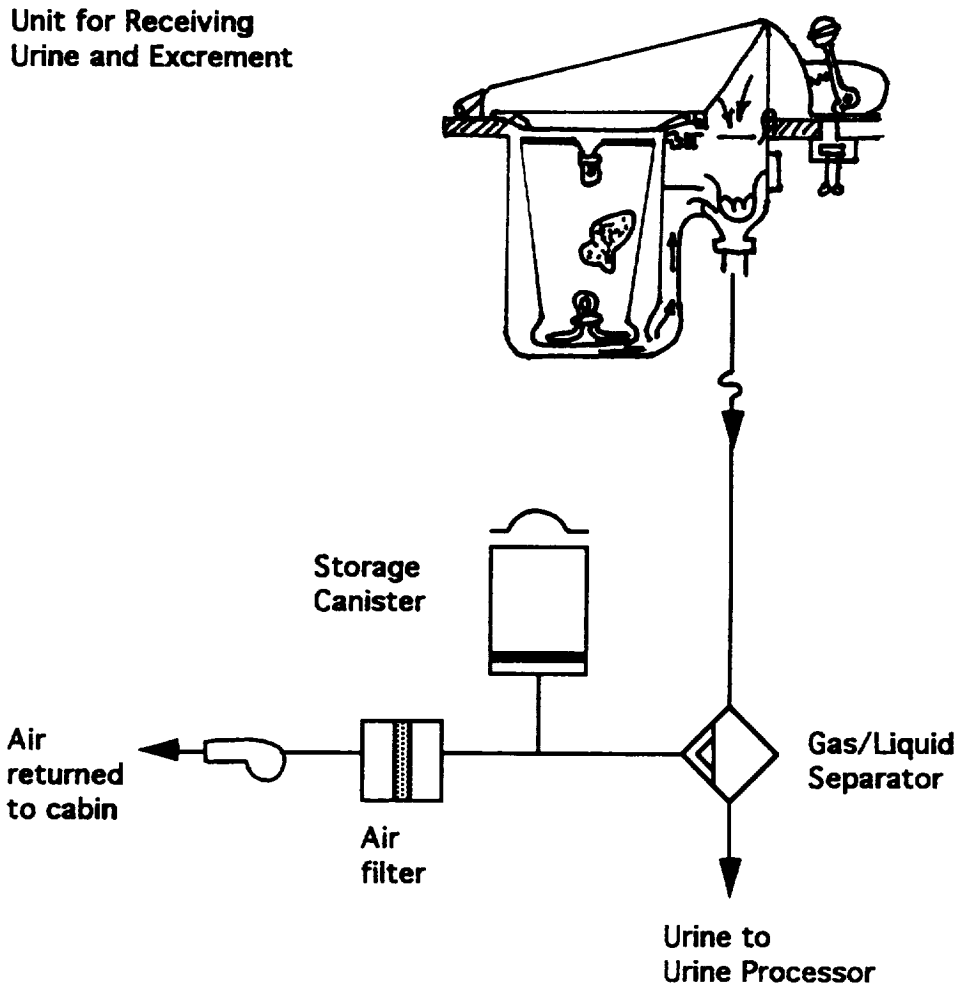

Figure 3-38 Mir-1 Waste Management Schematic

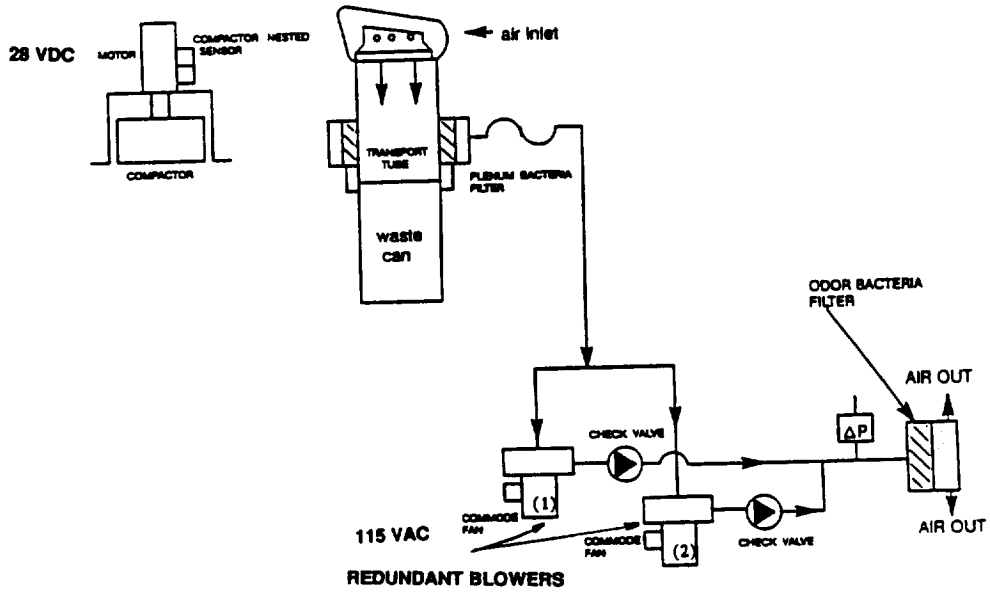

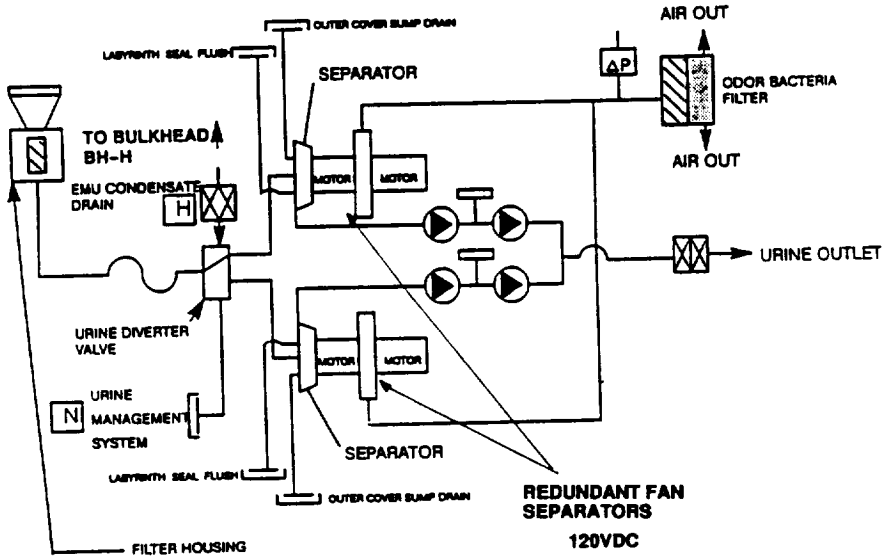

Figure 3-39 U. S. Waste Management Schematic

4.0 SUMMARY

With MSFC's responsibilities for the space station environmental control and life support systems (ECLSS) it was incumbent upon the center to evaluate the Russian life support systems utilized on the current Mir-1 space station and to investigate the possible application of their technology to the American program. In addition, the technical discussions with the Russians identified alternate technologies being pursued by the Russians for their Mir-2 program. The enclosed report documents our investigations over the past one and half years and is considered a benchmark for making technical decisions at this point in time regarding the international space station which includes the Russians as partners.

It was recognized early in this assessment that the Russian Mir-1 equipment was sized for a smaller crew (2 to 3) than that envisioned for the international space station (3 to 6). This is particularly true for the design of regenerative life support equipment which is the most impacted by crew size. However, the equipment could be used in a complementary manner and possibly reduce the cost of the baseline Alpha program.

The technical assessment of the Russian Mir-1 and Mir-2 designs led to the life support systems protocol signed between the Russians and Americans in the August, 1993 meetings in Washington D. C. (Crystal City) and is still applicable to the international space station program.

Table 4.1 of the enclosed report identifies the location of life support systems required to support the 6-person space station requirements and the expected failure-tolerance required of critical life support functions.

The Russian Mir equipment does not have the capability to support the entire space station requirements. This is particularly true regarding the following areas:

1) Their designs for control of trace contaminant gases in the atmosphere are limited to the equipment and crew in the Mir. More units or a redesign of the current system would be required to accommodate the entire station contaminant loads. Therefore, the U.S. equipment located in the Laboratory and the Habitation modules

should be retained to accommodate both the U. S. and the other international partners (NASDA, ESA, and Italians).

2) Their system alone is not capable of satisfying the life science payload requirement to control the partial pressure of CO_2 to < 0.3% of the total atmosphere. It is not clear that only one of their units will support 3 crew and maintain the $ppCO_2$ level below 0.7% in the U. S. Laboratory without the use of expendables. Therefore, the CO_2 removal equipment located in the U. S. LAB should be retained from both a crew safety and payload accommodation standpoint. It should be noted that the Mir-2 program was planning to implement both the Mir-1 CO_2 removal unit (inside the core module or service module) and a new technology design in their life support module which is like the molecular sieve technology planned for the U.S. Lab. This implies the Russians have not been satisfied with their current CO_2 removal system performance which may explain why they have been reluctant to provide any meaningful performance data to do a proper technical assessment.

3) Their centralized approach for cabin air temperature and humidity control to satisfy crew thermal comfort would not be adequate for accommodating the U.S. segment. Therefore, it is recognized by all designers that the U.S. should provide its own equipment for temperature and humidity control to satisfy both crew comfort and equipment air cooling requirements.

4) The Russian potable water recovery system allows a much higher level of contamination in the reclaimed water than that currently allowed by the NASA medical community for the Alpha program. It also utilizes a different biocide (silver ions) than the U.S. specified biocide (iodine). These design issues are recognized by all parties and a joint working group will resolve these issues by the System Design Review (SDR) in March, 1994. Hopefully this resolution will also determine the degree of functional/physical water interfaces required between the Russian and U.S. segments (both waste and potable water interfaces). Water management studies have been identified as a joint NASA/Russian activity for 1994.

5) The Russian designs for refrigerators and freezers for food are inadequate for the current Alpha program requirements. They would appear to be limited even for the current Mir program. It is assumed the Mir designs will be utilized for the Russian segment and the U.S.

development will occur to support the 6-crew and the U.S. Habitation module implementation.

6) The Russian Mir program has inadequate monitoring ability on-orbit to assess the atmosphere and water quality according to the current NASA requirements. Therefore, the U.S. development of this type hardware is assumed to continue and the biggest decision to be made regarding this U.S. developed equipment is "when and where" will this hardware be integrated into the international station.

7) The ability of the Russian Mir space station segment to adequately supply the international space station needs for nitrogen gas is under a joint NASA/Russian study. We are concerned that the Russians have not seriously examined the mission requirements for such support and believe the NASA options should remain open until SDR to resolve a satisfactory solution.

In addition to the above items, it is still unclear if the Russian designs can support the total supply of oxygen to the U.S. segment of the international space station. This is an on-going investigation in the joint program. The Russian design for oxygen generation via water electrolysis is an attractive, proven technology but should still be evaluated further against the current American technology because the Mir design requires more power, weight, and volume than the Alpha baseline. Cost will also be a factor in the final selection of equipment. Both technologies should be evaluated for the operational concept of only operating (generating oxygen) during the sunlight portion of the orbit to reduce the overall average power required on the dark side of the orbit (battery discharge requirements reduced). This trade study is on-going for the international program.

The fire detection and suppression designs implemented by the Russians are much simpler than that planned to date by the Alpha program and is predicated on a conservative approach to fire prevention or propagation. The joint international program is investigating a common approach to fire prevention, fire detection, and fire suppression which will satisfy program requirements for station survival, crew safety, and mission success.

The Russian waste management design for fecal collection is similar to the technology utilized on Skylab and is more crew intensive than that planned for the Alpha baseline. Whether the

joint station utilizes different equipment for this crew function is to be determined by the program management. Currently this is the baseline approach.

We believe we have done a thorough technical assessment of the Russian Mir life support systems considering the difficulties of getting the information from the Russians. The future working relationships with the Russians as partners should reveal more data on their equipment performance. This report will be used as the baseline for comparing future information with what we have understood to date regarding their equipment. For further information regarding this report contact Mr. Kenny Mitchell at (205) 544-8616 or Ms. Cindy Hutchens (205) 544-2313.

Table 4.1 International Space Station Life Support Functions
(3 Crew Initially, 6 Crew at U.S. Habitation)

LIFE SUPPORT FUNCTION	MIR-2		U.S. ALPHA STATION	
	Core Module	Service Module	Lab Module	Hab Module
CO_2 Removal				
Regenerable	X	X*	X	X
Non-regenerable	X			
CO_2 Reduction		X		
Oxygen Generation	X	X*		
Trace Contaminant Control				
Regenerable	X	X*		
Non-regenerable	X		X	X**
High Temp. Catalyst		X*	X	X
Trace Contaminant Monitoring				
Manual	X		X	
Automatic				X
Atmosphere Major Constituent Monitoring (PPO_2,$PPCO_2$,PPH_2O,PPN_2)	X		X	X**
Oxygen Storage/Supplu	X		X	
Nitrogen Storage/Supply	X		X	
Positive Pressure Relief		X	X	X
Negative Pressure Relief			X	X
Module Depress/Repress			X	X
EVA Support	X	X		X
Payload Support(O_2,N_2,H_2O)			X	X
Water Storage Tanks	X	X	X	X
Potable Water Storage	X			X
Hygiene Water Processor		X		X
Shower		X		X
Handwash	X	X		X
Laundry				X
Urine Processor		X		X
Urine Collection	X	X		X
Fecal Collection	X	X		X
Waste Water Storage	Progress	Progress	X	X
Waste Water Venting			X	X
Humidity Control (Condensing Heat Exchanger)	X		X	X
Crew Comfort (Selectable Air Temp.)	X		X	X
Air Circulation (Habitability, Intermodule)	X	X	X	X
Avionics Air Cooling	X		X	X
Refrigerators/Freezers	X			X
Particulate Filtration of Air	X		X	X
Fire Detection (Smoke Sensors)	X	X	X	X
Fire Suppression				
Portable Extinguishers	X	X	X	X
Fixed Suppression System			X**	X**
Module Depressurization			X	X

* Upgraded Mir-1 System (experimental)
** Possible Cost Savings Area(based on fault toleratice desired)

BIBLIOGRAPHY

1. An Analysis of the Russian Space Station *Mir* Regenerable Environmental Control and Life Support Systems, prepared under Contract NAS 9-18663 by Hamilton Standard for National Aeronautics and Space Administration/Lyndon B. Johnson Space Center, February, 1993.

2. Mir/NASA Program (Initial Data and Requirements), Attachment 1 and 7, Russian Evaluation of the NASA-Mir Scientific Program Submitted by NASA, August, 1993.

3. Samsonov, N.M., et. al., "A Physical/Chemical System for Water and Atmosphere Recovery Aboard a Space Station," 23rd Intersociety Conference on Environmental Systems, SAE 932077, Colorado Springs, CO, July 12-15, 1993.

4. Bluth, B. J., *Mir*, Soviet Space Stations as Analogs, Vol.II1, prepared under Grumman Aerospace Contract NASW-4300/6400120 for NASA Headquarters, Reston, VA, September, 1992.

5. Proceedings of the 4th European Symposium on Space Environmental Control and Life Support Systems, held in Florence, Italy, October 21-24, 1991.

6. Samsonov, N.M., V.M. Novikov, L.S. Bobe, B. Ja. Pinski, V.A. Leonov, N.N Protasov, V.V. Komolov, V.B. Filonenko, S.S. Bocharov, "Water Reclamation from Urine Aboard the Space Station," October, 1991.

7. Shuttle/Mir Rendezvous/Docking Missions, NASA/NPOE/OOO/4.04, November 22, 1993.

Russian/American ECLSS Technical Exchange Meetings

1. August, 1992. Boeing/NASA-Marshall Space Flight Center/ Niichimmash in Huntsville, Alabama.

2. April, 1993. NASA(Johnson Space Center/Marshall Space Flight Center/Ames/Headquarters)/NPO-Energia and Institute of Biomedical Problems (IBMP) at Crystal City, Virginia.

3. July, 1993. Boeing/NASA (JSC/MSFC/Ames/HQ)/Niichimmash in Huntsville, Alabama.

4. July, 1993. Boeing/NASA (MSFC/HQ/JSC)/Niichimmash and NPO-Energia and Institute of Biomedical Problems in Moscow, Russia.

5. August, 1993. NASA/NPO-Energia at Crystal City, Virginia.

6. September/October, 1993. NASA (JSC/MSFC/LeRC)/NPO-Energia in Moscow, Russia.

7. November/December, 1993. NASA/NPO-Energia at JSC, Houston, Texas.

APPROVAL

TECHNICAL ASSESSMENT OF MIR-1 LIFE SUPPORT HARDWARE FOR THE INTERNATIONAL SPACE STATION

By K.L. Mitchell, R.M. Bagdigian, R.L. Carrasquillo, D.L. Carter, G.D. Franks, D.W. Holder, Jr., C.F. Hutchens, K.Y. Ogle, J.L. Perry, and C.D. Ray

The information in this report has been reviewed for technical content. Review of any information concerning Department of Defense or nuclear energy activities or programs has been made by the MSFC Security Classification Officer. This report, in its entirety, has been determined to be unclassified.

K.L. Mitchell
Chief, Environmental Control and Life Support Branch

J.C. Blair
Acting Chief, Thermal Engineering and Life Support Division

J.C. Blair
Director, Structures and Dynamics Laboratory

REPORT DOCUMENTATION PAGE

Form Approved
OMB No. 0704-0188

Public reporting burden for this collection of information is estimated to average 1 hour per response, including the time for reviewing instructions, searching existing data sources, gathering and maintaining the data needed, and completing and reviewing the collection of information. Send comments regarding this burden estimate or any other aspect of this collection of information, including suggestions for reducing this burden, to Washington Headquarters Services, Directorate for Information Operations and Reports, 1215 Jefferson Davis Highway, Suite 1204, Arlington, VA 22202-4302, and to the Office of Management and Budget, Paperwork Reduction Project (0704-0188), Washington, DC 20503

1. AGENCY USE ONLY *(Leave blank)*

2. REPORT DATE
March 1994

3. REPORT TYPE AND DATES COVERED
Technical Memorandum

4. TITLE AND SUBTITLE
Technical Assessment of MIR-1 Life Support Hardware for the International Space Station

5. FUNDING NUMBERS

6. AUTHOR(S)
K.L. Mitchell, R.M. Bagdigian, R.L. Carrasquillo, D.L. Carter, G.D. Franks, D.W. Holder, Jr., C.F. Hutchens, K.Y. Ogle, J.L. Perry, and C.D. Ray

7. PERFORMING ORGANIZATION NAME(S) AND ADDRESS(ES)
George C. Marshall Space Flight Center
Marshall Space Flight Center, Alabama 35812

8. PERFORMING ORGANIZATION REPORT NUMBER

9. SPONSORING/MONITORING AGENCY NAME(S) AND ADDRESS(ES)
National Aeronautics and Space Administration
Washington, DC 20546

10. SPONSORING/MONITORING AGENCY REPORT NUMBER
NASA TM-108441

11. SUPPLEMENTARY NOTES
Prepared by Structures and Dynamics Laboratory, Science and Engineering Directorate

12a. DISTRIBUTION/AVAILABILITY STATEMENT
Unclassified-Unlimited

12b. DISTRIBUTION CODE

13. ABSTRACT *(Maximum 200 words)*
NASA has been progressively learning the design and performance of the Russian life support systems utilized in their Mir space station. In 1992 a plan was implemented to assess the benefits of the Mir-1 life support systems to the Freedom program. Three primary tasks focused on; 1) evaluating the operational Mir-1 support technologies and understanding if specific Russian systems could be directly utilized on the American space station and determine if Russian technology design information could prove useful in improving the current design of the planned American life support equipment, 2) evaluating ongoing Russian life support technology development activities to determine areas of potential long-term application to the U.S. space station, and 3) utilizing the expertise the Russians have gained with the long-term operation of their space station life support systems to evaluate the benefits to the current U.S. space station program which included the integration of the Russian Mir-1 designs with the U.S. designs to support a crew of six.

14. SUBJECT TERMS
Russian, Life Support, Environmental Control, ECLSS, Subsystems, Mir Space Station

15. NUMBER OF PAGES
183

16. PRICE CODE
NTIS

17. SECURITY CLASSIFICATION OF REPORT	18. SECURITY CLASSIFICATION OF THIS PAGE	19. SECURITY CLASSIFICATION OF ABSTRACT	20. LIMITATION OF ABSTRACT
Unclassified	Unclassified	Unclassified	Unlimited