IN-07
12626
39P

NASA Contractor Report 195323

Hot Corrosion Test Facility at the NASA Lewis Special Projects Laboratory

Raymond C. Robinson and Michael D. Cuy
Sverdrup Technology, Inc.
Lewis Research Center Group
Brook Park, Ohio

(NASA-CR-195323) HOT CORROSION TEST FACILITY AT THE NASA LEWIS SPECIAL PROJECTS LABORATORY Final Report (Sverdrup Technology) 39 p

N94-35267

Unclas

G3/09 0012626

May 1994

Prepared for the
Lewis Research Center
Under Contract NAS3–25266

National Aeronautics and
Space Administration

HOT CORROSION TEST FACILITY AT THE NASA LEWIS SPECIAL PROJECTS LABORATORY

Raymond C. Robinson & Michael D. Cuy

Sverdrup Technology, Inc.

NASA LeRC Group

Cleveland, Ohio 44135

SUMMARY

The hot corrosion test facility (HCTF) at the NASA Lewis Special Projects Laboratory (SPL) is a high-velocity, pressurized burner rig currently used to evaluate the environmental durability of advanced ceramic materials such as SiC and Si_3N_4. The HCTF uses laboratory service air which is preheated, mixed with jet fuel, and ignited to simulate the conditions of a gas turbine engine. Air, fuel, and water systems are computer-controlled to maintain test conditions which include maximum air flows of 250 kg/hr (550lbm/hr), pressures of 100-600 kPa (1-6 atm), and gas temperatures exceeding 1500°C (2732°F).

The HCTF provides a relatively inexpensive, yet sophisticated means for researchers to study the high-temperature oxidation of advanced materials, and the injection of a salt solution provides the added capability of conducting hot corrosion studies.

INTRODUCTION

Future jet engines will provide more thrust at greater engine efficiency by operating at higher temperatures and using more advanced,

lightweight materials such as SiC and Si_3N_4 for hot-section engine components. The environmental durability of such candidates must be considered and is best evaluated if testing is conducted under realistic conditions, where the materials are subjected to the high temperatures and harsh environments encountered in a gas turbine engine. If operating in a corrosive environments, the high-temperature corrosion of hot-section components then becomes a concern. This process occurs when sodium, either as a fuel impurity or an airborne contaminant, combines with sulfur impurities in the fuel to form sodium sulfate (Na_2SO_4). Molten Na_2SO_4 can condense on hot engine components leading to accelerated oxidation and severe corrosion. Degradation by this salt is termed "hot corrosion."

Hot corrosion has been studied by immersion tests, thin salt film tests, and burner rig studies.[1] Burner rig tests more closely model the harsh, corrosive environments in a gas turbine engine while providing a continuous deposition of salt, opposed to the one-time deposition used in furnace testing. Two examples of previous studies at NASA Lewis involve the effect of hot corrosion on the room temperature four-point bend strength of sintered α-SiC.[2,3] In those experiments, test variables included 1000°C (1832°F) specimen temperature, 4 atm system pressure, 2 ppm added sodium (as NaCl), and 40 hours of exposure time. A detailed view of the product layer formed on one sample is shown in Fig. 1, where portions of this product were chipped away to examine the interior of the layer. Removing the products by HF dissolution revealed a dramatic pitting attack of the SiC substrate, shown in Fig. 2. A correlation was found between fracture strength and corrosion pit dimensions, and the

strength decreased by as much as 25-35% due to the formation of deep pits in the SiC.

Studies like this make rigs such as the HCTF and other 1 atm, mach 0.3 burner rigs at NASA LeRC very valuable in the development of advanced aerospace materials. The purpose of this report is to promote awareness of the HCTF, provide corporate documentation of both the hardware and software being used, and describe the operation and capabilities of the test facility with emphasis on corrosion testing.

CORROSION TESTING REQUIREMENTS

At this point, it is helpful to discuss both the factors that influence hot corrosion and the significance of the HCTF in such studies. The deposition of Na_2SO_4 and subsequent corrosion is a function of temperature and pressure, therefore a burner rig used to study hot corrosion must satisfy certain requirements. The HCTF's operating range was specifically chosen such that deposition of the salt is predicted to occur on the test specimens.

As stated, hot corrosion occurs when sodium combines with sulfur impurities in the fuel to form Na_2SO_4. Deposition of Na_2SO_4 occurs in a temperature window bordered by the melting point of the salt (884°C or 1623°F) and the dew point which is pressure dependent. The dew point is the highest temperature at which the condensed phase of the salt can form. A test temperature of 1000°C (1832°F) was targeted because furnace tests[4-6] have shown rapid kinetics to occur at this temperature. The dew point was calculated[7] (see Table I) for various sodium and sulfur combinations (jet fuel is typically 0.05% S) at a test pressure of 100

kPa (1 atm). The dew point ranged between 920-970°C (1688-1778°F) for 0.5-4.0 ppm of Na, respectively. Higher operating pressures will raise the dew point and allow deposition to occur at higher temperatures. As a result, testing at higher pressures will more accurately model conditions in the engine, and since it raises the dew point, test temperatures of 1000°C (1832°F) can be obtained. Given a test pressure of 400 kPa (4 atm), dew points are on the order of 981-1038°C (1798-1900°F), therefore deposition should occur for sodium concentrations above 2.0 ppm, as indicated by Table I.

In summary, the HCTF allows testing at temperatures of 1000°C (1832°F) or above, but more importantly the capability of being pressurized to 4 atm assures Na_2SO_4 deposition.

TEST FACILITY SYSTEMS

The HCTF pictured in Fig. 3 has a number of critical systems which must work together to attain desired test conditions. These systems include the air, fuel, water, and salt systems which are shown schematically in Fig. 4. The combustion process occurs as preheated air is mixed with jet fuel and ignited in the combustor. After ignition, a salt solution is introduced into the gas stream. The hot gases flow downstream passing over the test specimens located in the test section, where temperature and pressure is maintained by automated control. Before exiting, the hot exhaust gases are quenched with cooling water to desired temperature levels.

<u>AIR SYSTEM</u> The HCTF uses 800 kPa (120 psig) pressurized air supplied by the laboratory central air system. The pressurized air is filtered

through a filter assembly and then passes through a venturi flowmeter. The mass flow rate is calculated from the pressures, temperature, and flow coefficients associated with the venturi. Air flow, which is controlled using valve A, can be supplied at rates of 50-250 kg/hr (100-550 lbm/hr), with a typical corrosion test operating at a mass flow rate of 150 kg/hr (325 lbm/hr). The air flow is directed into a preheater which increases the air temperature to 260°C (500°F) prior to entering the combustor. Preheating allows combustion to occur more efficiently, resulting in less soot development and buildup in the combustor.

The rig is pressurized to higher pressures by closing down exhaust valve B. As mentioned, test pressures can be varied between 100-600 kPa (1-6 atm), depending on mass air flow rates. Maximum air flows are available only at lower pressures. As discussed, hot corrosion tests are typically conducted at 4 atm to raise the dew point of Na_2SO_4 above 1000°C (1832°F).

FUEL SYSTEM The HCTF can burn Jet-A, JP-4, or JP-5 jet fuel, as well as diesel fuel. The jet fuels are supplied from a 19,000 liter (5000 gal) underground storage tank while the diesel fuel is supplied from a smaller surface tank. Each storage tank is equipped with a low-pressure fuel pump and 25-micron filter for delivering fuel to the facility. The fuel then passes through a high-pressure pump (1.7 MPa or 250 psig max.) in the test cell before being filtered through a second, 10-micron assembly and injected into the combustor.

The amount of fuel burned depends on the desired test temperature. Fuel flow is controlled with valve C, which schedules the fuel-to-air ratio required to produce the desired temperature. Flow rates, which are

measured with a turbine flowmeter, are relatively low with a maximum of 0.1 l/min (.025 gpm). A fuel nozzle (80°swirl) sprays atomized fuel into the combustor where it is mixed with the combustion air and ignited. The available range of fuel-to-air ratios and resulting gas temperatures are given in Fig. 5, suggesting only minimal heat loss when compared to calculated adiabatic temperatures. As an example, the standard hot corrosion test temperature of 1000°C (1832°F) would require a fuel-to-air ratio of approximately 0.024. This corresponds to a fuel flow near 0.073 l/min (.019 gpm) for the standard mass air flow of 150 kg/hr (325 lbm/hr).

WATER SYSTEM City water (400 kPa or 60 psig) is used to quench the combustion air exiting the test section. The hot gases expelled from the combustor, noted to reach as high as 1500°C (2732°F), must be cooled to protect the exhaust valve from thermal failure. The water pressure is initially boosted using a high-pressure pump (10 MPa or 160 psig max) before being filtered through a 25-micron filter. Water flow rates, also measured with a turbine flowmeter, are regulated with valve D as the cooling water is directed through a spray ring and water jet nozzles located before the exhaust valve. A Chromel-Alumel thermocouple (type K) monitors the exit temperature used to control the water flow. Only a flow of 2.0 l/min (.5 gpm) is required to cool the exhaust below 100°C (200°F).

SALT SYSTEM Salt solutions are injected into the hot gases leaving the combustor with an aspirating probe. The salt solution typically consists of 2-4 ppm NaCl in distilled water and is supplied from a 20 liter teflon tank located in the test cell. Salt flow is controlled with an

adjustable pump, capable of delivering a maximum steady flow of 2.0 l/hr. Current hot corrosion tests operate at a flow near 0.25 l/hr. Salt flow is indicated by a load cell which monitors the weight change of the salt tank. The salt solution is atomized within the aspirator probe and injected into the combustor.

TEST FACILITY CONFIGURATIONS

For discussion purposes, the HCTF has two primary areas of concern, the combustor and the test section (Fig. 6). Maintenance is often required in these areas due to their high-temperature nature and typically involves the replacement of certain components or the installation of test specimens. This section of the report focusses on the configuration of these two areas, discussing both the components and instrumentation which are an integral part of each area.

In Fig. 7, preheated air enters the combustor through a 1.9 cm (3/4 in) inlet. Here, a thermocouple (type K) monitors the inlet temperature used to control the preheater. Combustion pressure is also monitored. The air is forced through a swirler and mixed with the atomized fuel in the combustor liner. The fuel is sprayed from a fuel nozzle found in the center of the co-rotating swirler. Gases in the primary zone are ignited with a spark generated from an ignitor which extends through an opening in the liner. The liner, fabricated from Inconnel 601 material, is cooled with bypass air flowing down the outside diameter. This cooling air eventually dumps into the secondary zone through perforations in the liner and is added to the combustion process. The salt aspirator and a platinum-platinum/(13%)rhodium

thermocouple (type R) also extend through an opening into the liner. The combustion thermocouple monitors the flame temperature inside the liner and is used to detect a flameout condition.

As the combustor transitions into the test section, the hot gases accelerate through a nozzle and into the flame tube. Gas velocities typically reach 45-60 m/s (150-200 ft/sec) but can exceed 300 m/s (1000 ft/sec). Two test specimens (2.54 cm x 0.64 cm x 0.32 cm) are loaded horizontally through openings in the flame tube. The two specimens are held by a set of lava grips which are positioned by a lava specimen holder clamped to the flame tube. A cross section of this arrangement is shown in Fig. 8. A thermocouple (type R) is positioned on center between the two test specimens to monitor the test temperature and to control fuel flow. A flange on either side can be removed to gain easy access to the test section, which along with the transition section is packed with ceramic fiber insulation to minimize heat losses. A second set of test specimens can be assembled downstream in the test section (see Fig. 6), Here, the thermocouple is for information purposes only and temperatures are reduced approximately 25°C (50°F) due to heat losses.

DATA ACQUISITION AND CONTROL SYSTEM

The HCTF is equipped with an automated data acquisition and control system which is responsible for collecting data and modulating the control valves of the air, fuel, and water supplies. The rig is operated from the control room (Fig. 9), containing both the computer system and control panel. The computer system is integrated with the manual controls which include all the "hard-wired" permissives and

safety interlocks which must be satisfied before computer operation of the control valves is permitted.

The computer interfaces with a data acquisition and control unit to manage data flowing between the test facility and control room. An internal voltmeter collects data from pressure, temperature, and flow sensors. The data is processed by software and displayed as shown in Fig. 10, along with test parameter setpoints and valve positions. As setpoints are changed with the special function keys, control subroutines compare the data with corresponding setpoints and automatically make any necessary corrections to valve positions. Data scanning and setpoint control occurs at 0.5-1.0 Hz. The test parameters available for such closed-loop feedback and control include mass air flow, specimen temperature, and system pressure.

The software was developed internally at NASA LeRC and is listed in Appendix A for documentation purposes. In addition to data acquisition and control, the software also provides automated documentation. Data may be printed out or stored on a hard disk at user-defined intervals. Furthermore, a test log (Fig. 11) is used to store the test conditions and specimen data of individual test runs. These test conditions include a programmable "real-time" clock which adds the capability of unattended operation.

SAFETY FEATURES

The HCTF was designed with safety interlocks which prevent the rig from reaching a potentially unsafe or destructive mode. The HCTF's control logic will initiate a shutdown to safely handle any critical

situation. As mentioned, the computer works together with these "hard-wired" features, requiring that certain permissives are satisfied before computer operation of the control valves is permitted.

The most important parameters monitored are temperature and pressure. As previously mentioned, the HCTF was designed with a preheater which can only be operated if sufficient air flow is indicated by a pressure switch located at the venturi meter. Even as sufficient air flow is present, ignition is permitted only when the preheated air temperature is between assigned low and high limits. Other critical parameters which either must be within limits before ignition or during operation include combustor temperature, exit temperature, and system pressure. The upper and lower limits are given in Table II.

In the event that any critical limits are exceeded, an appropriate meter relay will automatically close the fuel supply solenoid valve and disable computer control of the fuel. Indicator lights in the control panel are used to provide diagnostic information. Therefore, any loss of air flow, mechanical malfunction, or operator control error will result in shutdown of the rig.

Although having a secondary logic priority, the computer will also initiate the shutdown of the facility under certain circumstances. If sensor data is not within software-defined limits, closed loop control of the setpoints is no longer possible. Therefore, the control valve to the fuel is closed, triggering the "hard-wired" shutdown. A diagnostic message is printed to indicate which parameter caused the shutdown.

CONCLUSIONS

The SPL hot corrosion test facility at NASA Lewis is a relatively simple, easy-to-operate resource for providing researchers with valuable information on advanced, high-temperature materials. Low maintenance and fuel costs make the facility attractive economically, and the rig's flexibility makes it useful for both oxidation and corrosion studies. The HCTF has been helpful in numerous programs, evaluating materials for aerospace, automotive, and other applications. Researchers interested in using the HCTF should contact the Facility Manager, Environmental Durability Branch, or the Materials Division.

ACKNOWLEDGEMENTS

The authors recognize Carl S. Stearns for his contributions in the design of the facility and to Dennis S. Fox for his direction of current materials testing and definition of operating limits. A special thanks to Tom B. Schneider, Wayne F. Gardner, and Leonard J. Bunyak for their contributions in configuring and installing all electrical and mechanical systems.

REFERENCES

1. N. S. Jacobson, J. L. Smialek, and D. S. Fox, "Molten Salt Corrosion of SiC and Si_3N_4," Handbook of Ceramics and Composites, Vol. 1: Synthesis and Properties (N. P. Cheremisinoff, ed), Marcel Dekker, New York, 99-136 (1990).

2. N. S. Jacobson, C. S. Stearns, and J. L. Smialek, "Burner Rig Corrosion of SiC at 1000°C," Adv. Ceram. Mat., **1** [2] 154-161 (1986).

3. D. S. Fox and J. L. Smialek, "Burner Rig Hot Corrosion of Silicon Carbide and Silicon Nitride," J. Am. Ceram. Soc., **73** [2] 303-311 (1990).

4. N. S. Jacobson and J. L. Smialek, "Hot Corrosion of Sintered SiC at 1000°C," J. Am. Ceram. Soc., **68** [8] 432-39 (1985).

5. J. L. Smialek and N. S. Jacobson, "Mechanism of Strength Degradation for Hot Corrosion of α-SiC," J. Am. Ceram. Soc., **69** [10] 741-752 (1986).

6. N. S. Jacobson, "Kinetics and Mechanism of SiC Molten Salt Corrosion," J. Am. Ceram. Soc., **69** [1] 74-82 (1986).

7. S. Gordon and B. J. McBride, "Computer Program for Calculation of Complex Chemical Equilibrium Compositions, Rocket Performance, Incident and Reflected Shocks, and Chapman-Jouget Detonations," NASA SP-273 (1976).

APPENDIX A

The software listed on the following pages has been included to serve as documentation for the control and operational procedures used in this facility. As seen before, test facilities can experience periods of dormancy due to programmatic or personnel changes. In such a case, this record could prove critical in attempts to renew operations of the facility after any such period.

```
10 ! PROGRAM "X1PGM"
20 ! 4.0 ATMOSHERES, HOT CORROSION BURNER RIG
30 ! CELL #1-BLDG. 24
40     OPTION BASE 1
50     MASS STORAGE IS ":CS80,805"
60     PRINTER IS 1
70     SYSTEM PRIORITY 9
80     GOSUB Clearscreen
90     PRINT TABXY(1,5)
100    PRINT "              ****************************************"
110    PRINT "              *                                      *"
120    PRINT "              *   X1PGM - SPL HCTF DATA ACQ.         *"
130    PRINT "              *   LATEST REVISION: 1/93              *"
140    PRINT "              *                                      *"
150    PRINT "              *   THIS PROGRAM IS THE PROPERTY OF    *"
160    PRINT "              *   THE NASA ENVIROMENTAL DURABILITY   *"
170    PRINT "              *   BRANCH. MAINTENANCE BY UNAUTHOR-   *"
180    PRINT "              *   IZED PERSONNEL IS PROHIBITED.      *"
190    PRINT "              *                                      *"
200    PRINT "              *   CONTACT: C. ROBINSON X-5547        *"
210    PRINT "              ****************************************"
220    WAIT 4
230    DIM Chan_label$(40)[14],Display_format$(40)[5],Sensor$(40)[5]
240    DIM Unit$(40)[5],Disp$(12)[80],L$[10],A$[5],B$[5],Title$[9],Fuel$[6]
250    DIM Ans$[25],Run_time$[11],Target_time$[15],Elap_time$[15]
260    DIM Air_control$[6],Back_control$[6],Fuel_control$[6],Blank$[80]
270    DIM Specimen$(4)[15],Install$(4)[15],Tot_time$(4)[15]
280    DIM Volt(30),Dval(40),K(13),R(13),Hi_lim(40),Low_lim(40)
290    DIM P(7,5),Amt(5),P_prop(5)
300    REAL Vref,Volt_comp,Vt,Temp,Err,Out,Prop,Sp_fraction
310    REAL Ts,Trun,Trun_start,Prev_ts,Tp,Fuel_gal,Target_temp
320    REAL Fuel_sp,Quench_sp,Air_sp,Back_sp,Setpoint
330    REAL Spec_temp_sp,Quench_temp_sp,Air_flow_sp,Back_psi_sp
340    REAL C,F,Tair,Roe,Wair_cf,Mu,Re_cf,Cf
350    INTEGER I,J,N,X,Z,Y,Print_order(15),Ignite_ind,Screen(12,2),Ans,Pid_ind
360    INTEGER Nlines,Nlines_page,Hot_ind,Prt_int,Out_lim_ind,Cntrl_ind,Pid
370    INTEGER Hours,Minutes,Tot_hours,Tot_minutes,Target_minutes
380    INTEGER Airout,Backout,Quenchout,Fuelout
390 Main_menu_keys:  !
400    PRINTER IS 1
410    OFF KEY
420    ON KEY 0 LABEL "   RUN RIG   ",10 GOTO Main
430    ON KEY 2 LABEL "  TEST SETUP ",10 GOTO Setup
440 Menu_display:  !
450    GOSUB Clearscreen
460    PRINT TABXY(1,5);"                                MAIN MENU"
470    PRINT TABXY(1,8);"                          CHOOSE DESIRED OPTION"
480    PRINT TABXY(1,10);"                           K0: DATA AQUISITION "
490    PRINT TABXY(1,12);"                           K2: TEST SETUP"
500 Echo:  !
510    GOTO Echo
520    !!!!!!!!!!!!!!!! TEST SETUP SUBPROGRAM !!!!!!!!!!!!!!!!!!!!!!
530 Setup:  !
540    Blank$="
               "
550    GOSUB Read_common
560    GOSUB Clearscreen
570    GOSUB Test_info
580    PRINT TABXY(1,18);"ENTER INDEX OF INFORMATION TO BE CHANGED"
590    INPUT "(1=TEST PARAMETERS   2=SPECIMEN DATA   0=EXIT)",N
```

```
600     SELECT N
610     CASE 1
620       PRINT TABXY(1,18);Blank$
630       INPUT "ENTER INDEX FOR TYPE OF TEST (1=OXIDATION  2=CORROSION)",I
640       IF I=1 THEN Title$="OXIDATION"
650       IF I=2 THEN Title$="CORROSION"
660       INPUT "ENTER INDEX FOR FUEL TYPE (1=JET A  2=DIESEL)",I
670       IF I=1 THEN Fuel$="JET A "
680       IF I=2 THEN Fuel$="DIESEL"
690       INPUT "ENTER TARGET TEMP IN DEG F",Target_temp
700       LINPUT "ENTER TEST DURATION (xxHRS,xxMIN)",Target_time$
710       LINPUT "ENTER TIME ELAPSED  (xxHRS,xxMIN)",Elap_time$
720       GOTO 560
730     CASE 2
740       PRINT TABXY(1,18);Blank$
750       INPUT "ENTER POSITION NO. OF SPECIMEN TO BE CHANGED",I
760       GOSUB Spec_change
770       GOTO 560
780     CASE 0
790       GOSUB Write_common
800       GOTO Main_menu_keys
810     CASE ELSE
820       BEEP
830       GOTO 580
840     END SELECT
850 Spec_change:   !
860     LINPUT "ENTER 8 CHARACTER PART NO. OR  -1=NO CHANGE  -2=EMPTY",Ans$
870     IF Ans$="-2" THEN
880       Specimen$(I)="EMPTY"
890       Install$(I)="           "
900       Tot_time$(I)="0 HRS,0 MIN"
910       GOTO 1050
920     END IF
930     IF Ans$="-1" THEN
940       GOTO 980
950     ELSE
960       Specimen$(I)=Ans$
970     END IF
980     LINPUT "ENTER DATE INSTALLED (DD MMM YYYY) OR  -1=NO CHANGE",Ans$
990     IF Ans$="-1" THEN
1000      GOTO 1040
1010    ELSE
1020      Install$(I)=Ans$
1030    END IF
1040    LINPUT "ENTER TEST TIME TO DATE (xxHRS,xxMIN)",Tot_time$(I)
1050    RETURN
1060 Test_info: !
1070    PRINT "SPL HOT CORROSION TEST FACILITY - CURRENT TEST SETUP"
1080    PRINT
1090    PRINT "TEST TYPE: "&Title$
1100    PRINT "FUEL TYPE: "&Fuel$
1110    PRINT "TARGET TEMP IN DEG F: "&VAL$(Target_temp)
1120    PRINT "CURRENT TEST TIME REQUEST: "&Target_time$
1130    PRINT "              TIME ELAPSED: "&Elap_time$
1140    PRINT
1150    PRINT
1160    PRINT "                POSITION #1       POSITION #2       POSITION #3
   POSITION #4"
1170    PRINT
1180    PRINT USING 1210;"SPEC NAME: ",Specimen$(1),Specimen$(2),Specimen$(3),Spe
```

```
cimen$(4)
1190   PRINT USING 1220;"INSTALLED: ",Install$(1),Install$(2),Install$(3),Instal
l$(4)
1200   PRINT USING 1220;"TEST TIME: ",Tot_time$(1),Tot_time$(2),Tot_time$(3),Tot
_time$(4)
1210   IMAGE 11A,4X,8A,10X,11A,7X,11A,7X,11A
1220   IMAGE 11A,4X,11A,7X,11A,7X,11A,7X,11A
1230   RETURN
1240   !!!!!!!!!!!!!!!!!!!! MAIN SUBPROGRAM !!!!!!!!!!!!!!!!!!!!!!!!!!
1250 Main:      !
1260   CLEAR 705
1270   GOSUB Read_coef
1280   GOSUB Read_label_lim
1290   GOSUB Read_common
1300   GOSUB Read_pid_val
1310   GOSUB Screen_setup
1320   GOSUB Build_string
1330   RESTORE 1370
1340   FOR I=1 TO 12
1350     READ Print_order(I)
1360   NEXT I
1370   DATA 24,23,31,32,25,26,2,8,6,7,11,29
1380 Reset: !
1390   LINPUT "ENTER TODAY'S DATE AND TIME (DD MMM YYYY HH:MM:SS)",Ans$
1400   SET TIMEDATE DATE(Ans$[1,11])+TIME(Ans$[13,20])
1410   PRINTER IS 701
1420   PRINT CHR$(12)
1430   Nlines=0
1440   GOSUB Print_header_1
1450   PRINTER IS 1
1460 Init_variables:   !
1470   Target_minutes=VAL(Target_time$[1,2])*60+VAL(Target_time$[7,8])-VAL(Elap_
time$[1,2])*60-VAL(Elap_time$[7,8])
1480   Prt_int=300
1490   Fuel_sp=0.
1500   Quench_sp=50.
1510   Air_sp=50.
1520   Back_sp=50.
1530   GOSUB Air_out
1540   GOSUB Back_out
1550   GOSUB Quench_out
1560   Spec_temp_sp=-999.
1570   Air_flow_sp=-99.9
1580   Quench_temp_sp=200.
1590   Back_psi_sp=-99.9
1600   Fuel_control$="OPEN"
1610   Air_control$="OPEN"
1620   Back_control$="OPEN"
1630   Blank$="
               "
1640   Hours=0
1650   Minutes=0
1660   Tot_hours=0
1670   Tot_minutes=0
1680   Hot_ind=2
1690   Ignite_ind=2
1700   Out_lim_ind=0
1710   Trun=0.
1720   Run_time$="0 HRS,0 MIN"
1730   Nlines_page=60
```

```
1740   Fuel_gal=0.
1750   MAT Volt= (0.)
1760   MAT Dval= (0.)
1770 Soft_keys: !
1780   GOSUB Clearscreen
1790   ON KEY 0 LABEL "  SHUT_DOWN  ",10 GOTO Shutdown
1800   ON KEY 1 LABEL " START  FUEL ",10 GOSUB Start_fuel
1810   ON KEY 2 LABEL " %  AIR VALVE",10 GOTO Air_out_sp
1820   ON KEY 3 LABEL " % BACK VALVE",10 GOTO Back_out_sp
1830   ON KEY 4 LABEL " %  H2O VALVE",10 GOTO Quench_out_sp
1840   ON KEY 5 LABEL "SET INTERVALS",10 GOTO Set_prt_int
1850   ON KEY 6 LABEL "             ",10 GOSUB Invalid
1860   ON KEY 7 LABEL "   SET PID   ",10 GOTO Pid_parm
1870   ON KEY 8 LABEL " SET CONTROL ",10 GOTO Control_setup
1880   ON KEY 9 LABEL " PRINT DUMP  ",10 GOSUB Print_data
1890 Init_scanner: !
1900   OUTPUT 705;"AF0AL29AC0VT4VN30VA0VS1VD5SD0AE1"
1910   OUTPUT 705;"VT3"
1920   Tp=TIMEDATE
1930   Ts=TIMEDATE
1940   !!!!!!!!!!!!!!!!!!!!! MAIN PROGRAM LOOP !!!!!!!!!!!!!!!!!!!!!
1950 Scan: !
1960   Prev_ts=Ts
1970   Ts=TIMEDATE
1980   OUTPUT 705;"VS"
1990   SYSTEM PRIORITY 15
2000   FOR I=1 TO 30
2010     ENTER 705 USING "#,K";Volt(I)
2020   NEXT I
2030   SYSTEM PRIORITY 9
2040   OUTPUT 705;"VT3"
2050   GOSUB Convert
2060   GOSUB Calculate
2070   GOSUB Check
2080   GOSUB Control
2090   GOSUB Status
2100   GOSUB Display
2110   IF Prt_int=-3 THEN GOTO 2160
2120   IF Ts-Tp>Prt_int THEN
2130     Tp=Ts
2140     GOSUB Print_data
2150   END IF
2160   GOSUB Fuel_count
2170   GOTO Scan
2180   !!!!!!!!!!!!!!!!!!!! PRIMARY SUBROUTINES !!!!!!!!!!!!!!!!!!!!
2190 Convert: !
2200! HP 3497 ANALOG INPUT CHANNELS/SLOT #0
2210   Vref=Volt(20)
2220   FOR I=1 TO 4            ! CHAN A0-A3
2230     GOSUB Type_k
2240   NEXT I
2250   FOR I=5 TO 8            ! CHAN A4-A7
2260     GOSUB Type_r
2270   NEXT I
2280   I=11                    ! CHAN B0
2290   GOSUB Type_k
2300! HP 3497 ANALOG INPUT CHANNELS/SLOT #1
2310   Dval(21)=6.689*Volt(21)*1000-.428              ! CHAN A0 - VENTURI PSI
2320   Dval(22)=.318*Volt(22)*1000-.010               ! CHAN A1 - VENTURI DP
2330                                                  ! CHAN A2 - FUEL FLOW
```

```
2340   Dval(23)=Volt(23)*160                          ! DC to Hz (800 HZ)
2350  !  IF Dval(23)<10 THEN ! MUST ZERO CALCULATED VALUE TO TO Y-INTERCEPT
2360  !      Dval(23)=0.
2370  !      GOTO 2400
2380  !  END IF
2390   Dval(23)=(9.13E-9*Dval(23)^2+4.41E-5*Dval(23)+.0090356)*60    ! Hz to GPH
2400   Dval(24)=16.378*Volt(24)*1000-4.569            ! CHAN A3 - FUEL PRESS
2410   Dval(25)=(3.614*Volt(25)*1000-.148)+14.7       ! CHAN A4 - COMB PRESS
2420   Dval(26)=(4.007*Volt(26)*1000+.008)+14.7       ! CHAN A5 - TEST PRESS
2430   Dval(27)=7.975*Volt(27)*1000-1.412             ! CHAN A6 - H2O  PRESS
2440                                                  ! CHAN A7 - H2O  FLOW
2450   Dval(28)=Volt(28)*320                            ! DC to Hz (1600 HZ)
2460   Dval(28)=.000517*Dval(28)+.003                   ! Hz to GPM
2470   Dval(29)=Volt(29)                              ! CHAN A8 - LOAD CELL
2480   RETURN
2490 Type_k:  !
2500   Volt_comp=K(1)+Vref*(K(2)+Vref*K(3))
2510   Vt=Volt_comp+Volt(I)
2520   Temp=K(8)+Vt*(K(9)+Vt*(K(10)+Vt*(K(11)+Vt*(K(12)+Vt*(K(13))))))
2530   Temp=K(4)+Vt*(K(5)+Vt*(K(6)+Vt*(K(7)+Vt*Temp)))
2540   Dval(I)=Temp*1.8+32
2550   RETURN
2560 Type_r:  !
2570   Volt_comp=R(1)+Vref*(R(2)+Vref*R(3))
2580   Vt=Volt_comp+Volt(I)
2590   Vt=Vt*1.E+6
2600   Temp=R(8)+Vt*(R(9)+Vt*(R(10)+Vt*(R(11)+Vt*(R(12)+Vt*(R(13))))))
2610   Temp=R(4)+Vt*(R(5)+Vt*(R(6)+Vt*(R(7)+Vt*Temp)))
2620   Dval(I)=Temp*1.8+32
2630   RETURN
2640 Check:  !
2650   FOR Z=1 TO 11
2660     IF Dval(Z)<0. THEN Dval(Z)=0.
2670     IF Dval(Z)>9999. THEN Dval(Z)=9999.
2680   NEXT Z
2690   FOR Z=21 TO 32
2700     IF Dval(Z)<0. THEN Dval(Z)=0.
2710     SELECT Display_format$(Z)
2720     CASE "DDD.D"
2730       IF Dval(Z)>999.9 THEN Dval(Z)=999.9
2740     CASE "DD.DD"
2750       IF Dval(Z)>99.99 THEN Dval(Z)=99.99
2760     CASE "D.DDD"
2770       IF Dval(Z)>9.999 THEN Dval(Z)=9.999
2780     END SELECT
2790   NEXT Z
2800   RETURN
2810 Limits:  !
2820   IF Dval(J)<Low_lim(J) OR Dval(J)>Hi_lim(J) THEN
2830     GOSUB Print_data
2840     PRINTER IS 701
2850     X=2
2860     GOSUB Turn_page
2870     PRINT USING "8A,2X,14A,34A";TIME$(TIMEDATE),Chan_label$(J)," DATA HAS E
XCEEDED A HI/LOW LIMIT!"
2880     PRINT
2890     Nlines=Nlines+2
2900     PRINTER IS 1
2910     Out_lim_ind=Out_lim_ind+1
2920     IF Out_lim_ind>4 THEN
```

```
2930        PRINTER IS 701
2940        X=3
2950        GOSUB Turn_page
2960        PRINT USING "8A,2X,21A";TIME$(TIMEDATE),"5 CLOSED LOOP ERRORS!"
2970        GOSUB End_sequence
2980        GOTO Restart
2990      ELSE
3000        GOTO Restart
3010      END IF
3020    END IF
3030    RETURN
3040 Calculate:  !
3050 ! COMB AIR MASS FLOW RATE
3060    C=1-(Dval(22)/(Dval(21)+14.7))
3070    Tair=Dval(1)+459.7
3080    Mu=32.1741*(2.270E-8*(Tair^1.5/(Tair+198.6)))
3090    Roe=144*Dval(21)/(53.35*Tair)
3100    IF C=1 OR Mu=0. OR Roe<0. OR Dval(22)<0. THEN
3110      Dval(31)=0.
3120      GOTO 3230
3130    END IF
3140    F=(C^1.42857*3.5*((1-C^.28571)/(1-C))*(.79241/(1-.20759*C^1.42857)))^.5
3150    Wair_cf=.52502*F*.675^2*(Roe*Dval(22))^.5
3160    Re_cf=(48*Wair_cf/(3.14*.675*Mu))/100000
3170    IF Re_cf>1.73 THEN
3180      Cf=1.07594+.0021752*Re_cf
3190    ELSE
3200      Cf=1.12381-.05719*Re_cf+.017205*Re_cf^2
3210    END IF
3220    Dval(31)=3600*Cf*Wair_cf
3230 ! FUEL/AIR RATIO
3240    IF Dval(31)=0. THEN
3250      Dval(32)=0.
3260    ELSE
3270      Dval(32)=Dval(23)*6.74/Dval(31)
3280    END IF
3290 ! SETPOINTS
3300    Dval(33)=Air_flow_sp
3310    Dval(34)=Spec_temp_sp
3320    Dval(35)=Back_psi_sp
3330    Dval(36)=Quench_temp_sp
3340    Dval(37)=Air_sp
3350    Dval(38)=Fuel_sp
3360    Dval(39)=Back_sp
3370    Dval(40)=Quench_sp
3380    RETURN
3390 Fuel_count:  !
3400    IF Ignite_ind=0 THEN GOTO 3440
3410    IF Dval(23)<0 THEN Dval(23)=0.
3420    IF Dval(23)>Hi_lim(23) THEN Dval(23)=0.
3430    Fuel_gal=Fuel_gal+Dval(23)*(Ts-Prev_ts)/3600
3440    RETURN
3450 Status:  !
3460    IF Dval(6)>Target_temp-50. AND Ignite_ind=1 THEN
3470      SELECT Hot_ind
3480      CASE 0
3490        Hot_ind=1
3500        Trun_start=TIMEDATE
3510        GOSUB Print_data
3520      CASE 1
```

```
3530        Trun=Trun+(TIMEDATE-Trun_start)
3540        Trun_start=TIMEDATE
3550        Minutes=Trun DIV 60
3560        Hours=Minutes DIV 60
3570        Minutes=Minutes MOD 60
3580        Run_time$[1,2]=VAL$(Hours)
3590        Run_time$[7,8]=VAL$(Minutes)
3600        IF Trun DIV 60=Target_minutes THEN
3610          PRINTER IS 701
3620          X=3
3630          GOSUB Turn_page
3640          PRINT USING "8A,2X,15A";TIME$(TIMEDATE),"TEST COMPLETED!"
3650          GOSUB End_sequence
3660        END IF
3670      CASE 2
3680        PRINTER IS 701
3690        X=3
3700        GOSUB Turn_page
3710        PRINT USING "8A,2X,14A";TIME$(TIMEDATE),"STATUS ERRORS!"
3720        GOSUB End_sequence
3730      END SELECT
3740    ELSE
3750      IF Dval(8)>500 THEN
3760        SELECT Ignite_ind
3770        CASE 0
3780          Ignite_ind=1
3790          Hot_ind=0
3800          Quench_sp=95.
3810          GOSUB Quench_out
3820          PRINTER IS 701
3830          X=3
3840          GOSUB Turn_page
3850          PRINT USING "8A,2X,21A";TIME$(TIMEDATE),"RIG HAS BEEN IGNITED!"
3860          PRINT USING "10X,31A";"NEW H2O VALVE SETPOINT IS 95 %."
3870          PRINT
3880          Nlines=Nlines+3
3890          GOSUB Print_data
3900          PRINTER IS 1
3910        CASE 1
3920          IF Hot_ind=1 THEN
3930            Hot_ind=0
3940            GOSUB Print_data
3950          END IF
3960        CASE ELSE
3970          GOTO 4110
3980        END SELECT
3990      ELSE
4000        IF Ignite_ind=1 THEN
4010          PRINTER IS 701
4020          X=3
4030          GOSUB Turn_page
4040          PRINT USING "8A,2X,18A";TIME$(TIMEDATE),"FLAMEOUT DETECTED!"
4050          GOSUB End_sequence
4060        ELSE
4070          GOTO 4110
4080        END IF
4090      END IF
4100    END IF
4110    RETURN
4120 Display:  !
```

```
4130   GOSUB Build_string
4140   PRINT TABXY(26,1);"SPL HOT CORROSION TEST FACILITY"
4150   PRINT TABXY(1,2);Blank$
4160   PRINT "                          ******* RIG PARAMETERS *******"
4170   FOR I=1 TO 8
4180     PRINT Disp$(I)
4190   NEXT I
4200   PRINT TABXY(1,12);Blank$
4210   PRINT "                          ******* CONTROL SECTION ******"
4220   FOR I=9 TO 12
4230     PRINT Disp$(I)
4240   NEXT I
4250   PRINT TABXY(1,18);Blank$
4260   DISP USING "8A,5X,6A,DD.DD";TIME$(TIMEDATE),"CYCLE=",Ts-Prev_ts
4270   OUTPUT 705;"AO4,0,"&VAL$(INT(Dval(32)*2000))
4280   RETURN
4290   !!!!!!!!!!!!!!!!!!!! CLOSED LOOP CONTROL !!!!!!!!!!!!!!!!!!!!
4300 Control:  !
4310   IF Fuel_control$="TEMP" THEN
4320     J=6
4330     GOSUB Limits
4340     GOSUB Control_loop
4350     GOSUB Fuel_out
4360   END IF
4370   IF Air_control$="FLOW" THEN
4380     J=31
4390     GOSUB Limits
4400     GOSUB Control_loop
4410     GOSUB Air_out
4420   END IF
4430   IF Back_control$="PRESS" THEN
4440     J=26
4450     GOSUB Limits
4460     GOSUB Control_loop
4470     GOSUB Back_out
4480   END IF
4490   RETURN
4500 Control_loop:  !
4510   SELECT J
4520   CASE 6                                                  ! SPEC TEMP
4530     Err=Dval(34)-Dval(6)
4540     Pid=1
4550     Sp_fraction=Fuel_sp/100
4560     GOSUB Pid
4570     IF Out<Low_lim(38)/100. THEN
4580       Out=Low_lim(38)/100.
4590     END IF
4600     Fuel_sp=Out*100
4610     IF Fuel_sp>Hi_lim(38) THEN Fuel_sp=Hi_lim(38)
4620   CASE 31                                                 ! AIR MASS FLOW
4630     Err=Dval(33)-Dval(31)
4640     Pid=2
4650     Sp_fraction=Air_sp/100
4660     GOSUB Pid
4670     IF Out<Low_lim(37)/100. THEN
4680       Out=Low_lim(37)/100.
4690     END IF
4700     Air_sp=Out*100
4710     IF Air_sp>Hi_lim(37) THEN Air_sp=Hi_lim(37)
4720   CASE 26                                                 ! TEST PRESS
```

```
4730      Err=Dval(35)-Dval(26)
4740      Pid=3
4750      Sp_fraction=Back_sp/100
4760      GOSUB Pid
4770      Out=Sp_fraction+(Sp_fraction-Out)
4780      IF Out<Low_lim(39)/100 THEN
4790        Out=Low_lim(39)/100
4800      END IF
4810      Back_sp=Out*100
4820      IF Back_sp>Hi_lim(39) THEN Back_sp=Hi_lim(39)
4830    END SELECT
4840    RETURN
4850 Pid:  !
4860    IF Err<=-P(3,Pid) THEN
4870      Prop=(Err+P(3,Pid))*P(4,Pid)-P(3,Pid)*P(2,Pid)
4880    ELSE
4890      IF Err<P(3,Pid) THEN
4900        Prop=Err*P(2,Pid)
4910      ELSE
4920        Prop=(Err-P(3,Pid))*P(5,Pid)+P(3,Pid)*P(2,Pid)
4930      END IF
4940    END IF
4950    Amt(Pid)=Sp_fraction+Prop*(Ts-Prev_ts)*P(7,Pid)
4960    IF Amt(Pid)>P(1,Pid) THEN Amt(Pid)=P(1,Pid)
4970    IF Amt(Pid)<-P(1,Pid) THEN Amt(Pid)=-P(1,Pid)
4980    Out=Prop+Amt(Pid)+((Prop-P_prop(Pid))/(Ts-Prev_ts))*P(6,Pid)
4990    IF Out>1 THEN Out=1.
5000    P_prop(Pid)=Prop
5010    RETURN
5020    !!!!!!!!!!!!!!!!!!!!!!!! P.I.D. VALUES !!!!!!!!!!!!!!!!!!!!!!!!
5030 Pid_parm:    !
5040    GOSUB Clearscreen
5050    PRINT
5060    PRINT
5070    PRINT "CURRENT CLOSED LOOP PARAMETERS"
5080    PRINT
5090    PRINT "1. SPECIMEN TEMP CONTROL OF FUEL VALVE"
5100    PRINT "2. MASS AIR FLOW CONTROL OF AIR VALVE"
5110    PRINT "3. SYSTEM PRESS CONTROL OF BACK PSI VALVE"
5120    INPUT "ENTER INDEX OF PARAMETER (0 TO QUIT)",Index
5130    IF Index=0 THEN GOTO Restart
5140    SELECT Index
5150    CASE 1                  ! SPECIMEN TEMP
5160      Pid_ind=1
5170      GOSUB Pid_val_input
5180    CASE 2                  ! AIR FLOW
5190      Pid_ind=2
5200      GOSUB Pid_val_input
5210    CASE 3                  ! SYSTEM PRESS
5220      Pid_ind=3
5230      GOSUB Pid_val_input
5240    END SELECT
5250    GOTO Restart
5260 Pid_val_input:  !
5270    GOSUB Clearscreen
5280    PRINT
5290    PRINT
5300    SELECT Pid_ind
5310    CASE 1
5320      PRINT TABXY(3,1);"SPECIMEN TEMPERATURE ";
```

```
5330   CASE 2
5340     PRINT TABXY(3,1);"MASS AIR FLOW ";
5350   CASE 3
5360     PRINT TABXY(3,1);"SYSTEM PRESSURE ";
5370   END SELECT
5380   PRINT "CONTROL LOOP PARAMETERS"
5390   PRINT
5400   PRINT "1) RESET LIMIT=";P(1,Pid_ind)
5410   PRINT "2) MID-BAND GAIN=";P(2,Pid_ind)
5420   PRINT "3) 1/2 MID-BAND WIDTH=";P(3,Pid_ind)
5430   PRINT "4) LOW BAND GAIN=";P(4,Pid_ind)
5440   PRINT "5) HI BAND GAIN=";P(5,Pid_ind)
5450   PRINT "6) RATE CONSTANT=";P(6,Pid_ind)
5460   PRINT "7) RESET CONSTANT=";P(7,Pid_ind)
5470   PRINT
5480   PRINT TABXY(1,18);"ENTER INDEX OF PARAMETER TO BE CHANGED"
5490   INPUT "(0 TO QUIT, OR -1 TO RECALL LAST STORED SET)",Index
5500   IF Index>0 THEN
5510     INPUT "ENTER NEW VALUE",P(Index,Pid_ind)
5520     GOTO Pid_val_input
5530   END IF
5540   IF Index=-1 THEN
5550     GOSUB Read_pid_val
5560     GOTO Pid_val_input
5570   ELSE
5580     PRINT TABXY(1,18);Blank$
5590   END IF
5600   GOSUB Write_pid_val
5610   RETURN
5620   !!!!!!!!!!!!!!!!!!!!!!! PRINT SECTION !!!!!!!!!!!!!!!!!!!!!!!
5630 Print_header_2:   !
5640   PRINT USING "#,9X"
5650   FOR Z=1 TO 12
5660     PRINT USING "#,X,DD,XXX";Z
5670   NEXT Z
5680   PRINT
5690   PRINT USING "#,2X,4A,2X";"TIME"
5700   FOR Z=1 TO 12
5710     PRINT USING "#,X,5A";Sensor$(Print_order(Z))
5720   NEXT Z
5730   PRINT
5740   PRINT USING "#,9X"
5750   FOR Z=1 TO 12
5760     PRINT USING "#,5A,X";Unit$(Print_order(Z))
5770   NEXT Z
5780   PRINT
5790   PRINT
5800   Nlines=Nlines+4
5810   RETURN
5820 Print_header_1:  !
5830   PRINT DATE$(TIMEDATE)
5840   PRINT
5850   GOSUB Test_info
5860   PRINT
5870   PRINT
5880   PRINT "* THESE ARE THE PARAMETERS TO BE PRINTED OUT"
5890   FOR I=1 TO 12
5900     PRINT USING "5X,2D,A,2X,16A";I,".",Chan_label$(Print_order(I))
5910   NEXT I
5920   PRINT
```

```
5930   Nlines=Nlines+32
5940   GOSUB Print_header_2
5950   RETURN
5960 Print_data:  !
5970   PRINTER IS 701
5980   GOSUB Check
5990   X=2
6000   GOSUB Turn_page
6010   PRINT USING "8A,X,#";TIME$(TIMEDATE)
6020   FOR Z=1 TO 12
6030     PRINT USING Display_format$(Print_order(Z))&",X,#";Dval(Print_order(Z))
6040   NEXT Z
6050   PRINT
6060   PRINT
6070   Nlines=Nlines+2
6080   PRINTER IS 1
6090   RETURN
6100 Turn_page:   !
6110   IF Nlines+X>Nlines_page THEN
6120     PRINT CHR$(12)
6130     Nlines=0
6140     GOSUB Print_header_2
6150   END IF
6160   RETURN
6170   !!!!!!!!!!!!!!!!!!!!! SETPOINT SECTION !!!!!!!!!!!!!!!!!!!!!!
6180 Cooldown:    !
6190   Ignite_ind=2  ! RIG CANNOT RE-IGNITE THUS ELIMINATING ERRONEOUS MESSAGES
6200   Hot_ind=2     ! DUE TO TC DRIFT
6210   Prt_int=-3
6220   Quench_sp=50.
6230   GOSUB Quench_out
6240   Fuel_control$="OPEN"
6250   Spec_temp_sp=-999.
6260   Fuel_sp=0.
6270   GOSUB Fuel_out
6280   ON KEY 1 LABEL " RIG RESTART ",10 GOTO Rig_restart
6290   Back_control$="OPEN"
6300   Back_psi_sp=-99.9
6310   Back_sp=50.
6320   GOSUB Back_out
6330   ON KEY 3 LABEL " % BACK VALVE",10 GOTO Back_out_sp
6340   Air_control$="OPEN"
6350   Air_flow_sp=-99.9
6360   Air_sp=60.
6370   GOSUB Air_out
6380   ON KEY 2 LABEL " %  AIR VALVE",10 GOTO Air_out_sp
6390   ON KEY 0 LABEL " PROGRAM END ",10 GOTO Pgm_stop
6400   PRINTER IS 701
6410   X=5
6420   GOSUB Turn_page
6430   PRINT USING "10X,25A,3D.D,23A";"NEW AIR VALVE SETPOINT IS",Air_sp,"% IN O
PEN LOOP CONTROL!"
6440   PRINT USING "10X,26A,3D.D,23A";"NEW FUEL VALVE SETPOINT IS",Fuel_sp,"% IN
 OPEN LOOP CONTROL!"
6450   PRINT USING "10X,27A,3D.D,23A";"NEW BACK VALVE SETPOINT IS ",Back_sp,"% I
N OPEN LOOP CONTROL!"
6460   PRINT USING "10X,25A,3D.D,23A";"NEW H20 VALVE SETPOINT IS",Quench_sp,"% I
N OPEN LOOP CONTROL!"
6470   PRINT
6480   Nlines=Nlines+5
```

```
6490   PRINTER IS 1
6500   RETURN
6510 Quench_out_sp:  !
6520   PRINT TABXY(1,18);Blank$
6530   PRINT TABXY(1,18);"PRESENT %OUTPUT OF H2O VALVE IS ";DROUND(Quench_sp,4);
"%."
6540   INPUT "ENTER NEW %OUTPUT OF H2O VALVE",Quench_sp
6550   Setpoint=Quench_sp
6560   J=40
6570   GOSUB Confirm_sp
6580   GOSUB Quench_out
6590   PRINT USING "8A,2X,25A,3D.D,23A";TIME$(TIMEDATE),"NEW H2O VALVE SETPOINT
IS",Quench_sp,"% IN OPEN LOOP CONTROL!"
6600   PRINT
6610   PRINTER IS 1
6620   GOTO Restart
6630 Quench_out:  !
6640   Quenchout=INT(Quench_sp*100)
6650   OUTPUT 705;"AO3,1,"&VAL$(Quenchout)
6660   RETURN
6670 Air_out_sp:  !
6680   PRINT TABXY(1,18);Blank$
6690   PRINT TABXY(1,18);"PRESENT %OUTPUT OF AIR VALVE IS ";DROUND(Air_sp,4);"%.
"
6700   INPUT "ENTER NEW %OUTPUT OF AIR VALVE",Air_sp
6710   Setpoint=Air_sp
6720   J=37
6730   GOSUB Confirm_sp
6740   Air_control$="OPEN"
6750   Air_flow_sp=-99.9
6760   GOSUB Air_out
6770   PRINT USING "8A,2X,25A,3D.D,23A";TIME$(TIMEDATE),"NEW AIR VALVE SETPOINT
IS",Air_sp,"% IN OPEN LOOP CONTROL!"
6780   PRINT
6790   PRINTER IS 1
6800   GOTO Restart
6810 Air_flow_sp:  !
6820   PRINT TABXY(1,18);Blank$
6830   PRINT TABXY(1,18);"PRESENT AIR FLOW SETPOINT IS ";Air_flow_sp;" LBM/HR."
6840   INPUT "ENTER NEW AIR FLOW SETPOINT VALUE",Air_flow_sp
6850   Setpoint=Air_flow_sp
6860   J=33
6870   GOSUB Confirm_sp
6880   Air_control$="FLOW"
6890   PRINT USING "8A,2X,25A,3D.D,31A";TIME$(TIMEDATE),"NEW AIR FLOW SETPOINT I
S ",Air_flow_sp," LBM/HR IN CLOSED LOOP CONTROL!"
6900   PRINT
6910   PRINTER IS 1
6920   GOTO Restart
6930 Air_out:  !
6940   Airout=INT(Air_sp*100)
6950   OUTPUT 705;"AO2,0,"&VAL$(Airout)
6960   RETURN
6970 Back_out_sp:  !
6980   PRINT TABXY(1,18);Blank$
6990   PRINT TABXY(1,18);"PRESENT %OUTPUT OF BACK PSI VALVE IS ";DROUND(Back_sp,
4);"%."
7000   INPUT "ENTER NEW %OUTPUT OF BACK PSI VALVE",Back_sp
7010   Setpoint=Back_sp
7020   J=39
```

```
7030   GOSUB Confirm_sp
7040   Back_control$="OPEN"
7050   Back_psi_sp=-99.9
7060   GOSUB Back_out
7070   PRINT USING "8A,2X,30A,3D.D,23A";TIME$(TIMEDATE),"NEW BACK PSI VALVE SETP
OINT IS",Back_sp,"% IN OPEN LOOP CONTROL!"
7080   PRINT
7090   PRINTER IS 1
7100   GOTO Restart
7110 Back_psi_sp: !
7120   PRINT TABXY(1,18);Blank$
7130   PRINT TABXY(1,18);"PRESENT SYSTEM PRESS SETPOINT IS ";Back_psi_sp;" PSIA.
"
7140   INPUT "ENTER NEW SYSTEM PRESS SETPOINT VALUE",Back_psi_sp
7150   Setpoint=Back_psi_sp
7160   J=35
7170   GOSUB Confirm_sp
7180   Back_control$="PRESS"
7190   PRINT USING "8A,2X,29A,3D.D,29A";TIME$(TIMEDATE),"NEW SYSTEM PRESS SETPOI
NT IS ",Back_psi_sp," PSIA IN CLOSED LOOP CONTROL!"
7200   PRINT
7210   PRINTER IS 1
7220   GOTO Restart
7230 Back_out:!
7240   Backout=INT((100-Back_sp)*100)        ! NORMALLY OPEN (20mA FOR 0%=CLOSE)
7250   OUTPUT 705;"AO3,0,"&VAL$(Backout)
7260   RETURN
7270 Start_fuel:  !
7280   Ignite_ind=0
7290   Fuel_sp=15.
7300   GOSUB Fuel_out
7310   ON KEY 1 LABEL " % FUEL VALVE",10 GOTO Fuel_out_sp
7320   PRINTER IS 701
7330   X=3
7340   GOSUB Turn_page
7350   PRINT USING "8A,2X,54A";TIME$(TIMEDATE),"RIG IS READY FOR IGNITION. CURRE
NT VALVE SETTINGS ARE:"
7360   PRINT USING 7370;"AIR=",Air_sp,"%","FUEL=",Fuel_sp,"%","BACK=",Back_sp,"%
","H2O=",Quench_sp,"%"
7370   IMAGE 10X,4A,3D.D,A,5X,5A,3D.D,A,5X,5A,3D.D,A,5X,4A,3D.D,A
7380   PRINT
7390   Nlines=Nlines+3
7400   GOSUB Print_data
7410   PRINTER IS 1
7420   RETURN
7430 Fuel_out_sp:  !
7440   PRINT TABXY(1,18);Blank$
7450   PRINT TABXY(1,18);"PRESENT %OUTPUT OF FUEL VALVE IS ";DROUND(Fuel_sp,4);"
%."
7460   INPUT "ENTER NEW %OUTPUT OF FUEL VALVE",Fuel_sp
7470   Setpoint=Fuel_sp
7480   J=38
7490   GOSUB Confirm_sp
7500   Fuel_control$="OPEN"
7510   Spec_temp_sp=-999.
7520   GOSUB Fuel_out
7530   PRINT USING "8A,2X,26A,3D.D,23A";TIME$(TIMEDATE),"NEW FUEL VALVE SETPOINT
 IS",Fuel_sp,"% IN OPEN LOOP CONTROL!"
7540   PRINT
7550   PRINTER IS 1
```

```
7560   GOTO Restart
7570 Spec_temp_sp:  !
7580   PRINT TABXY(1,18);Blank$
7590   PRINT TABXY(1,18);"PRESENT SPEC. TEMP SETPOINT IS ";Spec_temp_sp;" DEG F.
"
7600   INPUT "ENTER NEW SPEC. TEMP SETPOINT VALUE",Spec_temp_sp
7610   Setpoint=Spec_temp_sp
7620   J=34
7630   GOSUB Confirm_sp
7640   Fuel_control$="TEMP"
7650   PRINT USING "8A,2X,27A,4D,26A";TIME$(TIMEDATE),"NEW FLAME TEMP SETPOINT I
S ",Spec_temp_sp," F IN CLOSED LOOP CONTROL!"
7660   PRINT
7670   PRINTER IS 1
7680   GOTO Restart
7690 Fuel_out:  !
7700   Fuelout=INT(Fuel_sp*100)
7710   OUTPUT 705;"AO2,1,"&VAL$(Fuelout)
7720   RETURN
7730 Confirm_sp:  !
7740   IF Setpoint>Hi_lim(J) THEN Setpoint=Hi_lim(J)
7750   IF Setpoint<Low_lim(J) THEN Setpoint=Low_lim(J)
7760   PRINT TABXY(1,18);Blank$
7770   PRINTER IS 701
7780   X=2
7790   GOSUB Turn_page
7800   Nlines=Nlines+2
7810   RETURN
7820   !!!!!!!!!!!!!!!!!!!!!! MISC SUBROUTINES !!!!!!!!!!!!!!!!!!!!!
7830 Read_pid_val:  !
7840   ASSIGN @Pid TO "PID_PARM"
7850   ENTER @Pid;P(*)
7860   ASSIGN @Pid TO *
7870   RETURN
7880 Write_pid_val:  !
7890   ASSIGN @Pid TO "PID_PARM"
7900   OUTPUT @Pid;P(*)
7910   ASSIGN @Pid TO *
7920   RETURN
7930 Read_common:  !
7940   ASSIGN @Path_1 TO "TEST_LOG"
7950   ENTER @Path_1;Title$,Fuel$,Target_temp,Target_time$,Elap_time$
7960   ENTER @Path_1;Specimen$(*),Install$(*),Tot_time$(*)
7970   ASSIGN @Path_1 TO *
7980   RETURN
7990 Write_common:  !
8000   ASSIGN @Path_1 TO "TEST_LOG"
8010   OUTPUT @Path_1;Title$,Fuel$,Target_temp,Target_time$,Elap_time$
8020   OUTPUT @Path_1;Specimen$(*),Install$(*),Tot_time$(*)
8030   ASSIGN @Path_1 TO *
8040   RETURN
8050 Set_prt_int:  !
8060   INPUT "ENTER NEW PRINT INTERVAL IN SECONDS (-1=15min, -2=30min, OR -3=OFF
)",Prt_int
8070   IF Prt_int=-1 THEN Prt_int=900
8080   IF Prt_int=-2 THEN Prt_int=1800
8090   GOTO Restart
8100 Spec_update:  !
8110   FOR I=1 TO 4
8120     IF Specimen$(I)="EMPTY" THEN GOTO 8180
```

```
8130      Minutes=(VAL(Tot_time$(I)[1,2])+VAL(Run_time$[1,2]))*60+VAL(Tot_time$(I
)[7,8])+VAL(Run_time$[7,8])
8140      Hours=Minutes DIV 60
8150      Minutes=Minutes MOD 60
8160      Tot_time$(I)[1,2]=VAL$(Hours)
8170      Tot_time$(I)[7,8]=VAL$(Minutes)
8180    NEXT I
8190    Minutes=(VAL(Elap_time$[1,2])+VAL(Run_time$[1,2]))*60+VAL(Elap_time$[7,8]
)+VAL(Run_time$[7,8])
8200    Hours=Minutes DIV 60
8210    Minutes=Minutes MOD 60
8220    Elap_time$[1,2]=VAL$(Hours)
8230    Elap_time$[7,8]=VAL$(Minutes)
8240    RETURN
8250 Summary:  !
8260    PRINTER IS 701
8270    PRINT CHR$(12)
8280    PRINT
8290    PRINT
8300    PRINT "* * * * * * * * * * * * * * *     RUN SUMMARY     * * * * * * * *
* * * * * * *"
8310    PRINT "                        SPL  HOT CORROSION TEST FACILITY"
8320    PRINT
8330    PRINT DATE$(TIMEDATE)
8340    PRINT "CURRENT TEST: "&Title$
8350    PRINT "FUEL TYPE: "&Fuel$
8360    PRINT "TARGET TEMP IN DEG F: "&VAL$(Target_temp)
8370    PRINT "TOTAL TIME REQUESTED: "&Target_time$
8380    PRINT "      TIME COMPLETED: "&Elap_time$
8390    PRINT
8400    PRINT USING "12A,11A";"TODAYS RUN: ",Run_time$
8410    PRINT USING "12A,3D.D,8A";"FUEL USAGE: ",Fuel_gal," GALLONS"
8420    PRINT
8430    PRINT "AS OF TODAYS RUN:"
8440    PRINT
8450    GOSUB 1160
8460    PRINT
8470    PRINT "COMMENTS:"
8480    PRINTER IS 1
8490    RETURN
8500    !!!!!!!!!!!!!!!!!!! VALVE CONTROL SETUP !!!!!!!!!!!!!!!!!!!!!!
8510 Control_setup:   !
8520    GOSUB Clearscreen
8530    PRINT
8540    PRINT "CURRENT VALVE CONTROL OPTIONS:"
8550    PRINT
8560    PRINT
8570    PRINT "1) FUEL- MANUAL CONTROL OF VALVE OUTPUT"
8580    PRINT "2) FUEL- CLOSED LOOP WITH SPECIMEN TEMP"
8590    PRINT
8600    PRINT "3) AIR- MANUAL CONTROL OF VALVE OUTPUT"
8610    PRINT "4) AIR- CLOSED LOOP WITH AIR FLOW RATE"
8620    PRINT
8630    PRINT "5) BACK PSI- MANUAL CNTRL OF VALVE OUTPUT"
8640    PRINT "6) BACK PSI- CLOSED LOOP W/ SYSTEM PRESS"
8650    PRINT
8660    PRINT "7) WATER- MANUAL CONTROL OF VALVE OUTPUT"
8670    PRINT "8) WATER- CLOSED LOOP WITH EXIT AIR TEMP"
8680    PRINT
8690    PRINT "ENTER (0) TO RETURN"
```

```
8700   INPUT "ENTER YOUR CHOICE",Cntrl_ind
8710   SELECT Cntrl_ind
8720   CASE 0
8730     GOTO Restart
8740   CASE 1
8750     IF Ignite_ind=2 THEN
8760       BEEP
8770       DISP "FUEL CONTROL CURRENTLY NOT AVAILABLE"
8780       WAIT 1
8790       GOTO Control_setup
8800     END IF
8810     ON KEY 1 LABEL " % FUEL VALVE",10 GOTO Fuel_out_sp
8820     GOTO Fuel_out_sp
8830   CASE 2
8840     IF Ignite_ind=2 THEN
8850       BEEP
8860       DISP "FUEL CONTROL CURRENTLY NOT AVAILABLE"
8870       WAIT 1
8880       GOTO Control_setup
8890     END IF
8900     ON KEY 1 LABEL " SPEC_TEMP_SP",10 GOTO Spec_temp_sp
8910     GOTO Spec_temp_sp
8920   CASE 3
8930     ON KEY 2 LABEL " %  AIR VALVE",10 GOTO Air_out_sp
8940     GOTO Air_out_sp
8950   CASE 4
8960     ON KEY 2 LABEL "AIR_FLOW_SP  ",10 GOTO Air_flow_sp
8970     GOTO Air_flow_sp
8980   CASE 7
8990     GOTO Quench_out_sp
9000   CASE 8
9010     BEEP
9020     DISP "OPTION CURRENTLY NOT PROGRAMMED"
9030     WAIT 1
9040     GOTO Control_setup
9050   CASE 5
9060     ON KEY 3 LABEL " % BACK VALVE",10 GOTO Back_out_sp
9070     GOTO Back_out_sp
9080   CASE 6
9090     ON KEY 3 LABEL " SYS_PSI_SP  ",10 GOTO Back_psi_sp
9100     GOTO Back_psi_sp
9110   CASE ELSE
9120     GOTO Control_setup
9130   END SELECT
9140   !!!!!!!!!!!!!!!!!!! SETUP STRINGS & ARRAYS !!!!!!!!!!!!!!!!!!!
9150 Build_string:  !
9160   L$="          "
9170   FOR I=1 TO 12
9180     N=Screen(I,1)
9190     J=Screen(I,2)
9200     OUTPUT A$ USING Display_format$(N)&",#";Dval(N)
9210     OUTPUT B$ USING Display_format$(J)&",#";Dval(J)
9220     Disp$(I)=Chan_label$(N)[1,14]&L$[1,10]&A$[1,5]&L$[1,3]&Unit$(N)[1,5]&L$
[1,6]&Chan_label$(J)[1,14]&L$[1,10]&B$[1,5]&L$[1,3]&Unit$(J)[1,5]
9230   NEXT I
9240   RETURN
9250 Read_coef:  !
9260   RESTORE 9300
9270   FOR I=1 TO 13
9280     READ K(I)
```

```
9290   NEXT I
9300   DATA -8.16774E-7,3.964E-4,1.6E-8
9310   DATA -5.1E-2,2.48503E4,-3.82662E5,9.9661057E7,-1.0820624E10
9320   DATA 6.0392855E11,-1.9109E13,3.4782347E14,-3.3991028E15,1.3828514E16
9330   FOR I=1 TO 13
9340     READ R(I)
9350   NEXT I
9360   DATA -2.11284E-7,5.334E-5,1.2E-8,4.8343651E1
9370   DATA 1.109827E-1,-2.435389E-6,4.5164488E-11,1.8172612E-16,0,0,0,0,0
9380   RETURN
9390 Read_label_lim:  !
9400   RESTORE 9450
9410   FOR I=1 TO 40
9420     READ Chan_label$(I),Unit$(I),Display_format$(I),Sensor$(I)
9430     READ Hi_lim(I),Low_lim(I)
9440   NEXT I
9450   DATA "INLET AIR TEMP","DEG F","DDDD.","AS112",500,0          ! SLOT #0
9460   DATA "PREHEATER-WEST","DEG F","DDDD.","TP1  ",650,250
9470   DATA "EXIT TEMP     ","DEG F","DDDD.","TP130",400,0
9480   DATA "PREHEATER- API","DEG F","DDDD.","K-4  ",650,250
9490   DATA "COMBUSTOR TEMP","DEG F","DDDD.","TP136",2200,500    ! R
9500   DATA "SPEC. TEMP #1 ","DEG F","DDDD.","TP100",2500,500    ! R
9510   DATA "SPEC. TEMP #2 ","DEG F","DDDD.","TP2  ",2500,0      ! R
9520   DATA "COMB TEMP- API","DEG F","DDDD.","R-4  ",2500,500    ! R
9530   DATA "SPARE  TYPE  R","DEG F","DDDD.","R-5  ",3200,0      ! R
9540   DATA "SPARE  TYPE  R","DEG F","DDDD.","R-6  ",3200,0      ! R
9550   DATA "EXIT TEMP- API","DEG F","DDDD.","K-5  ",400,0
9560   DATA "              ","     ","DDDD.","     ",3200,0
9570   DATA "              ","     ","DDDD.","     ",3200,0
9580   DATA "              ","     ","DDDD.","     ",3200,0
9590   DATA "              ","     ","DDDD.","     ",3200,0
9600   DATA "              ","     ","DDDD.","     ",3200,0
9610   DATA "              ","     ","DDDD.","     ",3200,0
9620   DATA "              ","     ","DDDD.","     ",3200,0
9630   DATA "              ","     ","DDDD.","     ",3200,0
9640   DATA "TC REF. VOLT  ","     ","DDDD.","REF ",3200,0
9650   DATA "INLET PRESSURE","PSIA ","DDD.D","AS114",200,0          ! SLOT #1
9660   DATA "VENTURI DP    ","PSID ","DD.DD","AS116",5,0
9670   DATA "FUEL FLOW RATE","GPH  ","DD.DD","FC105",6,.6
9680   DATA "FUEL  PRESSURE","PSIG ","DDD.D","FC107",500,0
9690   DATA "COMB  PRESSURE","PSIA ","DDD.D","TP137",120,0
9700   DATA "SYS.  PRESSURE","PSIA ","DDD.D","TP104",120,0
9710   DATA "H2O   PRESSURE","PSIG ","DDD.D","WD107",200,0
9720   DATA "H2O  FLOW RATE","GPM  ","DD.DD","WD112",.75,.02
9730   DATA "SALT LOAD CELL","VOLT ","D.DDD","SALT ",10,0
9740   DATA "              ","     ","DDD.D","     ",100,0
9750   DATA "AIR  FLOW RATE","LB/HR","DDD.D","Mair",800,50          ! CALCULATED
9760   DATA "F/A  RATIO    ","     ","D.DDD","F/A ",.2,0
9770   DATA "AIR   FLOW  SP","LB/HR","DDD.D","SP #1",800,50
9780   DATA "SPEC. TEMP  SP","DEG F","DDDD.","SP #2",3000,100
9790   DATA "SYSTEM PSI  SP","PSIA ","DDD.D","SP #3",120,0
9800   DATA "EXIT  TEMP  SP","DEG F","DDDD.","SP #4",350,0
9810   DATA "% AIR  VALVE  ","  %  ","DDD.D","AS111",100,0
9820   DATA "% FUEL VALVE  ","  %  ","DDD.D","FC104",100,0
9830   DATA "% BACK VALVE  ","  %  ","DDD.D","TP113",100,0
9840   DATA "% H2O  VALVE  ","  %  ","DDD.D","WD109",100,0
9850   RETURN
9860 Screen_setup:  !
9870   RESTORE 9930
9880   FOR I=1 TO 12
```

```
9890      FOR J=1 TO 2
9900        READ Screen(I,J)
9910      NEXT J
9920    NEXT I
9930    DATA 21,22,31,1,24,2,23,8,32,6,25,7,26,11,27,28,33,37,34,38,35,39,36,40
9940    RETURN
9950    !!!!!!!!!!!!!!!!!!!! UTILITY SUBROUTINES !!!!!!!!!!!!!!!!!!!!!
9960 End_sequence:  !
9970    PRINT USING "10X,28A";"SHUTDOWN SEQUENCE INITIATED."
9980    PRINT
9990    Nlines=Nlines+3
10000   PRINTER IS 1
10010   GOSUB Cooldown
10020   GOSUB Print_data
10030   GOSUB Spec_update
10040   GOSUB Write_common
10050   GOSUB Summary
10060   RETURN
10070 Restart: !
10080   GOSUB Fuel_count
10090   OUTPUT 705;"VS1"
10100   OUTPUT 705;"VT3"
10110   GOTO Scan
10120 Rig_restart:  !
10130   PRINTER IS 701
10140   PRINT CHR$(12)
10150   Nlines=0
10160   GOSUB Print_header_1
10170   PRINTER IS 1
10180   GOTO Init_variables
10190 Clearscreen: !
10200   OUTPUT 2 USING "#,B";255,75
10210   RETURN
10220 Invalid: !
10230   BEEP
10240   DISP Blank$
10250   DISP "NOT VALID KEY"
10260   WAIT .5
10270   RETURN
10280 Shutdown:  !
10290   BEEP
10300   LINPUT "DO YOU REALLY WISH TO SHUTDOWN?(Y/N)",Ans$
10310   IF Ans$="Y" THEN
10320     PRINTER IS 701
10330     X=3
10340     GOSUB Turn_page
10350     PRINT USING "8A,2X,17A";TIME$(TIMEDATE),"OPERATOR REQUEST!"
10360     GOSUB End_sequence
10370     GOTO Restart
10380   ELSE
10390     GOTO Restart
10400   END IF
10410 Pgm_stop:  !
10420   BEEP
10430   GOSUB Clearscreen
10440   PRINT "THIS WILL RETURN YOU TO THE MAIN MENU."
10450   PRINT
10460   PRINT "RIG SHOULD BE COOLED DOWN BEFORE PROCEEDING!"
10470   LINPUT "DO YOU WISH TO CONTINUE? (Y/N)",Ans$
10480   IF Ans$="Y" THEN
```

```
10490     Air_sp=0.
10500     GOSUB Air_out
10510     Back_sp=100.
10520     GOSUB Back_out
10530     Quench_sp=0.
10540     GOSUB Quench_out
10550     DISP "PROGRAM ENDS"
10560     BEEP 500,3
10570     GOTO Main_menu_keys
10580   ELSE
10590     GOTO Restart
10600   END IF
10610   STOP
10620   END
```

Table I. - Dew Point of Na_2SO_4 for Given Sodium Concentrations

Na (ppm)	1 atm Dew Pt.	4 atm Dew Pt.
0.5	920°C (1688°F)	981°C (1798°F)
1.0	938°C (1720°F)	1001°C (1834°F)
2.0	954°C (1749°F)	1020°C (1868°F)
4.0	970°C (1778°F)	1038°C (1900°F)

Table II. - Safety Upper/Lower Limits on Critical Parameters

Parameter	Upper limit	Lower limit
Preheated temperature	370°C (700°F)	120°C (250°F)
Combustor temperature	1400°C (2550°F)	420°C (800°F)
Exhaust temperature	200°C (400°F)	none
System pressure	600 kPa	none

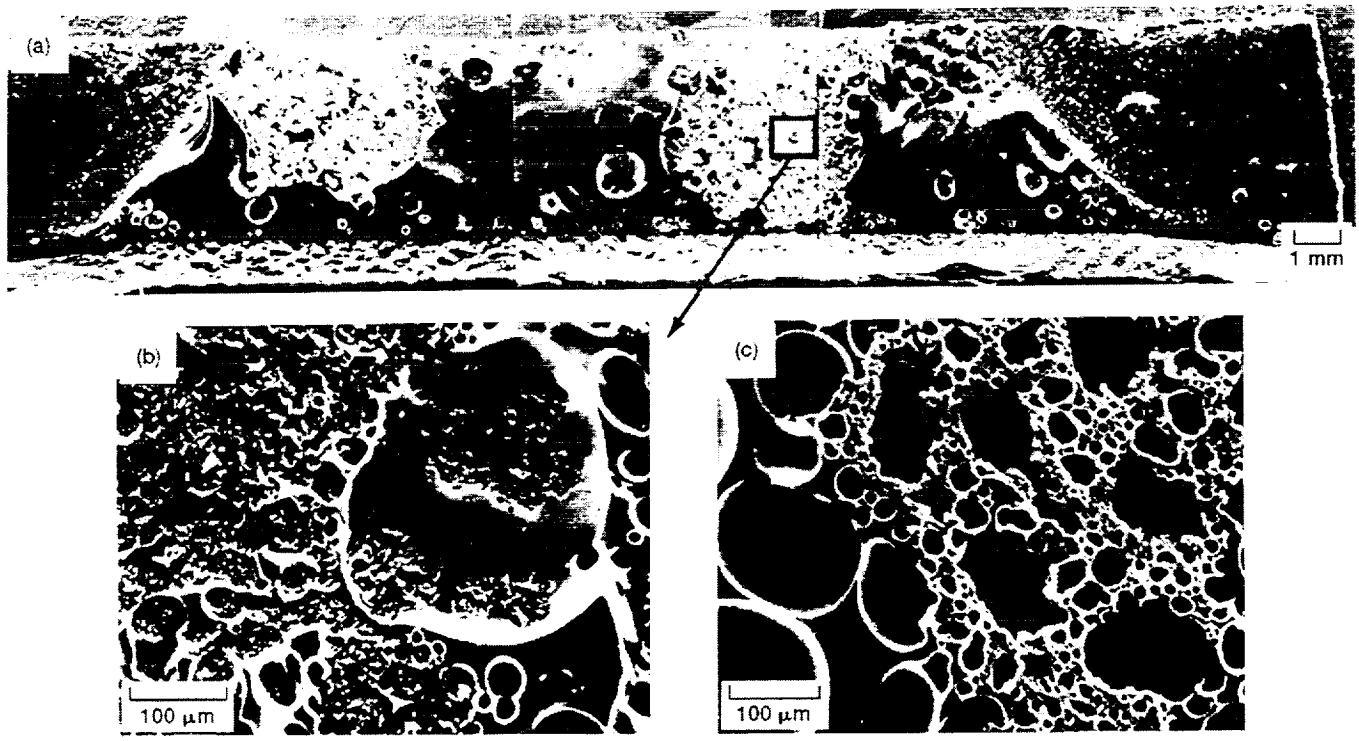

Figure 1.—SEM views of glassy products on SiC burner rig sample; (a) the entire sample (bar = 1 mm), (b) an enlargement of products near surface (bar = 100 μm); and (c) the underside of a spalled section (bar = 100 μm).

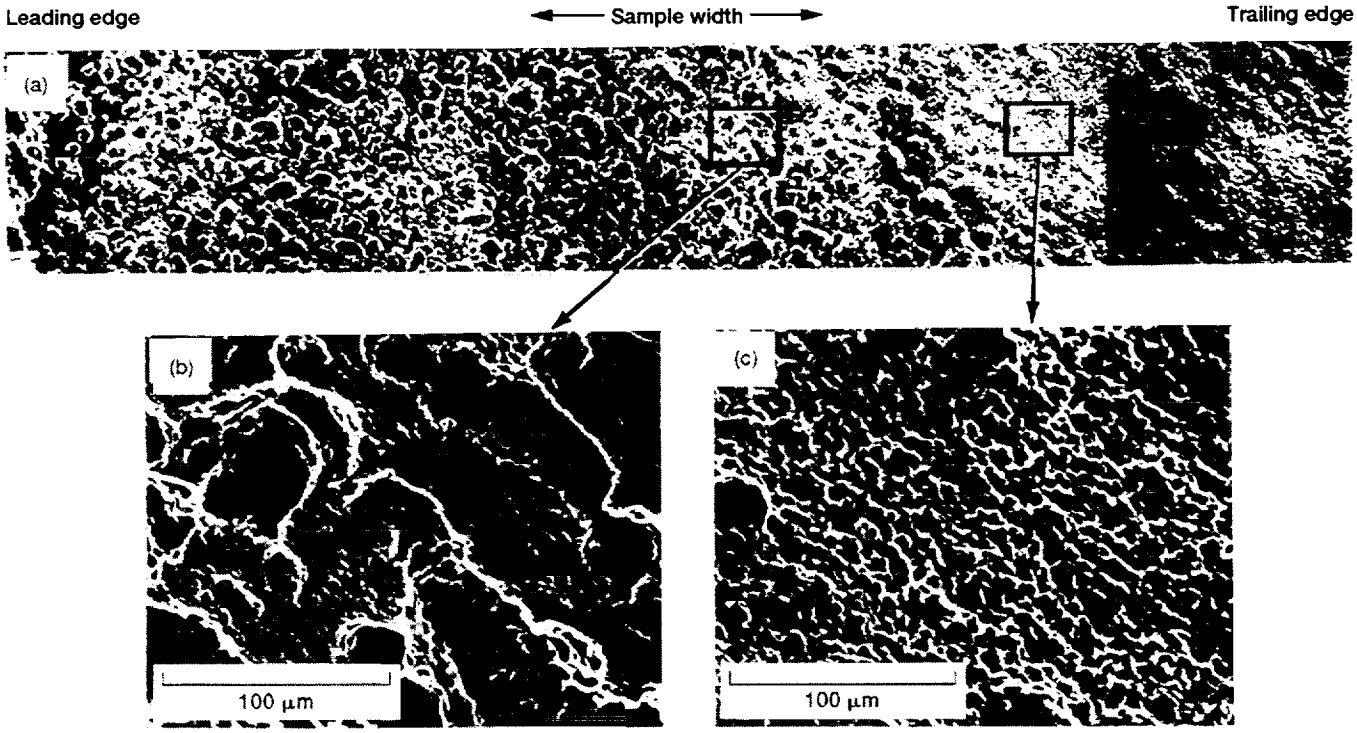

Figure 2.—Surface views of corroded SiC (products removed by HF); (a) the entire sample (bar = 100 μm), (b) enlargement of leading edge region (bar = 100 μm), (c) enlargement of trailing edge region (bar = 100 μm).

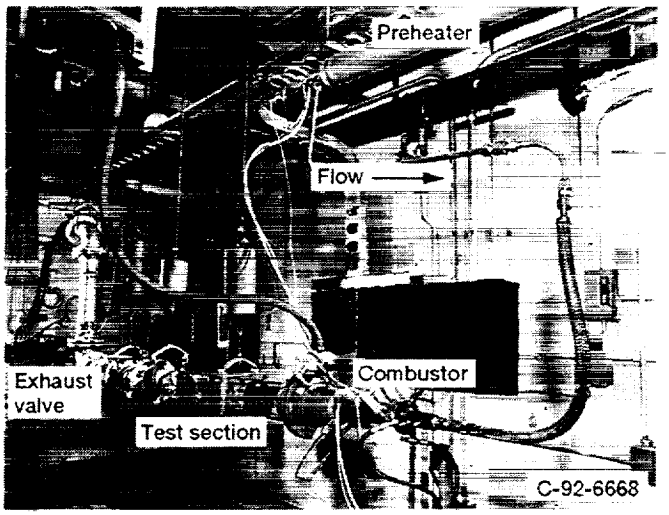

Figure 3.—Hot corrosion test facility at the NASA Lewis Research Center.

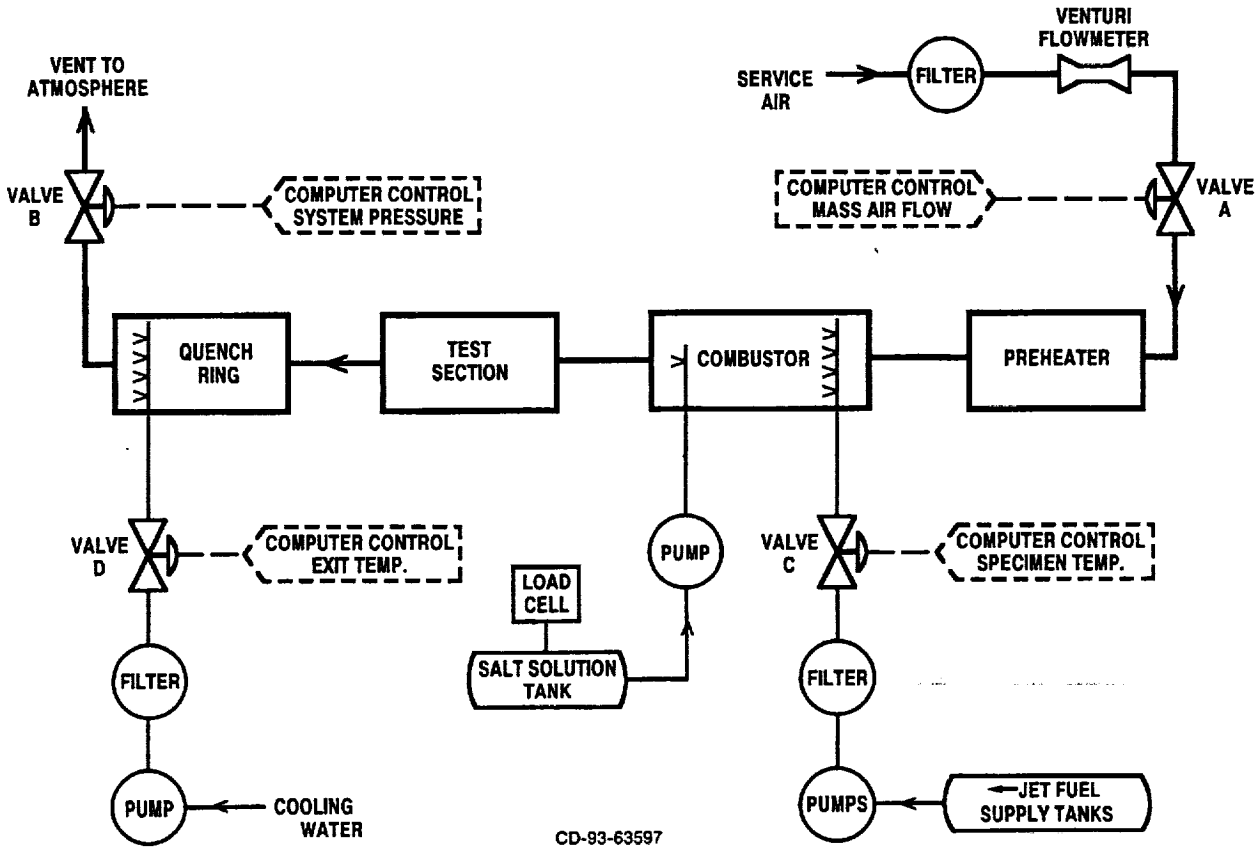

Figure 4.—Schematic of HCTF's components and support systems.

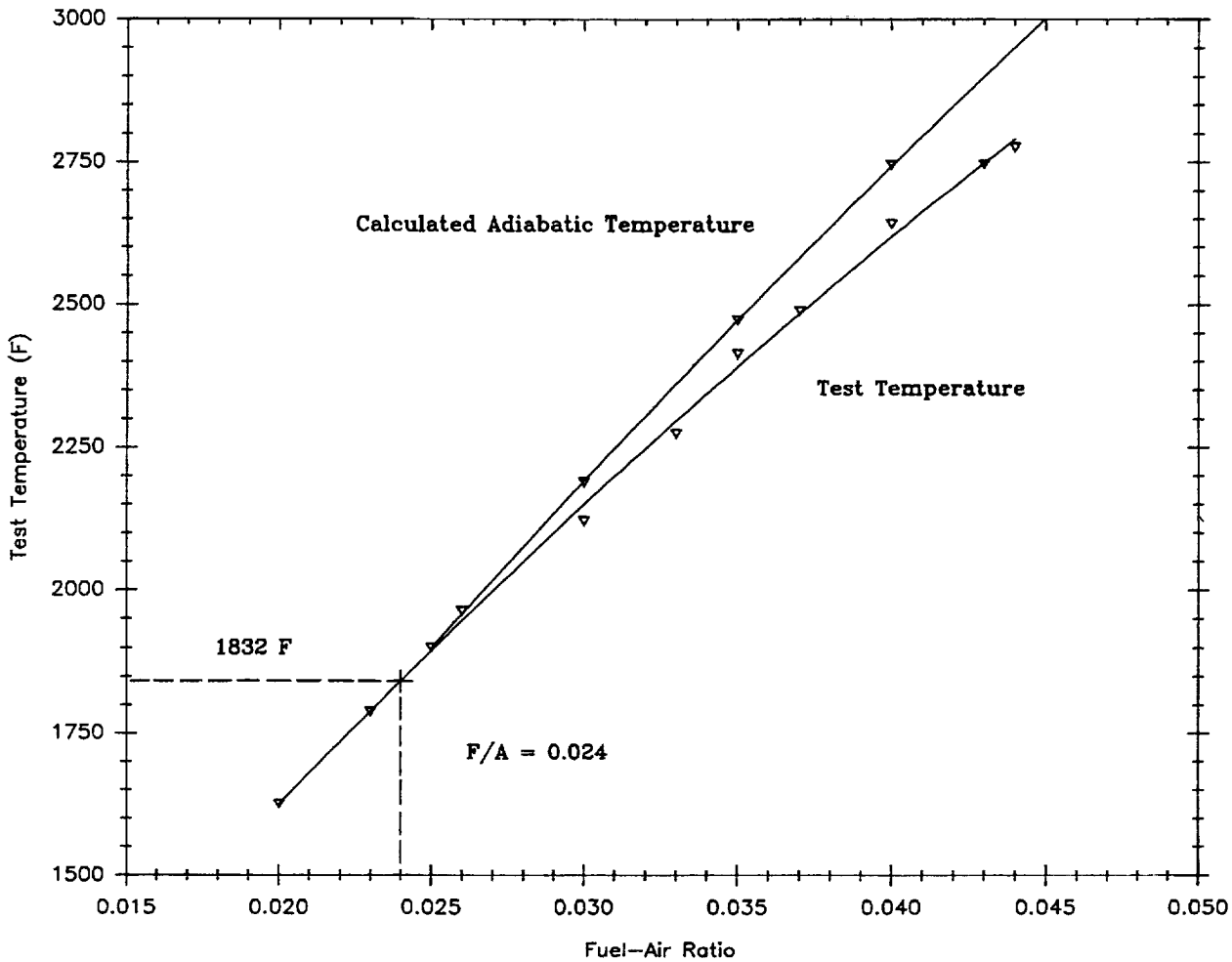

Figure 5.—Fuel-to-air ratio versus operating temperature.

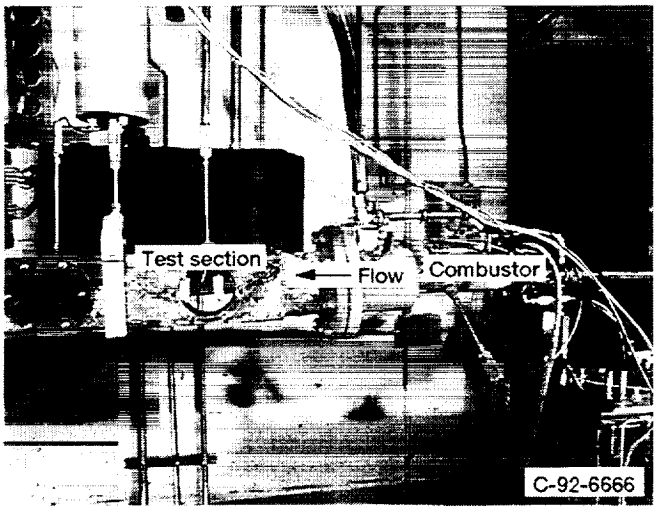

Figure 6.—HCTF combustor and test section.

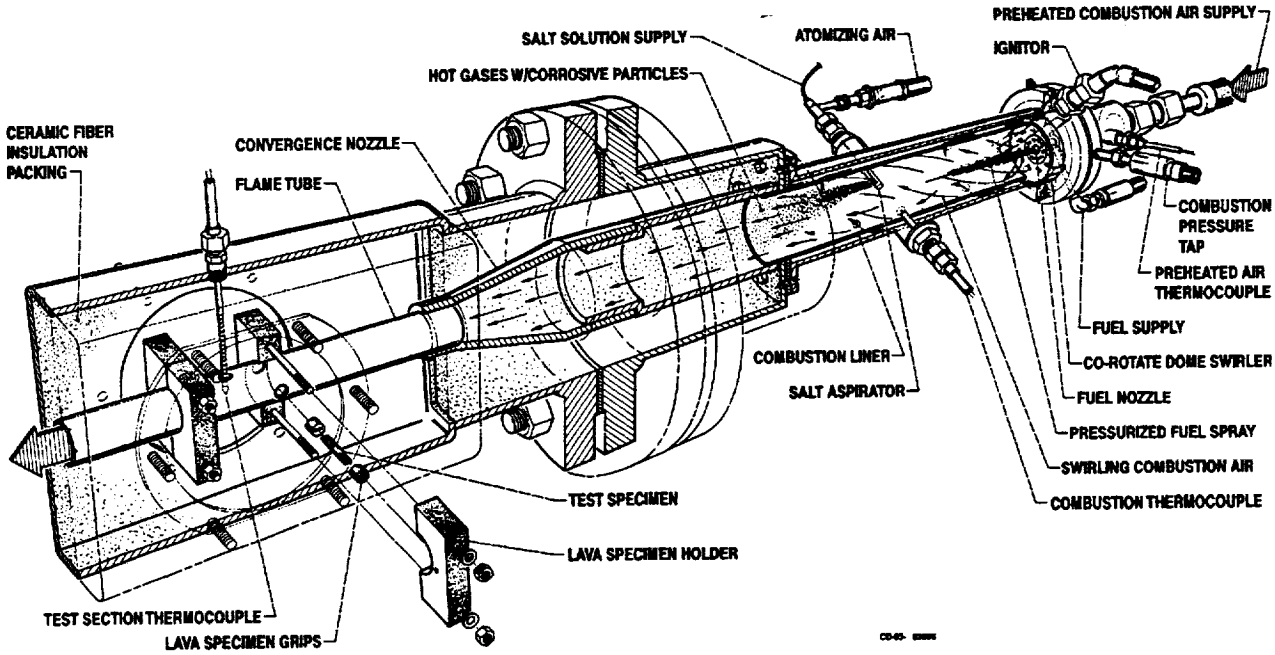

Figure 7.—Components of combustor and test section.

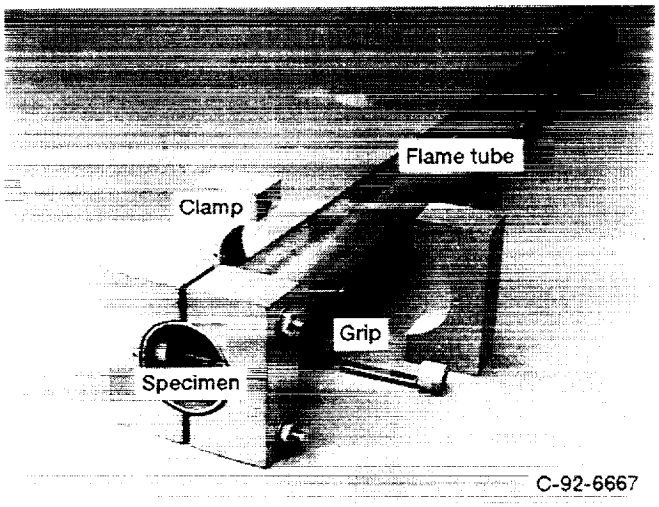

Figure 8.—Assembly of test specimens, lava holder, and flame tubes.

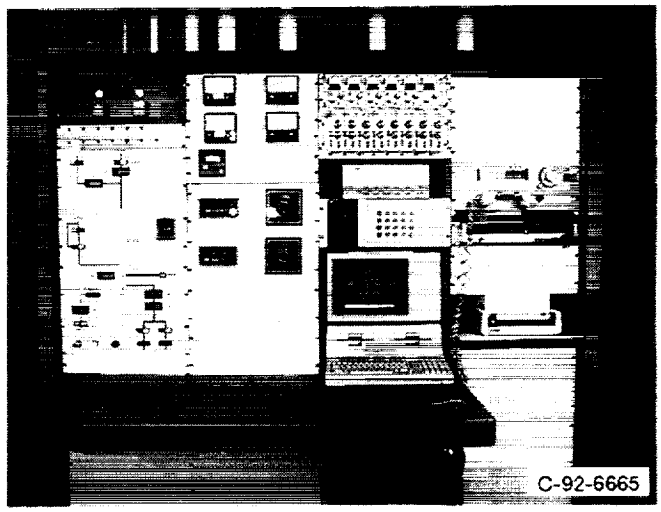

Figure 9.—HCTF control room with safety interlocks, computer and printer.

```
                    SPL HOT CORROSION TEST FACILITY

                    ******* RIG PARAMETERS *******
INLET PRESSURE        79.7   PSIA      VENTURI DP              .30   PSID
AIR  FLOW RATE       323.2   LB/HR     INLET AIR TEMP           65.  DEG F
FUEL  PRESSURE       171.7   PSIG      PREHEATER-WEST          489.  DEG F
FUEL FLOW RATE         1.25  GPH       COMB TEMP- API         1427.  DEG F
F/A  RATIO             .026            SPEC. TEMP #1          1833.  DEG F
COMB  PRESSURE         60.8  PSIA      SPEC. TEMP #2          1741.  DEG F
SYS.  PRESSURE         60.1  PSIA      EXIT TEMP- API          195.  DEG F
H2O   PRESSURE        109.5  PSIG      H2O  FLOW RATE           .76  GPM

                    ******* CONTROL SECTION ******
AIR   FLOW  SP        325.0  LB/HR     % AIR  VALVE            54.7    %
SPEC. TEMP  SP        1832.  DEG F     % FUEL VALVE            23.1    %
SYSTEM PSI  SP         60.0  PSIA      % BACK VALVE            53.8    %
EXIT  TEMP  SP        -999.  DEG F     % H2O  VALVE            95.0    %

15:03:57     CYCLE= 2.22

   SHUT_DOWN   ! SPEC_TEMP_SP !AIR_FLOW_SP   ! SYS_PSI_SP   ! %  H2O VALVE
 SET INTERVALS !              !   SET PID    ! SET CONTROL  ! PRINT DUMP     *
```

Figure 10.—Computer's data acquisition and control display screen.

```
SPL HOT CORROSION TEST FACILITY - CURRENT TEST SETUP

TEST TYPE: CORROSION
FUEL TYPE: JET A
TARGET TEMP IN DEG F: 1832
CURRENT TEST TIME REQUEST: 40HRS,0 MIN
             TIME ELAPSED: 25HRS,30MIN

              POSITION #1      POSITION #2      POSITION #3      POSITION #4

SPEC NAME:    SPEC. #1         SPEC. #2         SPEC. #3         SPEC. #4
INSTALLED:    08 DEC 1992      08 DEC 1992      25 NOV 1992      25 NOV 1992
TEST TIME:    25HRS,30MIN      25HRS,30MIN      65HRS,30MIN      65HRS,30MIN


ENTER INDEX OF INFORMATION TO BE CHANGED

(1=TEST PARAMETERS   2=SPECIMEN DATA   0=EXIT)

                                                                            *
```

Figure 11.—Test setup and documentation utility.

REPORT DOCUMENTATION PAGE

Form Approved
OMB No. 0704-0188

Public reporting burden for this collection of information is estimated to average 1 hour per response, including the time for reviewing instructions, searching existing data sources, gathering and maintaining the data needed, and completing and reviewing the collection of information. Send comments regarding this burden estimate or any other aspect of this collection of information, including suggestions for reducing this burden, to Washington Headquarters Services, Directorate for Information Operations and Reports, 1215 Jefferson Davis Highway, Suite 1204, Arlington, VA 22202-4302, and to the Office of Management and Budget, Paperwork Reduction Project (0704-0188), Washington, DC 20503.

1. AGENCY USE ONLY *(Leave blank)*

2. REPORT DATE
May 1994

3. REPORT TYPE AND DATES COVERED
Final Contractor Report

4. TITLE AND SUBTITLE
Hot Corrosion Test Facility at the NASA Lewis Special Projects Laboratory

5. FUNDING NUMBERS
WU–537–04–20
C–NAS3–25266

6. AUTHOR(S)
Raymond C. Robinson and Michael D. Cuy

7. PERFORMING ORGANIZATION NAME(S) AND ADDRESS(ES)
Sverdrup Technology, Inc.
Lewis Research Center Group
2001 Aerospace Parkway
Brook Park, Ohio 44142

8. PERFORMING ORGANIZATION REPORT NUMBER
E–8770

9. SPONSORING/MONITORING AGENCY NAME(S) AND ADDRESS(ES)
National Aeronautics and Space Administration
Lewis Research Center
Cleveland, Ohio 44135–3191

10. SPONSORING/MONITORING AGENCY REPORT NUMBER
NASA CR–195323

11. SUPPLEMENTARY NOTES
Project Manager, Leslie Greenbauer-Seng, Materials Division, organization code 5160, NASA Lewis Research Center, (216) 433–6781.

12a. DISTRIBUTION/AVAILABILITY STATEMENT
Unclassified - Unlimited
Subject Categories 9 and 24

12b. DISTRIBUTION CODE

13. ABSTRACT ***(Maximum 200 words)***

The hot corrosion test facility (HCTF) at the NASA Lewis Special Projects Laboratory (SPL) is a high-velocity, pressurized burner rig currently used to evaluate the environmental durability of advanced ceramic materials such as SiC and Si3N4. The HCTF uses laboratory service air which is preheated, mixed with jet fuel, and ignited to simulate the conditions of a gas turbine engine. Air, fuel, and water systems are computer-controlled to maintain test conditions which include maximum are flows of 250 kg/hr (550lbm/hr), pressures of 100-600 kPa (1-6 atm), and gas temperatures exceeding 1500°C (2732°F). The HCTF provides a relatively inexpensive, yet sophisticated means for researchers to study the high-temperature oxidation of advanced materials, and the injection of a salt solution provides the added capability of conducting hot corrosion studies.

14. SUBJECT TERMS
Burner rig; Corrosion; Materials testing

15. NUMBER OF PAGES
39

16. PRICE CODE
A03

17. SECURITY CLASSIFICATION OF REPORT
Unclassified

18. SECURITY CLASSIFICATION OF THIS PAGE
Unclassified

19. SECURITY CLASSIFICATION OF ABSTRACT
Unclassified

20. LIMITATION OF ABSTRACT