SRT 0094FR

FINAL REPORT

PIECE PARTS FOR FLIGHT QUALITY WC-103 CARTRIDGES

Prepared for:

DCN 1-3-JA-08346
Contract NAS8-39726
Project Manager: Dick Holmes (205) 544-2722 EJ21
Contracts Manager: Barry Kaigler (205) 544-0426, AP37J
NATIONAL AERONAUTICS AND SPACE ADMINISTRATION
George C. Marshall Space Flight Center
Marshall Space Flight Center, AL 35812

Prepared by:

SRT Electro-Optics, Inc.
Project Manager: James W. Ragland (205) 916-2912

(NASA-CR-196507) PIECE PARTS FOR FLIGHT QUALITY WC-103 CARTRIDGES Final Report (SRT Electro-Optics) 16 p

N95-70182

Unclas

Z9/38 0026414

SRT 0094FR

FINAL REPORT

PIECE PARTS FOR FLIGHT QUALITY WC-103 CARTRIDGES

March 31, 1994

Prepared for:

DCN 1-3-JA-08346
Contract NAS8-39726
Project Manager: Dick Holmes (205) 544-2722 EJ21
Contracts Manager: Barry Kaigler (205) 544-0426, AP37J
NATIONAL AERONAUTICS AND SPACE ADMINISTRATION
George C. Marshall Space Flight Center
Marshall Space Flight Center, AL 35812

Prepared by:

SRT Electro-Optics, Inc.
Project Manager: James W. Ragland (205) 916-2912

SUMMARY

Under this contract, SRT Electro-Optics delivered piece parts for 40 flight quality WC-103 cartridges. The project work identified several technical problems with the initial drawing set. SRT worked with NASA engineers to implement design changes to correct these problems. All 40 sets of hardware were built to this final drawing configuration. The only difference between the first set of 24 (delivered on 9/27/93) and the second set of 16 (delivered on 3/31/94) was that a government representative witnessed the heat treat of the second set. This was required for flight certification. All hardware was produced under a tailored NHB 5300.4(1C) Quality Assurance program.

Drawing Configuration was:

96M66763-001A	Spherical End Cap, High Temp. Cartridge
96M66764-001A	Tube, High Temp. Cartridge
96M66759-001A	Adjustment Block, Interface-SEM

The 9/27/93 delivery (24 sets) represented a seven-week ARO delivery (contract start date 8/5/93). The 3/31/94 delivery (16 sets, flight certified) was later than originally requested because of a government delay in scheduling GSI (Government Source Inspection) of heat treat. GSI of heat treat did not occur until 2/8/94.

The drawings are shown in Attachment A. We would note that the tubes were formed from flat sheets using proprietary deep draw forming techniques previously developed by our principle subcontractor, B-J Enterprises, for their commercial line of Laboratory Crucibles (B-J Scientific Products, Inc.). This process gives NASA the ability to form future cartridges with integral built in end caps rather than welding a two-piece assembly. The delivered parts were made to drawing specification by sawing off the end cap since this advanced design has not yet been approved and schedule did not permit the evaluation of this revised design. Future production should consider design changes that permit the use of a one-piece assembly. We would recommend that the specified parameters include the Outside Spherical Radius and the wall thickness rather than the Outside Spherical Radius and Inside Spherical Radius. The inside spherical radius would be very difficult to inspect but the wall thickness could be measured by ultrasonic techniques. We would recommend a tolerance of ± 0.005 inches on the wall thickness. We would propose a brief study to produce research hardware for testing this technique.

The contract Statement of Work is given in Attachment B. Inspection Documentation for the first and second sets are given in Attachment C. Only one part was non-conforming. Lot two, spherical end cap piece number 16 was 0.002 inches oversized on the inside spherical radius. Disposition was Use-As-Is.

ATTACHMENT A

ENGINEERING DRAWINGS

PART NO.	REVISIONS			
	ZONE	SYM	DESCRIPTION	DATE / APPROVAL
		A	INC EO'S 1 & 2	9/18/93

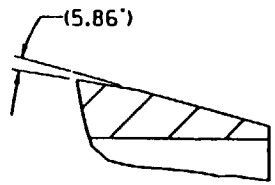

DETAIL B
SCALE : 6/1

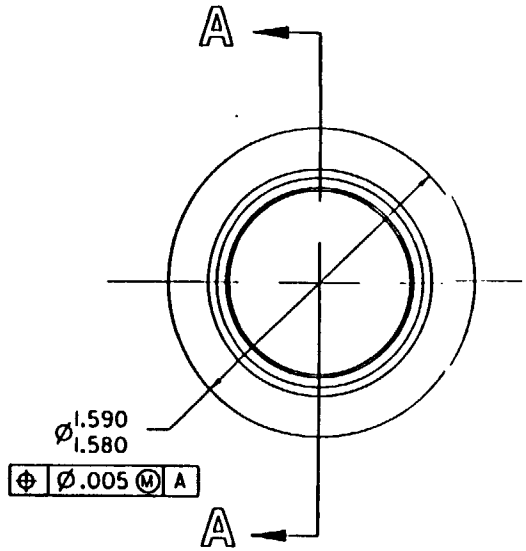

NOTES:

(A)2 1. MATERIAL: NIOBIUM-HAFNIUM ALLOY PER ASTM B 655-85 OR NAVORD WS16761A.

2. REMOVE ALL BURRS AND BREAK SHARP EDGES.

3. UNLESS OTHERWISE SPECIFIED 125√ ALL OVER.

4. DIMENSIONING AND TOLERANCING PER ANSI Y14.5M-1982.

(A)1 (A)2 5. HEAT TREAT PER NAVSEA WS24330A AT 2000°F ± 50°F FOR 1 HOUR ± 5 MIN IN A VACUUM OF AT LEAST 10^{-4} TORR. BEFORE HEAT TREATMENT, CLEAN THE PART BY IMMERSING IT IN AN ACID BATH OF 50% HNO_3 (NITRIC ACID), 30% H_2O (DISTILLED WATER) AND 20% HF (HYDROFLUORIC ACID). THEN, THROUGHLY RINSE IN TAP WATER. THE PART SHOULD MEET ALL DRAWING DIMENSIONS AFTER HEAT TREAT PROCESS.

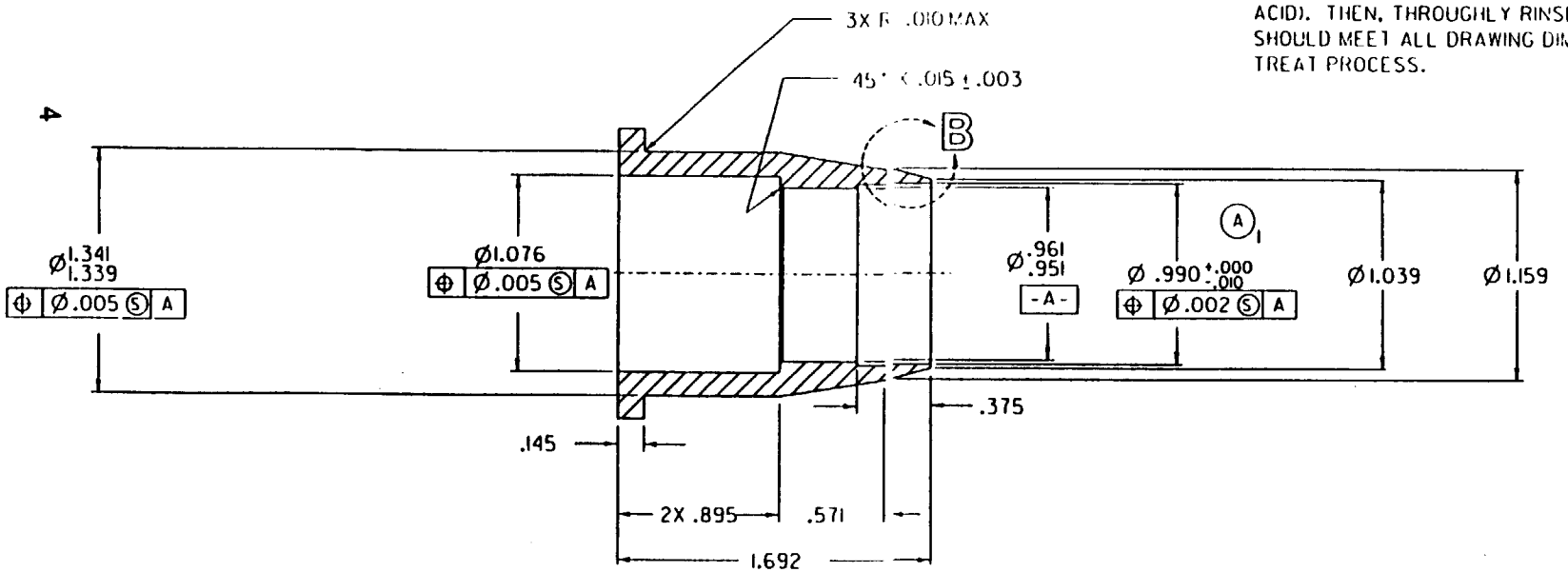

SECTION A - A

96M66759-1 SHOWN

96M66759
A

(A)1

SEE ENGINEERING RECORDS		UNLESS OTHERWISE SPECIFIED DIMENSIONS ARE IN INCHES TOLERANCES ON FRACTIONS DECIMALS .XXX ± .005 .XX ± .03 ANGLES 0°30' MATERIAL 1 MMW HEAT TREATMENT 5 FINAL PROTECTIVE FINISH	ORIGINAL DATE OF DRAWING 3/9/93 DRAFTSMAN CJC CHECKED RH ENGINEER CJC SUBMITTED JOE E WHITE APPROVED R DOTSON 3-12-93
96M66762	CGF USML-2		
NEXT ASSY	USED ON		
APPLICATION			

ADJUSTMENT BLOCK, INTERFACE-SEM

WEIGHT CHECKER | DATE | CODE 14981
SCALE 2/1 | UNIT WEIGHT .25

GEORGE C. MARSHALL SPACE FLIGHT CENTER
NATIONAL AERONAUTICS AND SPACE ADMINISTRATION
HUNTSVILLE, ALABAMA

DWG SIZE C | 96M66759
SHEET 1 OF 1

ZONE	SYM	DESCRIPTION	DATE	APPROVAL
	A	INC EO'S 1, 2, & 3	3/9/93	

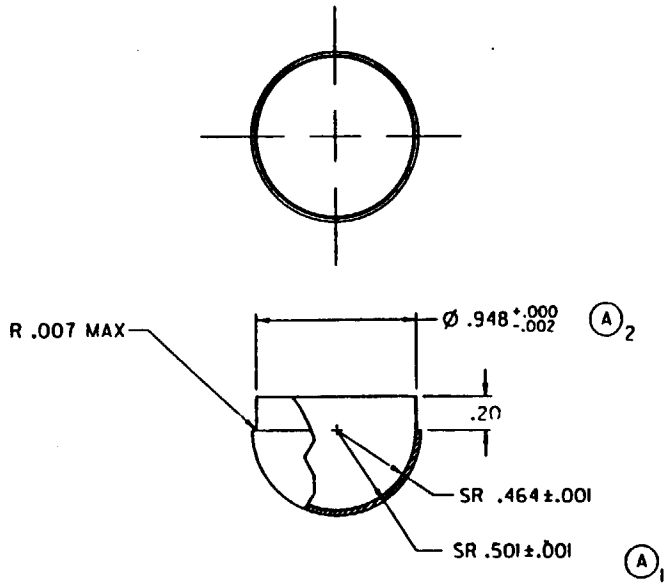

NOTES:

A 3 1. MATERIAL: NIOBIUM-HAFNIUM ALLOY PER ASTM B 654-79 OR NAVORD WS16121.

2. UNLESS OTHERWISE SPECIFIED 125√ ALL OVER.

3. REMOVE ALL BURRS AND BREAK SHARP EDGES.

A 1 A 2 A 3 4. HEAT TREAT PER NAVSEA WS24330A AT 2400°F ± 50°F FOR 30 MIN ± 5 MIN IN A VACUUM OF AT LEAST 10^{-4} TORR. BEFORE HEAT TREATMENT, CLEAN THE PART BY IMMERSING IT IN AN ACID BATH OF 50% HNO_3 (NITRIC ACID), 30% H_2O (DISTILLED WATER) AND 20% HF (HYDROFLUORIC ACID). THEN, THROUGHLY RINSE IN TAP WATER. THE PART SHOULD MEET ALL DRAWING DIMENSIONS AFTER HEAT TREAT PROCESS.

96M66763
A

96M66763-1 SHOWN

SEE ENGINEERING RECORDS		UNLESS OTHERWISE SPECIFIED DIMENSIONS ARE IN INCHES TOLERANCES ON FRACTIONS .XX ±.005 .XX ±.03 ANGLES	ORIGINAL DATE OF DRAWING 3/9/93
96M66762	CGF USML-2	MATERIAL 1 MMW	DRAFTSMAN CJC BS
NEXT ASSY	USED ON	HEAT TREATMENT 4	CHECKER RH JPS
APPLICATION		FINAL PROTECTIVE FINISH	DESIGNER CJC JP
			SUBMITTED JOE E WHITE
			APPROVED R DOTSON 3-12-93

SPHERICAL END CAP, HIGH TEMP. CARTRIDGE

WEIGHT CHECKER | DATE | CODE 14981
SCALE 2/1 | UNIT WEIGHT .03

GEORGE C. MARSHALL SPACE FLIGHT CENTER
NATIONAL AERONAUTICS AND SPACE ADMINISTRATION
HUNTSVILLE, ALABAMA

SIZE C | 96M66763
SHEET 1 OF 1

PART NO.		REVISIONS				
		ZONE	SYM	DESCRIPTION	DATE	APPROVAL
			A	INC EO'S 1 & 2		

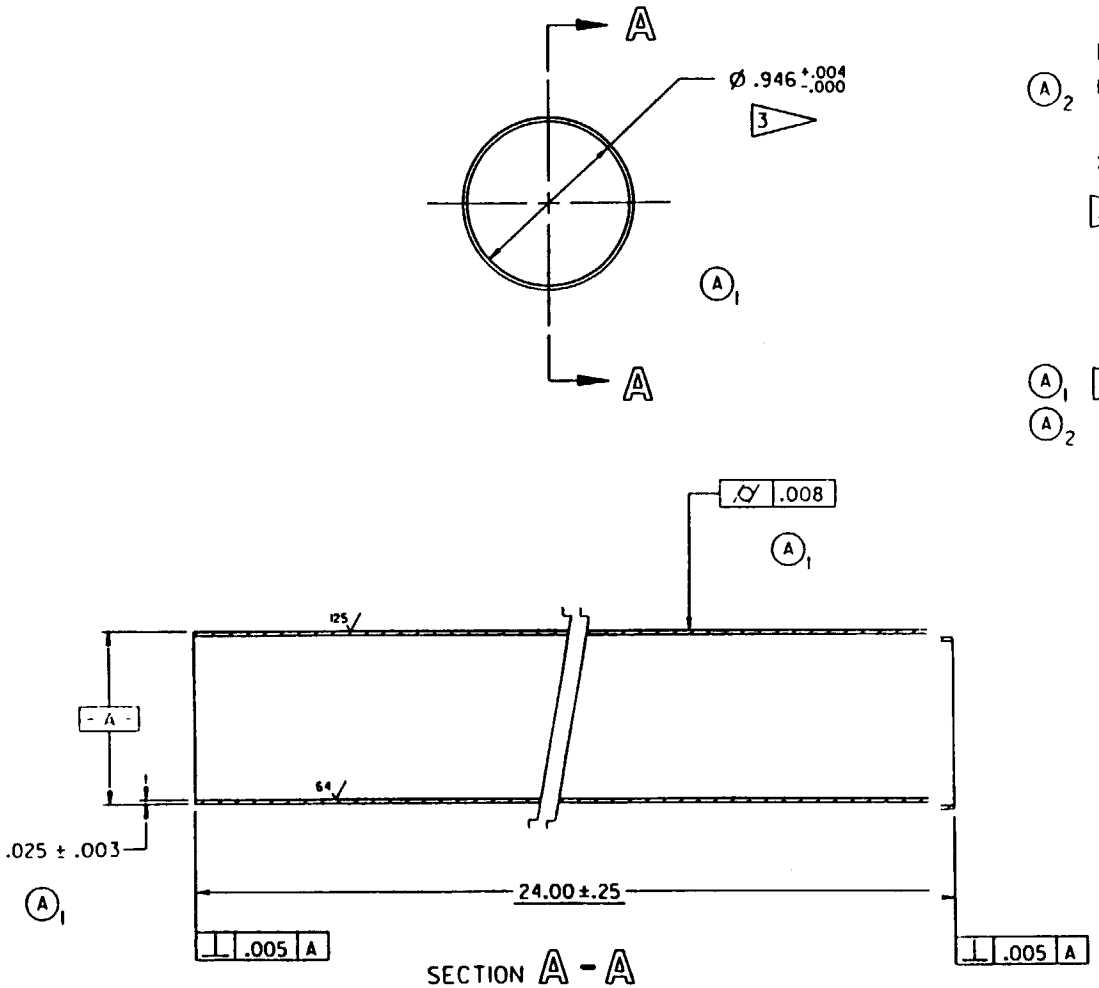

SECTION A - A

NOTES:

(A)2 1. MATERIAL: NIOBIUM-HAFNIUM ALLOY, PER ASTM B 654-79 OR NAVORD WS16421. TUBE SHALL BE SEAMLESS.

2. REMOVE ALL BURRS AND BREAK SHARP EDGES.

3. THESE DIMENSIONS ARE CONTROLLED BY AN INTERFACE CONTROL DOCUMENT (SP-ICD-6067). CHANGES SHALL NOT BE MADE PRIOR TO NASA CONFIGURATION CHANGE CONTROL AUTHORIZATION.

4. DIMENSIONING AND TOLERANCING PER ANSI Y14.5M-1982.

(A)1 (A)2 5. HEAT TREAT PER NAVSEA WS24330A AT 2400°F ± 50°F FOR 30 MIN ± 5 MIN IN A VACUUM OF AT LEAST 10^{-4} TORR. BEFORE HEAT TREATMENT, CLEAN THE PART BY IMMERSING IT IN AN ACID BATH OF 50% HNO_3 (NITRIC ACID), 30% H_2O (DISTILLED WATER) AND 20% HF (HYDROFLUORIC ACID). THEN, THROUGHLY RINSE IN TAP WATER. THE PART SHOULD MEET ALL DRAWING DIMENSIONS AFTER HEAT TREAT PROCESS.

96M66764

(A)1 96M66764-1 SHOWN

SEE ENGINEERING RECORDS		UNLESS OTHERWISE SPECIFIED: DIMENSIONS ARE IN INCHES; TOLERANCES ON FRACTIONS .XXX ± .010, .XX ± .03; ANGLES	ORIGINAL DATE OF DRAWING 3/9/93
96M66762	CGF USML-2	MATERIAL 1	DRAFTSMAN CJC; WR BS; CHECKER RH; STRESS JPS; ENGINEER CJC; R & QA JP
NEXT ASSY	USED ON	HEAT TREATMENT 5	SUBMITTED JOE E WHITE
APPLICATION		FINAL PROTECTIVE FINISH	APPROVED R DOTSON 3-12-93

TUBE, HIGH TEMP. CARTRIDGE.

WEIGHT CHECKER | DATE | CODE 14981 | SCALE 2/1 | WEIGHT .57

GEORGE C. MARSHALL SPACE FLIGHT CENTER
NATIONAL AERONAUTICS AND SPACE ADMINISTRATION
HUNTSVILLE, ALABAMA

SIZE C | 96M66764 | SHEET 1 OF 1

ATTACHMENT B

STATEMENT OF WORK FROM NAS8-39726

OBJECTIVE:

Immediate work is required by NASA/MSFC to fabricate the piece parts for 40 flight quality WC-103 cartridges. A minimum of 16 of the cartridges must be flight quality certified.

INTRODUCTION:

Crystal Growth Furnace (CGF) cartridges fabricated from WC-103 (niobium alloy) are being utilized again for USML-2. Because the Principal Investigators (PI's) were chosen late, the project is running roughly one year behind schedule. Cartridges are needed immediately to support PI Ground Control Experiment Laboratory (GCEL) testing and subsequent flight on USML-2. Because of the urgency, the contractor will supply only the piece parts with assembly/welding performed expediently by MSFC.

TASK 1: CARTRIDGE DESIGN

This effort will be provided into four subtasks. Each of these tasks are outlined in the following:

1.0 The contractor shall provide piece parts for 40 flight quality WC-103 CGF cartridges which will meet the conditions defined in MSFC-SPEC-1826 and JA55-6067 and will be in accordance with NASA Drawing No. 96M66759, EO1 (WC-103 Adjustment Block), Drawing No. 96M66764, EO1 (WC-103 Cartridge Tube) and Drawing No. 96M66763, EO1 (WC-103 Spherical End Cap).

1.1 Each of the three cartridge piece parts for certified cartridges shall meet NASA flight certification by satisfying a supplier selection survey by NASA/MSFC Quality Assurance to the above three drawings, No. 96M66759, EO1, No. 96M66764, EO1, and No. 96M66763, EO1.

1.2 Piece parts for 24 cartridges will be flight quality (but not certified), and must be delivered within 9 weeks of contract signing. Piece parts for the remaining 16 cartridges shall be flight quality certified, but need not be delivered until 21 weeks after contract signing. All cartridge tubes shall meet drawing dimensional requirements after annealing per drawing requirements.

1.3 The flight quality certified Acceptance Data Package shall include (A) Certificate of Compliance (COC), (B) Top Assembly Drawings, (C) materials certification consisting of COC with traceability back to manufacture of material, i.e., heat number and lot number, (D) actual physical and chemical test results in accordance with Drawing Nos. 96M66759, EO1; 96M66764, EO1; and 96M66763, EO1, respectively, and (5) Inspection Test Reports (contractor's /subcontractor's inspector's acceptance report).

DELIVERABLES:

Twenty-four flight quality WC-103 cartridges (piece parts) described in this Statement of Work are to be delivered to NASA/MSFC in a timely fashion to meet the 9 weeks deadline (estimated August 16, 1993). An additional 16 flight quality certified WC-103 cartridges (piece parts) are to be delivered with an Acceptance Data Package within 21 weeks.

PERIOD OF PERFORMANCE:

This effort shall be for six months from the effective date of this contract.

CONTRACTOR REPORTS:

Any pertinent data will be included in a formal written report submitted at the end of the project (six months). Report submittal shall be as noted in Appendix 1. The contractor will also travel to NASA/MSFC Huntsville, Alabama for technical interchange meetings with NASA/MSFC personnel as appropriate.

ATTACHMENT C

INSPECTION DATA

PART #: 96M66759-1A ADJUSTMENT BLOCK, INTERFACE-SEM (REV.A)

PIECE #	1 0.145 +.005 -.005 R.1501 R.1399	2 1.692 +.005 -.005 R1.6971 R1.6869	3 .961 .951 R.9611 R.9509	4 .990 +.000 -.010 R.9901 R.9799	5 1.341 1.339 R1.3411 R1.3389	6 1.590 1.580 R1.5901 R1.5799	7 .895 +.005 -.005 R.9001 R.8899
LOT A (SHIPPED 9/27/93):							
1	0.1469	1.6938	0.9518	0.9881	1.3399	1.5855	0.8959
2	0.1463	1.6929	0.9515	0.9858	1.3407	1.5859	0.8980
3	0.1459	1.6927	0.9519	0.9863	1.3395	1.5853	0.8965
4	0.1463	1.6933	0.9545	0.9890	1.3403	1.5859	0.8947
5	0.1445	1.6911	0.9532	0.9873	1.3403	1.5859	0.8924
6	0.1422	1.6907	0.9533	0.9876	1.3410	1.5865	0.8916
7	0.1452	1.6896	0.9541	0.9883	1.3400	1.5857	0.8956
8	0.1470	1.6922	0.9539	0.9883	1.3406	1.5863	0.8996
9	0.1466	1.6931	0.9520	0.9866	1.3403	1.5867	0.8976
10	0.1451	1.6926	0.9534	0.9878	1.3399	1.5853	0.8959
11	0.1455	1.6934	0.9540	0.9884	1.3393	1.5849	0.8963
12	0.1452	1.6919	0.9524	0.9877	1.3401	1.5858	0.8940
13	0.1455	1.6922	0.9538	0.9881	1.3395	1.5850	0.8952
14	0.1453	1.6926	0.9531	0.9874	1.3401	1.5853	0.8950
15	0.1495	1.6955	0.9547	0.9891	1.3401	1.5857	0.8979
16	0.1454	1.6926	0.9516	0.9862	1.3392	1.5847	0.8971
17	0.1454	1.6927	0.9537	0.9881	1.3394	1.5849	0.8959
18	0.1454	1.6925	0.9514	0.9882	1.3403	1.5861	0.8945
19	0.1461	1.6917	0.9537	0.9882	1.3401	1.5857	0.8974
20	0.1435	1.6902	0.9534	0.9875	1.3395	1.5848	0.8955
21	0.1453	1.6927	0.9525	0.9868	1.3401	1.5858	0.8950
22	0.1467	1.6931	0.9534	0.9876	1.3402	1.5859	0.8970
23	0.1468	1.6934	0.9521	0.9873	1.3399	1.5855	0.8973
24	0.1465	1.6928	0.9539	0.9883	1.3400	1.5855	0.8940

PART #: 96M66759-1A ADJUSTMENT BLOCK, INTERFACE-SEM (REV.A)

PIECE #	1 0.145 +.005 -.005 R.1501 R.1399	2 1.692 +.005 -.005 R1.6971 R1.6869	3 .961 .951 R.9611 R.9509	4 .990 +.000 -.010 R.9901 R.9799	5 1.341 1.339 R1.3411 R1.3389	6 1.590 1.580 R1.5901 R1.5799	7 .895 +.005 -.005 R.9001 R.8899
LOT B (SHIPPED 3/31/94):							
1	0.1468	1.6943	0.9519	0.9861	1.3402	1.5857	0.8956
2	0.1450	1.6922	0.9521	0.9865	1.3398	1.5853	0.8942
3	0.1464	1.6923	0.9542	0.9888	1.3397	1.5848	0.8972
4	0.1467	1.6933	0.9524	0.9864	1.3396	1.5858	0.8973
5	0.1451	1.6916	0.9561	0.9898	1.3393	1.5847	0.8943
6	0.1443	1.6938	0.9539	0.9882	1.3400	1.5854	0.8932
7	0.1439	1.6919	0.9536	0.9879	1.3398	1.5854	0.8935
8	0.1463	1.6930	0.9522	0.9864	1.3398	1.5856	0.8987
9	0.1480	1.6930	0.9518	0.9859	1.3397	1.5854	0.8949
10	0.1465	1.6940	0.9546	0.9886	1.3399	1.5855	0.8965
11	0.1470	1.6928	0.9547	0.9888	1.3394	1.5852	0.8970
12	0.1450	1.6923	0.9524	0.9865	1.3398	1.5849	0.8911
13	0.1459	1.6961	0.9541	0.9884	1.3390	1.5842	0.8999
14	0.1462	1.6924	0.9571	0.9888	1.3397	1.5854	0.8974
15	0.1461	1.6936	0.9520	0.9863	1.3398	1.5853	0.8966
16	0.1477	1.6932	0.9540	0.9884	1.3398	1.5851	0.8962

PART #: 96M66759-1A ADJUSTMENT BLOCK, INTERFACE-SEM (REV.A)

PIECE #	8	9	10	11	ID 12	13
	.571	1.159	1.039	1.076	.895	0.375
	+.005	+.005	+.005	+.005	+.005	+.005
	-.005	-.005	-.005	-.005	-.005	-.005
	R.5761	R1.1641	R1.0441	R1.0811	R.9001	R.3801
	R.5659	R1.1539	R1.0339	R1.0709	R.8899	R.3699
LOT A (SHIPPED 9/27/93):						
1	0.5699	1.1591	1.0383	1.0760	0.893	0.373
2	0.5672	1.1597	1.0391	1.0761	0.895	0.374
3	0.5675	1.1593	1.0384	1.0763	0.894	0.375
4	0.5685	1.1597	1.0395	1.0762	0.894	0.374
5	0.5687	1.1602	1.0392	1.0768	0.894	0.374
6	0.5685	1.1610	1.0389	1.0761	0.893	0.374
7	0.5674	1.1603	1.0398	1.0770	0.892	0.372
8	0.5669	1.1596	1.0404	1.0772	0.894	0.373
9	0.5678	1.1599	1.0389	1.0759	0.896	0.374
10	0.5689	1.1595	1.0387	1.0766	0.894	0.373
11	0.5692	1.1582	1.0375	1.0773	0.893	0.373
12	0.5703	1.1598	1.0387	1.0769	0.894	0.374
13	0.5717	1.1584	1.0384	1.0761	0.894	0.374
14	0.5725	1.1586	1.0394	1.0763	0.894	0.374
15	0.5710	1.1595	1.0393	1.0771	0.895	0.374
16	0.5687	1.1586	1.0383	1.0764	0.894	0.375
17	0.5679	1.1592	1.0379	1.0764	0.894	0.375
18	0.5674	1.1606	1.0387	1.0764	0.893	0.375
19	0.5691	1.1593	1.0392	1.0768	0.894	0.373
20	0.5668	1.1588	1.0377	1.0767	0.890	0.374
21	0.5678	1.1596	1.0374	1.0764	0.894	0.375
22	0.5683	1.1594	1.0384	1.0745	0.894	0.374
23	0.5701	1.1588	1.0388	1.0770	0.895	0.375
24	0.5701	1.1596	1.0389	1.0764	0.894	0.374

PART #: 96M66759-1A ADJUSTMENT BLOCK, INTERFACE-SEM (REV.A)

PIECE #	8	9	10	11	ID 12	13
	.571	1.159	1.039	1.076	.895	0.375
	+.005	+.005	+.005	+.005	+.005	+.005
	-.005	-.005	-.005	-.005	-.005	-.005
	R.5761	R1.1641	R1.0441	R1.0811	R.9001	R.3801
	R.5659	R1.1539	R1.0339	R1.0709	R.8899	R.3699
LOT B (SHIPPED 3/31/94):						
1	0.5684	1.1589	1.0375	1.0775	0.895	0.374
2	0.5680	1.1583	1.0378	1.0763	0.894	0.373
3	0.5669	1.1591	1.0392	1.0767	0.895	0.375
4	0.5720	1.1574	1.0383	1.0761	0.894	0.374
5	0.5670	1.1582	1.0379	1.0772	0.894	0.372
6	0.5664	1.1603	1.0375	1.0760	0.895	0.375
7	0.5676	1.1589	1.0373	1.0763	0.894	0.374
8	0.5681	1.1577	1.0392	1.0762	0.893	0.374
9	0.5696	1.1603	1.0385	1.0763	0.894	0.376
10	0.5709	1.1583	1.0386	1.0765	0.893	0.375
11	0.5671	1.1594	1.0377	1.0766	0.894	0.376
12	0.5693	1.1600	1.0377	1.0756	0.895	0.375
13	0.5718	1.1581	1.0380	1.0762	0.896	0.374
14	0.5688	1.1584	1.0388	1.0765	0.895	0.375
15	0.5684	1.1589	1.0373	1.0761	0.895	0.373
16	0.5715	1.1593	1.0380	1.0767	0.894	0.373

PART #: 96M66763-1A SPHERICAL END CAP, HIGH TEMP. CARTRIDGE (REV.A)

PIECE #	1	2	3	4
	SR.464	SR.501	0.948	0.20
	+.001	+.001	+.000	+.03
	-.001	-.001	-.002	-.03
	R.4651	R.5021	R.9481	R.231
	R.4629	R.4999	R.9459	R.169

LOT A (SHIPPED 9/27/93):

1	0.4639	0.5002	0.9470	0.202
2	0.4637	0.5005	0.9478	0.202
3	0.4644	0.5009	0.9479	0.202
4	0.4631	0.5003	0.9476	0.203
5	0.4637	0.5004	0.9462	0.202
6	0.4632	0.5007	0.9475	0.203
7	0.4637	0.5003	0.9470	0.203
8	0.4634	0.5007	0.9477	0.201
9	0.4634	0.5003	0.9472	0.202
10	0.4635	0.5003	0.9475	0.201
11	0.4635	0.5013	0.9471	0.203
12	0.4631	0.5006	0.9474	0.203
13	0.4634	0.5007	0.9480	0.204
14	0.4631	0.5001	0.9472	0.203
15	0.4636	0.5008	0.9479	0.202
16	0.4633	0.5005	0.9470	0.203
17	0.4640	0.5006	0.9478	0.202
18	0.4634	0.5014	0.9480	0.201
19	0.4637	0.5008	0.9475	0.204
20	0.4632	0.5007	R0.9488	0.200
21	0.4634	0.5010	0.9477	0.203
22	0.4637	0.5006	0.9476	0.202
23	0.4634	0.5010	0.9475	0.203
24	0.4636	0.5006	0.9477	0.202

PART #: 96M66763-1A SPHERICAL END CAP, HIGH TEMP. CARTRIDGE (REV.A)

PIECE #	1	2	3	4
	SR.464	SR.501	0.948	0.20
	+.001	+.001	+.000	+.03
	-.001	-.001	-.002	-.03
	R.4651	R.5021	R.9481	R.231
	R.4629	R.4999	R.9459	R.169

LOT B (SHIPPED 3/31/94):

NOTE: PIECE #16 IS NONCONFORMING w.r.t. DIMENSION #1 AND WAS SUBMITTED ON A WAIVER WITH A RECOMENDED" USE AS IS" DISPOSITION

1	0.4636	0.5014	0.9475	0.2005
2	0.4640	0.5013	0.9475	0.2000
3	0.4637	0.5012	0.9480	0.2010
4	0.4640	0.5013	0.9480	0.2015
5	0.4638	0.5015	0.9475	0.2010
6	0.4639	0.5018	0.9480	0.2020
7	0.4642	0.5016	0.9480	0.1975
8	0.4643	0.5018	0.9470	0.2000
9	0.4637	0.5018	0.9480	0.2015
10	0.4642	0.5019	0.9480	0.2000
11	0.4639	0.5019	0.9480	0.2010
12	0.4640	0.5019	0.9480	0.2015
13	0.4634	0.5010	0.9480	0.2010
14	0.4639	0.5018	0.9480	0.1990
15	0.4641	0.5016	0.9480	0.2005
16	R0.4670	0.5017	0.9475	0.1990

PART #: 96M66764-1A TUBE, HIGH TEMP. CARTRIDGE (REV.A)

PIECE #	1	2	3	4	5	NOTES
	0.946	0.025	24.00	<.008		
	+.004	+.003	+0.25	+.0001		
	-.000	-.003	-0.25	N/A		
	R.9501	R.0281	R24.251	R.0081		
	R.9459	R.0219	R23.749	N/A		
LOT A (SHIPPED 9/27/93):						
1	0.9460	0.027	24.22	0.0064		
	0.9465	0.028				
2	0.9470	0.027	24.18	0.0048		MINOR I.D. GALLS
	0.9470	0.028				
3	0.9468	0.026	24.19	0.0048		
	0.9485	0.028				
4	0.9465	0.026	24.20	0.0057		MINOR I.D. GALLS
	0.9490	0.028				
5	0.9464	0.027	24.23	0.0040		
	0.9465	0.028				
6	0.9466	0.026	24.24	0.0055		
	0.9468	0.028				
7	0.9465	0.026	24.23	0.0048		MINOR I.D. GALLS
	0.9490	0.027				
8	0.9468	0.025	24.24	0.0017		MINOR I.D. GALLS
	0.9488	0.028				
9	0.9466	0.026	24.21	0.0064		MINOR I.D. GALLS
	0.9482	0.028				
10	0.9468	0.027	24.24	0.0033		MINOR I.D. GALLS
	0.9490	0.028				
11	0.9460	0.027	24.22	0.0062		
	0.9461	0.028				
12	0.9463	0.027	24.20	0.0074		
	0.9465	0.028				
13	0.9470	0.027	24.22	0.0034		
	0.9477	0.027				
14	0.9464	0.026	24.24	0.0037		
	0.9465	0.028				
15	0.9462	0.027	24.24	0.0056		
	0.9468	0.028				
16	0.9461	0.023	24.20	0.0050		
	0.9483	0.027				
17	0.9467	0.025	24.20	0.0071		MINOR I.D. GALLS
	0.9478	0.027				
18	0.9470	0.024	24.22	0.0063		
	0.9478	0.026				
19	0.9461	0.027	24.21	0.0051		
	0.9463	0.028				
20	0.9462	0.027	24.20	0.0033		
	0.9463	0.028				
21	0.9475	0.025	24.23	0.0062		
	0.9482	0.027				
22	0.9464	0.027	24.24	0.0047		
	0.9465	0.028				
23	0.9470	0.026	24.13	0.0067		MINOR I.D. GALLS
	0.9480	0.028				
24	0.9464	0.027	24.20	0.0038		
	0.9466	0.028				

PART #: 96M66764-1A TUBE, HIGH TEMP. CARTRIDGE (REV.A)

PIECE #	1	2	3	4	5	NOTES
	0.946	0.025	24.00	<.008		
	+.004	+.003	+0.25	+.0001		
	-.000	-.003	-0.25	N/A		
	R.9501	R.0281	R24.251	R.0081		
	R.9459	R.0219	R23.749	N/A		
LOT B (SHIPPED 3/31/94):						
1	0.9480	0.020	24.07	0.0071		MINOR I.D. GALLS
	0.9460	0.026				
2	0.9475	0.027	24.06	0.0064		MINOR I.D. GALLS
	0.9460	0.026				
3	0.9480	0.027	24.05	0.0056		MINOR I.D. GALLS
	0.9460	0.026				
4	0.9480	0.028	24.07	0.0062		MINOR I.D. GALLS
	0.9460	0.026				
5	0.9490	0.027	24.05	0.0036		MINOR I.D. GALLS
	0.9460	0.026				
6	0.9485	0.027	24.05	0.0051		MINOR I.D. GALLS
	0.9460	0.025				
7	0.9475	0.027	24.06	0.0044		MINOR I.D. GALLS
	0.9460	0.026				
8	0.9475	0.028	24.06	0.0035		
	0.9460	0.026				
9	0.9485	0.027	24.07	0.0041		
	0.9460	0.026				
10	0.9480	0.027	24.07	0.0062		
	0.9460	0.026				
11	0.9470	0.027	24.06	0.0072		
	0.9460	0.026				
12	0.9470	0.028	24.06	0.0033		
	0.9460	0.026				
13	0.9475	0.028	24.05	0.0042		
	0.9460	0.025				
14	0.9475	0.028	24.06	0.0031		
	0.9460	0.026				
15	0.9480	0.027	24.05	0.0034		
	0.9460	0.026				
16	0.9470	0.028	24.05	0.0047		
	0.9460	0.025				