NASA-CR-197928

TONE

Temperature Ozone Nitric Oxide Experiment

Final Report

December 31,1994

LASP

Laboratory for Atmospheric and Space Physics

University of Colorado at Boulder

(NASA-CR-197928) TEMPERATURE OZONE NITRIC OXIDE EXPERIMENT (TONE) Final Report (Colorado Univ.) 80 p

N95-70826

Unclas

Z9/46 0043725

TONE Science Team

Investigators:

- David Rusch, Principal Investigator
- C. A. Barth
- R. T. Clancy
- J. C. Gerard
- G. M. Lawrence
- W. E. McClintock
- C. E. Randall
- R. R. Garcia
- R. G. Roble
- S. C. Solomon
- G. E. Thomas

TONE Key Supporting Personnel

Sam Jones	Engineering Director
Michael Anfinson	Project Manager
Richard Kohnert	Lead Optical Designer
Neil White	Lead Electronics Engineer
James Westfall	Lead Mechanism Engineer
Mark Lankton	Lead Test & Calibration Engineer
Michael McGrath	Lead Mechanical Engineer
Fred Lacy	Lead Software Engineer

TIMED Science Objectives

(1) Determine the temperature, density, and wind structure of the MLTI, including seasonal and lattitudinal variations.

(2) Determine the relative importance of the various radiative, chemical, electrodynamical, and dynamical sources and sinks of energy for the thermal structure of the MLTI.

(3) Determine the sources and magnitudes of gravity waves and planetary waves (extratropical and equatorial) in the MLTI region, their spatial and temporal variability, and their forcing of the large-scale circulation, and their thermal and constituent structures.

(4) Determine the mean global tidal structure, their annual and height variations, and their effects on the large-scale circulation of the MLTI.

(5) Determine the relative importance of the interactions occurring among the different wave motions (tidal, gravity, and planetary) and the extent, causes, and consequences of their variability.

(6) Determine the spatial and temporal variability of the radiatively significant minor species and the role that O plays in influencing the radiative balance through collision energy transfer.

(7) Determine the relative importance of the disturbance dynamo, tidal dynamos, and magnetospheric penetration fields in determining the global electrodynamics at mid and equatorial lattitudes.

(8) Determine the spatial and temporal variability of the odd-oxygen, odd-hydrogen, and odd-nitrogen compounds in the MLTI.

(9) Determine the roles of neutral winds and electric fields in controlling large and small scale variability in the ionospheric composition and density structure.

TONE Role In Supporting TIMED Mission Science Objectives

(1)Atmospheric Structure (TIMED Science Objective 1)

- Temperature
  - 50-110 km, Rayleigh scattering
  - 90-180 km, Nitric Oxide gamma band
- Density from Rayleigh scattering
- Pressure from temperature and density

(2)Energetics (TIMED Science Objectives 2 and 8)

- Ozone (50-110 km)
- Nitric Oxide (85-180 km)
- Atmospheric Cooling (excited Molecular Oxygen)
- Atmospheric Emissions
  - Dayglow (Nitrogen V-K bands)
  - Aurora (Nitrogen V-K bands)
  - Nightglow (Nitric Oxide Delta bands)

(3)Anthropogenic Effects

- Polar Mesospheric Clouds

TONE Unique Contributions To TIMED Mission

(1) Measures the temperature over the entire altitude range defined as primary to the TIMED Mission (50-180 km) - (Portions of this region are covered by DATES, SABER, and TIDI).

(2) Measures the density and pressure in the entire mesosphere - (As does SABER, to an uncertain upper altitude limit).

(3) Measures the thermospheric nitric oxide density.

(4) Make the only direct measurement of ozone through its absorption of Raleigh scattered solar UV flux - (IR is contaminated by non-thermal sources and the near IR measurement is chemically dependent).

TONE Measurement Requirements

Primary

Measurement	Technique Time	Altitude Coverage	Precision	Accuracy
Temperature	Rayleigh Scattering Day	50 - 110 km	1% for h<90 km 2% forh>90 km	2°K for h<90 km 4°K for h>90 km
	NO γ band Emission Day	90- 180 km	5%	10°K for h=90 km 15°K for h=160 km
Pressure & Density	Rayleigh Scattering Day	50 - 110 km	1% for h<90 km 2% forh>90 km	5%
Ozone Density	Rayleigh Scattering Day	50 - 70 km	1%	5%
	O_2 ($^1\Delta_g$) Emission Day	60 - 110 km	1%	15%
Nitric Oxide Density	NO γ band Emission Day	90- 200 km	2% for h=90 km 5% for h=160 km	10%
Atmospheric Cooling	O_2 ($^1\Delta_g$) Emission Day	60 - 110 km	1%	10%
PMCs	UV Scattering Day	85 km	1%	2-5%

Secondary

Measurement	Technique Time	Altitude Coverage	Precision	Accuracy
Energy deposition	N_2 V-K bands Day/Night (Aurora)	100 -200 km	10%	15%
Thermospheric N and O	NO δ band Emission Night	140 -180 km	10%	15%

Note: For All Measurements

Vertical Resolution = 2.5 km (LRS) 5.0 km (MRS)
Geographic Resolution = 4.5°

Schematic of TONE Measurements

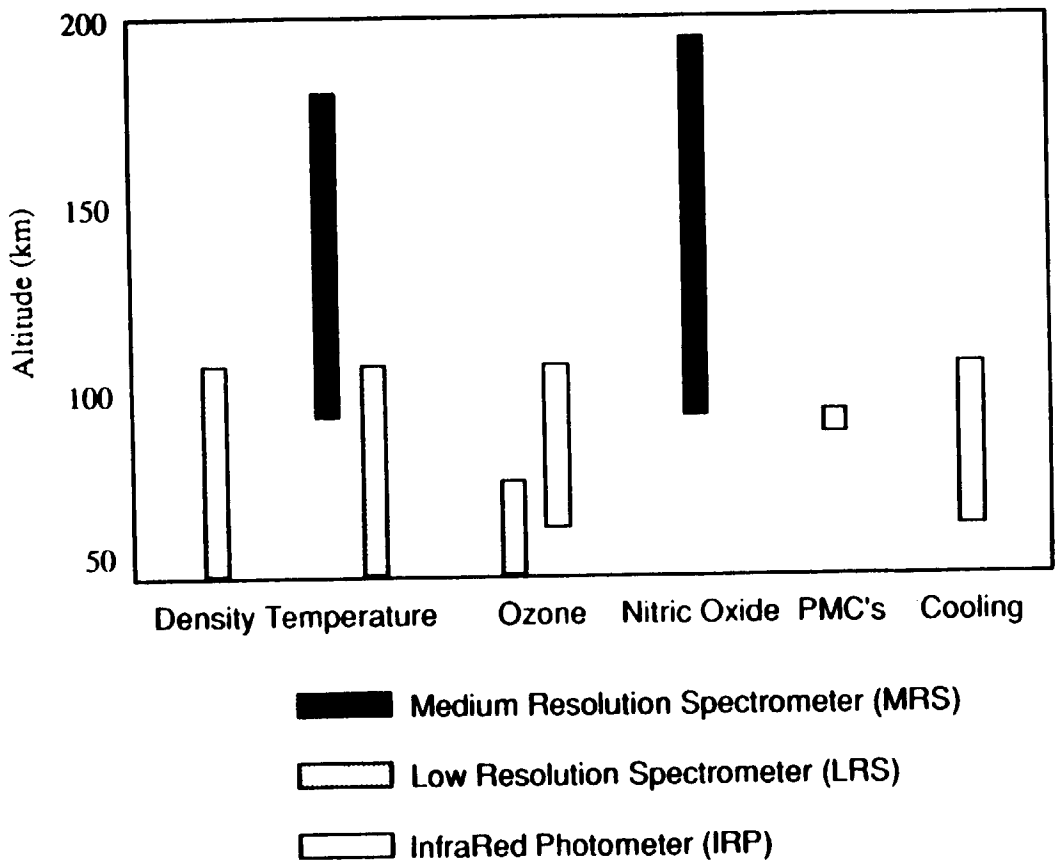

TONE LRS/IRP Development Flow Chart

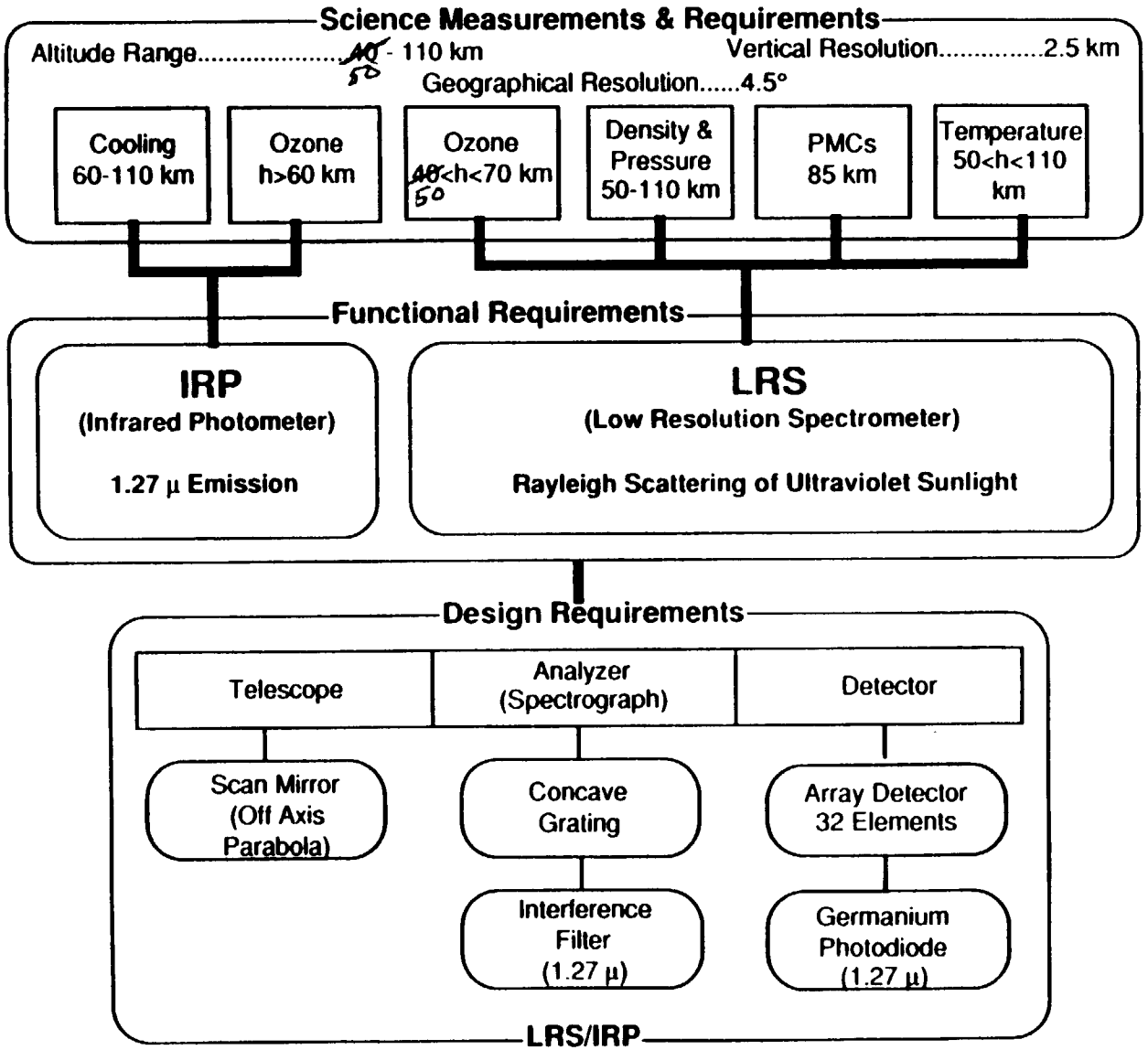

LASP

LRS Functional/Design Requirements Table

Functional Requirement		Design Requirement	
TELESCOPE			
Configuration		Single rotating mirror,	Off axis parabola
Altitude coverage	50-110 km	Angular scan range	2°
Vertical resolution	2.5 km	Step size	.036°
Vertical resolution		Jitter	0.0036°/sec
Scan time	78 sec	Bandwidth	35 Hz
Step dwell time	0.2-10 sec	Bandwidth	35 Hz
UV SPECTROMETER - DETECTOR			
Configuration	Single element	Grating type	Concave
Spectral range	240-310 nm	Photocathode	CsTe
Spectral resolution	2 nm	Array detector	32 elements
Signal to noise	50 (h> 90 km)	Detector type	MCP Multi-Anode
	100 (45km<h<90 km)	H.V. Power Supply	1-1.5 Kv
INFRARED PHOTOMETER			
Configuration	Single element	Detector type	Photodiode
Spectral range	1.27 μ	Detector material	Germanium
Spectral resolution	±0.01 μ	Filter type	Interference Filter
Signal to noise	100	Detector temperature	-30° C

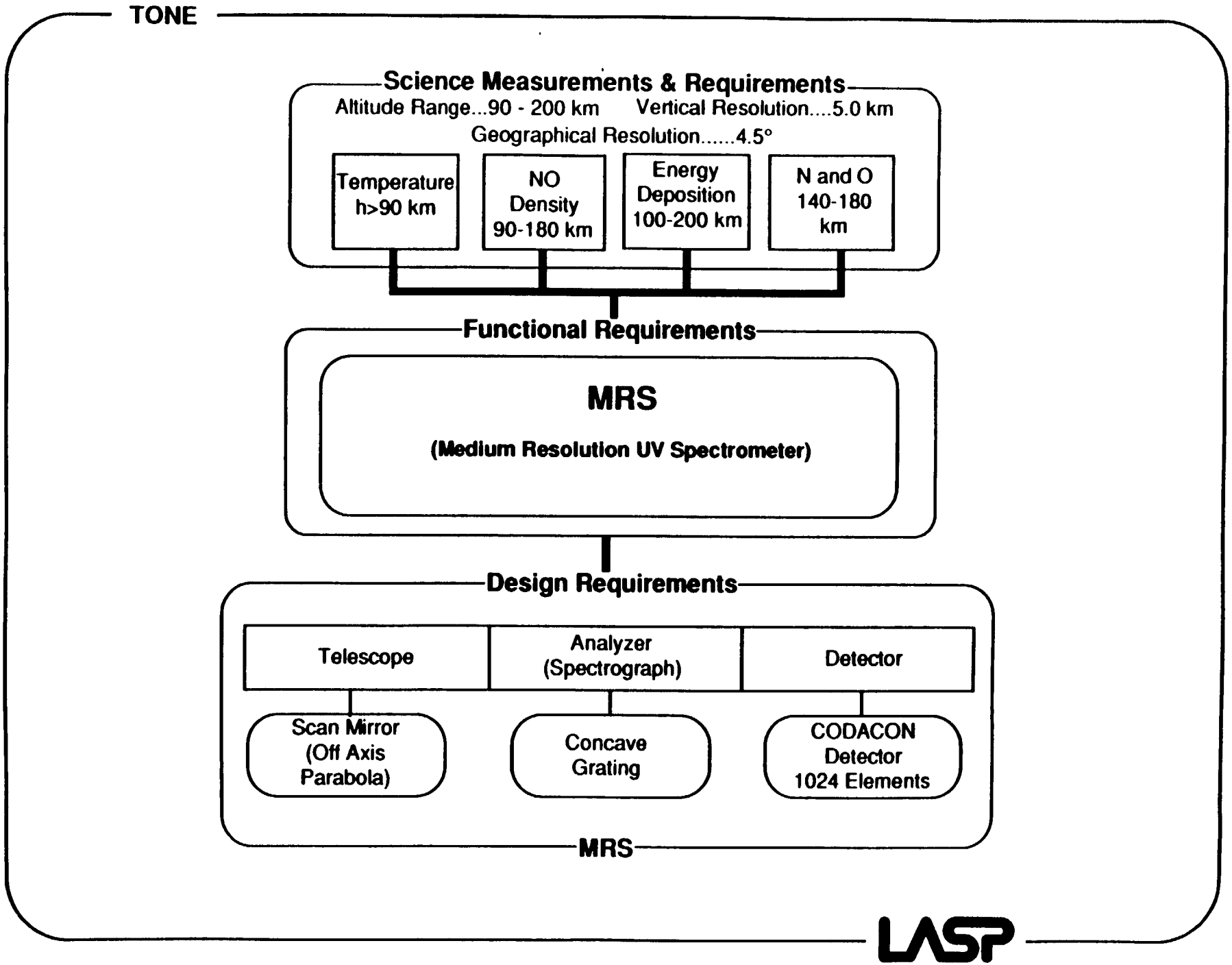
TONE
Science Measurements & Requirements
Altitude Range...90 - 200 km
Vertical Resolution....5.0 km
Geographical Resolution.....4.5°
Temperature h>90 km
NO Density 90-180 km
Energy Deposition 100-200 km
N and O 140-180 km
Functional Requirements
MRS
(Medium Resolution UV Spectrometer)
Design Requirements
Telescope
Analyzer (Spectrograph)
Detector
Scan Mirror (Off Axis Parabola)
Concave Grating
CODACON Detector 1024 Elements
MRS
LASP

MRS Functional/Design Requirements Table

Functional Requirement		Design Requirement	
TELESCOPE			
Configuration		Single tilting mirror,	Off axis parabola
Altitude coverage	90 -200 km	Angular scan range	2.0°
Vertical resolution	5.0 km	Step size	0.072°
Vertical resolution		Jitter	0.0072°
Scan time	78 sec	Bandwidth	35 Hz
Step dwell time	0.2-10 sec	Bandwidth	35 Hz
SPECTROMETER - DETECTOR			
Configuration		Single element	Concave
Spectral range	200-250 nm	Photocathode	CsTe
Spectral resolution	0.2 nm	Array detector	1024 elements
Photometric Sensitivity	500 counts/sec/kR	Detector type	MCP-CODACON
		H.V. Power Supply	2.0-2.5 Kv

TONE Original Proposal Package

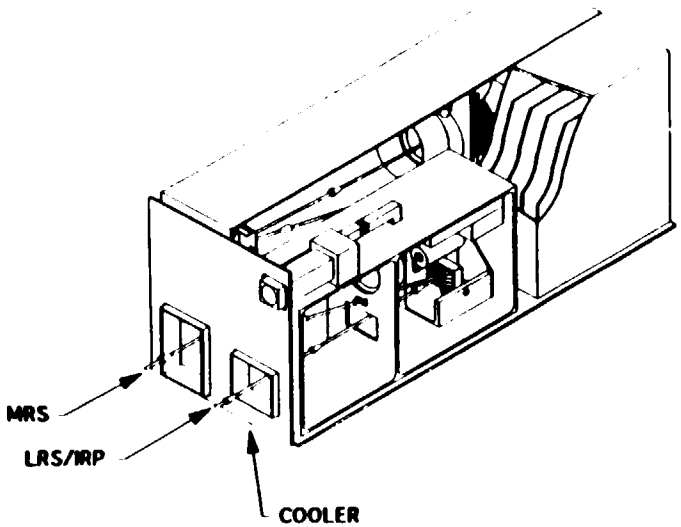

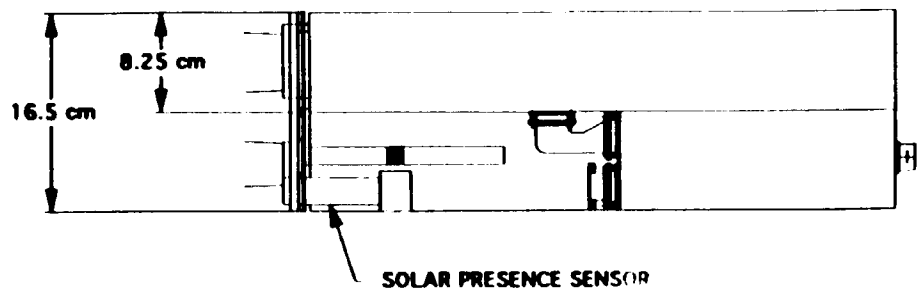

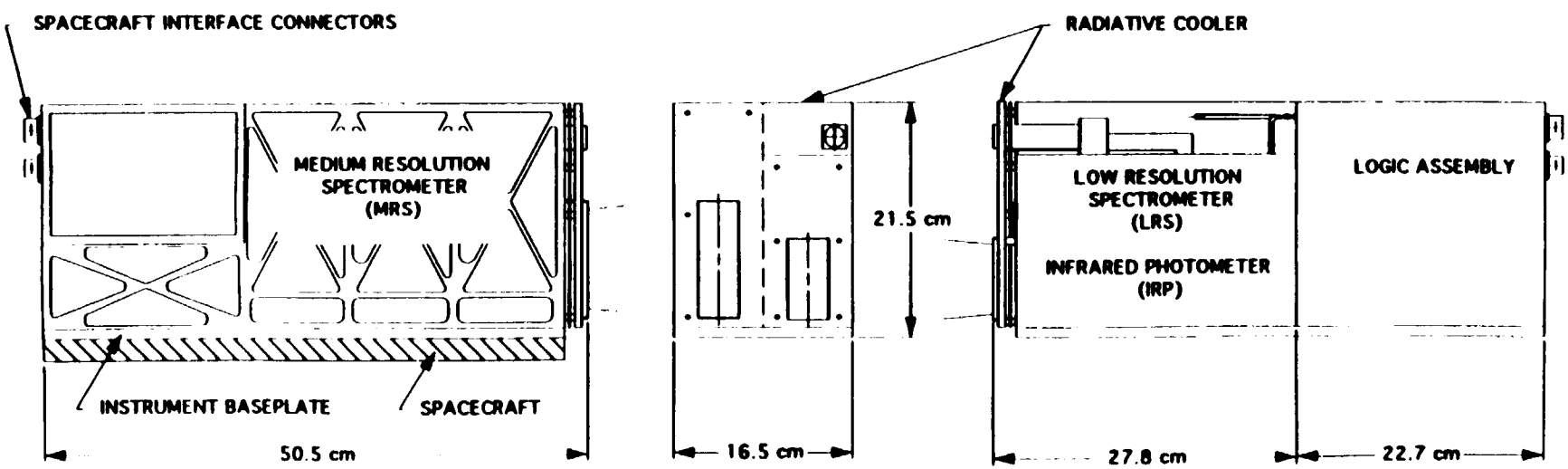

TONE LRS/IRP Channel (Original Proposal Design)

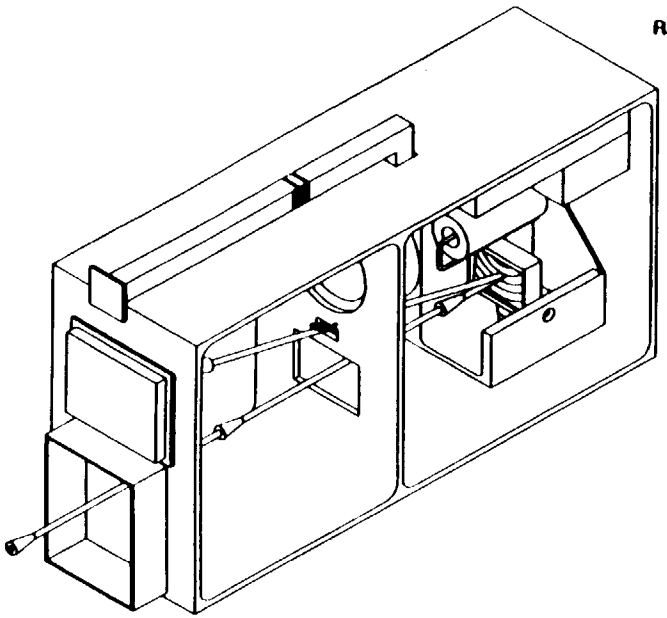

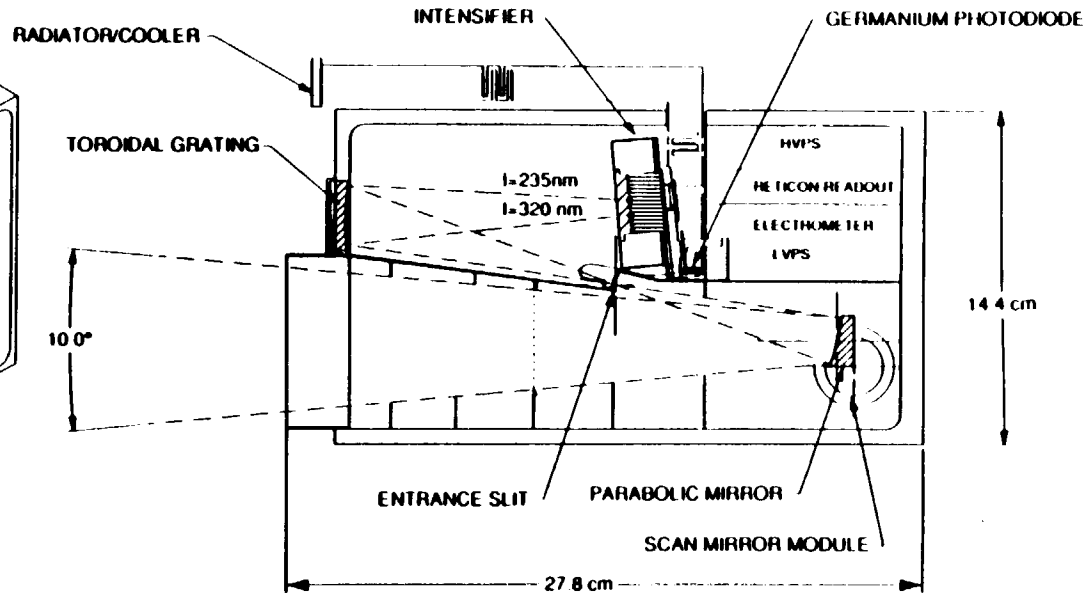

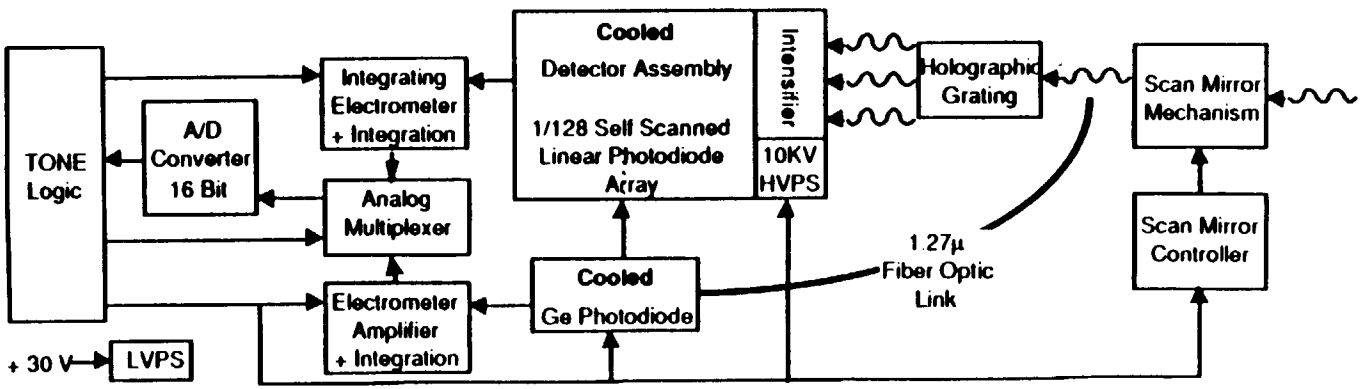

TONE MRS Channel (Original Proposal Design)

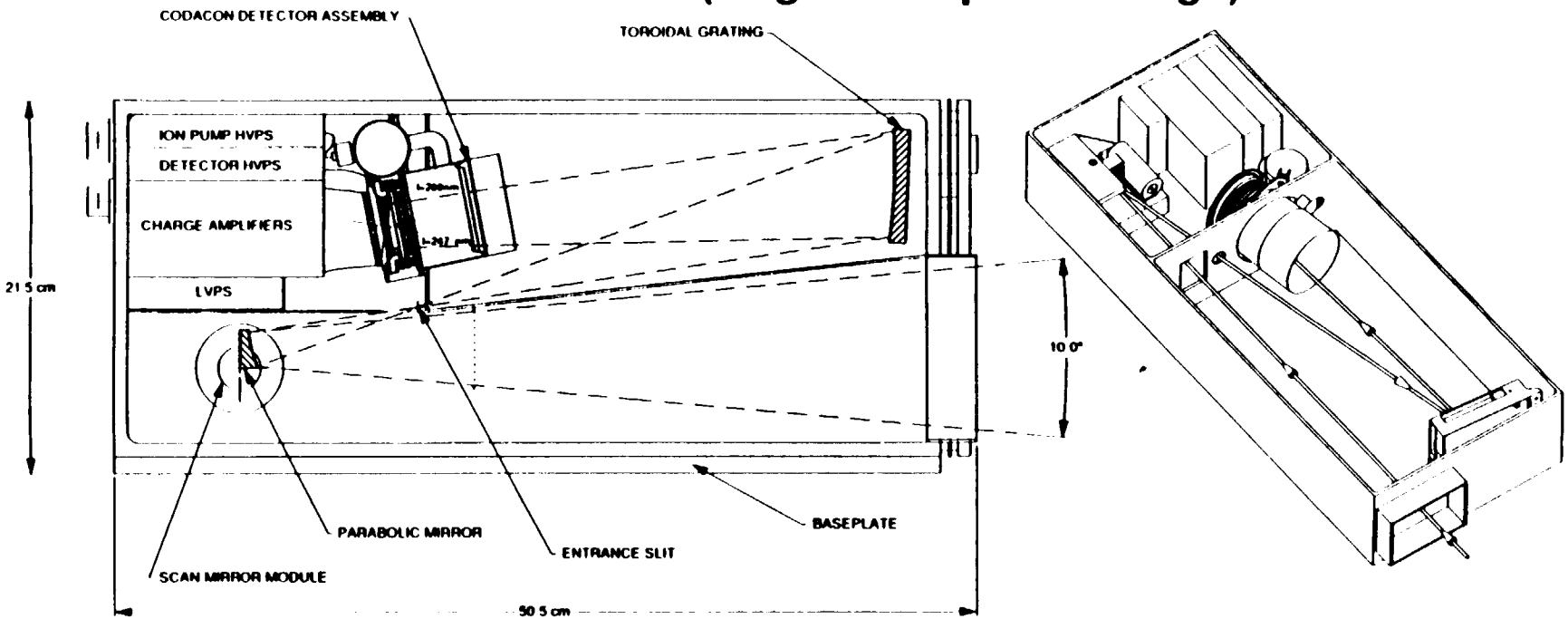

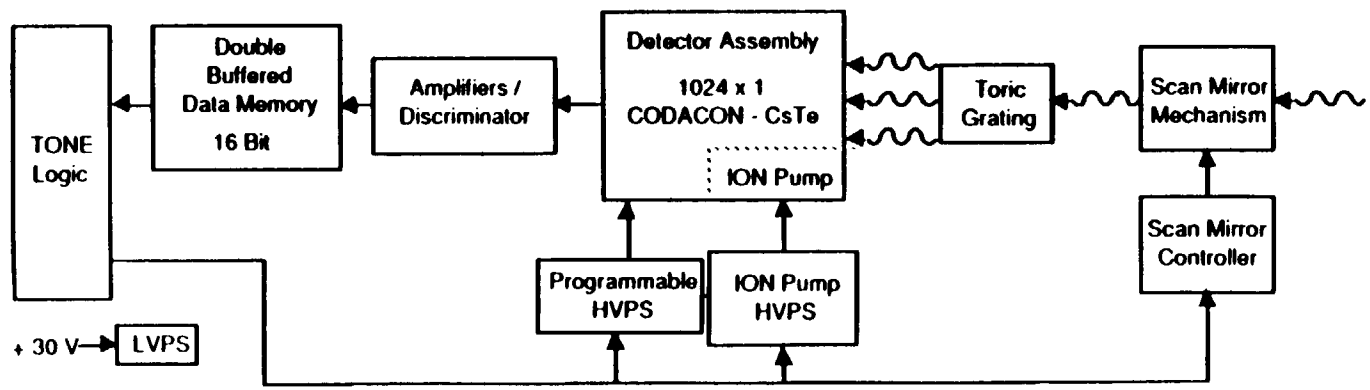

TONE Phase B Instrument Development

Goals:

- Reduction in cost (TIMED program mandate)
- Evolution of design

Design Modifications:

- Use modified Cassini UVIS package for both LRS and MRS channels
- Replace LRS 128 element array UV detector with a 32 element array

Gains:

- Utilize heritage hardware designs with "moderate" modification required
- Eliminate cooling requirements for the LRS detector
- Reduce overall design and packaging development costs

Losses:

- Continuous spectral coverage for Rayleigh scattering measurements

TONE

TONE MRS / LRS-IRP

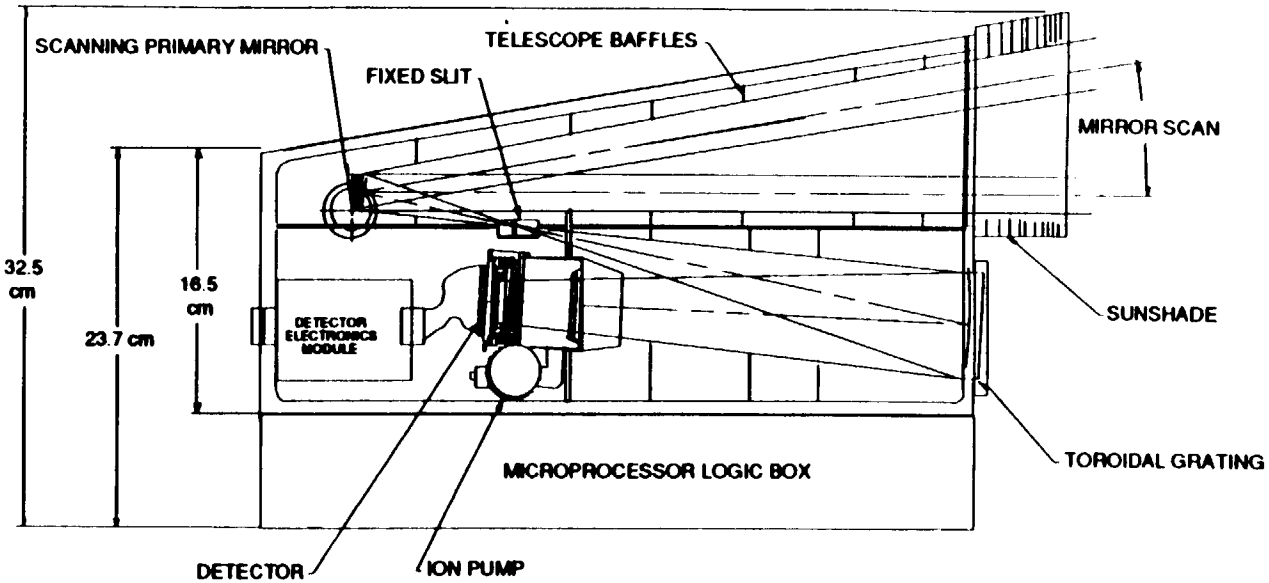

CASSINI UVIS

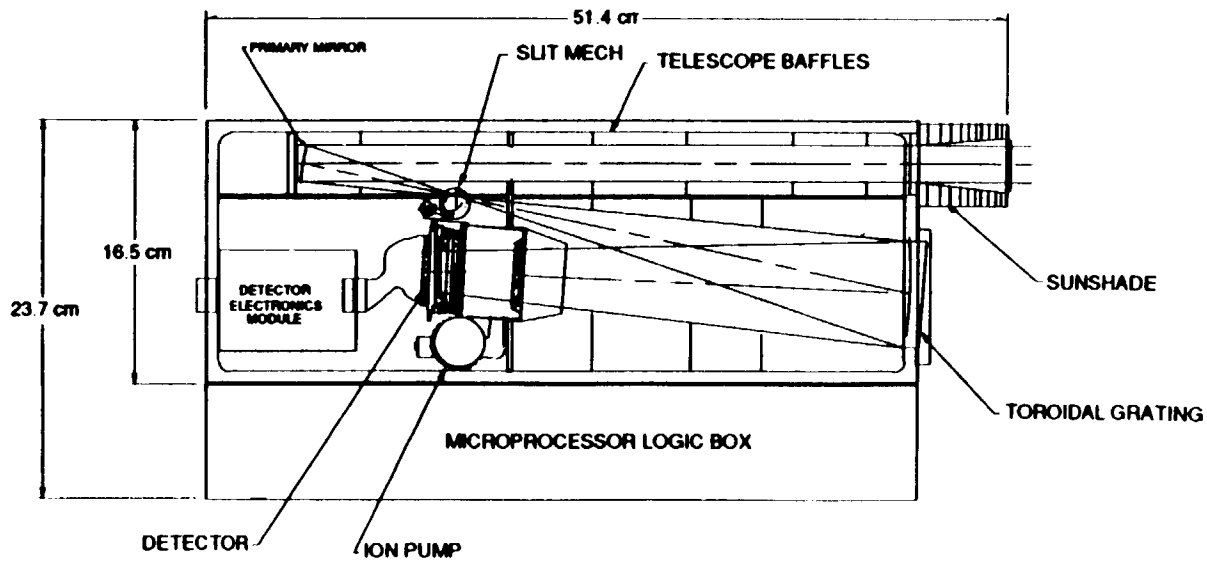

LASP

Summary of TONE Modifications and Impacts

Parameter	Original Proposal	Phase B Design
Mass (Kg)	11.1	11.6
Dimensions (cm)	50 L X 16.5 W X 21.5 H	51.5 L X 17 W X 32.5 H
Power - Avg (W)	7.2	8.9
Power - Peak (W)	12.5	14.0
Data Rate (kbs)	1.0	1.0
Pointing (°)	1.0	1.0
Knowledge (°)	0.3	0.3
Thermal	Operating Min = -20°C Operating Max = +30°C	Operating Min = -20°C Operating Max = +50°C

TONE MRS MODIFICATIONS TO CASSINI UVS

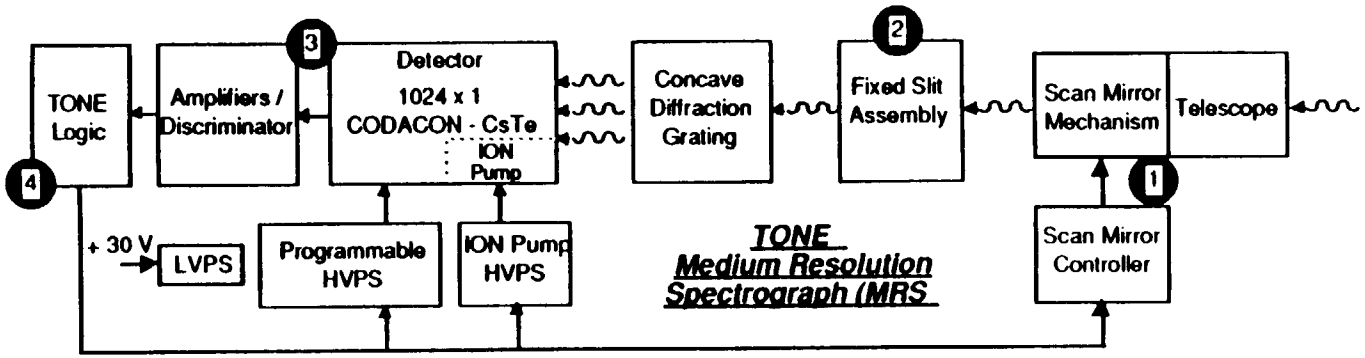

Modification 1:

•Moderate mechanical redesign of Cassini telescope to accommodate primary mirror scan mechanism and a larger aperture (this modification is required for both the MRS and LRS).

Modification 2:

•Minor mechanical redesign of Cassini telescope to replace slit selector mechanism with a fixed slit assembly (this modification is required for both the MRS and LRS).

Modification 3:

•Simplification of the detector electronics to accomodate TONE one-dimensional detector instead of the Cassini 2-dimensional detector.

Modification 4:

•Simplification of Cassini logic design to use TONE logic as defined in the original proposal.

TONE LRS MODIFICATIONS TO CASSINI UVS

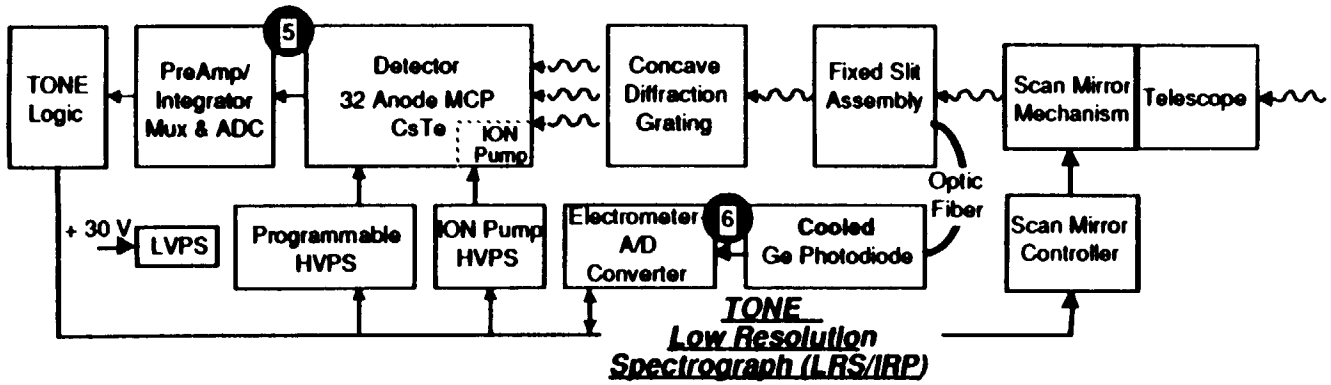

Modification 5:

•Minor modicfication of primary detector assembly. The LRS channel is mechanically the same as the MRS and Cassini CODACON packages; internal electronics are simplified from original proposal.

Modification 6:

•Moderate modification to the Cassini spectrometer housing design to accommodate 1.27μ detector assembly.

TONE

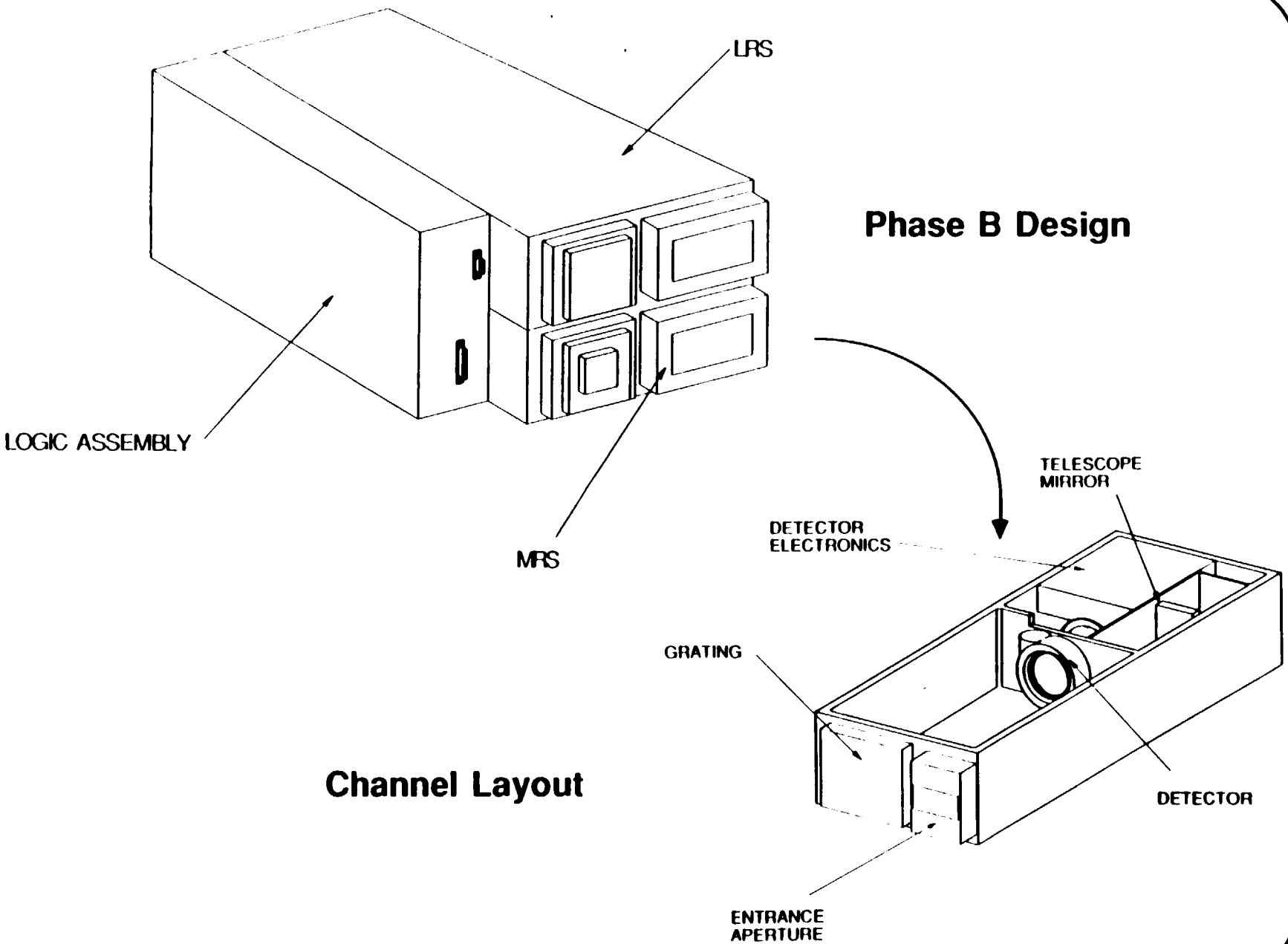

Phase B Design

Channel Layout

LASP

TONE Laboratory Calibration

TONE CALIBRATION SUMMARY

Parameter	Accuracy
Absolute sensitivity	5% LRS UV Channel 5% LRS VIS Channel 10% LRS IR Channel 15% MRS Channel
Detector linearity	1% all detectors
Telescope scattered light	10% up to 5° off axis
Spectrometer scattered light	10%
Polarization	2%
Wavelength scale	10% of bandpass
Scan mirror position	0.1% full scale (better than 0.1 km on the limb)

ABSOLUTE SENSITIVITY STANDARDS

Standard	Wavelength Range	Accuracy
NBS FEL Lamp	250 nm–2500 nm	3%
Deuterium Lamp	200 nm–350 nm	7.5%

TONE Flight Calibration

Wavelength scale

Verify wavelength by observation of known spectral features.

Absolute sensitivity

Based on the SME experience both the LRS Vis and IR detectors are expected to remain stable over the entire TIMED mission.

Both the LRS and MRS UV Channels have high gain microchannel plate detectors. Based on the SME experience these channels may degrade in sensitivity at a rate of 1-2 %/year.

Compare LRS UV and Vis Channel outputs.

Method of Instrument Acquisition

•All instrument development work will be performed "in house" at LASP's Engineering and Operations/Systems Divisions with the following exceptions:

- Manufacturing of optical elements
- Manufacturing of portions of the detector assemblies
- Vibration and shock testing
- EMI/EMC testing and magnetic mapping

LASP HERITAGE

SPACE FLIGHT QUALIFIED INSTRUMENTS

Development of sounding rocket instrumentation since the late 1940s

Development of satellite instrumentation since the late 1960s

Instrumentation developed includes:

- Telescopes - Baffles and optics
- Optical Systems - Spectrometers and photometers
- Detector systems - Photomulitiplier, micro channel plate and solid state, covering wavelength ranging from XUV to 1.27μ
- Electrical Systems - Discrete and microprocessor based logic, low noise - wide bandwidth preamplifiers and PADs, mechanism controllers and drivers
- Power converters - Isolated low and high voltage power converters - both synchronized and unsynchronized
- Mechanical systems - Instrument structures, baffle systems, complex optical systems
- Mechanisms - Closed loop and open loop mechanisms to control diffraction grating drives, slit changers, telescope mirrors and doors

Numerous rocket instruments have provided valuable test beds for future satellite instrument development

LASP Heritage

S/C	Instrument	Telescope	Mechanisms	Optical System	Detector
Mariner - Mars	UVS	Off-Axis Gregorian	Cam Grating Drive	Ebert - Fastie	EMR PMT
OSO VIII	UVS	Cassegrain	Lead screw grating drive w/ stepper motor, Filter & Slit Drives	Ebert - Fastie	EMR PMT
Pioneer Venus	UVS	Cassegrain	Optically Encoded Grating Drive	Ebert - Fastie	EMR PMT
Voyager	PPS	Cassegrain	Stepper motor Filter wheel	Filter Photometer	EMR PMT
Solar Mesosphere Explorer (SME)	Solar	Off-Axis Parabola	Optically Encoded Grating Drive	Ebert - Fastie	EMR PMT
SME	NIRS	Off-Axis Parabola	Optically Encoded Grating Drive, Tuning Fork Chopper	Ebert - Fastie	PbS - cooled using passive radiating surface
SME	UV	Off-Axis Parabola	Optically Encoded Grating Drive	Ebert - Fastie	EMR PMT
SME	VIS	Off-Axis Parabola	Optically Encoded Grating Drive	Ebert - Fastie	EMR PMT, Silicon Photodiode

LASP Heritage

S/C	Instrument	Telescope	Mechanisms	Optical System	Detector
UARS	Solstice	Off-Axis Parabola	Optically Encoded Grating Drive, Pyro Doors, Two Slit Changers	Plane Grating Spectrometer	EMR PMT (3 Each)
Galileo	UVS	Cassegrain	Optically Encoded Grating Drive, Pyro Door	Ebert - Fastie	EMR PMT
Pathfinder	UVS	Cassegrain	Optically Encoded Grating Drive, Pyro Door, 2-Axis Gimbal Mirror	Ebert - Fastie	Codacon, Quad MCP Detector (for image position feedback)
Polar	PPA			Parallel Plate Analyzer	Codacon (2 each)
Cassini	UVIS	Off-Axis Parabola	Two Slit Changers, Solar Occultation Mirror	Concave Grating Spectrometer, High Speed Photometer	Codacon (2 each), Hamamatsu PMT

TONE Heritage and Technology Risk

Comparison of TONE instrumentation with other LASP instruments

LRS and MRS instruments and optics from Cassini UVIS

Scanning mirrors use sensor and control technology similar to Pathfinder instrument and Planetary and Astronomy rockets

MRS CODACON detectors and electronics from Pathfinder, Polar and CASSINI instruments

LRS multianode MCP detector and electronics from UV Aurora Rocket instrument and from CODACON based instruments

IRP photodiode detector and electronics from SME VIS and NIRS spectrometers

IRP thermo-electric cooling from UVIP Rocket instrument or radiative patch from SME NIRS

Instrument microprocessor and logic from Galileo, UARS and Cassini instruments

TONE Instruments are not dependent upon any new or untried technologies

Technology risk is low - instruments and electronics similar to other LASP instruments

Environmental Design and Testing

Instrument environment driven by spacecraft and mission parameters

Thermal and radiation environments and mission lifetime affect instrument design requirements

- Total integrated radiation dose ≤ 100Krad typical
- -35°C to +55°C operating qualification test limits for Cassini UVIS

Spacecraft electromagnetic cleanliness requirements affect instrument EMI/EMC design

- Design of instrumentation meeting subset of MIL-STD-461 is typical

Testing

Optical calibration and test performed at LASP in ambient temperature and pressure or thermal vacuum test facilities

Thermal vacuum testing performed at LASP in cryo - pumped test chambers

EMI/EMC testing contracted out - typically BASD

Vibration testing contracted out - typically BASD

Reliability and Quality Assurance

Electrical, Electronic and Electromechanical (EEE) parts

MIL-STD-975, Goddard PPL and JPL IPL used for parts selection

MIL-STD-975, Appendix A used for parts stress derating

Nonstandard parts screening using outside contractors

Radiation requirements tailored to mission requirements - RDM of 2 applied

Electronics worst case design assumes radiation, temperature and aging effects and applies suitable margins

Structures

Margins on loads and factors of safety ≥ 2

Selection of materials for structural integrity, materials compatibility and contamination control

Mechanisms

Follow requirements and guidelines from MIL-A-83577 – General Specification for Moving Mechanical Assemblies for Space and Launch Vehicles

Conservative margins set for structures, torque and control loop parameters

Software Development Requirements

- Accept, verify, & execute commands
  - HV level settings
  - Integration periods
  - Mirror position/sequences
- Control TONE instrument during observation sequences
- Sample science and housekeeping data
- Format data for delivery to the spacecraft

Software Development Methodology

- Computer aided software engineering (CASE) tools are used during software development for tracking and managing software programs
- All software developed using a high level language (typically ADA or C)
- Space or speed critical code written in structured assembly language
- Flight code test procedures and testing is done by software engineers not involved in the development of the code

TONE Requirements On Orbital Parameters And Spacecraft Subsystems

Orbital Parameters: No Special Requirements

Spacecraft Accommodation:

Dimensions (cm):	51.5 L x 17 W x 32.5 H
Mass:	11.6 kg
Power:	8.9 watts
Data Rate:	1 kbs
Thermal:	-20°C - +50°C operating
Field of View:	Prefer 2π steradian clear FOV. (No sun glint from spacecraft or other instruments.)
Viewing Direction:	Instrument points down 17° (depedant on S/C altitude). Azimuth angle flexible.
Pointing Requirements:	
Accuracy †	± 0.3°
Knowledge †	± 0.3°
Stability ††	< 0.06° (3σ) during a 78 sec altitude scan

† Nominal requirement. TONE calibration facilitates retrieval of pressure altitude with an accuracy of 0.03°.

†† Present instrument baseline is a 2.4 sec average integration period and a 78 sec altitude scan. TONE can accommodate shorter integration periods and scan times. Decreased stability can be accommodated by either decreased scan times or after the fact knowledge.

TONE Measurement Strategy

- Primary measurements are during daytime.
- Nominal 67% duty cycle to include twilight.
- Selected secondary measurements during night as required by mission goals.
- Reduce duty cycle as required to meet mission constraints.

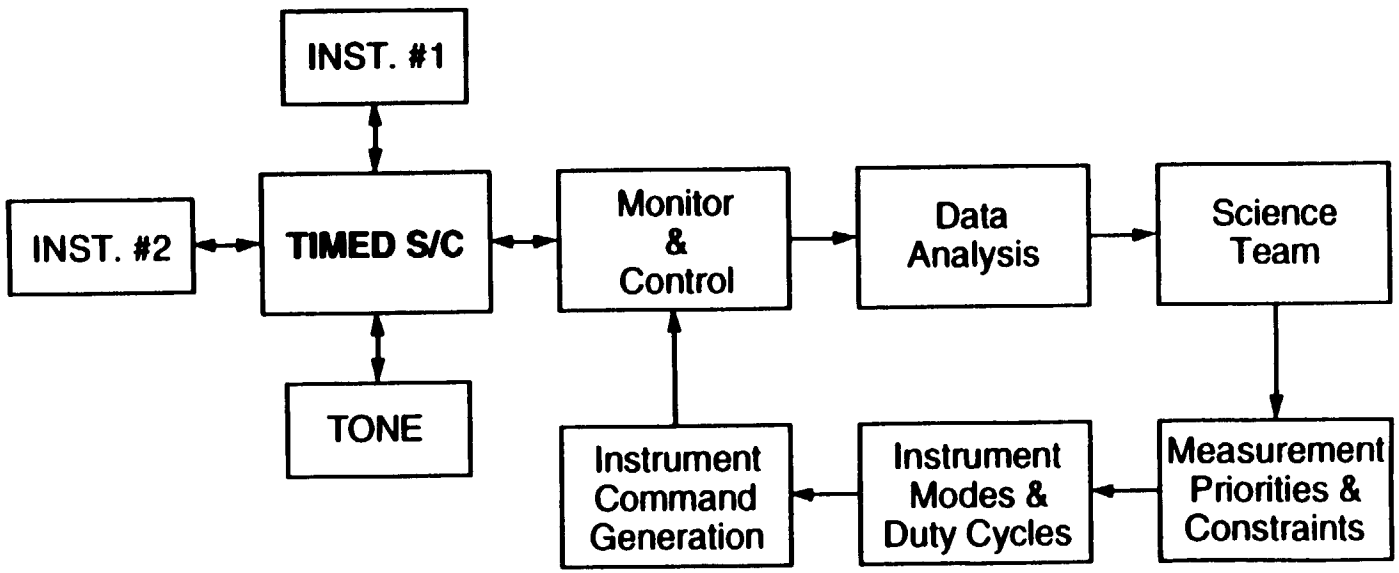

Science Data Center

Data Flow

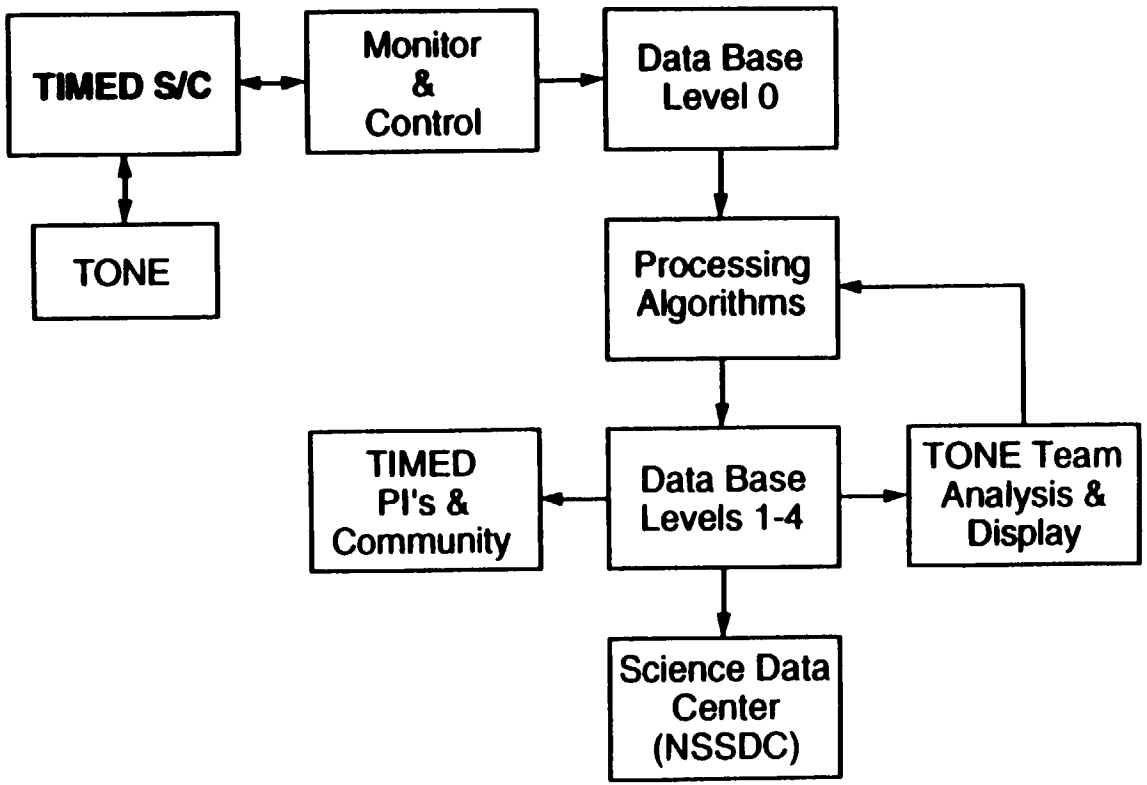

LRS/IRP Ozone, Temperature, and Density Measurements

1. Ozone (LRS, 50–70 km altitude)

- UV measurements of Hartley band absorption of Rayleigh scattered sunlight on limb.
- Self-calibrated retrievals of the ozone slant column density versus tangent height.
- Measurement technique demonstrated by SME UVS [Rusch et al., JGR 89, 11677, 1984].

2. Ozone (IRP, 60–110 km altitude)

- IR Measurement of O_2 ($^1\Delta_g$) 1.27 μm emission on limb; a direct product of ozone photolysis.
- Inference of slant column ozone density based upon simple O_2 ($^1\Delta_g$) photochemistry.
- Measurement technique demonstrated by SME NIRS [Thomas, JGR 95, 16457, 1990].

3. Density (LRS, 50–110 km altitude)

- UV measurement of Rayleigh scattered sunlight at wavelengths where absorption is negligible.
- Slant column density derived from molecular scattering, based on absolute calibration.
- Measurement technique demonstrated by SME UVS [Rusch et al., JGR 89, 11677, 1984].

4. Temperature (LRS, 50–110 km altitude)

- Vertical integration of derived density profile yields atmospheric pressure profile.
- Vertical differentiation of pressure profile yields atmospheric temperature profile.
- This technique is independent of the radiance absolute calibration.
- Measurement technique demonstrated by SME UVS [Clancy & Rusch, JGR 94, 3377, 1989].

MRS Nitric Oxide and Temperature Measurements

1. Nitric Oxide measurement (MRS, 90–200 km)

- UV measurement of NO gamma band system resonant florescence on limb.
- Slant column density derived from excitation g-factors, based on absolute calibration.
- Slant column density verified by comparison of bands, independent of absolute calibration.
- Density profiles obtained by geometric inversion of slant column density.
- Measurement technique demonstrated by SME UVS and numerous rocket flights [e.g., Barth et al., GRL, 15, 92, 1988; Eparvier & Barth, JGR 97, 13723, 1992].

2. Temperature measurement (MRS, 90–180 km)

- UV measurement of NO gamma band system resonant florescence on limb.
- Rotational shape of bands is determined by thermospheric temperature.
- Geometric inversion and synthetic spectral model used in temperature profile retrieval.
- Measurement technique demonstrated by recent rocket flights [Barth & Eparvier, JGR 98, 9437, 1993].

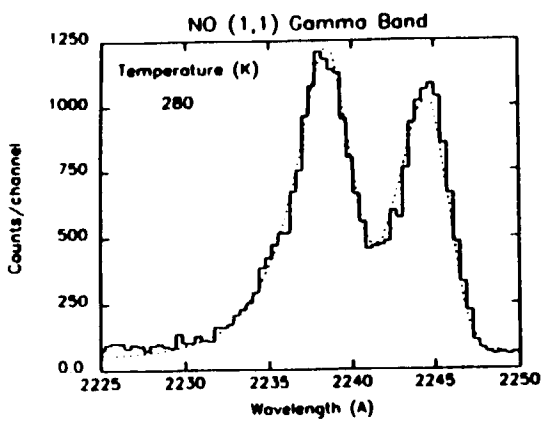

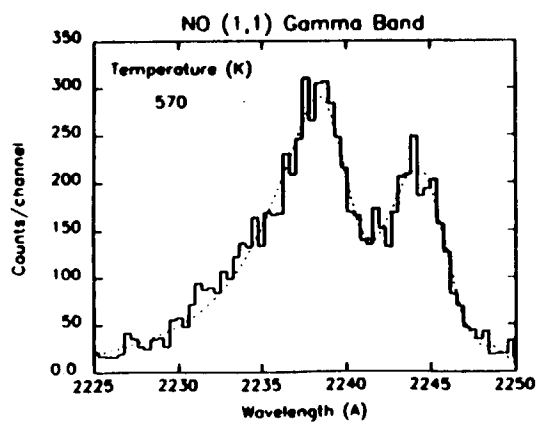

TONE Development Schedule

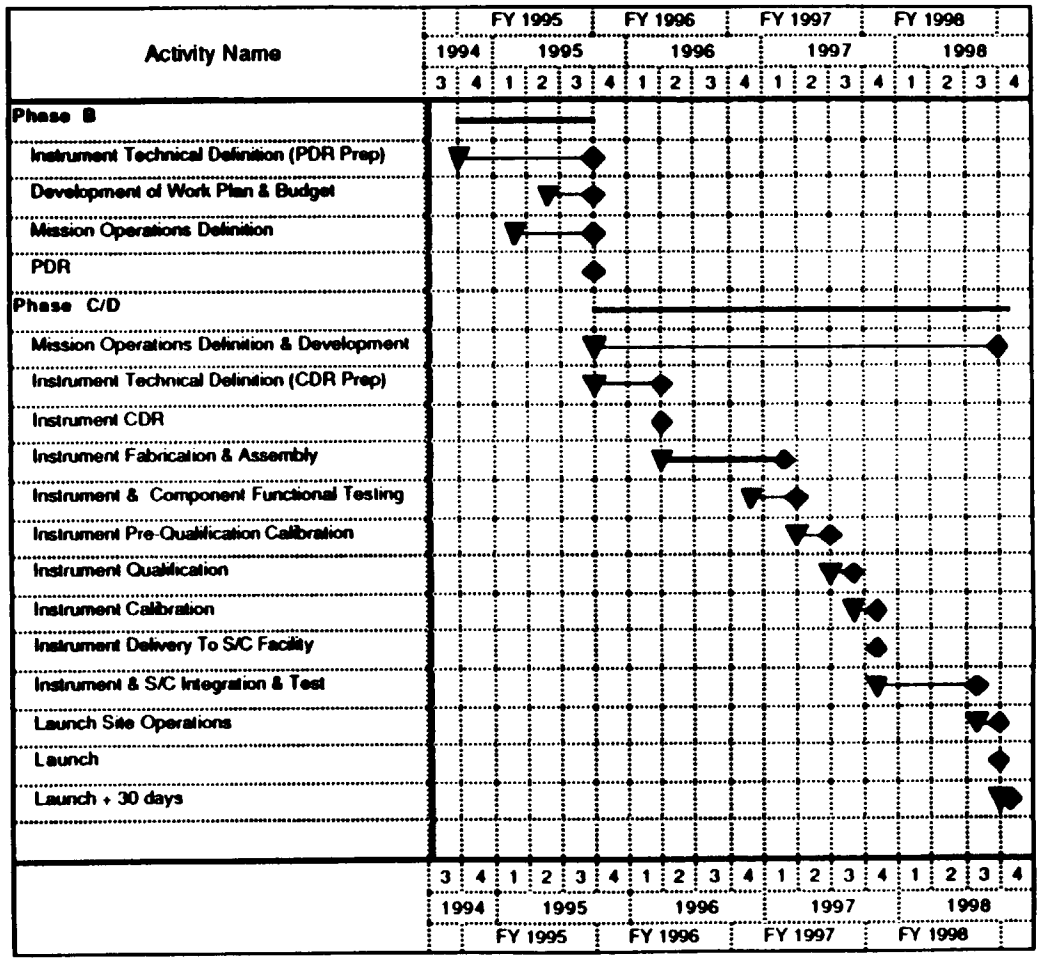

TONE COST SUMMARY

Cost Element	Proposal 4.5 Year Development (FY 94 K$)	Descope (3 Year Development) (FY 94 K$)
Management	694.1	$463.0
Science Support	959.6	640.0
Instrument Development	3767.3	2664.6
~~Qualification~~/I & T	125.5	125.5
MO & DA	706.7	530.1
Travel	185.1	123.5
Other Administrative	251.2	118.2
Total	6689.5	4664.9

Instrument Development Breakdown:

MRS	1115.0	690.1
LRS	864.3	516.4
IRP	377.2	285.8
Microprocessor/Logic	576.9	576.9
GSE	306.8	306.8
System Design	527.1	288.6
Total	3767.3	2664.6

TONE Fiscal Year Cost Breakdown

Phase B

Cost Element	FY 95 (FY 94 K$)	FY 96 (FY 94 K$)	FY 97 (FY 94 K$)	FY 98 (FY 94 K$)	Total (FY 94 K$)
Management	115.7				115.7
Science Support	160.0				160.0
Instrument Development	351.6				351.6
Qualification/I & T					
MO & DA	79.5				79.5
Travel	12.3				12.3
Other Administrative	18.7				18.7
Total	737.8				737.8

Phase C/D

Cost Element	FY 95 (FY 94 K$)	FY 96 (FY 94 K$)	FY 97 (FY 94 K$)	FY 98 (FY 94 K$)	Total (FY 94 K$)
Management		115.7	115.8	115.8	347.3
Science Support		160	160	160	480.0
Instrument Development		1170.2	964.2	178.6	2313.0
Qualification/I & T				125.5	125.5
MO & DA		132.6	159	159	450.6
Travel		12.4	49.4	49.4	111.2
Other Administrative		41.4	37.7	20.5	99.6
Total		1632.3	1486.1	808.8	3927.2

Basis For TONE Cost Estimates

Major Contributors To Cost Reduction

- Reduction in instrument development period from 4.5 years to 3 years
- Use of heritage instrument design (Cassini UVS) to reduce design costs
- Presumed reduction in documentation and RA/QA requirements
- Use heritage LASP detector in LRS channel instead newer technology procurement

Basis For Cost Estimates

- When using heritage based hardware, cost figures represent current year estimates of requirements to reproduce or modify those heritage designs
- With new hardware development, engineering estimates are checked against previously developed hardware with the closest similarity to the proposed development