MMC-ET-SE05-446 | Annual Report | September 1992

Spray on Foam Insulation (SOFI)
Process Improvements

TD 3.6.2.1-675R9

M. M. Wallo
Senior Group Engineer, APT

R. A. Meyer
Manager, APT

Martin Marietta
Manned Space Systems
P.O. Box 29304
New Orleans, LA 70189

FOREWORD

This annual report describes the purpose, approach and progress of Technical Directive 675, SOFI Process Improvements for Fiscal year 1992. This project consisted of the fabrication of prototype SOFI spray delivery system hardware to be tested in FY 1993 prior to production implementation. This year's effort continued development work done under TD 675 during FYs 1988 thru 1991, and TD 262 during FY 1988.

CONTENTS

SECTION PAGE

Acknowledgements....1
Executive Summary....2
Glossary of Acronyms....4
Introduction....5
Conclusions/Recommendations....11

Development Results
VOP Prototype....14
LH2 Aft Dome Spray Simulations....19
TPV Gun....23
SOFI Process Model....41
CVIM/Vision system spray evaluation....59

Appendices
Appendix A - VOP Specification
Appendix B - LH2 Aft Dome Spray Simulation Supporting Data
Appendix C - TPV Gun Drawings/Requirements
Appendix D - SOFI Process Model Supporting Data

ACKNOWLEDGEMENTS

The author wishes to acknowledge the support of the employees of Martin Marietta Manned Space Systems at the Michoud Assembly Facility and Huntsville Operations; especially Joe Walls, Peter Allen, David Cooper, Mike Gibbons, Gene Golden, Joe Simpson, Mike McGehee, Son Nguyen, Jeffrey Gray, Gerry Scott, Donna Hutson, Dave Buras, Jim Moring, Huel Chandler, Joe Bradley, Michael Javery and Dick Poticher.

EXECUTIVE SUMMARY

This report details the development results concerning the new SOFI proportioner(VOP) and spray gun(TPV) prototypes designed and fabricated during Fiscal Year 1992. In addition it describes the SOFI process model refinement and vision system development to be used for improved spray parameter predictions and in-process evaluations, respectively.

A new variable output SOFI proportioner was specified for prototype fabrication. This prototype is a scaled-down version of the VOPS testbed at MSFC built under this task in prior years. The prototype unit was designed to specifically fit into the MAF production tooling, while having selected hardware options which require further testing prior to final definition of the actual configuration of the production unit. This prototype was designed and fabricated by the Edge-Sweets Co. and will be tested extensively in FY 1993.

The spray gun selected for prototype build was the TPV gun which was developed at MAF under this task in previous years. This gun concept was selected over other developments(Turret Gun, Variable Output Gun) for reasons of reliability of operation, cost, performance and system adaptability. The prototype was designed as a 2 gun unit with weedwacker for gun switch testing in variable output applications(LO2 tank, LH2 aft dome and LH2 barrel) and duration performance. This prototype unit was designed in-house and was fabricated through a combination of MAF and subcontractor resources. It will be tested extensively with the VOP in FY 1993.

The SOFI process model was developed and refined during FY 1992. The model relates the SOFI requirements of thickness and density to the process parameters of output, surface speed, hoist rate, spray fan pattern and gun-to-tank distance. This quantified model was expanded in range and exhibits excellent prediction/specification of spray process parameters for a desired thickness and density. This model will be completed in FY 1993 with the TPV gun and will serve to eliminate development sprays during production implementation.

To improve in-process evaluation of the as-sprayed SOFI and the spray pattern; optical vision and computer aided vision(CVIM) methods were investigated for their feasibility in providing this function. The optical vision system was merely a camera installed on the spray carriage for observing the as-sprayed SOFI surface. This provide a real time evaluation of the SOFI surface roughness, crevicing and rollover. The CVIM method was applied to the spray pattern and utilized computer enhanced color contrasting to quantify the pattern distribution and any changes in a real time mode. Both methods proved to significantly improve in-process evaluation and will be further developed under PT 2112 in FY 1993.

GLOSSARY OF ACRONYMS

AMT	Advanced Manufacturing Technology
Binks 43PA	Currently used SOFI automatic spray gun
BV1	Ball Valve spray gun - Version 1
BV2	Ball Valve spray gun - Version 2
BVSG	Ball Valve Spray Gun
CFC	Chlorofluorocarbons
CPR	Chemical Products Research - DOW SOFI
CPU	Central Processing Unit
EPA	Environmental Protection Agency
FLOW 3D	Computational Fluid Dynamics Program-FlowAnalysis
FY	Fiscal Year
GOX	Gaseous Oxygen
HCFC	Hydrochlorofluorocarbon
I/T	Intertank
LH2	Liquid Hydrogen
LO2	Liquid Oxygen
MAF	Michoud Assembly Facility
MAFSG	Modular Automatic Foam Spray Gun
MNSH	Multi-nozzle Spray Head
MSFC	Marshall Space Flight Center
NCFI	North Carolina Foam Industries
NDE	Non-Destructive Evaluation
PCF	Pounds per Cubic Foot
PCOP	Programmable Constant Output Proportioner
PDA	Process Development Advisor
PHOENICS Easy Flow	Computational Fluid Dynamics Program-FlowAnalysis
PLC	Programmable Logic Controller
QFD	Quality Function Deployment
RIM	Reaction Injection Molding
SOFI	Spray On Foam Insulation
SPC	Statistical Process Control
TD	Technical Directive
TPS	Thermal Protection System
TPSIT	Thermal Protection System Improvement Team
TPV Gun	Tapered Plug Valve Spray Gun
TQM	Total Quality Management
TT	Turntable
VOG	Variable Output Gun
VOP	Variable Output Proportioner
VOPS	Variable Output Pumping System
WW	Weed wacker

INTRODUCTION

This report details the progress made under TD 675 during fiscal year 1992. This introductory section will describe the background(purpose) and approach used to meet this year's objectives. Conclusions and Recommendations will be detailed in the following section with detailed task discussions to complete this report.

BACKGROUND

This TD was first initiated in 1987 as a five year study/development effort to provide the technology necessary to improve the automatic SOFI spray operations in the VAB spray cells. A schematic of the present SOFI spray system is displayed in Figure 1. The improvement development directions have been focused toward improving system reliability and improving the thickness and density control of the applied SOFI, which is responsible for the majority of spray rework efforts. As a result of system needs analyses, the hardware development focus has been placed on the proportioning and spray gun subsystems. In addition the control system(hardware and software) has also required significant improvement by incorporating a distributed control approach as detailed in the TD 724 Final report - MMC-ET-SE05-420. Figure 2 shows the direction and focus of these efforts for improvement of the system; which when integrated with the distributed processing approach of TD 724 gives a future SOFI spray system configuration as shown in Figure 3. This future system will provide improvements in the reliability and capabilities of the SOFI spray process with respect to abort reduction, spray consistency over duration, variable output capability and as-sprayed SOFI performance feedback for in-process adaptive capability. The plans for implementation of the system are currently during the 1994 - 1996 time frame.

APPROACH

The approach to meeting the objectives in 1992 was to continue the SOFI delivery system development by designing and fabricating the prototype variable output proportioner and TPV spray guns. To facilitate these efforts support was provided from Systems Engineering, Reliability Engineering, Test Operations Engineering, Materials Engineering and Production Operations. In addition SOFI process model development and simulations

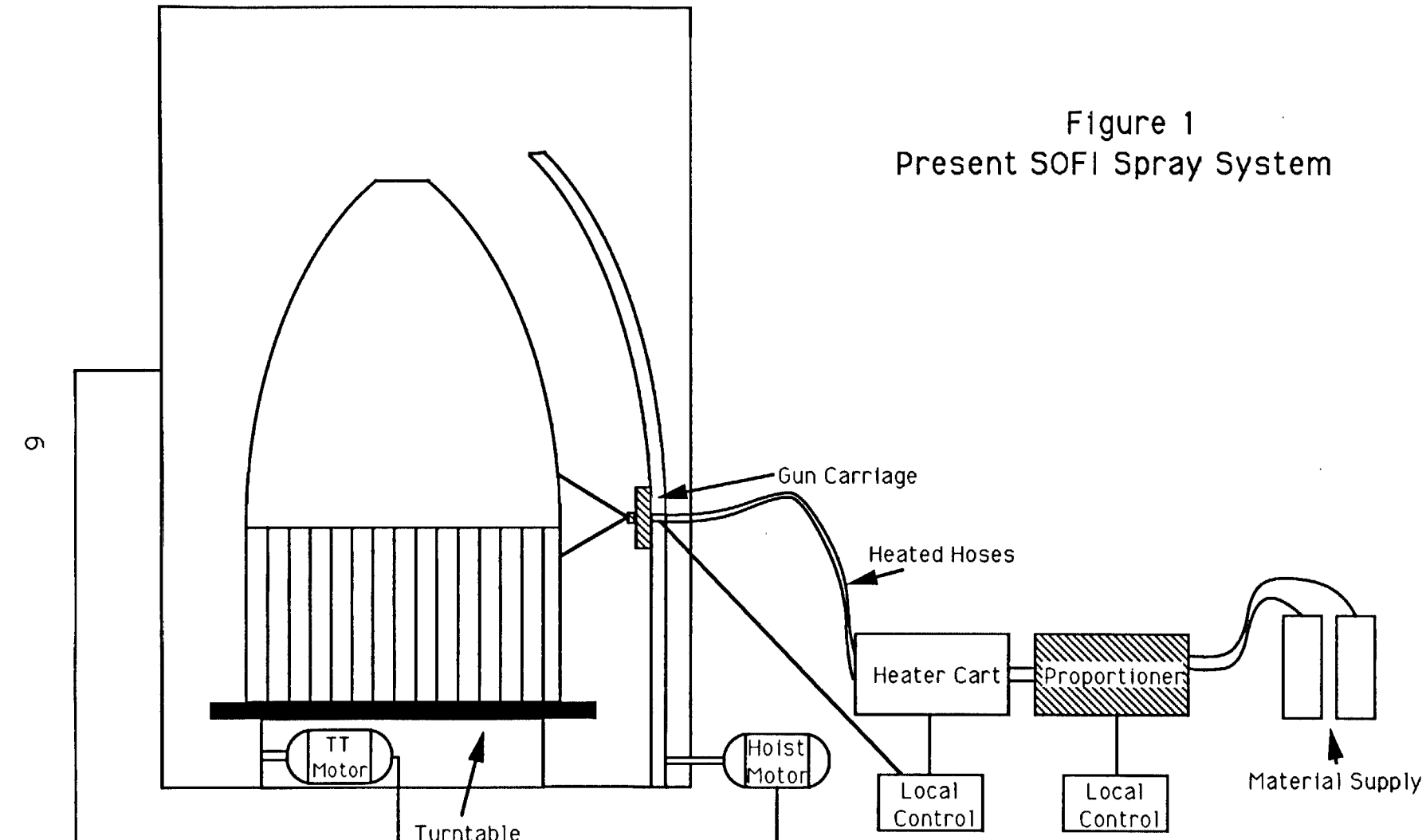

Figure 1
Present SOFI Spray System

Figure 2 - TD 675 Objective

PRESENT

- **Proportioner**
  - -Unstable Flow
  - -Fixed Output
- **Spray Gun**
  - -Unreliable Operation
  - -Inconsistent Fan Pattern
  - -Fixed Output
- **Control System**
  - -Independent Control centers
  - -Cell computer controls motion only, logs spray data
  - -Motion control is position feedback based; speed varies

Improve SOFI Thickness and Density Control

FUTURE

- **Proportioner**
  - -Stable flow
  - -Variable Output
- **Spray Gun**
  - -Reliable Operation
  - -Consistent Fan Pattern
  - -Output range capability
- **Control System**
  - -Distributed Approach
  - -Motion/Process are PLC controlled - speed control
  - -Cell computer provides process information to the Operator
- **Real Time As-sprayed SOFI feedback**
  - -Data for improved in-process decision making
  - -Adaptive process

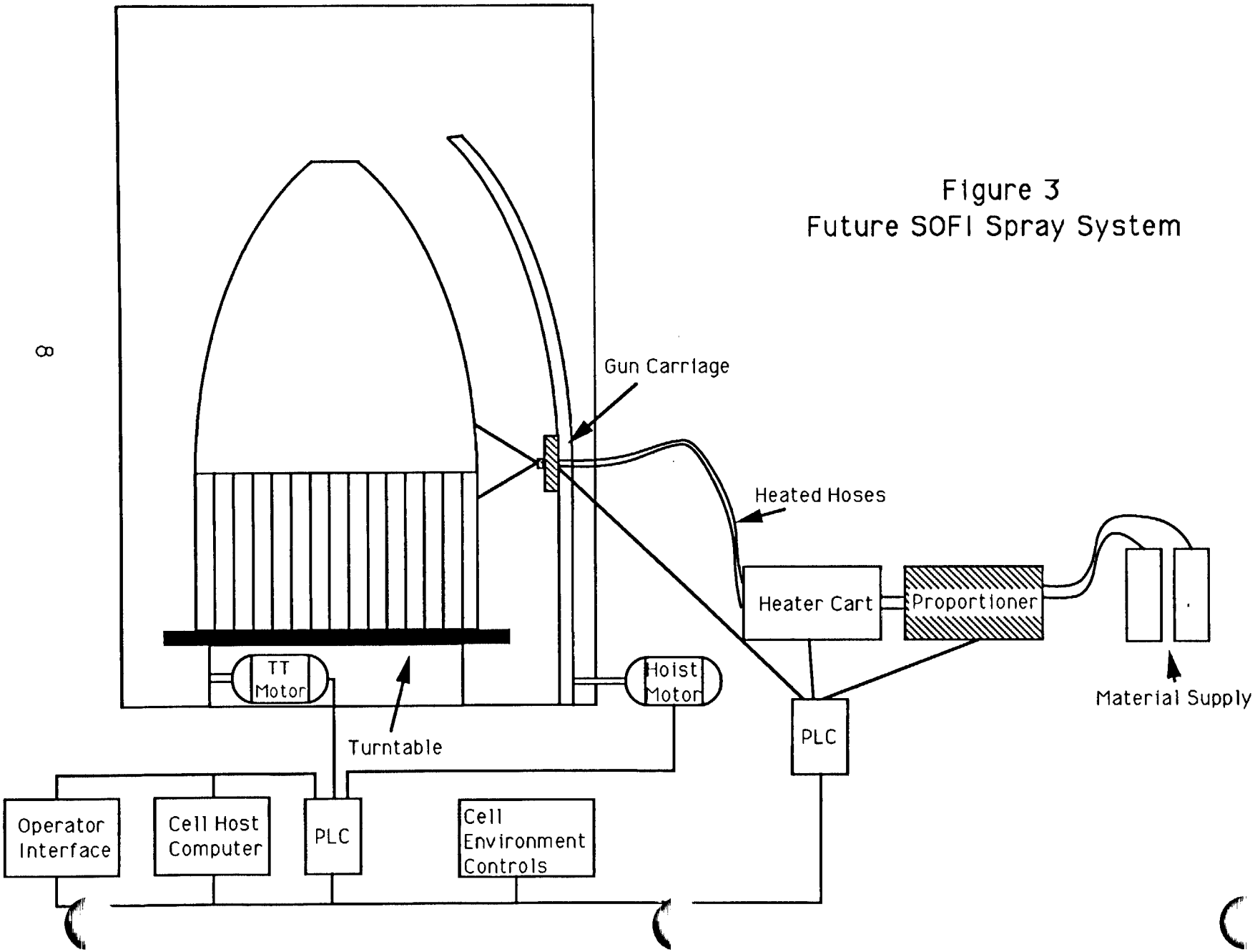

Figure 3
Future SOFI Spray System

were conducted to further understand and quantify the process for development and production operations activities. Further improvements in in-process feedback and evaluation were investigated to determine future feasibility and application for SOFI spray operations. The efforts of this TD were divided into five major areas: (1) VOP prototype design and fabrication, (2) TPV gun prototype design and fabrication, (3) LH2 Aft dome variable output spray simulation, (4) SOFI process model refinement and (5) SOFI in-process spray evaluation methods. Each of these efforts will be discussed subsequently.

The VOP proportioner prototype is a rotary pump based system utilizing digital motor speed control and/or flow feedback control to control and vary the material output during the spray application. The system is based on the MSFC testbed VOPS but with fewer features and scaled down size to permit ease of introduction into the production SOFI Cell operations. The prototype was designed and fabricated by the Edge-Sweets Company. Extensive testing of this unit in the spray booth and production operations will occur in FY 1993.

The TPV spray gun was selected as the optimum SOFI spray gun for prototype fabrication. It provided the best cost, reliability, performance and adaptability attributes and is planned for application in both fixed and variable(gun switch) output spray operations. The MSFC turret gun was shelved due to cost, reliability and adaptability(facilities/tooling) concerns. The variable output gun(VOG) development was cancelled due to high technical risk of successful development, control concerns and cost(Turret head based). The TPV gun prototype was designed and fabricated through a combination of MAF and subcontractor resources. Extensive testing of this gun's performance(operation, fixed output and variable output gun switch) will be conducted in FY 1993.

Simulations of the LH2 aft dome NCFI 22-65 spray were conducted on an aft dome simulation tool to further determine the feasibility of spraying the LH2 aft dome with variable output and eliminating the SLA-561/BX-250 closeout at the apex. These simulations studied the effects of different tip configurations and the use of a gun sweeping motion tool in order to spray the final portion of the apex successfully. The simulations proved successful and will be further demonstrated in full scale in FY 1993.

The SOFI process model refinement and spray simulations consisted of DOE/ECHIP experiments to further expand and refine the model quantitatively. The SOFI process model quantitatively defines SOFI

thickness and density as a function of the processing parameters of output, surface speed, fan pattern, hoist rate and gun-to-tank distance. This model accurately predicts the parameters needed to achieve a desired SOFI thickness and density. It has been successfully demonstrated during LO2 tank variable output spray simulations in FY 1991 and LH2 aft dome variable output spray simulations in FY 1992. This model will be completed in FY 1993 with further testing using the TPV gun.

To further improve the reliability and adaptability of the SOFI spray process, in-process SOFI surface and fan pattern vision and evaluation techniques were deemed necessary for development. Two methods - surface optical vision and computer aided fan pattern vision(CVIM) - were investigated for feasibility. The surface vision system consists of a carriage mounted camera providing in-process pictures of the as-sprayed SOFI surface. This proves useful in determining rollover, crevicing and waviness/dimpling attributes which may indicate a spray problem. The CVIM technique was utilized to evaluate spray fan pattern distribution using color contrasts to indicate pattern changes and external foam buildup in-process. Both methods proved feasible and are being incrementally implemented into the production operation. Further development will be continued under PT 2112 in FY 1993.

Support to all of these efforts was provided by Systems Engineering, Procurement, Reliability Engineering, Manufacturing Engineering, Test Operations Engineering, Tooling, MSFC Operations, Production Operations and Technical Operations to provide for a smooth transfer of this technology from the development phase into the production operation.This concurrent engineering approach has helped significantly in the efforts undertaken this fiscal year.

In summary, this year's efforts have consisted of VOP and TPV gun prototype fabrication, process model definition, variable output spray simulations and improved vision technique development. Testing of these systems will occur in FY 1993 in the laboratory and production operations to determine final production hardware configuration prior to implementation during the FY 1994 thru 1996 timeframe.

CONCLUSIONS/RECOMMENDATIONS

The following conclusions/recommendations are set forth as a result of this year's TD development efforts:

(1) The TPV gun is the preferred spray gun for both fixed and variable output sprays. This will be tested extensively in next year's effort. The Turret gun and variable output gun developments should be shelved due to cost, development and reliability issues.

(2) The proposed implementation scheme for VOP/TPV/PCOP technology is as shown in Figure 4. This shows that VOP/TPV technology is only required for the LO2 tank spray, LH2 aft dome spray and the LH2 tank barrel thick/thin spray.

(3) The configuration of the implemented VOP/TPV technology is as recommended in Figure 5. No volumetric calibrator is deemed necessary and this technology development will be shelved. In addition the extent of the remote control system needed for the VOP upon implementation will be determined by FY 1993 testing and timing of implementation with the next generation control system.

(4) The VOP prototype is a lab prototype of the future production model. The FY 1993 testing is required to determine the extent of options(tanks, recirculation, motor size and instrumentation) deemed necessary for the production units.

(5) The vision and CVIM in-process feedback systems have proven to significantly improve spray operator decision making capability. These technologies should be incrementally implemented into production and further developed under PT 2112.

Figure 4 - Proposed Production Implementation Scheme

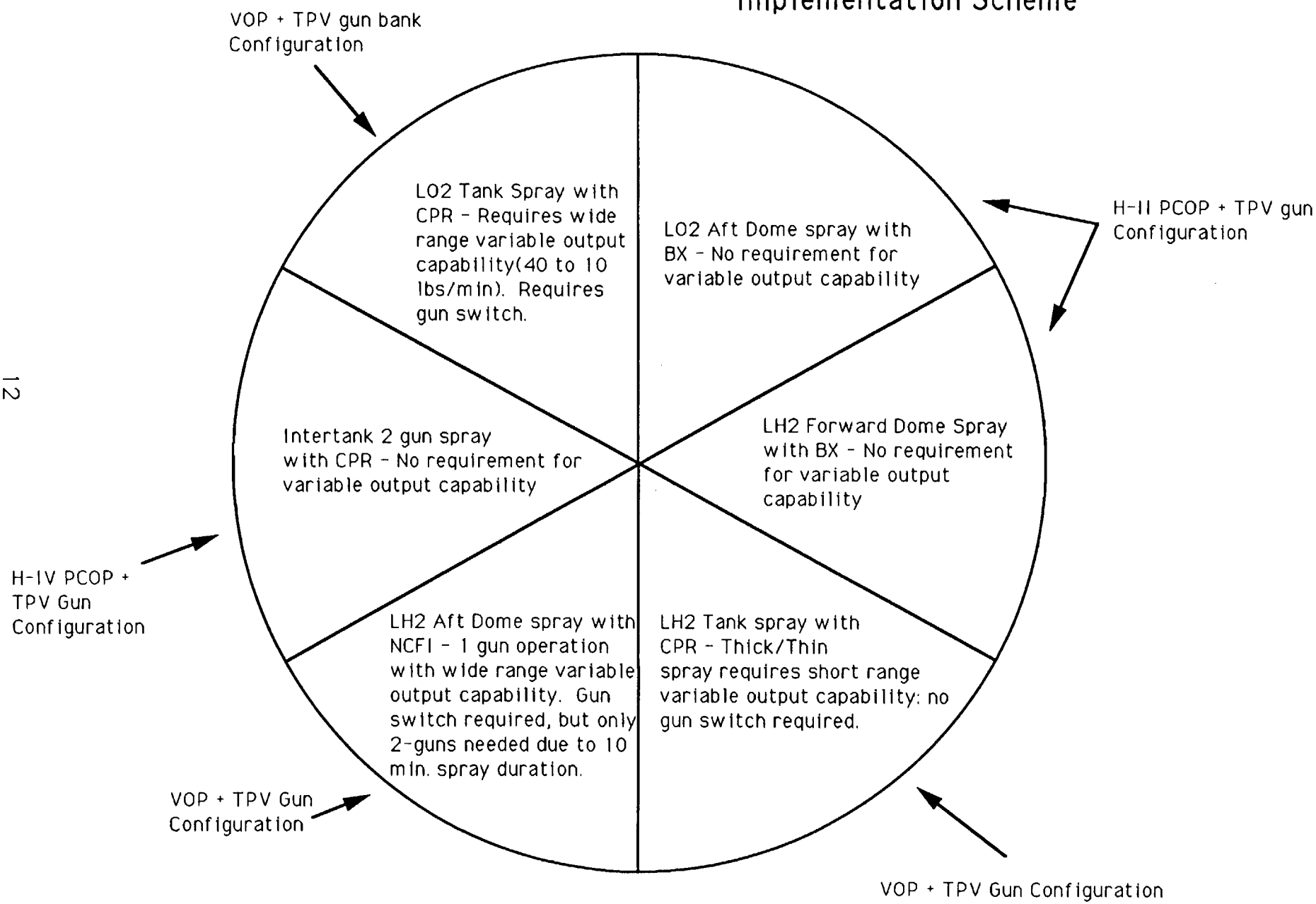

Figure 5 - Delivery System with VOP

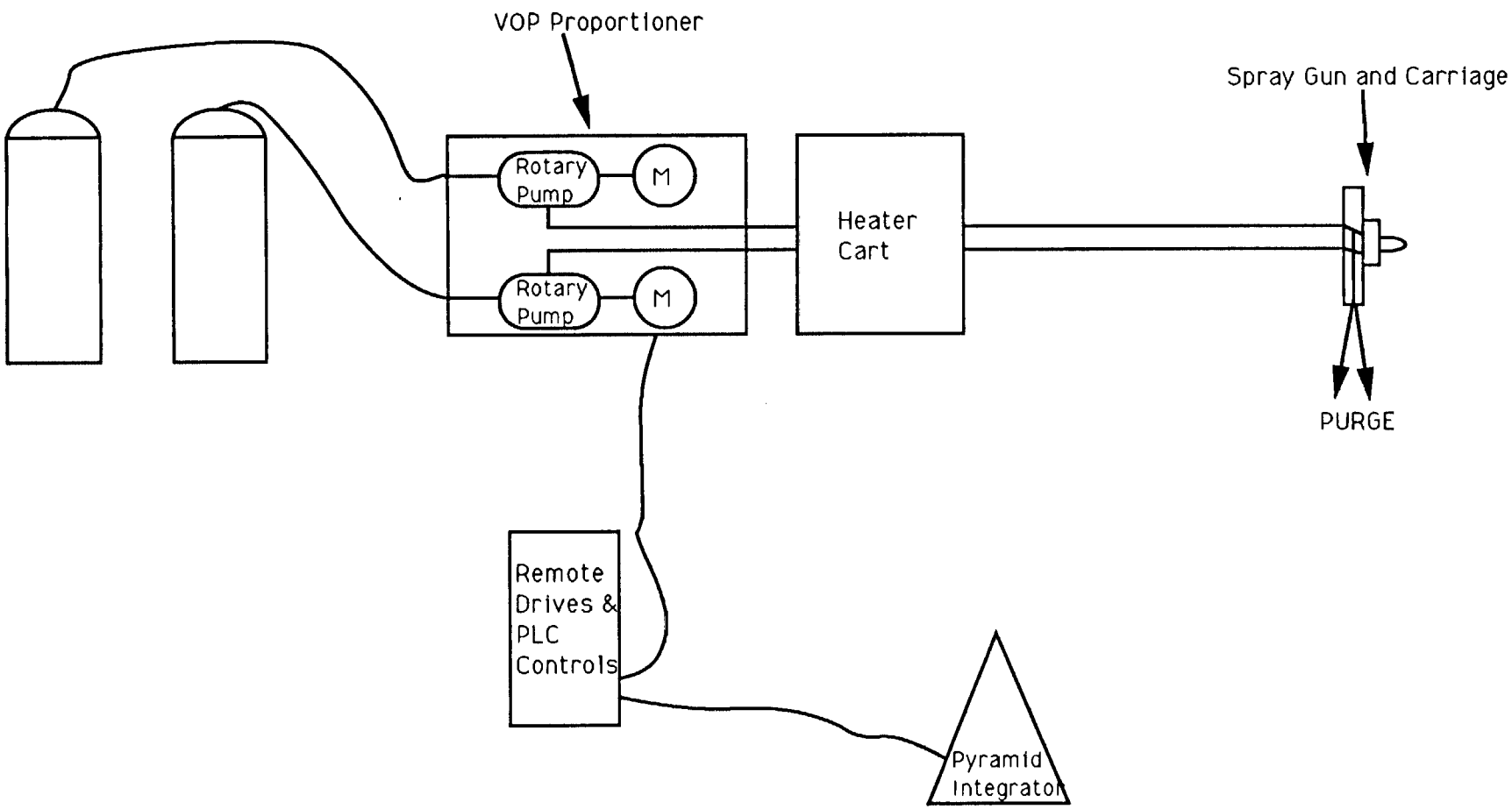

VOP PROTOTYPE PROPORTIONER DESIGN AND FABRICATION

Task Leads: Joe Walls
Mike McGehee
Mike Gibbons

During FY 1992 this TD's efforts included the design and fabrication of the prototype SOFI proportioner(VOP) which will provide variable output capability and improved flow reliability over the present proportioning systems. This effort consisted of the specification definition, vendor selection, vendor fabrication and spray booth test planning. The lab and simulation testing of this unit will occur in FY 1993.

The specification definition of this unit was conducted through a concurrent engineering approach using inputs from MSFC Operations, Production Support, Engineering and Production Operations. The unit was specified as a scaled-down version of the VOPS testbed at MSFC in terms of power requirements, size and portability; while retaining the remote control capabilities which are needed to allow the unit to be operated at any location - Production Cells, Spray Booth or Gun Room. The schematic of this unit is shown in Figure 6 and the Full detailed specification sent out for vendor bidding is in Appendix A. The tank, instrumentation and some of the valving and recirculation options are more than is anticipated being needed for the final production unit but were included to allow testing to determine the need for recirculation tanks and more fully understand machine operating behavior in this prototype test phase. It is anticipated that this schematic/specification will be reduced prior to the specification of production units in 1993.

The specification was sent out to seven vendors for technical, schedule and price quotations. The vendors included Admiral, Gusmer, Cannon and Edge-Sweets which are all well established manufacturers of SOFI processing equipment. Bids were received from three vendors - Admiral, Edge-Sweets and FutureTech Design(a small hydraulic equipment manufacturer). All were technically acceptable but, Edge-Sweets Co. was the only one capable of meeting schedule and cost requirements for the effort and was selected as the vendor to design and fabricate the prototype VOP unit.

The vendor design and fabrication of this unit occured between April and September of 1992. The unit consists of two pieces of hardware - A control unit and the pumping(proportioning) unit. Both fit within the 6' long by 3' wide by 6' high size envelope specified making the unit capable of being transported in the VAB elevators and proportioner rooms. The control unit consists of two DC drives(one for each component stream), a PLC, a Panel View and interface cards for interfacing with unit instrumentation. The pumping unit consists of the component pumps, pump motors, tanks, high and low pressure recirculation lines and the associated valving and

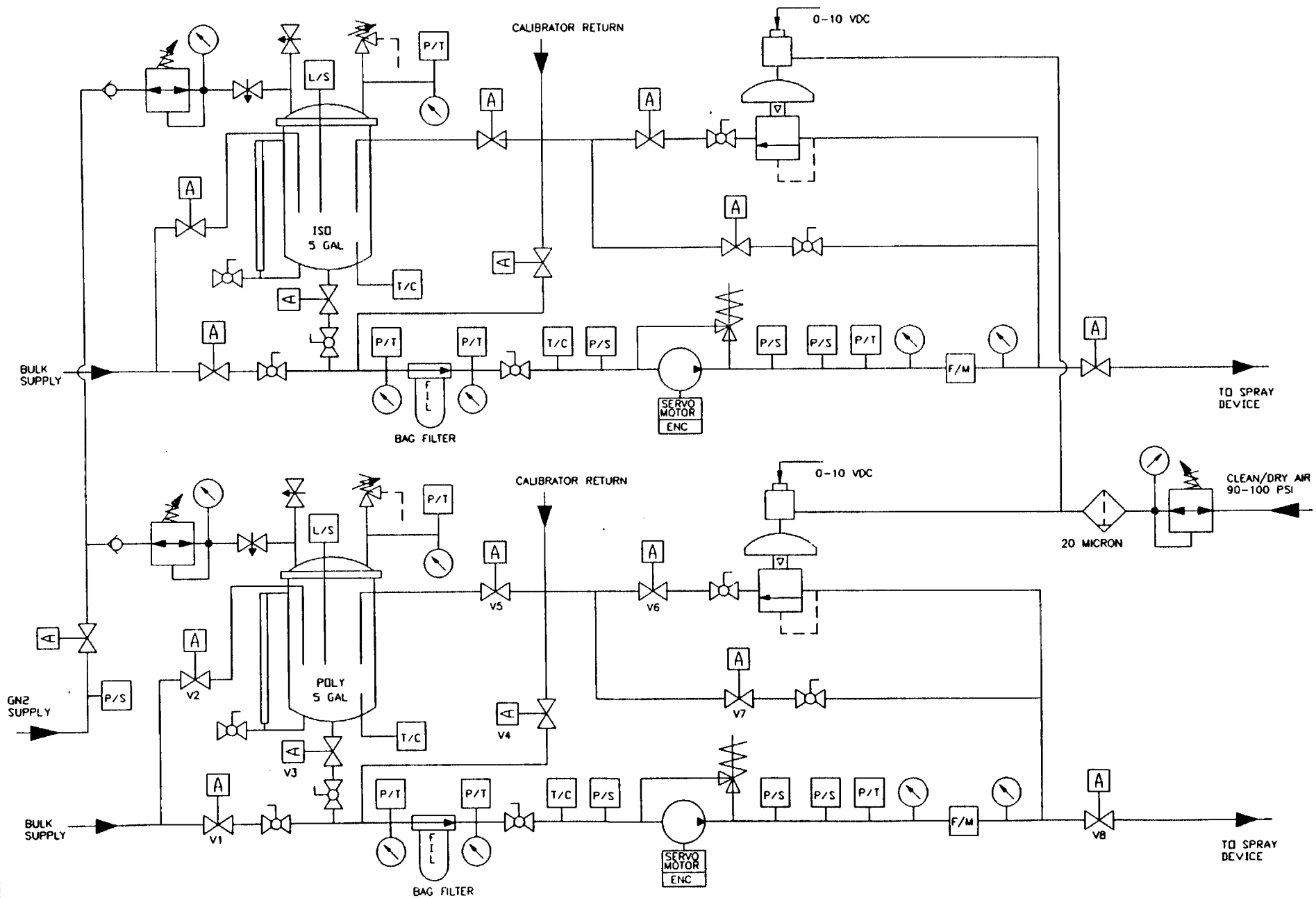

Figure 6 MAF PROTOTYPE VARIABLE OUTPUT PUMPING SYSTEM

DRA. NO. MAFVOPS2

GOLDEN 12/4/91

instrumentation. The unit will allow output to be varied and controlled more accurately due to the use of rotary pumps and the digital control.

The unit was acceptance tested during September of 1992 during two visits to the Edge-Sweets Company. During the first visit the only major problem to be found was the Micromotion mass flowmeters used. These flowmeters developed an instability at certain flow ranges thought to be due to a harmonic disturbance which occured due to the motion of the fluid component through the meter. Gear type flowmeters(similar to those used in MAF systems) were substituted and the unit performed as designed and needed. Stauff flowmeters were substituted, at Edge-Sweets cost, prior to the second visit along with minor programming glitches found during the first checkout. During the second visit the unit was accepted and thereafter shipped to MAF.

Upon arrival in FY 1993 the unit will be tested in the AMT booth in a configuration representative of the equipment as used in the Production cells. This configuration is shown in Figure 7. The VOP and control unit fit into the system where the Gusmer H-IV proportioner is used presently. The proportioner will be tested with the TPV guns as shown in the following operational modes: (1) System operation - gun operation, gun switching, fixed output and variable output; (2) Narrow and wide range variable output sprays; (3) Proportioner design options - tank requirement, recirculation, motor size and instrumentation requirements; and (4) Control system interface requirements. Once this testing is completed the unit and TPV guns will be tested in the production cells in full scale simulation.

In summary the specification for the VOP proportioner was defined and sent out for vendor bidding for its design and construction. Three of seven vendors responded with bids and Edge-Sweets Company was selected based on technical capability, cost and schedule. The unit was completed and accepted in September and will be tested in the laboratory and production with the TPV guns in FY 1993.

Figure 7 - AMT Booth System Configuration using TPV gun

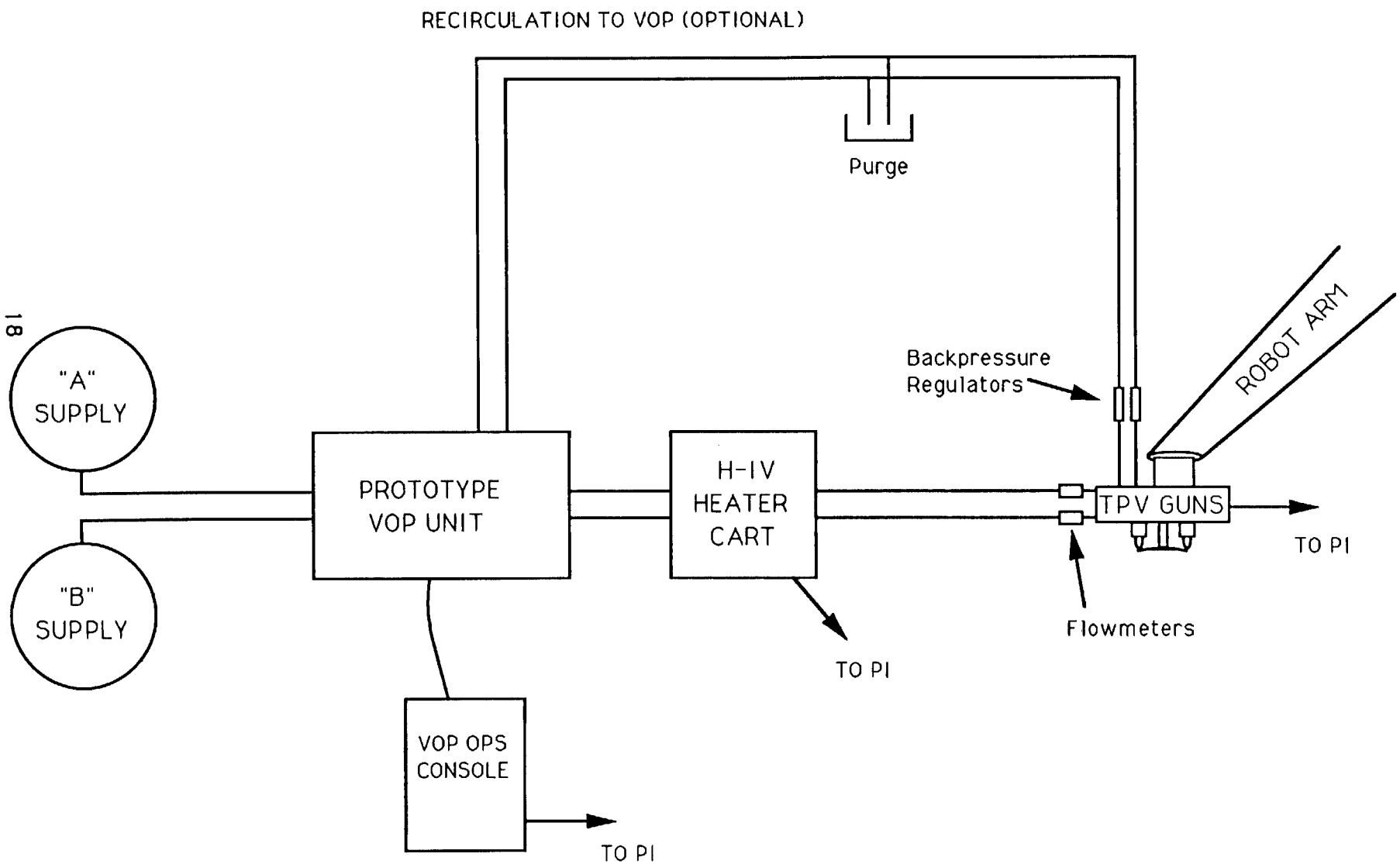

LH2 AFT DOME SPRAY SIMULATION

Task Lead: Gene Golden

INTRODUCTION

The objective of this effort was to develop a variable output spray for the application of NCFI 22-65 onto the dome cap of the LH2 aft dome. This was to be done using variable output spray technology to net spray the entire dome, thereby eliminating the currently required BX-250/SLA-561 closeouts in the apex area. This effort was completed at the MSFC operation by using the VOPS testbed unit and the Multi-nozzle spray gun to apply the NCFI to a simulated aft dome cap test fixture.

The capability to spray the LH2 aft dome was clearly demonstrated using the variable output technique. The variable output technology employed consisted of two methods as follows: (1) Gradual reduction in output which was utilized for most of the dome spray and (2) A gun sweeping technique which was used for the centermost portion of the dome cap. The latter technique was required due to the small circular surface area and overlap time restrictions of the foam. Density and tensile strength testing were all well within the STP/Drawing requirements. Thickness measurements were within specification except for the centermost 40 inches of the dome cap. This area had thick areas which either could be sanded to meet requirement or further developed using different spray tips to eliminate the problem.

The following sections will detail the effort conducted with respect to the test fixture, foam application strategy and test results.

AFT DOME TEST FIXTURE

In order to conduct these simulations an aft dome test fixture(T.N. 97M22672) was constructed. The fixture consists of a surplus heavyweight LH2 tank aft dome cap mounted on a rotational fixture. The rotation axis was horizontal rather than vertical, as in the VAB, due to space and heating limitations in the MSFC spray booth. This difference was deemed not to be detrimental to the simulations. Substrate heating was provided over the entire dome cap back surface via a hot air duct and plenum system on the fixture. A test panel mounting bracket was constructed and installed on the +Z axis manhole to provide a witness panel location identical to that of the production spray. A Teflon taped window was fabricated that reached from the -Y axis edge, across the manhole, to the +Y axis edge so that a "slice" of foam could be removed for density and thickness testing of each spray.

FOAM APPLICATION STRATEGY

Successful application of foam to the entire surface of the dome cap required the use of two different application techniques, or spray gun motions, during the same spray. The first technique used was the standard method of as moving spray gun tracking across a rotating surface, applying foam in a spiral fashion. Using this motion the gun moved onto the outer edge of the dome cap at a set "rise" per pass and continued movement along the rotating fixture surface while spraying foam onto it. A rise value of 5 inches was initially used but later changed to 8 inches to yield the proper overall and knitline thicknesses required for acceptable densities. This application technique is currently used in all VAB production SOFI sprays.

The second application technique used was one for applying foam to the center of the dome cap. This was done using a "sweeping" motion of the gun. After the last standard pass was achieved, the spray gun was rotated to an "off" position to the right of the tank. After a short pause the gun was rotated onto the dome at a position fifteen inches to the right of center. The gun was then swept across the center to a point fifteen inches to the left of center and rotated off to the left yielding a thirty inch total sweep. The gun sprayed at the left "off" position pausing to achieve planned coverage and allow for minimum overlap time. After meeting minimum overlap time the sweep was then repeated in the same manner from left to right. The sweeps were executed at gun-to-tank distances varying between 30 and 48 inches, a gun velocity of fifteen inches per second and a tip clocking angle of zero degrees. The 48 inch distance yielded the most reliable coverage. In applying this technology to the production operation a "flipping" tool would have to be designed to permit this "sweeping" motion and, this tool will be fabricated and used in spray simulations at MAF in FY 1993.

TEST RESULTS

Thirteen different spray processes were conducted involving variations in output, rise rates and sweep timings using an SS 6510 spray tip. The majority of these variations were designed to improve inconsistent thicknesses at the center of the dome cap. The 6510 spray tips exhibited varying fan angles when used resulting in high thickness values in some small areas. These could be sanded into requirement or further development

could be done with the spray tips to potentially alleviate this problem. All density and plug pull tensile data met specification requirements. In addition data from the five witness panels sprayed gave density values of 2.761 PCF (Specification is 2.8 - 3.1 PCF), average compression strength of 45.3 psi, average bond tension strength at -423F of 44.5 psi and passing cryoflex testing. This indicates acceptable material properties of the foam applied by this process.

SUMMARY

In summary the aft dome cap spray was simulated using a combination of two application techniques - standard spray motion and gun sweeping motion. Applicable parameters were varied using an SS 6510 tip with the optimum giving acceptable material properties. Thickness values were also acceptable except in the center most area where they were high in local areas and could be sanded to meet specification requirements. Based on this data these simulations demonstrated the feasibility of spraying the entire LH2 aft dome with NCFI 22-65. Further development of the spray tip used; however, could be done to possibly eliminate the need for some sanding.

TPV GUN PROTOTYPE FABRICATION

Task Lead: Peter Allen

INTRODUCTION

The spray gun development task is to design and develop an automatic spray gun to replace the Binks 43PA spray gun. This task is a continuation of spray gun development in which a Tapered Plug Valve (TPV) spray gun breadboard prototype was designed and tested in FY91.

This spray gun completed a successful development program with water and foam sprays at various outputs. The production version is based on this design with an emphasis on simplicity and the minimum of components.

The spray gun development task included the generation of production requirements, design, fabrication and basic testing of two TPV spray guns and associated mounting module. The two gun module consists of a base plate with mounting blocks, A and B component fluid and purge lines, four pneumatic valves and a weed wacker. This module is compatable with the laboratory robot and production cells B and C.

The requirements include recommendations from production operations personnel and these have been incorporated into the design. These include additional safety features, the elimination of hose cleaning, improved maintenance by using a modular approach and assembly aids.

The TPV spray gun test program started with valve operation and proof pressure testing. This was followed with water testing to refine the mix chamber, insert and spray tip relationship. The foam sprays have yet to be completed and will evaluate the TPV spray gun with the current component delivery systems and VOP system.

Additionally a new weedwacker and shaft assembly for removing the external buildup of the spray tips has been designed. Although detailing has yet to be accomplished the high acceleration motor and power supply has been purchased. The fabrication and development testing will be incorporated into the TPV spray gun development in FY93.

The flow analysis using Cham Phoenics software has been limited to the multi orifice mix chamber. It shows the flow stabilizing .4 inch from the center of the mix chamber orifices and assures a stable flow into the insert and spray tip. A recent development, the stepped insert, has been introduced to reduce the attachment of material by generating a turbulent boundry layer. Further analysis is required to fully understand the flow in this stepped insert and spray tip as the fan pattern distribution is controlled by the size and position of the steps. Used originally in the TPV spray gun prototype this insert proved to be very consistant and suitable for long sprays. A variation of the original insert is currently being used successfully in production for the LH2 barrel spray and shows minimal laquering.

TPV GUN PROTOTYPE FABRICATION

TPV Spray Gun and Associated Equipment

The TPV spray gun is an automatic spray gun that can replace the Binks 43PA spray gun with some modifications. These include the addition of an optional pneumatic OFF trigger for increased system reliability and an air purge for improved post spray evaluation of the spray guns.

The development bread board model of the TPV spray gun was similar to the Binks 43PA as they used hose connections to the spray gun body. the philosophy(system and spray gun design issues are displayed in Tables 1 and 2) of the production version follows the modular approach developed with the MAF spray gun. This allowed the guns to be stacked together on a mounting block. The TPV spray gun concept has developed this further by mounting the gun head directly to the mounting block which has the A and B component fluid and purge connections. The spray gun rotary valve is driven by a coupling and pneumatic actuator which is permanently mounted to the carriage base plate. This base plate forms the basis for the spray gun module that can be removed as a single piece or individual components for maintenance. The TPV spray gun has been designed to have a minimum number of components and be simple to assemble. It is fitted with location pins and certain components are "keyed" to aid assembly. These are the following: - mounting block/valve body, main packing/valve body, coupling/valve and spray tip/valve if required.

TPV Spray Gun Design Details

The TPV spray gun consists of a body containing a tapered plug valve (TPV) and its associated packing assembly. The body also incorporates three ports, the A and B component ports and a purge port. The spray gun orifices are protected by 'end of line' filter screens that are fitted in the A and B ports. The spray gun assembly is located and bolted to a fixed mounting block that transfers the A and B component and the purge pneumatic supply (see cross-sectional drawing). The mounting blocks are fitted with A and B isolation valves with tamper proof knobs to eliminate accidental operation. The mounting blocks are fitted with protective cover plates when the spray guns are not required. Photographs of the prototype gun and its components are shown in Figures 8 thru 16. The detailed drawings of the gun and components along with design and operational requirements are presented in Appendix C.

The rotary valve is the single controlling feature of the spray gun and incorporates the A and B orifices. The spray tip is inserted into the valve and its angular position is clocked visually or by a pin if required. A combined multi-orifice mixer and flow insert is then inserted behind the spray tip. These are held in place by a threaded retainer.

The valve is encapsulated in a Teflon^R packing that consists of a carbon fiber filled Teflon^R main packing and a unfilled Teflon^R packing ring. The packing

Table 1 - TPV Spray Gun and System Design Issues

- Equipment interchangeability between cells
- Adaptable to recirculation type supply such as full VOPS system with back pressure regulators
- Spray gun check out test equipment - pressure test, actuation operation and torque test. (gun room)
- Spray gun assembly tooling - including spray tip alignment and torque test equipment
- Spray gun and equipment build, test and maintenance procedures
- Inspection requirements of hardware including calibration; inspect at each critical build stage
- Spares and disposable items lists, tool manual
- Alternate supplies - components and assemblies
- Adaptors for spray tip calibration rig - for new spray tips and gun assembly
- Investigate better/acceptable release coating for spray tip and spray gun external/internals to help cleaning (CAMIE 980 not acceptable)
- Improved weed wacker, position adjustment, cord and cord mounting
- Investigation and design concepts for air curtain to reduce spray gun and tip buildup future development if required

Table 2 - Spray Gun Design Issues

- Clocked mounting of spray gun with a clocking pin in mounting block
- Clocked and keyed actuator drive to alleviate gun misuse
- Fabrication of spray gun. Mixture of in house and subcontracted components or all subcontract
- Find alternate supplier for custom spray tips
- Spray tip clocking techniques. Pin on flat location or adjustable
- Alternate spray tip mounting, i.e. external/internal threaded tip or Binks 43PA locking collar or proposed inserted tip type assembly
- Spray gun body design - machine prototype from bar stock or simple castings for prototype and production units
- Seal on mounting location diameter to alleviate leakage to back of spray gun body
- Nylon seal ring integrated into end of line filters or should O'rings be used also, for increased sealing reliability
- Use of additional O'ring seals on valve (thrust ring) to seal to body and valve. This would alleviate any leakage from the main packing and packing ring
- Recommend the use of packing rings in the design should a need arise for the following conditions: higher system pressure, higher non operating pressure or length of time under non operating pressure
- Spray gun body and mounting block designs to accept two purge ports
- Tapered plug threads at A and B port cross drilling to accept tapered plugs. These plugs will act as both sealing plugs and bleed nipples. Investigate the use and availability of sealant pre coated plugs
- Design of filter assembly to accept check valves . This would increase the cost per gun build but alleviate a cross over getting to the supply system (Gusmer makes a filter screen with and without check valves that might be used for this application)
- O'Ring sealed boss plugs at A and B cross drilling and investigate the incorporation of a filter with these plugs. This would alleviate the use of a sealant and simplify the filter design.

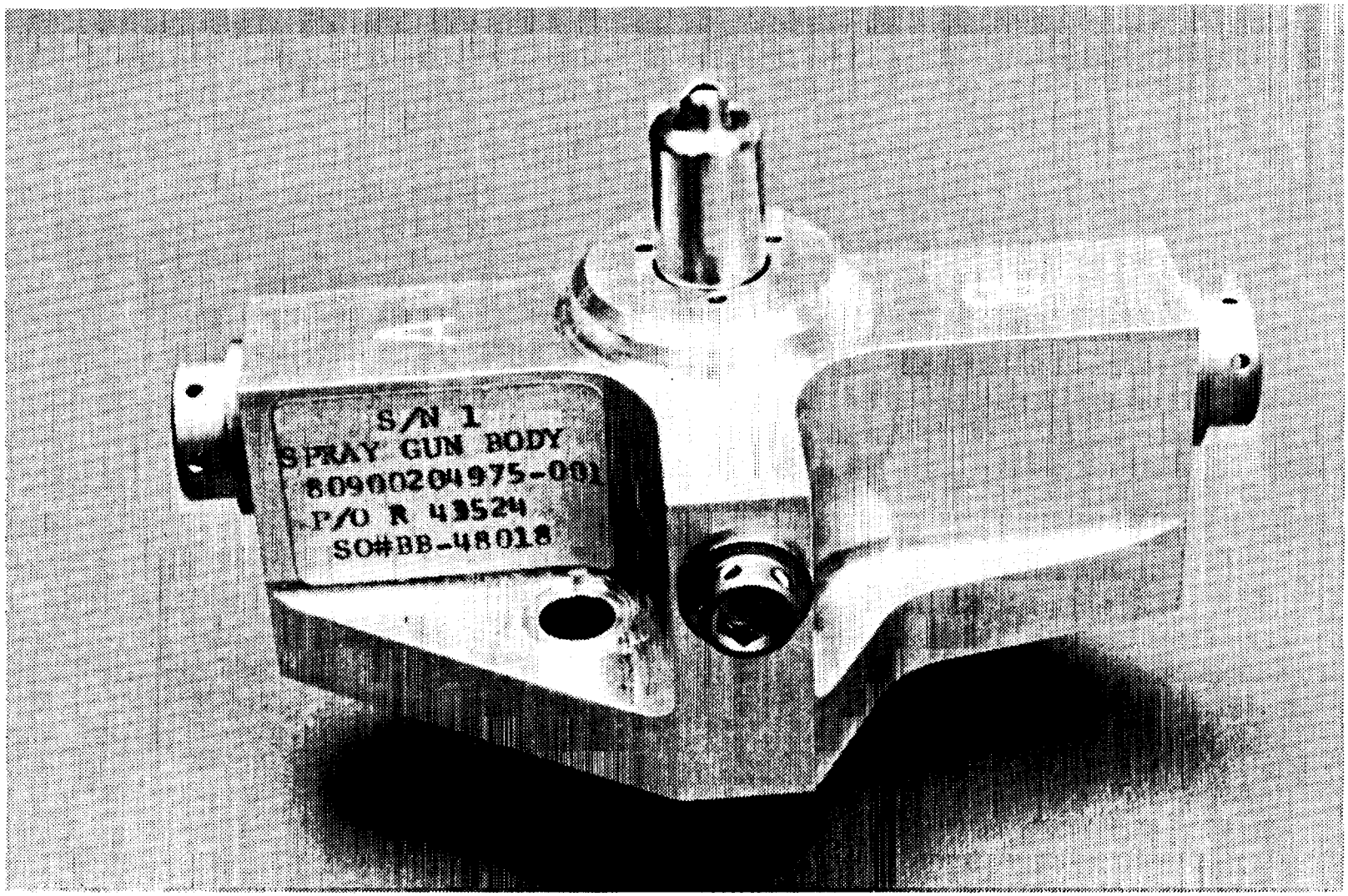

Figure 8 TPV Spray Gun Production Prototype Assembly - Side View

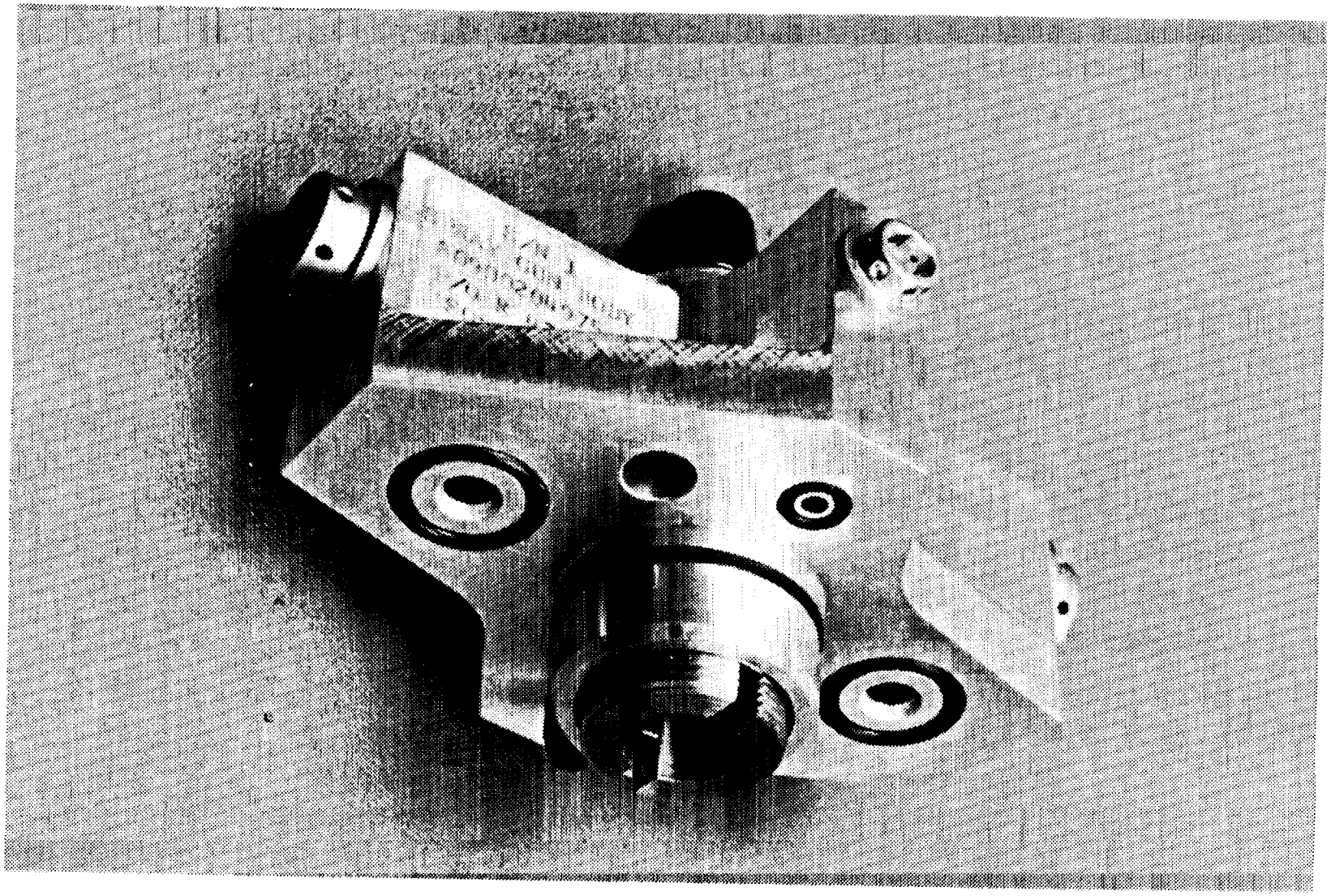

Figure 9 TPV Spray Gun Production Prototype Assembly - Bottom View

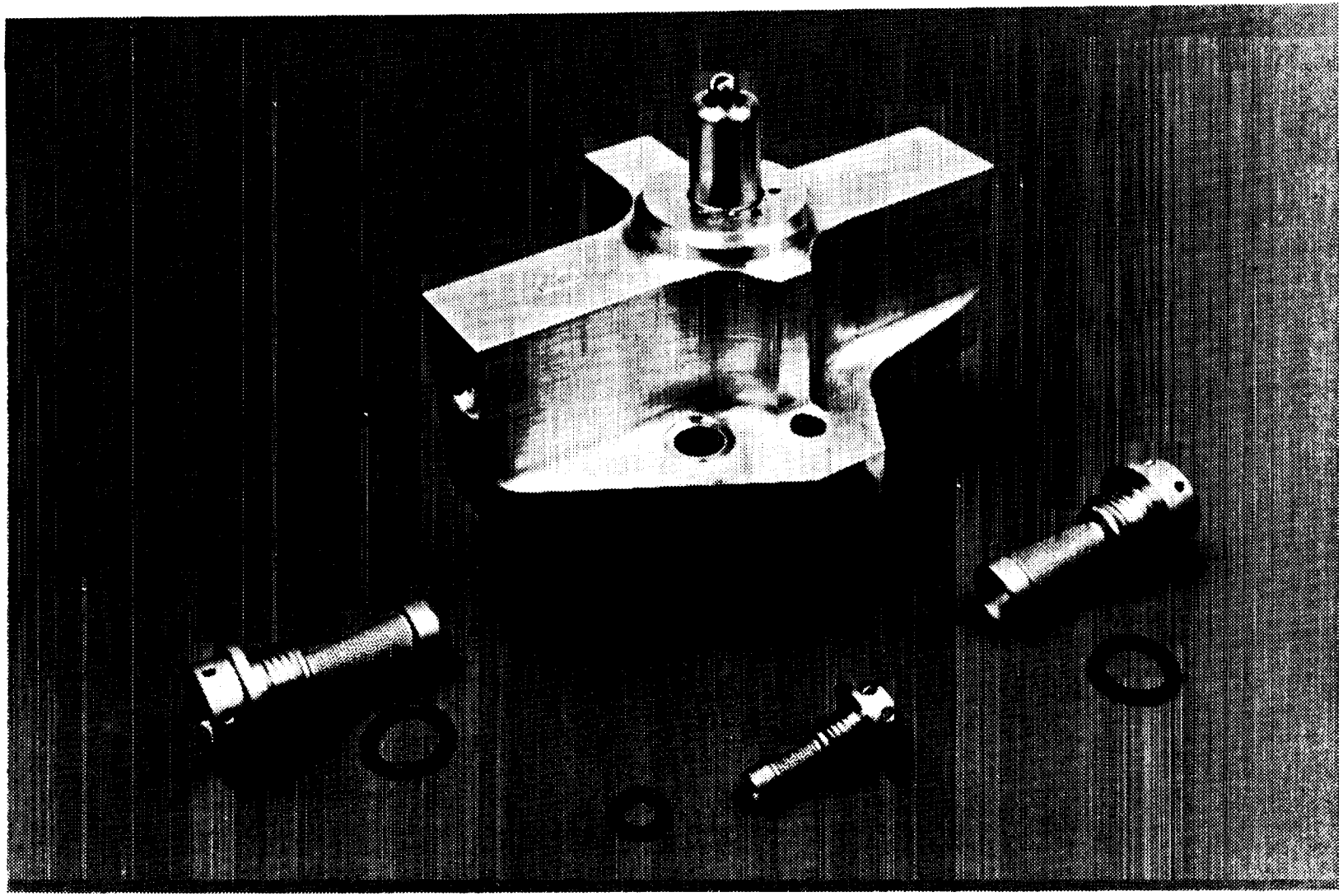

Figure 10 TPV Spray Gun Assembly - Detail of Filters

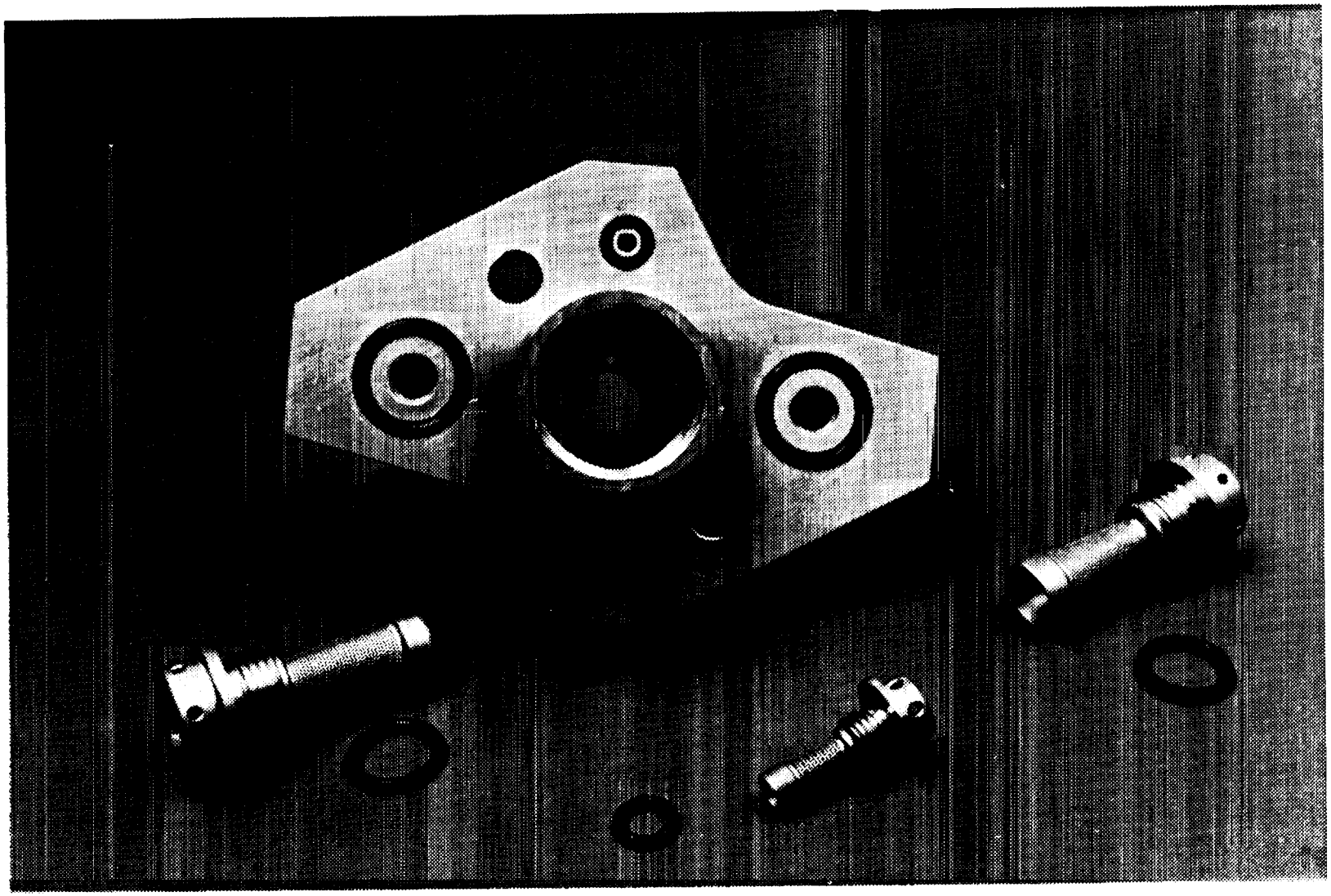

Figure 11 TPV Spray Gun Body and Filter Detail

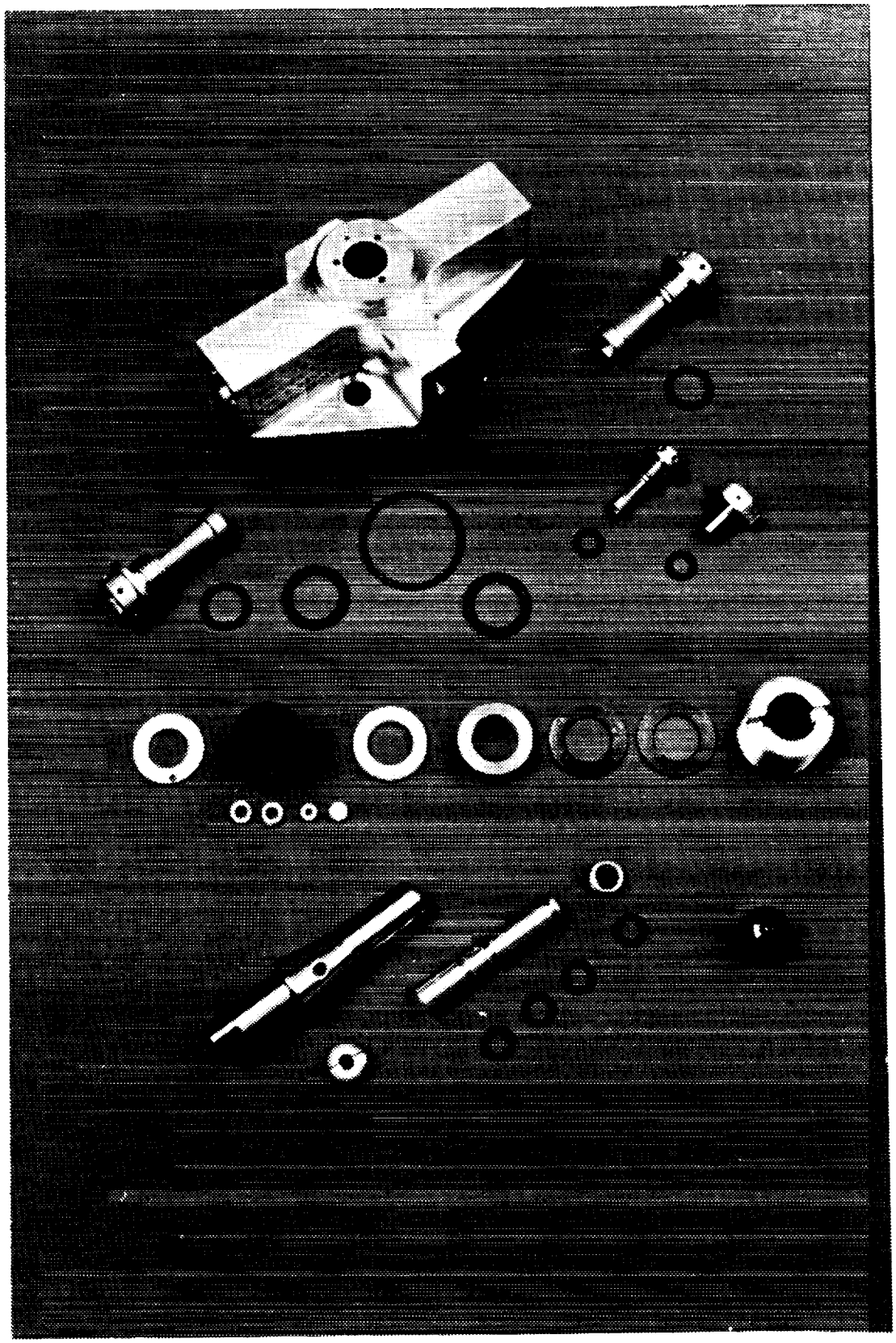

Figure 12 TPV Spray Gun Components

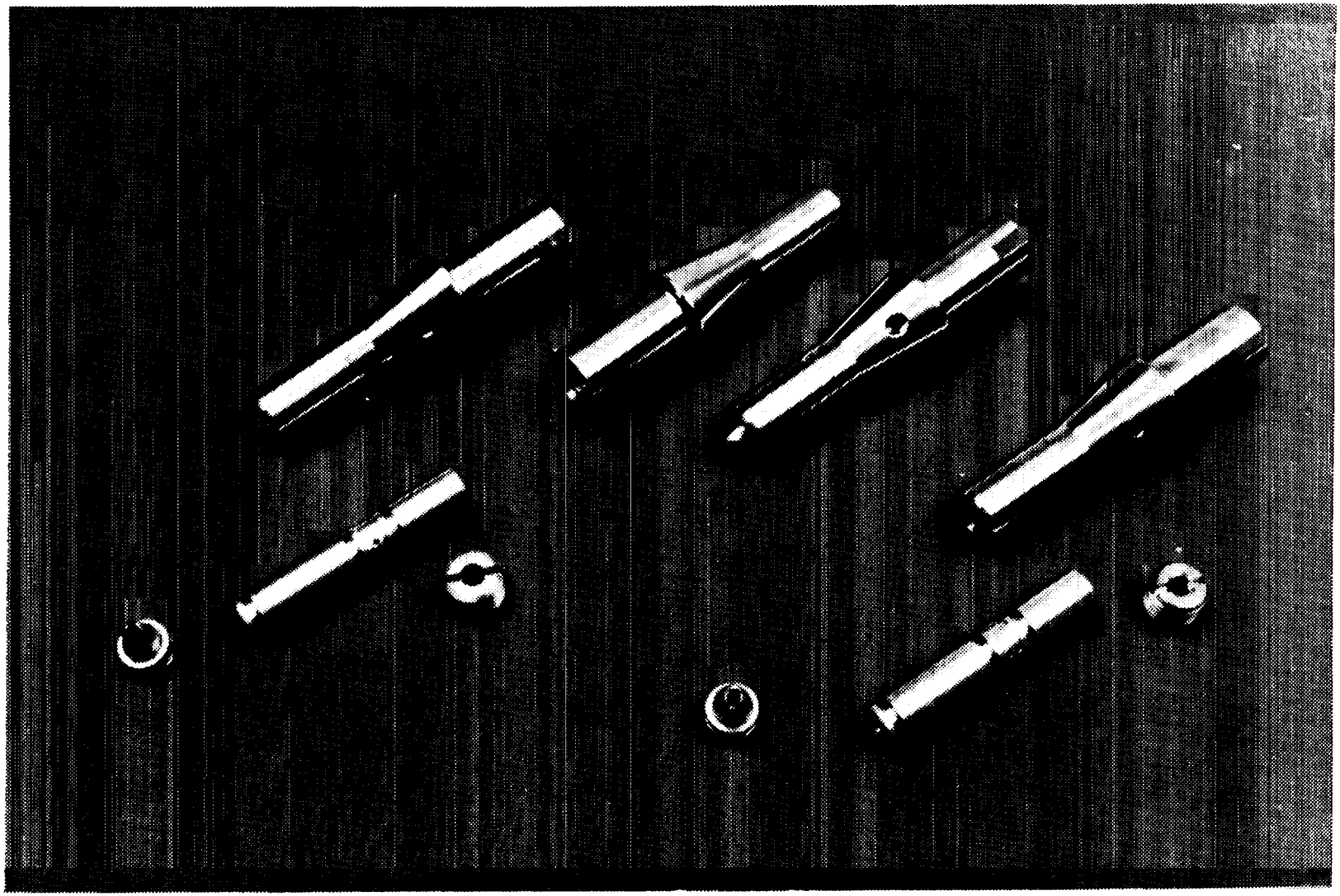

Figure 13 TPV Spray Gun Valves - 1 Assembly, 1 Blank, and 2 Valve Sets Minus O'Rings

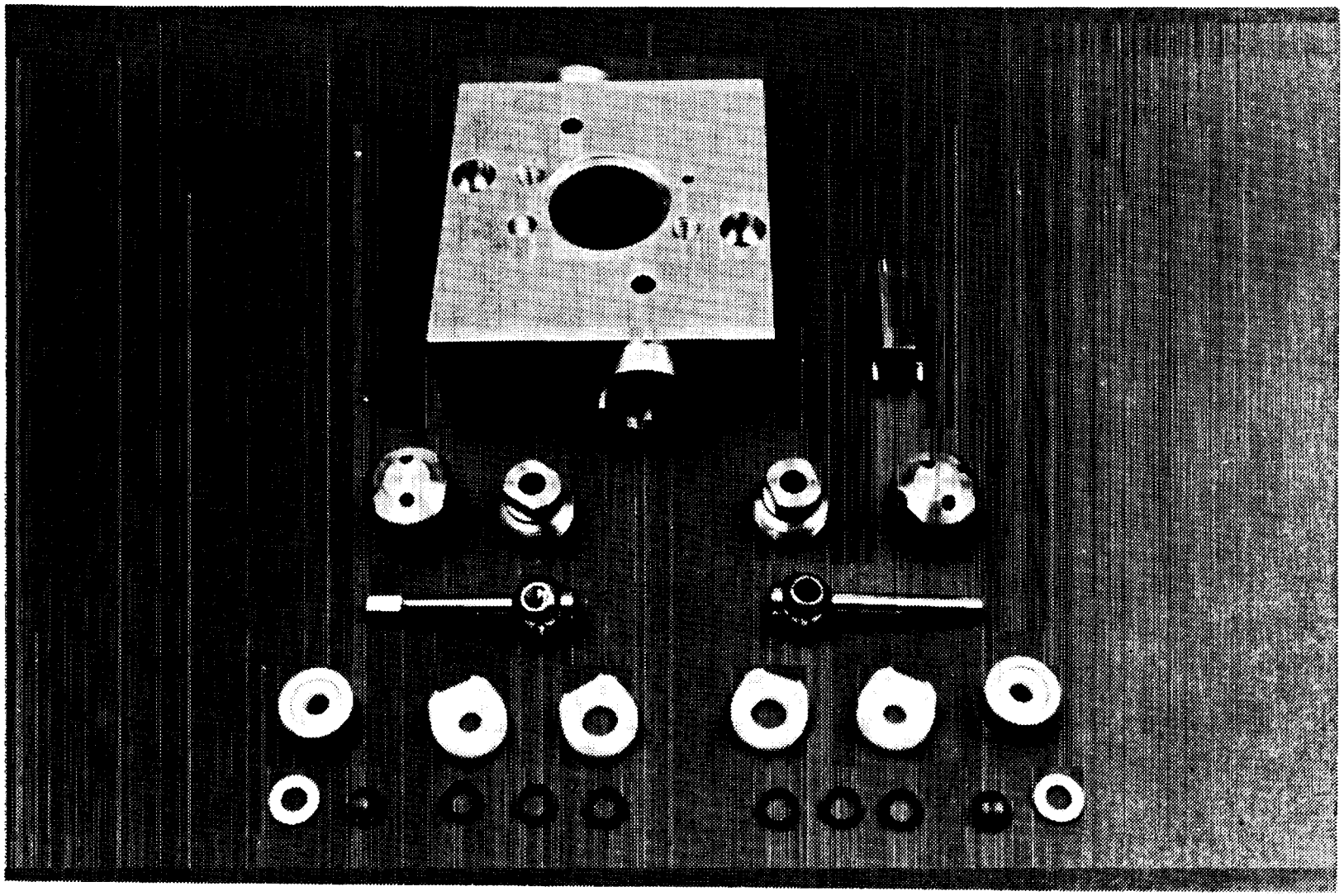

Figure 14 Mounting Plate and Ball Valve Components

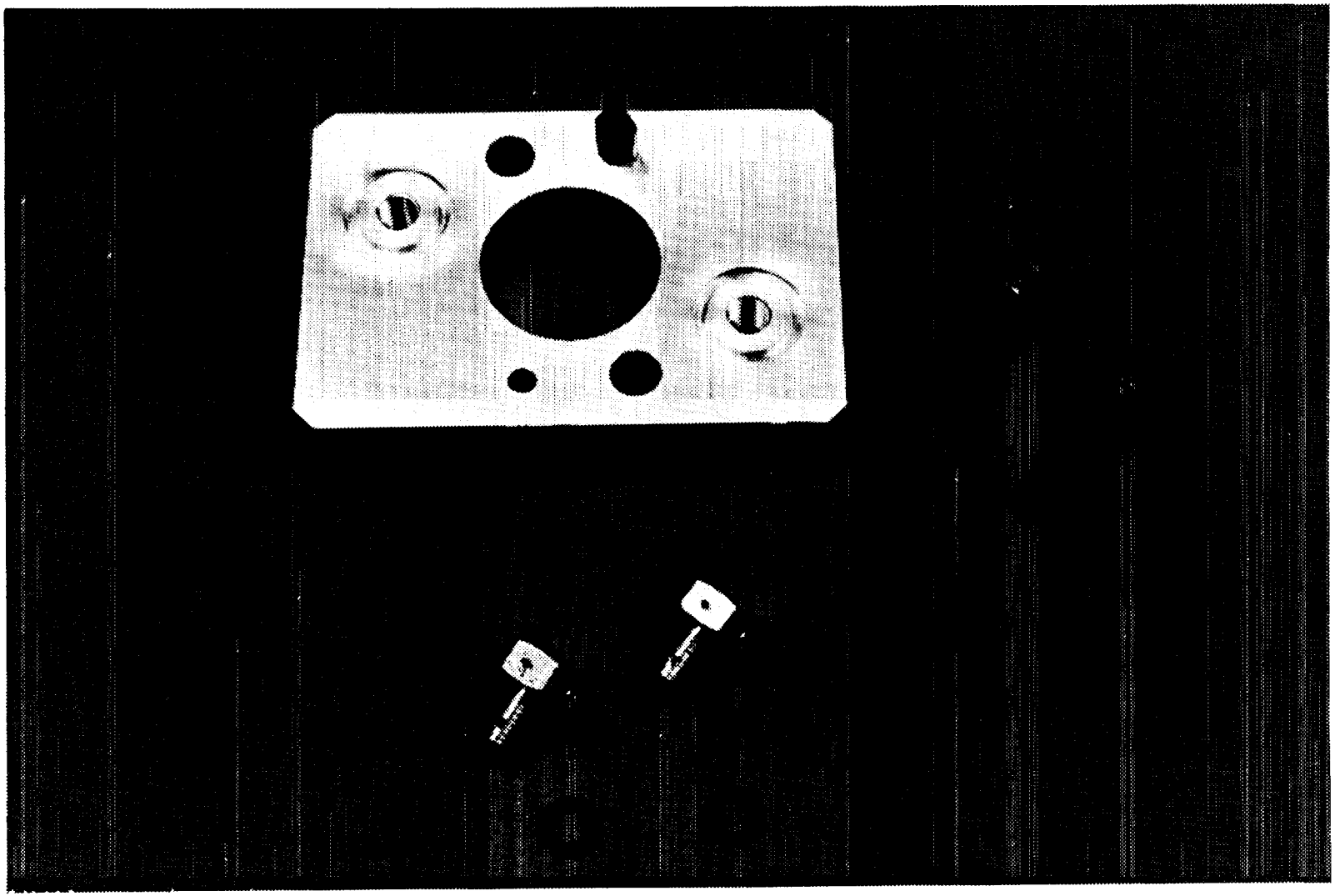

Figure 15 Cover Plate and Components

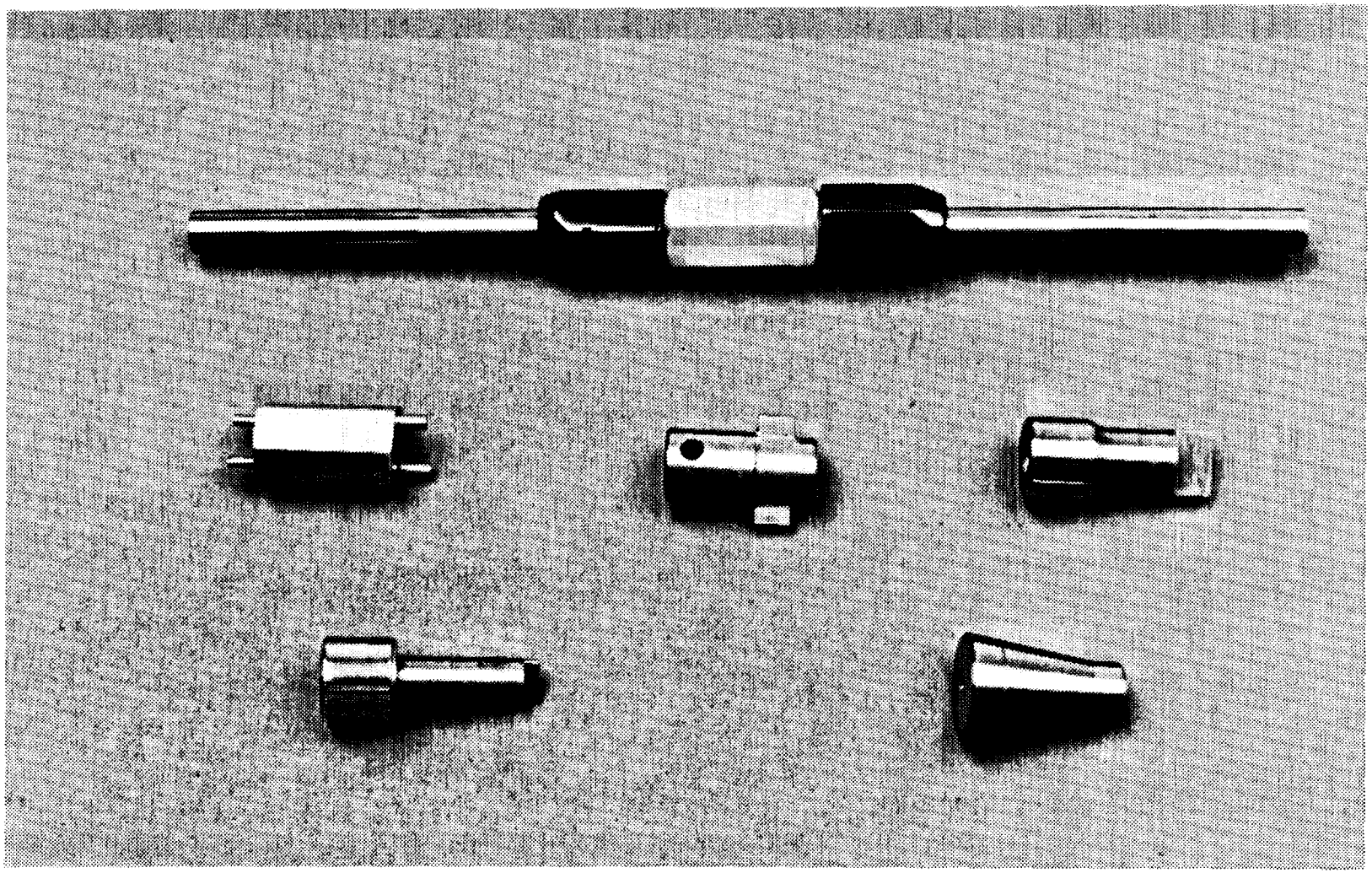

Figure 16 Special Tools - Including 2 Plug Gages

hold out inserts normally associated with the previous ball valve spray gundesign are still incorporated to allow a higher system operating pressure and reliability. (Hold out inserts were not used in the original breadboard prototype design as the packing material resists the creep phenomenon for short periods of time and was suitable for that application). A packing removal ring is installed behind the main packing to facilitate its removal without damaging the spray gun body.

The packing around the valve is compressed with the threaded adjustment ring via two belleville disc springs and a thrust ring. The threaded adjustment ring is torqued initially to a level sufficient to deform the packing around the valve. The torque is then adjusted to the recommended level which is typically 100 to 150 inch pounds. The use of the spring is to give a more controlled preload to the packing without relying on the packing alone.

The valve is actuated by a 90° rotary pneumatic actuator such that when it is in the OFF position the B orifice is in alignment with the purge port. The rotation of the actuator causes the A and B orifices in the valve to align with the matching ports simultaneously, thereby triggering the gun ON.

The sequence for triggering OFF and purging is the reverse except the air purge solenoid valve is triggered ON at the same time the gun is triggered OFF. Therefore, air pressure is at the purge port when the valve reaches the OFF position. The air purge is ported to the mixchamber via the B orifice. The duration of the purge is controlled by the air purge solenoid valve which is typically 5-10 seconds. The pneumatic purge valve is fitted with a manual override for test purposes such as checking that the line is clear to the mounting block.

The TPV spray gun module is to be initially used in the laboratory prior to duration testing in a production spray cell. Therefore, the design has to accomodate both locations, but more importantly, its use in production cell. This is because the spray guns are mounted at an angle - this angle will suit the use in production cells B and C. Because of this angle will be incorrect for use with the half size tank in the laboratory. Therefore, the robot will have to be programmed to achieve the correct angle. This will be particularly important with a two-gun operation at gun change over.

TPV Gun Development Testing

The Production Prototype TPV spray gun development plan is to verify the spray gun's operation and as a replacement for the current production spray gun, the Binks 43PA. The following assembly and test procedure summary is for the TPV Spray Gun and associated mounting blocks. The success criteria for the spray gun as a mechanical valve and as a spray gun;and the success criteria for the mounting block and interface with the TPV spray gun is given in Appendix C.

The TPV spray gun development tests will be conducted in the production gun room and AMT spray booth. The initial component inspection and fit checks will be followed by functional and proof pressure tests in the gun room. The water spray testing, using the TPV spray gun/mounting block assembly, will be accomplished on the gun room water test rig. This will require some development of mixer/insert and spray tip combinations.

SOFI spray testing in the AMT spray booth will include laboratory shake-down tests, spray tests and new weed-wacker testing. It is also planned to use the automated fan pattern measuring system to correlate these water tests and foam sprays to generate a data base from the beginning of the spray gun development.

The testing is itemized in the following eight sections of the procedure.

Visual Inspection and Fit Check

The first section of the procedure requires a visual inspection and fit check of the TPV spray gun and mounting block components for discrepancies, poor machining, etc. Possible improvements and drawing changes/additions will be noted for future incorporation or immediate corrective action.

Function and Pressure Testing - Mounting Blocks

The second section is the functional and proof pressure testing of the mounting blocks. The mounting block ball valve assemblies require functional and pressure testing at various packing torque values. This torque will be increased until the valve seals at proof pressure. Note: The assembly and testing of the mounting blocks is accomplished first as they are required to supply the test pressure to the TPV spray gun. Safety to witness final proof pressure tests of both mounting blocks.

Function and Pressure Testing - Cover Plate

The third section is the function and proof pressure testing of the mounting block cover plate. These plates are fitted in place of TPV spray gun as a safety and protective cover. The plate is fitted with seals and bleed plugs so if the isolation valves should leak or be inadvertently turned on (although a "key" knob is used) it will protect personnel. The pressure test will include cracking open the bleed plugs at static system pressure to assure their function and safe operation. Safety to witness proof pressure and bleed plug operation tests of both cover plates.

Functional and Pressure Testing - TPV Spray Gun
The fourth section is the functional and proof pressure testing of the TPV spray gun. It requires testing the tapered plug valve assemblie at various packing torque values until it seals at proof pressure. The testing will also evaluate two types of main packing materials, one in each spray gun. Note: The attachment and interface sealing between the TPV spray gun and its mounting block are tested at the same time. Safety to witness proof pressure tests.

TPV Spray Gun Water Spray Tests
The fifth section is a series of water spray tests with the spray gun assembled. This is to evaluate the flow rate and fan patterns using the production gun room water test rig.

The three valves (high, medium high, medium) will be tested with matching mixer/inserts, initially with straight insert bores. Both Spray Systems and Delevan Delta spray tips will be used. The mixing of mixer/inserts, valves and spray tips will be tried. This is to "blanket" the flow and distribution ranges. These additional test will be accomplished only when deemed necessary.

The straight bores of selected inserts will be modified progressive to a stepped insert configuration to adjust fan pattern distribution. These modifications will be based on a previously tested bread board spray gun with a stepped insert/tip combination and also the results of recent testing of a Binks 43PA spray gun. This testing evaluated a selection of straight and stepped inserts. One of these stepped inserts is currently being used in production for LH2 barrel sprays. A TPV spray gun mixer/insert will be modified to match that particular one also.

Laboratory Shake Down Tests
The sixth section is the dry firing of the spray gun module on the Laboratory robot which will include single and two gun operations. The tests will include triggering with various delays between primary and backup gun. Safety may want to monitor these tests prior to spraying foam.

Laboratory Spray Testing
The seventh section is the foam spray testing with one and then two spray guns. These test initially will be fixed output sprays at high and medium outputs. The tests will include several tip/insert combinations as shown by the previous water spray tests.

The tests will be continued with variable output sprays using the VOPS to assess the spray gun stability. These will include repeating some tests that were previously conducted at MSFC on the breadboard TPV spray gun, for a comparison with the new, Prototype TPV spray gun. Further testing will be defined after these results are evaluated by the T.I.P.s Team, and these will include laboratory duration sprays. The duration tests in the Laboratory will be for 15 minutes to evaluate mixer/insert and tip buildup using high and medium output configurations. The new weedwacker will be required at this time and it will also be evaluated by these tests.

New Weedwacker Tests

The eighth section evaluates the new weedwacker motor, flex drive/bearing assembly, cord assembly, power supply and amplifier including the electronic clocking device. As the power supply and amplifier is 150 feet from the motor, the addition of the clocking device for the cord complicates the system. This clocking device is an important addition particularly with high acceleration motors, as it would be more difficult than with the currently used method of short bursts of power to "inch" the cord out of the fan pattern.

Simulation Testing

Further Testing in FY93 will be needed for different outputs and foams including the new blowing agent (141B), and to verify the guns maximum range and applicability to LO2 ogive sprays. Testing shall also be performed in the production cells such as Cell B or C where a full up paper spray can be performed on a LH2 Tank. This is to evaluate long duration and spray gun change over characteristics prior to production implementation.

SUMMARY

In summary the TPV spray gun prototype design and fabrication has been completed through a combination of MAF and vendor resources. It incorporates several design features to make the gun's assembly and use simpler and improves on SOFI spray efficiency It will be fully tested along with the VOP in FY 1993.

IMPROVED SOFI PROCESS MODEL(ISPM) DEVELOPMENT

Task Lead: David Cooper

IMPROVED SOFI PROCESS MODEL (ISPM) DEVELOPMENT

BACKGROUND

The LO2 tank ogive SOFI application is accomplished using a fixed-output system which applies foam at 42 lbs/minute. While this rate produces mid-density foam on the barrel portion, the constant reduction in surface speed brought about by the tank's geometry, results in lower and lower density foam as the apex is approached. At the apex the 'lead out' density is generally 2.10 lbs/cu.ft which is the lower acceptance limit. Minor 'common cause' variation can result in density lower than 2.10 which requires foam removal and reapplication.

In addition to low density, other problems are associated with the application rates encountered on the forward ogive. Porosity and low strength can be causes to strip as can 'creasing', a condition which can produce deep grooves in the GOx footprint area.

An effort was made, in the fall of 1989, to address all of these quality/manufacturing issues. At that time, a wider fan pattern was implemented, along with a precision tapered COP (Cunningham Orifice Plate) which stabilized the pattern. These changes have improved process consistency and reduced the frequency of stripping. However, density, strength, porosity and creasing continue to be borderline. The key to long-term process improvement is to 'center' density within the acceptance range. When this is accomplished, strength increases, porosity is reduced, and surface creasing is eliminated. It has been demonstrated, under related programs, that a variable-output spray will bring about the required improvements.

This year's work was directed towards producing a mathematical model which will be used to control the output of the Variable Output Pumping System (VOPS) and will also determine which spray tips to use for different areas of the LO2 tank. The model, in conjunction with the VOPS, will allow much closer control of thickness than previously possible, and will allow density and thickness to be controlled independently.

INTRODUCTION

In 1991, under TD 724, the basic relationship between flow rate, substrate velocity, and density was established, i.e.

$$F = \frac{A \times SPi}{(D\varnothing - B + (C \times SPi))}$$

Where;

F = Flow Rate (lbs/min)
DØ = Macro Density (lbs/cu.ft)
SPi = Substrate Velocity at Station 'i' (inches/sec)
Di = Diameter of ET at Station 'i' (inches)
A = Empirically Derived Constant Related to Fan Pattern
B = Empirically Derived Constant Related to Raw Material (Cup Density)
C = Empirically Derived Constant Related to Fan Pattern

This equation, or model, established conclusively that a significant quality factor, density, could be controlled to some extent by the process parameters of Output and RPM. The constants A, B and C relate to properties of the raw material and the particular fan pattern used to construct the model. Because of this, the values of the constants change for different materials, different spray gun assemblies, and different spray gun orientations.

The purpose of the work conducted in 1992 under TD 675 was to expand the model to make it apply over a range of outputs, spray tips, and gun orientations, essentially to produce a 'universal' model for CPR 488 in support of a variable-output spray of the LO2 tank. An additional goal was to derive the relationship, if any, between density and the 'stripe width' of the foam as it is applied. The lab work was divided into two 'blocks' of 25 experiments. At the time of preparation of this report, the first (high output) block is complete, the second (low output) is 50% complete. Results from the first block only will be included in this report.

RESULTS AND DISCUSSION

'ECHIP®' experimental design software was used to provide a 4-variable, 3-level experimental structure. Appendix D1 (Test Plan 3614-92-DAC-067) gives the experimental structure and procedure. Appendix D2 contains the results for Macro Density, Stripe Width, Micro Density and '20" Roughness' for the first block of experiments. Appendix D3 is the ECHIP effects table which shows the relative strength of interactions between the process variables and response factors. The significant points of the effects table will be discussed later in this section.

The ECHIP program produces 3-D reponse surfaces(Contour Plots) of the variables of interest. Figures 17 thru 24 show the significant response surfaces for the first block of experiments. Each figure includes an explanatory paragraph to aid in interpretation; however, a definition of some basic terminology will be helpful at this time as follows:

(1) Macro Density: The density of a 'large' volume of SOFI, in this case a 20" x 20" x 1" panel. Macro density is generally 15% greater than 'micro density' which is density of a 2" x 2" x .75" specimen used for Tank-level acceptance testing. Macro density is used in the process model since it provides more accuracy in the prediction of thickness.

(2) Stripe Width: The vertical height of the band of foam deposited on the tank surface.

(3) Clocking or Clock Angle: The angle that the eliptical orifice in the spray tip is rotated from vertical.

(4) Cos or Cos Ø: The cosine of the clocking angle. Theoretically directly proportional to stripe width.

(5) 20" Square Roughness: Thickness measurements taken every 4" around the perimeter of a 20" x 20" SOFI panel, converted arithmetically to absolute average roughness. Usually stated in millimeters (mm), smooth SOFI measures 1.5mmRa or less, rough foam, such as the as-sprayed condition of the forward ogive, approaches 4.0mmRa.

(6) Texture: The 'micro roughness'. Texture is determined using a laser scanning system which makes multiple sweeps across the foam surface. Sweep width is approximately 4". 400 measurements per sweep are taken. The data from each sweep are arithmetically converted to average roughness. All roughness values are then averaged to give an average value for the whole panel. Sloping surfaces do not affect the accuracy of the Texture value. Sloping surfaces are covered by the 20" Sq. Roughness test. Laser scan testing was not completed in time for inclusion in this report. Texture response will be reported at a later date.

(7) MSFC Spray No.: A 4 digit designator assigned to any SOFI spray performed in the MSFC booth. A suffix of a, b, c, or d, denotes the panel's location on the booth's 13' tank.

(8) Experiment No.: The number assigned by the ECHIP program to identify each experiment. Since some of the experiments are repeated, a suffix is sometimes added. An 'a' suffix denotes the first performance of that experiment, a 'b' denotes a planned repeat, or replicate. Occasionally, an additional designator, 'r' is used to denote a respray at a particular set of conditions.

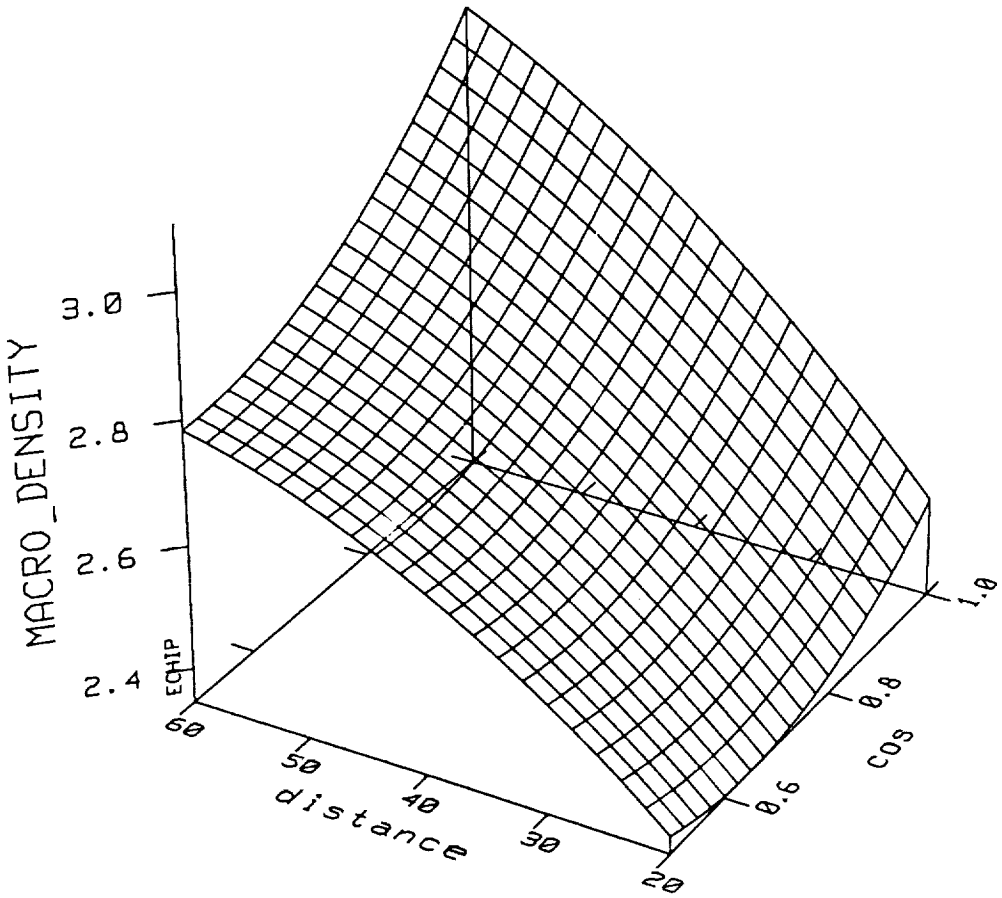

FIGURE 17: Macro Density as a Function of Gun to Tank Distance and Cosine of Clock Angle (Cos Ø)

SS8020 Spray Tip, .110" Orifice Plate, Flow: 42 lbs/min, Speed: 50"/sec.

The graph shows that the relationship of density to gun-to-tank distance and cosØ is essentially linear.

As the gun-to-tank distance increases, the foam is applied over a larger area, resulting in thinner passes. Thinner passes result in higher density foam, probably due to the reduction in exotherm temperature and the resultant reduction in expansion of the blowing agent.

As the clocking angle, Ø, approaches 0°, the effect is virtually the same as increasing gun-to-tank distance, i.e. the foam is spread over a wider area: the 'stripe width' increases. The increase in density occurs for the same reasons.

Cos Ø was chosen as the controlling variable since it is proportional to the stripe width and we expected a linear response to stripe width. If we had chosen Ø as the controlling variable, we would have encountered pronounced curvature in the response surface along that axis.
The cos Ø axis runs from .5 to 1.0 which is equivalent to a range of 60° to 0°. The stripe width at 0° is double what it is at 60°.

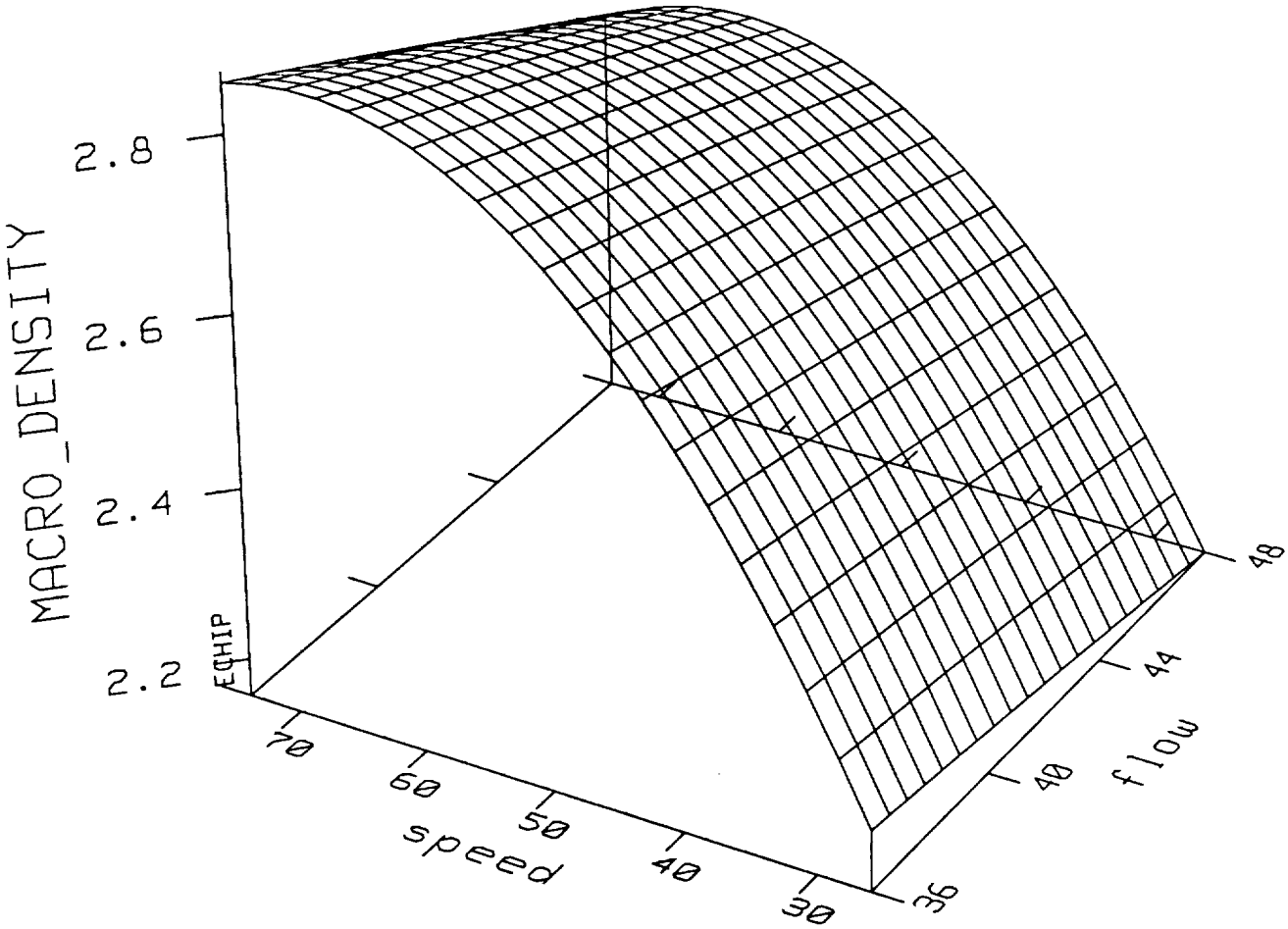

FIGURE 18: Macro Density as a Function of Surface Speed and Material Flow Rate

SS8020 Spray Tip, .110" Orifice Plate, Distance: 40", Clock Angle: 41.4°.

The graph shows that density is strongly influenced by surface speed, and that the response is non-linear, density approaching an upper limit. In the region where the majority of ET acreage foam is applied, around 50"/sec., density is very responsive to speed.

Density would appear to be not so responsive to flow, however the flow range on the graph is rather small. The reason for this narrow range is that the spray tip will only produce a viable fan pattern within about 15% of its nominal rated output. One would expect density to *decrease* as output increases and the graph indicates that this occurs. However, the magnitude of the density change is reduced by a characteristic of the spray tip i.e. as the flow through a fixed-orifice spray tip is increased, the fan pattern, and thus the stripe width, become wider, resulting in a tendency to *increase* density. Thus the effects tend to cancel each other out and indicate that attempting to control density by output changes *through a single spray tip* would be unsuccessful.

The 'real' effect of flow will become apparent when the results of the low output sprays (with a *different spray tip*) are analyzed.

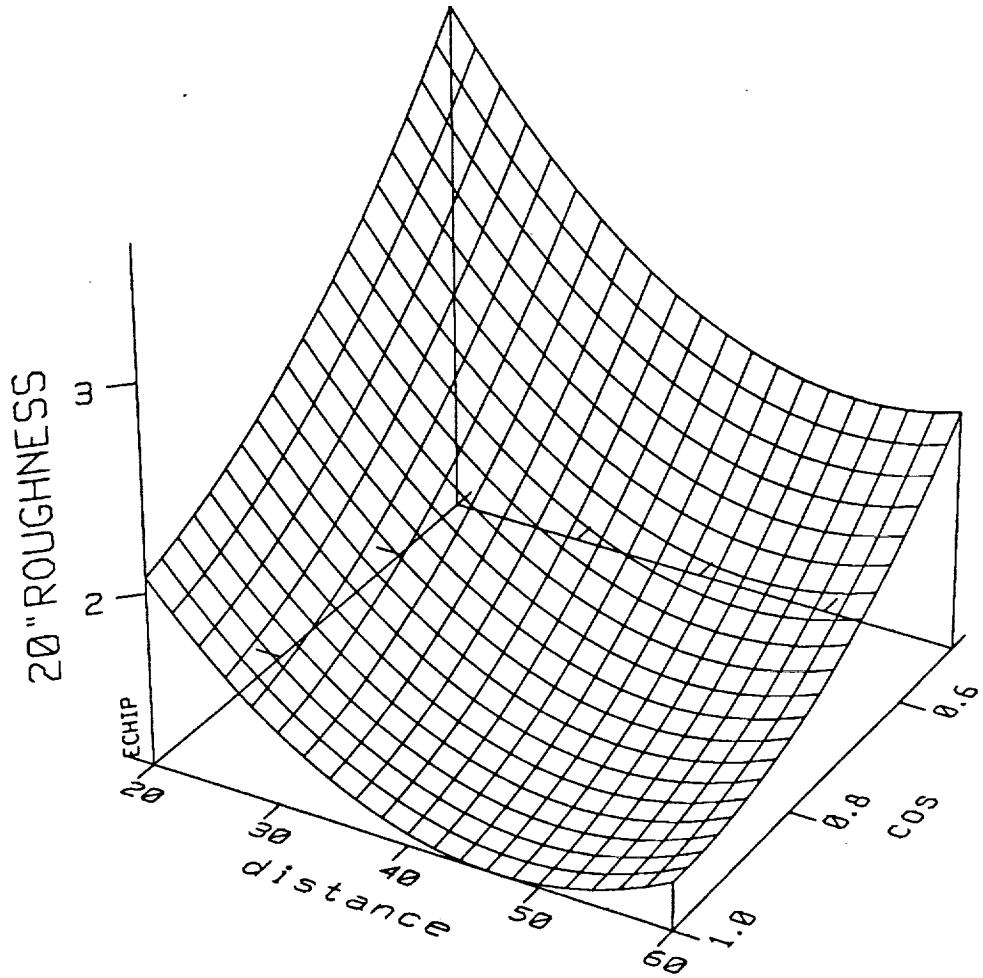

FIGURE 19: 20" Roughness as a Function of Distance and CosØ

SS8020 Spray Tip, .110" Orifice Plate, Flow: 42 lbs/min, Speed: 50"/sec.

This graph shows that the foam gets smoother as the spray gun is moved further from the tank and as the plane of the fan pattern approaches vertical.

The slight reflex curvature of the graph in the region of the distance axis is an artifact of the software and may or may not be representative of what really happens. A higher resolution experiment around the 50" distance point would be required to resolve this issue. However, for all practical purposes, the response surface indicates that the gun-to-tank distances of the ET production sprays (35-40"), are close to optimal to produce the smoothest foam. The LO2 tank, which has a distance of 35", could be expected to show a slight improvement in smoothness if increased to the 40+ range.

As far as clocking is concerned, 0° produces the smoothest foam. ET sprays generally use 22°. There is no reason to suppose that 22° is better than 0°, but it is close enough to 0° that there is probably very little difference in roughness.

The LO2 tank uses 35°. This was done to lower density on the LO2 barrel region (see Figure P). Smoother foam could be produced on the LO2 tank by changing to 0° clocking providing the resultant density change is compensated for. This compensation will be possible using the VOPS, together with a higher output spray tip, to apply foam to the barrel section at a higher output. Compensation by speed change is not possible without violating overlap time requirements.

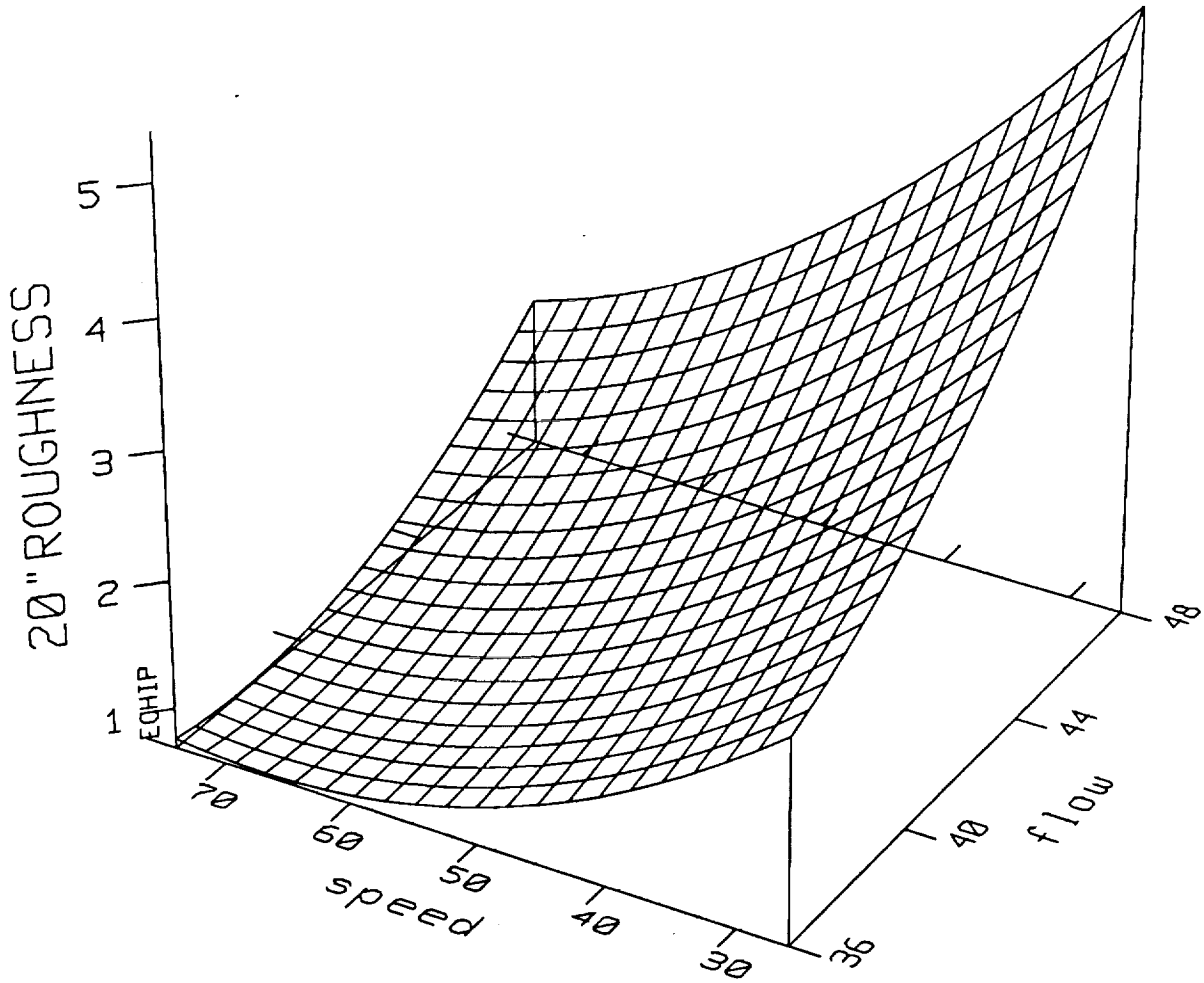

FIGURE 20: 20" Roughness as a Function of Surface Speed and Material Flow Rate

SS8020 Spray Tip, .110" Orifice Plate, Distance: 40", Clock Angle: 41.4°.

The graph shows that the foam gets smoother as speed is increased and flow rate is reduced.

The effect of flow at low speed is very strong. At high speed flow's effect is reduced. This means that there is a strong interaction between speed and flow.

An ET barrel spray would fall at the mid-point of the response surface, indicating that smoother foam could be achieved by decreasing flow and/or increasing speed. However, increasing speed is generally not an option due to overlap time requirements or turntable limitations. Lowering flow is also generally not an option with a single, fixed-orifice, spray tip because foam build-up on the tip increases as flow decreases.

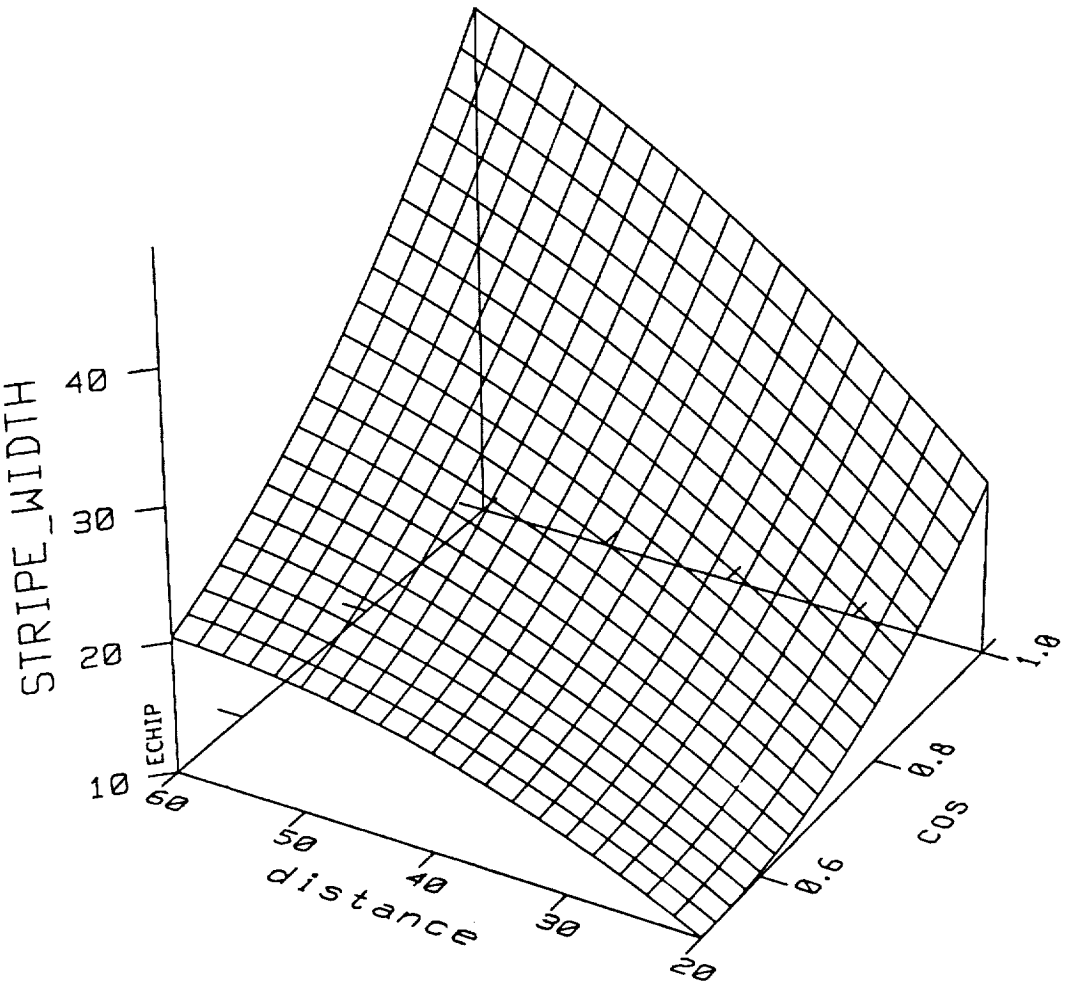

FIGURE 21: Stripe Width as a Function of Distance and Cos Ø

As expected, the stripe width increases as gun-to-tank-distance increases, stripe width increases as Ø approaches 0°, and there is interaction between the variables.

The 'apparent fan angle' can be derived from the data used to construct this response surface. The apparent fan angle is defined as: "the angle subtended at the spray tip by the applied stripe when the fan pattern is vertical."

Mathematically, the apparent fan angle, $\hat{a} = 2\tan^{-1}\left(\frac{y}{2Z\cos Ø}\right)$ where y = stripe width, Z = gun-to-tank distance, Ø = Clock angle.
Note that this expression corrects for clock angle.

The apparent fan angle is a more useful term than the nominal angle of the spray tip. Spray tip manufacturers give their tips a nominal fan angle value, in this case 80°. The angle will only *be* 80°, however, at a specific flow/viscosity combination.

Once we have derived the apparent fan angle for a given tip, we can then predict what stripe width will be produced for a given gun-to-tank-distance and clock angle.

It will be shown later that density and stripe width are closely related. Therefore, if we know the apparent fan angle, we can predict/control density. Also, if we measure the stripe width as the foam is being applied, we will be able to predict density *during application.*

Note the similarity of shape in the stripe width and density response surfaces (Figures 17,21 and 23).

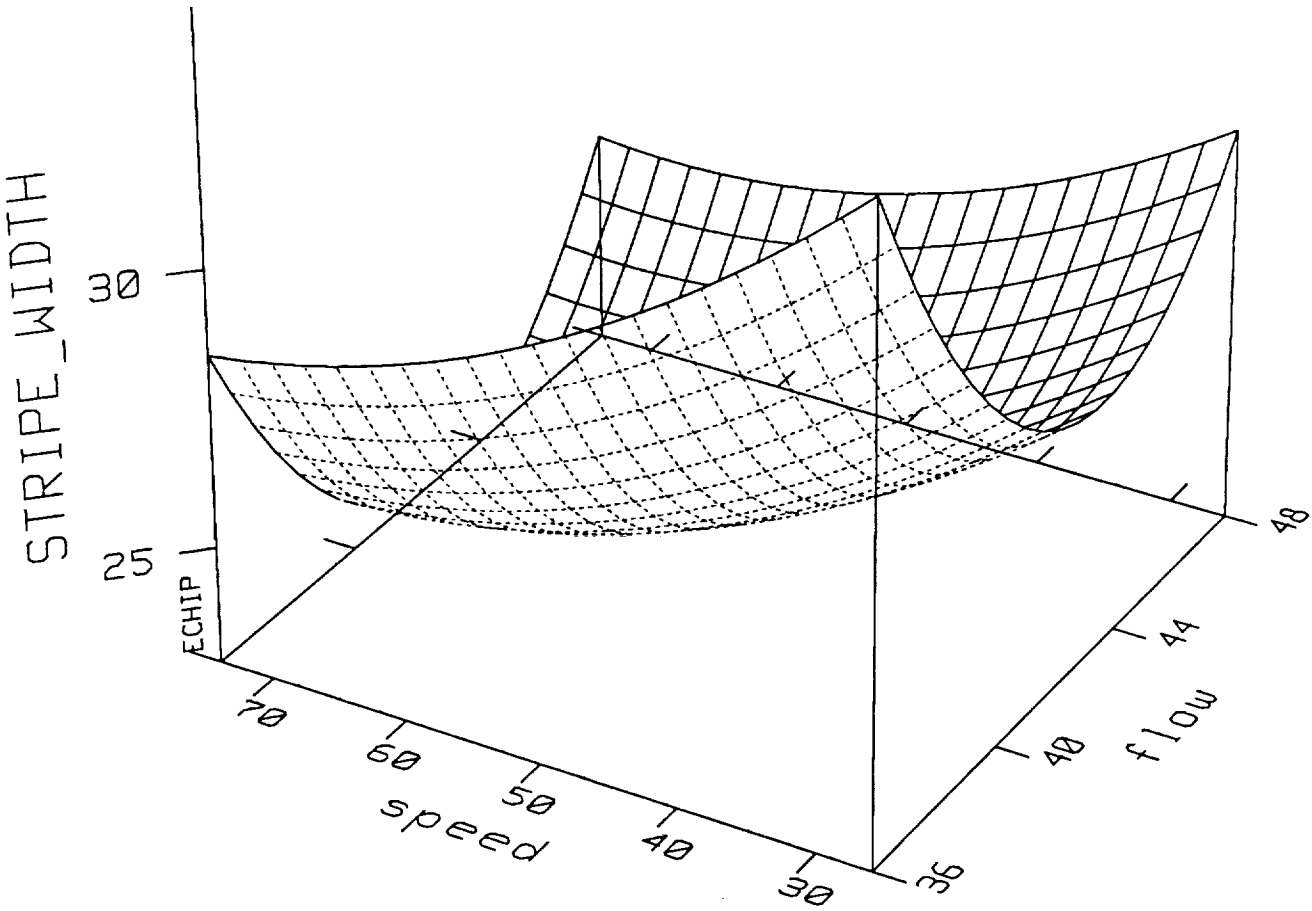

FIGURE 22: Stripe Width as a Function of Speed and Flow

This response surface indicates little, if any, effect of speed or flow on measured stripe width. The vertical axis range is only about 5". At high speeds and low flows, it was very difficult to get accurate measurements of stripe width due to the extreme feathering of the edge of the fan pattern.

Common sense says that there should be no change in stripe width as the turntable speed changes.

The Effects Table, Appendix D3, indicates no response of stripe width to speed, and a very weak response to flow and distance combined. This is to be expected, because at low flow rates the velocity of the droplets in the fan pattern will be lower, causing them to be more influenced by gravity. In other words, at low flow rates, more of the foam falls to the floor. At a low enough flow rate and/or a great distance, no foam would reach the tank surface.

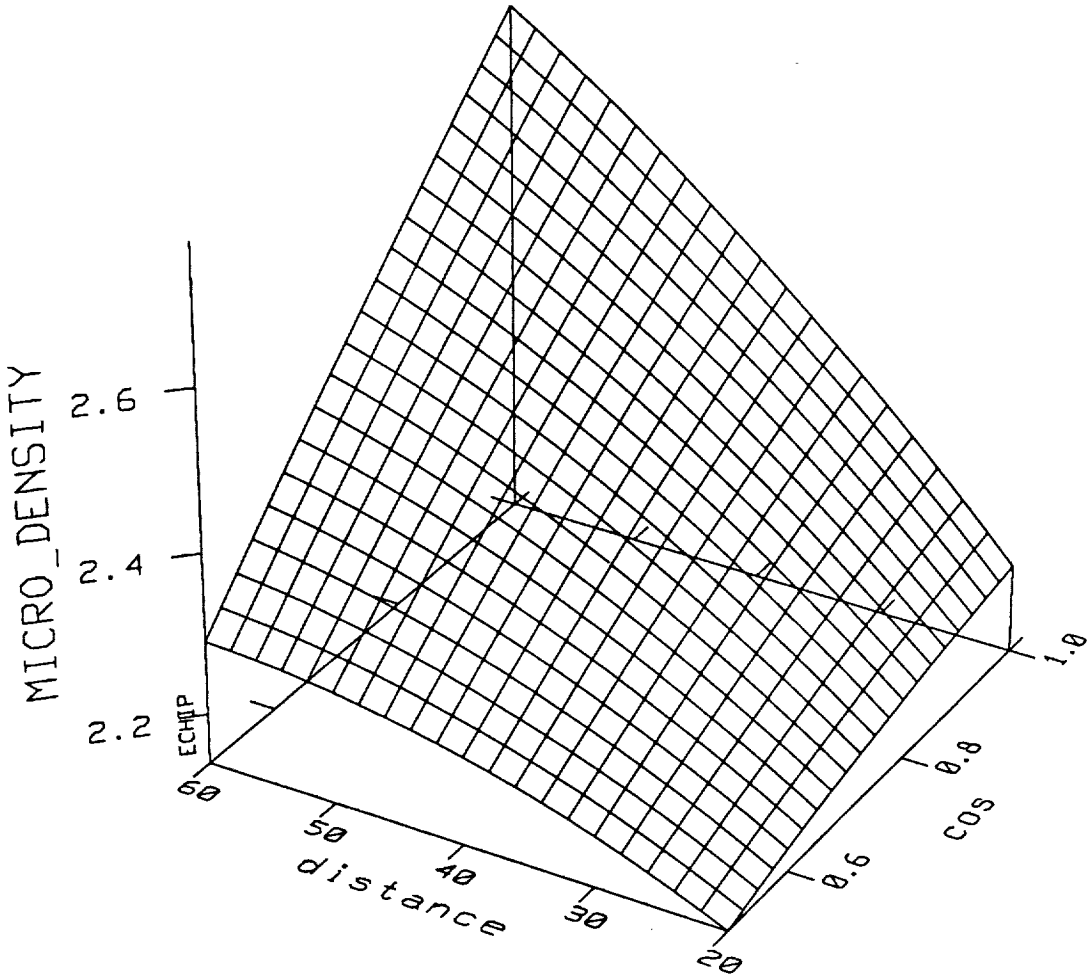

FIGURE 23: Micro Density as a Function of Distance and CosØ

This response surface, and the Effects Table, indicate strong influence of distance and cosØ on micro density. The twisting in the response surface indicates interaction between distance and cosØ, i.e. a change in one multiplies the effect of a change in the other.

Micro density is one of the major ET acceptance criteria. It looks at first glance that distance and clocking could be used effectively to achieve control of micro density, however, in most spray cells, major tooling modifications would be required to increase gun-to-tank-distances. Also, at high gun-to-tank-distances, coverage becomes a problem; the droplets are so spread out that they do not fully coat the substrate, resulting in porosity at the foam/substrate interface.

Some control of density with clocking is possible at ET gun-to-tank-distances. This effect has been utilized on the LO2 barrel/ogive spray to fine-tune the lead-in density.

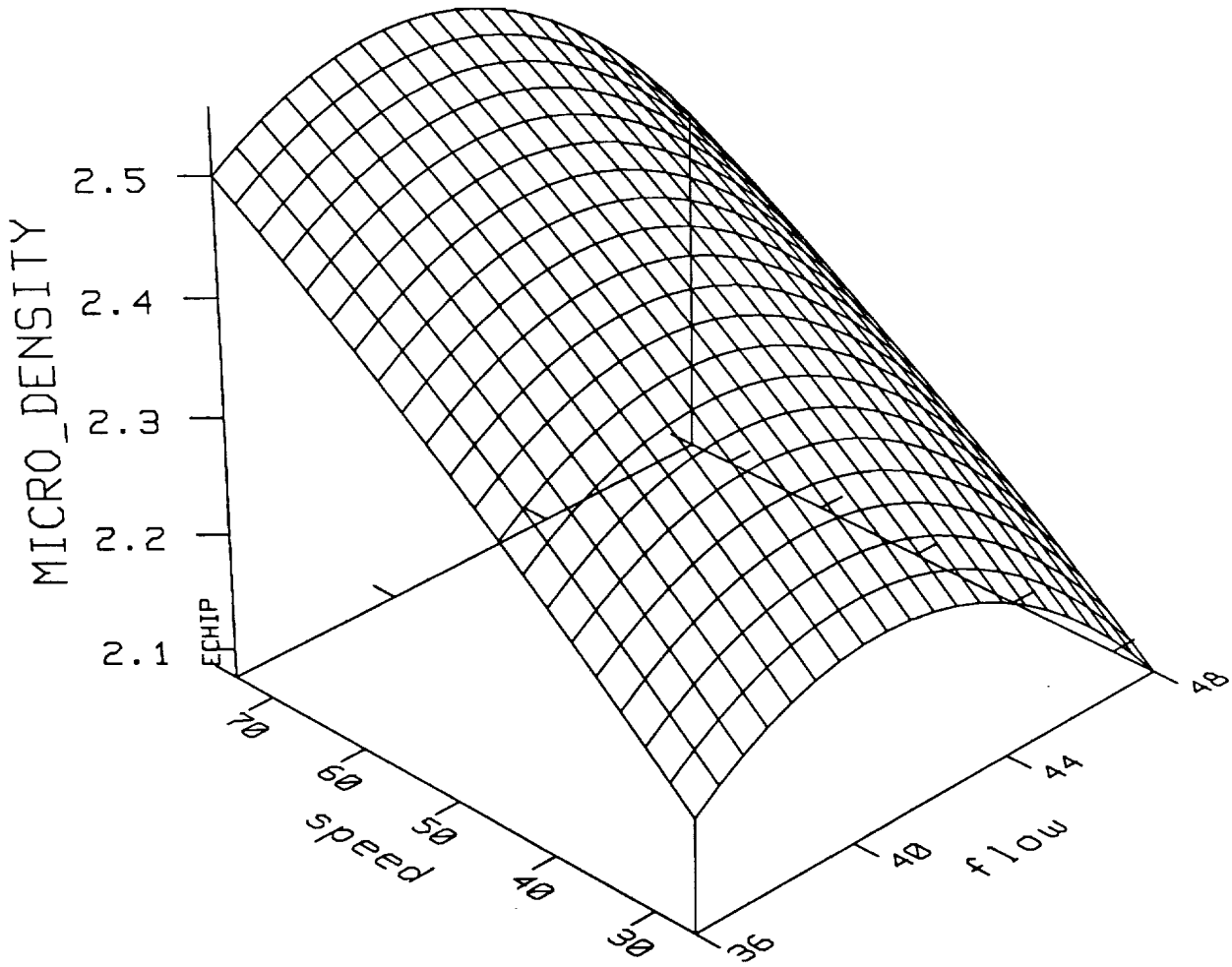

FIGURE 24: Micro Density as a function of Speed and Flow

This surface effectively displays the strong relationship between substrate velocity (speed) and density. Flow's effect is less clear. Compare this chart with Figure18 (Macro Density). Again the influence of flow is insignificant.

Flow's weakness as a potential control variable should not be misinterpreted. It must be remembered that all flow changes were made through a fixed-area spray tip. This means that as flow changes, droplet velocity changes, amount of overspray changes and material distribution within the pattern probably changes also. The results from the 2nd (low output) block of experiments will show that good control of density can be achieved using flow rate as a variable *if appropriately sized spray tips are used.*

For a variable-output, constant-density, spray of the LO2 tank, several spray tips will be required to enable good fan patterns to be maintained as the output is changed. These response surfaces indicate that little, if any density change will occur while the output is changing through one spray tip. Rather, the density changes will be incremental.

EFFECTS TABLE

To assist in discussion of the Effects Table, it is reproduced below. A full-size version is in Appendix I.

coop8020...EFFECTS TABLE...High Output SOFI Sprays

	flow	speed	cos	distance	MACRO_DENSITY	sigres	STRIPE_WIDTH	sigres	20%ROUGHNESS	sigres	MICRO_DENSITY	sigres
0	0	0	0	0	2.672		24.119		1.580		2.405	
1	1	0	0	0	-0.162	*	-3.167	8.458	2.086	**	-0.113	*
2	0	1	0	0	0.537	***	-4.680	9.725	-2.529	**	0.312	***
3	0	0	1	0	0.224	**	20.557	***	-1.255	2.609	0.295	***
4	0	0	0	1	0.506	***	17.938	***	-1.009	2.340	0.341	***
5	2	0	0	0	-0.003	0.179!	4.688	10.715	0.436	2.057!	-0.111	*
6	0	2	0	0	-0.208	*	1.129	7.207!	0.552	2.186!	-0.014	0.108!
7	0	0	2	0	0.080	0.292!	3.638	10.917!	0.252	2.209!	-0.010	0.123!
8	0	0	0	2	-0.061	0.228!	-2.266	8.009!	0.526	2.070!	-0.034	0.123!
9	1	1	0	0	-0.091	0.250	1.398	6.847!	-0.997	2.463	-0.016	0.100!
10	1	0	1	0	0.061	0.216!	-1.752	7.072!	-0.429	1.859!	0.063	0.145
11	1	0	0	1	-0.018	0.168!	-5.552	*	-0.260	1.648!	-0.098	*
12	0	1	1	0	0.168	*	-1.582	6.997!	0.569	2.026!	0.059	0.143
13	0	1	0	1	0.217	*	-2.047	7.463!	0.696	2.152!	0.202	***
14	0	0	1	1	0.095	0.244	7.583	**	0.317	1.690!	0.187	***
RESD SD					0.130		4.450		1.197		0.069	
REP SD					0.137		4.339		1.349		0.061	
INFLNCE					0.998		1		0.996		1	

20 Data rows used
5 Replications
25 Observations in all

The block of 0's, 1's and 2's on the left side of the page are the exponents of the variables used in the experiment, i.e. flow, speed, cos, and distance. The groups of stars indicate the strength of a variable, or pair of variables, to influence the response factor. Three stars indicate the strongest effect. We are mainly concerned with the three and two star effects. To use the table, locate a three star group. That group belongs to the response factor printed above the column to the left. Sight horizontally across the table to the exponent group until you encounter a digit other than 0 in the exponent group. It will be a 1 or 2. Read the column heading above the 1 or 2. That is one of the variables which most strongly influences the response you selected. A 1 indicates direct influence. A 2 indicates the influence of the variable *squared.* If more than one number appears on the same line in the exponent group, the effect under consideration is the result of the *interaction* between those variables.

The effects table shows that Micro Density is strongly influenced by a number of variables and combinations of variables, i.e. Speed, Clocking, Distance, Speed/Clocking, Clocking/ Distance. Less significant variables are: Flow, Flow Squared, and Flow/Distance.

Stripe width, predictably, shows that it is strongly influenced by clocking and distance. It is weakly influenced by flow in combination with distance.

'20" Roughness' shows the most sensitivity to flow and speed i.e. deposition rate. It showed a lesser sensitivity to clocking and distance.

Macro Density shows similar behavior to micro density. Speed, Clocking and Distance are the big hitters. Macro Density shows wide variation. This is indicated by the replicate standard deviation which is 0.137. The probable cause for this variation is that some of the sprayed panels had 'low' corners and edges. This seems to be a characteristic of the panel's position on the tank and has been noticed on other panels sprayed in the MSFC booth. The cause of the phenomenon is not known. Micro Density shows much less variation, having a replicate SD of .061.

COEFFICIENTS

In order to fully utilize the mathematical model within the ECHIP® program, it is possible to extract the coefficients and reconstruct them into an equation. The coefficients from the High-Output, SS 8020 model are shown below:

	Macro Density	Stripe Width	20" Roughness	Micro Density
CONSTANT	2.3476E+00	2.1608E+02	1.8523E+01	-3.0298E+00
FLOW	-1.7326E-03	-1.1008E+01	-5.2008E-01	2.5397E-01
SPEED	-4.1003E-02	-3.1323E-01	-6.7676E-02	-8.8372E-04
COSØ	-3.3910E+00	-4.5411E+01	-6.1854E+00	-1.0427E+00
DISTANCE	9.5006E-03	1.4113E+00	-1.4482E-01	7.9221E-03
FLOW^2	-9.6732E-05	1.3023E-01	1.2114E-02	-3.0953E-03
SPEED^2	-3.6042E-04	1.9604E-03	9.5819E-04	-2.4409E-05
COS^2 Ø	1.2749E+00	5.8213E+01	4.0249E+00	-1.6098E-01
DISTANCE^2	-1.5213E-04	-5.6652E-03	1.3143E-03	-8.4368E-05
FLOW.SPEED	-3.1619E-04	4.8542E-03	-3.4619E-03	-5.4977E-05
FLOW.COSØ	2.0168E-02	-5.8417E-01	-1.4291E-01	2.0971E-02
FLOW.DISTANCE	-7.4042E-05	-2.3135E-02	-1.0850E-03	-4.0898E-04
SPEED.COSØ	1.3981E-02	-1.3183E-01	4.7448E-02	4.9417E-03
SPEED.DISTANCE	2.2574E-04	-2.1326E-03	7.2472E-04	2.1046E-04
COSØ.DISTANCE	9.5105E-03	7.5829E-01	3.1719E-02	1.8662E-02

For example: Micro Density = -3.0298E+00 +2.5397E-01.F-8.8372E-04.Spi-1.0427E+00.cosØ+7.9221E-03.Z
-3.0953E-03.F^2 -2.4409E-05.Spi^2 -1.6098E-01.cos^2Ø -8.4368E-05.Z^2
-5.4977E-05.F.Spi +2.0971E-02.F.cosØ -4.0898E-04.F.Z
+4.9417E-03.Spi.cosØ +2.1046E-04.Spi.Z +1.8662E-02.cosØ.Z

Similar equations can be assembled for the other responses. In this format, the models are rather cumbersome and are more easily handled in a spreadsheet program. Appendix D4 shows a spreadsheet which was developed to calculate Hoist Velocity and flow rates for simulations of the forward ogive. Calculations, including the Macro Density Function above, are embedded in the spreadsheet.

DENSITY / STRIPE WIDTH RELATIONSHIP

If we take the density and stripe width functions and plot them for equal values of density, we can observe the relationship between them. Figures X, Y and Z show the relationship for different values of substrate velocity:

FIGURE 25: STRIPE WIDTH V. DENSITY (42lbs/min, 26 in/sec)

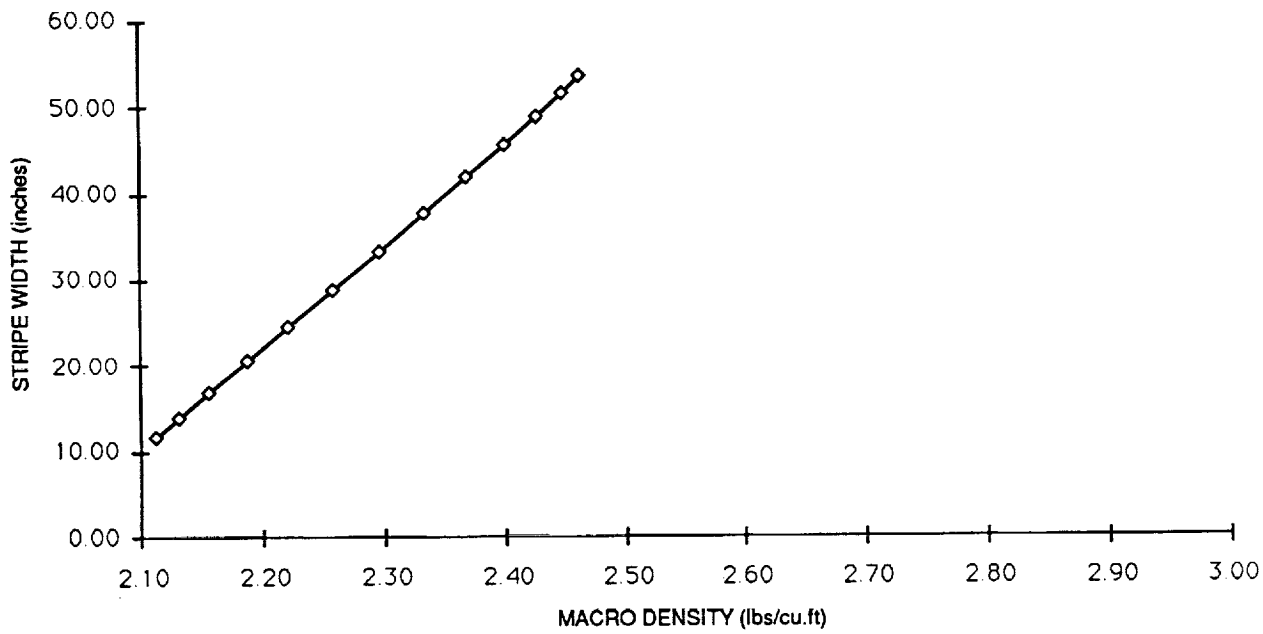

FIGURE 26: STRIPE WIDTH V. DENSITY (42lbs/min, 50 in/sec)

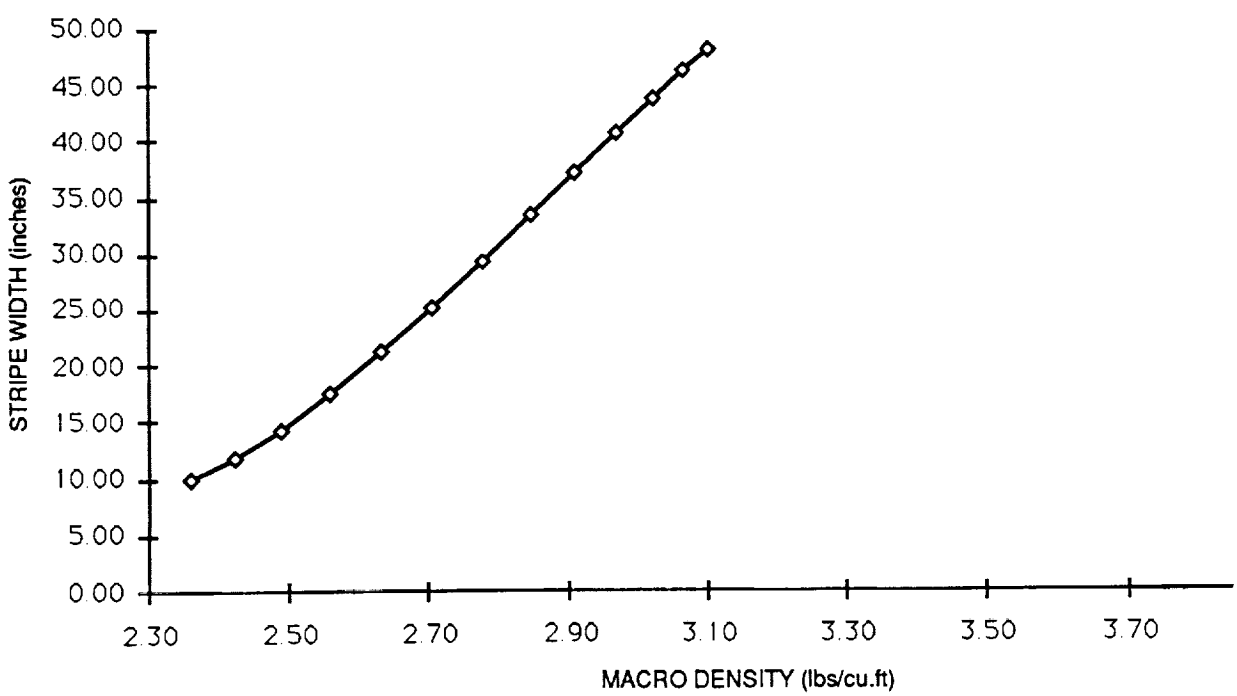

FIGURE 27: STRIPE WIDTH V. DENSITY (42lbs/min, 74 in/sec)

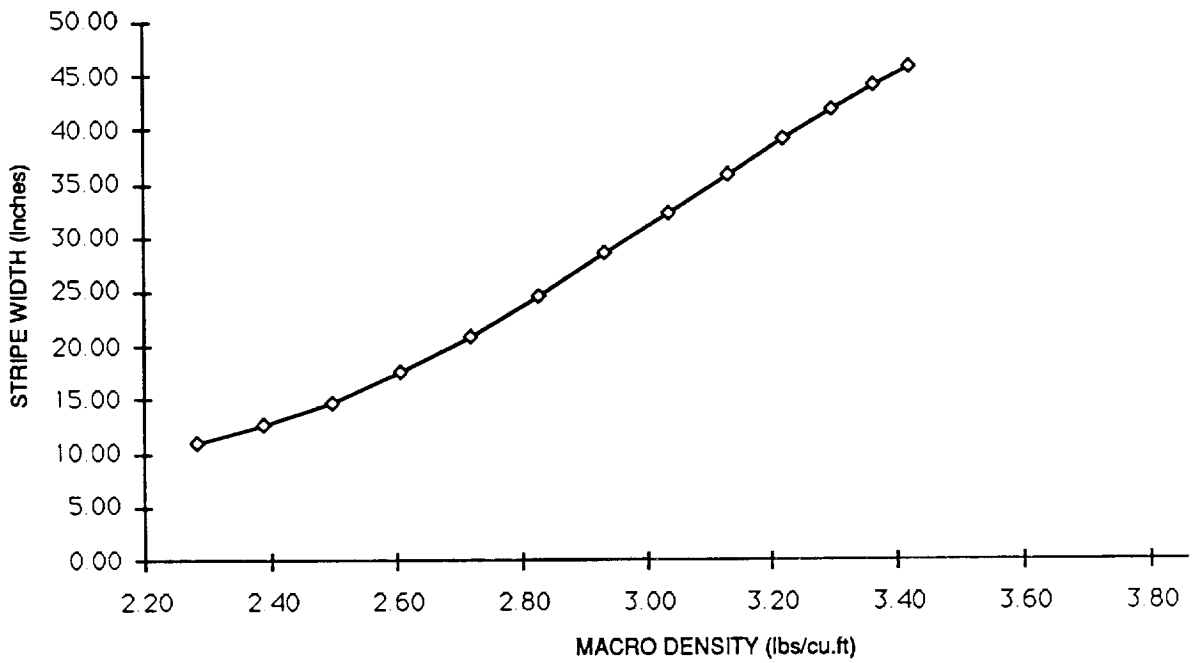

The graphs indicate an essentially linear response of density to stripe width. What this tells us is that, for a given speed and flow rate, a change in the stripe width will produce a change in density. It does not matter how the stripe width is changed, whether by clocking or gun-to-tank-distance.

The implication of this for all ET sprays is that any fan pattern instability which results in a change in the apparent fan angle *will* cause a change in density *and,* as a consequence of the density change, a change in thickness.

This helps to explain why the LH Tank spray, nominally set to give 1.0" ± .25" of coverage, sometimes has areas of thick foam, sometimes thin, even though the flow rate in all cases is the same. Similarly, although the foam density is 'normally' 2.3 lbs/cu.ft., densities as high as 2.8 have been encountered on the LH tank.

Once this relationship was confirmed, attention was focussed on the LH tank spray gun assembly. It was reasoned that, if it did produce unstable fan paterns, that a possible cause might be the 'orifice plate'. This is a relatively low-precision component which separates the mix chamber from the spray tip, it is glued in position. It was decided to replace the orifice plate with a Cunningham Orifice Plate, or COP. Adjustments were made to the COP to increase its duration performance and it was tested in cell B.

The results of this change were dramatic. Over 3 full duration sprays, including ET 68, thickness was maintained within 1/8" of the target value with the exception of two minor 'bumps' on ET 68. Density stabilized at 2.3 to 2.4 lbs/cu.ft.

While attention was focussed on the spray gun, an evaluation of the spray tip itself was made. We found that the SS6520 tip hade wide variation in the dimensions of its eliptical opening, whereas the SS8020, used for the LO tank, did not. A procedure was immediately implemented to screen each spray tip dimensionally.

The 3 sprays which have so far been accomplished with the new COP and tip screening, show unprecedented repeatability in appearance, thickness, density and gun performance.

The new extended-performance COP enabled each spray to be made with only a 60 psi pressure build up after 50 minutes. 'Normal 'build up would be about 600 psi.

CONCLUSIONS AND IMPLICATIONS FOR THE ET

Currently, ET SOFI process parameters are calculated according to a model which assumes a constant density for the foam:

$$\text{Hoist Velocity} = \frac{9.1673 \,.\, \text{Flow}}{\text{Thickness} \,.\, \text{Density} \,.\, (\text{Thickness} + \text{Diameter})}$$

As we have seen, density is actually strongly affected by speed, clocking and gun-to-tank distance. When the low output experiments are completed, we will show that flow rate (through a properly sized spray tip) is also a strong controlling factor.

If we substitute the newly-developed Macro Density equation into the fixed-density formula, we create a quadratic function which calculates hoist velocity based on the *actual* density at any location:

$$\text{Hoist Velocity} = \frac{9.1673 \,.\, \text{Flow}}{\text{Thickness} \,.\, \underline{(\text{Macro Density Function})} \,.\, (\text{Thickness} + \text{Diameter})}$$

Such a formula is readily manipulated in a computer spreadsheet program and can also be transposed to act as a predictive tool for thickness and density.

It must be remembered, however, that the Macro Density Function only applies to one spray tip. When a new tip is activated to accomodate a flow change, the Macro Density *Function* itself has to change. The low-output experiments will create Functions for the SS8010 spray tip which, it is anticipated, will be one of those used for the forward ogive region of the LO2 tank.

Functions for intermediate spray tips will be produced by interpolation and tested by brief verification experiments.

For an actual variable-output spray of the LO2 Tank, the following procedure is anticipated:

1. Barrel will be sprayed at 42 lbs/min (SS 8020). Output will be reduced to 36 as the 1st gun change is approached.
2. Gun change will be made at the station location where 30 lbs/min is required to maintain constant density.
3. 2nd gun, with SS 8015 activates at 36 lbs/min. Output immediately reduces to 30 lbs/min. Output reduces to 25.5 immediately prior to the next change.
4. Next gun change will be made at the station location where 25.5 lbs/min is required to maintain constant density.
5. 3rd gun, with SS 8010 activates at 25.5 lbs/min. Output immediately reduces to 21 lbs/min. which is maintained until just prior to the next change when it drops to 17.5 lbs/min.
6. 4th and final gun is activated at 17.5 lbs/min. Gun has an SS 8008 spray tip. Output reduces continuously to 12 lbs/min which is the end of the spray.

At each gun change a new density function is inserted into the hoist velocity program. In practice, this will occur off-line. Less than 4 guns may be used depending on the performance range of the new TPV gun.

The possibility exists, since multiple guns will be used, that each could have different clocking. This would allow fine-tuning of the barrel density and fine-tuning of the surface finish on the forward ogive. In practice though, this is a risky proposition which complicates the gun assembly process. A fixed clocking angle, shared by all the guns, is a safer compromise.

In summary, this year's experimental design work has produced an improved model of the SOFI application process for CPR 488 at high output. The conclusion of the low-output experiments will extend the range of the model. The results from the designed experiments confirmed what had been' known' intuitively, and quantitatively defined the relationships between variables. The confirmation of the link between density and stripe width led to the immediate resolution of perhaps the largest SOFI-related production problem, the LH Tank barrel spray.

The power of the designed-experiment philosophy cannot be over-emphasized. The wealth of data and response functions included in this report were the result of 15 lab sprays, which took about a month to perform. 'Traditional' methods would have required in the order of 50 sprays and perhaps months of analysis. The experience gained in the use of the experimental design philosophy will pay dividends in the evaluation of CFC replacements for SOFI.

CVIM/VISION SYSTEM SPRAY EVALUATION

Task Leads: Son Ngyuen(CVIM)
Jeffrey Gray(VS)

The CVIM/Vision measurement feasibility effort was concerned with developing techniques to imrove the real time feedback concerning gun and as-sprayed SOFI performance thereby improving in-process spray decision making and reducing SOFI rework. This effort was composed of two seperate technology studies. The first of these was the spray pattern recognition system development utilizing a Configurable Vision Input Module(CVIM) to analyze spray pattern dynamics. The second effort was the in-process video monitoring system(VMS) using video technology to analyze the spray pattern and as-sprayed SOFI surface in a real time mode. The details of these development efforts are given in the following sections.

I. CVIM DEVELOPMENT

INTRODUCTION

A CVIM (Configurable Vision Input Module) module and associated vision equipment was acquired under TD675 FY90 as part of the Pyramid Integrator System. Under TD675 FY92 efforts, the CVIM was determined as a feasible system for use in recognizing a spray fan pattern distribution. Since the CVIM is part of the Pyramid Integrator System, all data obtained by the CVIM is shared with the PLCs, the HP workstation, and the MAF LAN through the system backplane.

The CVIM contains several types of tool sets used to analyze an acquired image. Among these are gages for measuring distance, angles, number of edges, and etc. There are also analysis windows for measuring number of objects, average luminance, template matching, optical character recognition, and etc.

Two important aspects of any visual analysis system is the way the image is acquired and the method by which the image is analyzed. Image acquisition involves using the proper camera along with proper lighting and camera parameter settings such as resolution, exposure time, aperture size, field of view, focal distance, and etc.

The best way to determine the relative material distribution of the fan pattern is to measure the average luminance of different, equally sized areas across the pattern over a fixed distance from the gun tip. The more light an area of the pattern reflects, the more material is passing through that area since the luminance of the reflected light is a function of the

number of particles reflecting the light source. The question that remains is the geometry, size, and placement of the measurement areas.

APPROACH

The CVIM is capable of analyzing two different images from two different cameras with its tool sets. The equipment configuration as used is shown in Figure 28. For ease of testing, only one image was used, that of the side view of the fan pattern. Twenty-four analysis windows are available and were all placed across the pattern at a distance of approximately 6 inches away from the gun tip. These analysis windows are rectangular and were sized at 12 by 8 pixels. The windows were set up for luminance measurements. The value of the luminance was scaled from 0 to 63 with 63 being the saturation level. These luminance values were then plotted as a function of position along the cross section of the fan pattern. A diagram of this image analysis configuration is shown in Figure 29. This set up was used in the gun room with water sprays, in the AMT spray booth during tip insert selection, and cell B during two test sprays and one production spray of the LH2 barrel.

Figure 28 - CVIM Equipment Configuration

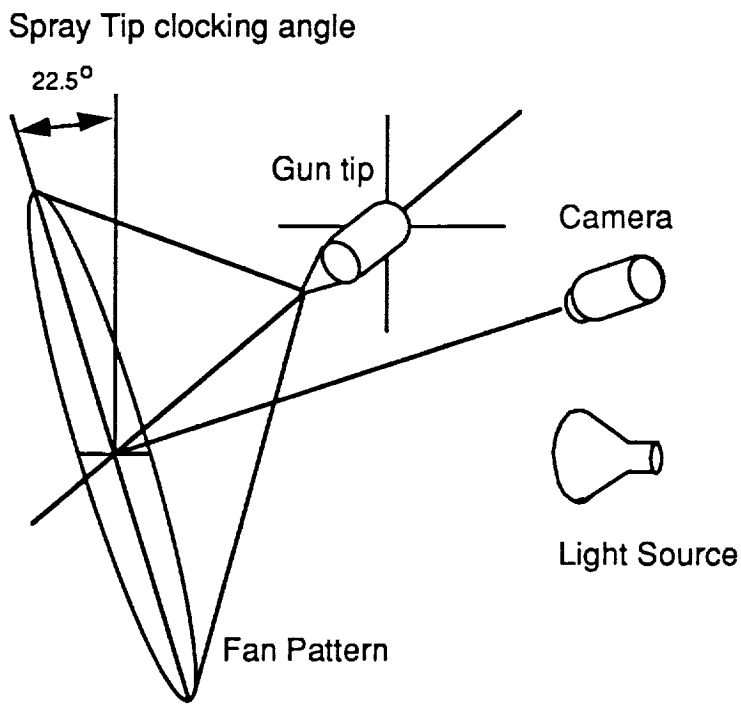

Figure 29 - Image Analysis

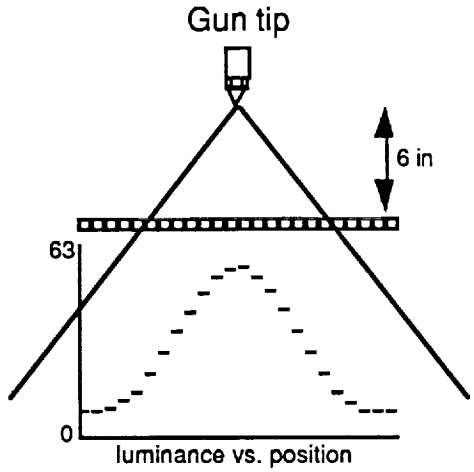

DEVELOPMENT RESULTS

The fan pattern distribution was successfully acquired and displayed on a monitor screen. The fan pattern distributions are different for different types of tip inserts and can be easily distinguished. Each tip insert has a baseline fan pattern distribution characteristics. Any deviation from this baseline pattern indicates a possible foam build up on the gun tip. The spray cell operators did actually use this pattern to determine at what point the SOFI wacker should be used. A baseline fan pattern for a SS 6520 tip with a 0.109, 0.156 stepped insert would normally look like this at the beginning of the spray:

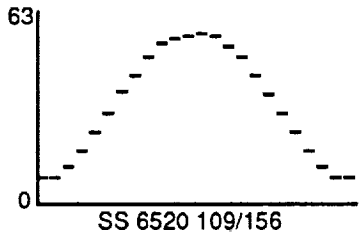

As build up on the gun tip occurs during spray, the fan pattern changes:

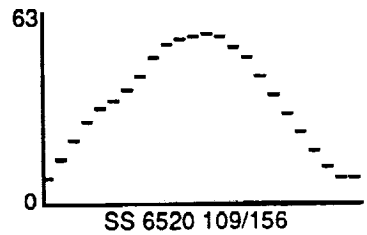

The fan pattern showed significant changes in distribution about 2 to 3 minutes prior to visual confirmation of a gun tip build up.

CONCLUSIONS AND RECOMMENDATIONS

Now that the spray fan pattern distribution can be recognized and recorded, further development should be pursued to incorporate this technology as a feedback loop to the control system. An inference software routine can be written to automatically analyze the pattern and recognize any anomalies associated with gun tip build up. The results could then be used to alert the operator, or fed back to the control algorithms so that the SOFI wacker or a gun switch can be activated automatically when needed. Structured experiments using Taguchi methods on the pattern distribution should be done to determine if there is a correlation between pattern distribution and foam thickness, density, or surface finish.

Another area that can benefit from this technology is the gun room. Currently, gun tips are being tested with water sprays to determine the fan pattern distribution. The process is slow due to individual depth measurements made of each water bin by a conventional ruler. Then, the results are manually entered into a computer for logging and plotting. The CVIM system can be used to record the fan pattern directly into a computer database, thereby minimizing measurement time and labor.

II. IN-PROCESS VIDEO MEASUREMENT SYSTEM

INTRODUCTION

The feasibility of using video monitoring for viewing the applied TPS on the External Tank LH2 barrel sections during rotation of the Tank at TPS application speeds was demonstrated. The adaptability of this method for use during the TPS application process was extrapolated from prior experience and technique. The operator viewing enhancement presented with this method represents a step forward in the manufacturing methods of the VAB operation.

Phase I (Feasibility demonstration of *in-situ* video monitoring) and Phase II (Video camera installation and testing) have been successfully completed. The information obtained from the Phase I testing has defined the CCTV specifications for an acceptable off-the-shelf solution to the problems of size, weight, resolution, sensitivity, chromaticity, illumination, and shutter speed. Performance of Phase II has demonstrated the functionality of the CCTV specifications. It is now possible to obtain in-process machine vision quality images of both the rotating tank surface and the SOFI spray patterns with low cost standard imaging components.

The image shuttering methods have clearly enhanced the ability to detect sputtering, transient fingering, and surface crevicing. Process debriefing of the spray operators and Cell supervisors has provided user evaluation and recommendations. This capability has been demonstrated both on the laboratory scale and in full scale production sprays on the ET 67 and 68 LH2 barrel SOFI sprays.

APPROACH

This effort was divided into three phases as follows: (1) Feasibility demonstration of in-situ video monitoring, (2) Video camera installation and testing and (3) Long range implementation planning. The details of each phase's approach are detailed subsequently.

PHASE I

The Phase 1 effort consisted of evaluating site requirements, identifying a suitable environment for field evaluations, conducting feasibility

experiments, determining equipment requirements for carriage installation and formulating long range plans and recommendations.

Site evaluation

The starting point for this effort consisted of several tours of the VAB with various individuals and conversations with VAB supervisors and spray operators. Production spray operations were observed in Cell C for the forward dome and barrel applications. Approximate measurements for available mountings were made in Cells B, C, and D. Clearances were estimated, ambient lighting was considered and existing cameras were noted.

The large barrel spray carriages in Cells B and C , combined with the 6-foot clearance from the tank, provide a workable environment for camera and lighting installation with minimum impact on the existing hardware. The availability of large areas of platform space provide additional room for static testing. Similar conditions exist on the LH2 spray gun carriage The tight quarters and two-gun spray arrangement in Cell D creates a difficult situation for design and mounting of vision equipment on the carriage. Modification of the existing tower camera systems is possible in Cell D but will require some pan and zoom modifications.

Special provisions for explosion proof enclosures and nitrogen purges will be required in all installations to satisfy equipment environmental and safety constraints. These problems are addressable with field proven methods and do not represent a limitation of the vision system.

In conclusion, no site limitations in Cell B or C were found to preclude installation of the proposed vision system. Suitable room for developmental testing is available. Considerations for installation in cell D will require specialized planning. Futher cell evaluations for additional spray cells will be conducted once field installation of the first camera system is demonstrated.

Identification of suitable equipment for initial evaluations

The initial field feasibility test was designed to evaluate a wide range of camera parameters and features. Since the field test results would define the technical camera specifications of the vision system, it was desired to test multiple combinations of parameters.

The experimental design consisted of still and moving (tank rotation at 3-RPMs) video recordings. The videotapes were made using a B/W CCD camera (NEC model TI-24), a color CCD camera (SONY CD15), and a moire camera (COHU model 4415 with an NRC moire viewer). Two illumination sources were used in the initial tests, a standard color projector and an NRC white light/fringe projector. These combinations provided suitable test setups for evaluation of the critical parameters.

Feasibility experiments

The variable shutter speeds of the NEC and SONY cameras provided suitable control ranges for shutter speed evaluation. Chromaticity evaluation was made by comparison of the B/W NEC camera and the color SONY camera. Resolution evaluation were made by comparison of the same cameras. Sensitivity studies were obtained by using standard illumination and reducing the shutter speeds and F/# until usable images were unobtainable.

Additional feasibility testing was performed with fringe projection and moire interferometry techniques. Although these techniques are long range options for contour viewing enhancements, the necessity for defining test capabilities to coordinate with PT-2112 and the CVIM efforts make it prudent to perform preliminary capability evaluations at this time.

Determination of equipment requirements for carriage installation

Test results from the feasibility experiments were used to develop a comprehensive set of camera specifications. Size and weight restrictions were applied, further reducing the list of commercially available choices.

Long range plans and strategies

Currently, the long range planning is limited to the remainder of FY'92. During the coming period, camera installation and checkout in Cell-C is planned. The effort will also include interface with PT-2112, and the CVIM efforts.

PHASE II

Upon the successful conclusion of Phase I a plan for incremental implementation to support test and production activities was undertaken. The production spray failure on the LH2 barrel of ET-67 provided an impetus for production support activities. At the recommendation of management, phase II activities were accelerated to support the respray activities. The availability of a flawed production article provided opportunity to work directly with the production supervisors to develop suitable SOFI surface monitoring techniques.

Camera selection was made based upon the previously defined parameters. At the request of the production personnel a suitable color camera was obtained. On-site testing was performed on the nominal and rejected areas of the ET-67 LH2 tank in collaboration with the Cell B personnel. The cameras were next mounted on the Cell-B spray carriage and additional lighting was provided for shadow imaging. A second camera (B/W) was installed above the SOFI spray gun to provide a second view angle of the spray process.

In-process monitoring was performed on the ET-67 BBL-4 respray providing the operators with live images of the SOFI surface and sampled images of the weld bead regions where the rollover condition was anticipated. In addition, live and frozen images of the top view of the spray pattern were provided to detect any fan pattern flutter. In-process monitoring was also performed on the ET-68 LH2 production and in support of the spray gun development activities which followed the ET-67 failure. Water spray and spray booth tests were monitored for the candidate spray tips using fan pattern analysis. During the ET-68 spray, a full array of fan pattern and SOFI surface cameras were used for the first time. The results were displayed on the Cell-B/C control room consoles where the cell observation cameras are normally displayed.

Evaluation of the spray monitoring techniques was performed through interaction with the spray personnel prior to, during, and after the ET-67 respray and the ET-68 production spray. Refinements and additional implementations were made between the ET-67 and ET-68 LH2 sprays

Upon completion of each spray monitoring, the spray cell personnel were debriefed. The collected data was also presented at the TPS Process Improvement Team meetings for comments and for information support of special observations.

The CVIM modules were used by Test Operations during the spray development activities prior to the ET-68 spray and again during the ET-68 spray. The CVIM performance and compatibility evaluation was performed during and after these activities.

DEVELOPMENT RESULTS

PHASE I

The site evaluation revealed that both space and loading constraints on the LH2 barrel spray carriages presented no significant limitations to the installation of a video monitoring system. The tooling engineers which were interviewed expressed confidence that suitable enclosures and controls could be designed and constructed at reasonable costs. The existence of prior effort in implementation of video systems provides sufficient design base to support the requirements of this task

Discussions with the spray operators and cell supervisors revealed a strong interest in utilizing the video technology. They demonstrated their current observation methods (limited viewports), and the few cameras which they currently use. Although the existing cameras appear somewhat better than expected, they are insufficient for the accurate shuttered SOFI surface imaging needed. One technical observation made from the discussions, was a distinct preference for color imaging. The operators felt that asthetic appeal of the color images alleviated some of the viewing strain which had been experienced with the previous B/W cameras.

The selection of cameras and shutter speeds for the initial experiments were sufficiently complete to obtain a reliable specification for the desired imaging requirements. The parameters of field of view, camera resolution, pixel resolution, and visibility are the primary concerns for camera selection. The secondary concerns of sensitivity, chromaticity, size and weight, must be considered when designing the illumination source.

Tables 3 and 4 show the primary performance characteristics related to the shuttered CCD imaging cameras. Selection of suitable operating ranges depends upon the resolution requirement of the overall system. For example, if a 50 mil feature must be resolved during tank rotation, Table 3 gives a shutter speed requirement of 1/250th sec. while Table 4 requires a maximum field of view of 1 foot for a 240 pixel camera and

about 2 foot for a 512 pixel camera. Faster shutter speeds will provide some improvement in visibility. Slower shutter speeds will significantly blur the image. At larger fields of view, the pixel resolution is insufficient to image the feature.

Shutter Speed	1/60	1/100 sec	1/250 sec	1/500 sec	1/1000 sec
Blur Spot	80 mils	48 mils	19.2 mils	9.6 mils	4.8 mils
Resolution*	160 mils	96 mils	38.4 mils	19.2mils	9.6 mils
SOFI Visibility	Very Blurred	Blurred	Slight Blur	Crisp	Very Crisp

Table 3
Spot Resolutions of Rotating Tank at 3-RPM

At a rotation rate of 3-RPM the movement of the surface during the shutter period (or exposure time) will tend to blur the perceived image. *The theoretical resolution which can be achieved is roughly twice the distance travelled (Nyquist Criterion) during the exposure. The asthetic visibility of the SOFI image (given here for a 2' field of view) when freeze frame is implemented is given in the 4th row of the table.

Field ov View	1'	2'	3'	4'	5'
Pixel Size(512)	23.4 mils	46.9 mils	70.3 mils	93.8 mils	117 mils
Pixel Size(240)	50 mils	100 mils	150 mils	200 mils	250 mils

Table 4
Single Pixel Size in Object Space at 512 and 240 Pixel Resolution

The object feature size corresponding to a single image pixel is given here, for 512 and 240 pixel resolutions, compared with the lateral field of view of the imaging system. Operator viewing of single pixels is difficult and requires close observation. The pixel size however, is the minimum resolvable feature size for unenhanced automated processing.

The next consideration for imaging considerations is the update rate which must be maintained to provide full coverage of the tank. Although the the live video is constantly being updated at 30 frames per second, the frozen images which will be presented to the operator can be taken at any discrete point. Live viewing of tank rotation at small (< 4-5 feet) fields of view was found to cause a strain on the observer and a reduction in the visibility of features.

The final resolution tradeoff becomes the update rate versus resolution problem. Table 5 shows the required image update rates to successfully image an ET rotating at 3-RPM. When the field of view is widened to slow down the update rate, the pixel resolution is compromised and the minimum resolvable feature size is reduced. The possibility for using double monitors exists in the final system design to alleviate this problem. The possibility for dedicated monitors to look only at specific regions of interest is also another consideration. These issues should be addressed in Phase two of this effort.

Field of View	1	2	2.4	3	4
Frames / Sec	4.8	2.4	2.0	1.6	1.2

Table 5
Frame Update Rate for Full Coverage at 3-RPM

During rotation freeze frame images must be updated to provide full field coverage of the ET. Table 3 shows the video updates rates for various fields of view to provide full coverage

From these studies, the only camera requirement of major imaging importance turn out to be the pixel resolution. For illumination importance, the sensitivity will be critical. For mounting, the size and weight will be important.

PHASE II

A COHU 8295 color CCD camera was selected to satisfy performance criteria in a color format. The camera was initially utilized on the Cell-B observation platforms to refine lighting placement design. After initial testing with various lighting angles and shuttering, the spray operators were consulted for opinions. Due to the rotation of the tank the characteristic formation of the crevice conditions were best observed with right side illumination at a 45 degree angle and normal viewing.

To provide operators with a qualitative visual measure of the crevice severity, several regions on ET-67 were presented, representing degrees of crevicing. The rollover condition which leads to crevicing in extreme cases is observable on almost all weld beads of the LH2 spray and serves as a benchmark for visual observation and detection of crevicing. By

direct comparison with Quality inspection data, we were able to provide the operators with an enhanced subjective evaluation capability to judge the severity of crevicing which later occurred in-process.

This technique was successfully utilized during the ET-67 BBL-4 respray and during the ET-68 spray development and production spray. The operator observations made during the ET-67 respray detected a noticable rollover and crevicing condition which appeared to remain just within acceptable spray constraints. Subsequent measurements by Quality Control confirmed the acceptability of the respray for thickness and waviness.

Frozen images of the rotating tank were obtained using a color video digitizer mounted in a 386-PC computer. A game port input trigger was linked through the existing PLC controller and synchronized to the +Z-axis proximity sensor on the turntable. Software timing loops within the PC provided suitable delays to synchronize individual frame acquisitions to areas of interest on the tank during rotation. For the ET-67 respray a single weld land area was sampled once per revolution. On the ET-68 test and production sprays, multiple weld land areas were sampled.

Use of the surface vision techniques on the ET-68 test and production sprays provided in-process verification of the significant reduction in rollover which resulted from the gun tip redesign. Although the weld land areas were observable during the ET-68 sprays, the lack of any severe rollover condition could clearly be distinguished in-process from the live video imaging.

During the ET-67 respray moderate levels of crevicing were observed in-process. The spray supervisor determined that the anomalous conditions he observed were within specifications and continued the spray. Subsequently, Quality inspection of the tank verified the acceptability of the spray.

Observation of the spray cell personel during the ET-67 and ET-68 spray operations revealed that their primary utilizations of the video methods were to maintain a clean gun tip and to perform cursory visual examination of the weld land rollover condition. During the ET-67 respray, when the rollover condition was significant, much attention was given to the sampled weld land surface images.

During all sprays which were monitored a significant amount of operator attention was directed towards maintaining a clean gun tip. The fast shuttered CCD cameras, CVIM and the NEC, both provide a significant enhancement in ability to detect the sputter particles which are indicative of material buildup on the gun tip. An additional unexpected result of the ET-68 spray monitoring occurred when the auxiliary operator was able to directly observe gun tip buildup several seconds before sputtering was observed. Overall, a 5 to 10 second improvement in gun tip buildup detection has been obtained through use of the top view fan pattern monitoring. The use of dual fan pattern cameras has also improved the operators ability to observe and visualize the rotational position of the gun tip cleaning mechanism and prevent the rest position of the monofilament element from impinging on the fan pattern.

Post spray debriefing of the spray operators and supervisors indicated a high level of satisfaction with the performance of the video imaging systems. At their recommendations, the video images were fed directly into the operators console for the ET-68 production spray.

Presentations of video results were made to the TPS Process Improvement Team after all test and production sprays. The video data was used for general evaluation and to support investigation of several specific anomalies. During the ET-67 respray, the top view fan pattern camera clearly detected the previously theorized flutter phenomena, where the lateral direction of the fan pattern oscillates at high frequency (~60 hz). A single fan pattern deflection resulting from gun tip clogging was also observed. The team also used the video images to study the gun tip switch dynamics, the dynamics of the new gun tip cover and mount, the ET-68 gun switch and reversal event, and other dynamic phenomena of lesser importance.

Test Operations Engineering conducted parallel evaluation of the CVIM imaging system during the ET-68 test and production sprays. Several issues of compatibility and interface were raised. The video format of the CVIM cameras is still unidentified. The interface between the CVIM and the PC controllers is in question but the manufacturer implies that a plug-in PC card can be used for control and communications. The data output from the CVIM into a PC controller must be addressed in future efforts.

The CVIM performance in current configuration is limited in resolution but we anticipate that it can serve the production implementation requirements after additional work and refinement.

PHASE III-LONG RANGE PLANNING

Currently the long range implementation plans for full scale video imaging is suspended as a result of FY'93 budget cuts from the NASA. Work Breakdown Structures, task descriptions, system and subsystem concepts, subsystem interaction concepts, resource analysis, and development timelines have been developed and are awaiting allocation of appropriate funding.

The overall concept for the SOFI Vision Monitoring System (VMS) consists of three independent instrumentation systems which are designed to provide a complete set of process instrumentation from foam expulsion at the gun tip to geometrical conformance measurements of the cured product on the ET surface. Qualitative and quantitative measurements are designed to provide spray operators with enhanced decision making capabilities and to provide machine vision feedback for future smart process controllers.

The purpose of an in-process SOFI surface vision subsystem is to provide the spray operators with a real time viewing capability for observing the ET SOFI surface during spray operations. This effort which is now essentially complete is described above. Final implementation will involve minimal levels of additional evaluation and a final control link connection to the VMS master controller.

The purpose of an in-process SOFI fan pattern monitoring and measurement system is to provide real-time dual axis observation and qualitative measurement of the SOFI spray pattern in-process. The system will be designed to measure the fan pattern from side and top views at standard video frame rates (30 images per second). The system will be designed to quantify the theoretical gaussian profiles and identify anomalies such as fingering, flutter, lateral offsets, and temporal drift. An additional future option is to equate direct measurements of the fan pattern distributions with theoretical models of SOFI thickness and then compare those results with the real time quantitative measurements provided by the SOFI thickness and measurement subsystem.

The purpose of an in-process SOFI thickness and waviness measurement system is to provide a quantitative measure of the SOFI material application conformance to spray requirements. The current concept involves a fusion of two types of sensor technologies to provide a real-time three dimensional geometrical measurement. Point sensors are to be

used to detect location of multiple positions on the ET aluminum skin as a substrate reference plane. Video machine vision methods are to be used to provide accurate (~25 mil resolution) three dimensional relief maps of the SOFI surface geometry. By combining the two sets of data the overall thickness of the applied TPS can be determined.

By construction a wireframe model of the measured data and applying positional referencing, the thicknesses of individual knit lines can be extracted and related to the TPS models for extraction of theoretical densities. Evaluation of the surface relief profiles can be used to extract vertical waviness data for full area coverage in-process. Consolidation of the entire data set can be later utilized for Quality acceptance of the finished product.

Once all subsystems are fabricated and tested the remaining task is to develop an artificial intelligence module to extract performance measurement information. The AI decision making processes can then be used to evaluate the SOFI application process and provide the process controllers performance feedback information for modification or shutdown.

CONCLUSIONS

(1) Field capabilities for enhanced video monitoring of the TPS application process have been demonstrated.

(2) Operator decision making enhancements are clearly obtainable as demonstrated by field test results.

(3) A conceptual solution for machine vision instrumentation from gun tip to Quality acceptance is given.

Appendix A

VOP Specification

Specification for Prototype High Pressure Variable Output Pumping and Metering Machine for Automatic Spray On Foam Insulation

Technical Directive 575

SOFI Process Improvements

Prepared by
Joe T. Walls

Task Lead TPS Development
Martin Marietta Advanced Manufacturing
Non Metals Processing Group
Marshall Space Flight Center.

Phone: 205-544-4673
FTS 824-4673

280493

JAN 0 8 1992

Specification for Prototype High Pressure Variable Output Pumping and Metering Machine for Automatic Spray On Foam Insulation

Technical Directive 675

SOFI Process Improvements

1.0 **Introduction**

1.1 This document defines the specifications for a high pressure Variable Output Pumping System (VOPS) which provides the foundation for a new generation of automatic processing equipment for Spray On Foam Insulation (SOFI) applications for External Tank Thermal Protection Systems. This specification is based on the Variable Output Pumping System (VOPS) developed by Martin Marrieta Manned Space System at the Marshall Space Flight Center (MSFC) for testing and evaluation of advanced design concepts for a variable output SOFI process.

1.2 The purpose of this document is to provide specifications for a prototype variable output metering and high pressure pumping system for urethane and isocyanurate spray foam systems.

1.3 The specifications delineated herein are based upon demonstrated capabilities of the MSFC VOPS test bed and an in depth study of urethane equipment manufacturers and industry capabilities. The specifications are designed to provide a "State-of-the-Art" variable output platform that meets the requirements for the automatic SOFI system for the Michoud Assemble Facility (MAF).

1.4 The technical point of contact for the engineering development and fabrication of the prototype pumping unit specified herein will be the Martin Marietta Advanced Manufacturing Non Metals Processing Group at MSFC.

1.5 System components shall adhere to the functional descriptions in section five (5) entitled "Pumping Machine System Components". Where possible, required tolerances, ranges of capability and control configurations are specified.

1.6 The intent of this specification is to remain within the state-of-the-art of commercially available production pumping and metering technology from the urethane industry. One exception, where novel custom engineering will be required is the special requirements for

ORIGINAL PAGE IS OF POOR QUALITY

programmable variable flow control.

2.0 **Applicable Standards**

2.1 Equipment and sub-components defined herein, must meet or exceed all applicable OSHA and ANSI requirements related to processing two component urethane chemical systems and the standard practices of the urethane equipment manufacturing industry.

2.2 Electrical controls, subsystems and devices shall meet or exceed all NEC, NEMA, NFPA, and UL approvals where applicable, as standard practice within the urethane equipment manufacturing industry.

2.3 The equipment shall meet or exceed all ASME codes for pressure vessels, Section VIII, Division I.

2.4 Applicable sections of the standards, codes, approvals, and regulations specified herein shall be those in effect on the date of this invitation to bid and shall be considered part of the Martin Marietta Corporation (MMC) specification.

3.0 **Machine Configuration**

3.1 The VOPS shall be constructed on two delivery platforms herein defined as the Control Console and the Pumping Unit.

3.1.1 The Control Console shall include the operator interface, PLC controller, I/O modules, motor drive controllers relays, switches, transformers and indicating lights required for machine operation.

3.1.2 The Control Console shall be of NEMA 12 construction with hinged front and rear doors and be mounted on four locking swivel castors.

3.1.3 The Control Console shall be a single bay type , connected to the pumping unit via quick-disconnect wiring. The console shall be designed and constructed so as to provide for portability, ease of moving, and maintenance of the internal controls equipment.

3.1.4 Two sets of quick-disconnect wiring shall be provided for cennection of the control console and pumping unit, one 20 foot length and on 100 foot length, complete with quick-disconnect connectors so that the unit may be operated in multiple locations.

3.1.5 All indicator lights mounted on the Control Console shall be on a master lamp test switch for indicating lamp conditions.

3.1.6 All items mounted on the control console shall be placarded with engraved metal ledgend plates

3.2 The Pumping Unit shall include all fluid components, valves, servomotors, tanks and instrumentation as noted on the enclosed MAF VOPS pipe schematic (Figure 1).

3.2.1 The Pumping Unit shall be skid mounted on four lockable swivel castors and prvide space for lifting via forklift loader, maximum size to be L 6 ft., x H 6 ft., x W 3 ft.

3.2.2 The Pumping Unit shall be designed and constructed so as to provide for portability, minimized size, and maintenance of the fluid components and instrumentation.

3.2.3 Two (each) two-inch lip drip pans shall be provided for positioning underneath the Pump Unit Skid to contain spills. The two drip pans shall be sized to fit below the polyol and isocyanurate component fluid systems, one for each fluid type, to prevent mixing of fluid components.

4.0 <u>Control System</u>

4.1 <u>Control System Processor</u>

4.1.1 The MAF VOPS control system will utilize a programmable logic controller (PLC) capable of operating in two modes:

(1) an autonomous, stand alone configuration
(2) as a remotely controlled PLC, connected as remote I.O. to the supervisory controller (SC) which will be an Allen-Bradley Pyramid Integrator.

4.1.2 Mode selection shall be locally switch selectable from inside the control console between autonomous and remote control modes.

4.1.3 The programmable logic controller shall be an Allen-Bradley PLC processor, capable of simultaneous remote scanner and adapter mode operation to meet the requirement of section 4.1.1 (PLC-5/40 or PLC-5/60).

4.1.4 The PLC I/O system shall be sized to provide for control of all machine functions, status indications, alarms, interlocks, and data acquisition, as noted on the enclosed MAF VOPS pipe schematic (Figure 1) and as defined in section 5.0 Modes of Machine Operation. The PLC processor configuration shall provide for EEPROM backup of all memory.

4.1.5 A minimum of ten samples per second for each data input shall be provided for display on the operator interface or available for display through the S.C.

ORIGINAL PAGE IS
OF POOR QUALITY

4.1.6 The operator interface to the VOPS PLC controller for local, stand alone control of machine operation, shall b an Allen Bradley Bulletin 2711 Panel View with a remote I/O link to the PLC (type and model TB).

4.1.7 The operator interface shall provide interactive screen graphics displays for system function status indications, alarms, interlocks, data acquisition, and operator input of all control set-points required for machine operation.

4.1.8 The operator interface shall provide interactive screen graphics displays for support of machine set-up, diagnostics, and servo motor/drive tuning required after replacement of servo drive components.

4.2 Control System Input/Output

4.2.1 All Input and Output from the VOPS PLC to VOPS system subcomponents shall be directly compatible with Allen-Bradley Bulletin 1771 Universal I/O modules and Universal chassi requirements.

4.2.2 Input modules shall be provided for the following signal types in order to support sensors as noted on the enclosed MAF VOPS pipe schematic (Figure 1) and as defined in section 5.0, Modes of Machine Operation:

(a) differential analog
(b) differential millivolt/thermocouple (i.e. 1771-IXHR thermocouple input modules for thermocouple signals)
(c) flowmeter output signals (CMOS pulse i.e. 1771 VHFC)
(d) discrete

4.2.3 Output modules shall be provided for the following signal types in order to control valves and subsystem components, as noted, on the enclosed MAF VOPS pipe schematic (Figure 1) and as defined in section 5.0, Modes of Machine Operation:

(a) discrete (AC & DC)
(B) differential analog (quantity and range TBD)

4.3 Control System Sub components

4.3.1 Flow-rate and ratio control of both component output streams shall be achieved via synchronized closed loop RPM control of both component pumps. Flowmeters shall be provided, as noted, on the enclosed VOPS pipe schematic (Figure 1) as feed back for Proportional Integral Derivative (PID) control of the output of both component streams.

4.3.2 Drives for the both component streams shall be independent digitally controlled regenerative DC servo motor drives. The servo drive motors shall be totally enclosed, fan cooled, rated for continuous operation and sized to match the mechanical load requirements of the component pumps.

4.3.3 Control of the drive servo motors shall be achieved using Allen Bradley Bulletin 1395 (1396) intelligent drives with remote I/O link to the Allen-Bradley PLC-540/560.

4.3.4 Dynamic variable flow control of component pump outputs shall be provided via three methods of user control in both stand alone and supervisory control modes.

4.3.5 Flow control method one:
Dynamic variable output control shall be provided using a user programmable data table which provides for a set-point output, ratio and polynomial rate of ramp for the combined flow of both component streams for a minimum of 700 output set-points.

4.3.6. The value for rate of ramp shall determine the rate of change of the combined flow of both component streams when a command to change to a new flow set-point has been detected by the PLC.

4.3.7 Synchronization for output changes shall be provided via the Panel View user interface in the local, the SC (Allen Bradley Pyramid Integrator) in the remote control mode of operation or a single dedicated digital input as specified in section 5.0, Modes of Machine Operation.

4.3.8 User Initiation of a command to change to a new flow set-point shall be available from the Panel View user interface, the digital input in autonomous control mode and from the SC in the remote control mode of operation.

4.3.9 Flow control method two:
An analog voltage input method of combined flow rate control shall be provided where at programmable fixed ratio, a user defined output range shall follow a 0 to 10 volt analog input signal from a Martin Marietta provided analog control device. This method shall provide a direct real-time control of pump output for experimental evaluations of automation methods.

4.3.10 Flow control method three:
A user defined fixed output and ratio method of flow control shall be provide which allows the normal start-up of the pumping system from the Panel View user interface in local control mode or the SC in remote control mode.

5.0 Modes of Machine Operation

5.1 All modes of operation shall be available to the operator from a control terminal located at the Control Console or remotely from the SC.

5.1.1 General Operation
A method for monitoring machine status in all modes of operation shall be provided at the Panel View control terminal using screen graphic displays. Diagnostic screens for machine function testing and performance anomalies shall also be provided.

5.1.2 The modes of operation described in this section of the specification (5.0) , refer to the isocyanate and polyol component systems in synchronous operation unless specifically designated by "either", which refers to independent control of the isocyanate or polyol streams.

5.1.3 Control Power On:
A single power switch of the pull/on, push/off type shall energize the PLC -5 controller, all instrumentation and power systems required for determination of machine status in order to facilitate the start-up of all subsequent control mode operations.

5.1.4 Pump Unit Power On:
A single power switch of the pull/on, push/off type shall energize the Pumping Unit drive system. The switch shall also be interlocked to the Control Power On switch which must be on.

5.1.5 Emergency Stop:
A single momentary push-button shall serve as the Emergency Stop device. The switch shall be clearly marked and serve to terminate all pump unit operations and power to the pump unit. This feature shall be in addition to the emergency shut down of the unit via the methods referenced in section 5.1.6.

5.1.6 Emergency Shut Down:
The emergency shut down of all pump motors will also returns all valve states to the start-up operating mode, without powering down the Allen Bradley control computer. Emergency shut down shall be available from the Panel View control terminal, the SC, saftey pressure switches or via one input bit address of the PLC digital input module which shall be reserved for this special function.

5.1.7 The Pumping unit recirculation valves shall automatically return to low pressure recirculation, high pressure outlet closed mode; whether the machine operation was terminated by the operator, by emergency shutdown, or automatically via a safety pressure switch.

5.2 **Recirculation Modes**

5.2.1 All recirculation modes of operation shall provide for the return of low pressure component to either the respective component tank or the high pressure pump inlet line preceding the filter. User selction of the pump inlet return shall inhibit the operation of the tank fill valve until recirculation of components are returned to the tank.

5.2.2 The low pressure recirculation (LPR) mode of operation shall be the start-up mode for both isocyanate and polyol component pumping subsystems. Recirculating components shall by-pass the closed high pressure outlet valves and back pressure regulators via low pressure recirculation valves which will return components directly to their respective material tanks or the pump inlet line.

5.2.2 Automatic high pressure outlet valves shall be provided which control the flow of either component exit stream from the metering unit. The high pressure outlet valves shall be independently controlled at the control terminal or from a S.C. The output valves shall control delivery of urethane components downstream of the Pumping Unit and will remain closed to low pressure recirculation flows upon power up of the Pumping Unit and during Short Loop pressure test of the VOPS.

5.2.3 Variable pressure regulating valves shall be provided in a secondary local recirculation system downstream of the LPR valves, preceding the secondary recirculation valves. This feature is required in order to adjust the recirculation pressure of the high pressure pumps to simulate the load of the downstream spray devices during short loop pressure test of the VOPS system.

5.2.4 Back-pressure valves shall be remotely controlled, temperature and pressure compensated, variable flow pressure control valves designed for operation over the pressure range of the pumping system.

5.4 **High Pressure Recirculation**

5.3.1 High pressure recirculation (HPR) mode shall be accomplished from the low pressure recirculation mode for either component stream by automatically opening the automatic high pressure outlet valves, closing the low pressure recirculation valves forcing 100% of component flow through the instrumentation manifolds and high pressure outlet valves.

5.3.2 HPR mode shall be selected from the control terminal, or supervisory controller in each of four user control modes of operation:

(1) Variable Output Spray Mode 1 (via flow control method 1, section 4.3.5 Output/Ratio table)
(2) Variable Output Spray Mode 2 (via flow control method 2, section 4.3.9, Analog Input)
(3) Continuous Fixed Output Spray Mode (via flow control method 3, section 4.3.10, fixed Output/Ratio)
(4) Timed Fixed Output Mode (via flow control method 3, section 4.3.10, fixed Output/Ratio)

5.3.3 Variable Output Spray Mode 1 shall place the pumping unit in HPR utilizing flow control method 1 (ref. section 4.3.5, Output/Ratio table) until user terminated from the control terminal, supervisory controller or via all methods of safety shut down. Synchronization of flow rate changes will be achieved via the Panel View user interface in local control mode, the supervisory controller in remote control mode or via one 110 volt input bit addresses of the Allen Bradly programmable logic controller digital input module reserved for this specified function in either control mode.

5.3.4 Variable Output Spray Mode 2 shall place the Pumping Unit in HPR utilizing flow control method 2 (ref. section 4.3.9, Analog Input) until user terminated from the control terminal, supervisory controller or via all methods of safety shut down.

5.3.5 Continuous Fixed Output Spray Mode shall place the unit in HPR utilizing flow control method 3 (REF. section 4.3.10, fixed Output/Ratio) until user terminated from the control console , or the SC. The fixed output spray mode shall use a flow and ratio set-point, programmable from the control terminal or downloaded from the SC.

5.3.6 Timed Fixed Output Mode shall place the Pumping Unit in HPR utilizing flow control method 3 (ref. section 4.3.10, fixed Output/Ratio) for a variable fixed interval via preset timer. This mode shall be the normal mode for adjusting spray orifices downstream of the Pumping Unit.

5.4. <u>Overpressure Saftey</u>

5.4.1 Two adjustable safety pressure switchs shall insure that high pressure recirculation shall not exceed the 3000 psi upper pressure limit of machine operation.

5.4.2 As an ancillary safety measure, a method of pressure relief via an adjustable calibrated pressure relief valve shall be provided at the pump high \pressure outlet.

5.5 **Short Loop Pressure Test Mode**

5.5.1 The Short Loop Pressure Test Mode shall close the low pressure recirculation valves, open the secondary recirculation valves, permitting 100% of the flow of either component stream through the back-pressure regulators that have been preset to one of ten user programmable pressure values. The Pressure Test mode shall provide one or more of the programable pressure loads in a test series. If operated as a test series after a variable preset interval required for ramp-up of system pressures, the next value of the user programable back-pressure values shall become the next set-point of the test series.

5.5.2 Pressure Test mode shall be available utillizing each of three flow control modes:

(1) Variable Output Test Mode 1 (via flow control method 1, section 4.3.5 Output/Ratio table)
(2) Variable Output Test Mode 2 (via flow control method 2, section 4.3.9, Analog Input)
(3) Continuous Fixed Output Test Mode (via flow control method 3, section 4.3.10, fixed Output/Ratio)

6.0 **Pumping Unit System Component Specifications**

6.1 The following minimum requirements shall define acceptable performance of the VOPS components as noted on the enclosed MAF VOPS pipe schematic (Figure 1). The design and assembly of system components shall minimize the volume of foam components required to flush and run the machine. In some cases a specific configuration or type of component is required due to previous testing at MSFC or the Automatic Spray Development task which the machine must support.

6.2 **Pump Type:**

Rexroth fixed output positive displacement multi-element axial piston pump, rated for chemical service, Part number A2FK10R4P4, with urethane o-rings, Teflon shaft seal and Keyed shaft. Pumps shall be free of non-ferrous metals.

6.3 **Pump Drive:**

The Pump Drives shall be independent digitally controlled regenerative DC servo motor drives, totally enclosed, fan cooled, and rated for continuous

operation at the maximum torque required at the pressure and flowrate maximum for the Pumping Unit.

6.4 **Pump Control:**

Variable output control via servo motor control of pump RPM shall be the method of output and ratio control of the system.

5 **Maximum Throughput:**

Sixty (60.0) pounds per minute at a 1:1 ratio or 30 pounds per minute for each component.

6.6 **Pressure Range:**

200 to 3000 psi operating pressure.

6.7 **Pump Pulsation:**

Less than plus or minus 0.2 % of the output assuming constant temperature.

6.8 **Combined System Accuracy:**

Less than plus or minus 0.3 % error assuming constant temperature.

6.9 **Pressure Indication:**

6.9.1 Pressure instrumentation shall be accomplished via precision pressure transducers having zero and span adjustment capabilities and an accuracy of +/- 0.5 % full scale.

6.9.2 A redundant analog pressure gauge shall be provided at each transducer location for hands on maintenance and diagnostic purposes. Pressure gauges shall be minimu 4 inch face dial type, over pressure protected, calibration capable, glycerin filled and rated to an accuracy of +/- 1/2 % full scale.

6.10 **Temperature Measurement**

6.10.1 Temperature measurmentsshall be accomplished utilizing E type, exposed junction 3/16 inch diameter thermocouples wired directly to the PLC 5 input module using the appropriate connectors and thermocouple wire.

6.11 Pressure Control:

Both A and B component pumps shall shut down when the inlet pressure or outlet pressure is outside of a user set upper and lower operating range.

6.12 Over Pressure Safety:

Over pressure conditions shall be relieved primarily via rupture disk and secondarily via a field resetable calibrated pressure relief valve.

6.13 Material Tanks:

Five gallon vats shall be provided for recirculation of the components. An indicating pressure relief valve shall protect material tanks from over pressure conditions. Components shall return to the material tanks via dip tubes to minimize frothing. A dry nitrogen blanket system consisting of a pressure regulator, pressure gauge, shut-off valve, and check valve will be required for each tank to exclude moisture and provide suction pressure for each metering pump. Capability to monitor the vat blanket pressure via a pressure transducer shall be provided at the control console user interface.

6.14 Valves and Piping

6.14.1 All valves and piping shall be labeled, color coded with the flow direction referenced. All remotely operated valves shall be stainless steel electrically operated valves from the R. Springer CO. rated for urethane service with teflon seats and urethane o-rings. All rigid tubing downstream of the chemical pumps shall be seamless stainless steel. Valves shall be rated for the intended service pressure (pump inlet 120 psi, pump outlet 3000 psi.)

6.14.2 All fluid system seals and o-rings shall utilize materials compatible with urethane chemical systems, including foam systems utilizing HCFC 141 B.

6.14.3 Back-pressure regulators shall be Tescom air loaded back pressure regulators, part number 54-2320W212A, 303 stainless steel, 50 to 3500 psi, with Teflon seals.

6.14.4 Control of the back pressure regulators shall be achieved using an air pilot regulator, Proportion Air No. 2B1MB100, 0-100 psi, 0-10 VDC command signal.

ORIGINAL PAGE IS OF POOR QUALITY

6.15 **Skid and Frame**

The Skid and frame for the pump unit shall be fabricated of aluminumum structrual materials and left unfinished.

6.15 **Paint**

The control console and electrical connetion boxes shall be primed and painted NASA Blue meeting Federal Specification TT-E-489 for paint composition and color complying with Federal Standard 595a, color number 25120 or equivalent with textured finish.

7.0 **INSTALLATION** (by Martin Marietta Corporation)

7.1 Martin Marietta Corporation shall provide utilities connections as outlined to the manufacturer.

7.2 Manufacturer shall provide Martin Marietta Corporation complete instructions for the installation of the VOPS.

7.3 Manufacturer's drawings shall reflect items which Martin Marietta Corporation provides.

8.0 **VENDOR INSTALLATION (optional)**

8.1 Installation shall be accomplished in its entirety at the Michoud Assembly Facility. The manufacturer shall furnish all materials, tools, equipment, and experienced qualified personnel to install, checkout, calibrate instruments and test the complete system.

8.2 Any installations performed (such as welding) that distort factory paint shall be touched up to original factory specifications.

8.3 Vendor shall make all connections to the Martin Marietta Corporation provided air, and nitrogen connections.

8.4 Vendor shall be required to have installation personnel attend a contractor orientation presented by Martin Marietta Corporation Safety Department prior to start of installation.

8.5 Vendor shall maintain good housekeeping practice throughout installation.

9.0 **TRAINING**

9.1 The supplier shall, in his proposal, specify his provisions for the training of Martin Marietta personnel at MAF in the operation, programming, and maintenance of the proposed equipment for a minimum of five days.

ORIGINAL PAGE IS OF POOR QUALITY

10.0 **INSPECTION AND ACCEPTANCE**

10.1 The supplier shall submit with his proposal an Acceptance Test Procedure (A.T.P.) for Martin Marietta Corporation's approval. The A.T.P. shall recommend the supplier's procedure to demonstrate the system's capability to meet the requirements for this specification. Martin Marietta will accept the A.T.P. as supplied or negotiate acceptable revisions to the A.T.P prior to issue of fabrication drawings.

10.2 Acceptance of each paragraph of this specification shall be when both parties (supplier and MMC) sign off, as acceptable, the individual paragraphs of the subject specification requirements. In the event such equipment is to be returned to the supplier, all teardown, packaging/crating and shipping costs shall be the responsibility of the supplier and shall be performed by supplier personnel.

10.3 Equipment furnished to this specification shall be required to pass examination to determine compliance with this specification at the vendor's plant prior to shipment. The examination shall be performed by an authorized representative of the customer. Final acceptance of equipment shall be at MAF after installation and checkouts are completed.

10.4 A visual examination will be performed to determine conformance to accepted design, wiring and construction practices.

11.0 **WARRANTY**

11.1 The supplier shall warrant that all equipment delivered shall be free from defects in materials and workmanship, that all items and performance will conform to applicable specifications and drawings and to the extent such items are not manufactured pursuant to detailed design furnished by buyers, that all items will be free from defect in design and suitable for the intended purpose.

11.2 The warranties of seller, together with its service warranties and guarantees, if any, shall run to the buyer and its customers.

11.3 Warranties shall extend for one (1) year from the date of first full and satisfactory operation at the buyer's plant.

12.0 **FABRICATION REQUIREMENT**

12.1 Design reviews , including a preliminary review, shall be held at the manufacturers fabrication plant at 33 %

intervals until the completion of the VOPS design. At the completion of the design phase, the supplier shall furnish for MMC approval five (5) sets of complete and comprehensive fabrication and installation drawing for the VOPS, dealing with overall dimensions and utility connections. One (1) approved set of drawings will be returned to the supplier.

12.1 Supplier shall furnish five (5) sets of Process and Instrumentation Diagrams and Ladder Logic Diagrams (to include input/output and control assignment sheets); a copy shall also be provided on 3 1/2 ", 1.4 MB, disk in ICOM format.

13.0 <u>DOCUMENTATION</u>

13.1 Supplier shall provide MMC with the following documentation in the quantities given. If manuals are in a combined form the larges quantity given shall apply.

13.2 <u>Operation</u> Five copies: This manual shall describe in detail all procedures necessary for proper operation of the equipment in its entirety of functions.

13.3 <u>Maintenance</u> - Five (5) copies: This manual shall provide all necessary information for proper maintenance of all machine components and systems so as to minimize wear and unnecessary downtime. It must also describe in detail frequency and methods of maintenance for all components and systems.

13.4 <u>Installation</u> - Five (5) copies: This manual shall provide all necessary information for the proper installation and start-up of the machine. This is to include all details as to any assembly, hookup of any pneumatic, hydraulic, and or electrical systems and components, and all other related work.

13.5 <u>Parts Lists</u> - Five (5) copies: This manual shall list all parts and components used in the manufacture of this machine including all for those components not manufactured by the builder, but that were purchased from other commercial sources. Each part should be described in detail such that there will be no confusion in identification, and part drawings and/or exploded view drawings should be supplied wherever possible. Part identification shall include commercial part names and numbers in addition to the builder's identifications, if different.

13.6 <u>Suggested Spare Parts List</u> - Three (3) copies: Builder shall supply a list of parts (price and quote separately) which are determined to have a limited life span in the course of normal use. This list will be used

to stock such items so as to minimize downtime should a part or component fail.

13.6 <u>Schematics and Diagrams</u> - Five (5) copies ,one (1) reproducible copy: Builder shall supply all electrical wiring, hydraulic, and pneumatic piping schematics and diagrams associated with this machine.

13.7 Documentation shall include all necessary program and software backup in the event of any memory loss to the controllers.

13.8 Documentation shall include a certificate of compliance that tanks meet ASME codes for pressure vessel, Section VIII, Division I.

14.0 PREPARATION FOR SHIPMENT

The equipment supplied under this specification shall be properly preserved, packaged and crated prior to shipment in accordance with best commercial practices to provide protection against deterioration and damage from the environment, handling, and road shock during shipment and any damage which may occur.

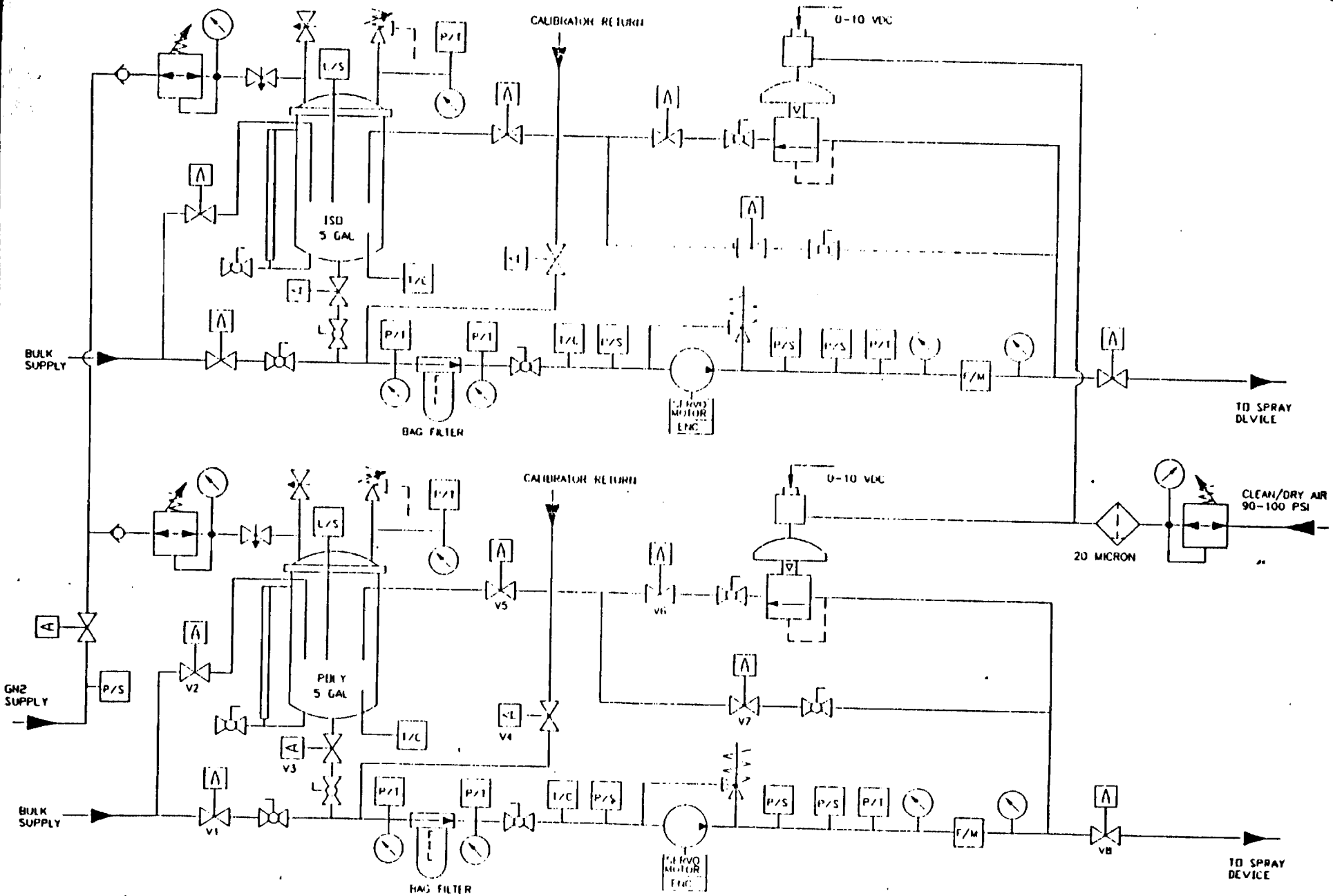

FIGURE 1

MAF PROTOTYPE VARIABLE OUTPUT PUMPING SYSTEM

NO. MAFVOPS2

G. GOLDEN 12/4/91

	V1	V2	V3	V4	V5	V6	V7	V8
POWER OFF	C	C	O	C	O	C	O	C
1. RECIRCULATION TO TANK/LOW PRESSURE	C	C	O	C	O	C	O	C
2. RECIRCULATION TO TANK/PRESSURE TEST LOOP	C	C	O	C	O	O	C	C
3. RECIRCULATION TO TANK/SPRAY MODE	C	A	O	C	O	C	C	O
4. RECIRCULATION TO SUCTION/LOW PRESSURE	O	C	C	O	C	C	O	C
5. RECIRCULATION TO SUCTION/PRESSURE TEST LOOP	O	C	C	O	C	C	C	C
6. RECIRCULATION TO SUCTION/SPRAY MODE	O	C	C	O	C	C	C	O
7. AUTOMATIC SHUTDOWN/EMERGENCY STOP	C	C	O	C	O	C	O	C

O = VALVE OPEN
C = VALVE CLOSED
A = VALVE ACTIVE (DEMAND CYCLE OPERATED)

NOTE: VALVE SEQUENCES SHOWN REFER TO THE NUMBERED VALVES IN FIGURE 1. ONLY THE POLY STREAM VALVES WERE REFERENCED FOR CLARITY. SEQUENCES SHOWN ARE TYPICAL FOR THE ISO STREAM VALVES.

TABLE 1

VALVE SEQUENCE/STATUS CHART

ORIGINAL PAGE IS OF POOR QUALITY

Specification for Prototype Variable Output Pumping System

For External Tank Spray On Foam Insulation Processing

Technical Directive 675

SOFI Process Improvements

ADDENDUM NO. 1

NO. 280493

1.0 Failure Modes and Effects Analysis (FMEA)

1.1 The supplier shall participate in the Martin Marietta "Reliability Analysis" of the VOPS unit. The supplier is NOT expected to quote the cost of conducting the FMEA analysis. The actual FMEA study shall be conducted by Martin Marietta. However, the supplier's configuration management techniques shall be structured to apply the FMEA principals necessary for final acceptance. These techniques shall be addressed in the suppliers proposal. The supplier shall quote two (2) trips to the Michoud Assembly Facility for consulting on the FMEA study.

1.2 The purpose of conducting a FMEA is to prevent, through an analytical evaluation of a system, failures that could promote a "worst case" effect. The approach and rationale shall address, at a minimum, the following:

a. Failure modes and Defects analysis

b. Critical items list criteria

c. Critical item list content

d. Analysis requirements and ground rules

1.3 In the process of conducting a FMEA, each item is analyzed for each possible failure mode and for the worst case effect on the SOFI processing system. The analyst begins the analysis with block diagrams which illustrate the operation, interrelationships, including software, and interdependencies of functional entities of a system and provide the ability for tracing failure mode effects through all hardware levels. Functional/reliability block diagrams are required to show the functional flow sequence and the series dependance or independence

ORIGINAL PAGE IS OF POOR QUALITY

of functions and operations. Block diagrams should be constructed in conjunction with and after defining the system and should present the system as a breakdown of its major functions. More than one block diagram may be required to display alternative modes of operations, depending upon the definition established for the system.

1.4 The process of conducting the FMEA includes the following:

a. Defining the system and its performance requirements.

b. Specifying the assumptions and ground rules to be used in the analysis.

c. Developing block diagrams or other simple models of the system.

d. Devising the analysis worksheet and completing for every identified failure mode. The effects documented will address the worst case effects.

e. Recommending and evaluation corrective actions and design improvements.

f. Summarizing the analysis in report form.

1.5 Analysis results are documented by listing each identified failure mode for each component in the system being analyzed on a separate table or worksheet. The worksheet contains all data elements to be addressed in the analysis. The failure effects, causes, criticalities, etc. are individually assessed for each failure mode on each component depending upon the functions that component performs.

2.0 All fluid stream pressure gauges and pressure sensors shall utilize chemically impervious isolation diaphrams.

ORIGINAL PAGE IS OF POOR QUALITY

Specification for Prototype Variable Output Pumping System

For External Tank Spray On Foam Insulation Processing

Technical Directive 675

SOFI Process Improvements

ADDENDUM NO. 2

P.R. NO. 280493

1.0 The following changes, deletions, and additions are herin documented to the above referenced specification.

2.0 In section 6.12, the reference " via rupture disk" shall be deleted. The primary method to insure over pressure safety shall be the two safety pressure switches located immeadiatly dowstream of of the high pressure pump which shall cause the recirculation valve V7 to open and the pump drive motors to shut down in the event of over pressure detection.

3.0 In TABLE 1. " Valve Sequence/Status Chart" the reference to V6 during condition 5. Recirculation To Suction/ Pressure Test Loop shall be changed to O (open).

Appendix B

LH2 Aft Dome Spray Simulaton Supporting Data

DATA REPORT

M.S.F.C. JOB ORDER 6071

REVISION NO. 1

MARTIN MARIETTA MANNED SPACE SYSTEMS
M.S.F.C. OPERATIONS
TD 675

DATE: May 27, 1992 (REV 1 9/14/92)

DISTRIBUTION:
R. WELCH (3913)
S. RAINWATER (3913)
R. VENABLE (3913)
M. WALLO (4341)
D. COOPER (3619)
J. HUNT (3913)
C. CHILDRESS (3913)
J. SIMPSON (3913)
J. WALLS (3913)

PREPARED BY
GENE GOLDEN (3913)
Sr. Mfg. Engineer
M.S.F.C. OPERATIONS
(205)544-0931

REVISION 1

Revision 1 added the "MAF TESTING RESULTS" section of this report.

SUMMARY OF THE JOB ORDER

The objective of Job Order 6070 was to develop a variable output spray for the application of NCFI 2265 onto the dome cap of the ET LH2 aft dome. The primary goal was to demonstrate that by using variable output spray technology the entire dome could be net sprayed, eliminating the currently required trimming and manual closeouts. The Variable Output Pumping System (VOPS) and the Multi-Nozzle Spray Head were used for processing and spraying the foam, and the LH2 Aft Dome Fixture was the test article or substrate sprayed.

The capability to net spray the dome cap and meet density requirements was clearly demonstrated. Density samples were taken from the apex of the dome outward at five inch intervals for most sprays. The density values measured consistently met the current ET density specification. Also, plug pulls conducted at the apex showed the foam to be of adequate strength, with most strength values being above normal.

Thickness measurements were taken from all sprays and showed some variability at the center. Thicknesses were in specification consistently in all areas except the center-most twenty inches (forty inch diameter), of the cap. Thickness varied out of specification in this area due to inconsistent fan pattern widths. The current solution to this problem would be to spray this area on the thick side and subsequently sand any "humps" encountered to meet the specification. However, additional development sprays, which included tip screening for fan pattern width, could provide a spray strategy which eliminates this problem.

These test sprays also demonstrated that the above mentioned foam properties may be achieved without risk of roll-over, crevassing, or voids, and with a very smooth textured end product. The capability of a variable output spray strategy to overcome current aft dome spray problems and limitations was clearly demonstrated.

AFT DOME TEST FIXTURE

In order to perform this series of test sprays an Aft Dome Fixture was constructed (T.N. 97M22672). The fixture consists of a surplus heavy weight LH2 tank aft dome cap mounted on a rotational fixture. The rotation axis is

horizontal rather than vertical, as in the VAB, due to space and heating limitations in the MSFC spray booth. Substrate heating was provided over the entire dome cap back surface via a hot air duct and plenum system on the fixture. A test panel mounting bracket was constructed and installed on the +Z axis manhole in order to provide a witness panel location identical to that of a production spray. Witness panels were produced for all sprays conducted. A Teflon taped window was constructed that reached across the manhole from the -Y axis edge over the center to the +Y axis edge. A sample "slice" of foam was produced and removed from this window for each spray. Thickness measurements and density samples were taken from this "slice". The remainder of the dome cap was papered.

CONTROL SCHEME

In order to execute the aft dome sprays, it was necessary to step through changes in output, fixture RPM (surface speed), and gun position on a rev-to-rev basis. The spray booth robot, using position signals from the turntable controller, was able to position the spray gun as required to achieve any rise or hoist velocity required. The VOPS, also using position signals from the turntable controller, was able to change output at any desired position during a spray. However, the current spray booth turntable controller was not capable of changing RPM setpoints on a rev-to-rev basis during a spray.

An innovative solution to this problem was developed and put into place which enabled the VOPS unit to control both output and RPM in synchronization with the robot movement. Upon start-up, prior to opening the spray gun, the spray booth control system was used, as usual, to control the environment and fixture RPM. When all parameters were within specification and the spray sequence was initiated, the robot controller transferred RPM control from the spray booth controller to the VOPS. From this point onward, the VOPS controlled fixture RPM and output, and the robot controlled gun position. The spray booth control system now maintained the environment only, but also sent out synchronization signals to the VOPS and robot controller based on fixture position. This system, composed of three computer systems working together to perform a spray, seemed overly complex at first, but performed exceptionally well.

The additional wiring, relays and switches, installed in order to perform this series of sprays, was left in place as a permanent part of the MSFC spray booth control system and provides capabilities that did not previously exist. These capabilities could not have been realized without the advanced abilities of the VOPS unit and the new GMF robot.

FOAM APPLICATION STRATEGY

To apply foam to the entire surface of the dome cap required the use of two different application techniques, or spray gun motions, during the same spray. The first technique used was the standard method of a moving spray gun tracking up a rotating surface, applying foam in a spiral fashion. Using this motion the gun moved onto the outer edge of the dome cap at a set "rise" per pass and continued movement along the rotating surface while spraying foam onto it. A rise value of five inches was used initially but was later changed to eight inches. The eight inch rise per pass yielded the proper overall and knit line thicknesses required for densities within the specification.

The second technique used was one for applying foam to the center of the dome cap. This was done in a "sweeping" fashion. After the last regular pass was achieved, the spray gun was rotated off of the dome to an "off" position to the right of the tank. After a short pause, the gun was rotated onto the dome at a position fifteen (15) inches to the right of the center. The gun was then swept across the center to a point 15 inches to the left of the center, and rotated off to the left, yielding a 30 inch total sweep. The gun sprayed at the left off position, pausing in order to achieve planned coverage and overlap timing, and then proceeded to sweep from left to right in the same manner. The sweeps were executed at a constant gun-to-tank distance of 35 inches, measured to the dome apex, a clocking of zero (0) degrees, and at a gun velocity of 15 inches per second. Sweeps of 30 and 48 inches were tested, and the 48 inch sweeps yielded the most reliable coverage.

The sweeping motion used was intended to be as simple as possible so that any future production tooling would be uncomplicated.

SPRAY SCHEDULES

Thirteen different spray schedules were tested under the job order, and they reflect varying outputs, rises and sweep timings. The majority of changes and efforts were in response to inconsistent thickness values at the center of the dome cap (see the attached spray schedules). The 6510 tips sprayed showed varying fan angles when used, causing a corresponding spray-to-spray change in coverage widths which yielded thickness variations at the center of the dome cap. Due to lack of funds, tip screening tests, which could have eliminated fan angle variability, were not performed. Currently, a reliable aft dome spray strategy would entail spraying the center-most area of the dome cap to a minimum repeatable thickness of 1.50 inches. This would yield some small areas with a thickness of more than 2.00 inches, which could be sanded to a thickness of 2.00 inches or less in order to meet the thickness specification. However, further

tip screening tests for fan angle and coverage could enable the dome to be sprayed with no sanding required.

SPRAY DATA

Density samples were taken from the apex of the dome outward at five inch intervals for most sprays. The density values consistently met the current ET density specification. See the attached spray run data sheets for specific density data.

Concerns were raised as to the strength of the foam sprayed by the sweeping motion at the dome cap center. In order to investigate these concerns an 8" x 24" substrate was taped to the dome cap at the apex and was sprayed for runs 2196, 2197 and 2198. After the spray the panels were removed and prepared for plug pulls. The plug pull values achieved were within specification. See the attached plug pull data sheet for specific data.

Thickness measurements were taken from all sprays and showed some variability at the center. Thicknesses were in specification consistently in all areas except the center-most twenty inches (forty inch diameter), of the cap. As was discussed previously, thicknesses varied out of specification in this area due to inconsistent fan pattern widths. See the attached spray run data sheets for specific thickness data.

MAF TESTING RESULTS

Witness panels from spray runs 2207, 2208, 2209, 2210, and 2211 were shipped to MAF for cryoflex, bond tension, density and compression testing. This testing was performed under Material Sciences Job No. APT-0412-92.

Fifteen cryoflex specimens were tested (five per panel). The specimens were tested to 65 ksi with inspections performed at 35 ksi, 45 ksi, 58 ksi, and 65 ksi. All specimens passed the requirement of 58 ksi. Ten specimens were tested to 65 ksi with no anomalies occurring. Four specimens developed cracks outside the test area at 65 ksi, and one developed a non-surfacing crack in the test area at 65 ksi. No delaminations occured in any specimens.

Three density and compression specimens were prepared from each of the five panels. All tests passed with the average density and compression values being 2.761 ppcf and 45.3 psi, respectively.

Six bond tension samples from each panel were tested at -423 deg. F. Average ultimate stress values were 42.1 psi for 2207, 26.1 psi for 2208, 44.9 psi for 2209, 53.5 psi for 2210, and 56.0 psi for 2211. The 26.1 psi average for panel

2208 is low, and additional testing may be required to insure sufficient bond tension strength.

Refer to the attached data sheets for specific testing data and results.

ADDITIONAL DEVELOPMENT NEEDED

Additional studies should be performed in order to determine the effects of varying fan angles. A basic element of this study should include a methodology for predicting a spray tip's fan angle prior to spraying. This knowledge would help to achieve a "best possible" aft dome spray in which no manual sanding was required.

Also, tooling studies for production implementation should begin. Current tooling is incompatible with the "sweeping" foam application technique tested at the center of the dome cap. If this spray strategy is implemented in production, tooling modifications will be required. These activities should be initiated as soon as possible in order to assure timely installation.

P L U G P U L L D A T A

PLUGS WERE PULLED FROM A 8" x 24" PRIMED SUBSTRATE
LOCATED AT THE APEX (CENTER) OF THE DOME CAP.
PLUG PULLS WERE PERFORMED FOR THE THREE SPRAYS LISTED BELOW.

SPRAY 2196

PLUG NUMBER	TENSILE STRENGTH (PSI)
1	38.1
2	51.4
3	45.9
4	44.1
5	45.7
6	44.7
7	44.6
8	49.3
9	41.2
10	NO TEST

SPRAY 2197

PLUG NUMBER	TENSILE STRENGTH (PSI)
1	37.6
2	55.0
3	50.7
4	49.4
5	37.8
6	57.4
7	46.0
8	49.2
9	44.9
10	54.7
11	48.1
12	49.5
13	51.3
14	41.0

SPRAY 2198

PLUG NUMBER	TENSILE STRENGTH (PSI)
1	53.0
2	59.1
3	51.7
4	40.8
5	38.7
6	42.1
7	51.8
8	47.1
9	55.8
10	51.2
11	48.3
12	46.5
13	47.7
14	40.4
15	44.8
16	46.5

AFT DOME SPRAY SCHEDULE NO. 1

BASED ON A CONSTANT OF 1.26 PPM / IN/S / IN K.L.

PASS NUMBER	TT RPM	t ELAPSED TIME (SEC)	T TARGET THKNESS. (INCHES)	TARGET KNIT LINE (INCHES)	F OUTPUT (PPM)	SUBSEQ. RISE (INCHES)	STATION NUMBER	DIAMETER (INCHES)	SPi SURFACE SPEED (IN/SEC)	A COMP. FLOW (PPM)
1	4.00	0.00	1.75	0.5	18.47	5.00	2161.38	140.00	29.32	1.20
2	4.00	15.00	1.75	0.5	17.22	5.00	2162.98	130.51	27.33	1.12
3	4.00	30.00	1.75	0.5	15.96	5.00	2164.46	120.96	25.33	1.04
4	4.00	45.00	1.75	0.5	14.69	5.00	2165.83	111.34	23.32	0.95
5	4.00	60.00	1.75	0.5	13.41	5.00	2167.09	101.66	21.29	0.87
6	4.00	75.00	1.75	0.5	12.13	5.00	2168.23	91.93	19.25	0.79
7	4.00	90.00	1.75	0.6	13.01	5.00	2169.26	82.14	17.20	0.84
8	4.00	105.00	1.75	0.6	11.45	5.00	2170.17	72.31	15.14	0.74
9	4.00	120.00	1.75	0.7	11.53	5.00	2170.96	62.43	13.08	0.75
10	4.00	135.00	1.75	0.7	9.70	5.00	2171.64	52.53	11.00	0.63
11	4.00	150.00	1.75	0.7	7.87	5.00	2172.20	42.59	8.92	0.51
12	4.00	165.00	1.75	0.7	6.03	N/A	2172.65	32.63	6.83	0.39

SPRAY SCHEDULE NO. 2

BASED ON A CONSTANT OF 2.2 PPM / IN/S / IN K.L.
6510 TIP, 20 DEG. CLOCK

PASS NUMBER	TT RPM	t ELAPSED TIME (SEC)	T TARGET THKNESS. (INCHES)	TARGET KNIT LINE (INCHES)	F OUTPUT (PPM)	SUBSEQ. RISE (INCHES)	STATION NUMBER	DIAMETER (INCHES)	SPi SURFACE SPEED (IN/SEC)	A COMP. FLOW (PPM)
1	3.00	0.00	1.75	0.5	24.25	5.00	2161.38	140.00	21.99	1.57
2	3.20	18.75	1.75	0.5	24.11	5.00	2162.98	130.51	21.87	1.57
3	3.40	36.40	1.75	0.5	23.74	5.00	2164.46	120.96	21.53	1.54
4	3.60	53.06	1.75	0.5	23.14	5.00	2165.83	111.34	20.99	1.50
5	3.80	68.85	1.75	0.5	22.30	5.00	2167.09	101.66	20.23	1.45
6	4.00	83.85	1.75	0.5	21.23	5.00	2168.23	91.93	19.25	1.38
7	4.00	98.85	1.75	0.6	22.76	5.00	2169.26	82.14	17.20	1.48
8	4.00	113.85	1.75	0.6	20.04	5.00	2170.17	72.31	15.14	1.30
9	4.00	128.85	1.75	0.6	17.30	5.00	2170.96	62.43	13.08	1.12
10	4.00	143.85	1.75	0.6	14.55	5.00	2171.64	52.53	11.00	0.95
11	4.00	158.85	1.75	0.7	13.77	5.00	2172.20	42.59	8.92	0.89
12	4.00	173.85	1.75	0.7	10.55	5.00	2172.65	32.63	6.83	0.69

SWEEP TABLE
****

SWEEP NO.	ELAPSED TIME (SECONDS)	A COMP. FLOW (GPM)
FIRST OFF	0	1.14
1	11.25	1.14
2	21.25	1.14
3	31.25	1.14
4	41.25	1.14

AFT DOME SPRAY SCHEDULE NO. 4

PASS NUMBER	TT RPM	t ELAPSED TIME (SEC)	T TARGET THKNESS. (INCHES)	TARGET KNIT LINE (INCHES)	F OUTPUT (PPM)	SUBSEQ. RISE (INCHES)	STATION NUMBER	DIAMETER (INCHES)	SPi SURFACE SPEED (IN/SEC)	A COMP. FLOW (PPM)
1	3.00	0.00	1.75	0.5	24.25	5.00	2161.38	140.00	21.99	1.57
2	3.20	18.75	1.75	0.5	24.11	5.00	2162.98	130.51	21.87	1.57
3	3.40	36.40	1.75	0.5	23.74	5.00	2164.46	120.96	21.53	1.54
4	3.60	53.06	1.75	0.5	23.14	5.00	2165.83	111.34	20.99	1.50
5	3.80	68.85	1.75	0.5	22.30	5.00	2167.09	101.66	20.23	1.45
6	4.00	83.85	1.75	0.5	21.23	5.00	2168.23	91.93	19.25	1.38
7	4.00	98.85	1.75	0.6	22.76	5.00	2169.26	82.14	17.20	1.48
8	4.00	113.85	1.75	0.6	20.04	5.00	2170.17	72.31	15.14	1.30
9	4.00	128.85	1.75	0.6	17.30	5.00	2170.96	62.43	13.08	1.12
10	4.00	143.85	1.75	0.6	14.55	5.00	2171.64	52.53	11.00	0.95
11	4.00	158.85	1.75	0.7	13.77	5.00	2172.20	42.59	8.92	0.89
12	4.00	173.85	1.75	0.7	13.00	5.00	2172.65	32.63	6.83	0.84
13	4.00	188.85	1.75	0.7	13.00	5.00	2172.97	22.65	4.74	0.84

SWEEP TABLE

****

SWEEP NO.	ELAPSED TIME (SECONDS)	A COMP. FLOW (GPM)
FIRST OFF	0	1.14
1	11.25	1.14
2	28.75	1.14
3	46.25	1.14
4	63.75	1.14
5	81.25	1.14
6	98.75	1.14

AFT DOME SPRAY SCHEDULE NO. 5

PASS NUMBER	TT RPM	t ELAPSED TIME (SEC)	T TARGET THKNESS. (INCHES)	TARGET KNIT LINE (INCHES)	F OUTPUT (PPM)	SUBSEQ. RISE (INCHES)	STATION NUMBER	DIAMETER (INCHES)	SPi SURFACE SPEED (IN/SEC)	A COMP. FLOW (PPM)
1	3.00	0.00	1.75	0.5	24.25	5.00	2161.38	140.00	21.99	1.57
2	3.20	18.75	1.75	0.5	24.11	5.00	2162.98	130.51	21.87	1.57
3	3.40	36.40	1.75	0.5	23.74	5.00	2164.46	120.96	21.53	1.54
4	3.60	53.06	1.75	0.5	23.14	5.00	2165.83	111.34	20.99	1.50
5	3.80	68.85	1.75	0.5	22.30	5.00	2167.09	101.66	20.23	1.45
6	4.00	83.85	1.75	0.5	21.23	5.00	2168.23	91.93	19.25	1.38
7	4.00	98.85	1.75	0.6	22.76	5.00	2169.26	82.14	17.20	1.48
8	4.00	113.85	1.75	0.6	20.04	5.00	2170.17	72.31	15.14	1.30
9	4.00	128.85	1.75	0.6	17.30	5.00	2170.96	62.43	13.08	1.12
10	4.00	143.85	1.75	0.6	14.55	5.00	2171.64	52.53	11.00	0.95
11	4.00	158.85	1.75	0.7	13.77	5.00	2172.20	42.59	8.92	0.89
12	4.00	173.85	1.75	0.7	13.00	5.00	2172.65	32.63	6.83	0.84
13	4.00	188.85	1.75	0.7	9.75	5.00	2172.97	22.65	4.74	0.63

SWEEP TABLE

****

SWEEP NO.	ELAPSED TIME (SECONDS)	A COMP. FLOW (GPM)
FIRST OFF	0	1.14
1	11.25	1.14
2	28.75	1.14
3	46.25	1.14
4	63.75	1.14
5	81.25	1.14
6	98.75	1.14

AFT DOME SPRAY SCHEDULE NO. 6

PASS NUMBER	TT RPM	t ELAPSED TIME (SEC)	T TARGET THKNESS. (INCHES)	TARGET KNIT LINE (INCHES)	F OUTPUT (PPM)	SUBSEQ. RISE (INCHES)	STATION NUMBER	DIAMETER (INCHES)	SPi SURFACE SPEED (IN/SEC)	A COMP. FLOW (PPM)
1	2.80	0.00	1.75	0.5	36.23	8.00	2161.38	140.00	20.53	2.35
2	3.00	20.00	1.75	0.5	34.60	8.00	2163.88	124.79	19.60	2.25
3	3.20	38.75	1.75	0.5	32.36	8.00	2166.09	109.41	18.33	2.10
4	3.40	56.40	1.75	0.5	29.50	8.00	2168.01	93.88	16.71	1.92
5	3.60	73.06	1.75	0.5	26.02	8.00	2169.63	78.21	14.74	1.69
6	3.80	88.85	1.75	0.5	21.93	8.00	2170.96	62.43	12.42	1.42
7	4.00	103.85	1.75	0.6	20.66	8.00	2171.99	46.57	9.75	1.34
8	4.00	118.85	1.75	0.6	13.59	8.00	2172.72	30.64	6.42	0.88

SPRAY SCHEDULE NO. 6 SWEEP TABLE

SWEEP NO.	ELAPSED TIME (SECONDS)	A COMP. FLOW (GPM)
FIRST OFF	0	1.82
1	11.25	1.82
2	28.75	1.82
3	46.25	1.82
4	63.75	1.82

CHANGES:

RISE CHANGED FROM 5" TO 8",
OUTPUT INCREASED ACCORDINGLY,
IN ORDER TO REDUCE DENSITY

AFT DOME SPRAY SCHEDULE NO. 7

PASS NUMBER	TT RPM	t ELAPSED TIME (SEC)	T TARGET THKNESS. (INCHES)	TARGET KNIT LINE (INCHES)	F OUTPUT (PPM)	SUBSEQ. RISE (INCHES)	STATION NUMBER	DIAMETER (INCHES)	SPi SURFACE SPEED (IN/SEC)	A COMP. FLOW (PPM)
1	2.80	0.00	1.75	0.5	36.23	8.00	2161.38	140.00	20.53	2.35
2	3.00	20.00	1.75	0.5	34.60	8.00	2163.88	124.79	19.60	2.25
3	3.20	38.75	1.75	0.5	32.36	8.00	2166.09	109.41	18.33	2.10
4	3.40	56.40	1.75	0.5	29.50	8.00	2168.01	93.88	16.71	1.92
5	3.60	73.06	1.75	0.5	26.02	8.00	2169.63	78.21	14.74	1.69
6	3.80	88.85	1.75	0.5	21.93	8.00	2170.96	62.43	12.42	1.42
7	4.00	103.85	1.75	0.5	17.21	8.00	2171.99	46.57	9.75	1.12

SPRAY SCHEDULE NO. 6 SWEEP TABLE

SWEEP NO.	ELAPSED TIME (SECONDS)	A COMP. FLOW (GPM)
FIRST OFF	0	1.82
1	11.25	1.82
2	28.75	1.82
3	46.25	1.82
4	63.75	1.82

CHANGES FROM SCHEDULE 6:

OUTPUT REDUCED ON PASS NO. 7 ,
PASS NO. 8 ELIMINATED

AFT DOME SPRAY SCHEDULE NO. 8

PASS NUMBER	TT RPM	t ELAPSED TIME (SEC)	T TARGET THKNESS. (INCHES)	TARGET KNIT LINE (INCHES)	F OUTPUT (PPM)	SUBSEQ. RISE (INCHES)	STATION NUMBER	DIAMETER (INCHES)	SPi SURFACE SPEED (IN/SEC)	A COMP. FLOW (PPM)
1	2.80	0.00	1.75	0.5	28.98	8.00	2161.38	140.00	20.53	1.88
2	3.00	20.00	1.75	0.5	27.68	8.00	2163.88	124.79	19.60	1.80
3	3.20	38.75	1.75	0.5	25.88	8.00	2166.09	109.41	18.33	1.68
4	3.40	56.40	1.75	0.5	23.60	8.00	2168.01	93.88	16.71	1.53
5	3.60	73.06	1.75	0.5	20.82	8.00	2169.63	78.21	14.74	1.35
6	3.80	88.85	1.75	0.5	17.54	8.00	2170.96	62.43	12.42	1.14
7	4.00	103.85	1.75	0.5	13.77	8.00	2171.99	46.57	9.75	0.89

SPRAY SCHEDULE NO. 8 SWEEP TABLE

SWEEP NO.	ELAPSED TIME (SECONDS)	A COMP. FLOW (GPM)
FIRST OFF	0	1.82
1	11.25	1.82
2	28.75	1.82
3	46.25	1.82

OUTPUT REDUCED BY 20% FROM SCHEDULE 7 TO REDUCE THICKNESS AND TO RAISE DENSITIES SLIGHTLY. THE FOURTH SWEEP HAS ALSO BEEN ELIMINATED.

FLOW FACTOR: 2.824 PPM/IPS IKL

AFT DOME SPRAY SCHEDULE NO. 9

PASS NUMBER	TT RPM	t ELAPSED TIME (SEC)	T TARGET THKNESS. (INCHES)	TARGET KNIT LINE (INCHES)	F OUTPUT (PPM)	SUBSEQ. RISE (INCHES)	STATION NUMBER	DIAMETER (INCHES)	SPi SURFACE SPEED (IN/SEC)	A COMP. FLOW (PPM)
1	2.80	0.00	1.75	0.5	30.43	8.00	2161.38	140.00	20.53	1.98
2	3.00	20.00	1.75	0.5	29.06	8.00	2163.88	124.79	19.60	1.89
3	3.20	38.75	1.75	0.5	27.18	8.00	2166.09	109.41	18.33	1.77
4	3.40	56.40	1.75	0.5	24.78	8.00	2168.01	93.88	16.71	1.61
5	3.60	73.06	1.75	0.5	21.86	8.00	2169.63	78.21	14.74	1.42
6	3.80	88.85	1.75	0.5	18.42	8.00	2170.96	62.43	12.42	1.20
7	4.00	103.85	1.75	0.5	14.46	8.00	2171.99	46.57	9.75	0.94

SPRAY SCHEDULE NO. 8 SWEEP TABLE

SWEEP NO.	ELAPSED TIME (SECONDS)	A COMP. FLOW (GPM)
FIRST OFF	0	1.456
1	11.25	1.456
2	28.75	1.456
3	46.25	1.456

OUTPUT INCREASED BY 5% FROM SCHEDULE 8 TO INCREASE THICKNESS.

SWEEP OUTPUT REDUCED BY 20%

FLOW FACTOR: 2.965 PPM/IPS IKL

AFT DOME SPRAY SCHEDULE NO. 10

PASS NUMBER	TT RPM	t ELAPSED TIME (SEC)	T TARGET THKNESS. (INCHES)	TARGET KNIT LINE (INCHES)	F OUTPUT (PPM)	SUBSEQ. RISE (INCHES)	STATION NUMBER	DIAMETER (INCHES)	SPi SURFACE SPEED (IN/SEC)	A COMP. FLOW (PPM)
1	2.80	0.00	1.75	0.5	30.43	8.00	2161.38	140.00	20.53	1.98
2	3.00	20.00	1.75	0.5	29.06	8.00	2163.88	124.79	19.60	1.89
3	3.20	38.75	1.75	0.5	27.18	8.00	2166.09	109.41	18.33	1.77
4	3.40	56.40	1.75	0.5	24.78	8.00	2168.01	93.88	16.71	1.61
5	3.60	73.06	1.75	0.5	21.86	8.00	2169.63	78.21	14.74	1.42
6	3.80	88.85	1.75	0.5	18.42	8.00	2170.96	62.43	12.42	1.20
7	4.00	103.85	1.75	0.5	14.46	8.00	2171.99	46.57	9.75	0.94

SPRAY SCHEDULE NO. 8 SWEEP TABLE

SWEEP NO.	ELAPSED TIME (SECONDS)	A COMP. FLOW (GPM)
FIRST OFF	0	1.456
1	11.25	1.456
2	28.75	1.456
3	46.25	1.456
4	63.75	1.456

SAME PROGRAM AS SCHED. 9
WITH 4 SWEEPS INSTEAD OF 3

FLOW FACTOR: 2.965 PPM/IPS IKL

AFT DOME SPRAY SCHEDULE NO. 11

PASS NUMBER	TT RPM	t ELAPSED TIME (SEC)	T TARGET THKNESS. (INCHES)	TARGET KNIT LINE (INCHES)	F OUTPUT (PPM)	SUBSEQ. RISE (INCHES)	STATION NUMBER	DIAMETER (INCHES)	SPi SURFACE SPEED (IN/SEC)	A COMP. FLOW (PPM)
1	2.80	0.00	1.75	0.5	30.43	8.00	2161.38	140.00	20.53	1.98
2	3.00	20.00	1.75	0.5	29.06	8.00	2163.88	124.79	19.60	1.89
3	3.20	38.75	1.75	0.5	27.18	8.00	2166.09	109.41	18.33	1.77
4	3.40	56.40	1.75	0.5	24.78	8.00	2168.01	93.88	16.71	1.61
5	3.60	73.06	1.75	0.5	21.86	8.00	2169.63	78.21	14.74	1.42
6	3.80	88.85	1.75	0.5	18.42	8.00	2170.96	62.43	12.42	1.20
7	4.00	103.85	1.75	0.5	14.46	8.00	2171.99	46.57	9.75	0.94

SWEEP TABLE

SWEEP NO.	ELAPSED TIME (SECONDS)	A COMP. FLOW (GPM)
FIRST OFF	0.000	1.456
1	11.250	1.456
2	24.375	1.456
3	37.500	1.456
4	50.625	1.456

SWEEP TIMING CHANGED TO
13.125 SECONDS BETWEEN SWEEPS
OR 315 DEGREES OF ROTATION

FLOW FACTOR: 2.965 PPM/IPS IKL

AFT DOME SPRAY SCHEDULE NO. 12

PASS NUMBER	TT RPM	t ELAPSED TIME (SEC)	T TARGET THKNESS. (INCHES)	TARGET KNIT LINE (INCHES)	F OUTPUT (PPM)	SUBSEQ. RISE (INCHES)	STATION NUMBER	DIAMETER (INCHES)	SPi SURFACE SPEED (IN/SEC)	A COMP. FLOW (PPM)
1	2.80	0.00	1.75	0.538	32.74	8.00	2161.38	140.00	20.53	2.13
2	3.00	20.00	1.75	0.538	31.27	8.00	2163.88	124.79	19.60	2.03
3	3.20	38.75	1.75	0.538	29.24	8.00	2166.09	109.41	18.33	1.90
4	3.40	56.40	1.75	0.538	26.66	8.00	2168.01	93.88	16.71	1.73
5	3.60	73.06	1.75	0.538	23.52	8.00	2169.63	78.21	14.74	1.53
6	3.80	88.85	1.75	0.538	19.82	8.00	2170.96	62.43	12.42	1.29
7	4.00	103.85	1.75	0.538	15.56	8.00	2171.99	46.57	9.75	1.01

SWEEP TABLE

SWEEP NO.	ELAPSED TIME (SECONDS)	A COMP. FLOW (GPM)
FIRST OFF	0.000	1.456
1	11.250	1.456
2	24.375	1.456
3	37.500	1.456
4	50.625	1.456

OUTPUT INCREASED 7.5% FROM SCH. 11
ON PASSES ONLY

FLOW FACTOR: 2.965 PPM/IPS IKL

AFT DOME SPRAY SCHEDULE NO. 13

PASS NUMBER	TT RPM	t ELAPSED TIME (SEC)	T TARGET THKNESS. (INCHES)	TARGET KNIT LINE (INCHES)	F OUTPUT (PPM)	SUBSEQ. RISE (INCHES)	STATION NUMBER	DIAMETER (INCHES)	SPi SURFACE SPEED (IN/SEC)	A COMP. FLOW (PPM)
1	2.80	0.00	1.75	0.538	32.74	8.00	2161.38	140.00	20.53	2.13
2	3.00	20.00	1.75	0.538	31.27	8.00	2163.88	124.79	19.60	2.03
3	3.20	38.75	1.75	0.538	29.24	8.00	2166.09	109.41	18.33	1.90
4	3.40	56.40	1.75	0.538	26.66	8.00	2168.01	93.88	16.71	1.73
5	3.60	73.06	1.75	0.538	23.52	8.00	2169.63	78.21	14.74	1.53
6	3.80	88.85	1.75	0.538	19.82	8.00	2170.96	62.43	12.42	1.29
7	4.00	103.85	1.75	0.538	15.56	8.00	2171.99	46.57	9.75	1.01
8	4.00	118.85	1.75	0.538	10.24	8.00	2172.72	30.64	6.42	0.66

SWEEP TABLE

SWEEP NO.	ELAPSED TIME (SECONDS)	A COMP. FLOW (GPM)
FIRST OFF	0.000	1.456
1	11.250	1.456
2	24.375	1.456
3	37.500	1.456
4	50.625	1.456

OUTPUT INCREASED 7.5% FROM SCH. 11
ON PASSES ONLY

FLOW FACTOR: 2.965 PPM/IPS IKL

AFT DOME SPRAY SCHEDULE NO. 14

PASS NUMBER	TT RPM	t ELAPSED TIME (SEC)	T TARGET THKNESS. (INCHES)	TARGET KNIT LINE (INCHES)	F OUTPUT (PPM)	SUBSEQ. RISE (INCHES)	STATION NUMBER	DIAMETER (INCHES)	SPi SURFACE SPEED (IN/SEC)	A COMP. FLOW (PPM)
1	2.80	0.00	1.75	0.58	35.30	8.00	2161.38	140.00	20.53	2.29
2	3.00	20.00	1.75	0.58	33.71	8.00	2163.88	124.79	19.60	2.19
3	3.20	38.75	1.75	0.58	31.53	8.00	2166.09	109.41	18.33	2.05
4	3.40	56.40	1.75	0.58	28.74	8.00	2168.01	93.88	16.71	1.87
5	3.60	73.06	1.75	0.58	25.35	8.00	2169.63	78.21	14.74	1.65
6	3.80	88.85	1.75	0.58	21.36	8.00	2170.96	62.43	12.42	1.39
7	4.00	103.85	1.75	0.58	16.77	8.00	2171.99	46.57	9.75	1.09

SWEEP TABLE

SWEEP NO.	ELAPSED TIME (SECONDS)	A COMP. FLOW (GPM)
FIRST OFF	0.000	1.456
1	11.250	1.456
2	24.375	1.456
3	37.500	1.456
4	50.625	1.456

TARGET KNIT LINE THICKNESS
INCREASED TO .58

FLOW FACTOR: 2.965 PPM/IPS IKL

RUN NO. 2210

SPRAY SCHEDULE NO. 12 with 4 SWEEPS, 315 DEGREE SWEEP TIMING
AD48C-1 ROBOT PROG.

DISTANCE FROM DOME APEX	THICKNESSES (IN) +Y AXIS	THICKNESSES (IN) -Y AXIS	THICKNESSES (IN) AVG.	KNIT LINES +Y AXIS	KNIT LINES -Y AXIS	DISTANCE FROM APEX (INCHES)	DENSITIES LENGTH (INCHES)	DENSITIES WIDTH (INCHES)	DENSITIES HEIGTH (INCHES)	DENSITIES MASS (GRAMS)	DENSITIES VOLUME (CU.IN.)	DENSITIES DENSITY (PPCF)
0.00	1.88	1.94	1.91			0	2.001	2.002	0.749	2.224	3.000	2.825
5.00	1.88	1.88	1.88			5	2.004	2.002	0.752	2.344	3.017	2.961
10.00	2.00	1.88	1.94			10	2.000	2.000	0.760	2.505	3.040	3.140
15.00	1.88	2.00	1.94			15	2.002	2.003	0.746	2.160	2.991	2.752
20.00	1.88	2.13	2.01			20	2.003	2.003	0.744	2.100	2.985	2.681
25.00	1.56	2.38	1.97			25	2.001	2.003	0.740	2.143	2.966	2.754
30.00	1.50	1.81	1.66			30	2.001	2.002	0.741	2.085	2.968	2.677
35.00	1.63	1.56	1.60			35	2.003	2.001	0.755	2.157	3.026	2.717
40.00	1.50	1.56	1.53			40	2.001	2.000	0.744	2.117	2.977	2.710
45.00	1.63	1.63	1.63			45	2.002	2.001	0.746	2.214	2.988	2.823
50.00	1.56	1.63	1.60			50	2.002	2.004	0.741	2.078	2.973	2.664
55.00	1.56	1.56	1.56			55	2.003	2.001	0.735	2.220	2.946	2.872
60.00	1.63	1.63	1.63			60	2.003	2.000	0.744	2.281	2.980	2.917

DENSITY STATISTICS

AVERAGE:	2.807
VARIANCE:	0.018
SD:	0.133
MIN:	2.664
MAX:	3.140

RUN NO. 2211

SPRAY SCHEDULE NO. 12 with 4 SWEEPS, 315 DEGREE SWEEP TIMING
AD48C-1 ROBOT PROG.

DISTANCE FROM DOME APEX	THICKNESSES (IN) +Y AXIS	THICKNESSES (IN) -Y AXIS	THICKNESSES (IN) AVG.	KNIT LINES +Y AXIS	KNIT LINES -Y AXIS	DISTANCE FROM APEX (INCHES)	DENSITIES LENGTH (INCHES)	DENSITIES WIDTH (INCHES)	DENSITIES HEIGTH (INCHES)	DENSITIES MASS (GRAMS)	DENSITIES VOLUME (CU.IN.)	DENSITIES DENSITY (PPCF)
0.00	1.75	1.69	1.72			0	2.002	2.001	0.753	2.146	3.017	2.711
5.00	1.81	1.50	1.66			5	2.004	2.003	0.748	2.174	3.002	2.759
10.00	1.88	1.44	1.66			10	2.003	2.004	0.757	2.203	3.039	2.763
15.00	2.13	1.56	1.85			15	2.001	2.002	0.756	2.247	3.029	2.828
20.00	2.31	1.75	2.03			20	2.002	2.002	0.755	2.186	3.026	2.753
25.00	2.31	1.88	2.10			25	2.004	2.000	0.756	2.142	3.030	2.694
30.00	2.18	2.00	2.09			30	2.001	2.002	0.758	2.155	3.037	2.705
35.00	2.13	2.00	2.07			35	2.001	2.003	0.751	2.088	3.010	2.644
40.00	1.88	2.00	1.94			40	2.002	2.002	0.749	2.125	3.002	2.698
45.00	1.75	1.75	1.75			45	2.003	2.001	0.750	2.214	3.006	2.807
50.00	1.63	1.75	1.69			50	2.003	2.000	0.751	2.231	3.009	2.826
55.00	1.75	1.69	1.72			55	2.002	2.001	0.745	2.106	2.984	2.689
60.00	1.75	1.69	1.72			60	2.003	2.002	0.738	2.029	2.959	2.613

DENSITY STATISTICS

AVERAGE:	2.730
VARIANCE:	0.004
SD:	0.064
MIN:	2.613
MAX:	2.828

PRECEDING PAGE BLANK NOT FILMED

NO:16

RUN NO. 2208

SPRAY SCHEDULE NO. 12 with 4 SWEEPS, 315 DEGREE SWEEP TIMING
AFTDM-6 ROBOT PROG.

DISTANCE FROM DOME APEX	THICKNESSES (IN) +Y AXIS	THICKNESSES (IN) -Y AXIS	THICKNESSES (IN) AVG.	KNIT LINES +Y AXIS	KNIT LINES -Y AXIS	DISTANCE FROM APEX (INCHES)	DENSITIES LENGTH (INCHES)	DENSITIES WIDTH (INCHES)	DENSITIES HEIGTH (INCHES)	DENSITIES MASS (GRAMS)	DENSITIES VOLUME (CU.IN.)	DENSITIES DENSITY (PPCF)
0.00	2.00	2.00	2.00			0	2.000	1.999	0.758	2.173	3.030	2.733
5.00	2.00	1.75	1.88			5	2.003	2.000	0.757	2.223	3.033	2.794
10.00	1.75	1.63	1.69			10	2.000	2.001	0.733	2.197	2.933	2.854
15.00	1.38	1.75	1.57			15	1.995	2.001	0.725	2.007	2.894	2.643
20.00	1.56	2.25	1.91			20	2.001	2.001	0.755	2.127	3.023	2.681
25.00	1.50	1.88	1.69			25	2.002	2.000	0.749	2.052	2.999	2.608
30.00	1.75	1.75	1.75			30	2.003	2.003	0.759	2.159	3.045	2.702
35.00	1.75	1.63	1.69			35	2.002	2.000	0.729	1.984	2.919	2.590
40.00	1.69	1.75	1.72			40	2.002	1.997	0.757	2.057	3.026	2.590
45.00	1.88	1.88	1.88			45	1.998	2.002	0.748	2.064	2.992	2.629
50.00	1.88	1.75	1.82			50	2.002	2.003	0.758	2.223	3.040	2.787
55.00	1.63	1.63	1.63			55	2.002	1.999	0.754	2.217	3.018	2.800
60.00	1.75	1.63	1.69			60	2.001	2.001	0.753	2.070	3.015	2.616

DENSITY STATISTICS

AVERAGE:	2.694
VARIANCE:	0.008
SD:	0.087
MIN:	2.590
MAX:	2.854

RUN NO. 2209 NO:17

SPRAY SCHEDULE NO. 13 with 4 SWEEPS, 315 DEGREE SWEEP TIMING
AFTDM-6 ROBOT PROG.

DISTANCE FROM DOME APEX	THICKNESSES (IN) +Y AXIS	THICKNESSES (IN) -Y AXIS	THICKNESSES (IN) AVG.	KNIT LINES +Y AXIS	KNIT LINES -Y AXIS	DISTANCE FROM APEX (INCHES)	DENSITIES LENGTH (INCHES)	DENSITIES WIDTH (INCHES)	DENSITIES HEIGTH (INCHES)	DENSITIES MASS (GRAMS)	DENSITIES VOLUME (CU.IN.)	DENSITIES DENSITY (PPCF)
0.00	3.50	3.63	3.57			0	2.003	2.003	0.748	2.452	3.001	3.114
5.00	3.50	3.50	3.50			5	2.002	2.001	0.745	2.280	2.984	2.911
10.00	3.50	3.50	3.50			10	2.002	2.001	0.764	2.231	3.061	2.778
15.00	3.13	3.13	3.13			15	2.002	2.000	0.715	2.020	2.863	2.689
20.00	2.38	3.00	2.69			20	2.001	1.999	0.718	1.996	2.872	2.649
25.00	2.00	2.25	2.13			25	2.000	2.001	0.710	1.994	2.841	2.674
30.00	1.88	1.94	1.91			30	2.002	1.998	0.736	2.149	2.944	2.782
35.00	1.63	2.00	1.82			35	2.001	1.999	0.756	2.143	3.024	2.701
40.00	1.63	1.75	1.69			40	2.002	2.003	0.755	2.139	3.028	2.693
45.00	1.63	1.75	1.69			45	2.000	2.001	0.757	2.231	3.030	2.807
50.00	1.63	1.75	1.69			50	2.001	2.000	0.748	2.138	2.993	2.722
55.00	1.63	1.69	1.66			55	1.999	2.001	0.757	2.138	3.028	2.691
60.00	1.63	1.63	1.63			60	2.002	2.003	0.729	2.051	2.923	2.674

DENSITY STATISTICS

AVERAGE:	2.760
VARIANCE:	0.015
SD:	0.123
MIN:	2.649
MAX:	3.114

No: 18

RUN NO. 2206

SPRAY SCHEDULE NO. 12 with 4 SWEEPS, 315 DEGREE SWEEP TIMING
AFTDM-6 ROBOT PROG.

DISTANCE FROM DOME APEX	THICKNESSES (IN) +Y AXIS	THICKNESSES (IN) -Y AXIS	THICKNESSES (IN) AVG.	KNIT LINES +Y AXIS	KNIT LINES -Y AXIS	DISTANCE FROM APEX (INCHES)	DENSITIES LENGTH (INCHES)	DENSITIES WIDTH (INCHES)	DENSITIES HEIGTH (INCHES)	DENSITIES MASS (GRAMS)	DENSITIES VOLUME (CU.IN.)	DENSITIES DENSITY (PPCF)
0.00	1.88	1.88	1.88			0	2.003	1.997	0.762	2.145	3.048	2.682
5.00	1.81	1.88	1.85			5	2.000	2.000	0.770	2.271	3.080	2.810
10.00	2.06	1.88	1.97			10	2.001	2.002	0.765	2.310	3.065	2.873
15.00	1.75	1.88	1.82			15	2.000	1.993	0.768	2.399	3.061	2.987
20.00	1.50	1.75	1.63			20	1.999	2.000	0.759	2.169	3.034	2.724
25.00	1.50	1.50	1.50			25	2.000	2.002	0.768	2.233	3.075	2.767
30.00	1.56	1.56	1.56			30	1.995	1.993	0.768	2.080	3.054	2.596
35.00	1.63	1.56	1.60			35	1.998	2.000	0.770	2.206	3.077	2.732
40.00	1.56	1.56	1.56			40	2.000	1.995	0.765	2.053	3.052	2.563
45.00	1.63	1.63	1.63			45	1.998	2.000	0.767	2.176	3.065	2.706
50.00	1.50	1.63	1.57			50	2.002	2.000	0.764	2.077	3.059	2.588
55.00	1.63	1.63	1.63			55	2.001	1.997	0.764	2.120	3.053	2.646
60.00	1.63	1.50	1.57			60	2.002	1.982	0.765	2.072	3.035	2.601

DENSITY STATISTICS

AVERAGE:	2.713
VARIANCE:	0.014
SD:	0.119
MIN:	2.563
MAX:	2.987

No: 19

RUN NO. 2207

SPRAY SCHEDULE NO. 12 with 4 SWEEPS, 315 DEGREE SWEEP TIMING
AFTDM-6 ROBOT PROG.

DISTANCE FROM DOME APEX	THICKNESSES (IN) +Y AXIS	THICKNESSES (IN) -Y AXIS	THICKNESSES (IN) AVG.	KNIT LINES +Y AXIS	KNIT LINES -Y AXIS	DISTANCE FROM APEX (INCHES)	DENSITIES LENGTH (INCHES)	DENSITIES WIDTH (INCHES)	DENSITIES HEIGTH (INCHES)	DENSITIES MASS (GRAMS)	DENSITIES VOLUME (CU.IN.)	DENSITIES DENSITY (PPCF)
0.00	1.75	1.75	1.75			0					0.000	ERR
5.00	1.75	1.75	1.75			5					0.000	ERR
10.00	1.63	1.63	1.63			10					0.000	ERR
15.00	1.25	1.75	1.50			15					0.000	ERR
20.00	1.38	2.13	1.76			20					0.000	ERR
25.00	1.63	1.75	1.69			25					0.000	ERR
30.00	1.75	1.56	1.66			30					0.000	ERR
35.00	1.69	1.63	1.66			35					0.000	ERR
40.00	1.75	1.75	1.75			40					0.000	ERR
45.00	2.00	1.69	1.85			45					0.000	ERR
50.00	1.75	1.56	1.66			50					0.000	ERR
55.00	1.63	1.56	1.60			55					0.000	ERR
60.00	1.50	1.63	1.57			60					0.000	ERR

DENSITY STATISTICS

AVERAGE:	ERR
VARIANCE:	ERR
SD:	ERR
MIN:	ERR
MAX:	ERR

No: 20

RUN NO. 2204

SPRAY SCHEDULE NO. 12 with 4 SWEEPS, 315 DEGREE SWEEP TIMING
AFTDM-6 ROBOT PROG.

DISTANCE FROM DOME APEX	THICKNESSES (IN) +Y AXIS	THICKNESSES (IN) -Y AXIS	THICKNESSES (IN) AVG.	KNIT LINES +Y AXIS	KNIT LINES -Y AXIS	DISTANCE FROM APEX (INCHES)	DENSITIES LENGTH (INCHES)	DENSITIES WIDTH (INCHES)	DENSITIES HEIGTH (INCHES)	DENSITIES MASS (GRAMS)	DENSITIES VOLUME (CU.IN.)	DENSITIES DENSITY (PPCF)
0.00	2.00	2.00	2.00	0.50	0.50	0	2.002	2.006	0.769	2.060	3.088	2.542
5.00	2.00	2.00	2.00	0.50	0.50	5	2.003	2.008	0.772	2.332	3.105	2.862
10.00	2.25	2.13	2.19	0.50	0.50	10	2.002	2.006	0.763	2.375	3.064	2.954
15.00	2.25	2.25	2.25	0.63	0.63	15	2.000	2.005	0.770	2.401	3.088	2.963
20.00	1.75	1.69	1.72	0.63	0.63	20	1.997	1.996	0.768	2.117	3.061	2.635
25.00	1.75	1.63	1.69	0.63	0.63	25	1.995	1.996	0.766	2.211	3.050	2.762
30.00	1.69	1.75	1.72	0.63	0.63	30	1.997	2.006	0.764	2.114	3.061	2.632
35.00	1.75	1.75	1.75	0.63	0.63	35	2.005	2.000	0.769	2.175	3.084	2.688
40.00	1.63	1.75	1.69	0.63	0.63	40	2.006	1.995	0.767	2.151	3.070	2.671
45.00	1.75	1.69	1.72	0.63	0.63	45	2.000	2.003	0.769	2.136	3.081	2.642
50.00	1.69	1.63	1.66	0.63	0.69	50	2.007	2.008	0.767	2.238	3.091	2.759
55.00	1.63	1.75	1.69	0.63	0.69	55	2.001	1.997	0.761	2.160	3.041	2.707
60.00	1.75	1.69	1.72	0.63	0.63	60	2.005	2.002	0.765	2.018	3.071	2.504

DENSITY STATISTICS

AVERAGE:	2.717
VARIANCE:	0.018
SD:	0.136
MIN:	2.504
MAX:	2.963

No: 21

RUN NO. 2205

SPRAY SCHEDULE NO. 12 with 4 SWEEPS, 315 DEGREE SWEEP TIMING
AFTDM-6 ROBOT PROG.

DISTANCE FROM DOME APEX	THICKNESSES (IN) +Y AXIS	THICKNESSES (IN) -Y AXIS	THICKNESSES (IN) AVG.	KNIT LINES +Y AXIS	KNIT LINES -Y AXIS	DISTANCE FROM APEX (INCHES)	DENSITIES LENGTH (INCHES)	DENSITIES WIDTH (INCHES)	DENSITIES HEIGTH (INCHES)	DENSITIES MASS (GRAMS)	DENSITIES VOLUME (CU.IN.)	DENSITIES DENSITY (PPCF)
0.00	1.88	1.88	1.88	0.50		0	2.000	2.003	0.769	2.120	3.081	2.623
5.00	2.00	2.00	2.00	0.50		5	2.002	1.997	0.768	2.070	3.070	2.569
10.00	2.13	2.00	2.07	0.50		10	2.003	2.014	0.770	2.348	3.106	2.881
15.00	1.75	2.13	1.94	0.56	DATA	15	2.002	1.995	0.767	2.168	3.063	2.697
20.00	1.63	1.88	1.76	0.56	NOT	20	1.998	1.980	0.753	2.338	2.979	2.991
25.00	1.75	1.63	1.69	0.63	TAKEN	25	2.004	2.004	0.765	2.201	3.072	2.730
30.00	1.75	1.69	1.72	0.63		30	1.995	1.995	0.765	2.180	3.045	2.729
35.00	1.63	1.63	1.63	0.63		35	2.001	2.006	0.766	2.203	3.075	2.731
40.00	1.63	1.56	1.60	0.63		40	1.996	2.004	0.763	2.204	3.052	2.752
45.00	1.63	1.56	1.60	0.50		45	2.002	1.998	0.766	2.125	3.064	2.643
50.00	1.63	1.63	1.63	0.50		50	1.998	1.995	0.765	2.170	3.049	2.712
55.00	1.56	1.69	1.63	0.63		55	2.005	1.996	0.764	2.162	3.058	2.695
60.00	1.56	1.75	1.66	0.63		60	2.000	2.004	0.768	2.118	3.078	2.622

DENSITY STATISTICS

AVERAGE:	2.721
VARIANCE:	0.012
SD:	0.107
MIN:	2.569
MAX:	2.991

No: 22

RUN NO. 2202

SPRAY SCHEDULE NO. 11 with 4 SWEEPS, 315 DEGREE SWEEP TIMING
AFTDM-6 ROBOT PROG.

DISTANCE FROM DOME APEX	THICKNESSES (IN) +Y AXIS	THICKNESSES (IN) -Y AXIS	THICKNESSES (IN) AVG.	KNIT LINES +Y AXIS	KNIT LINES -Y AXIS	DISTANCE FROM APEX (INCHES)	DENSITIES LENGTH (INCHES)	DENSITIES WIDTH (INCHES)	DENSITIES HEIGTH (INCHES)	DENSITIES MASS (GRAMS)	DENSITIES VOLUME (CU.IN.)	DENSITIES DENSITY (PPCF)
0.00	2.00	2.00	2.00	0.50	0.50	0	1.993	1.993	0.725	2.183	2.880	2.889
5.00	1.81	2.00	1.91	0.50	0.50	5	1.993	1.995	0.748	2.307	2.974	2.956
10.00	1.96	2.00	1.98	0.50	0.50	10	1.995	1.993	0.749	2.366	2.978	3.028
15.00	1.56	2.00	1.78	0.56	0.63	15	1.996	1.993	0.715	2.098	2.844	2.811
20.00	1.50	1.75	1.63	0.56	0.63	20	1.995	1.990	0.752	2.293	2.985	2.927
25.00	1.56	1.63	1.60	0.56	0.56	25	1.899	1.899	0.753	2.207	2.715	3.097
30.00	1.63	1.63	1.63	0.50	0.50	30	1.991	1.991	0.738	2.195	2.925	2.859
35.00	1.63	1.63	1.63	0.50	0.50	35	1.995	1.995	0.748	2.137	2.977	2.736
40.00	1.63	1.63	1.63	0.50	0.50	40	1.991	1.995	0.746	2.224	2.963	2.860
45.00	1.50	1.63	1.57	0.50	0.50	45	1.995	1.994	0.755	2.250	3.003	2.855
50.00	1.38	1.63	1.51	0.50	0.50	50	1.998	1.995	0.740	2.181	2.950	2.818
55.00	1.44	1.56	1.50	0.44	0.50	55	1.998	1.995	0.748	2.223	2.982	2.841
60.00	1.63	1.63	1.63	0.44	0.50	60	1.995	1.998	0.753	2.176	3.001	2.763

DENSITY STATISTICS

AVERAGE:	2.880
VARIANCE:	0.009
SD:	0.097
MIN:	2.736
MAX:	3.097

No: 23

RUN NO. 2203

SPRAY SCHEDULE NO. 10 with 4 SWEEPS, 420 DEGREE SWEEP TIMING
AFTDM-5 ROBOT PROG.

DISTANCE FROM DOME APEX	THICKNESSES (IN) +Y AXIS	THICKNESSES (IN) -Y AXIS	THICKNESSES (IN) AVG.	KNIT LINES +Y AXIS	KNIT LINES -Y AXIS	DISTANCE FROM APEX (INCHES)	DENSITIES LENGTH (INCHES)	DENSITIES WIDTH (INCHES)	DENSITIES HEIGTH (INCHES)	DENSITIES MASS (GRAMS)	DENSITIES VOLUME (CU.IN.)	DENSITIES DENSITY (PPCF)
0.00	2.00	2.06	2.03	0.50	0.50	0	1.993	1.990	0.740	2.117	2.935	2.749
5.00	1.88	2.13	2.01	0.50	0.50	5	1.992	1.991	0.758	2.238	3.006	2.837
10.00	1.63	2.31	1.97	0.50	0.50	10	1.991	1.993	0.757	2.410	3.004	3.058
15.00	1.25	2.00	1.63	0.63	0.63	15	1.991	1.994	0.706	2.091	2.803	2.843
20.00	1.25	1.63	1.44	0.63	0.63	20	1.995	1.995	0.753	2.114	2.997	2.688
25.00	1.50	1.75	1.63	0.63	0.63	25	1.992	1.990	0.753	2.193	2.985	2.800
30.00	1.63	1.88	1.76	0.63	0.63	30	1.993	1.991	0.738	2.087	2.928	2.716
35.00	1.56	1.81	1.69	0.63	0.50	35	1.991	1.991	0.738	2.169	2.925	2.826
40.00	1.63	1.75	1.69	0.50	0.50	40	1.992	1.992	0.748	2.214	2.968	2.843
45.00	1.63	1.75	1.69	0.50	0.56	45	1.992	1.990	0.753	2.159	2.985	2.756
50.00	1.50	1.75	1.63	0.50	0.56	50	1.996	1.991	0.725	2.111	2.881	2.792
55.00	1.50	1.75	1.63	0.50	0.38	55	1.991	1.994	0.710	2.000	2.819	2.704
60.00	1.50	1.75	1.63	0.50	0.38	60	1.993	1.993	0.730	2.087	2.900	2.743

DENSITY STATISTICS

AVERAGE:	2.797
VARIANCE:	0.008
SD:	0.091
MIN:	2.688
MAX:	3.058

SPRAY SCHEDULE NO. 9 WITH 3 SWEEPS - RUN 3
RUN NO. 2199

DISTANCE FROM DOME APEX	THICKNESSES (IN) +Y AXIS	THICKNESSES (IN) -Y AXIS	THICKNESSES (IN) AVG.	KNIT LINES +Y AXIS	KNIT LINES -Y AXIS	DISTANCE FROM APEX (INCHES)	DENSITIES LENGTH (INCHES)	DENSITIES WIDTH (INCHES)	DENSITIES HEIGTH (INCHES)	DENSITIES MASS (GRAMS)	DENSITIES VOLUME (CU.IN.)	DENSITIES DENSITY (PPCF)
0.00	1.44	1.50	1.47	0.50		0	2.004	2.002	0.740	2.178	2.969	2.796
5.00	1.50	1.50	1.50	0.50		5	2.006	2.005	0.705	2.119	2.836	2.848
10.00	1.75	1.25	1.50	0.50		10	2.006	2.003	0.721	2.318	2.897	3.049
15.00	1.75	1.38	1.57	0.63		15	2.005	2.000	0.733	2.252	2.939	2.920
20.00	1.75	1.56	1.66	0.63		20	2.005	2.001	0.749	2.359	3.005	2.992
25.00	1.50	1.63	1.57	0.50		25	2.002	1.999	0.740	2.321	2.961	2.987
30.00	1.75	1.88	1.82	0.50		30	2.006	2.004	0.745	2.267	2.995	2.885
35.00	1.88	1.94	1.91	0.50		35	2.004	2.000	0.745	2.206	2.986	2.816
40.00	1.75	1.94	1.85	0.50		40	2.000	2.006	0.740	2.296	2.969	2.947
45.00	1.75	1.88	1.82	0.50		45	2.006	2.004	0.749	2.222	3.011	2.812
50.00	1.63	1.75	1.69	0.50		50	2.005	2.005	0.740	2.263	2.975	2.899
55.00	1.63	1.88	1.76	0.50		55	2.004	2.000	0.752	2.156	3.014	2.726
60.00	1.63	1.75	1.69	0.50		60	1.998	2.004	0.750	2.136	3.003	2.711

DENSITY STATISTICS

AVERAGE:	2.876
VARIANCE:	0.010
SD:	0.099
MIN:	2.711
MAX:	3.049

SPRAY SCHEDULE NO. 10 with 4 SWEEPS - RUN 1
RUN NO. 2200

DISTANCE FROM DOME APEX	THICKNESSES (IN) +Y AXIS	THICKNESSES (IN) -Y AXIS	THICKNESSES (IN) AVG.	KNIT LINES +Y AXIS	KNIT LINES -Y AXIS	DISTANCE FROM APEX (INCHES)	DENSITIES LENGTH (INCHES)	DENSITIES WIDTH (INCHES)	DENSITIES HEIGTH (INCHES)	DENSITIES MASS (GRAMS)	DENSITIES VOLUME (CU.IN.)	DENSITIES DENSITY (PPCF)
0.00	2.18	2.18	2.18	0.50		0	2.016	2.018	0.742	2.428	3.019	3.065
5.00	2.25	2.06	2.16	0.50		5	2.017	2.019	0.735	2.239	2.993	2.851
10.00	2.25	2.38	2.32	0.50		10	2.020	2.019	0.687	2.082	2.802	2.832
15.00	1.75	2.38	2.07	0.63		15	2.015	2.016	0.646	1.856	2.624	2.695
20.00	1.56	2.06	1.81	0.63		20	2.017	2.018	0.677	2.004	2.756	2.772
25.00	1.69	1.88	1.79	0.50		25	2.018	2.019	0.680	1.922	2.771	2.644
30.00	1.63	2.00	1.82	0.50		30	2.020	2.018	0.685	1.958	2.792	2.672
35.00	1.69	1.94	1.82	0.50		35	2.020	2.017	0.682	1.854	2.779	2.543
40.00	1.75	1.88	1.82	0.50		40	2.018	2.019	0.718	2.075	2.925	2.703
45.00	1.56	1.88	1.72	0.50		45	2.017	2.017	0.723	2.027	2.941	2.626
50.00	1.56	1.75	1.66	0.50		50	2.019	2.019	0.678	2.007	2.764	2.767
55.00	1.63	1.69	1.66	0.50		55	2.017	2.015	0.704	1.984	2.861	2.643
60.00	1.75	1.75	1.75	0.50		60	2.014	2.017	0.733	2.118	2.978	2.711

DENSITY STATISTICS

AVERAGE:	2.733
VARIANCE:	0.016
SD:	0.126
MIN:	2.543
MAX:	3.065

SPRAY SCHEDULE NO. 9 WITH 3 SWEEPS - RUN 1
RUN NO. 2197

DISTANCE FROM DOME APEX	THICKNESSES (IN) +Y AXIS	THICKNESSES (IN) -Y AXIS	THICKNESSES (IN) AVG.	KNIT LINES +Y AXIS	KNIT LINES -Y AXIS	DISTANCE FROM APEX (INCHES)	DENSITIES LENGTH (INCHES)	DENSITIES WIDTH (INCHES)	DENSITIES HEIGTH (INCHES)	DENSITIES MASS (GRAMS)	DENSITIES VOLUME (CU.IN.)	DENSITIES DENSITY (PPCF)
0.00	2.00	2.00	2.00	0.50		0	2.002	2.002	0.758	2.627	3.038	3.295
5.00	2.00	2.13	2.07	0.50		5	2.005	2.005	0.742	2.527	2.983	3.229
10.00	1.94	2.13	2.04	0.50		10	2.009	2.004	0.750	2.503	3.020	3.159
15.00	1.88	1.88	1.88	0.63		15	2.008	2.008	0.730	2.208	2.943	2.859
20.00	1.63	1.69	1.66	0.63		20	2.009	2.004	0.723	2.264	2.911	2.964
25.00	1.75	1.75	1.75	0.63		25	2.012	2.002	0.691	1.996	2.783	2.733
30.00	1.88	1.75	1.82	0.56		30	2.007	2.007	0.740	2.146	2.981	2.744
35.00	1.75	1.75	1.75	0.56		35	2.012	2.002	0.735	2.093	2.961	2.694
40.00	1.88	1.75	1.82	0.56		40	2.011	2.007	0.721	2.084	2.910	2.729
45.00	1.88	1.75	1.82	0.56		45	2.005	2.007	0.722	2.055	2.905	2.696
50.00	1.88	1.69	1.79	0.56		50	2.010	2.007	0.700	1.984	2.824	2.678
55.00	1.88	1.63	1.76	0.56		55	2.009	2.010	0.721	2.046	2.911	2.678
60.00	1.63	1.63	1.63	0.56		60	2.009	2.009	0.759	2.204	3.063	2.742

DENSITY STATISTICS

AVERAGE:	2.861
VARIANCE:	0.047
SD:	0.216
MIN:	2.678
MAX:	3.295

SPRAY SCHEDULE NO. 9 WITH 3 SWEEPS - RUN 2
RUN NO. 2198

DISTANCE FROM DOME APEX	THICKNESSES (IN) +Y AXIS	THICKNESSES (IN) -Y AXIS	THICKNESSES (IN) AVG.	KNIT LINES +Y AXIS	KNIT LINES -Y AXIS	DISTANCE FROM APEX (INCHES)	DENSITIES LENGTH (INCHES)	DENSITIES WIDTH (INCHES)	DENSITIES HEIGTH (INCHES)	DENSITIES MASS (GRAMS)	DENSITIES VOLUME (CU.IN.)	DENSITIES DENSITY (PPCF)
0.00	1.63	1.56	1.60	0.50		0	1.994	1.990	0.774	2.216	3.071	2.750
5.00	1.75	1.38	1.57	0.50		5	1.989	1.987	0.759	2.241	3.000	2.847
10.00	1.81	1.50	1.66	0.50		10	1.997	1.994	0.742	2.346	2.955	3.026
15.00	1.63	1.63	1.63	0.63		15	1.995	1.997	0.767	2.336	3.056	2.913
20.00	1.56	1.50	1.53	0.63		20	2.000	2.005	0.755	2.298	3.028	2.893
25.00	1.75	1.50	1.63	0.63		25	2.002	2.000	0.775	2.361	3.103	2.900
30.00	1.75	1.69	1.72	0.63		30	1.987	1.990	0.760	2.171	3.005	2.753
35.00	1.81	1.75	1.78	0.56		35	1.993	1.996	0.762	2.283	3.031	2.870
40.00	1.81	1.75	1.78	0.56		40	2.006	2.003	0.775	2.210	3.114	2.705
45.00	1.69	1.75	1.72	0.63		45	2.000	2.006	0.765	2.289	3.069	2.842
50.00	1.69	1.75	1.72	0.63		50	2.010	1.995	0.768	2.201	3.080	2.724
55.00	1.63	1.81	1.72	0.50		55	1.998	2.003	0.762	2.265	3.050	2.831
60.00	1.63	1.75	1.69	0.50		60	2.008	1.992	0.768	2.182	3.072	2.707

DENSITY STATISTICS

AVERAGE:	2.828
VARIANCE:	0.009
SD:	0.092
MIN:	2.705
MAX:	3.026

SPRAY SCHEDULE NO. 7 WITH 4 SWEEPS
RUN NO. 2195

DISTANCE FROM DOME APEX	THICKNESSES (IN) +Y AXIS	THICKNESSES (IN) -Y AXIS	THICKNESSES (IN) AVG.	KNIT LINES +Y AXIS	KNIT LINES -Y AXIS	DISTANCE FROM APEX (INCHES)	DENSITIES LENGTH (INCHES)	DENSITIES WIDTH (INCHES)	DENSITIES HEIGTH (INCHES)	DENSITIES MASS (GRAMS)	DENSITIES VOLUME (CU.IN.)	DENSITIES DENSITY (PPCF)
0.00	2.50		1.25	0.75		0	1.985	1.990	0.753	1.984	2.974	2.542
5.00	2.63		1.32	0.63		5	1.904	1.903	0.753	1.871	2.728	2.613
10.00	2.38		1.19	0.50		10	1.990	1.996	0.754	2.279	2.995	2.900
15.00	2.25		1.13	0.88		15	1.985	1.983	0.752	1.939	2.960	2.496
20.00	2.38		1.19	1.00		20	1.983	1.983	0.752	2.014	2.957	2.596
25.00	2.50		1.25	0.75		25	1.988	1.988	0.755	2.073	2.984	2.648
30.00	2.38		1.19	0.75		30	1.990	1.988	0.750	2.120	2.967	2.723
35.00	2.25		1.13	0.75		35	1.987	1.990	0.752	2.104	2.974	2.697
40.00	2.25		1.13	0.75		40	1.985	1.985	0.754	2.011	2.971	2.580
45.00	2.31		1.16	0.75		45	1.988	1.987	0.753	1.985	2.974	2.543
50.00	2.13		1.07	0.75		50	1.983	1.984	0.755	2.150	2.970	2.758
55.00	2.13		1.07	0.75		55	1.991	1.992	0.751	2.089	2.979	2.673
60.00	2.13		1.07	0.75		60	1.990	1.990	0.752	2.064	2.978	2.641

DENSITY STATISTICS

AVERAGE:	2.647
VARIANCE:	0.011
SD:	0.103
MIN:	2.496
MAX:	2.900

26

SPRAY SCHEDULE NO. 8 WITH 3 SWEEPS
RUN NO. 2196

DISTANCE FROM DOME APEX	THICKNESSES (IN) +Y AXIS	THICKNESSES (IN) -Y AXIS	THICKNESSES (IN) AVG.	KNIT LINES +Y AXIS	KNIT LINES -Y AXIS	DISTANCE FROM APEX (INCHES)	DENSITIES LENGTH (INCHES)	DENSITIES WIDTH (INCHES)	DENSITIES HEIGTH (INCHES)	DENSITIES MASS (GRAMS)	DENSITIES VOLUME (CU.IN.)	DENSITIES DENSITY (PPCF)
0.00	2.25	2.38	2.32	0.63		0	2.002	2.003	0.745	2.056	2.987	2.623
5.00	2.50	2.38	2.44	0.63		5	2.002	2.002	0.748	2.128	2.998	2.705
10.00	2.50	2.13	2.32	0.63		10	1.999	1.995	0.749	2.148	2.987	2.741
15.00	2.13	2.00	2.07	0.50		15	1.996	1.997	0.750	2.130	2.990	2.715
20.00	1.81	1.63	1.72	0.50		20	2.002	2.000	0.748	2.227	2.995	2.834
25.00	1.63	1.63	1.63	0.50		25	1.999	2.000	0.747	2.068	2.987	2.639
30.00	1.56	1.75	1.66	0.50		30	2.001	2.000	0.750	2.180	3.002	2.768
35.00	1.44	1.69	1.57	0.50		35	1.997	1.997	0.747	2.101	2.979	2.688
40.00	1.50	1.63	1.57	0.50		40	1.998	1.998	0.749	2.154	2.990	2.745
45.00	1.56	1.63	1.60	0.50		45	2.000	2.000	0.745	2.171	2.980	2.776
50.00	1.50	1.63	1.57	0.50		50	2	2.002	0.746	2.169	2.987	2.767
55.00	1.50	1.50	1.50	0.50		55	1.998	2.000	0.745	2.117	2.977	2.710
60.00	1.50	1.50	1.50	0.50		60	2.002	2.002	0.744	2.188	2.982	2.796

DENSITY STATISTICS

AVERAGE:	2.731
VARIANCE:	0.003
SD:	0.058
MIN:	2.623
MAX:	2.834

SPRAY SCHEDULE NO. 5 WITH 6 SWEEPS
RUN NO. 2189

OUT OF DATE MATERIAL USED

DATA NOT VALID

DISTANCE FROM DOME APEX	THICKNESSES +Y AXIS t1	+Y AXIS t2	-Y AXIS t3	-Y AXIS t4	+Y AVG.	-Y AVG.	4 PT. AVG	KNIT LINES +Y KL1	KNIT LINES -Y KL2	DISTANCE FROM APEX (INCHES)	DENSITIES LENGTH (INCHES)	WIDTH (INCHES)	HEIGTH (INCHES)	MASS (GRAMS)	VOLUME (CU.IN.)	DENSITY (PPCF)
0.00	2.00	2.00	1.94	2.06	2.00	2.00	2.00	0.38	0.31	0					0.000	ERR
5.00	2.06	2.13	2.00	2.06	2.10	2.03	2.06	0.38	0.31	5					0.000	ERR
10.00	2.25	2.38	2.13	2.06	2.32	2.10	2.21	0.38	0.38	10					0.000	ERR
15.00	2.25	1.94	2.00	2.00	2.10	2.00	2.05	0.50	0.38	15					0.000	ERR
20.00	1.88	1.88	1.88	1.94	1.88	1.91	1.90	0.38	0.38	20					0.000	ERR
25.00	1.81	1.88	1.94	2.00	1.85	1.97	1.91	0.38	0.31	25					0.000	ERR
30.00	1.75	1.75	1.94	1.88	1.75	1.91	1.83	0.31	0.38	30					0.000	ERR
35.00	1.81	1.81	2.06	1.94	1.81	2.00	1.91	0.31	0.31	35					0.000	ERR
40.00	1.75	1.75	2.00	1.88	1.75	1.94	1.85	0.31	0.31	40					0.000	ERR
45.00	1.69	1.75	1.88	1.88	1.72	1.88	1.80	0.31	0.31	45					0.000	ERR
50.00	1.69	1.88	1.81	1.81	1.79	1.81	1.80	0.31	0.31	50					0.000	ERR
55.00	1.75	1.81	1.81	1.81	1.78	1.81	1.80	0.31	0.31	55					0.000	ERR
60.00	1.75	1.81	1.69	1.75	1.78	1.72	1.75	0.31	0.31	60					0.000	ERR

AVERAGE: ERR
VARIANCE: ERR
SD: ERR

27

SPRAY SCHEDULE NO. 5 WITH 6 SWEEPS
RUN NO. 2190

OUT OF DATE MATERIAL USED

DATA NOT VALID

DISTANCE FROM DOME APEX	THICKNESSES +Y AXIS t1	+Y AXIS t2	-Y AXIS t3	-Y AXIS t4	+Y AVG.	-Y AVG.	4 PT. AVG	KNIT LINES +Y KL1	KNIT LINES -Y KL2	DISTANCE FROM APEX (INCHES)	DENSITIES LENGTH (INCHES)	WIDTH (INCHES)	HEIGTH (INCHES)	MASS (GRAMS)	VOLUME (CU.IN.)	DENSITY (PPCF)
0.00	2.13	2.00	2.13	2.00	2.07	2.07	2.07			0	1.995	1.987	0.783	2.882	3.104	3.539
5.00	2.18	2.25	2.00	2.00	2.22	2.00	2.11			5	1.996	1.997	0.785	3.150	3.129	3.837
10.00	2.25	2.50	2.00	2.18	2.38	2.09	2.23			10	1.999	1.995	0.784	3.286	3.127	4.005
15.00	2.18	2.25	2.50	2.50	2.22	2.50	2.36			15	1.992	1.996	0.781	2.967	3.105	3.641
20.00	1.75	1.94	2.25	2.18	1.85	2.22	2.03			20	1.994	1.993	0.776	2.807	3.084	3.469
25.00	1.69	1.75	1.94	1.88	1.72	1.91	1.82			25	1.993	1.992	0.779	2.866	3.093	3.532
30.00	1.63	1.69	1.75	1.75	1.66	1.75	1.71			30	1.996	1.995	0.774	2.858	3.082	3.534
35.00	1.63	1.81	1.75	1.69	1.72	1.72	1.72			35	1.996	1.996	0.781	2.945	3.112	3.607
40.00	1.63	1.69	1.69	1.75	1.66	1.72	1.69			40	1.995	1.999	0.781	2.925	3.115	3.579
45.00	1.63	1.63	1.69	1.81	1.63	1.75	1.69			45	1.992	1.997	0.779	3.027	3.099	3.723
50.00	1.69	1.63	1.63	1.75	1.66	1.69	1.68			50	1.993	1.999	0.777	2.975	3.096	3.663
55.00	1.63	1.50	1.63	1.69	1.57	1.66	1.61			55	1.991	1.995	0.775	2.902	3.078	3.593
60.00	1.63	1.56	1.63	1.69	1.60	1.66	1.63			60	1.994	1.994	0.775	2.803	3.081	3.467

AVERAGE: 3.630
VARIANCE: 0.021
SD: 0.146

SPRAY SCHEDULE NO. 4 WITH 6 SWEEPS
RUN NO. 2187

	DISTANCE FROM DOME APEX	THICKNESSES +Y AXIS t1	t2	-Y AXIS t3	t4	+Y AVG.	-Y AVG.	4 PT. AVG	KNIT LINES +Y KL1	-Y KL2	DISTANCE FROM APEX (INCHES)	DENSITIES LENGTH (INCHES)	WIDTH (INCHES)	HEIGTH (INCHES)	MASS (GRAMS)	VOLUME (CU.IN.)	DENSITY (PPCF)
	0.00	2.00	1.88	2.00	1.88	1.94	1.94	1.94	0.31	0.31	0	2.001	1.999	0.755	2.520	3.020	3.180
	5.00	1.94	1.88	2.06	2.00	1.91	2.03	1.97	0.31	0.38	5	2.002	2.001	0.754	2.600	3.021	3.280
OUT	10.00	2.18	2.06	2.13	2.18	2.12	2.16	2.14	0.38	0.63	10	2.002	2.001	0.754	2.820	3.021	3.558
OF	15.00	2.31	2.13	2.13	1.88	2.22	2.01	2.11	0.63	0.50	15	2.000	2.002	0.755	2.780	3.023	3.505
DATE	20.00	1.94	2.00	1.88	1.94	1.97	1.91	1.94	0.50	0.50	20	2.001	2.002	0.753	2.680	3.017	3.386
MATERIAL	25.00	1.94	1.94	1.81	1.88	1.94	1.85	1.89	0.38	0.38	25	2.005	2.003	0.755	2.750	3.032	3.456
USED	30.00	2.00	1.94	1.75	1.75	1.97	1.75	1.86	0.31	0.31	30	2.002	2.001	0.754	2.780	3.021	3.508
	35.00	1.94	1.88	1.75	1.69	1.91	1.72	1.82	0.31	0.31	35	2.005	2.002	0.752	2.760	3.019	3.485
DATA	40.00	1.88	1.75	1.69	1.69	1.82	1.69	1.75	0.31	0.38	40	2.002	2.000	0.754	2.670	3.019	3.370
NOT	45.00	1.75	1.69	1.69	1.69	1.72	1.69	1.71	0.31	0.38	45	2.001	2.001	0.754	2.760	3.019	3.484
VALID	50.00	1.75	1.75	1.69	1.69	1.75	1.69	1.72	0.31	0.31	50	2.004	2.003	0.753	2.760	3.023	3.480
	55.00	1.75	1.63	1.69	1.63	1.69	1.66	1.68	0.31	0.38	55	2.005	2.004	0.754	2.720	3.030	3.422
	60.00	1.75	1.56	1.75	1.63	1.66	1.69	1.67	0.31	0.31	60	2.000	2.004	0.750	2.680	3.006	3.398

AVERAGE: 3.424
VARIANCE: 0.010
SD: 0.099

28

SPRAY SCHEDULE NO. 5 WITH 6 SWEEPS
RUN NO. 2188

	DISTANCE FROM DOME APEX	THICKNESSES +Y AXIS t1	t2	-Y AXIS t3	t4	+Y AVG.	-Y AVG.	4 PT. AVG	KNIT LINES +Y KL1	-Y KL2	DISTANCE FROM APEX (INCHES)	DENSITIES LENGTH (INCHES)	WIDTH (INCHES)	HEIGTH (INCHES)	MASS (GRAMS)	VOLUME (CU.IN.)	DENSITY (PPCF)
	0.00	1.81	1.81	1.81	1.75	1.81	1.78	1.80	0.31	0.31	0					0.000	ERR
	5.00	1.75	1.81	1.81	1.75	1.78	1.78	1.78	0.31	0.31	5					0.000	ERR
OUT	10.00	1.75	1.94	1.75	1.81	1.85	1.78	1.81	0.31	0.38	10					0.000	ERR
OF	15.00	1.88	1.81	1.88	1.88	1.85	1.88	1.86	0.31	0.50	15					0.000	ERR
DATE	20.00	1.75	1.75	2.00	2.00	1.75	2.00	1.88	0.44	0.50	20					0.000	ERR
MATERIAL	25.00	1.69	1.75	1.88	1.94	1.72	1.91	1.82	0.44	0.38	25					0.000	ERR
USED	30.00	1.63	1.75	1.81	1.88	1.69	1.85	1.77	0.38	0.38	30					0.000	ERR
	35.00	1.69	1.69	1.81	1.75	1.69	1.78	1.74	0.31	0.31	35					0.000	ERR
DATA	40.00	1.75	1.69	1.75	1.75	1.72	1.75	1.74	0.31	0.38	40					0.000	ERR
NOT	45.00	1.75	1.63	1.81	1.81	1.69	1.81	1.75	0.44	0.38	45					0.000	ERR
VALID	50.00	1.81	1.81	1.81	1.75	1.81	1.78	1.80	0.38	0.38	50					0.000	ERR
	55.00	1.88	1.75	1.94	1.63	1.82	1.79	1.80	0.25	0.38	55					0.000	ERR
	60.00	1.81	1.75	1.75	1.69	1.78	1.72	1.75	0.31	0.38	60					0.000	ERR

AVERAGE: ERR
VARIANCE: ERR
SD: ERR

SPRAY SCHEDULE NO. 2 WITH 4 SWEEPS
RUN NO. 2182

	DISTANCE FROM DOME APEX	THICKNESSES +Y AXIS t1	+Y AXIS t2	-Y AXIS t3	-Y AXIS t4	+Z AXIS t5	+Z AXIS t6	+Y AVG.	-Y AVG.	4 PT. AVG	KNIT LINES +Y KL1	KNIT LINES -Y KL2
	0.00	1.25	1.38	1.38	1.25			1.32	1.32	1.32	0.25	0.25
	5.00	1.18	1.33	1.32	1.31			1.26	1.32	1.29	0.25	0.38
	10.00	1.06	1.12	1.13	1.12			1.09	1.13	1.11	0.25	0.38
OUT	15.00	1.06	1.16	1.03	0.98			1.11	1.01	1.06	0.31	0.38
OF	20.00	1.31	1.31	0.93	0.94	1.13	1.13	1.31	0.94	1.12	0.44	0.25
DATE	25.00	1.38	1.28	1.26	1.36	1.53	1.49	1.33	1.31	1.32	0.44	0.50
MATERIAL	30.00	1.31	1.37	1.58	1.59	1.64	1.66	1.34	1.59	1.46	0.50	0.44
USED	35.00	1.63	1.70	1.67	1.75	1.72	1.71	1.67	1.71	1.69	0.38	0.38
	40.00	1.75	1.87	2.02	1.93	1.81	1.79	1.81	1.97	1.89	0.50	0.31
DATA	45.00	1.81	1.87	2.16	2.00	1.88	1.93	1.84	2.08	1.96	0.44	0.44
NOT	50.00	1.75	1.84	2.18	2.11			1.80	2.15	1.97	0.38	0.38
VALID	55.00	1.88	2.00	2.14	2.17			1.94	2.16	2.05	0.38	0.38
	60.00	1.88	2.00	2.00	2.00			1.94	2.00	1.97	0.25	0.25

29

SPRAY SCHEDULE NO. 4 WITH 6 SWEEPS
RUN NO. 2186

	DISTANCE FROM DOME APEX	THICKNESSES (inches) +Y AXIS t1	+Y AXIS t2	-Y AXIS t3	-Y AXIS t4	+Y AVG.	-Y AVG.	4 PT. AVG	KNIT LINES +Y KL1	KNIT LINES -Y KL2	DISTANCE FROM APEX (INCHES)	DENSITIES LENGTH (INCHES)	WIDTH (INCHES)	HEIGTH (INCHES)	MASS (GRAMS)	VOLUME (CU.IN.)	DENSITY (PPCF)
	0.00	2.12	2.12	2.12	2.12	2.12	2.12	2.12	0.38	0.38	0	2.000	2.000	0.753	2.450	3.012	3.100
	5.00	2.18	2.12	2.12	2.31	2.15	2.21	2.18	0.38	0.38	5	2.003	2.002	0.753	2.560	3.020	3.231
OUT	10.00	2.31	2.31	2.25	2.38	2.31	2.32	2.31	0.25	0.50	10	2.002	2.002	0.752	2.550	3.014	3.224
OF	15.00	2.06	2.00	2.18	2.25	2.03	2.22	2.12	0.50	0.50	15	2.001	2.003	0.753	2.740	3.018	3.460
DATE	20.00	1.75	1.75	1.81	1.94	1.75	1.88	1.81	0.50	0.50	20	1.999	1.997	0.754	2.520	3.010	3.191
MATERIAL	25.00	1.62	1.62	1.81	1.75	1.62	1.78	1.70	0.38	0.38	25	1.998	1.997	0.753	2.590	3.004	3.285
USED	30.00	1.56	1.56	1.75	1.81	1.56	1.78	1.67	0.25	0.38	30	2.000	2.000	0.753	2.600	3.012	3.290
	35.00	1.62	1.62	1.81	1.81	1.62	1.81	1.72	0.25	0.38	35	2.001	2.000	0.751	2.610	3.006	3.310
DATA	40.00	1.62	1.62	1.88	1.81	1.62	1.85	1.73	0.25	0.31	40	2.000	2.000	0.750	2.670	3.000	3.392
NOT	45.00	1.62	1.62	1.81	1.81	1.62	1.81	1.72	0.38	0.38	45	2.001	2.000	0.751	2.630	3.006	3.335
VALID	50.00	1.62	1.62	1.75	1.75	1.62	1.75	1.69	0.31	0.31	50	1.999	2.001	0.750	2.550	3.000	3.239
	55.00	1.62	1.62	1.75	1.75	1.62	1.75	1.69	0.31	0.31	55	1.999	2.001	0.752	2.640	3.008	3.345
	60.00	1.69	1.69	1.62	1.62	1.69	1.62	1.66	0.39	0.31	60	2.001	2.001	0.753	2.610	3.015	3.299

AVERAGE: 3.285
VARIANCE: 0.008
SD: 0.088

SPRAY SCHEDULE NO. 1 WITH 6 SWEEPS
RUN NO. 2180

	DISTANCE FROM DOME APEX	THICKNESSES +Y AXIS t1	+Y AXIS t2	-Y AXIS t3	-Y AXIS t4	+Z AXIS t5	+Z AXIS t6	+Y AVG.	-Y AVG.	4 PT. AVG	KNIT LINES +Y KL1	KNIT LINES -Y KL2
	0.00	1.06	1.18	1.06	1.18			1.12	1.12	1.12	0.25	0.25
	5.00	0.93	1.00	1.12	1.18			0.97	1.15	1.06	0.18	0.18
OUT	10.00	0.81	0.81	1.00	1.06			0.81	1.03	0.92	0.25	0.18
OF	15.00	0.75	0.75	0.87	1.00			0.75	0.94	0.84	0.31	0.18
DATE	20.00	0.63	0.63	0.87	0.93	0.75	0.80	0.63	0.90	0.77	0.12	0.13
MATERIAL	25.00	0.81	0.81	1.00	1.00	0.87	0.89	0.81	1.00	0.91	0.38	0.31
USED	30.00	0.93	0.93	1.00	1.00	1.02	1.06	0.93	1.00	0.97	0.25	0.31
	35.00	1.00	1.06	1.06	1.06	1.05	1.08	1.03	1.06	1.04	0.25	0.25
DATA	40.00	1.18	1.06	1.06	1.06	1.06	1.08	1.12	1.06	1.09	0.18	0.18
NOT	45.00	1.13	1.13	1.06	1.06			1.13	1.06	1.10	0.13	0.18
VALID	50.00	1.06	1.06	1.06	1.00			1.06	1.03	1.04	0.13	0.18
	55.00	1.00	1.00	1.00	0.93			1.00	0.97	0.98	0.13	0.13
	60.00	1.00	1.00	0.93	0.93			1.00	0.93	0.97	0.13	0.13

30

SPRAY SCHEDULE NO. 2 WITH 4 SWEEPS
RUN NO. 2181

	DISTANCE FROM DOME APEX	THICKNESSES +Y AXIS t1	+Y AXIS t2	-Y AXIS t3	-Y AXIS t4	+Z AXIS t5	+Z AXIS t6	+Y AVG.	-Y AVG.	4 PT. AVG	KNIT LINES +Y KL1	KNIT LINES -Y KL2
	0.00	1.25	1.13	1.25	1.25			1.19	1.25	1.22	0.25	0.25
	5.00	1.31	1.25	1.16	1.13			1.28	1.15	1.21	0.25	0.25
	10.00	1.38	1.38	1.25	1.18			1.38	1.21	1.30	0.25	0.18
OUT	15.00	1.50	1.41	1.44	1.41			1.46	1.43	1.44	0.31	0.18
OF	20.00	1.50	1.18	1.31	1.25	1.55	1.64	1.34	1.28	1.31	0.25	0.25
DATE	25.00	1.44	1.25	1.13	1.13	1.48	1.59	1.35	1.13	1.24	0.31	0.25
MATERIAL	30.00	1.50	1.44	1.38	1.25	1.52	1.63	1.47	1.32	1.39	0.25	0.25
USED	35.00	1.56	1.50	1.56	1.63	1.61	1.66	1.53	1.60	1.56	0.25	0.25
	40.00	1.63	1.56	1.69	1.69	1.71	1.77	1.60	1.69	1.64	0.25	0.38
DATA	45.00	1.69	1.63	1.78	1.75	1.71	1.75	1.66	1.77	1.71	0.25	0.38
NOT	50.00	1.63	1.63	2.00	1.88			1.63	1.94	1.79	0.25	0.38
VALID	55.00	1.69	1.75	2.00	1.93			1.72	1.96	1.84	0.25	0.25
	60.00	1.81	1.75	1.93	1.93			1.78	1.93	1.85	0.25	0.25

MARTIN MARIETTA
MANNED SPACE SYSTEMS

MATERIAL SCIENCES WORK REQUEST

BT.

MATERIAL SCIENCES JOB NO. APT-0412-92		DATE RECD 07/09/92
CHARGE NO. 00675		LAB START DATE 07/10/92
REQUESTOR JOB NO. 6071	REFERENCE	DATE COMPLETED 07/15/92

TITLE MAF TESTING OF MSFC JOB ORDER 6071 PANELS

PURPOSE Testing of Panels 2207 - 2211

MATERIAL NCF; 22-65

DESCRIPTION OF WORK CRYOFLEX @ -423 15 SPEC.

2207
2208
2209 CF-2, -3, -4
2210
2211

DATA REQUIRED

WITNESS ☐ YES ☒ NO REPORT ☐ VERBAL ☒ WRITTEN

ENGINEER Golden PHONE 8·205·544-0931

LAB PROCEDURE Gradient EQTP 1002 Rev. B. ∞ Radius, Inspect @ 35KSi, proceed to 45 KSi, inspect; to 58 KSi, inspect; proceed to 65 KSi. If failure occurs below 58 KSi, report to Gene Golden

OBSERVATION

DISPOSITION OF DATA AND SPECIMENS

TECHNICIAN (S) W. Gamman DATE 7-16-92

DWF 3500-203(6/88)

Cryoflex Measurements

M&P Job# APT-0412-92

TPS Job# _____

		WIDTH	AL. THK	TOTAL THK	TPS THK
Pnl # 2207	Spec # CF2				
		1.299			
		1.297			
		1.298			
	Avg	1.297	0.122	1.569	1.447
	CF3				
		1.306			
		1.304			
		1.306			
	Avg	1.305	0.122	1.568	1.446
	CF4				
		1.302			
		1.304			
		1.303			
	Avg	1.302	0.120	1.634	1.514
PNL#2208	SPEC# CF2				
		1.302			
		1.301			
		1.300			
	Avg	1.301	0.119	1.744	1.625
	CF3				
		1.301			
		1.299			
		1.297			
	Avg	1.299	0.119	1.737	1.618
	CF4				
		1.302			
		1.303			
		1.303			
	Avg	1.302	0.119	1.744	1.625

DEPT WORK FROM 3500-207 (8/83)

Cryoflex Measurements

M&P Job# APT-0412-92

TPS Job# _____

		WIDTH	AL. THK	TOTAL THK	TPS THK
Pnl #2209	Spec #CF2				
		1.303			
		1.304			
		1.301			
	Avg	1.302	0.120	1.427	1.307
	CF3				
		1.303			
		1.301			
		1.302			
	Avg	1.301	0.119	1.436	1.317
NL#2209	CF4				
		1.306			
		1.304			
		1.304			
	Avg	1.304	0.119	1.429	1.310
VL#2210	CF2				
		1.301			
		1.300			
		1.298			
	Avg	1.299	0.119	1.672	1.553
	CF3				
		1.302			
		1.300			
		1.303			
	Avg	1.301	0.119	1.671	1.552
	CF4				
		1.300			
		1.298			
		1.299			
	Avg	1.299	0.120	1.669	1.549

DEPT WORK FROM 3500-207 (8/83)

Cryoflex Measurements

M&P Job# APT0412-92

TPS Job# _____

		WIDTH	AL. THK	TOTAL THK	TPS THK
Pnl # 2211	Spec # CF2				
		1.301			
		1.301			
		1.301			
	Avg	1.301	0.116	2.073	1.957
	CF3				
		1.305			
		1.306			
		1.304			
	Avg	1.305	0.116	2.082	1.966
	CF4				
		1.307			
		1.304			
		1.303			
	Avg	1.304	0.115	2.077	1.962
	DUMMY				
		1.305			
		1.306			
		1.304			
	Avg	1.305	0.116	2.082	1.966
	Avg				
	Avg				

DEPT WORK FROM 3500-207 (8/83)

Test No. ..... Size ..... Area ..... Yield Point Lbs. Sq. In. ..... Ultimate Str. Lbs. Sq. In. .....

Elongation / Compression } In ..... Inches ..... Per Cent. Elongation ..... Per Cent. Reduced Area ..... Date .....

LOAD IN POUNDS

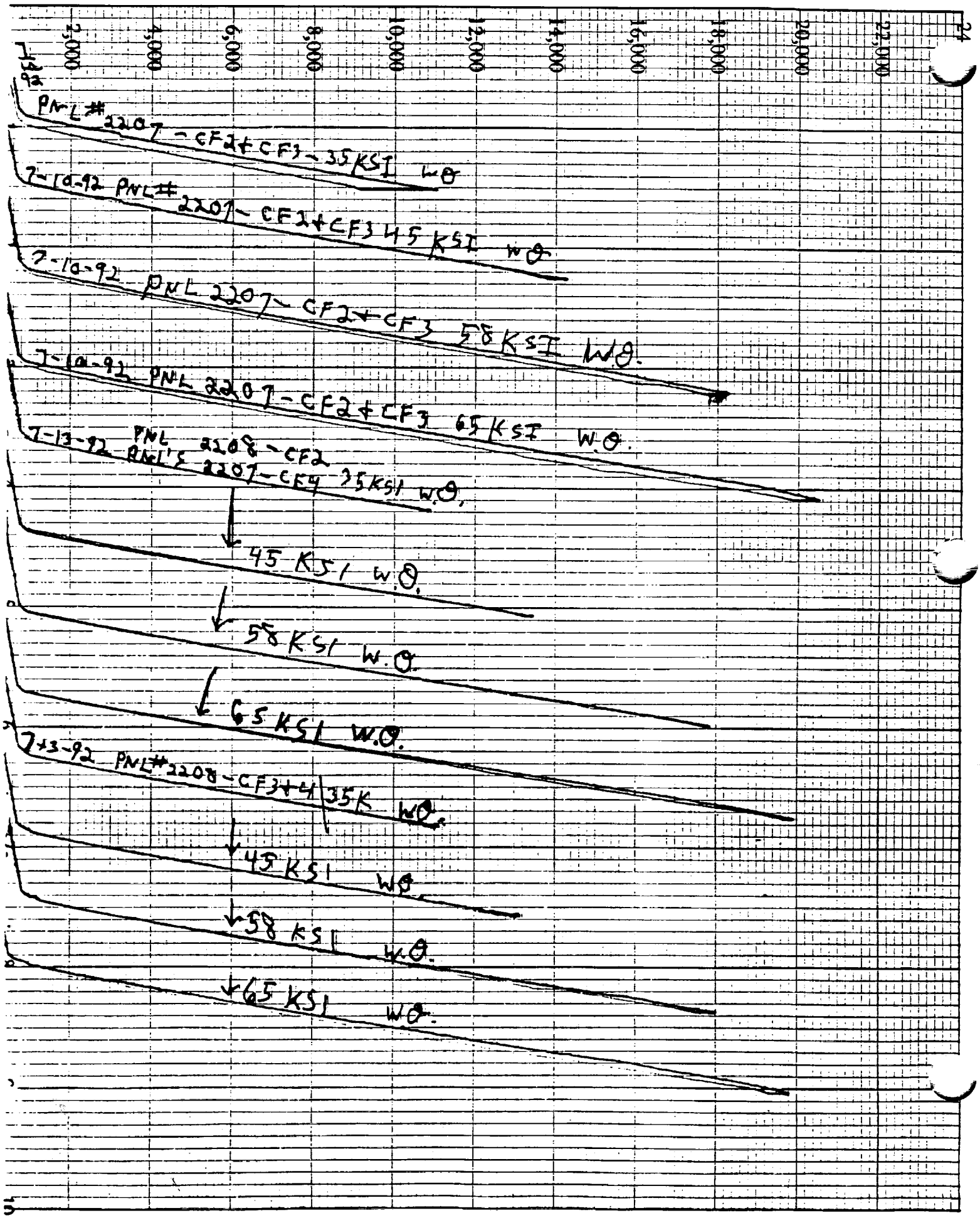

Test No.....Size.....Area.....Yield Point Lbs. Sq. In.....Ultimate Str. Lbs. Sq. In.....

Elongation / Compression } In.....Inches.....Per Cent. Elongation.....Per Cent. Reduced Area.....Date.....

LOAD IN POUNDS

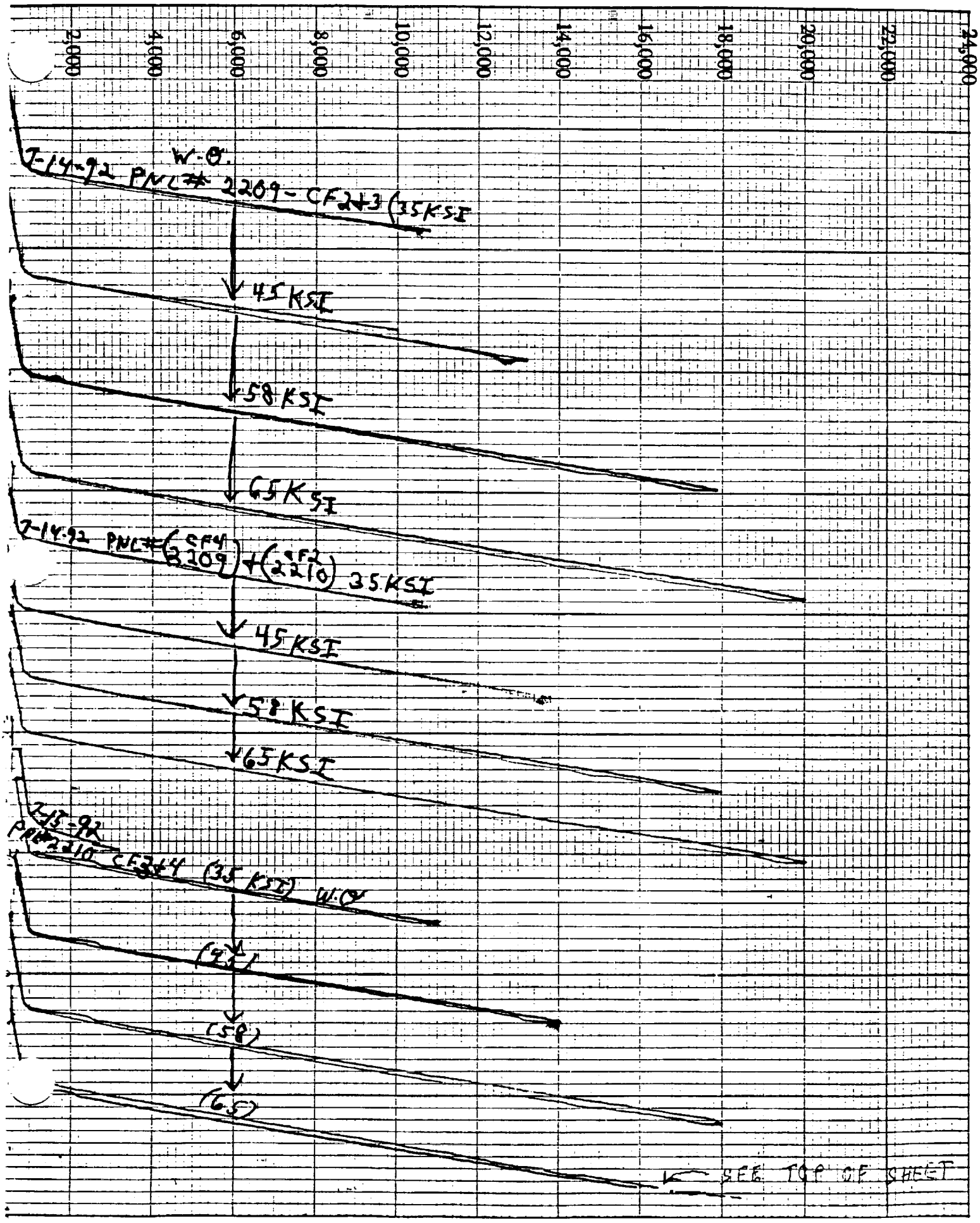

Test No.....Size.....Area.....Yield Point Lbs. Sq. In.....Ultimate Str. Lbs. Sq. In.....

Elongation / Compression } In.....Inches.....Per Cent. Elongation.....Per Cent. Reduced Area.....Date.....

LOAD IN POUNDS

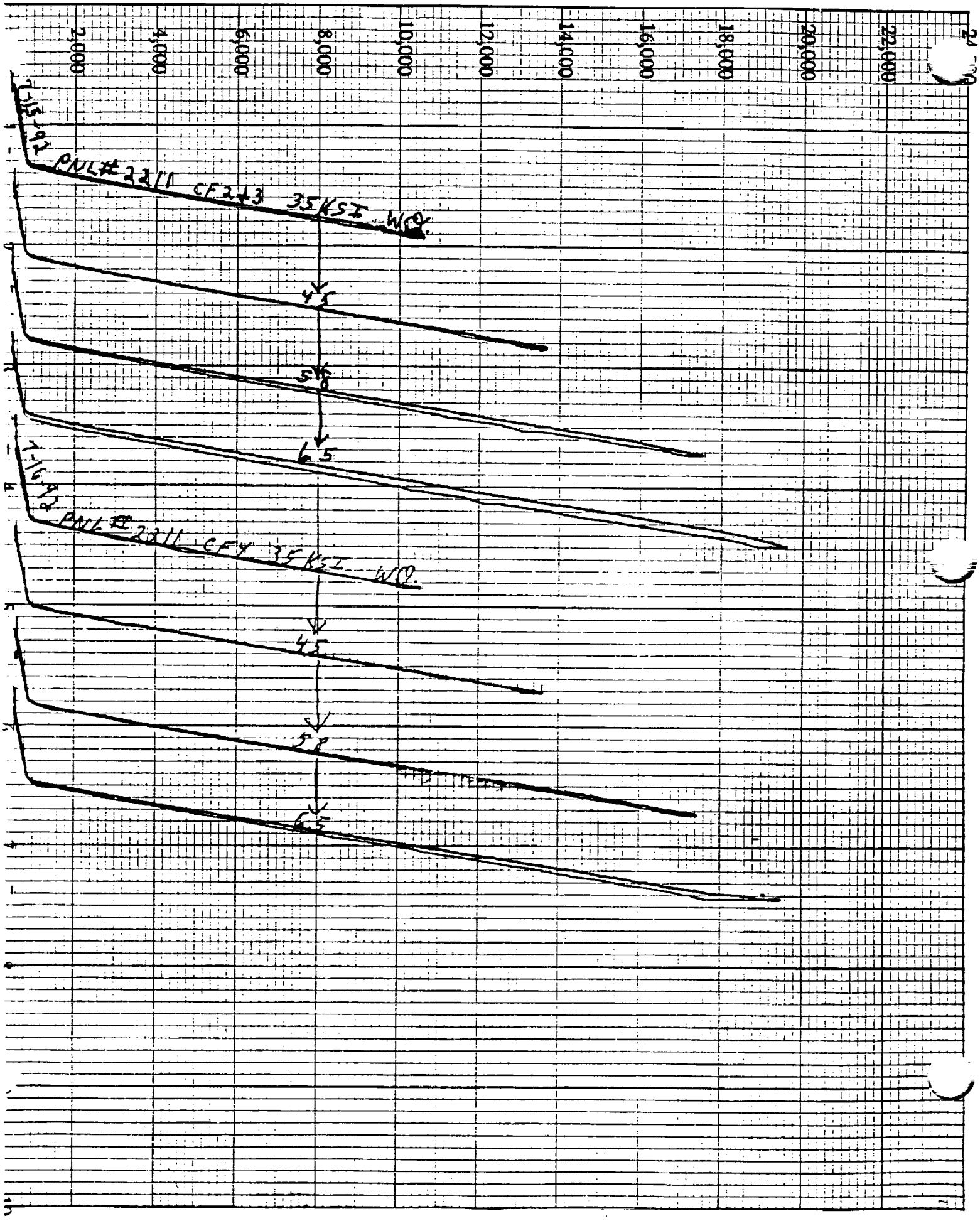

TPS CRYOFLEX TEST RESULTS M. Nunez SHT 1 OF 4

TEST SERIES APT-0412-92 TECH W. ORMAN CKD. BY 1109 / 1426 TEST DATE 7-10-92

LOT NO: 2207

TEMP. -423 ☒ -320 ☐

TPS MATL: NCF 22-65

TPS THK: 1.446 IN.

TILING YES ☐ NO ☒

DEPTH ____ IN.

SPACING ____ IN. O.C

RADIUS ∞ IN.

WIDTH 1.301 IN.

AL. THK 0.122 IN.

AL. AREA 0.317 IN.^{2}

PRELOAD R. T. 0.5 KIPS

PRESTRESS R. T. 1.6 KSI

ULT APP. LD 18.38 / 20.60 KIPS

ULT APP. STR 58 / 65 KSI

1/14.26

45

ENGR. ACCEPTANCE VALUE PER DWG = ____ KSI

STP REQMTS MET

YES ☐ ACCEPT ☐

NO ☐ REJECT ☐

SPEC NO. CF2 TAPED YES ☐ NO ☒ 18.38 / 20.60 @ KIPS

CONT. LOST YES ☐ NO ☐ 35 45 58 65 KSI

1ST, 2ND, 3RD, 4TH RUN

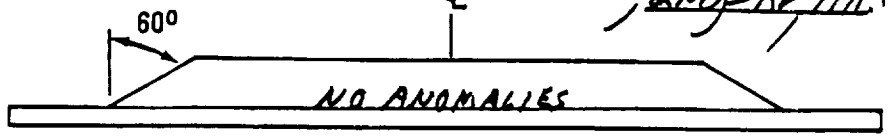

SPEC TO BE RERUN

YES ☐ NO ☒ @ ____ KSI AVG. GX6300 THK. ____ IN.

SPEC NO. CF3 TAPED YES ☐ NO ☒ 1109 / 1426 / 18.38 / 20.60 @ KIPS

CONT. LOST YES ☐ NO ☐ 35 45 58 65 KSI

1ST, 2ND, 3RD, 4TH RUN

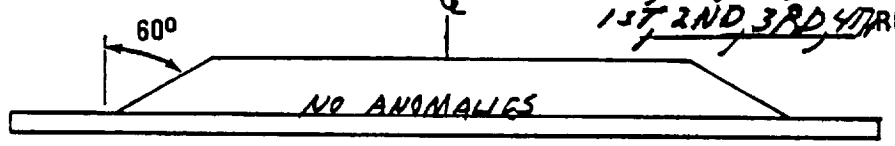

SPEC TO BE RERUN

YES ☐ NO ☒ @ ____ KSI AVG. GX6300 THK. ____ IN.

ANUL -404°F TO -415°F

ORMAN 7-13-92

LOT NO. (CF4) 2207 / (CF2) 2208

TEMP. -423 ☒ -320 ☐

TPS MATL: NCF 22-65

TPS THK: 1.569 IN.

TILING YES ☐ NO ☒

DEPTH IN.

SPACING IN. O.C

RADIUS ∞ IN.

WIDTH 1.301 IN.

AL. THK 0.119 IN.

AL. AREA 0.307 IN.^{2}

PRELOAD R.T. 0.5 KIPS

PRESTRESS R.T. 1.6 KSI

ULT APP. LD 17.92 / 20.08 KIPS

ULT APP. STR 58 / 65 KSI

1/1.28

ENGR ACCEPTANCE VALUE PER DWG = ____ KSI

STP REQMT MET

YES ☐ ACCEPT ☐

NO ☐ REJECT ☐

SPEC NO. CF4 TAPED YES ☐ NO ☒ 18.38 / 20.60 @ KIPS

CONT. LOST YES ☐ NO ☐ 35 / 45 / 58 / 65 KSI

1ST / 2ND / 3RD / 4TH RUN

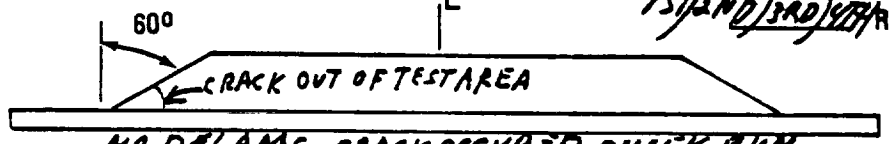

NO DELAMS CRACK OCCURED ONES'K RUN

SPEC TO BE RERUN

YES ☐ NO ☒ @ ____ KSI AVG. GX6300 THK. ____ IN.

SPEC NO. CF2 TAPED YES ☐ NO ☒ 10.81 / 15.19 / 17.92 / 20.08 @ KIPS

CONT. LOST YES ☐ NO ☐ 35 / 45 / 58 / 65 KSI

1ST, 2ND, 3RD, 4TH RUN

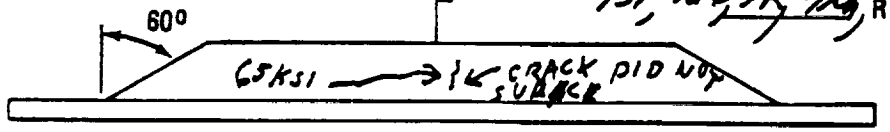

SPEC TO BE RERUN

YES ☐ NO ☒ @ ____ KSI AVG. GX6300 THK. ____ IN.

TPS CRYOFLEX TEST RESULTS

SHT 2 OF 4

TEST SERIES APT0412-92 TECH W. ORMAN CKD. BY M. Nunez TEST DATE 7-13-92

LOT NO: 2208

TEMP. -423 ☒ -320 ☐

TPS MATL: NCF2265

TPS THK: 1.621 IN.

TILING YES ☐ NO ☒

DEPTH _____ IN.

SPACING _____ IN. O.C

RADIUS ∞ IN.

WIDTH 1.300 IN.

AL. THK 0.119 IN.

AL. AREA 0.309 IN.2

PRELOAD R. T. 0.5 KIPS

PRESTRESS R. T. 1.6 KSI

ULT APP. LD 17.92 / 20.08 KIPS

ULT APP. STR 58 / 65 KSI

7/13.90 45

ENGR. ACCEPTANCE VALUE PER DWG = _____ KSI

STP REQMTS MET

YES ☐ ACCEPT ☐

NO ☐ REJECT ☐

SPEC NO. CF3 TAPED YES ☐ NO ☒ 10.81 @ 13.90 / 17.92 / 20.08 KIPS

CONT. LOST YES ☐ NO ☐ 35 / 45 / 58 / 65

1ST / 2ND / 3RD / 4TH RUN

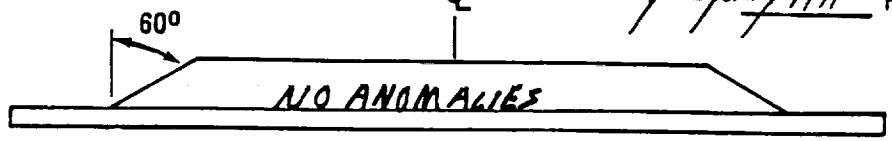

SPEC TO BE RERUN

YES ☐ NO ☒ @_____ KSI AVG. GX6300 THK. _____ IN.

SPEC NO. CF4 TAPED YES ☐ NO ☒ 10.81 @ 13.90 / 17.92 / 20.08 KIPS

CONT. LOST YES ☐ NO ☐ 35 / 45 / 58 / 65 KSI

1ST / 2ND / 3RD / 4TH RUN

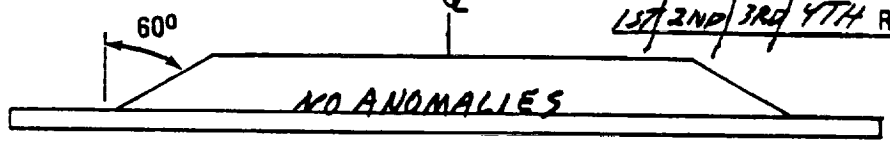

SPEC TO BE RERUN

YES ☐ NO ☒ @_____ KSI AVG. GX6300 THK. _____ IN.

ANVIL - 404 TO 417°F

W. ORMAN 7-14-92

LOT NO. 2209

TEMP. -423 ☒ -320 ☐

TPS MATL: NCF2265

TPS THK: 1.312 IN.

TILING YES ☐ NO ☒

DEPTH IN.

SPACING IN. O.C

RADIUS ∞ IN.

WIDTH 1.301 IN.

AL. THK 0.119 IN.

AL. AREA 0.309 IN.2

PRELOAD R.T. 0.5 KIPS

PRESTRESS R.T. 1.6 KSI

ULT APP. LD 17.92 / 20.08 KIPS

ULT APP. STR 58 / 65 KSI

7/13.90 45

ENGR ACCEPTANCE VALUE PER DWG = _____ KSI

STP REQMT MET

YES ☐ ACCEPT ☐

NO ☐ REJECT ☐

SPEC NO. CF2 TAPED YES ☐ NO ☒ 10.81 @ 13.90 / 17.92 / 20.08 KIPS

CONT. LOST YES ☐ NO ☐ 35 / 45 / 58 / 65 KSI

1ST / 2ND / 3RD / 4TH RUN

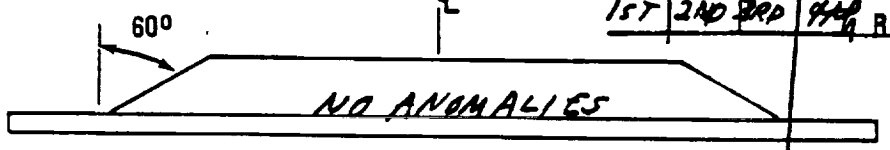

SPEC TO BE RERUN

YES ☐ NO ☒ @_____ KSI AVG. GX6300 THK. _____ IN.

SPEC NO. CF3 TAPED YES ☐ NO ☒ 10.81 @ 13.90 / 17.92 / 20.08 KIPS

CONT. LOST YES ☐ NO ☐ 35 / 45 / 58 / 65 KSI

1ST / 2ND / 3RD / 4TH RUN

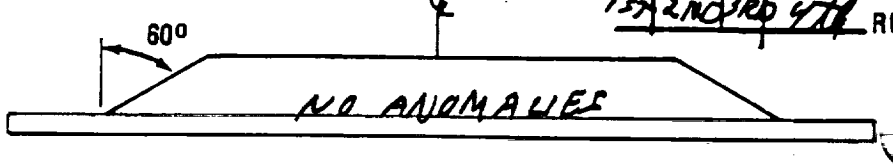

SPEC TO BE RERUN

YES ☐ NO ☒ @_____ KSI AVG. GX6300 THK. _____ IN.

ANVIL - 404 TO 417°F

TPS CRYOFLEX TEST RESULTS

SHT 3 OF 4

TEST SERIES APT042-92 TECH W. ORMAN CKD. BY M. Nunez TEST DATE 7-14-92

LOT NO: (CF4) 2209 (CF2) 2210

TEMP. -423 ☒ -320 ☐

TPS MATL: NCF 22-65

TPS THK: 1.431 IN.

TILING YES ☐ NO ☐

DEPTH ____ IN.

SPACING ____ IN. O.C

RADIUS ∞ IN.

WIDTH 1.301 IN.

AL. THK 0.119 IN.

AL. AREA 0.309 IN.^{2}

PRELOAD R. T. 0.5 KIPS

PRESTRESS R. T. 1.6 KSI

ULT APP. LD 17.92/20.08 KIPS

ULT APP. STR 58/65 KSI

1/13.90 -/45

ENGR. ACCEPTANCE VALUE PER DWG = ____ KSI

STP REQMTS MET

YES ☐ ACCEPT ☐

NO ☐ REJECT ☐

SPEC NO. CF4 TAPED YES ☐ NO ☒ 10.81/13.90/17.92/20.08 @ KIPS

CONT. LOST YES ☐ NO ☐ 35/45/58/65 KSI

1, 2, 3, 4 RUN

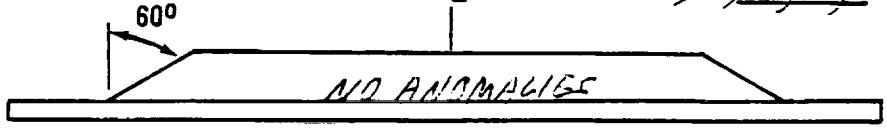

SPEC TO BE RERUN

YES ☐ NO ☒ @ ____ KSI AVG. GX6300 THK. ____ IN.

SPEC NO. CF2 TAPED YES ☐ NO ☒ 10.81/13.90/17.92/20.08 @ KIPS

CONT. LOST YES ☐ NO ☐ 35/45/58/65 KSI

1, 2, 3, 4 RUN

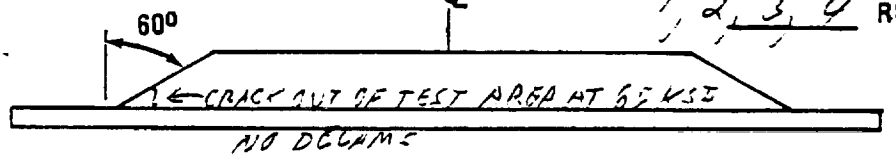

SPEC TO BE RERUN

YES ☐ NO ☒ @ ____ KSI AVG. GX6300 THK. ____ IN.

ANNL 414°F TO 412°F

W. ORMAN 7-15-92

LOT NO. 2210

TEMP. -423 ☒ -320 ☐

TPS MATL: NCF 22-65

TPS THK: 1.550 IN.

TILING YES ☐ NO ☒

DEPTH IN.

SPACING IN. O.C

RADIUS ∞ IN.

WIDTH 1.300 IN.

AL. THK 0.119 IN.

AL. AREA 0.309 IN.^{2}

PRELOAD R.T. 0.5 KIPS

PRESTRESS R.T. 1.6 KSI

ULT APP. LD 17.92-20.08 KIPS

ULT APP. STR 58/65 KSI

1-13.90

ENGR ACCEPTANCE VALUE PER DWG = ____ KSI

STP REQMT MET

YES ☐ ACCEPT ☐

NO ☐ REJECT ☐

SPEC NO. ____ TAPED YES ☐ NO ☒ 10.81/13.90/17.92/20.08 @ KIPS

CONT. LOST YES ☐ NO ☐ 35/45/58/65 KSI

1, 2, 3, 4 RUN

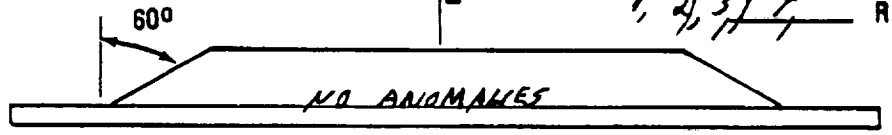

SPEC TO BE RERUN

YES ☐ NO ☒ @ ____ KSI AVG. GX6300 THK. ____ IN.

SPEC NO. ____ TAPED YES ☐ NO ☒ 10.81/13.90/17.92/20.08 @ KIPS

CONT. LOST YES ☐ NO ☐ 35/45/58/65 KSI

1/2/3/4 RUN

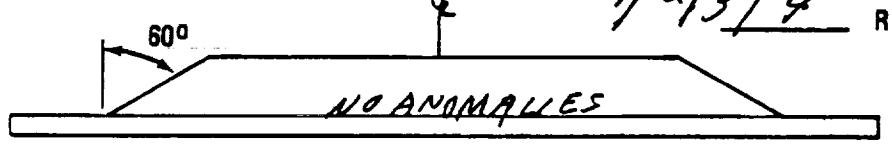

SPEC TO BE RERUN

YES ☐ NO ☒ @ ____ KSI AVG. GX6300 THK. ____ IN.

ANNL 414°F TO 412°F

TPS CRYOFLEX TEST RESULTS

SHT 4 OF 4

TEST SERIES APTO 412-92 TECH W. ORMAN CKD. BY M. Nunez TEST DATE 7-15-92

LOT NO: 2211

TEMP. -423 ☒ -320 ☐

TPS MATL: NCF 22-65

TPS THK: 1.961 IN.

TILING YES ☐ NO ☒

DEPTH _____ IN.

SPACING _____ IN. O.C

RADIUS ∞ IN.

WIDTH 1.303 IN.

AL. THK 0.116 IN.2

AL. AREA 0.302 IN.

PRELOAD R. T. 0.5 KIPS

PRESTRESS R. T. 1.6 KSI

57/1359 ULT APP. LD 17.51/19.63 KIPS

5/45 ULT APP. STR 58/65 KSI

ENGR. ACCEPTANCE VALUE PER DWG = _____ KSI

STP REQMTS MET

YES ☐ ACCEPT ☐

NO ☐ REJECT ☐

SPEC NO. CF2 TAPED YES ☐ NO ☒ 10.57 @ 13.59 17.51 19.63 KIPS

CONT. LOST YES ☐ NO ☐ 35 45 58 65 KSI

1 2 3 4 RUN

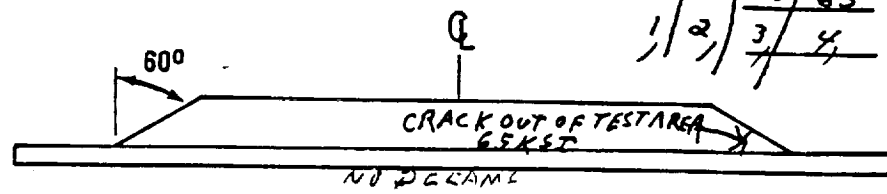

SPEC TO BE RERUN

YES ☐ NO ☒ @ _____ KSI AVG. GX6300 THK. _____ IN.

SPEC NO. CF3 TAPED YES ☐ NO ☒ 10.57 @ 13.59 17.51 19.63 KIPS

CONT. LOST YES ☐ NO ☐ 35 45 58 65 KSI

1 2 3 4 RUN

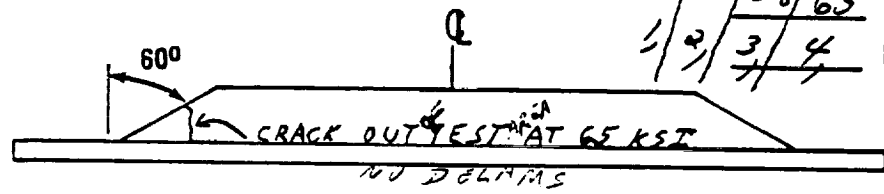

SPEC TO BE RERUN

YES ☐ NO ☒ @ _____ KSI AVG. GX6300 THK. _____ IN.

ANVIL - 405°F TO 417°F

LOT NO. 2211

TEMP. -423 ☒ -320 ☐

TPS MATL: NCF 22-65

TPS THK: 1.964 IN.

TILING YES ☐ NO ☒

DEPTH IN.

SPACING IN. O.C

RADIUS ∞ IN.

WIDTH 1.304 IN.

AL. THK 0.115 IN. 2

AL. AREA 0.299 IN.

PRELOAD R.T. 0.5 KIPS

PRESTRESS R.T. 1.6 KSI

46/1345 ULT APP. LD 17.34/19.43 KIPS

-/45 ULT APP. STR 58/65 KSI

ENGR ACCEPTANCE VALUE PER DWG = _____ KSI

STP REQMT MET

YES ☐ ACCEPT ☐

NO ☐ REJECT ☐

SPEC NO. CF4 TAPED YES ☐ NO ☒ @ _____ KIPS

CONT. LOST YES ☐ NO ☐ _____ KSI

_____ RUN

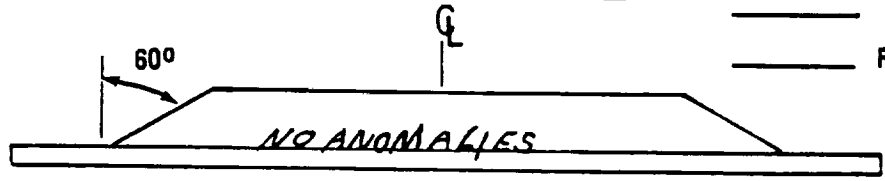

SPEC TO BE RERUN

YES ☐ NO ☒ @ _____ KSI AVG. GX6300 THK. _____ IN.

SPEC NO. _____ TAPED YES ☐ NO ☒ @ _____ KIPS

CONT. LOST YES ☐ NO ☐ _____ KSI

_____ RUN

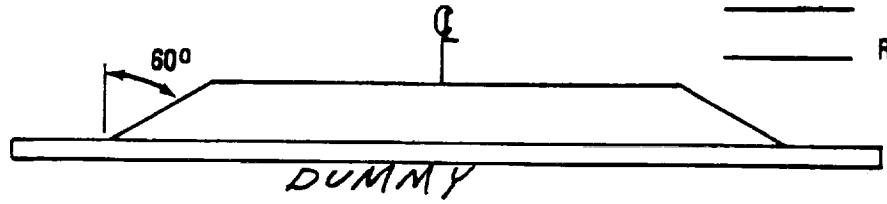

SPEC TO BE RERUN

YES ☐ NO ☒ @ _____ KSI AVG. GX6300 THK. _____ IN.

RTV 652

MARTIN MARIETTA
MANNED SPACE SYSTEMS

MATERIAL SCIENCES WORK REQUEST

BT

MATERIAL SCIENCES JOB NO. APT-0412-92		DATE RECD	07/07/92
CHARGE NO. 00675		LAB START DATE	7/8/92
REQUESTOR JOB NO. 6071	REFERENCE	DATE COMPLETED	7/8/92

TITLE MAF TESTING OF MSFC JOB ORDER 6071

PURPOSE TESTING OF PANELS 2207 - 2211

MATERIAL NCFI 22-65

DESCRIPTION OF WORK BT @-423 30 SPEC.

2207
2208
2209 01 - 06
2210
2211

DATA REQUIRED

WITNESS ☐ YES ☒ NO REPORT ☐ VERBAL ☒ WRITTEN

ENGINEER GOLDEN PHONE 8-0931

LAB PROCEDURE

OBSERVATION

DISPOSITION OF DATA AND SPECIMENS

TECHNICIAN (S) Losoya / B. Maguer DATE 7-8-92

DWF 3500-203(6/88)

MARTIN MARIETTA
MANNED SPACE SYSTEMS

TPS MECHANICAL PROPERTIES

M & P WORK REQ.: APT-0412-92
TITLE: MSFC JOB ORDER 6071
TPS JOB NO.: 6071 REV
TEST MATERIAL (S): NCFI 22-65
☐ SANDWICH CONFIGURATION
SUBSTRATE MAT'L ☒ 2219T87 AL.
OTHER:
PRIMARY BOND ADHESIVE: RTV 652
INTERFACE ADHESIVE:
☒ BOND TENSION
TEST DATE: 7/8/92
☐ FLATWISE TENSION

PANEL ID NO.	SPECIMEN. NO.	TEST TEMP (°F)	ULT. LOAD (LBS)	ULT. STRESS (PSI)	FAILURE MODE (%) ADHESIVE PB (tff)	ADHESIVE PB (SO)	ADHESIVE SB (Tool)	COHESIVE Mat'l	COHESIVE SB (tff)	COHESIVE K/L
2207	1	-423	NO	LOAD	/ OPERATOR ERROR					
	2		NO	LOAD	/ OPERATOR ERROR					
	3		211	52.8	40			60		
	4		204	51.0				70	30	
	5		128	32.0	80			20		
	6	-423	130	32.5	100			0		
2208	1	-423	92	23.0	100			0		
	2		78	19.5	95			5		
	3		118	29.5	30			70		
	4		125	31.3	90			10		
	5		99	24.8	100			0		
	6	-423	113	28.3	100			0		
2209	1	-423	210	52.5	90			10		
	2		229	57.3				90	10	
	3		172	43.0	95			5		
	4		150	37.5	95			5		
	5		154	38.5	95			5		
	6	-423	162	40.5	95			5		

FAILURE MODE NOMENCLATURE: PB=PRIMARY BOND, SB=SECONDARY BOND, tff= THIN FUZZY FILM, SO=SLICK OFF

TECHNICIAN (S) FAB: BONDING:
TEST: LOSOYA
NOTES:

MARTIN MARIETTA
MANNED SPACE SYSTEMS

TPS MECHANICAL PROPERTIES

M & P WORK REQ. APT-0412-92	TITLE MSFC JOB ORDER 6071
TPS JOB NO. 6071 REV	TEST MATERIAL (S) NCFI 22-65 ☐ SANDWICH CONFIGURATION
SUBSTRATE MAT'L ☒ 2219T87 AL. OTHER:	PRIMARY BOND ADHESIVE RTV 652 / INTERFACE ADHESIVE
☒ BOND TENSION	TEST DATE 7/8/92 ☐ FLATWISE TENSION

PANEL ID NO.	SPECIMEN. NO.	TEST TEMP (°F)	ULT. LOAD (LBS)	ULT. STRESS (PSI)	FAILURE MODE (%) ADHESIVE PB (tff)	ADHESIVE PB (SO)	ADHESIVE SB (Tool)	COHESIVE Mat'l	COHESIVE SB (tff)	COHESIVE K/L
2210	1	-423	233	58.3				100	0	
	2		249	62.3				100	0	
	3		188	47.0	100			0		
	4		189	47.3	70			30		
	5		201	50.3				50	50	
	6	-423	222	55.5				60	40	
2211	1	-423	255	63.8				100		80
	2		219	54.8				100		
	3		248	62				100		
	4		261	65.3				100		
	5		191	47.8	90			10		
	6	-423	170	42.5	90			10		10

FAILURE MODE NOMENCLATURE: PB=PRIMARY BOND, SB=SECONDARY BOND, tff= THIN FUZZY FILM, SO=SLICK OFF

TECHNICIAN (S) FAB: BONDING:

TEST: LOSOYA / B. Maguar

NOTES:

MARTIN MARIETTA
MANNED SPACE SYSTEMS

MATERIAL SCIENCES WORK REQUEST

BT

MATERIAL SCIENCES JOB NO. APT-0412-92		DATE RECD 07/08/92
LARGE NO. 00675		LAB START DATE 7-9-92
REQUESTOR JOB NO. 6071	REFERENCE	DATE COMPLETED

TITLE MAF TESTING OF MSFC JOB ORDER 6071 PANELS

PURPOSE TESTING OF PANELS 2207 - 2211

MATERIAL NCFI 22-65

DESCRIPTION OF WORK D/C @RT 18 SPEC.

Pnl 2207 ~~01~~
Pnl 2208 ~~02~~
Pnl 2209 ~~03~~ EED 01 - 03
Pnl 2210 ~~04~~
Pnl 2211 ~~05~~
~~06~~

DATA REQUIRED

WITNESS ☐ YES ☒ NO REPORT ☐ VERBAL ☒ WRITTEN

ENGINEER GOLDEN PHONE 8-0931

LAB PROCEDURE

OBSERVATION

DISPOSITION OF DATA AND SPECIMENS

TECHNICIAN (S) Elliott Deforrow DATE 7-9-92

DWF 3500-203(6/88)

MARTIN MARIETTA
MANNED SPACE SYSTEMS

TPS DENSITY & COMPRESSION

TPS JOB NO. 6071 REV

TITLE MAF TESTING OF 6071 PANELS

M & P WORK REQ. APT-0412-92

TECHNICIAN (S) (DENSITY) B.T., B.F. (COMPRESSION) Elliott Dufour

☑ DENSITY

TEST MATERIAL (S) NCF: 22-65

☐ SANDWICH CONFIGURATION

☑ COMPRESSION

TEST TEMP. RT °F

TEST DATE (DENSITY) 7/8/92 (COMPRESSION) 7-9-92

INTERFACE ADHESIVE

PANEL NO.	SPEC. NO.	LENGTH	WIDTH	AREA (in 2)	THICK NESS	WEIGHT	DENSITY	ULT. LOAD (LBS)	ULT. STRESS (PSI)	NO. of K/L's
2207	1	2.000	1.998		.759	2.1800		182.9		1 1/2
	2	2.002	1.998		.761	2.2273		177.0		1 3/4
	3	2.000	1.999		.746	2.2158		178		1 3/4
2208	1.	1.997	1.994		.751	2.0865		180		1 1/4
	2.	2.000	1.992		.752	2.1328		170		1 1/4
	3	1.994	1.999		.742	2.0903		180		1 1/4
2209	1.	1.994	2.002		.733	2.1161		181		1 1/4
	2	1.999	2.001		.747	2.1438		192		1 1/4
	3.	1.994	1.999		.747	2.2242		181		1 3/4
2210	1.	1.991	2.002		.733	2.1451		195		2
	2.	2.000	1.995		.721	2.1675 ~~2.1[illegible]~~		172		2
	3.	1.997	1.997		.733	2.1619		192		1 1/2
2211	1	1.989	1.997		.760	2.1421		177		1
	2.	1.992	2.000		.762	2.1453		175		1 1/4
	3.	2.000	1.997		.740	2.1068		175		1

NOTES:

Appendix C

TPV Gun Drawings/Requirements

SOFI Spray Gun Development

APPENDIX

TPV Spray Gun Requirements and Recommendations

- TPV spray gun operation and interface requirement
  Figure 1 VOP System requirement and TPV spray gun interface requirement
  Figure 4 TPV spray gun fluid system
- TPV spray gun and recirculation valve operation sequence
- TPV spray gun - valve operation sequence
- Basic requirements for TPV spray gun

Spray Gun Actuator Requirements and Recommendations Basic Requirements for TPV Spray Gun Actuator

Spray Gun Mounting Module Requirements and Recommendations

TPV Spray Gun - Production Prototype Requirements and Recommendations

The TPV spray gun shall be interchangeable with the current production spray gun, the Binks 43PA. It shall operate with the same supply system and proportioners, including the current Gusmer models, PCOP and VOPS. A pneumatic OFF trigger has been incorporated for increased system reliability and positive shut off. Also included is an air purge for improved post spray process evaluation of spray gun performance (buildup) and fan pattern. The TPV spray gun, actuator and associated mounting hardware shall be accommodated on the present production carriages and AMT robot arm.

The spray gun shall trigger ON and OFF with or without component pressure. It will not leak with component pressure applied to the valve (800 psi) for 24 hours and then operate correctly. The spray gun components will be fully inspected and where applicable water spray tested prior to assembly. The spray gun assembly shall be water spray calibrated at 80 psi. It will be proof pressure tested to 3000 psi with the pressure applied alternately to A and B component ports. If the spray gun is left for more than 24 hours before mounting on the carriage the packing shall be retorqued to the recommended torque value. Initially the time limit shall be 24 hours on the carriage with or without system pressure (800 psi), after which it shall be removed and retorqued. This is to evaluate possible leakage due to packing relaxation. It is recommended that a post spray water calibration test be completed before stripping the gun to evaluate fan pattern changes with internal build up.

The air purge shall be operated for a minimum of 5 seconds before and after the spray gun is initially fitted to the mounting block (no A and B component on the valve). Also it can be tested immediately prior to spraying, with the system pressure on the valve as a purge system checkout (it will also show if the gun has a component leak). This test will not be possible if a tip cover is used on the backup spray gun tip. This cover would eliminate foam being deposited by the weedwacker cord.

The spray gun main components and packing materials shall be compatible with current and possible future spray systems. The exception is the O'ring seal material as it can be changed for future systems and blowing agents (An O'ring material compatible to Freon II and 141B could be used). The O'rings and packing components are designed to be discarded with each gun build if it is more cost effective to do so.

The spray gun will be positively located and clocked to the mounting block alleviating crossed A and B component ports. It shall be easily mounted and removed without endangering personnel. It is compulsory that bleed screws be used on A and B ports (particularly the B port due to the Freon^R blowing agent). This is to bleed any pressure and check that the isolation valves are shut OFF and not leaking. It is recommended that the plugs be removed and the filter cavity flushed as this will aid gun cleaning.

The A and B ports shall be marked with 1/4 inch high (or higher) letters. These letters can be engraved, or if a casting is used, they can be cast letters.

The spray gun actuator coupling shall be 'keyed' to the spray gun valve so that the valve cannot be 180° out of position. It would also be desirable that the coupling be matched to the correct spray gun valve to alleviate an incorrect spray gun being assembled to the carriage.

The spray guns are to be individually packaged in shipping boxes and have a protective cover over the spray tip. This cover shall be removed immediately prior to spraying. If the cover is inadvertently left on it shall be blown off with the air purge (purge checkout) and not damage the tank or primer coat or be attached with a cord..

TPV Spray Gun Operation and Interface Requirements

The TPV spray gun shall be activated ON and OFF with a pneumatic actuator operated by solenoid valves triggered by the Control System (Figure 1). The actuator is to be fitted with ON and OFF position indicator switches. They influence the control system valve sequencing operation by locking out further operations and giving a screen warning of a malfunction. The TPV spray gun purge port shall open in the valve OFF position and the duration of pneumatic purge is to be controlled by the purge solenoid valve. The weed wacker positioning cylinder operation is to be controlled by the spray gun ON solenoid valves and are also shown in the valve diagram. With a VOP System using recirculation at the VOP unit or to the gun, a recirculation shut-off valve is needed in the A and B return lines to the VOP unit. The recirculation valve open and closed position indication can be accomplished by position indicator switches or better still, monitoring the pressure transducers on the supply and return lines.

TPV Spray Gun and Recirculation Valve Operation Sequence

The TPV spray gun will require the A and B recirculation valves of the VOP recirculation system to close after the spray gun has triggered ON. The recirculation valves have to open before the spray gun triggers OFF. This is to alleviate pressure spikes in the system that could open the relief valve or operate the pressure switches and shut down the system if the flex hoses do not dampen it out sufficiently.

The sequence of valve/spray gun operation is also different for a system with a backup gun. When it is advisable to trigger ON the backup spray gun just prior to triggering OFF the primary this also improves the foam surface by 'blending' it in the change over area.

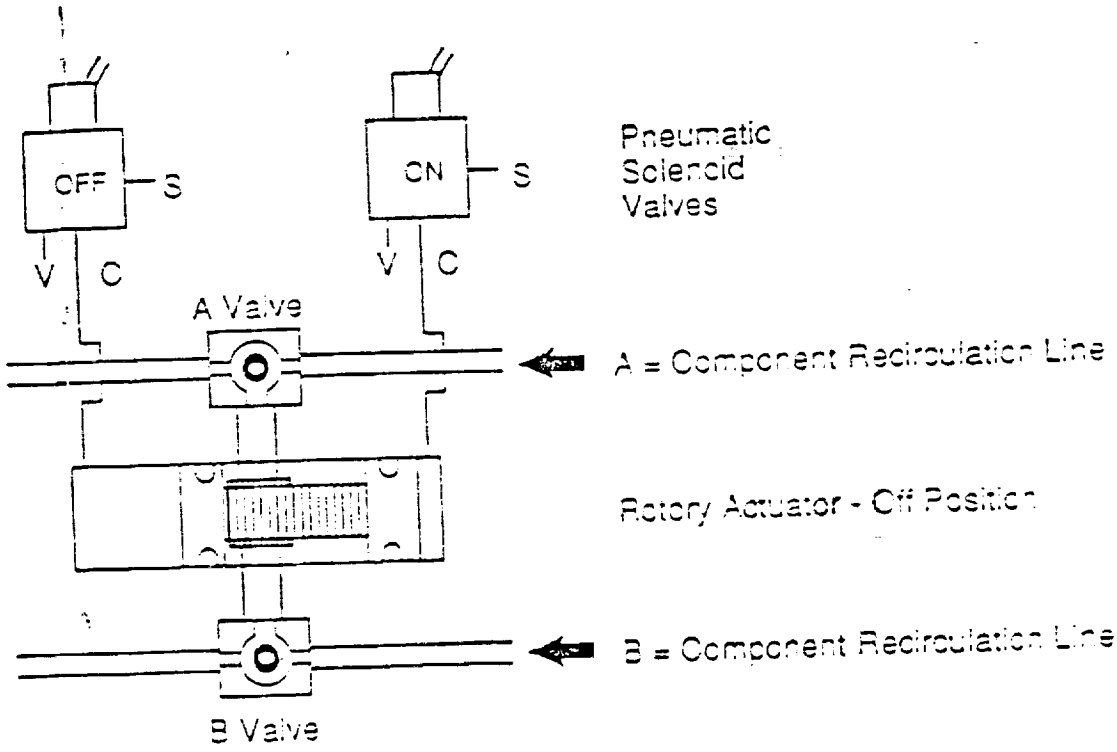

VOP System A and B Component Recirculation Valve Requirements

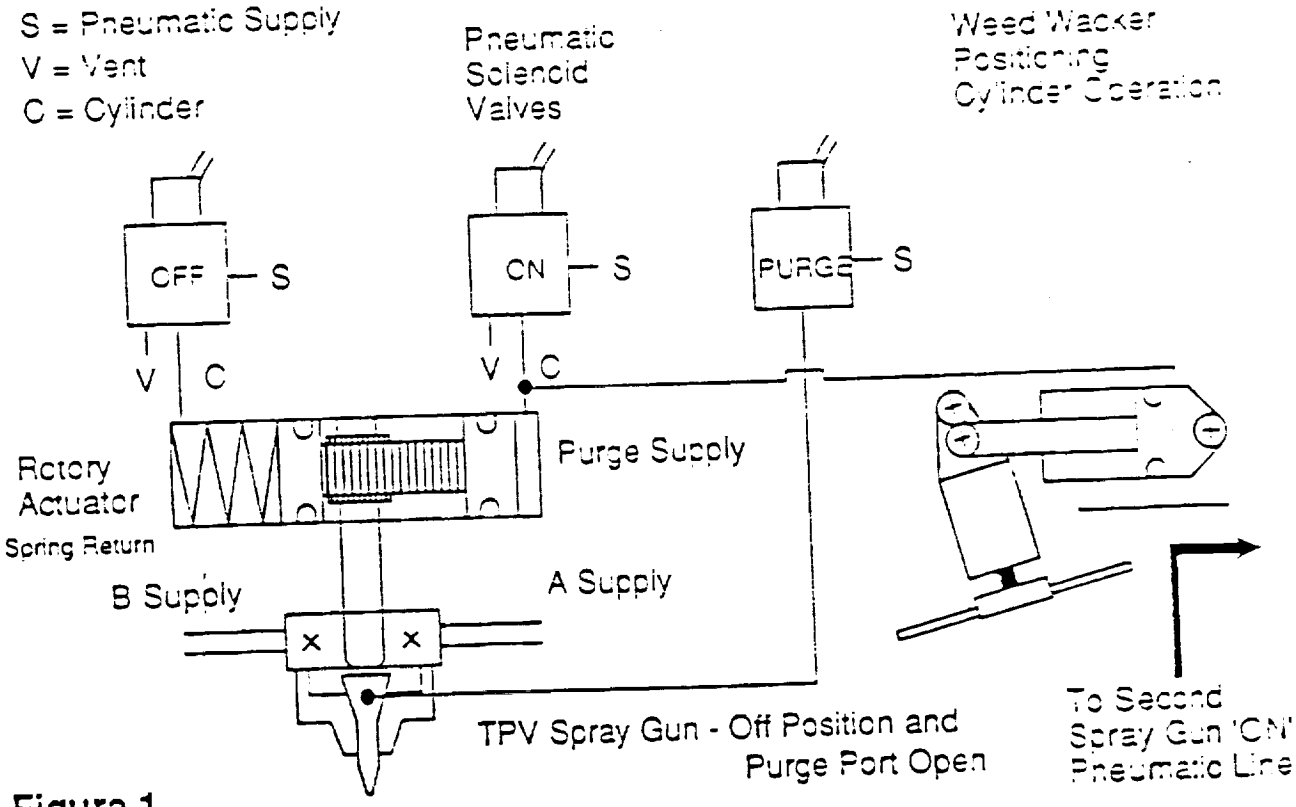

Figure 1

TPV Spray Gun System Interface Requirements

Disk: Kaye, Falcon Peter Allen
File name: TPV Spray Gun

ORIGINAL PAGE IS
OF POOR QUALITY

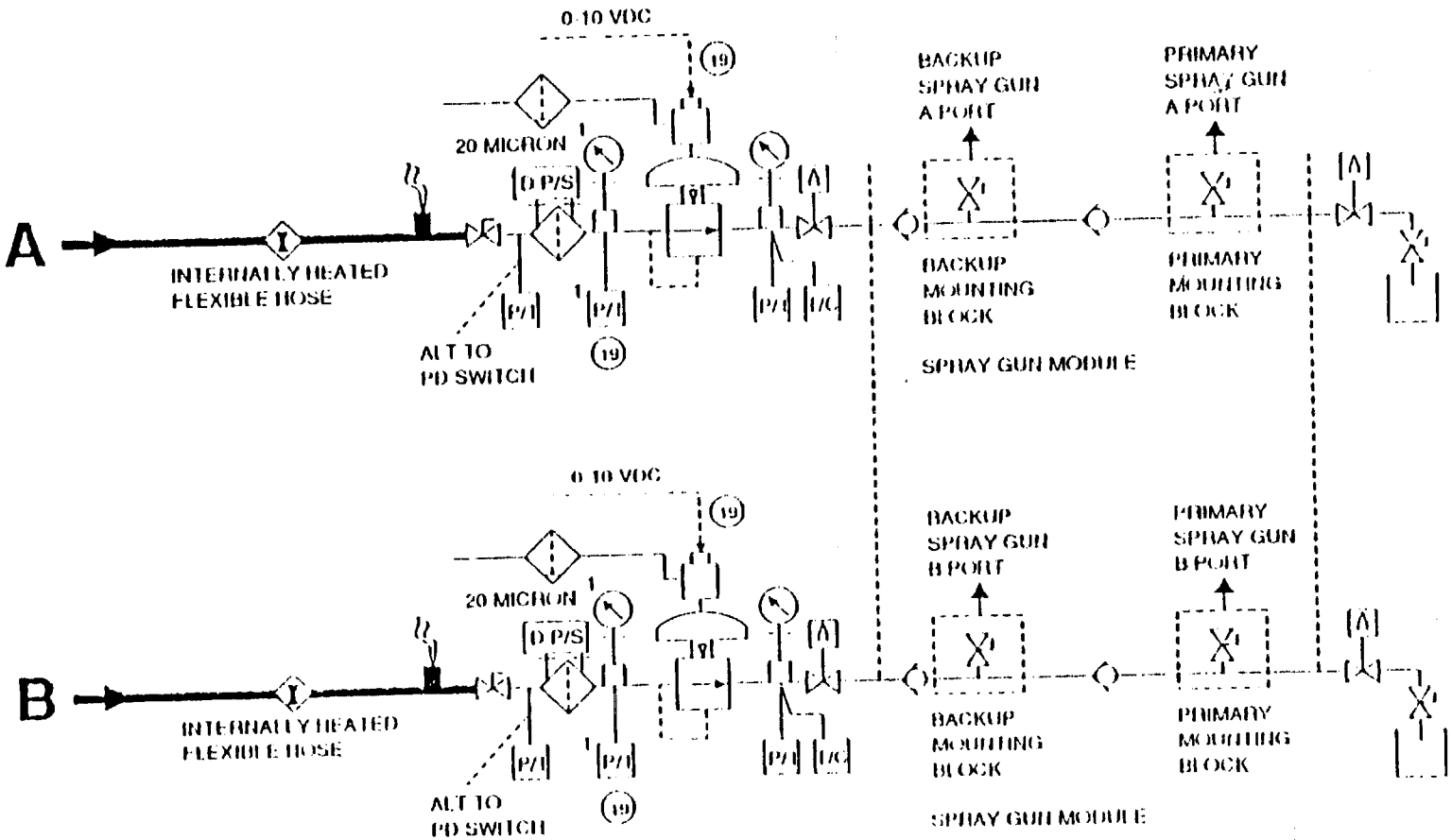

FIGURE 1

TPV SPRAY GUN FLUID SYSTEM - INCLUDING RECOMMENDATIONS FOR INCREASE SYSTEM RESPONSE FOR VARIABLE OUTPUT SPRAYS .

Note: BP Regulator, Pressure Gauge 1 and Pressure Transducer 1 are not required for fixed output sprays

TPV Spray Gun - Valve Operation Sequence

<u>One TPV spray gun-valving sequence</u>

ON Sequence:

TPV	spray gun ON valve triggered ON	T, 0 seconds-position switch confirmation before continuing program
VOPS	recirculation OFF valve triggered ON	T, 2 second delay to alleviate pressure spikes.

OFF Sequence:

VOPS	Recirculation OFF valve triggered OFF	T, 0 seconds
VOPS	Recirculation ON valve triggered ON	T, 0 seconds - pressure transducer confirmation of reconfiguration
TPV	Spray gun ON valve triggered OFF	T, 1 second
TPV	Spray gun OFF valve triggered ON	T, 1 second
TPV	Spray gun OFF valve triggered OFF	T, 5 seconds -OFF position switch confirmation before this operation. Screen warning
TPV	Spray gun purge valve triggered ON	T, 0 seconds
TPV	Spray gun purge valve triggered OFF	T, 10 seconds

Note - A single stage actuator could be substituted. Therefore, the OFF valve triggering would not be required although the OFF position switch operation would still be monitored.

<u>One Plus One Backup TPV Spray Gun - Valving Sequence</u>

This would require the backup spray gun to trigger ON at the same time or slightly before the primary is triggered OFF. Note the recirculation would not be triggered ON/OFF between the primary and backup spray gun change over.

The triggering ON at the beginning of the spray and OFF at the end of the spray is the same as the one gun sequence.

(backup)		
TPV	Spray gun ON valve triggered ON	T, 0 seconds - ON position switch confirmation before continuing program
(primary)		
TPV	Spray gun ON valve triggered OFF	T, 0-1 second
TPV	Spray gun OFF valve triggered ON	T, 0-1 second
TPV	Spray gun Purge valve triggered ON	T, 0-1 second
TPV	Spray gun OFF valve triggered OFF	T, 5 seconds - OFF position switch confirmation before this operation. Screen warning
TPV	Spray gun Purge valve triggered OFF	T, 10 seconds.

Basic Requirements for TPV Spray Gun

Component System		CPR 488, NCFI, BK250 and be compatible with new blowing agents, 2-1 and 1-1 ratios of A and B component.
Output		CPR 488. 42 PPM, LH2 Barrel, LO2 Ogive 42-30 PPM LH2 Barrel thick/thin (LO2 Ogive) 42-15 PPM (with development) LO2 Ogive 30 PPM (2 gun) intertank. NCFI 22 PPM (2 gun) LH2 aft dome 20 - 5 PPM (2 gun) LH2 aft dome BX250 22 PPM LO2 Dome, LH2 forward dome
Normal working pressure		700 - 1200 psi
Variable output pressure range		300 - 1600 psi Plus
Maximum working pressure		2000 psi - 24 hr limit/introduction period
Proof pressure		3000 psi
Burst pressure		8000 psi
Packing retorque period _____		2000 psi operation 48 hrs/introduction period
Actuation torque		60 lb/in. breakaway, 40 lb/in moving
Operating temperature (O'ring limit)		40° - 250° F, Spray cell 100° - 140° F or factory air
Purge pressure		75 - 125 psi Dry nitrogen or factory air
Gun head - Weight - Size		3/4 pound 3" x 3" x 2"
Gun variations	Intertank	1 (2 guns & 2 backups)
	LH2, LO2	1 (+ 1 backup)
	LH2 aft dome	1 (+1 backup)
	LO2 dome/LH2 front dome	1 (+1 backup)
	Possible	2 (1 +1 backup high output, 1 + 1 low output for LO2 ogive variable output)

NOTE: Gun body standard to all builds. The valve, mixer/insert and spray tips are per tank configuration.

Spray Gun Actuator Requirements and Recommendations

The spray gun shall be triggered ON and OFF with a rotary double acting, spring returned, pneumatic actuator. The actuator shall be pneumatically actuated with dry nitrogen (non-lubricated) or factory air. The actuator will rotate the valve ON and OFF (2 X break away torque) with a minimum pressure of 75 psi and maximum of 125 psi and hold the valve open at 60 psi. The actuator will turn the spray gun valve to the OFF position should the pneumatic supply fail, i.e. spring operated (2 X breakaway torque minimum). Note there is no turning moment generated by the spray gun valve in the ON and OFF positions.

The actuator will positively trigger the spray gun valve ON and OFF with pneumatic assistance within half a second. It will turn the valve to the OFF position within one second should the pneumatic supply fail with the aid of the spring return only. A single stage actuator with pneumatic ON and spring return could also be used, although this is recommended for development only.

The incorporation of the spring to provide a snap action ON and OFF will be considered an important improvement to the actuator operation. A concept that does not allow the actuator to actuate before a pre-determined pressure has been reached is possible. (This would be an ideal requirement as it would be a mechanical end of line system safety device). The use of a valve device between the ON solenoid valve and the actuator as an alternative to the snap action spring would also be acceptable. The valve device shall not decrease the overall system reliability.

The actuator shall rotate 90° + 5°/-2° clockwise (OFF to ON position) looking at the output shaft. It shall preferably be fitted with adjustable stops or 90° ± 2° including backlash, without stops. The actuator shall be fitted with pneumatic snubbers at both ends of the stroke or with shock absorbing stops. The operation of the actuator shall not generate contamination or metallic particles that could reduce its life or cause it to seize. The actuator shall be internally lubricated (bearing, seals, etc) sufficient for 1,500 ON and OFF operations and a 15 year life or a recommended service period.

The rotary actuator shall be mounted on an adaptor plate that aligns the actuator and also allows alternate actuators to be used without modifications to the module. The actuator shall be of simple design and construction to facilitate service, repair or replacement of components with standard shop tools and not require specialized supplier training. A parts list, exploded view and assembly procedure shall be supplied. A test procedure for check out in the production gun room prior to use in the production cells shall also be supplied.

The actuator shall be fitted with ON and OFF indication switches that operate within 5° of these positions. The switches shall be capable of switching .05 Amp 120 Volts AC and be of a single pole two way construction (i.e. Reed or Micro Switch). The electrical connections shall be identified and have mate decals and the plug keyed to the socket.

The actuator leakage shall be within 0 - 1.2 cubic feet per hour while holding the spray gun valve in the ON position. The leakage can be up to 2.5 cubic feet per hour during the OFF actuation. There is no requirement to pressurize the actuator once it has reached the OFF position for more than five seconds. This is to conserve gas and assure full supply for the other operations.

All pneumatic connections to the ON and OFF trigger ports shall not allow a crossed connection and be identified. The primary and secondary spray gun supply connections to the actuators shall have hose identification and mate decal tags.

The coupling between the actuator and spray gun shall be retained at the actuator end. There shall be ± .02 inch of free play about a point at the spray gun end and ± 15 seconds of rotational play. The actuator shall be easily replaced with another without disturbing the mounting block and A/B component lines. Component leakage from the spray gun shall not be able to contaminate the actuator and cause it to fail.

The actuator shall be supplied and controlled by pneumatic electro-mechanical valves, typically solenoid valves. These valves shall be manifold mounted to aid servicing without disconnection or connection of the pneumatic hoses. It is recommended that if the valve meets the requirement of one that is currently used at MAF, then this should be chosen to reduce the spares inventory. Electrical connections shall not be allowed to be cross-connected and have identification and mate decal tags.

Basic Requirements for TPV Spray Gun Actuator

Pneumatic Rotary Actuator
Rotation, clockwise OFF to ON (looking at output shaft)

Angle	90° +6°/-2° 90° +2°/-2°	with adjustable stops without stops
Output	OFF to ON	120 inch pounds minimum/ 180° second (pneumatic) - Optional
	ON to OFF	120 inch pounds minimum/ 90° second (pneumatic only) 120 inch pounds minimum/ 90° second (spring only)
	ON	actuator will hold ON at 60 psi minimum
Life	1500 cycles 15 years	(OFF to ON to OFF) or stated service requirements
Leakage	OFF to ON hold ON ON to OFF hold OFF	0 to 1.2 cubic feet hour 0 to 1.2 cubic feet hour 0 to 2.5 cubic feet hour 0 to 1.2 cubic feet hour
Electrical	ON and OFF position switches 0° to 5° of position	.05 AMP 120V SP2W
Pneumatic supply	Dry nitrogen	75 to 125 psi factory air (dried and lubricated) 75 to 125 psi
	hold test pressure	60 psi
Weight	10 pounds	
Size	1 foot X 1 foot X 1 foot including pneumatic connectors	
Operation	Electro-mechanical valves (solenoids) Manifold mounted. 1 x 4 way, 1 x 2 way for each actuator. 1/8 inch diameter port 120V 60 Hz, 2A max Manifold to accommodate 2 x 4 way solenoid valves for operation OFF gun module isolation valves (4) on A and B component lines - optional.	

Spray Gun Mounting Module Requirements and Recommendations

The TPV spray gun installation on the production cell carriage will have a different arrangement than currently used. The TPV spray gun production concept requires the spray gun head to be attached to the mounting block with permanently plumbed-in fluid lines to the block. The TPV spray gun will be actuated by a pneumatic actuator via a coupling which it 'plugs' into upon installation to the mounting block.

The spray gun module shall be mounted to the carriage in such a manner that it can be easily removed for servicing as a unit or as individual components. The removal of the spray gun module should be such that the main A and B component supply system is not contaminated.

The spray gun mounting module shall basically consist of a removable plate that is mounted to the carriage. The components attached to the plate consists of two spray gun actuators, two spray gun mounting blocks, weed wacker motor, and shaft assembly. The pneumatic solenoid valve module will be mounted separately. The two spray gun rotary actuators shall be mounted on adaptor plates that align the actuators. It will also allow alternate rotary actuators to be used.

The spray gun mounting blocks will be attached to the main mounting plate so that they are at a 90° angle to the turntable center. These mounting blocks shall be connected to each other with minimum of 1/4in preferably 3/8 inch OD pipe and appropriate fittings. The pipe will incorporate a U bend to accommodate expansion and assembly tolerances.

The change out of individual mounting blocks, check valves, and fluid lines shall not disturb the other block and contaminate the main system. This will require the use of system isolation valves on each A and B component line at either end of the spray gun module. The spray gun mounting blocks will be fitted with check valves on the up stream side of the A and B component lines. This is to alleviate system contamination up stream of the mounting block should a 'cross over' of component occur in the gun. The primary spray gun is down stream of the backup spray gun for the same reason. Also, this alleviates stagnation of the material and assures the spray gun and the A and B components will be at operating temperature.

A spray gun mounting block temperature transducer may be used but this and the actuation position indicator switches are the only monitoring devices on the spray gun module. Up stream monitoring of A and B component fluid temperature and pressures will be carried out as they are presently. If A and B supply system remote shut-off valves are used they also will be up stream and possibly down stream of the module. These would be used in place of the system isolation valves to reduce complexity. Up stream filters on the A and B

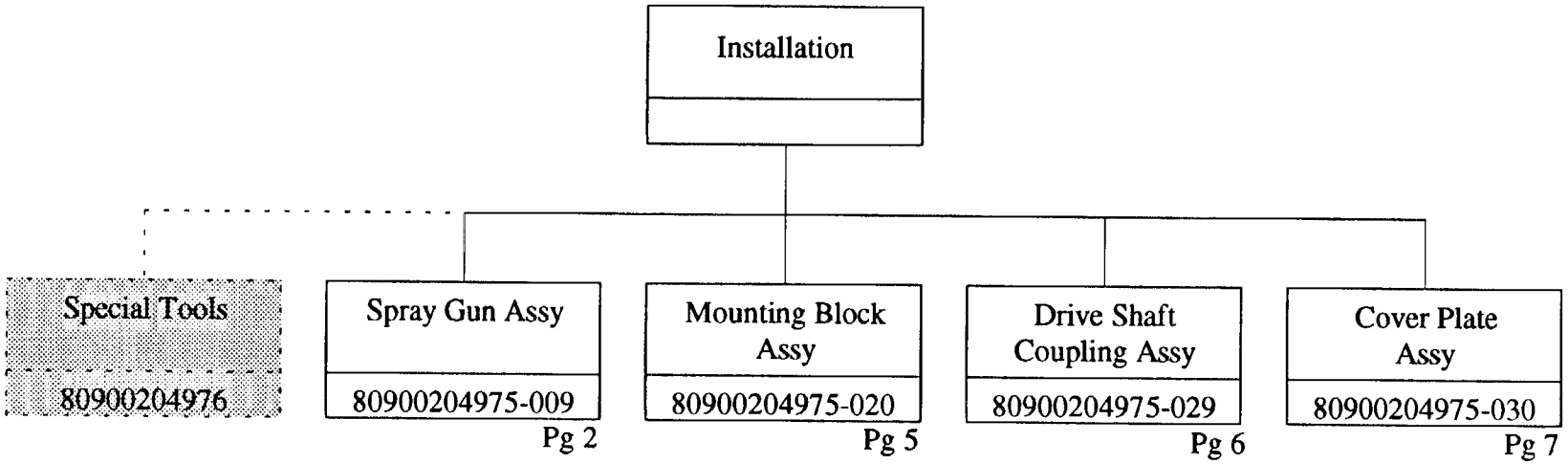
Installation
Special Tools
80900204976
Spray Gun Assy
80900204975-009
Pg 2
Mounting Block Assy
80900204975-020
Pg 5
Drive Shaft Coupling Assy
80900204975-029
Pg 6
Cover Plate Assy
80900204975-030
Pg 7

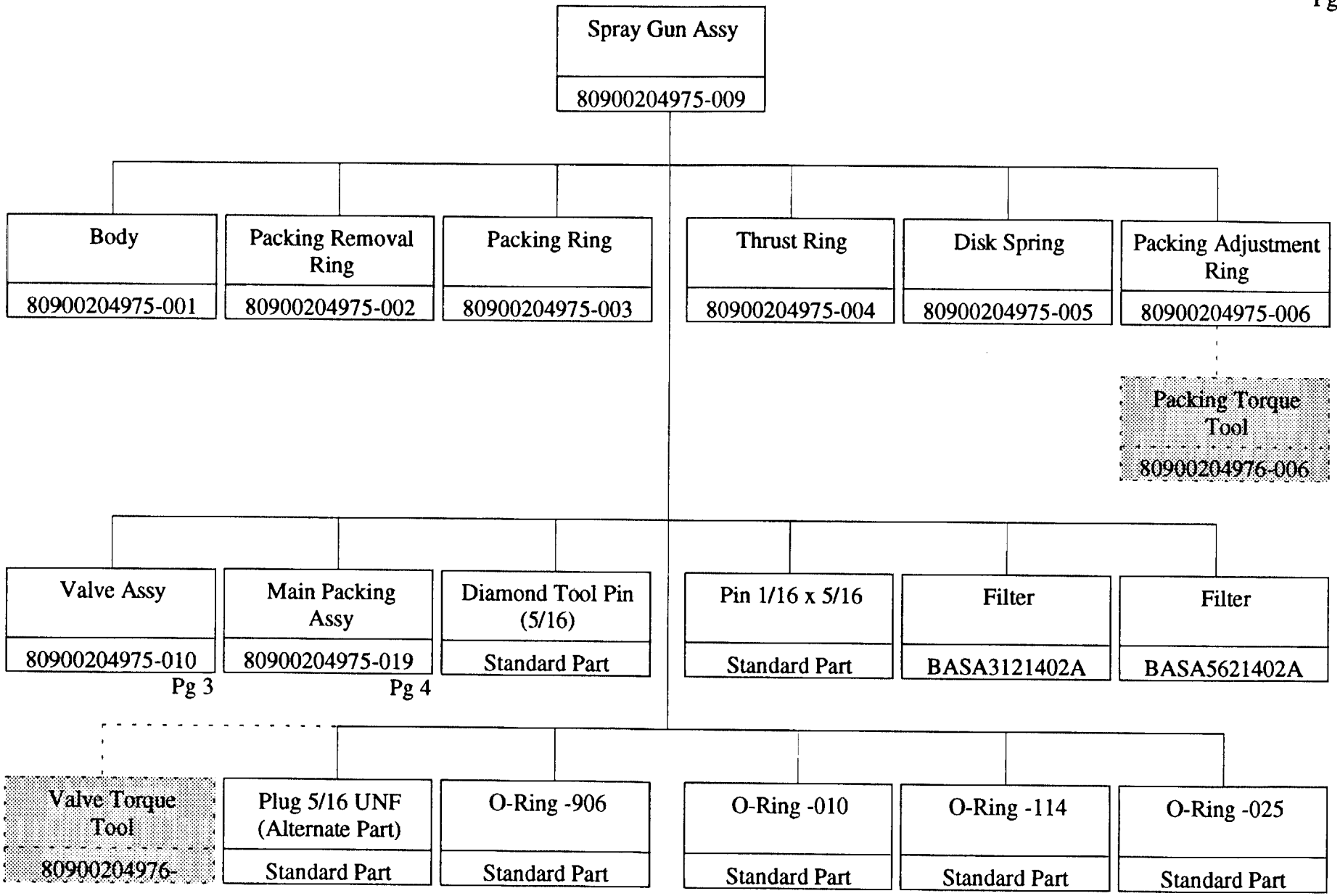
Spray Gun Assy
80900204975-009
Body
80900204975-001
Packing Removal Ring
80900204975-002
Packing Ring
80900204975-003
Thrust Ring
80900204975-004
Disk Spring
80900204975-005
Packing Adjustment Ring
80900204975-006
Packing Torque Tool
80900204976-006
Valve Assy
80900204975-010
Pg 3
Main Packing Assy
80900204975-019
Pg 4
Diamond Tool Pin (5/16)
Standard Part
Pin 1/16 x 5/16
Standard Part
Filter
BASA3121402A
Filter
BASA5621402A
Valve Torque Tool
80900204976-
Plug 5/16 UNF (Alternate Part)
Standard Part
O-Ring -906
Standard Part
O-Ring -010
Standard Part
O-Ring -114
Standard Part
O-Ring -025
Standard Part

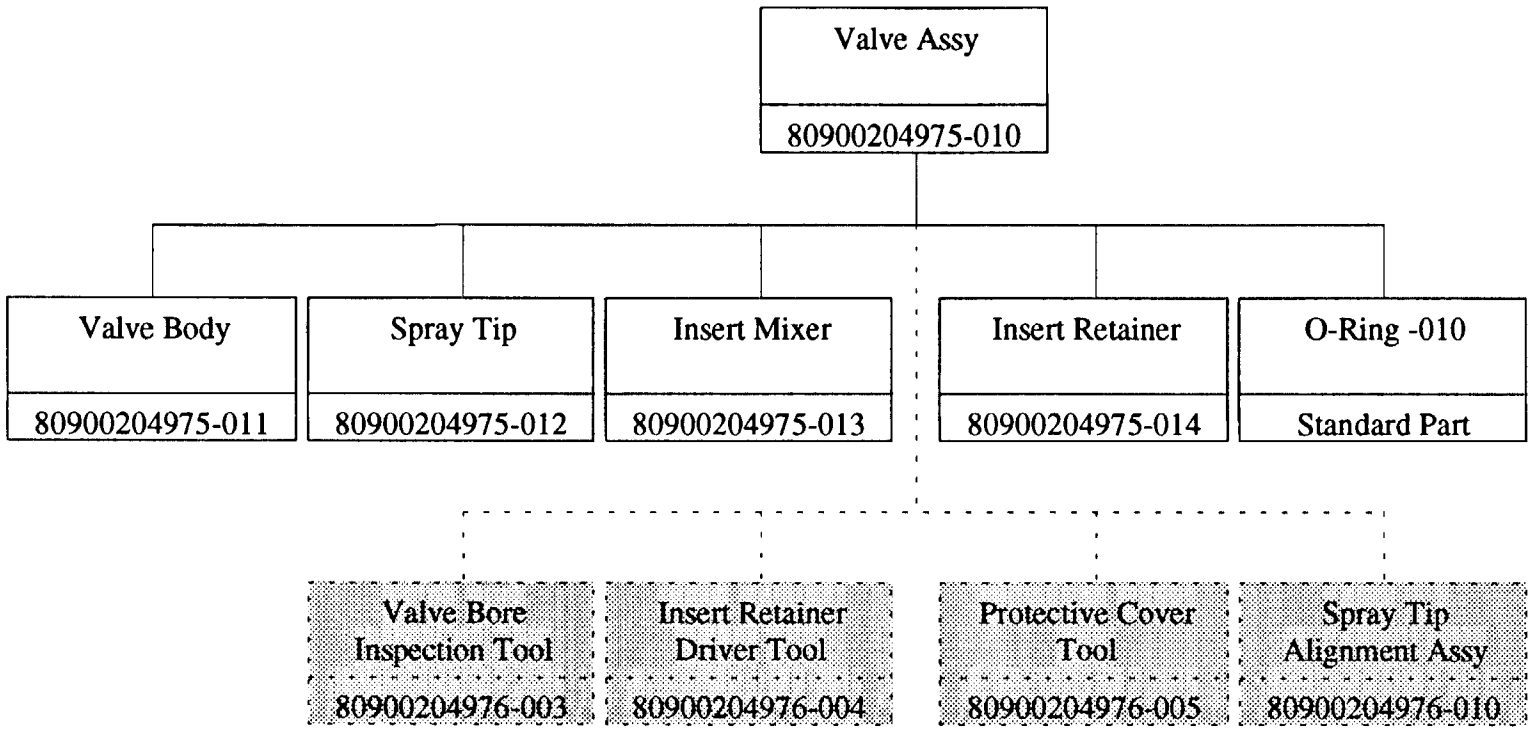
Valve Assy
80900204975-010
Valve Body
80900204975-011
Spray Tip
80900204975-012
Insert Mixer
80900204975-013
Insert Retainer
80900204975-014
O-Ring -010
Standard Part
Valve Bore Inspection Tool
80900204976-003
Insert Retainer Driver Tool
80900204976-004
Protective Cover Tool
80900204976-005
Spray Tip Alignment Assy
80900204976-010

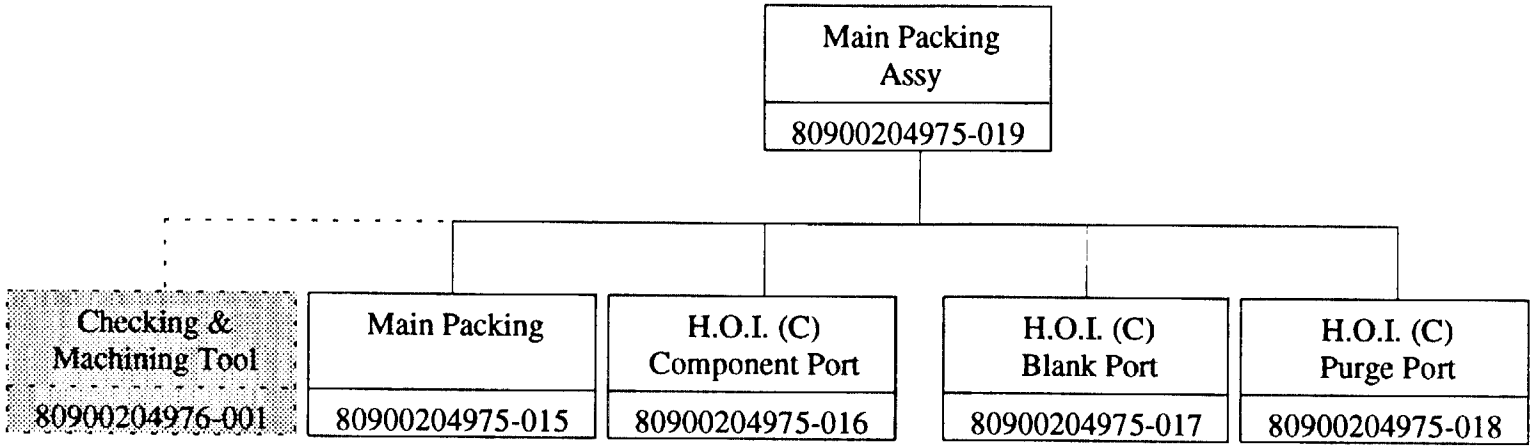
Main Packing Assy
80900204975-019
Checking & Machining Tool
80900204976-001
Main Packing
80900204975-015
H.O.I. (C) Component Port
80900204975-016
H.O.I. (C) Blank Port
80900204975-017
H.O.I. (C) Purge Port
80900204975-018

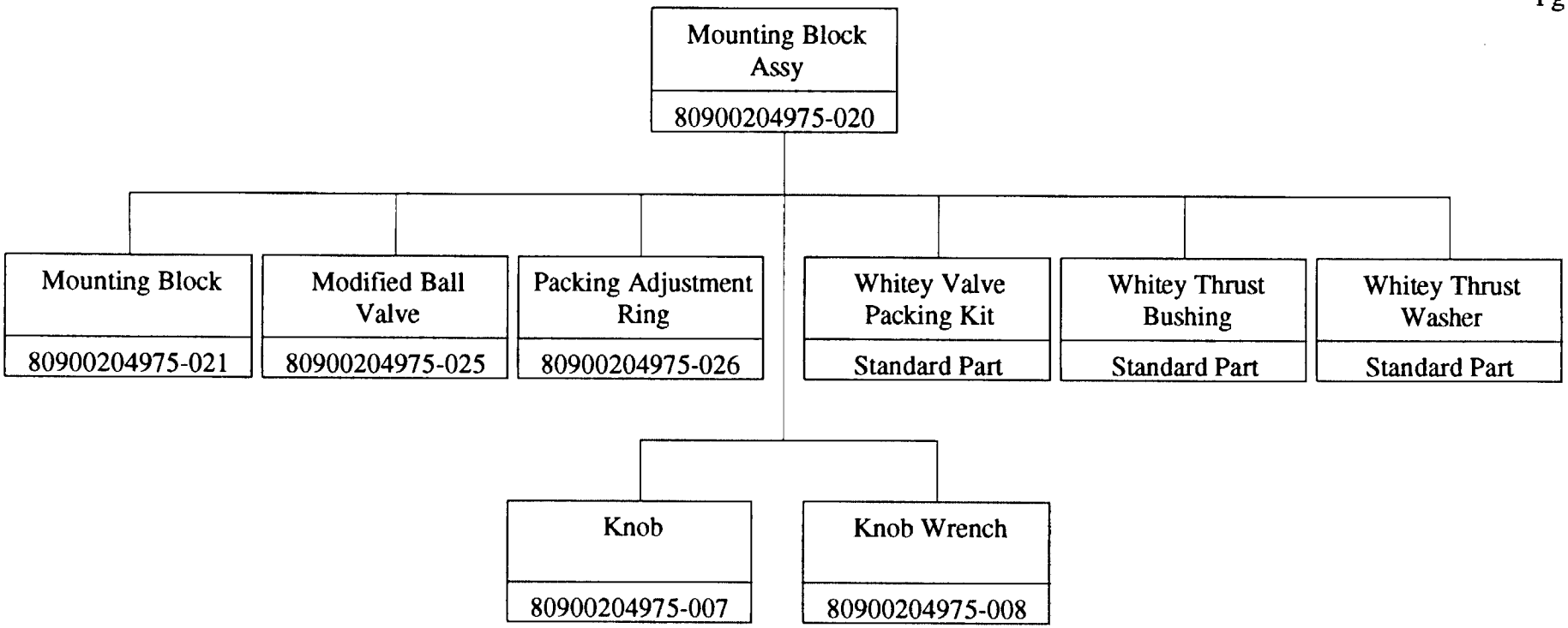
Mounting Block Assy
80900204975-020
Mounting Block
80900204975-021
Modified Ball Valve
80900204975-025
Packing Adjustment Ring
80900204975-026
Whitey Valve Packing Kit
Standard Part
Whitey Thrust Bushing
Standard Part
Whitey Thrust Washer
Standard Part
Knob
80900204975-007
Knob Wrench
80900204975-008

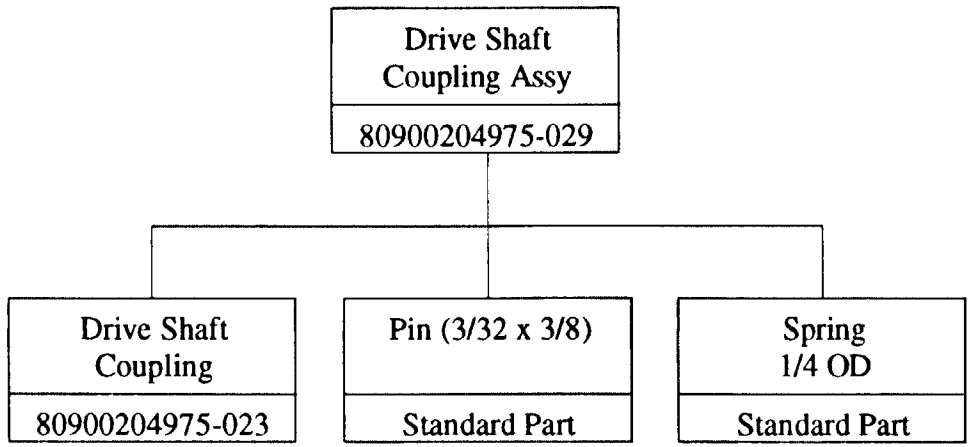
Drive Shaft
Coupling Assy
80900204975-029
Drive Shaft
Coupling
80900204975-023
Pin (3/32 x 3/8)
Standard Part
Spring
1/4 OD
Standard Part

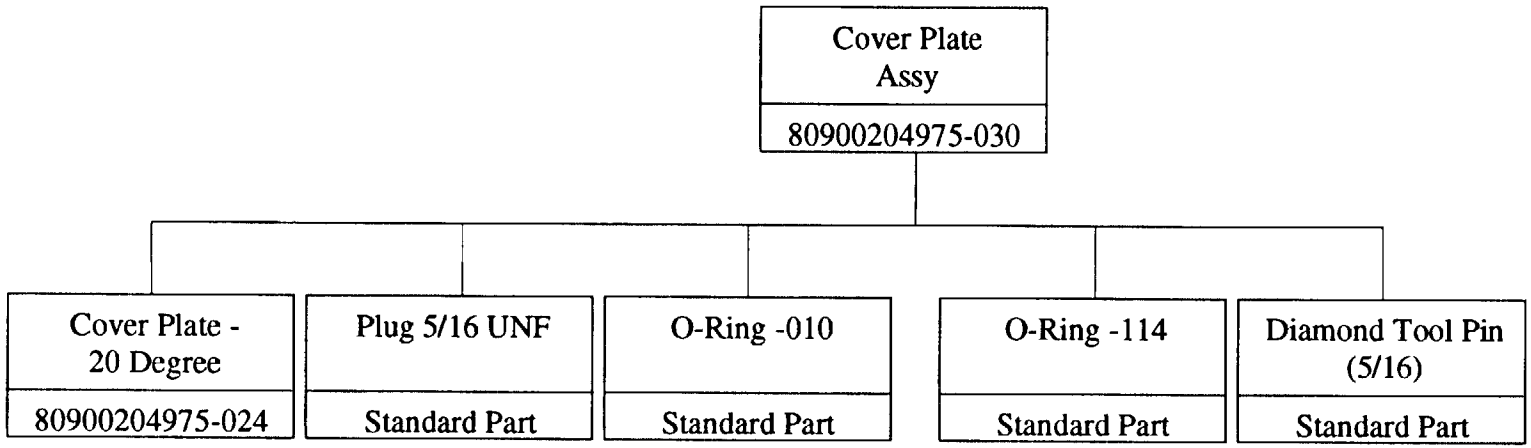
Cover Plate Assy
80900204975-030
Cover Plate - 20 Degree
80900204975-024
Plug 5/16 UNF
Standard Part
O-Ring -010
Standard Part
O-Ring -114
Standard Part
Diamond Tool Pin (5/16)
Standard Part

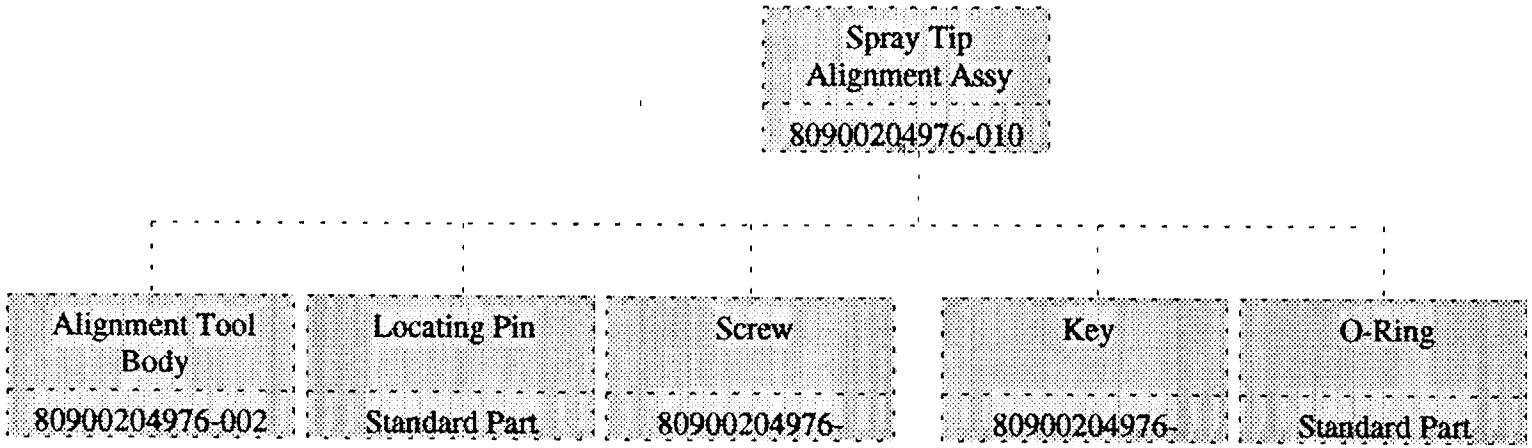
Spray Tip Alignment Assy
80900204976-010
Alignment Tool Body
80900204976-002
Locating Pin
Standard Part
Screw
80900204976-
Key
80900204976-
O-Ring
Standard Part

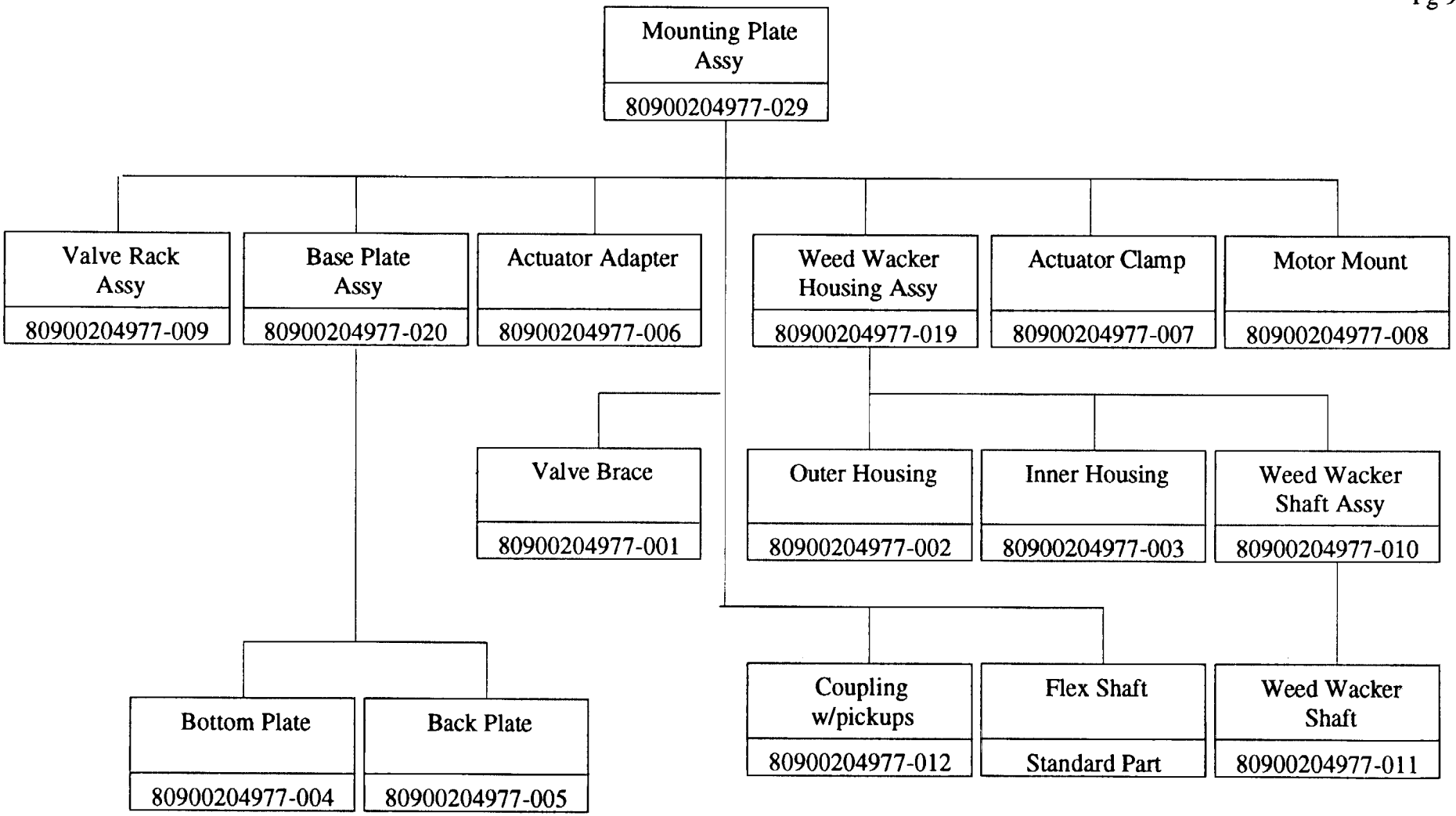
Mounting Plate Assy
80900204977-029
Valve Rack Assy
80900204977-009
Base Plate Assy
80900204977-020
Actuator Adapter
80900204977-006
Weed Wacker Housing Assy
80900204977-019
Actuator Clamp
80900204977-007
Motor Mount
80900204977-008
Valve Brace
80900204977-001
Outer Housing
80900204977-002
Inner Housing
80900204977-003
Weed Wacker Shaft Assy
80900204977-010
Bottom Plate
80900204977-004
Back Plate
80900204977-005
Coupling w/pickups
80900204977-012
Flex Shaft
Standard Part
Weed Wacker Shaft
80900204977-011

Total (2 Guns)	Spares	-030	-029	-020	-019	-010	-009	Description	Material
		Quantity / Dash Number							
			1					Spring 1/4OD	
6	4	2					1	Plug 5/16 UNF	57L7-J2 or K2, or MS24391J2 or K2
2	23						1	O-Ring 2-025	
4				2				Ball Valve Components	Whitey SS-44 F4 or F6 or S6
4	2			2				Valve Packing kit	Whitey SS-9K-44
2	2		1					Pin (D 3/32 x 3/8)	3/32 x 3/8 LDK or P, CEM (Spiral Pin)
AR	2					AR		PTFE Release Coat	Camie 2000 / Airtech ALL30
AR							AR	WD40	
AR		AR		AR	AR	AR	AR	Krytox Grease Lubricant	PTFE (Teflon)
4	4	1					1	Diamond Tool Pin (5/16)	CL-2-DPZ, Carr Lane Co
2	2						1	Pin (D 1/16 x 5/16)	1/16 x 5/16 LDK or P, CEM (Spiral Pin)
4	96						2	O-Ring 3-906	
4	96	2					2	O-Ring 2-114	

121

Total (2 Guns)	Spares	-030	-029	-020	-019	-010	-009		Description	Material
16	284	2				4	2		O-Ring 2-010	
2	2						1		Filter BASA3121402A	lee Inc. (Alt to Plug 5/16 UNF)
4	6						2		Filter BASA5621402A	Lee Inc.
4				2				-026	Packing Adjustment Ring	Brass or Bronze
4				2				-025	Modified Ball Valve	Whitey 44 Series
2		1						-024	Cover Plate - 20	2219-T87
2			1					-023	Drive Shaft	SS or Carbon Steel
0								-022		
2				1				-021	Mounting Block	2219-T87
2	8				1			-018	H.O.I. (C) Purge Port	Seybert Inc.
2	8				1			-017	H.O.I. (C) Blank Port	Seybert Inc.
4	16				2			-016	H.O.I. (C) Component Pc	Seybert Inc.
2	8				1			-015	Main Packing	Carbon Fiber (PTFE)
2	3					1		-014	Insert Retainer	Brass or Bronze
2	4					1		-013	Insert Mixer	2219-T87
2	4					1		-012	Spray Tip	SS 303/316
2	6					1		-011	Valve Body	17-4 PH, Cond A, HT 40-47 RC
2				1				-008	Knob Wrench	
4				2				-007	Knob	
2	2						1	-006	Packing Adjustment Ring	Brass or Bronze
4	96						2	-005	Disk Spring	Key Bellevilles Inc.
2	2						1	-004	Thrust Ring	Brass or Bronze
2	13						1	-003	Packing Ring	PTFE (Teflon)
2	2						1	-002	Packing Removal Ring	SS 300 or Equiv
2							1	-001	Body	2219-T87
								-030	Cover Plate Assy	
								-029	Driveshaft Coupling Assy	
								-020	Mounting Block Assy	
								-019	Main Packing Assy	
								-010	Valve Assy	
								-009	Spray Gun Assy	

Quantity / Dash Number

			1						Flex Shaft	
			8						Bolt 1/4UNC x 1	
			4						Bolt 5/16UNC x 1 1/4	
			4						Bolt 5/16UNC x 1 3/8	
					2				Bearing 1/4 x 5/8	
								-012	Coupling w/ Pickups	
						1		-011	WW Shaft	
			1					-008	Motor Mount	
			2					-007	Actuator Clamp	
			2					-006	Actuator Adapter	
				1				-005	Back Plate	
				1				-004	Bottom Plate	
					1			-003	Inner Housing	
					1			-002	Outer Housing	
							2	-001	Valve Brace	
Total (2 Guns)	**Spares**							-029	Mounting Plate Assy	
			1					-020	Base Plate Assy	
			1					-019	WW Housing Assy	
			1		1			-010	WW Shaft Assy	
			1					-009	Valve Rack Assy	
			-029	**-020**	**-019**	**-010**	**-009**		**Description**	**Material**
		Quantity / Dash Number								

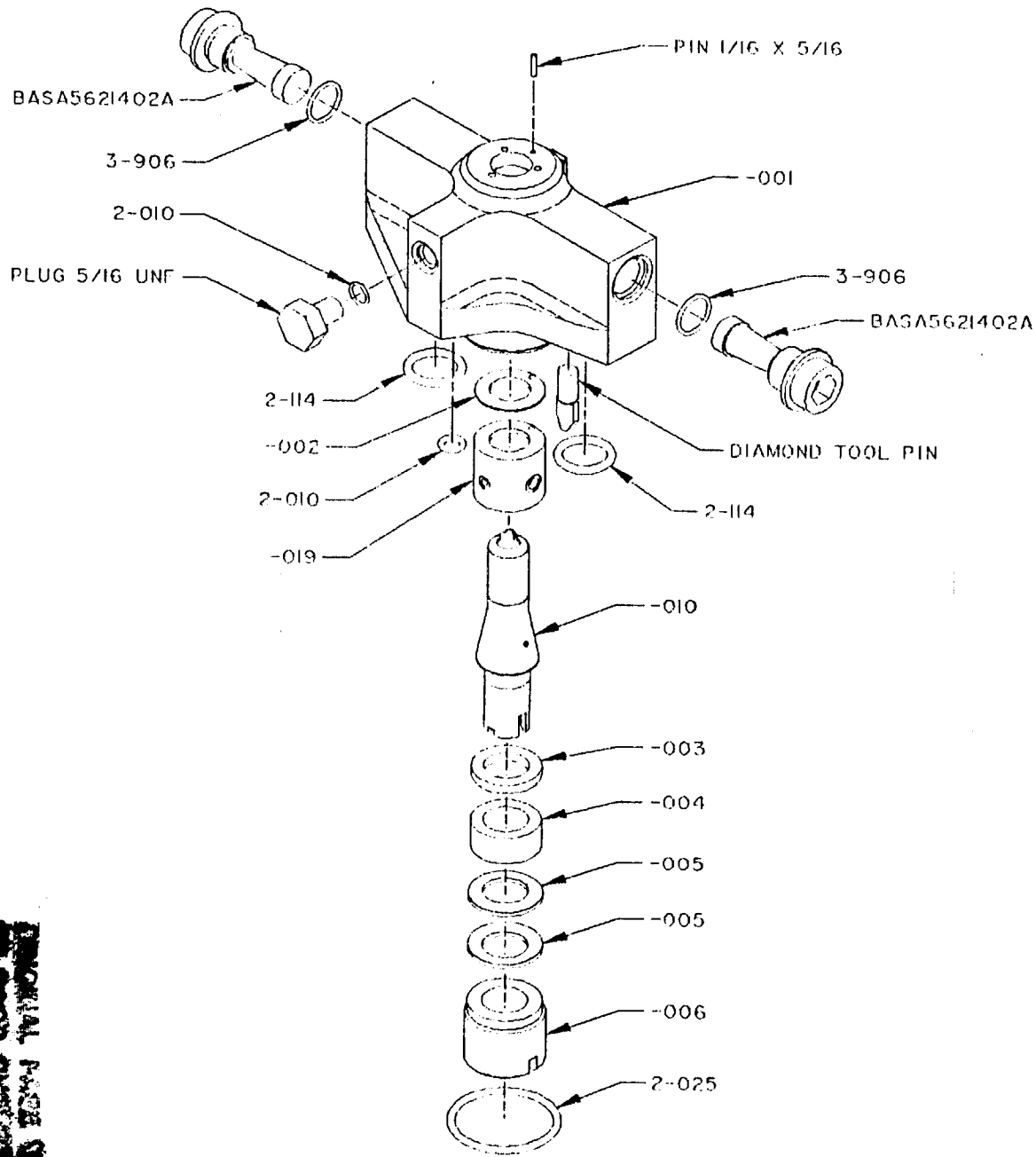

-009 EXPLODED VIEW

REVISIONS				
SYM.	ZONE	DESCRIPTION	DATE	APPROVED

SIZE	FSCM NO	
C	53100	80900204975
SCALE NONE		SHEET

80900204975

ORIGINAL PAGE IS OF POOR QUALITY

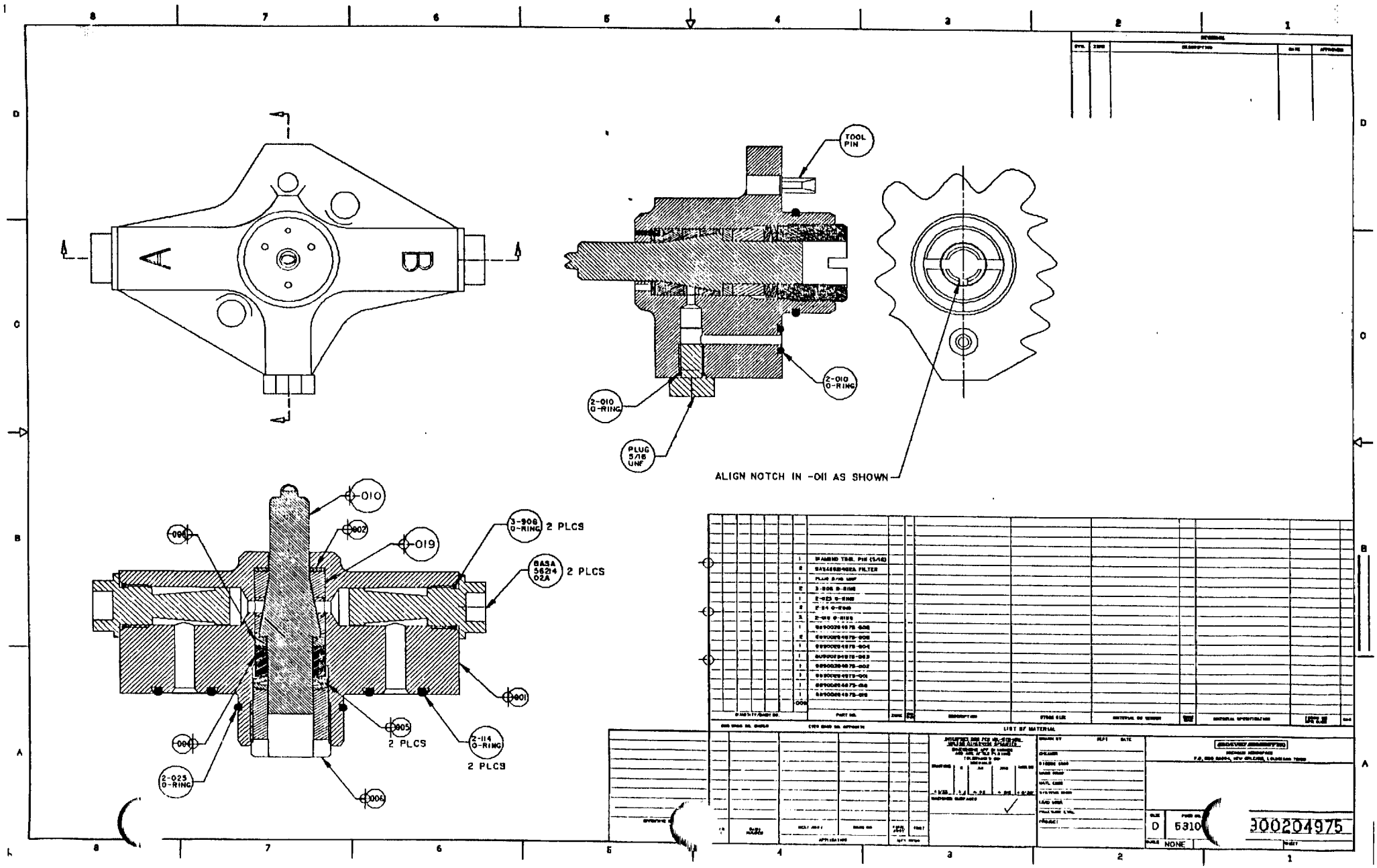

A
B
TOOL PIN
2-010 O-RING
2-010 O-RING
PLUG 5/16 UNF
ALIGN NOTCH IN -011 AS SHOWN
-010
-002
-019
3-906 O-RING 2 PLCS
BASA 56214 02A 2 PLCS
-001
-005
2 PLCS
2-114 O-RING
2 PLCS
-004
2-025 O-RING
-006
LIST OF MATERIAL
D
5310
300204975
NONE

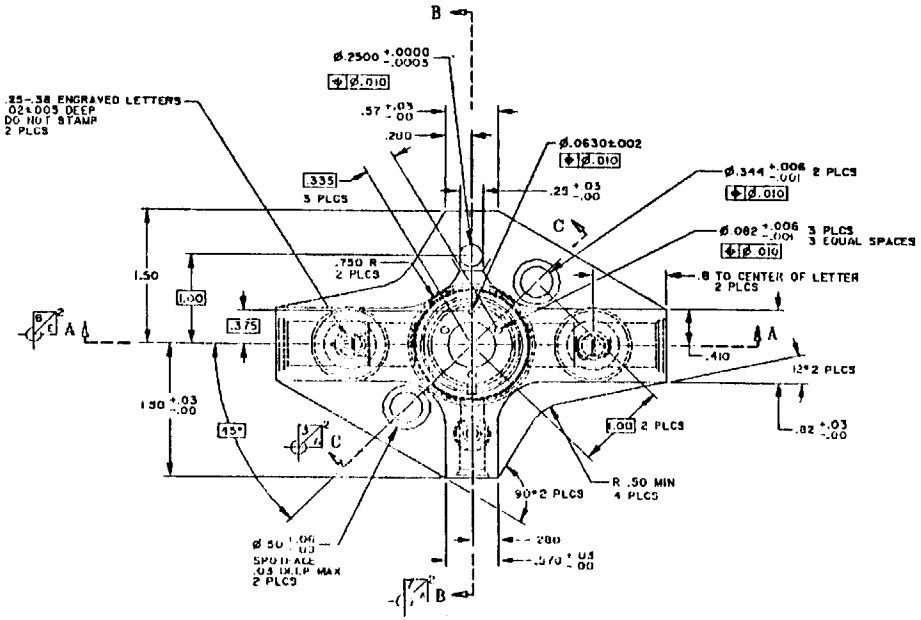

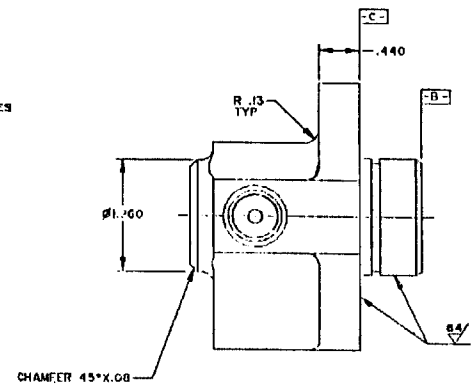

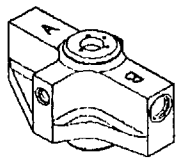

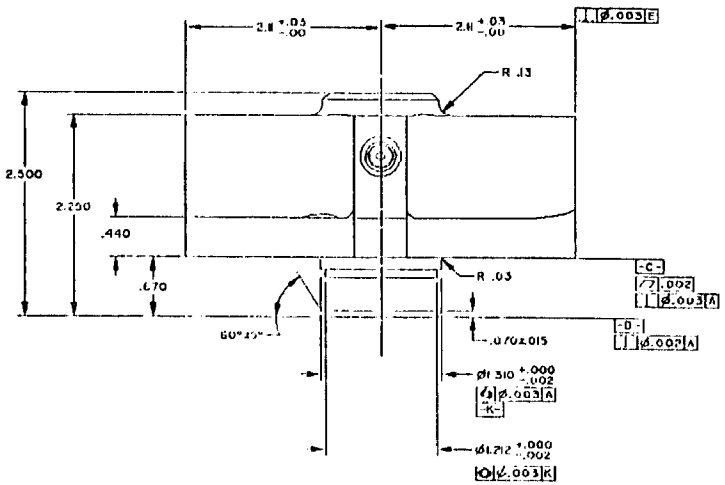

SPRAY GUN BODY - MACHINED PROTOTYPE

REFERENCE ONLY

E 63100 80900204975

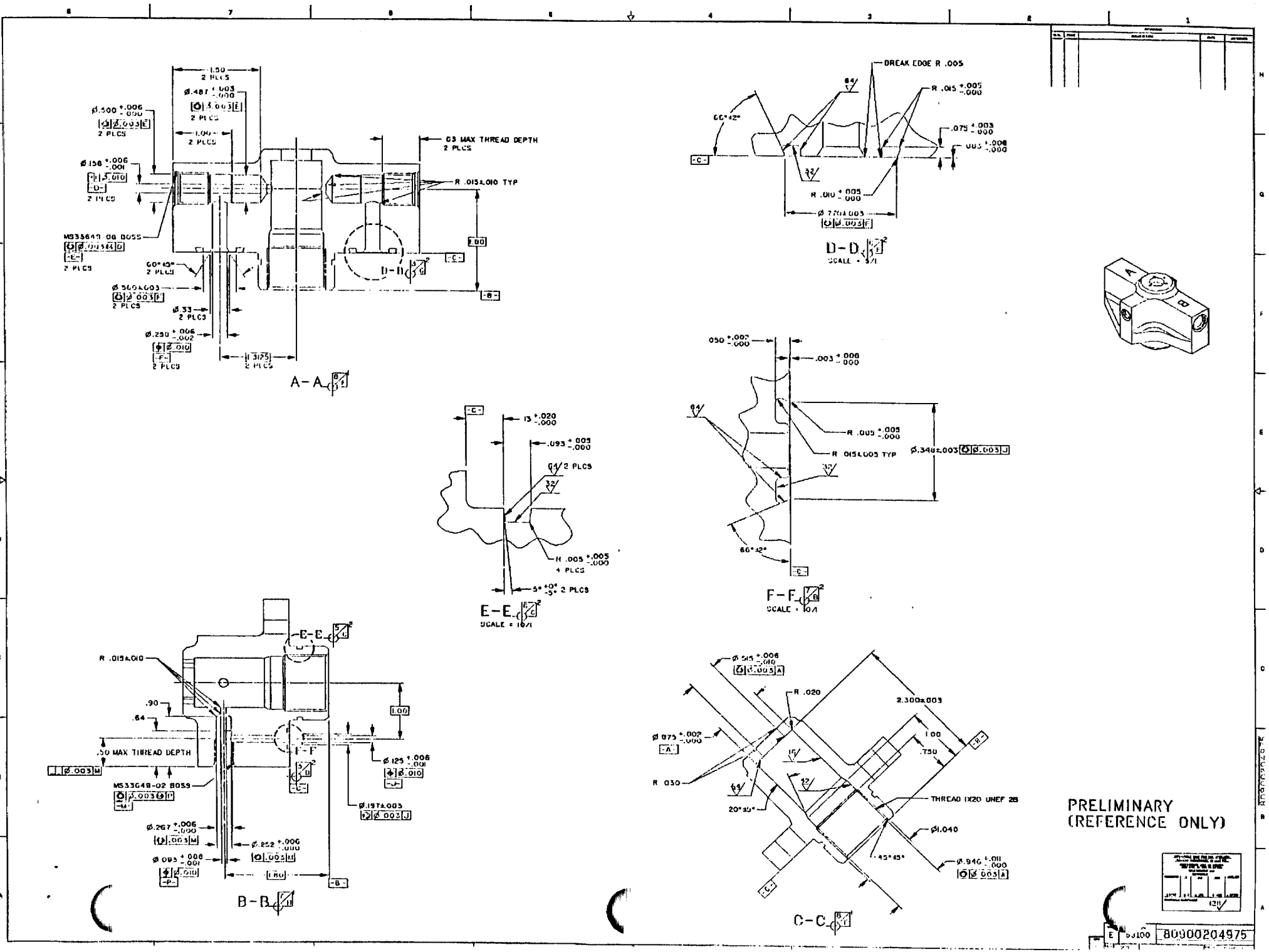
A-A
B-B
C-C
D-D
E-E
F-F
PRELIMINARY
(REFERENCE ONLY)
80900204975

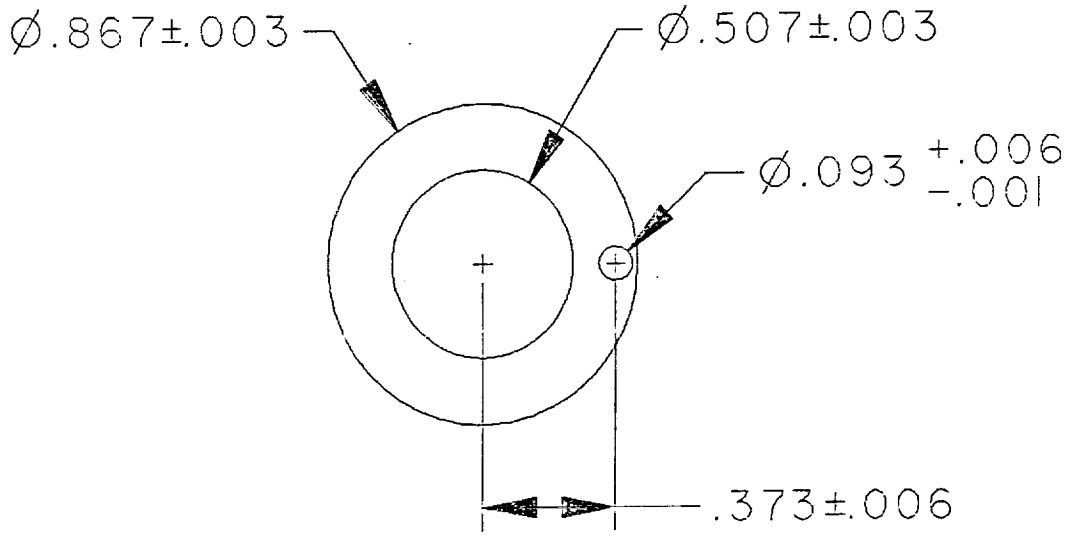

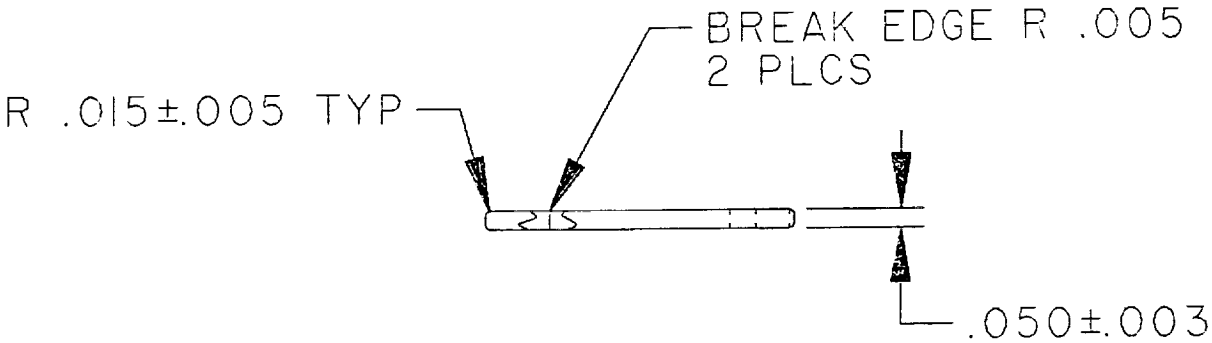

-002

PRELIMINARY
(REFERENCE ONLY)

REV	SIZE	FSCM NO.	
—	A	53100	80900204975
	SCALE 2/1	PAGE	SHEET 3

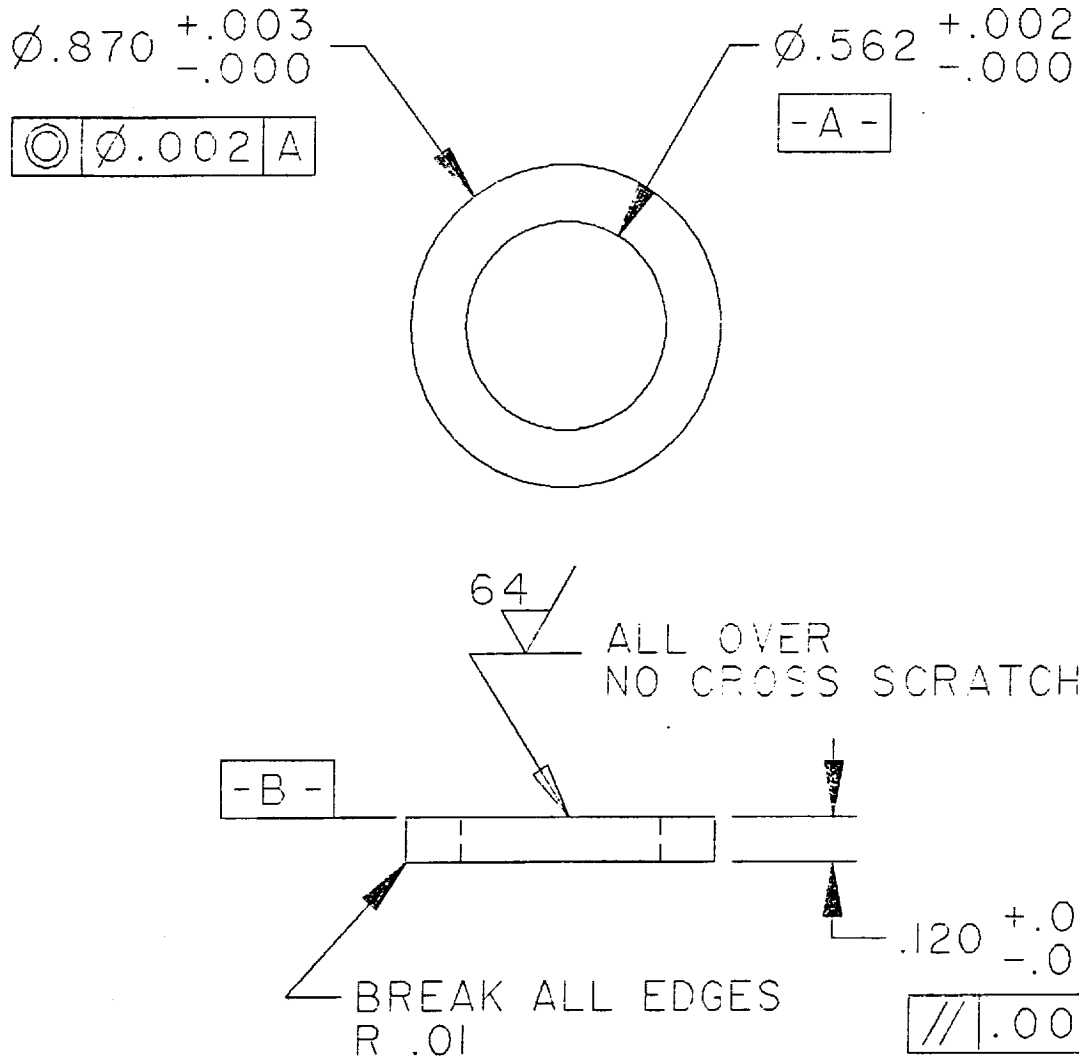

-003

PRELIMINARY
(REFERENCE ONLY)

SIZE	FSCM NO.	
A	53100	80900204975

REV	SCALE	PAGE	SHEET
—	2/1		4

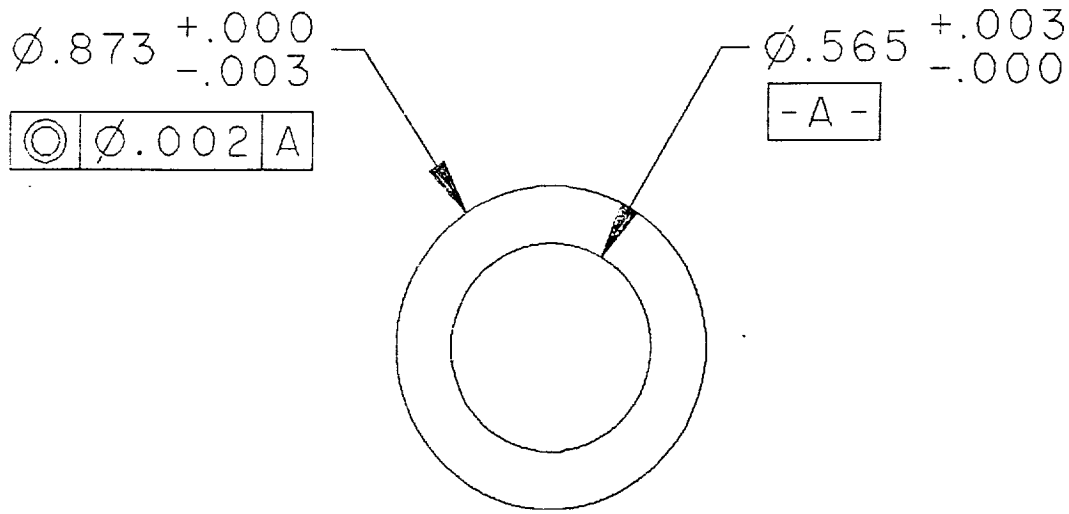

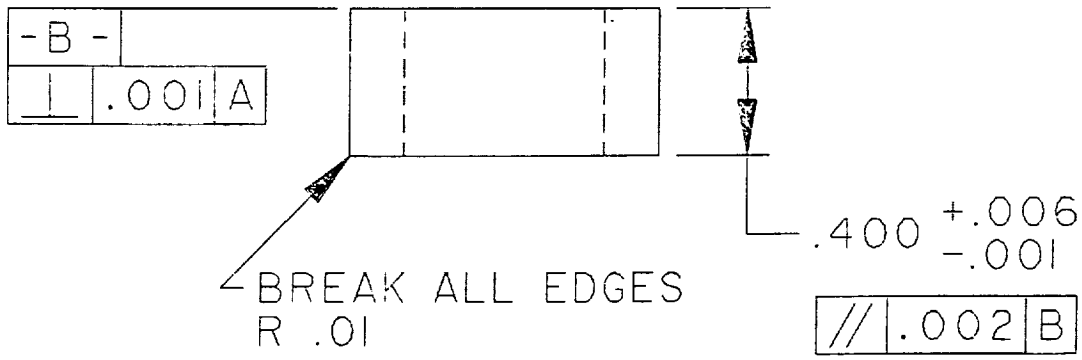

-004

PRELIMINARY
(REFERENCE ONLY)

SIZE	FSCM NO.	
A	53100	80900204975
REV —	SCALE 2/1	PAGE	SHEET 5

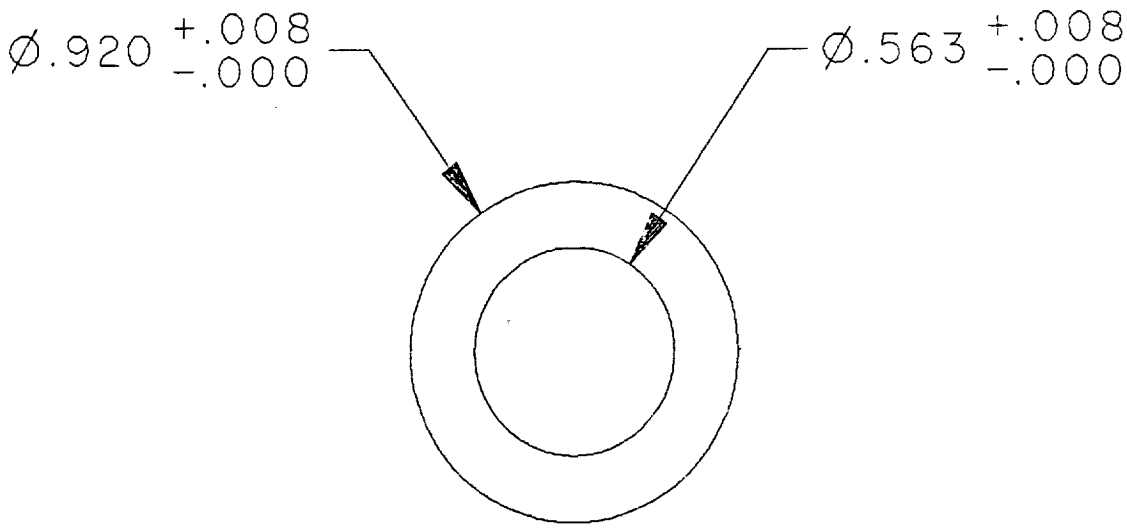

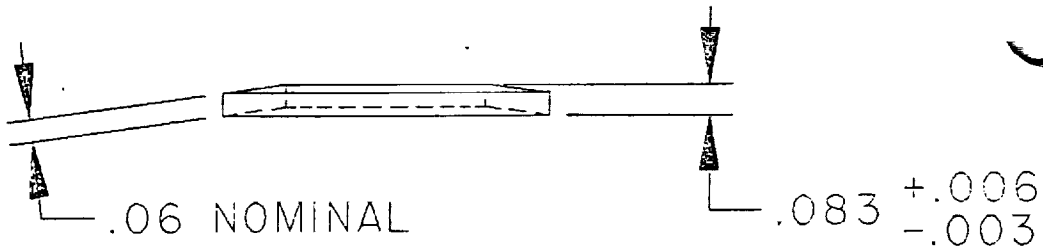

-005

PRELIMINARY
(REFERENCE ONLY)

SIZE	FSCM NO.	
A	53100	8090020497

REV	SCALE	PAGE	SHEET
—	2/1		6

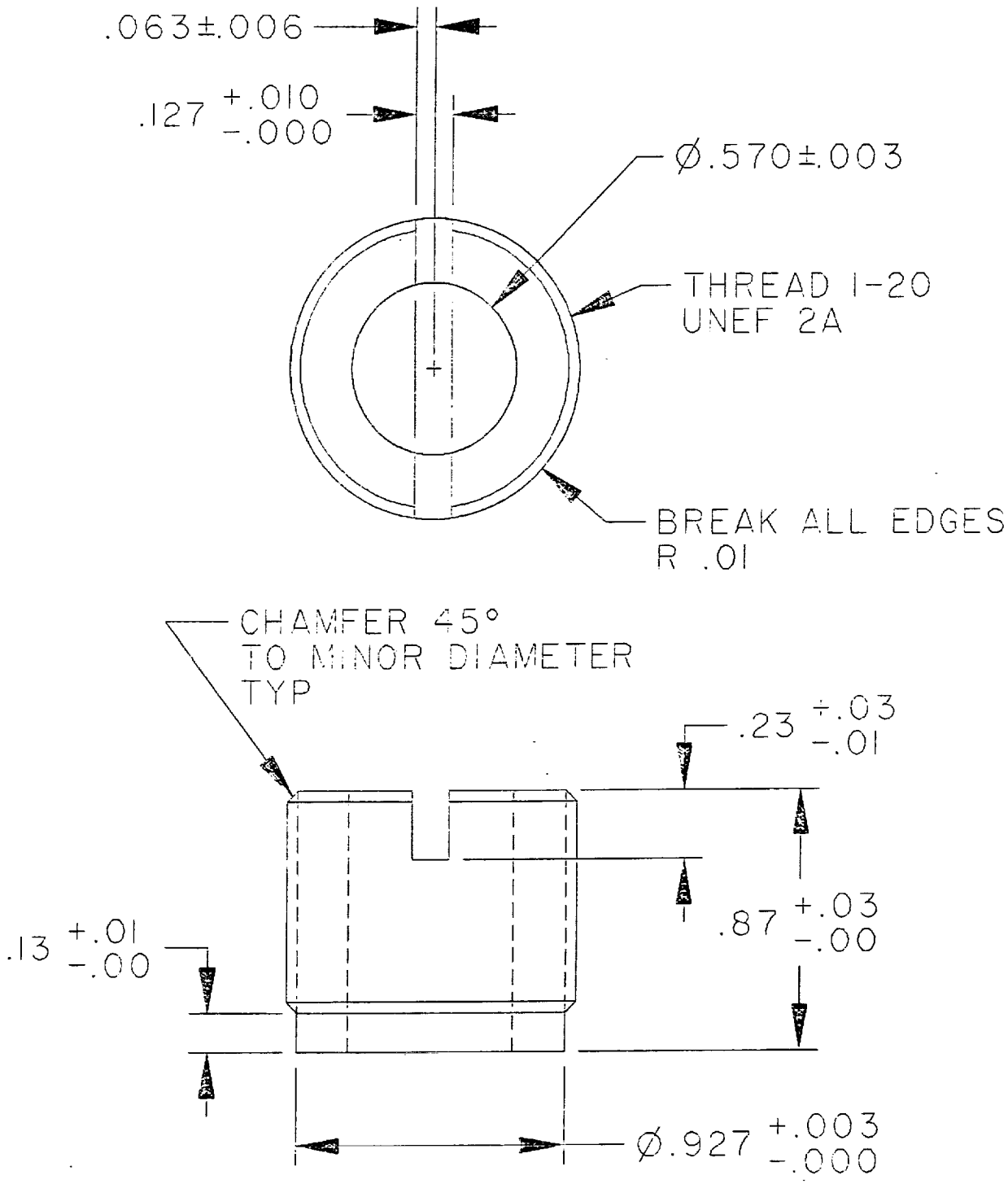

-006 PRELIMINARY (REFERENCE ONLY)

SIZE	FSCM NO.	
A	53100	8090020497 5

REV	SCALE	PAGE	SHEET
—	2/1		7

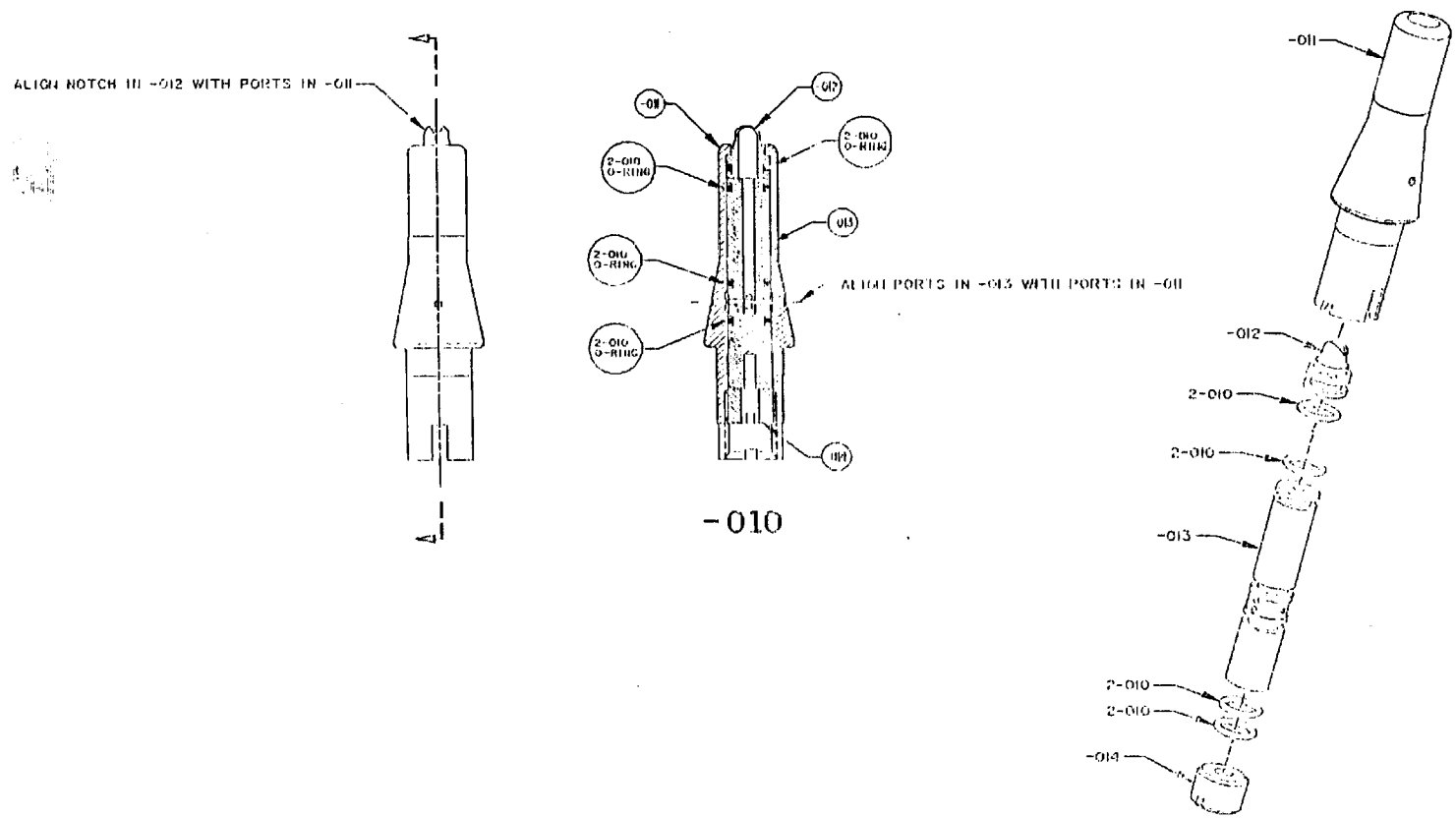
ALIGN NOTCH IN -012 WITH PORTS IN -011
-011
-012
2-010 O-RING
2-010 O-RING
-013
2-010 O-RING
ALIGN PORTS IN -013 WITH PORTS IN -011
2-010 O-RING
-014
-010
-011
-012
2-010
2-010
-013
2-010
2-010
-014

D 53100

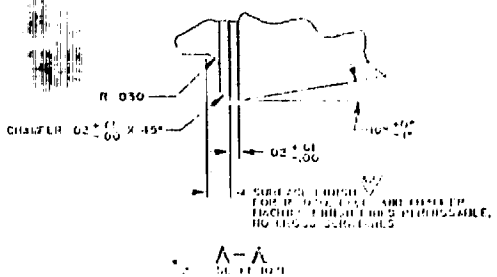

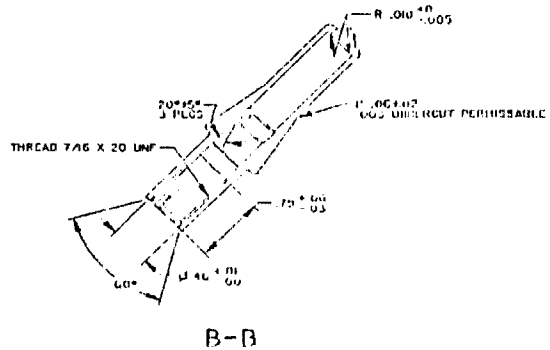

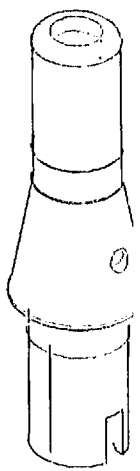

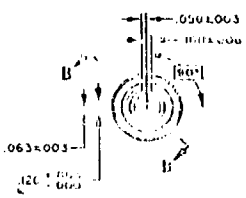

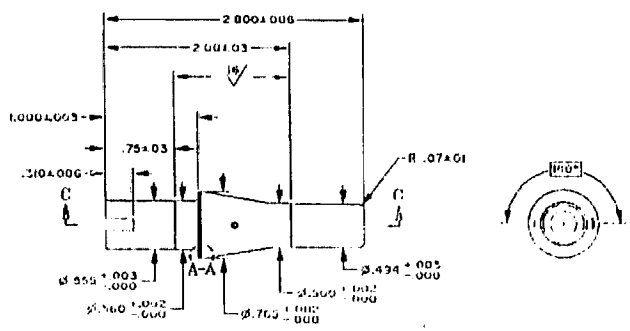

-011

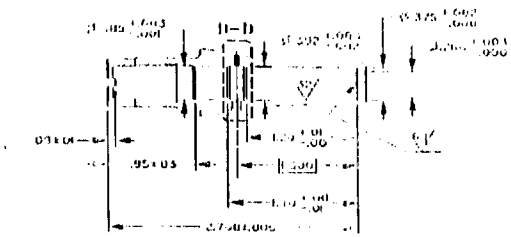

C-C

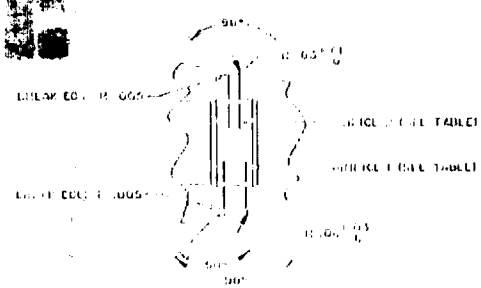

D-D

	ORIFICE 1 +.003 -0	ORIFICE 2 +.003 -0
-010A	.120	.063
-010B	.103	.052
-010C	.093	.047

PRELIMINARY
(REFERENCE ONLY)

80900204975

REVISIONS				
SYM.	ZONE	DESCRIPTION	DATE	APPROVED

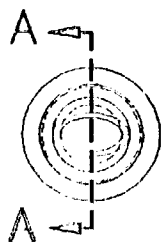

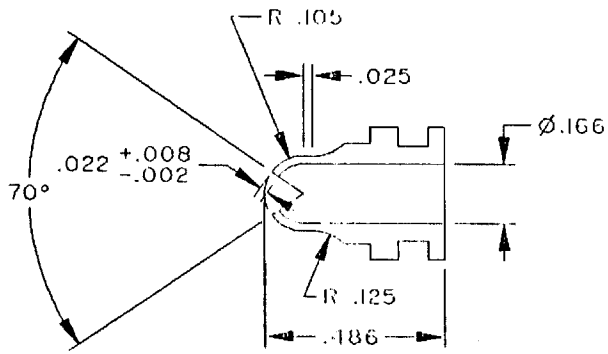

A – A

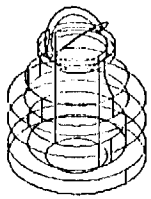

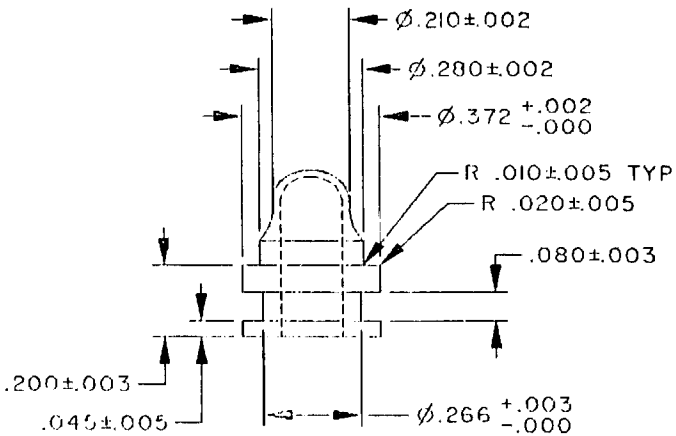

PRELIMINARY
(REFERENCE ONLY)

-012

UNLESS OTHERWISE SPECIFIED DIMENSIONS ARE IN INCHES AND ARE AFTER PLATING TOLERANCES ON DECIMALS				
FRACTIONS	.X	.XX	.XXX	ANGLES
±1/32	±.1	±.03	±.010	±0°30'
MACHINED SURFACES ✓				

SIZE	FSCM NO.	
C	53100	80900204975
SCALE 4:1		SHEET 13

80900204975

-013	C +.003 -.000	D +.003 -.000	E +.003 -.001	W .005 TP	X ±.003	Y +.006 -.003	Z ±.003	VALVE A	VALVE B	ORIGINAL REF
A	.040 (60)	.055 (54)	.093	.042	.350	.160	.080	.103	.052	M5 SMALL O-RING
B	.040 (60)	.055 (54)	.13 REF	.042	.350	.160	.080	.093 .103	.047 .052	M 5° INCLUSIVE TAPER SMALL O-RING
C	.040 (60)	.055 (54)	.130	.040	350	.168	.084	.103	.052	M2
D	.046 (56)	.067 (51)	.13	.050	.340	.195	.097	.120	.063	M4
L	.040 (60)	.052 (55)	.106	.037	.354	.146	.073	.093	.047	M3 SHORT (.7)

REVISIONS				
SYM.	ZONE	DESCRIPTION	DATE	APPROVED

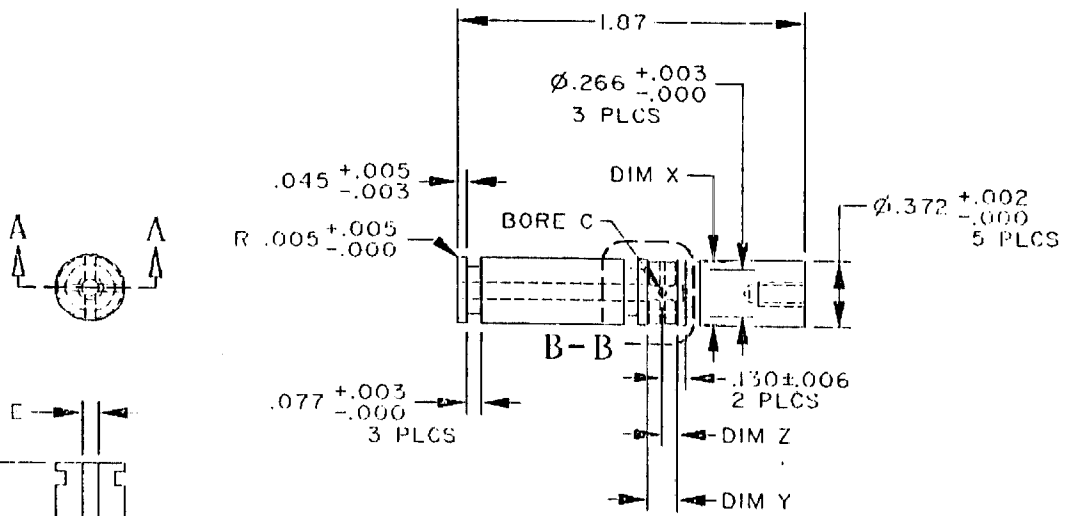

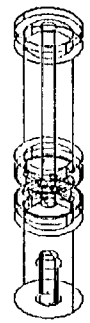

PRELIMINARY
(REFERENCE ONLY)

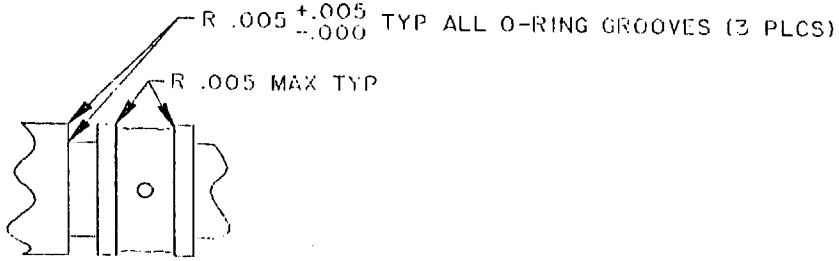

A-A

B-B

FRACTIONS	.X	.XX	.XXX	ANGLES
±1/32	±.1	±.03	±.010	±0°30'

MACHINED SURFACES

SIZE	FSCM NO.	
C	53100	809 04975
SCALE 2/1		SHEET 14

809002049 75

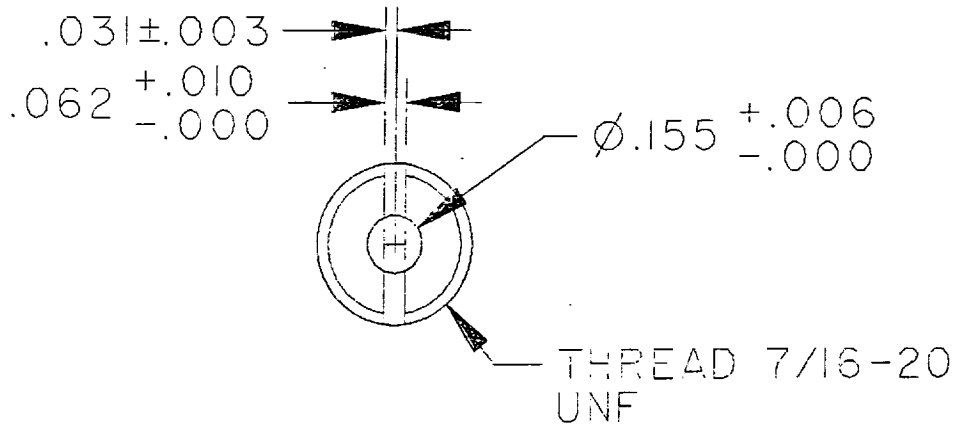

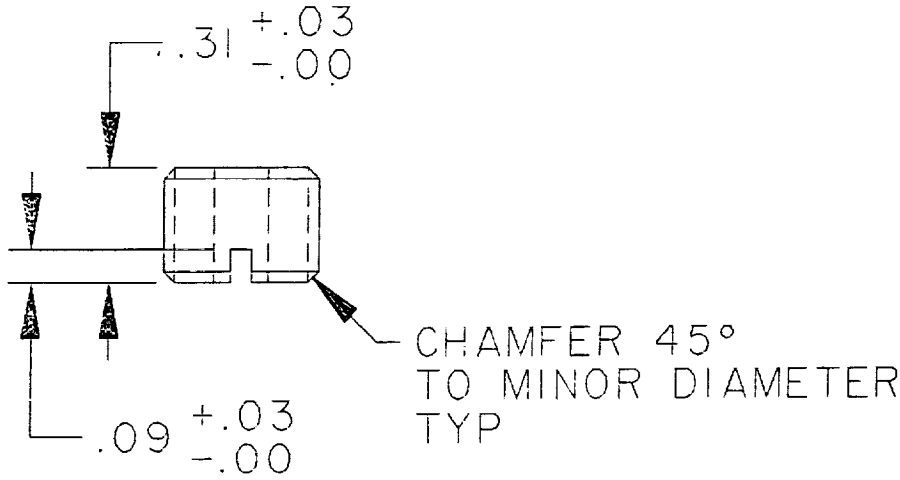

-014

PRELIMINARY
(REFERENCE ONLY)

SIZE	FSCM NO.	
A	53100	8090020497 5

REV	SCALE	PAGE	SHEET
—	2/1		15

REVISIONS				
SYM.	ZONE	DESCRIPTION	DATE	APPROVED

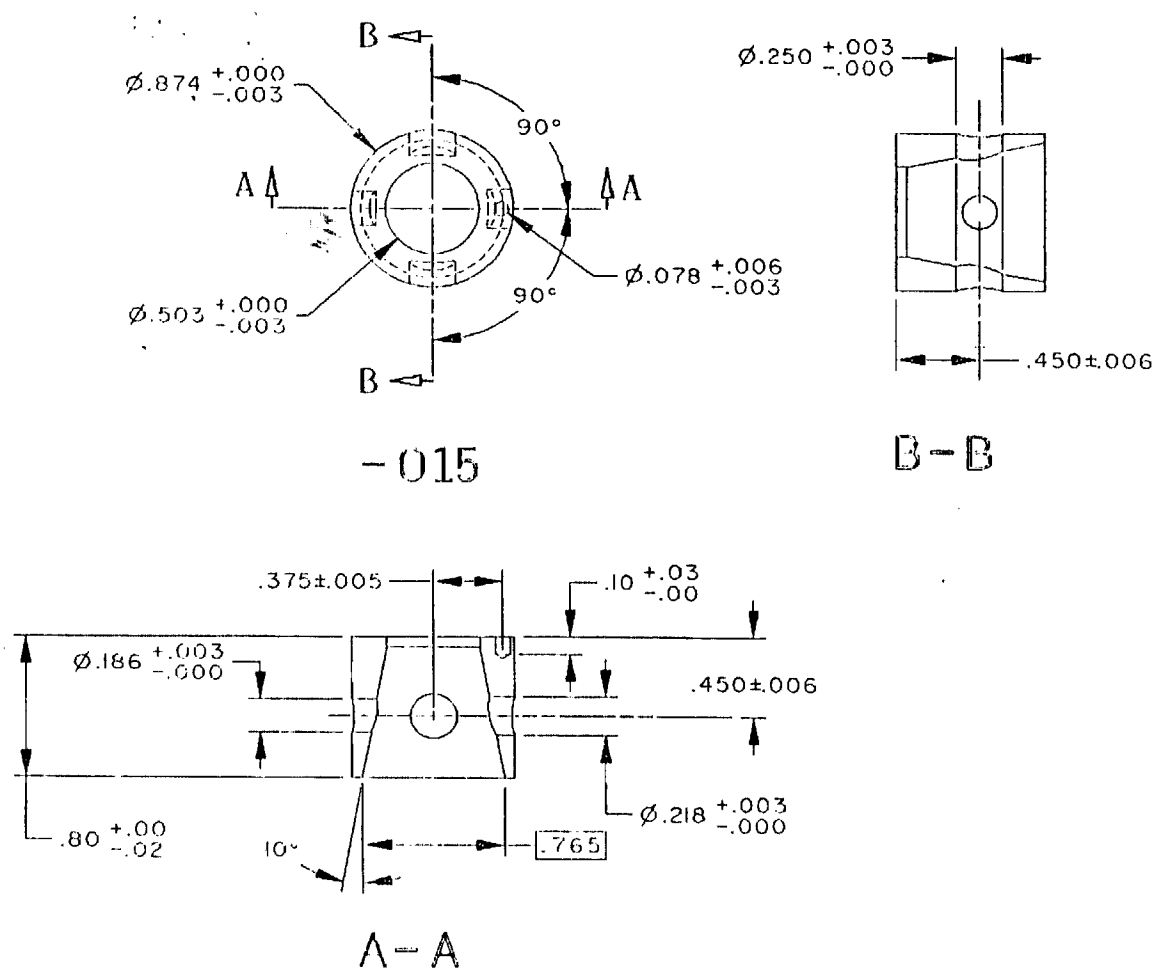

PRELIMINARY
(REFERENCE ONLY)

INTERPRET DWG PER MIL-STD-100
UNLESS OTHERWISE SPECIFIED
DIMENSIONS ARE IN INCHES
AND ARE AFTER PLATING
TOLERANCES ON
DECIMALS

FRACTIONS	X	.XX	.XXX	ANGLES
± 1/32	± .1	± .03	± .010	± 0°30'

MACHINED SURFACES ✓

SIZE	FSCM NO.	
C	53100	809 04975

CHG —

SCALE 2/1

SHEET 16

80900204975

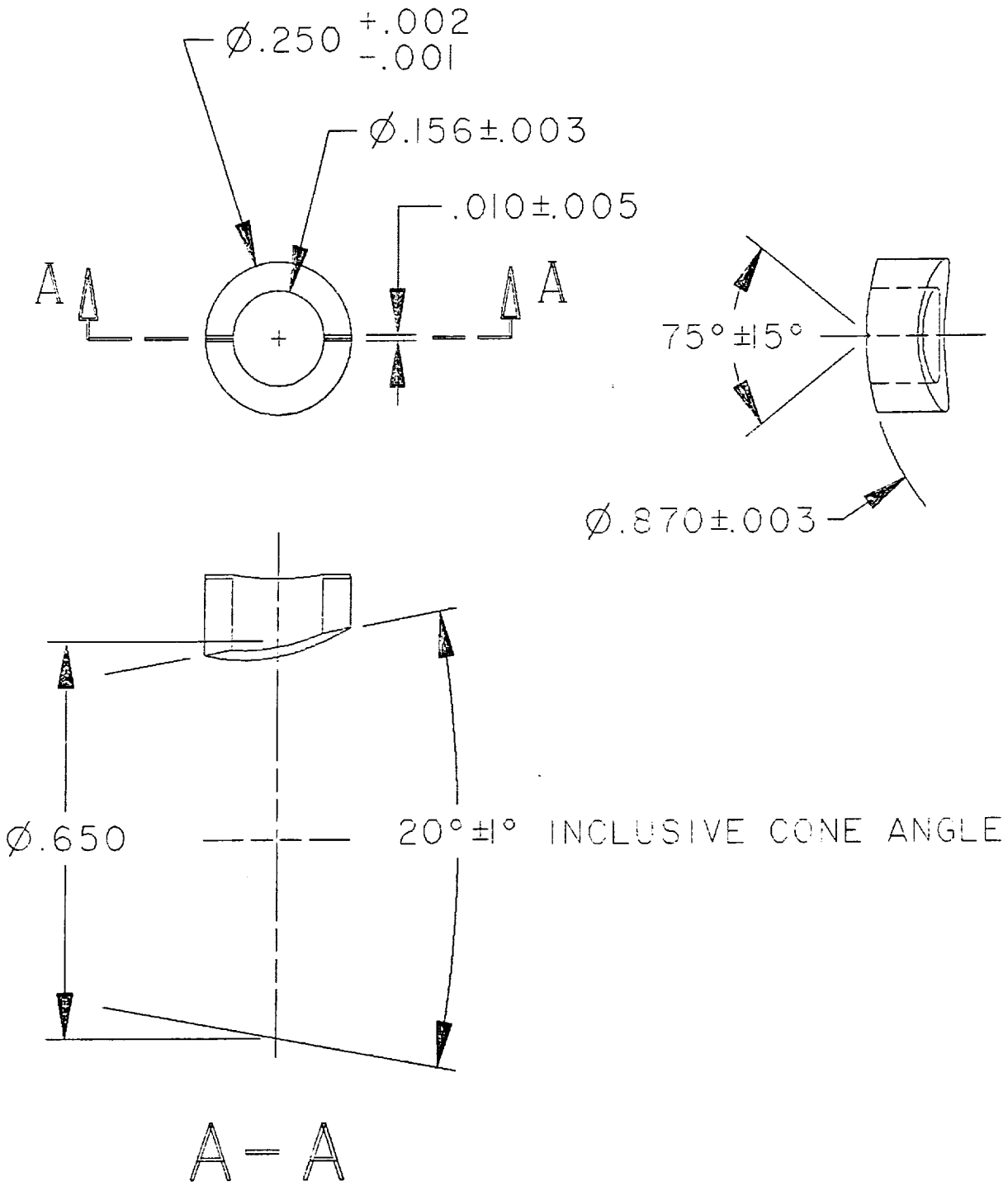

-016 PRELIMINARY (REFERENCE ONLY)

SIZE	FSCM NO.	
A	53100	8090020497 5

REV	SCALE	PAGE	SHEET
—	4/1		17

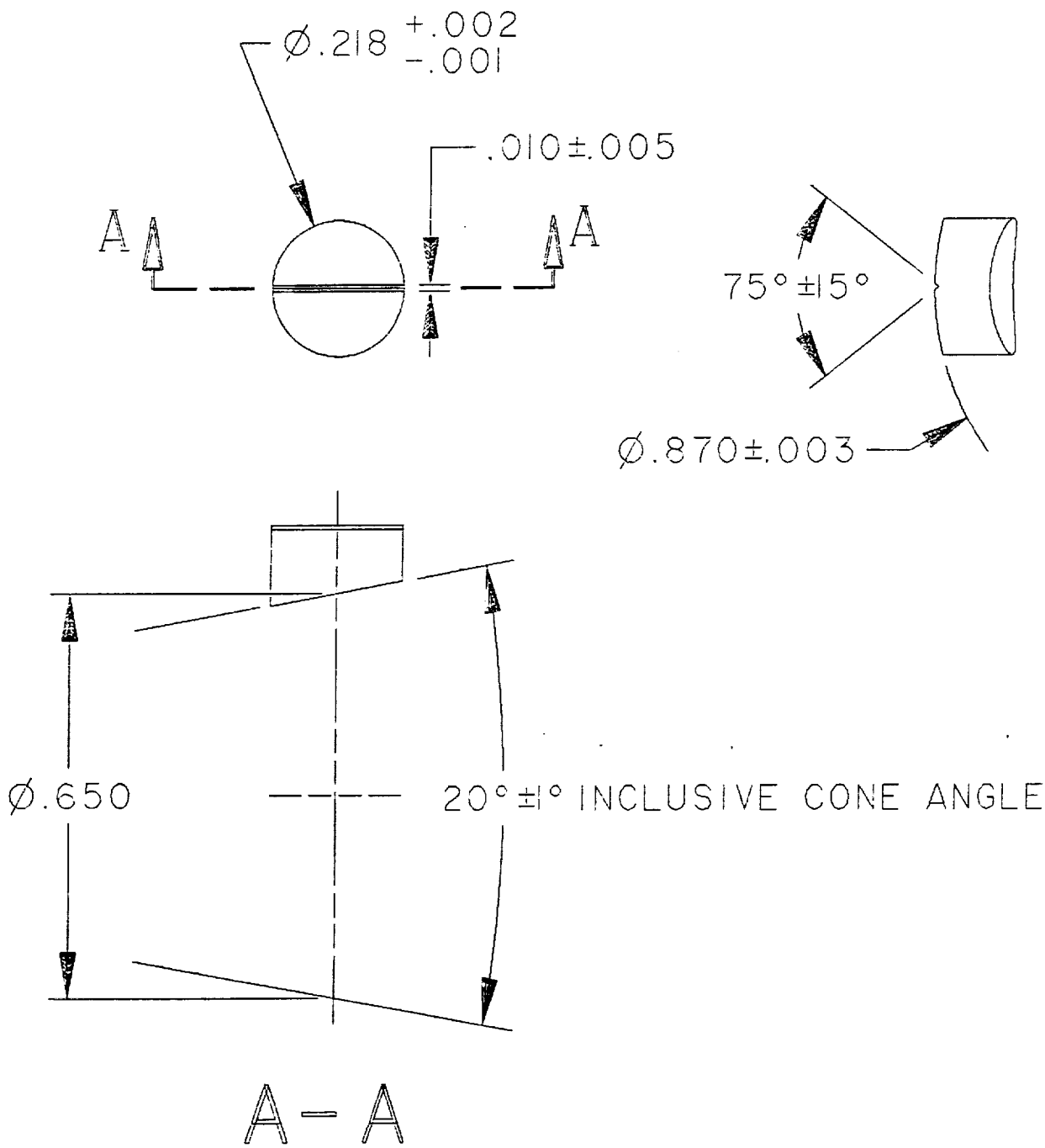

-017 PRELIMINARY (REFERENCE ONLY)

SIZE	FSCM NO.	
A	53100	80900204975
REV —	SCALE 4/1	PAGE	SHEET 18

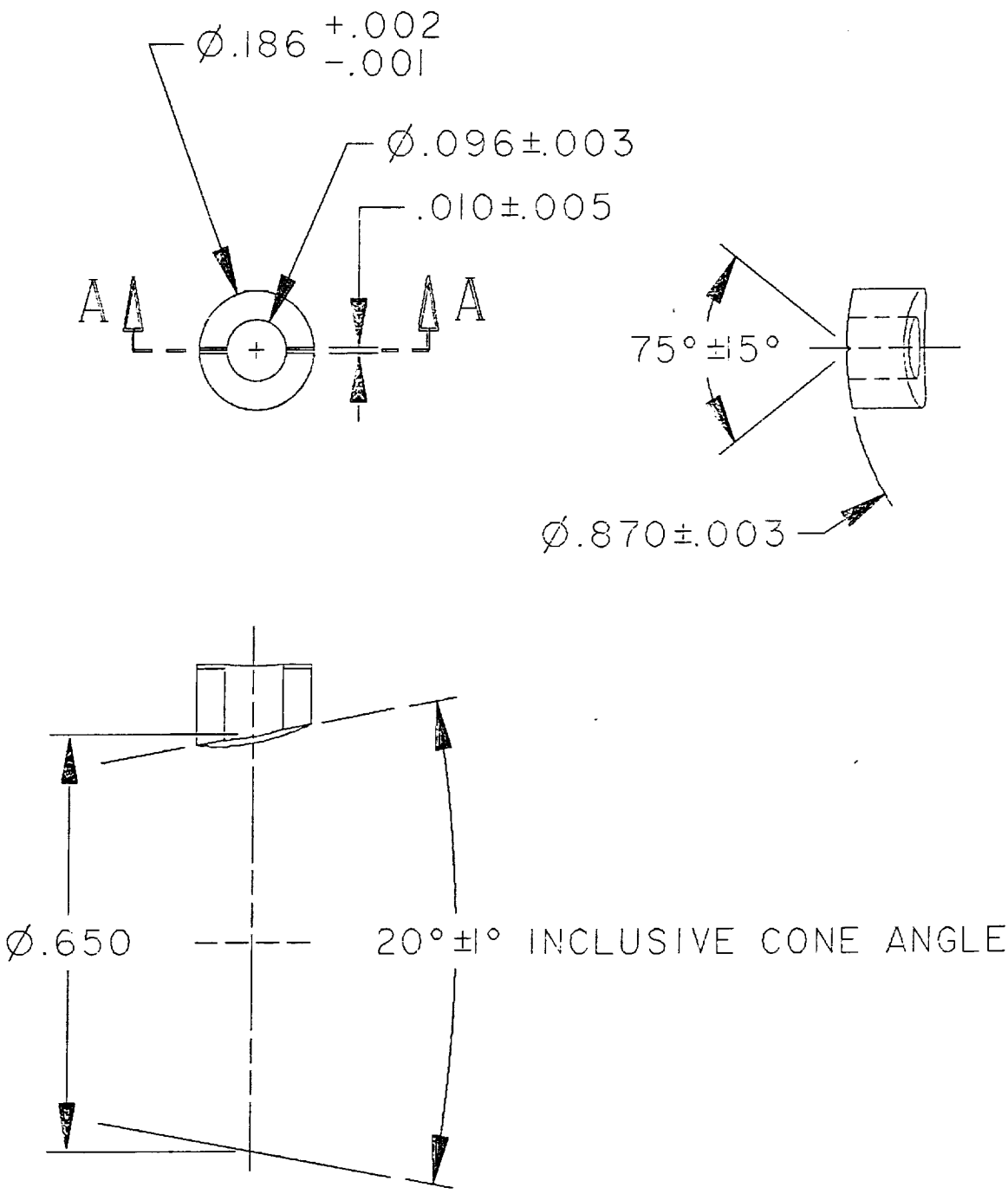

-018 PRELIMINARY REFERENCE ONLY

SIZE	FSCM NO.	
A	53100	8090020497 5

REV	SCALE	PAGE	SHEET
—	4/1		19

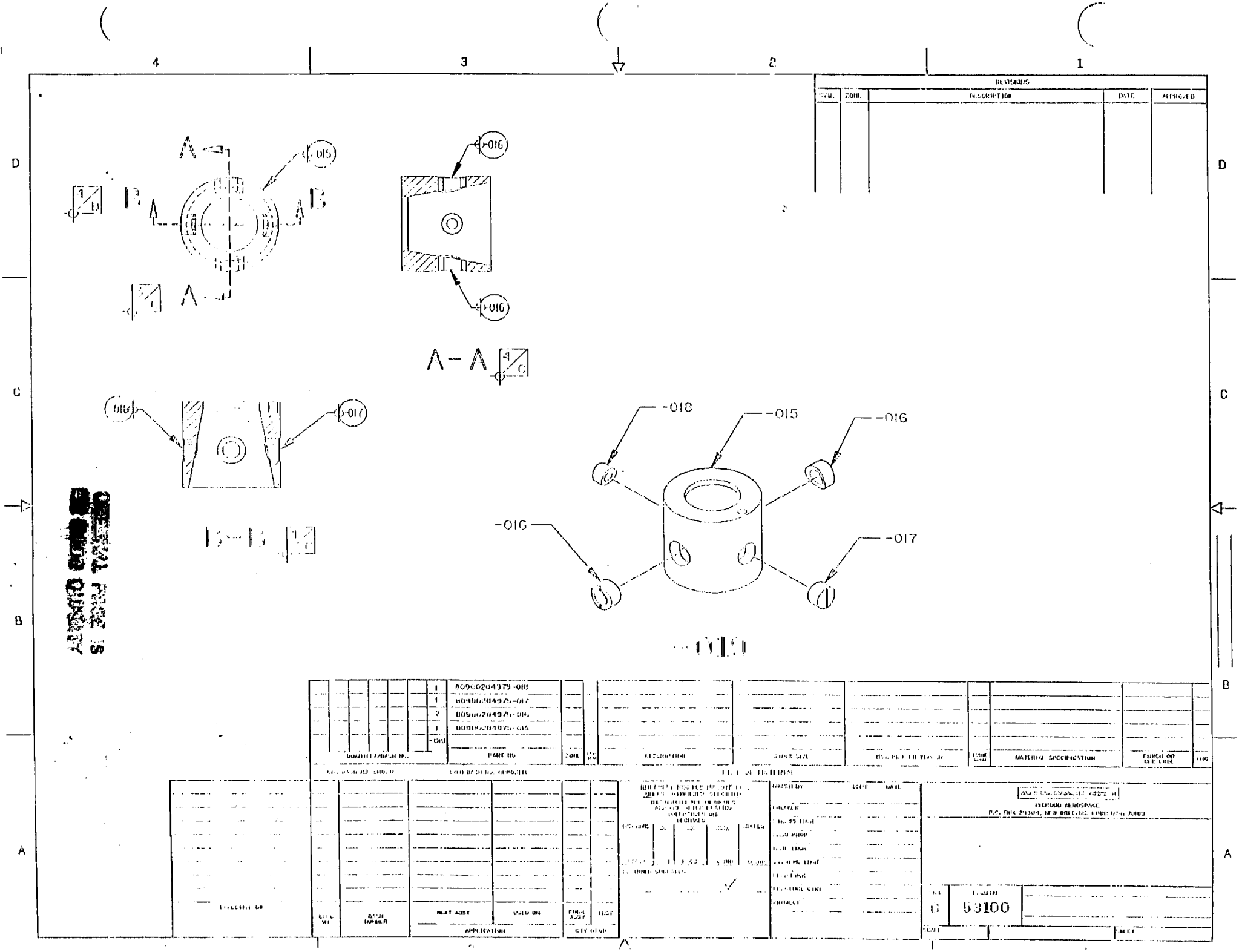

REVISIONS
SYM.
ZONE
DESCRIPTION
DATE
APPROVED
A
B
-015
-016
A - A
-017
B - B
-018
-015
-016
-016
-017
-019
1 80900204975-018
1 80900204975-017
2 80900204975-016
1 80900204975-015
-019
QUANTITY/DASH NO.
PART NO
ZONE
DESCRIPTION
MATERIAL SPECIFICATION
FINISH OR MFG CODE
NEXT ASSY
USED ON
APPLICATION
MICROOD AEROSPACE
G
53100

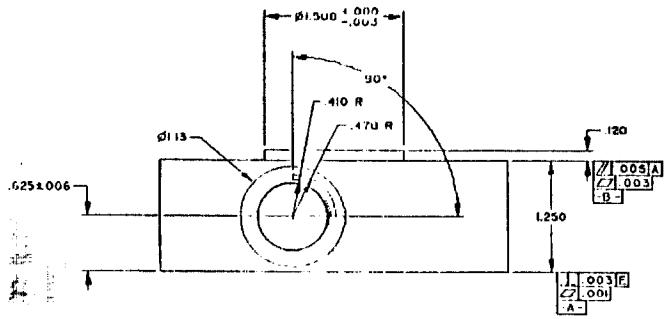

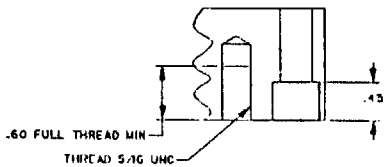

A-A
B-B ROTATED 180 CW

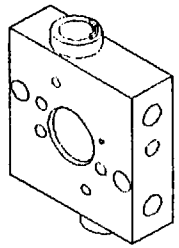

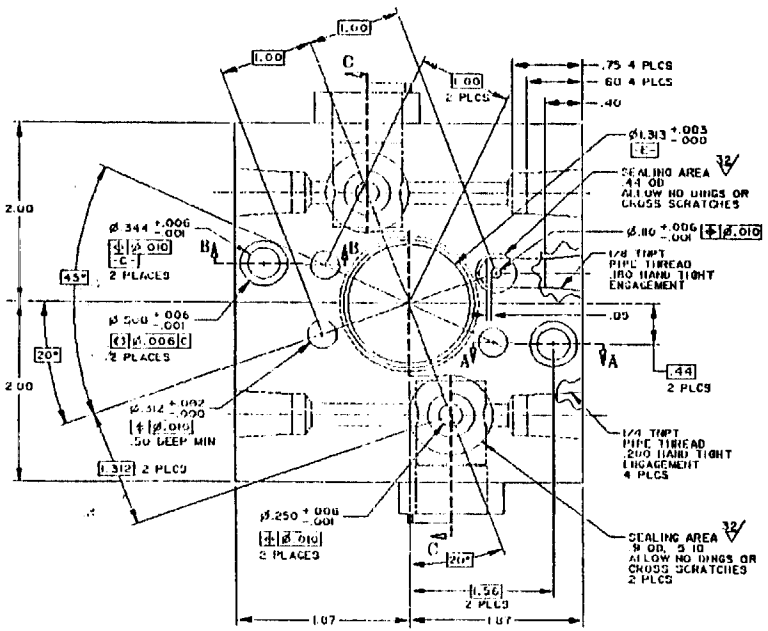

-021

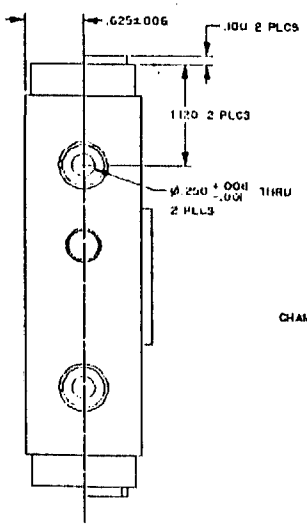

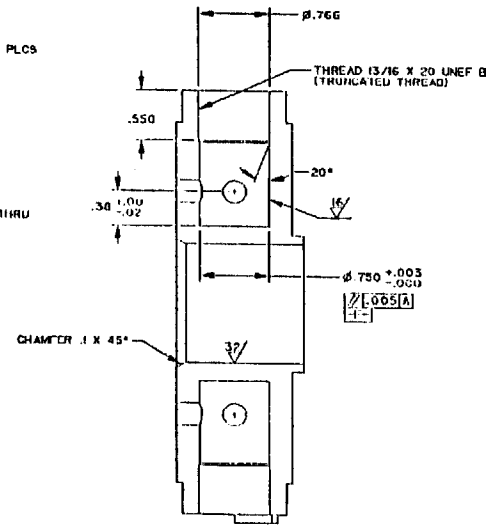

C-C

PRELIMINARY
(REFERENCE ONLY)

80900204975

ORIGINAL PAGE IS OF POOR QUALITY

REVISIONS				
SYM.	ZONE	DESCRIPTION	DATE	APPROVED

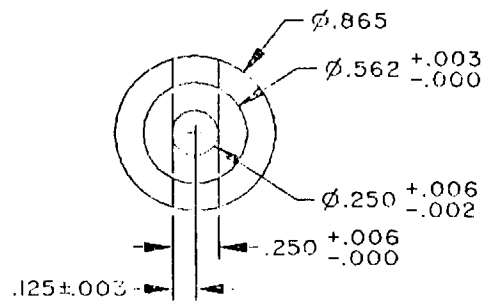

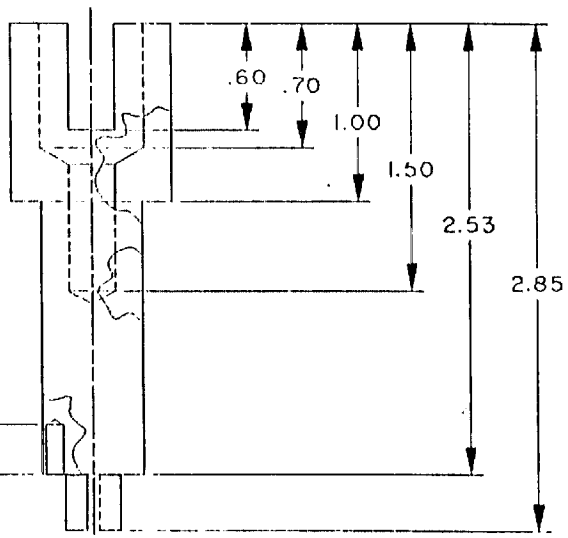

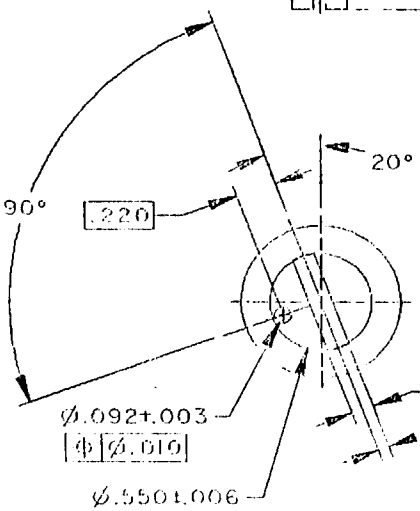

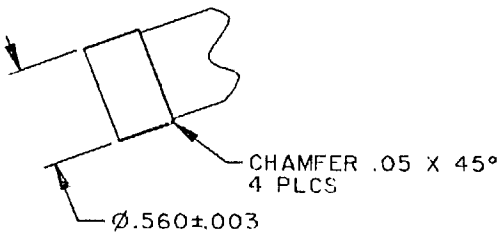

C-3

-023

INTERPRET DWG PER MIL-STD-100.
UNLESS OTHERWISE SPECIFIED
DIMENSIONS ARE IN INCHES
AND ARE AFTER PLATING
TOLERANCES ON
DECIMALS

FRACTIONS	X	XX	XXX	ANGLES
± 1/32	± .1	± .01	± .010	± 0°30'

MACHINED SURFACES ✓

SIZE	FSCM NO.	
C	53100	80900204975
SCALE 2/1		SHEET 24

CHG —

80500204975

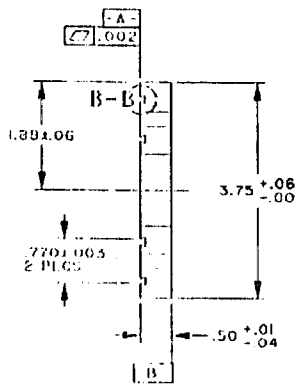

A-A

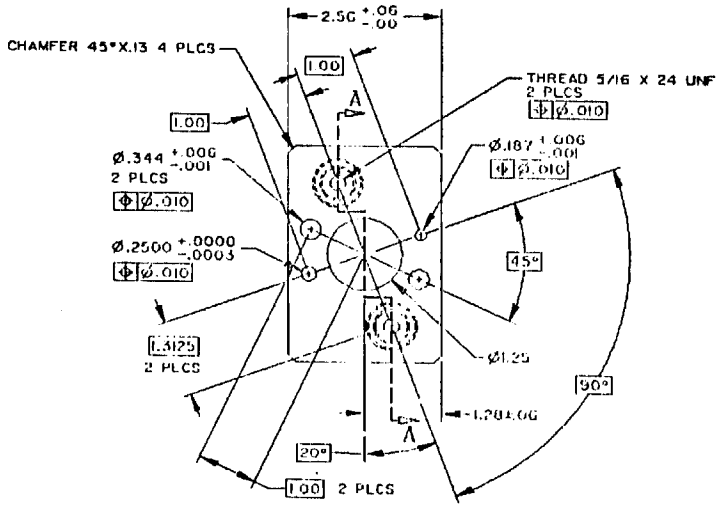

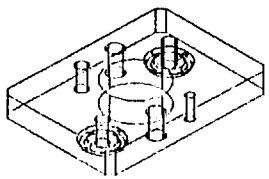

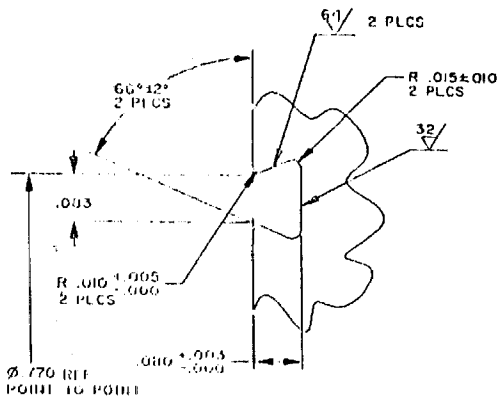

B-B

PRELIMINARY
(REFERENCE ONLY)

ORIGINAL PAGE IS
OF POOR QUALITY

SIZE	PART NO.	
D	53100	0900204975

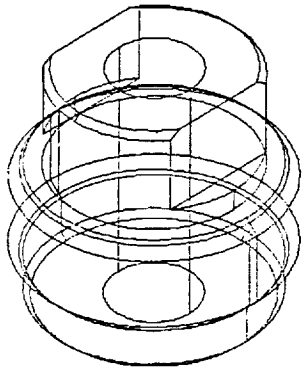

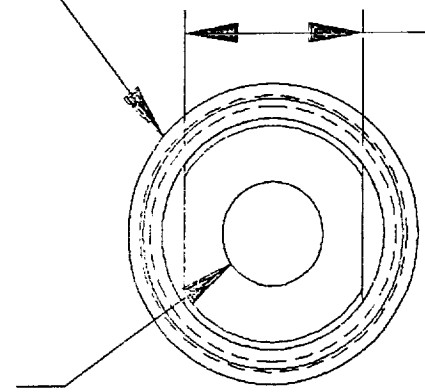

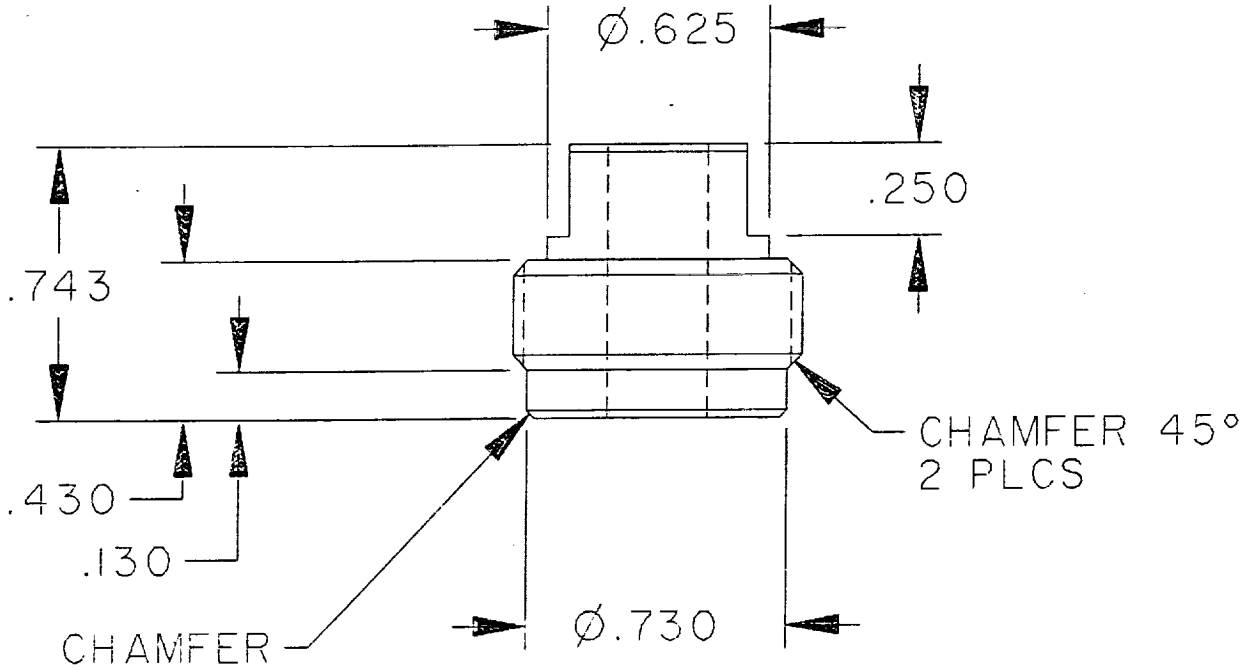

-026 PRELIMINARY (REF ONLY)

REV —	SIZE A	FSCM NO. 53100	80900204975
	SCALE 2/1	PAGE	SHEET 27

ORIGINAL PAGE IS
OF POOR QUALITY

REVISIONS				
SYM.	ZONE	DESCRIPTION	DATE	APPROVED

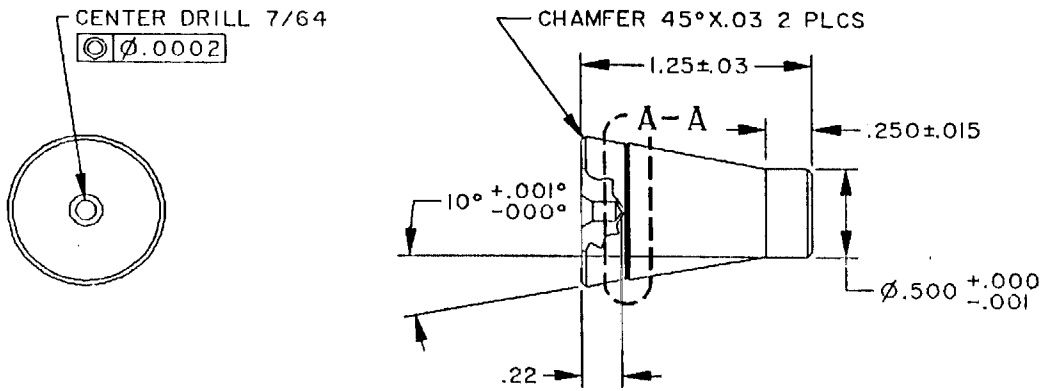

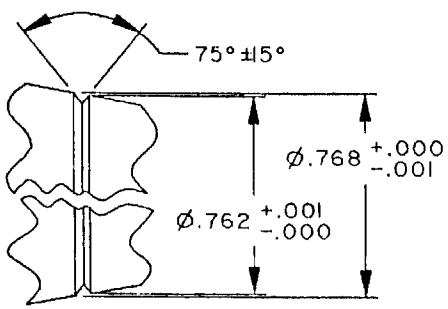

VIEW A-A
SCALE 10/1

INTERPRET DWG PER MIL-STD-100
UNLESS OTHERWISE SPECIFIED
DIMENSIONS ARE IN INCHES
AND ARE AFTER PLATING
TOLERANCES ON:
DECIMALS

FRACTIONS	.X	.XX	.XXX	ANGLES
± 1/32	± .1	± .03	± .010	± 0°30'

MACHINED SURFACES ✓

SIZE	FSCM NO.	
C	53100	80900204976
CHG —	SCALE 2/1	SHEET 2

80900204976

PRECEDING PAGE BLANK NOT FILMED

REVISIONS				
SYM.	ZONE	DESCRIPTION	DATE	APPROVED

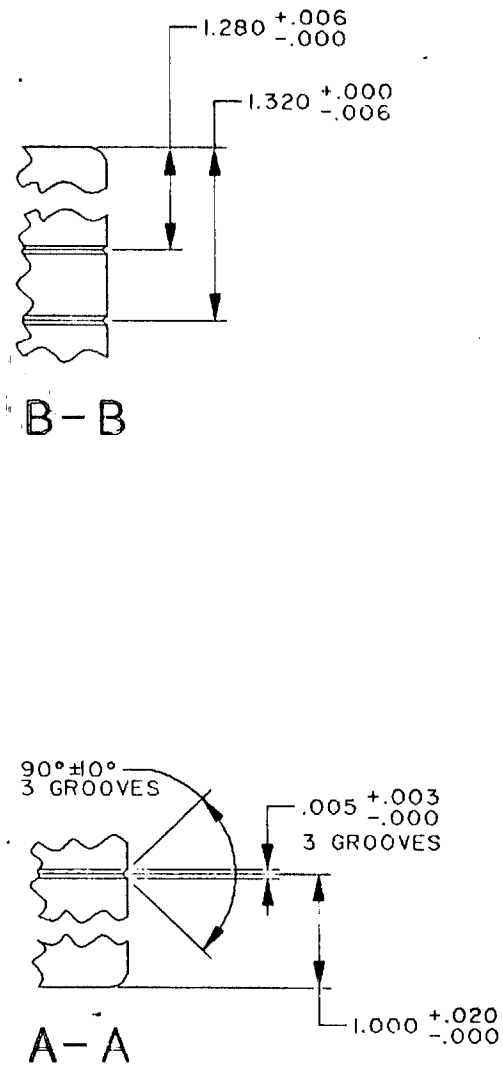

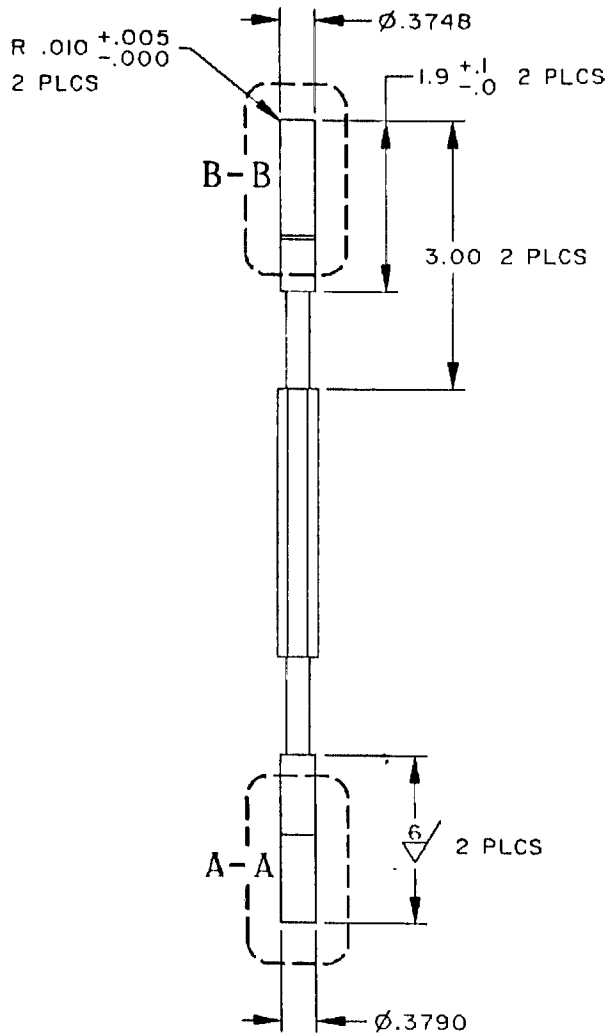

-004

INTERPRET DWG PER MIL-STD-100
UNLESS OTHERWISE SPECIFIED
DIMENSIONS ARE IN INCHES
AND ARE AFTER PLATING
TOLERANCES ON:

FRACTIONS	.X	.XX	.XXX	ANGLES
± 1/32	± .1	± .03	± .010	± 0°30'

MACHINED SURFACES ✓

SIZE	FSCM NO.		
C	53100	809	04976

CHG —

SCALE 1/1

SHEET 4

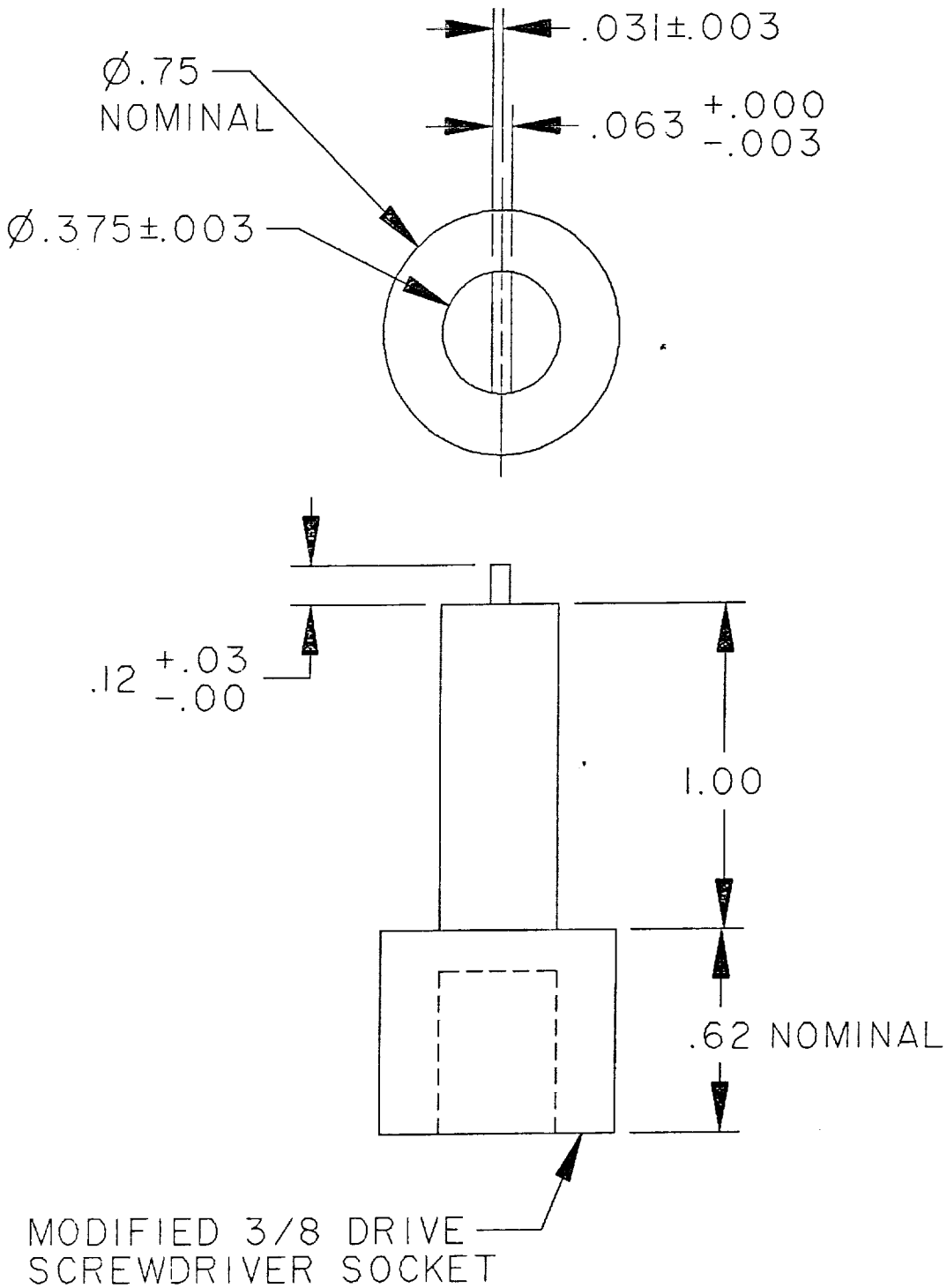

-004

SIZE	FSCM NO.	
A	53100	80900204976

REV	SCALE	PAGE	SHEET
—	2/1		5

PRECEDING PAGE BLANK NOT FILMED

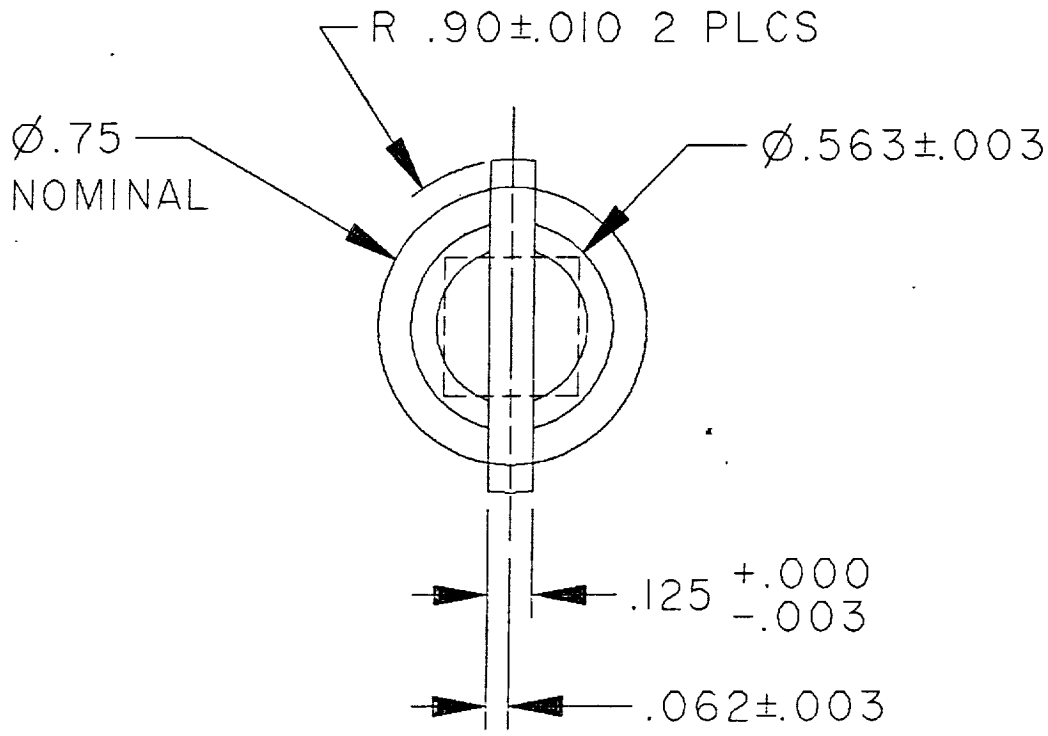

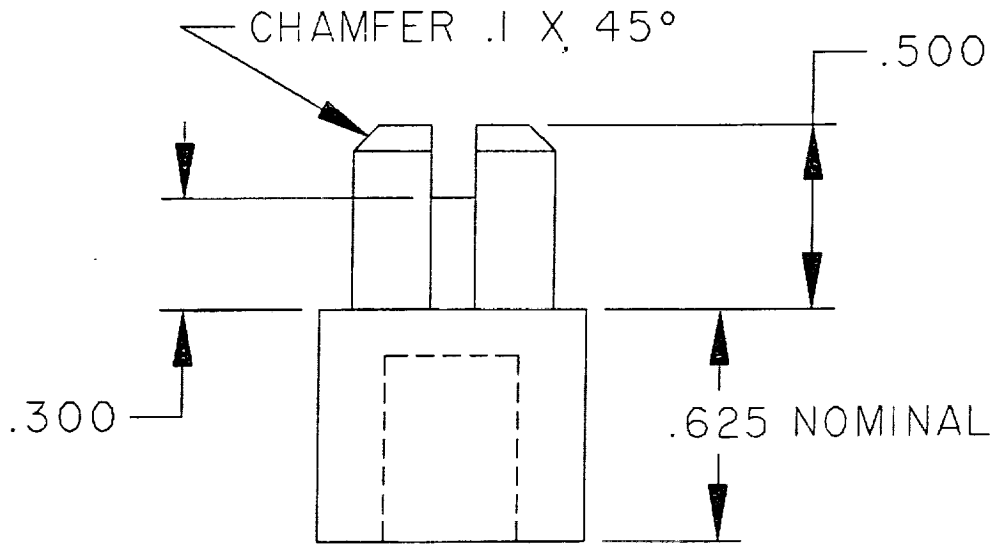

-006 PRELIMINARY (REFERENCE ONLY)

SIZE	FSCM NO.	
A	53100	80900204976

REV	SCALE	PAGE	SHEET
—	2/1		5 A.

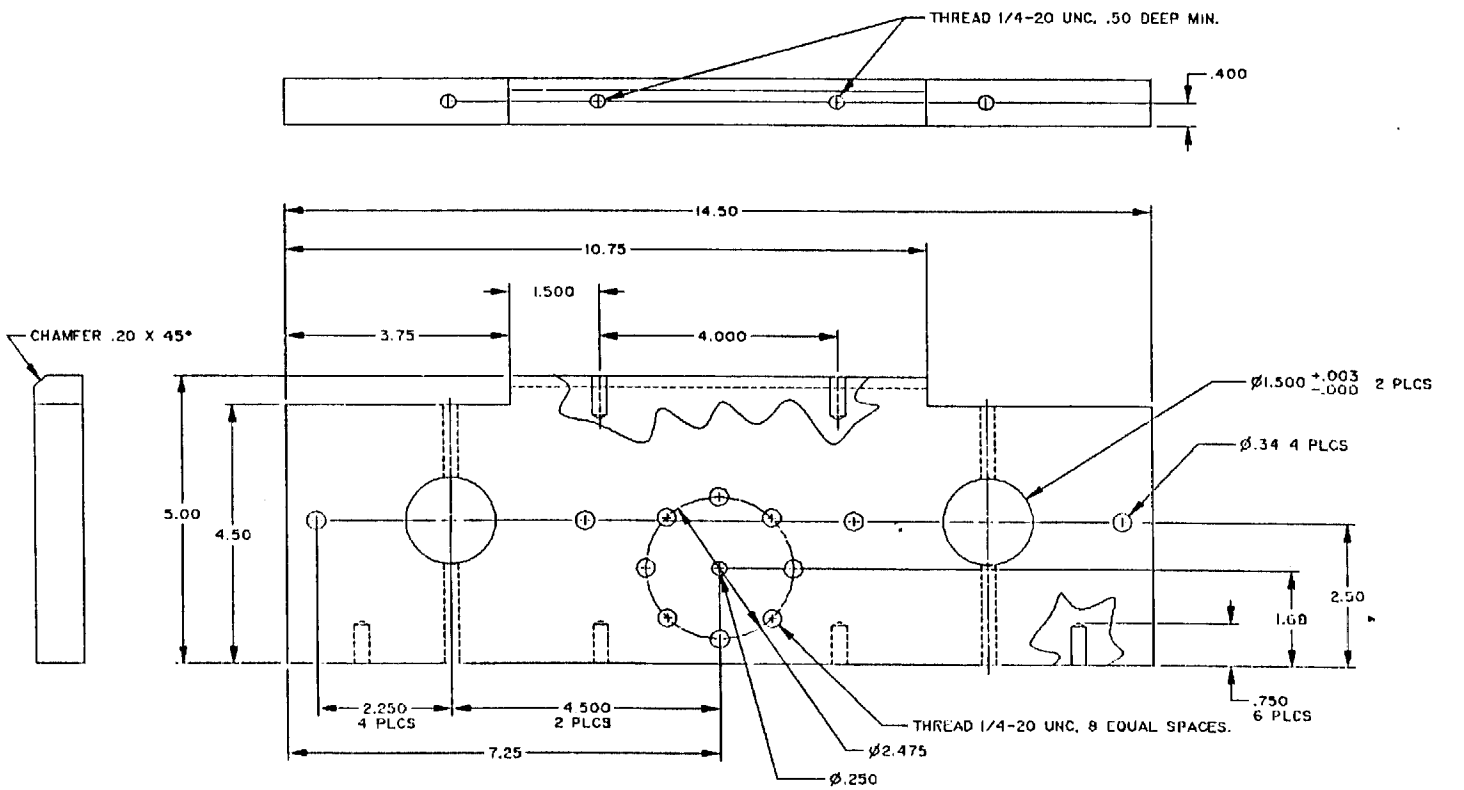

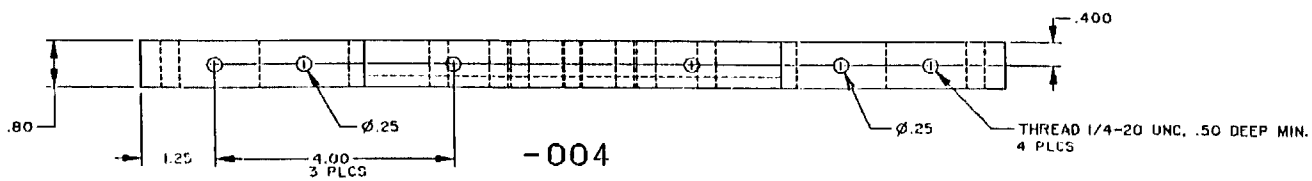

-004

MAKE FROM .80 ALUMINUM PLATE

D	53100	80900204977
SCALE 1/4		SHEET 1

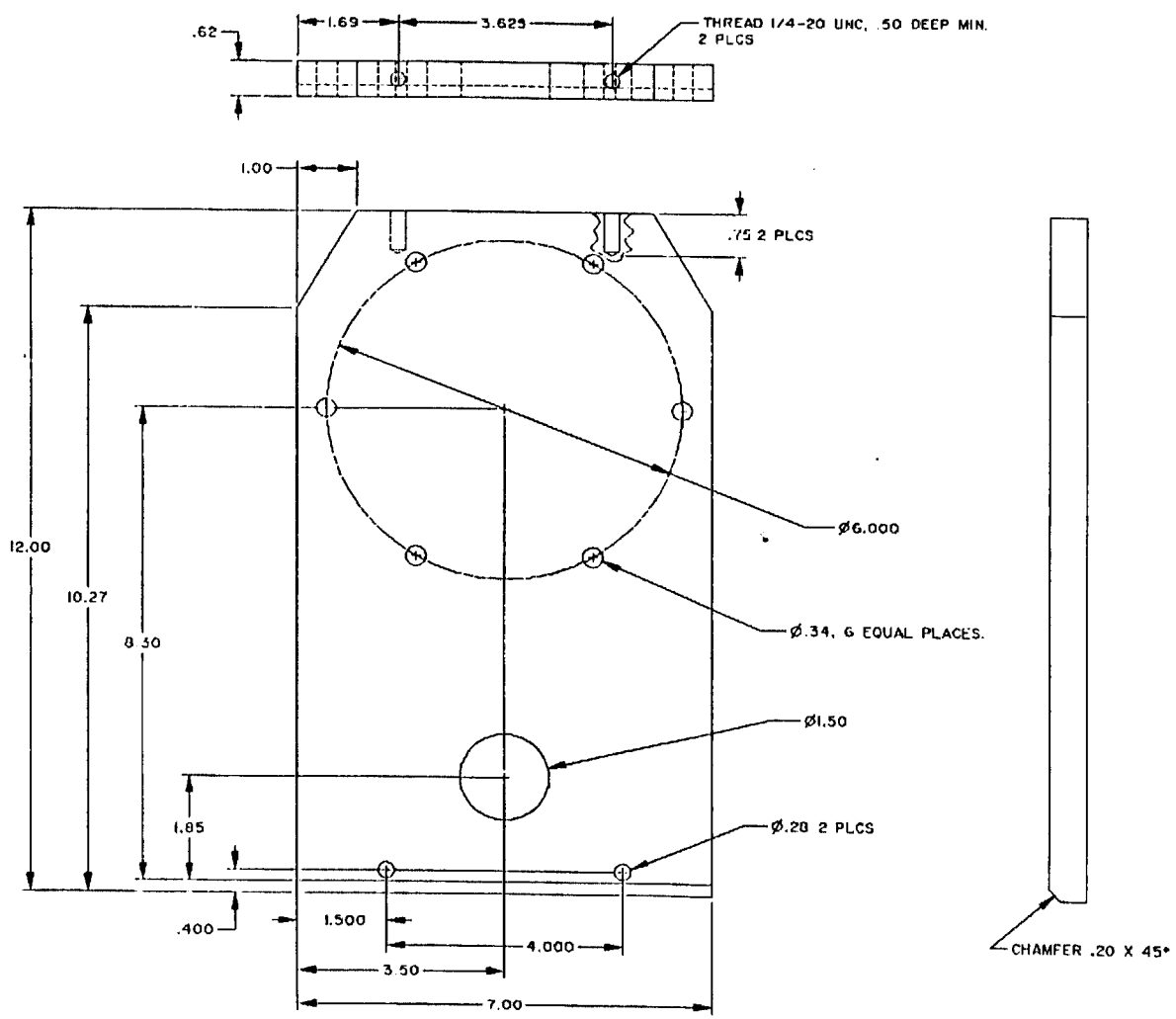

MAKE FROM 5/8 ALUMINUM PLATE

-005

SIZE	FSCM NO.	
D	63100	900204977
SCALE 1/1		SHEET 1

8090020497

REVISIONS				
SYM.	ZONE	DESCRIPTION	DATE	APPROVED

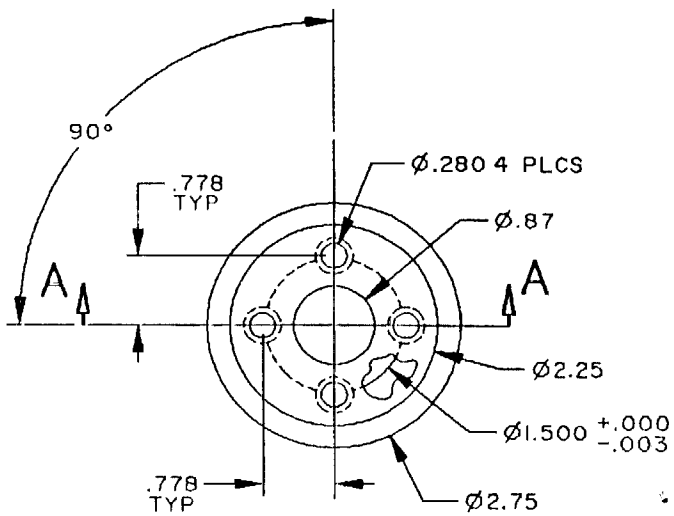

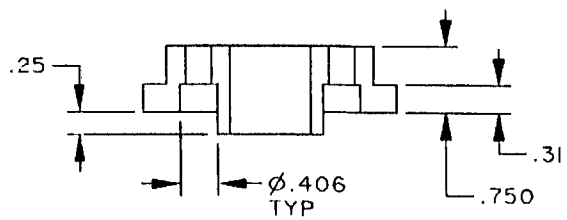

SECTION A-A

-006

MATL: ALUMINUM ALLOY 6061-T6

SIZE	FSCM NO.	
C	53100	80900204977
SCALE		SHEET

80900204977

REVISIONS				
SYM.	ZONE	DESCRIPTION	DATE	APPROVED

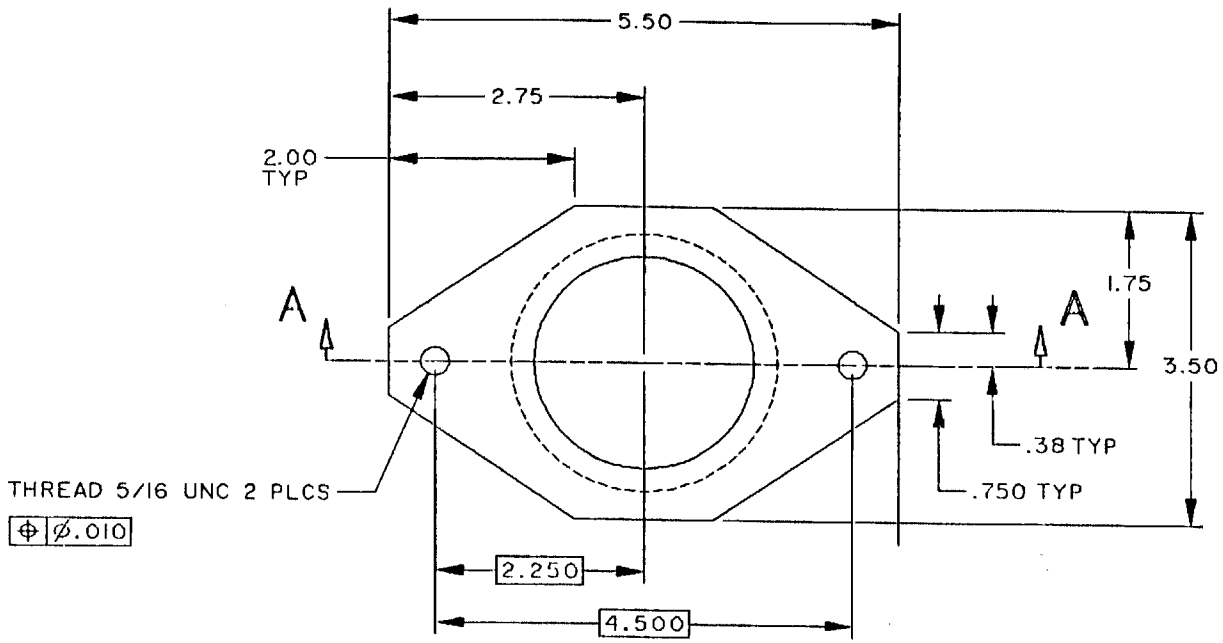

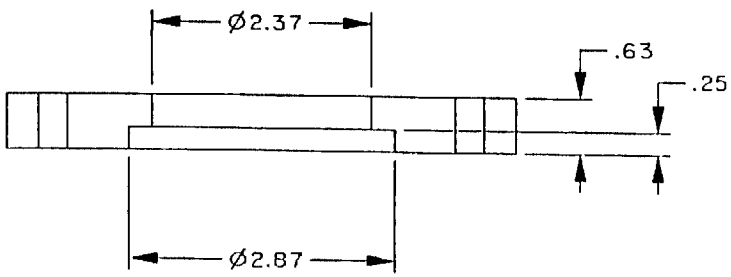

SECTION A-A

MATL: ALUMINUM ALLOY 6061-T6

-007

SIZE	FSCM NO.	
C	53100	809204977
SCALE		SHEET

809204977

Appendix D

SOFI Process Model Supporting Data

APPENDIX D1

M.E. TEST PLAN 3614-92-DAC-067 REV B 4/15/92

SOFI PROCESS MODEL DEVELOPMENT

ACKGROUND AND OBJECTIVES

Experimental work performed during 1991 resulted in the establishment of certain relationships between SOFI process variables, namely;

$$F = \frac{A \times SPi}{(D\cancel{Q}\text{-}B + (C \times SPi))}$$

F = Flow Rate (lbs/min)
D$\cancel{Q}$ = Macro Density (lbs/cu.ft)
SPi = Substrate Velocity at Station 'i' (inches/sec)
Di = Diameter of ET at Station 'i' (inches)
A = Empirically Derived Constant Related to Fan Pattern
B = Empirically Derived Constant Related to Raw Material (Cup Density)
C = Empirically Derived Constant Related to Fan Pattern
T = Thickness (inches)
S$\cancel{Q}_s$ = Hoist Velocity (inches/sec)

$$\boxed{D\cancel{Q} = SPi((A/F) - C) + B} \quad \text{--- (1)}$$

For CPR 488 and the gun builds used in the 1991 Taguchi experiments:

A = 0.8768 B = 1.904 C = 0.0129

Hoist Velocity Equation:

$$\boxed{S\cancel{Q}_s = \frac{9.1673\,F}{T.\,D\cancel{Q}\,(T + Di)}} \quad \text{--- (2)}$$

Substituting 1into 2 =>

$$\boxed{S\cancel{Q}s = \frac{9.1673\,F}{T(SPi((A/F)\text{-}C) + B)(T + Di)}} \quad \text{--- (3)}$$

Solving for Thickness =>

$$\boxed{T = \frac{-1(D\cancel{Q}.Di.S\cancel{Q}s) + [(D\cancel{Q}.Di.S\cancel{Q}s)^2 + 4(D\cancel{Q}.S\cancel{Q}s(9.1673F))]^{0.5}}{2D\cancel{Q}.S\cancel{Q}s}} \quad \text{--- (4)}$$

These equations are only true, however, for *one* spray tip, *one* clock angle, and *one* gun-to-tank distance. With the advent of a variable output pumping system and multi-nozzle spray head, we will soon be able to take advantage of varying flow, fan angle, and clocking during the course of a spray to closely control density and thickness without sacrificing surface finish or strength.

The experiments performed by this test plan are designed to provide the data required to expand the process model, as it appears above, to include the variables of;

Gun-to-Tank Distance
Tip Clocking
Tip Type

We hope to demonstrate that the density of the applied foam is related to the 'stripe width' of the foam as it is applied to a surface and we will subsequently quantify the relationship for a range of flow rates and surface speeds.

This work is performed as a sub-task of TD 675.

David Cooper D 3614
Process Applications & Development

M. Wallo
Principle Investigator TD 675

EXPERIMENT STRUCTURE

APPENDIX D1

Control Factors: 2 Tips will be involved in the experiment; SS8020 and SS8010

For the 8010:

FACTOR	LOW	HIGH	
FLOW(F)	18	24	LBS/MIN
SPEED(S)	10	40	INCHES/SEC
COS Ø* (C)	0.5	1.0	(Ø will vary from 0° to 60° with a mid point at 41.4°)
DISTANCE(Z)	20	60	INCHES

*Clock Angle

For the 8020:

FACTOR	LOW	HIGH	
FLOW(F)	36	48	LBS/MIN
SPEED(S)	20	80	INCHES/SEC
COS Ø* (C)	0.5	1.0	(Ø will vary from 0° to 60° with a mid point at 41.4°)
DISTANCE(Z)	20	60	INCHES

A standard ECHIP design will be used; quadratic, 3 levels for each factor:

For the 8020:

Treatment Combination	Flow lbs/min	Speed in/sec	Cos Ø	Distance inches
1	36	25	.5	20
2	48	75	.5	20
3	48	25	1.0	20
4	36	75	1.0	20
5	36	25	.5	60
6	48	75	.5	60
7	48	25	1.0	60
8	36	75	1.0	60
9	48	75	1.0	40
10	48	25	.5	40
11	36	75	.5	40
12	36	25	1.0	40
13	42	50	1.0	60
14	48	50	.75	60
15	42	75	.75	60
16	42	25	.5	60
17	42	75	.5	20
18	48	25	.75	20
19	36	50	1.0	20
20	36	50	.5	60
1	36	25	.5	20
2	48	75	.5	20
3	48	25	1.0	20
4	36	75	1.0	20
5	36	25	.5	60

For the 8010:

Treatment Combination	Flow lbs/min	Speed in/sec	Cos Ø	Distance inches
1	18	10	.5	20
2	24	40	.5	20
3	24	10	1.0	20
4	18	40	1.0	20
5	18	10	.5	60
6	24	40	.5	60
7	24	10	1.0	60
8	18	40	1.0	60
9	24	40	1.0	40
10	24	10	.5	40
11	18	40	.5	40
12	18	10	1.0	40
13	21	25	1.0	60
14	24	25	.75	60
15	21	40	.75	60
16	21	10	.5	60
17	21	40	.5	20
18	24	10	.75	20
19	18	25	1.0	20
20	18	25	.5	60
1	18	10	.5	20
2	24	40	.5	20
3	24	10	1.0	20
4	18	40	1.0	20
5	18	10	.5	60

RESPONSES:

STRIPE WIDTH: The vertical heightof the fan pattern, determined by spraying one pass onto paper or cardboard at the same control factor values as the panel to be sprayed.

MACRO DENSITY: Each sprayed panel is to be tested for density in accordance with attached procedure.

MICRO DENSITY: A standard 2"x2" density specimen shall be taken from the perimeter of the panel where it is to be trimmed.

WAVINESS AMPLITUDE: The amplitude of any waviness occuring at 8" intervals shall be measured (at MSFC or MAF).

SURFACE ROUGHNESS: Each sprayed panel shall be laser scanned at MAF and its absolute surface roughness determined.

PLUG PULLS: Plug-pull strength shall be determined (after laser scanning) at MAF.

TENSILE STRENGTH: Flatwise tensile strength values shall be determined at MAF or MSFC. If this work is performed at MSFC, the specimens must be prepared from the perimeter trim area of each panel.

MATERIAL REQUIREMENTS

24" x 24" Primed Aluminum Test Panels_____50. MAF to supply

CPR 488 Foam -3 Kits. MAF to supply.

Spray Tips - 5 x SS 8020 MAF to provide
5 x SS 8010
2 x SS 6520 " "
2 x SS 6510 " "
2 x SS 5020 " "
2 x SS 5010 " "

Turret Head Plate Inserts____(MSFC to provide)____ .147" dia bore (QTY. A/R)
.105" dia bore (QTY. A/R)

Orifice Plates_____(MAF to provide)_____.110" dia. (for SS 8020)(QTY. A/R)
.078" dia. (for SS 8010)(QTY. A/R)

36" wide Kraft Paper_____ As required

EQUIPMENT REQUIREMENTS

- Turret Spray Head
- Variable Output Pumping System
- Robot
- Turntable with 13.75' diameter tank.

EXPERIMENTAL REQUIREMENTS:

Each experiment will consist of applying CPR 488 foam to one 2' x 2' primed aluminum substrate.

A 'spray' may include more than one experiment.

A means to determine the stripe width of the fan pattern (at the same control factor values as the test panel) must be provided.

More than one experiment should be conducted within each spray wherever possible to minimize foam consumption.

Overlap times should be kept within the range 7 - 21 seconds.

Gun rise per pass shall be 8.0"

EXPERIMENTAL PROCEDURE

1. Project leader and spray system programmer will decide which experiments can be grouped together within each spray.

2. Programmer will prepare the programs for each spray. Provision for fan pattern width measurement must be made.

3. Programs will be loaded into the robot/booth control systems.

4. All test panels shall be weighed (in grams) and indelibly marked with their weight (on the back) prior to foam application.

5. Dry runs will be made prior to each spray to check: Gun to pattern-measurement-surface distance, gun-to-panel distance(s), clock angle(s), gun rise per pass, turntable speed (if used), programmed flow rate, etc.. Project leader or designee will record values on the appropriate data sheet(s).

6. A spray technician should be in the booth during the spray to keep the spray tip clean if no tip cleaning mechanism is available. This requirement may be waived at the discretion of the project leader.

7. After each spray, lab personnel shall: measure and record stripe width, remove panel(s), set panels aside for at least 24 hours prior to preparation for density determination, prepare booth for next spray. Project leader will provide appropriate data sheets for recording spray factors and results.

8. Sprayed panels shall be prepared in accordance with the attached "Macro Density Measurement Procedure" and their density determined. A 'standard' 2" x 2" density specimen should also be prepared from the foam on the perimeter of the panel which is to be removed. Density values shall be recorded on the appropriate data sheets.

9. Completed panels shall be sent to MAF for laser scanning and plug pulls.

RESULTS AND VERIFICATION EXPERIMENTS

Project leader will input the macro density results into the ECHIP program for analysis.

Project leader will input the stripe width results into the ECHIP program for analysis.

Project leader will extract the process models from the analysis and use them to construct verification experiments.

Verification sprays will be made to determine the 'fit' of the model to the process and to determine whether it can be extrapolated for spray tips other than those used in the first 50 experiments.

Approximately 6 verification experiments will be required.

MACRO DENSITY MEASUREMENT PROCEDURE

H. Teal 3/26/92

- The following steps outline the procedure for measurement of macro density of SOFI spray specimens made in the laboratory :
- The substrate panels shall be aluminum squares of 24 inches and of standard thickness.
- Weigh and mark each nonsprayed substrate panel with its unsprayed weight in units of grams.
- Record the weight of the substrate (WS) in the data sheet of Figure 2.
- Spray each substrate panel consecutivly in accordance with its scheduled RUN NUMBER as indicated by the spray setup data sheet of Figure 3.
- Mark the non spray surface of each substrate panel to show the top of the panel, the run number and the date of spray. Also draw an arrow to show the direction of movement of the spray gun over the panel.
- Machine 2 to 3 inches of foam off from each edge of the aluminum panel assembly. (See Figure 1).
- Square all machined SOFI cuts.
- Measure the weight of the machined SOFI assembly (Units of grams).
- Mark the measured weight of the panel assembly on the back panel surface of the assembly.
- Record the weight of the assembly (WA) in the data sheet of Figure 2.

MACRO DENSITY MEASUREMENT PROCEDURE — CONTINUED —

H. Teal 3/26/92

- Use a digital dial caliper to measure the following lengths as shown in Figure 1:

  - ☐ Top foam edge : A1
  - ☐ Bottom foam edge : A2
  - ☐ Left foam edge : B1
  - ☐ Right foam edge : B2

- Record these measurements in the data sheet of Figure 2.

- Make eight thickness measurements as indicated by Figure 1. Record these values in the data sheet of Figure 2.

- Use data from Figure 2 to compute macro density as follows:

☐ $$D = \frac{(WA-WS)*121.9}{(A1+A2)*(B1+B2)*(T1+T2+T3+T4+T5+T6+T7+T8)}$$ Lbs./Cu. ft.

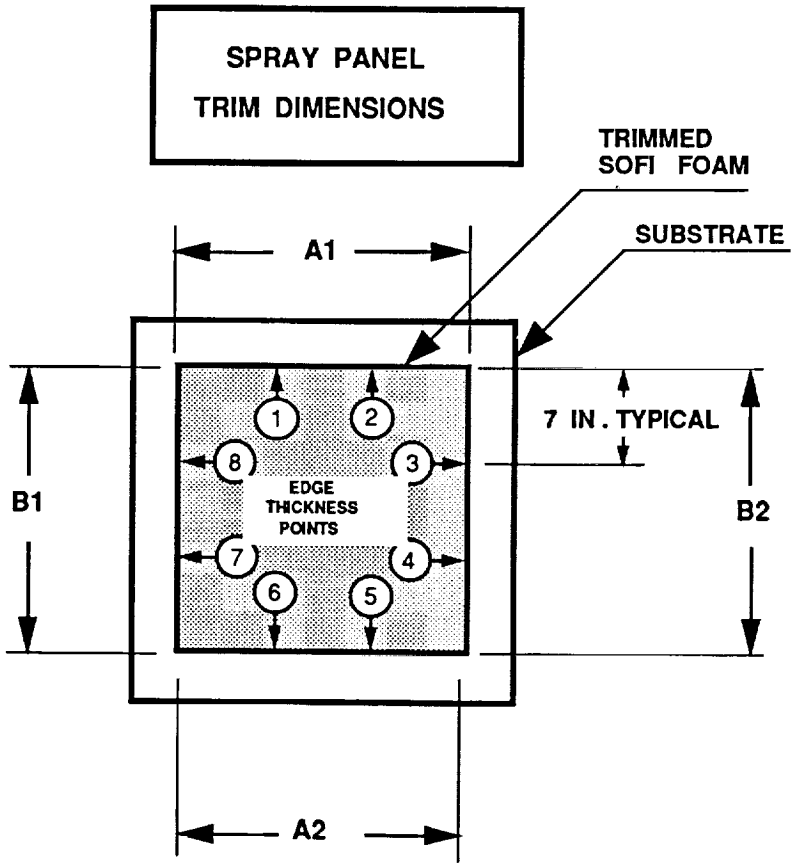
SPRAY PANEL
TRIM DIMENSIONS
TRIMMED
SOFI FOAM
SUBSTRATE
A1
7 IN. TYPICAL
B1
B2
EDGE
THICKNESS
POINTS
1
2
3
4
5
6
7
8
A2

FIGURE 1

APPENDIX D2: DENSITY, WAVINESS AND STRIPE WIDTH FOR 8020 TIP

MSFC SPRAY NO.	EXP. NO.	PANEL PLUS FOAM WEIGHT (GRAMS)	SUBSTRATE WEIGHT (GRAMS)	FOAM WEIGHT (GRAMS)	AVERAGE LENGTH (INCHES)	AVERAGE WIDTH (INCHES)	THICKNESSES (INCHES) 1	2	3	4	5	6	7	8	AVE	MACRO DENSITY (lbs/cu.ft) C=3.81	MICRO DENSITY (lbs/cu.ft)	Waviness (inches)	20"SQUARE ROUGHNESS (mmRa)	STRIPE WIDTH (INCHES)	REMARKS
							9	10	11	12	13	14	15	16	std dev						
2214a	4a	3525	3362	163	20.06	20.01	.632	.683	.619	.650	.650	.643	.661	.628	.622	2.490	########	None	1.41	#########	
							.585	.465	.471	.524	.710	.660	.656	.707	.075						
2214d	8	3508	3364	144	20.03	20.05	.408	.386	.525	.464	.490	.397	.491	.361	.397	3.440	########	None	1.34	>32	
							.338	.373	.311	.310	.292	.384	.408	.418	.069						
2215c	5a	3608	3203	405	19.95	20.03	####	####	####	####	####	####	####	####	######	2.298	2.077	.530	3.43	#########	
							####	####	####	####	####	####	####	####	.187						
2215a	12	3821	3337	484	20.07	20.02	####	####	####	####	####	####	####	####	######	2.301	2.230	None	1.70	#########	
							####	####	####	####	####	####	####	####	.093						
2216a	9	3462	3258	204	20.08	20.06	.608	.640	.693	.776	.588	.765	.750	.573	.668	2.889	########	None	1.72	#########	Surface Undulations.
							.620	.683	.645	.597	.666	.533	.623	.725	.082						
2216d	2a	3434	3208	226	19.92	20.05	.986	.948	.891	.940	.780	.988	.855	.946	.956	2.256	2.023		2.13	#########	
							####	.785	####	.872	.975	.916	####	####	.120						
2217a	19	3619	3363	256	20.04	20.07	.847	.906	.780	.941	####	####	####	.912	.978	2.480	2.145	None	1.86	#########	
							.958	.916	####	.991	.993	####	####	####	.092						
2217d	20	3392	3184	208	20.05	20.06	.769	.681	.675	.598	.721	.770	.698	.719	.697	2.827	2.334	None	1.80	#########	
							.500	.638	.570	.650	.720	.852	.843	.746	.093						
2219a	11	3573	3406	167	20.01	20.06	.582	.628	.585	.540	.580	.526	.557	.564	.552	2.874	########	None	0.64	#########	
							.530	.555	.544	.513	.529	.526	.563	.503	.032						
2219d	4b	3417	3245	172	20.09	20.02	.505	.500	.580	.510	.648	.637	.622	.693	.582	2.801	########	None	1.08	#########	
							.531	.577	.575	.620	.610	.568	.565	.565	.055						
2221a	18	4076	3381	695	20.06	19.88	####	####	####	####	####	####	####	####	######	2.020	########		7.56	#########	
							####	####	####	####	####	####	####	####	.377						
2221d	7	3964	3419	545	19.88	20.06	####	####	####	####	####	####	####	####	######	2.365	2.328		4.52	#########	
							####	####	####	####	####	####	####	####	.217						
2222a	1a	3841	3353	488	20.00	20.00	####	####	####	####	####	####	####	####	######	1.913	2.244		6.83	12.7	Bad tip buildup. Experiment repeated later. Do not use these data in ECHIP analysis. Use 1ar data.
							####	####	####	####	####	####	####	####	.299						
2222d	5b	3836	3407	429	19.94	20.00	####	####	####	####	####	####	####	####	######	2.358	2.291		2.09	#########	Bad tip buildup. Experiment repeated later. Do not use these data in ECHIP analysis. Use 5ar data.
							####	####	####	####	####	####	####	####	.097						
2220a	2b	3600	3395	205	20.03	19.88	.598	####	####	####	.948	####	####	.939	.993	1.975	1.936	.310	4.25	#########	Wavy and rough. Uncharacteristic ridge on NW corner. Suggest ignoring thickness data points #1,15 and 16.
							####	.955	.967	.938	.939	####	.837	.479	.316						
2220d	6	3560	3398	162	20.00	19.94	.698	.624	.684	.601	.640	.733	.683	.695	.568	2.727	########	None	3.25	#########	Undulating surface.
							.660	.681	.491	.432	.396	.312	.376	.375	.144						
2223a	10	4012	3439	573	19.84	19.97	####	####	####	####	####	####	####	####	######	2.096	1.982	########	7.22	#########	
							####	####	####	####	####	####	####	####	.339						
2223d	3a	3982	3364	618	20.03	20.03	####	####	####	####	####	####	####	####	######	2.022	2.074	None	7.20	#########	Undulating, very rough surface.
							####	####	####	####	####	####	####	####	.321						
2224a	17	3459	3275	184	20.06	20.06	.688	.945	.748	####	.835	.800	.783	.780	.617	2.133	########	.576	3.25	#########	
							.784	.498	.796	.447	.890	####	.997	.965	.174						
2224d	15	3506	3344	162	20.06	20.03	.592	.484	.583	.538	.589	.500	.488	.491	.521	2.951	########	None	1.24	#########	Undulating.
							.419	.496	.557	.467	.485	.585	.463	.591	.056						
2226a	3b	3943	3330	613	19.84	19.56	####	####	####	####	####	####	####	####	######	2.074	2.049	None	3.90	#########	
							####	####	####	####	####	####	####	####	.187						
2228d	16	3942	3454	488	19.78	19.75	####	####	####	####	####	####	####	####	######	2.362	1.954	None	2.92	#########	Undulating.
							####	####	####	####	####	####	####	####	.158						
2231a	14	3660	3382	278	19.97	20.06	.822	####	####	####	####	.833	.816	.856	.947	2.792	2.273	None	2.27	#########	Undulating.
							.984	.813	####	.938	.945	.890	.895	####	.106						
2230	13	3596	3359	237	20.00	20.08	.754	.762	.735	.698	.779	.759	.903	.680	.700	3.213	########	None	1.59	#########	
							.638	.585	.569	.684	.672	.620	.652	.706	.083						
2234	1b	3948	3401	547	19.94	20.06	####	####	####	####	####	####	####	####	######	2.158	########	None	5.26	#########	Undulating Surface
							####	####	####	####	####	####	####	####	.255						
2225a	1ar	3824	3347	477	19.91	19.97	####	####	####	####	####	####	####	####	######	2.145	1.935	.460	3.64	#########	Good fan pattern at start, small finger at end. B panel will be thin at trailing adge due to timing adjustment. Severe debonds.
							####	####	####	####	####	####	####	####	.174						
2225d	5br	3767	3384	383	20.03	20.03	####	####	####	####	####	####	####	####	######	2.394	2.114	.562	3.17	#########	
							####	####	####	####	####	####	####	####	.165						

APPENDIX D3

coop8020...EFFECTS TABLE...High Output SOFI Sprays

	flow	spec	dist	conc	MACRO_DENSITY	sigres	STRIPE_WIDTH	sigres	20"ROUGHNESS	sigres	MICRO_DENSITY	sigres
0	0	0	0	0	2.672		24.119		1.580		2.405	
1	1	0	0	0	-0.162	*	-3.167	8.458	2.086	**	-0.113	*
2	0	1	0	0	0.537	***	-4.680	9.725	-2.529	**	0.312	***
3	0	0	1	0	0.224	**	20.557	***	-1.255	2.609	0.295	***
4	0	0	0	1	0.506	***	17.938	***	-1.009	2.340	0.341	***
5	2	0	0	0	-0.003	0.179!	4.688	10.715	0.436	2.057!	-0.111	*
6	0	2	0	0	-0.208	*	1.129	7.207!	0.552	2.186!	-0.014	0.108!
7	0	0	2	0	0.080	0.292!	3.638	10.917!	0.252	2.209!	-0.010	0.123!
8	0	0	0	2	-0.061	0.228!	-2.266	8.009!	0.526	2.070!	-0.034	0.123!
9	1	1	0	0	-0.091	0.250	1.398	6.847!	-0.997	2.463	-0.016	0.100!
10	1	0	1	0	0.061	0.216!	-1.752	7.072!	-0.429	1.859!	0.063	0.145
11	1	0	0	1	-0.018	0.168!	-5.552	*	-0.260	1.648!	-0.098	*
12	0	1	1	0	0.168	*	-1.582	6.997!	0.569	2.026!	0.059	0.143
13	0	1	0	1	0.217	*	-2.047	7.463!	0.696	2.152!	0.202	***
14	0	0	1	1	0.095	0.244	7.583	**	0.317	1.690!	0.187	***
RESD SD					0.130		4.450		1.197		0.069	
REP SD					0.137		4.339		1.349		0.061	
INFLNCE					0.998		1		0.996		1	

20 Data rows used
5 Replications
25 Observations in all

ORIGINAL PAGE IS OF POOR QUALITY

Given RPM, Target Macro Density, Target Thickness, Specific Gravity and Initial Station Number, the model calculates: Flow Rate. and Hoist Velocity

This particular spreadsheet was set up to spray variable-output simulations on the cone at MSFC. It has produced foam within a few percent of target thickness and density.

Pass Number	Time t(sec	RPM	Station #	Gun Travel After Pass(")	Dia.(ft)	SPi(in/sec)	Target Macro Density	Expected Micro Density	Required thickness	flow rate (lbs/min)	Hoist Vel. (in/Min)	Gals/min 'A' Comp.	RAP Density	Estimated Cup Density	Process Constant 'A'	Process Constant 'B'	Process Constant 'C'	Specific Gravity of 'A' and 'B' mixture
1	0.00	3.00	437.84	0.00	12.28	23.14	2.70	2.25	2.15	18.79	11.91	1.356	2.18	1.92	0.8768	1.918	0.0129	1.11
2	20.00	3.14	434.63	3.97	11.94	23.58	2.70	2.25	2.15	19.04	12.40	1.374	2.18	1.92	0.8768	1.918	0.0129	1.11
3	39.09	3.29	431.44	3.95	11.61	23.96	2.70	2.25	2.15	19.26	12.90	1.390	2.18	1.92	0.8768	1.918	0.0129	1.11
4	57.36	3.43	428.26	3.93	11.27	24.27	2.70	2.25	2.15	19.44	13.41	1.403	2.18	1.92	0.8768	1.918	0.0129	1.11
5	74.86	3.57	425.09	3.91	10.93	24.51	2.70	2.25	2.15	19.57	13.92	1.413	2.18	1.92	0.8768	1.918	0.0129	1.11
6	91.67	3.71	421.94	3.90	10.58	24.68	2.70	2.25	2.15	19.67	14.44	1.420	2.18	1.92	0.8768	1.918	0.0129	1.11
7	107.83	3.86	418.79	3.89	10.23	24.78	2.70	2.25	2.15	19.73	14.97	1.424	2.18	1.92	0.8768	1.918	0.0129	1.11
8	123.40	4.00	415.65	3.88	9.87	24.80	2.70	2.25	2.15	19.74	15.50	1.425	2.18	1.92	0.8768	1.918	0.0129	1.11
9	138.41	4.14	412.51	3.88	9.52	24.75	2.70	2.25	2.15	19.71	16.06	1.423	2.18	1.92	0.8768	1.918	0.0129	1.11
10	152.90	4.28	409.38	3.88	9.15	24.63	2.70	2.25	2.15	19.64	16.62	1.418	2.18	1.92	0.8768	1.918	0.0129	1.11
11	166.91	4.43	406.24	3.88	8.78	24.42	2.70	2.25	2.15	19.53	17.20	1.409	2.18	1.92	0.8768	1.918	0.0129	1.11
12	180.47	4.57	403.09	3.89	8.41	24.13	2.70	2.25	2.27	19.36	16.84	1.397	2.18	1.92	0.8768	1.918	0.0129	1.11
13	193.60	4.71	400.11	3.69	8.05	23.82	2.70	2.25	2.39	19.18	16.52	1.384	2.18	1.92	0.8768	1.918	0.0129	1.11
14	206.34	4.85	397.27	3.51	7.70	23.49	2.70	2.25	2.51	18.99	16.23	1.370	2.18	1.92	0.8768	1.918	0.0129	1.11
15	218.71	5.00	394.57	3.34	7.37	23.13	2.70	2.25	2.63	18.78	15.97	1.355	2.18	1.92	0.8768	1.918	0.0129	1.11
16	230.72	5.14	391.98	3.20	7.05	22.75	2.70	2.25	2.75	18.55	15.74	1.339	2.18	1.92	0.8768	1.918	0.0129	1.11
17	242.40	5.28	389.50	3.06	6.73	22.34	2.70	2.25	2.88	18.31	15.48	1.321	2.18	1.92	0.8768	1.918	0.0129	1.11
18	253.76	5.42	387.13	2.93	6.43	21.91	2.70	2.25	3.00	18.05	15.29	1.303	2.18	1.92	0.8768	1.918	0.0129	1.11
19	264.83	5.57	384.85	2.82	6.14	21.46	2.70	2.25	3.00	17.78	15.75	1.283	2.18	1.92	0.8768	1.918	0.0129	1.11
20	275.61	5.71	382.56	2.83	5.84	20.94	2.70	2.25	3.00	17.51	16.29	1.264	2.18	1.92	0.8768	1.918	0.0129	1.11
21	286.12	5.85	380.25	2.85	5.54	20.35	2.70	2.25	3.00	17.09	16.71	1.233	2.18	1.92	0.8768	1.918	0.0129	1.11
22	296.38	5.85	377.94	2.86	5.23	19.23	2.70	2.25	3.00	16.37	16.90	1.182	2.18	1.92	0.8768	1.918	0.0129	1.11
23	306.63	5.85	375.60	2.89	4.92	18.07	2.70	2.25	3.00	15.62	17.10	1.127	2.18	1.92	0.8768	1.918	0.0129	1.11
24	316.89	5.85	373.24	2.92	4.60	16.90	2.70	2.25	3.00	14.82	17.30	1.070	2.18	1.92	0.8768	1.918	0.0129	1.11
25	327.15	5.85	370.84	2.96	4.27	15.70	2.70	2.25	3.00	13.98	17.51	1.009	2.18	1.92	0.8768	1.918	0.0129	1.11
26	337.40	5.85	368.42	2.99	3.94	14.47	2.41	2.01	3.00	18.70	28.33	1.350	2.18	1.92	0.8768	1.918	0.0129	1.11
27	347.66	5.85	364.50	4.84	3.39	12.45	2.33	1.94	3.00	19.01	34.25	1.372	2.18	1.92	0.8768	1.918	0.0129	1.11
28	357.92	5.85	359.77	5.85	2.71	9.97	2.24	1.86	3.00	19.54	45.07	1.410	2.18	1.92	0.8768	1.918	0.0129	1.11
29	368.17	5.85	353.54	7.70	1.80	6.62	2.70	2.25	3.00	6.69	18.47	.483	2.18	1.92	0.8768	1.918	0.0129	1.11

30	378.43	5.85	350.98	3.16	1.42	5.22	2.70	2.25	3.00	5.39	18.27	.389	2.18	1.92	0.8768	1.918	0.0129
31	388.69	5.85	348.45	3.12	1.04	3.82	2.70	2.25	3.00	4.03	17.69		2.18	1.92	0.8768	1.918	0.0129
32	398.94	5.85	346.01	3.02	0.67	2.45	2.70	2.25	3.00	2.64	16.31		2.18	1.92	0.8768	1.918	0.0129
33	409.20	5.85	343.75	2.79	0.32	1.17	2.70	2.25	3.00	1.29	12.83		2.18	1.92	0.8768	1.918	0.0129
34	419.45	5.85	341.98	2.19	0.04	0.16	2.70	2.25	3.00	0.18	3.42		2.18	1.92	0.8768	1.918	0.0129
35	429.71	5.85	341.51	0.58	-0.03	-0.11	2.70	2.25	3.00	-0.13	-3.28		2.18	1.92	0.8768	1.918	0.0129
36	439.97	5.85	341.96	-0.56	0.04	0.15	2.70	2.25	3.00	0.16	3.22		2.18	1.92	0.8768	1.918	0.0129
37	450.22	5.85	341.52	0.55	-0.03	-0.11	2.70	2.25	3.00	-0.12	-3.11		2.18	1.92	0.8768	1.918	0.0129
38	460.48	5.85	341.95	-0.53	0.04	0.14	2.70	2.25	3.00	0.16	3.06		2.18	1.92	0.8768	1.918	0.0129
39	470.74	5.85	341.52	0.52	-0.03	-0.10	2.70	2.25	3.00	-0.12	-2.98		2.18	1.92	0.8768	1.918	0.0129
40	480.99	5.85	341.93	-0.51	0.04	0.13	2.70	2.25	3.00	0.15	2.93		2.18	1.92	0.8768	1.918	0.0129
41	491.25	5.85	341.53	0.50	-0.03	-0.10	2.70	2.25	3.00	-0.11	-2.87		2.18	1.92	0.8768	1.918	0.0129
42	501.51	5.85	341.93	-0.49	0.03	0.13	2.70	2.25	3.00	0.14	2.83		2.18	1.92	0.8768	1.918	0.0129
43	511.76	5.85	341.53	0.48	-0.03	-0.10	2.70	2.25	3.00	-0.11	-2.78		2.18	1.92	0.8768	1.918	0.0129
44	522.02	5.85	341.92	-0.47	0.03	0.12	2.70	2.25	3.00	0.14	2.75		2.18	1.92	0.8768	1.918	0.0129
45	532.28	5.85	341.54	0.47	-0.03	-0.10	2.70	2.25	3.00	-0.11	-2.70		2.18	1.92	0.8768	1.918	0.0129
46	542.53	5.85	341.91	-0.46	0.03	0.12	2.70	2.25	3.00	0.13	2.67		2.18	1.92	0.8768	1.918	0.0129
47	552.79	5.85	341.54	0.46	-0.03	-0.09	2.70	2.25	3.00	-0.10	-2.63		2.18	1.92	0.8768	1.918	0.0129
48	563.04	5.85	341.91	-0.45	0.03	0.12	2.70	2.25	3.00	0.13	2.61		2.18	1.92	0.8768	1.918	0.0129
49	573.30	5.85	341.55	0.45	-0.02	-0.09	2.70	2.25	3.00	-0.10	-2.57		2.18	1.92	0.8768	1.918	0.0129
50	583.56	5.85	341.90	-0.44	0.03	0.11	2.70	2.25	3.00	0.13	2.55		2.18	1.92	0.8768	1.918	0.0129
51	593.81	5.85	341.55	0.44	-0.02	-0.09	2.70	2.25	3.00	-0.10	-2.52		2.18	1.92	0.8768	1.918	0.0129
52	604.07	5.85	341.90	-0.43	0.03	0.11	2.70	2.25	3.00	0.12	2.50		2.18	1.92	0.8768	1.918	0.0129
53	614.33	5.85	341.55	0.43	-0.02	-0.09	2.70	2.25	3.00	-0.10	-2.48		2.18	1.92	0.8768	1.918	0.0129
54	624.58	5.85	341.89	-0.42	0.03	0.11	2.70	2.25	3.00	0.12	2.46		2.18	1.92	0.8768	1.918	0.0129
55	634.84	5.85	341.55	0.42	-0.02	-0.09	2.70	2.25	3.00	-0.10	-2.44		2.18	1.92	0.8768	1.918	0.0129
56	645.10	5.85	341.89	-0.42	0.03	0.11	2.70	2.25	3.00	0.12	2.42		2.18	1.92	0.8768	1.918	0.0129
57	655.35	5.85	341.55	0.41	-0.02	-0.09	2.70	2.25	3.00	-0.10	-2.40		2.18	1.92	0.8768	1.918	0.0129
58	665.61	5.85	341.89	-0.41	0.03	0.11	2.70	2.25	3.00	0.12	2.39		2.18	1.92	0.8768	1.918	0.0129
59	675.87	5.85	341.56	0.41	-0.02	-0.08	2.70	2.25	3.00	-0.10	-2.37		2.18	1.92	0.8768	1.918	0.0129
60	686.12	5.85	341.88	-0.41	0.03	0.10	2.70	2.25	3.00	0.12	2.36		2.18	1.92	0.8768	1.918	0.0129
61	696.38	5.85	341.56	0.40	-0.02	-0.08	2.70	2.25	3.00	-0.09	-2.34		2.18	1.92	0.8768	1.918	0.0129
62	706.63	5.85	341.88	-0.40	0.03	0.10	2.70	2.25	3.00	0.11	2.33		2.18	1.92	0.8768	1.918	0.0129
63	716.89	5.85	341.56	0.40	-0.02	-0.08	2.70	2.25	3.00	-0.09	-2.32		2.18	1.92	0.8768	1.918	0.0129
64	727.15	5.85	341.88	-0.40	0.03	0.10	2.70	2.25	3.00	0.11	2.31		2.18	1.92	0.8768	1.918	0.0129
65	737.40	5.85	341.56	0.39	-0.02	-0.08	2.70	2.25	3.00	-0.09	-2.29		2.18	1.92	0.8768	1.918	0.0129
66	747.66	5.85	341.88	-0.39	0.03	0.10	2.70	2.25	3.00	0.11	2.29		2.18	1.92	0.8768	1.918	0.0129
67	757.92	5.85	341.56	0.39	-0.02	-0.08	2.70	2.25	3.00	-0.09	-2.27		2.18	1.92	0.8768	1.918	0.0129
68	768.17	5.85	341.88	-0.39	0.03	0.10	2.70	2.25	3.00	0.11	2.26		2.18	1.92	0.8768	1.918	0.0129
69	778.43	5.85	341.56	0.39	-0.02	-0.08	2.70	2.25	3.00	-0.09	-2.25		2.18	1.92	0.8768	1.918	0.0129
70	788.69	5.85	341.87	-0.39	0.03	0.10	2.70	2.25	3.00	0.11	2.25		2.18	1.92	0.8768	1.918	0.0129

71	798.94	5.85	341.56	0.38	-0.02	-0.08	2.70	2.25	3.00	-0.09	-2.24	2.18	1.92	0.8768	1.918	0.0129
72	809.20	5.85	341.87	-0.38	0.03	0.10	2.70	2.25	3.00	0.11	2.23	2.18	1.92	0.8768	1.918	0.0129
73	819.45	5.85	341.57	0.38	-0.02	-0.08	2.70	2.25	3.00	-0.09	-2.22	2.18	1.92	0.8768	1.918	0.0129
74	829.71	5.85	341.87	-0.38	0.03	0.10	2.70	2.25	3.00	0.11	2.21	2.18	1.92	0.8768	1.918	0.0129
75	839.97	5.85	341.57	0.38	-0.02	-0.08	2.70	2.25	3.00	-0.09	-2.21	2.18	1.92	0.8768	1.918	0.0129
76	850.22	5.85	341.87	-0.38	0.03	0.10	2.70	2.25	3.00	0.11	2.20	2.18	1.92	0.8768	1.918	0.0129
77	860.48	5.85	341.57	0.38	-0.02	-0.08	2.70	2.25	3.00	-0.09	-2.19	2.18	1.92	0.8768	1.918	0.0129
78	870.74	5.85	341.87	-0.37	0.03	0.10	2.70	2.25	3.00	0.11	2.19	2.18	1.92	0.8768	1.918	0.0129
79	880.99	5.85	341.57	0.37	-0.02	-0.08	2.70	2.25	3.00	-0.09	-2.18	2.18	1.92	0.8768	1.918	0.0129
80	891.25	5.85	341.87	-0.37	0.03	0.09	2.70	2.25	3.00	0.11	2.17	2.18	1.92	0.8768	1.918	0.0129
81	901.51	5.85	341.57	0.37	-0.02	-0.08	2.70	2.25	3.00	-0.09	-2.17	2.18	1.92	0.8768	1.918	0.0129
82	911.76	5.85	341.87	-0.37	0.03	0.09	2.70	2.25	3.00	0.11	2.16	2.18	1.92	0.8768	1.918	0.0129
83	922.02	5.85	341.57	0.37	-0.02	-0.08	2.70	2.25	3.00	-0.09	-2.16	2.18	1.92	0.8768	1.918	0.0129
84	932.28	5.85	341.87	-0.37	0.03	0.09	2.70	2.25	3.00	0.10	2.15	2.18	1.92	0.8768	1.918	0.0129
85	942.53	5.85	341.57	0.37	-0.02	-0.08	2.70	2.25	3.00	-0.09	-2.15	2.18	1.92	0.8768	1.918	0.0129
86	952.79	5.85	341.87	-0.37	0.03	0.09	2.70	2.25	3.00	0.10	2.14	2.18	1.92	0.8768	1.918	0.0129
87	963.04	5.85	341.57	0.37	-0.02	-0.08	2.70	2.25	3.00	-0.09	-2.14	2.18	1.92	0.8768	1.918	0.0129
88	973.30	5.85	341.87	-0.37	0.03	0.09	2.70	2.25	3.00	0.10	2.14	2.18	1.92	0.8768	1.918	0.0129
89	983.56	5.85	341.57	0.37	-0.02	-0.08	2.70	2.25	3.00	-0.09	-2.13	2.18	1.92	0.8768	1.918	0.0129
90	993.81	5.85	341.86	-0.36	0.03	0.09	2.70	2.25	3.00	0.10	2.13	2.18	1.92	0.8768	1.918	0.0129
91	1004.07	5.85	341.57	0.36	-0.02	-0.08	2.70	2.25	3.00	-0.09	-2.12	2.18	1.92	0.8768	1.918	0.0129
92	1014.33	5.85	341.86	-0.36	0.03	0.09	2.70	2.25	3.00	0.10	2.12	2.18	1.92	0.8768	1.918	0.0129
93	1024.58	5.85	341.57	0.36	-0.02	-0.08	2.70	2.25	3.00	-0.09	-2.12	2.18	1.92	0.8768	1.918	0.0129
94	1034.84	5.85	341.86	-0.36	0.02	0.09	2.70	2.25	3.00	0.10	2.11	2.18	1.92	0.8768	1.918	0.0129
95	1045.10	5.85	341.57	0.36	-0.02	-0.08	2.70	2.25	3.00	-0.09	-2.11	2.18	1.92	0.8768	1.918	0.0129
96	1055.35	5.85	341.86	-0.36	0.02	0.09	2.70	2.25	3.00	0.10	2.11	2.18	1.92	0.8768	1.918	0.0129
97	1065.61	5.85	341.57	0.36	-0.02	-0.08	2.70	2.25	3.00	-0.09	-2.10	2.18	1.92	0.8768	1.918	0.0129
98	1075.87	5.85	341.86	-0.36	0.02	0.09	2.70	2.25	3.00	0.10	2.10	2.18	1.92	0.8768	1.918	0.0129
99	1086.12	5.85	341.57	0.36	-0.02	-0.08	2.70	2.25	3.00	-0.09	-2.10	2.18	1.92	0.8768	1.918	0.0129
100	1096.38	5.85	341.86	-0.36	0.02	0.09	2.70	2.25	3.00	0.10	2.10	2.18	1.92	0.8768	1.918	0.0129
101	1106.63	5.85	341.57	0.36	-0.02	-0.08	2.70	2.25	3.00	-0.08	-2.09	2.18	1.92	0.8768	1.918	0.0129
102	1116.89	5.85	341.86	-0.36	0.02	0.09	2.70	2.25	3.00	0.10	2.09	2.18	1.92	0.8768	1.918	0.0129
103	1127.15	5.85	341.57	0.36	-0.02	-0.08	2.70	2.25	3.00	-0.08	-2.09	2.18	1.92	0.8768	1.918	0.0129
104	1137.40	5.85	341.86	-0.36	0.02	0.09	2.70	2.25	3.00	0.10	2.09	2.18	1.92	0.8768	1.918	0.0129
105	1147.66	5.85	341.57	0.36	-0.02	-0.08	2.70	2.25	3.00	-0.08	-2.08	2.18	1.92	0.8768	1.918	0.0129
106	1157.92	5.85	341.86	-0.36	0.02	0.09	2.70	2.25	3.00	0.10	2.08	2.18	1.92	0.8768	1.918	0.0129
107	1168.17	5.85	341.57	0.36	-0.02	-0.08	2.70	2.25	3.00	-0.08	-2.08	2.18	1.92	0.8768	1.918	0.0129
108	1178.43	5.85	341.86	-0.36	0.02	0.09	2.70	2.25	3.00	0.10	2.08	2.18	1.92	0.8768	1.918	0.0129
109	1188.69	5.85	341.57	0.36	-0.02	-0.07	2.70	2.25	3.00	-0.08	-2.07	2.18	1.92	0.8768	1.918	0.0129
110	1198.94	5.85	341.86	-0.35	0.02	0.09	2.70	2.25	3.00	0.10	2.07	2.18	1.92	0.8768	1.918	0.0129
111	1209.20	5.85	341.57	0.35	-0.02	-0.07	2.70	2.25	3.00	-0.08	-2.07	2.18	1.92	0.8768	1.918	0.0129

112	1219.45	5.85	341.86	-0.35	0.02	0.09	2.70	2.25	3.00	0.10	2.07	2.18	1.92	0.8768	1.918	0.0129
113	1229.71	5.85	341.57	0.35	-0.02	-0.07	2.70	2.25	3.00	-0.08	-2.07	2.18	1.92	0.8768	1.918	0.0129
114	1239.97	5.85	341.86	-0.35	0.02	0.09	2.70	2.25	3.00	0.10	2.07	2.18	1.92	0.8768	1.918	0.0129
115	1250.22	5.85	341.57	0.35	-0.02	-0.07	2.70	2.25	3.00	-0.08	-2.06	2.18	1.92	0.8768	1.918	0.0129
116	1260.48	5.85	341.86	-0.35	0.02	0.09	2.70	2.25	3.00	0.10	2.06	2.18	1.92	0.8768	1.918	0.0129
117	1270.74	5.85	341.57	0.35	-0.02	-0.07	2.70	2.25	3.00	-0.08	-2.06	2.18	1.92	0.8768	1.918	0.0129
118	1280.99	5.85	341.86	-0.35	0.02	0.09	2.70	2.25	3.00	0.10	2.06	2.18	1.92	0.8768	1.918	0.0129
119	1291.25	5.85	341.57	0.35	-0.02	-0.07	2.70	2.25	3.00	-0.08	-2.06	2.18	1.92	0.8768	1.918	0.0129
120	1301.51	5.85	341.86	-0.35	0.02	0.09	2.70	2.25	3.00	0.10	2.06	2.18	1.92	0.8768	1.918	0.0129
121	1311.76	5.85	341.57	0.35	-0.02	-0.07	2.70	2.25	3.00	-0.08	-2.06	2.18	1.92	0.8768	1.918	0.0129
122	1322.02	5.85	341.86	-0.35	0.02	0.09	2.70	2.25	3.00	0.10	2.06	2.18	1.92	0.8768	1.918	0.0129
123	1332.28	5.85	341.57	0.35	-0.02	-0.07	2.70	2.25	3.00	-0.08	-2.05	2.18	1.92	0.8768	1.918	0.0129
124	1342.53	5.85	341.86	-0.35	0.02	0.09	2.70	2.25	3.00	0.10	2.05	2.18	1.92	0.8768	1.918	0.0129
125	1352.79	5.85	341.57	0.35	-0.02	-0.07	2.70	2.25	3.00	-0.08	-2.05	2.18	1.92	0.8768	1.918	0.0129
126	1363.04	5.85	341.86	-0.35	0.02	0.09	2.70	2.25	3.00	0.10	2.05	2.18	1.92	0.8768	1.918	0.0129
127	1373.30	5.85	341.57	0.35	-0.02	-0.07	2.70	2.25	3.00	-0.08	-2.05	2.18	1.92	0.8768	1.918	0.0129
128	1383.56	5.85	341.86	-0.35	0.02	0.09	2.70	2.25	3.00	0.10	2.05	2.18	1.92	0.8768	1.918	0.0129
129	1393.81	5.85	341.58	0.35	-0.02	-0.07	2.70	2.25	3.00	-0.08	-2.05	2.18	1.92	0.8768	1.918	0.0129
130	1404.07	5.85	341.86	-0.35	0.02	0.09	2.70	2.25	3.00	0.10	2.05	2.18	1.92	0.8768	1.918	0.0129
131	1414.33	5.85	341.58	0.35	-0.02	-0.07	2.70	2.25	3.00	-0.08	-2.05	2.18	1.92	0.8768	1.918	0.0129
132	1424.58	5.85	341.86	-0.35	0.02	0.09	2.70	2.25	3.00	0.10	2.05	2.18	1.92	0.8768	1.918	0.0129
133	1434.84	5.85	341.58	0.35	-0.02	-0.07	2.70	2.25	3.00	-0.08	-2.04	2.18	1.92	0.8768	1.918	0.0129
134	1445.10	5.85	341.86	-0.35	0.02	0.09	2.70	2.25	3.00	0.10	2.04	2.18	1.92	0.8768	1.918	0.0129
135	1455.35	5.85	341.58	0.35	-0.02	-0.07	2.70	2.25	3.00	-0.08	-2.04	2.18	1.92	0.8768	1.918	0.0129
136	1465.61	5.85	341.86	-0.35	0.02	0.09	2.70	2.25	3.00	0.10	2.04	2.18	1.92	0.8768	1.918	0.0129
137	1475.87	5.85	341.58	0.35	-0.02	-0.07	2.70	2.25	3.00	-0.08	-2.04	2.18	1.92	0.8768	1.918	0.0129
138	1486.12	5.85	341.86	-0.35	0.02	0.09	2.70	2.25	3.00	0.10	2.04	2.18	1.92	0.8768	1.918	0.0129
139	1496.38	5.85	341.58	0.35	-0.02	-0.07	2.70	2.25	3.00	-0.08	-2.04	2.18	1.92	0.8768	1.918	0.0129
140	1506.63	5.85	341.86	-0.35	0.02	0.09	2.70	2.25	3.00	0.10	2.04	2.18	1.92	0.8768	1.918	0.0129
141	1516.89	5.85	341.58	0.35	-0.02	-0.07	2.70	2.25	3.00	-0.08	-2.04	2.18	1.92	0.8768	1.918	0.0129
142	1527.15	5.85	341.86	-0.35	0.02	0.09	2.70	2.25	3.00	0.10	2.04	2.18	1.92	0.8768	1.918	0.0129
143	1537.40	5.85	341.58	0.35	-0.02	-0.07	2.70	2.25	3.00	-0.08	-2.04	2.18	1.92	0.8768	1.918	0.0129
144	1547.66	5.85	341.86	-0.35	0.02	0.09	2.70	2.25	3.00	0.10	2.04	2.18	1.92	0.8768	1.918	0.0129
145	1557.92	5.85	341.58	0.35	-0.02	-0.07	2.70	2.25	3.00	-0.08	-2.04	2.18	1.92	0.8768	1.918	0.0129
146	1568.17	5.85	341.86	-0.35	0.02	0.09	2.70	2.25	3.00	0.10	2.04	2.18	1.92	0.8768	1.918	0.0129
147	1578.43	5.85	341.58	0.35	-0.02	-0.07	2.70	2.25	3.00	-0.08	-2.03	2.18	1.92	0.8768	1.918	0.0129
148	1588.69	5.85	341.86	-0.35	0.02	0.09	2.70	2.25	3.00	0.10	2.03	2.18	1.92	0.8768	1.918	0.0129