NASA-CR-197998

SSD95D0173 P. 219

Propulsion Module Design Review

Milestone 8

Cooperative Agreement NCC8-47

April 17, 1995

J. H. LeBlanc
IPTD Design Task Lead

for T. J. Healy
Chief Engineer
Advanced Launch Systems

(NASA-CR-197998) PROPULSION MODULE DESIGN REVIEW. MILESTONE 8: INTEGRATED PROPULSION TECHNOLOGY DEMONSTRATOR (Rockwell International Corp.) 219 p

N95-71091

Unclas

Z9/20 0045502

MARSHALL SPACE FLIGHT CENTER

Rockwell Aerospace

Space Systems Division

SSD95D0173

Propulsion Module Design Review

Milestone 8

Cooperative Agreement NCC8-47

April 17, 1995

J. H. LeBlanc
IPTD Design Task Lead

for T. J. Healy
Chief Engineer
Advanced Launch Systems

MARSHALL SPACE FLIGHT CENTER

Rockwell Aerospace
Space Systems Division

Integrated Propulsion Technology Demonstrator

Propulsion Module Design Review

April 15, 1995

Prepared by

James P. Rogers
Rockwell Space Systems Division
Downey, Ca.

Curtis L. Vesperman
Rockwell Space Systems Division
Downey, Ca.

TABLE OF CONTENTS

1. INTRODUCTION 1

2. PURPOSE AND DESIGN REQUIREMENTS 1

2.1 PROJECT LEVEL IPTD REQUIREMENTS 1
2.2 IPTD CONFIGURATION REQUIREMENTS 2

3. PROPULSION MODULE FLUID/MECHANICAL DESIGN 3

3.1 FLUID/MECHANICAL DESIGN REQUIREMENTS 3
3.2 FLUID/MECHANICAL DESIGN ELEMENTS 4
3.2.1 Fluid Schematics 4
3.2.2 Fluid System Design 7
3.2.3 Structural Frame Work Design 10

4. PROPULSION CHECKOUT AND CONTROL SYSTEM DESIGN 11

4.1 PCCS DESIGN REQUIREMENTS 11
4.2 PCCS DESIGN ELEMENTS 12
4.2.1 System Architecture 12
4.2.2 Instrumentation requirements 15
4.2.3 Component/System models 16
4.2.4 FMEA and component failure modes 17
4.2.5 SW requirements and design 18

List of References 19

APPENDIX A: IPTD FLUID SCHEMATICS A-1

APPENDIX B: PROPULSION MODULE FLUID SYSTEMS DRAWINGS B-1

APPENDIX C: PROPULSION MODULE SUPPORT STRUCTURE C-1

APPENDIX D: PCCS SYSTEM ARCHITECTURE D-1

APPENDIX E: INSTRUMENTATION REQUIREMENTS E-1

APPENDIX F: COMPONENT AND SYSTEM MODELS F-1

APPENDIX G: FMEA AND COMPONENT FAILURE MODES ..... Gi

APPENDIX H: PCCS CONTROL AND DATA SOFTWARE DESIGN ..... Hi

APPENDIX I: PCCS TECHNOLOGY TESTBED INTERFACE Ii

List of Tables

Table 2-1 IPTD Configuration and Associated Technology Demonstration.....3

Propulsion Module Design Review

1. INTRODUCTION

The propulsion module for the Integrated Propulsion Technology Demonstrator (IPTD) consists of main engine(s), and fluid, mechanical, electrical, propulsion checkout and control systems (PCCS), and associated instrumentation representative of an X-33 main propulsion system (MPS). These systems are integrated within a structural support fixture which includes mounting provisions for the MPS feed lines and ancillary equipment. The weight of the main engine(s) and associated thrust loads are reacted by a separate thrust structure mounted directly to the large structural beams (i.e., Norman Beams) of the Advanced Engine Test Facility (AETF).

This document provides a summary of the design requirements, and associated design features of the major elements of the propulsion module. Significant design detail is provided for the hardware that will be procured, fabricated, assembled and delivered to MSFC in October 1995. Designs of hardware items due for fabrication at a later date (such as the thrust structure and tank modules) are presented only to the degree necessary to indicate critical interface requirements. This report also documents the findings of an independent peer of the design to ensure that major design oversights or errors are caught early in this design and fabrication process. This peer review board consisted of senior propulsion, control, and software engineers at Rockwell who had avionics/ground control and data handling system or cryogenic design experience on the Saturn launch vehicle and/or the Shuttle.

2. DESIGN REQUIREMENTS

A set of project level and lower level "configuration" design requirements for the IPTD were established based on user needs documented in the Test Objectives and Test Plans reports (Reference 1 & 2), the NASA/MSFC RLV Program Office, Propulsion Lab engineering staff, and Rockwell's X-33 /RLV program development plan. These high level requirements provides the basis from which propulsion module design requirements were developed for the fluid/mechanical systems (Section 3.), and the PCCS. (Section 4.). FY 94 & 95 funding limitations, hardware availability, and timing of the first Test Sequence (February - April 1996) provides additional constraints in developing the propulsion module design requirements discussed in Sections 3 & 4.

2.1 PROJECT LEVEL IPTD REQUIREMENTS

The RLV program needs a complete propulsion system demonstrator to evaluate operations benefits of advanced designs and technologies to support X-33 / RLV

business and technical decisions. To satisfy this need, the following set of "Project Level" IPTD requirements, based on RLV program level inputs, were defined;

1.) Propulsion hardware-in-the-loop preflight and launch processing simulator with single propulsion console for launch command and control

2.) Verifies functionality of X-33 propulsion system by 1997, and subset of the RLV propulsion system by 1999

3.) Capable of replacing SOA components and systems with advanced technology versions with minimum test article reconfiguration

4.) Provide data necessary to support validation of operational benefits of incorporating new technologies

5.) Adaptable to technology & operation assessment needs of multiple Government & industry users

These top level requirements defines the basis from which IPTD configuration and lower level design requirements evolve.

2.2 IPTD CONFIGURATION DESIGN REQUIREMENTS

Requirements which defines the top level IPTD configuration characteristics are influenced primarily by the need to provide the "user " with test data to support the various technology and system demonstrations specified in Reference 1 and 2. These IPTD configuration design requirements and corresponding technology demonstrations are presented in Table 2-1. Other requirements which has a significant impact on the IPTD configuration design are the following;

1.) The test article will be installed in the second test position of the Advanced Engine Test Facility (AETF) at MSFC. Installation and removal process should not require significant alteration of the existing structure and systems within the AETF

2.) The PCCS shall be capable of being isolated from safing commands issued by the test conductor using existing AETF command and control capabilities.

3.) The LH2 tank volume is the largest which can be shipped with standard commercial trucking using existing highway clearance restrictions. The tank geometry of the LO2 and RP-1 will be based on mixture ratio requirements of the TBD engine, but will not exceed the length or diameter constraints of the LH2 tank.

4.) Standard "industrial grade" or commercial material, hardware, design techniques, and common components will be used to minimize cost if operational test data is not compromised.

IPTD CONFIGURATION DESIGN REQUIREMENT	APPLICABILITY TO TECHNOLOGY DEMONSTRATION
Use STS or Other Flight Type Components	Evaluate Manual (STS) vs. Automated C/O (Validate RLV Cost Model to Known Basepoint)
Aft Mounted Fluid/Electrical Interfaces	Rise-Off Disconnect H/W Integration (Requires *Funding)
Flanged Joints in Feed System	Replace Existing Components with Tech. Upgrades
12 Inch Feedlines	High Flow/High Thrust Engine Integ. (~500 Klbs)
Dual Outlet from Feedline Manifold	Multi-Engine Integration and Operation (Including Aerospike Segment)
Dual Suction Line from Tanks	Evaluate Anti-Geyser and Prop. Densification (*Funding)
Bypass/Bleed Valves in Feed System	Evaluate Bleed/No Bleed Conditioning Timelines
On-Line Access to Support Instrumentation Requirements & Embedded PCCS	Funct. C/O, Auto C/O - Health Assessments, Tech. Upgrades
RP-1 Tank Module and Feed System	System Ops Evaluation of Tri-Propellant Complexity
Subsystem Module Stacked with Tankage	Evaluate Flight Type Integration of ACS/EPG/APS
Reconfigure Tank Module Orientation	Remain Flexible to Flight Vehicle Tankage Orientation Based On Industry Partner Req'ts
On-Board He System and Procedures	Evaluate Post Flight (Post Test) Safing Procedures

Table 2-1
IPTD Configuration and Associated Technology Demonstration

3. PROPULSION MODULE FLUID/MECHANICAL DESIGN

3.1 FLUID/MECHANICAL DESIGN REQUIREMENTS

1.) Maximize use of STS or other flight type valves and components

2.) Configure GSE/propulsion module interfaces to allow future rise-off disconnect hardware integration

3.) 12-inch feed lines to permit high flow/high thrust engine configuration.

4.) Dual outlet from a feed line manifold to permit multi-engine operation

5.) Dual "down-comer" line option from propellant tanks to assess anti-geyser/recirculation procedures

6.) Three separate propellant systems: LH2, LO2, and RP-1

7.) Provisions to permit bleed/no bleed propellant conditioning evaluation

8.) Flanged connections allowing replacement of components with technology upgrades

9.) System safing and inerting provisions

10.) Simulation of GSE fluid supply and control systems

11.) Structural installation into MSFC AETF allowing integration and thrust reaction of 500K lb. class engine

12.) Design to accommodate open/closed boattail configuring

3.2 FLUID/MECHANICAL DESIGN ELEMENTS

3.2.1 *Fluid Schematics*

Designer: Steve Petrilla, Senior Engineering Specialist, Propulsion Systems, Rockwell SSD DNY

Design concept/approach: The IPTD propulsion system is being designed to simulate a multi-engine system with a single engine in the 500K class. The system will accommodate either bi- or tri- propellant operation. It will also accommodate either a LO2 tank aft or forward configuration.

The LO2 and LH2 feed systems use a dual downcomer approach to maximize the passive recirculation flow through the manifold during the loading operation to enhance the usage of passive conditioning of the engine feed system and to serve as an anti-geyser line. The systems incorporate a helium injection system to initiate the convective flow.

Each individual feed line incorporates a prevalve for engine post-shutdown operation. The LO2 and LH2 systems incorporate a by-pass valve to prevent locking-up the pressure between the prevalve and the engine valves. The LO2 and LH2 prevalves are instrumented in a manner to determine their functional health(position indicators and actuator cylinder pressures).

The propellant fill systems consist of a single fill and drain valve for each system, a vehicle helium purge system to assist draining the fill line prior to liftoff and a GSE valve skid to control the flow rates during the filling and draining operations.

Schematic Nos. 3 & 4 have been merged into Schematic Nos. 1 & 2 and are no longer included as separate drawings. Schematic No. 8 has not been completed at the publication of this report.

The propulsion module fluid schematics are included in Appendix A. The fluid schematic designs are configured to satisfy Propulsion Module Fluid/Mechanical Design Requirements Nos. 4,5,6,7,9, and 10.

Reviewed by: Charles Wood, Project Manager, Advanced Programs, Rockwell SSD HSV

Conclusions:

A. Schematic/Fluid, IPTD - LH_2 - Sheet 1 of 10

1) Turbo pump bleed line includes no instrumentation. Suggest pressure and temperature. You should assure yourself that you can somehow determine flow.
2) No bleed line is shown upstream of turbo pump and one could be desirable/necessary. If added should have appropriate instrumentation.
3) To avoid the poor quality H_2 resulting from ground hardware chill down and potential damage to instrumentation you may consider a bleed in the supply line prior to entering the test article. This is particularly true for the O_2 system where damage can almost be assured. If added you may want a pressure/temp. measurement to determine when the flow has become relatively stable (less slugging).
4) I would suggest on this and subsequent drawings as appropriate identification of location for smart sensors/smart components
5) I would think He usage would be desired. For He inject you apparently depend on storage tank temp. Maybe this is good enough. Same applies to other He system branches.
6) Would suggest when the time is right to invest in an integrated schematic for test article/facility for all systems - by sequences.

B. Schematic/Fluid, IPTD - LO_2 - Sheet 2 of 10

1) Identical comment as for H_2 - A (2) - bleed line upstream of turbo pump.
2) I do not recognize an anti geyser line or provisions for adding one if needed. Perhaps it's not needed once necessary calculations are performed. Provision for adding if needed and reserve for instrumentation may be wise. Shuttle, while not having an anti geyser line, is trick at best and complicates operations.
3) Identical comment as for H_2 - A (3). Bleed line to fill line prior to fluid entry into test article.

C. Schematic/Fluid, IPTD - IPTD LH_2 and LO_2 tank module. Sheets 5 and 6 of 10.

1) Liquid level rakes (A&G) type measurement not currently identified. Shuttle type point level sensor not ideal. Caused extensive system integration testing. Suggest something else - also flexibility in design to accommodate potentially improved systems is highly desirable.
2) No pressure measurement shown in tank and no absolute pressure measurement shown in feed line.

D. Schematic/fluid, IPTD - IPTD propulsion module RP system - sheet 7 of 10

1) Test conducted with propulsion module enclosed to represent an engine compartment will yield cold RP-1. You may need local or complete insulation at that time. Also more temperature sensors. During the Saturn test era we destroyed many turbines because of low temperature fluid and had problems with reverse propellant stratification in the tankage. GN_2 purges were added to feed lines and insulation used at critical locations. I would expect similar issues here.

E. Schematics/Fluid, IPTD - IPTD propulsion module helium system - Sheet 10 of 10

1) Pressure/temp redundancy for sphere and downstream of regulators may be in order.
2) The ability to determine usage/fill rate is an attribute for enhance application of model based reasoning techniques to enhance automated checkout. Do you have that capability?

Reviewed by: James Ziese, Project Manager, Vehicle Systems Design, Rockwell SSD DNY

Conclusions:

A. Propulsion Module - LH2

1) Consider adding a check valve to the small pump drain line.
2) Ensure that the manifold purge line is located so that the entire system is inerted. Another purge near the pump might help.
3) A low pressure bleed upstream of the pump is a conditioning option. Design should be capable of adding this if needed.
4) Two downcomers for LH2 probably not necessary but does add versatility to system.
5) Is the tank drained through the flowmeter? If so, can FM stand the possible very high reverse flow. (Same for LO2 & RP)
6) Can a recirculation be added to duplicate Shuttle system?

B. Propulsion Module - LO2

1) Is LV212 also used for helium bubbling? Consider a separate valve with probably a smaller orifice, or even better, variable flow control to evaluate He bubbling.
2) A ground supplied GN2 purge system could save helium.

C. Tank Modules
1) The vent valves should provide relief function (either mechanical or software control) in addition to their vent function.

D. Propulsion Module - RP-1
1) The engine interface is not clear.

E. Propulsion Module - Helium
1) Can additional helium bottles be added? They could be needed for engine purging.

Reviewed by: Harv Le Blanc, Branch Manager, Cryogenic Systems, Rockwell SSD DNY

Conclusions:

A. Sheet 1- 750 psi helium supply is shown going to the vent port of LV102. Should be to the supply port.

B. Sheets 1, 2 & 7- Redundant check valves should be added in the helium purge supplies to each of the LH2, LO2, and RP-1 systems. This is a safety requirement to assure that fluids from these systems can not be mixed together in the event that the helium system is inadvertently shutdown and a leak occurs in the any of the purge check valves.

3.2.2 *Fluid System Design*

Designers: Cliff Barnett, Senior Engineering Specialist, Ground Support Equipment, Rockwell SSD DNY; James P. Rogers, Engineering Specialist, Laboratories and Test, Rockwell SSD DNY

Design concept/approach: The propellant systems piping design uses ANSI Sch 40S 6061-T6 welded aluminum pipe for all the major fluid runs for cost savings and ease of fabrication. The aluminum pipe also allows for easy installation of various types of bosses, ports, and penetrations for different kinds of instrumentation. The cryogenic lines will be insulated with SOFI for both the LH2 and LO2 systems. The RP-1 system will be uninsulated.

The LH2 and LO2 systems will be configured with a 12-inch pipe horizontal propellant distribution manifold which could be typical of a multi-engine RLV. The

manifold will have two 12-inch upper connections for a feed line "down-comer" and an anti-geyser or recirculation return line from a propellant tank. For the propulsion module only test series, the LH2 feed line "down-comer" connection will be routed to a vent return system to allow fluid flow through the manifold; and the LO2 "down-comer" connection will be routed to the MSFC AETF LO2 run tank for liquid level control operations. The anti-geyser/recirculation return connection will be blocked on both manifolds. These "down-comer" and anti-geyser/recirculation connections will be replaced by actual "down comers" when the propellant tank modules are installed in later test series.

The LH2 and LO2 horizontal manifolds will also have a lower 8-inch inlet connection plus lower 8-inch and 12-inch outlets for engine feed lines. The 8-inch inlet will connect to a MC284-0397 STS fill and drain valve, which, in turn, will connect to a simulated GSE propellant control system. The 12-inch outlet will connect to a MC284-0396 STS pre valve and offset engine feed line. The 8-inch outlet will be closed off pending a requirement to feed multiple engines.

The LH2 12-inch engine feed line will be the PRTA instrumented sloped line and will terminate with a SSME turbo pump for heat load input. The LO2 12-inch feed line will be a new fabrication and will terminate with the PRTA adjustable engine heat load simulator.

The RP-1 system will be configured with an 8-inch horizontal distribution manifold with a single 8-inch upper feed line "down-comer" connection and two 8-inch lower connections for a fill and drain valve and pre valve. The "down-comer" connection will be routed, for the first test series, to a new RP-1 run tank on the AETF test stand. The fill and drain valve will be an 8-inch Fisher industrial ball valve that uses pneumatic actuation similar to the STS flight valves. The inlet to the fill and drain valve will be connected to a simulated GSE propellant control system in the same manner as the LH2 and LO2 systems. The pre valve will be the same type Fisher ball valve as used for the fill and drain and will be connected to an 8-inch offset engine feed line. The engine feed line will terminate with a closure flange with no requirement for a heat source.

Bleed, vent, and purge systems will be provided to all three systems to investigate propellant conditioning methods, system draining, and system inerting. All the bleed lines will be controlled by STS MC284-0395 2-inch and 1.5-inch ball valves.

The MSFC supplied simulated GSE propellant control systems for all three fluids will consist of a supply line with variable position control valves fed from the AETF storage tanks, and a vent/drain line return line for removing propellants from the fluid systems. The GSE supply and return lines for all three systems will be routed to the propulsion module through vertically attached flexible connections with separate groupings for the fuels and oxidizer. This connection will allow the incorporation of rise-off type disconnects in future operations studies.

All the major feed line sections and active components will be installed in the fluid systems with flanged connections. The piping connections will use ANSI flanges with Gortex rope seals and the STS valve components will use specially fabricated flange adapters and TFE coated metallic "C" ring seals. The generous use of flange connections will simplify the rearrangement or replacement of components and provide a more critical test of any leak detection system.

The fluid system design detail and assembly drawings are included in Appendix B. The fluid system design is configured to satisfy Propulsion Module Design Requirements Nos. 1 through 10.

Reviewed by: Harv Le Blanc, Branch Manager, Cryogenic Systems, Rockwell SSD DNY

Conclusions:

A. Show insulation requirements on all cryogenic pipe assemblies.

B. List proof pressure and cleanliness requirements on all pipe assemblies.

C. Show bolt clocking requirements for all flanges.

D. Include call outs for all fasteners as they become available.

E. Minimize the use of pipe thread type connections. They are a potential source of system contamination when joints are assembled and disassembled.

F. Include mounting provisions for pipe supports as they become available.

G. Drawings LR6565-004 & -024, add the dimension of the flat surface adjacent to the 37 degree cut.

H. Since the LO2 anti-geyser line is capped for the first phase of testing, it is necessary to assure that the required operational constraints are in place to prevent the formation of bubbles which could result in a geyser in the long LO2 line to the MSFC tank.

Reviewed by: James Ziese, Project Manager, Vehicle Systems Design, Rockwell SSD DNY

Conclusions:

A. Bolt hole orientation should be specified on the weld assys, even if it is obvious that the pattern is aligned or splits a center line. I am afraid that if you don't, you may be faced with scrapped parts or assembly problems.

B. Avoid use of pipe threads in cryogenic systems.

C. On drawing -025 the dimensions should be (Ref.).

D. On drawing -026
1) Is the 22 degree dimension critical? It would be very difficult to inspect.
2) Large welds are not called out.
3.)Add vertical dim for location of 2.08 hole.

3.2.3 *Structural Frame Work Design*

Designers: Mike Simmons, Engineering Specialist, Laboratories and Test, Rockwell SSD DNY; James P. Rogers, Engineering Specialist, Laboratories and Test, Rockwell SSD DNY

Design concept/approach: The propulsion module structural support frame work is designed to be positioned between and below beams "D" and "E", ref. Dwg. No. FAC-M-4670 "Advanced Technology Engine Test Stand, 12 March 1986", at the proposed Engine Test Position 2. Beams "D" and "E" support and react the thrust loads from the current Engine Test Position 1 and are commonly referred to as "Norman Beams". The propulsion module will consist of two sections, a fuel half and an oxidizer half, to allow shipment by truck and to provide system separation for possible future rise-off disconnect studies. The structural frame work is designed to support the weight of the propulsion module piping, valves, and components as well as any technicians and equipment required to service or replace components within the module. Although the propulsion module is not designed to react engine thrust loads, it will nest closely within the proposed 500K lb. engine thrust structure design (not covered in this document). The physical proximity of the propulsion module to the AETF Test Position 2 engine mounting point will allow simulation of an integrated engine/propellant feed system and boat tail structure for an SSTO candidate design.

The Structural Frame Work Design drawings are included in Appendix C. Also included are design layouts showing the positioning of the propulsion module within the proposed engine thrust structure. The Structural Frame Work Design is configured to satisfy Design Requirements Nos. 2, 11, and 12.

Reviewed by: Stephen Howell, Structural Analysis Engineer, Sverdrup Technology Inc., HSV

Conclusions: The basic structure has a high factor of safety and will adequately support the expected applied loads.

The overhead piping support beam stress should be reverified when the final weight of the piping is known.

The installation and hanging procedure for the propulsion module should be clarified.

The access hole in the "Norman Beams" should be moved to the center of the AETF test stand to provide equal access to Engine Test Positions 1 and 2.

Reviewed by: Harv Le Blanc, Branch Manager, Cryogenic Systems, Rockwell SSD DNY

Conclusions:

A. Call out all structural weld requirements on the drawings. This can be in the form of codes or general notes.

B. Include mounting provisions for supporting piping assemblies as they become available.

4. PROPULSION CHECKOUT AND CONTROL SYSTEM DESIGN

4.1 PCCS DESIGN REQUIREMENTS

1. Provide control of Integrated Propulsion Test Demonstrator controllers and effectors.
2. Monitor system and component status
3. Archive test data for post test analysis
4. Get facility status from the AETF data monitoring system for control and display
5. Provide IPTD system status data to the AETF monitoring system and redline monitor
6. Provide processing for sensor data algorithms to assess sensor integrity assessment
7. Provide processing for sensor calibration, compensation and conversion
8. Provide processing for sensor algorithms (e.g. liquid level sensors)
9. Provide processing for low level command and control
10. Provide processing for sensor data fusion and analytical redundancy
11. Provide processing for redundant sensors selection filters

12. Provide workstations and data displays for operator interaction and monitoring
13. Provide diagnostics for component and system functional and performance tests
14. Provide continuous system health assessment and trending algorithms
15. Provide Built-In-Test
16. Provide component and system simulation capabilities
17. Provide environment for development and evaluation of system software using system simulation
18. Provide failure mode and isolation software
19. Provide capability to add an interface to an engine controller
20. Provide capability to emulate RLV system architecture elements; hardware and software
21. Provide capability to develop and evaluate different levels of autonomy
22. Provide capability to assess operations improvements

4.2 PCCS DESIGN ELEMENTS

4.2.1 *System Architecture*

Designers: Curtis L. Vesperman, Project Manager, Special Projects, Rockwell SSD Dny; Steve Woesner, Engineering Specialist, Software and Simulation, Rockwell SSD DNY

Design concept/approach: The PCCS System architecture has been structured to reflect the functional allocation and partitioning between the on-board and ground systems elements. The PCCS on-board element incorporates hard real-time embedded processors and input/output devices in a remote interface unit (RIU) that can be configured to emulate on-board sub-systems. The PCCS ground element consists of a commercial UNIX file server and a network of local and remote UNIX workstations to execute application support software. A reflective memory link between the PCCS RIU and the PCCS ground element is used to emulate ground test ports, launch umbilicals, avionics telemetry and uplink connections. The system architecture overview is provided in Appendix D.

The current recommended target processors for the PCCS RIU are the Malibu R3000 (32 bit) processor. The single board module provides two serial interfaces, SCSI II (fast and wide), ethernet and an I/O bus connection for user developed hardware. Real-time board support is from Wind River Systems VxWorks with development supported from Silicon Graphics, SUN workstations or PCs.

The MIPS series is also one family being radiation hardened and developed for the next generation of avionics processors. Use of this processor family would also facilitate migration of application software from the PCCS to system prototypes and eventually to avionics systems or ground control systems.

The real-time data link for PCCS is the Systran fiber optic reflective memory system providing: VME interfaces for remote PCCS data acquisition and control, an S-bus interfaces for SUN workstation data monitoring, data archive and high level command and control, and a VME interface to the AETF RealStar. This link will provide minimum data latency, multi-rate data capability and high sample rates to support development of sensor processing and control techniques. A shared memory interface to the RealStar DSU will provide PCCS access to facility data acquired or generated data by the RealStar DSU and allow the DSU to monitor PCCS acquired or generated data with minimum impact.

All remote PCCS processing nodes will be connected by ethernet for software development, operational program loading and runtime monitoring. Remote links will utilize the fiber ethernet physical links to improve reliability and isolation. Processors will utilize standard UNIX/POSIX protocols, data and file formats. Additional serial data fiber links will be provided to each remote front end data acquisition node to support remote operation and maintenance. Connections to remote sites will utilize the backbone. A central server will provide common software, database and data services.

A PCCS UNIX file server will provide centralized data acquisition, time correlation of data, multi-rate archival, database services for engineering unit conversion, and basic engineering unit conversion. Data archival will be to magnetic disk and optical disk for quick-look and post test operations. The server will provide real-time and post test data services to local and remote users over standard ethernet links. The system will be based on existing data handling systems and software. Interfaces between PCCS and DSU will require exchange of parameter Engineering Unit conversion and reflective memory mapping.

Distributed VME based systems are provide for sensor data acquisition and control, coupled by reflective memory to minimize data latencies. Systems shall be logically or physically reconfigurable to reflect vehicle and system concepts. Embedded capability to simulate test article performance shall be provided to support system development, pretest site certification and fault handling capabilities. Architecture shall accommodate integration of hardware subsystem prototypes. Prototype hardware may shadow PCCS systems or replace the PCCS function. This may include sensor systems, valve or actuator controllers or prototype engine controllers.

Suppliers of complex or critical development elements and support equipment (such as the engine controllers) shall be designed to integrate into the PCCS architecture to maximize software, hardware and data reuse.

<u>Long term architecture development to meet RLV test needs:</u> Several factors have been identified as design goals for consideration in long term planning. The major architecture elements are summarized in the following:

1. Provide common networks for real-time and operational support
2. Reduce data latency, improve expandability and adaptability for new system and program requirements
3. Improve real-time Operating System response and deterministic timing
4. Establish hierarchical LAN architecture with nodes attached to bridged LAN segments.
5. Provide capability to physically or logically partition and operate system by LAN elements.
6. Provide integrated system administration and operations concept for widely distributed systems
7. Improve effectiveness of data distribution:
    - 7a. Central file server for remote NFS access to executables
    - 7b. Real time data available to all workstations
    - 7c. Minimize replication of common data handling and database services
    - 7d. Provide real-time broadcast and distribution of data
    - 7e. Partition data networks to minimize contention
8. Identify specific industry standards to assure portability
    - 8a. Open standards not proprietary implementations
    - 8b. POSIX/UNIX operating systems
    - 8c. Network protocols
    - 8d. File and data exchange
    - 8e. System and component modeling
9. Assure support for concurrent development and operations
    - 9a. Sharing of common resources
        - 9a.1 Development system has same set of hardware
        - 9a.2 Development system has same quantities/redundancy
        - 9a.3 Development system has same level of redundancy
    - 9b. Re-configuration time and cost
        - 9b.1 Support incremental operational configuration changes
        - 9b.2 Roll-forward for HW upgrade and SW release tests
        - 9b.3 Roll-back for anomaly resolution
    - 9c. Minimize scheduling conflicts and system downtime to reconfigure
10. New development to address complex system, failure modes and effects
    - 10a. Interface errors due to mixed Operating Systems, vendor hardware and operation modes
    - 10b. Loss of data during LAN fault recovery and reconfiguration
    - 10c. Fail over capability to hot spare, cold spare or reboot
    - 10d. Add redundancy to improve reliability that contributes to nominal processing
    - 10e. Provide transient fault detection, environment capture and analysis support

11. Utilize Graphical User Interface development tool for generation and maintenance of X-Motif interfaces.
12. Include Network Manager tools, third party network applications and developed network management applications built on SNMP protocol.

Reviewed by: P. D. Schoen- Manager RI SSD, Van Blankenship (EP75) MSFC

Conclusions: Earlier review comments incorporated. Coordination of fiber optic link installation by MSFC and acquisition of Reflective Memory node being coordinated with MSFC.

4.2.2 *Instrumentation requirements*

Designers: Curtis L. Vesperman, Project Manager, Special Projects, Rockwell SSD DNY; Daniel Jury, Engineering Specialist, Software and Simulation, Rockwell SSD DNY; and James P. Rogers, Engineering Specialist, Laboratories and Test, Rockwell SSD DNY

Design concept/approach: The current instrumentation and control design notes are provided in Appendix E. This includes the data dictionary for the PCCS and AETF DSU, the working IPTD reference designator prefix definition, and the current instrumentation and control list. The list provides the identifiers for the source or destination of each signal, signal type, input or output orientation, conversion factors and sampling rates. The identifiers include unique component and system identifiers, component nomenclature, component type and part number. MSFC has provided the IPTD Master Measurement List (MML) Measurement Stimulus Identifier (MSID) format that will be used in the PCCS to identify measurement and stimulus designators. Also provided is the format and mapping between the MSID and facility Data Selection Unit (DSU) Measurement Identifier (MID).

The instrumentation and control list includes development, operational, maintenance and test signals. Operational sensors provide the minimum monitoring required to determine system status, monitor critical parameters, support control decisions and issue required control. This list reflects the initial conceptual design allocation that may be revised based on Failure Mode Effects Analysis (FMEA), testability analysis or operational improvement concepts. FMEA analysis is currently being conducted to determine any additional hardware or analytical sensor redundancy required to meet the required system reliability goals. The current configuration includes two and three level sensor redundancy at several points which is based on similar operational Shuttle redundancy. Development instrumentation included in the current design configuration provides additional data to support design analysis, characterize system performance, determine flow rates and temperature profiles. This data is used to validate the

operational environment and system design analysis. Development instrumentation will primarily be used in ground tests or initial development flight tests.

The instrumentation list will also included health assessment and maintenance sensors that show a significant benefit. The list provided currently only shows the added solenoid current sensors to assess the health of solenoid valves. Other sensors or sensor configurations may be added to assess system and component health, sensor integrity, determine required maintenance actions and verify repairs have been correctly incorporated. Effort is continuing on testability analysis to identify and optimize test and control points that can be incorporated into the system design.

Reviewed by: James P. Rogers, Engineering Specialist, Laboratories and Test, Rockwell SSD DNY

Conclusions:

A. Noted missing LH2 GSE sensors and effectors in instrumentation and control list. Missing items have since been added to list.

B. Range column in sensor and effector list should reflect capability of signal conditioning system, additional column required for nominal parameter range.

4.2.3 *Component/System models*

Designers: Curtis L. Vesperman, Project Manager, Special Projects, Rockwell SSD DNY; Massoud Sinai PhD, Engineering Specialist, Avionics, Rockwell SSD DNY

Design concept/approach: Functional models are being developed at the component, subsystem and system level using $MATRIX_x$. The modeling will identify the functions, controls and sensors as well as the connectivity or dependency of the elements. This task is done concurrently and iteratively as the system is being developed. Modeling may be top/down or bottom/up depending on availability and maturity of supporting data and the modeling technique being applied.

Timelines and sequencing are being established for ground operations, startup, shutdown, emergency operations and normal operations. System models will be used to validate the functional performance requirements, determine margins, redundancy, recovery procedures and time to criticality. Functional models will be used to determine sensitivity to variations in timing, improper sequencing, and system failures.

Currently component valve models have been generated for the Pre-Valve and spring valve. Preliminary model concepts for the solenoid, 8 inch and RTD temperature sensor have been generated but need additional detail design data to complete. Modeling of the system performance will reflect the fluid flow, thermal dynamics and heat transfer elements. System modeling has been initiated starting with a simple line segment. The system component model for the Pre-valve and simulation code generated by AUTOCODE from the models are included in Appendix F for reference. The models and simulation code included herein are for a continuous model that provides high fidelity but may not be suitable for hard real-time execution. The continuous models can be transformed by $MATRIX_X$ into discrete data models (s domain to z domain) from which real-time discrete data simulation code can be automatically generated.

The generated code has been executed using the existing SIM EXEC with no significant effort required to port the software to this target and operating environment.

Reviewed by: As the modeling effort is in the initial stages, no review of the existing models was conducted. The processing and hosting of the generated simulation code has been reviewed by Will Wagner, Rockwell SSD, the responsible lead engineer for the SIM EXEC.

Conclusions: High fidelity component modeling has been complicated by the lack of detail design data for existing components. It will be important for a new program start to insure that required component design data in provided by the component and subsystem developers. No significant effort or complications have been encountered in the process used to generate executables for embedded simulation processor targets and hosting these executable under a simulation executive.

4.2.4 *FMEA and component failure modes*

Design concept/approach: Failure models of the IPTD functions, system, subsystems and components are being developed. The functions allocated to the IPTD design are identified and individual components are assessed for their failure modes, causes, and individual effects. These component failures are then connected in the system to determine how the effects of a component failure can eventually propagate down steam causing the anomalous operations of a functions. In a similar manner when anomalous operation is detected, the effects can be backtracked to identify the possible causes. This modeling will be used to assess the complexity of Fault Detection Isolation and Recovery capability of each design configuration during the design for the purpose of simplification.

System design will be evaluated to determine if the defined functional failures or error conditions resulting from the failure are detectable by the sensors in the system and to determine optimal locations for this sensors. In this task sensor placement will be optimized for fault detection, containment, isolation and recovery.

The preliminary FMEA for the LH2 tank is shown in Appendix G page 1. The FMEA includes all mission phases, tank states and related failure modes, and the effects of each failure mode. Page 2 shows the Digraph model for LH2 tank system and page 3 shows the prevalve.

Reviewed by: The FMEA is based on the analysis of the established design being reviewed herein. As this analysis is in the very early stages no review has been conducted on this item.

Conclusions: Data has not been reviewed.

4.2.5 *SW requirements and design*

Design concept/approach: The PCCS software consists of three segments: 1) PCCS Ground Control & Data Services 2) PCCS component and system simulation and 3) PCCS Signal Conditioning. The primary design effort is in the Ground Control and Data Services. The majority of the simulation software will be generated by using AUTOCODE and discrete data models generated in $MATRIX_x$. The simulation executive is an off-the-shelf software product (SIM EXEC) that will not require significant effort to adapt to this application. SIM EXEC also provide the environment for the PCCS Signal conditioning. The significant signal conditioning software effort will be in the device drivers, Input/Output data mapping, and high sample rate data handling and event logging. Design of the signal condition software will follow the final definition of the instrumentation and control signal definition and selection of the supporting Input/Output interface modules.

The design data provided for review consists of the PCCS Ground Control and Data Services, Software Preliminary Design notes and the interface design for the Ground Control and Data Services external software interfaces. This design notes are provided in Appendix H.

Reviewed by: P. D. Schoen - Manager, Rockwell SSD

Conclusions: Intermediate design stage documents were reviewed prior to this report and comments and concerns have been incorporated

List of References

1. SSD94D0335 Test Objectives, Milestone 3; Cooperative Agreement NCC8-47; November 15, 1994

2. SSD95D0067 Program Test Plan, Milestone 5; Cooperative Agreement NCC8-47; January 31, 1995

3. SSD95D0070 Evaluation of Current TTB Data Processing, Control System Upgrades, and Proposed PCCS System Architecture and Technologies; Cooperative Agreement NCC8-47; March 1, 1995

Appendix A:

IPTD FLUID SCHEMATICS

FOLDOUT FRAME

FOLDOUT FRAME

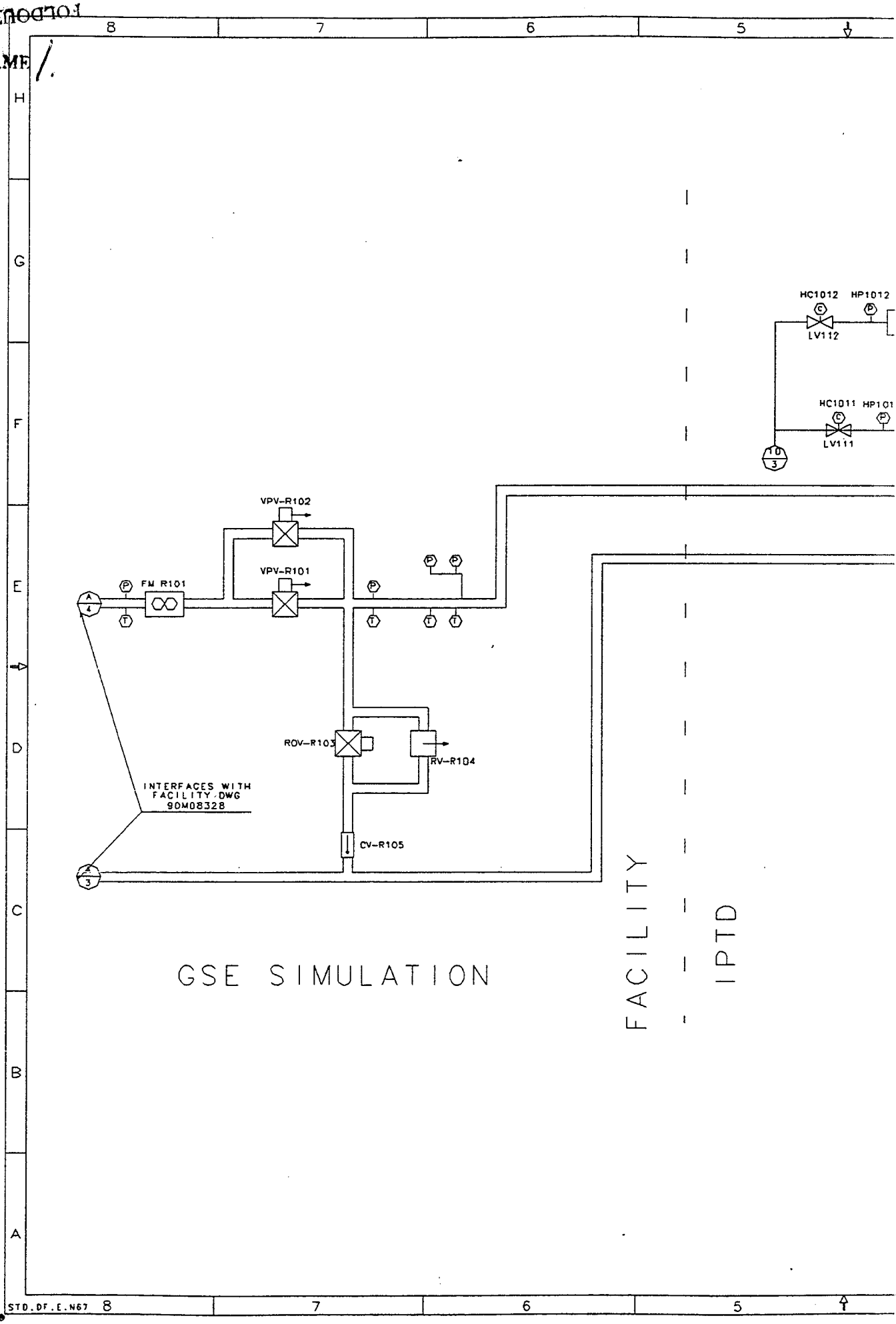

REVISIONS

ZONE	LTR	DESCRIPTION	DATE	APPROVED

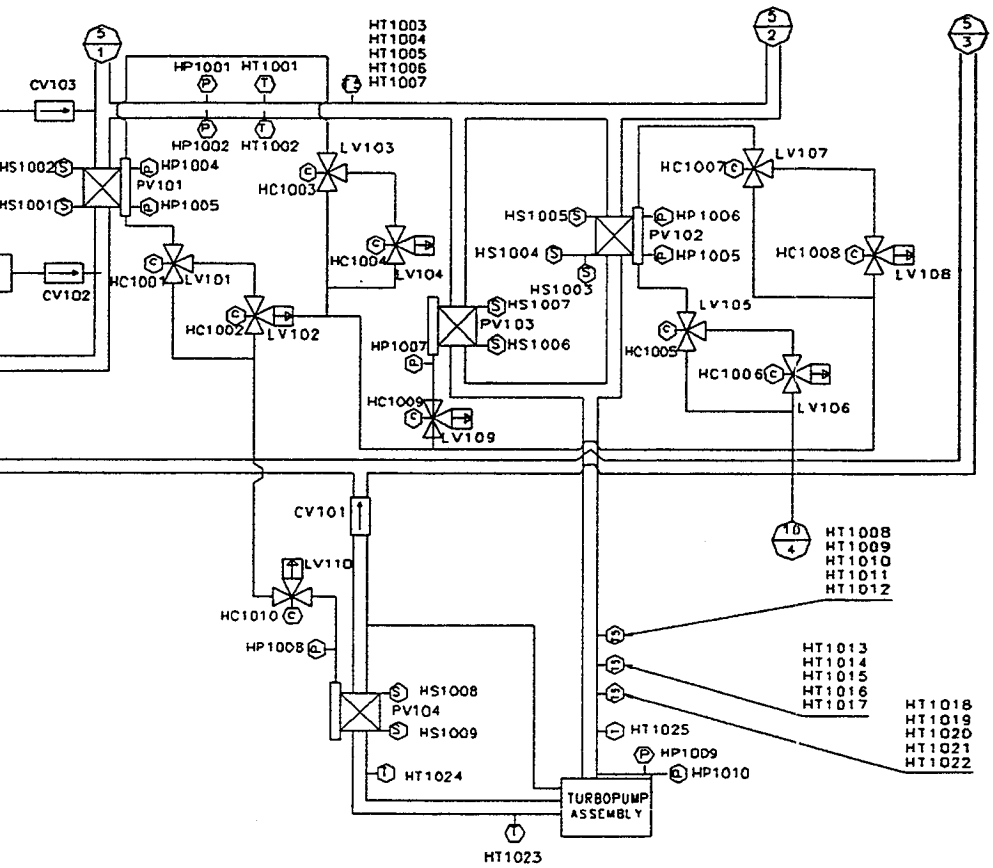

IPTD PROPULSION MODULE LH2

FOR PARTS LIST, APPLICATION DATA, AND GENERAL NOTES SEE SEPARATE PARTS LIST

ROCKWELL INTERNATIONAL SPACE SYSTEMS DIVISION

SCHEMATIC/FLUID. IPTD

SIZE E SCH NO. 03953 DRAWING NO. LR6565-050

SCALE: NONE SHEET 1 OF 10

CAD/CAM 1

FOLDOUT FRAME

3

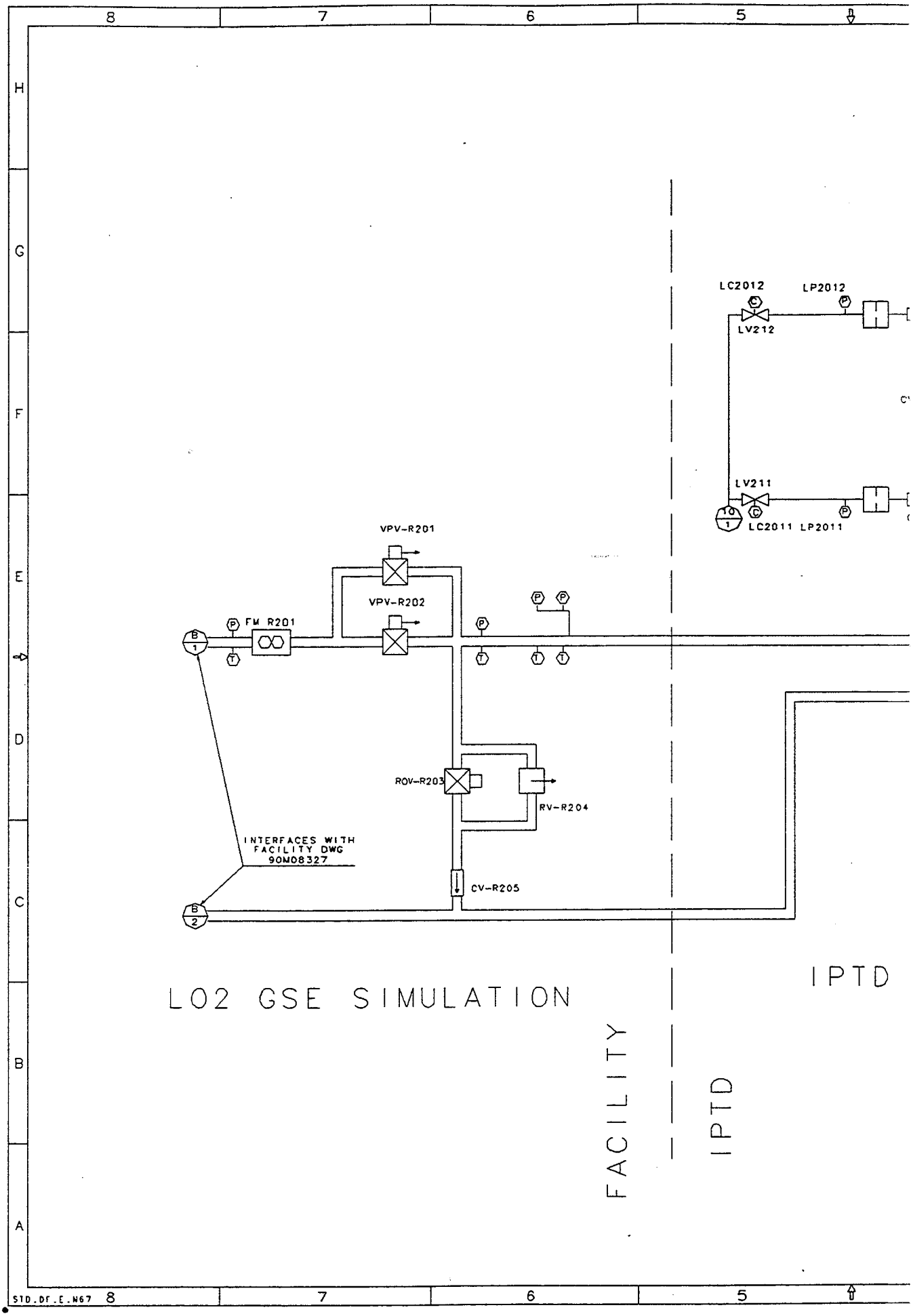

FOLDOUT FRAME

5

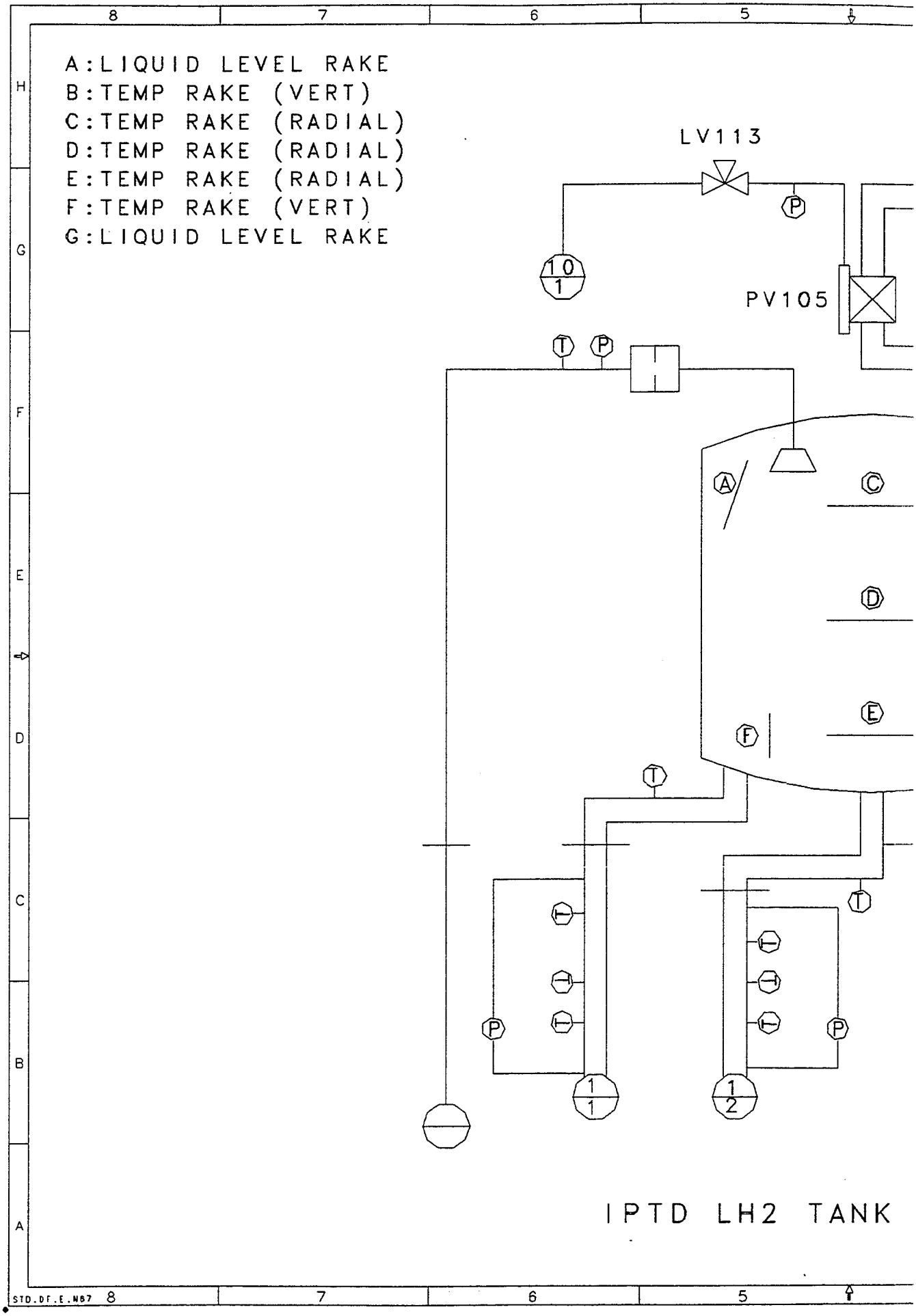

FOLDOUT FRAME 6

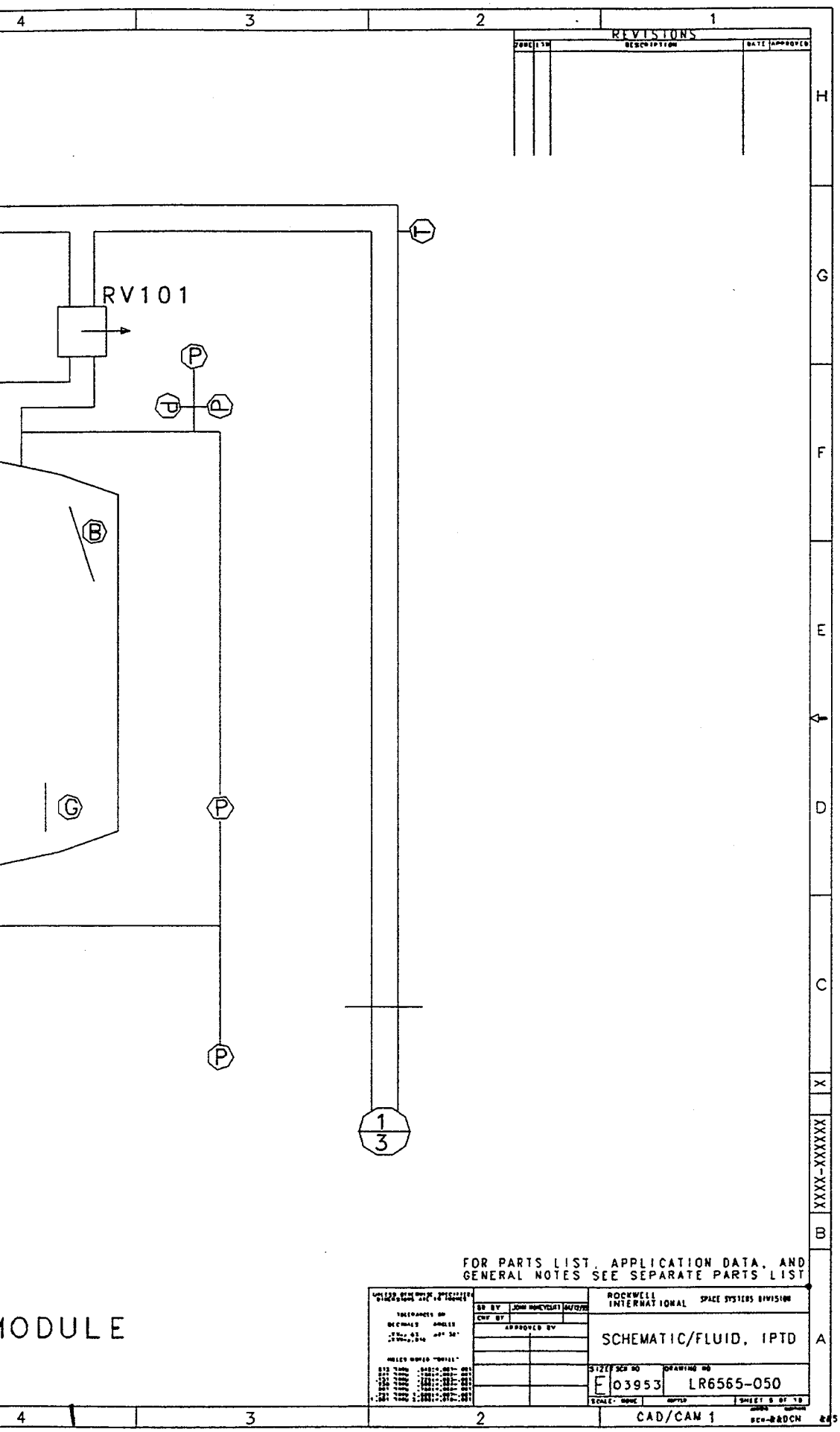

FOLDOUT FRAME 7

A:LIQUID LEVEL RAKE
B:TEMP RAKE (VERT)
C:TEMP RAKE (RADIAL)
D:TEMP RAKE (RADIAL)
E:TEMP RAKE (RADIAL)
F:TEMP RAKE (VERT)
G:LIQUID LEVEL RAKE

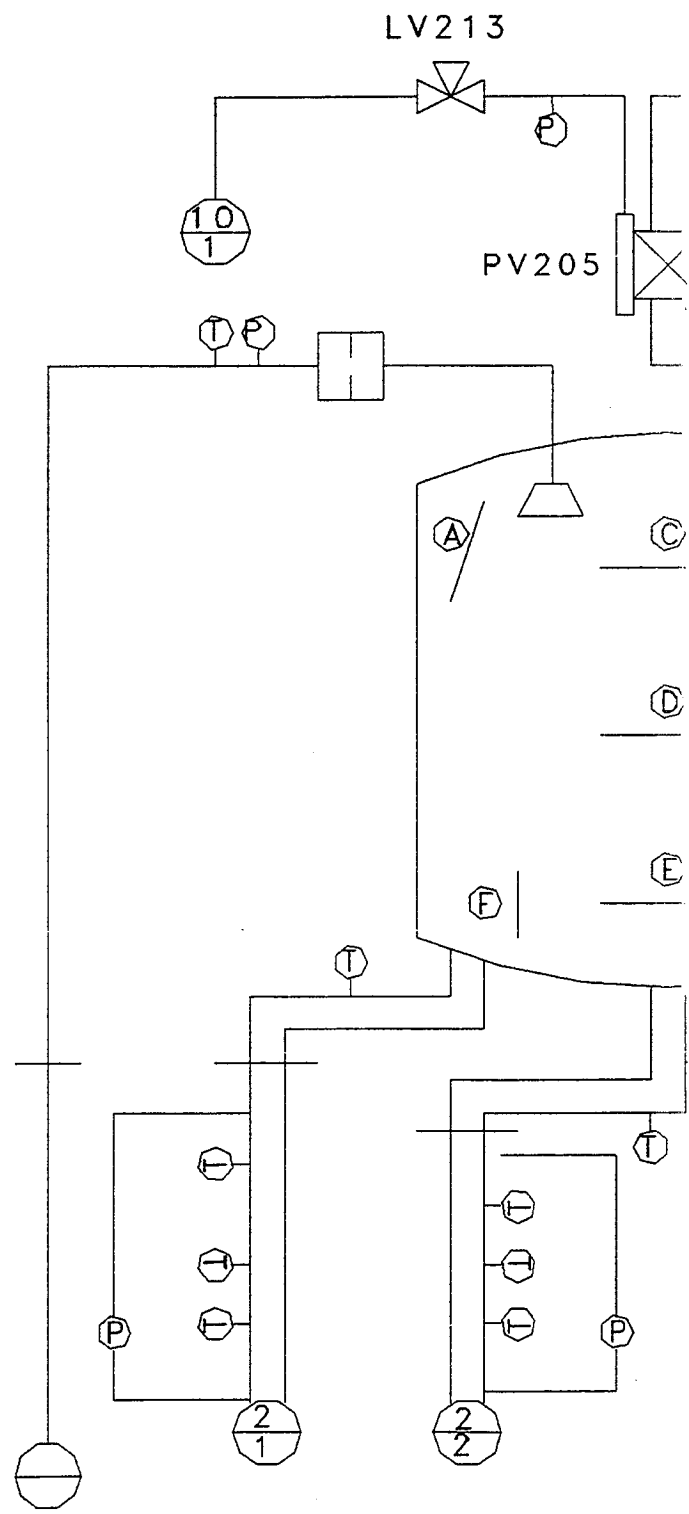

IPTD LO2 TANK M

STD.DF.C.N67

8

FOLDOUT FRAME

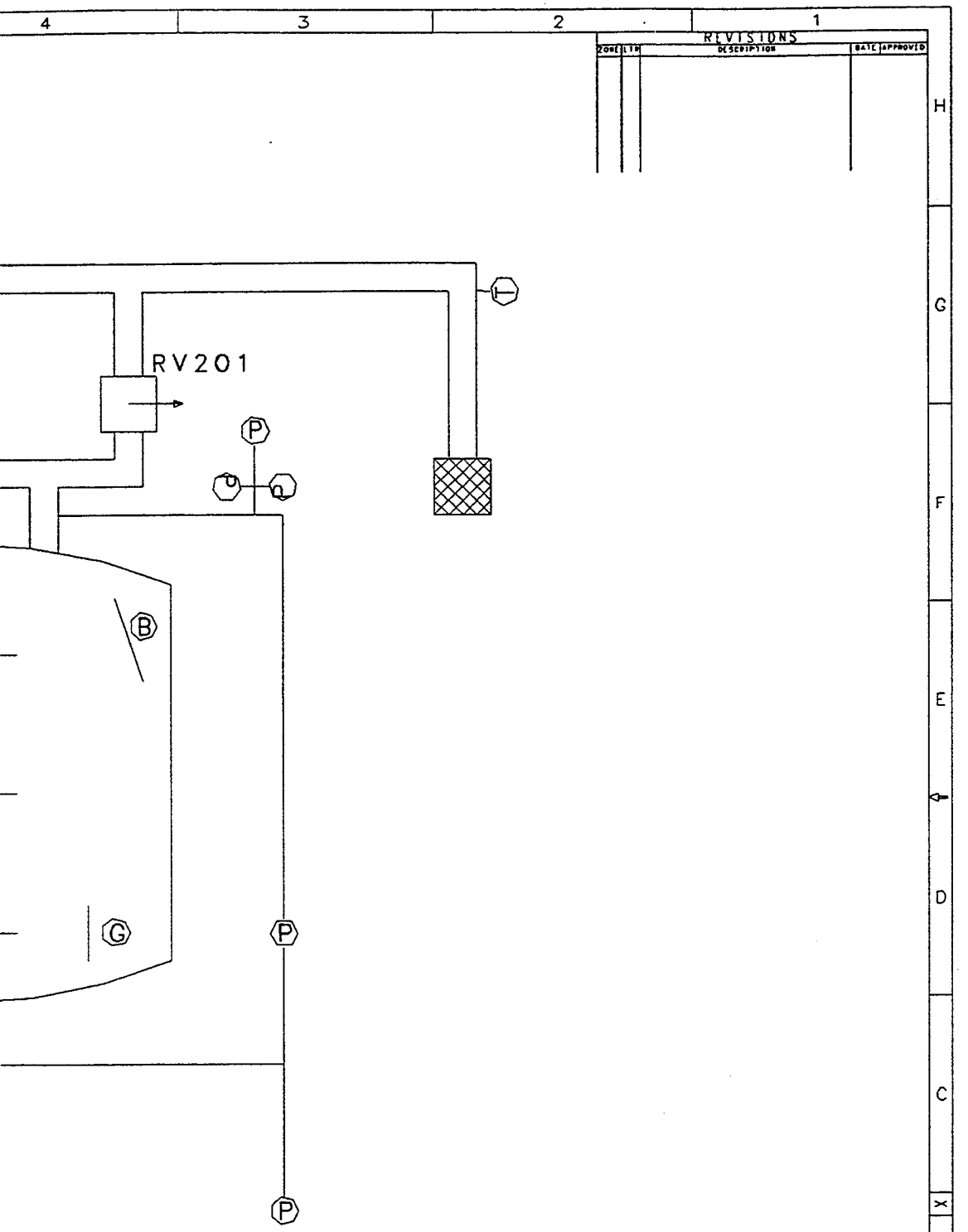

REVISIONS

ZONE	LTR	DESCRIPTION	DATE	APPROVED

FOR PARTS LIST, APPLICATION DATA, AND GENERAL NOTES SEE SEPARATE PARTS LIST

DULE

DR BY	JOHN MORCYCLAT 04/17/85
CHK BY	
APPROVED BY	

ROCKWELL INTERNATIONAL SPACE SYSTEMS DIVISION

SCHEMATIC/FLUID. IPTD

SIZE E | SCH NO 03953 | DRAWING NO. LR6565-050

SCALE: NONE | SHEET 6 OF 10

CAD/CAM 1

XXXX-XXXXXX

FOLDOUT FRAME

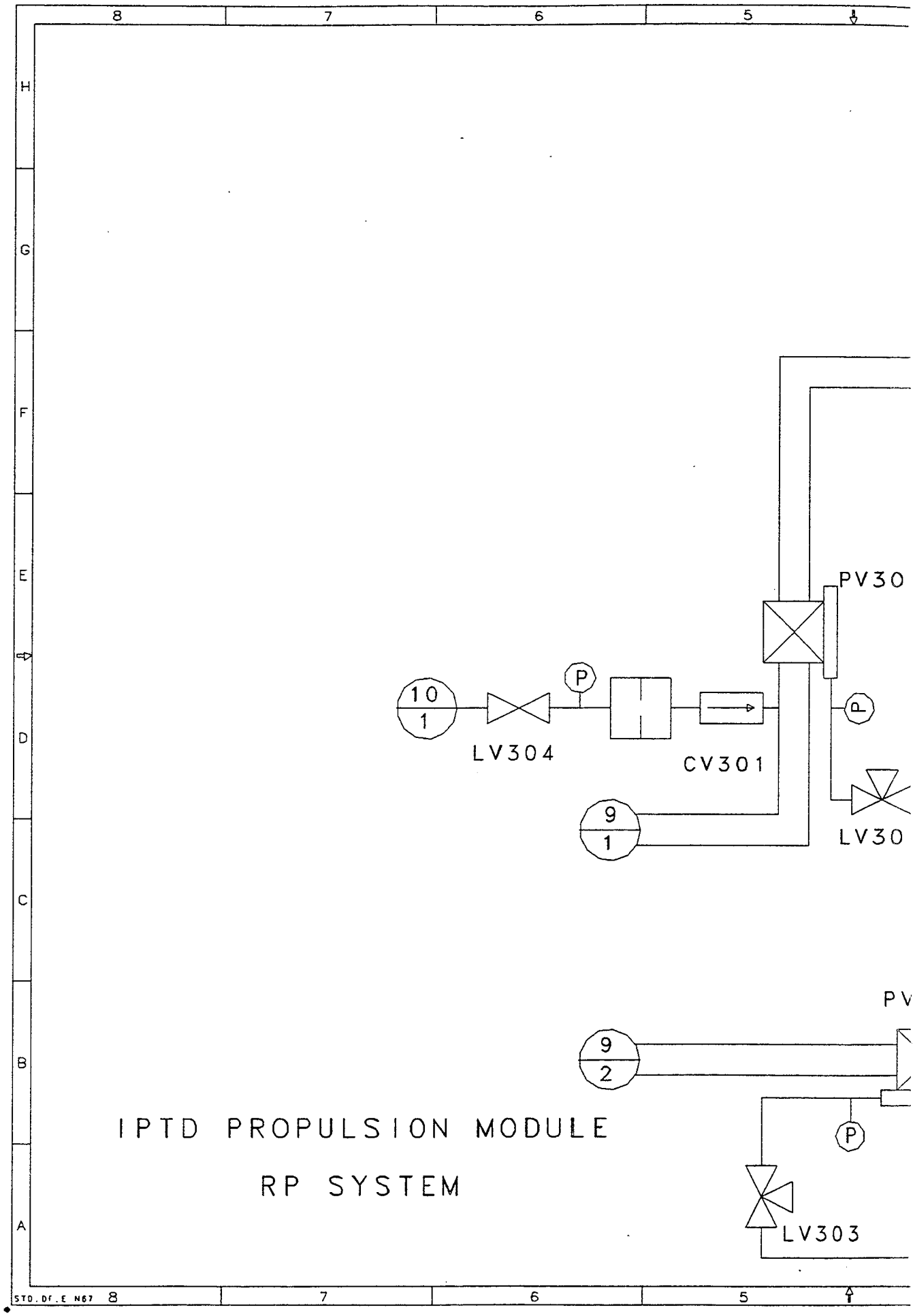

FOLDOUT FRAME

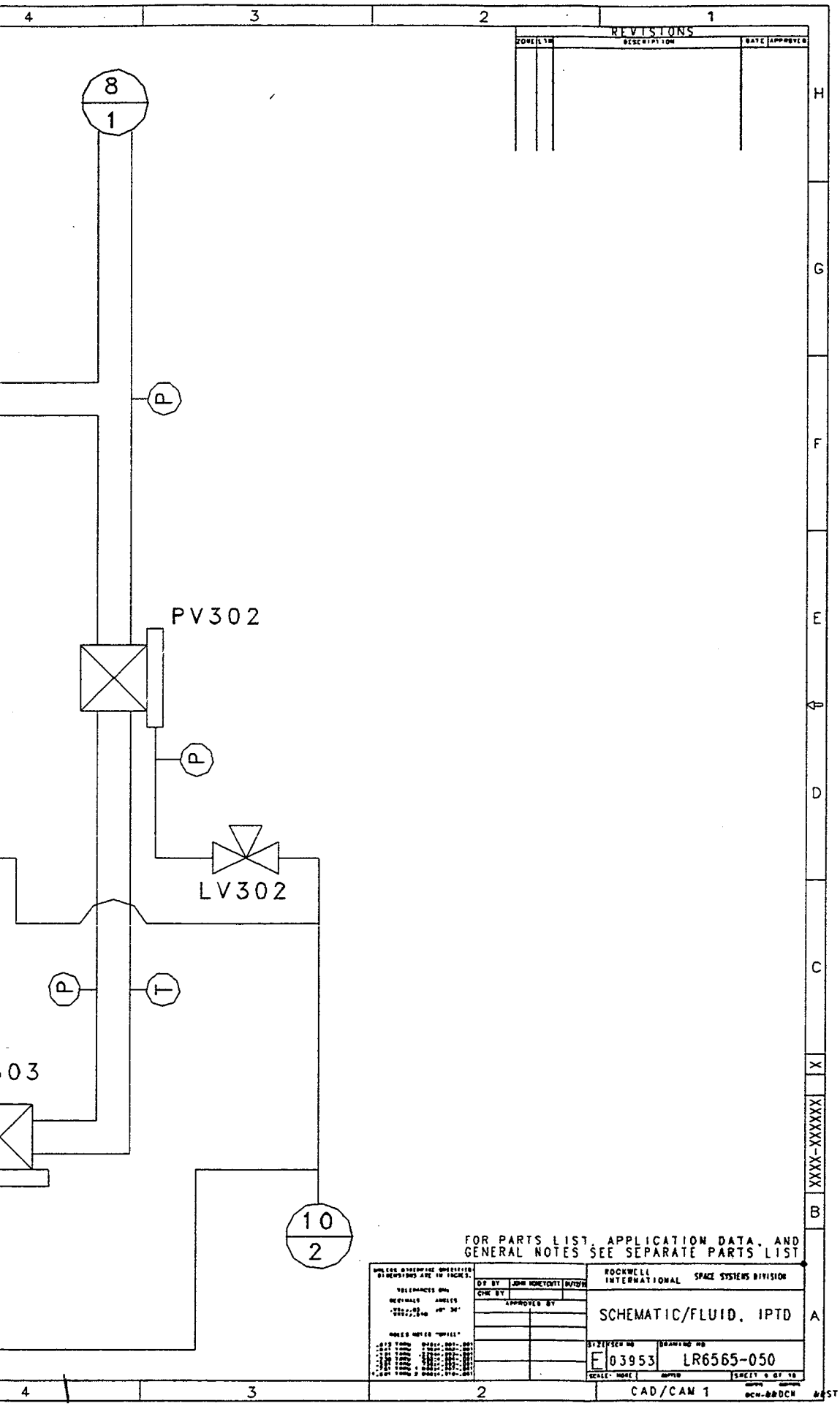

FOLDOUT FRAME

11

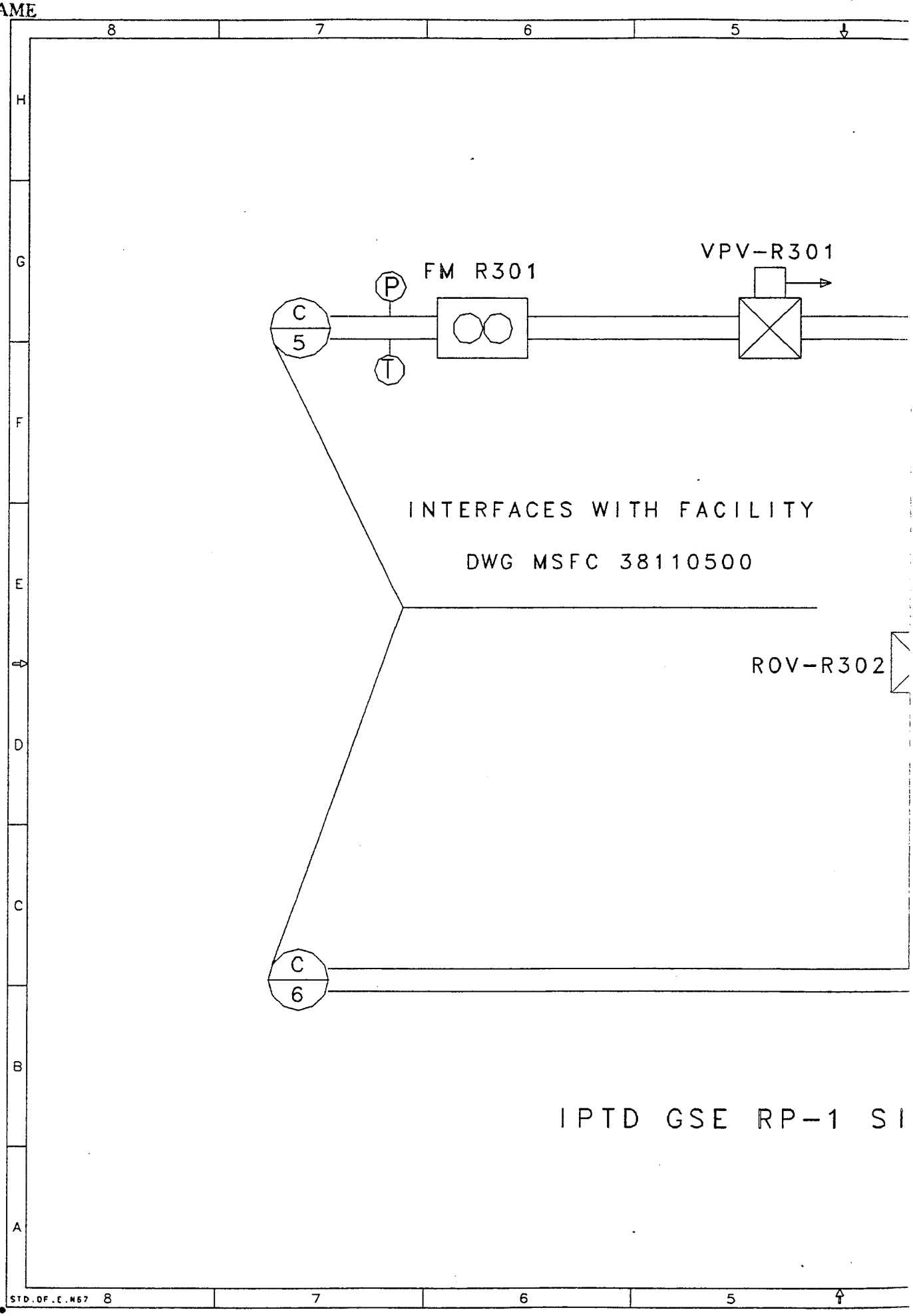

FOLDOUT FRAME

12

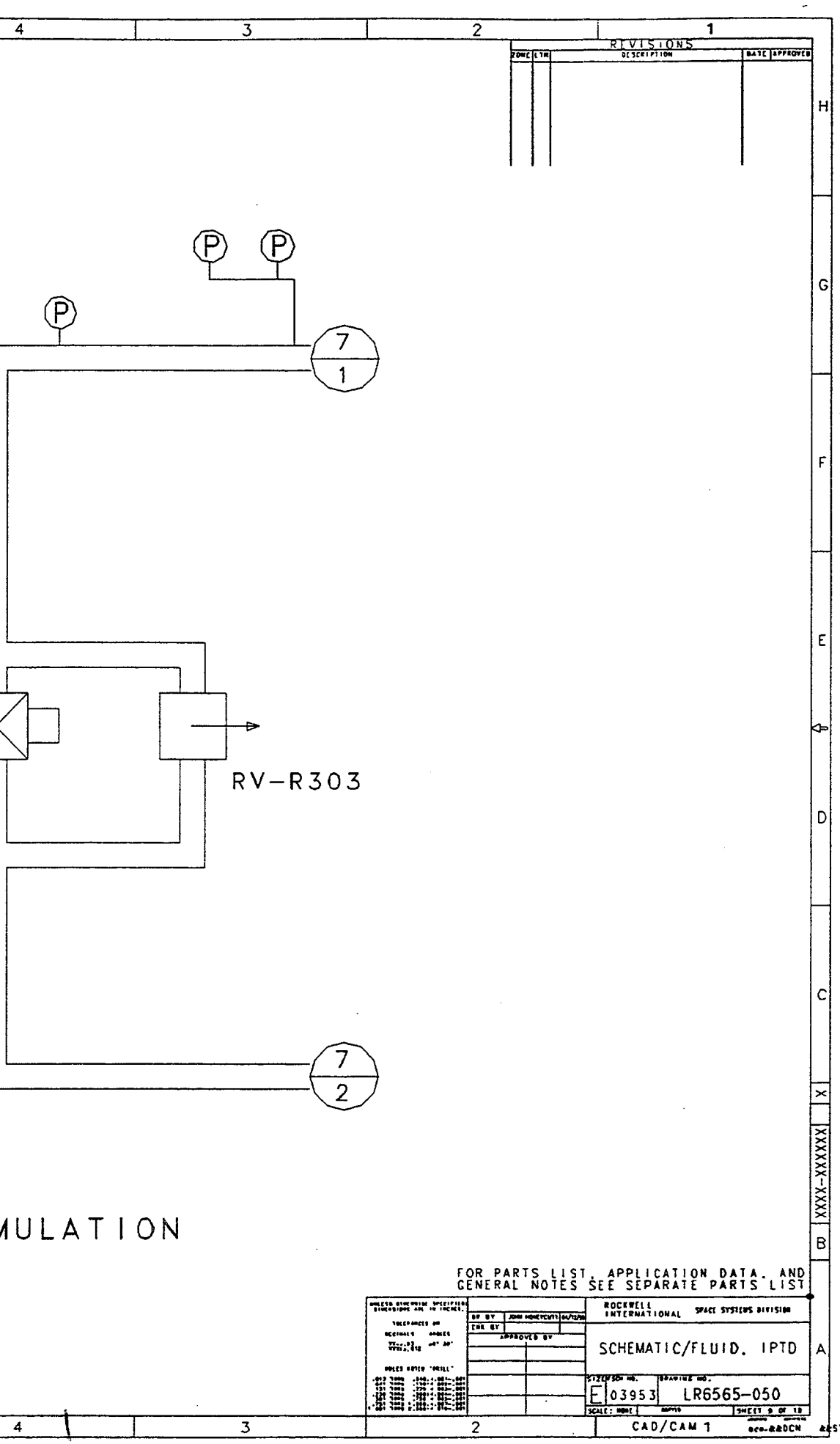

FOLDOUT FRAME

13

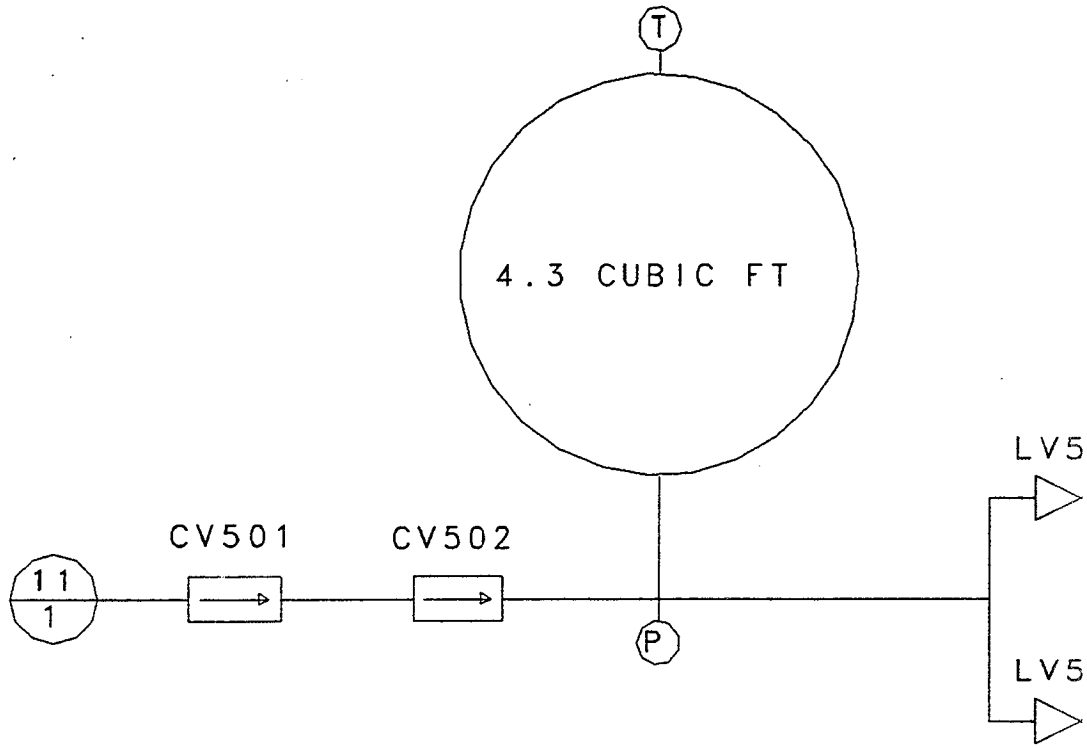

IPTD PROPULSION MODULE

HELIUM SYSTEM

STD.DF.E.N67

FOLDOUT FRAME

14

REVISIONS

ZONE	LTR	DESCRIPTION	DATE	APPROVED

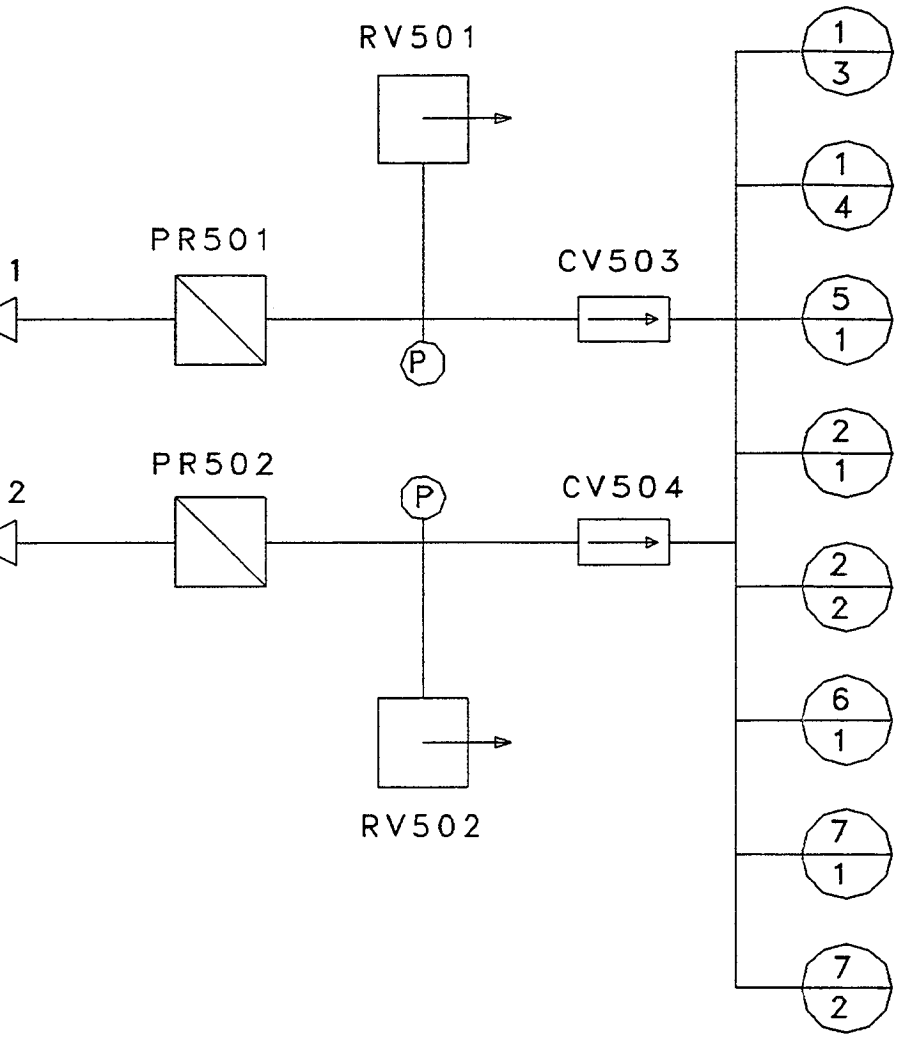

FOR PARTS LIST, APPLICATION DATA, AND GENERAL NOTES SEE SEPARATE PARTS LIST

ROCKWELL INTERNATIONAL SPACE SYSTEMS DIVISION

SCHEMATIC/FLUID, IPTD

E 03953 LR6565-050

CAD/CAM 1

APPENDIX B:

PROPULSION MODULE FLUID SYSTEMS DRAWINGS

15

FOLDOUT FRAME

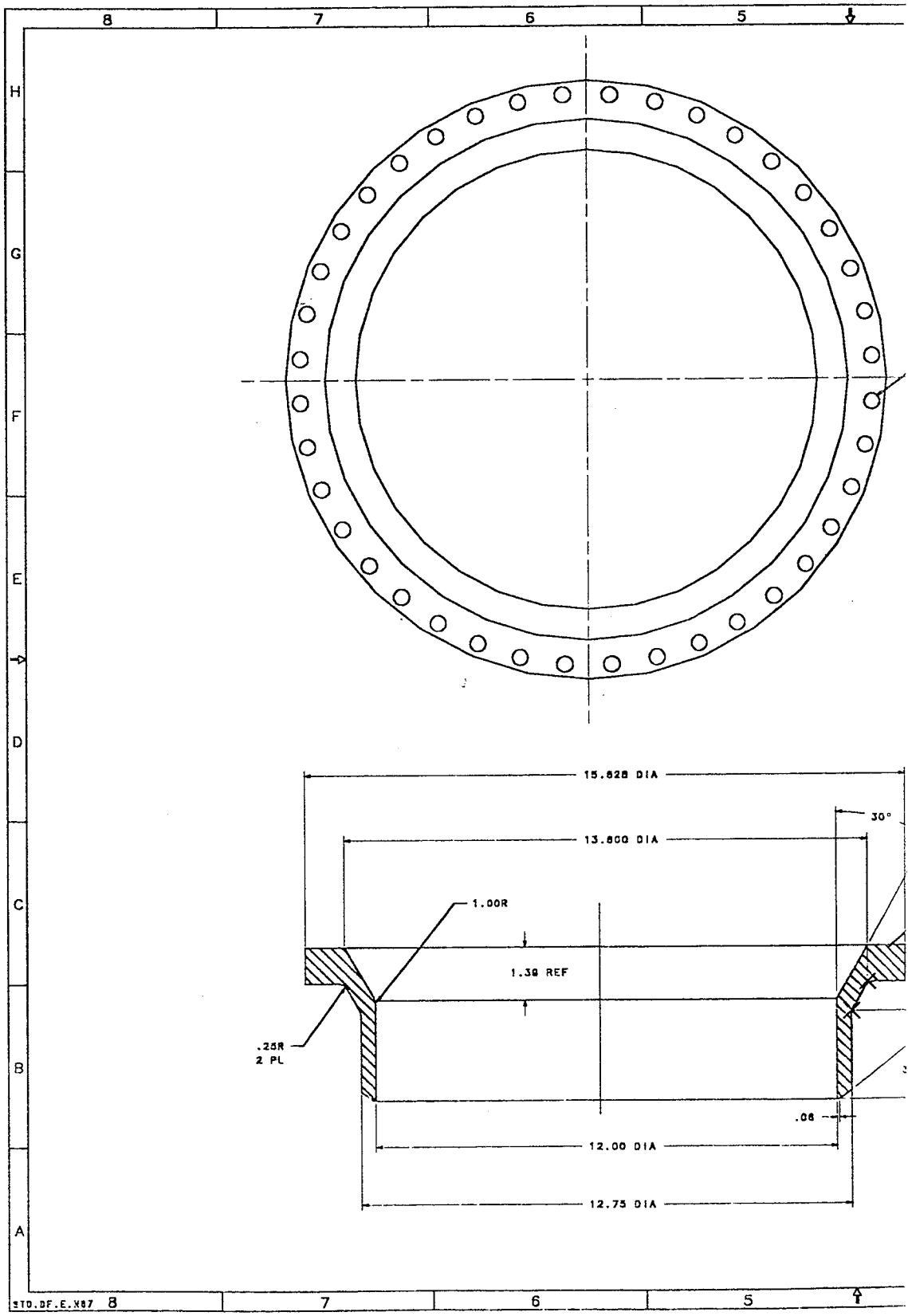

REVISIONS

ZONE	LTR	DESCRIPTION	DATE	APPROVED

.406 DIA $^{+.004}_{-.001}$ 40 HOLES
EQ SP ON 14.911 DIA

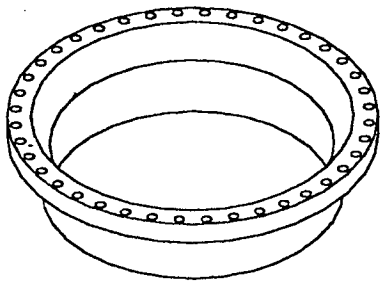

ORIENTATION VIEW
SCALE: NONE

32

1.70

.040

4.000 REF

MATERIAL: 6061-T651 4 INCH PLATE PER QQ-A-250/11

FOR PARTS LIST, APPLICATION DATA, AND GENERAL NOTES SEE SEPARATE PARTS LIST

DR BY G. GARNETT
CHK BY
APPROVED BY

ROCKWELL INTERNATIONAL SPACE VEHICLE DIVISION

FLANGE - INLET
LO2/LH2 PREVALVE

SIZE E
DRAWING NO. 03953
SCALE 1/2
PART NO. LR6565-003

CAD/CAM 1

17

FOLDOUT FRAME

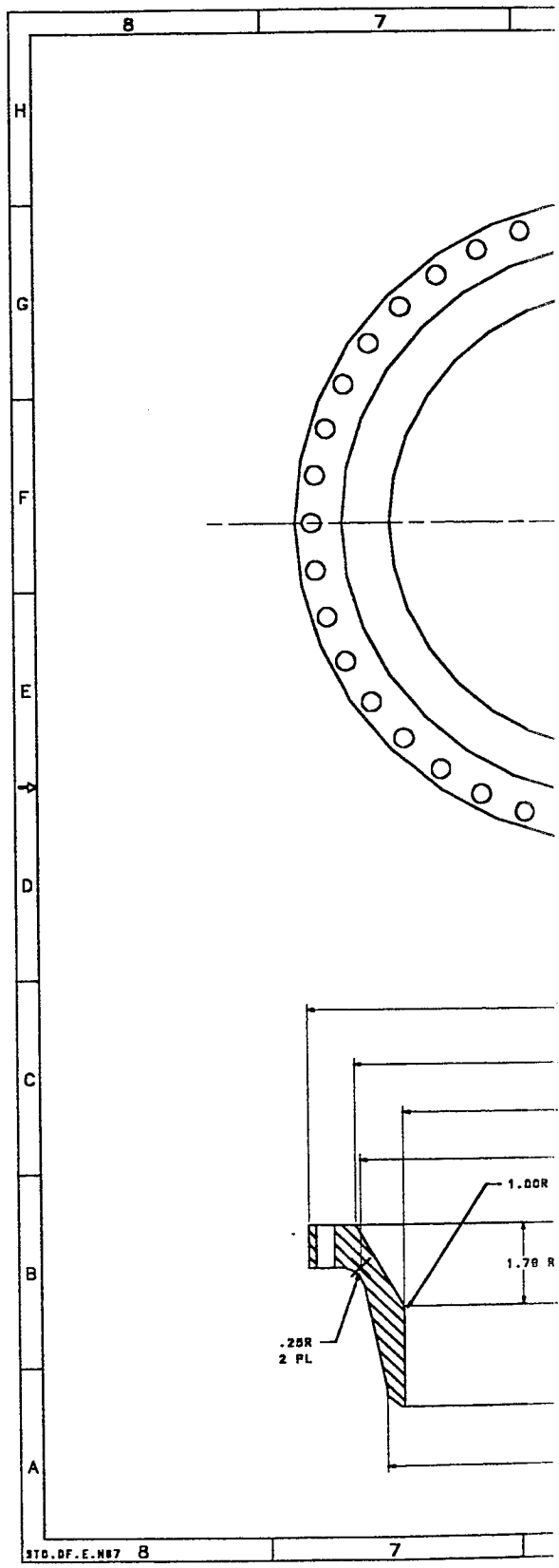

REVISIONS

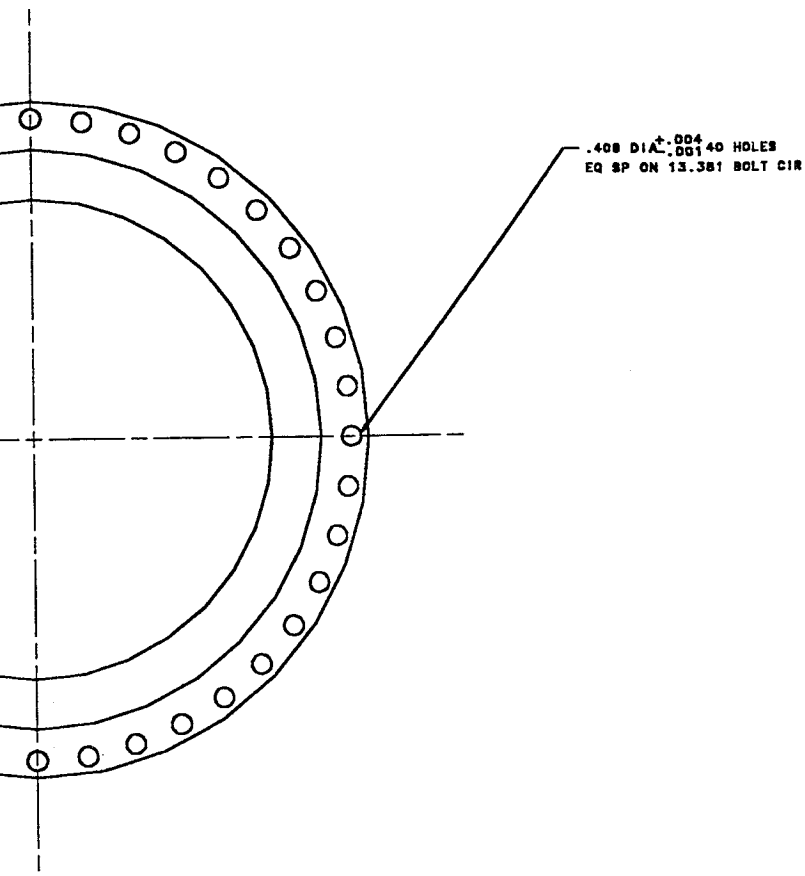

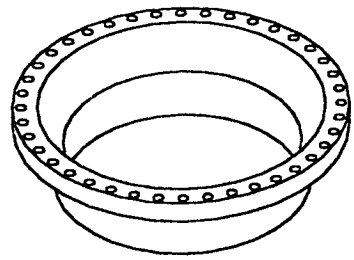

ORIENTATION VIEW
SCALE: NONE

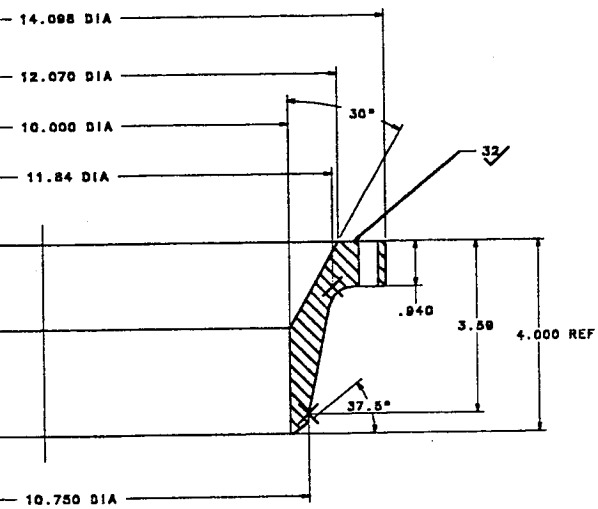

MATERIAL: 6061-T651 4 INCH PLATE PER QQ-A-250/11

FOR PARTS LIST, APPLICATION DATA, AND GENERAL NOTES SEE SEPARATE PARTS LIST

ROCKWELL INTERNATIONAL

FLANGE- OUTLET, LO2 PREVALVE

F 03953 LR6565-004

CAD/CAM 1

19 FOLDOUT FRAME

VMBAT008 FRAME 1 MARCH 21, 1995 07.11.20

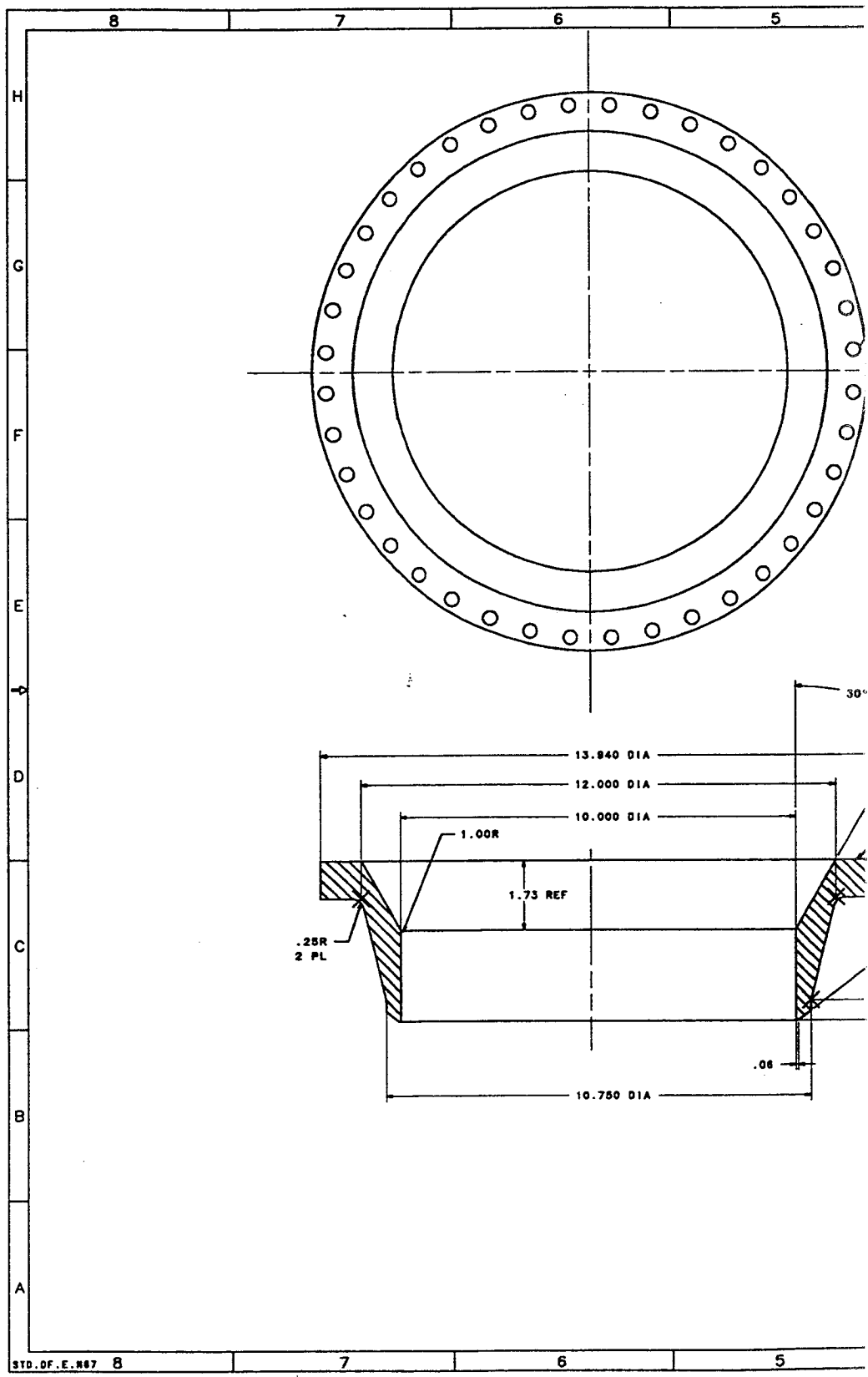

FOLDOUT FRAME

REVISIONS

SYM	ZONE	DESCRIPTION	DATE	APPROVED

.344 DIA $^{+.004}_{-.001}$ 40 HOLES
EQ SP ON 13.321 BOLT CIR

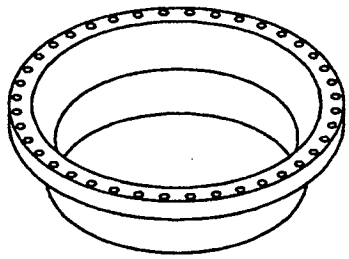

ORIENTATION VIEW
SCALE: NONE

32

.940
3.50
4.000 REF
37.5°

MATERIAL: 6061-T651 4 INCH PLATE PER QQ-A-250/11

FOR PARTS LIST, APPLICATION DATA, AND GENERAL NOTES SEE SEPARATE PARTS LIST

DR BY	L. BARNETT	10/6/87
CHK BY		
APPROVED BY		

ROCKWELL INTERNATIONAL SPACE SYSTEMS DIVISION

FLANGE- OUTLET, LH2 PREVALVE

SIZE F | DRAWING NO. LR6565-005

SCALE: 1/1 | SHEET 1 OF 1

CAD/CAM 1

LR6565-005

21 FOLDOUT FRAME

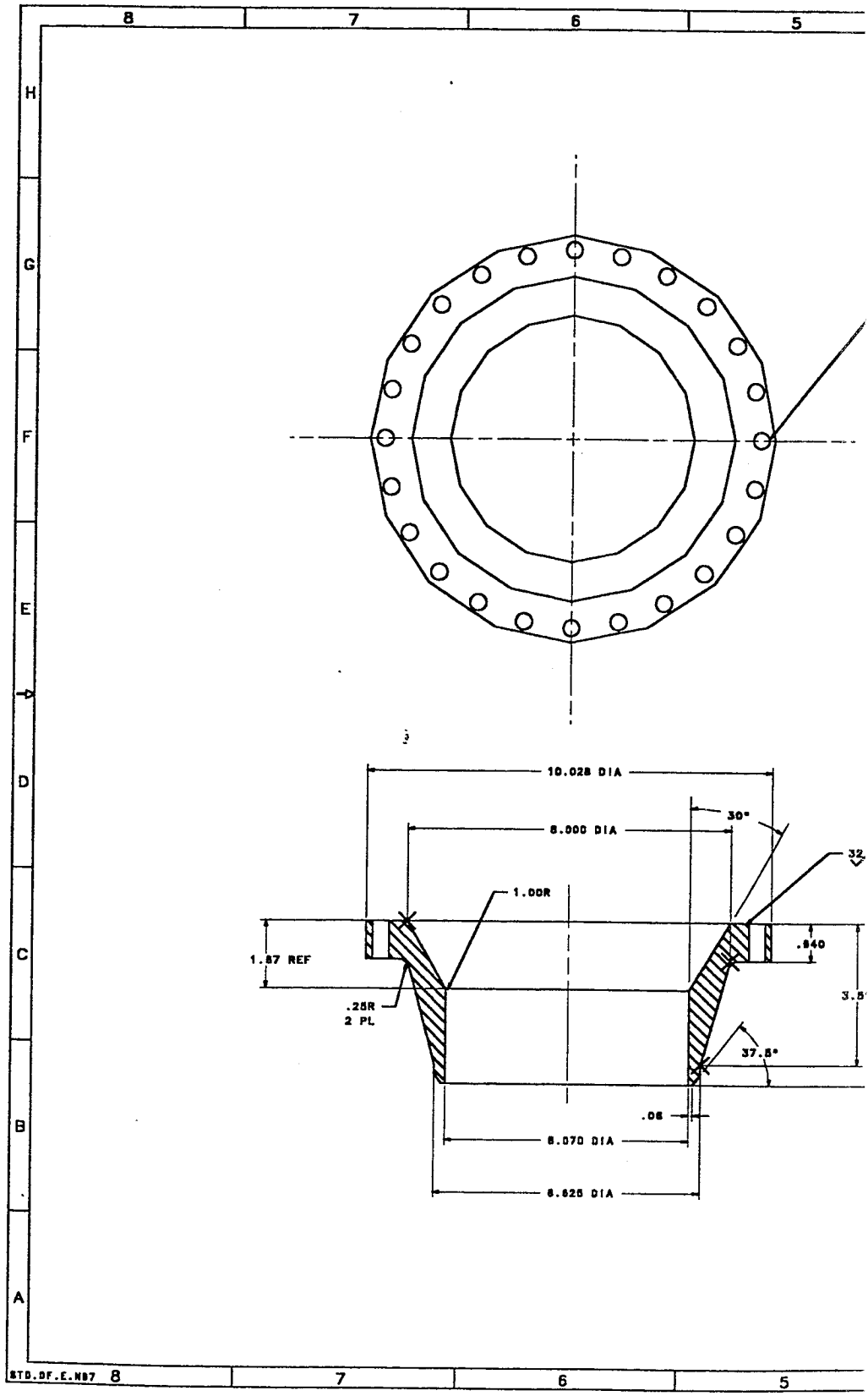

FOLDOUT FRAME

22

REVISIONS

ZONE	LTR	DESCRIPTION	DATE	APPROVED

.408 DIA $^{+.004}_{-.001}$ 24 HOLES
EQ SP ON 8.311 DIA

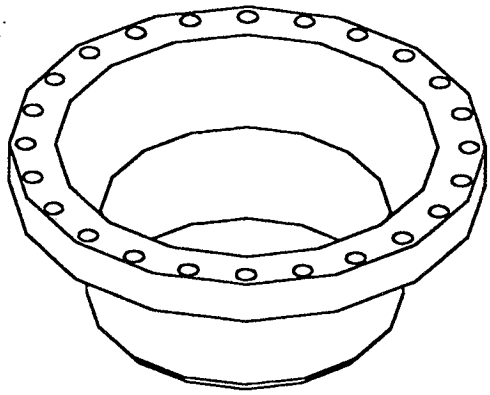

4.000

ORIENTATION VIEW
SCALE: NONE

MATERIAL: 6061-T651 4 INCH PLATE PER QQ-A-250/11

FOR PARTS LIST, APPLICATION DATA, AND GENERAL NOTES SEE SEPARATE PARTS LIST

ROCKWELL INTERNATIONAL SPACE SYSTEMS DIVISION

FLANGE - INLET
LH2/LO2 FILL&DRAIN

E 03853 LR6565-006

CAD/CAM 1

LR6565-006

Z3 FOLDOUT FRAME

ORIGINAL PAGE IS
OF POOR QUALITY

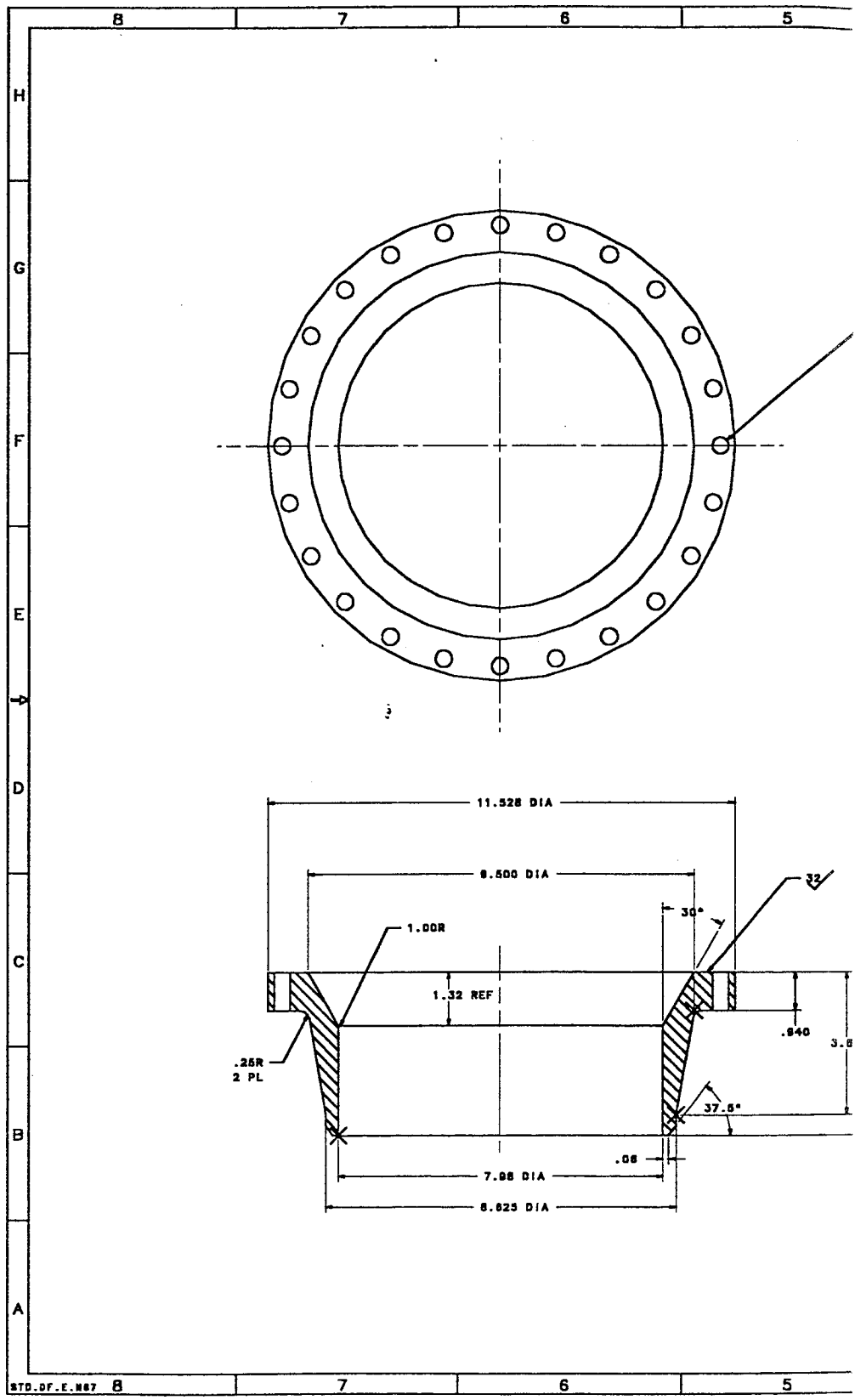

FOLDOUT FRAME

REVISIONS

CHGS. TO	DESCRIPTION	DATE APPROVED

.406DIA $^{+.006}_{-.001}$ 24 HOLES
EQ SP ON 10.811 DIA

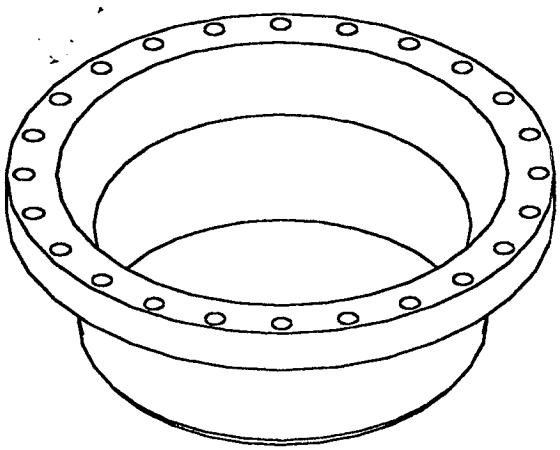

ORIENTATION VIEW
SCALE: NONE

4.000 REF

MATERIAL: 6061-T651 4 IN PLATE PER QQ-A-250/11

FOR PARTS LIST, APPLICATION DATA, AND GENERAL NOTES SEE SEPARATE PARTS LIST

DR BY G. BARRETT	ROCKWELL INTERNATIONAL SPACE SYSTEMS DIVISION
CHK BY	FLANGE - OUTLET, 8"FILL & DRAIN, LO2
APPROVED BY	
	F 03953 LR6565-007
	SCALE: 1/1 SHEET 1 OF 1

CAD/CAM 1

LR6565-007

25

FOLDOUT FRAME

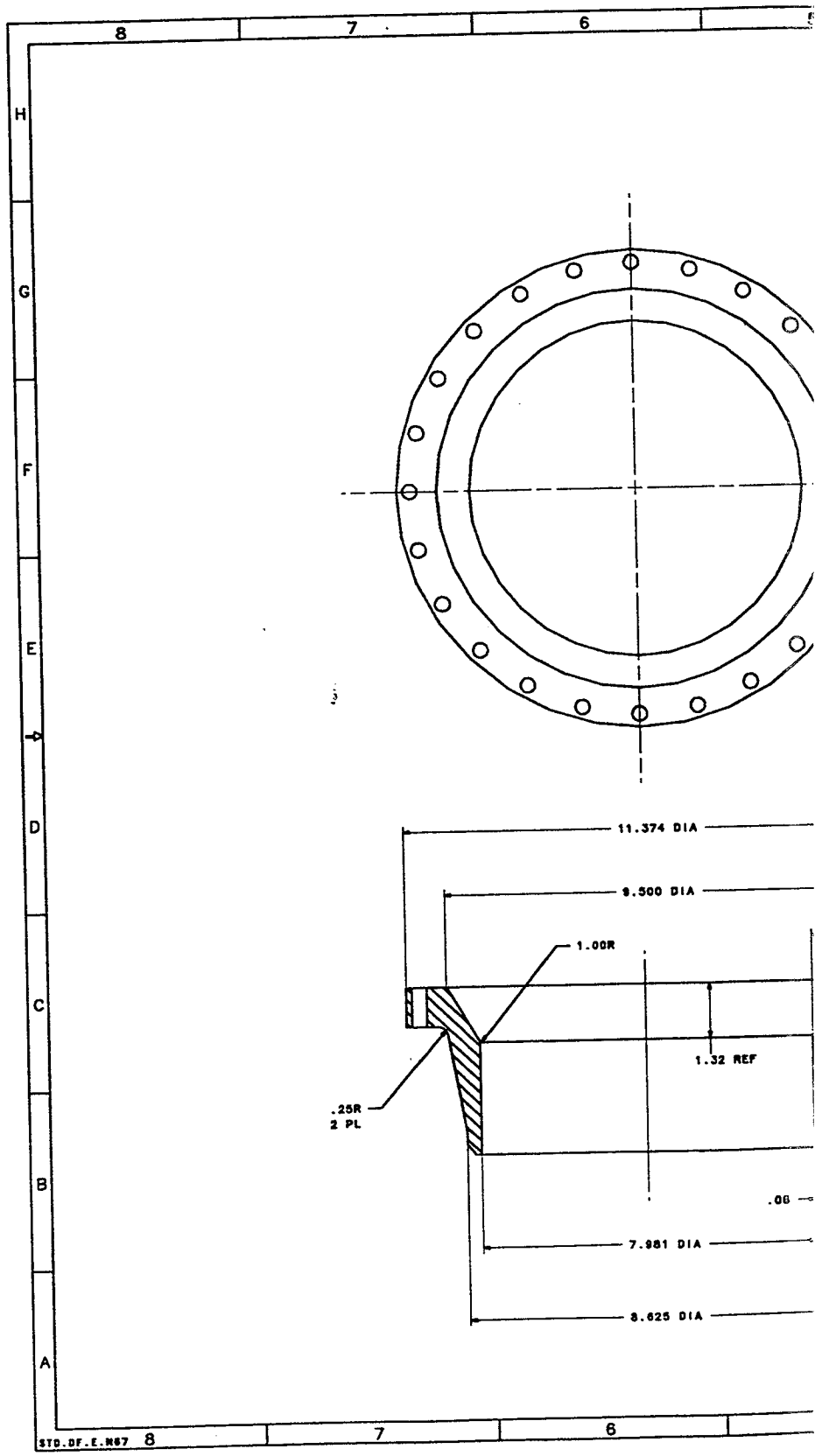

REVISIONS

ZONE	LTR	DESCRIPTION	DATE	APPROVED

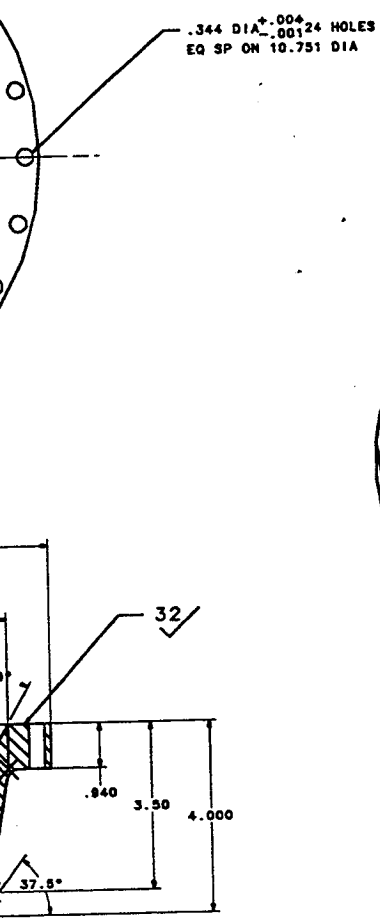

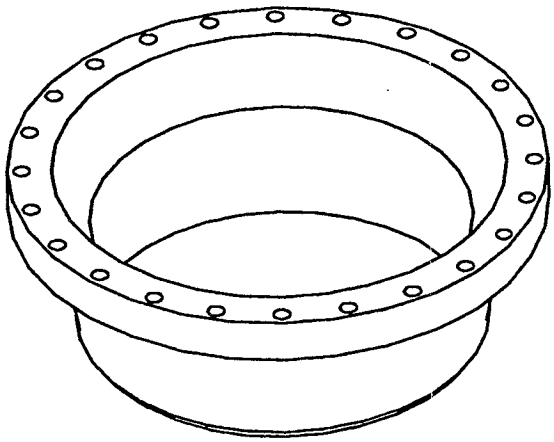

ORIENTATION VIEW
SCALE: NONE

MATERIAL: 6061-T651 4 INCH PLATE PER QQ-A-250/11

FOR PARTS LIST, APPLICATION DATA, AND GENERAL NOTES SEE SEPARATE PARTS LIST

DR. BY	C. BRIGHT	9/8/88
CHK. BY		
APPROVED BY		

ROCKWELL INTERNATIONAL SPACE STATION DIVISION

FLANGE - OUTLET, FILL&DRAIN LH2

SIZE E | DRAWING NO. 03953 | LOCATION NO. LR6565-008

SCALE: 1/1 | SHEET 1 OF 1

CAD/CAM 1

27

FOLDOUT FRAME

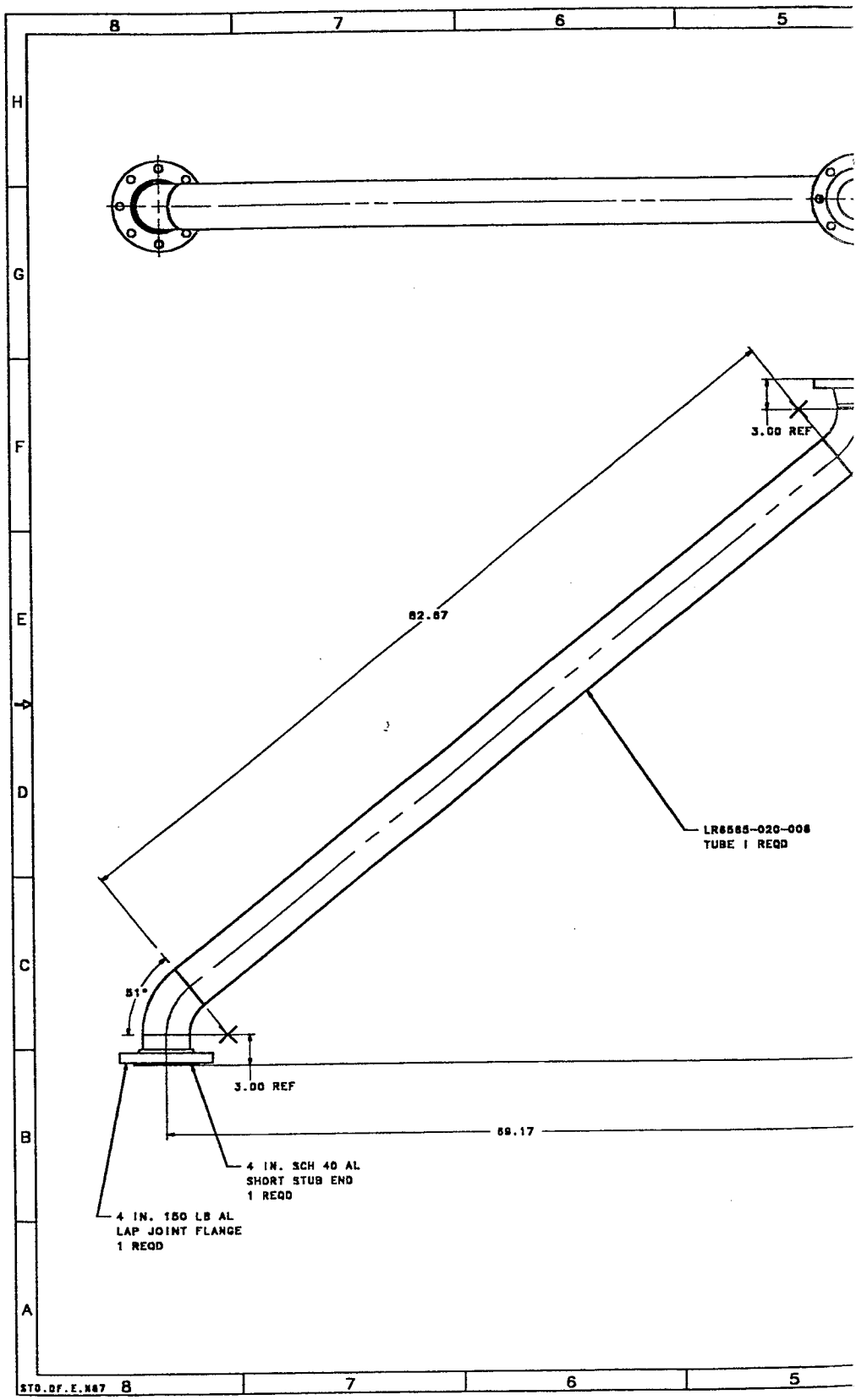

28

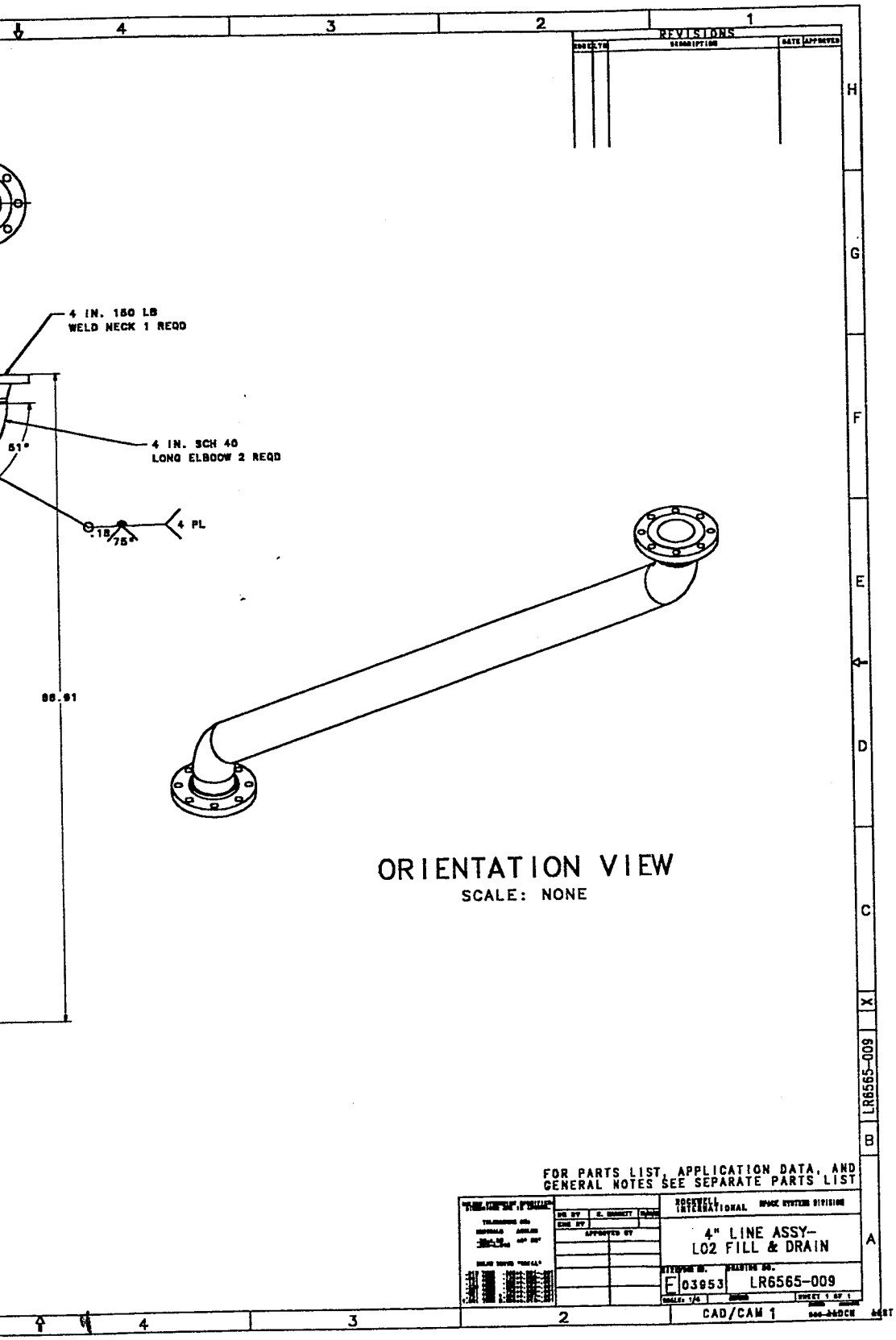
REVISIONS
4 IN. 150 LB
WELD NECK 1 REQD
4 IN. SCH 40
LONG ELBOW 2 REQD
51°
.18
75°
4 PL
86.91
ORIENTATION VIEW
SCALE: NONE
FOR PARTS LIST, APPLICATION DATA, AND
GENERAL NOTES SEE SEPARATE PARTS LIST
ROCKWELL INTERNATIONAL
4" LINE ASSY-
LO2 FILL & DRAIN
F 03953
LR6565-009
CAD/CAM 1
LR6565-009

29 FOLDOUT FRAME

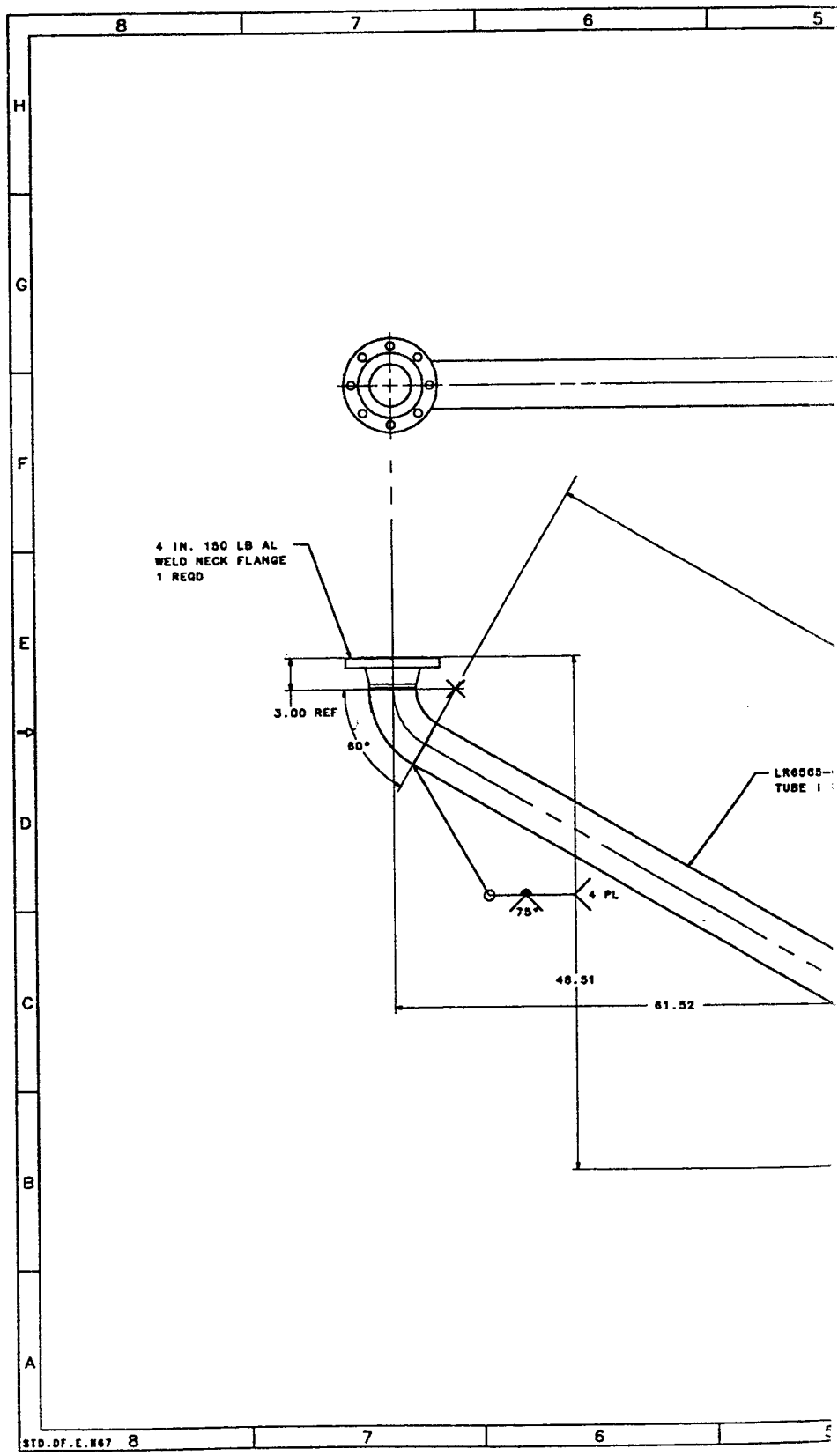

FOLDOUT FRAME

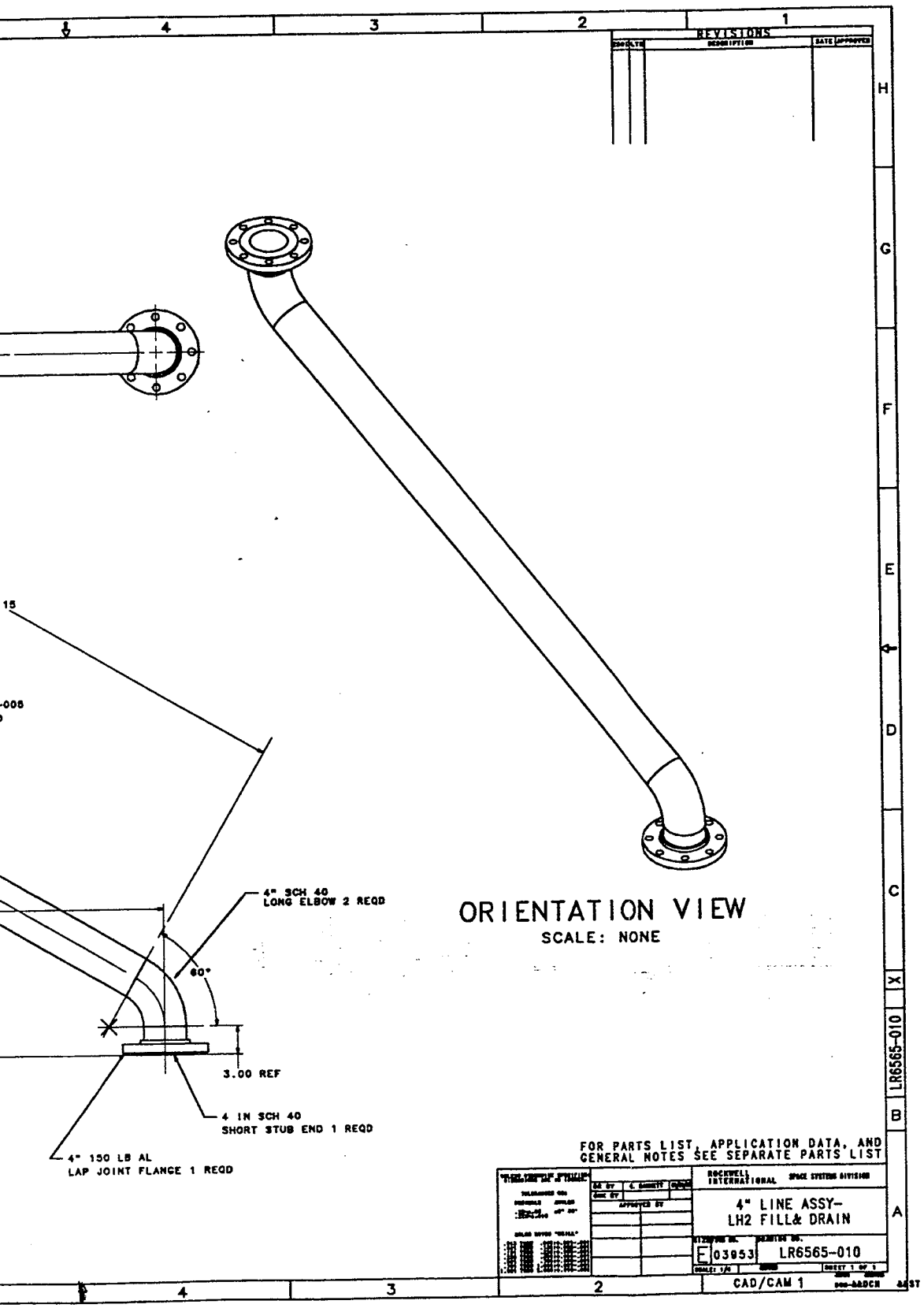

31

FOLDOUT FRAME

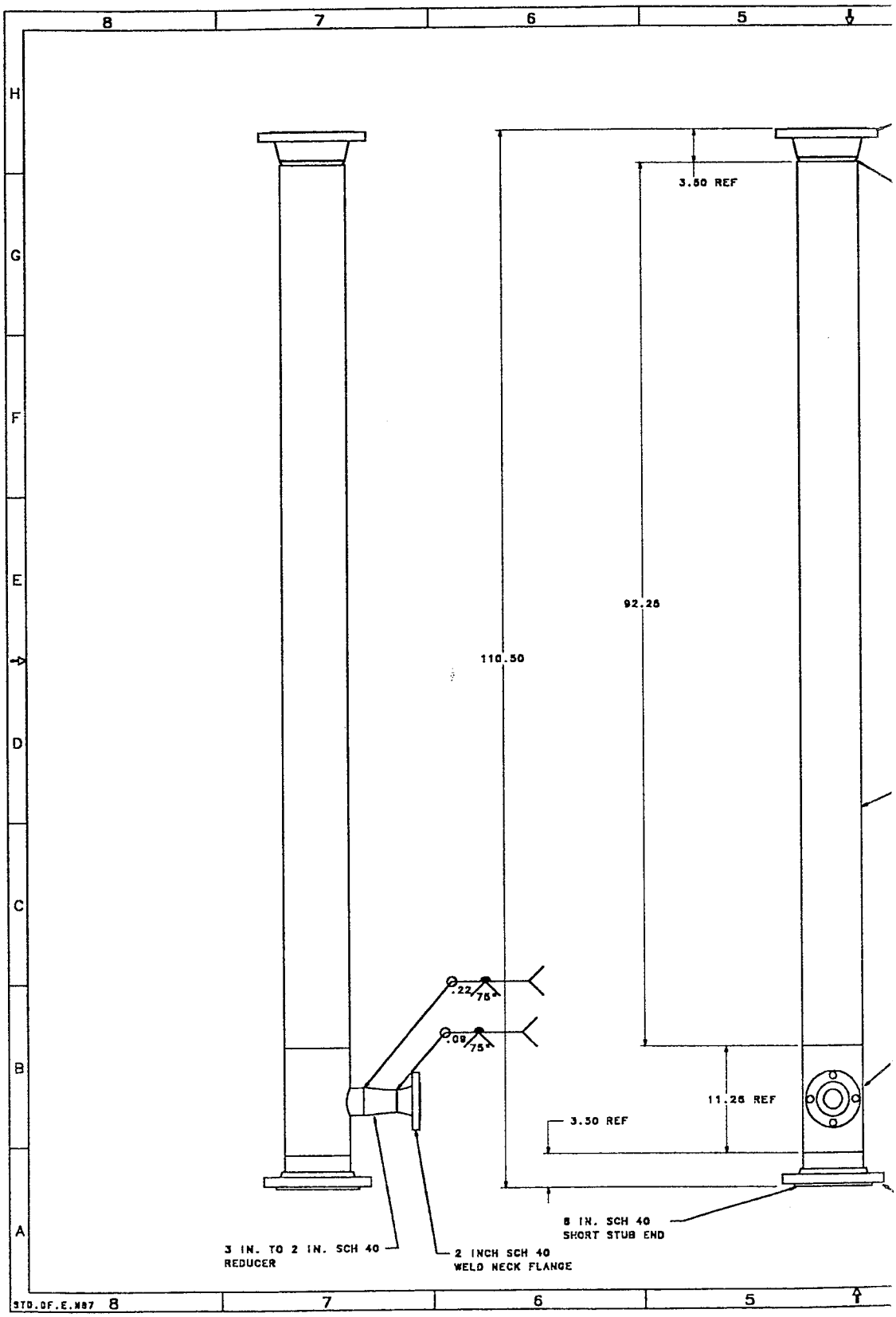

FOLDOUT FRAME

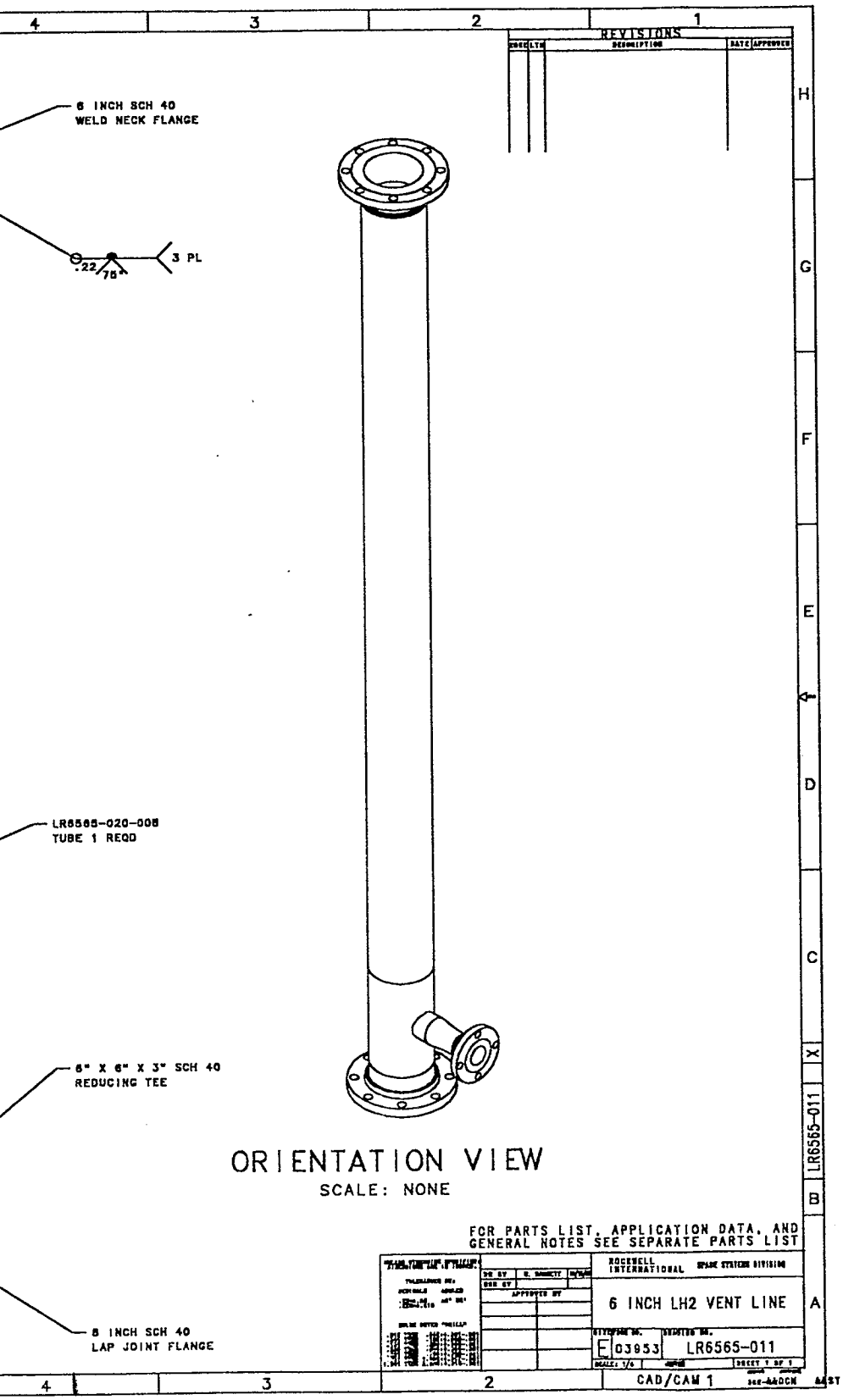

33 FOLDOUT FRAME

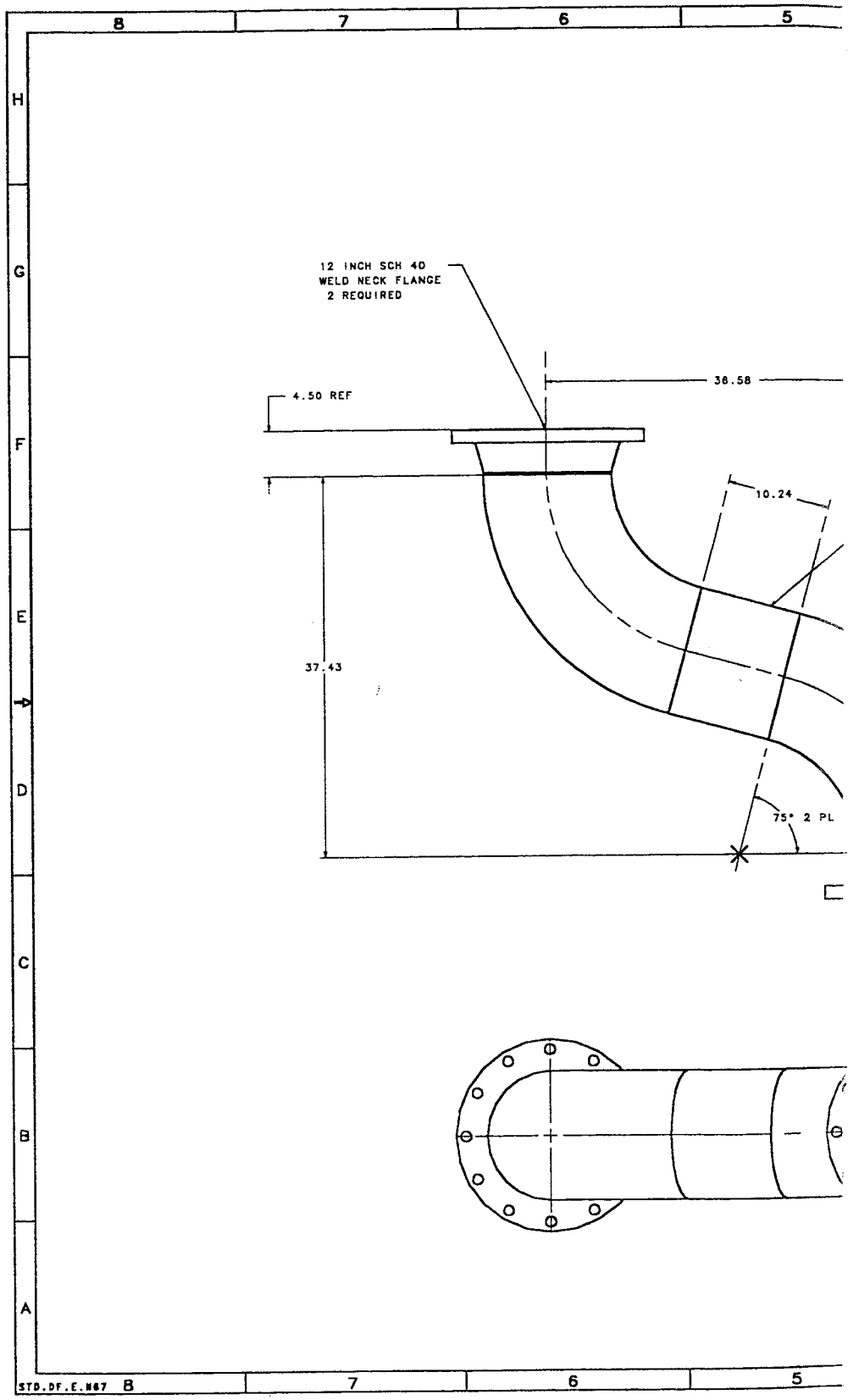

FOLDOUT FRAME

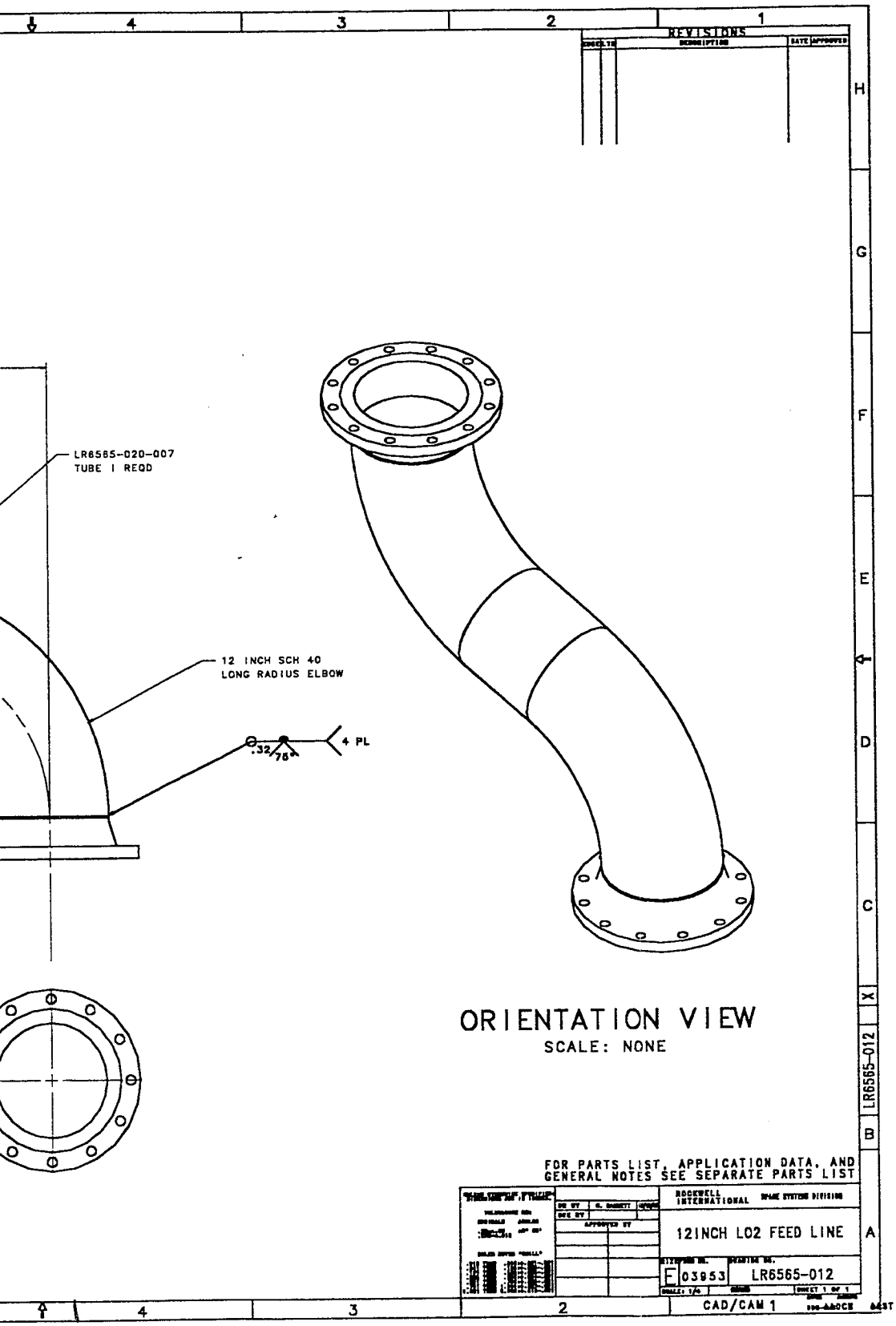

35

FOLDOUT FRAME

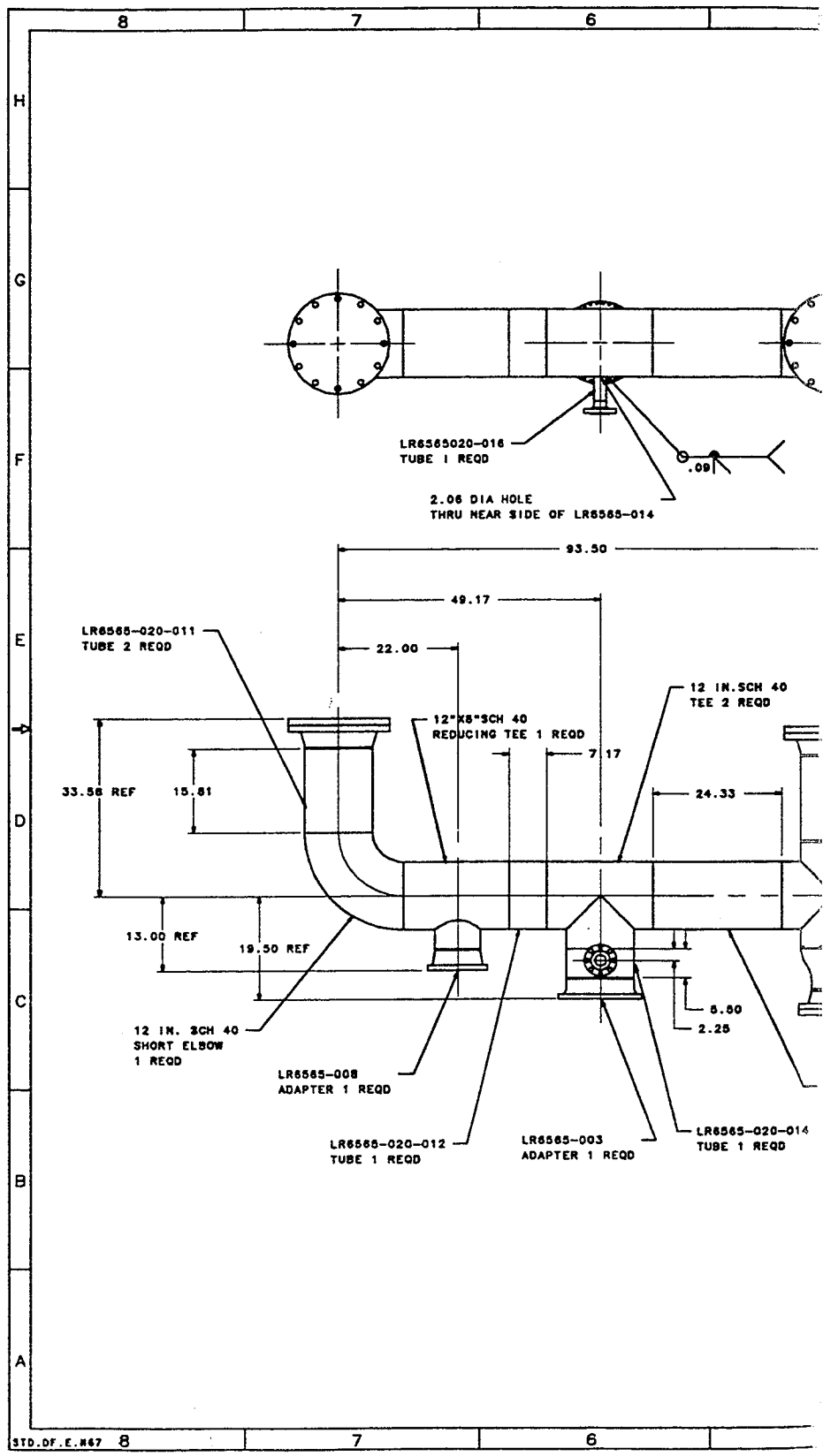

FOLDOUT FRAME

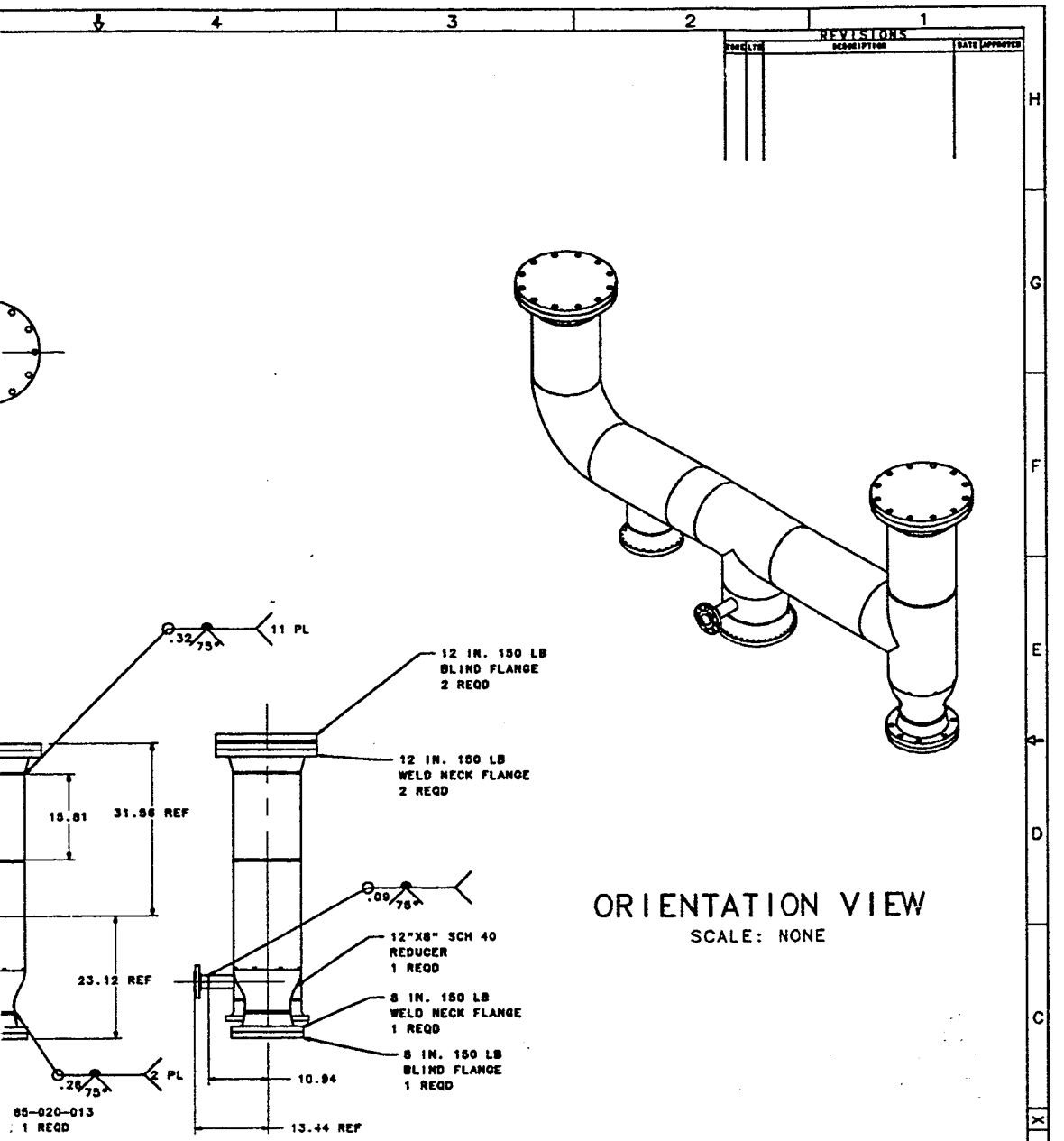

ORIENTATION VIEW
SCALE: NONE

FOR PARTS LIST, APPLICATION DATA, AND GENERAL NOTES SEE SEPARATE PARTS LIST

REVISIONS

ROCKWELL INTERNATIONAL SPACE SYSTEMS DIVISION

LH2 MANIFOLD-WELDMENT ASSY

E 03953 LR6565-013

CAD/CAM 1

37

FOLDOUT FRAME

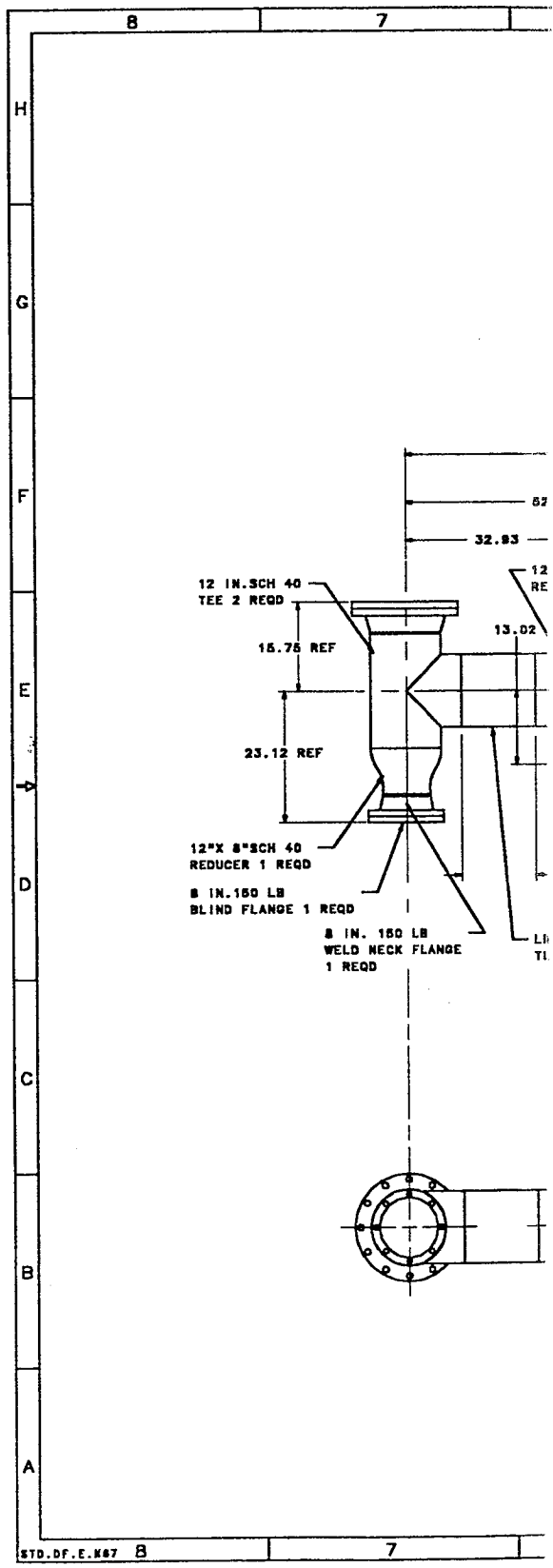

3p

FOLDOUT FRAME

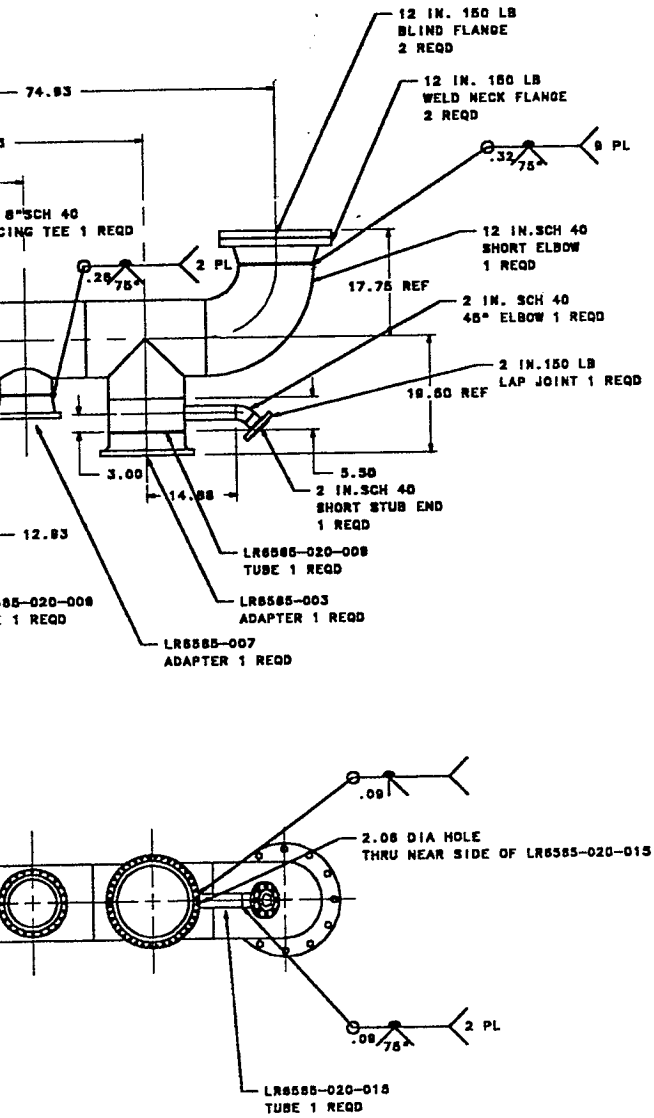

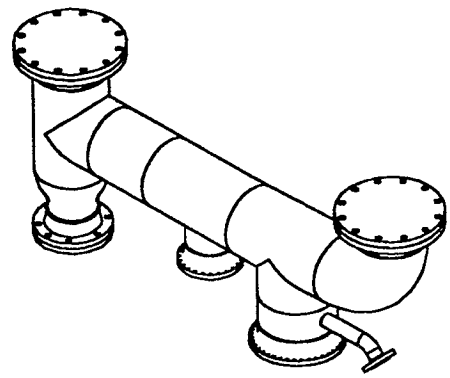

ORIENTATION VIEW
SCALE: NONE

FOR PARTS LIST, APPLICATION DATA, AND GENERAL NOTES SEE SEPARATE PARTS LIST

ROCKWELL INTERNATIONAL SPACE SYSTEMS DIVISION

LO2 MANIFOLD-
WELDMENT ASSY

E 03953 LR6565-014

CAD/CAM 1

39 FOLDOUT FRAME

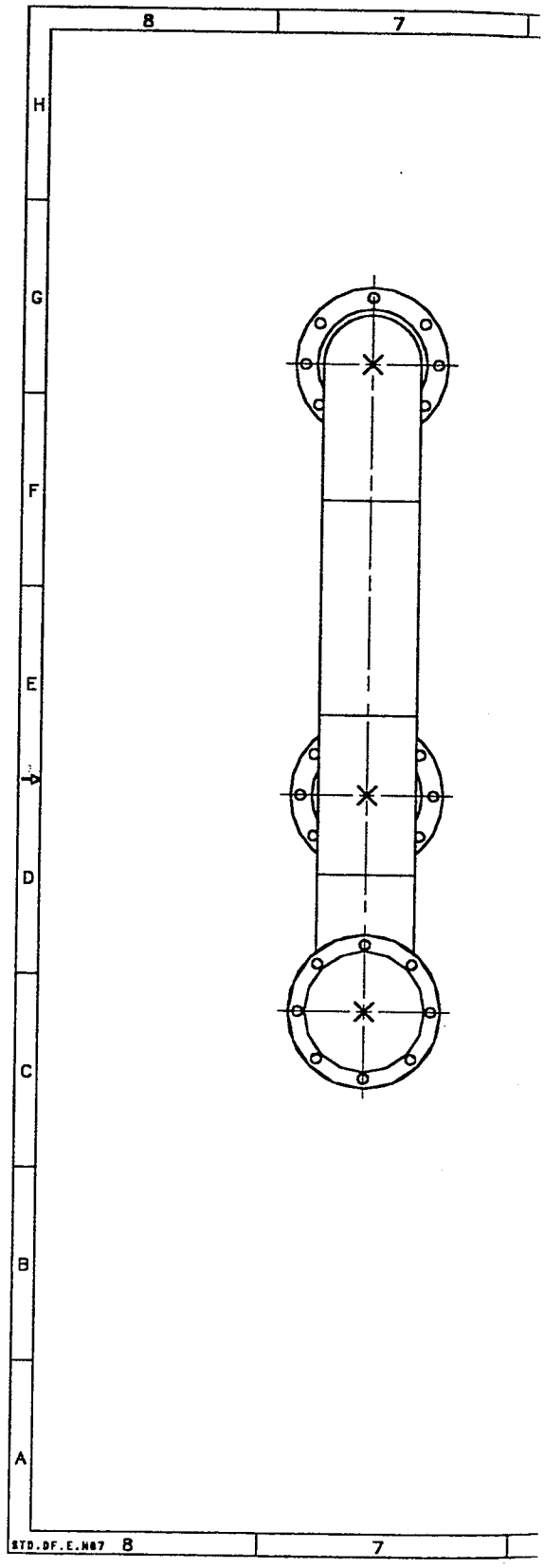

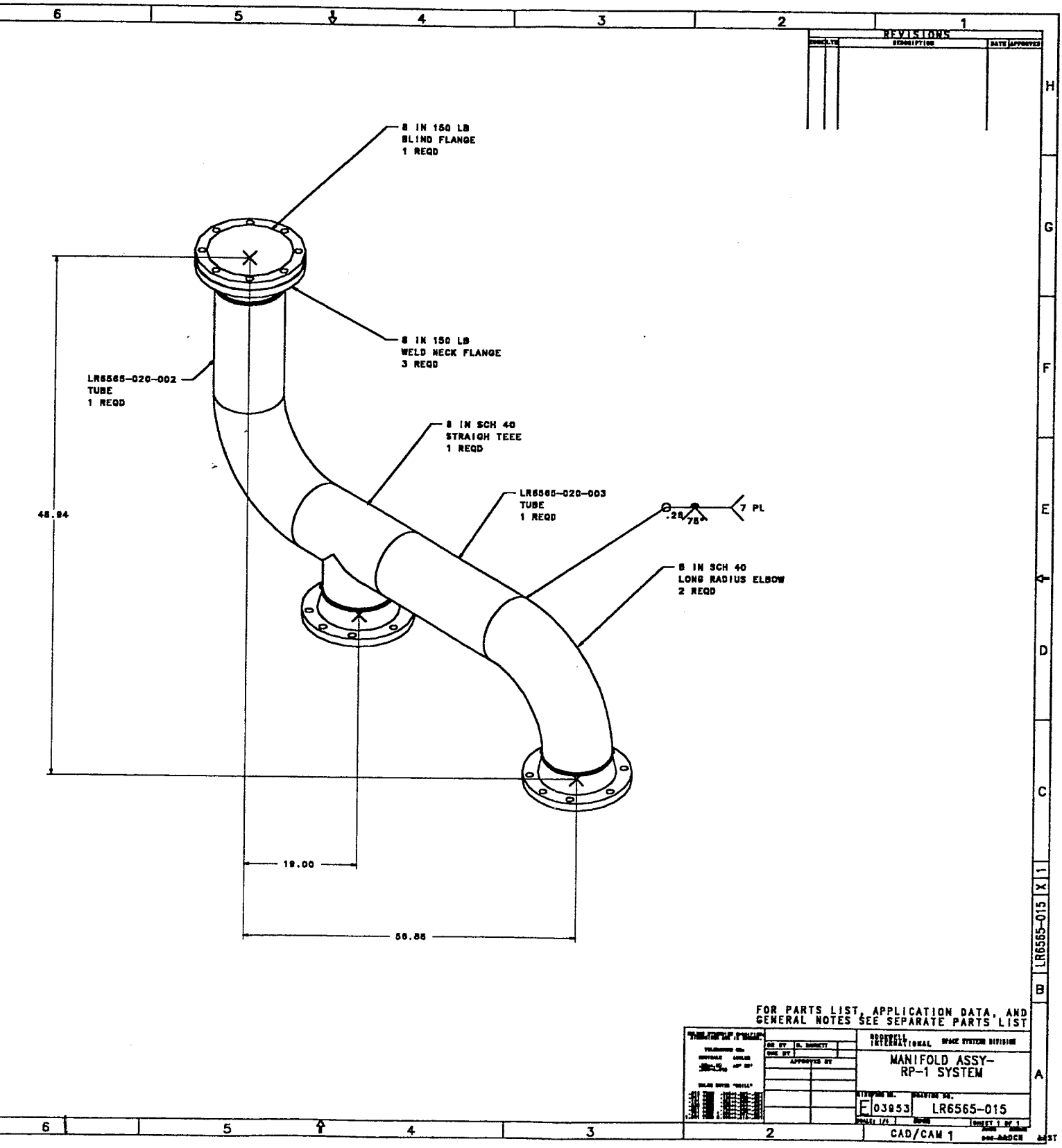
REVISIONS
8 IN 150 LB
BLIND FLANGE
1 REQD
8 IN 150 LB
WELD NECK FLANGE
3 REQD
LR6565-020-002
TUBE
1 REQD
8 IN SCH 40
STRAIGH TEEE
1 REQD
LR6565-020-003
TUBE
1 REQD
.28/.75
7 PL
8 IN SCH 40
LONG RADIUS ELBOW
2 REQD
48.94
19.00
56.88
FOR PARTS LIST, APPLICATION DATA, AND
GENERAL NOTES SEE SEPARATE PARTS LIST
ROCKWELL INTERNATIONAL
SPACE SYSTEM DIVISION
MANIFOLD ASSY-
RP-1 SYSTEM
E 03953
LR6565-015
CAD/CAM 1
LR6565-015

41 FOLDOUT FRAME

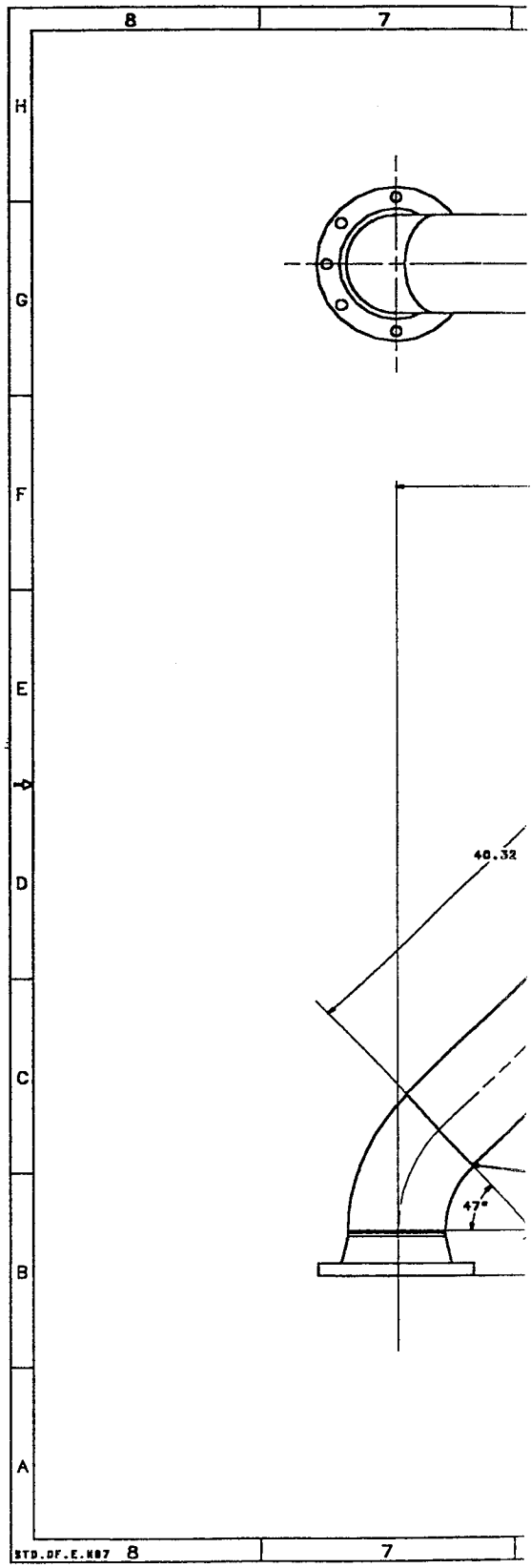

FOLDOUT FRAME

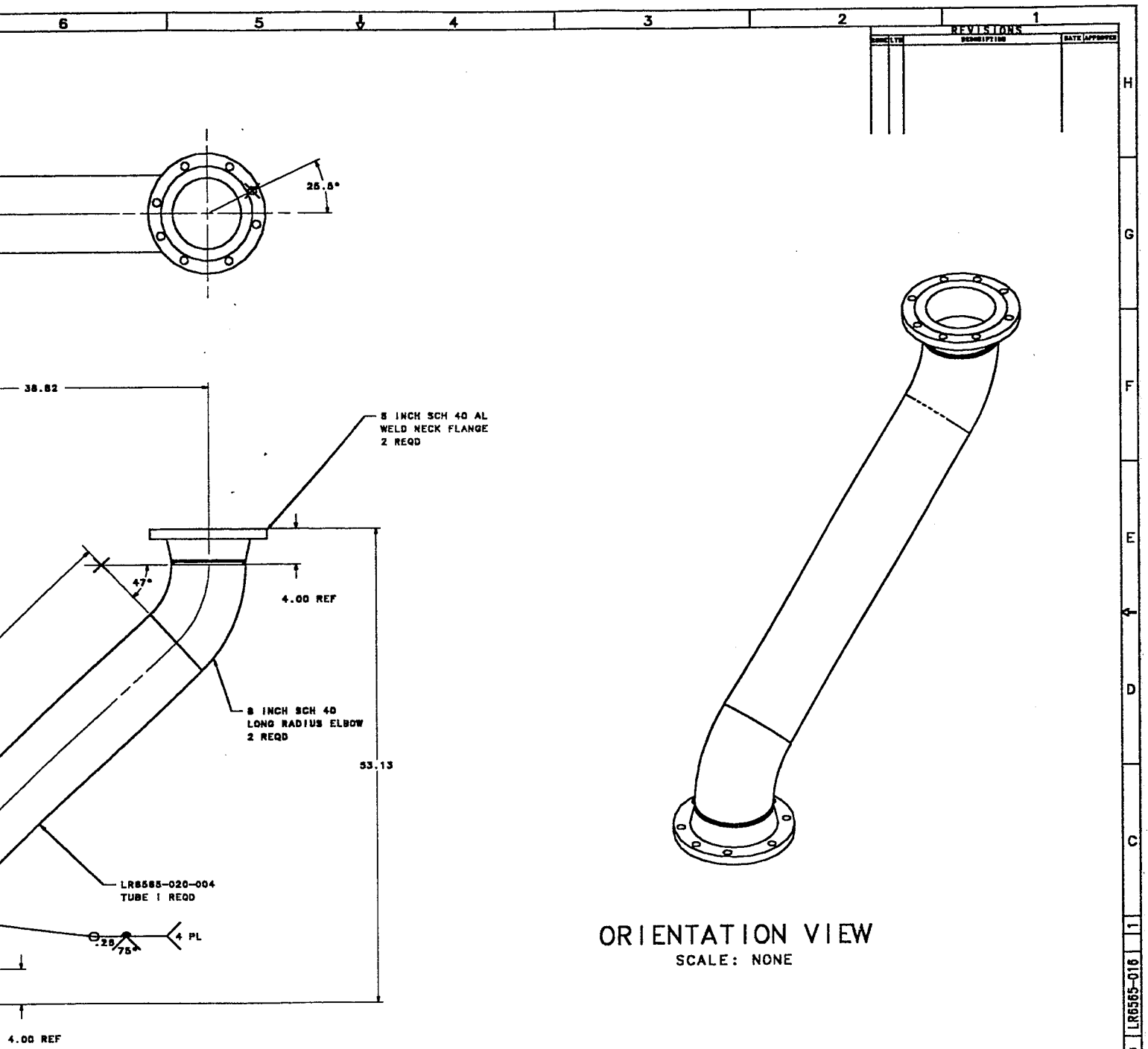

FOR PARTS LIST, APPLICATION DATA, AND GENERAL NOTES SEE SEPARATE PARTS LIST

ROCKWELL INTERNATIONAL SPACE SYSTEM DIVISION

8 INCH RP-1 - FEED LINE

E 03953 LR6565-016

CAD/CAM 1

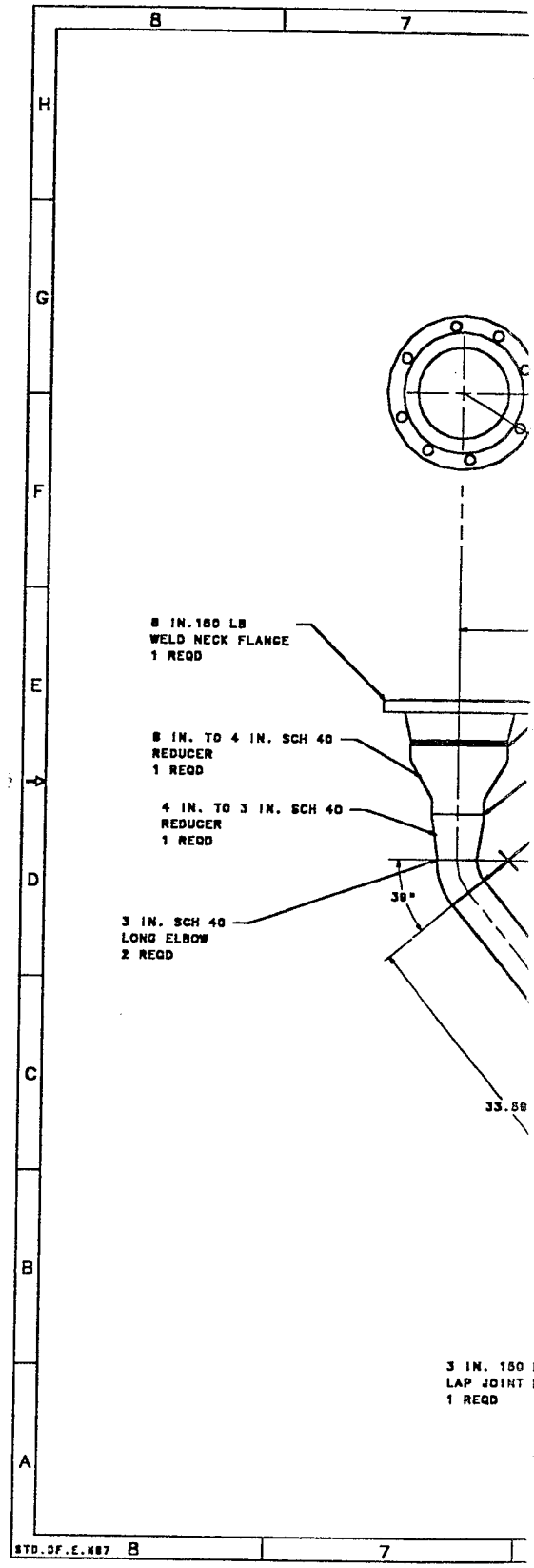
8 IN.150 LB
WELD NECK FLANGE
1 REQD
8 IN. TO 4 IN. SCH 40
REDUCER
1 REQD
4 IN. TO 3 IN. SCH 40
REDUCER
1 REQD
3 IN. SCH 40
LONG ELBOW
2 REQD
38°
33.50
3 IN. 150
LAP JOINT
1 REQD
STD.DF.E.N87

44

FOLDOUT FRAME

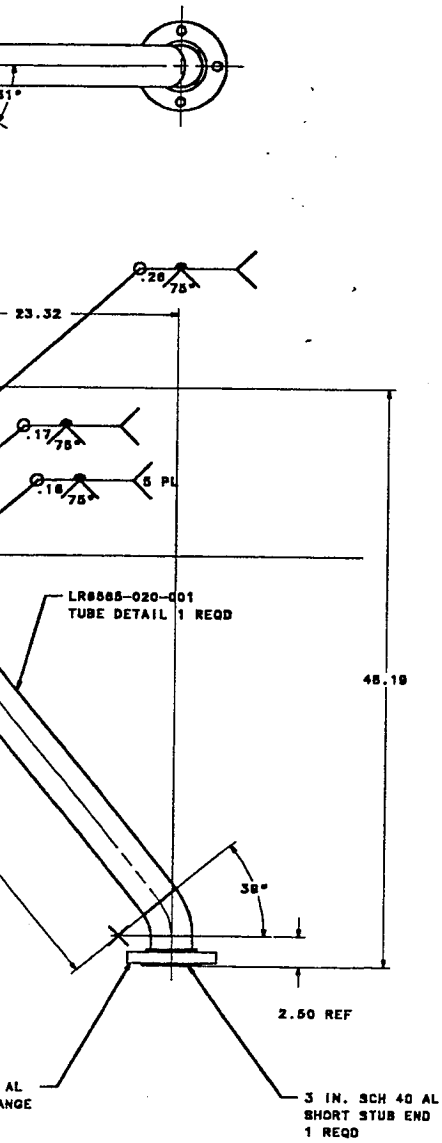

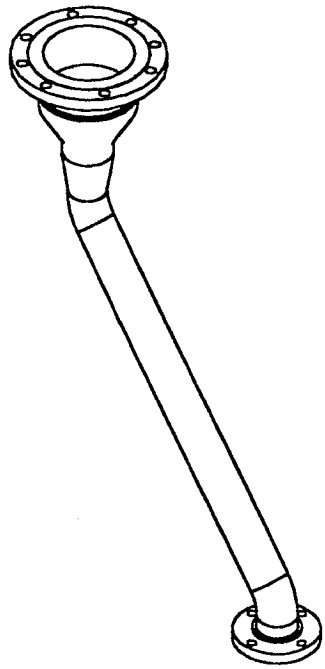

ORIENTATION VIEW
SCALE: NONE

FOR PARTS LIST, APPLICATION DATA, AND GENERAL NOTES SEE SEPARATE PARTS LIST

REVISIONS

ROCKWELL INTERNATIONAL SPACE SYSTEMS DIVISION

3 INCH RP-1
FILL & DRAIN LINE

E 03953 LR6565-017

CAD/CAM 1

45

FOLDOUT FRAME

VMBAT008 FRAME 1 MARCH 22, 1995 07.22.21

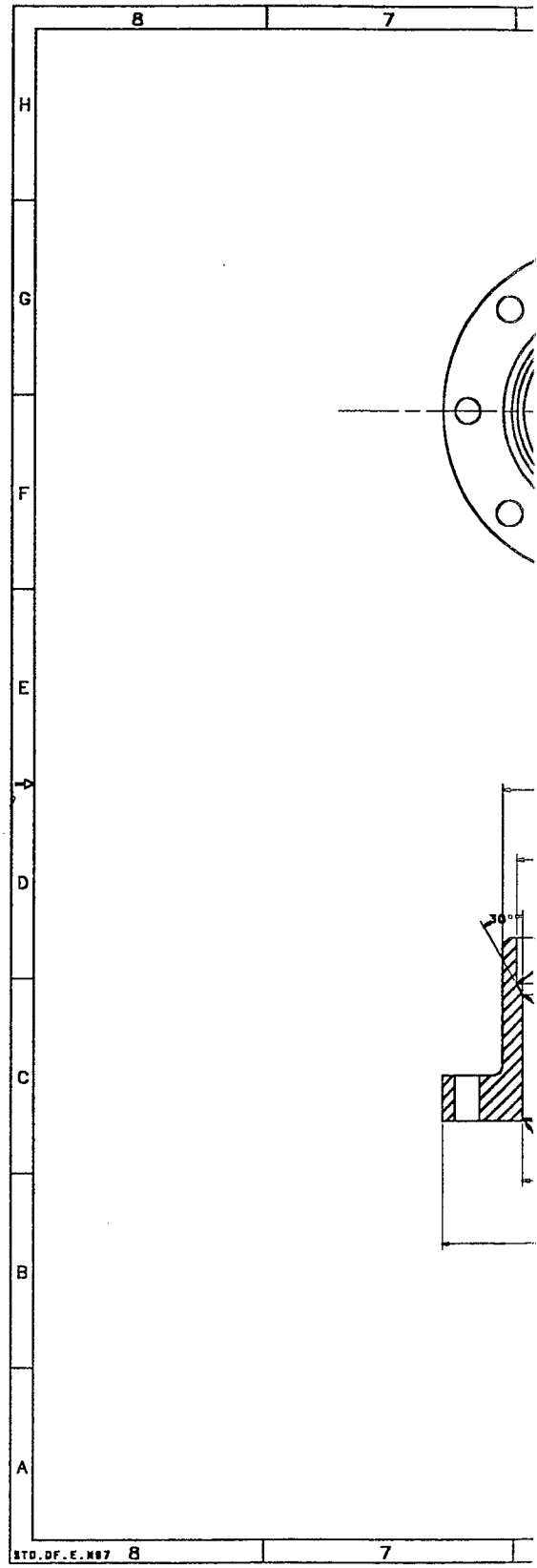

FOLDOUT FRAME

REVISIONS

ZONE	LTR	DESCRIPTION	DATE	APPROVED

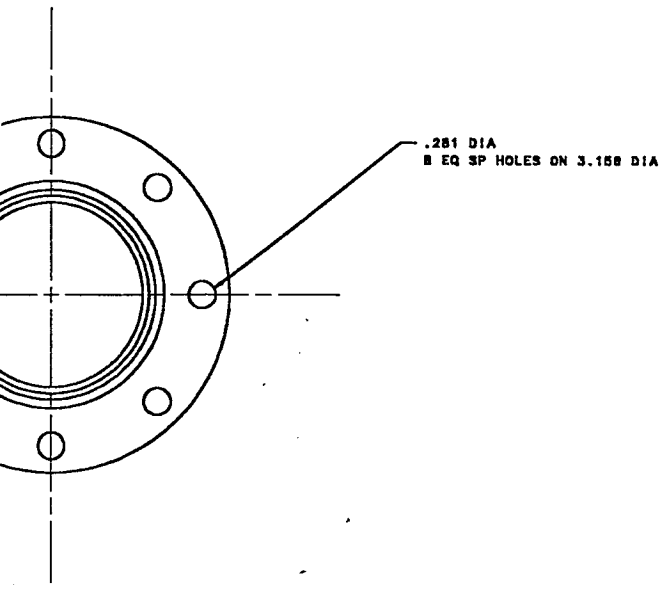

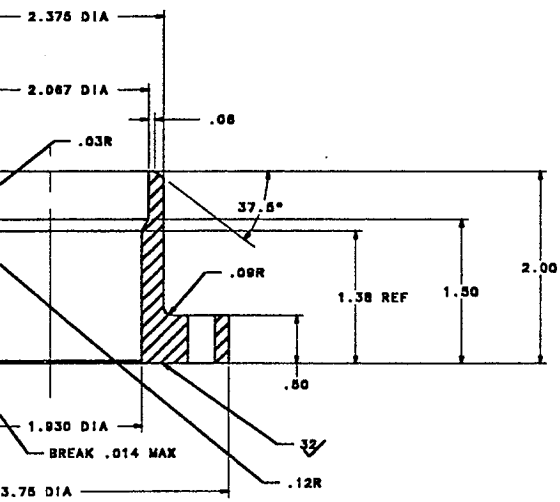

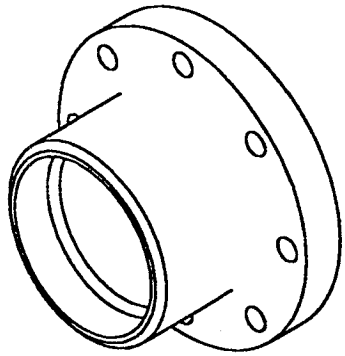

ORIENTATION VIEW
SCALE: NONE

MATERIAL: 2 INCH PLATE 6061-T651 AL PER QQ-A-250/11

FOR PARTS LIST, APPLICATION DATA, AND GENERAL NOTES SEE SEPARATE PARTS LIST

ROCKWELL INTERNATIONAL SPACE SYSTEMS DIVISION

ADAPTER-
TYPE 1 INLET & TYPE 2 OUTLET,
MC284-0395 VALVE

E 03953 LR6565-018

SHEET 1 OF 1

CAD/CAM 1

LR6565-018

47 FOLDOUT FRAME

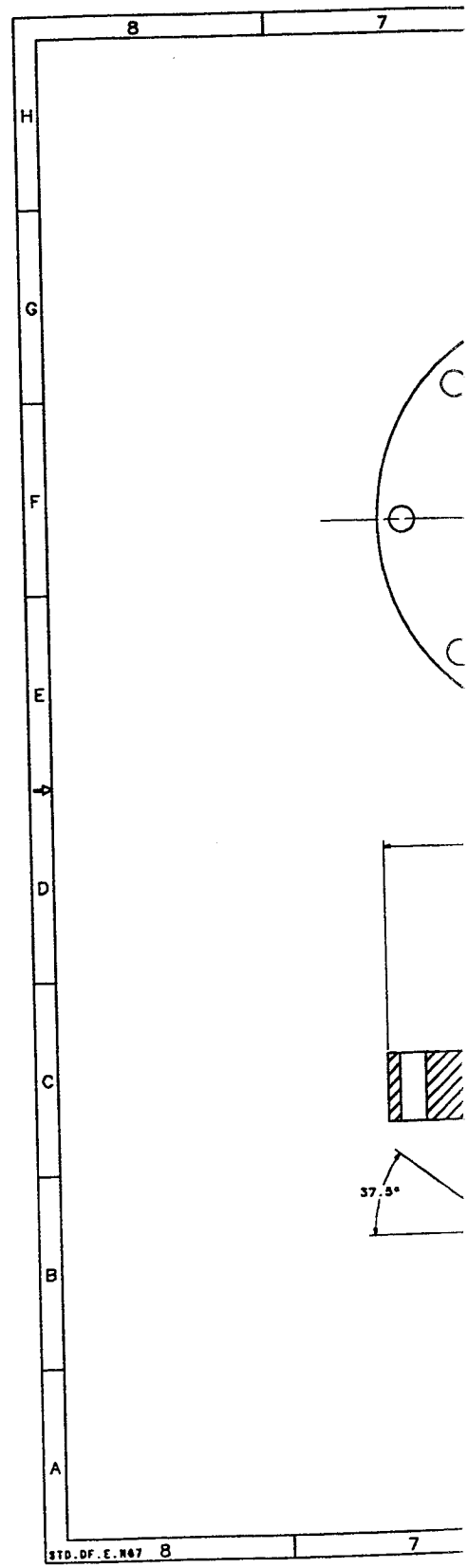

VARIAN FRAME 1 MAGNET 6T, 1000 - 1500

FOLDOUT FRAME 48

REVISIONS

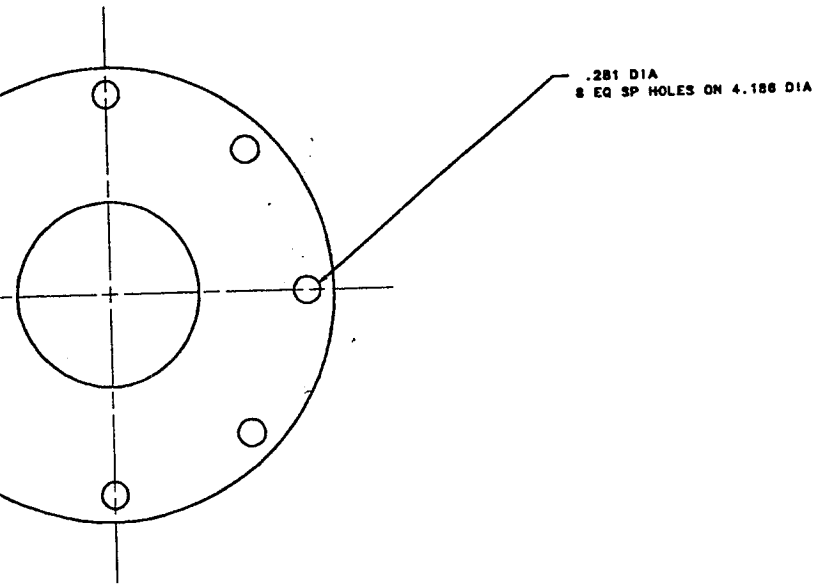

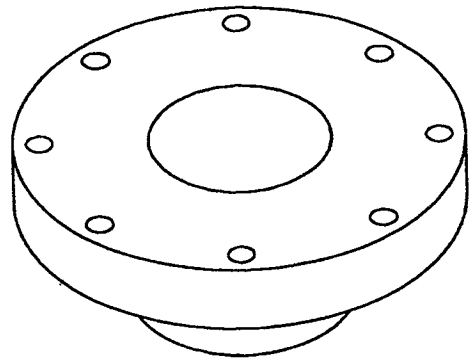

ORIENTATION VIEW
SCALE: NONE

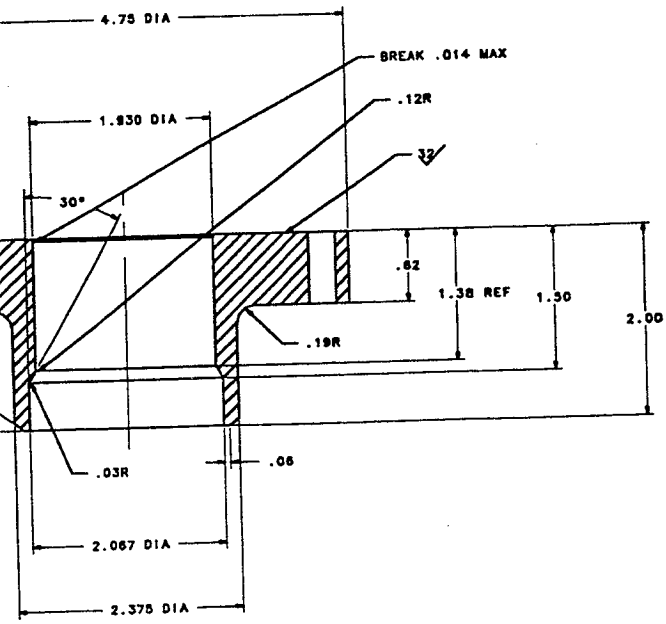

FOR PARTS LIST, APPLICATION DATA, AND GENERAL NOTES SEE SEPARATE PARTS LIST

ROCKWELL INTERNATIONAL SPACE SYSTEMS DIVISION

ADAPTER-
TYPE 1 OUTLET & TYPE 2 INLET, MC284-0395 VALVE

SIZE E 03953 DRAWING NO. LR6565-019

SCALE: 2/1 SHEET 1 OF 1

CAD/CAM 1

49 FOLDOUT FRAME

VMBAT009 FRAME 1 APRIL 04, 1995 08.30.07

DASH NO.	"A"DIM	"B"DIM	"C"DIM	NEXT ASSY	SY
-001	33.59	3.50	.216	LR6565-017	RP-
-002	16.94	8.625	.322	LR6565-015	RP-
-003	18.68	8.625	.322	LR6565-016	RP-
-004	40.32	8.625	.322	LR6565-016	RP-
-005	84.15	4.50	.237	LR6565-010	LH
-006	82.87	4.50	.237	LR6565-009	LO
-007	10.24	12.75	.375	LR6565-012	LO
-008	92.25	8.625	.280	LR6565-011	LH
-009	12.93	12.750	.375	LR6565-014	LO
-010	5.50	12.750	.375	LR6565-014	LO
-011	15.81	12.750	.375	LR6565-013	LH
-012	7.17	12.750	.375	LR6565-013	LH
-013	24.33	12.750	.375	LR6565-013	LH
-014	5.50	12.750	.375	LR6565-013	LH
-015	8.70	2.375	.154	LR6565-014	LO
-016	4.93	2.375	.154	LR6565-013	LH
-017	3.90	2.375	.154	LR6565-028	LO
-018	4.00	2.375	.154	LR6565-034	LH
-019	51.46	2.375	.154	LR6565-034	LH
-020	68.46	2.375	.154	LR6565-035	RP-
-021	32.79	2.375	.154	LR6565-036	RP-
-022	2.98	2.375	.154	LR6565-035	RP-
-023	121.83	4.50	.237	LR6565-036	LO
-024	92.55	4.50	.237	LR6565-036	LO
-025	75.23	2.375	.154	LR6565-037	LO
-026	25.42	2.375	.154	LR6565-038	LO

ALL MATERIAL IS 6061-T6 EXCE

CODED ① WHICH ARE 304 CRES

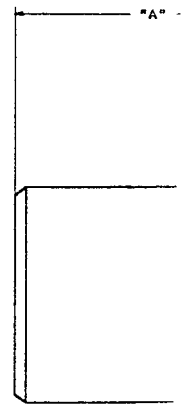

STD.DF.E.M87

SCH	QTY
40S	1
	1
	1
	2
	1
	1
	1
40S	1

ITEMS

REVISIONS

ZONE	LTR	DESCRIPTION	DATE	APPROVED

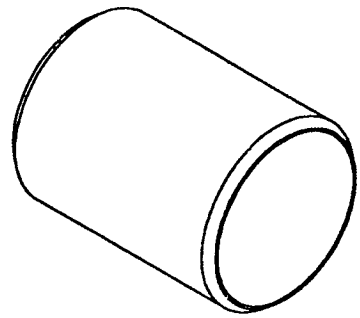

ORIENTATION VIEW
SCALE: NONE

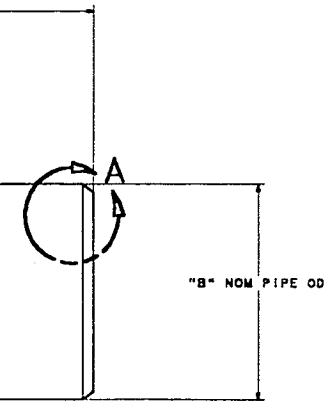

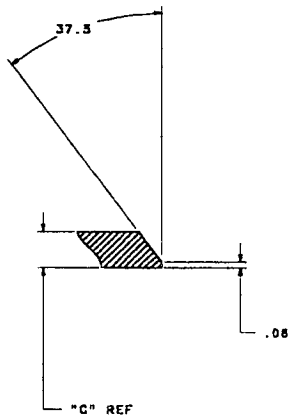

DETAIL A
SCALE:2/1

FOR PARTS LIST, APPLICATION DATA, AND GENERAL NOTES SEE SEPARATE PARTS LIST

ROCKWELL INTERNATIONAL SPACE SYSTEMS DIVISION

TUBE-PROP TEST ARTICLE

DRAWING NO. E 03053 DRAWING NO. LR6565-020

SCALE: 1/1 SHEET 1 OF 1

CAD/CAM 1

LR6565-020

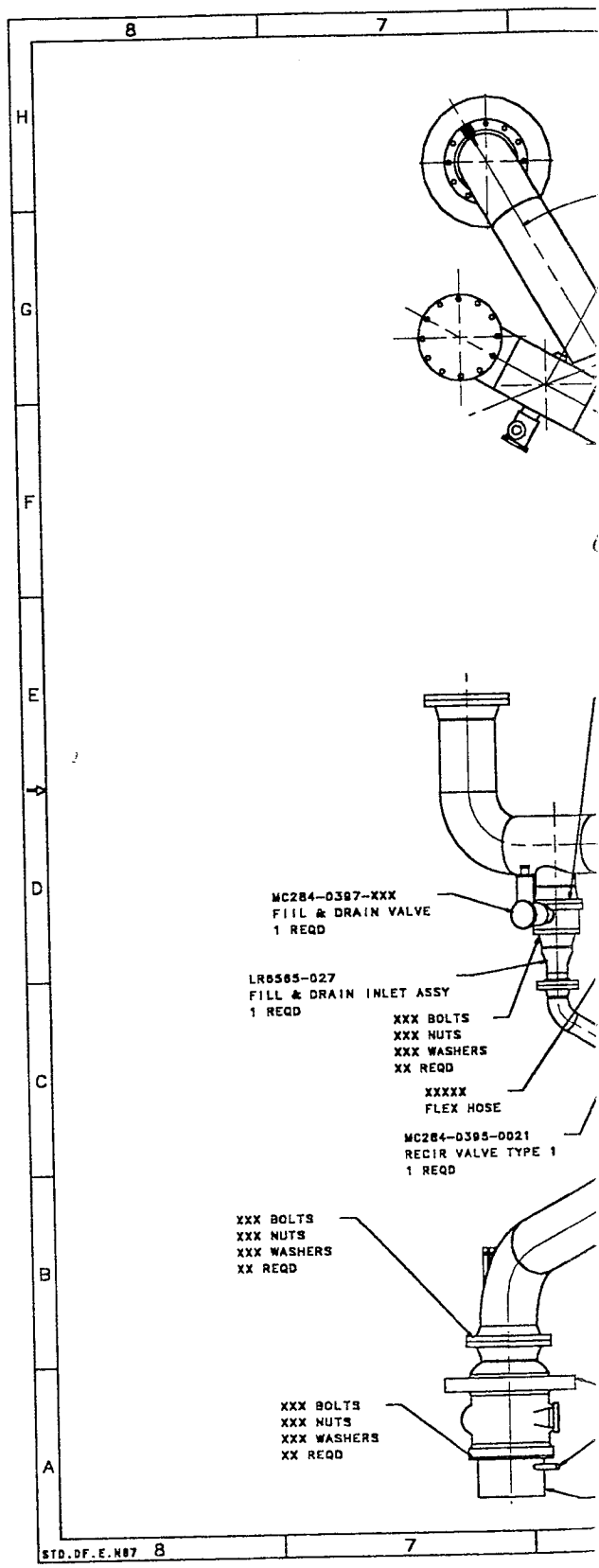
MC284-0397-XXX
FILL & DRAIN VALVE
1 REQD
LR6565-027
FILL & DRAIN INLET ASSY
1 REQD
XXX BOLTS
XXX NUTS
XXX WASHERS
XX REQD
XXXXX
FLEX HOSE
MC284-0395-0021
RECIR VALVE TYPE 1
1 REQD
XXX BOLTS
XXX NUTS
XXX WASHERS
XX REQD
XXX BOLTS
XXX NUTS
XXX WASHERS
XX REQD
STD.DF.E.M87

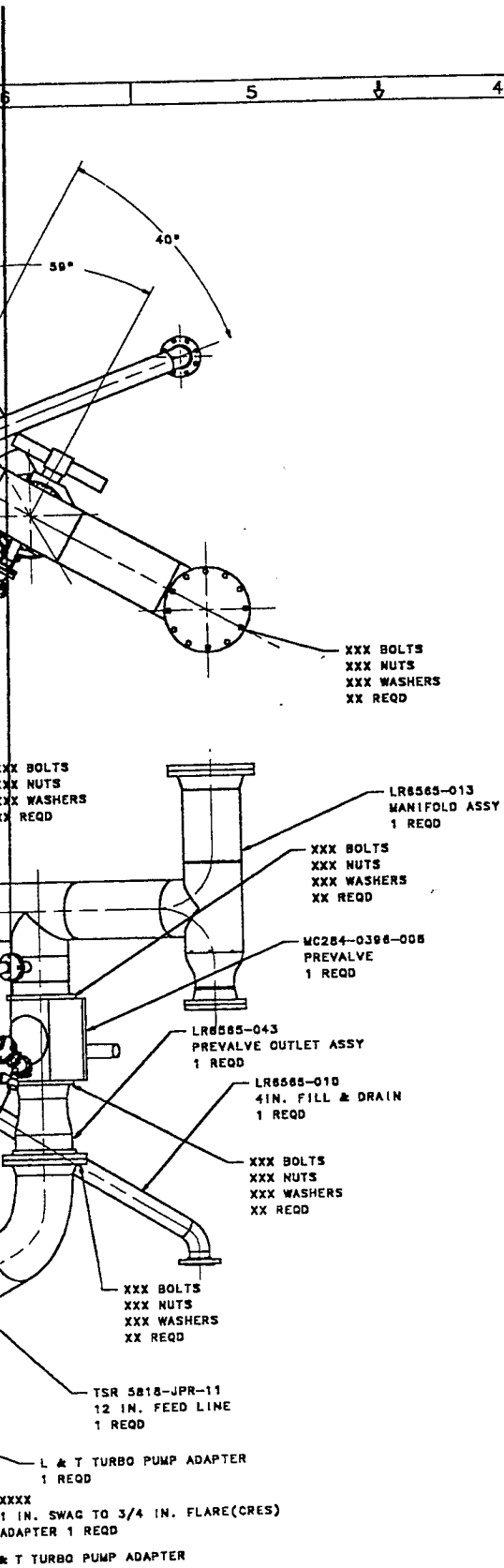

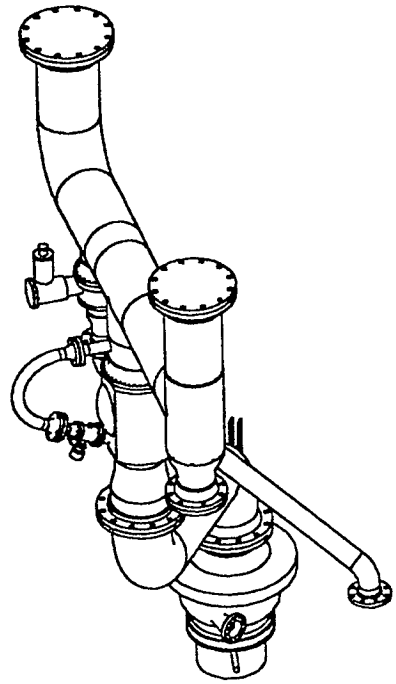

ORIENTATION VIEW
SCALE: NONE

REVISIONS

FOR PARTS LIST, APPLICATION DATA, AND GENERAL NOTES SEE SEPARATE PARTS LIST

ROCKWELL INTERNATIONAL SPACE SYSTEMS DIVISION

LH2 FEED SYS-ASSY

E 03953 LR6565-021

CAD/CAM 1

53 FOLDOUT FRAME

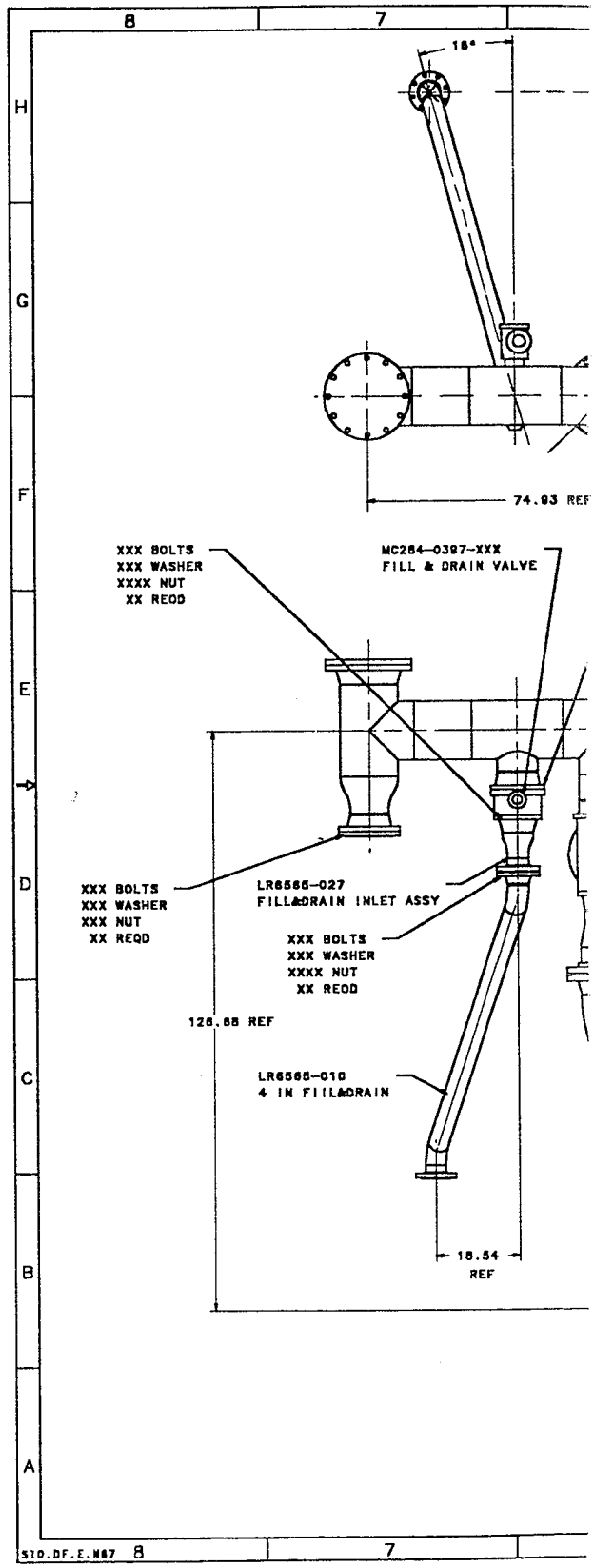

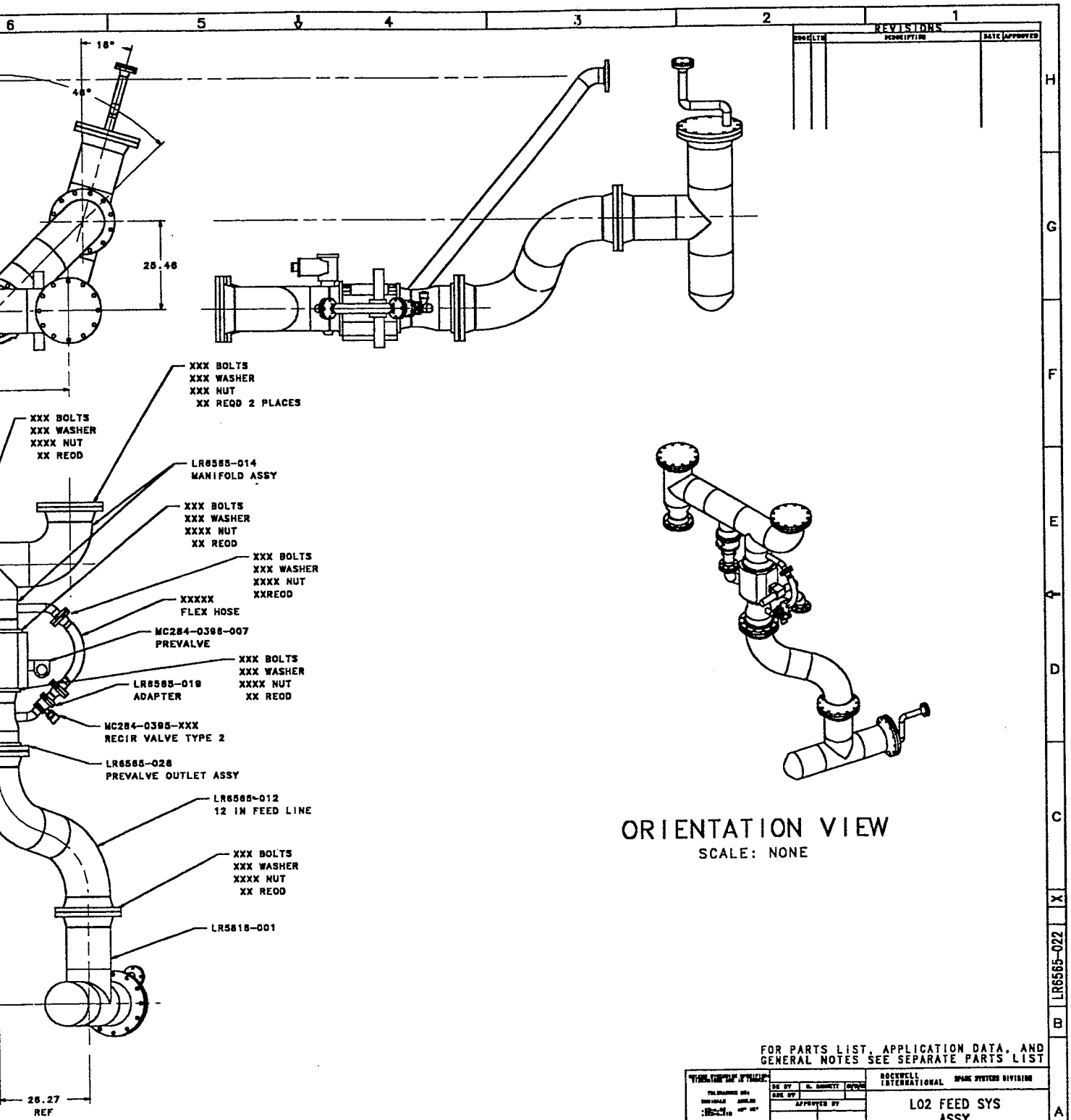
REVISIONS
18°
48°
28.46
XXX BOLTS
XXX WASHER
XXX NUT
XX REQD 2 PLACES
XXX BOLTS
XXX WASHER
XXXX NUT
XX REQD
LR6565-014
MANIFOLD ASSY
XXX BOLTS
XXX WASHER
XXXX NUT
XX REQD
XXX BOLTS
XXX WASHER
XXXX NUT
XXREQD
XXXXX
FLEX HOSE
MC284-0398-007
PREVALVE
XXX BOLTS
XXX WASHER
XXXX NUT
XX REQD
LR6565-019
ADAPTER
MC284-0395-XXX
RECIR VALVE TYPE 2
LR6565-026
PREVALVE OUTLET ASSY
LR6565-012
12 IN FEED LINE
XXX BOLTS
XXX WASHER
XXXX NUT
XX REQD
LR5818-001
26.27
REF
ORIENTATION VIEW
SCALE: NONE
FOR PARTS LIST, APPLICATION DATA, AND
GENERAL NOTES SEE SEPARATE PARTS LIST
ROCKWELL INTERNATIONAL
LO2 FEED SYS
ASSY
F 03953
LR6565-022
CAD/CAM 1
LR6565-022

55 FOLDOUT FRAME

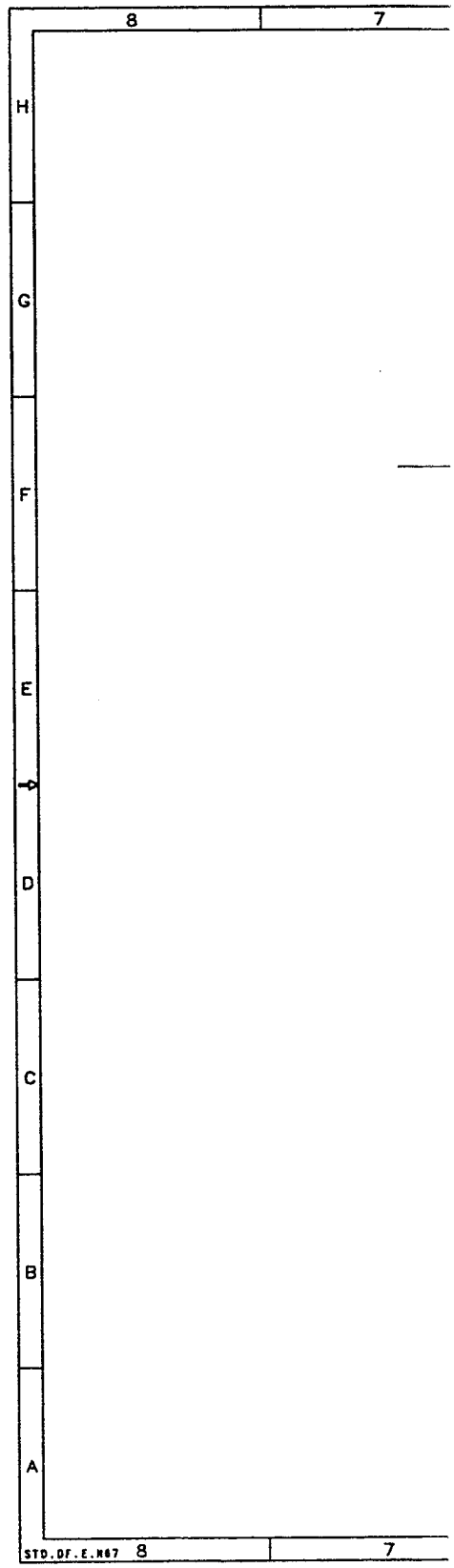

FOLDOUT FRAME 56

REVISIONS

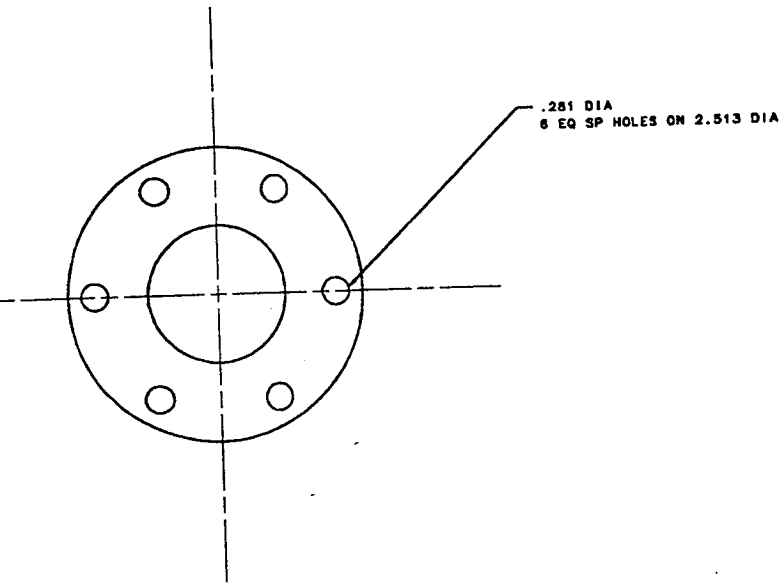

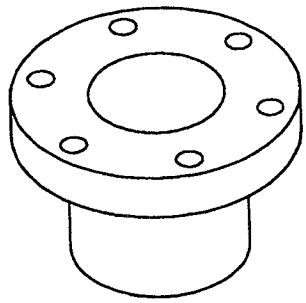

ORIENTATION VIEW
SCALE: NONE

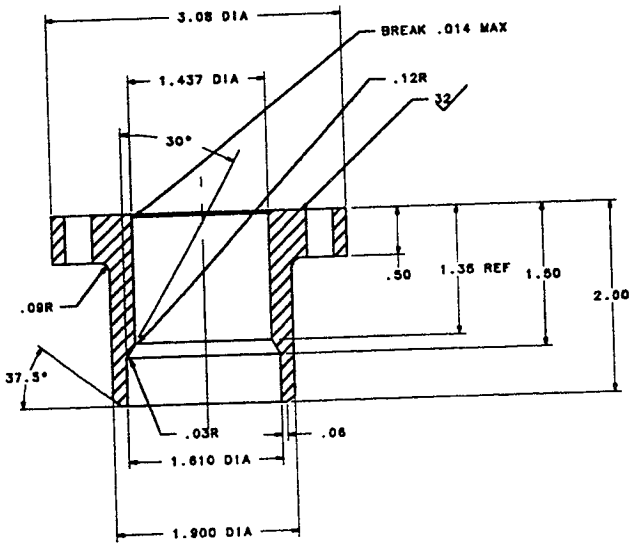

FOR PARTS LIST, APPLICATION DATA, AND GENERAL NOTES SEE SEPARATE PARTS LIST

ROCKWELL INTERNATIONAL SPACE SYSTEMS DIVISION

ADAPTER- OUTLET, TYPE 5, MC284-0395 VALVE

F 03953 LR6565-023

CAD/CAM 1

57 FOLDOUT FRAME

VMBAT012 FRAME 1 MARCH 24, 1995 13.15.37

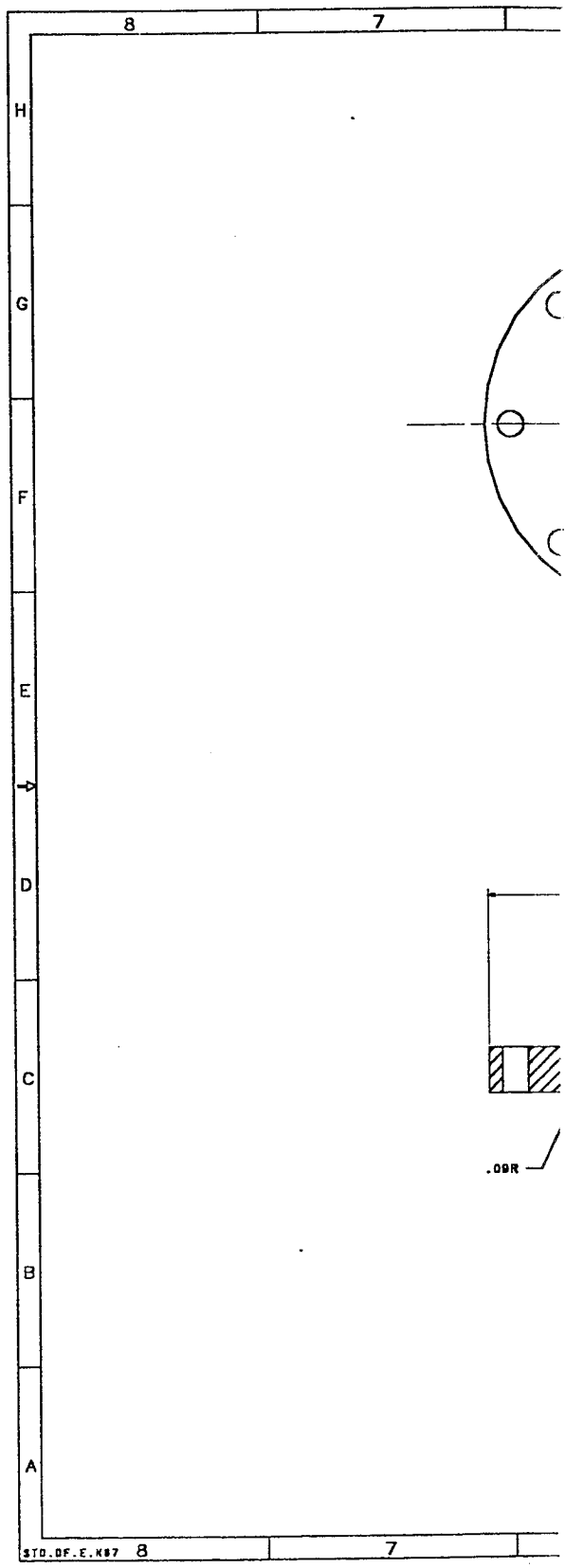

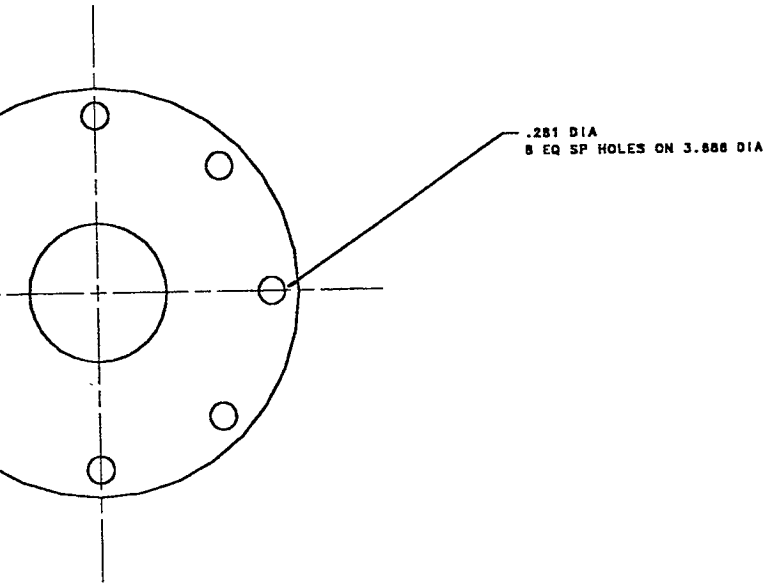

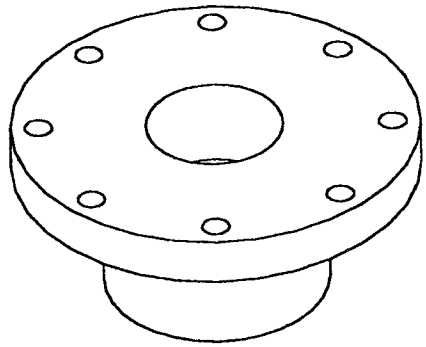

ORIENTATION VIEW
SCALE: NONE

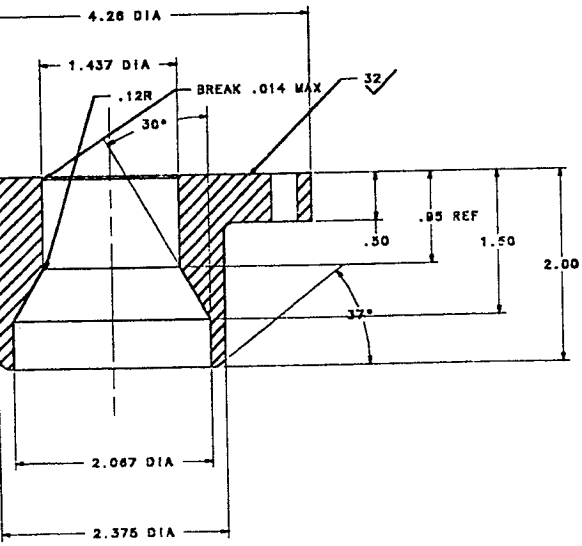

FOR PARTS LIST, APPLICATION DATA, AND GENERAL NOTES SEE SEPARATE PARTS LIST

ROCKWELL INTERNATIONAL SPACE SYSTEMS DIVISION

ADAPTER-INLET
TYPE 5
MC284-0395 VALVE

E 03953 LR6565-024

CAD/CAM 1

59 FOLDOUT FRAME

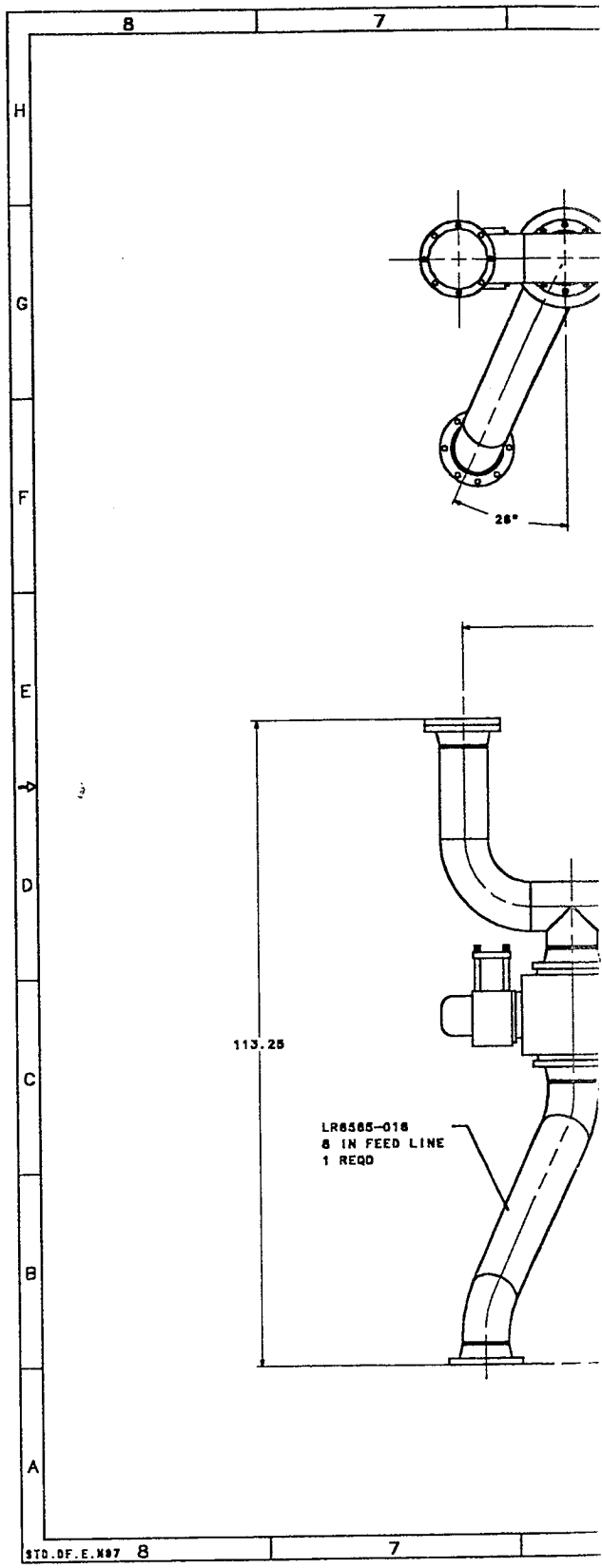

VIDEOJET 1 MANUAL 22, 1990 11:07:00

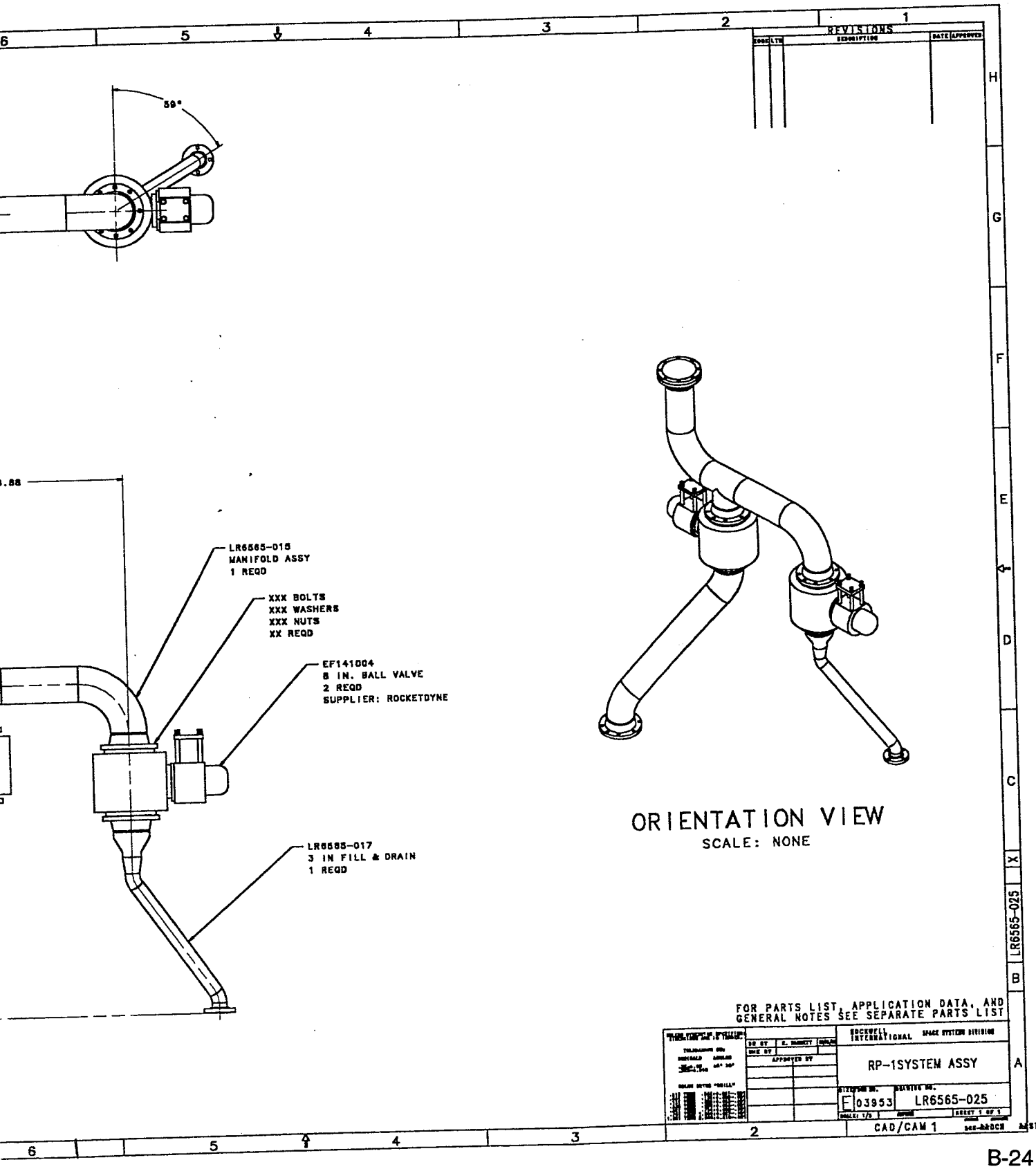
REVISIONS
59°
LR6565-015
MANIFOLD ASSY
1 REQD
XXX BOLTS
XXX WASHERS
XXX NUTS
XX REQD
EF141004
8 IN. BALL VALVE
2 REQD
SUPPLIER: ROCKETDYNE
LR6565-017
3 IN FILL & DRAIN
1 REQD
ORIENTATION VIEW
SCALE: NONE
FOR PARTS LIST, APPLICATION DATA, AND
GENERAL NOTES SEE SEPARATE PARTS LIST
ROCKWELL INTERNATIONAL SPACE SYSTEM DIVISION
RP-1SYSTEM ASSY
F 03953
LR6565-025
CAD/CAM 1
LR6565-025

61 FOLDOUT FRAME

VMBAT008 FRAME 1 MARCH 22, 1995 11.35.08

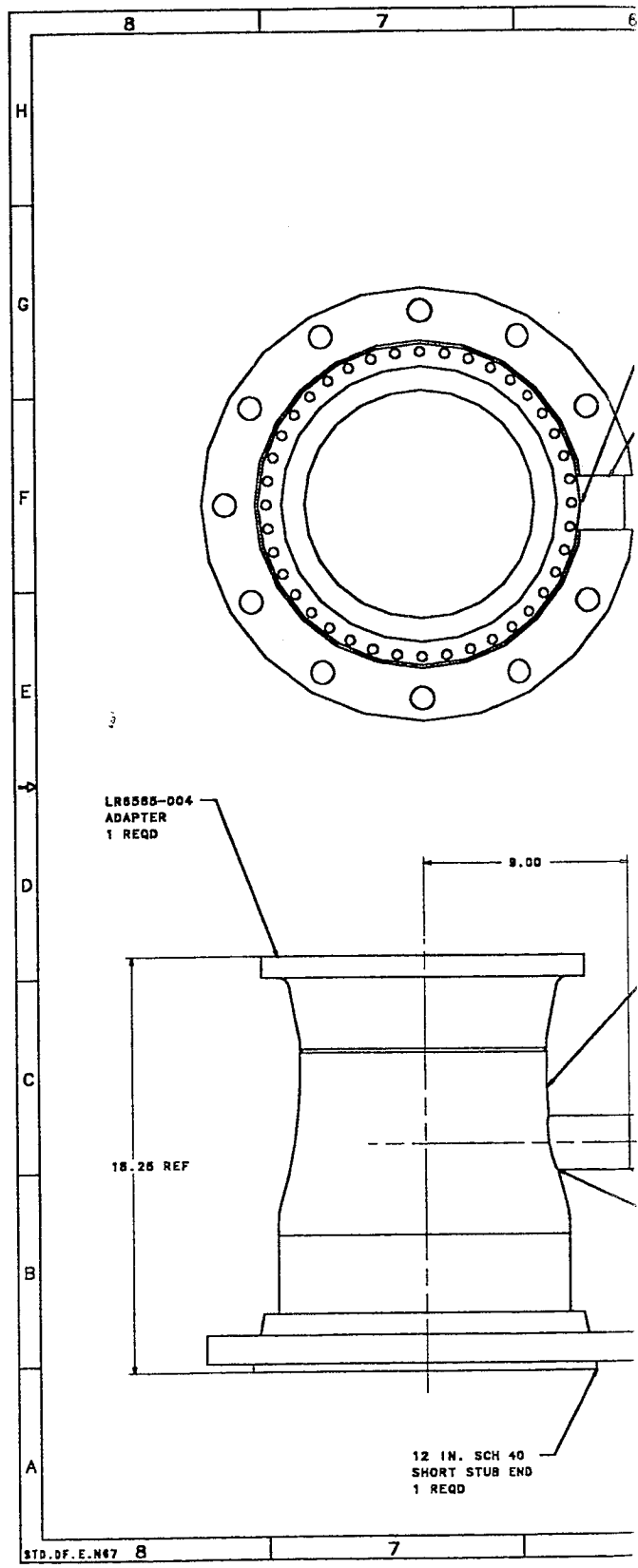

REVISIONS

CHECK	LTR	DESCRIPTION	DATE	APPROVED

2.08 DIA HOLE
THRU NEAR SIDE OF 10 IN. TO 12 IN. REDUCER

LR6565-020-017
TUBE
1 REQD

2 IN. SCH 40
45° ELBOW
1 REQD

LR6565-018
ADAPTER
1 REQD

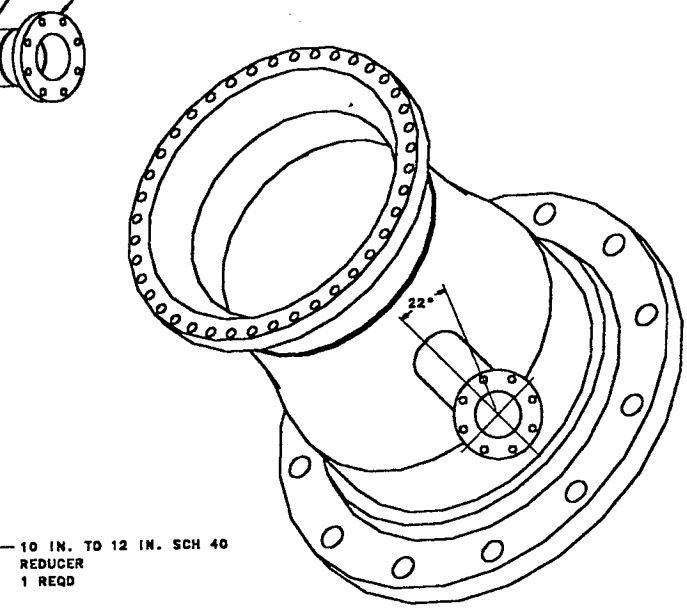

10 IN. TO 12 IN. SCH 40
REDUCER
1 REQD

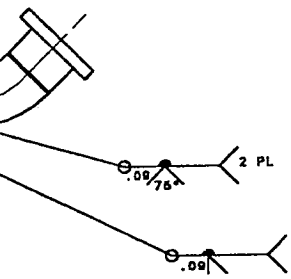

12 IN. SCH 40
LAP JOINT FLANGE
1 REQD

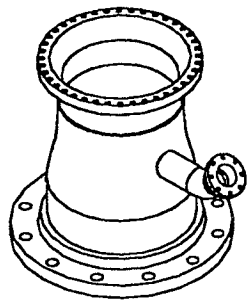

ORIENTATION VIEW
SCALE: NONE

FOR PARTS LIST, APPLICATION DATA, AND GENERAL NOTES SEE SEPARATE PARTS LIST

ROCKWELL INTERNATIONAL SPACE SYSTEMS DIVISION

OUTLET ASSY-
PREVALVE, LO2

MILESTONE NO. F03953
DRAWING NO. LR6565-026
SHEET 1 OF 1

CAD/CAM 1

63

FOLDOUT FRAME

VMBAT011 FRAME 1 MARCH 22, 1995 13.57.00

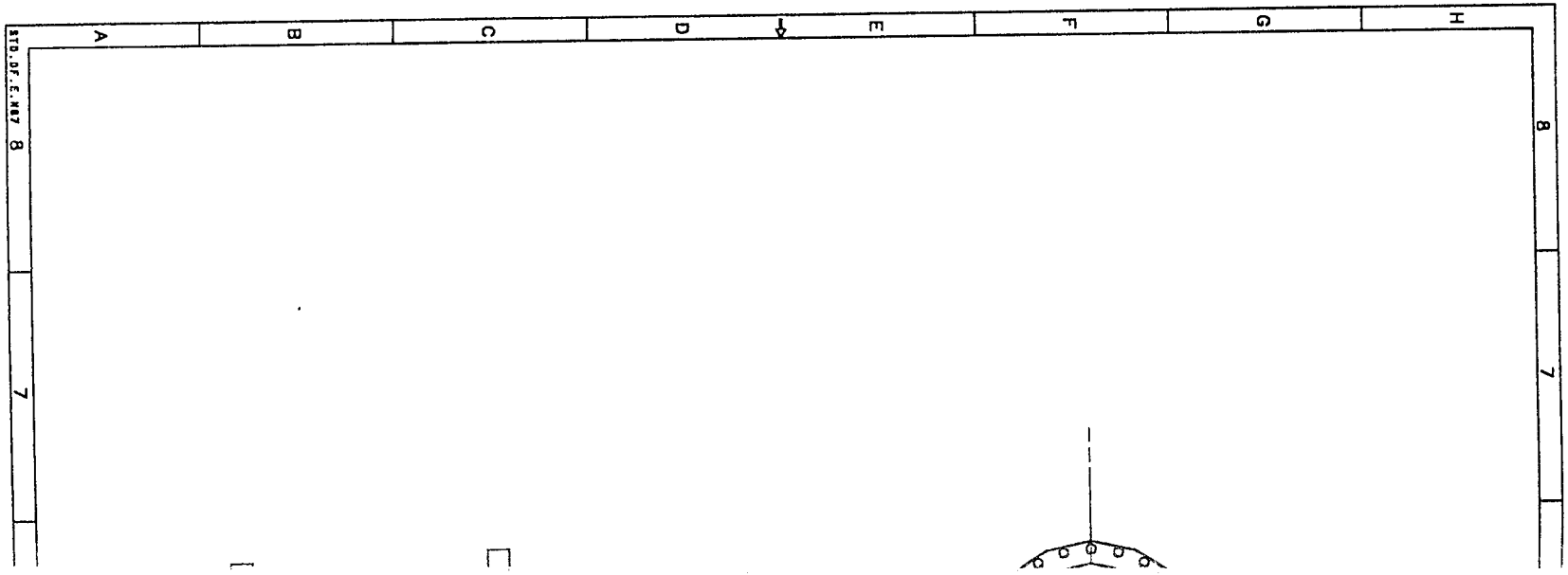

REVISIONS

ZONE	LTR	DESCRIPTION	DATE	APPROVED

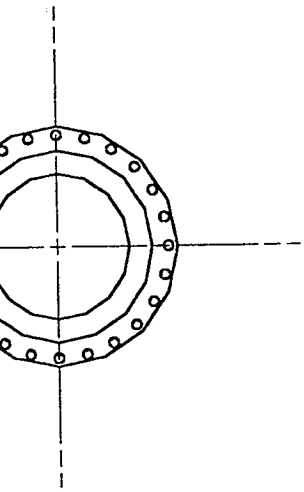

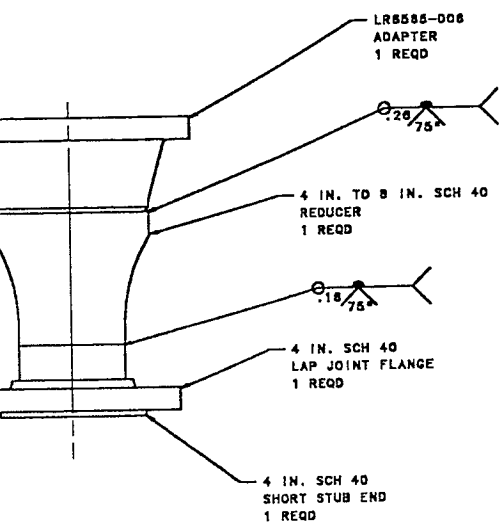

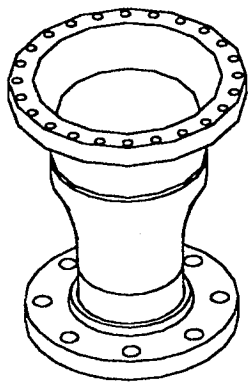

ORIENTATION VIEW
SCALE: NONE

FOR PARTS LIST, APPLICATION DATA, AND GENERAL NOTES SEE SEPARATE PARTS LIST

ROCKWELL INTERNATIONAL SPACE SYSTEM DIVISION

DR BY G. BARRETT
ENG BY
APPROVED BY

INLET ASSY-
FILL & DRAIN VALVE,
LO2

SIZE F | DRAWING NO. 03953 | LR6565-027

SCALE: 1/1 | SHEET 1 OF 1

CAD/CAM 1

65 FOLDOUT FRAME

VMBH1008 FRAME 1 APRIL 05, 1995 05.53.06

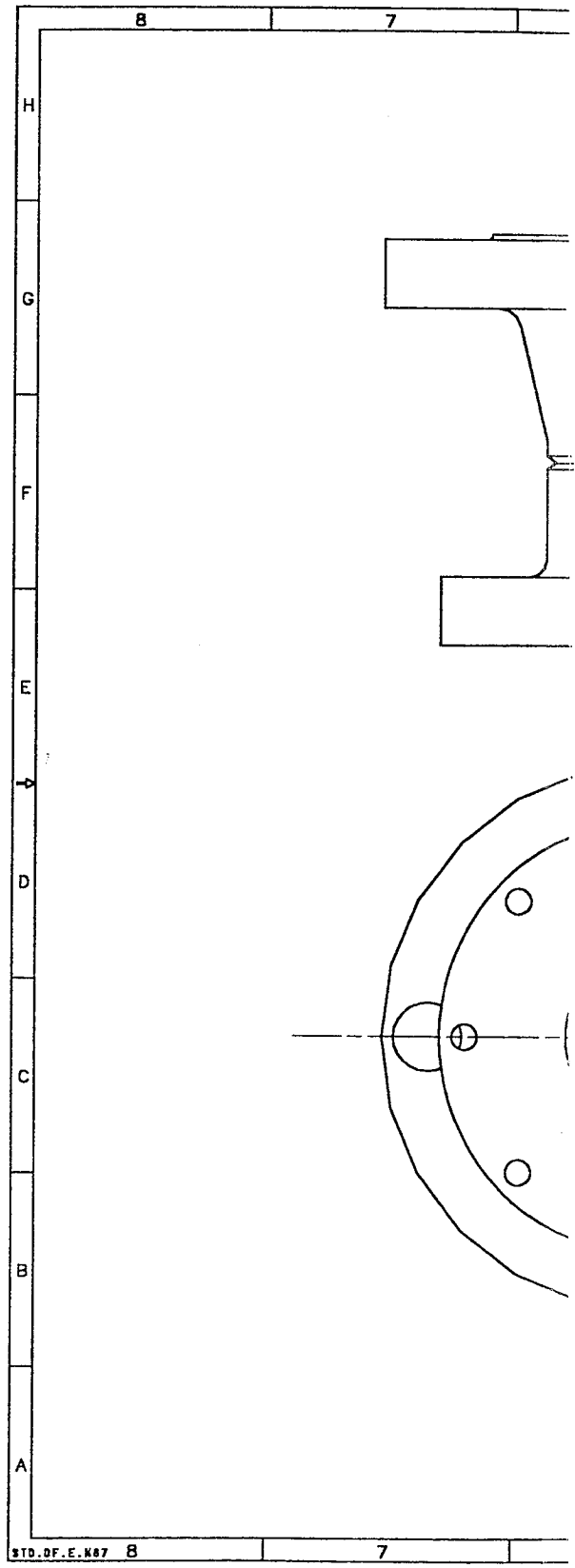

65 FOLDOUT FRAME

VMBH1008 FRAME 1 APRIL 05, 1995 05.53.06

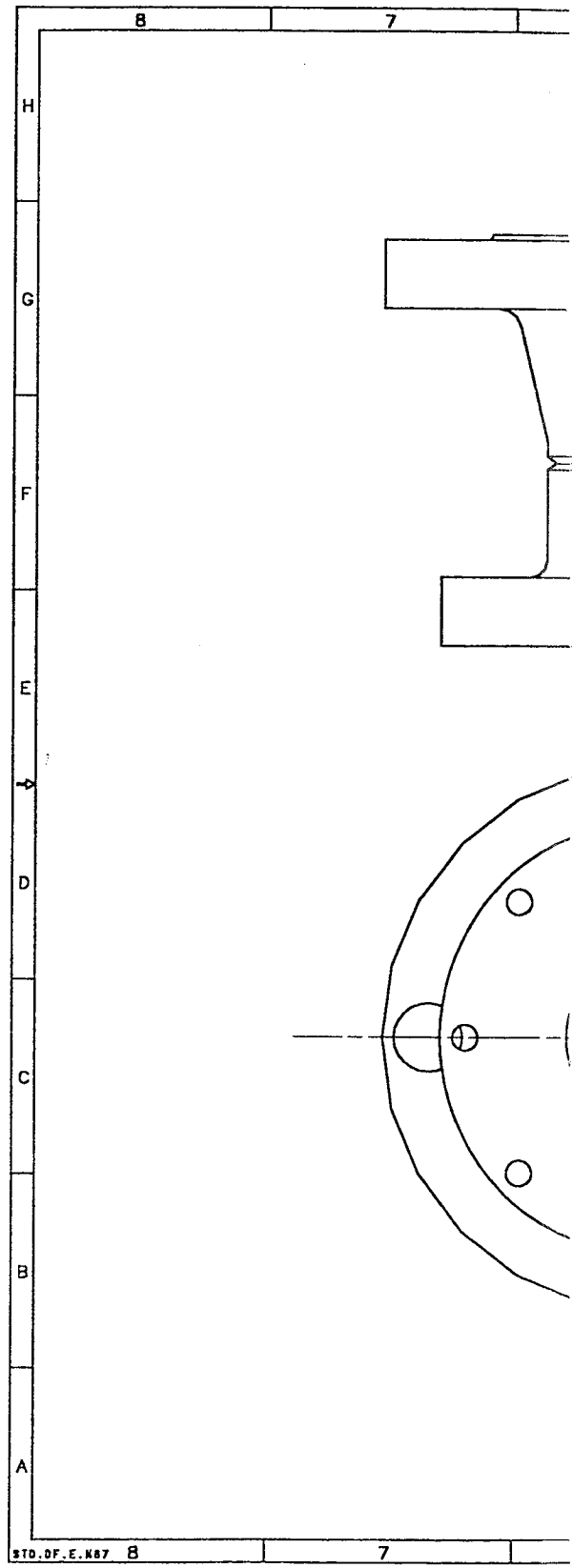

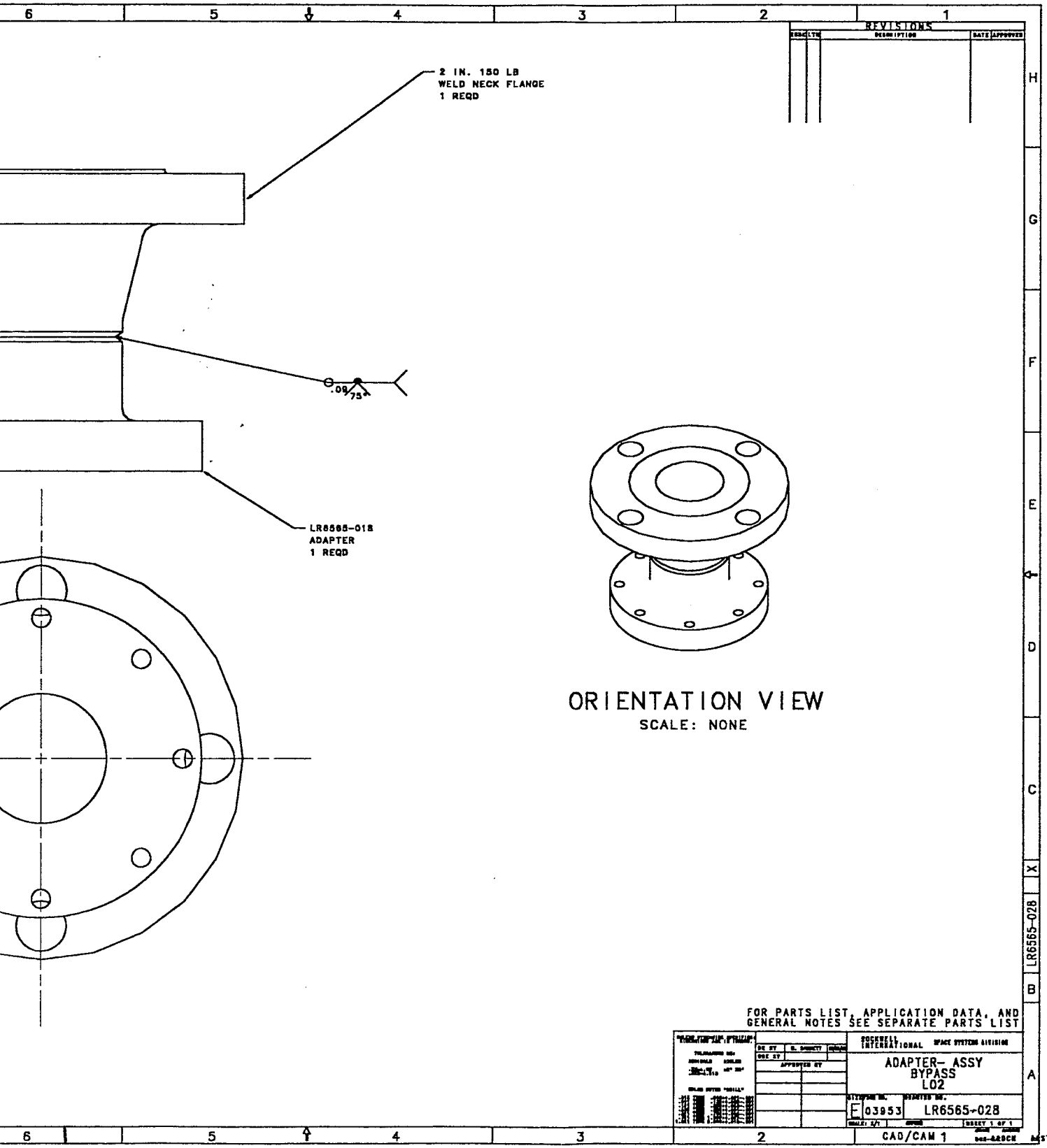
REVISIONS
2 IN. 150 LB
WELD NECK FLANGE
1 REQD
.09
.75
LR6565-018
ADAPTER
1 REQD
ORIENTATION VIEW
SCALE: NONE
FOR PARTS LIST, APPLICATION DATA, AND
GENERAL NOTES SEE SEPARATE PARTS LIST
ROCKWELL INTERNATIONAL
SPACE SYSTEMS DIVISION
ADAPTER- ASSY
BYPASS
LO2
E 03953
LR6565-028
CAD/CAM 1
LR6565-028

67 FOLDOUT FRAME

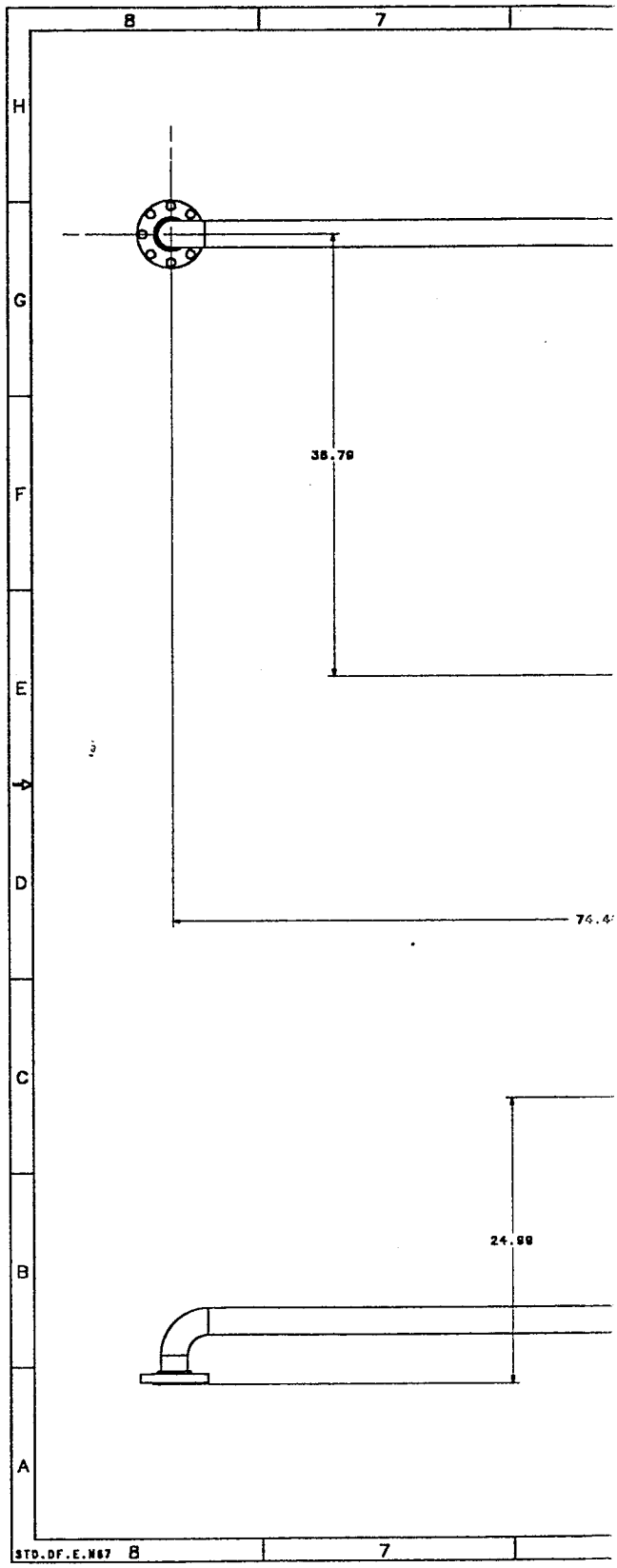

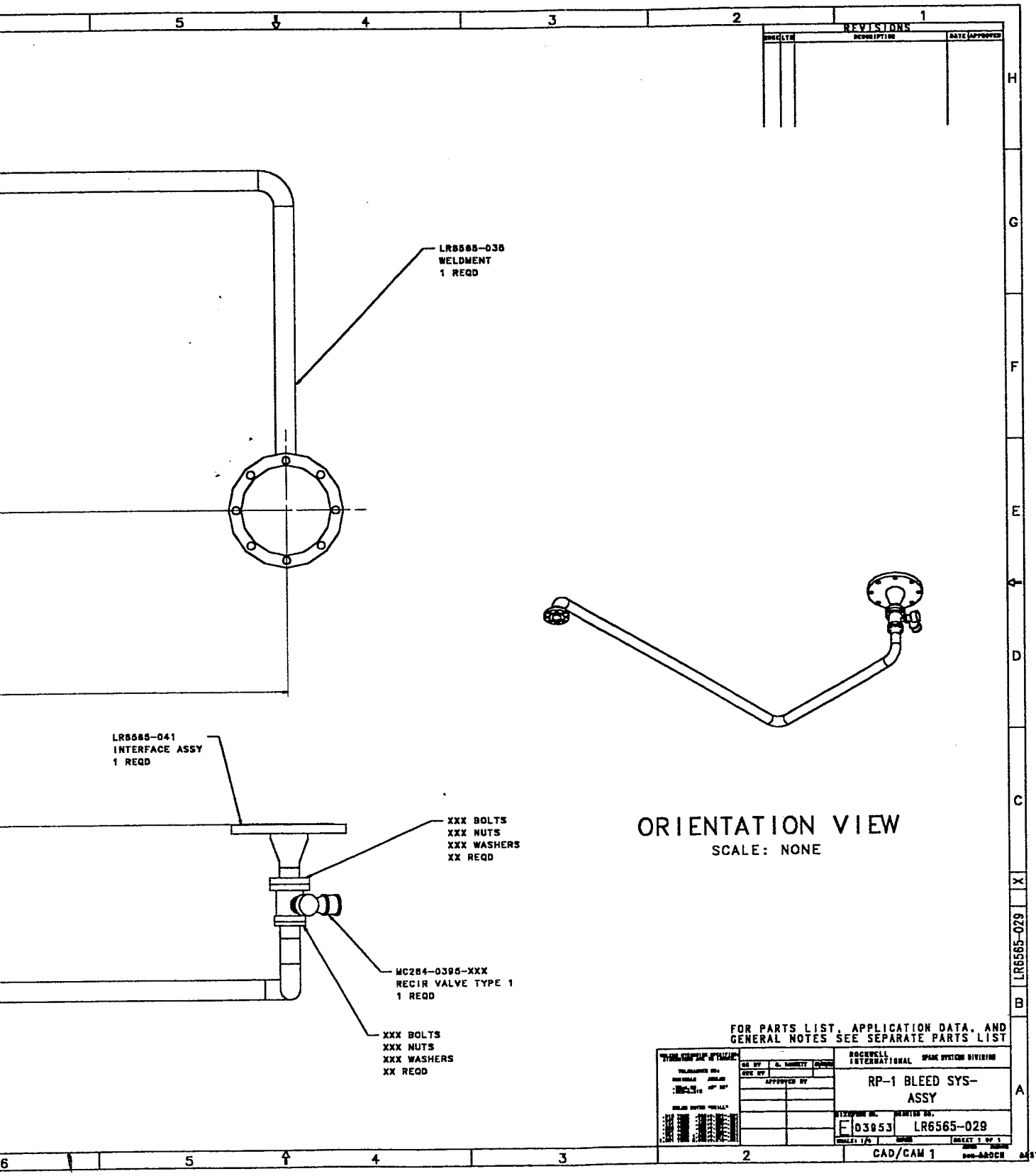
REVISIONS
LR6565-036
WELDMENT
1 REQD
LR6565-041
INTERFACE ASSY
1 REQD
XXX BOLTS
XXX NUTS
XXX WASHERS
XX REQD
MC264-0395-XXX
RECIR VALVE TYPE 1
1 REQD
XXX BOLTS
XXX NUTS
XXX WASHERS
XX REQD
ORIENTATION VIEW
SCALE: NONE
FOR PARTS LIST, APPLICATION DATA, AND
GENERAL NOTES SEE SEPARATE PARTS LIST
ROCKWELL INTERNATIONAL
RP-1 BLEED SYS-
ASSY
E 03953
LR6565-029
CAD/CAM 1

VMBAT008 FRAME 1 APRIL 05, 1995 06.00.30

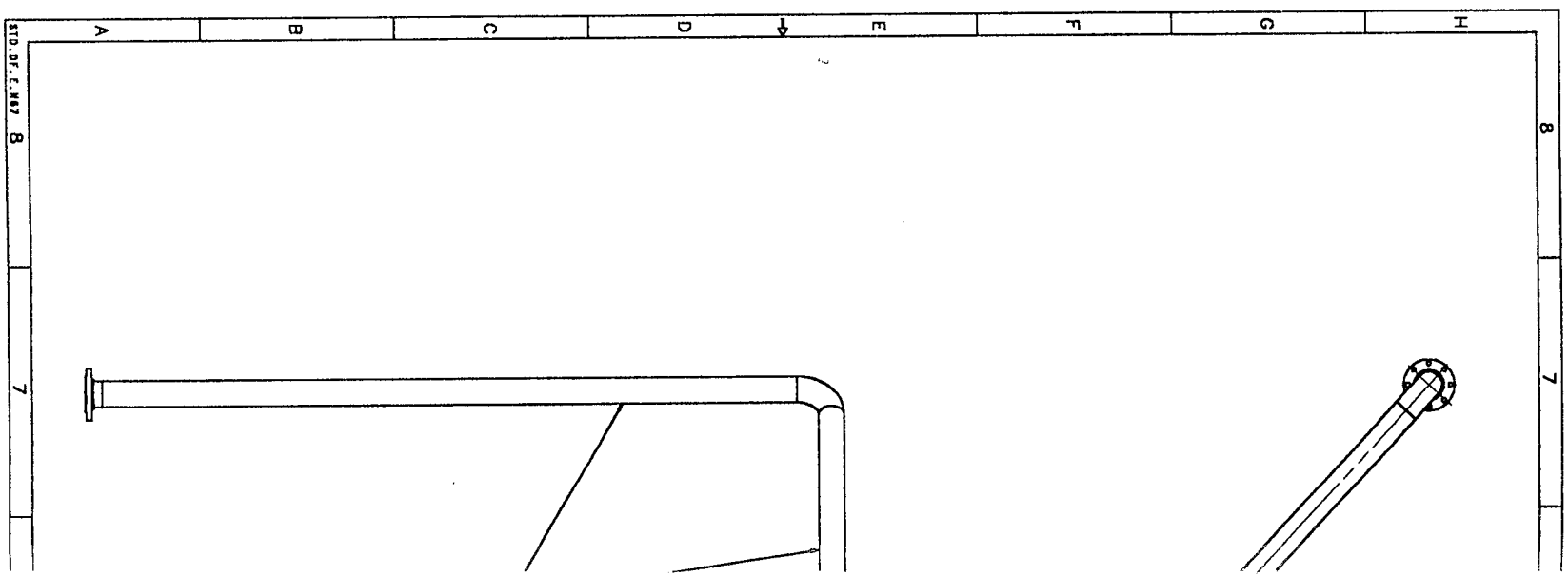

FOLDOUT FRAME

70

REVISIONS

ZONE	LTR	DESCRIPTION	DATE	APPROVED

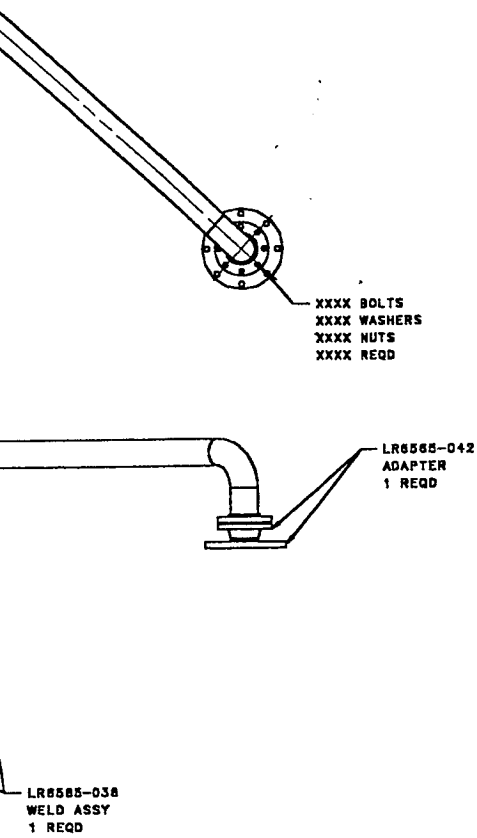

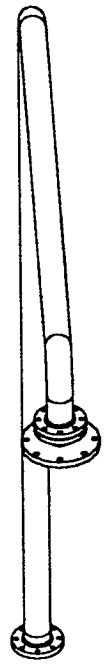

ORIENTATION VIEW

SCALE: NONE

FOR PARTS LIST, APPLICATION DATA, AND GENERAL NOTES SEE SEPARATE PARTS LIST

ROCKWELL INTERNATIONAL SPACE SYSTEMS DIVISION

LO2 FEED LINE TEMP. ASSY

SIZE E | DRAWING NO. 03953 | MASTER NO. LR6565-030

SCALE: 1/8 | SHEET 1 OF 1

CAD/CAM 1

71 FOLDOUT FRAME

VMBAT008 FRAME 1 APRIL 05, 1995 05.56.01

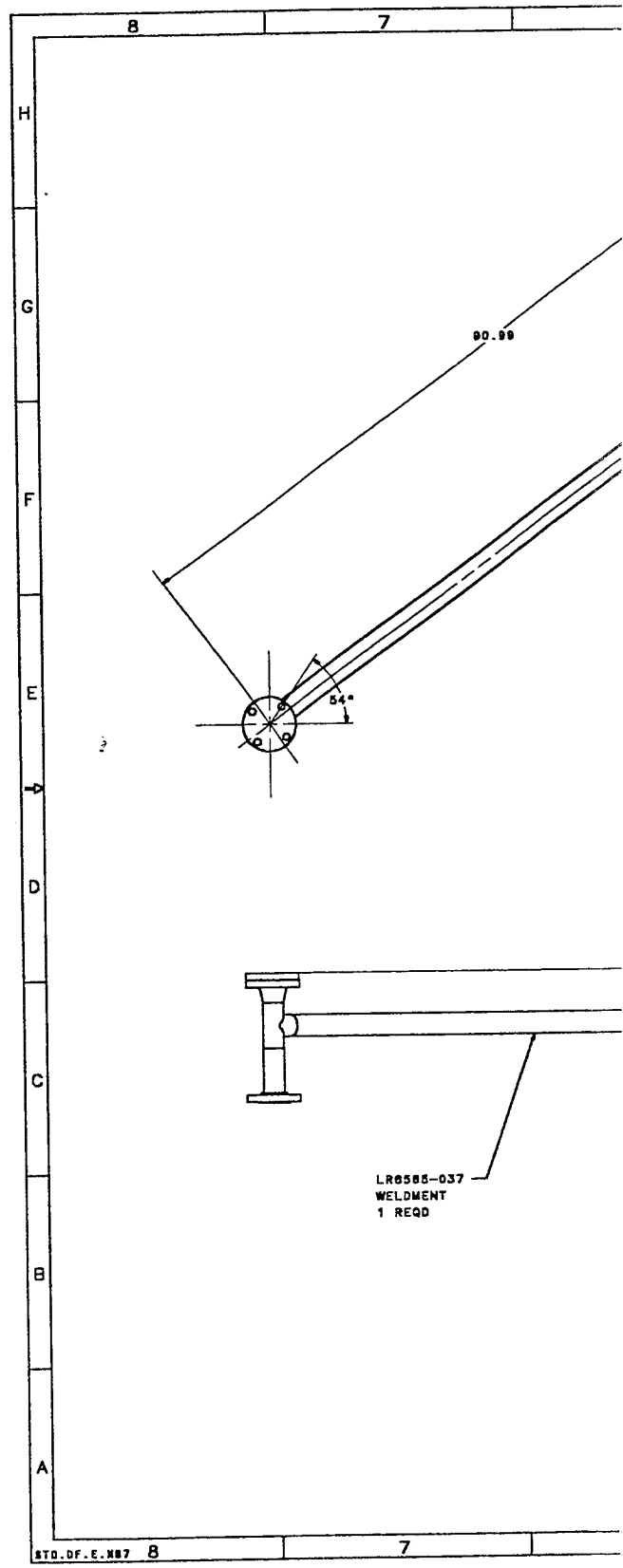

FOLDOUT FRAME 72

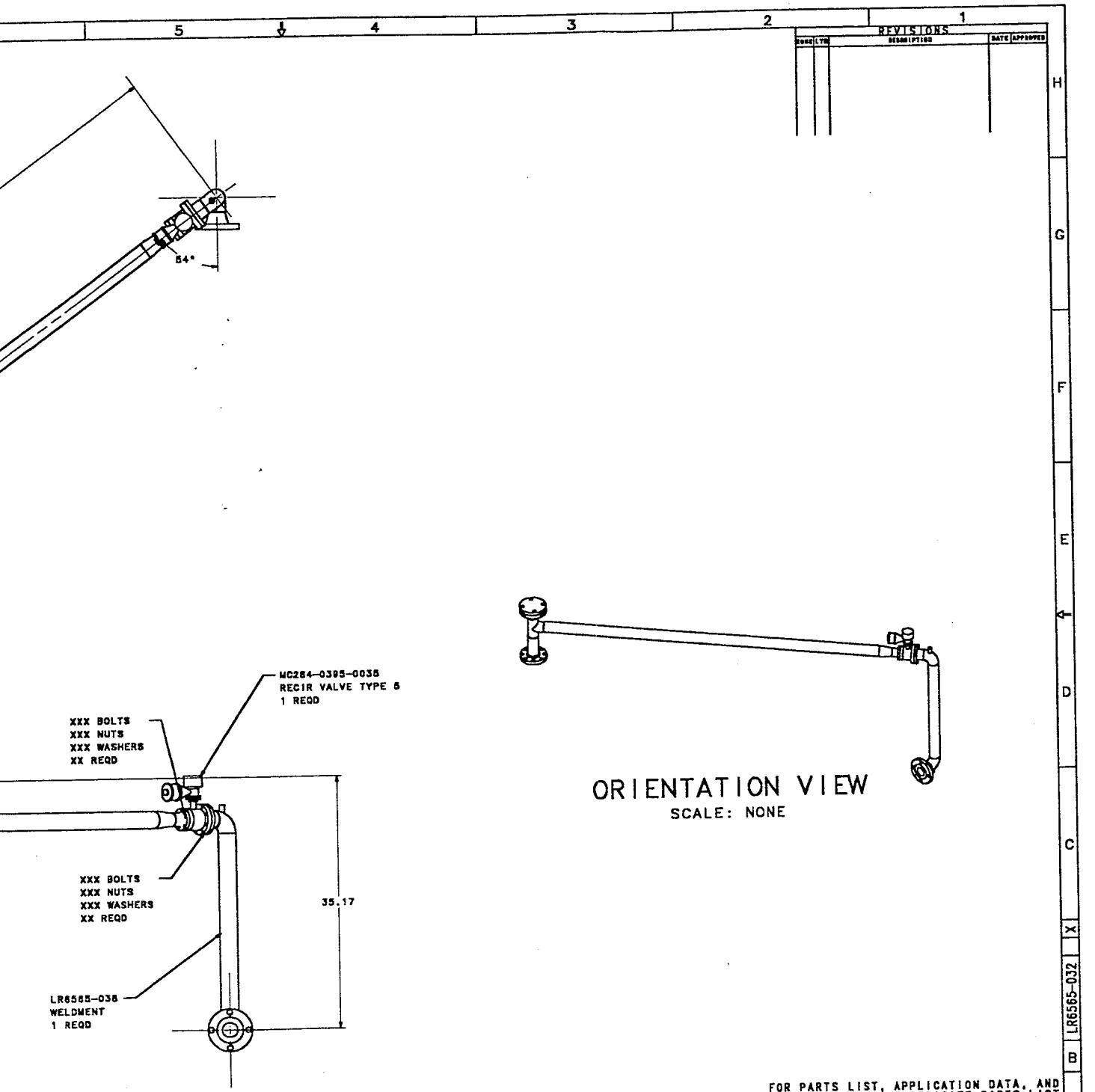

C-2

VMDH1010 FRAME 1 APRIL 04, 1995 08.27.32

FOLDOUT FRAME

REVISIONS

ZONE	LTR	DESCRIPTION	DATE	APPROVED

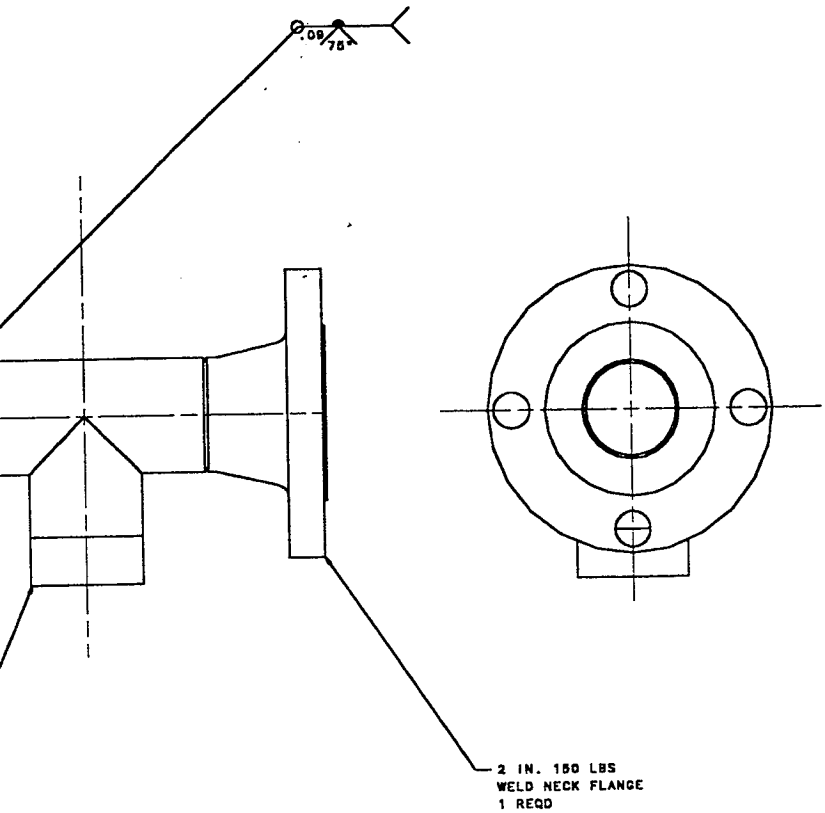

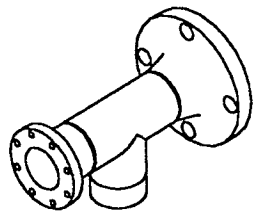

ORIENTATION VIEW
SCALE: NONE

FOR PARTS LIST, APPLICATION DATA, AND GENERAL NOTES SEE SEPARATE PARTS LIST

DR BY G. BARNETT	ROCKWELL INTERNATIONAL SPACE SYSTEMS DIVISION	
CHK BY	TEE- LH2 BLEED SYS. ASSY	
APPROVED BY		
	DIVISION NO. F03953	DRAWING NO. LR6565-033
	SCALE: 0/1	SHEET 1 OF 1
	CAD/CAM 1	

LR6565-033

75

FOLDOUT FRAME

VMBAT008 FRAME 1 APRIL 03, 1995 13.41.04

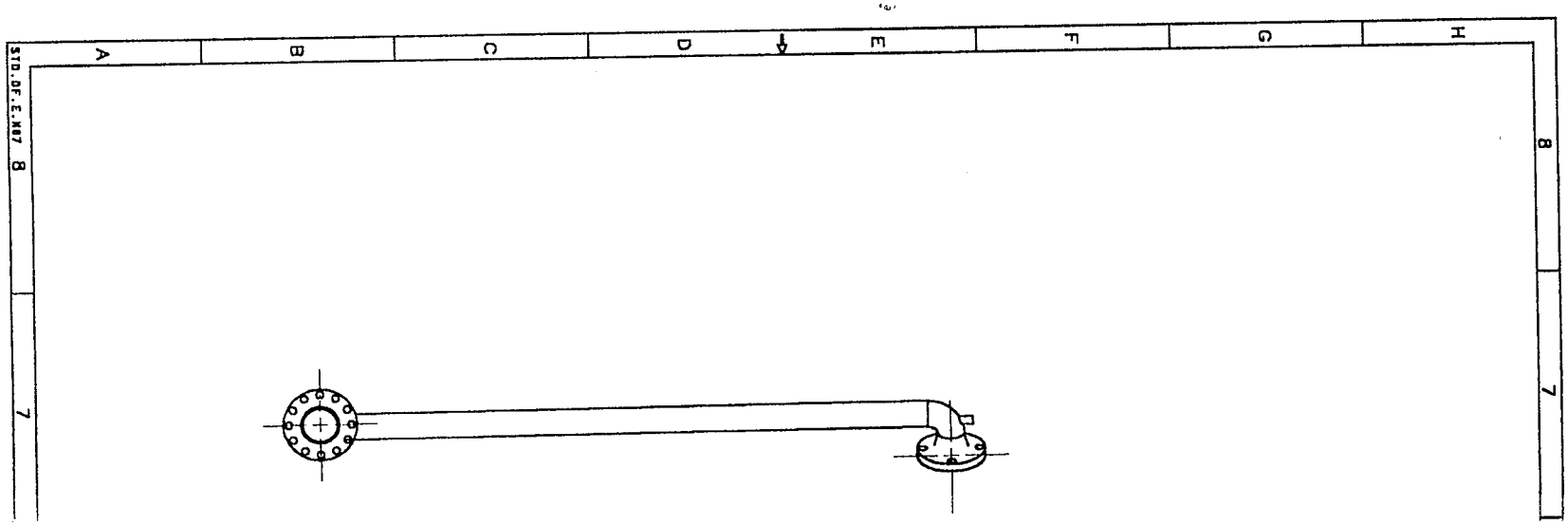

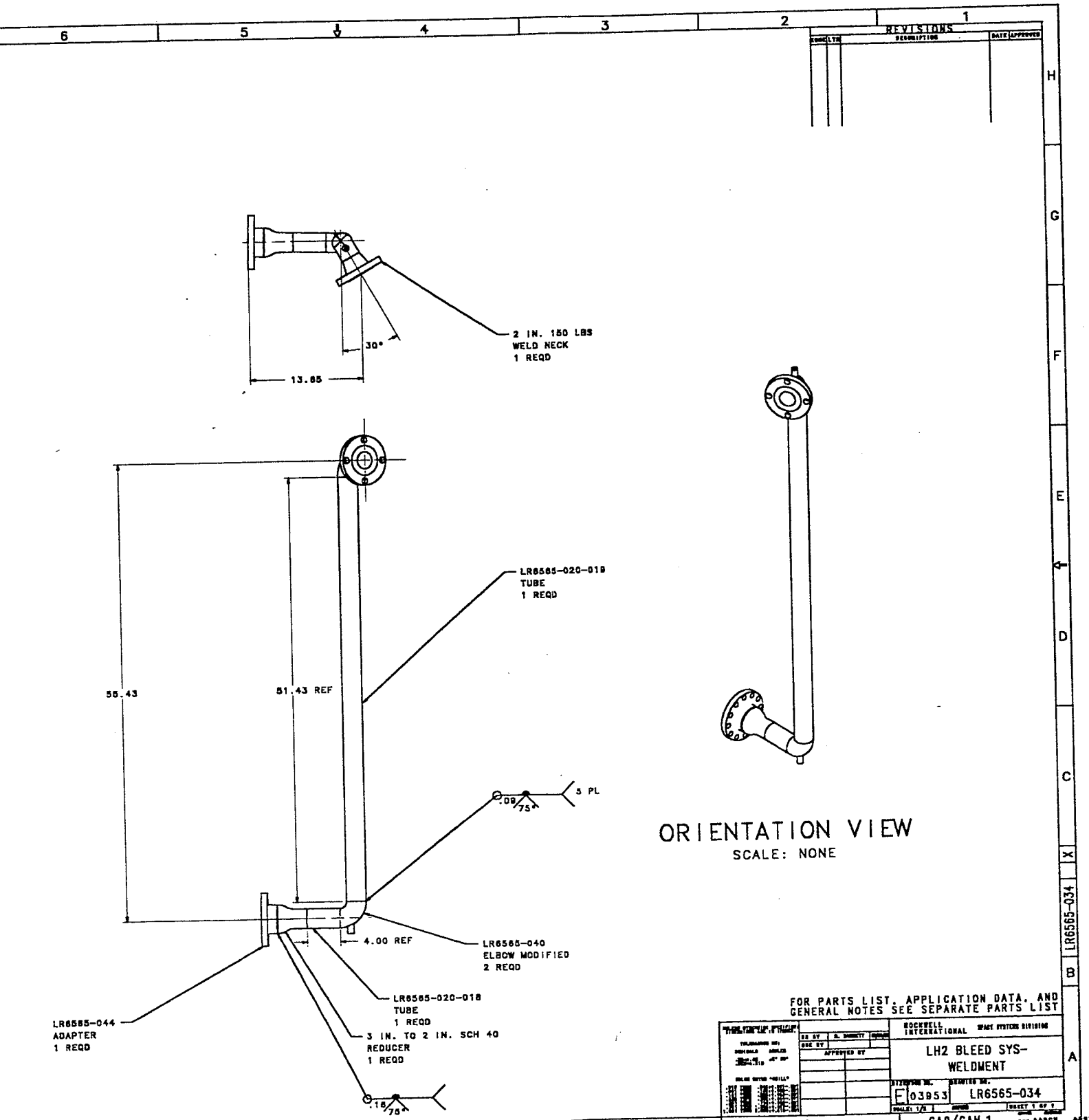
REVISIONS
2 IN. 150 LBS
WELD NECK
1 REQD
30°
13.85
LR6565-020-019
TUBE
1 REQD
55.43
51.43 REF
.09
75°
5 PL
4.00 REF
LR6565-040
ELBOW MODIFIED
2 REQD
LR6565-020-018
TUBE
1 REQD
LR6565-044
ADAPTER
1 REQD
3 IN. TO 2 IN. SCH 40
REDUCER
1 REQD
.16
75°
ORIENTATION VIEW
SCALE: NONE
FOR PARTS LIST, APPLICATION DATA, AND
GENERAL NOTES SEE SEPARATE PARTS LIST
ROCKWELL INTERNATIONAL
LH2 BLEED SYS-
WELDMENT
F 03953
LR6565-034
CAD/CAM 1

77

FOLDOUT FRAME

VMBAT008 FRAME 1 APRIL 03, 1995 06.23.04

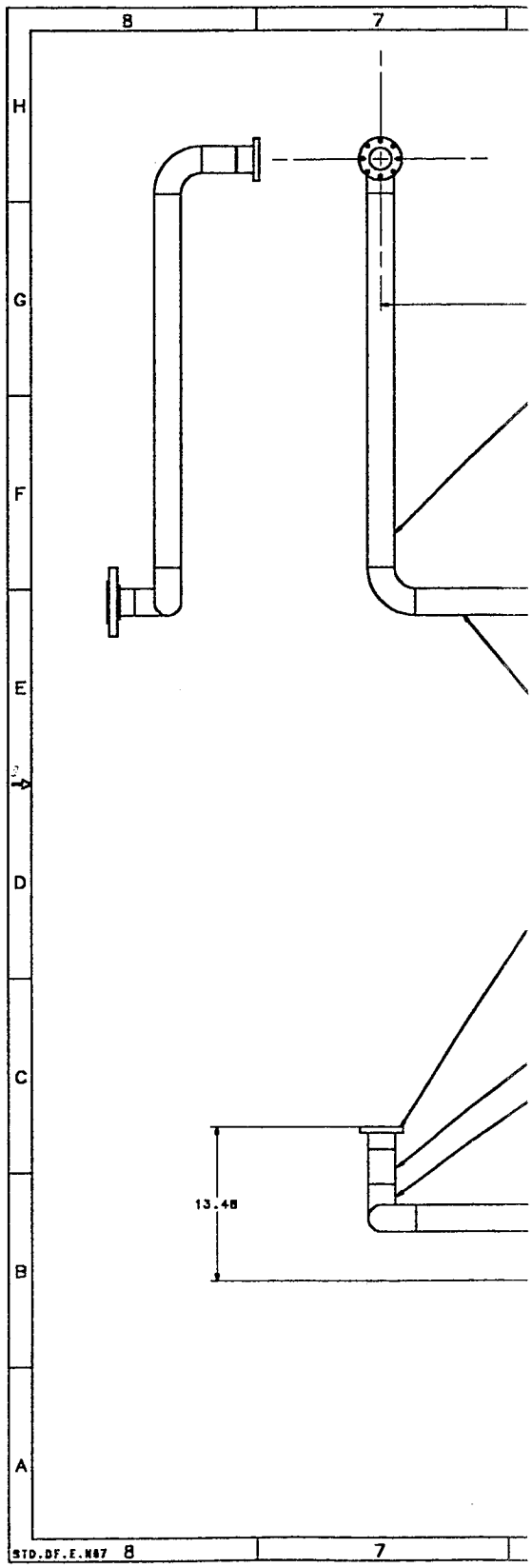

FOLDOUT FRAME

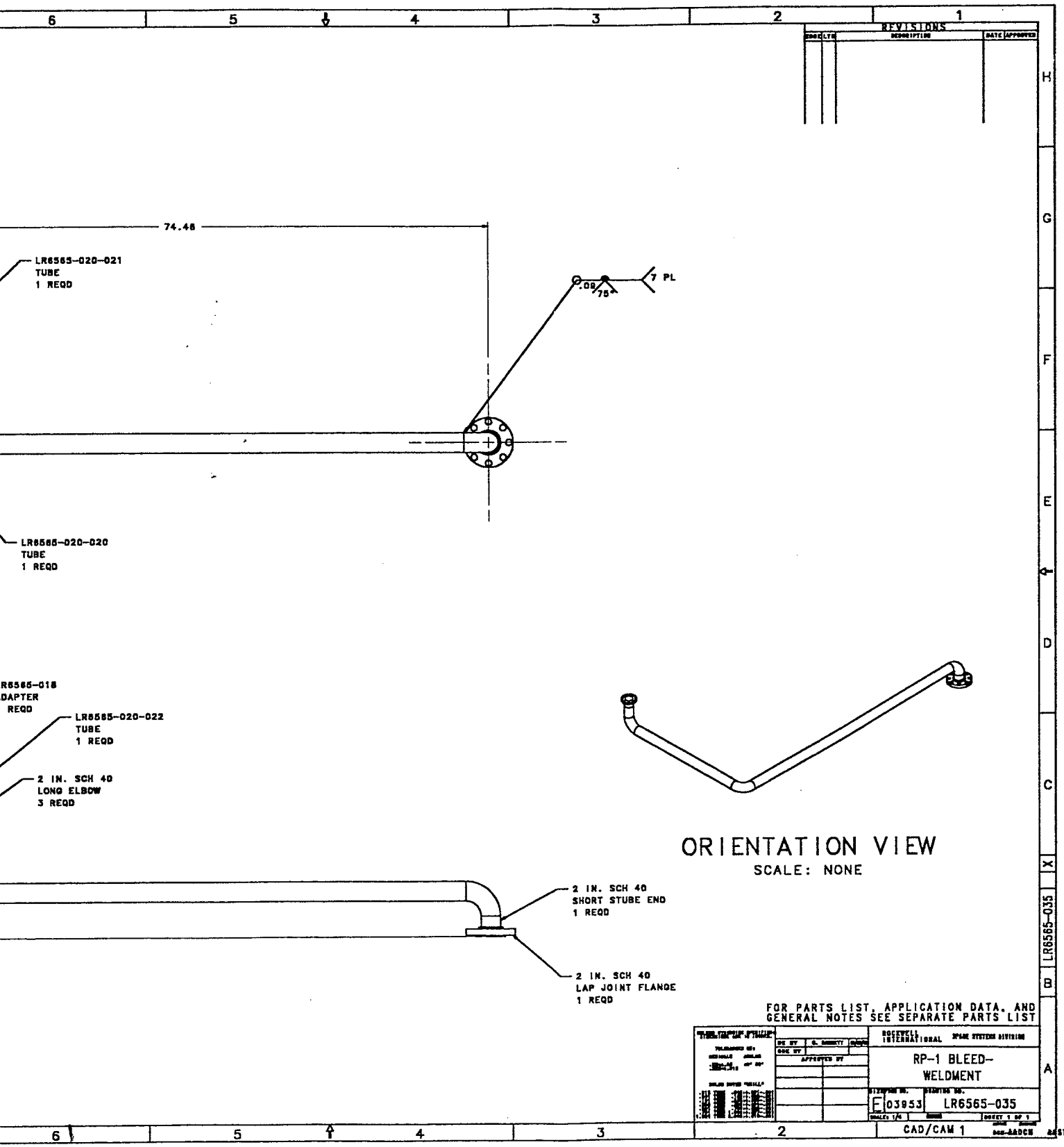

79

FOLDOUT FRAME

VMBAT008 FRAME 1 APRIL 05, 1995 05.58.59

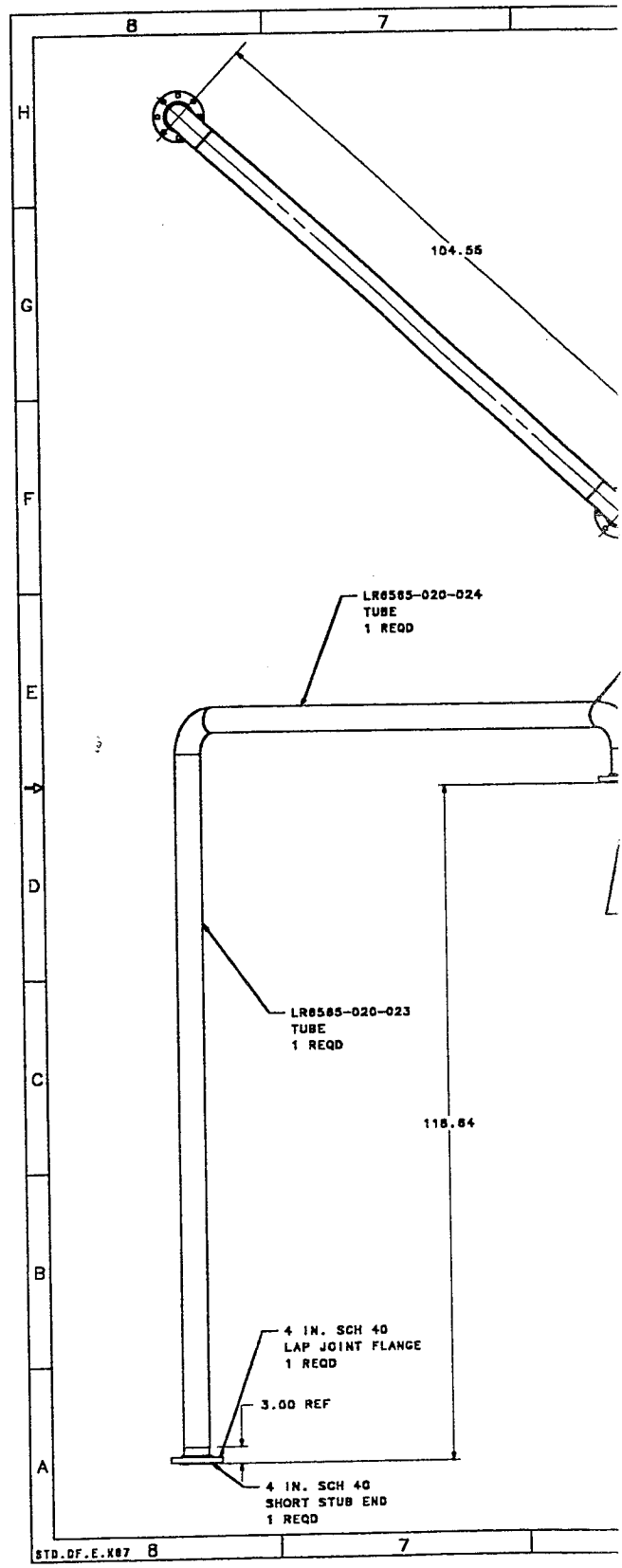

REVISIONS

CHG	LTR	DESCRIPTION	DATE	APPROVED

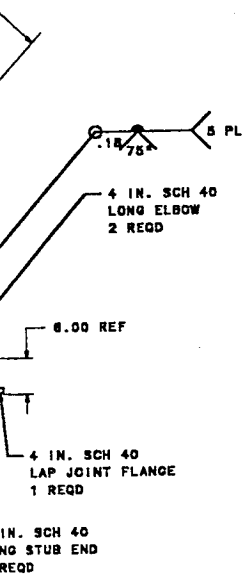

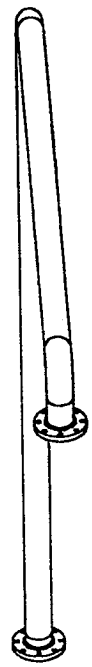

ORIENTATION VIEW
SCALE: NONE

FOR PARTS LIST, APPLICATION DATA, AND GENERAL NOTES SEE SEPARATE PARTS LIST

ROCKWELL INTERNATIONAL SPACE SYSTEMS DIVISION

LO2 FEED LINE TEMP-WELDMENT

SIZE E | DRAWING NO. 03953 | DRAWING NO. LR6565-036

SHEET 1 OF 1

CAD/CAM 1

LR6565-036

81 FOLDOUT FRAME

VMBAT010 FRAME 1 MARCH 31, 1995 06.55.00

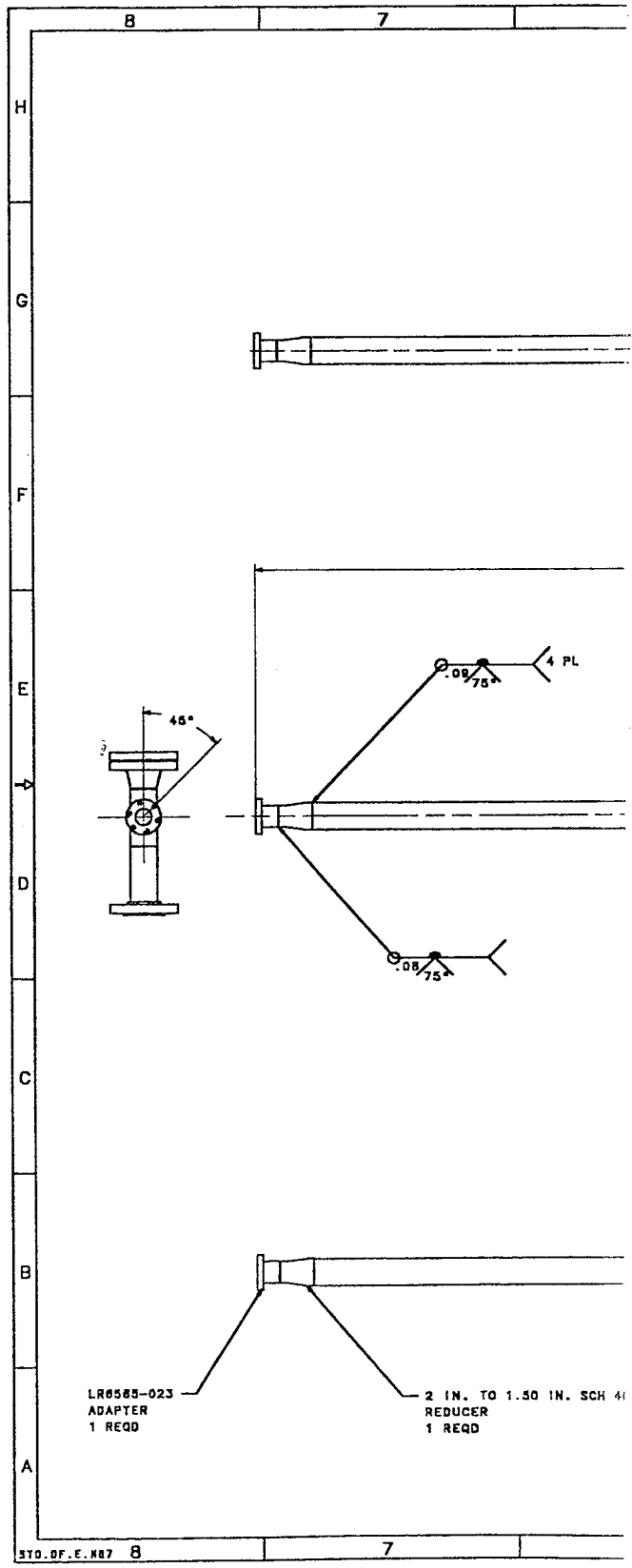

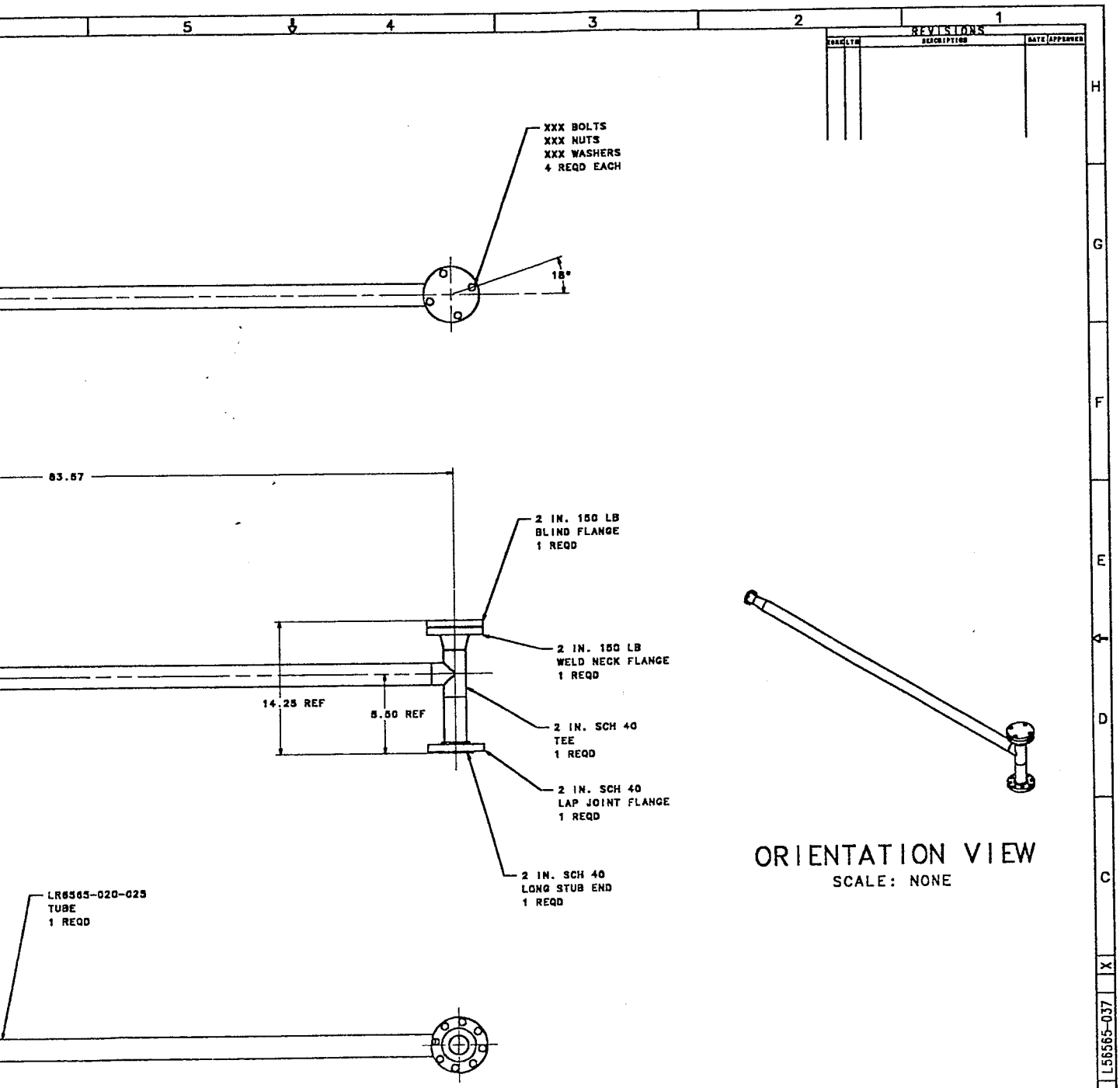
REVISIONS
XXX BOLTS
XXX NUTS
XXX WASHERS
4 REQD EACH
18°
83.57
2 IN. 150 LB
BLIND FLANGE
1 REQD
2 IN. 150 LB
WELD NECK FLANGE
1 REQD
14.25 REF
8.50 REF
2 IN. SCH 40
TEE
1 REQD
2 IN. SCH 40
LAP JOINT FLANGE
1 REQD
2 IN. SCH 40
LONG STUB END
1 REQD
LR6565-020-025
TUBE
1 REQD
ORIENTATION VIEW
SCALE: NONE
L56565-037
FOR PARTS LIST, APPLICATION DATA, AND
GENERAL NOTES SEE SEPARATE PARTS LIST
ROCKWELL INTERNATIONAL
LO2 VENT SYS-
WELDMENT
F 03953
L56565-037
CAD/CAM 1

83 FOLDOUT FRAME

VMBAT008 FRAME 1 APRIL 05, 1995 05.54.24

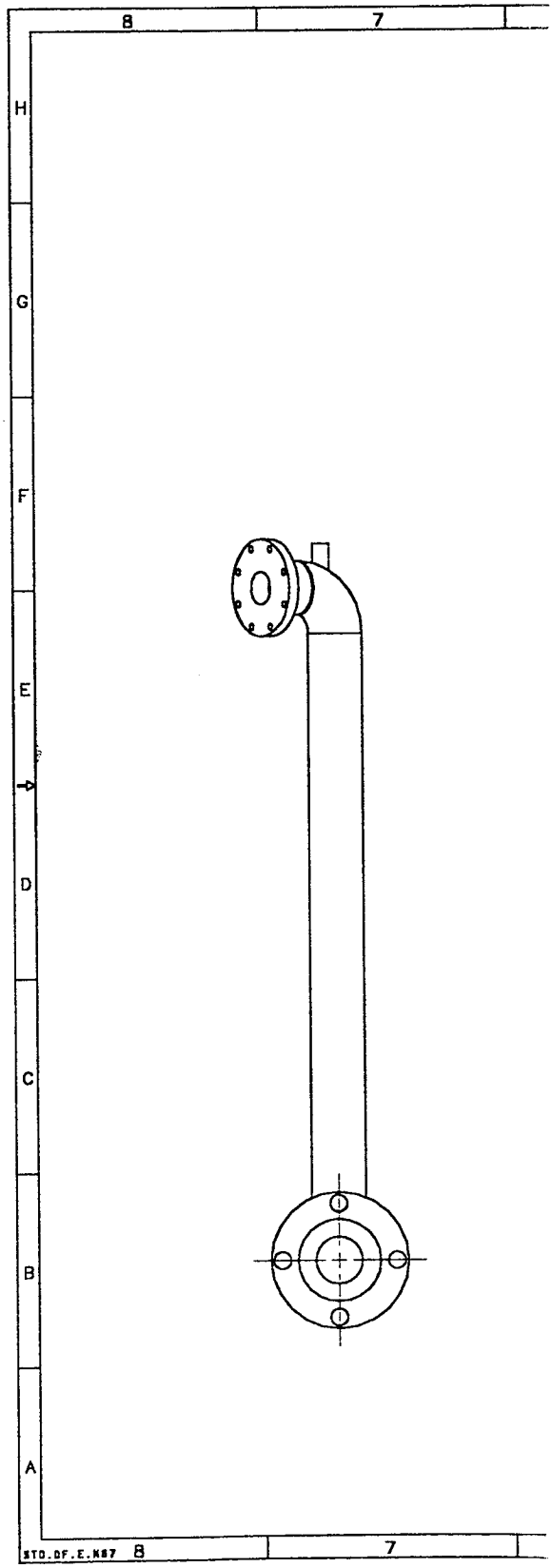

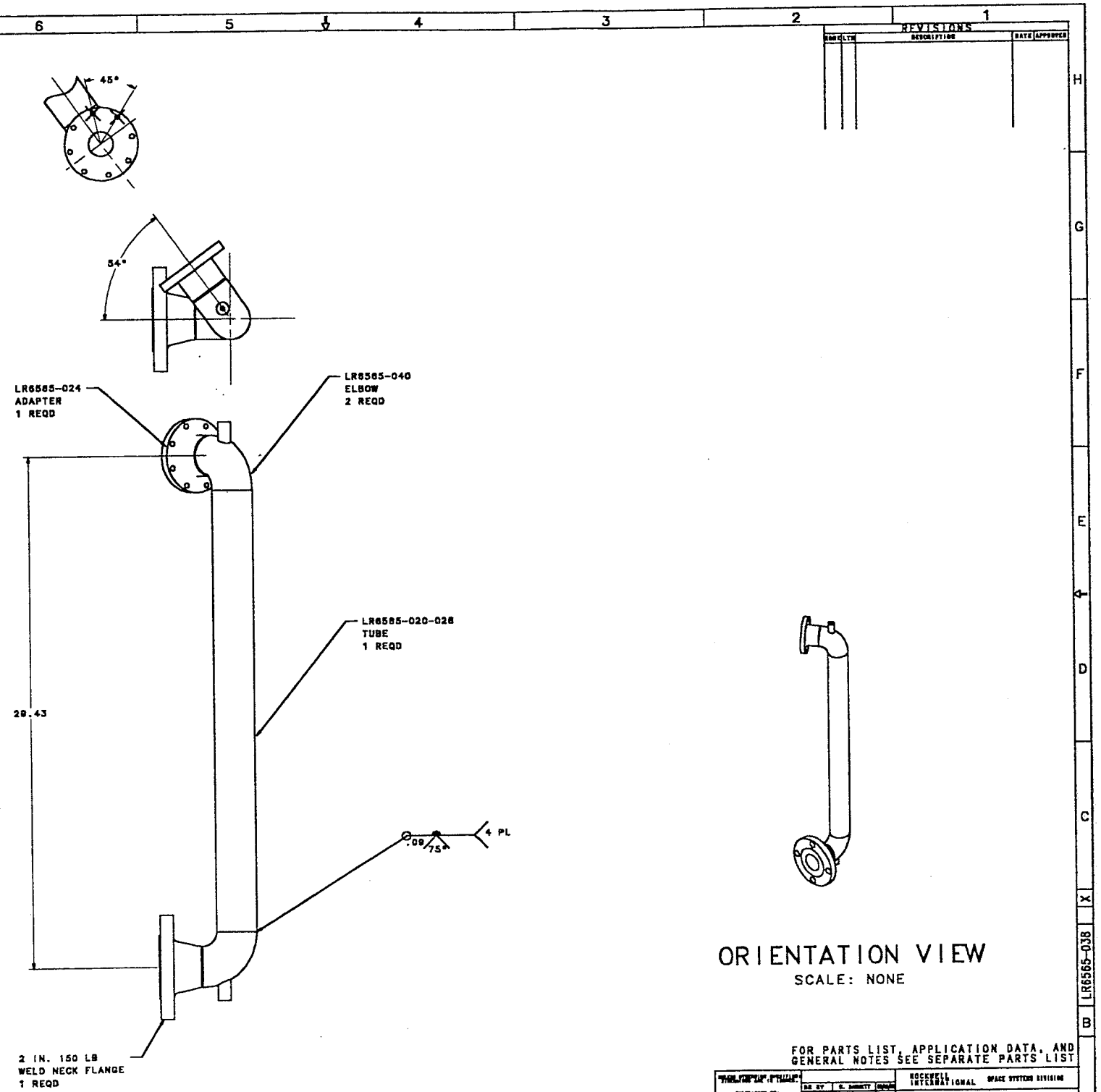
REVISIONS
45°
54°
LR6565-024
ADAPTER
1 REQD
LR6565-040
ELBOW
2 REQD
LR6565-020-028
TUBE
1 REQD
29.43
.09
75°
4 PL
2 IN. 150 LB
WELD NECK FLANGE
1 REQD
ORIENTATION VIEW
SCALE: NONE
FOR PARTS LIST, APPLICATION DATA, AND
GENERAL NOTES SEE SEPARATE PARTS LIST
ROCKWELL INTERNATIONAL SPACE SYSTEMS DIVISION
ADAPTER-
LO2 BLEED SYS
E 03953
LR6565-038
CAD/CAM 1
LR6565-038

85 FOLDOUT FRAME

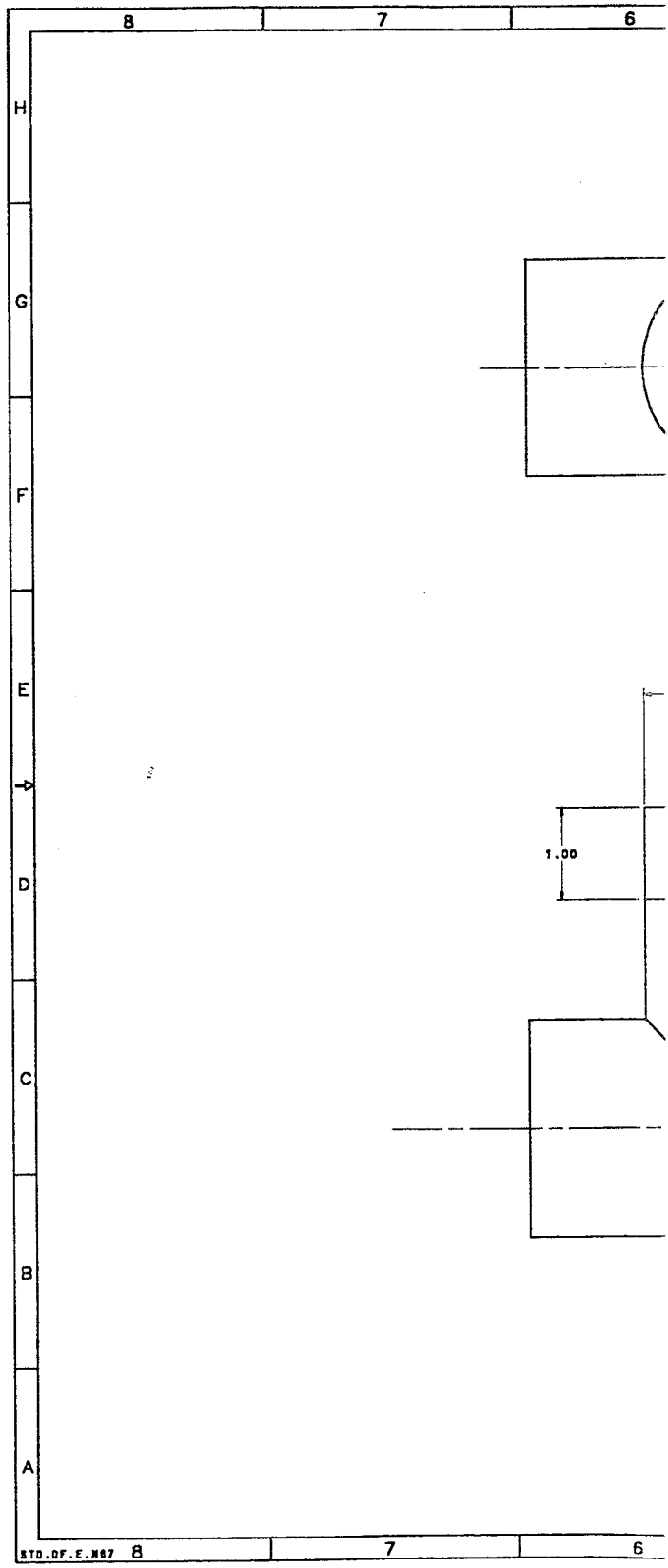

86

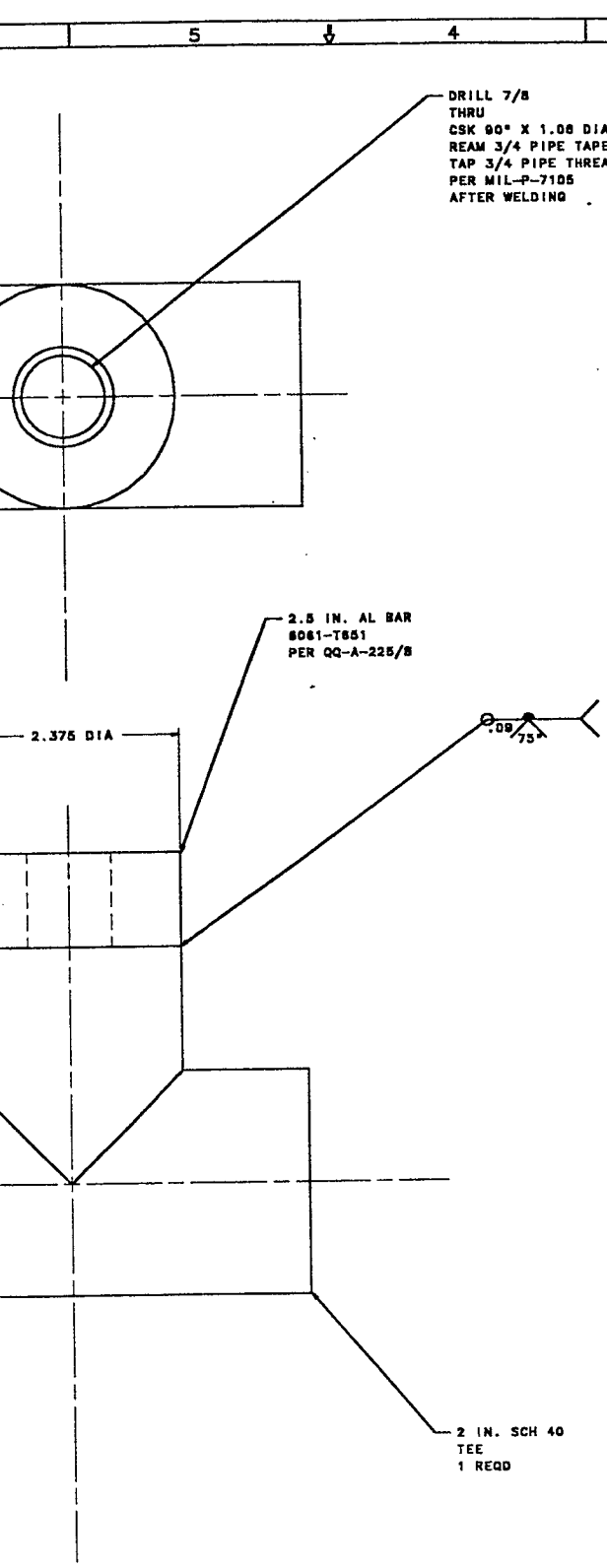

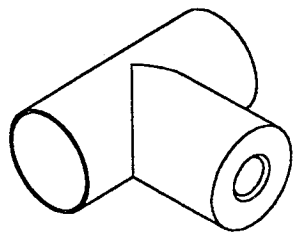

ORIENTATION VIEW
SCALE: NONE

FOR PARTS LIST, APPLICATION DATA, AND GENERAL NOTES SEE SEPARATE PARTS LIST

REVISIONS

ZONE	LTR	DESCRIPTION	DATE	APPROVED

ROCKWELL INTERNATIONAL SPACE SYSTEMS DIVISION

TEE-MODIFIED,
LH2 BLEED SYS

SIZE E | CODE IDENT NO. 03953 | DRAWING NO. LR6565-039

SCALE: 1/1 | SHEET 1 OF 1

CAD/CAM 1

LR6565-039

FOLDOUT FRAME

VMBAT009 FRAME 1 APRIL 04, 1995 08.25.14

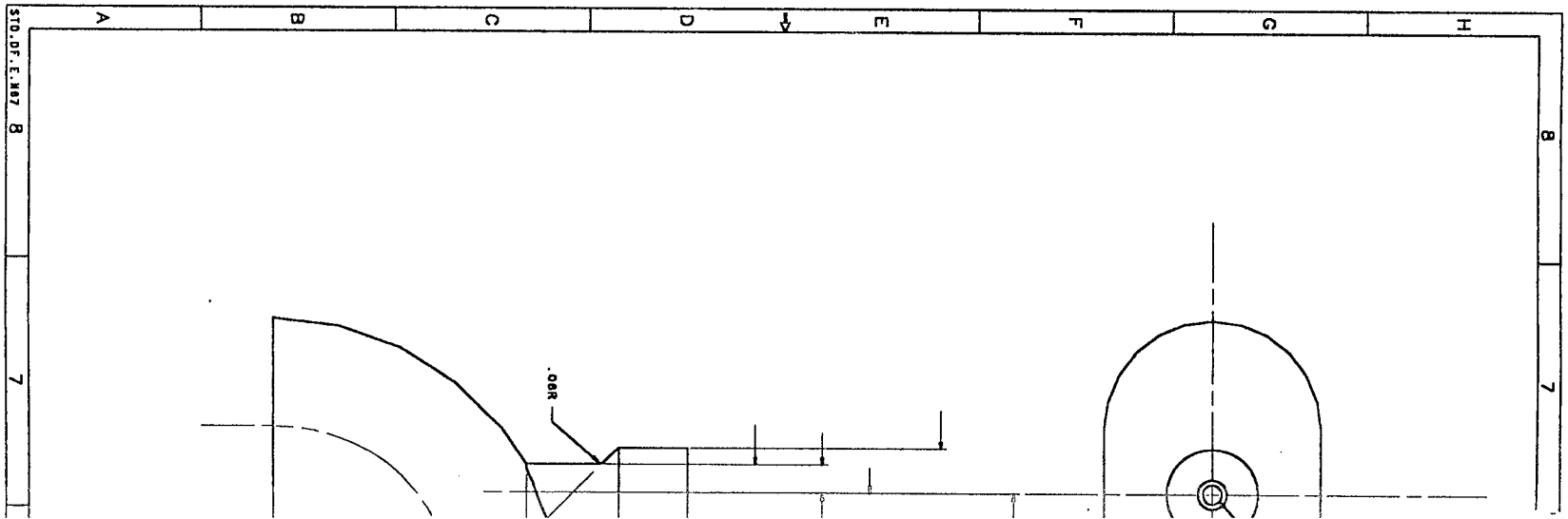

FOLDOUT FRAME

88

REVISIONS

ZONE	LTR	DESCRIPTION	DATE	APPROVED

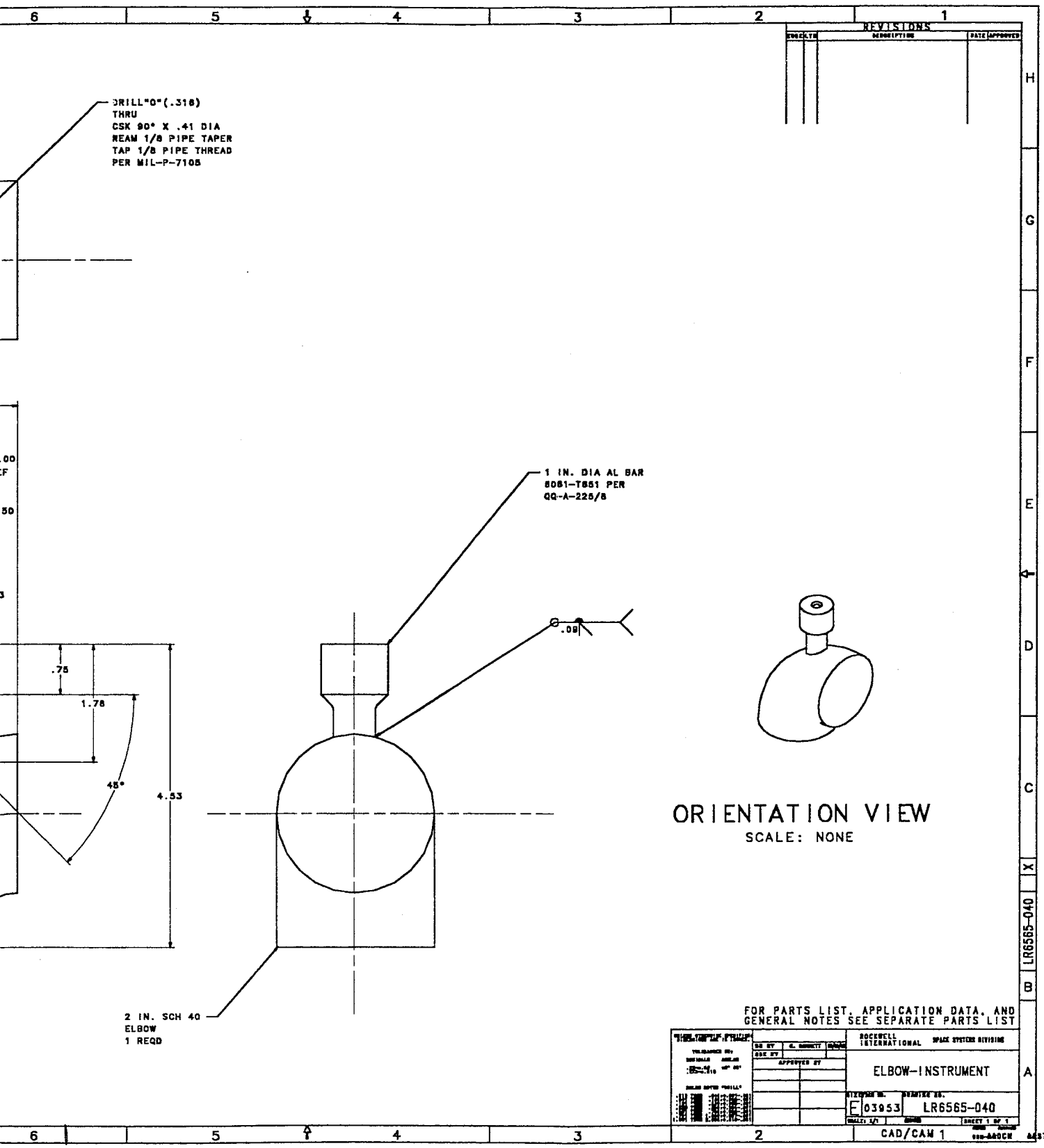

FOR PARTS LIST, APPLICATION DATA, AND GENERAL NOTES SEE SEPARATE PARTS LIST

ROCKWELL INTERNATIONAL SPACE SYSTEMS DIVISION

DR BY K. BARNETT

CHK BY

APPROVED BY

ELBOW-INSTRUMENT

DRAWING NO. E 03953

DRAWING NO. LR6565-040

SCALE: 1/1

SHEET 1 OF 1

CAD/CAM 1

LR6565-040

89 FOLDOUT FRAME

VMBAT008 FRAME 1 APRIL 03, 1995 06.24.33

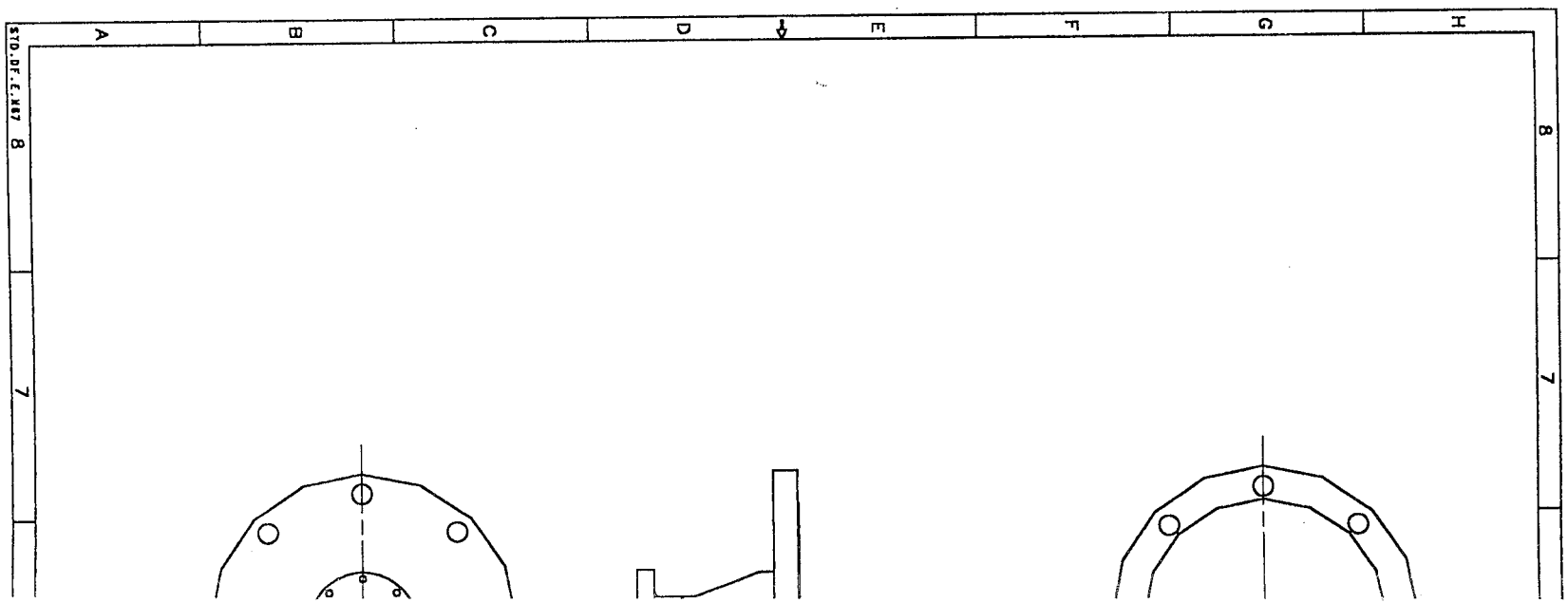

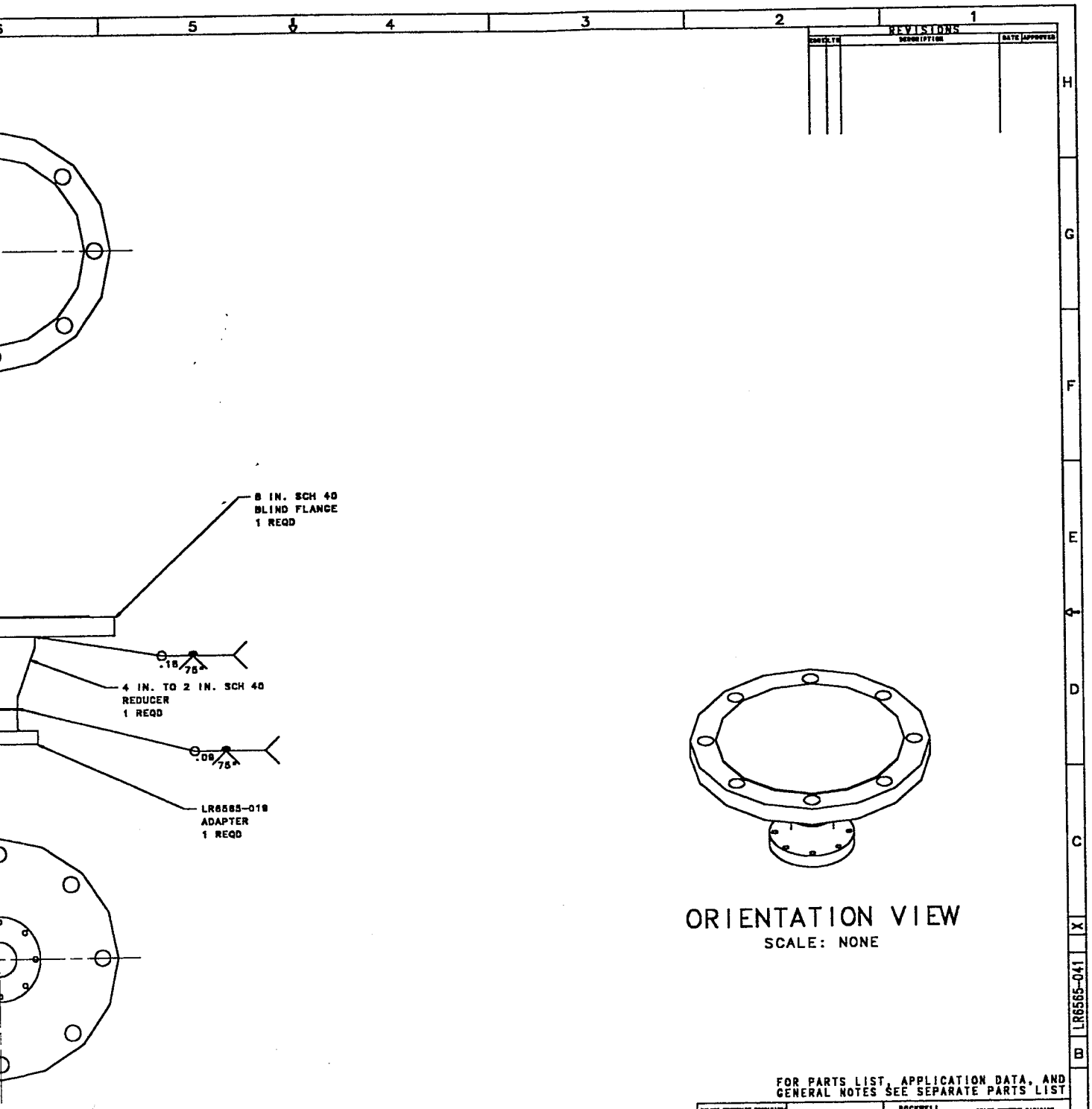
REVISIONS
8 IN. SCH 40
BLIND FLANGE
1 REQD
4 IN. TO 2 IN. SCH 40
REDUCER
1 REQD
LR6565-019
ADAPTER
1 REQD
ORIENTATION VIEW
SCALE: NONE
FOR PARTS LIST, APPLICATION DATA, AND
GENERAL NOTES SEE SEPARATE PARTS LIST
ROCKWELL INTERNATIONAL
SPACE SYSTEMS DIVISION
RP-1 BLEED-
INTERFACE
E 03953
LR6565-041
CAD/CAM 1
LR6565-041

91 FOLDOUT FRAME

VMBAT011 FRAME 1 APRIL 05, 1995 06.05.10

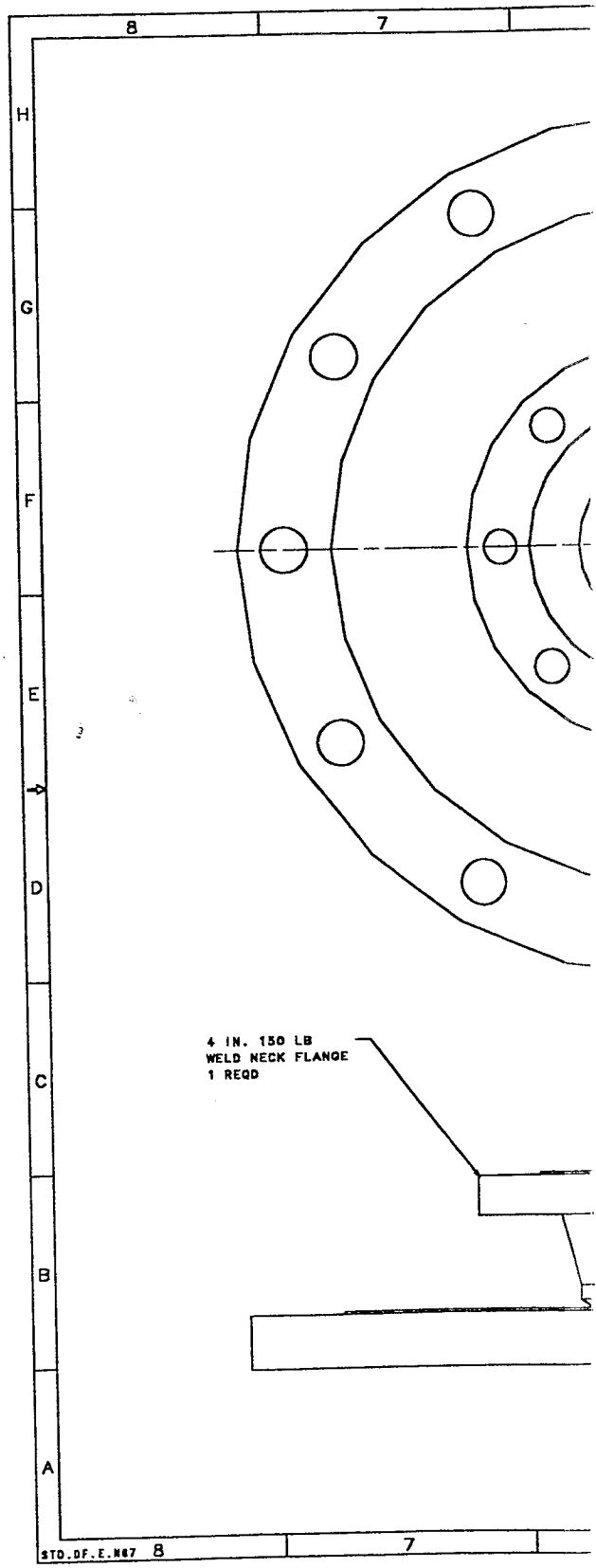

FOLDOUT FRAME

92

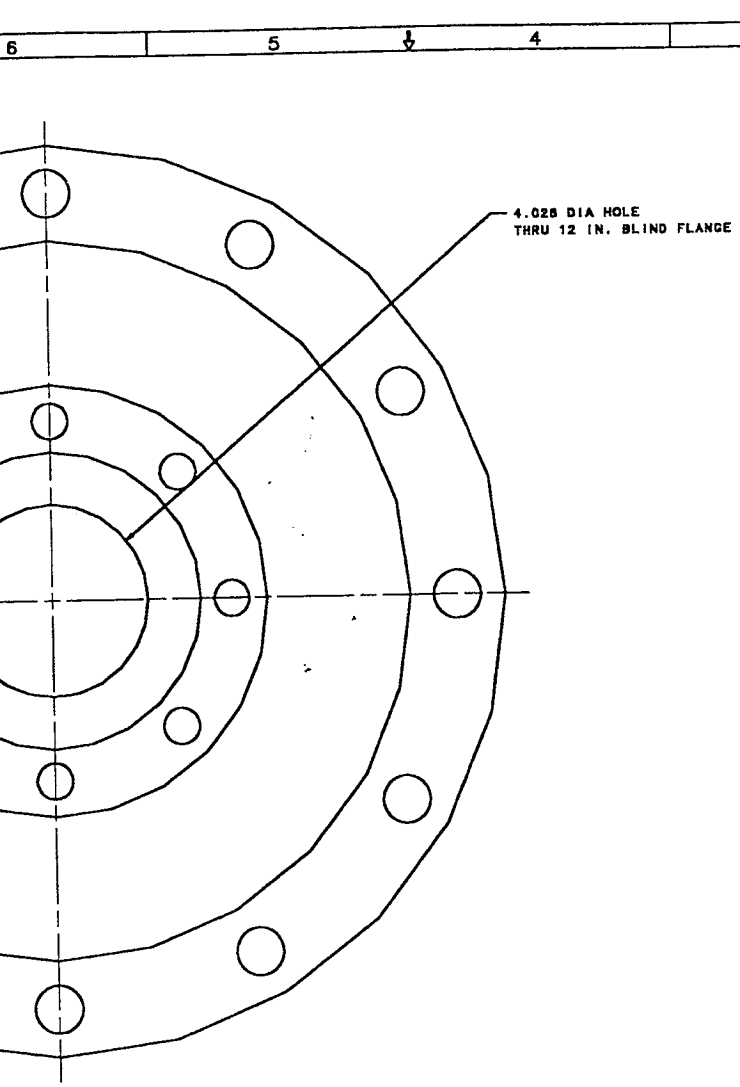

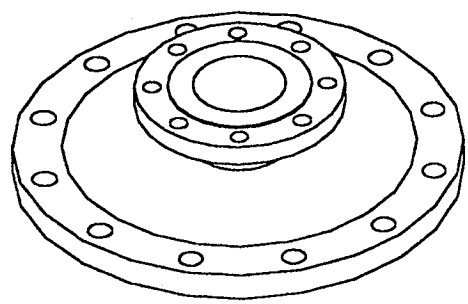

ORIENTATION VIEW
SCALE: NONE

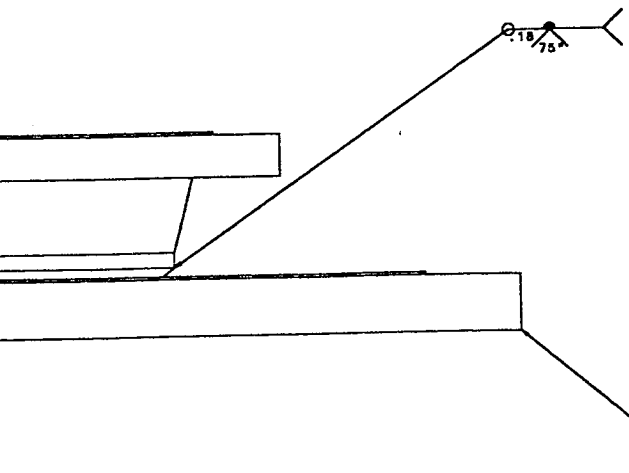

FOR PARTS LIST, APPLICATION DATA, AND GENERAL NOTES SEE SEPARATE PARTS LIST

REVISIONS

ZONE	LTR	DESCRIPTION	DATE	APPROVED

ROCKWELL INTERNATIONAL SPACE SYSTEMS DIVISION

DR BY R. BARNETT

ADAPTER-
LO2 TEMP FEED LINE

DRAWING NO. E 03853

LR6565-042

SCALE: 1/1

SHEET 1 OF 1

CAD/CAM 1

LR6565-042

93 FOLDOUT FRAME

VMBAT009 FRAME 1 APRIL 10, 1995 13.51.59

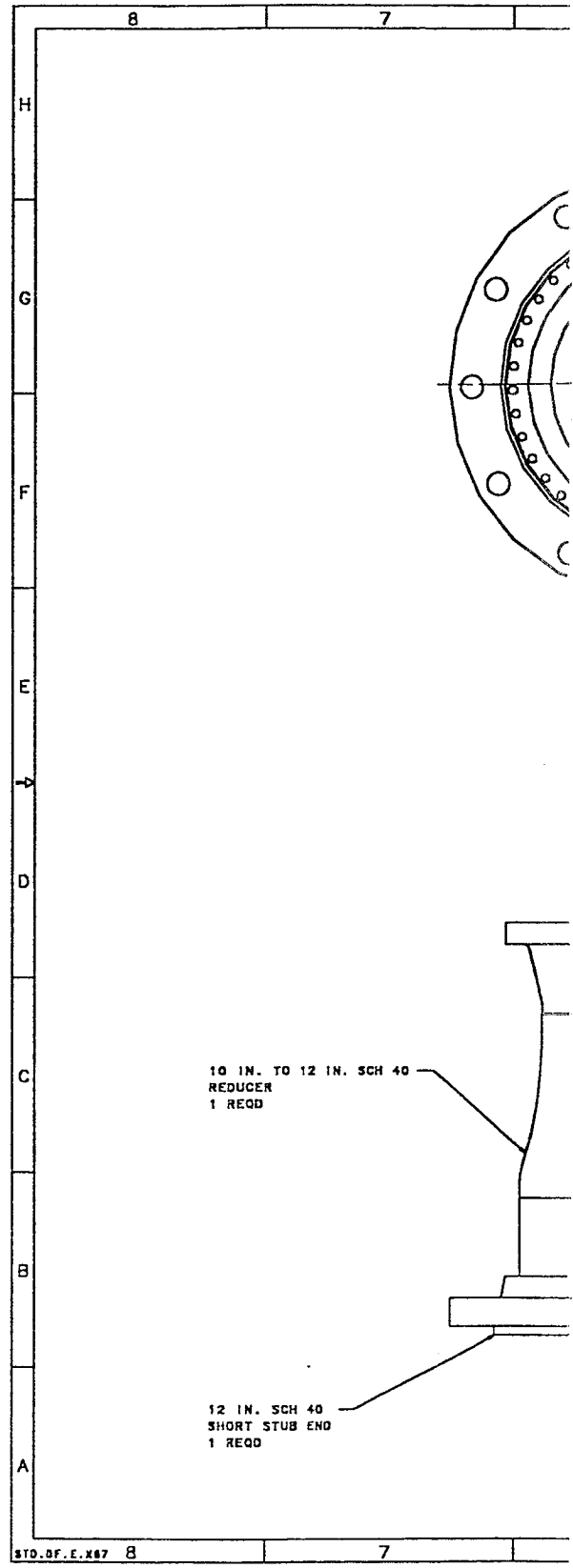

REVISIONS

ZONE	LTR	DESCRIPTION	DATE	APPROVED

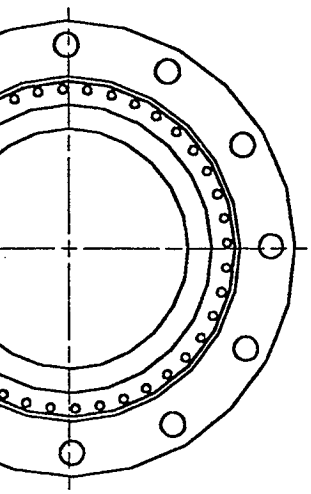

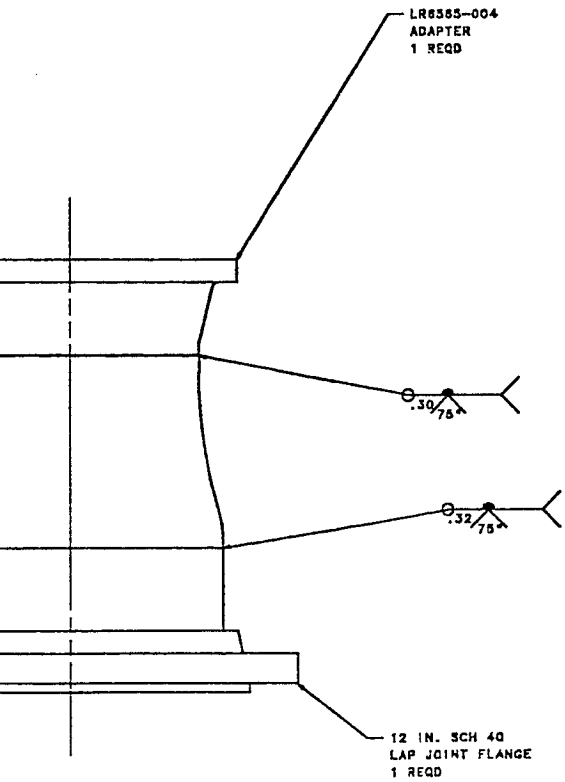

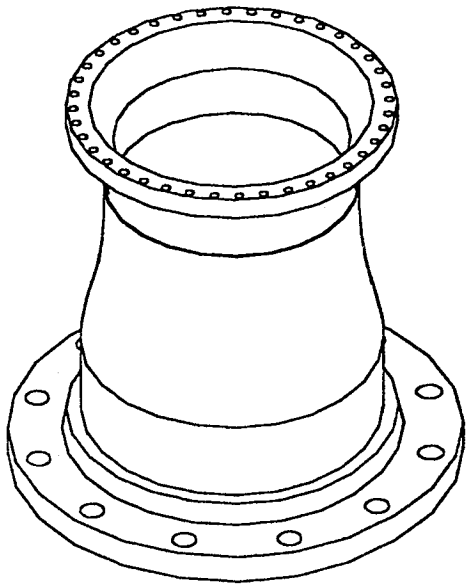

ORIENTATION VIEW
SCALE: NONE

FOR PARTS LIST, APPLICATION DATA, AND GENERAL NOTES SEE SEPARATE PARTS LIST

ROCKWELL INTERNATIONAL SPACE SYSTEMS DIVISION

OUTLET ASSY-
PREVALVE, LH2

HISTORY NO. F 03953 DRAWING NO. LR6565-043

SCALE: 1/2 SHEET 1 OF 1

CAD/CAM 1

LR6565-043

95

FOLDOUT FRAME

VMBAT008 FRAME 1 APRIL 05, 1995 05.57.58

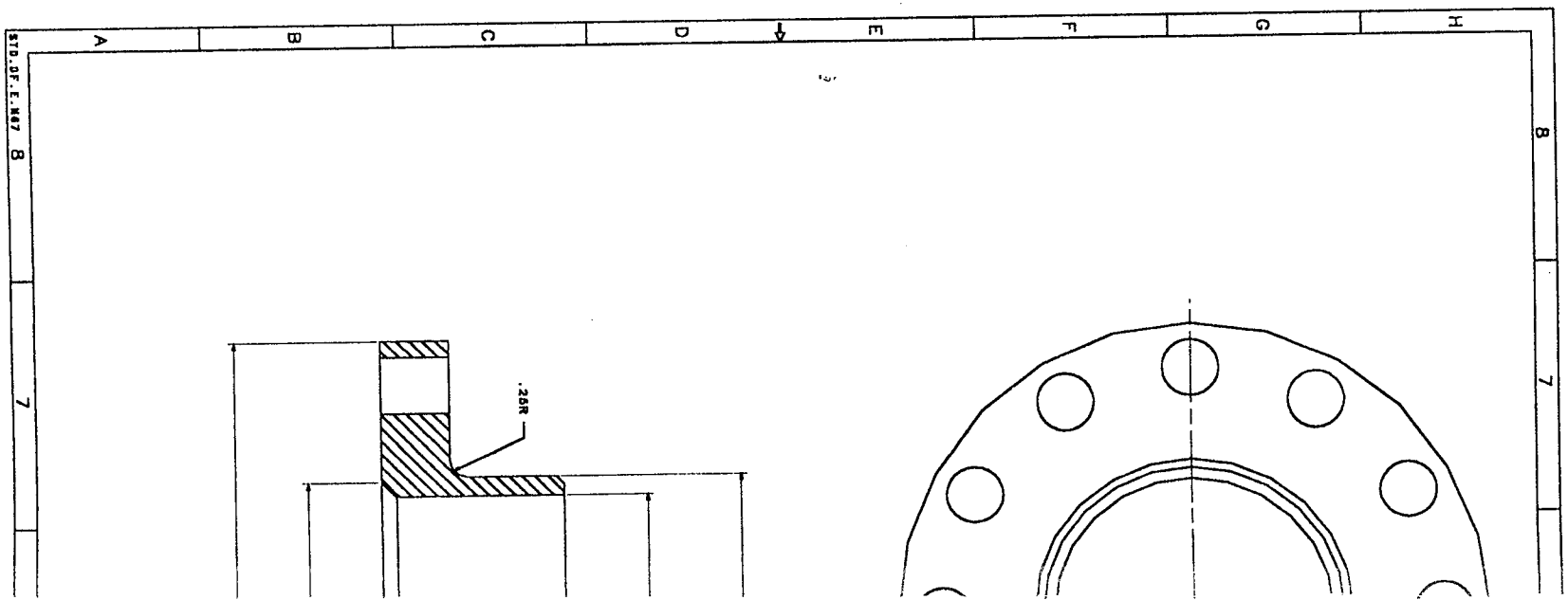

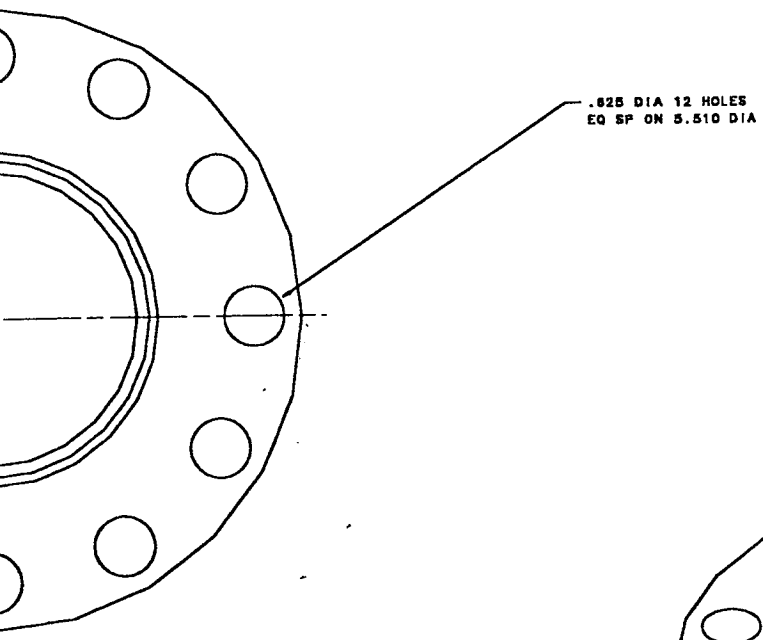

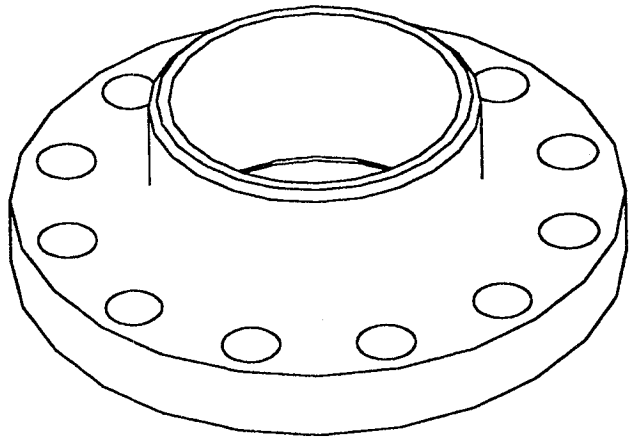

ORIENTATION VIEW
SCALE: NONE

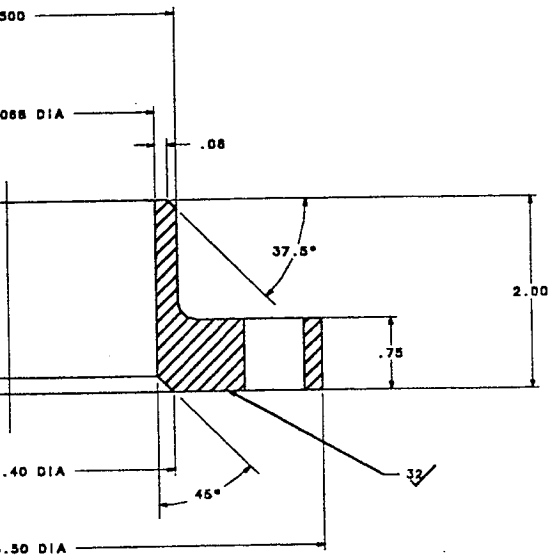

FOR PARTS LIST, APPLICATION DATA, AND GENERAL NOTES SEE SEPARATE PARTS LIST

ROCKWELL INTERNATIONAL SPACE SYSTEMS DIVISION

ADAPTER-LH2, TURBO PUMP

E 03953 LR6565-044

CAD/CAM 1

LR6565-044

97 FOLDOUT FRAME

VMBAT013 FRAME 1 APRIL 03, 1995 13.41.38

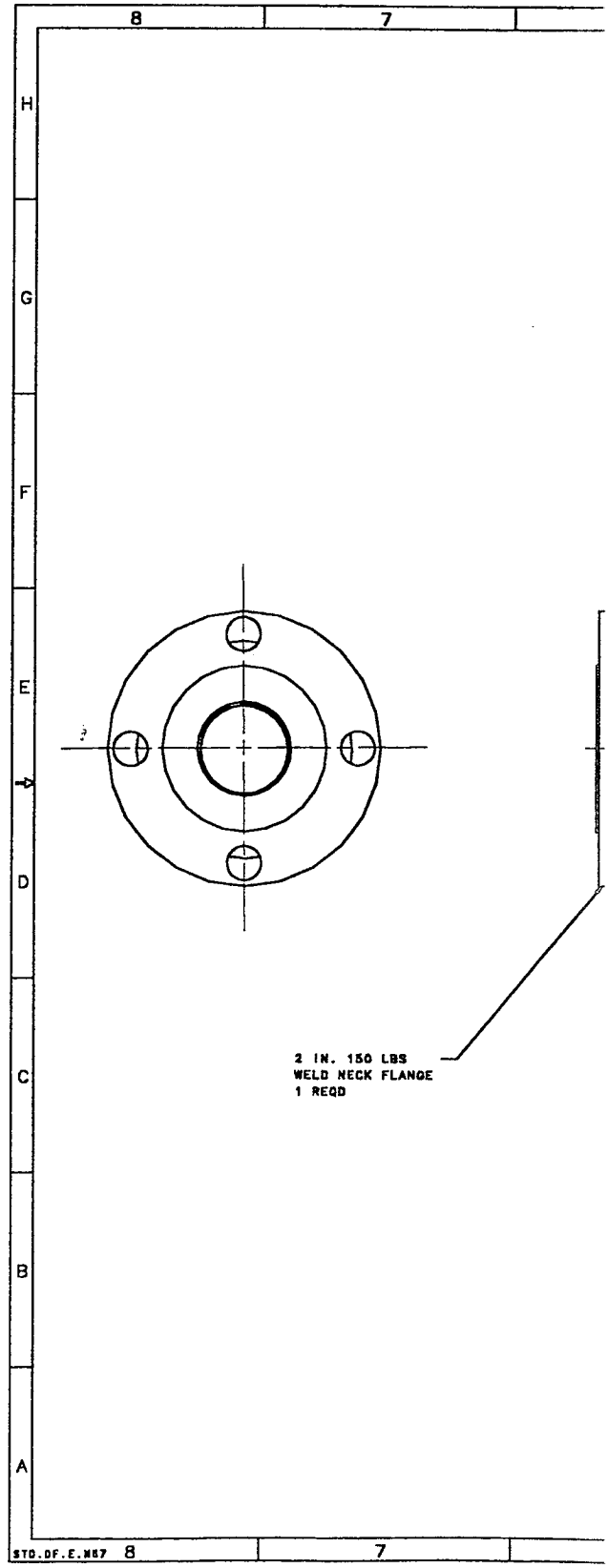

REVISIONS

ZONE	LTR	DESCRIPTION	DATE	APPROVED

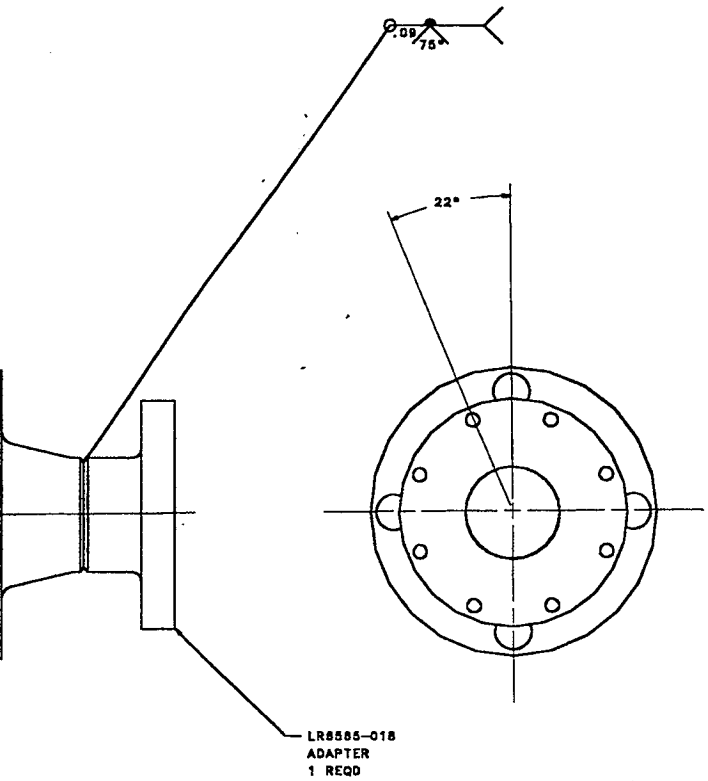

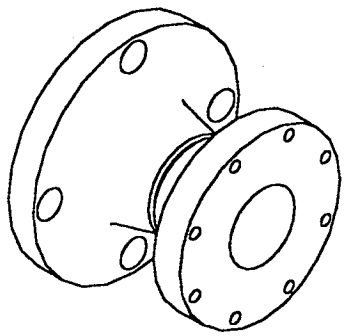

ORIENTATION VIEW
SCALE: NONE

FOR PARTS LIST, APPLICATION DATA, AND GENERAL NOTES SEE SEPARATE PARTS LIST

ROCKWELL INTERNATIONAL SPACE SYSTEM DIVISION

ADAPTER-
LH2 BLEED SYS
ASSY

E 03953 LR6565-045

CAD/CAM 1

APPENDIX C:

PROPULSION MODULE SUPPORT STRUCTURE

99

FOLDOUT FRAME

-41 QTY REQD	-31 QTY REQD	-21 QTY REQD	-11 QTY REQD	BSC QTY REQD	FIND NO	PART NO	PART NAME	MATERIAL//SI
	8	4		40		98023A035	WASHER	SAE McMASTER-CAR
	8					91571A806	BOLT/NUT	ASTM A325 McMAST
				16		91571A804	BOLT/NUT	ASTM A325 McMAST
				16		91571A803	BOLT/NUT	ASTM A325 McMAST
		4				91571A802	BOLT/NUT	ASTM A325 McMAST
				8		91571A800	BOLT/NUT	ASTM A325 McMAST
				2	-41	-41	SUB ASSY	
				4	-31	-31	SUB ASSY	
				1	-21	-21	SUB ASSY	
				4	17	-17	GUSSET	STL PL 1/2x8.00>
				AR	16	-16	KICK ANG	STL ANGLE 1/4x6.
	4				15	-15	BLOCK	STL PLATE 1.25x7
		4			14	-14	ANGLE	STL ANGLE 1/4x2.
				AR	13	-13	RAIL	SQ STL TUBE 1.5>
			6		12	-12	GUSSET	STL PL 1/2x3.80>
				2	-11	-11	SUB ASSY	
				4	10	-10	PLATE	STL PL 1/2x8.00>
4					9	-9	CAP	STL PL 1/2x6.50>
	4				8	-8	CAP	STL PL 1/2x8.07>
				2	7	-7	DIAG'L	W8x13 103.19 LON
	4				6	-6	HANGER	W8x40 126.75 LON
2					5	-5	BEAM	W12x35 156.50 LO
				2	4	-4	SPACER	STL PL 1/4x6.00>
		1			3	-3	BEAM	W10x30 165.40 LO
				2	2	-2	BEAM	W10x45 165.40 LO
			2		1	-1	BEAM	W10x45 115.91 LO

PARTS L

STD.DF.E.N67

101

FOLDOUT FRAME

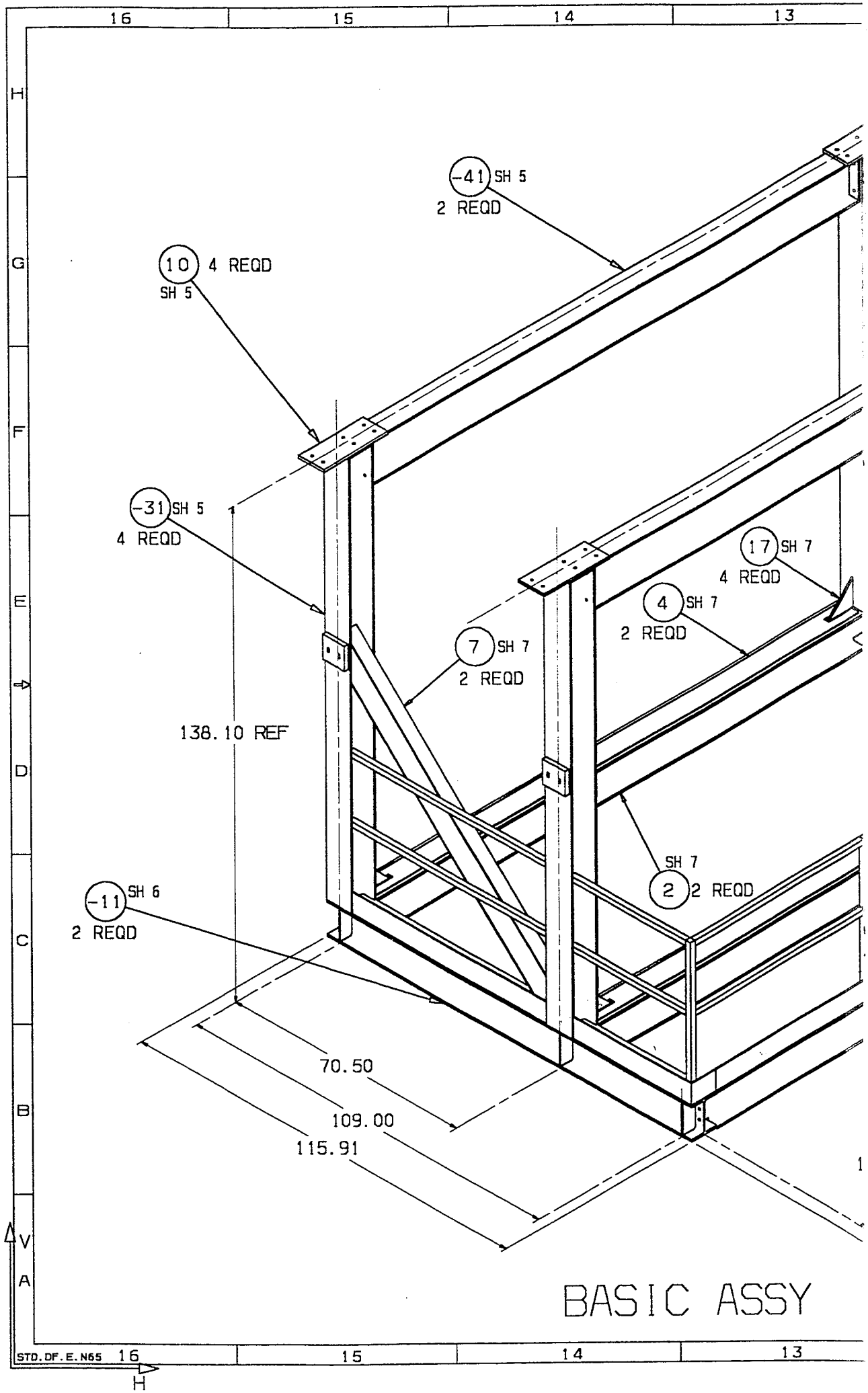

102

FOLDOUT FRAME

12	11	10	9

REVISIONS

ZONE	LTR	DESCRIPTION	DATE	APPROVED

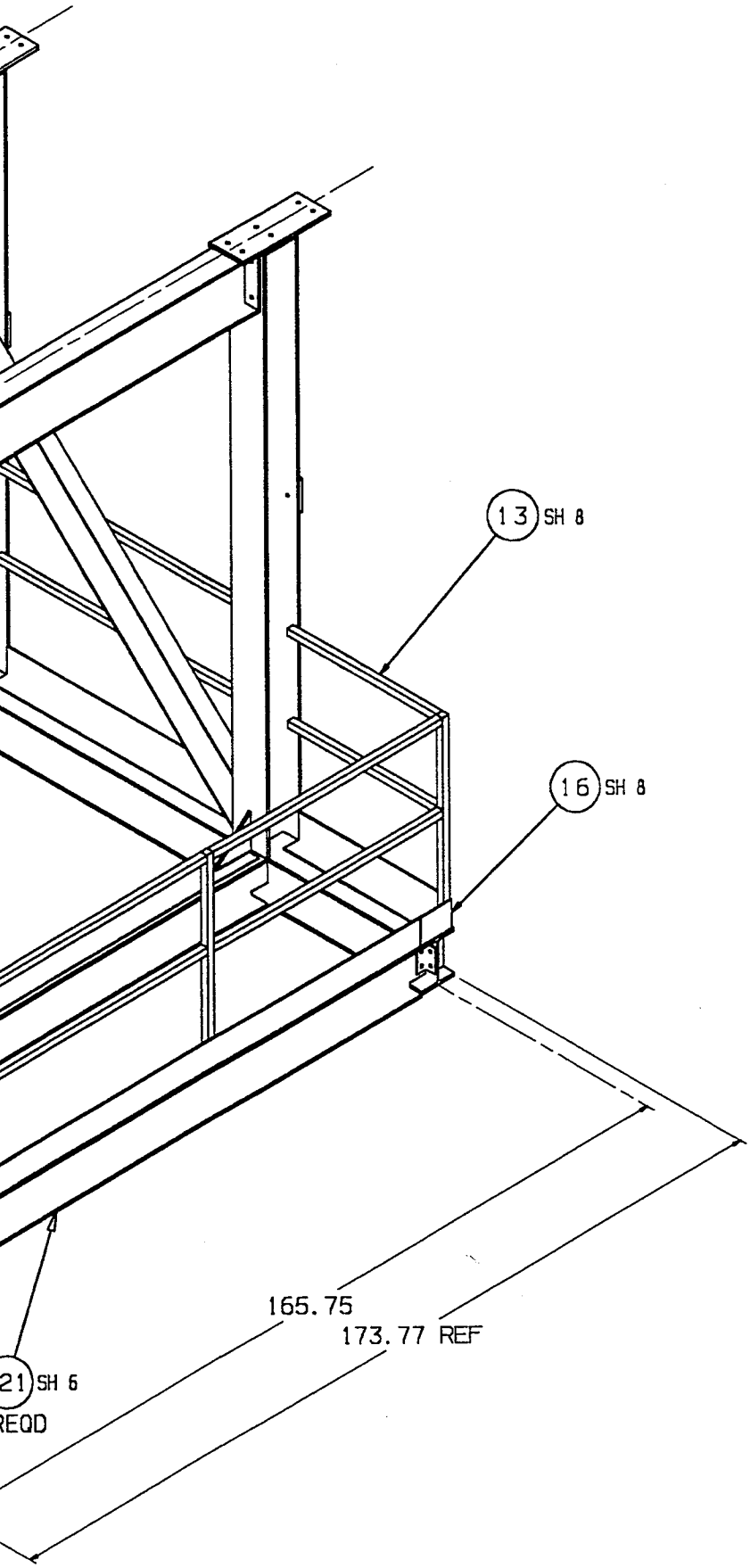

SIZE	SCH NO.	DRAWING NO.
F	03953	LR6565-002
SCALE: 1/1		SHEET 8 OF X

CAD/CAM 9 DCN-

12	11	10

H G F E D C B A

LR6565-002 X 2

103

FOLDOUT FRAME

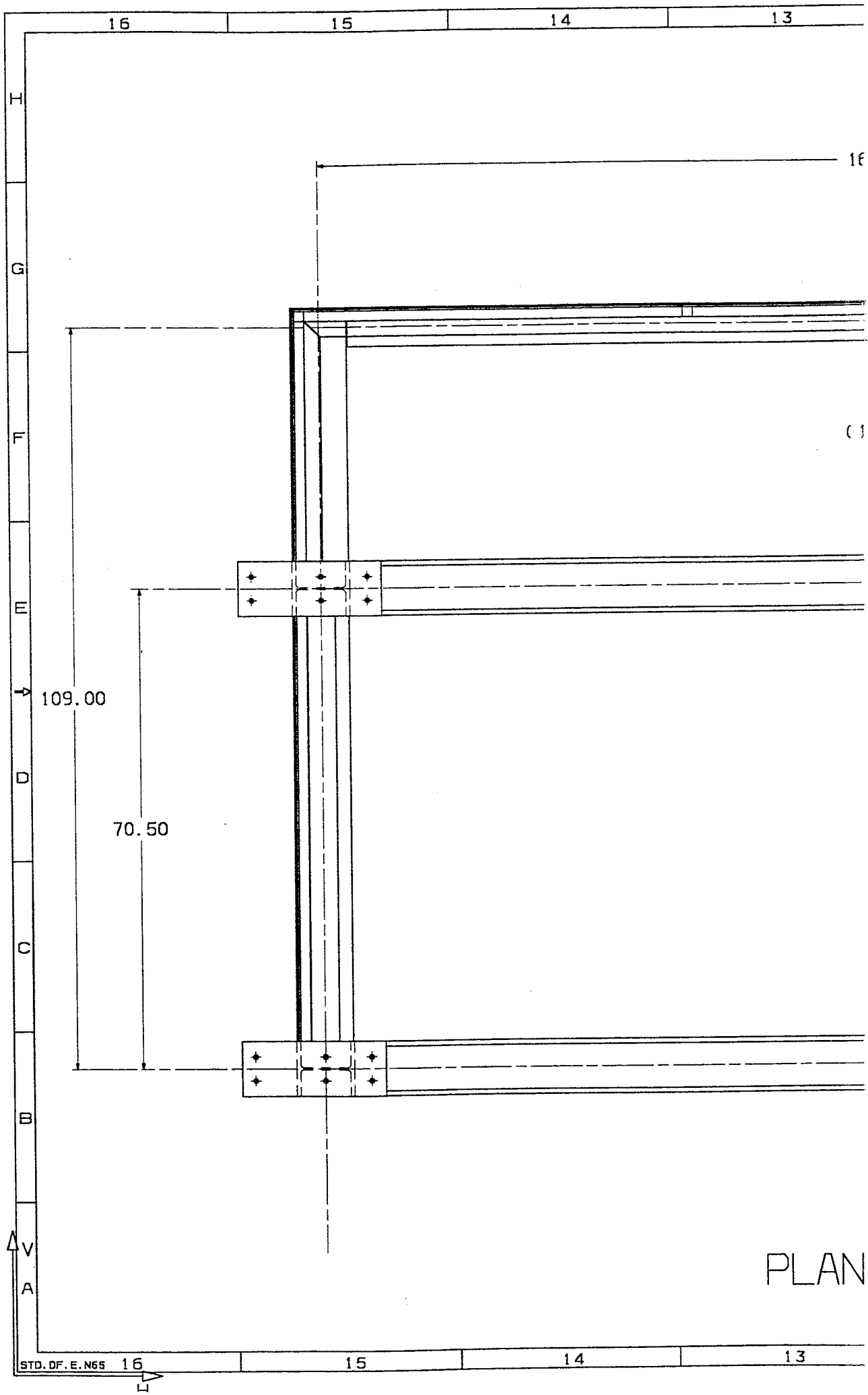

FOLDOUT FRAME

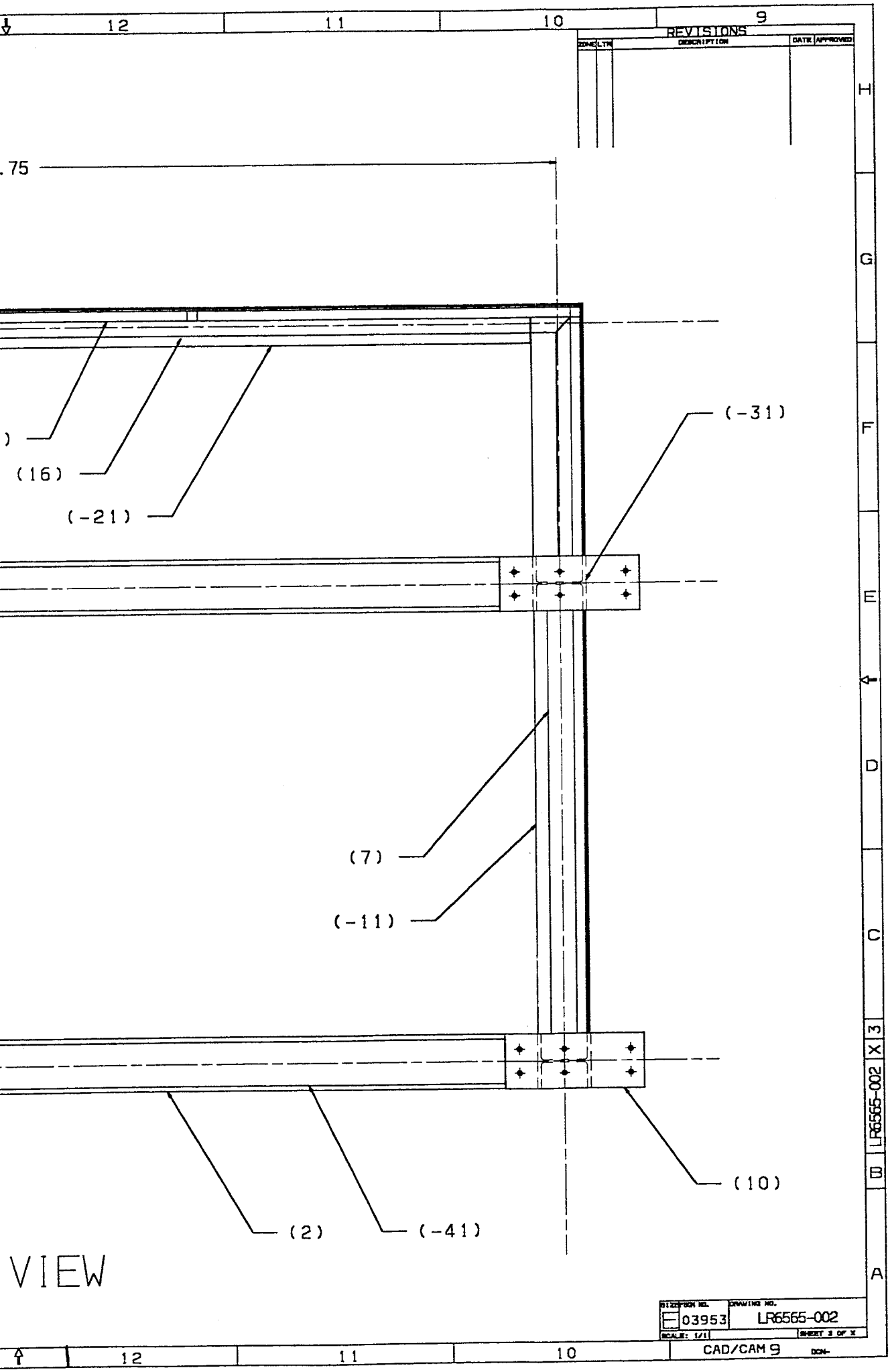

105

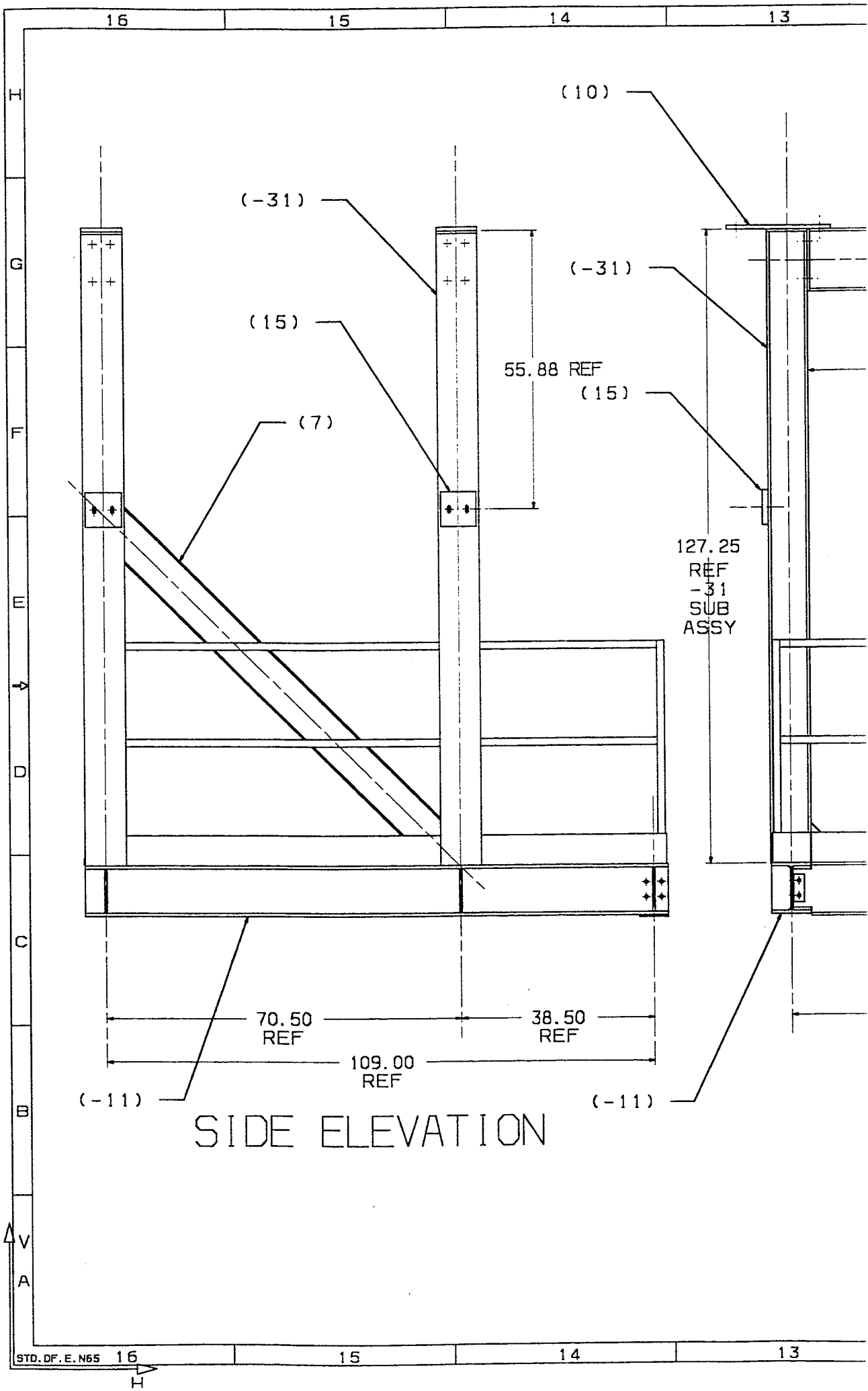
16
15
14
13
H
G
F
E
D
C
B
A
(10)
(-31)
(-31)
(15)
(15)
(7)
55.88 REF
127.25
REF
-31
SUB
ASSY
70.50
REF
38.50
REF
109.00
REF
(-11)
(-11)
SIDE ELEVATION
STD. DF. E. N65

106

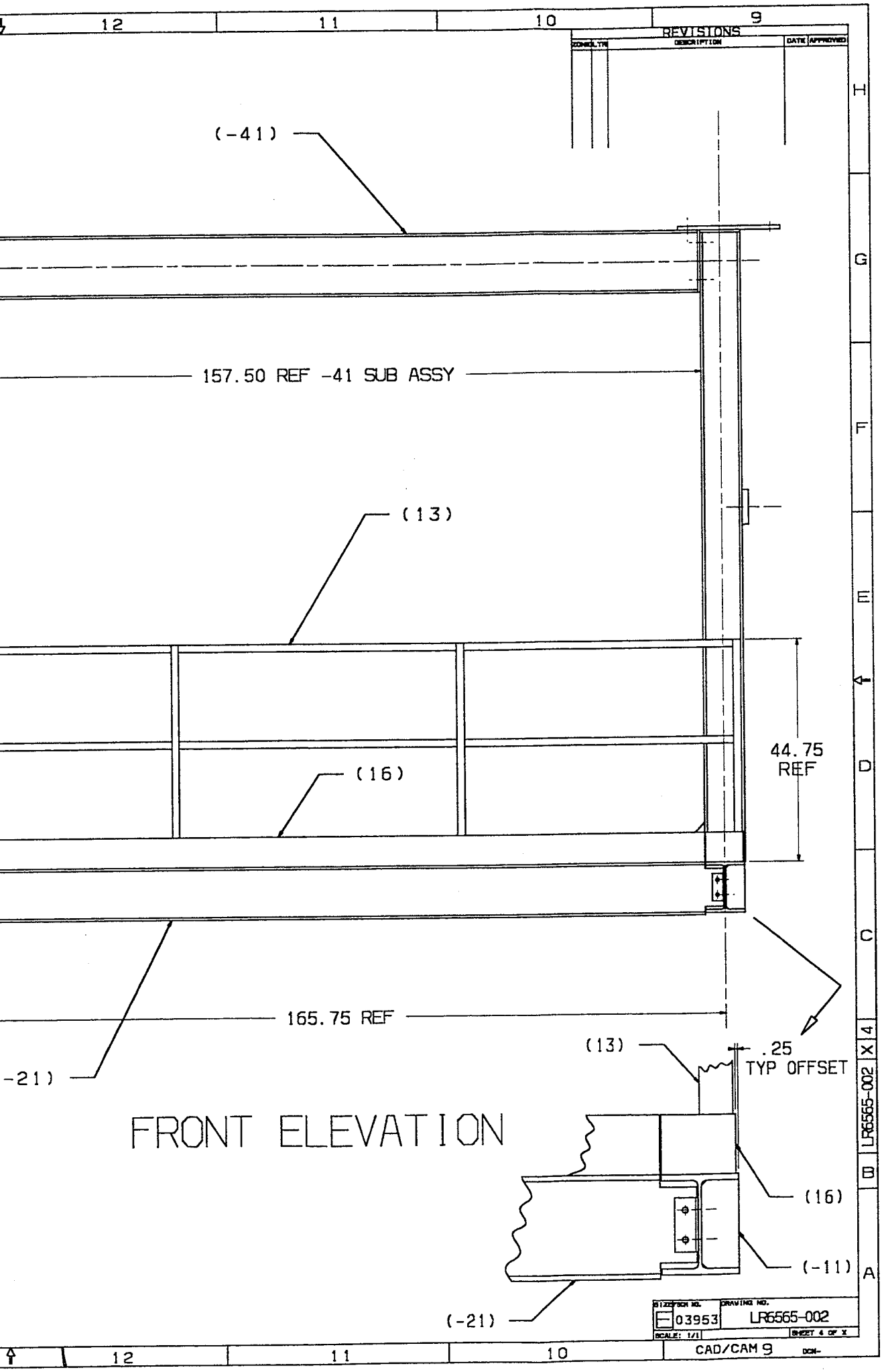
REVISIONS
ZONE
LTR
DESCRIPTION
DATE
APPROVED
(-41)
157.50 REF -41 SUB ASSY
(13)
(16)
44.75
REF
165.75 REF
-21)
FRONT ELEVATION
(13)
.25
TYP OFFSET
(16)
(-11)
(-21)
LR6565-002
SIZE
FSCM NO.
03953
DRAWING NO.
LR6565-002
SCALE: 1/1
SHEET 4 OF X
CAD/CAM 9
DCN-

107

FOLDOUT FRAME

91571A804 2 1/2" BOLT 16
98023A035 WASHER 16

DETAIL -10
4 REQD

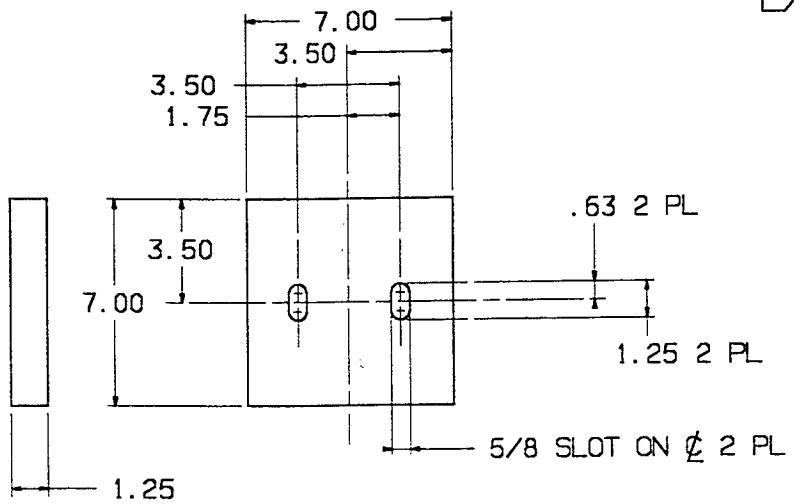

DETAIL -15
4 REQD

℄ JOINT

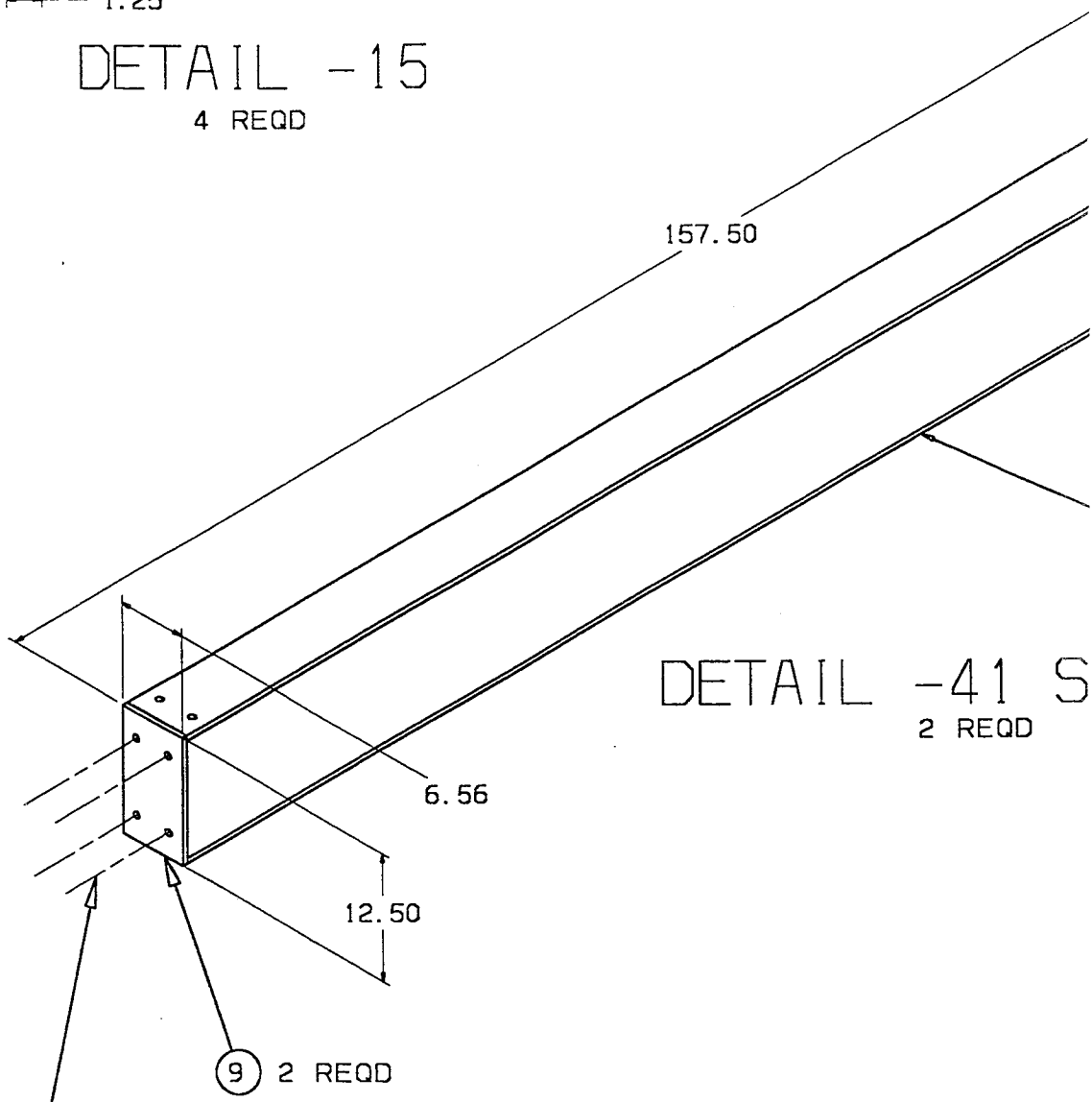

DETAIL -41 S
2 REQD

91571A803 2 1/4" BOLT 16 REQD
98023A035 WASHER 16 REQD

SHEET 5; DETAIL -5, -6, -8, -9, -10, -15,

STD. DF. E. N65

108

FOLDOUT FRAME

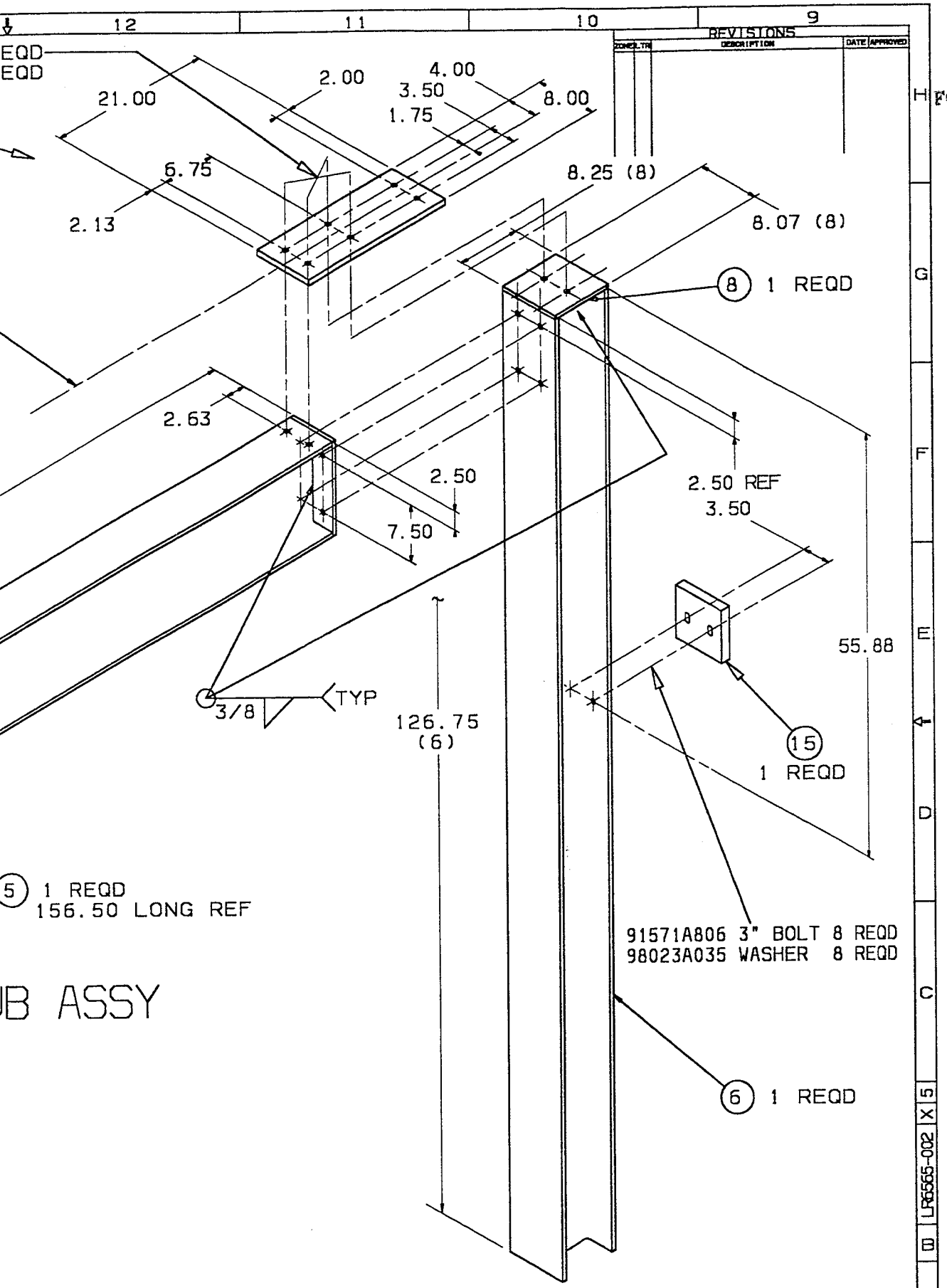

UB ASSY

DETAIL -31
SUB ASSY
4 REQD

31 & -41 WITH ASSOCIATED JOINT

SIZE	PART NO.	DRAWING NO.
	03953	LR6565-002
SCALE: 1/1		SHEET 6 OF X

CAD/CAM 9

109

FOLDOUT FRAME

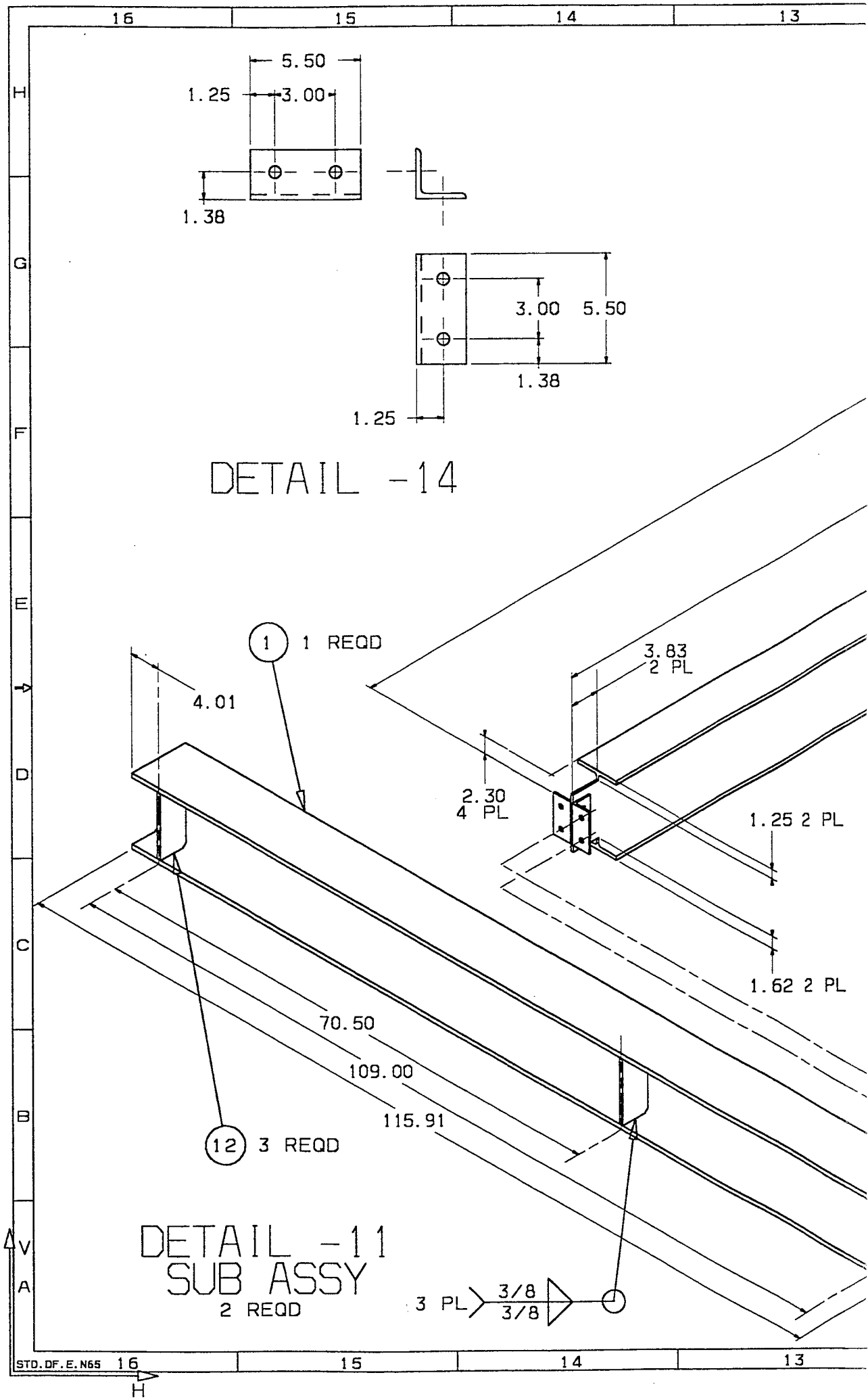

FOLDOUT FRAME

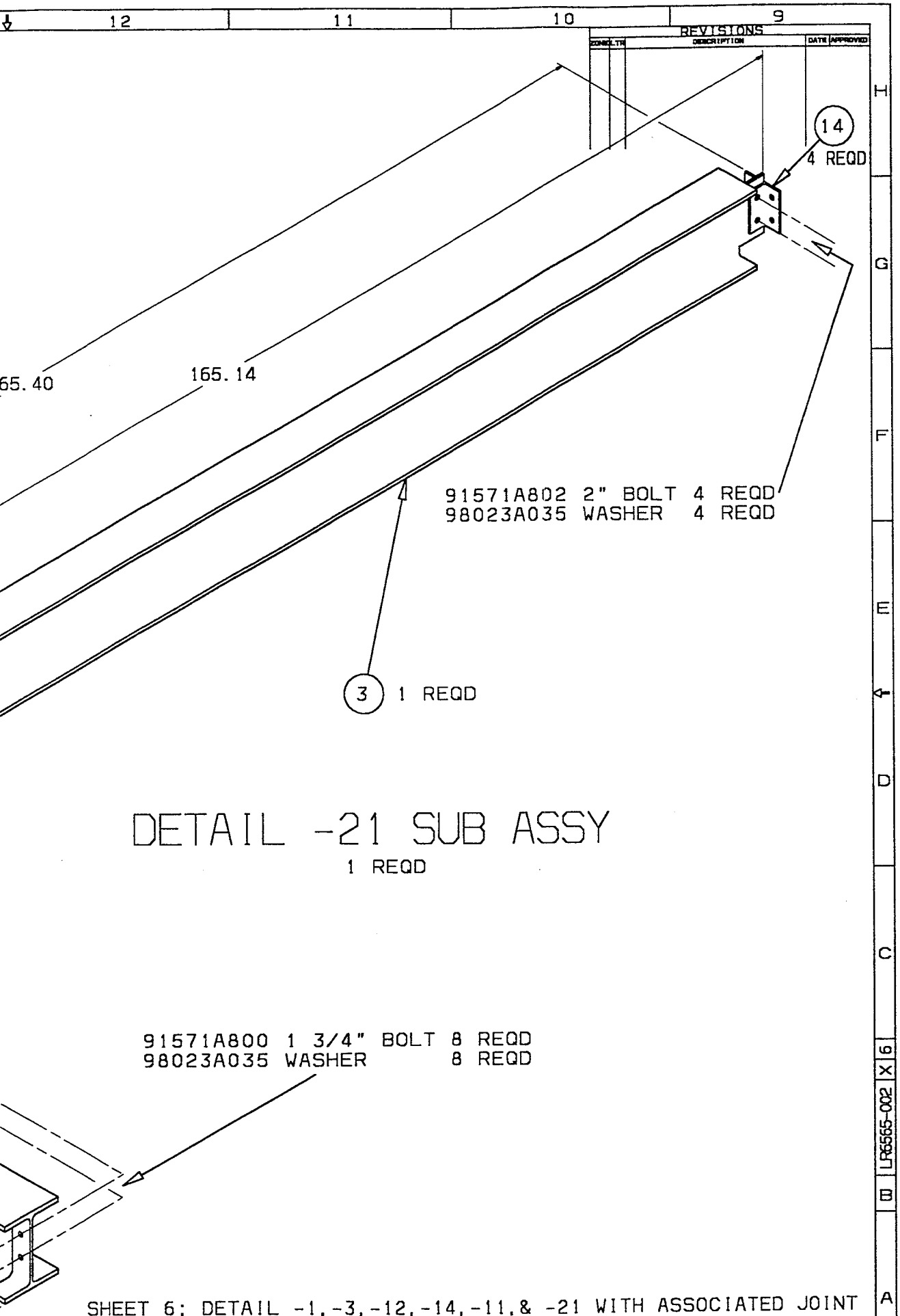

111

FOLDOUT FRAME

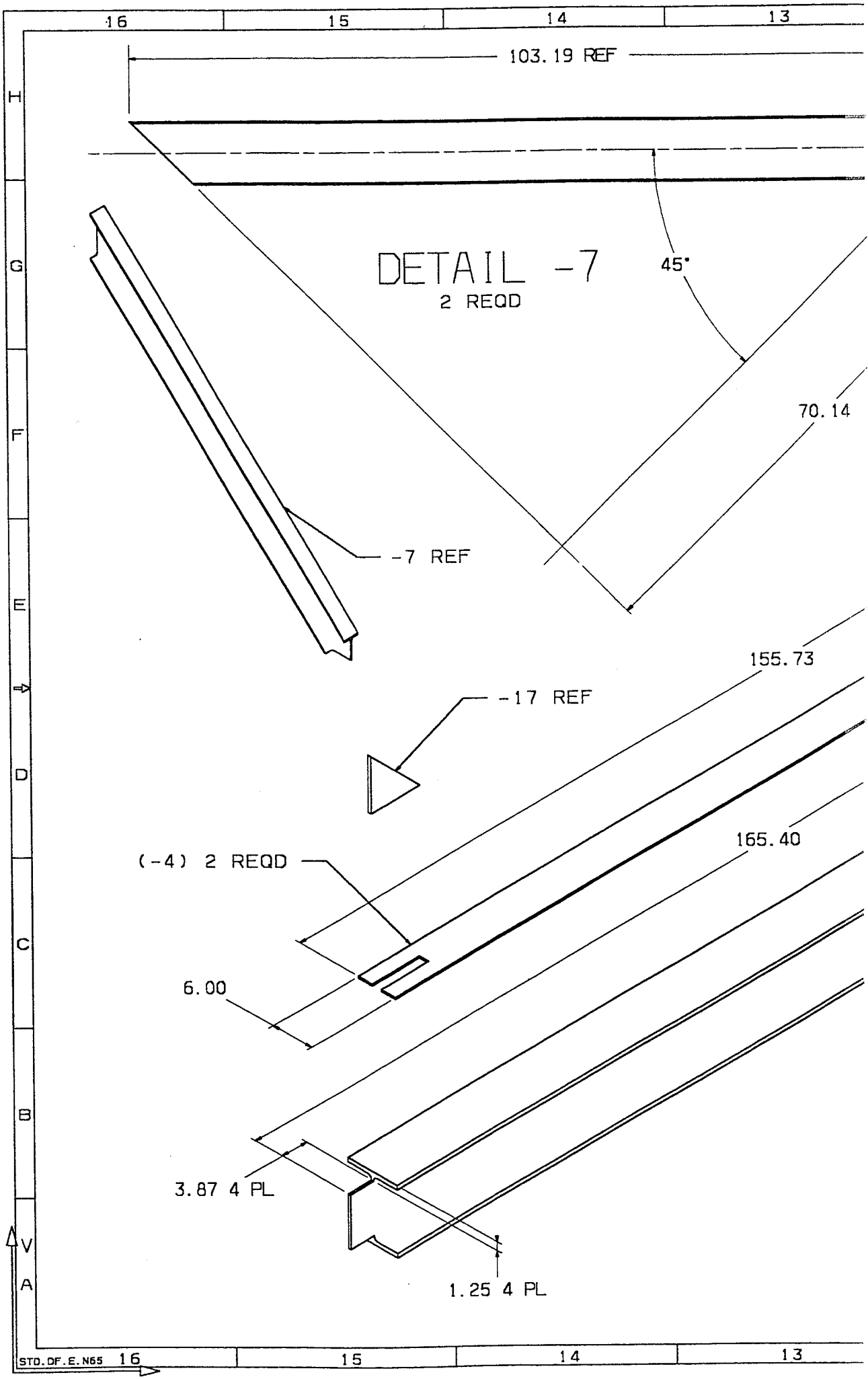

112

FOLDOUT FRAME

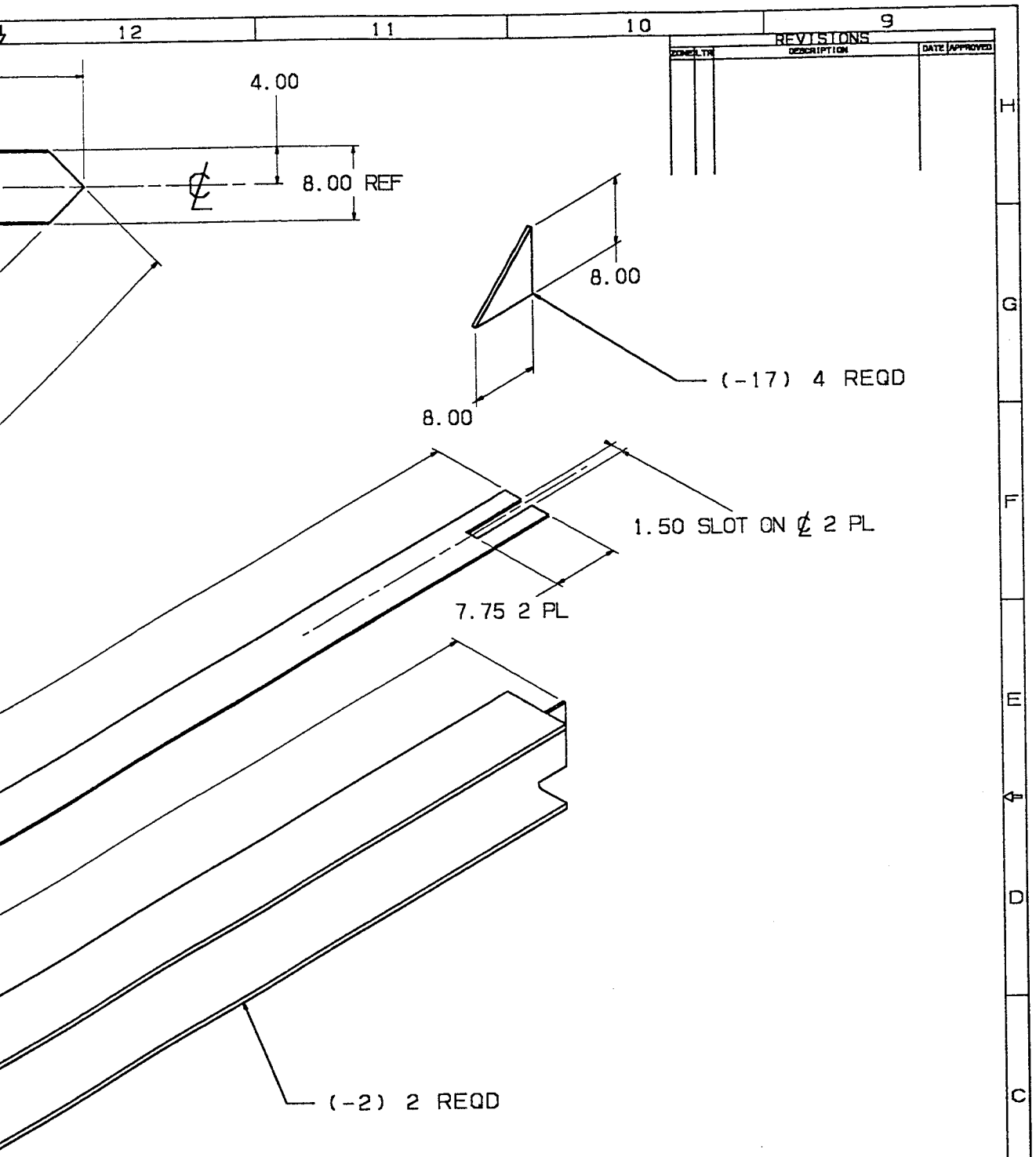

DETAIL -2, -4, & -17

REVISIONS

ZONE	LTR	DESCRIPTION	DATE	APPROVED

SIZE	BOM NO.	DRAWING NO.
F	03953	LR6565-002

SCALE: 1/1 SHEET 7 OF X

CAD/CAM 9

113

FOLDOUT FRAME

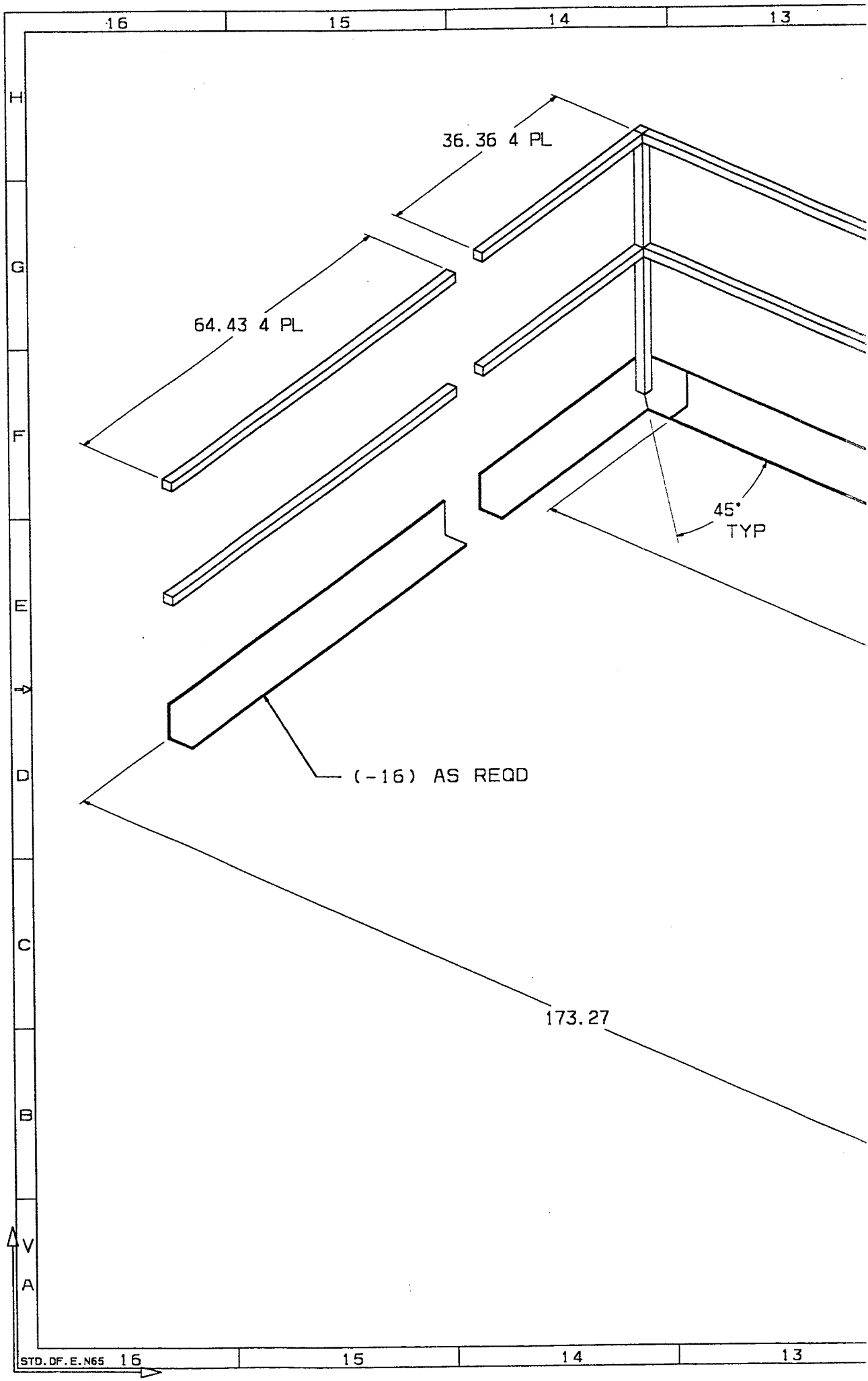

STD. DF. E. N65

114

FOLDOUT FRAME

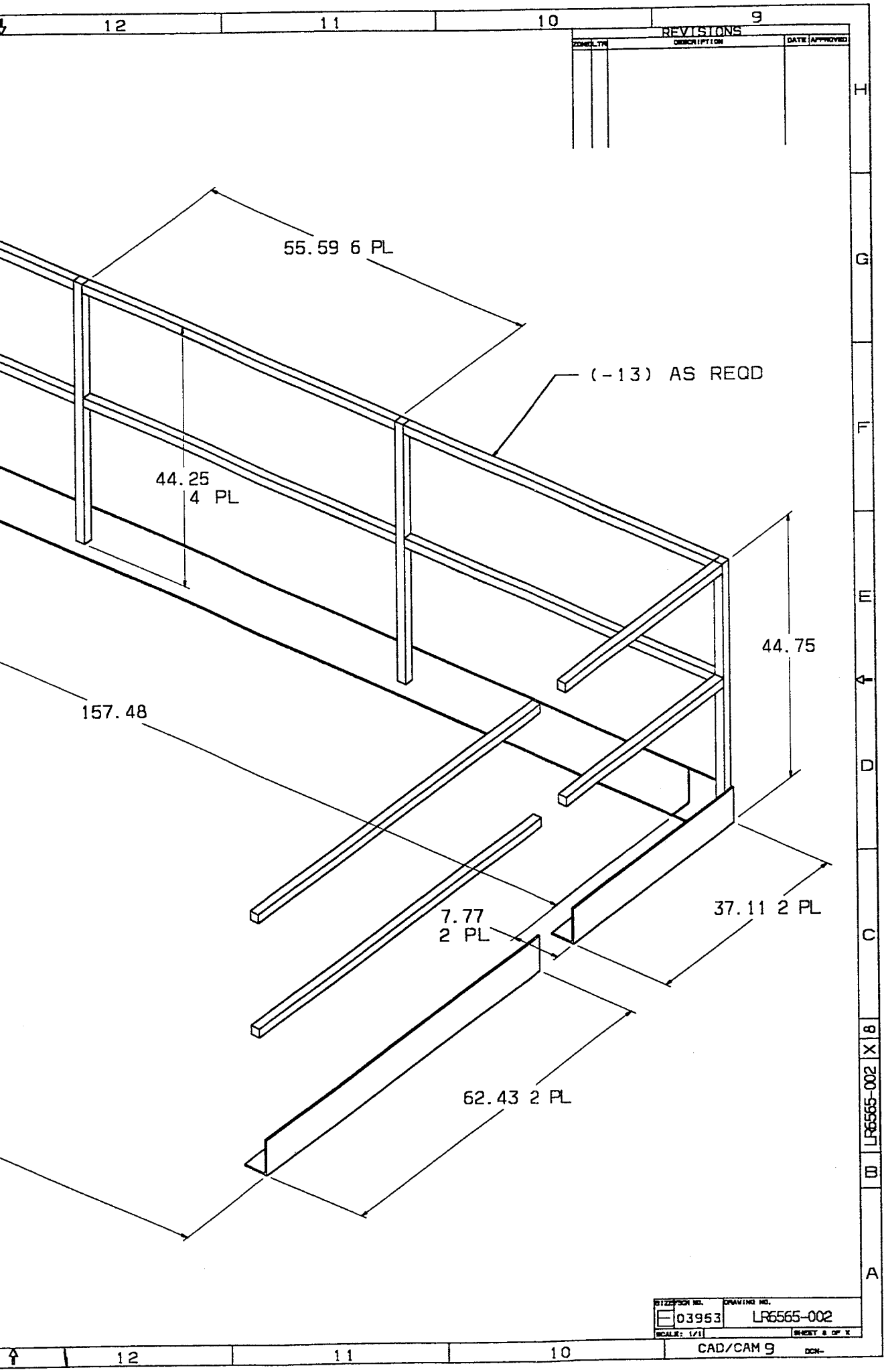

APPENDIX D:

PCCS SYSTEM ARCHITECTURE

(Ref. SSD95D0070 Sect. 40)

40. Propulsion Checkout and Control System

Evaluation of technology and system designs that would reduce operation costs were included as part of the proposed NRA propulsion system technology evaluation. This included techniques that would reduce ground support systems by improving the on-board system autonomy and the integration of on-board systems.

40.1 Phase 1 Propulsion Checkout and Control System (PCCS)

The PCCS system will be implemented in a phased approach. The initial system, as shown in figure 40-1, will be a hybrid of the current AETF systems and the PCCS. The PCCS will always be limited to the command and control of IPTD hardware, only. This cost effective use of assets will allow for the early deployment of a test article utilizing existing AETF assets and its existing systems and procedures. Eventually, as the NRA progresses, the PCCS will control the entire ground test and command & control of the test article and its associated support hardware. To support this early deployment, a data link will need to be established between the AETF monitor system and the PCCS. Based on the discussions with NASA and its contractor personnel, it has been determined the most cost effective and non-intrusive approach would be to provide a data link from the RealStar 2000 and the PCCS data front end processor. The link will be a Systran ScramNet reflective memory. The RealStar hardware and software required for this link will be provided by MSFC. All other ScramNet software and hardware for the IPTD will be provided the NRA (Rockwell). This link will provide for the bi-directional data transfer from either system to the other. This approach for the initial system deployment will provide a test bed or proving ground for potential future ground system improvements.

In addition to establishment of a network for distributed development of models and applications, the PCCS system will also provide remote monitoring capability of the testing at MSFC, as shown by figure 40-2. As cooperative efforts are completed at any of the sites: Lewis Research Center, Ames Research Center, Kennedy Space Center, Marshall Space Flight Center or Rockwell, they will be integrated at Rockwell and a release version or update will be delivered to the MSFC PCCS Test bed system. The ability to control the time-critical functions will be limited to the TTB block house.

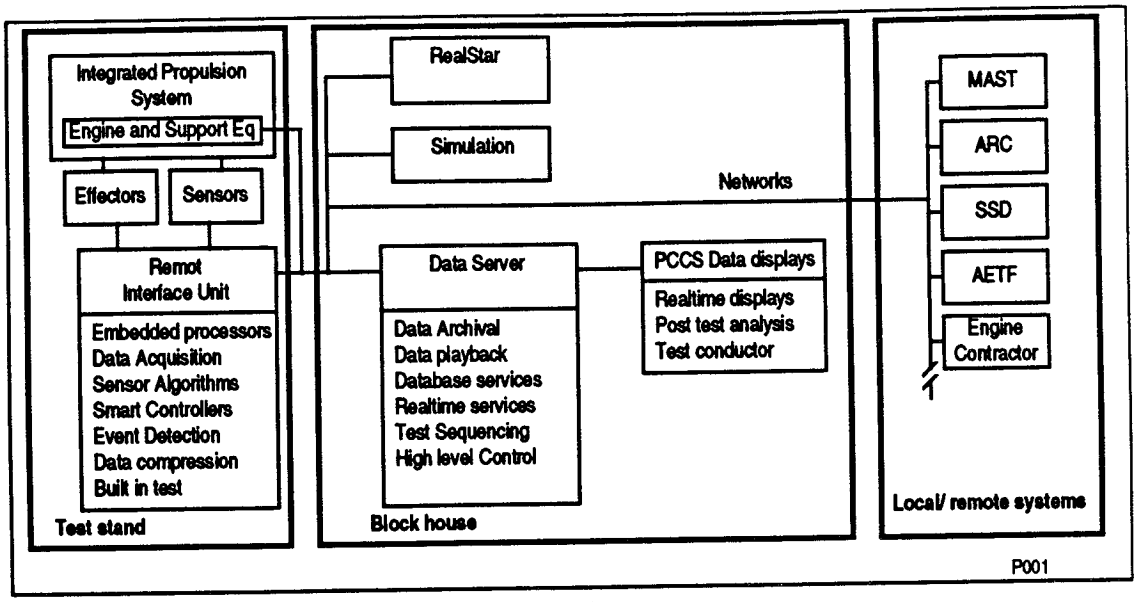

Figure 40-1 - Initial PCCS & TTB Hybrid Support System

The development and operational support will include network capabilities linking the development and operations support centers as shown in figure 40-2. The objective is to support concurrent development and data reuse. Non-real-time links range from file transfer services to remote login and interactive sessions. Real-time links provide near real-time data monitoring. The objective here is to identify standards and processes that can facilitate data reuse and integrated development.

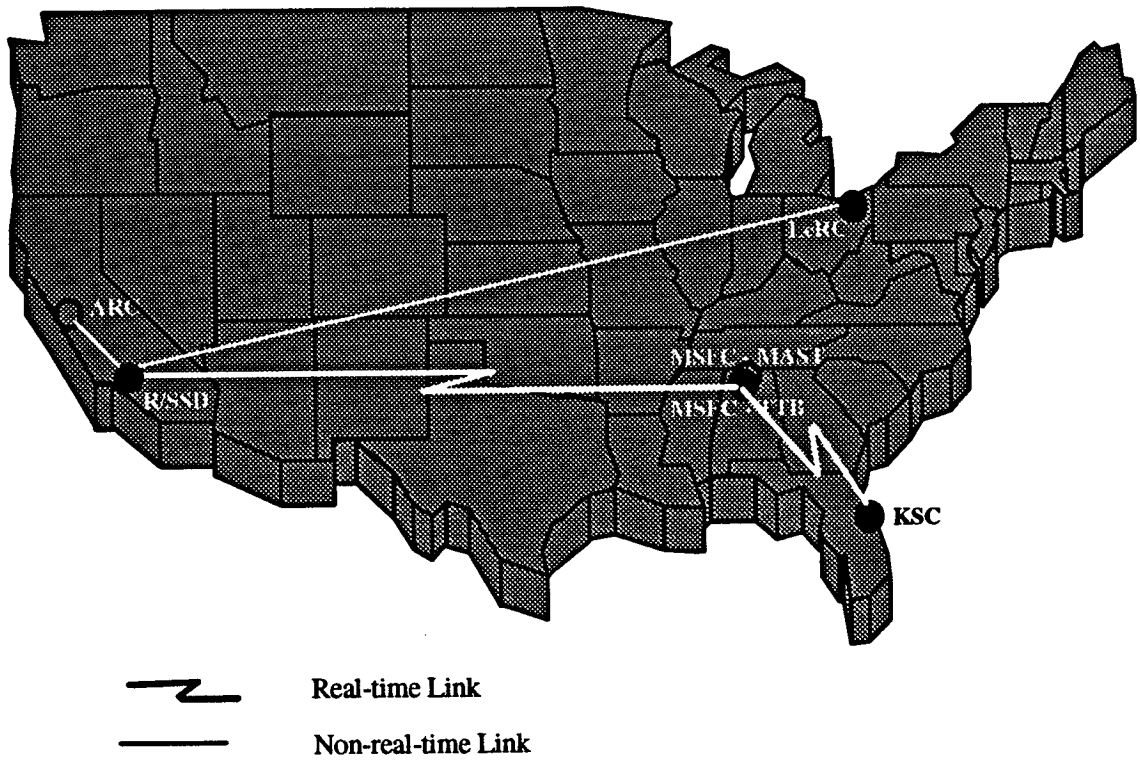

Figure 40-2 : PCCS Network

40.2. PCCS legacy

The PCCS architecture is based on technology and implementation experience gained in the development of the upgraded Mission Support Room (MSR) and Data Display and Review (DDR) Room as well as the expertise gained in the support of all of the systems supported by the Rockwell Aerospace Simulation and Systems Test Center (ASSTC). The hardware & software architecture is based on a hierarchical, distributed methodology. The MSR system is database driven and re-configured utilizing a Master Measurements List (MML) provided by NASA on magnetic tape without any code changes.

This support system "Infrastructure" is based on a distributed, multi-layered architecture. This approach allows the functional distribution of software across multiple nodes with complete platform independence, and maintains a consistent inter-process communication. Figure 40-3 depicts the software layering structure. This layering and functional allocation utilizes similar methodology as defined by both the POSIX and GOSIP specifications. That is, the COTS operating systems utilized and the layering of software meets the intent of these specifications to the degree of the acceptance by the software community as standards.

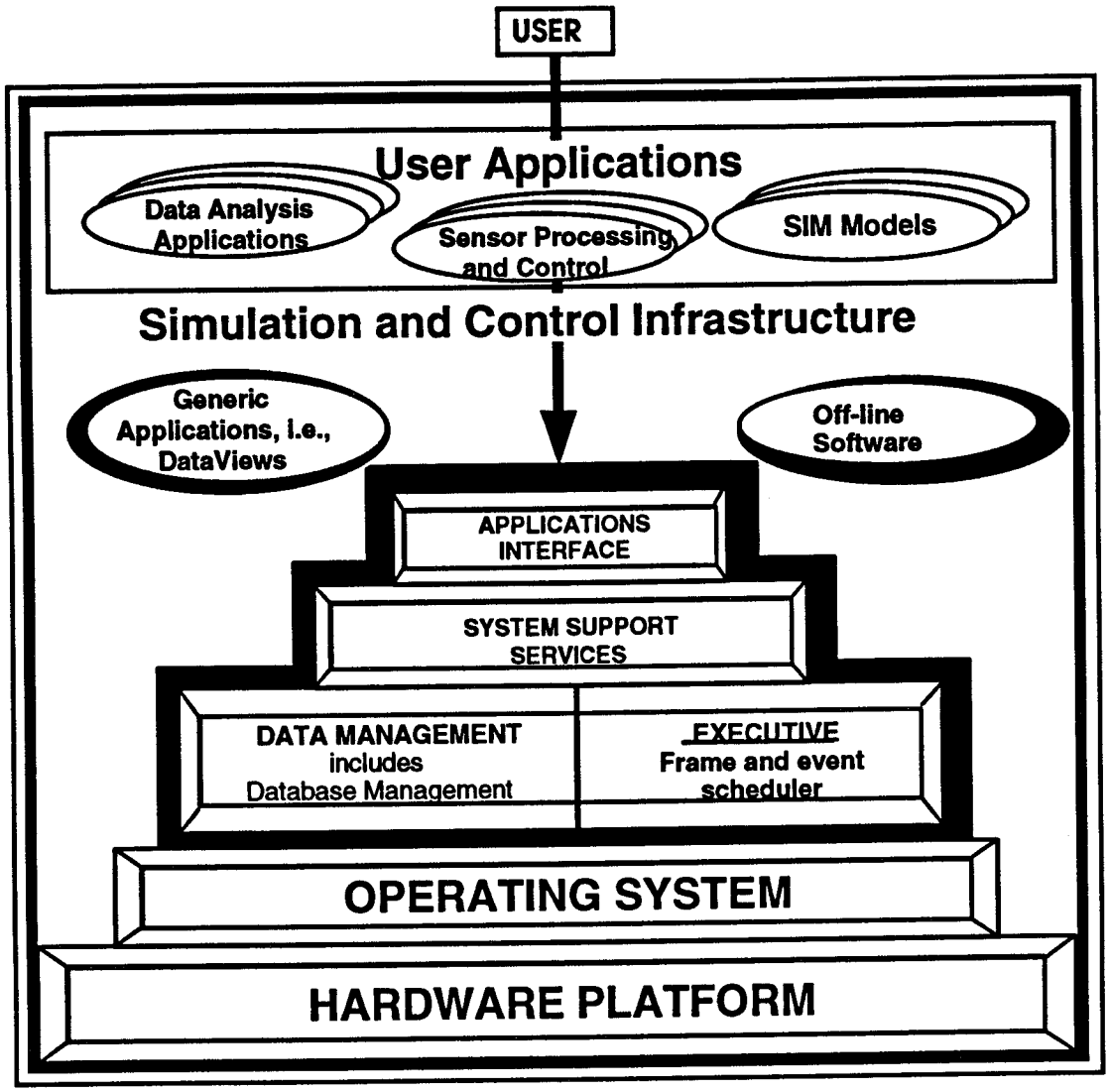

Figure 40-3 System Layering

40.3 PCCS Software Architecture

The first layer of the software, device drivers, provides the adaptation of the operating system to a specific instance of the hardware platform as shown in Figure 40-3. These device drivers are a collection of "C" routines which establish the communication interface to the specific hardware elements (i.e. CPU boards, analog, digital, serial I/O, etc.). These routines are normally provided by either the board vendors or the operating system vendors and therefore "pure" COTS. In some cases however, these device drivers do not exist due to custom designs, or that the device drivers do not meet the functional requirements. Examples: the GN&C Test Station (GTS) project's Shuttle-Orbiter Data Bus cards (custom design but available in printed-circuit board implementation), and the data archival to optical disk (modification of vendor supplied software to speed up output).

The second layer of the system is the COTS operating system. In virtually all systems that have developed by ASSTC, no modification of the COTS products has taken place. This allows us to upgrade to newer releases without any additional software development.

The Third layer of the software is the Data Management and Executive layer. This layer provides such services as inter-/intra- process communication, data management (real-time and archival), system management, health/status, and applications management. These services provide the primary building block for platform independence. For example, the inter-/intra- process communication process isolates the physical method of communication between processing entities. The communication may be over ethernet, VME backplane, point-to-point communication hardware or shared/reflective memory without the knowledge of the actual executing processes. This also isolates the operating system from the software processes, such that processes can be on different computer systems or platforms with different operating systems and still communicate as if they are on the same system. This allows the developer to apply the right tools and platforms to the specific task at hand and not try to force the wrong platform into doing a job it was not made to do. These services also establish the structure to rapidly re-configure a system to perform new tasks or the inclusion of new functions or processing. An example of the utilization of this approach was the application of the MEWS software package to the Rockwell Shuttle Mission Support System. The MEWS package was rehosted onto a SUN SPARC platform utilizing the system services software by NASA and Lockheed personnel with little Rockwell support outside of the interface control document (ICD) from Rockwell. This software package currently runs in the RI mission support system, the same as in the MER with completely different system bases. In other programs, the system has been applied to ground checkout, test stands, and other telemetry programs with minimal effort.

The fourth layer, System Support Services, provides the high-level support services required by a ground system which can be defined as "generic" required processing. That is, the functions of database management, data manipulation, display processing, HELP function and application execution/control (including Status And Control -SAC). This layer provides the middle-man processing required to support the user requests for data

and information from whatever source, real-time and/or archival, with minimal knowledge of the ground system architecture or data paths. The functions (processes) that comprise this layer of software provide the user of the system with the basic tools to do most of his job without the requirement of hardcode generation. Through the database management function, this layer provides for automated reconfiguration of the system without any software changes. This layer is composed of both software developed in-house (i.e. flat-file database software for real-time use) as well as COTS products (i.e. database tools like ORACLE, UNIFY, SYBASE and INGRES). which have been used in our systems.

The last layer of software is the Application Interface. This layer provides a consistent look and feel to the user no matter what function he is executing. That includes both real-time and post-processing of commands and data. This layer is developed utilizing COTS tools for both development and execution software. Examples are BuilderXcesory & DevGuide for window development, X-windows (OPENLOOK on the SUN platform or X/MOTIF on others) for window control, and DataViews for graphical/numerical displays.

Figure 40-4 shows the software functions to be supported by the software architecture. Device drivers provide the I/O for command processing and collection of test and health monitoring data. The low level command execution software generates the device level commands, verifies system status and command execution and provides time critical control sequences. Data acquisition monitors the system under test, collects instrumentation, health and control status and provides data exchange between different control loops within the command execution function. Data management provides common support services for test execution and user monitoring. The test sequence manager provides the higher level and less time critical command generation and control functions.

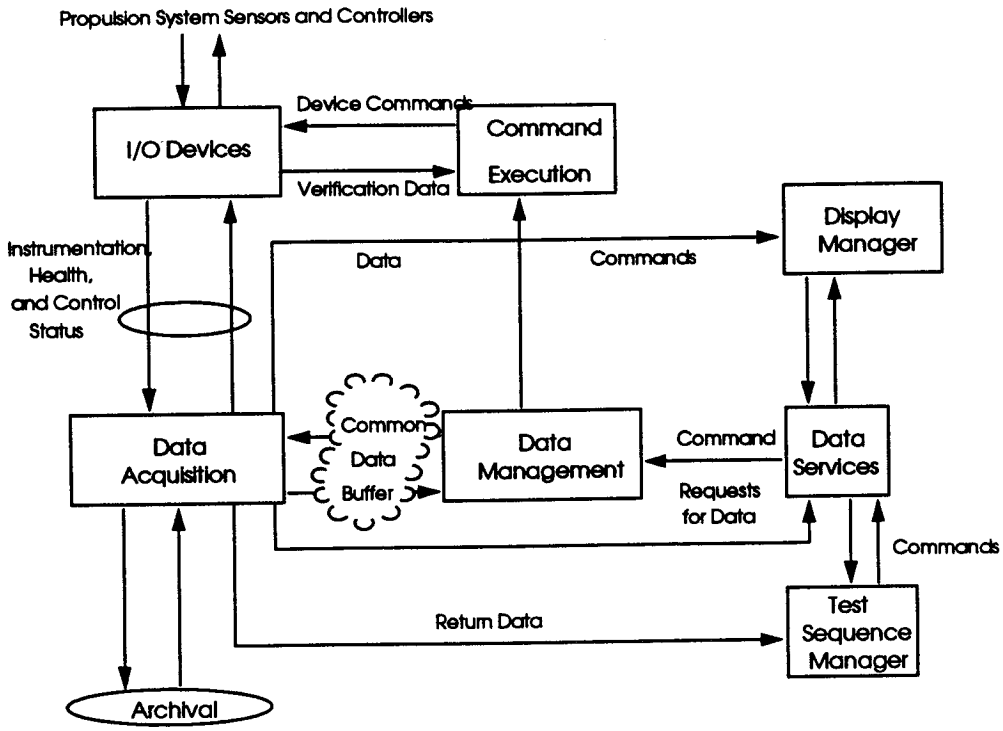

Figure 40-4 Software Functional Decomposition

APPENDIX E:

INSTRUMENTATION REQUIREMENTS

IPTD Master Measurement List

This section provides the data dictionaries used for the PCCS and the AETF Data Selection Unit (DSU) databases. These definitions have been provided by MSFC and included here for completeness in establishing the PCCS database design.

MSID (Measurement Stimulus ID)

Each measurement or stimulus has a unique identification number configured in accordance with Space Transportation System methodology for identifying signals. The ID is 9 characters in length and is divided into 5 descriptive fields as follows:

Character 1 of this field describes the major elements of the IPTD Test Program and is coded as follows:

CODE	DESCRIPTION
A	IPTD Drag-On Cables
E	IPTD PCCS
F	AETF Facility

Character 2&3 of this field are numeric and designated subsystem definitions as follows:

CODE	DESCRIPTION
07	Thermal & Environment
08	Structural
35	Fire Detection
40	IPTD (Non-controller)
41	IPTD PCCS
42	LO2 Propellant System
43	LH2 Propellant System
44	GHE System
45	GH2 System
46	Air/GN2 Pressurant/Pneumatic Control System
47	Water System
48	RP-1 Propellant System
49	IPTD Engine (Non-controller)
57	Thrust Measurement System
58	Hydraulic System
76	Electrical Power System
93	GSE Interlocks
97	PCCS Measurements Shared with DSU
98	DSU Measurements Shared with PCCS

The fourth character is an STS alphabetic and identifies the type of measurement.

CODE	DESCRIPTION
A	Acceleration
C	Current
D	Vibration
F	Frequency
G	Force/Stress/Strain
H	Position
J	Logic Status
K	Command/Stimuli
L	Liquid Level
M	Multi-Data (Serial Digital Channels)
P	Pressure
Q	Quantity/Humidity
R	Rate
T	Temperature
U	Binary or BCD Count
V	Voltage
W	Power
X	Discrete Events
Y	Acoustics

Characters 5 through 8 are numbers assigned within the subsystem. Breakdown by subsystem is as follows:

1000 through 1499 PCCS System

2000 Through 2249 Analog IPTD Engine LH2 System
2250 Through 2499 Analog IPTD Engine LO2 System
2500 Through 2749 Analog IPTD Engine RP-1 System
2750 Through 2999 Analog IPTD Engine Misc. System

3000 Through 3499 Digital From LH2 System (Facility)
4000 Through 4499 Digital From LO2 System (Facility)
5000 Through 5499 Digital From RP-1 System (Facility)
6000 Through 6499 Digital From PCCS & IPTD (DSU)
7000 Through 7499 Digital From Misc. System (Facility)

8000 Through 8499 Discretes Recorded on the DEE

Character 9 is alphabetic and used to identify the recording system.

CODE	DESCRIPTION

A	Wideband (Analog)
D	PCCS
H	Digital Data Acquisition (DSU)
W	DEE (Event)

MID (Measurement ID)

This MID is primarily used on the DSU system to identify measurements. The MID is six to seven characters in length and divided into two categories. The first category in the Test Article/Engine measurements and begins with an "AX" prefix followed by a STS Alphabetic identifier and four digit number. The second category is facility measurements which begin with a "F" prefix and also followed by a STS Alphabetic identifier and four digit number. The four digit number will be the same as the four digit number used in the MSID.

PID (Position ID)

This PID is basically a four digit number exclusive to a measurement port or position. The four digit number is the same four digit number used in the MSID and MID.

Example:

MSID#	MID#	PID#	DESCRIPTION
A49R6000H	AXR6000	6000	LH2 Return Line Flow
E41P1000D	N/A	1000	RP-1 Mod. Tank Pressure
F42T4000H	FT4000	4000	Facility LOX Run Line
E97P6000H	EP6000	6000	Helium Bleed Pressure
F98T3000H	FT3000	3000	Facility LH2 Inlet Temp.
A49D2750A	N/A	2750	Engine Accel. RAD 180

This section provides the initial working database and data dictionary (prefix codes) for the IPTD sensor and effectors. Indicated System ID numbers will be converted to the MSID definitions provided in the previous section.

Prefix Codes			
System	Active component	Data transducer	
	System id prefix	System ID prefix	MEANING
LH2	PV		PNEUMATIC VALVE
	LV		SOLENOID VALVE
	CV		CHECK VALVE
	VPV-R		VARIABLE POSITION VALVE (GSE)
	ROV-R		REMOTE OPERATING VALVE (GSE)
	RV-R		RELIEF VALVE (GSE)
	CV-R		CHECK VALVE (GSE)
	LV-R		SOLENOID VALVE (GSE)
	IP		CURRENT/PRESSURE CONVERTER
		HT	LH2 SYSTEM TEMPERATURE
		HP	LH2 SYSTEM PRESSURE
		HS	LH2 SYSTEM MICRO-SWITCH
		HC	LH2 SYSTEM CURRENT
		HF	LH2 SYSTEM FLOW
		HL	LH2 SYSTEM DISPLACEMENT
LO2	PV		PNEUMATIC VALVE
	LV		SOLENOID VALVE
	CV		CHECK VALVE
	VPV-R		VARIABLE POSITION VALVE (GSE)
	ROV-R		REMOTE OPERATING VALVE (GSE)
	RV-R		RELIEF VALVE (GSE)
	CV-R		CHECK VALVE (GSE)
	LV-R		SOLENOID VALVE (GSE)
	IP		CURRENT/PRESSURE CONVERTER
		LT	LO2 SYSTEM TEMPERATURE
		LP	LO2 SYSTEM PRESSURE
		LS	LO2 SYSTEM MICRO-SWITCH
		LC	LO2 SYSTEM CURRENT
		LF	LO2 SYSTEM FLOW
		LL	LO2 SYSTEM DISPLACEMENT
RP-1	PV		PNEUMATIC VALVE
	LV		SOLENOID VALVE
	CV		CHECK VALVE
	VPV-R		VARIABLE POSITION VALVE (GSE)
	ROV-R		REMOTE OPERATING VALVE (GSE)
	RV-R		RELIEF VALVE (GSE)
	CV-R		CHECK VALVE (GSE)
	LV-R		SOLENOID VALVE (GSE)
	IP		CURRENT/PRESSURE CONVERTER
		RT	RP-1 SYSTEM TEMPERATURE
		RP	RP-1 SYSTEM PRESSURE
		RS	RP-1 SYSTEM MICRO-SWITCH
		RC	RP-1 SYSTEM CURRENT
		RF	RP-1 SYSTEM FLOW
		RL	RP-1 SYSTEM DISPLACEMENT

NOTE: LH2 System components have 100 series numbers and transducers have 1000 series numbers
LO2 System components have 200 series numbers and system transducers have 2000 series numbers
RP-1 System components have 300 series numbers and transducers have 3000 series numbers

The following table provides working instrumentation list, signal scaling and data conversion requirements.

APPENDIX F:

COMPONENT AND SYSTEM MODELS
(Ref. SSD95D0070 Sect. 60)

60.1 Prevalve Model

The purpose is to provide a first order functional model of the prevalve (less solenoids). This initial model will be used to establish user model interfaces for initialization, calling sequences, driving input and output parameters. In the current implementation, the mass flow rate equations are based on a supply pressure of 750 psi. The implementation will be modified to accept other initialization values.

1. Executable discrete model (sample and hold) with a 1 ms sample time. Solution is incremented in time by 1 ms each time the routine is called.
2. Execution is controlled by calling program.
3. Model initialization will include:
   - Pneumatic supply pressure; nominally 750 psi
   - Initial valve position (open or closed)
   - Model parameters

Nomenclature	Variable	Default	Type
Valve spool mass	Spool Mass (Total Equivalent Mass)	5 slugs	static
Stiction force	Stic_Force	200 lbs	static
Detent force	Det_Force	1056.75 lbs	static
Left chamber pressure I. C.	P_L0	50 psi	dynamic
Right chamber pressure I. C.	P_R0	750 psi	dynamic
Valve position I. C.	x0	0.0195 in.	Dynamic (0.0195 to 3.8805)

4. Two control inputs will be provided by the calling program
   - Open Command (1 = pressurize/0= vent)
   - Close Command (1 = pressurize/0=vent)

   Typically one of the two commands will be true at any time. In normal operation both may be momentarily true or false during a command transition, due to different latencies in the command paths. System command failures can result in both commands being true or false.
5. Model outputs include:
   - Valve position
   - Valve velocity
   - Open chamber force (pressure * area)
   - Close chamber force (pressure * area)

Equations Used to Derive Prevalve Model

$\dot{W} = f(P)$

$PV = WRT$ *Differentiting with* Re*spect to Time*

$\dot{P}V + \dot{V}P = \dot{W}RT$

$V = Ax$

$\dot{V} = A\dot{x}$

$\dot{P} = \frac{1}{V}(\dot{W}RT - \dot{V}P)$

$\dot{W} = f(P)$

A: Cylinder Area (Square Inches)
P: Pressure (PSI)
V: Volume (Cubic Inches)
x: Distance (Inches)
W: Gas Mass (Pounds)
W dot : Gas Mass Rate (Pounds per Second)

$$\dot{W}_{vent} = C_D A_O \frac{P}{\sqrt{T}} \sqrt{\frac{\gamma g}{R}} \left(\frac{2}{\gamma + 1}\right)^{\frac{\gamma+1}{\gamma-1}} \qquad \dot{W}_{vent} = .0000213P$$

$$\dot{W}_{prres} = C_D A_O \frac{P_S}{\sqrt{T}} \sqrt{\frac{2g}{R}} \left(\frac{\gamma}{\gamma - 1}\right) \sqrt{\left(\frac{P}{P_S}\right)^{\frac{2}{\gamma}} - \left(\frac{P}{P_S}\right)^{\frac{\gamma+1}{\gamma}}}$$

$$\dot{W}_{pres} = .0392\left[\left(\frac{P}{750}\right)^{1.2} - \left(\frac{P}{750}\right)^{1.6}\right]^{5} \quad 365 \le P \le 750$$

$$\dot{W}_{pres} = .0128 \quad 0 \le P365$$

60.2 MATRIX$_X$ Continuous Model

Continuous SuperBlock	Ext.Inputs	Ext.Outputs
SIM_VALVE	2	4

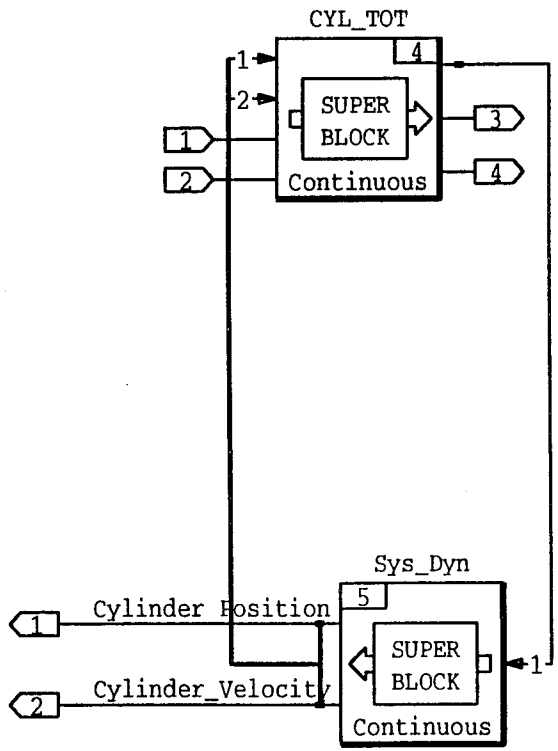

3-MAR-95

Continuous SuperBlock	Ext.Inputs	Ext.Outputs
Mass Flow Rate	2	1

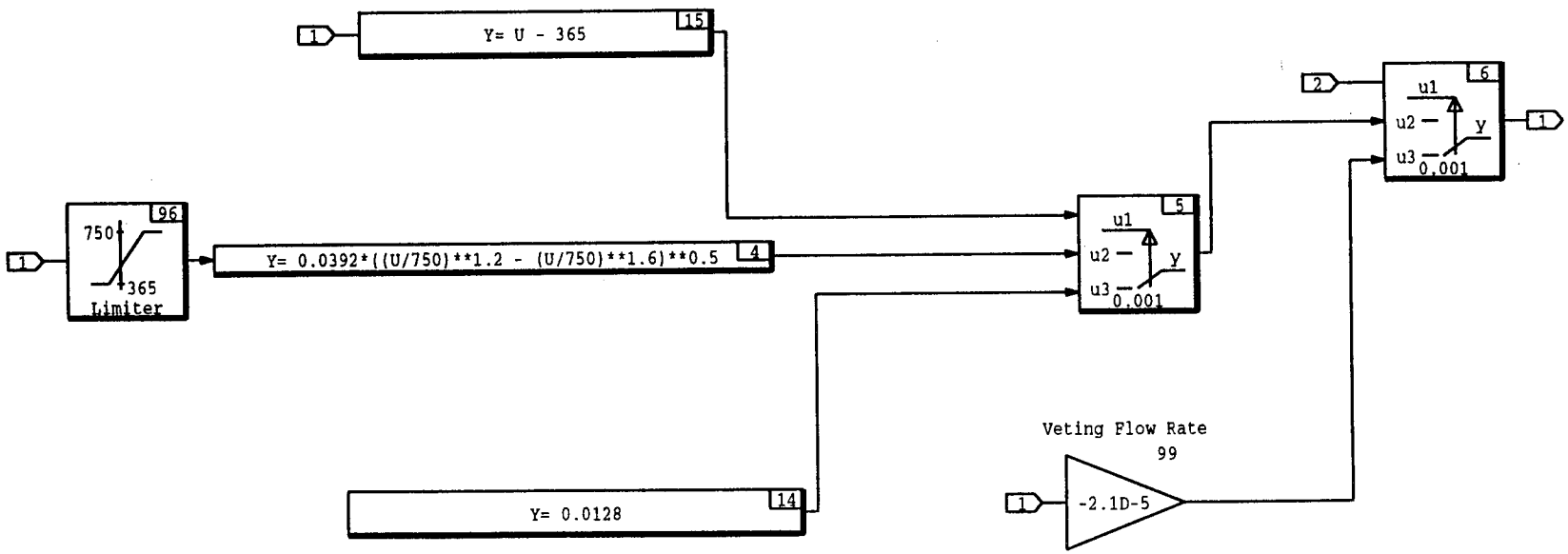

Continuous SuperBlock	Ext.Inputs	Ext.Outputs
CYL_TOT	4	3

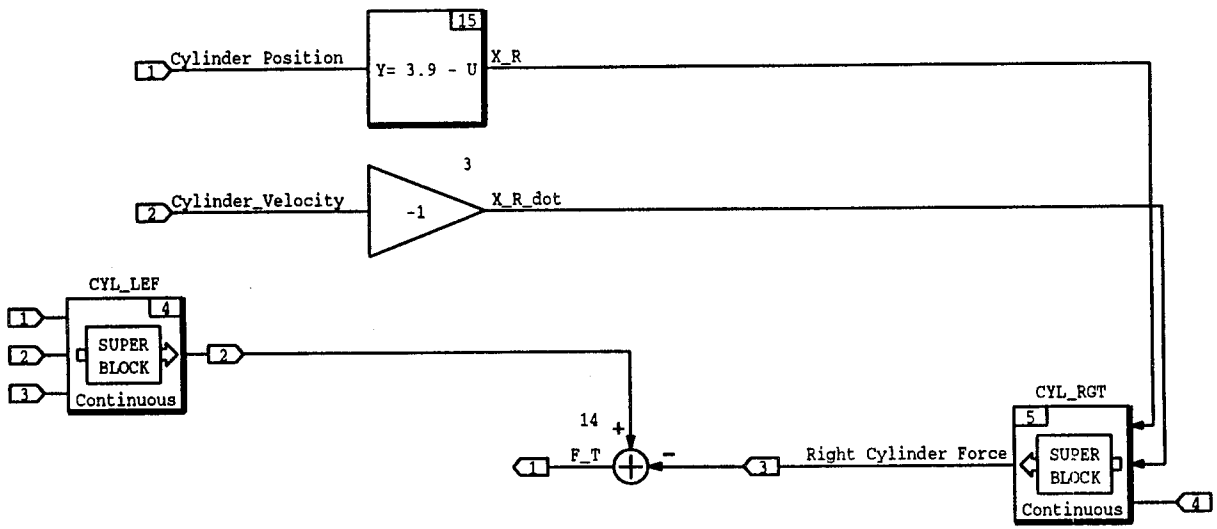

3-MAR-95

Continuous SuperBlock	Ext.Inputs	Ext.Outputs
CYL_LEF	3	1

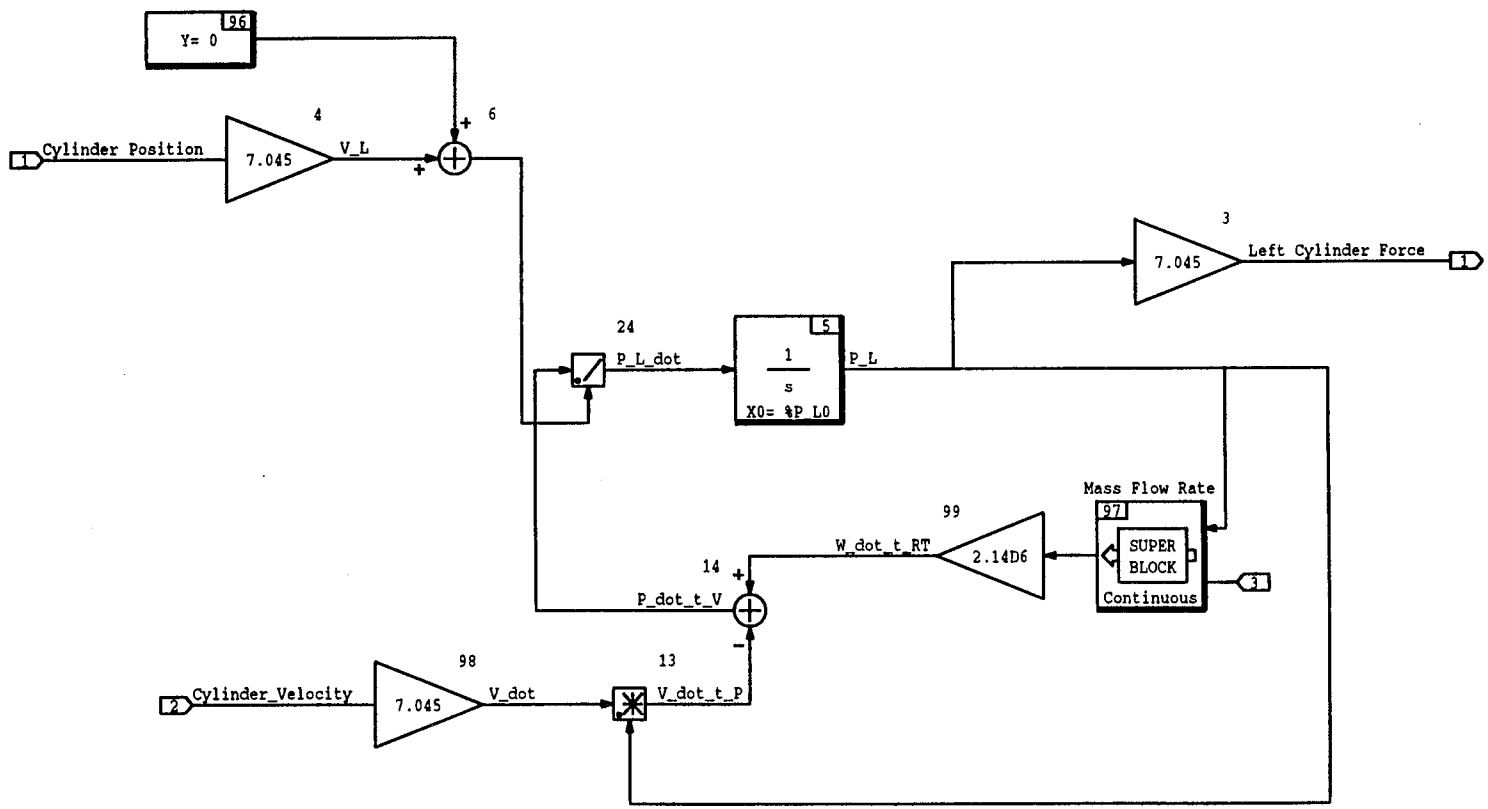

Continuous SuperBlock	Ext.Inputs	Ext.Outputs
CYL_RGT	3	1

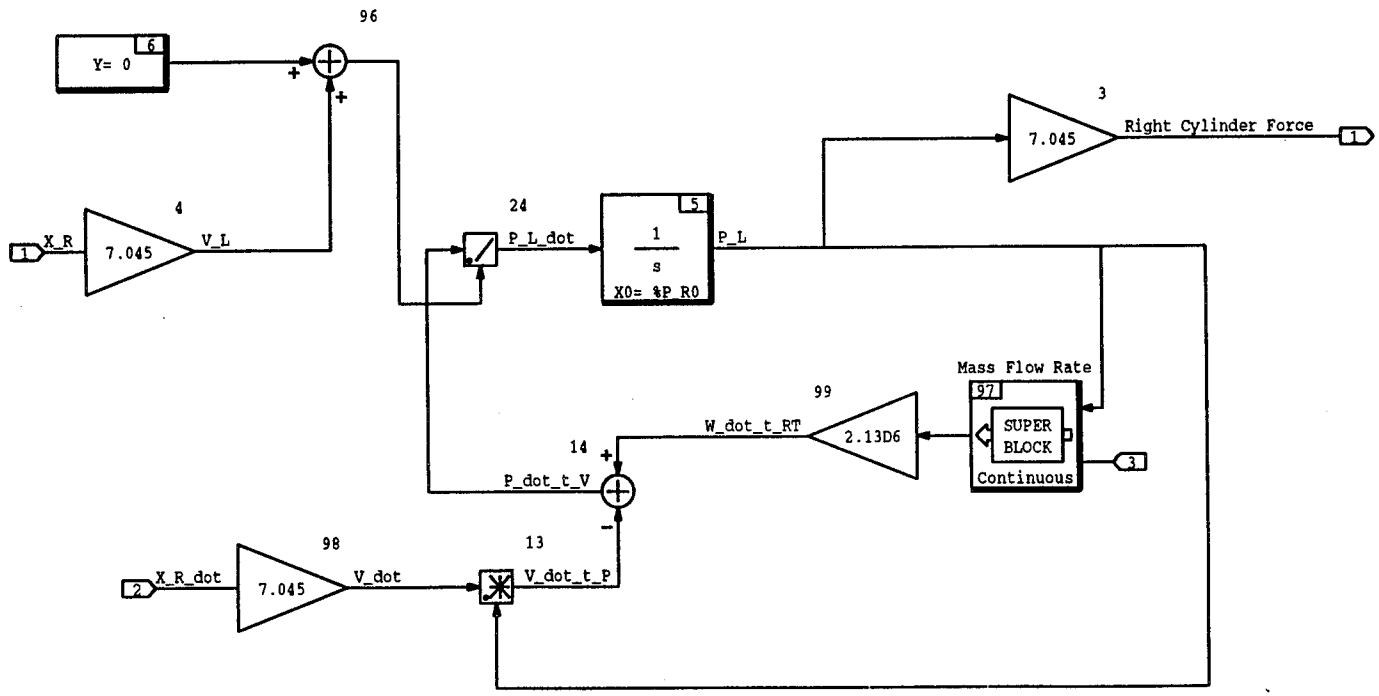

3-MAR-95

Continuous SuperBlock	Ext.Inputs	Ext.Outputs
Stiction	1	1

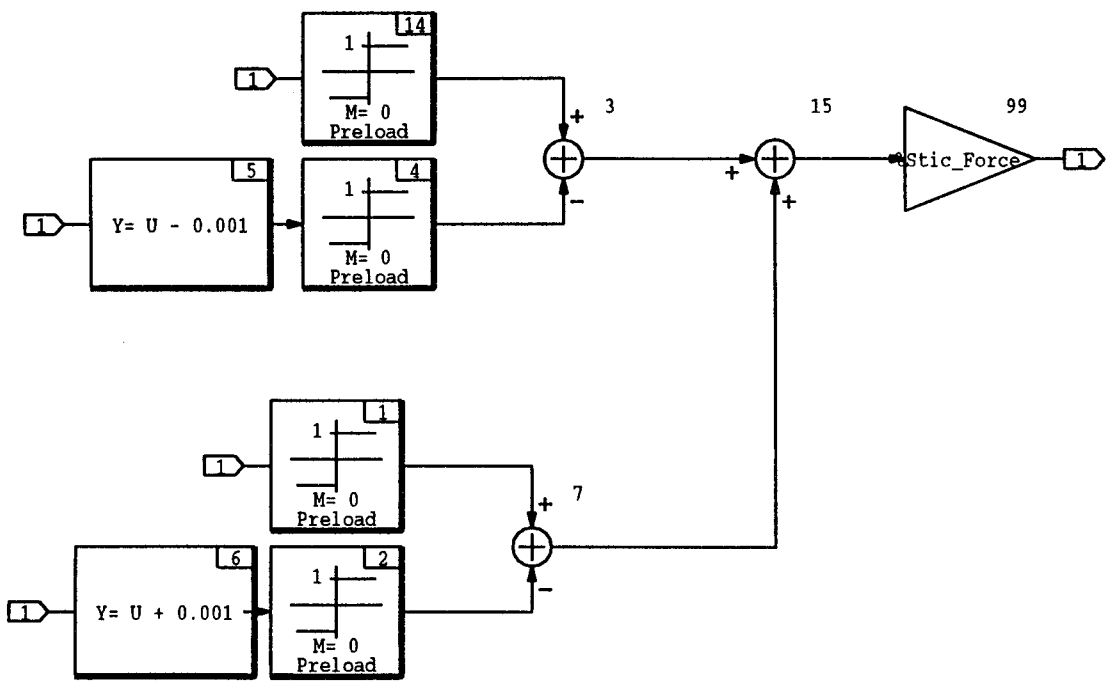

F10

Continuous SuperBlock	Ext.Inputs	Ext.Outputs
Latch	2	1

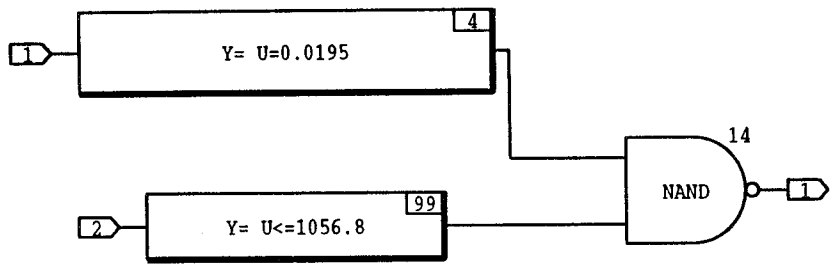

3-MAR-95

Continuous SuperBlock	Ext.Inputs	Ext.Outputs
Sys_Dyn	1	2

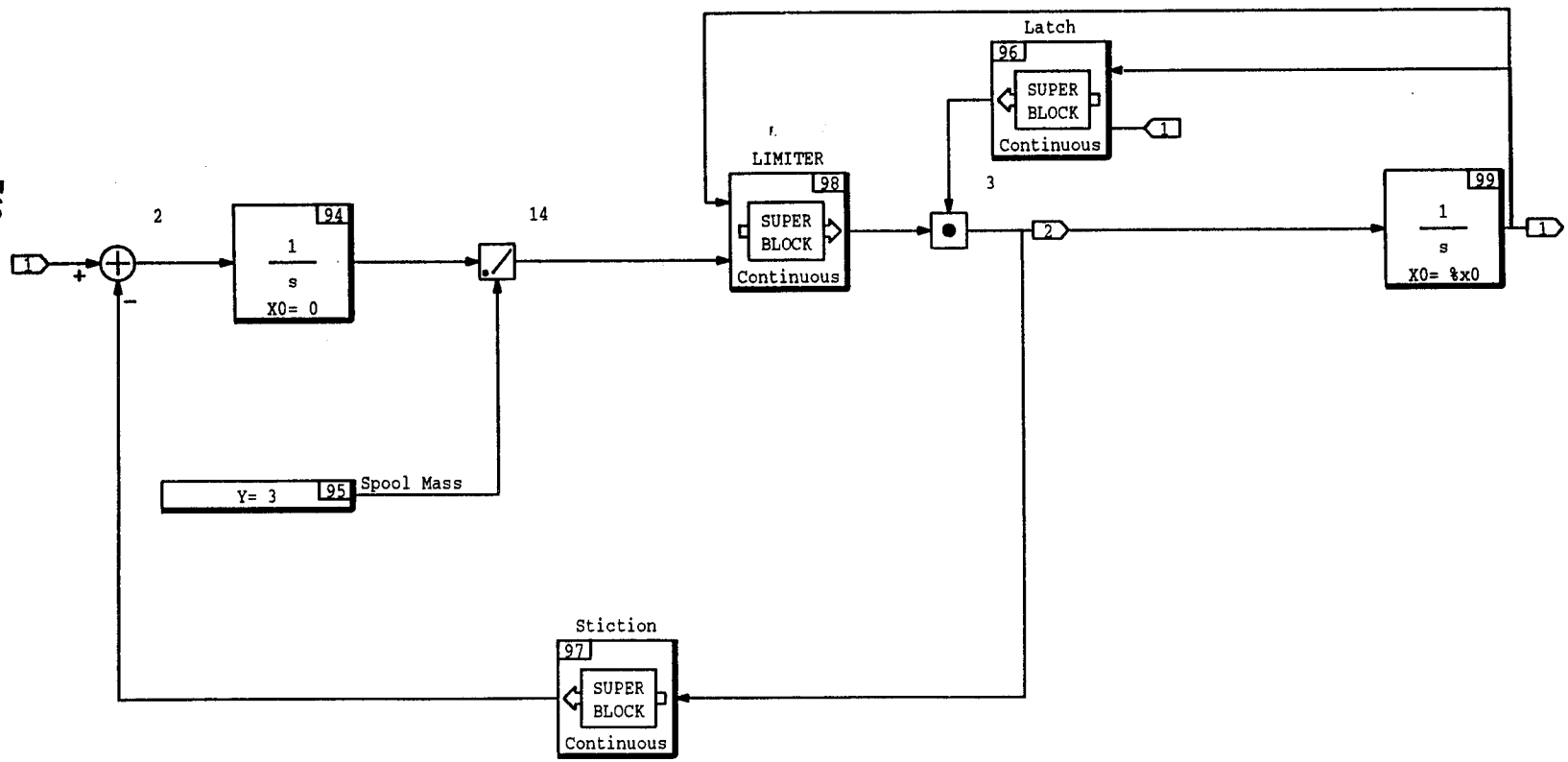

F12

Continuous SuperBlock	Ext.Inputs	Ext.Outputs
LIMITER	2	1

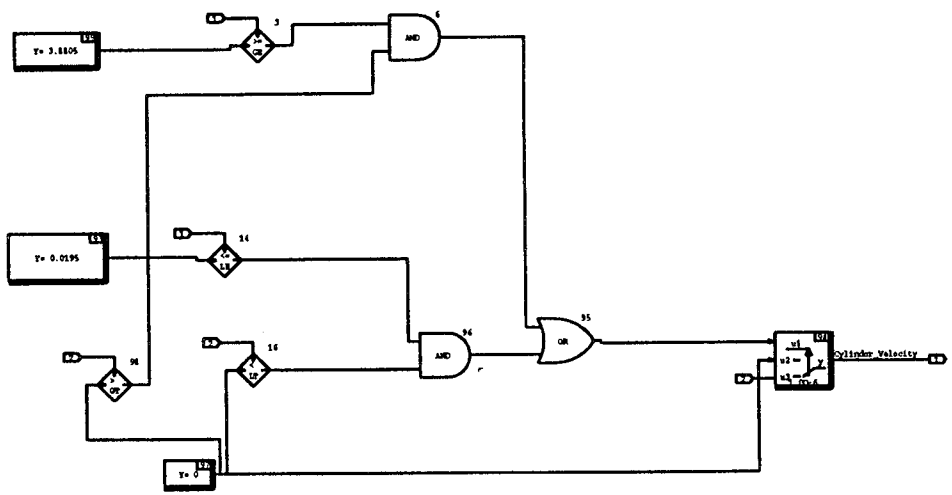

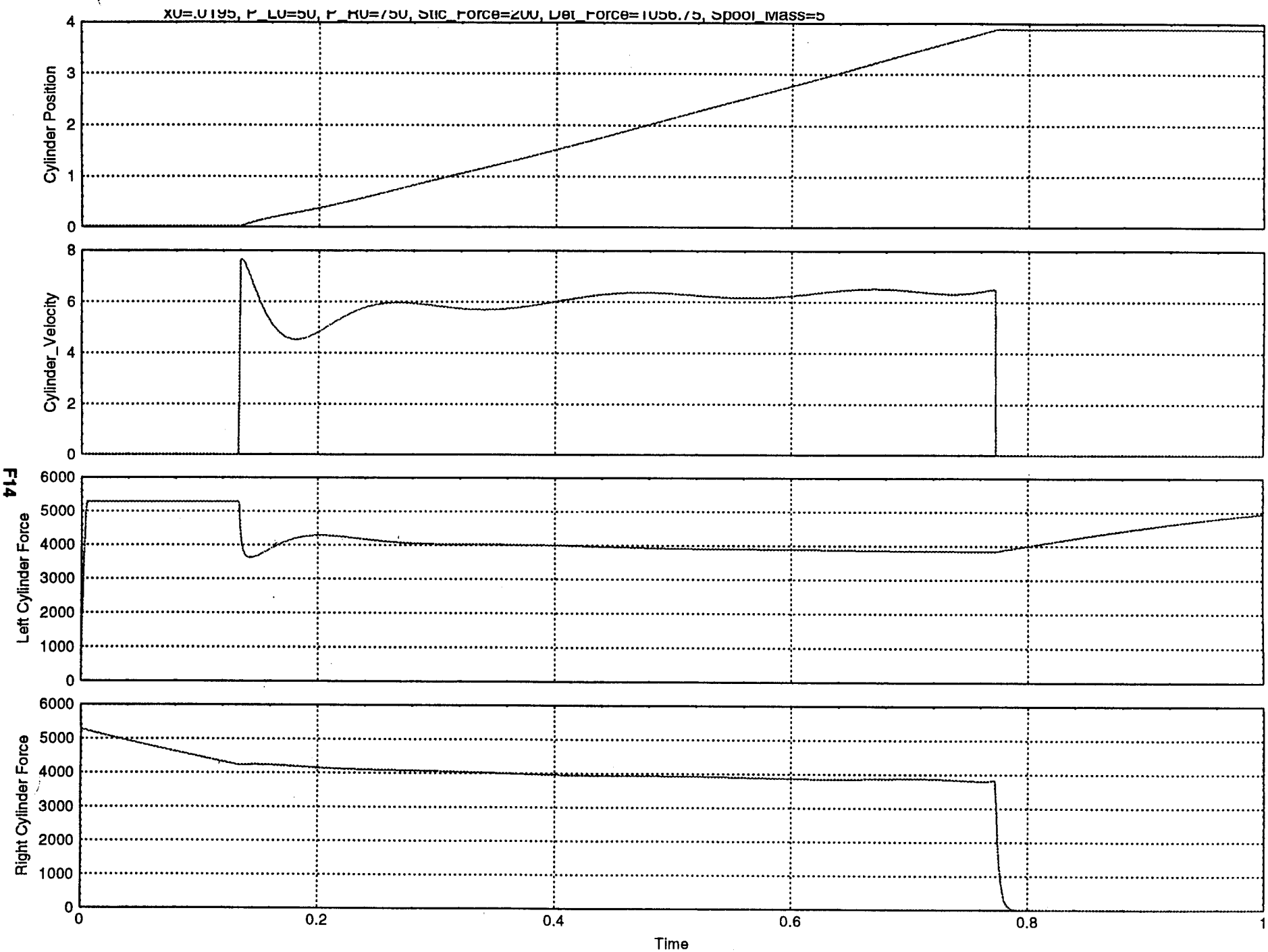
X0=.0195, P_L0=50, P_R0=750, Stic_Force=200, Det_Force=1056.75, Spool_Mass=5
Cylinder Position
Cylinder_Velocity
Left Cylinder Force
Right Cylinder Force
Time
0
0.2
0.4
0.6
0.8
1

F14

60.3 Source Code Generated by MATRIX$_X$ AUTOCODE

```
/*****************************************************************************
|                    AutoCode/C (TM) Code Generator V4.0-1                   |
|              INTEGRATED SYSTEMS INC., SANTA CLARA, CALIFORNIA              |
*****************************************************************************
rtf filename            : PNEU_VALVE_D_1.rtf
Filename                : PNEU_VALVE_D_1.c
Dac filename            : /home3/matrixx4.01/.xmath.sun/../case/ACC/templates/c_s
im.dac
Generated on            : Tue Mar  7 10:31:14 1995
Dac file created on     : Fri Aug 19 19:01:57 1994
--
--   Number of External Inputs : 2
--   Number of External Outputs: 4
--
--   Scheduler Frequency:    1000.00
--
--   SUBSYSTEM  FREQUENCY  TIME_SKEW  OUTPUT_TIME  TASK_TYPE
--   ---------  ---------  ---------  -----------  ---------
--   1          1000.00    0.00000    0.00000      CONTINUOUS


*/


#include <stdio.h>
#include <math.h>
#include "sa_system.h"
#include "sa_defn.h"
#include "sa_types.h"
#include "sa_math.h"
#include "sa_user.h"
#include "sa_utils.h"
#include "sa_time.h"
#include "sa_fuzzy.h"


/*** System Data ***/

/******* Structure to drive disconnected input/output. *******/

struct _DcZero {
   RT_FLOAT dzero;
   RT_INTEGER izero;
   RT_BOOLEAN bzero;
};

static const struct _DcZero dczero = {0.0, 0, FALSE};


#define SCHEDULER_FREQ              1000.00
#define NTASKS                      1
#define NUMIN                       2
#define NUMOUT                      4
#define SCHEDULER_ID                0
#define PREEMPTABLE                 2

enum TASK_STATE_TYPE { IDLE, RUNNING, BLOCKED, UNALLOCATED };
```

```
static RT_INTEGER                   ERROR_FLAG  [NTASKS+1];
static RT_DURATION                  SUBSYS_TIME [NTASKS+1];
static enum TASK_STATE_TYPE         TASK_STATE  [NTASKS+1];

/******* System Ext I/O type declarations. *******/
struct _Subsys_1_out {
   RT_FLOAT Cylinder_Position;
   RT_FLOAT Sys_Dyn_3_1;
   RT_FLOAT Left_Cylinder_Force;
   RT_FLOAT Right_Cylinder_Force;
};

struct _Sys_ExtIn {
   RT_FLOAT SIM_VALVE_D_1;
   RT_FLOAT SIM_VALVE_D_2;
};


/******* System Ext I/O type definitions. *******/
struct _Subsys_1_out subsys_1_out = {-EPSILON, -EPSILON, -EPSILON, -EPSILON};
struct _Sys_ExtIn sys_extin;


static RT_FLOAT                     ExtIn       [NUMIN+1];
static RT_FLOAT                     ExtOut      [NUMOUT+1];

RT_BOOLEAN RESETC = FALSE;

/******* Continuous Subsystem states and info type declarations. *******/
struct _Subsys_1_states {
   RT_FLOAT CYL_RGT_5_S1;
   RT_FLOAT CYL_LEF_5_S1;
   RT_FLOAT Sys_Dyn_99_S1;
   RT_FLOAT Sys_Dyn_94_S1;
};
struct _Subsys_1_info {
   RT_INTEGER iinfo[5];
   RT_FLOAT rinfo[5];
};

/******* Continuous Subsystem states and info definitions.       *******/
struct _Subsys_1_states subsys_1_states[2] = {0.0, 0.0, 0.0, 0.0, 0.0, 0.0, 0.0,
   0.0};
struct _Subsys_1_info subsys_1_info = {0, 1, 1, 1, 1, 0.0, 0.001000, 0.0, 0.0,
   0.0};
RT_INTEGER *ss1_iinfo = &subsys_1_info.iinfo[0];
RT_FLOAT   *ss1_rinfo = &subsys_1_info.rinfo[0];


/******** Tasks declarations ********/
```

```
/******* (Continuous) Subsystem 1 initialization declaration. *******/
extern void subsys_1_init();

/******* Continuous Subsystem  *******/

/******* Subsystem 1  *******/
extern void subsys_1();


/******** Tasks code ********/


/******* (Continuous) Subsystem 1 initialization definition. *******/
void subsys_1_init(S, I)
   struct _Subsys_1_states *S;
   struct _Subsys_1_info *I;
{

      /******* States' Pointer. *******/

      struct _Subsys_1_states *X = &S[0];

      X->CYL_RGT_5_S1 = 750.0;
      X->Sys_Dyn_99_S1 = 0.0195;
}


/* The function rungekutta2 employs the second-order Runge-Kutta method with
   Kutta's coefficients to integrate a system of n simultaneous first
   order ordinary differential equations dxdt[j] = dx[j]/dt, (j=1,2,...,n),
   across one step of length h in the independent variable t, subject
   to initial conditions x[j], (j=1,2,...,n).  Each dxdt[j], the derivative
   of x[j], must be computed two times per integration step by calling the
   state derivatives and output equations function (subsys_1()).
   savex(j) is used to save the initial value of x(j) and phi(j) is the
   increment function for the j(th) equation.
   As written, n may be no larger than 4.
   (Modified Euler)
*/
void rungekutta2(n,x,dxdt,t,h)
    RT_INTEGER n;
    RT_FLOAT *x,*dxdt,t,h;
{
    RT_FLOAT phi[4];
    RT_FLOAT savex[4];
    RT_INTEGER j, retval;
    RT_FLOAT hh = t;

        ss1_rinfo[0] = hh;
    ss1_iinfo[2]=1; ss1_iinfo[3]=1; ss1_iinfo[4]=8;
    subsys_1(&sys_extin, &subsys_1_out, subsys_1_states, &subsys_1_info);

    for (j=0; j<n; j++) {
         savex[j] = x[j];
         phi[j] = dxdt[j];
         x[j] = savex[j] + h*dxdt[j];
    }
    hh=t+h;
        ss1_rinfo[0] = hh;
    ss1_iinfo[2]=1; ss1_iinfo[3]=1; ss1_iinfo[4]=0;
    subsys_1(&sys_extin, &subsys_1_out, subsys_1_states, &subsys_1_info);

    for (j=0; j<n; j++) x[j] = savex[j] + (phi[j] + dxdt[j])*h/2.0;
}


/******* Continuous Subsystem  *******/

/******* Subsystem 1  *******/

void subsys_1(U, Y, S, I)
   struct _Sys_ExtIn *U;
   struct _Subsys_1_out *Y;
   struct _Subsys_1_states *S;
   struct _Subsys_1_info *I;
{
      RT_INTEGER *iinfo = &I->iinfo[0];
      RT_FLOAT *rinfo = &I->rinfo[0];
      RT_INTEGER INIT          = iinfo[1];
      RT_INTEGER STATES        = iinfo[2];
      RT_INTEGER OUTPUTS       = iinfo[3];

      /***** States' and State Derivatives' Pointers. *****/

      struct _Subsys_1_states *X = &S[0];
      struct _Subsys_1_states *XD = &S[1];


      /***** Parameters. *****/

      static RT_INTEGER I_P[18] = {1, 1, 1, 1, 1, -1, 1, -1, 1, -1, 1, 1, 1, -1,
         1, -1, 1, -1};

      /***** Local Block Outputs. *****/

      RT_FLOAT P_L;
      RT_FLOAT Mass_Flow_Rate_14_1;
      RT_FLOAT CYL_RGT_6_1;
      RT_FLOAT P_L_1;
      RT_FLOAT Mass_Flow_Rate_14_1_1;
      RT_FLOAT CYL_LEF_96_1;
      RT_FLOAT LIMITER_99_1;
      RT_FLOAT LIMITER_97_1;
      RT_FLOAT LIMITER_93_1;
      RT_FLOAT Spool_Mass;
      RT_FLOAT Sys_Dyn_94_1;
      RT_FLOAT Mass_Flow_Rate_15_1;
      RT_FLOAT Mass_Flow_Rate_96_1;
      RT_FLOAT Mass_Flow_Rate_4_1;
      RT_FLOAT Mass_Flow_Rate_5_1;
      RT_FLOAT Veting_Flow_Rate_1;
      RT_FLOAT Mass_Flow_Rate_6_1;
      RT_FLOAT V_L;
      RT_FLOAT Mass_Flow_Rate_15_1_1;
      RT_FLOAT Mass_Flow_Rate_96_1_1;
      RT_FLOAT Mass_Flow_Rate_4_1_1;
      RT_FLOAT Mass_Flow_Rate_5_1_1;
      RT_FLOAT Veting_Flow_Rate_1_1;
      RT_FLOAT Mass_Flow_Rate_6_1_1;
```

```
RT_FLOAT W_dot_t_RT;
RT_FLOAT X_R;
RT_FLOAT V_L_1;
RT_FLOAT CYL_RGT_96_1;
RT_FLOAT CYL_LEF_6_1;
RT_FLOAT F_T;
RT_FLOAT LIM.13E-05*P_L_1;
   /* ---------------------------  Data Path Switch */
   /* {Mass Flow Rate..6} */
   if (U->SIM_VALVE_D_2 <= 0.0) {
      Mass_Flow_Rate_6_1_1 = Veting_Flow_Rate_1_1;
   }
   else if (U->SIM_VALVE_D_2 < 0.001) {
      alpha = U->SIM_VALVE_D_2/0.001;
      Mass_Flow_Rate_6_1_1 = alpha*Mass_Flow_Rate_5_1_1 + (1.0 - alpha)*
      Veting_Flow_Rate_1_1;
   }
   else {
      Mass_Flow_Rate_6_1_1 = Mass_Flow_Rate_5_1_1;
   }
   /* ---------------------------  Gain Block */
   /* {CYL_LEF..99} */
   W_dot_t_RT = 2.136E+06*Mass_Flow_Rate_6_1_1;
   /* ---------------------------  Algebraic Expression */
   /* {CYL_TOT..15} */
   X_R = 3.9 - Y->Cylinder_Position;
   /* ---------------------------  Gain Block */
   /* {CYL_RGT..4} */
   V_L_1 = 7.045*X_R;
   /* ----- P_L_dot;
RT_FLOAT P_dot_t_V_1;
RT_FLOAT P_L_dot_1;

/***** Algorithmic Local Variables. *****/

RT_FLOAT alpha;
RT_BOOLEAN test;
RT_FLOAT steep;
RT_FLOAT ushift;

/***** Output Update. *****/

if( OUTPUTS ) {
   /* ---------------------------  Nth Order Integrator */
   /* {CYL_RGT..5} */
   P_L = X->CYL_RGT_5_S1;
   /* ---------------------------  Algebraic Expression */
   /* {Mass Flow Rate..14} */
   Mass_Flow_Rate_14_1 = 0.0128;
   /* ---------------------------  Algebraic Expression */
   /* {CYL_RGT..6} */
   CYL_RGT_6_1 = 0.0;
   /* ---------------------------  Nth Order Integrator */
   /* {CYL_LEF..5} */
P_L_1 = X->CYL_LEF_5_S1;
/* ---------------------------  Algebraic Expression */
/* {Mass Flow Rate..14} */
Mass_Flow_Rate_14_1_1 = 0.0128;
/* ---------------------------  Algebraic Expression */
/* {CYL_LEF..96} */
CYL_LEF_96_1 = 0.0;
/* ---------------------------  Nth Order Integrator */
/* {Sys_Dyn..99} */
Y->Cylinder_Position = X->Sys_Dyn_99_S1;
/* ---------------------------  Algebraic Expression */
/* {LIMITER..99} */
LIMITER_99_1 = 3.8805;
/* ---------------------------  Algebraic Expression */
/* {LIMITER..97} */
LIMITER_97_1 = 0.0;
/* ---------------------------  Algebraic Expression */
/* {LIMITER..93} */
LIMITER_93_1 = 0.0195;
/* ---------------------------  Algebraic Expression */
/* {Sys_Dyn..95} */
Spool_Mass = 5.0;
/* ---------------------------  Nth Order Integrator */
/* {Sys_Dyn..94} */
Sys_Dyn_94_1 = X->Sys_Dyn_94_S1;
/* ---------------------------  Algebraic Expression */
/* {Mass Flow Rate..15} */
Mass_Flow_Rate_15_1 = P_L - 365.0;
/* ---------------------------  L - U  Bounded Limit */
/* {Mass Flow Rate..96} */
Mass_Flow_Rate_96_1 = MIN(MAX(365.0,P_L),750.0);
/* ---------------------------  Algebraic Expression */
/* {Mass Flow Rate..4} */
Mass_Flow_Rate_4_1 = 0.0392*pow((pow((Mass_Flow_Rate_96_1/750.0),1.2) -
   pow((Mass_Flow_Rate_96_1/750.0),1.6)),0.5);
/* ---------------------------  Data Path Switch */
/* {Mass Flow Rate..5} */
if (Mass_Flow_Rate_15_1 <= 0.0) {
   Mass_Flow_Rate_5_1 = Mass_Flow_Rate_14_1;
}
else if (Mass_Flow_Rate_15_1 < 0.001) {
   alpha = Mass_Flow_Rate_15_1/0.001;
   Mass_Flow_Rate_5_1 = alpha*Mass_Flow_Rate_4_1 + (1.0 - alpha)*
   Mass_Flow_Rate_14_1;
}
else {
   Mass_Flow_Rate_5_1 = Mass_Flow_Rate_4_1;
}
/* ---------------------------  Gain Block */
/* {Mass Flow Rate.Veting Flow Rate.99} */
Veting_Flow_Rate_1 = -2.13E-05*P_L;
/* ---------------------------  Data Path Switch */
/* {Mass Flow Rate..6} */
if (U->SIM_VALVE_D_1 <= 0.0) {
   Mass_Flow_Rate_6_1 = Veting_Flow_Rate_1;
}
else if (U->SIM_VALVE_D_1 < 0.001) {
   alpha = U->SIM_VALVE_D_1/0.001;
   Mass_Flow_Rate_6_1 = alpha*Mass_Flow_Rate_5_1 + (1.0 - alpha)*
   Veting_Flow_Rate_1;
}
```

```
else {
   Mass_Flow_Rate_6_1 = Mass_Flow_Rate_5_1;
}
/* ---------------------------- Gain Block */
/* (CYL_LEF..4) */
V_L = 7.045*Y->Cylinder_Position;
/* ---------------------------- Gain Block */
/* (CYL_LEF..3) */
Y->Left_Cylinder_Force = 7.045*P_L_1;
/* ---------------------------- Algebraic Expression *.94) */
if (LIMITER_95_1 <= 0.0) {
   Cylinder_Velocity = Sys_Dyn_14_1;
}
else if (LIMITER_95_1 < 1.0E-06) {
   alpha = LIMITER_95_1/1.0E-06;
   Cylinder_Velocity = alpha*LIMITER_97_1 + (1.0 - alpha)*
   Sys_Dyn_14_1;
}
else {
   Cylinder_Velocity = LIMITER_97_1;
}
/* ---------------------------- Dot or Inner Product */
/* (Sys_Dyn..3) */
Y->Sys_Dyn_3_1 = Latch_14_1*Cylinder_Velocity;
/* ---------------------------- Preload Function */
/* (Stiction..14) */
if (Y->Sys_Dyn_3_1 >= 0.0) {
   Stiction_14_1 = 1.0;
}
else {
   steep = 1.0/STOL;
   if (steep == 0.0) {
      ushift = 0.0;
   }
   else {
      ushift = 2.0/(-steep);
   }
   if (Y->Sys_Dyn_3_1 > ushift) {
      Stiction_14_1 = steep*Y->Sys_Dyn_3_1 + 1.0;
   }
   else {
      Stiction_14_1 = -1.0;
   }
}
/* ---------------------------- Algebraic Expression */
/* (Stiction..5) */
Stiction_5_1 = Y->Sys_Dyn_3_1 - 0.001;
/* ---------------------------- Preload Function */
/* (Stiction..4) */
if (Stiction_5_1 >= 0.0) {
   Stiction_4_1 = 1.0;
}
else {
   steep = 1.0/STOL;
   if (steep == 0.0) {
      ushift = 0.0;
   }
   else {
      ushift = 2.0/(-steep);
   }
   if (Stiction_5_1 > ushift) {
      Stiction_4_1 = steep*Stiction_5_1 + 1.0;
   }
   else {
      Stiction_4_1 = -1.0;
   }
}
/* ---------------------------- Sum of Vectors */
/* (Stiction..3) */
Stiction_3_1 = Stiction_14_1 - Stiction_4_1;
/* ---------------------------- Preload Function */
/* (Stiction..1) */
if (Y->Sys_Dyn_3_1 >= 0.0) {
   Stiction_1_1 = 1.0;
}
else {
   steep = 1.0/STOL;
   if (steep == 0.0) {
      ushift = 0.0;
   }
   else {
      ushift = 2.0/(-steep);
   }
   if (Y->Sys_Dyn_3_1 > ushift) {
      Stiction_1_1 = steep*Y->Sys_Dyn_3_1 + 1.0;
```

```
      }
      else {
         Stiction_1_1 = -1.0;
      }
   }
   /* ---------------------------- Algebraic Expression */
   /* (Stiction..6) */
   Stiction_6_1 = Y->Sys_Dyn_3_1 + 0.001;
   /* ---------------------------- Preload Function */
   /* (Stiction..2) */
   if (Stiction_6_1 >= 0.0) {
      Stiction_2_1 = 1.0;
   }
   else {
      steep = 1.0/STOL;
      if (steep == 0.0) {
         ushift = 0.0;
      }
      else {
         ushift = 2.0/(-steep);
      }
      if (Stiction_6_1 > ushift) {
         Stiction_2_1 = steep*Stiction_6_1 + 1.0;
      }
      else {
         Stiction_2_1 = -1.0;
      }
   }
   /* ---------------------------- Sum of Vectors */
   /* (Stiction..7) */
   Stiction_7_1 = Stiction_1_1 - Stiction_2_1;
   /* ---------------------------- Sum of Vectors */
   /* (Stiction..15) */
   Stiction_15_1 = Stiction_3_1 + Stiction_7_1;
   /* ---------------------------- Gain Block */
   test = Latch_4_1 > 0.0;
   test = Latch_99_1 > 0.0 && test;
   if (test) {
      Latch_14_1 = 0.0;
   }
   else {
      Latch_14_1 = 1.0;
   }
   /* ---------------------------- Elem by Elem Divide */
   /* (Sys_Dyn..14) */
   Sys_Dyn_14_1 = Sys_Dyn_94_1/Spool_Mass;
   /* ---------------------------- Relational (LT-EQ-GT) */
   /* (LIMITER..16) */
   test = Sys_Dyn_14_1 < LIMITER_97_1;
```

APPENDIX G:

FMEA AND COMPONENT FAILURE MODES

FAILURE MODES AND EFFECTS ANALYSIS

TK101	TANK		LH2 PROPELLANT TANK
PHASE	STATE	FAILURE MODE	EFFECTS
FILL	INSULATED	LOSS OF INSULATION	EXCESSIVE FORMATION OF GH2. LOSS OF LH2.
	CONTAIN-MENT	LEAKAGE	DUMPING LH2 ON THE PAD. FIRE AND EXPLOSION HAZARD.
	FILL	RESTRICTED FLOW	SLOW FILL. TERMINATION OF FILL PROCESS.
DRAIN	CONTAIN-MENT	LEAKAGE	DUMPING LH2 ON THE PAD. FIRE AND EXPLOSION HAZARD. TANK COLLAPSE.
START UP	PRESSUR-IZATION	LEAKAGE	LOSS OF ULLAGE PRESSURE. REDUCED ENGINE PERFORMANCE. LOSS OF LH2. FIRE EXPLOSION HAZARD. LOSS OF STRUCTURAL INTEGRITY FOR LAUNCH.
LAUNCH			
SHUT DOWN			
ON-ORBIT	PRESSUR-IZATION	LEAKAGE	LOSS OF STRUCTURAL INTEGRITY FOR ENTRY AND LANDING.
ENTRY			
APPROACH			
LANDING	CONTAIN-MENT	LEAKAGE	FIRE AND EXPLOSION HAZARD.
SAFING			

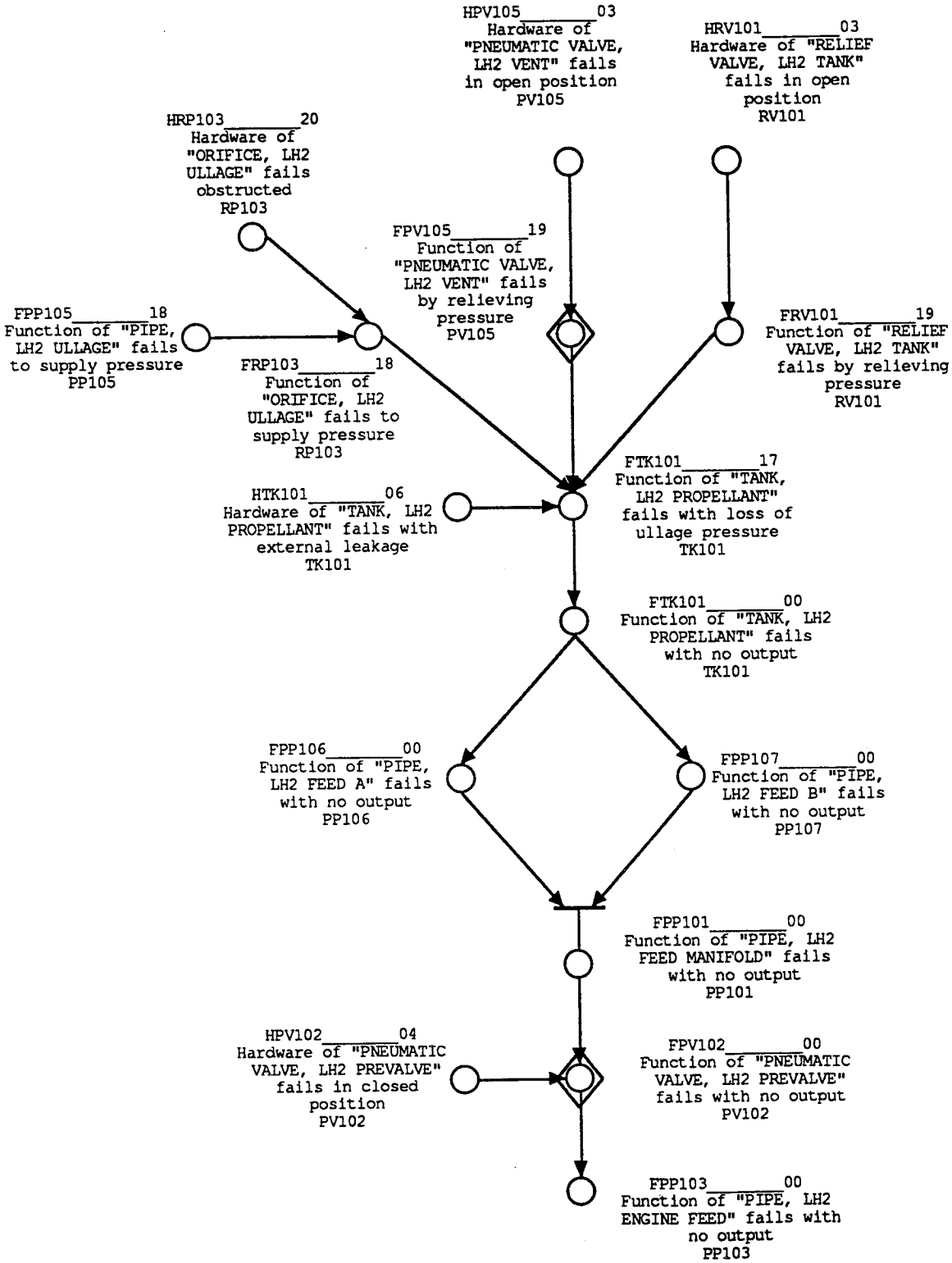
HPV105_____03
Hardware of "PNEUMATIC VALVE, LH2 VENT" fails in open position PV105
HRV101_____03
Hardware of "RELIEF VALVE, LH2 TANK" fails in open position RV101
HRP103_____20
Hardware of "ORIFICE, LH2 ULLAGE" fails obstructed RP103
FPV105_____19
Function of "PNEUMATIC VALVE, LH2 VENT" fails by relieving pressure PV105
FPP105_____18
Function of "PIPE, LH2 ULLAGE" fails to supply pressure PP105
FRP103_____18
Function of "ORIFICE, LH2 ULLAGE" fails to supply pressure RP103
FRV101_____19
Function of "RELIEF VALVE, LH2 TANK" fails by relieving pressure RV101
FTK101_____17
Function of "TANK, LH2 PROPELLANT" fails with loss of ullage pressure TK101
HTK101_____06
Hardware of "TANK, LH2 PROPELLANT" fails with external leakage TK101
FTK101_____00
Function of "TANK, LH2 PROPELLANT" fails with no output TK101
FPP106_____00
Function of "PIPE, LH2 FEED A" fails with no output PP106
FPP107_____00
Function of "PIPE, LH2 FEED B" fails with no output PP107
FPP101_____00
Function of "PIPE, LH2 FEED MANIFOLD" fails with no output PP101
HPV102_____04
Hardware of "PNEUMATIC VALVE, LH2 PREVALVE" fails in closed position PV102
FPV102_____00
Function of "PNEUMATIC VALVE, LH2 PREVALVE" fails with no output PV102
FPP103_____00
Function of "PIPE, LH2 ENGINE FEED" fails with no output PP103

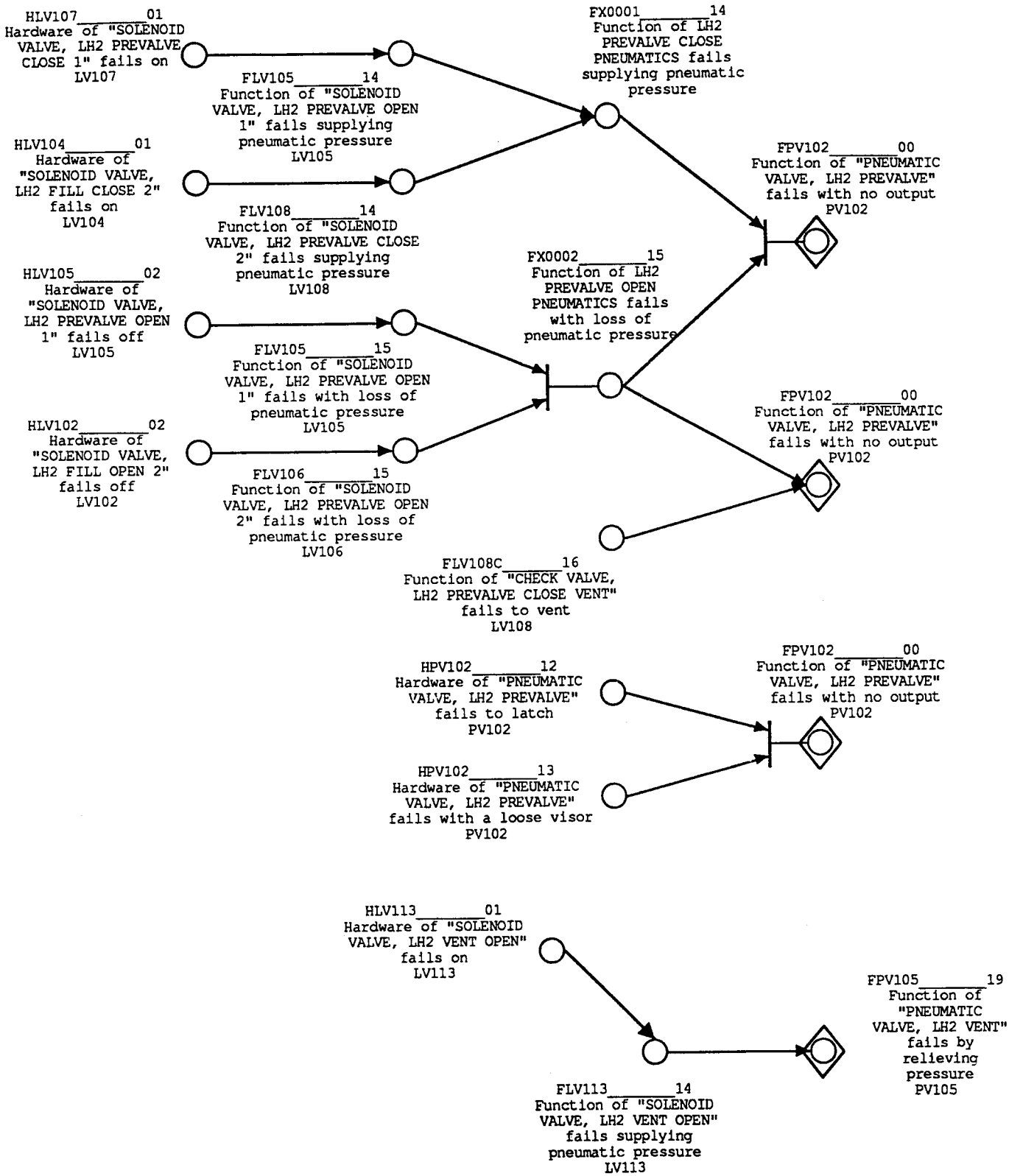
HLV107_____01
Hardware of "SOLENOID VALVE, LH2 PREVALVE CLOSE 1" fails on LV107
FLV105_____14
Function of "SOLENOID VALVE, LH2 PREVALVE OPEN 1" fails supplying pneumatic pressure LV105
FX0001_____14
Function of LH2 PREVALVE CLOSE PNEUMATICS fails supplying pneumatic pressure
HLV104_____01
Hardware of "SOLENOID VALVE, LH2 FILL CLOSE 2" fails on LV104
FPV102_____00
Function of "PNEUMATIC VALVE, LH2 PREVALVE" fails with no output PV102
FLV108_____14
Function of "SOLENOID VALVE, LH2 PREVALVE CLOSE 2" fails supplying pneumatic pressure LV108
FX0002_____15
Function of LH2 PREVALVE OPEN PNEUMATICS fails with loss of pneumatic pressure
HLV105_____02
Hardware of "SOLENOID VALVE, LH2 PREVALVE OPEN 1" fails off LV105
FLV105_____15
Function of "SOLENOID VALVE, LH2 PREVALVE OPEN 1" fails with loss of pneumatic pressure LV105
FPV102_____00
Function of "PNEUMATIC VALVE, LH2 PREVALVE" fails with no output PV102
HLV102_____02
Hardware of "SOLENOID VALVE, LH2 FILL OPEN 2" fails off LV102
FLV106_____15
Function of "SOLENOID VALVE, LH2 PREVALVE OPEN 2" fails with loss of pneumatic pressure LV106
FLV108C_____16
Function of "CHECK VALVE, LH2 PREVALVE CLOSE VENT" fails to vent LV108
FPV102_____00
Function of "PNEUMATIC VALVE, LH2 PREVALVE" fails with no output PV102
HPV102_____12
Hardware of "PNEUMATIC VALVE, LH2 PREVALVE" fails to latch PV102
HPV102_____13
Hardware of "PNEUMATIC VALVE, LH2 PREVALVE" fails with a loose visor PV102
HLV113_____01
Hardware of "SOLENOID VALVE, LH2 VENT OPEN" fails on LV113
FPV105_____19
Function of "PNEUMATIC VALVE, LH2 VENT" fails by relieving pressure PV105
FLV113_____14
Function of "SOLENOID VALVE, LH2 VENT OPEN" fails supplying pneumatic pressure LV113

G3

APPENDIX H:

PCCS
GROUND CONTROL AND DATA SERVICES

A.1 Preliminary Design.

A.1.1 CI overview.

This CI overview covers the software design of the PCCS Ground Control and Data Services (GCD) CI. And explains the 3 external interfaces; PCCS Signal Conditioning I/F, PCCS Simulation I/F and Technology Testbed I/F. *Need a system architecture diagram.*

NOTE: Phase II as referenced in this document refers to Software Components that will not be available until the second phase of development of the PCCS .

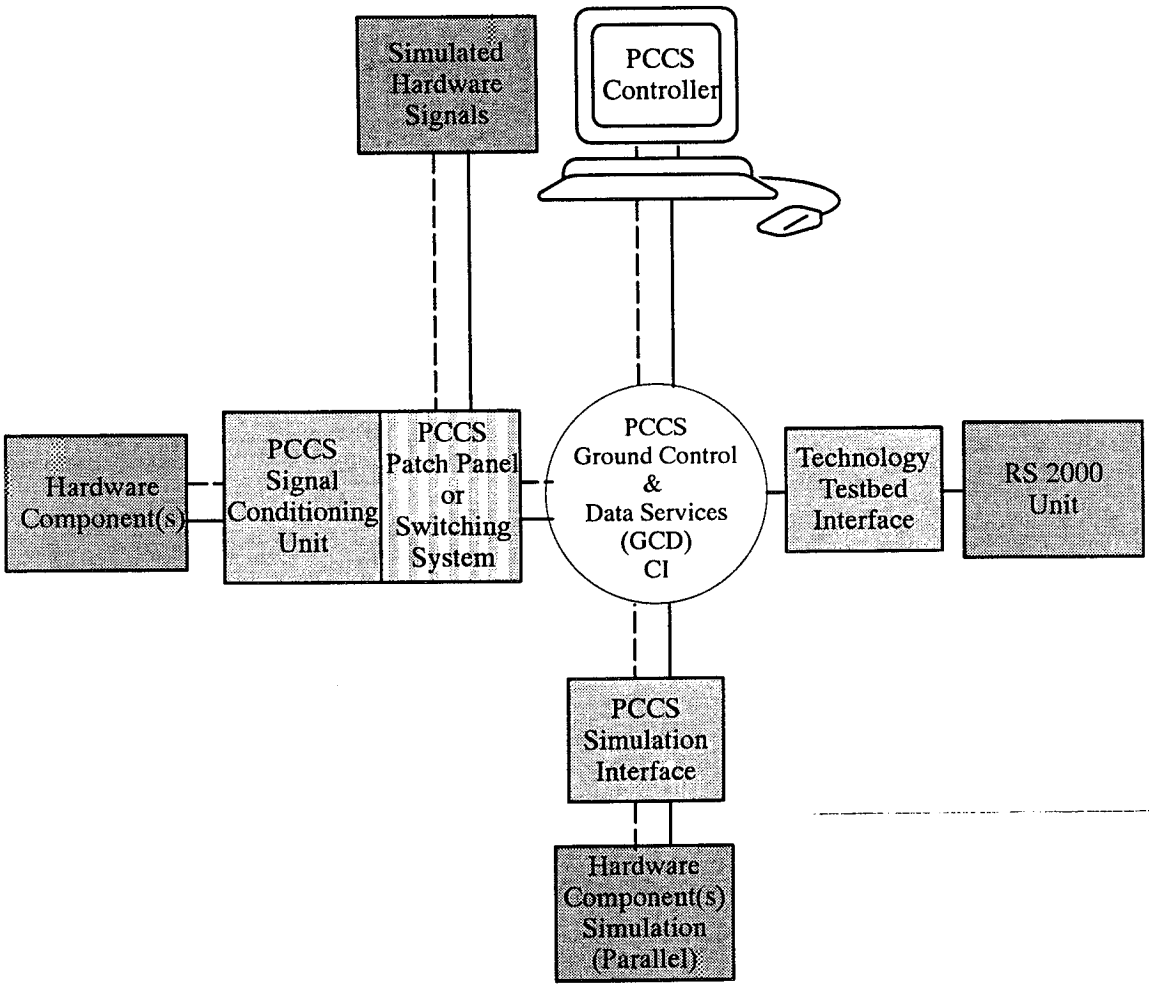

Figure 1 PCCS System Architecture

A.1.1.1 CI architecture.

The PCCS Ground Control and Data Services (GCD) CI consists of three major CSCIs; Applications, System Support Software and Data Management. Within Applications (APPs) the top–level CSC, Graphical User Applications (GUA), provides a PCCS controller user interface into the GCD CI for the control and monitor of the PCCS. Data Management (DAM) provides the control and data transfer and manipulation (if required), through the GCD CI to and from its external interfaces. The GUA CSC transmits control commands and associated data from a PCCS controller to the DAM CSCI, and receives monitored data from the DAM CSCI for display to the PCCS controller.

The Data Management CSCI consists of two top–level CSCs; Data Services & Database Management, and PCCS Data Management. Data Services & Database Management (UDM) governs the control and monitor of data through the Data Management. PCCS Data Management (VDM) transmits control commands and associated data to, and receives data from its external interfaces. The UDM CSC routes control commands and associated data received from the GUA CSC to the VDM CSC, and monitored data received from the VDM CSC to the GUA CSC.

The Data Services & Database Management consists of five sub–level CSCs; Command/Control, Database Management, Data Services–Monitor, Data Archival, and System Support Software. Command/Control (CCS) governs the interpretation and direction of control commands to the appropriate source control driver(s) within Data Management. Database Management (DBM) governs the update and query of data to and from one or more database sources within Data Management. Data Services–Monitor (DSS) governs the collection and transmission of monitored data for real–time display. Data Archival (DAS) governs the storing and retrieving of archived data. System Support Software (SSS) provides general support functions for process–to–process communication thru multiple types of interface, for message logging, and other basic utilities shared throughout the GCD CI.

The PCCS Data Management consists of six sub–level CSCs; Technology Testbed (TTB) Data Supply and Monitor, Signal/Simulation Driver and Monitor, Conditional Parameter Management, Calibration, System Support Software, and PCCS Simulation Playback. Technology Testbed Data Supply and Monitor (TSM) transmits and receives data through the Technology Testbed external interface. Signal/Simulation Driver and Monitor (SDM) transmits control commands and associated data, and receives data through the PCCS Signal Conditioning and PCCS Simulation external interfaces. Conditional Parameter Management (CPM) receives monitored data, provides the conditional data, and transmits control commands and associated data to the appropriate source control driver(s) within Data Management. Calibration (CAL) transmits control commands and receives data from the PCCS Signal Conditioning external interface. PCCS Simulation Playback (PSP) transmits archived data to the PCCS Simulation external interface allowing repeatability of sequences of control commands and associated data to the PCCS Simulation(s).

The GCD CI consists of eight internal interfaces; CCS I/F, SDM I/F, DBM I/F, TSM I/F, CPM I/F, DSS I/F, DAS I/F and PSP I/F. All the internal interfaces of the GCD CI are governed by the SSS CSCI for its communication between CSCs.

The CCS CSC receives control commands and associated data through the CCS interface from the GUA CSC, and transmits interpreted control commands and data through the SDM interface to the SDM CSC.

The DBM CSC communicates through the DBM interface for reception of requests and updates from, and transmission of requested data to, the CCS, DSS, SDM, TSM, CPM and CAL CSCs.

The DSS CSC transmits and receives through the DSS interface, the collection and request of monitor data to and from the GUA CSC. From the requests for monitor data; the DSS communicates through the TSM, SDM, and CPM interfaces collecting the requested monitor data.

The DAS CSC communicates through the DAS interface receiving enable, disable and data archive requests from the GUA and DSS CSCs, and transmitting requested archive data to the GUA and DSS CSCs.

The PSP CSC communicates through the PSP interface receiving playback command requests from the GUA CSC, and through the PCCS Simulation external interface transmitting archived control commands and associated data.

NOTE: The following CSC is apart of PHASE II.

A. PCCS Simulation Playback (PSP)

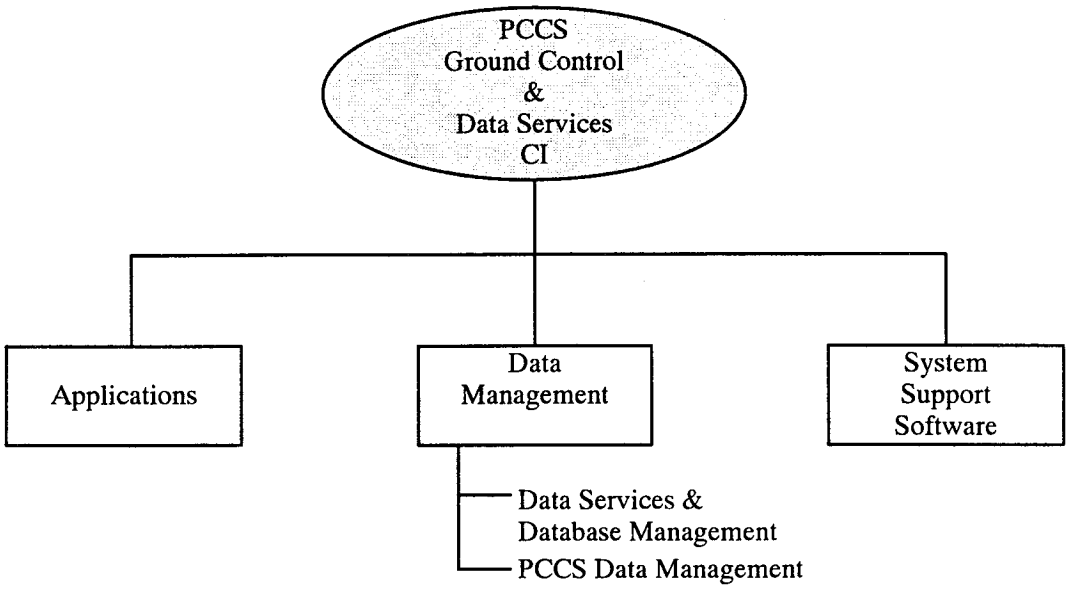

Figure 2 PCCS Ground Control & Data Services CI Architecture

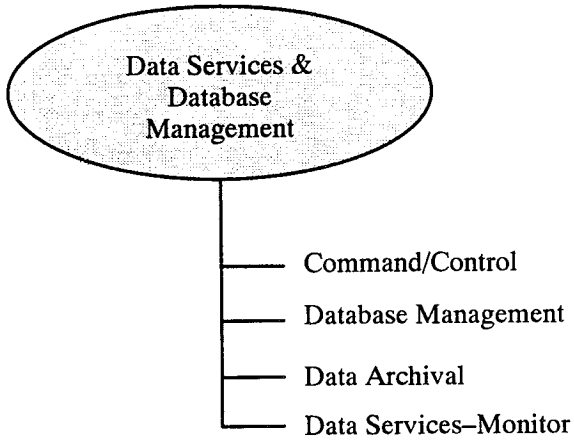

Figure 3 Data Services & Database Management Architecture

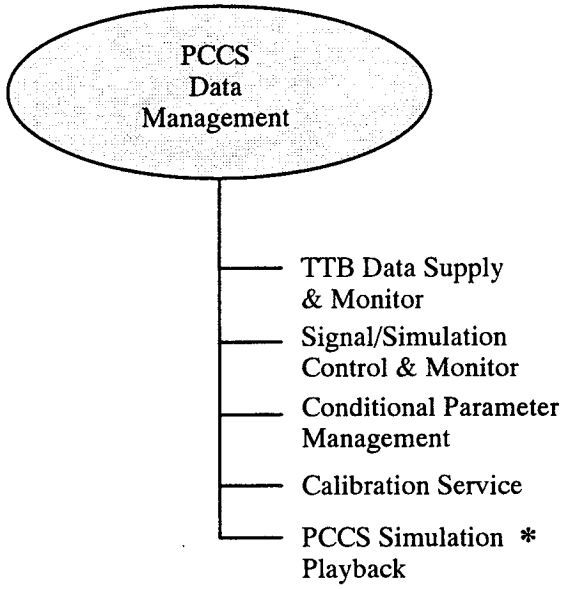

* Phase II

Figure 4 PCCS Data Management Architecture

A.1.1.2 System states and modes.

The PCCS Ground Control and Data Services (GCD) CI operates in two states, preparation and operational.

The *preparation* state consists of one mode, calibration. The calibration mode performs calibration measurements on signal conditioning hardware and records the measurements for use during the modes of the operational state.

The *operational* state consists of three modes, initialization, operate and shutdown. The initialization mode performs initialization required prior to going into the operate mode. The operate mode allows control and monitoring of PCCS signals and simulation data. The shutdown mode performs cleanup required prior to terminating the operational state.

Table I PCCS GCD CI State/Mode To CSCs

STATE	MODE	CSC(s)
Preparation	Calibration	CAL SSS CCS DBM GUA
Operational	Initialization	TSM SDM CPM PSP SSS CCS DBM GUA
	Operate	TSM SDM CPM PSP SSS CCS DSS DAS GUA
	Shutdown	TSM SDM CPM PSP SSS CCS GUA

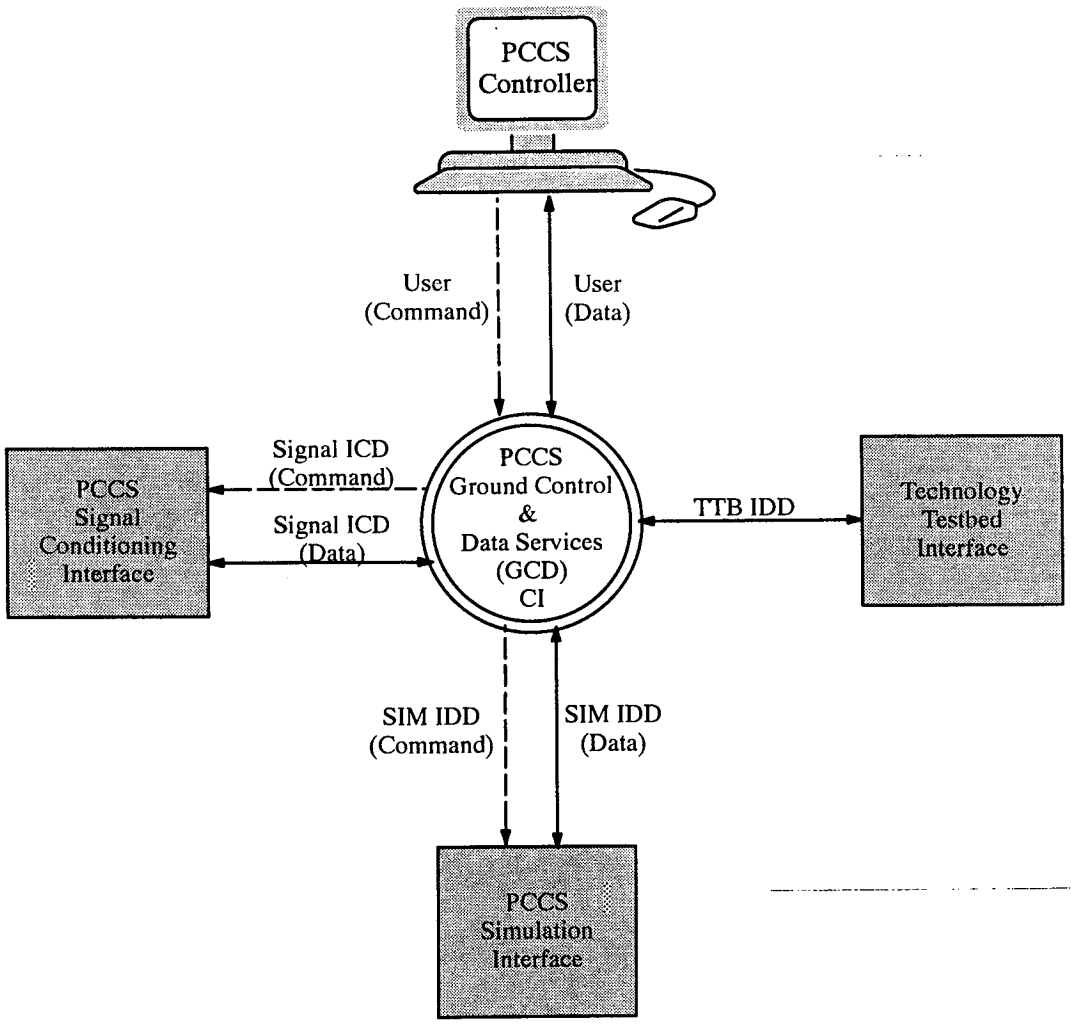

Figure 5 Propulsion Command and Checkout System (PCCS) Flow

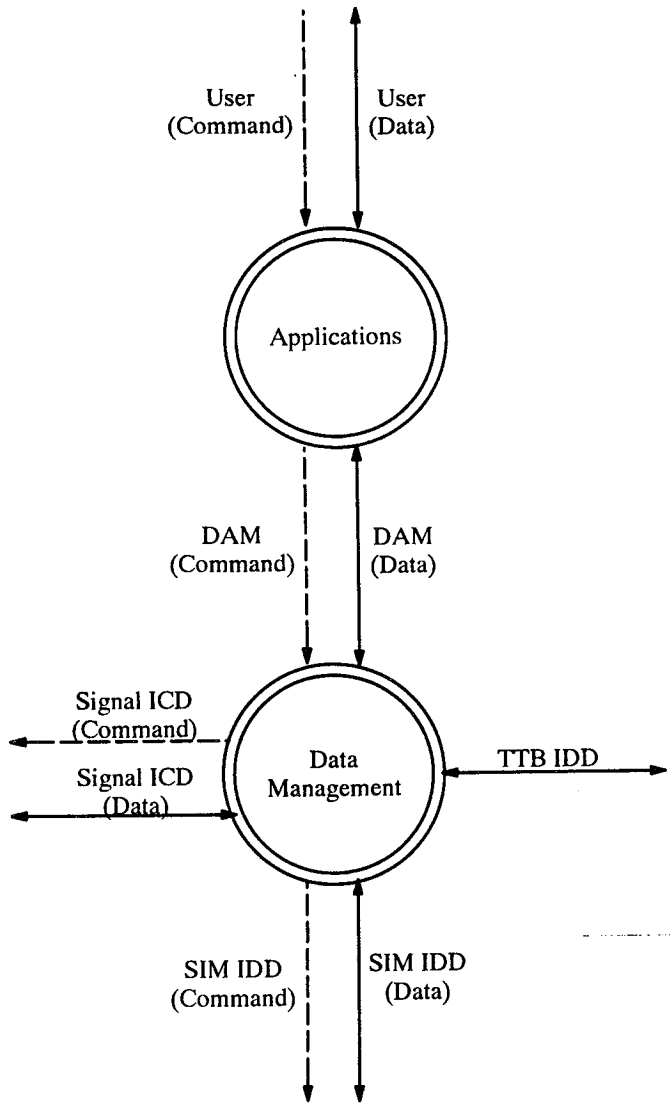

Figure 6 PCCS Ground Control & Data Services CI Flow (All Modes)

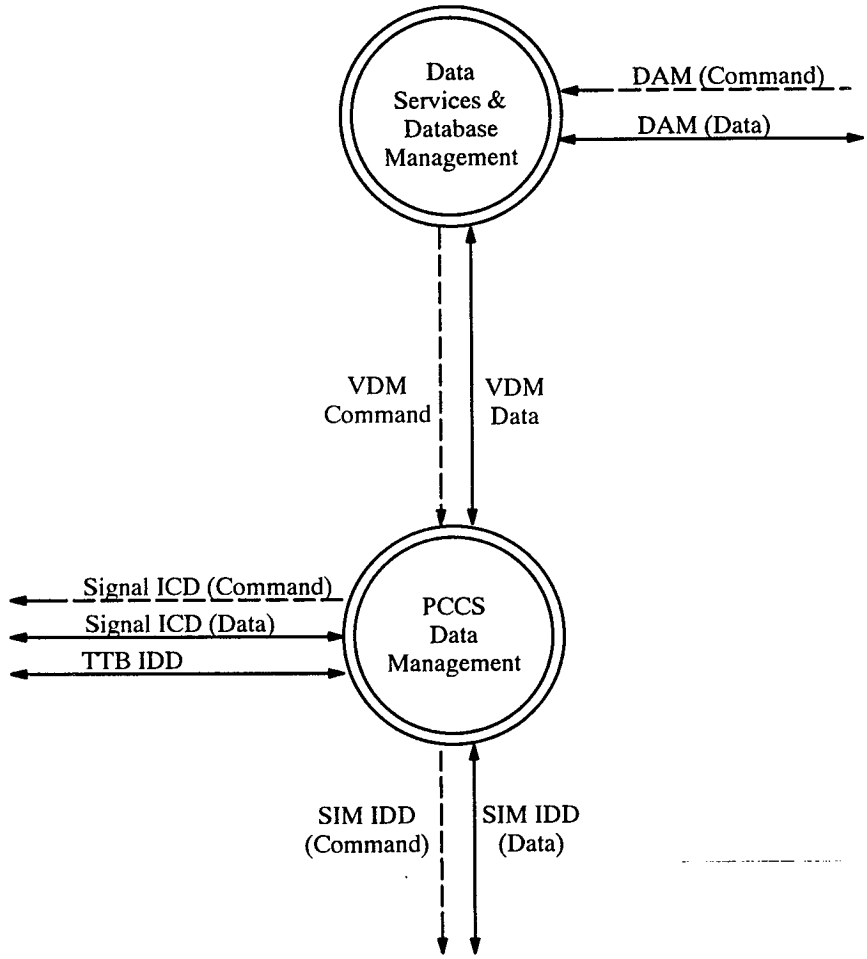

Figure 7 Data Management Flow (All Modes)

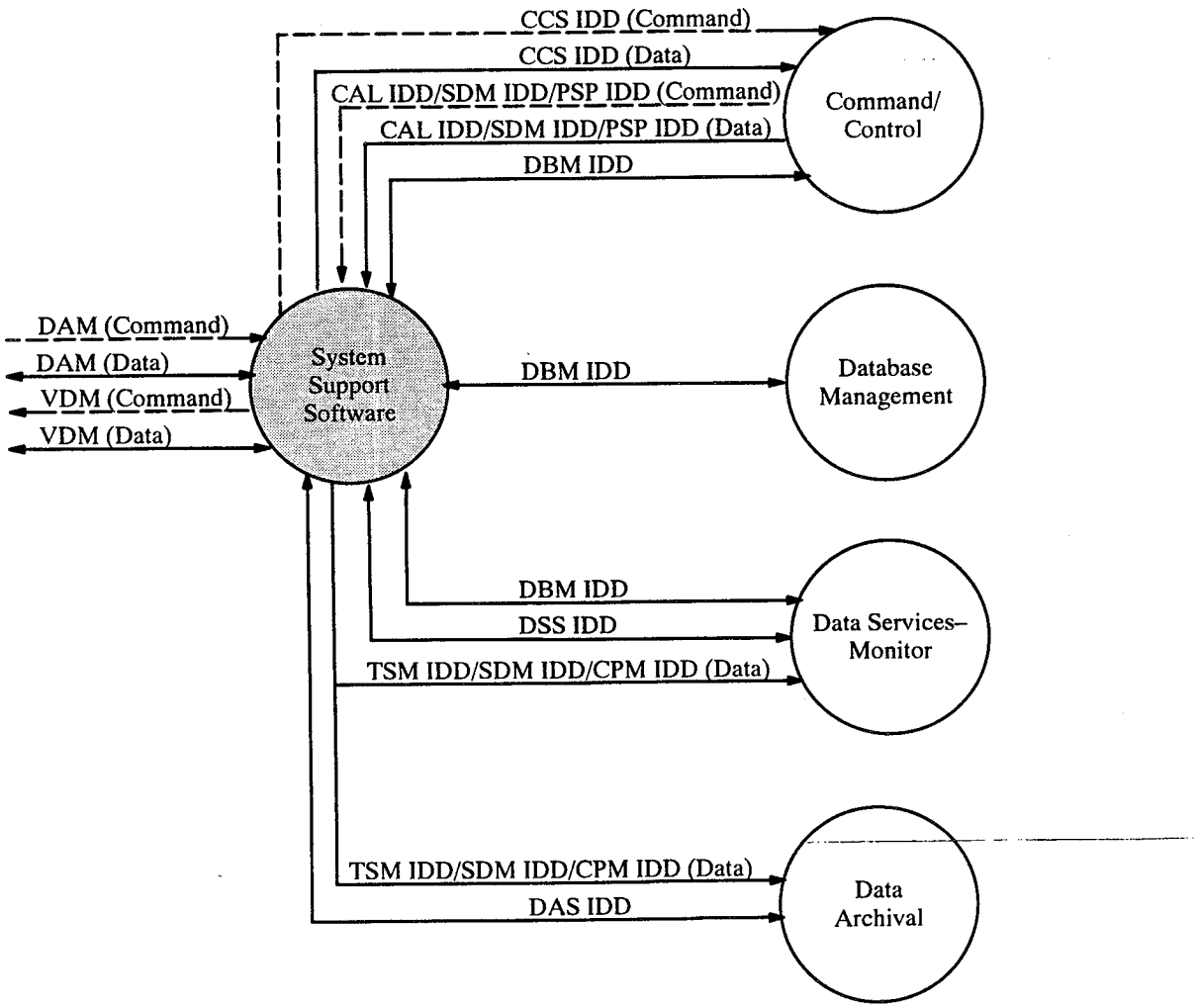

Figure 8 Data Services & Database Management Flow (All Modes)

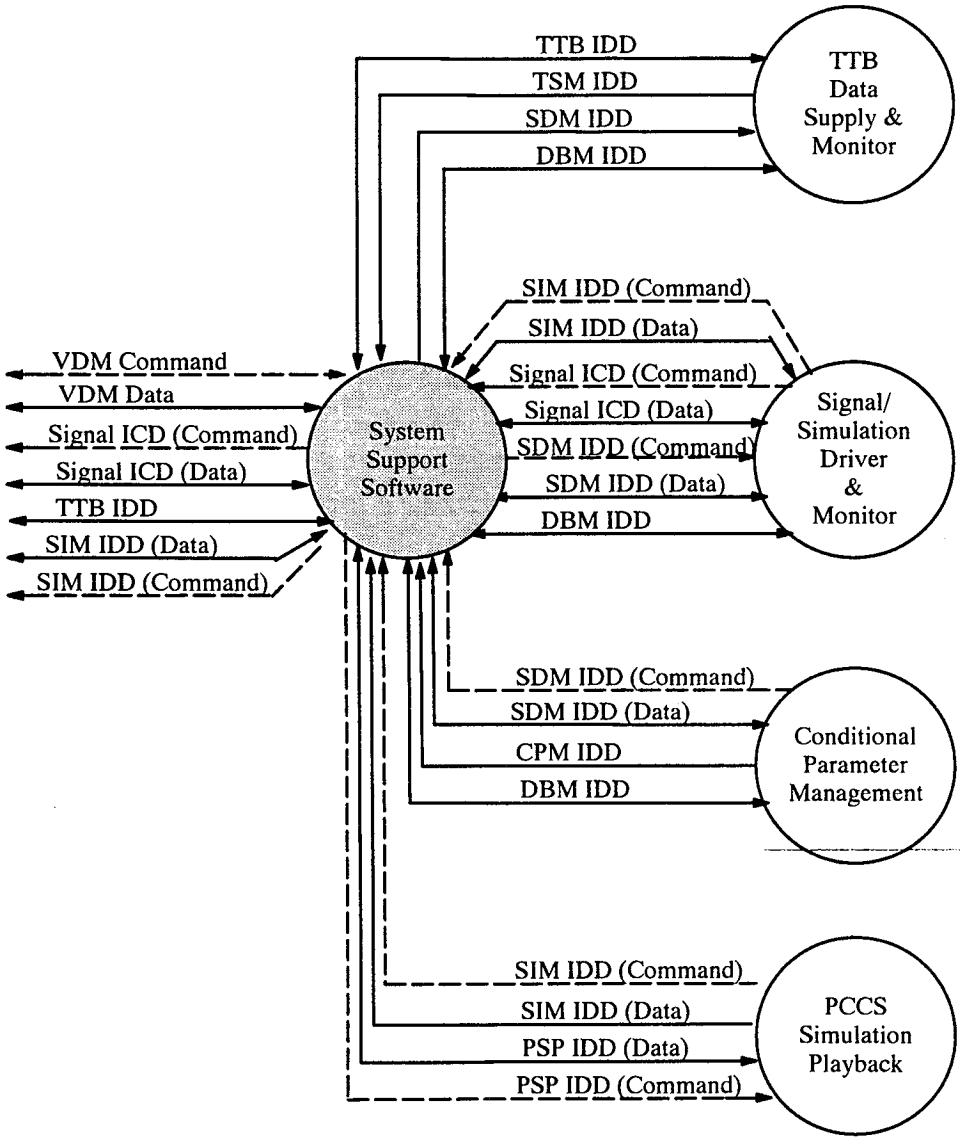

Figure 9 PCCS Data Management Flow (Initialization, Operate and Shutdown Modes)

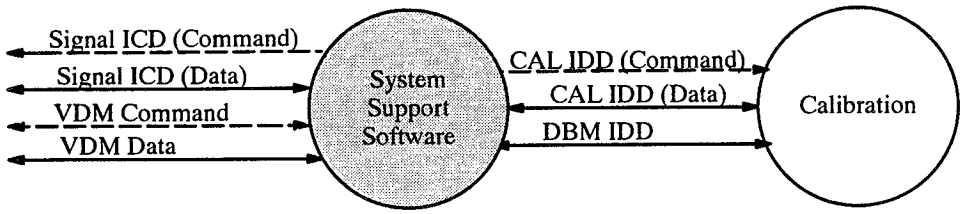

Figure 10 PCCS Data Management Flow (Calibration Mode)

A.1.1.3 Memory and processing time allocation.

Table II PCCS GCD Memory/Processing Time Table

CSC Name	CSCI/CSC Unique Identifier	Memory Budget (Bytes)	Allocated Processing Time
Applications CSCI	APP	N/A	N/A
Calibration	CAL	N/A	2–5 minutes
Command/Control	CCS	1056	20–50 msec
Conditional Parameter Management	CPM	2688	20–50 msec
Data Archival	DAS	14220 31500	20 msec 50 msec
Data Services & Database Management	UDM	N/A	N/A
Data Services–Monitor	DSS	2112	20–50 msec
Data Management CSCI	DAM	N/A	N/A
Database Management	DBM	N/A	1 sec
Graphical User Applications	GUA	N/A	N/A
PCCS Data Management	VDM	N/A	N/A
PCCS Simulation Playback	PSP	1056	20–50 msec
Signal/Simulation Driver & Monitor	SDM	148 and 2112	500 usec and 20–50 msec
System Support Software CSCI	SSS	N/A	N/A
TTB Data Supply & Monitor	TSM	(2112+11520=13632) (2112+28800=30912)	20 msec 50 msec

A.1.2 CI design description.

A.1.2.1 Applications (APP)

Applications CSCI provides an user interface into the GCD CI for the control and monitor of the PCCS.

Allocated Requirements

No allocated requirements for this CSCI, no requirement specification(s) provided.

Derived Requirements

For derived design requirements and design constraints, reference the sub–level CSCs that comprise this CSCI.

Description

Applications contains the following top–level CSC:

A. Graphical User Applications

A.1.2.1.1 Graphical User Applications (GUA)

Graphical User Applications provides a PCCS controller user interface into the GCD CI for the control and monitor of the PCCS.

Allocated Requirements

No allocated requirements for this CSC, no requirement specification(s) provided.

Derived Requirements

For derived design requirements and design constraints, reference the sub–level CSCs that comprise this CSC.

Description

Graphical User Applications contains the following sub–level CSCs:

A.

B.

C.

A.1.2.2 Data Management (DAM)

Data Management provides the control and data transfer and manipulation (if required), through the GCD CI to and from its external interfaces.

Allocated Requirements

No allocated requirements for this CSCI, no requirement specification(s) provided.

Derived Requirements

For derived design requirements and design constraints, reference the sub–level CSCs that comprise this CSCI.

Description

Data Management CSCI receives commands and associated data from APP, and the control commands and data are transmitted through the PCCS Signal Conditioning, PCCS Simulation and Techonology Testbed external interfaces. Data Management receives monitor data from the external interfaces and provides the monitor data to the APP. A control and data flow of Data Management is shown in figure 6.

Data Management consists of the following top–level CSCs:

A. Data Services & Database Management (UDM)

B. PCCS Data Management (VDM)

UDM through the CCS, DSS, DBM and DAS internal interfaces are the GUA command and data manager. Control commands and associated data determined to be destined for the external interfaces are passed through the SDM or PSP internal interfaces to VDM. VDM is the external interface manager. Control commands received through the SDM or PSP internal interfaces by VDM are issued to the external interfaces. Database data requests and responses to and from UDM are provided through the DBM internal interface. Monitor data read from the external interfaces by VDM is transmitted through the SDM, TSM and CPM internal interfaces to UDM. UDM receives the monitor data and transmits the data to APP through the DSS internal interface, and /or archives the data through the DAS internal interface.

A.1.2.2.1 Data Services & Database Management (UDM)

Data Services & Database Management governs the control and monitor ~~of data through the~~ Data Management.

Allocated Requirements

No allocated requirements for this CSC, no requirement specification(s) provided.

Derived Requirements

For derived design requirements and design constraints, reference the sub–level CSCs that comprise this CSC.

Description

Data Services & Database Management receives commands and associated data through the CCS internal interface, and the control commands and data are transmitted through the SDM or

PSP internal interfaces to VDM. Data Services & Database Management receives monitor data from VDM through the SDM, TSM and CPM internal interfaces and provides the monitor data through the DSS and DAS internal interfaces. Database mananagement by the Data Services & Database Management is provided through the DBM internal interface. A control and data flow of Data Services & Database Management is shown in figure 7.

UNIX Data Management contains the following sub–level CSCs:

A. Command/Control (CCS)

B. Data Services–Monitor (DSS)

C. Database Management (DBM)

D. Data Archival (DAS)

SSS CSCI acts as the conduit in which all the internal interfaces of the GSD CI are accessed. The data is entered into the appropriate internal interface, and SSS passes the data to its destination for processing. CCS receives control commands and associated data from GUA through the CCS internal interface; interprets the control commands and transmits the interpretted control commands and associated data to the appropriate source control driver under VDM through the SDM, CAL or PSP internal interface. DBM receives database requests from CCS, DSS, VDM and GUA through the DBM internal interface and transmits the appropriate database data to the requestor through the same interface. DSS receives monitor data requests through the DSS internal interface from GUA. DSS reads the requested monitor data provided by VDM through the TSM, SDM and CPM internal interfaces, and the monitor data is transmitted through the DSS internal interface to GUA. DAS receives enable/disable archive commands from GUA through the DAS internal interface to archive data read from the TSM, SDM and CPM internal interfaces provided by VDM. DAS transmits archived data upon requests from GUA through the DAS internal interface.

A.1.2.2.2 PCCS Data Management (VDM)

PCCS Data Management transmits control commands and associated data to, and receives data from its external interfaces.

Allocated Requirements

No allocated requirements for this CSC, no requirement specification(s) provided.

Derived Requirements

For derived design requirements and design constraints, reference the sub–level CSCs that comprise this CSC.

Description

PCCS Data Management receives control commands and associated data from UDM through the SDM or PSP internal interfaces, and transmits them through its external interfaces. Data-

base data from UDM is requested and received through the DBM internal interface. PCCS Data Management receives monitor data through its external interfaces, and transmits monitor data to UDM through the SDM, TSM and CPM internal interfaces. A control and data flow of PCCS Data Management is shown in figure 7.

PCCS Data Management contains the following sub–level CSCs:

A. Technology Testbed Data Supply and Monitor (TSM)

B. Signal/Simulation Driver and Monitor (SDM)

C. Conditional Parameter Management (CPM)

D. Calibration (CAL)

E. PCCS Simulation Playback (PSP)

During the preparation state of GCD CI calibration control and data flow occurs. CAL receives interpretted control commands and associated data provided by UDM through the CAL internal interface, and from the DBM internal interface any database data pertinent to CAL. CAL transmits the data through the PCCS Signal Conditioning external interface.

During the operational state of GCD CI operation control and data flow occurs. SDM receives interpretted control commands and associated data provided by UDM and CPM through the SDM internal interface, and from the DBM internal interface any database data pertinent to SDM. SDM transmits the data through the PCCS Signal Conditioning and PCCS Simulation external interfaces. SDM receives monitor data from the PCCS Signal Conditioning and PCCS Simulation external interfaces and provides it through the SDM internal interface. TSM receives control and monitor data from the SDM internal interface, and from the DBM internal interface any database data pertinent to TSM. TSM transmits the data through the TTB external interface. TSM receives monitor data from the TTB external interface and provides it through the TSM internal interface. CPM receives monitor data from the SDM internal interface, and from the DBM internal interface any database data pertinent to CPM. CPM compares monitor data from the SDM internal interface to pre–determined conditions, and based on the results of the comparison, interpretted control commands and associated data is transmitted through the SDM internal interface to SDM. Results of the comparison are provided for UDM monitoring through the CPM internal interface. PSP receives playback commands from UDM through the PSP internal interface to read archive data and transmits the archive data through the PCCS Simulation external interface.

A.1.2.2.3 Command/Control (CCS)

Command/Control governs the interpretation and direction of control commands to the appropriate source control driver(s) within Data Management.

Allocated Requirements

No allocated requirements for this CSC, no requirement specification(s) provided.

Derived Requirements

The following are the derived design requirements for this CSC:

I. PCCS shall provide the capability of receiving control commands and interpret the commands to transmit a sequence of control signals available to the PCCS Signal Conditioning external interface.

Description

For a control and data flow description refer to the UDM description section A.1.2.2.1, and control and data flow of Command/Control is shown in figure 8.

A.1.2.2.4 Data Services–Monitor (DSS)

Data Services–Monitor governs the collection and transmission of monitored data for real–time display.

Allocated Requirements

No allocated requirements for this CSC, no requirement specification(s) provided.

Derived Requirements

The following are the derived design requirements for this CSC:

I. PCCS shall provide the capability of monitoring a set of signals available on the PCCS Signal Conditioning external interface.

II. PCCS shall provide the capability of monitoring a set of signals available on the PCCS Simulation external interface.

Description

For a control and data flow description refer to the UDM description section A.1.2.2.1, and control and data flow of Data Services–Monitor is shown in figure 8.

A.1.2.2.5 Database Management (DBM)

Database Management governs the update and query of data to and from database source(s) within Data Management.

Allocated Requirements

No allocated requirements for this CSC, no requirement specification(s) provided.

Derived Requirements

The following are the derived design requirements for this CSC:

I. PCCS shall provide the capability of querying and updating PCCS specific data from and to a database.

Description

For a control and data flow description refer to the UDM description section A.1.2.2.1, and control and data flow of Database Management is shown in figure 8.

A.1.2.2.6 Data Archival (DAS)

Data Archival governs the storing and retrieving of archived data within Data Management.

Allocated Requirements

No allocated requirements for this CSC, no requirement specification(s) provided.

Derived Requirements

The following are the derived design requirements for this CSC:

I. PCCS shall provide the capability of archiving and retrieving of PCCS archive data.

Description

For a control and data flow description refer to the UDM description section A.1.2.2.1, and control and data flow of Data Archival is shown in figure 8.

A.1.2.2.7 TTB Data Supply and Monitor (TSM)

Technology Testbed Data Supply and Monitor transmits and receives data through the Technology Testbed external interface.

Allocated Requirements

No allocated requirements for this CSC, no requirement specification(s) provided.

Derived Requirements

The following are the derived design requirements for this CSC:

I. PCCS shall transmit and receive data from the Technology Testbed external interface.

Description

For a control and data flow description refer to the VDM description section A.1.2.2.2, and control and data flow of Technology Testbed Data Supply and Monitor is shown in figure 9.

A.1.2.2.8 Conditional Parameter Management (CPM)

Conditional Parameter Management receives monitored data, provides the detection of conditional data, and transmits control commands and associated data to the appropriate source control driver(s) within Data Management.

Allocated Requirements

No allocated requirements for this CSC, no requirement specification(s) provided.

Derived Requirements

The following are the derived design requirements for this CSC:

I. PCCS shall monitor at least one signal and detect an event based on at least one event condition associated with monitored signal.

NOTE: Phase II

II. PCCS shall produce at least one control signal, due to the detection of at least one event condition.

Description

For a control and data flow description refer to the VDM description section A.1.2.2.2, and control and data flow of Conditional Parameter Management is shown in figure 9.

A.1.2.2.9 Signal/Simulation Driver and Monitor (SDM)

Signal/Simulation Driver and Monitor (SDM) transmits interpretted control commands and associated data, and receives monitor data through the PCCS Signal Conditioning and PCCS Simulation external interfaces.

Allocated Requirements

No allocated requirements for this CSC, no requirement specification(s) provided.

Derived Requirements

The following are the derived design requirements for this CSC:

I. PCCS shall transmit and receive data from the PCCS Signal Conditioning external interface.

II. PCCS shall transmit and receive data from the PCCS Simulation external interface.

Description

For a control and data flow description refer to the VDM description section A.1.2.2.2, and control and data flow of Signal/Simulation Driver and Monitor is shown in figure 9.

A.1.2.2.10 Calibration (CAL)

Calibration (CAL) transmits control commands and receives data from the PCCS Signal Conditioning external interface.

Allocated Requirements

No allocated requirements for this CSC, no requirement specification(s) provided.

Derived Requirements

The following are the derived design requirements for this CSC:

I. PCCS shall perform automated calibration of signal conditioning boards, where possible.

II. PCCS shall record the measured gains from auto–calibration of signal conditioning boards to a database.

Description

For a control and data flow description refer to the VDM description section A.1.2.2.2, and control and data flow of Calibration is shown in figure 10.

A.1.2.2.11 PCCS Simulation Playback (PSP)

PCCS Simulation Playback (PSP) transmits archived data to the PCCS Simulation external interface allowing repeatability of sequences of control commands and associated data to the PCCS Simulation(s).

Allocated Requirements

No allocated requirements for this CSC, no requirement specification(s) provided.

Derived Requirements

The following are the derived design requirements for this CSC:

NOTE: Phase II

I. PCCS shall provide the capability of driving archived PCCS data to the PCCS Simulation external interface.

Description

For a control and data flow description refer to the VDM description section A.1.2.2.2, and control and data flow of PCCS Simulation Playback is shown in figure 9.

A.1.2.3 System Support Software (SSS)

System Support Software CSCI provides general support functions for process–to–process communication thru multiple types of interface, for message logging, and for other basic utilities shared throughout the GCD CI.

Allocated Requirements

No allocated requirements for this CSCI, no requirement specification(s) provided.

Derived Requirements

No derived requirements assigned to this CSCI.

Description

For a control and data flow description refer to the UDM description section A.1.2.2.1, and control and data flow of System Support Software is shown in figures 8, 9 and 10.

APPENDIX I:

PCCS

TECHNOLOGY TESTBED INTERFACE

B.1 INTERFACE DESIGN

B.1.1 Interface Diagrams

The Technology Testbed (TTB) external interface is comprised of several memory blocks allocated within the reflective memory of the PCCS system. Table I in AppendixB.2 provides the memory address and associated offset values for the allocated memory blocks.

The memory blocks for the interface are broken down by block name, group number, subgroup number and word index. This generic breakdown provides the interface with future expandability. Each memory block is given an unique block name, refer to figure 1 for TTB external interface block names. An unique block is divided into major groupings, then a major grouping is separated into subgroupings. For example, if a block were to consist of two different signal types, then the block would be made up of two groups; and each group would be subdivided by the number of hardware boards (subgroups) required to access the amount of signals of a particular type. Figure 6 depicts a general block group. A subgroup is divided into words, where a word is the data access of one or more signals. Figure 7 depicts a general block subgroup.

TECHNOLOGY TESTBED (TTB) INTERFACE

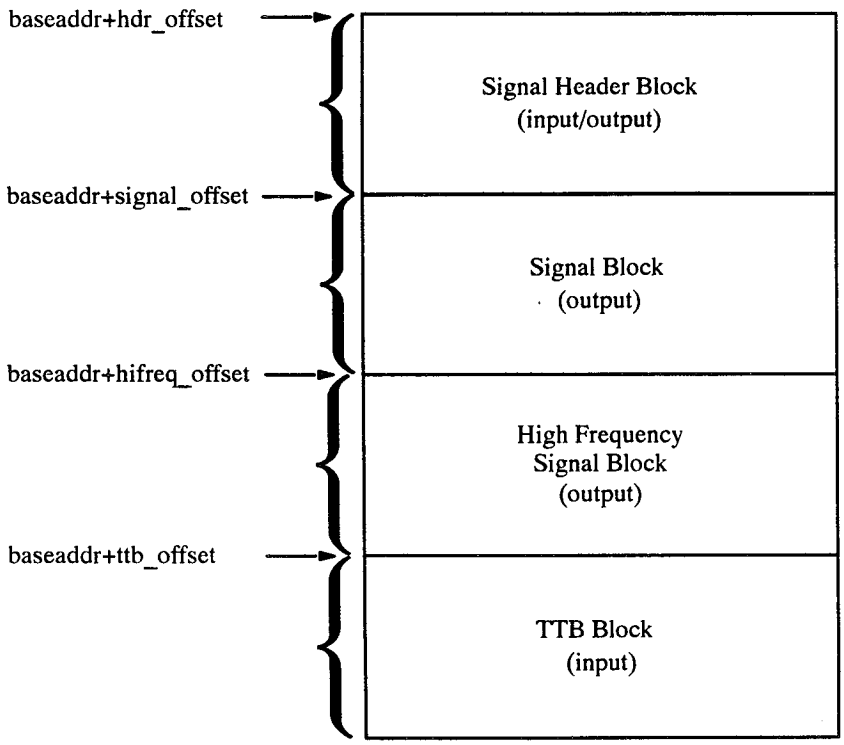

where

baseaddr	– Base address for the TTB external interface
hdr_offset	– Number of bytes from base address to start of Signal Header Block
signal_offset	– Number of bytes from base address to start of Signal Block
hifreq_offset	– Number of bytes from base address to start of High Frequency Signal Block
ttb_offset	– Number of bytes from base address to start of TTB Block
input	– PCCS receives data signals from TTB
output	– PCCS transmits data signals to TTB

Figure 1 TTB External Interface

Signal Header Block Group(s)

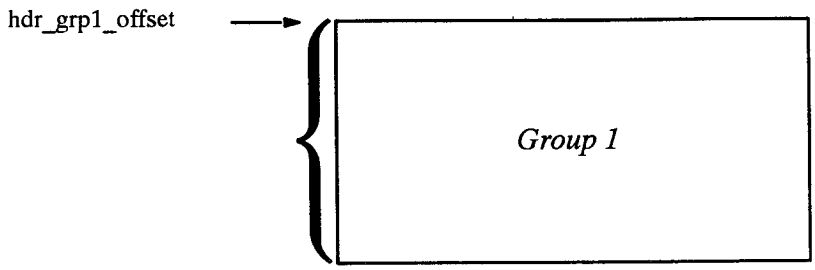

where

hdr_grp1_offset – Number of bytes from Signal Header Block offset to the start of group 1

Figure 2 Signal Header Block

Signal Block Group(s)

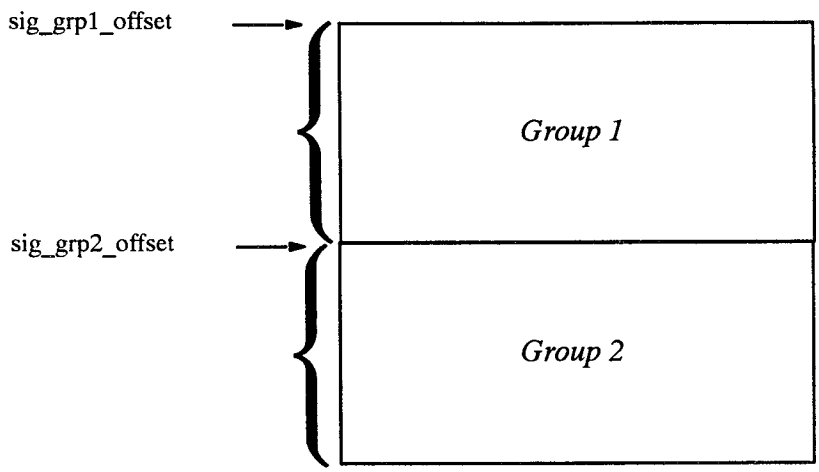

where

sig_grp#_offset – Number of bytes from Signal Block offset to the start of Group #

Figure 3 Signal Block

High Frequency Signal Block Group(s)

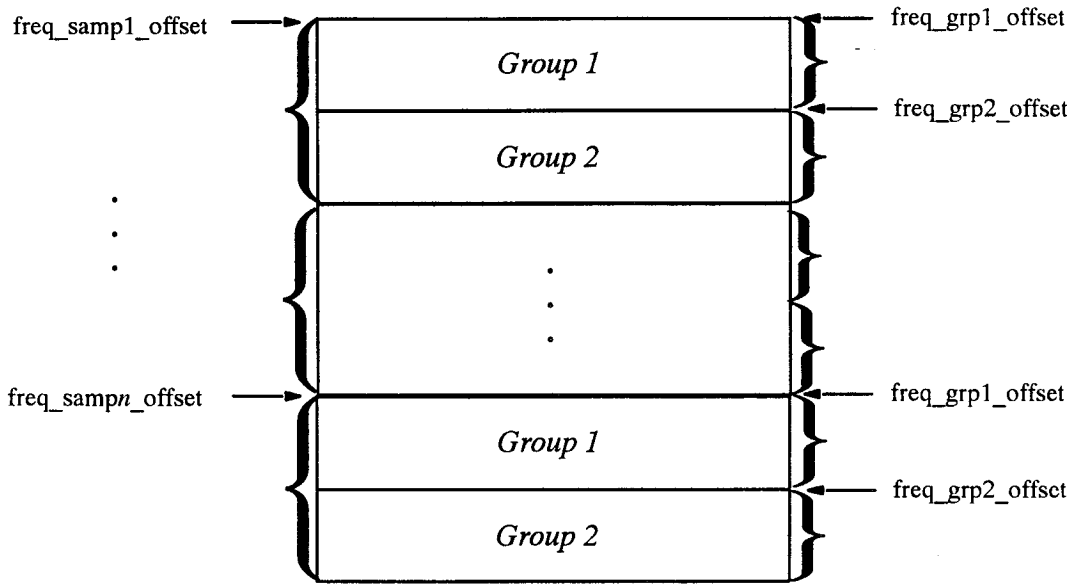

where

freq_samp#_offset – Number of bytes from High Frequency Signal Block offset to the start of Sample #

freq_grp#_offset – Number of bytes from High Frequency Signal Block offset plus High Frequency Sample offset to the start of Group #

Figure 4 High Frequency Signal Block

To Be Supplied By Customer

Figure 5 TTB Block

Block SubGroup(s)

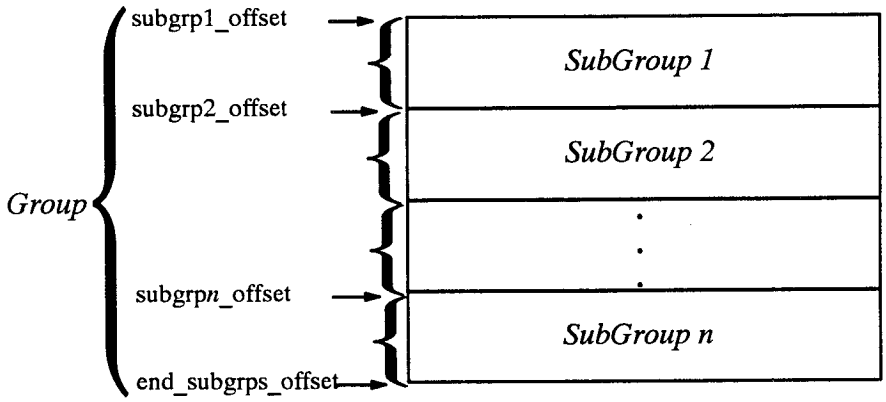

where

subgrp#_offset	– Number of bytes from Group offset to the start of SubGroup #
end_subgrps_offset	– Total number of bytes from Group offset to the end of the last subgroup

Figure 6 Block Group

Block Word(s)

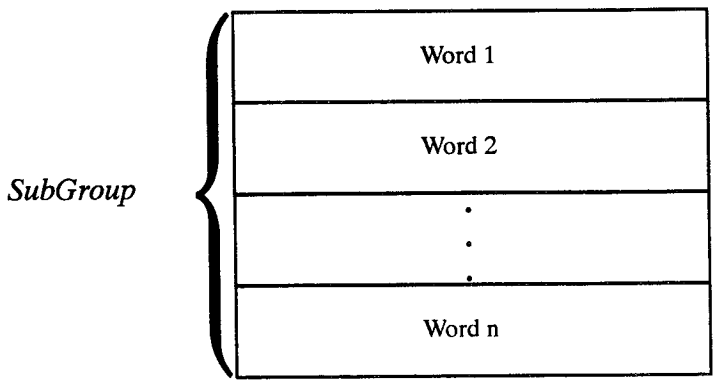

Figure 7 Block SubGroup

B.1.2 Block Description

B.1.2.1 Signal Header Block

The Signal Header Block provides TTB interface control between the TTB–PCCS output data reader and writer. Figure 2 depicts the block grouping of the Signal Header Block.

B.1.2.1.1 Signal Header Block – Group 1 – SubGroup 1

The subgroup consists of the following word(s):

WORD: Word 1
IDENTIFIER: PCCS_UPDATE_COUNTER
RANGE: 0 – 4,294,967,296
UNIT: N/A
ACCURACY: N/A
FREQUENCY: 20–50 Hz
BYTES: 4
DATA FORMAT: unsigned int
DESCRIPTION:
This word is an increment counter indicating the Signal Block and/or High Frequency Signal Block has had its data updated with each increment. Upon reaching the maximum range, the counter will rollover and continue incrementing.

WORD: Word 2
IDENTIFIER: TTB_PCCS_WRITER_LOCK
RANGE: 0 – 1
UNIT: N/A
ACCURACY: N/A
FREQUENCY: 20–50 Hz
BYTES: 4
DATA FORMAT: int

Value	Definition
0	data is ready
1	data is write locked

DESCRIPTION:
This word is a semaphore indicating data being written into the Signal Block and/or High Frequency Signal Block. Reader(s) of the identified blocks will monitor this semaphore, and read data only when semaphore set to data ready.

WORD: Word 3
IDENTIFIER: TTB_PCCS_READER_LOCK
RANGE: 0 – 1
UNIT: N/A

ACCURACY: N/A
FREQUENCY: 20–50 Hz
BYTES: 4
DATA FORMAT: int

Value	Definition
0	data is ready
1	data is read locked

DESCRIPTION:
This word is a semaphore indicating data being read from the Signal Block and/or High Frequency Signal Block. Writer(s) of the identified blocks will monitor this semaphore, and write data only when semaphore set to data ready.

WORD: Word 4
IDENTIFIER: reserved
RANGE: N/A
UNIT: N/A
ACCURACY: N/A
FREQUENCY: N/A
BYTES: 4
DATA FORMAT: N/A
DESCRIPTION:
This word is reserved for future use.

WORD: Word 5
IDENTIFIER: reserved
RANGE: N/A
UNIT: N/A
ACCURACY: N/A
FREQUENCY: N/A
BYTES: 4
DATA FORMAT: N/A
DESCRIPTION:
This word is reserved for future use.

B.1.2.2 Signal Block

The Signal Block provides the TTB–PCCS output data for signals at or lower frequencies than the TTB–PCCS output data writer. Figure 3 depicts the block grouping of the Signal Block. For word descriptions of this block, refer to table II detailing the block to ICD signal descriptions cross reference.

B.1.2.3 High Frequency Signal Block

The High Frequency Signal Block provides the TTB–PCCS output data for signals at or higher frequencies than the TTB–PCCS output data writer. Figure 4 depicts the block grouping of the

High Frequency Signal Block. For word descriptions of this block, refer to table II detailing the block to ICD signal descriptions cross reference.

B.2 MEMORY ALLOCATION

The Memory Offset Allocation table provides the offset values for the memory blocks allocated for the PCCS system.

Table I Memory Offset Allocation

base address: 0x00000000

Block	Offset Name	Offset Value (Bytes)
Signal Header	hdr_offset	0
	hdr_grp1_offset	0
	subgrp1_offset	0
	end_subgrps_offset	20
Signal	signal_offset	32
	sig_grp1_offset	0
	subgrp1_offset	0
	end_subgrps_offset	16
	sig_grp2_offset	16
	subgrp1_offset	0
	subgrp2_offset	128
	subgrp3_offset	256
	subgrp4_offset	384
	end_subgrps_offset	512
High Frequency Signal	hifreq_offset	560
	freq_samp*n*_offset	((sample#–1) * 144) (20Hz = 100 samples) (50Hz = 40 samples)
	freq_grp1_offset	0
	subgrp1_offset	0
	end_subgrps_offset	16
	freq_grp2_offset	16
	subgrp1_offset	0
	end_subgrps_offset	128
TTB	ttb_offset	TBD

B.3 CROSS MATRIX

The PCCS Signal Conditioning ICD Cross Matrix identifies each TTB–PCCS external interface memory block to the word level for mapping to the PCCS Signal Conditioning ICD.

Table II PCCS Signal Conditioning ICD Cross Matrix

BLOCK	GROUP	SUBGROUP	WORD	ICD Reference Number
High Frequency Signal	1	1	1–4	
	2	1	1–64	
Signal	1	1	1–4	
	2	1	1–64	
		2	1–64	
		3	1–64	
		4	1–64	
Signal Header	–	–	–	N/A
TTB	–	–	–	N/A