NASA-TM-110809

p. 373

NASA
AMES RESEARCH CENTER

SYSTEM ENGINEERING REPORT

Report No. SP-001
Date 3-28-90
Prep. by Julie Pollitt
Page ___ of ___

SUBJECT
SOFIA Mirror Coating Study Report

PROJECT

DISTRIBUTION File copy (Do not remove from file)

-13-131

(NASA-TM-110809) SOFIA MIRROR COATING STUDY REPORT (NASA. Ames Research Center) 373 p

N95-71620

Unclas

Z9/31 0060318

SER JP-CC1

National Aeronautics and
Space Administration
Ames Research Center
Moffett Field, California 94035

SOFIA

Reply to Attn of: 213-4

March 28, 1990

To: SOFIA Distribution

From: Julie Pollitt

Subject: SOFIA Mirror Coating Study Report

The enclosed is the final report of the mirror coating study that was done for SOFIA. One section is missing due to errors discovered after copies were made. The corrected section will be mailed out separately by April 13. If you have any questions or comments please call me at x43832 or send them to me at MS 213-4.

Julie A. Pollitt
Julie Pollitt

Distribution:

NANS KUNZ 213-4
JIM EILERS 213-4
KEITH VENTER 213-8
GARY THORLEY T041-3
CHRIS WILTSEE T041-3
JERRY HIRATA T041-3
DAVE KOCH T244-10
ED ERICKSON 245-6 (2 copies)
LOU HAUGHNEY 211-12

CONTENTS

1.0 INTRODUCTION 1

2.0 SUMMARY OF FINDINGS 3

3.0 THE FACILITY IN DETAIL 21

3.1 CLEAN ROOM REQUIREMENTS 22

3.2 MIRROR HANDLING 33

3.2.1 REMOVAL OF MIRRORS FROM PLANE 34
3.2.2 HANDLING WITHIN THE FACILITY 62
3.2.2.1 PRIMARY MIRROR HANDLING 63
3.2.2.2 SECONDARY AND TERTIARY MIRRORS HANDLING 100

3.3 CLEANING/STRIPING ROOM 101

3.3.1 PHYSICAL LAYOUT AND EQUIPMENT 102
3.3.1.1 SPECIAL PRIMARY MIRROR CLEANING EQUIPMENT ... 104
3.3.1.2 SECONDARY/TERTIARY MIRROR CLEANING EQUIPMENT. 111
3.3.2 PROCEDURES/SUPPLIES 113
3.3.3 WASTE DISPOSAL AND SAFETY REQUIREMENTS 122

3.4 MIRROR COATING EQUIPMENT AND PROCEDURES 123

3.4.1 PRIMARY MIRROR 128
3.4.1.1 PHYSICAL DIMENSIONS/DESCRIPTION (EXTERIOR)... 131
3.4.1.2 PUMPING SYSTEM 138
3.4.1.3 CONTROLS AND GAUGING SYSTEM 152
3.4.1.4 COATING APPARATUS (INTERIOR) 178
3.4.1.5 COATING OPERATIONS AND OPTIONS 186
3.4.1.6 GLOW DISCHARGE FINAL CLEANING 198
3.4.2 SECONDARY/TERTIARY MIRRORS 200
3.4.3 DICHROIC TERTIARY 212

4.0 BUDGET AND COSTS..... 213

4.1 INITIAL COST 213

4.1.1 PRIMARY MIRROR COATING CHAMBER 213
4.1.2 SECONDARY/TERTIARY MIRRORS COATING CHAMBER 215
4.1.3 CLEAN ROOM 216
4.1.4 CLEANING ROOM EQUIPMENT 216
4.1.5 HANDLING EQUIPMENT 216
4.1.6 MISCELLANEOUS COSTS 217

4.2 YEARLY OPERATING COSTS 220

4.2.1 PRIMARY MIRROR COATING AND CLEANING 220
4.2.2 SECONDARY/ALUMINUM COATED TERTIARY COATING 220
4.2.3 DICHROIC TERTIARY COATING/CLEANING 220

5.0 NOTES TO FUTURE DESIGNERS AND USERS 224

6.0 BIBLIOGRAPHIES 229

7.0 APPENDICES 230

A) TRIP REPORTS

B) MIRROR CLEANING/COATING FACILITY REQUIREMENTS REPORT

C) BLUEPRINT - PLAN VIEW OF FACILITY

D) CONTRACTOR'S REPORT ON PRIMARY MIRROR COATING CHAMBER

E) SECTIONS OF ZEISS TELESCOPE ASSEMBLY DEFINITION FINAL REPORT

F) THIN-FILM DEPOSITION SUGGESTIONS

G) ARGUMENT FOR THE USE OF A SECOND FLOOR PLATFORM IN THE HIGH BAY

1.0 INTRODUCTION

Telescopes are comprised of mirrors. The mirrors gather the distant light from space. The better reflection the mirrors have, the more light that can be gathered from space by the telescope. Therefore in telescope work, reflectivity is all important. Over time the metal surface of a mirror gets dirty and oxidizes. Reflectivity is decreased. The mirror must then be stripped of the old coating and recoated. This report contains, in detail, the methods best suited to clean, strip, and recoat the mirrors of the Stratospheric Observatory for Infrared Astronomy's (SOFIA's) telescope.

SOFIA's telescope contains four mirrors, the primary, the secondary, and two tertiarys. ZEISS suggests that the material and coating for the primary mirror and the secondary mirror be Zerodur with a pure Aluminum reflective coating. ZEISS further proposes that the beamsplitter (dichroic tertiary) be made of BK7 and be coated with a specialized gold coating. The remaining tertiary's material is Zerodur coated with Aluminum overcoated with silicon oxide. Bare Aluminum is a popular choice because it remains highly reflective at all light wavelengths.

Described on the following pages is how to remove the four mirrors from the airplane, transport them to the cleaning/stripping room, the cleaning procedures, how they will be brought to and loaded into the vacuum chambers for coating, the actual coating procedures, and the transit back to the airplane. It is written from the point of view that there is not a single best method for coating the mirrors but that there are several options. Each method has its own pros and cons. The main pluses and minuses will be touched upon.

As a mode of research, several existing mirror cleaning/coating facilities were visited. The first was Lick Observatory which has a facility to coat a 3.0m (120 inch) mirror with bare aluminum. The second was Scrader Scientific, a company fabricating the vacuum chamber for Keck Observatory in Hawaii. This chamber will coat 1.8m (72 inch) mirrors. The third was Battelle Pacific Northwest Laboratory in Richland, Washington. They coat laser quality substrates of a maximum size of 2.2m (86 inch) for the U.S. government's SDI program. The trip reports are contained in Appendix A. Further modes of research took the form of attending seminars, visits to the library, and phone calls to vendors and users of vacuum equipment.

William Brown, the Head of the University of California, Santa

Cruz, Optical Coating Facility was awarded a contract to aid in the conceptual design of the primary mirror coating chamber. He has had 10 years experience with mirrors of the same size scale. He has coated them, partly designed, and maintained the coating/cleaning facilities for them. He concieved the design of the interior of the primary mirror coating chamber. In conjunction with the author he has helped "nail down" the other aspects of the design. His report is contained in Appendix D.

Appendix B contains the Mirror Coating Facility Requirements Report as given to Facilities Planning (Code EF) for incorporation into the Facility Requirements Document. Appendix C has blueprints of several plan views of the facility, based on the different coating options, as done by Will Vallotton. Appendix E consists of excerpts from the Telescope Assembly Definition Phase B Final Report by ZEISS. Appendix F is an excerpt from the 1990 Varian, Inc. Vacuum Products Catalogue for suggestions on thin-film deposition of different material.

2.0 SUMMARY OF FINDINGS

The following is a summary of what the mirror cleaning and coating facility could look like. See Figure 2.0-0 for the conceptual plan view of the whole facility.

There are certain requirements to assure that the mirror coatings are good ones. Good in the sense that they have a high reflectivity. The main requirement is that the facility be "relatively" clean; hence, no dust/dirt particles remain on a mirror leaving pinholes when it is coated. Pinholes reduce reflectivity: this leads to a bad coating. Most of the activities that take place in the facility are to keep this from happening.

Mirror handling:

All of the four mirrors will be removed from the plane, as it rests in the high bay, through the use of a special device refered to as the ten-ton manipulator (Figures 2.0-1, 2.0-3, and 2.0-4). The telescope cavity door is opened. The 10-ton manipulator, with a device designed specifically for the purpose, extracts the secondary mirror and spider (Figure 2.0-1). These are then set aside on a stand (2.0-2). The supporting tube containing the tertiaries is removed and also set upon a stand (Figure 2.0-3). Next the ten-ton manipulator, with a device to attach to the primary mirror, reaches in and extracts the mirror (Figure 2.0-4). The primary mirror is placed onto a transport cart (Figure 2.0-5) and moved into the cleaning/stripping room. The secondary is removed from the spider and the tertiary mirrors are removed from the supporting tube. All the smaller mirrors are light enough to be handled manually once out of their mounts. They are then also brought into the cleaning room.

Further lifting of the primary will be required in the coating room when it is taken off the transport cart and placed in the chamber. A bridge crane will be sufficient for this. At any time while out of the plane the primary mirror will have a plastic cover (Figure 2.0-6) except when it is being cleaned or stripped or coated. The current recommendation by the telescope system contractor is that the primary mirror remain facing upwards, as it does when in the telescope, if the mirror cell is removed. If the mirror cell or similar support stays attached, the transport cart must have the ability to rotate the mirror 180 degrees.

The cleaning and stripping facility:

The cleaning/stripping room will consist of a segregated area with water, ventilation, and chemical waste disposal facilities. The cleaning procedure will closely follow that of most observatories, acids will be used for stripping the old coating off and soap will be used to wash. The choice of chemicals and the finer details of the procedure depend on one's individual preferences.

The primary mirror is cleaned/stripped on the transport carriage (cart) or in an acid and corrosion resistant cleaning bin (see Figure 2.0-7). If done on the transport cart it is done in a horozontal orientation facing upwards if the mirror cell is detached (see Figure 2.0-8). If the cell remains it is convenient to clean and strip it oriented vertically (see Figure 2.0-9). In the cleaning bin it will be oriented horozontally. Glow discharge is best used to do the final cleaning while the mirror is under vacuum.

The smaller secondary and tertiary mirrors can be cleaned and stripped in a corrosion and acid resistant sink.

Primary mirror coating chamber:

The chamber will be cylindrical in shape with dished ends. The axis of the cylinder will be oriented vertically or horozontally. The approximate dimensions are 10 feet in diameter by 10 feet long. It will be constructed of a mild steel (rather than a stainless) which is less expensive and sufficient for the present coating needs.

One of four options for chamber design must be chosen (see Figures 2.0-10, 2.0-11, 2.0-12). There is not yet a picture for the fourth option. The first is the mirror facing down to be coated, Figure 2.0-10. The next two are where the mirror faces upward to be coated. In Figure 2.0-11 the chamber top is removed and the mirror placed in, and in Figure 2.0-12 the bottom of the chamber is removed and the mirror placed on it. The bottom is then moved back into place. The final option is the mirror facing sidewards to be coated. Note that for the mirror to be coated facing downwards or sideways it is suggested by the telescope system contractor that the mirror cell or similar support remain attached.

The least expensive and most uncomplicated method of coating was physical vapor deposition by resistive heating of tungsten filaments. To assure uniformity of the coating the chamber interior should consist of 2 or 3 concentric circles of filaments

(see Figure 2.0-13). A total number of forty filaments is needed to coat the mirror facing downward. If it must be coated looking up then the number will be greater to outweigh the loss due to the shields in place to keep the hot aluminum from falling onto the surface of the mirror.

The pumping system consists of a (Stokes) mechanical pump with a pumping speed of 300 cfm. A Roots Rotary Blower will be used in conjunction with the mechanical pump to increase the pumping speed. In series with the mechanical pump is a 35 inch oil diffusion pump. The pumping speed of the diffusion pump is 52,000 liters/sec for air. The total pumping time from atmospheric pressure to 10^{-6} Torr is about two hours. The pumping system layout is seen in Figure 2.0-14.

Diffusion pumps are notorious for backstreaming oil into the chamber. To alleviate this problem, baffles which are liquid-nitrogen cooled can be used. They are located between the high vacuum valve and the diffusion pump. A high vacuum valve attaches the diffusion pump to the vaccuum chamber. A roughing valve is found between the mechanical pump and the chamber. A backing valve is situated between the diffusion pump and mechanical pump. Appropriate gauges monitor the pressures at several locations.

The approximate cost for constructing this chamber is $550,000.

Secondary/Tertiary mirror coating:

The first option is to contract out all of these mirrors to be recoated. The second option is to purchase an off-the-shelf, complete vacuum coating chamber to do all three. The price of this would run about $150,000.00, maybe slightly more. The third option is to send the dichroic tertiary elsewhere to be coated and to purchase an off-the-shelf chamber, for close to $116,000.00, to coat the other two. There is a fourth option which also involves sending the dichroic tertiary out. There is an old, complete vacuum chamber, of the correct size, unused and stored here at AMES which could be rebuilt. The cost to do this is unknown but there are companies in the San Francisco area that do this type of work.

The best estimate, at this time, for the cost of a facility to coat all four SOFIA mirrors is between 1.7 and 2.2 million dollars.

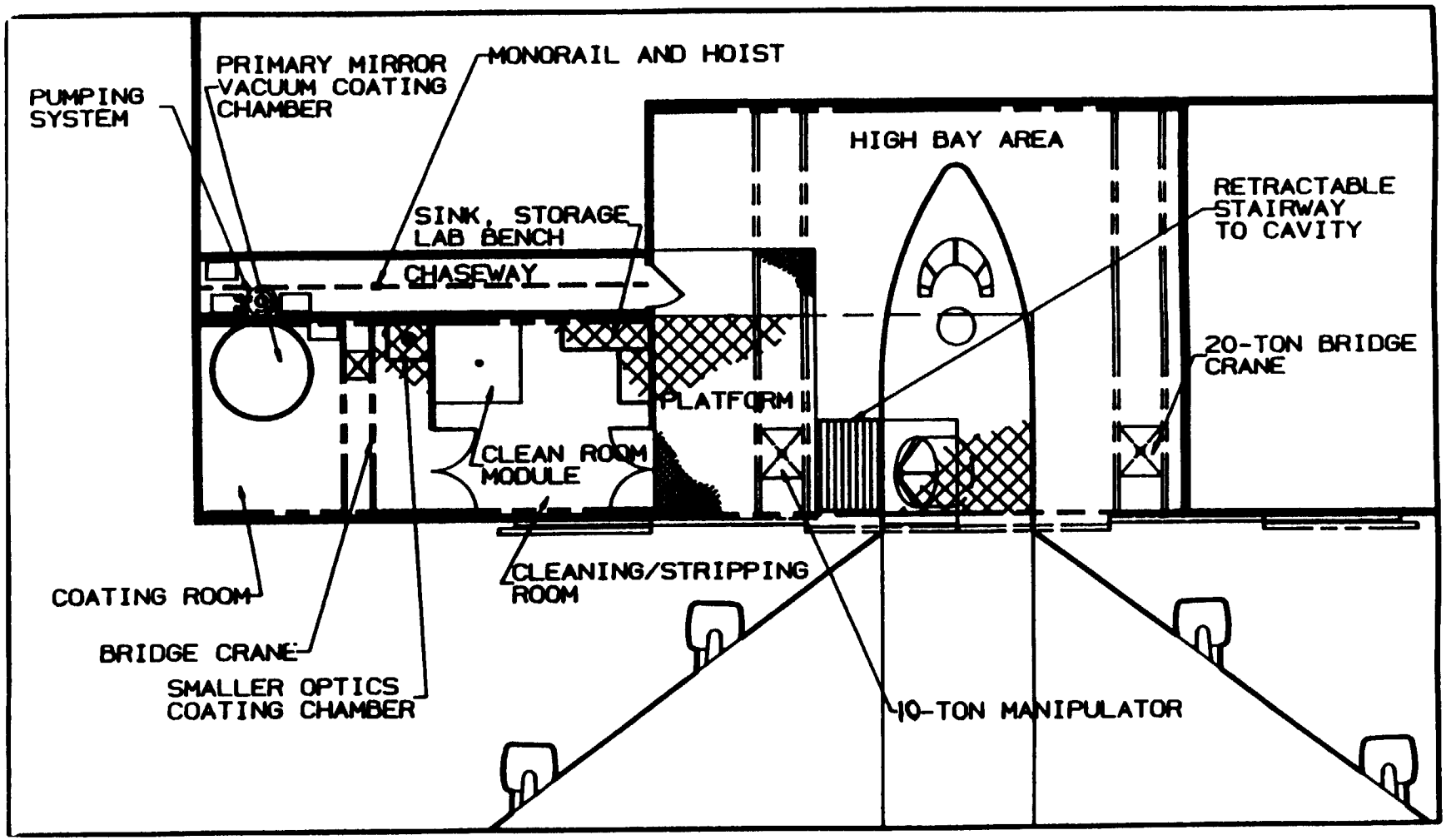

PLAN VIEW

Figure 2.0-0

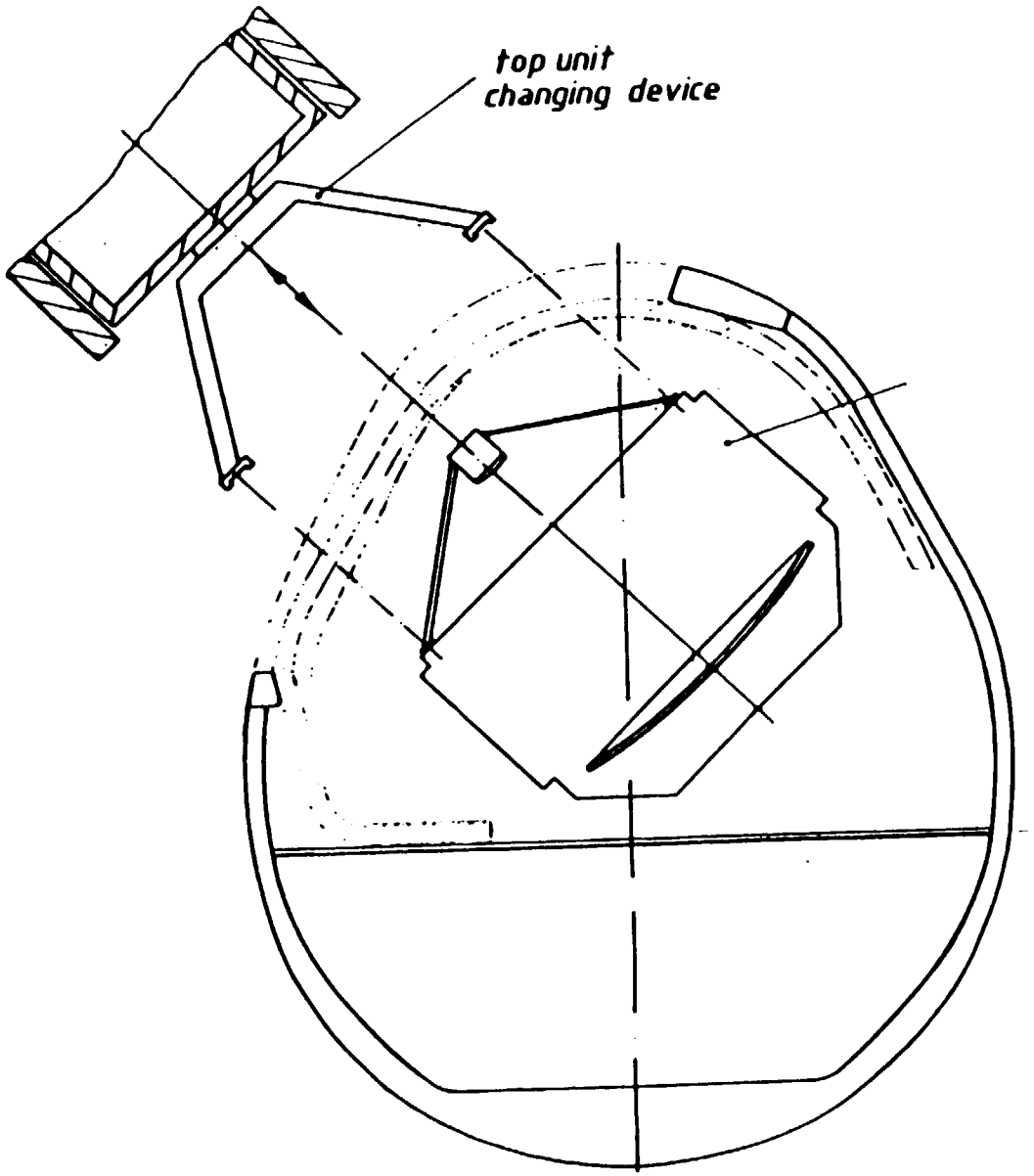

Figure 2.0-1

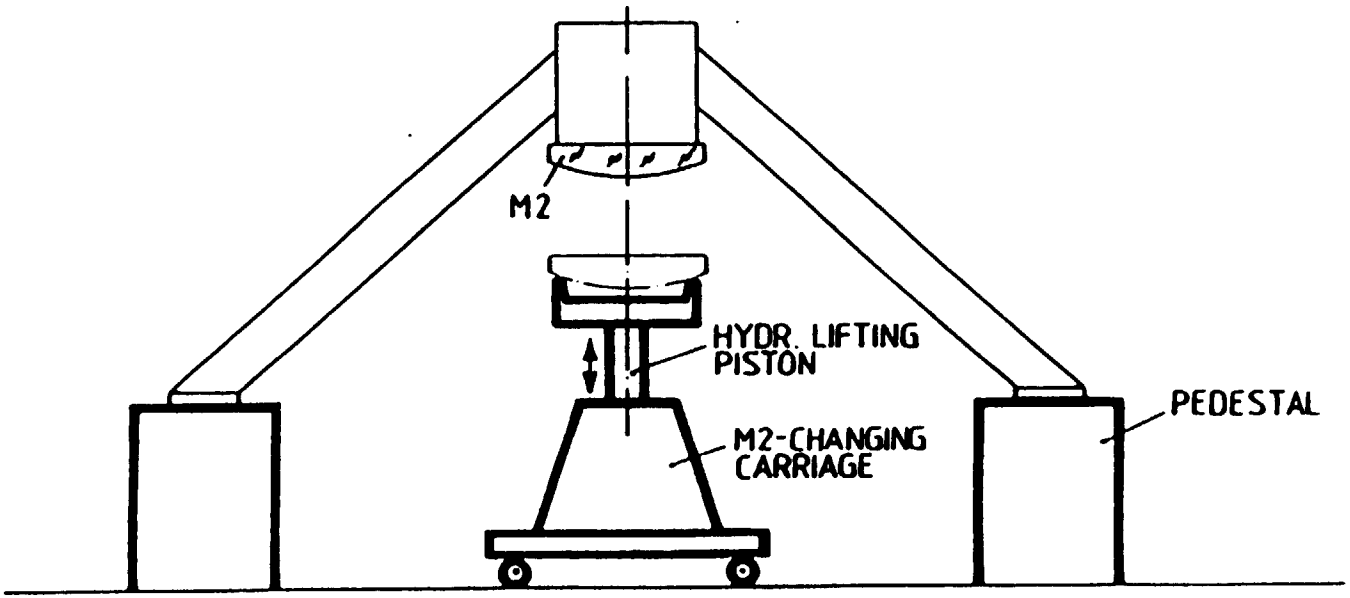

Figure 2.0-2

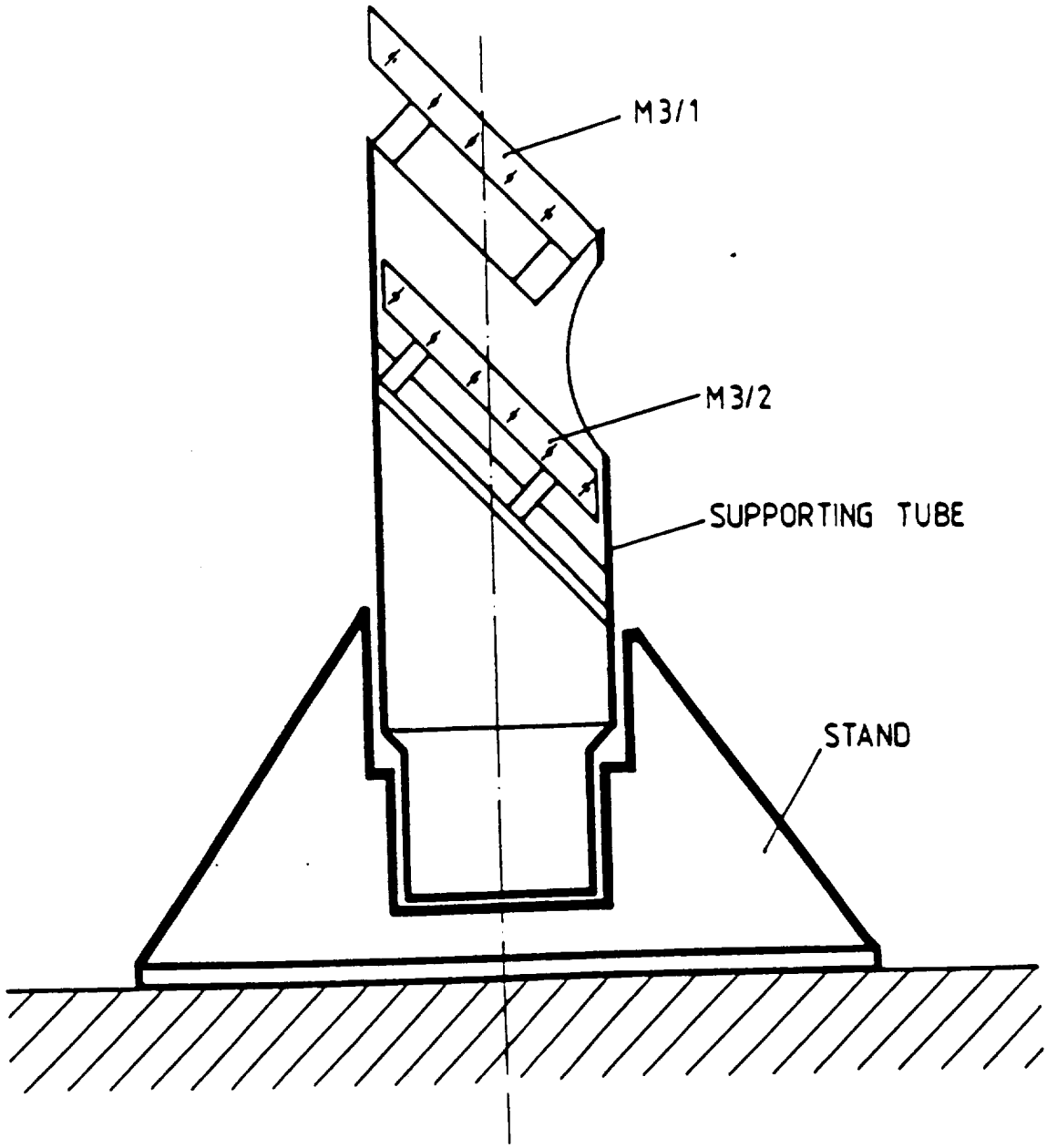

Figure 2.0-3

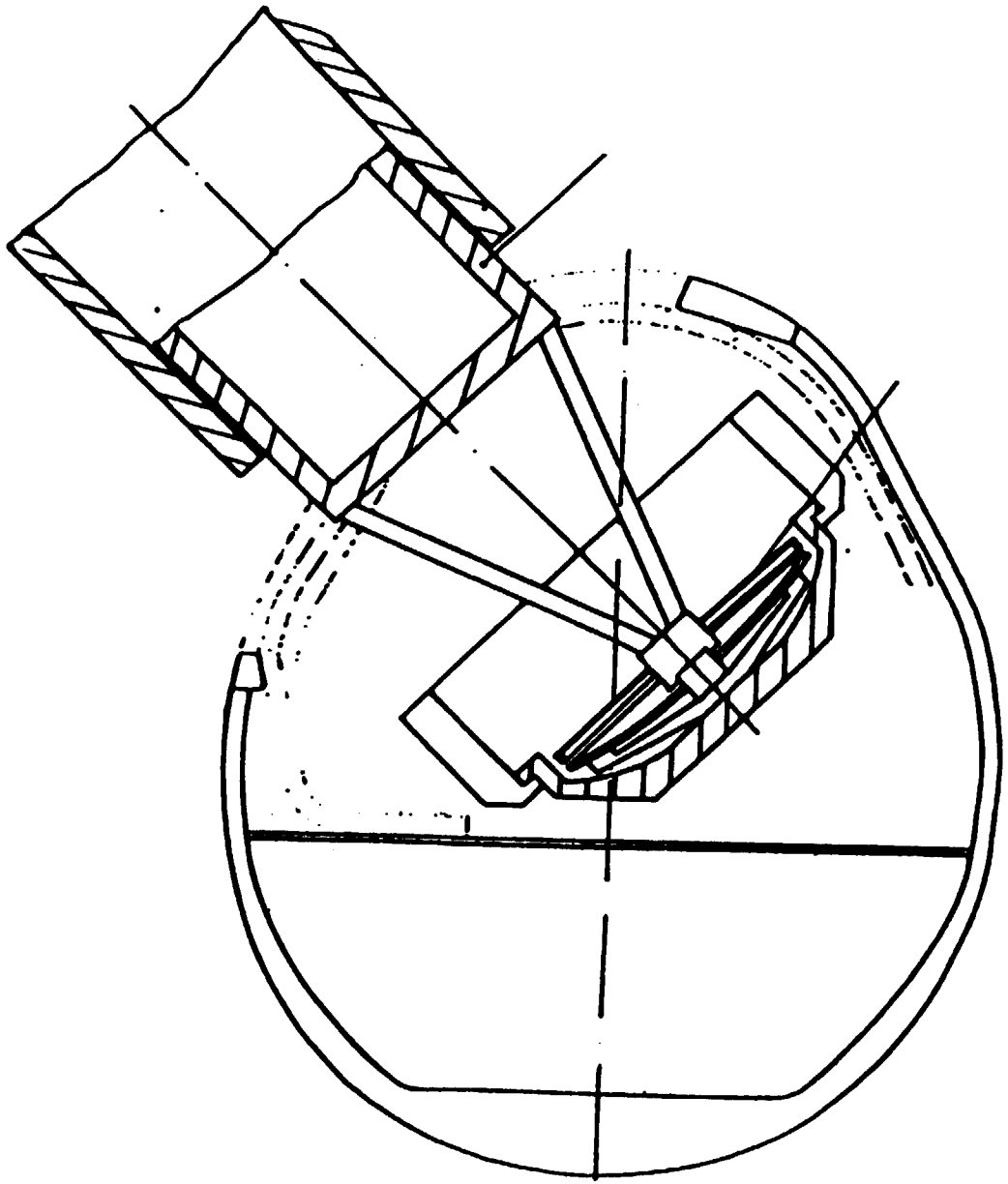

Figure 2.0-4

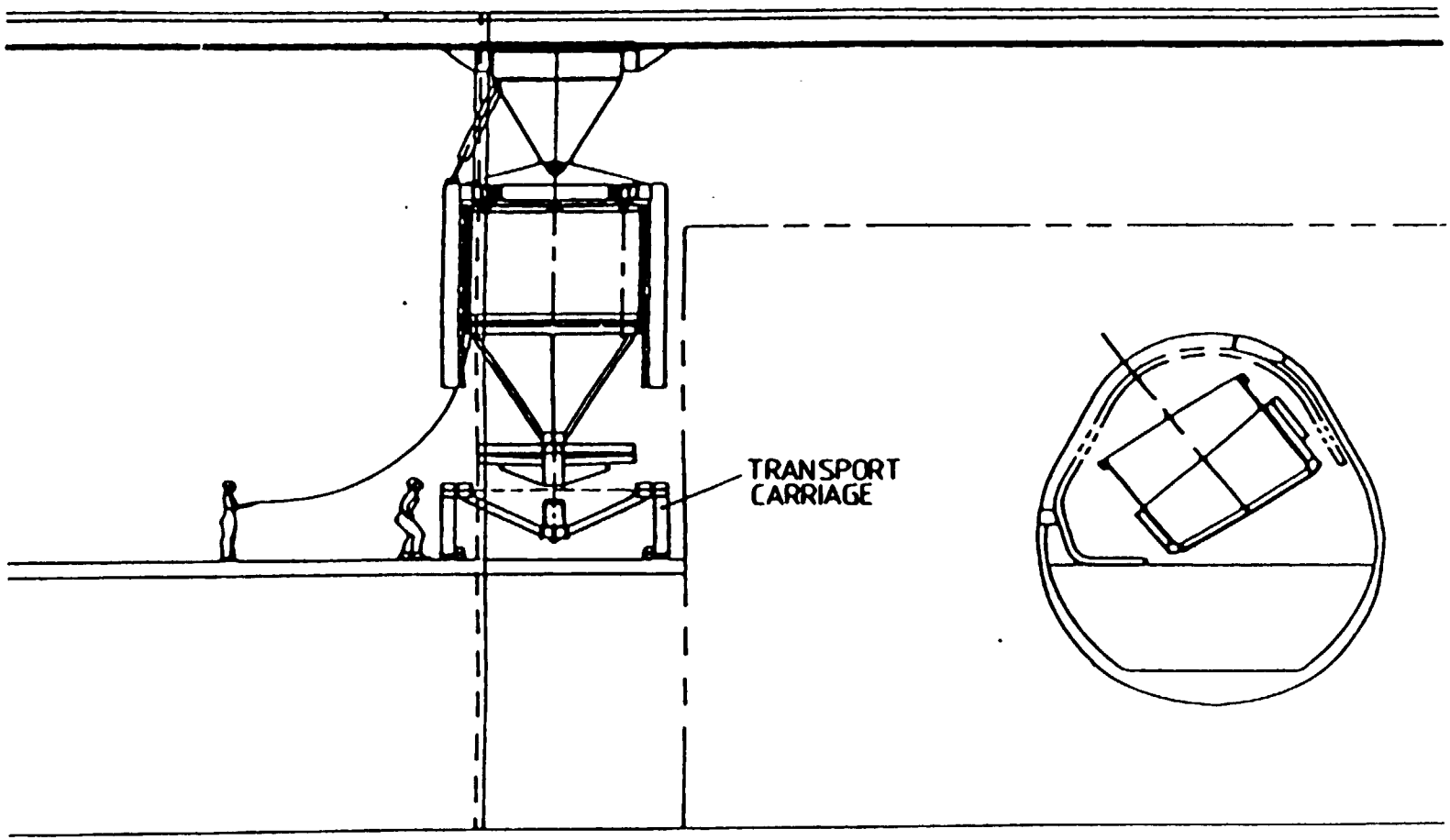

Figure 2.0-5

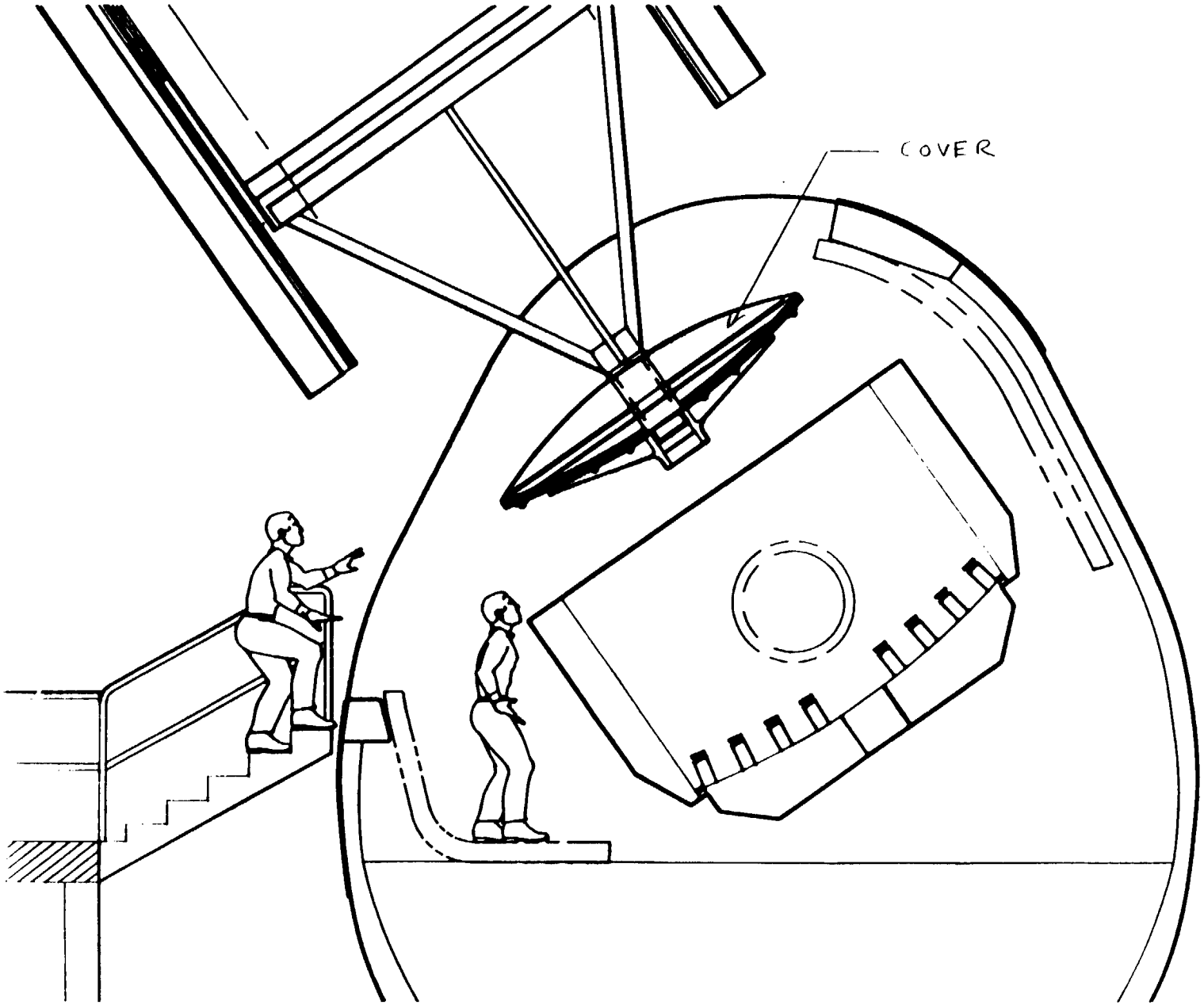

Figure 2.0-6

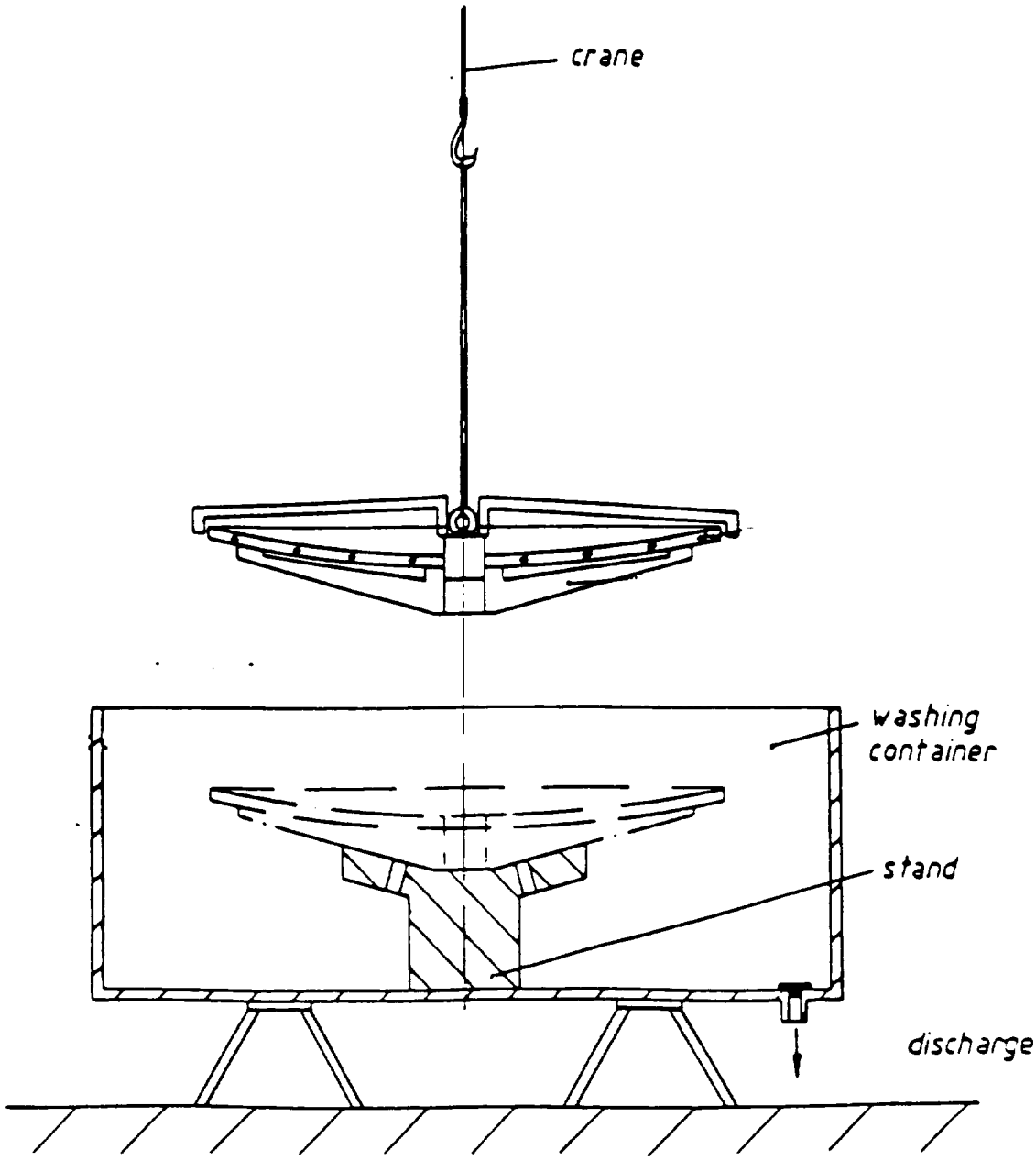

Figure 2.0-7

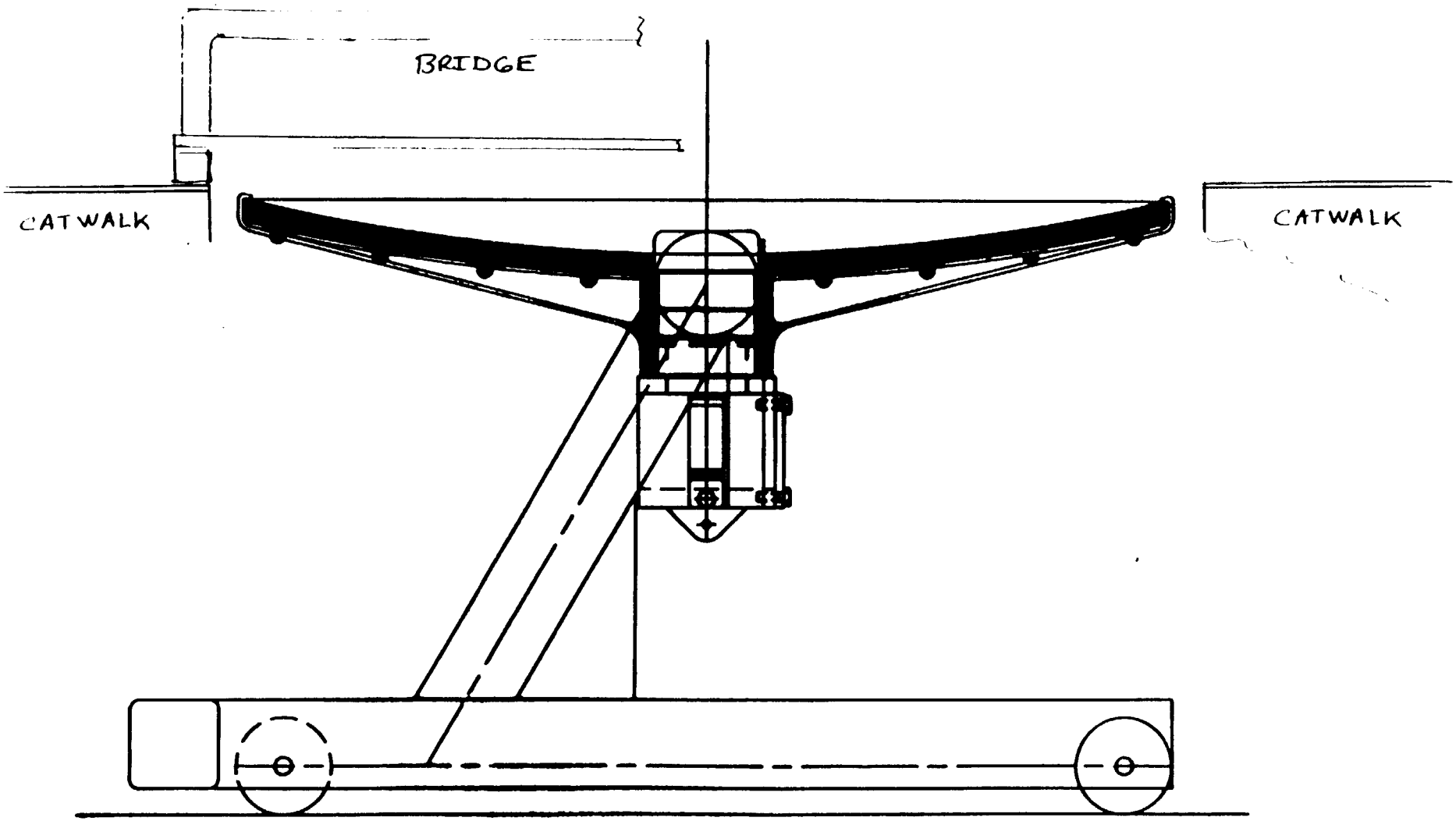

Figure 2.0-8

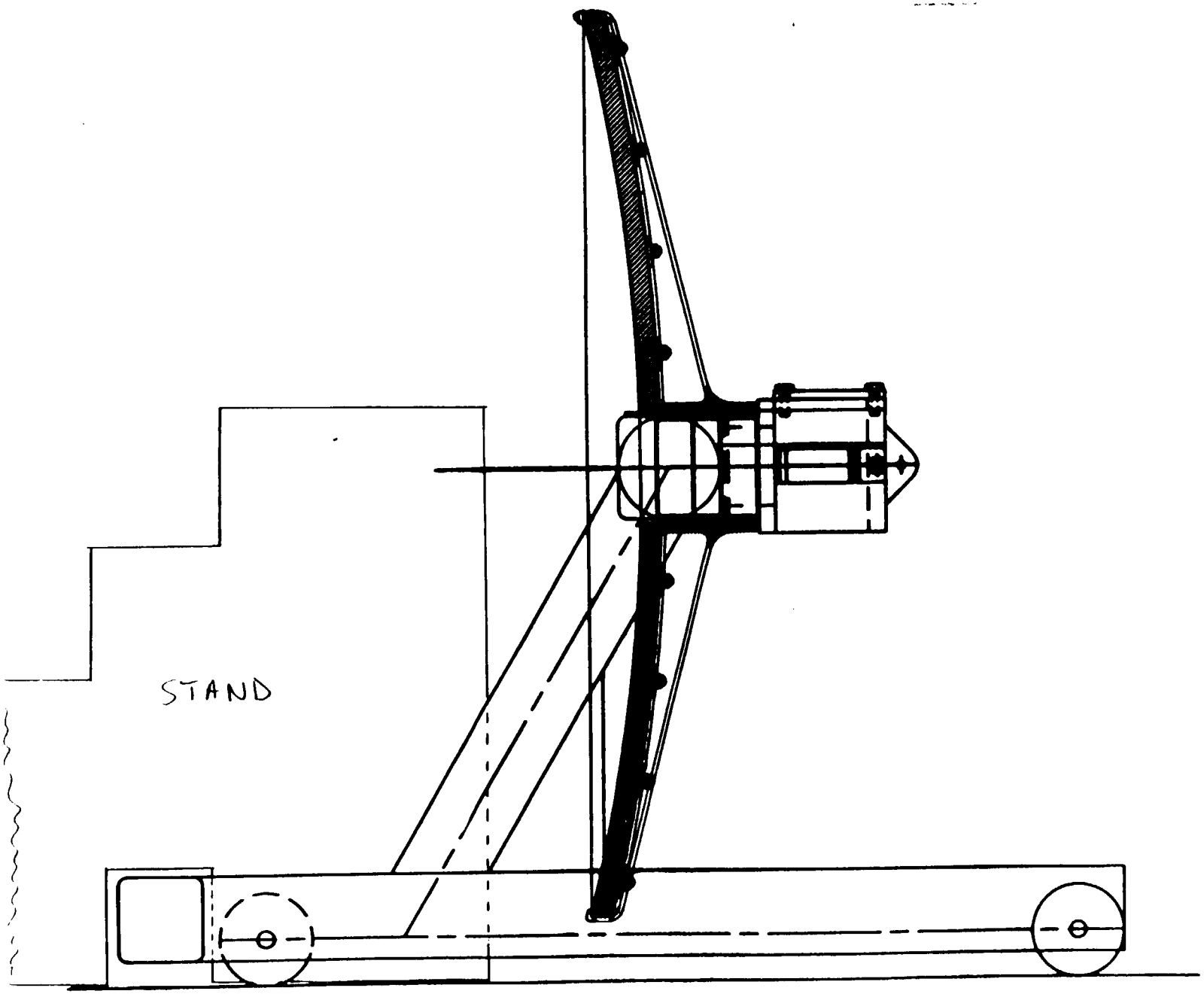

Figure 2.0-9

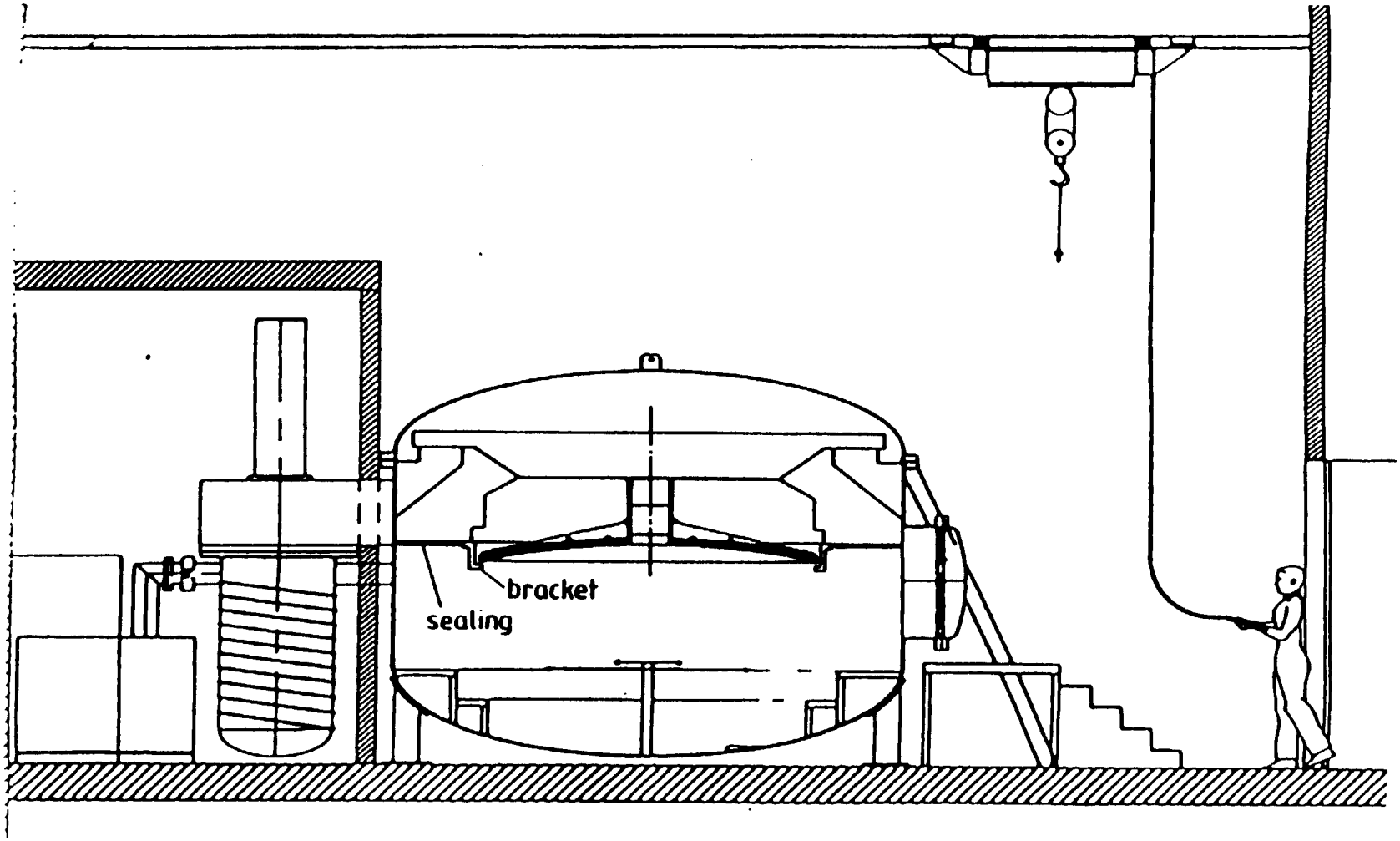

Figure 2.0-10

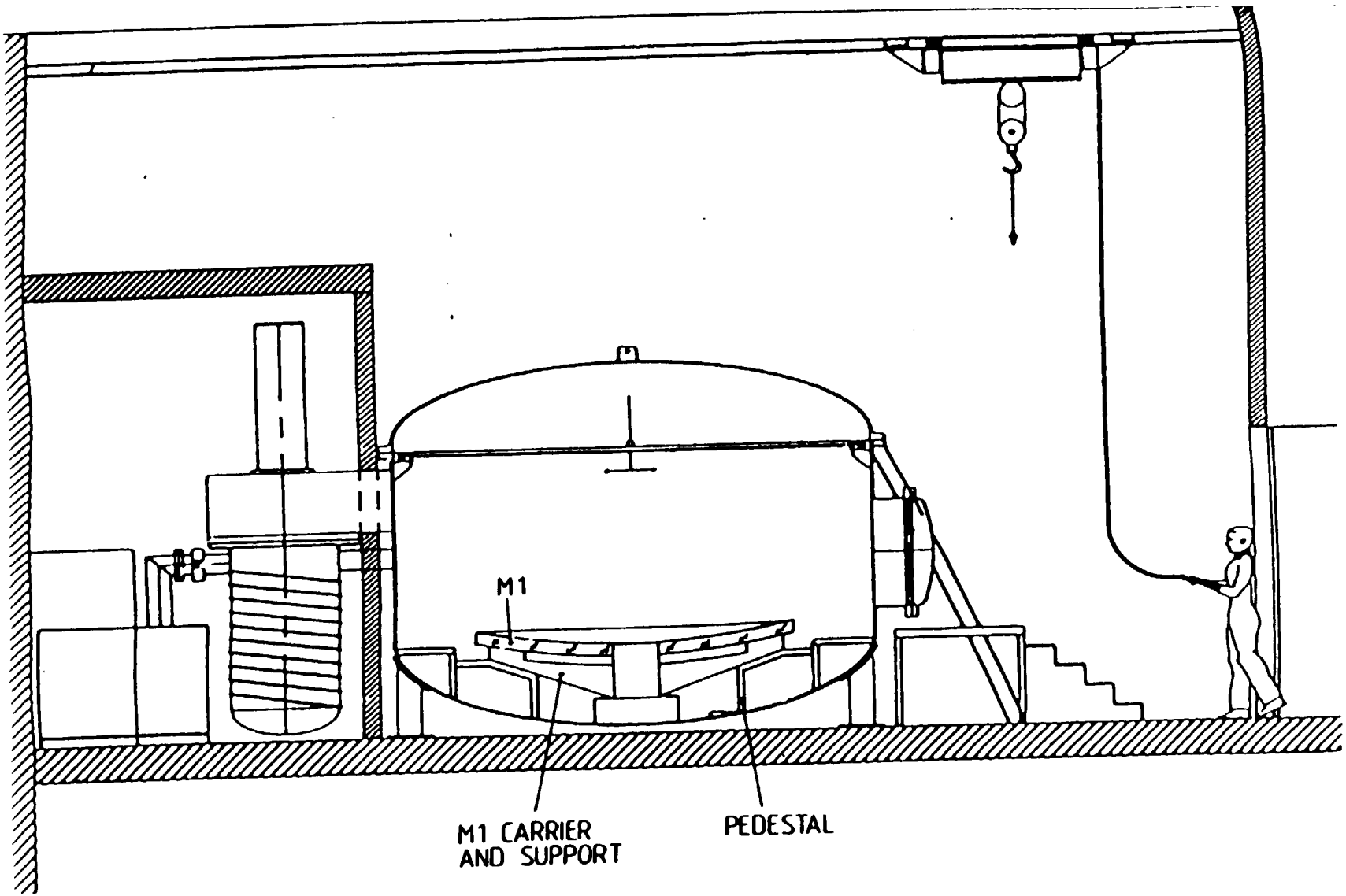

Figure 2.0-11

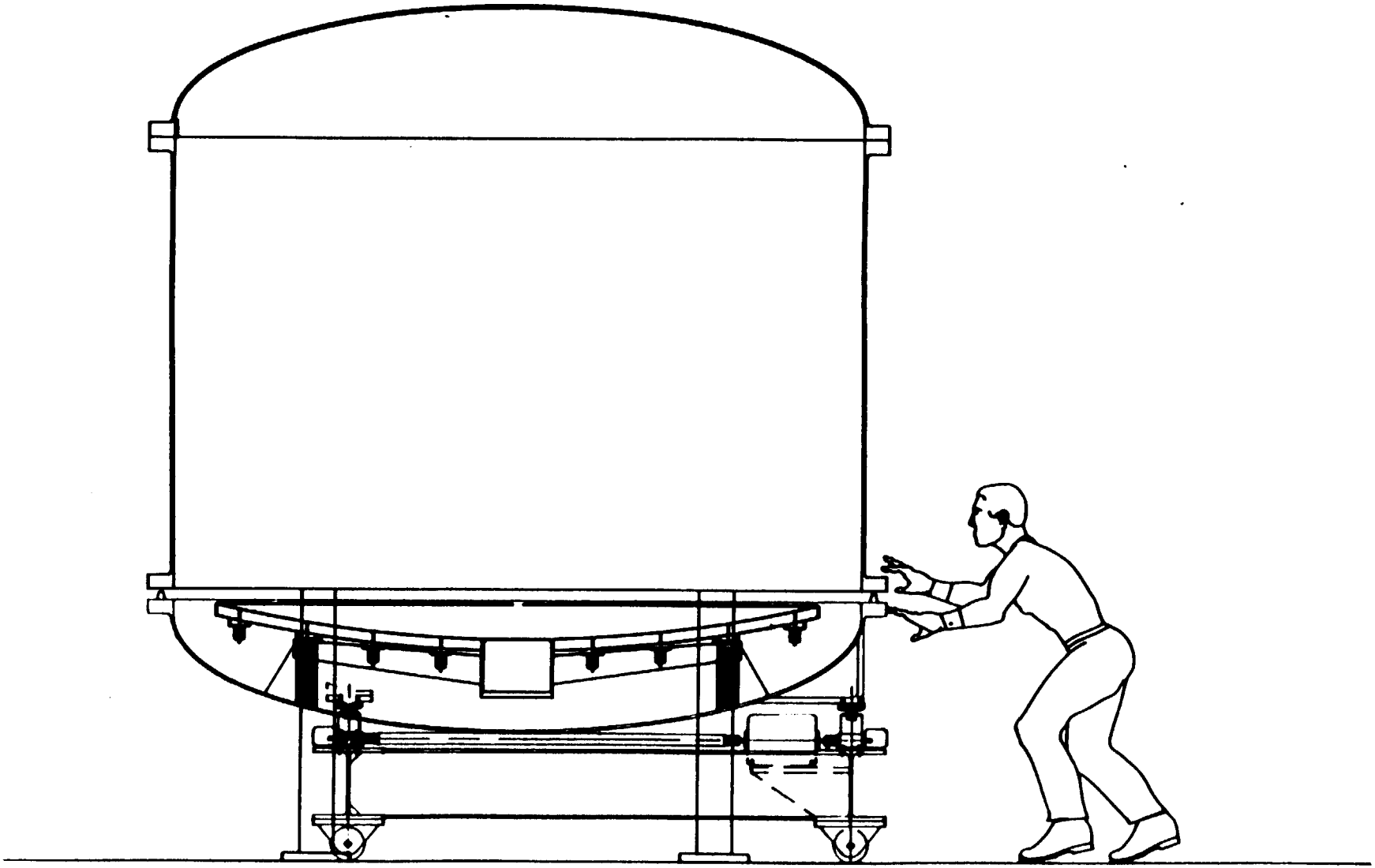

Figure 2.0-12

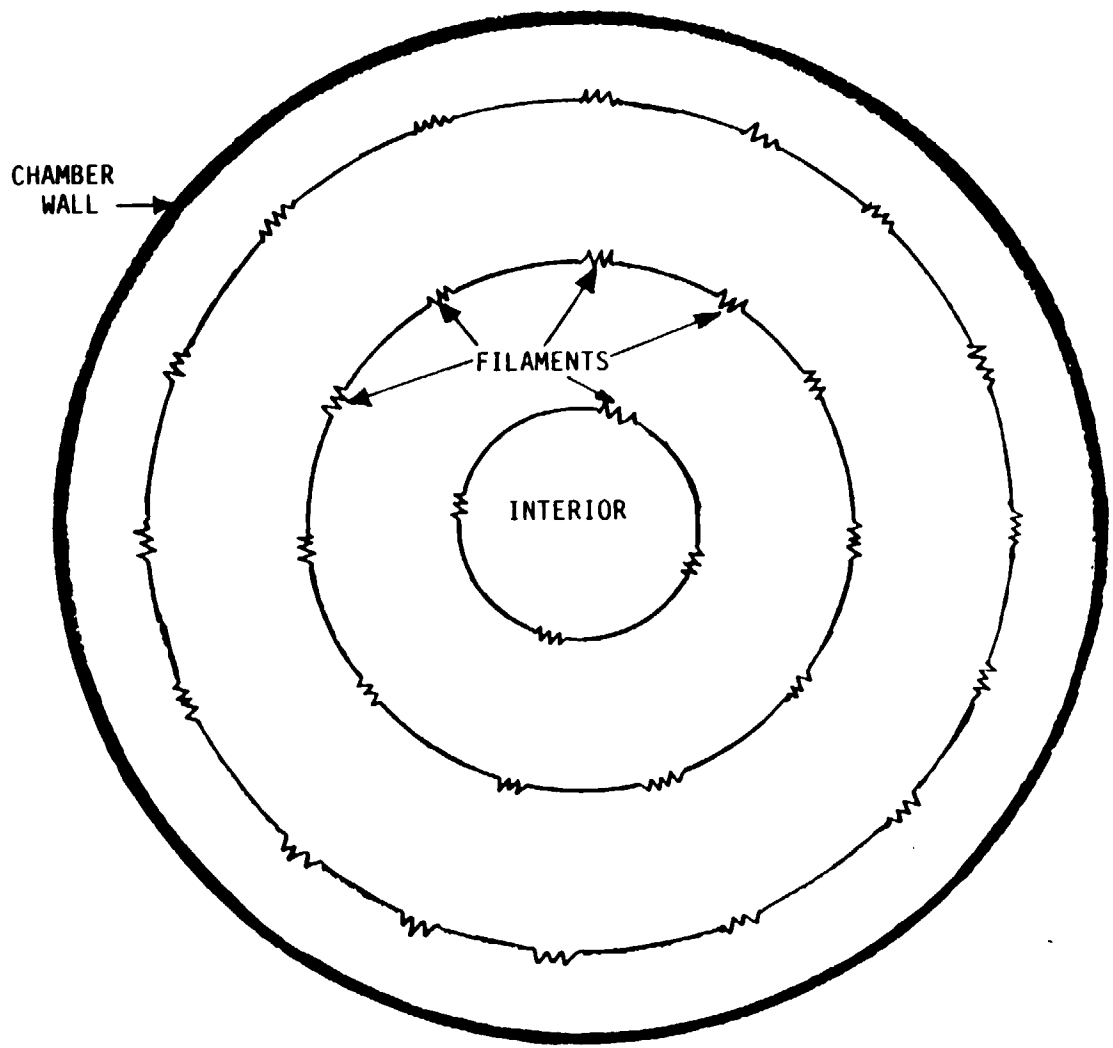

FILAMENT ARRANGEMENT

Figure 2.0-13

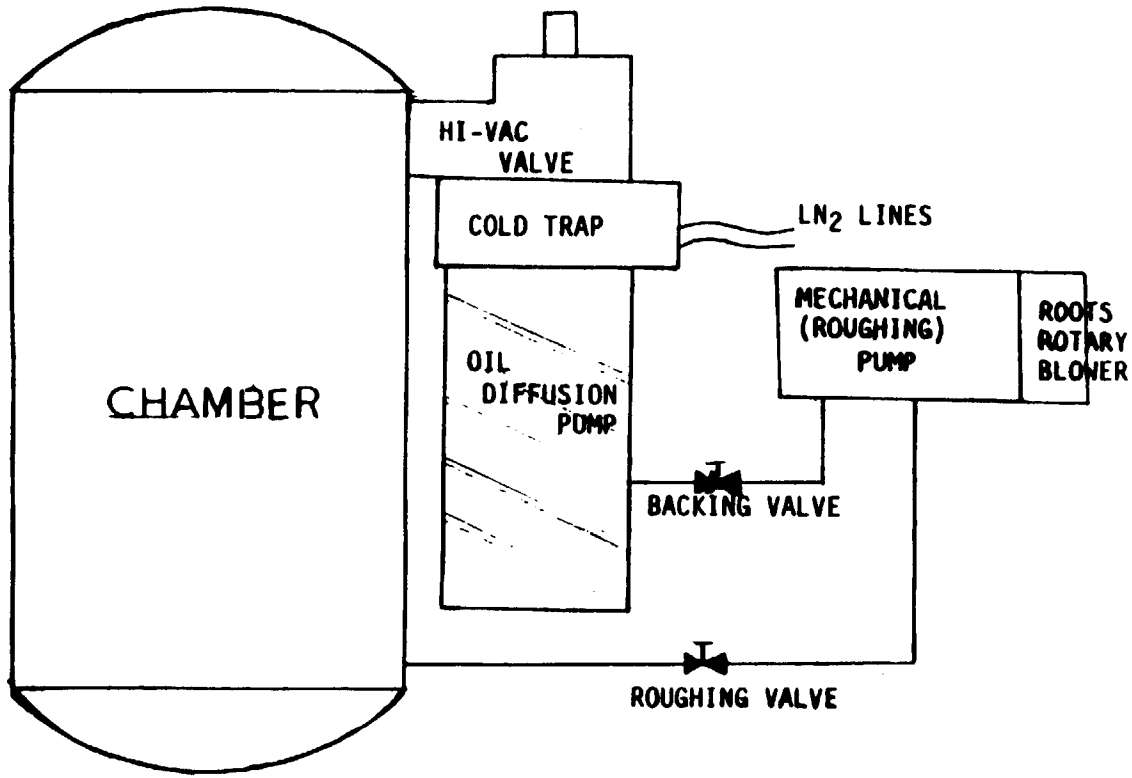

VACUUM PUMPING SYSTEM

Figure 2.0-14

3.0 THE FACILITY IN DETAIL

This section provides the bulk of the gathered information. It describes, in detail, how to remove the four mirrors from the airplane, transport them to the cleaning/stripping room, the cleaning procedures, how they will be brought to and loaded into the vacuum chambers for coating, the actual coating procedures, and the transit back to the airplane. It is written from the point of view that there are several options for cleaning, coating and handling the mirrors but ones that are prefered by the author. The reasons for the preference are stated. See Appendix C for a plan view of the entire facility. The major components are pointed out.

Section 3.1 contains the criteria to keep the cleaning and coating rooms at the desired level of clean. Section 3.2 has the step by step sequence for removing the mirrors from the plane. It also provides for their movement within the mirror cleaning and coating facility. Section 3.3 is all about cleaning and stripping all four mirrors. Section 3.4 is on coating. The options are looked at for all the mirrors.

3.1 CLEAN ROOM REQUIREMENTS

Ideally, it is desired that the mirror coating room meet Class 10,000 clean room conditions (see Figures 3.1-1 and 3.1-2) and that the cleaning/stripping room meet Class 100,000. In addition to the stated requirements on those sheets, the following design precautions will help to achieve a particle-free environment:

- the walls, floors and ceilings are to be made of materials that are particle-free or sealed with a washable high gloss finish.
- use lights flush with the ceiling. The idea is to have as little as possible hanging from the ceiling that could gather dust which would then fall on the mirror.
- maintain a slight positive pressure in the cleaning/stripping room and an even greater positive pressure in the coating room. Refer to Figure 3.1-0 for the way the air should flow, it is marked by arrows.
- place some sort of trap underneath the cranes to assure that no oil drips from them (Figure 3.1-3).
- the use of a second floor platform (see Figures 3.1-4 and 3.1-5) in the highbay. The platform allows for the construction of a permanent wall between the highbay and the mirror coating facility. This wall will provide a good seal from dirt and aircraft fumes. See Appendix G for further explainations, dimensions, and arguements for the use of this platform.
- a particle (dust,etc.) barrier situated above the platform in the highbay and cavity section of the airplane (see Figures 3.1-5 and 3.1-6). Its purpose will be to trap particles from the ceiling support beams, etc. Hence these particles will not fall onto the freshly recoated mirrors on their way back into the plane.

An option is to remove the criteria of a Class 10,000 and 100,000, use the listed precautions, and clean the mirrors under clean room modules (laminar flow hoods) of Class 100,000 or cleaner. These are purchased off-the-shelf (as shown in Figure 3.1-7). Once clean, the mirrors are covered, with plastic wrap or other suitable material, until placed in the chamber. This is the case no matter what level of clean room exists.

Most observatories pay little attention to which class of clean room exists in their facility but a strong suggestion is to follow the design precautions for a particle-free

environment listed on the previous page. This opens up the option of combining the cleaning and coating room into a single room. With the precautions listed above this would give a single room of about a class 100,000 without specifying any level of clean. This also would allow the use of only one bridge crane to service both the cleaning and coating areas.

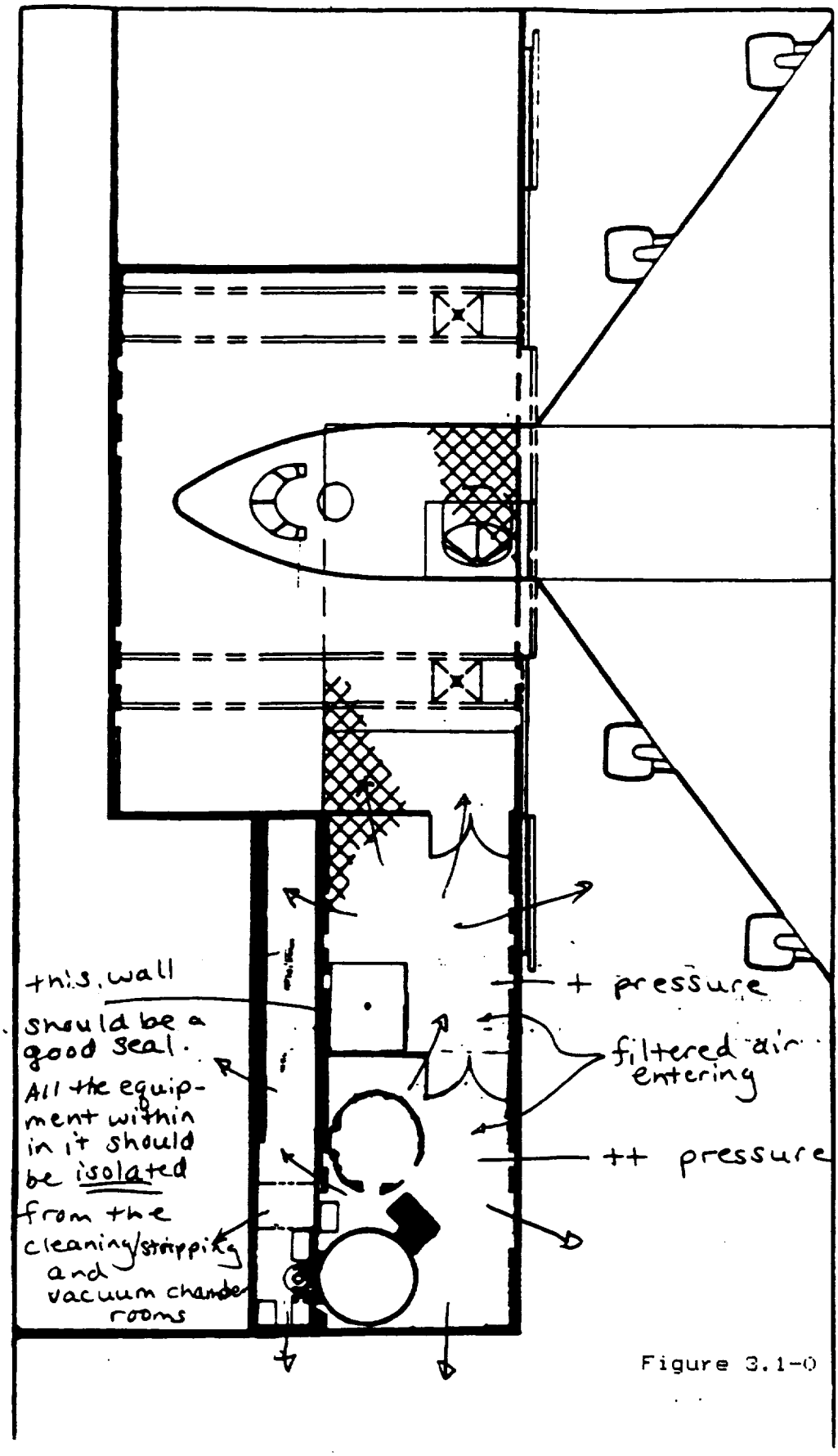

THIS DRAWING SHOWS THE MINIMUM PLAN AREA REQUIRED FOR TELESCOPE AND COMPONENT HANDLING, CLEANING AND COATING

Figure 3.1-0

AIR FILTER CONTROL INC

1023 CHESTNUT STREET P.O. BOX 5806 REDWOOD CITY, CALIFORNIA 94063 (415) 367-8310

LAMINAR FLOW METHOD

Class 10

90-100% coverage with Cambridge CAM-1 Laminar Flow Modules, 99.99% DOP Consider using Gold-Seal CAM-1 Modules (99.999% on .12 micron particles) if higher efficiencies are desired.

Air flow at 90 FPM or more based on gross ceiling area.

Raised floor return preferred, but low side wall returns are OK if aisles are narrow, and total divergence width does not exceed 18 ft.

Class 100

80-100% coverage with Cambridge CAM-1 Laminar Flow Modules; air flow 90 ± 20 FPM based on gross ceiling area.

Low side wall returns common; acceptable divergence width 24 ft. max.

DILUTION METHOD

Class 1000

60-90 air changes per hour; does not need laminar flow modules. Low return preferred.

If room is filled with laminar flow benches, judgment might indicate (for example) the use of 50% of the bench recirculated air that is not being exhausted toward the 60-90 air change rate.

99.97% HEPAs in fan discharge or behind ceiling diffuser (makes no difference). Non-laminar air distribution devices are normally used.

If HEPAs are used in ceiling with no grilles, dumping can be expected and temperature differential of more than 6-7° will be uncomfortable.

Class 10,000

Same as Class 1000 except 50-60 air changes.

Ceiling returns commonly used, thought low returns are preferred.

Class 100,000

Outdated class; if specified, use 20-30 air changes per hour, or CFM sufficient for cooling load.

Filter Selections:

A. Cambridge 95% ASHRAE HiFlo Bag Filters will usually suffice with an occasional "spike" above 100,000 due to outside count.
B. Cambridge Micretain Absolutes (95% DOP) will always assure Class 100,000. Generally applied on pressure side of fan with Cambridge 85% HiFlo Bag Filters on suction side (sometimes 30% pleated).

* * * * *

Note: Above guidelines are based on experience factors and are not guaranteed. Clean rooms can exceed design criteria if disrupted by personnel, or are not maintained and operated properly.

Cambridge
P.O. BOX 4906
SYRACUSE, NEW YORK 13221

RELATIVE SIZE CHART OF COMMON AIR CONTAMINANTS

PARTICLE DIAMETER, MICRONS-LOGARITHMIC SCALE

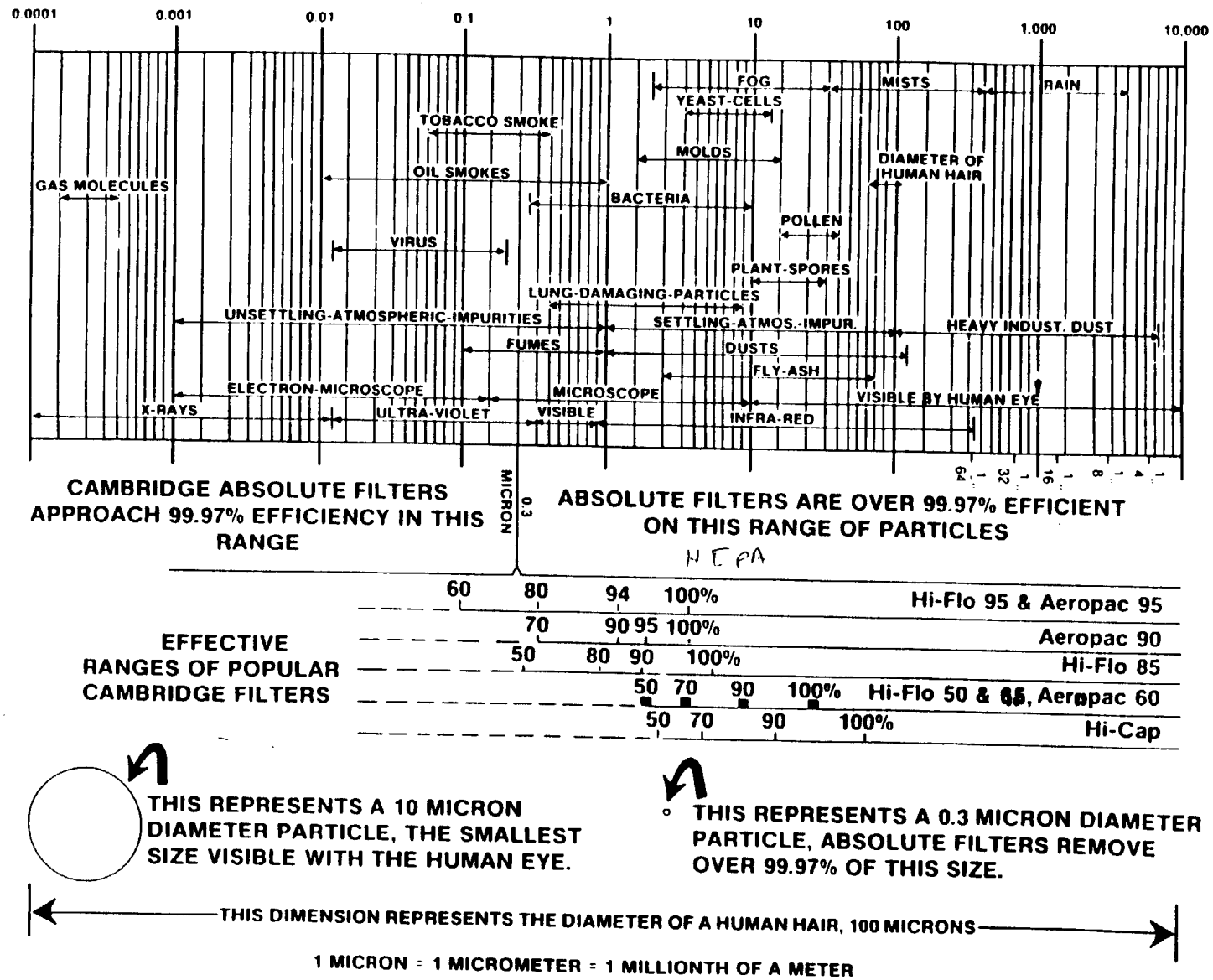

Figure 3.1-2

(CM-382A)
Rev 10/78

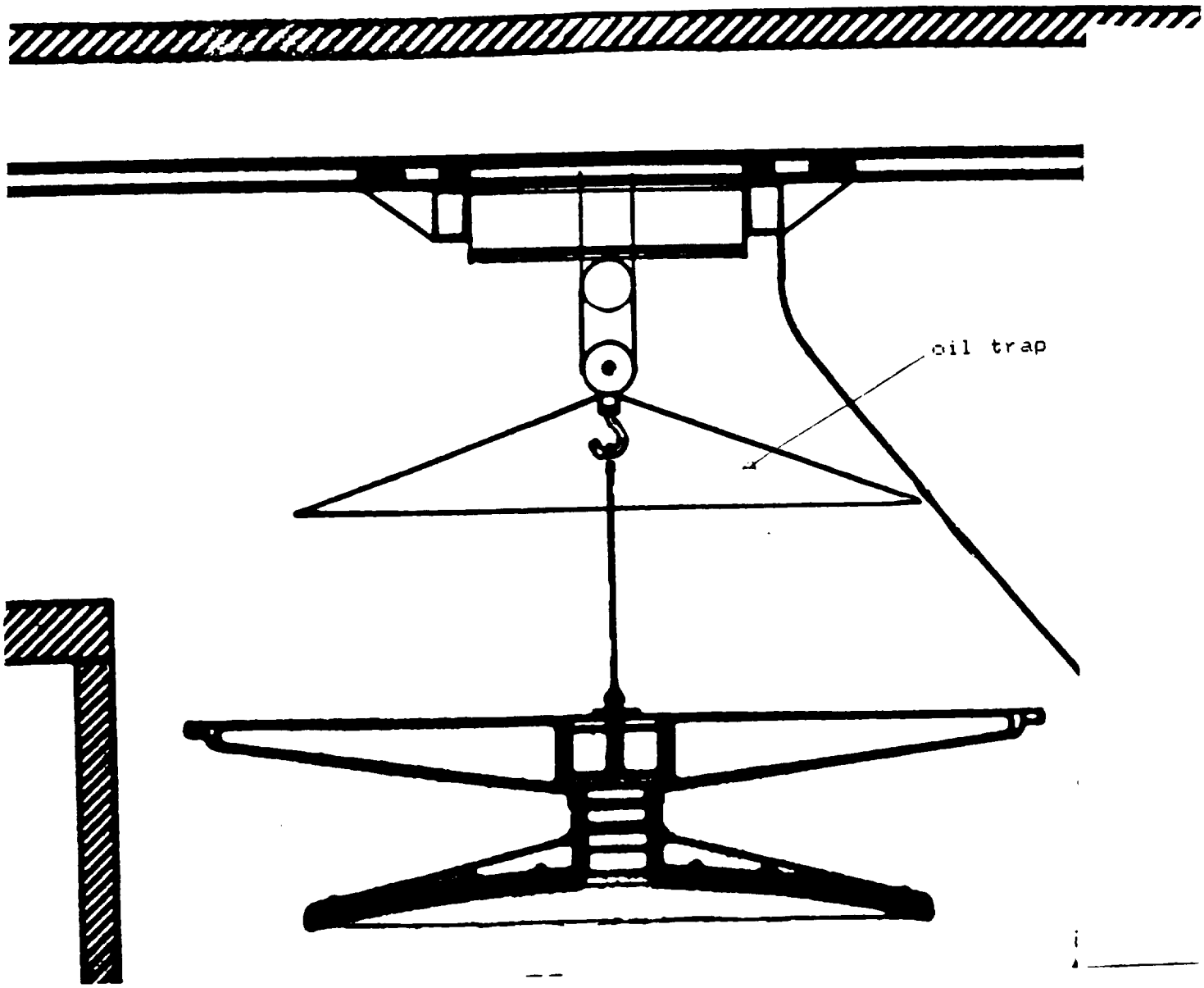

Figure 3.1-3

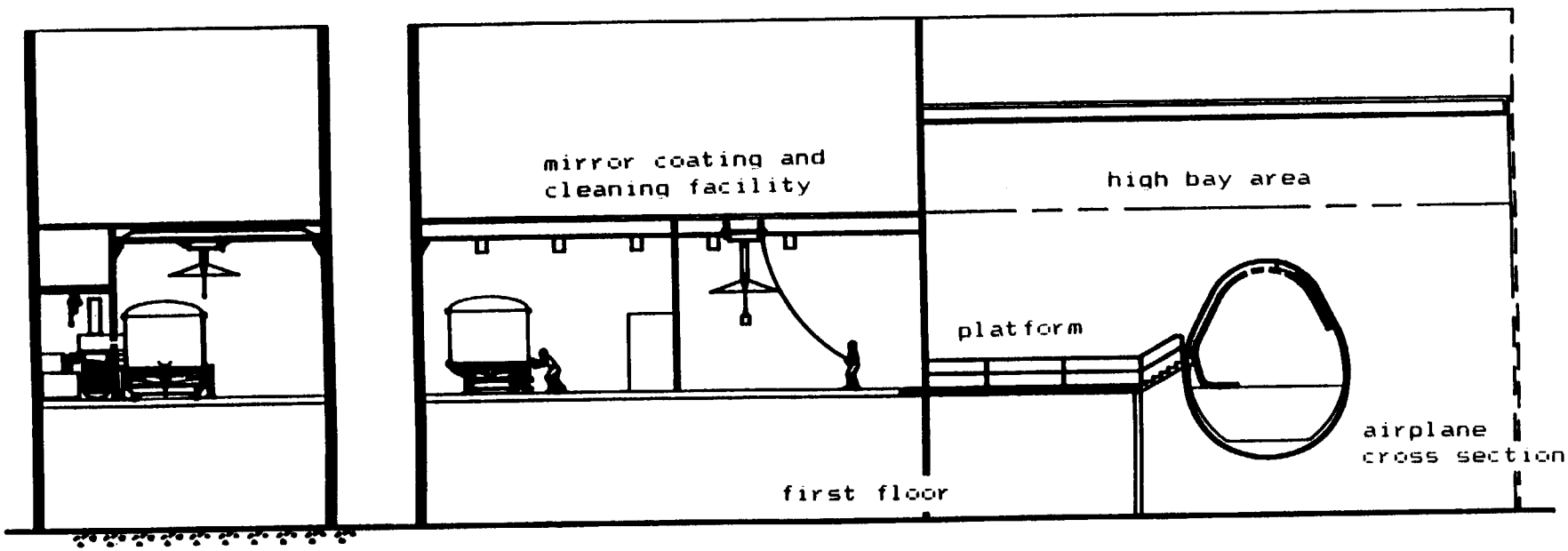

ELEVATION VIEW

Figure 3.1-4

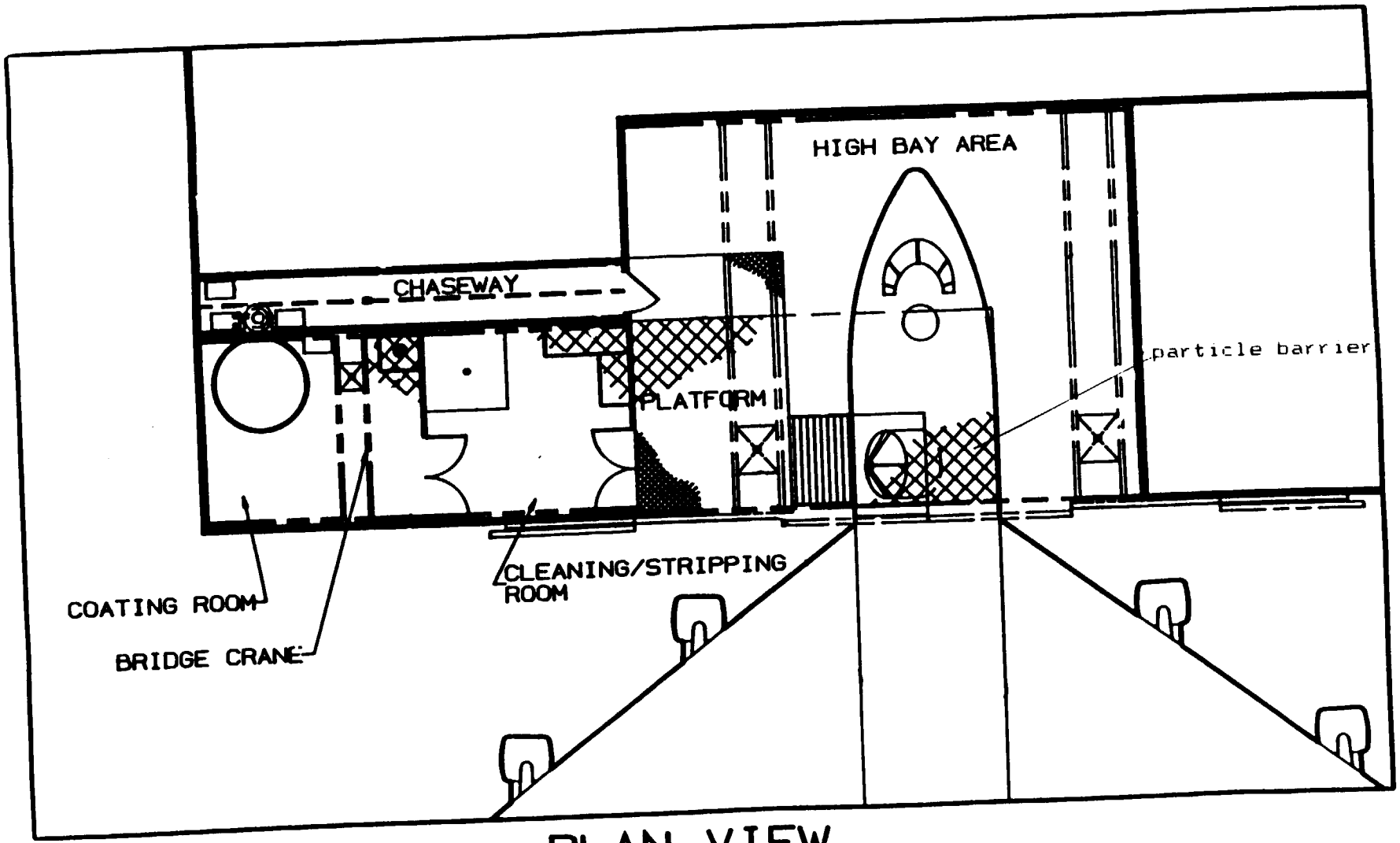

PLAN VIEW

Figure 3.1-5

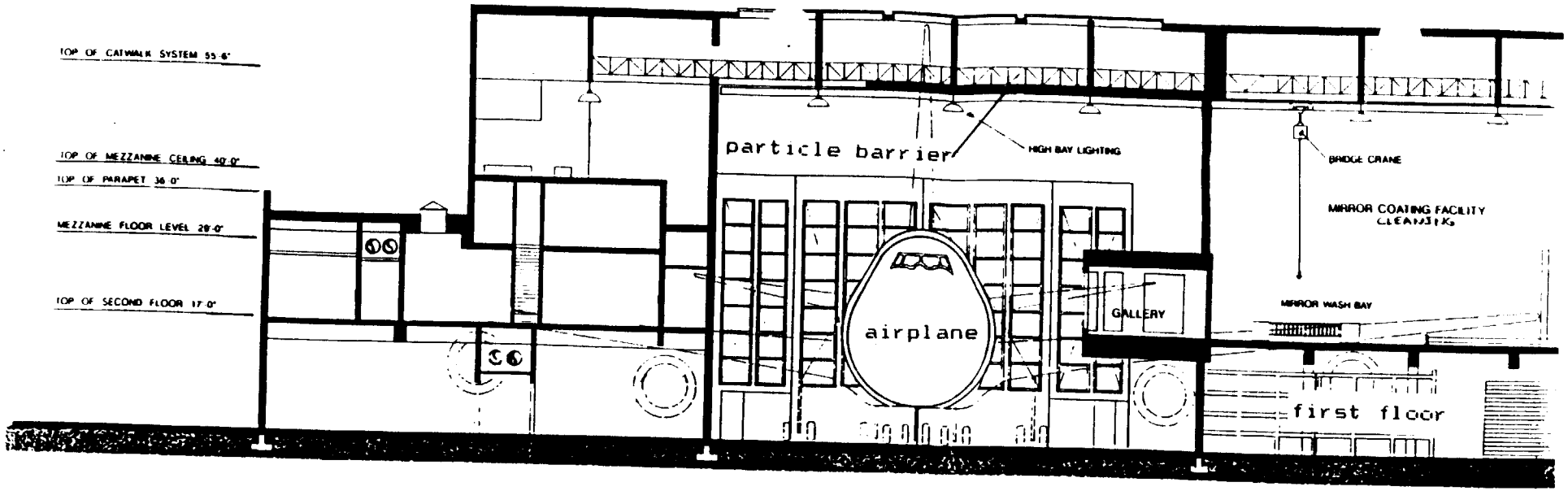

SECTION A

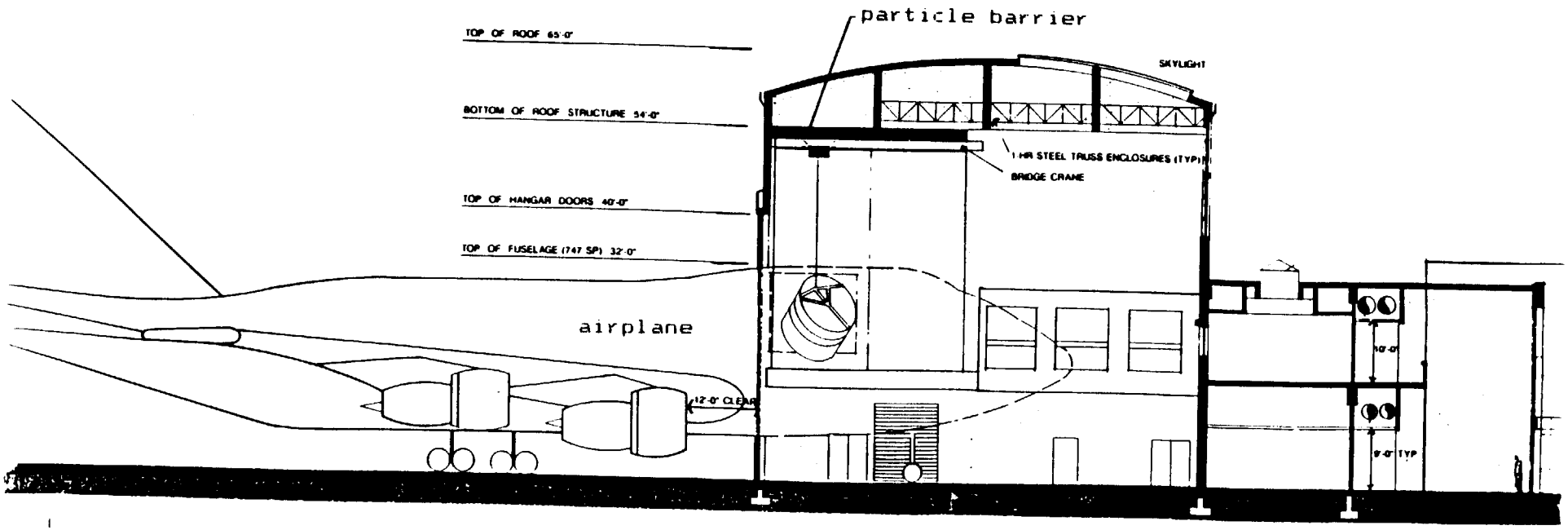

SECTION B

Figure 3

[redacted]

Model 850

Mini-Cleanrooms

Economical, Portable Enclosure Systems that Work

At last, an economical solution to your micro-fine particle management and contamination problems. If you need a simple, clean enclosure system and you don't have a hundred thousand dollar budget, then Servicor's Mini-Cleanrooms are right for you. The portable units are self-supporting metal frames. See-through vinyl material that keeps the clean air in, and contaminating micro-fine particles out.

Features and Benefits

- Increase the cleanliness, quality, yield and consistency of your clean work area.
- Sturdy construction.
- Standard units up to 8'x 8'. Four curtain materials and three Hepa filter efficiencies available.
- Vestibule option offers easy access between gowning and clean areas while protecting air quality.
- Custom made to your specific application and configuration — often using your existing equipment.
- Save money. Compare our clean enclosures with the cost of conventional cleanroom construction.

Applications

The cleanroom concept was developed by the medical profession to protect their patients against exposure to infection and disease. Many industries including space, pharmaceutical, food processing, electronics and high tech manufacturing have since adopted cleanrooms as barriers against particle contamination.

The enclosures provide a separate chamber for isolated research requiring a work area without interference from other projects or departments. In addition, they function as control over projects requiring tight audit trails, such as component parts cleaning and packaging.

The Servicor System

Servicor's Mini-Cleanrooms offer a simple, economical method for particle management and containment.

The design of the system is a portable frame unit with transparent, flexible vinyl curtains. The frame and legs are sturdily constructed of aluminum or steel tubing finished with hospital white epoxy paint.

The standard enclosure walls are made of a see-through 20 mil PVC material. This clear material allows viewing of equipment and the work stations. In addition, the operators do not feel shut in as they frequently experience within hardwall cleanrooms.

The clear shields are strategically mounted to the Hepa filter unit. They act

SERVICOR, INC.
Clean Enclosure Systems That Work

ORIGINAL PAGE IS
OF POOR QUALITY

as a containment device to keep the clean, filtered air flowing down over the critical work area. The walls and shields are also available in optically clear, non-outgassing, antistatic, 16 mil vinyl. For privacy, hospital white 12 mil vinyl or room-darkening black is available.

The clean, Class-100 air is supplied by a Hepa filter that is 99.97% efficient for particles of 0.3 micron or larger. The self-contained 1/2 HP blower/motor (110 VAC) keeps the Class-100 air flowing through the Hepa filters and throughout the enclosure's interior. Hepa filters of greater efficiency are available.

A Quick and Clean Installation

Installation is fast, easy and CLEAN to meet your rapidly changing cleanroom needs or emergencies. Servicor's simple installation system provides the necessary hardware, pre-drilled tubing, fasteners and simple, printed instructions.

Let Us Help You

Our experienced engineering team will analyze your general requirements, define your needs and design a clean enclosure system to your specifications. Best of all, it's guaranteed to work.

In California, Servicor provides complete installation and cleanroom custom modification service. Our factory-trained field engineers offer worldwide support to assist you in layout and assembly of clean enclosure systems that work.

There's a Servicor Mini-Cleanroom Right for You

Model 850 8'L x 5'D x 7'0" H
It comes complete with framework, wall panels and access door system. Also included is a 24" x 48" self-contained blower/motor (110 VAC) and a Class-100 particle air filter for overhead mounting.

Model 880 8'L x 8'W x 7'0"H
It comes complete with framework, wall panels and access door systems. Also included is two 24" x 48" self-contained blower/motors (110 VAC) with Class-100 particle air filters for overhead mounting.

Model 185 8'L x 5'W x 7'0"H
One side opens for adapting a vestibule to laminar flow benches. It comes complete with framework, wall panels and access door systems. Your choice of one or two 24' x 48' self-contained blower/motors (110 VAC) with Class-100 particle air filters for overhead mounting.

Custom Systems that work are designed in any size or shape to meet your requirements. Also, open-end, horizontal laminar flow tunnel frames and walls are manufactured to order.

Specifications—Standard Model

Overall Size	
Height	7'
Length	8'
Width	5'
Frame	Aluminum or Steel tubing
Overall Assembly Weight	Approx. 350 lbs.
Hepa Air Filter	99.97% efficient on particles of 0.3 microns
Variable Speed Air Flow	Ranges from 60 FPM to 110 FPM
Air Changes	Approx. 4 per minute
Noise Level	Conforms to OSHA noise standards
Wall material	20 mil clear vinyl with quick release, non-particulating velcro attachment strips
Strip Access Doorway	Standard 8" wide, clear vinyl material with hanging hardware

Options

Overall Size
- Maximum 8' Length
- Maximum 8' Width

Casters

Light Fixtures

Electrical Outlets

Flame Retardant Materials

Pass-Through Windows

Zippered Doorways

Garment Change Vestibule

Frame
- Aluminum
- Steel painted white
- Steel painted designer colors

Hepa Air Filters
- 99.97% efficient
- 99.99% efficient
- 99.999% efficient

Wall materials
- Antistatic, non-outgassing, see-through vinyl, 16 mil
- Black opaque vinyl, 12 mil
- White opaque vinyl, 12 mil

3.2 MIRROR HANDLING

There are several aspects to mirror handling. The two most important are how to keep the mirror clean while moving it, and how to assure it's safety. The main difficulty lies in handling the primary mirror. It is quite large in diameter (2.7 meters) while extremely thin (0.06 meters). Any mirror handling fixture is designed, first and foremost, to assure the safety of the mirror.

This section starts with the removal of all four mirrors from the airplane in Section 3.2.1. It then describes, in each of the various subsections under 3.2.2, how each of the mirrors is to be moved from one step of the cleaning/coating process to the next.

3.2.1 Removal of Mirrors From the Plane

The following sequence of figures, 3.2.1-0 through 3.2.1-2, show the installation of the major telescope components. They will be removed in the opposite order through the use of the manipulator. Figure 3.2.1-3 shows the layout of the major telescope components and their nomenclature. Note that some figures contain M1, M2, M3/1 and M3/2 which refer to the primary mirror, secondary mirror, dichroic tertiary and the second tertiary mirror respectively. The described procedure starts with the assumption that the airplane is in it's position in the high bay.

1) A special adaptor, called the secondary mirror/spider removal device, is attached to the 10-ton manipulator (Figure 3.2.1-4).

2) The cavity door is opened.

3) The removal device is aligned with the spider legs. It telescopes in (Figure 3.2.1-5) and is clamped on as seen in Figure 3.2.1-6.

4) The nuts of the central screws are unscrewed (Figure 3.2.1-6).

5) The spider is detached and lifted through the cavity and away from the airplane.

6) The spider is placed on a special spider storage stand located on the platform (see Figures 3.2.1-7 and 3.2.1-8a).

7) The mirror is detached from the spider and lifted manually onto a small hand push cart for transit to the cleaning room (Figure 3.2.1-8a). This cart is purchased off the shelf. The option exists to design an apparatus, as suggested by the telescope system contractor, as seen in Figure 3.2.1-8b. This device hydraulically lifts the mirror down from it's support.

8) The adaptor for removing the secondary mirror/spider is replaced by another called the tertiary mirror removal device (Figure 3.2.1-9).

9) The removal device aligns with the tertiary tube (housing). It extends forward and attaches to the tube (Figure 3.2.1-9).

10) The tube is detached (see Figure 3.2.1-10) and lifted through the cavity.

11) The tertiary tube is then placed on a special stand (Figure 3.2.1-11) located on the platform (Figure 3.2.1-12).

12) The tertiary mirrors are removed manually and placed on the secondary/tertiary mirrors transport cart for transit to the cleaning room (Figure 3.2.1-13).

13) The adaptor for removing the tertiary mirrors is replaced by the special primary mirror removal device (see Figure 3.2.1-14).

14) The primary mirror is detached. The fixation screws, for the primary mirror cell attachment flange, are released. The cell is then detached (see Figures 3.2.1-15 and -16).

15) The primary mirror removal device is attached to the primary mirror cell through the center hole and about the outer edge.

16) The mirror is removed as is outlined in Figures 3.2.1-17 through 3.2.1-22.

17) It is placed on the primary mirror transport cart (Figures 3.2.1-23 and 3.2.1-24).

For placement back into the plane, the reverse order of steps 1 through 24 is followed. This starts with removing the freshly recoated primary mirror support cell from the transport cart and placing it back into the telescope.

The Telescope Assembly Defination Final Report by ZEISS, INC. states approximately the same procedure as outlined above for removing the mirrors from the airplane. The excerpts from that report are contained in Appendix E of this report.

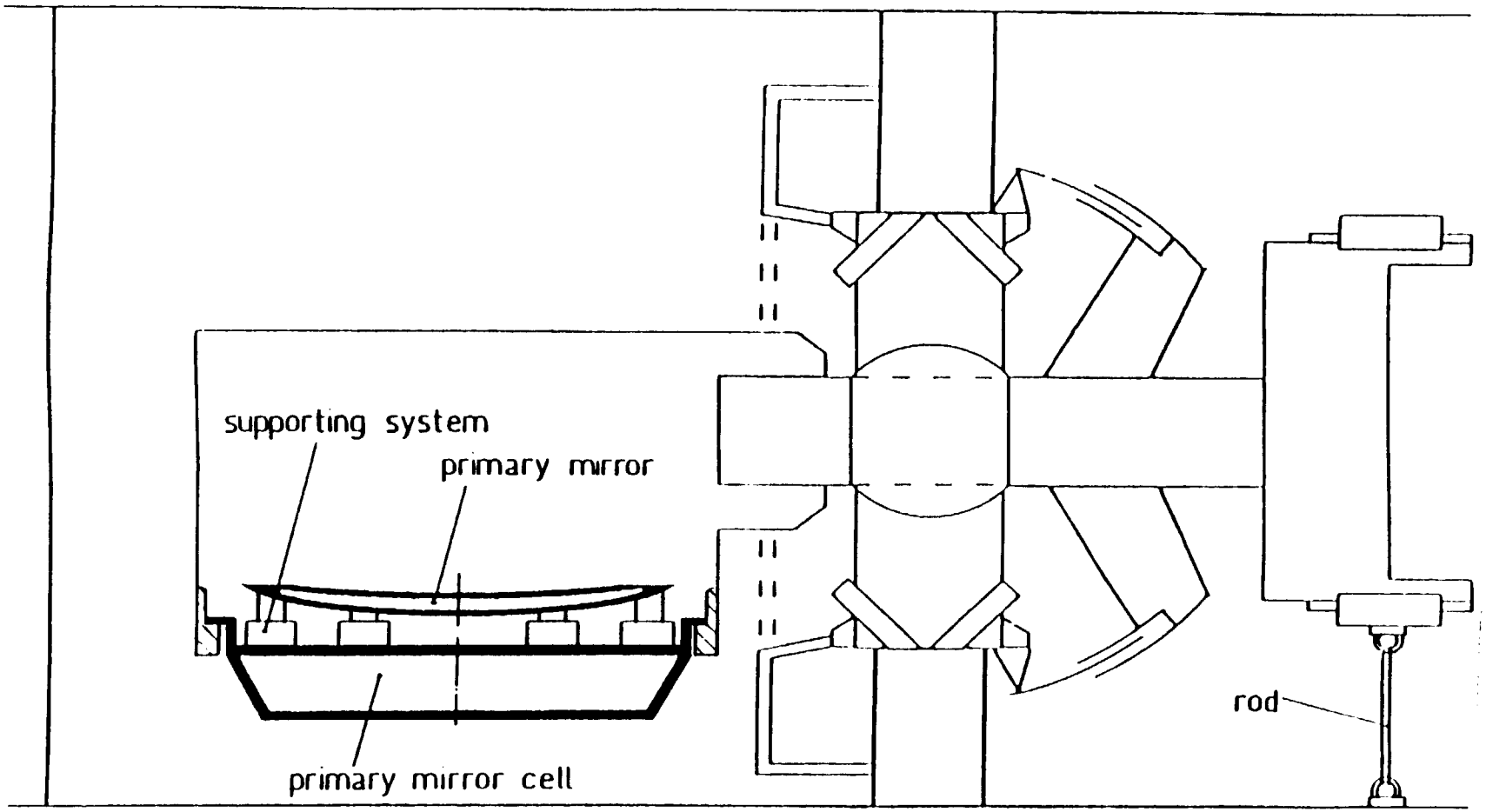

PRIMARY MIRROR INSTALLATION

Figure 3.2.1-0

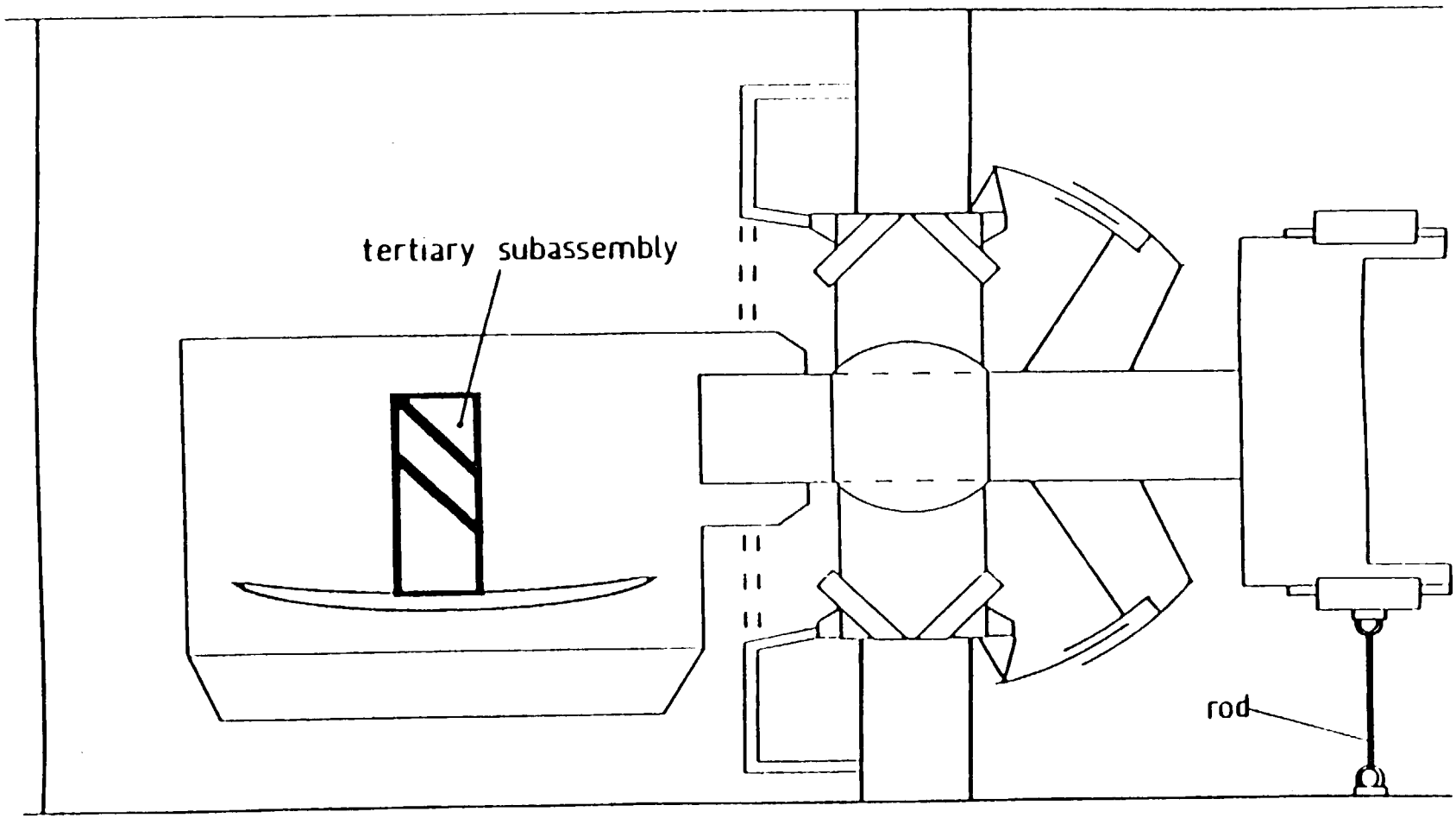

TERTIARY MIRROR INSTALLATION

Figure 3.2.1-1

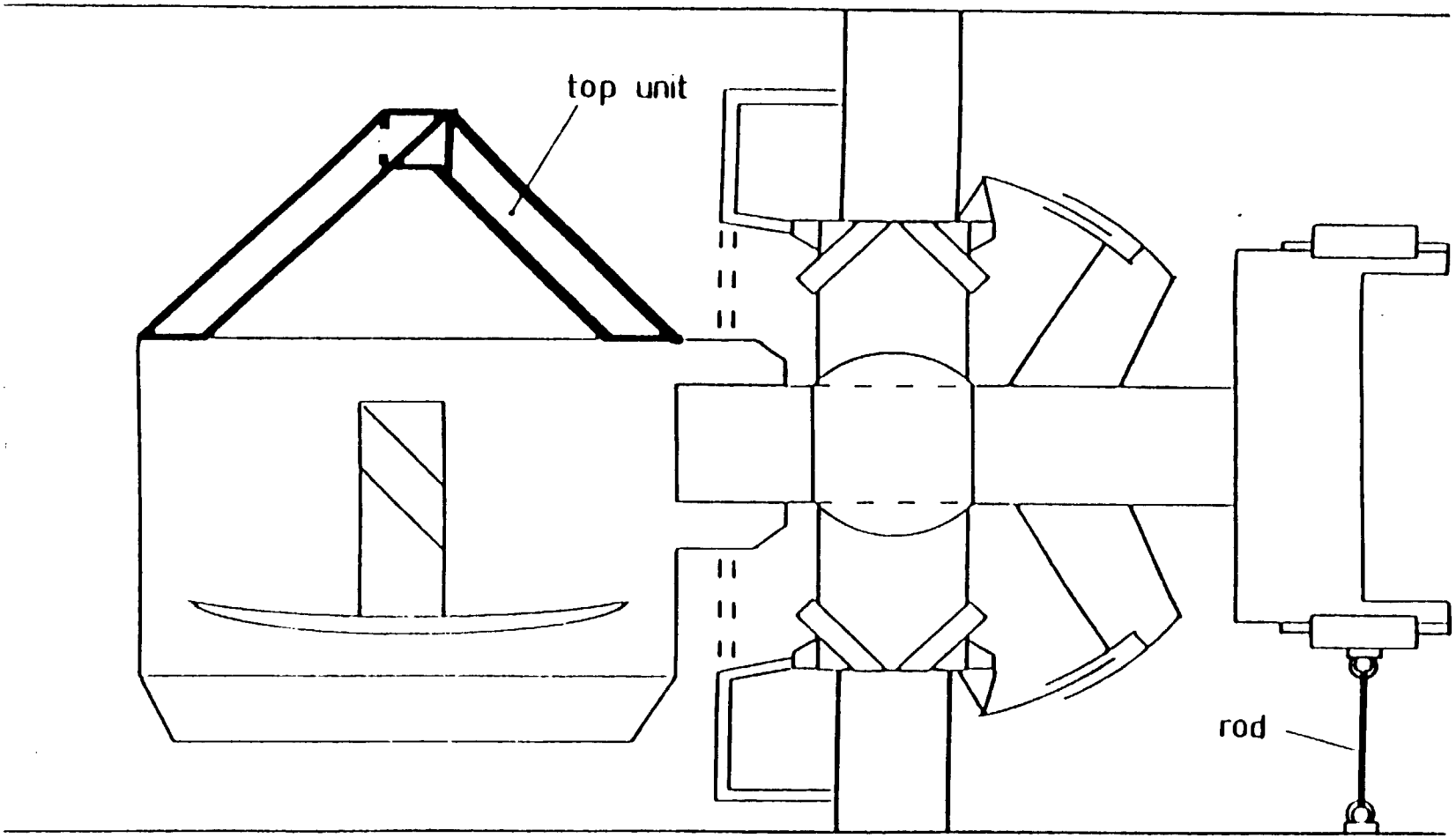

TOP UNIT INSTALLATION

Figure 3.2.1-7

Nomenclature of the Different Telescope Parts

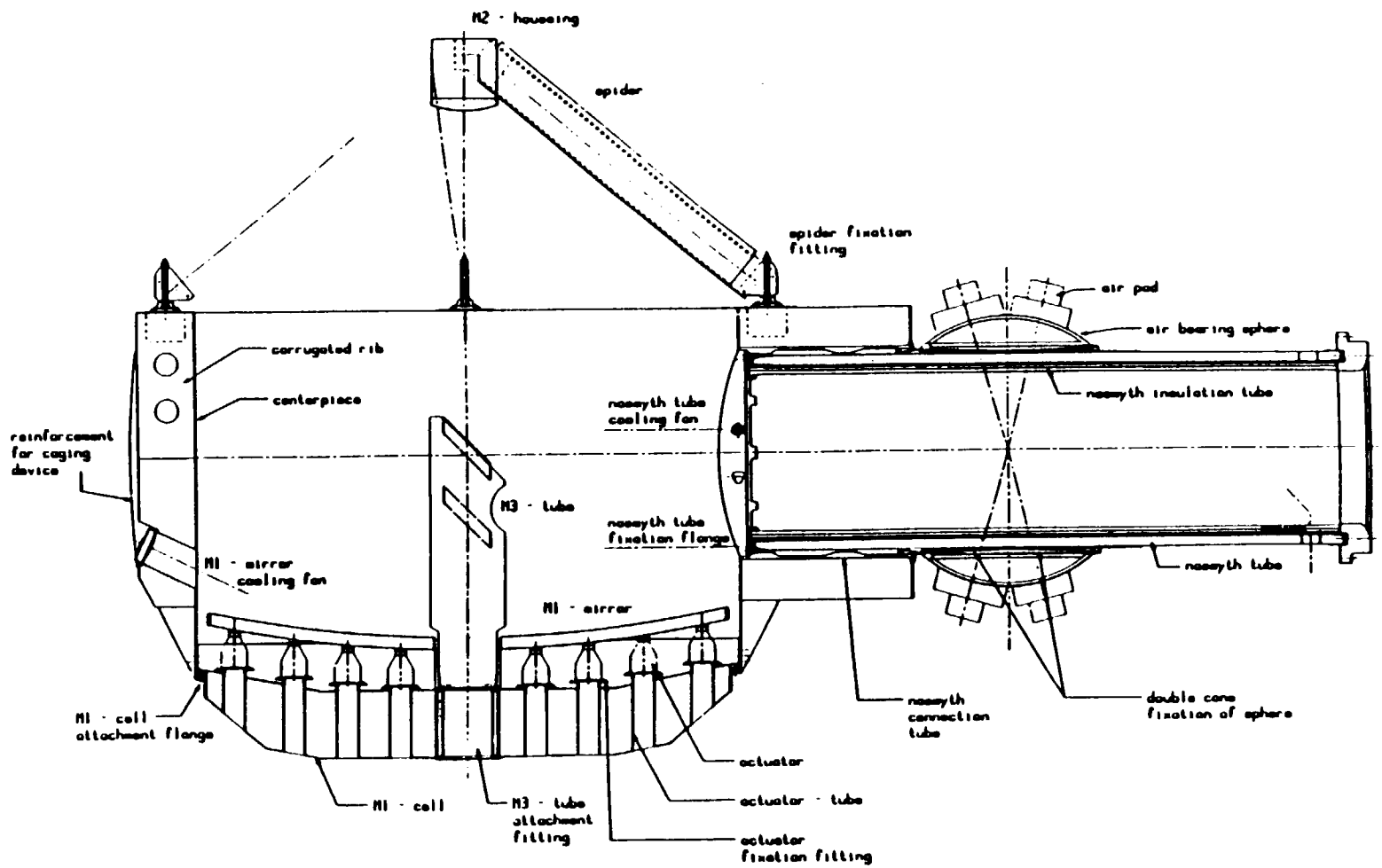

Figure 3.2.1-3

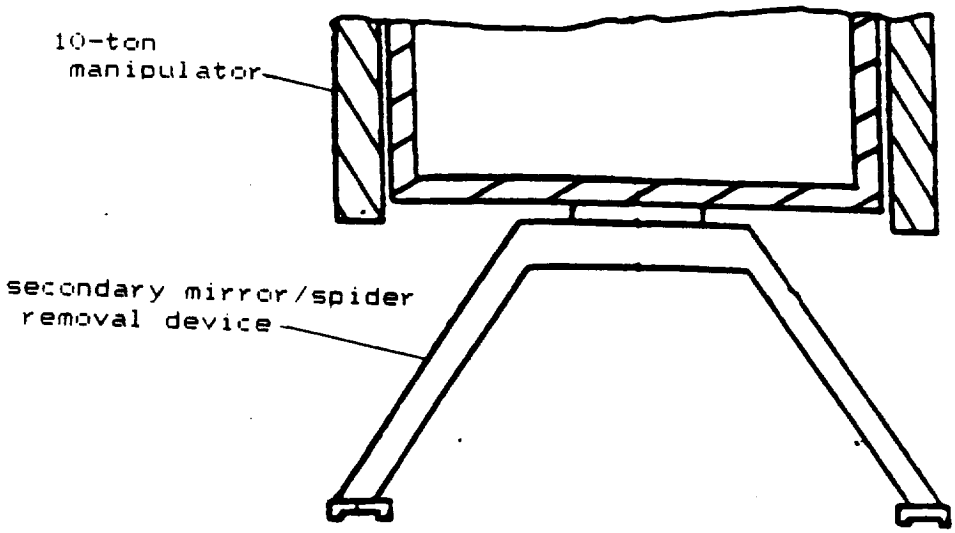
10-ton
manipulator
secondary mirror/spider
removal device

Figure 3.2.1-4

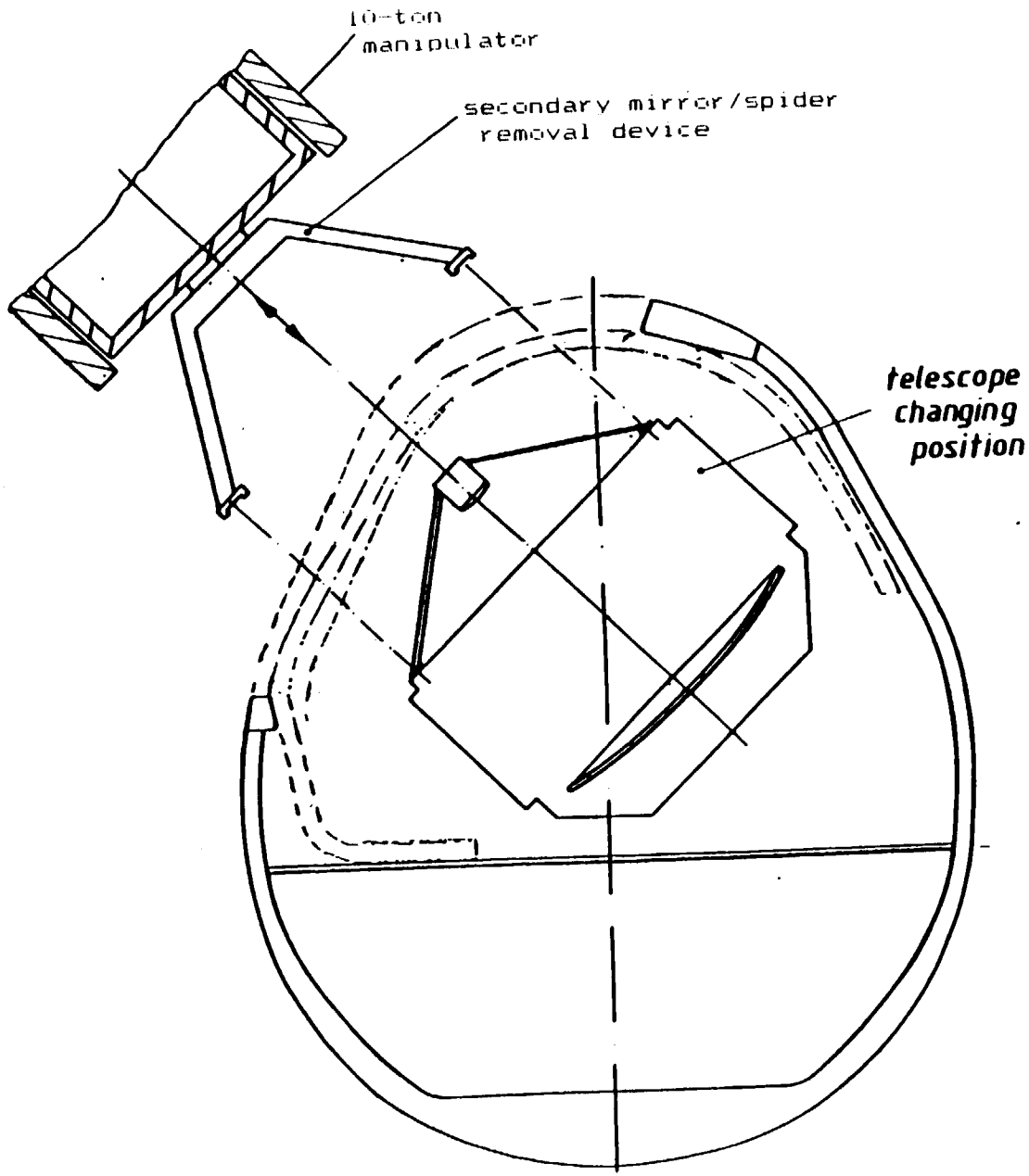
10-ton
manipulator
secondary mirror/spider
removal device
telescope
changing
position

Figure 3.2.1-5

Spider Fixation Fitting

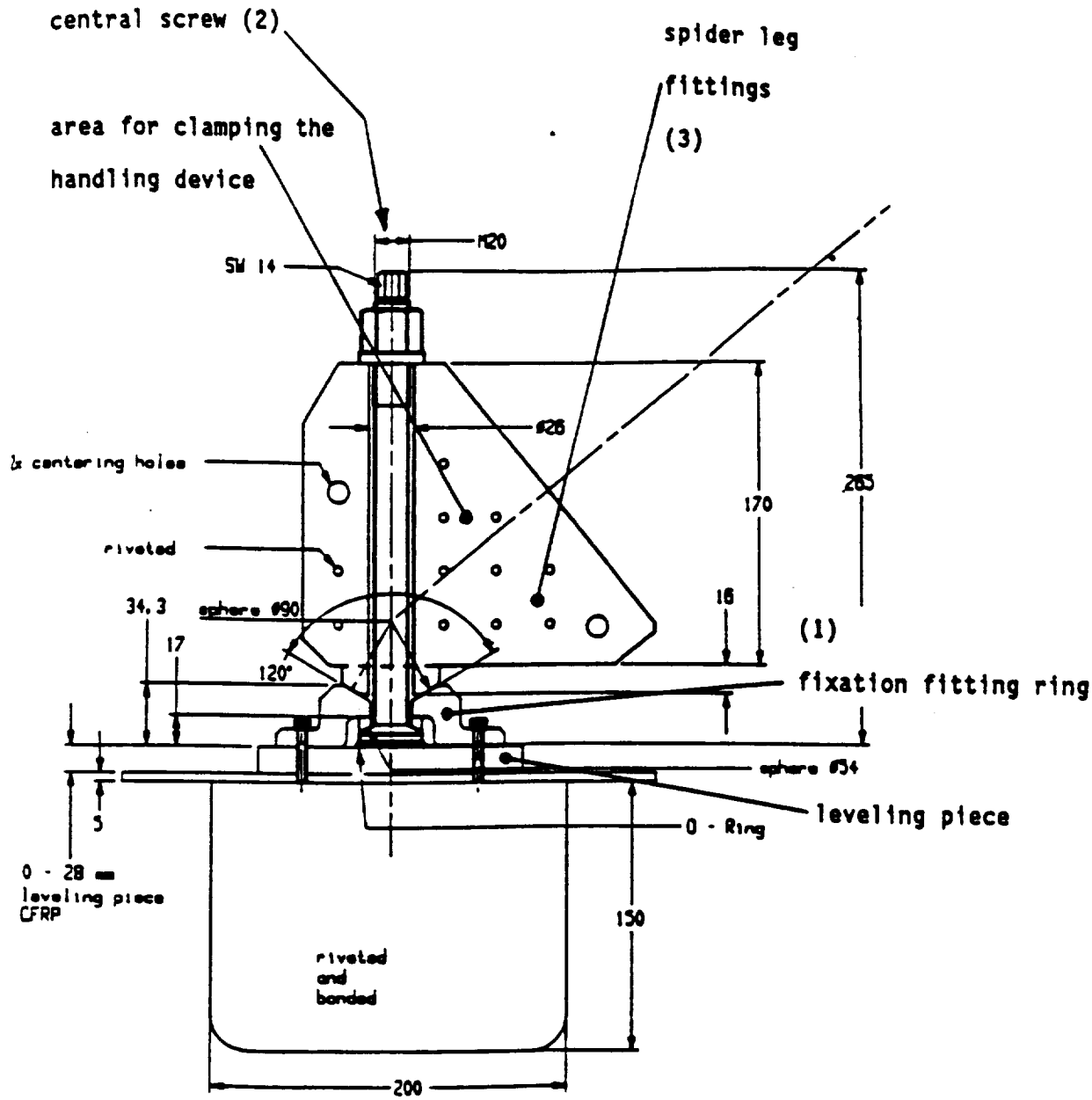

Figure 3.2.1-6

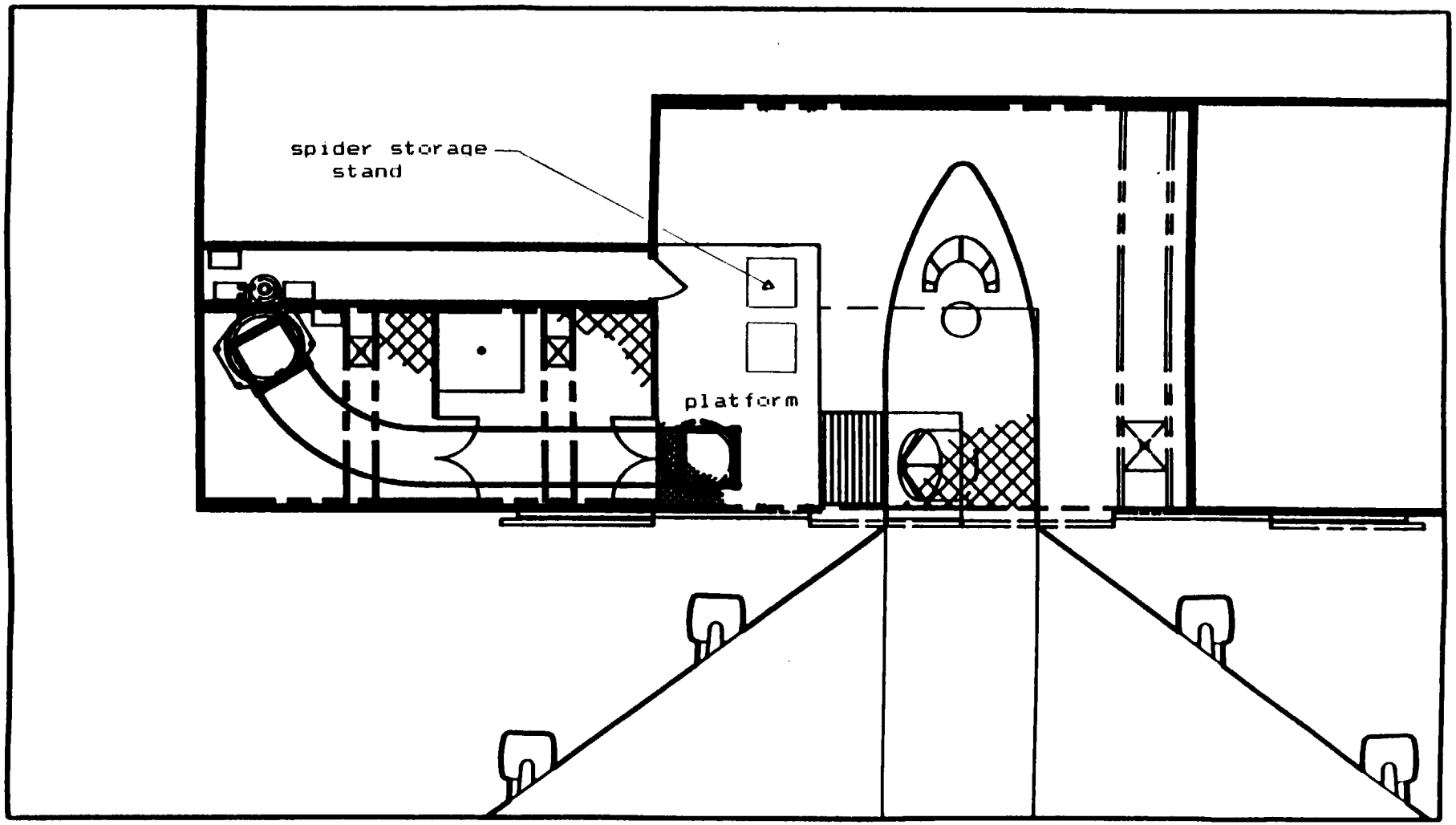

Figure 3.2.1-7

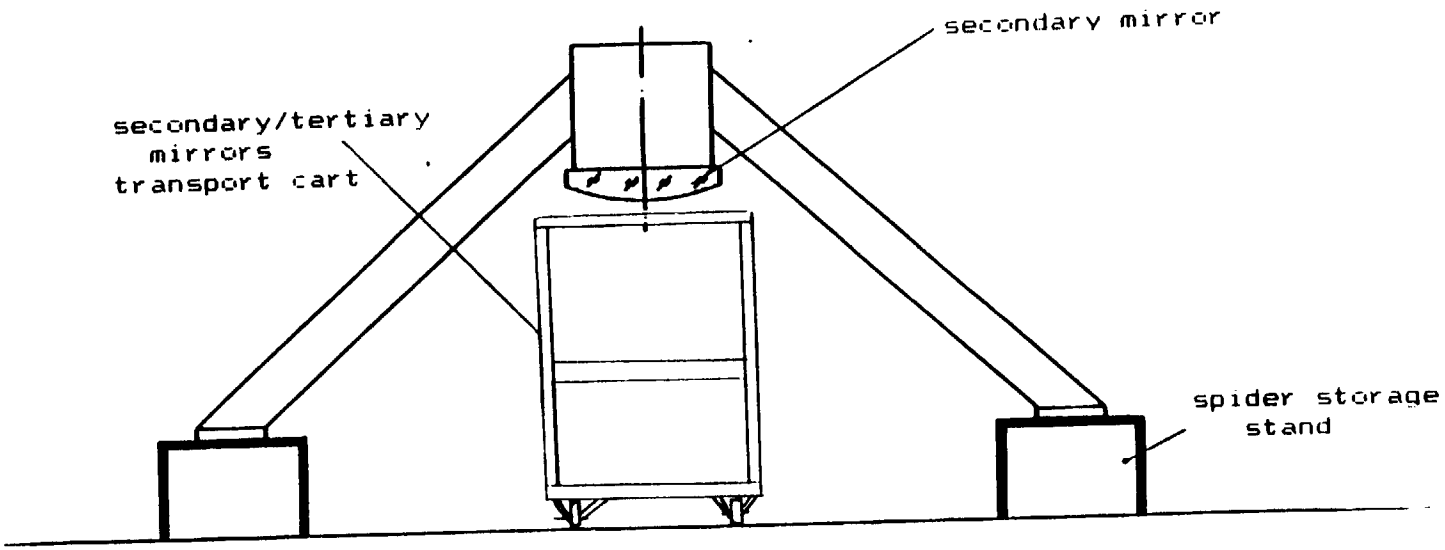

Figure 3.2.1-8a

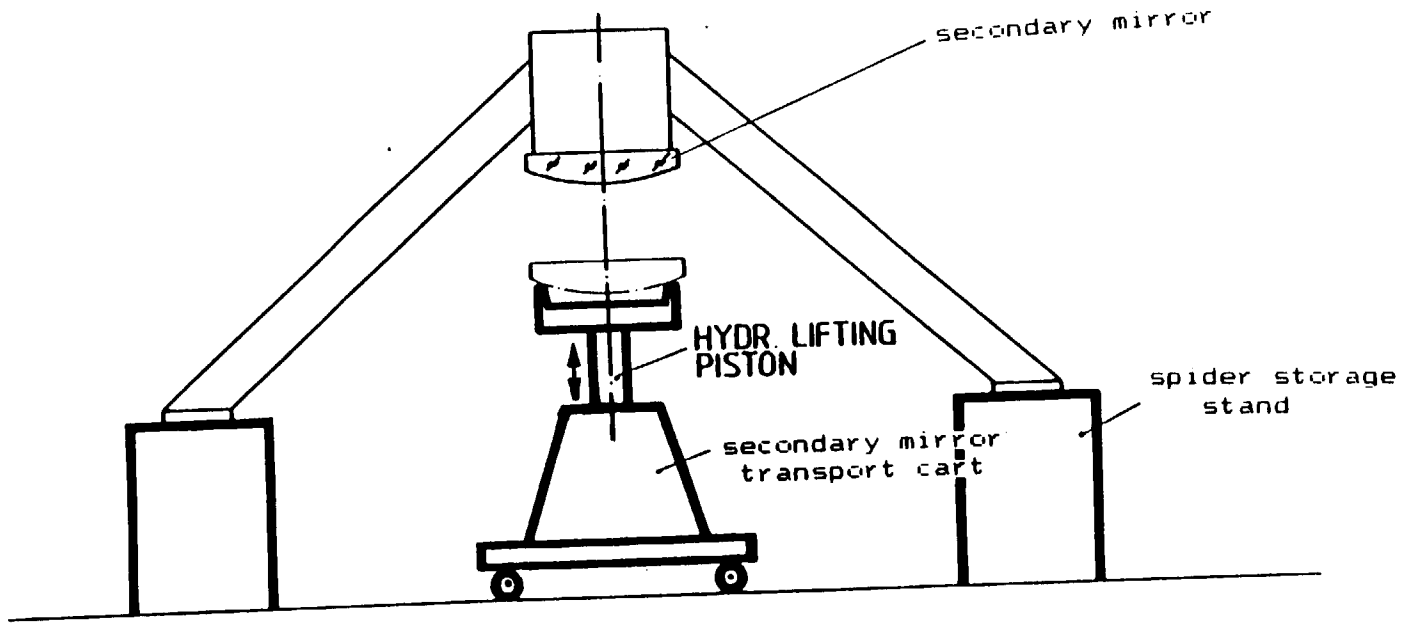

Figure 3.2.1-8b

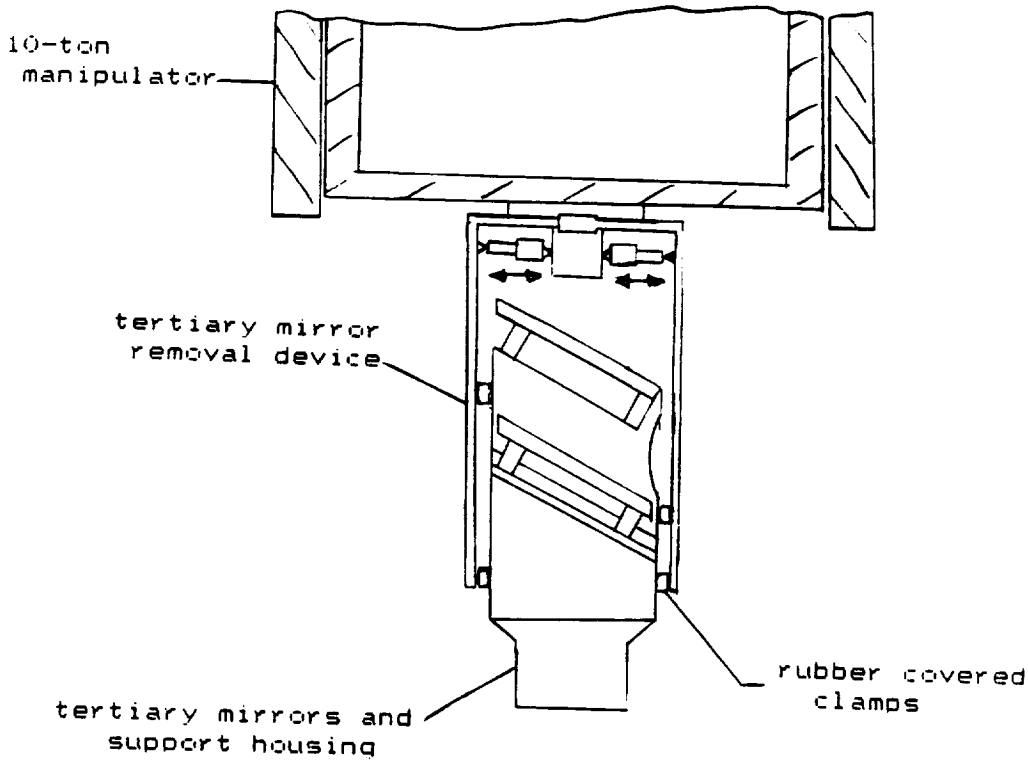
10-ton
manipulator
tertiary mirror
removal device
rubber covered
clamps
tertiary mirrors and
support housing

Figure 3.2.1-9

Side View of the M1-Cell - Details

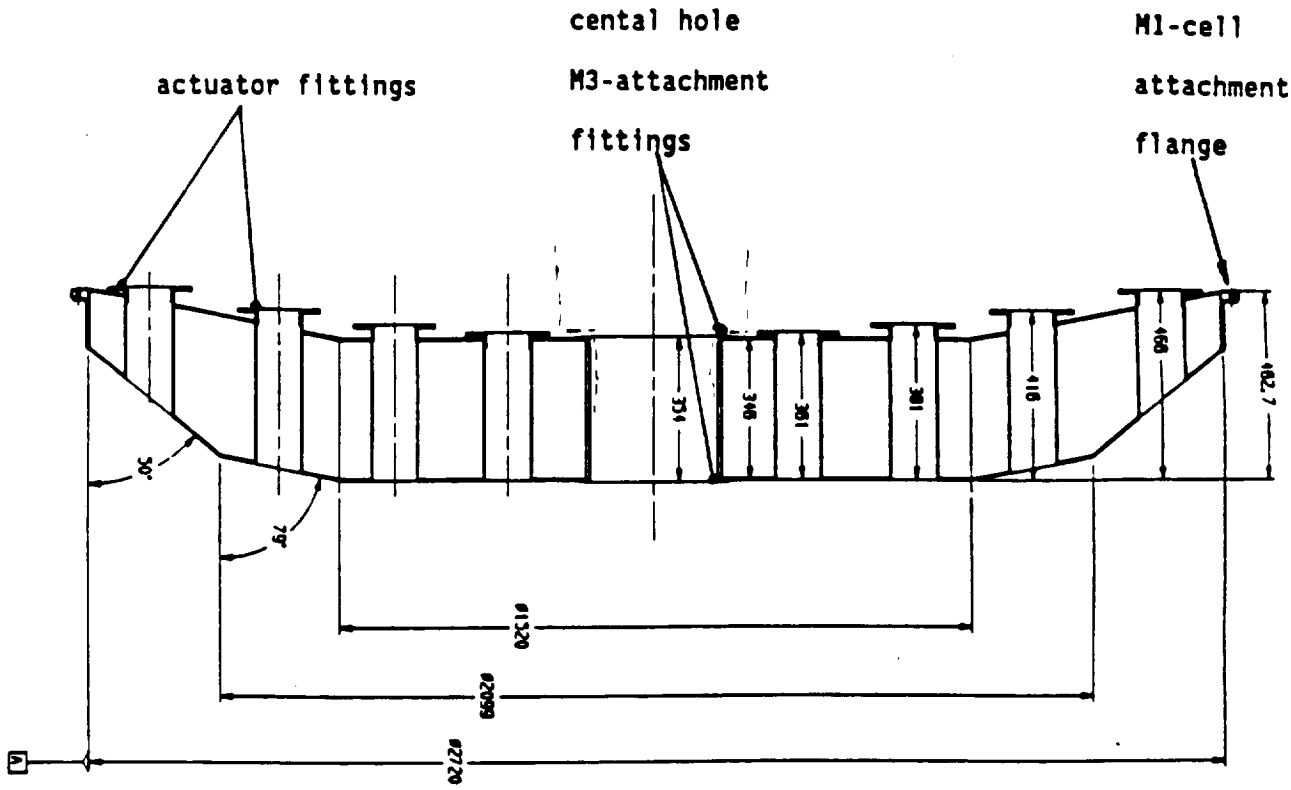

M3 - tube
attachment fitting

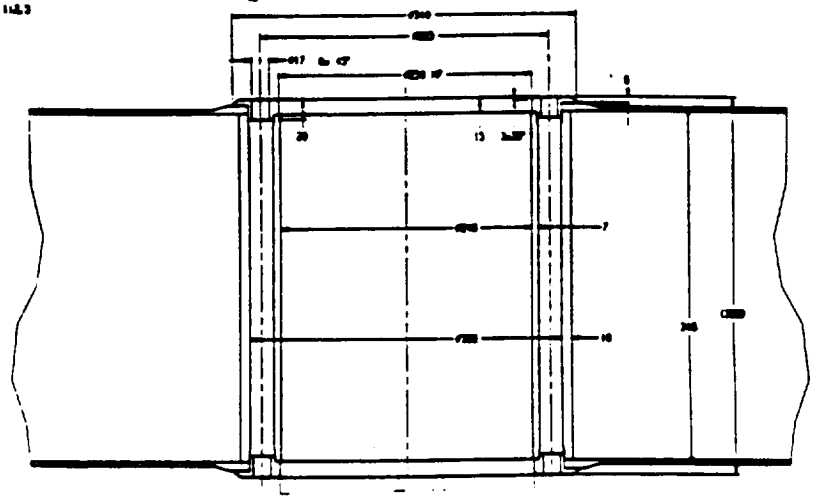

Figure 3.2.1-10

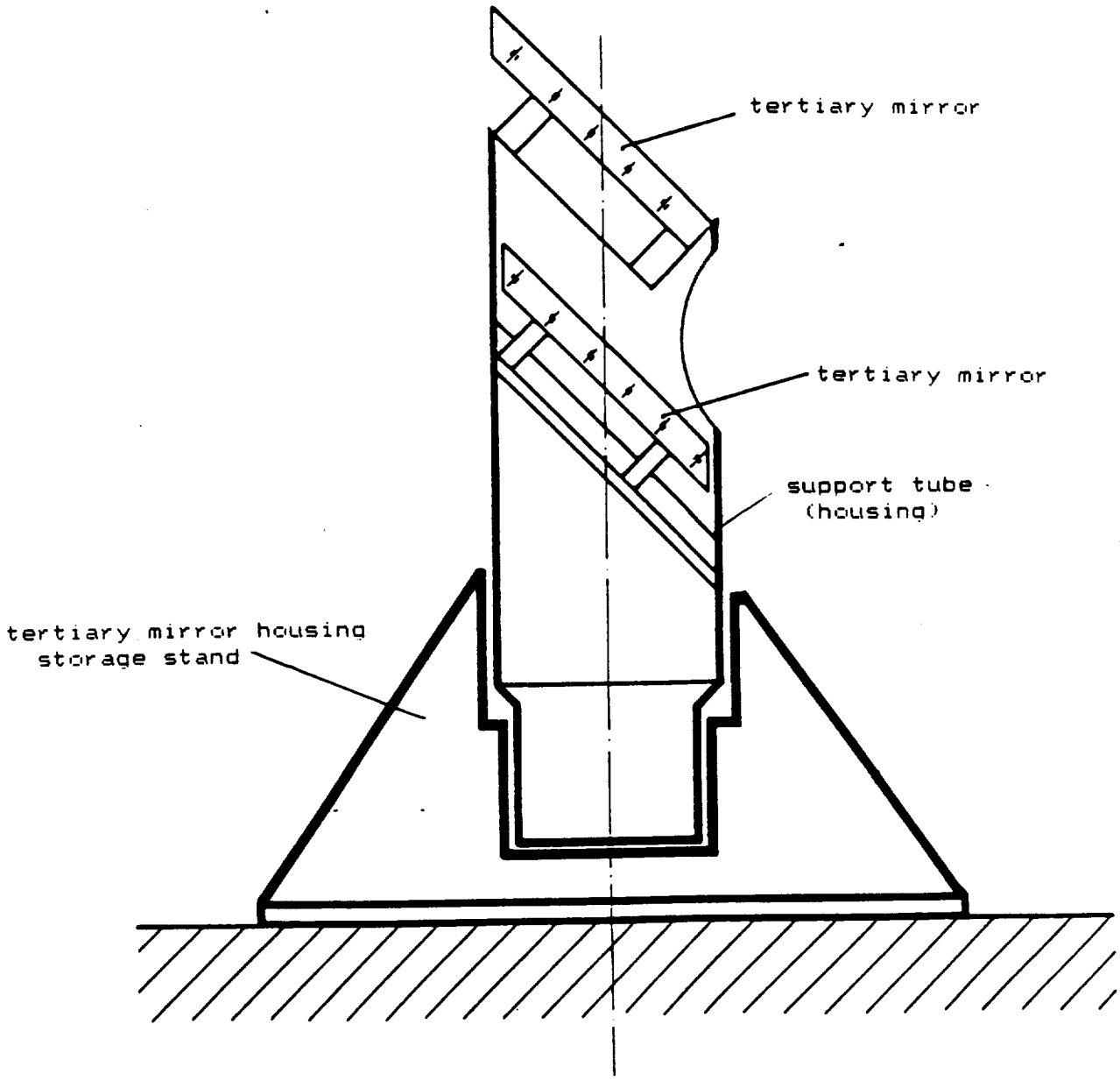

Figure 3.2.1-11

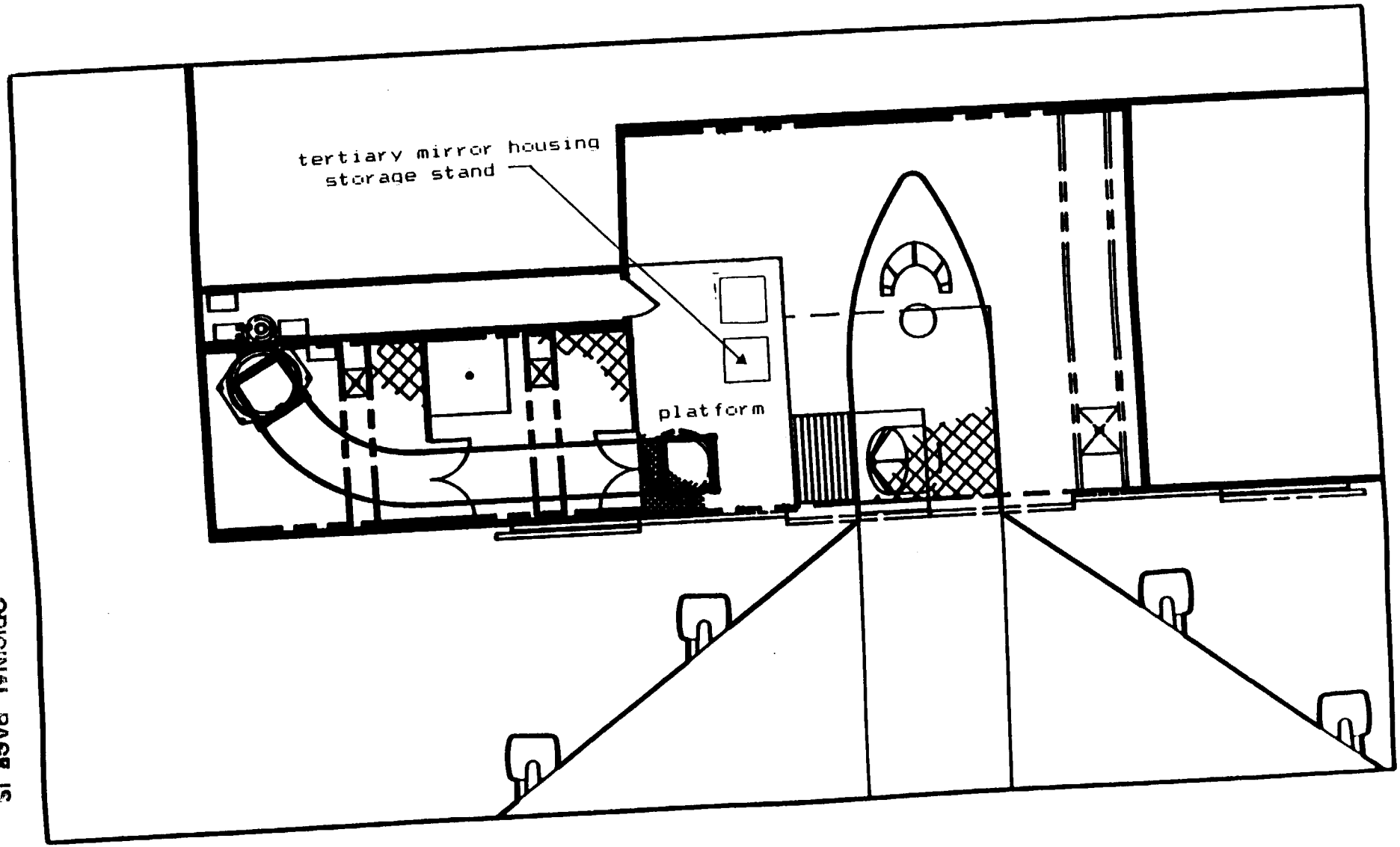

Figure 3.2.1-12

ORIGINAL PAGE IS
OF POOR QUALITY

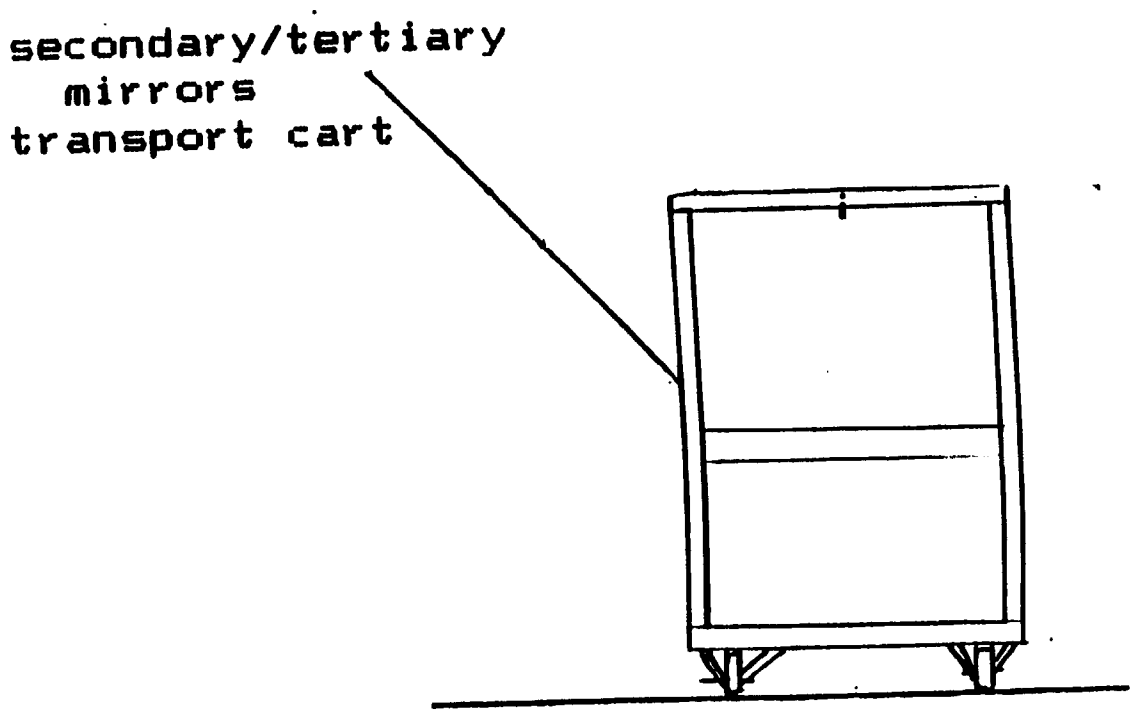

Figure 3.2.1-13

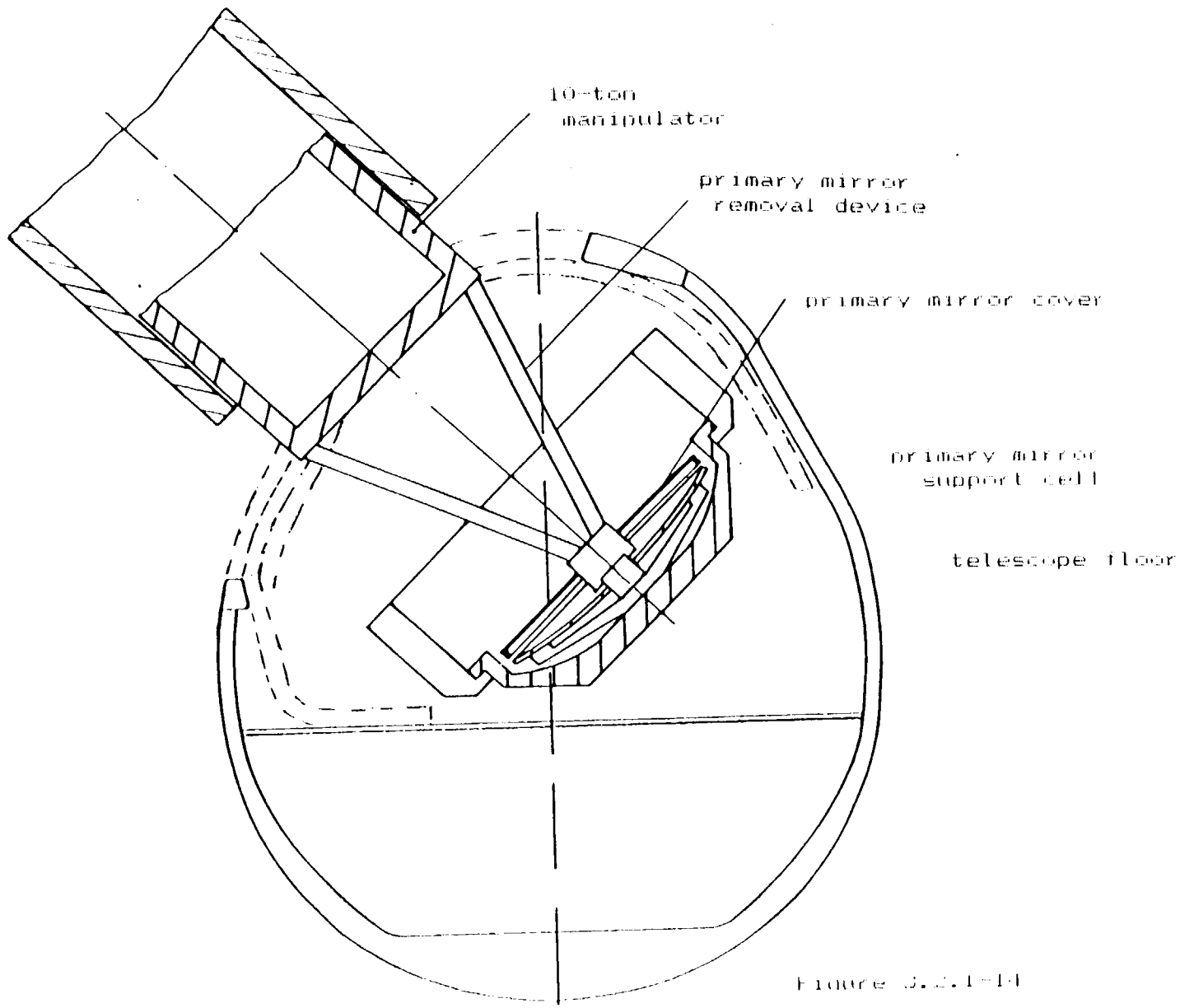

Figure 3.2.1-14

ORIGINAL PAGE IS
OF POOR QUALITY

Mounting Device of M1-Cell

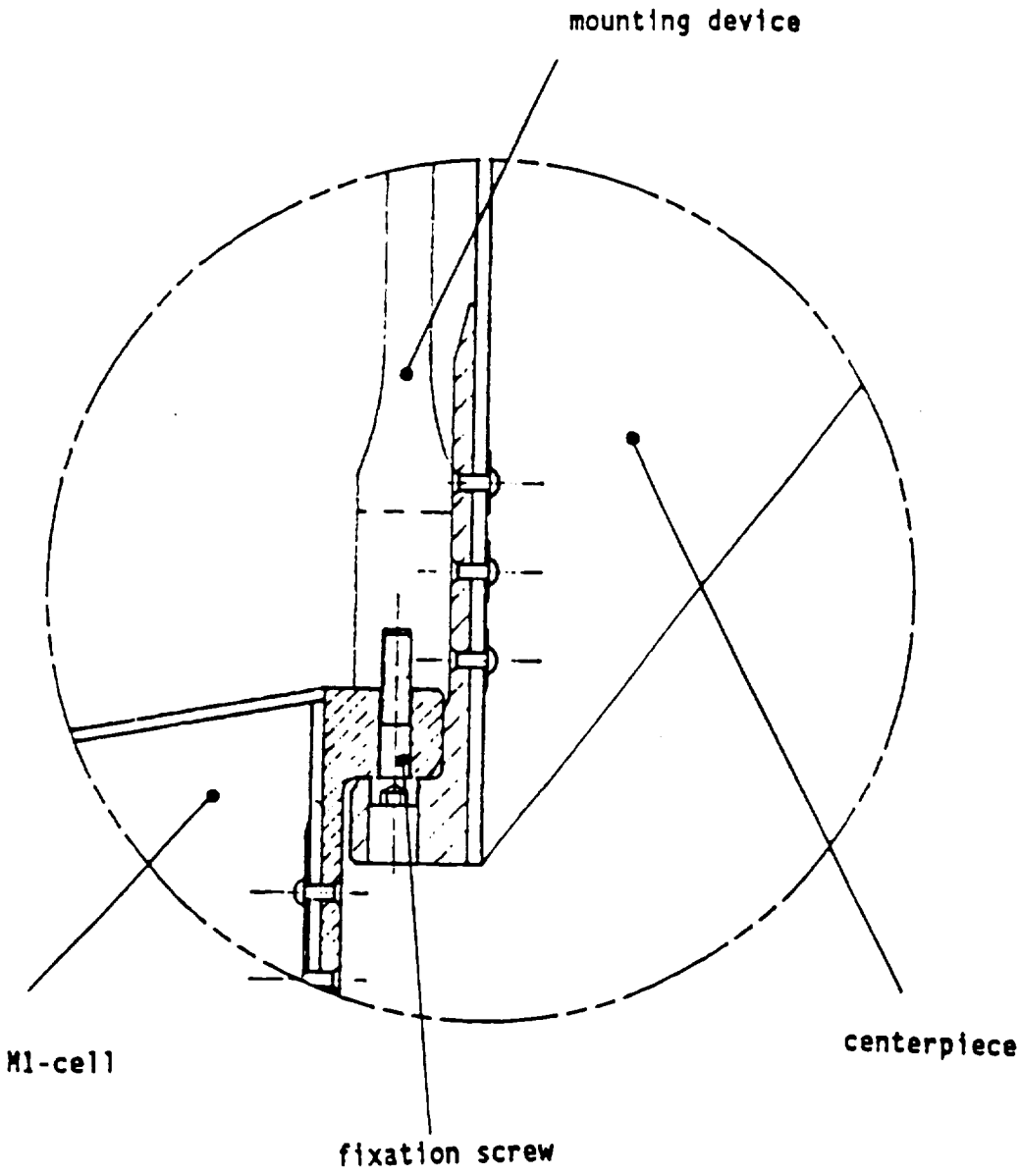

Figure 3.2.1-15

Fixation of the M1-Cell at the Centerpiece

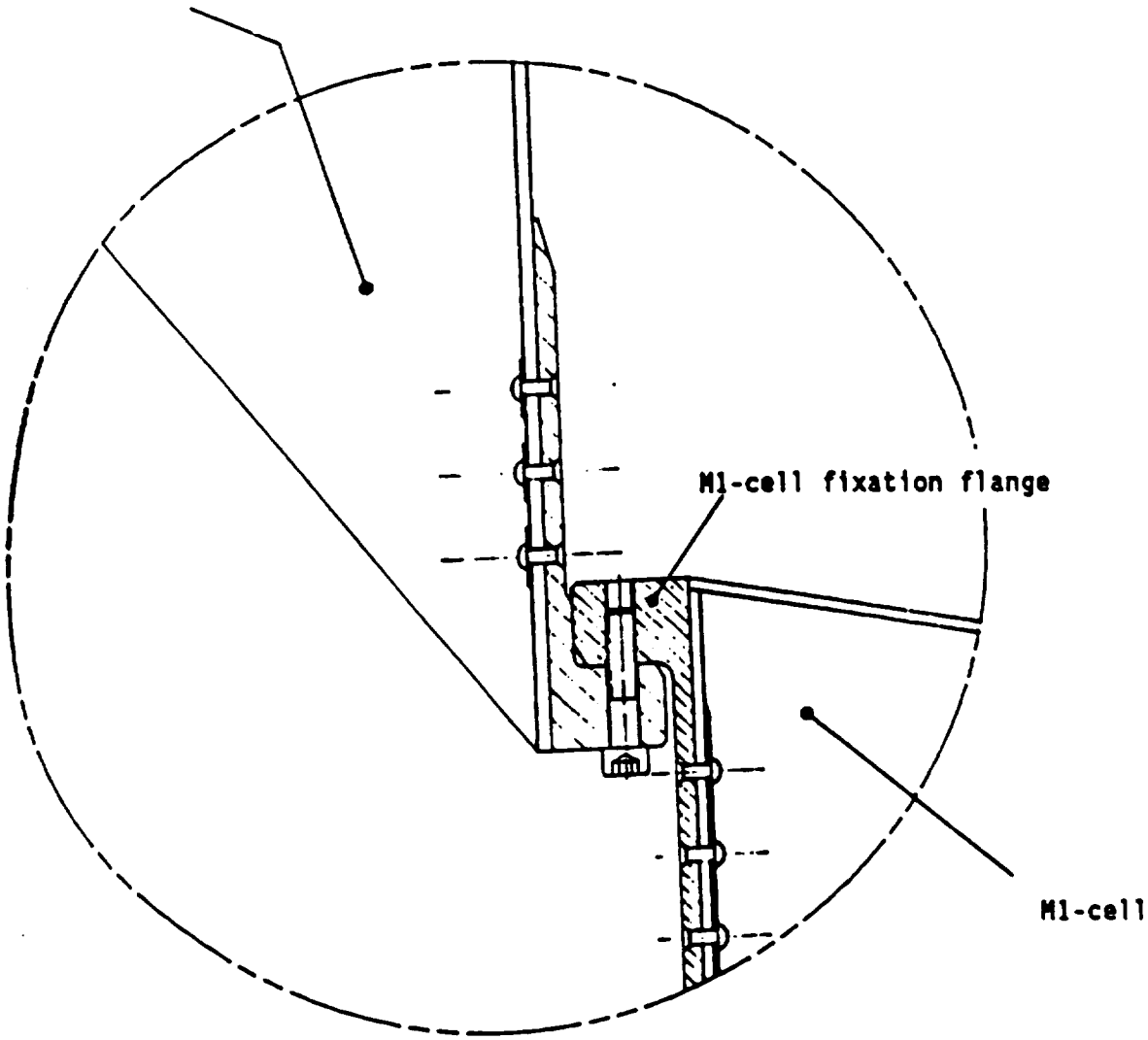

Figure 3.2.1-16

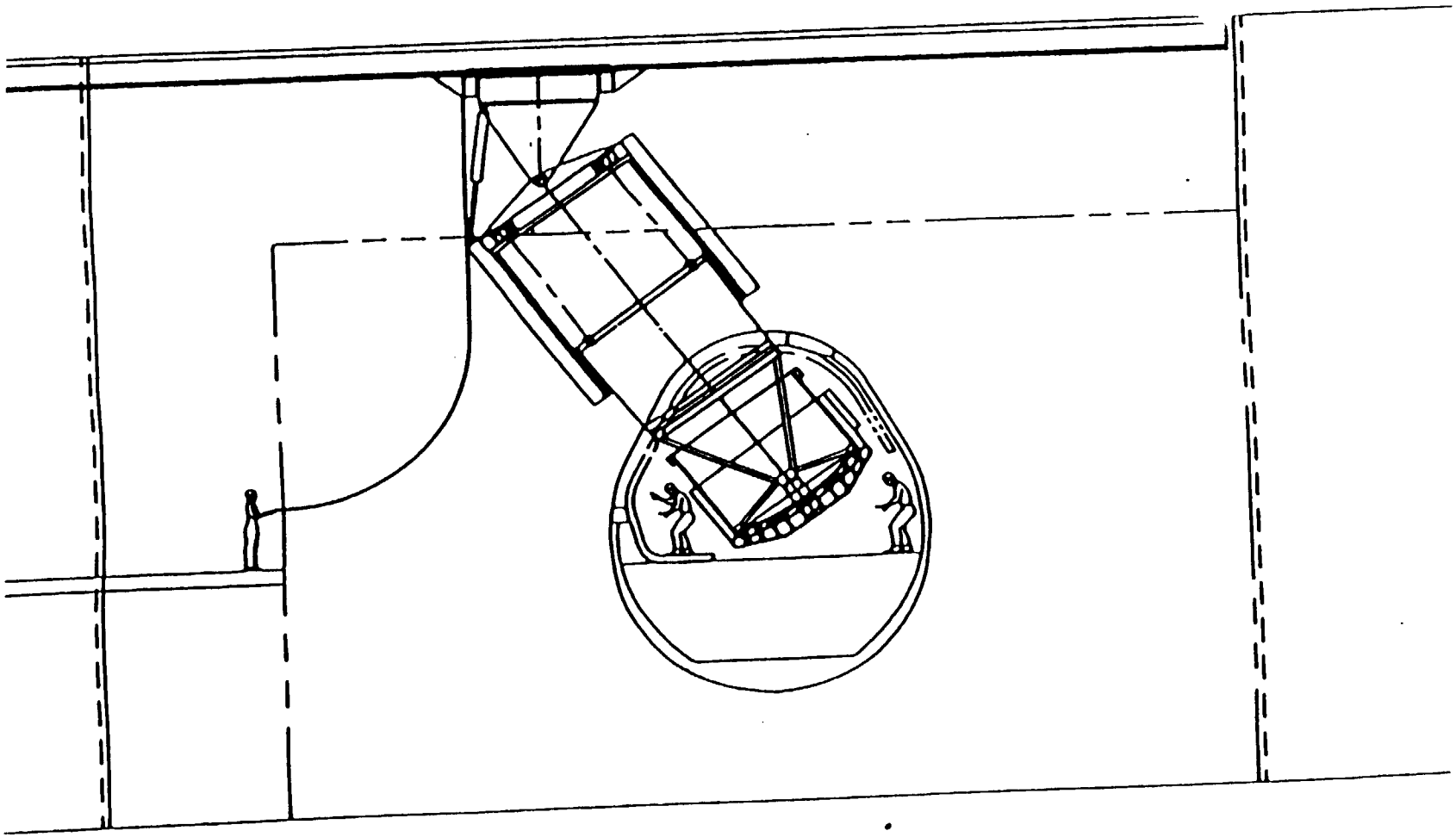

Figure 3.2.1-17

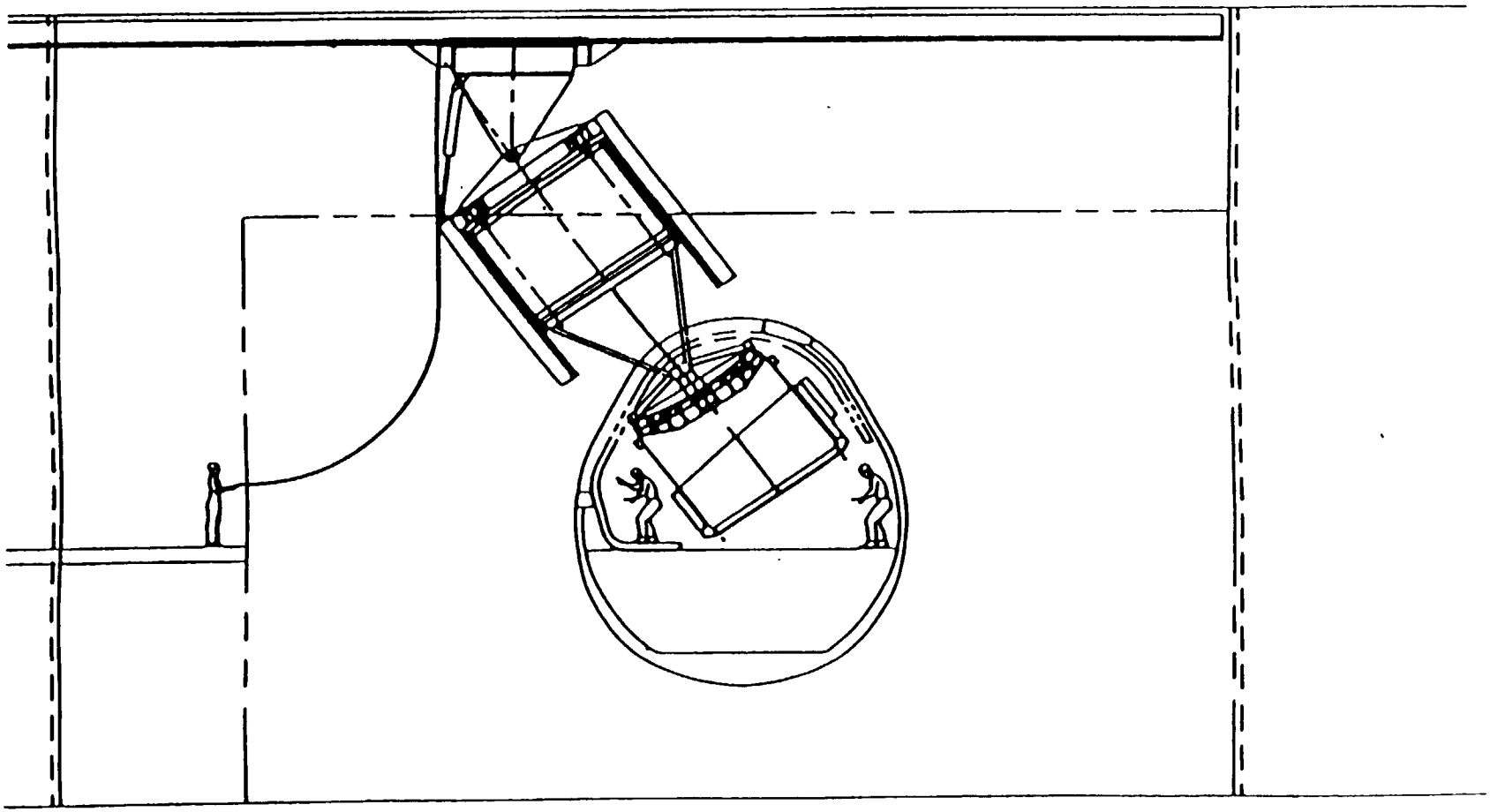

Figure 3.2.1-18

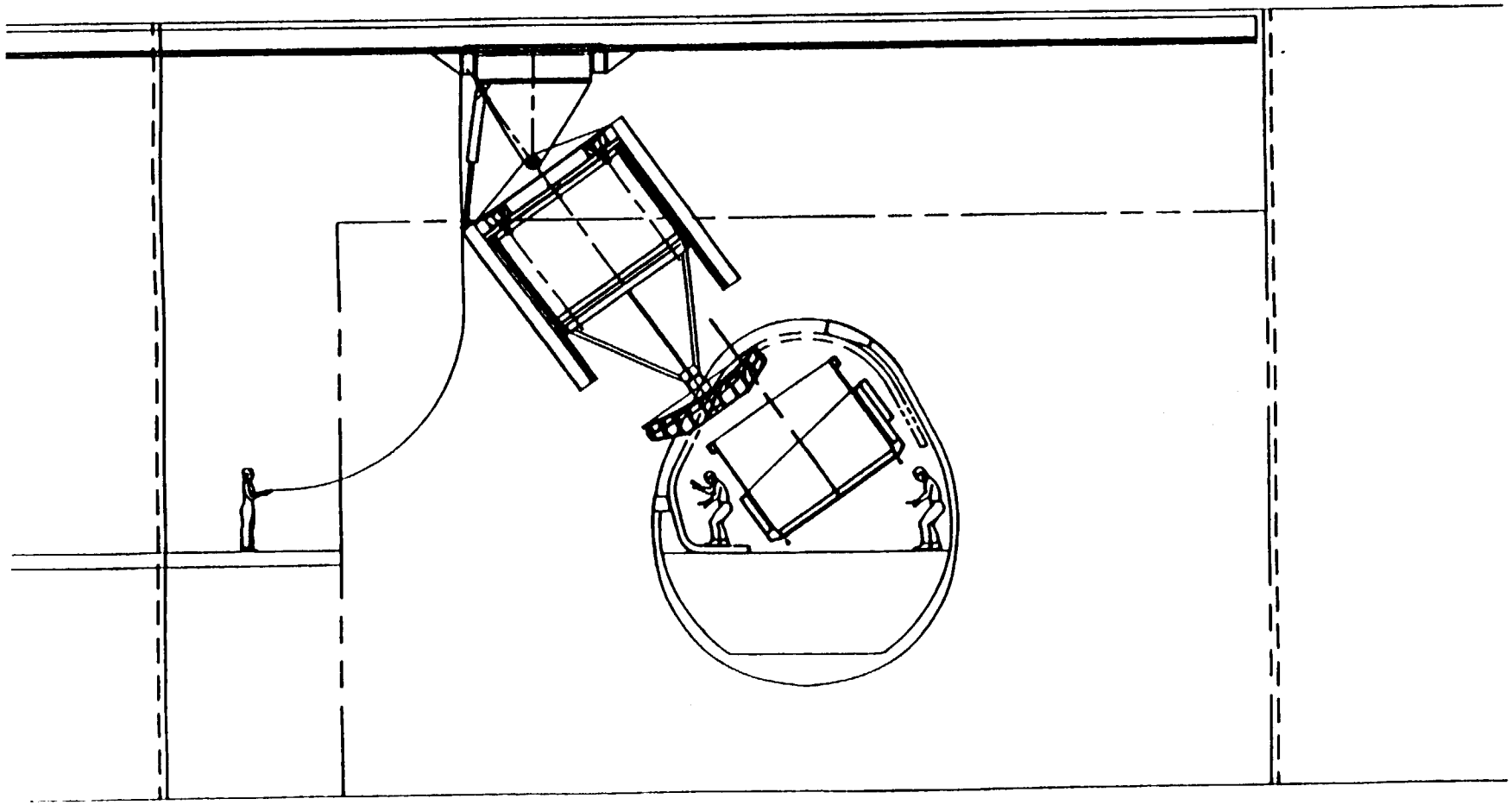

Figure 3.2.1-19

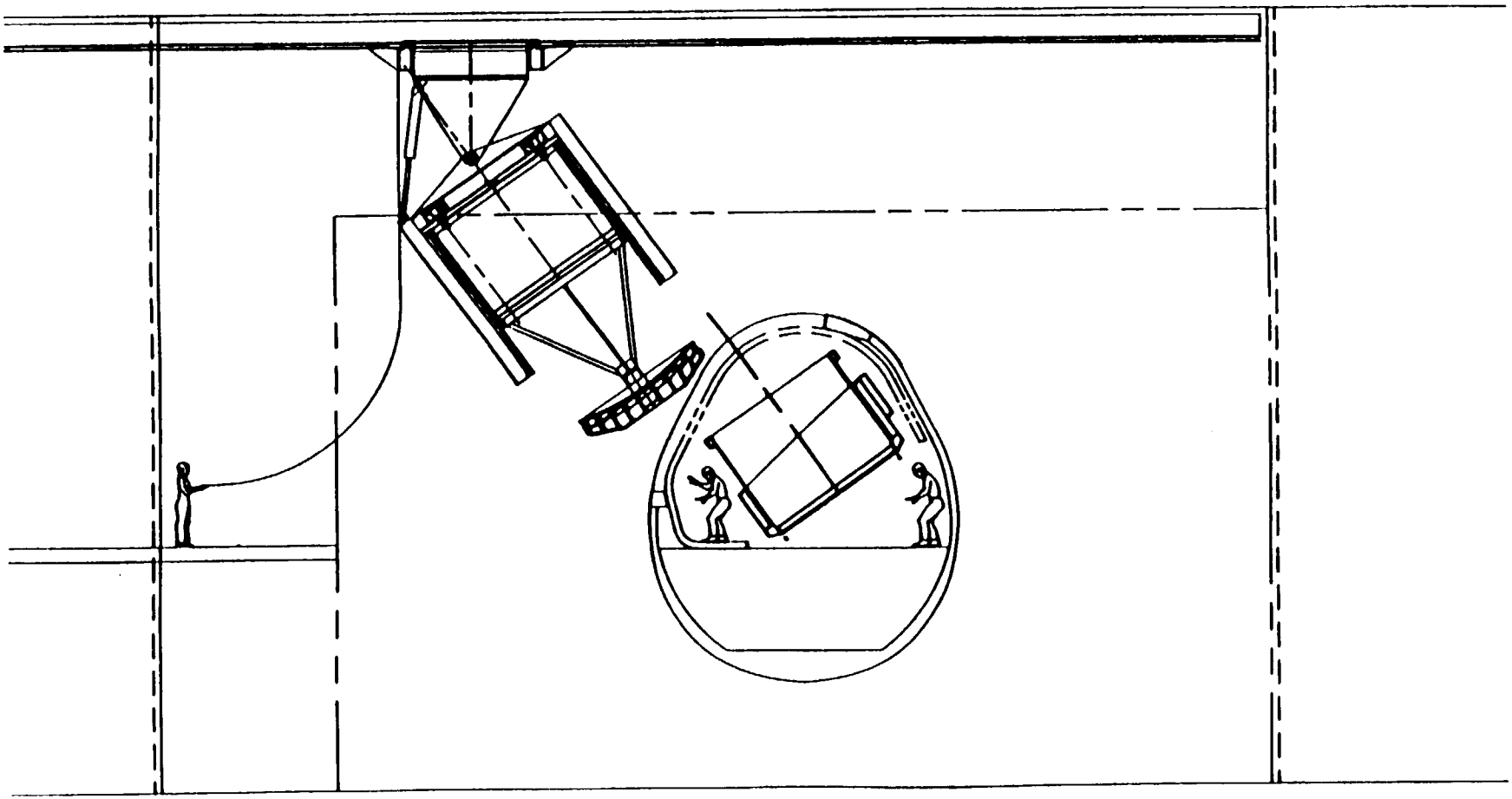

Figure 3.2.1-20

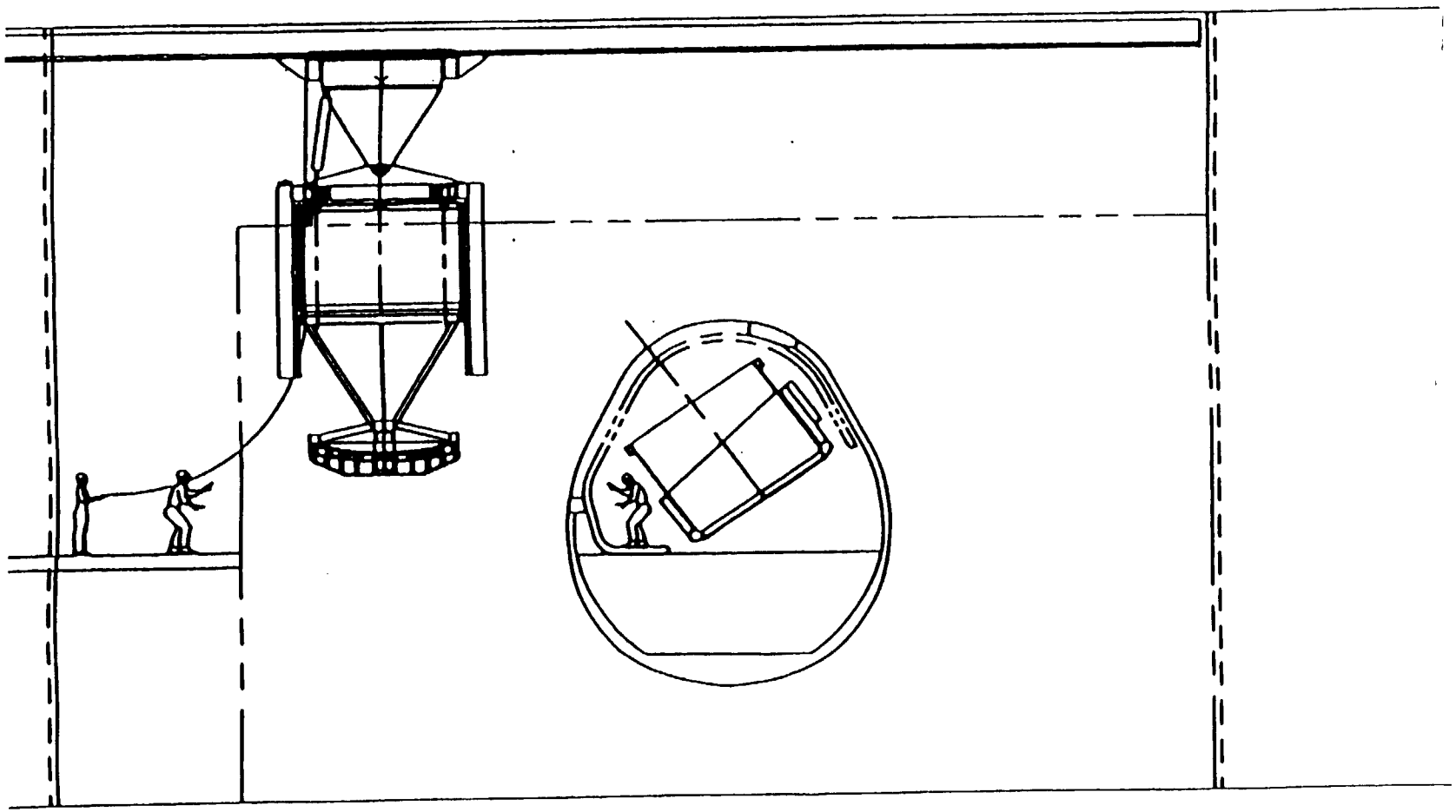

Figure 3.2.1-21

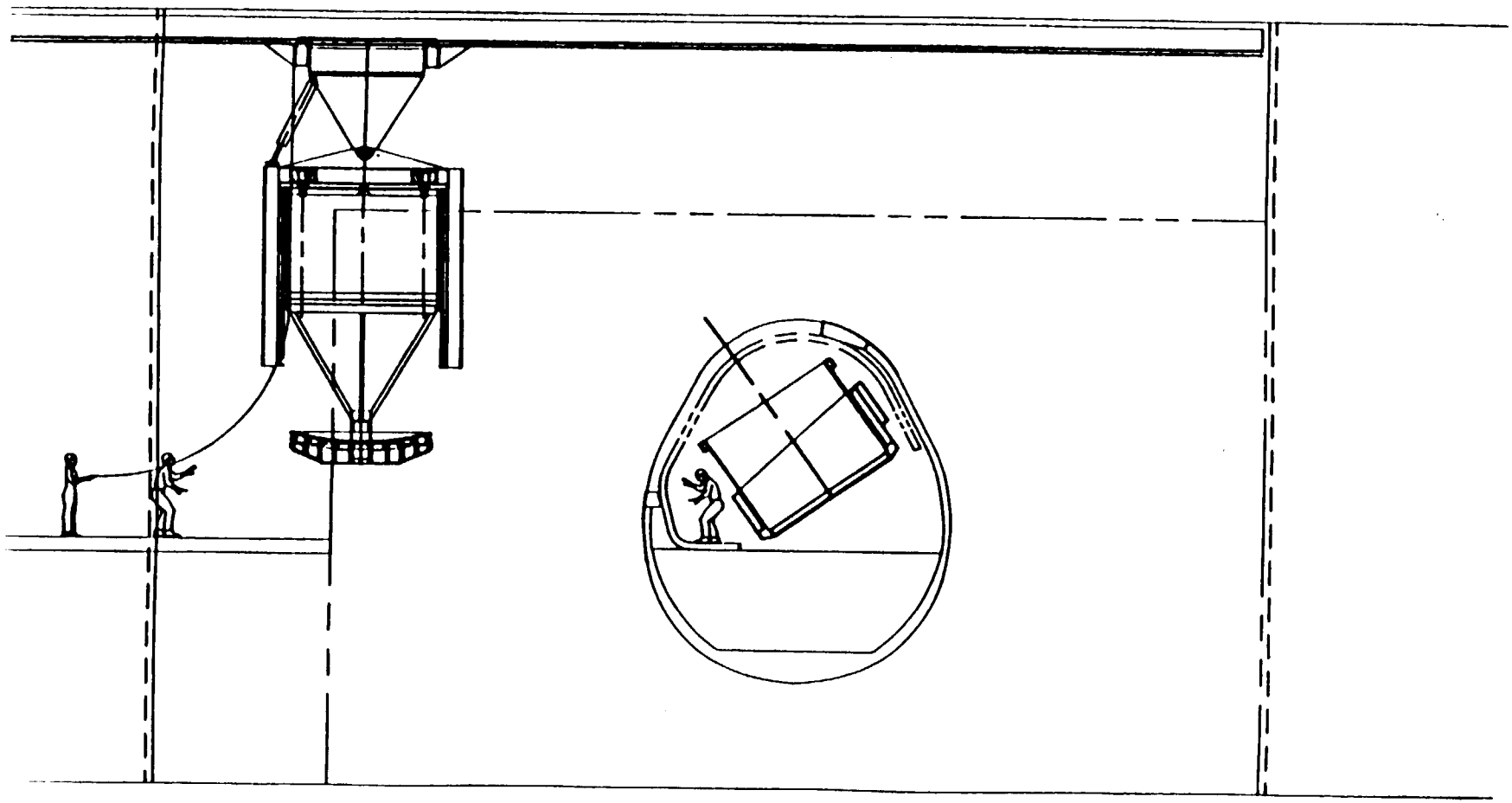

Figure 3.2.1-22

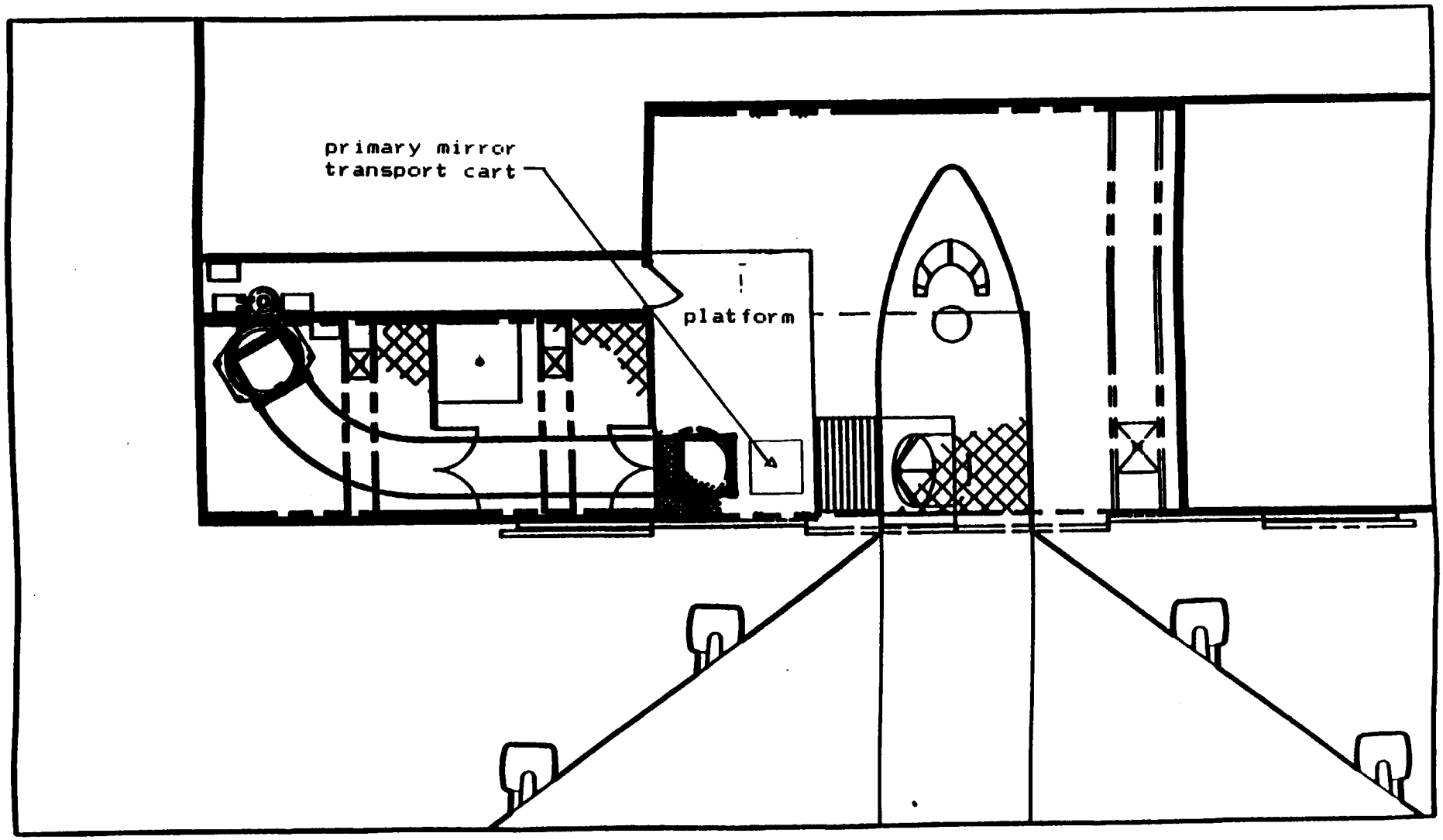

Figure 3.2.1-23

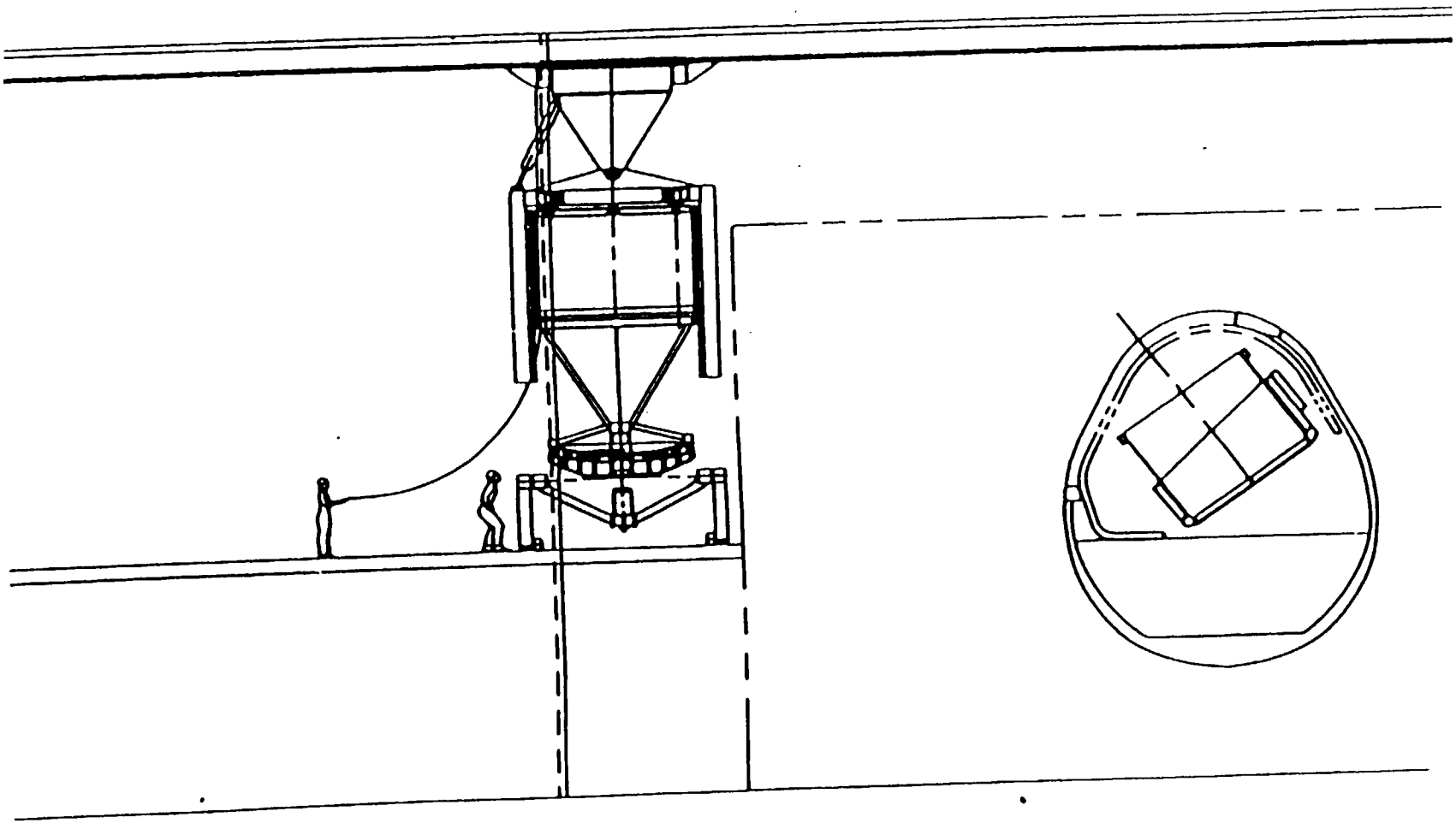

Figure 3.2.1-24

3.2.2 Handling Within the Facility

This section contains handling procdures and equipment for all four of the mirrors once they are within the facility. In subsection 3.2.2.1 the movement and attachment to the vacuum of the primary mirror is addressed. In subsection 3.2.2.2 it is done for the secondary and tertiary mirrors.

3.2.2.1 Primary Mirror Handling

There are three options under consideration to coat the primary mirror. The first is facing upwards, the second is facing downwards, and the third is facing sidewards. If the mirror is to be coated facing upwards, the mirror support cell that holds the mirror while in the telescope, may be removed. If this is the case it will also have to be cleaned facing upwards. If the cell remains or is replaced by a similar support structure, the assumption is made that the mirror can be safely (from a structural point of view) turned on to its side for cleaning and coating or completely upside down for coating.

All of the options will require the same 10-ton manipulator to remove the primary mirror from the airplane as well as the transport cart as shown in Figure 3.2.1-24. If the mirror is to be coated downward or cleaned/coated sidewards looking, the transport cart will have the ability to rotate the mirror otherwise it will hold it stationary facing upwards. The main differences occur when the mirror is to be placed in the coating chamber and in the holding fixtures within the vacuum chamber.

A more detailed explaination of cleaning procedures can be found in Section 3.3. Here it is important to mention that if the mirror is to be cleaned on the transport cart, a crane will not be required in the cleaning room. If the decision is made to take it off the cart and place it in a cleaning bin (see Section 3.3-Figure 3.3.1.1-3), a 5-ton bridge crane will be needed.

The support for the mirror, when coated upside down or looking sidewards, can be either the mirror support cell or a similar support structure. If the mirror cell remains, the following sequence of pictures shows the placement of the mirror onto the transport cart-Figures 3.2.2.1-0 through -2. The alternative, removing the cell and attaching a similar (acid resistant) support structure, requires the unclamping of the mirror connection device seen in Figure 3.2.2.1-3. This is assumed done while the mirror is suspended above the platform by the 10-ton manipulator. The process of placing it in the support structure and onto the transport cart is shown in Figures 3.2.2.1-4 through -7. The support structure attaches to the outermost ring of ceramic pieces. These pieces are the same that the mirror connection devices are fastened to (Figures 3.2.2.1-6a). The ceramic pieces are slipped into the support structure (Figure 3.2.2.1-6c).

Hooks are inserted into the structure and through the grooves in the ceramic pieces (Figure 3.2.2.1-6b and -6c). The mirror is now fully attached to the support structure. Note this assumes that it is safe to rest the full weight of the mirror on the outer circle of connecting ceramic pieces.

In the case of the mirror looking upward, assuming the cell is already detached. The 10-ton manipulator is to be used to place the mirror on the bottom half of the chamber (see Figure 3.2.2.1-8). The mirror is moved into the cleaning room, removed from the bottom via a 5-ton bridge crane and placed in the cleaning bin. It is cleaned and then returned to the vacuum chamber bottom (Figures 3.2.2.1-9 and -10). The bottom half will then be moved into position underneath the top of the chamber and raised up by a hydraulic lift (Figures 3.2.2.1-11 through -15).

An optional method for coating facing upward, suggested by the telescope system contractor, removes the chamber top via crane then lifts the mirror, facing upwards, into the bottom of the vacuum chamber. The chamber top which contains the tungsten filaments, etc. is then placed back on the chamber (Figure 3.2.2.1-16). Note that the mirror can be cleaned vertically as long as the support cell is not removed, until after cleaning, and a transport cart is made available.

In the case of the mirror looking down, a 5-ton bridge crane will remove the chamber top and place it aside. The mirror will be rotated on the transport cart (Figure 3.2.2.1-17). Detail on the rotation apparatus is seen in Figure 3.2.2.1-18. The same crane will pick it up and place it in the chamber (Figure 3.2.2.1-19 and -20). Figures 3.2.2.1-21 and -22 show the fixture by which to hang the mirror in the vacuum chamber. It would be inserted into grooves on the chamber's walls. Figures 3.2.2.1-23 through -29 show the general idea but are not exact.

For the case of the mirror looking sideways, a process similar to that at Lick Observatory, Mt. Hamilton, California could be used. The mirror would be rotated into a vertical position while on the transport cart. The fixture by which to hang it in the chamber would then be attached (Figure 3.2.2.1-30). The side of the vacuum chamber, not attached to the pumping system, is rolled back (Figure 3.2.2.1-31) and the mirror hung inside the stationary part (Figure 3.2.2.1-32).

In review, all of the methods will require a single bridge crane in the coating room and possibly one in the cleaning a

room, each with a 5-ton capacity. If the two rooms (cleaning and coating) are combined into one, a single bridge crane will be required. The mirror transport cart is needed in all cases except where the chamber bottom is used as a mirror transport instead.

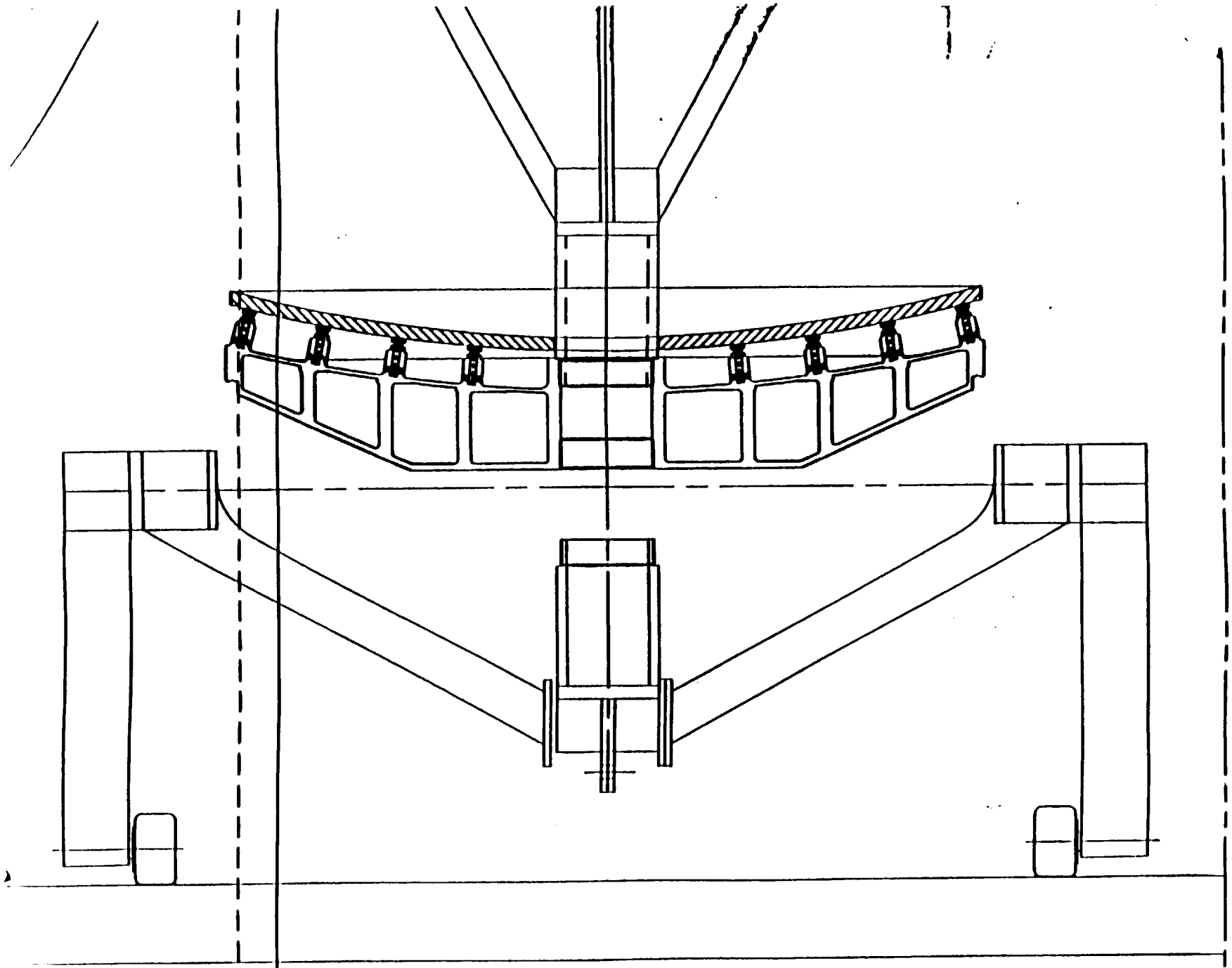

Figure 3.2.2.1-6

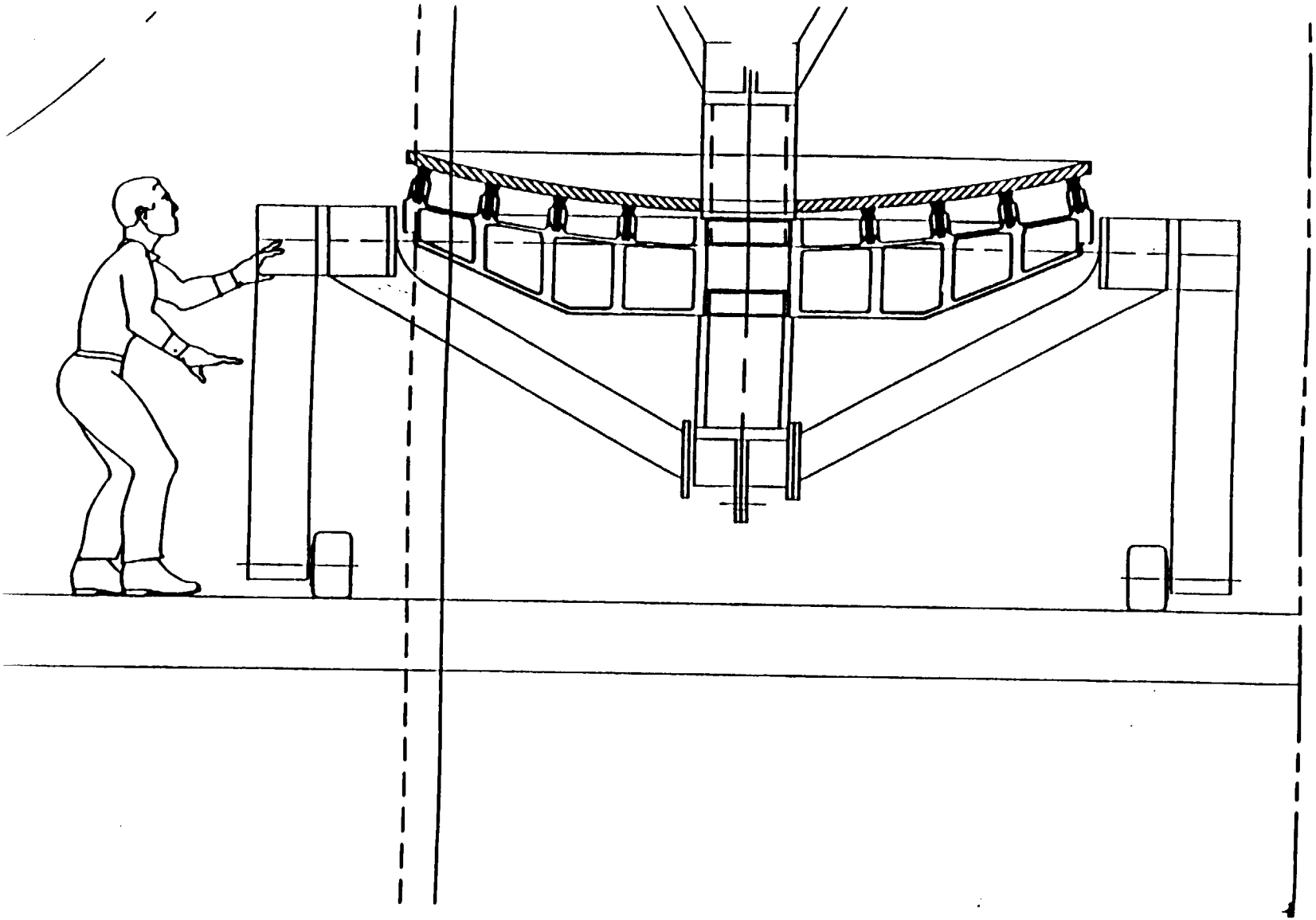

Figure 3.2.2.1-1

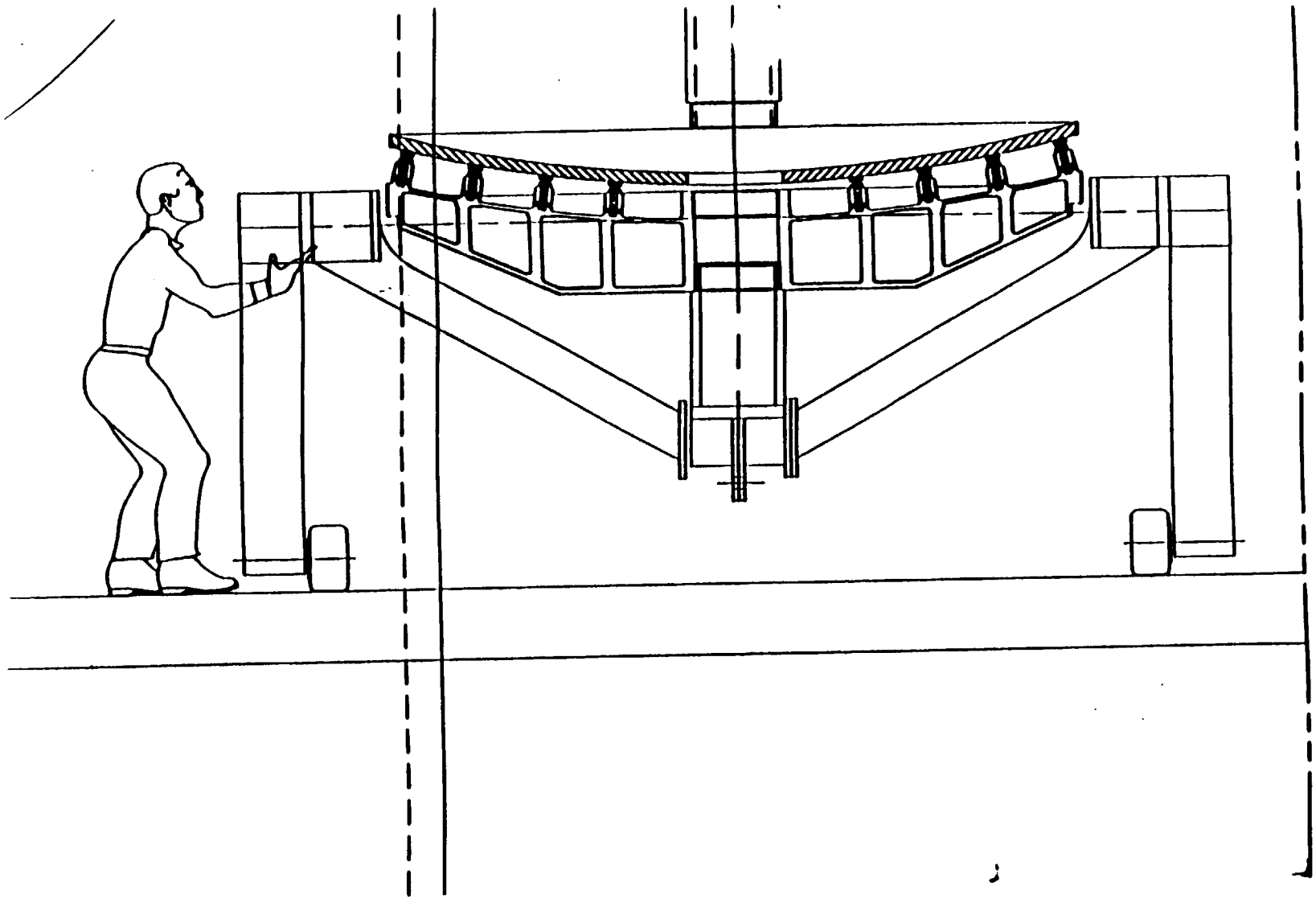

Figure 3.2.2.1-2

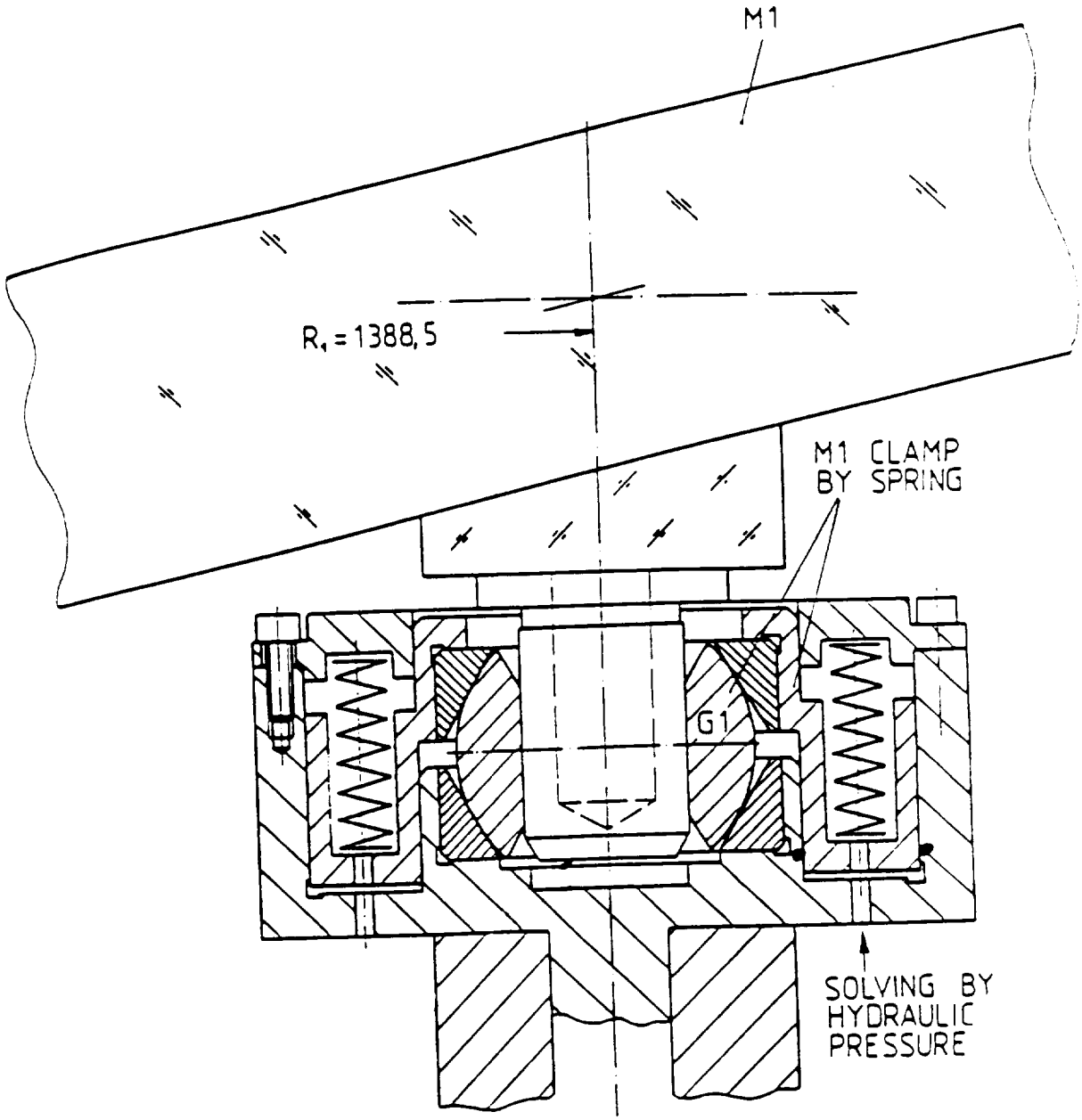

Figure 3.3.3.1-3 **Connection Device for Mirror**

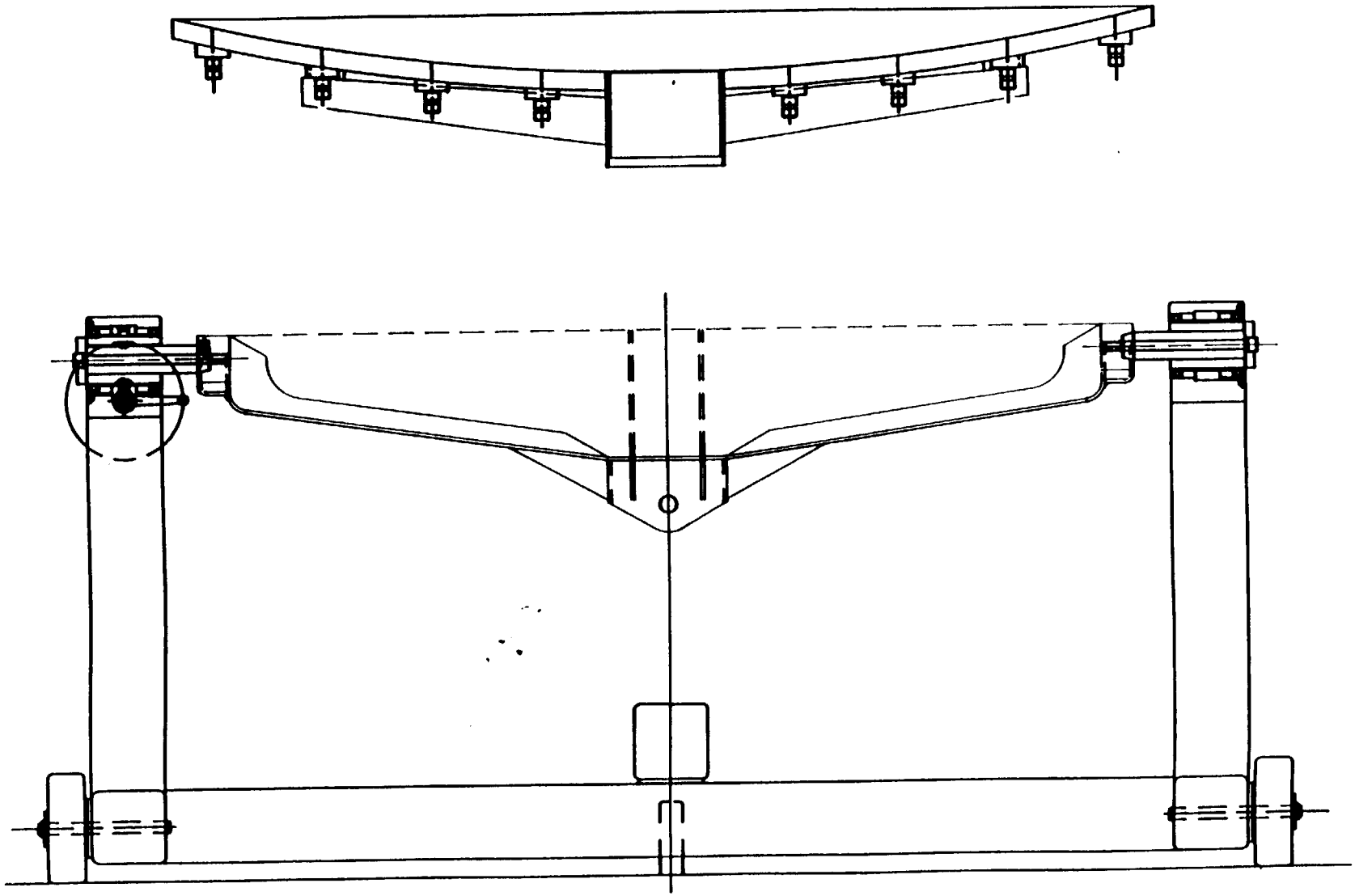

Figure 3.2.2.1-4

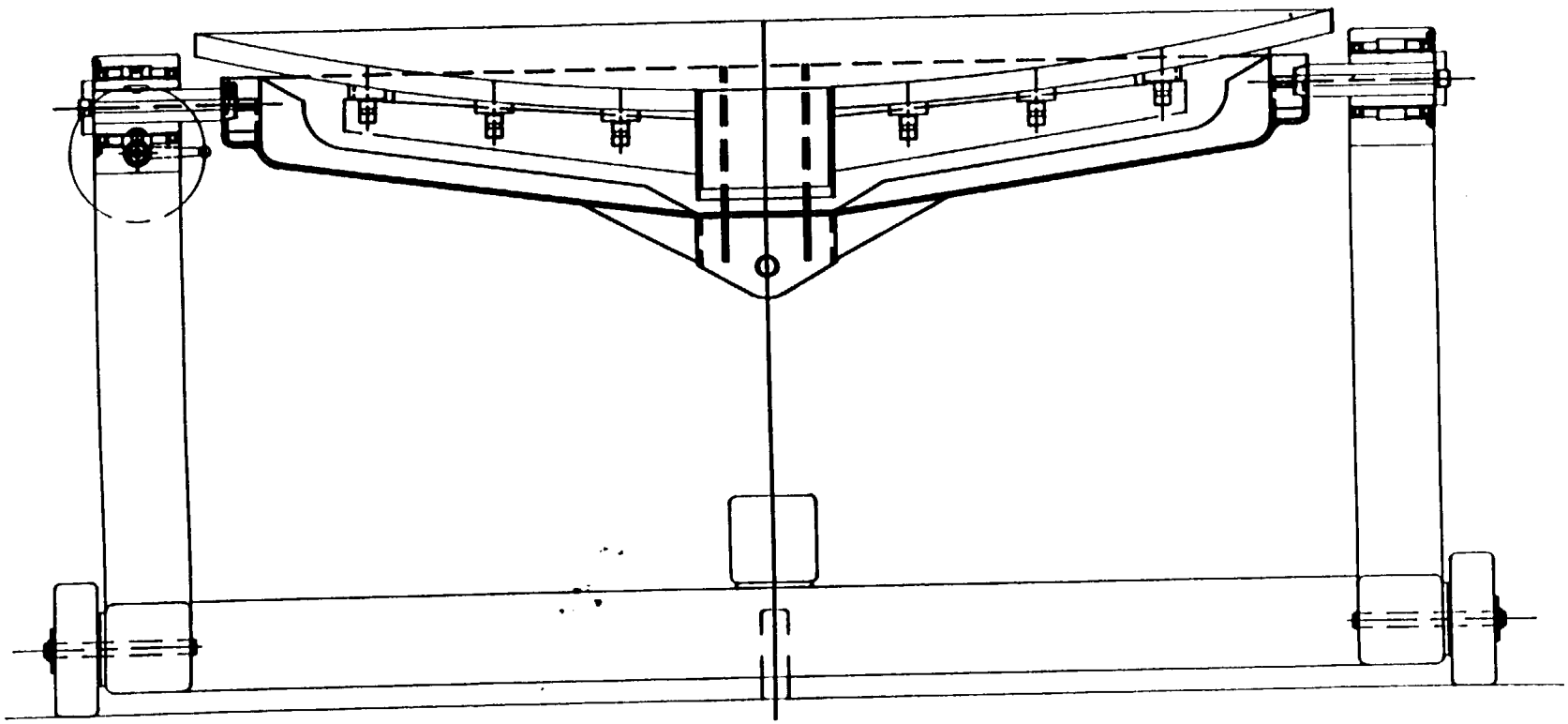

Figure 3.2.2.1-5

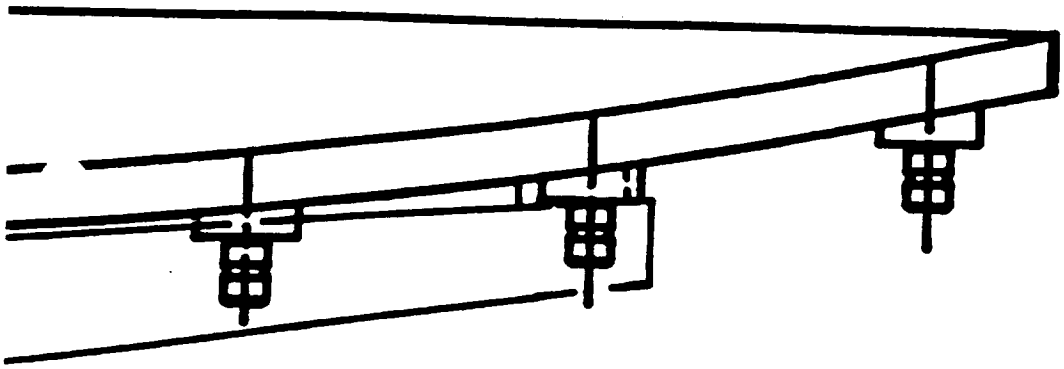

Figure 3.2.2.1-6a

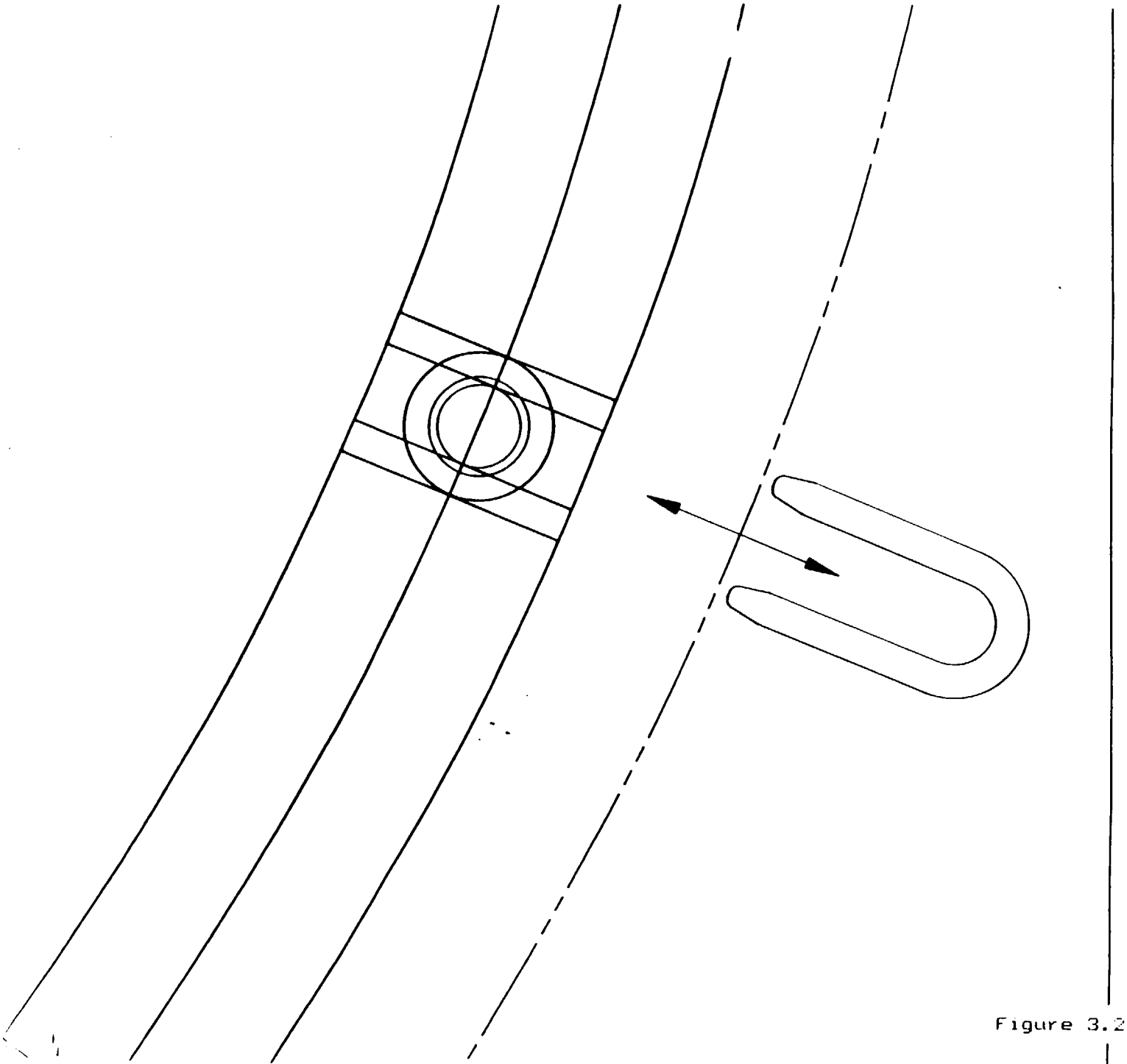

Figure 3.2.2.1-6b

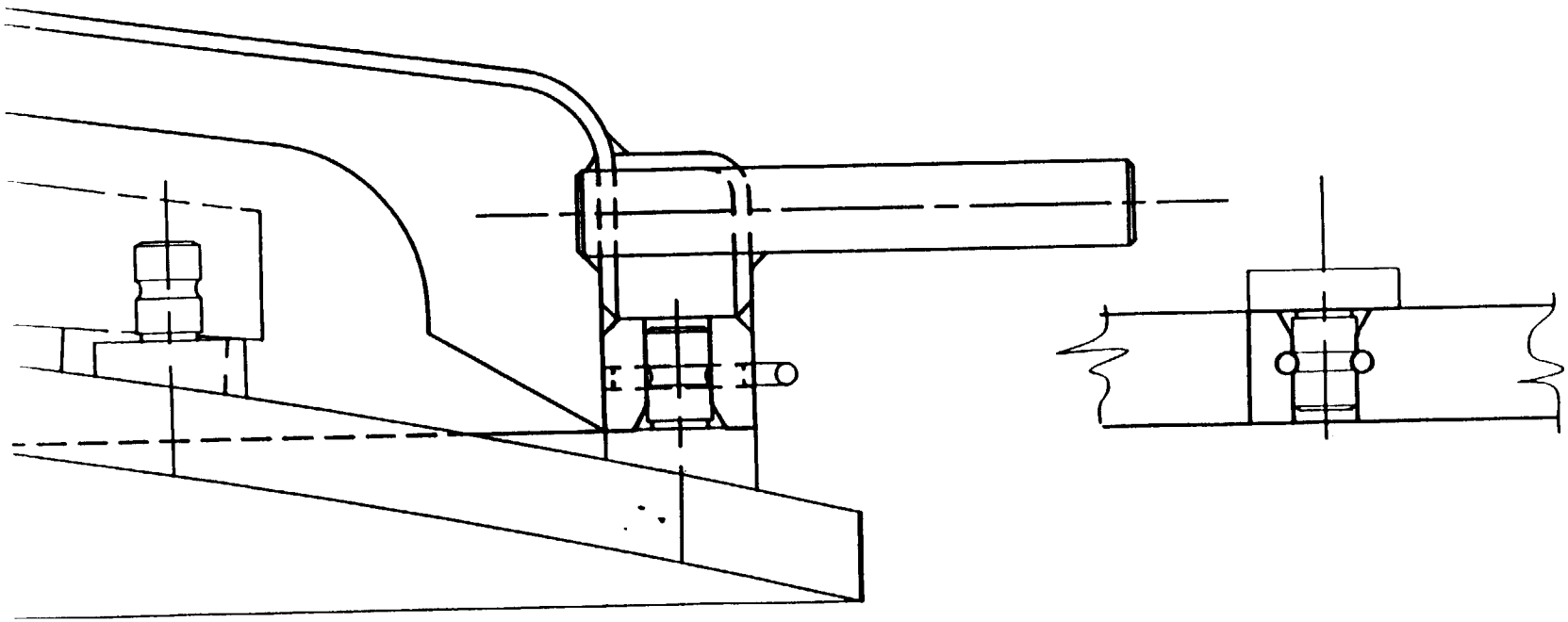

Figure 3.2.2.1-6c

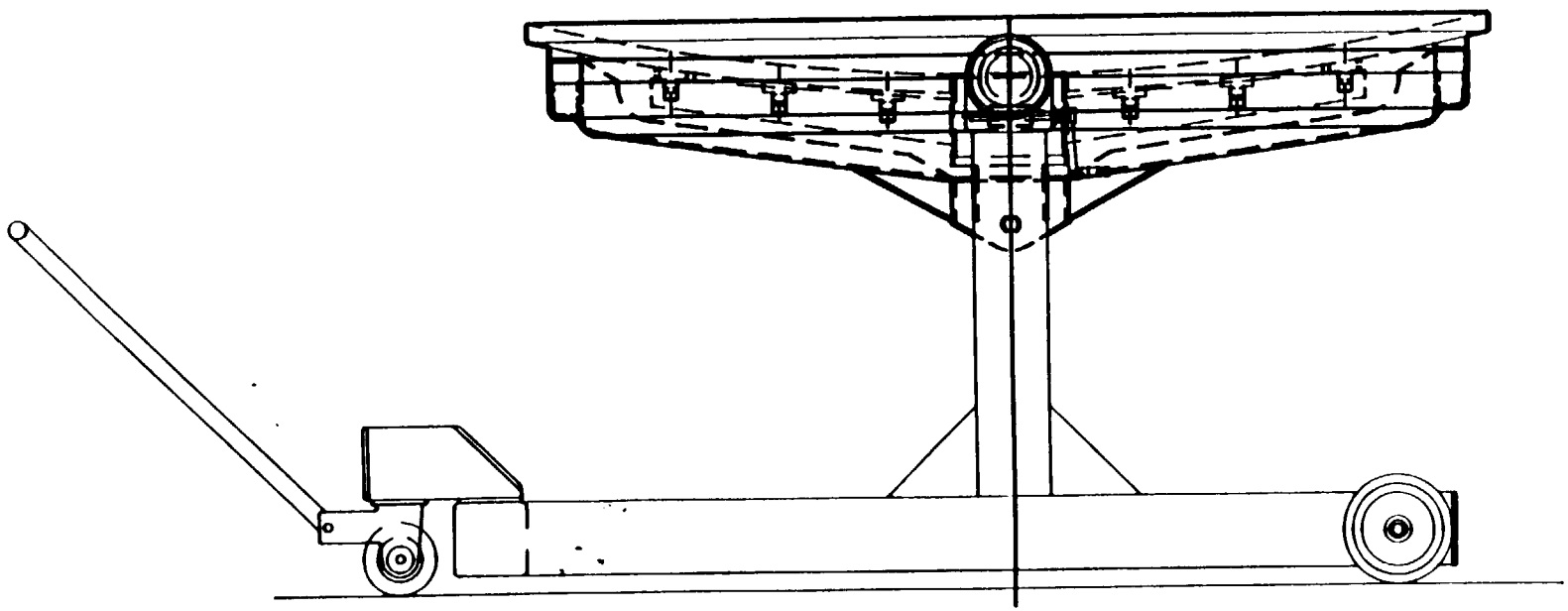

Figure 3.2.2.1-7

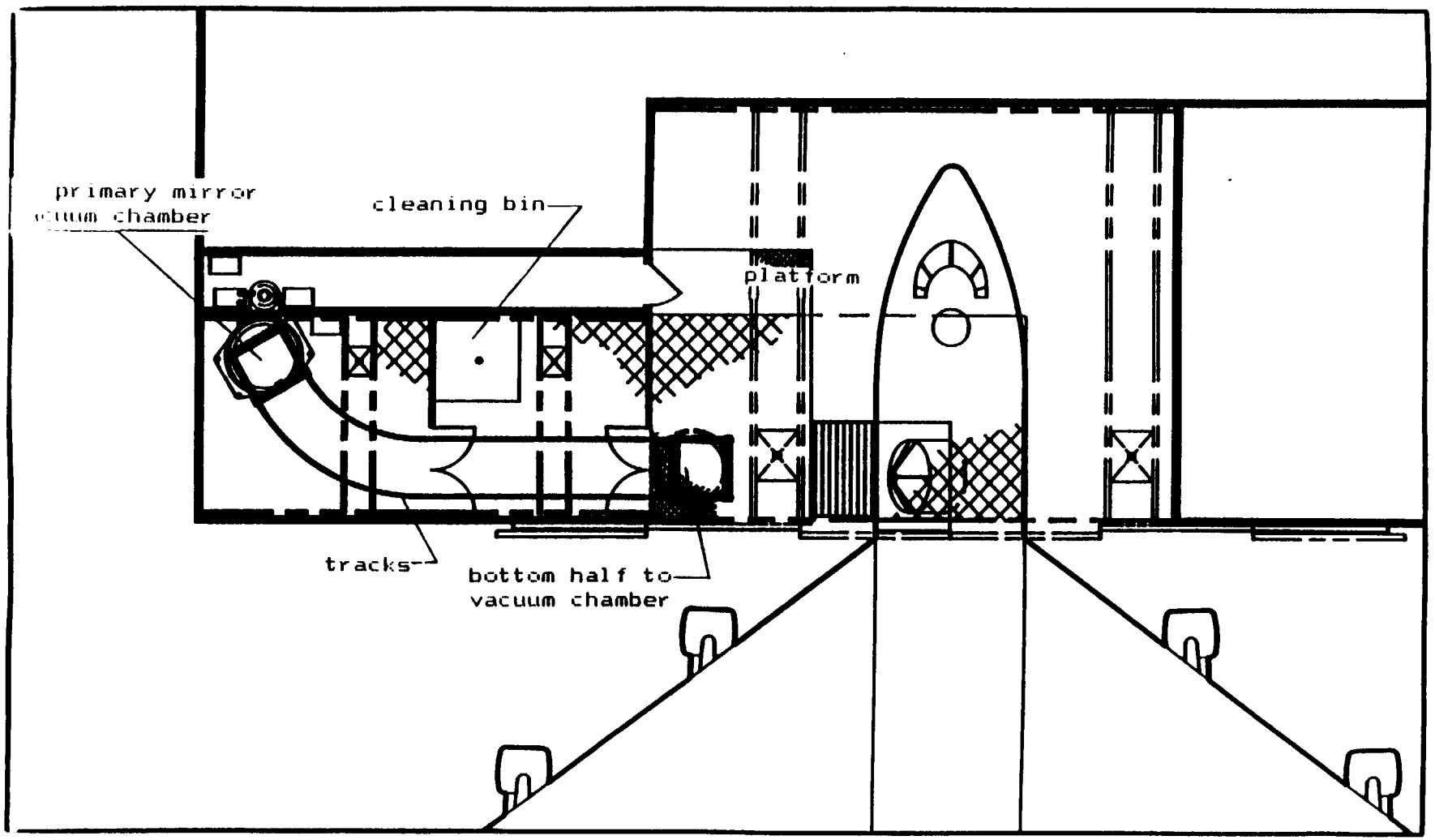

Figure 3.2.2.1-8

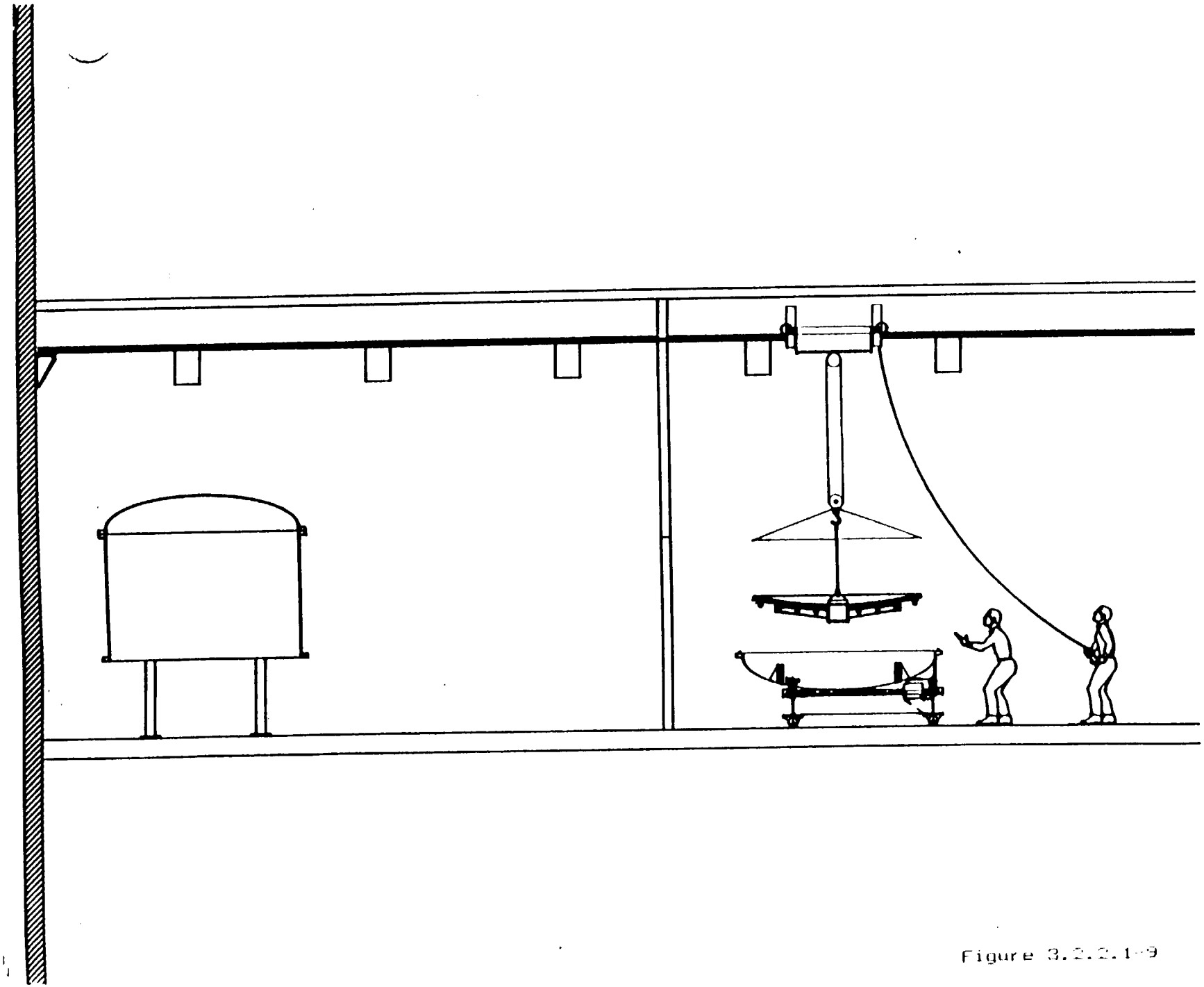

Figure 3.2.2.1-9

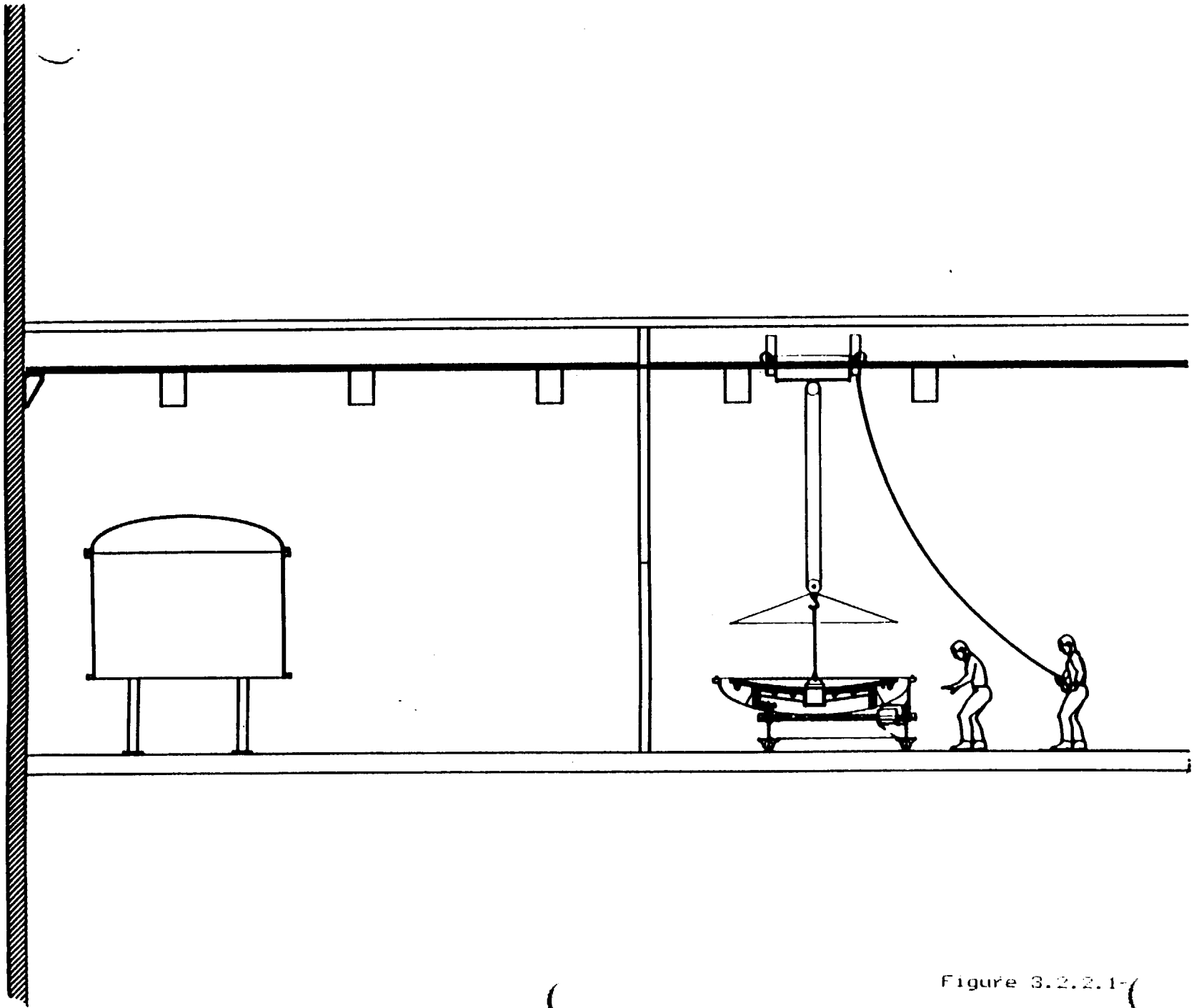

Figure 3.2.2.1-

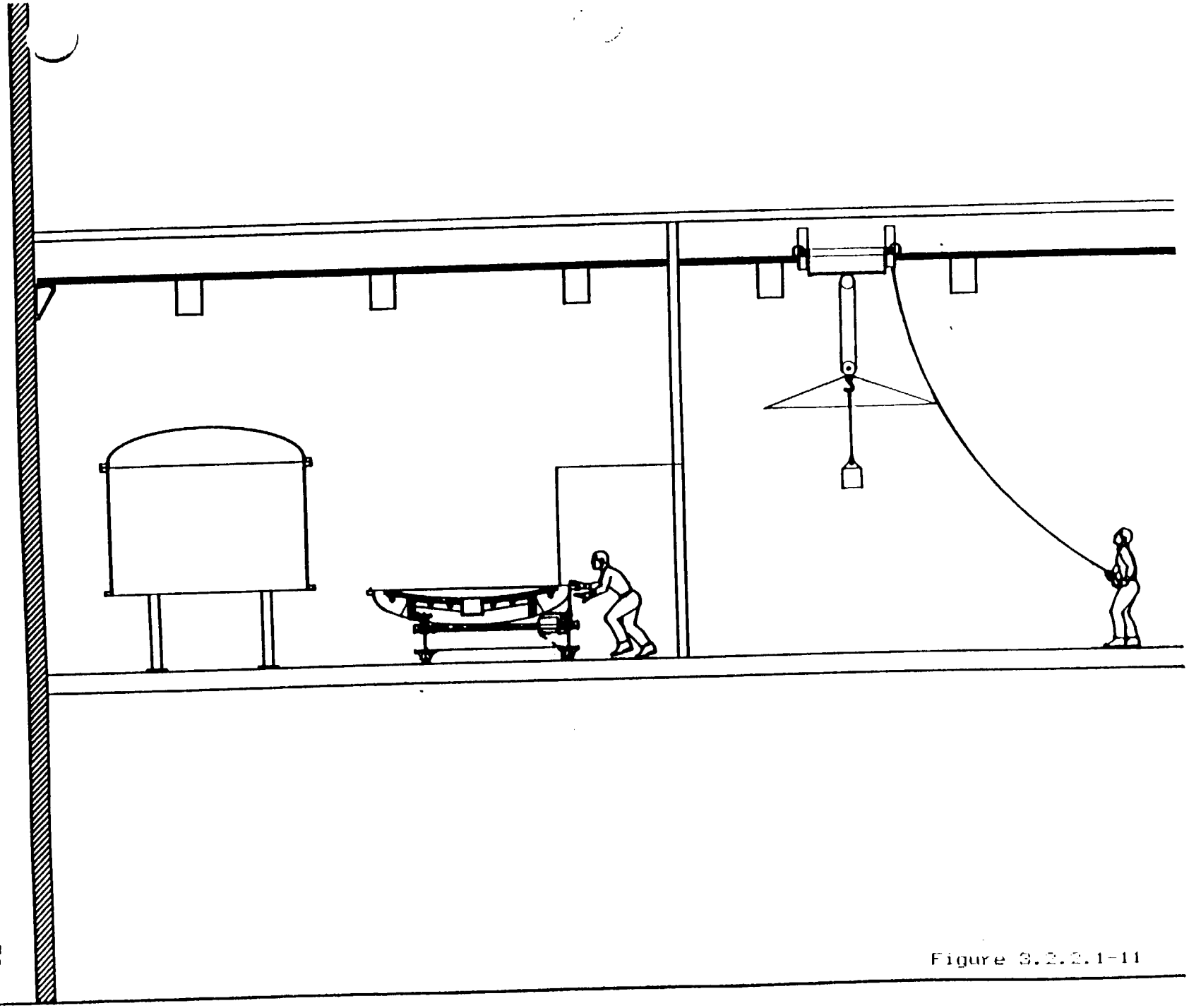

Figure 3.2.2.1-11

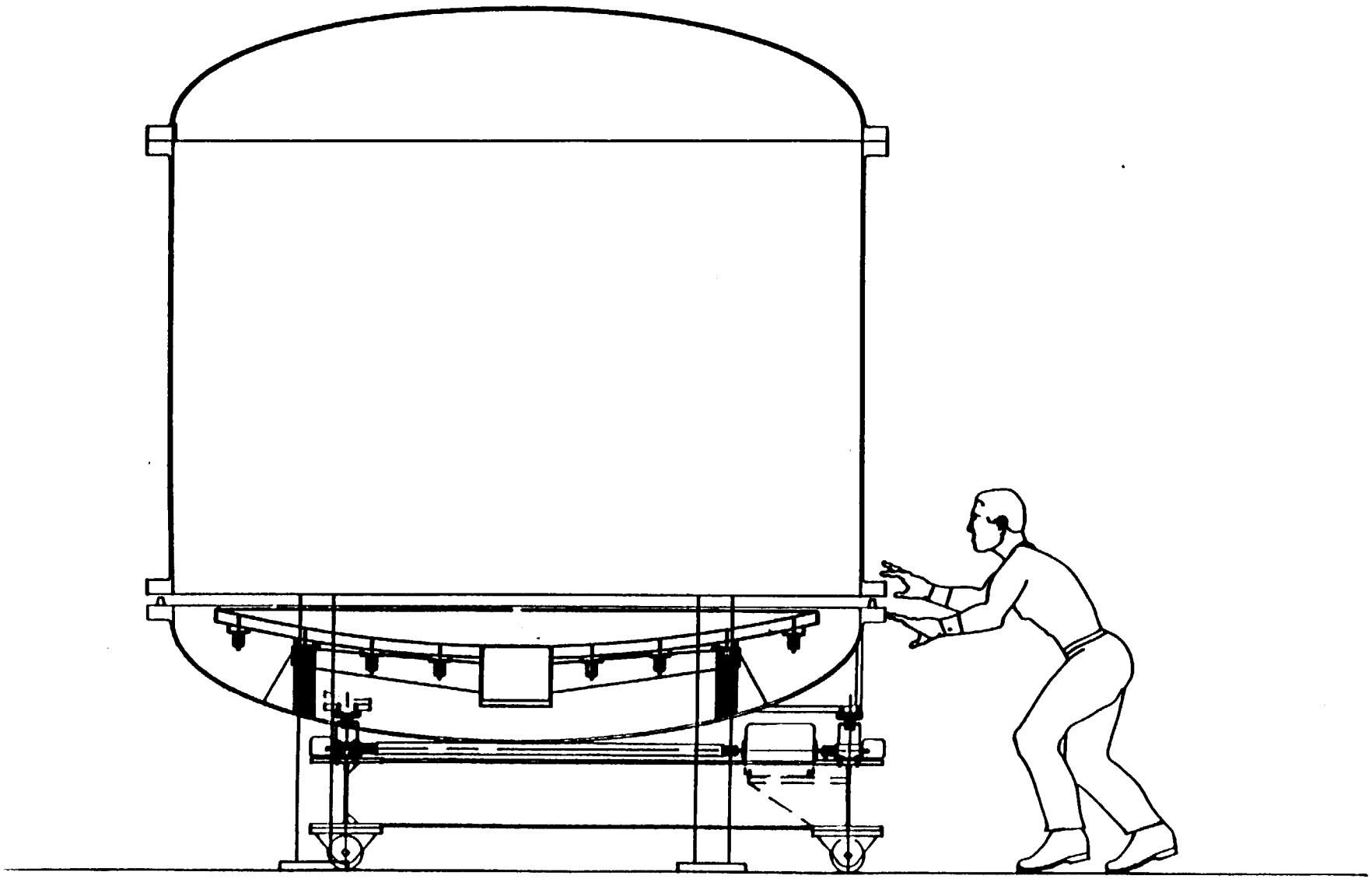

Figure 3.2.2.1-12

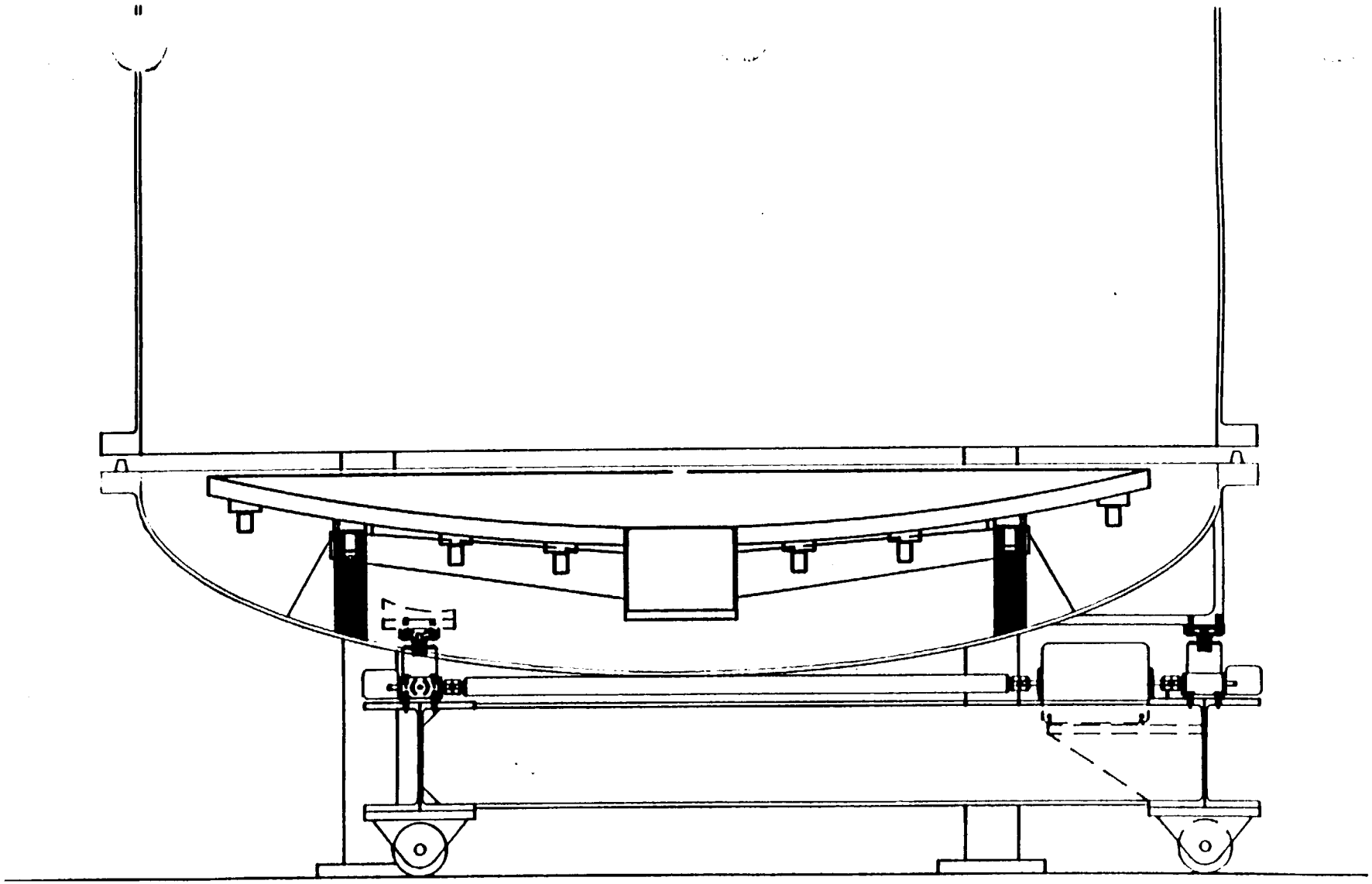

Figure 3.2.2.1-13

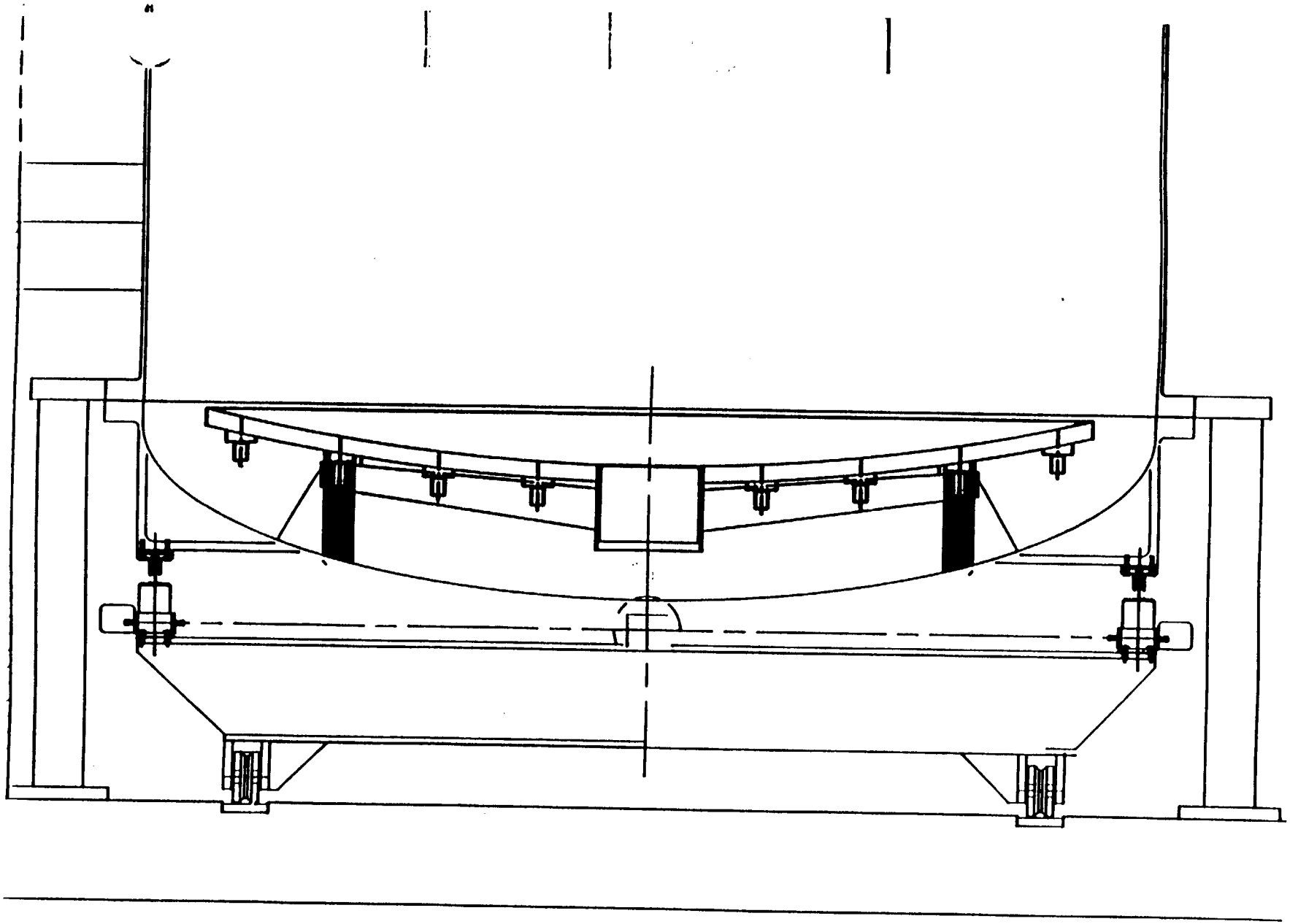

Figure 3.2.2.1-14

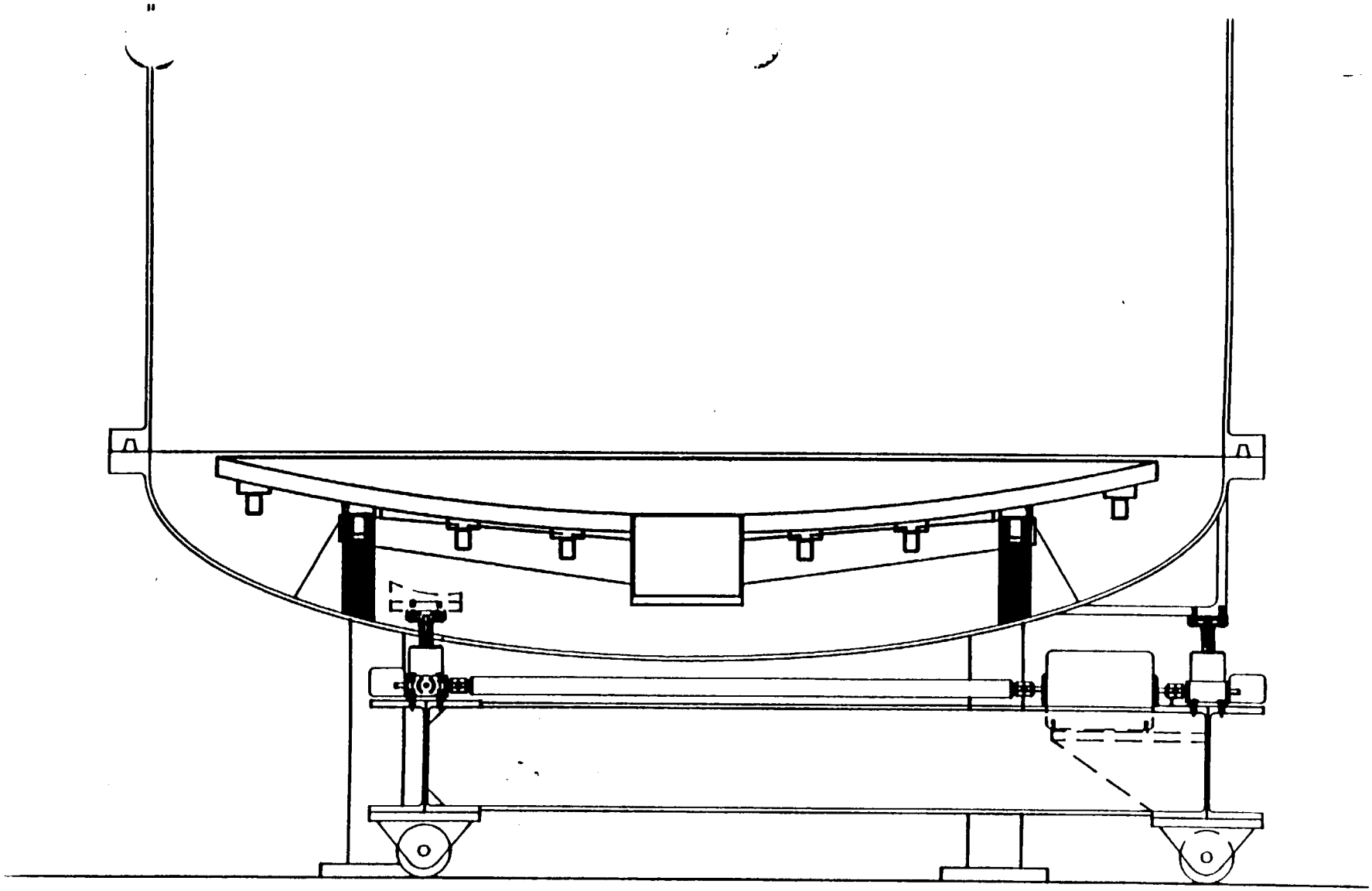

Figure 3.2.2.1-15

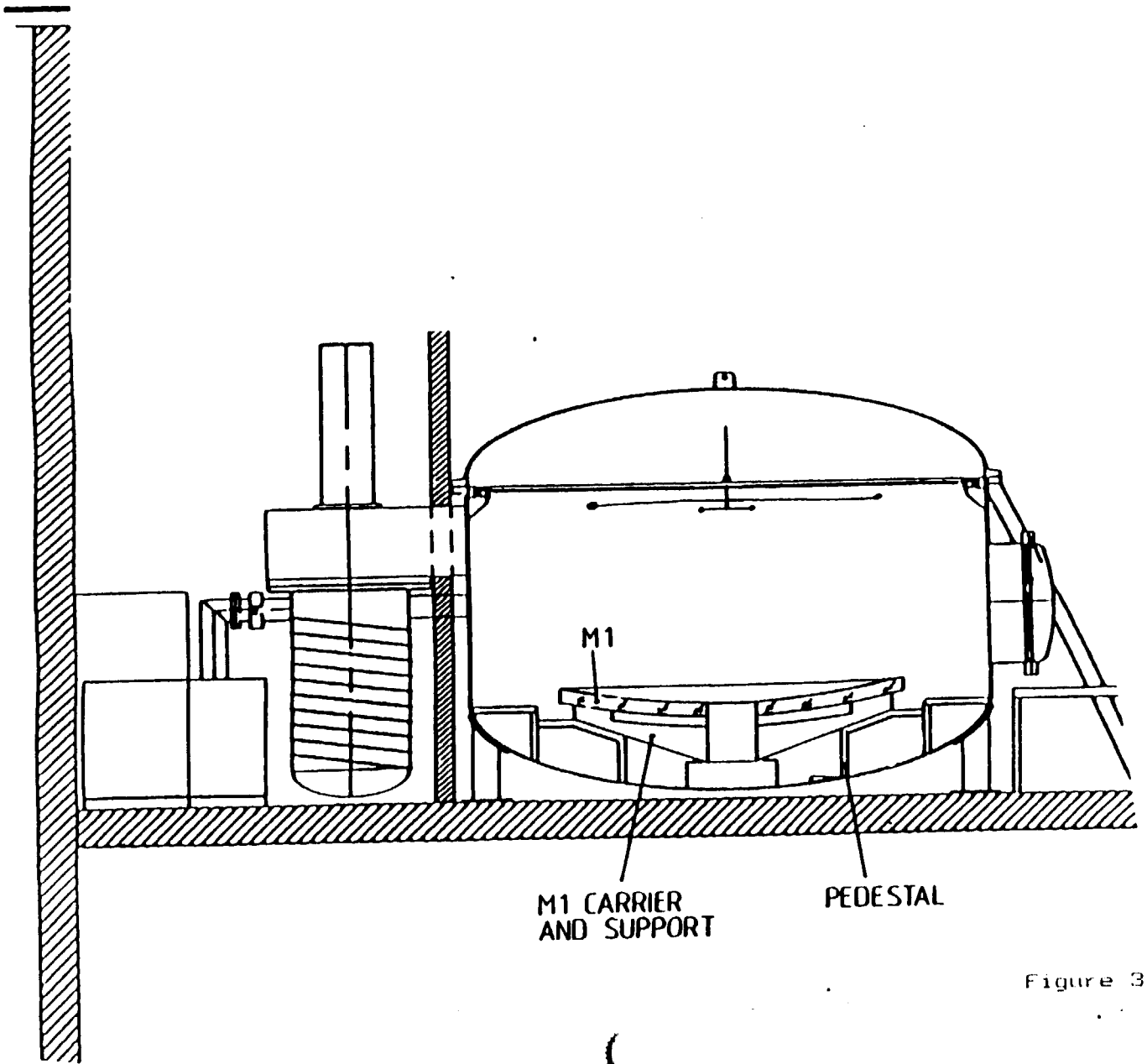

Figure 3.2.2.1-16

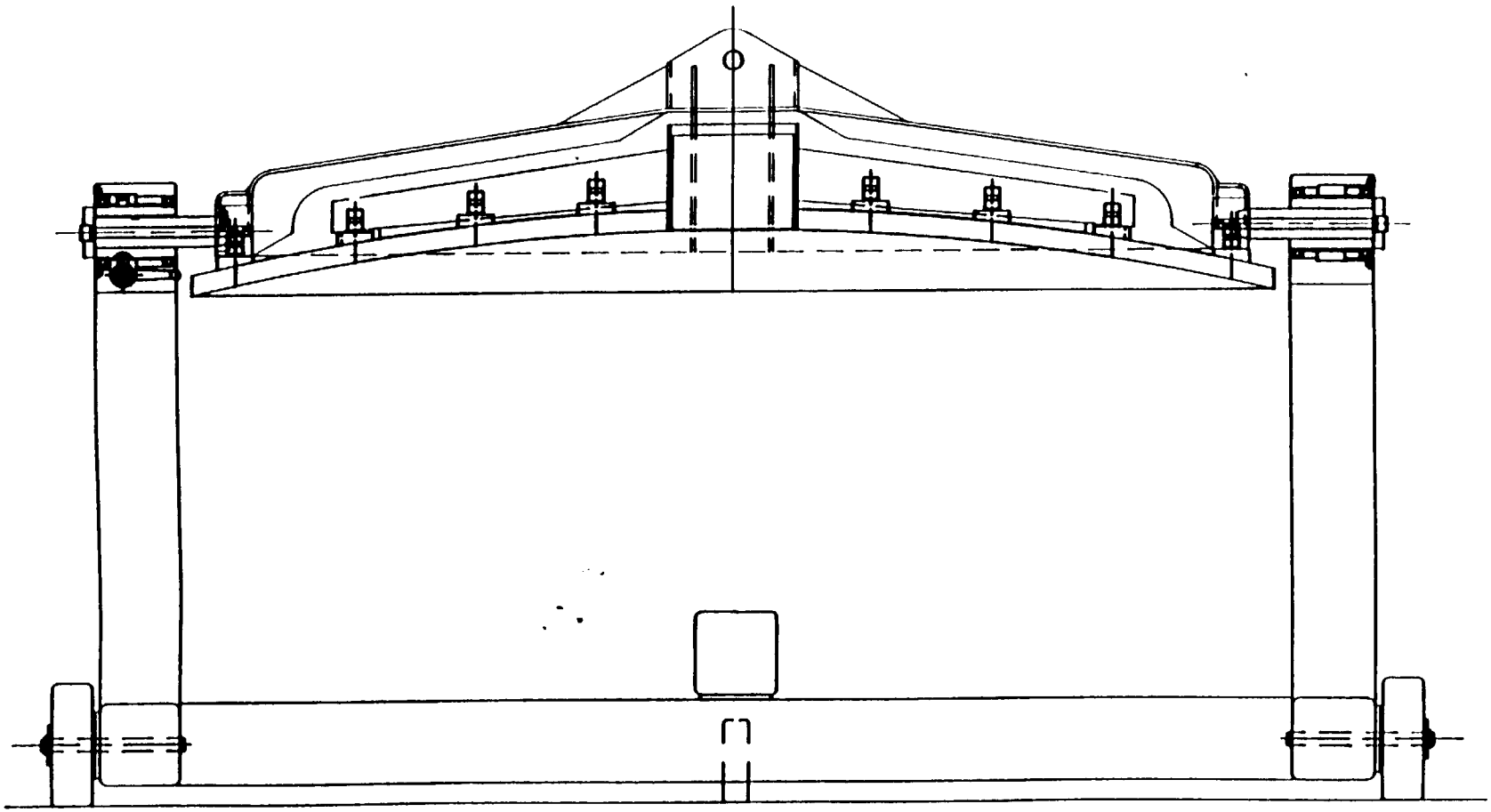

Figure 3.2.2.1-17

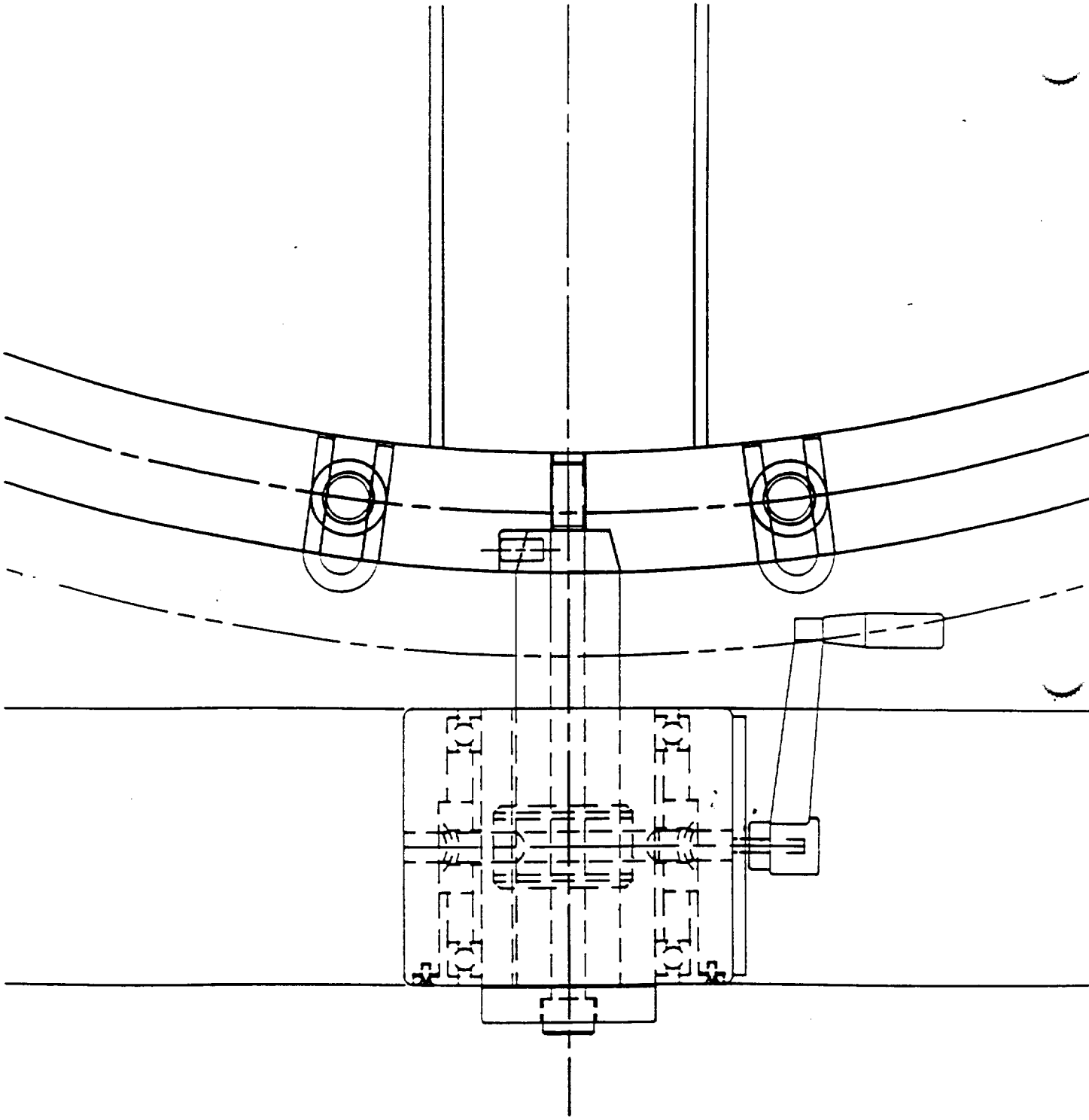

Figure 3.2.2.1-18

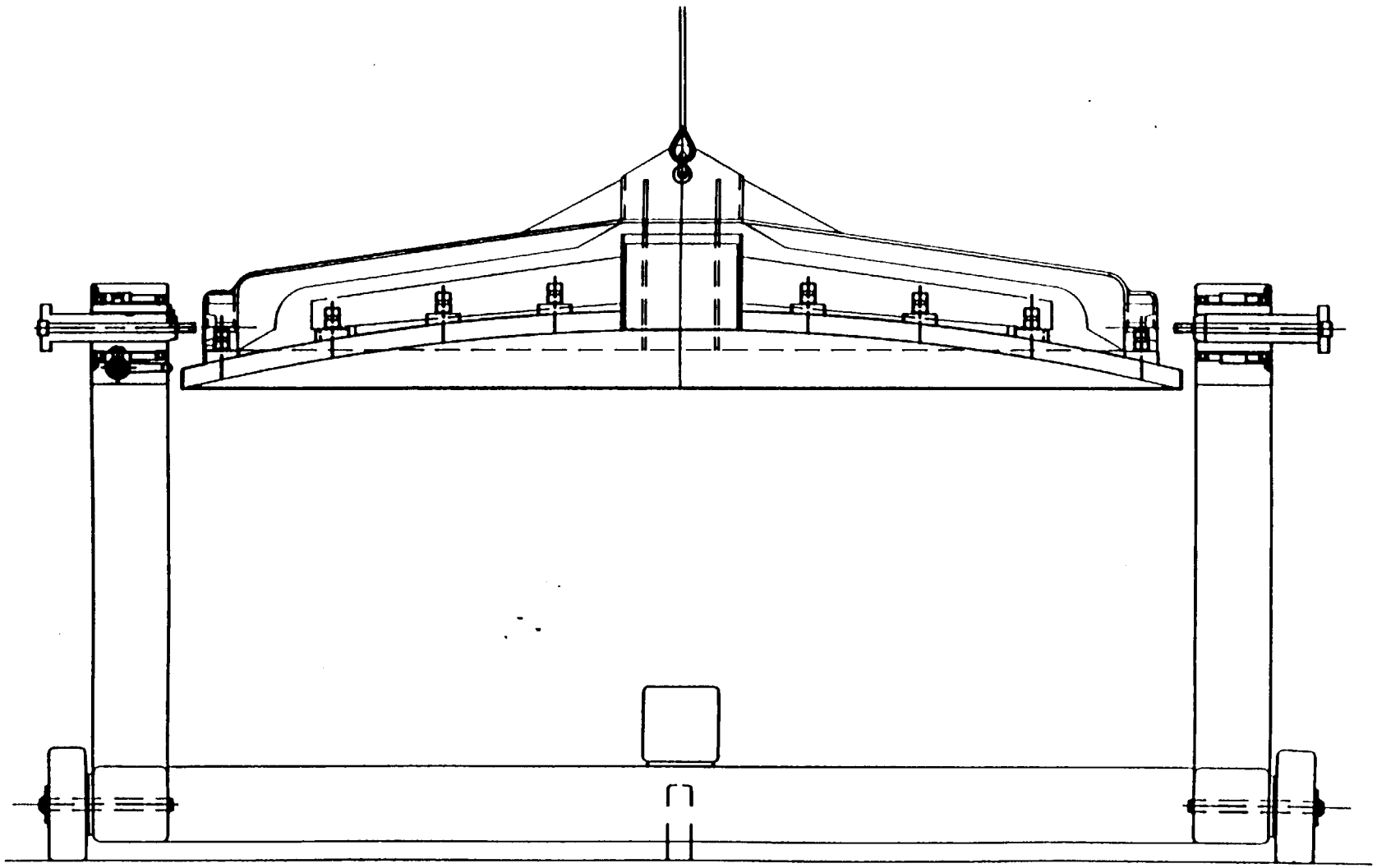

Figure 3.2.2.1-19

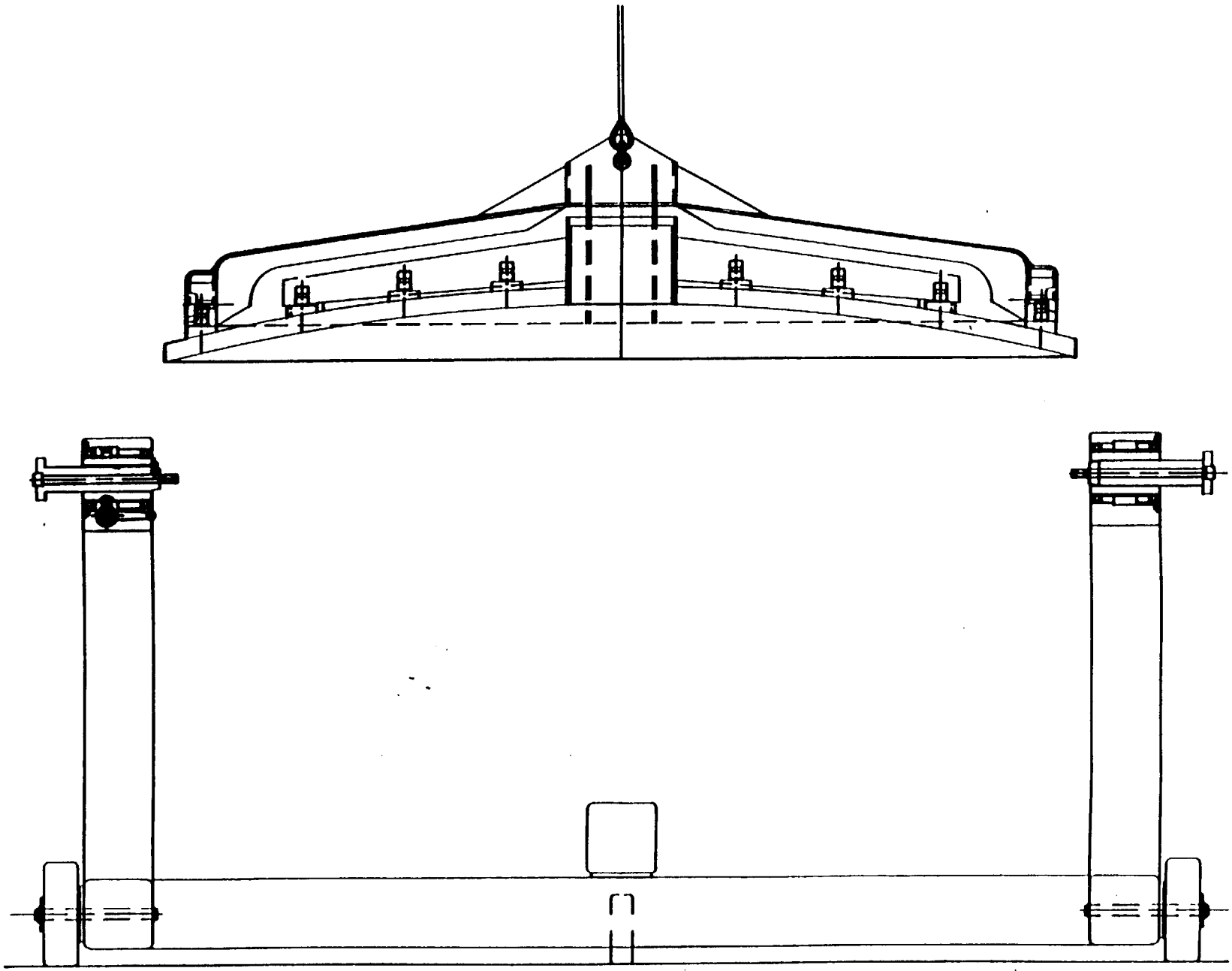

Figure 3.2.2.1-

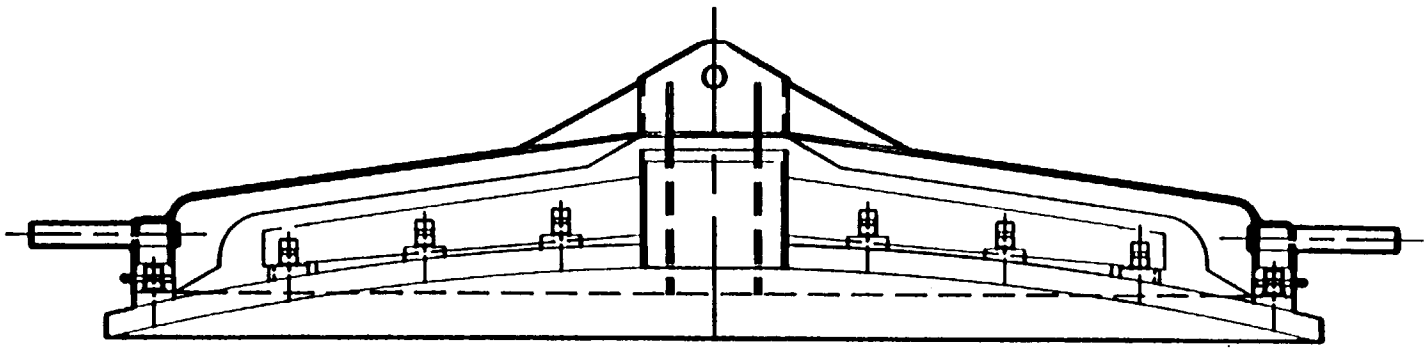

Figure 3.2.2.1-21

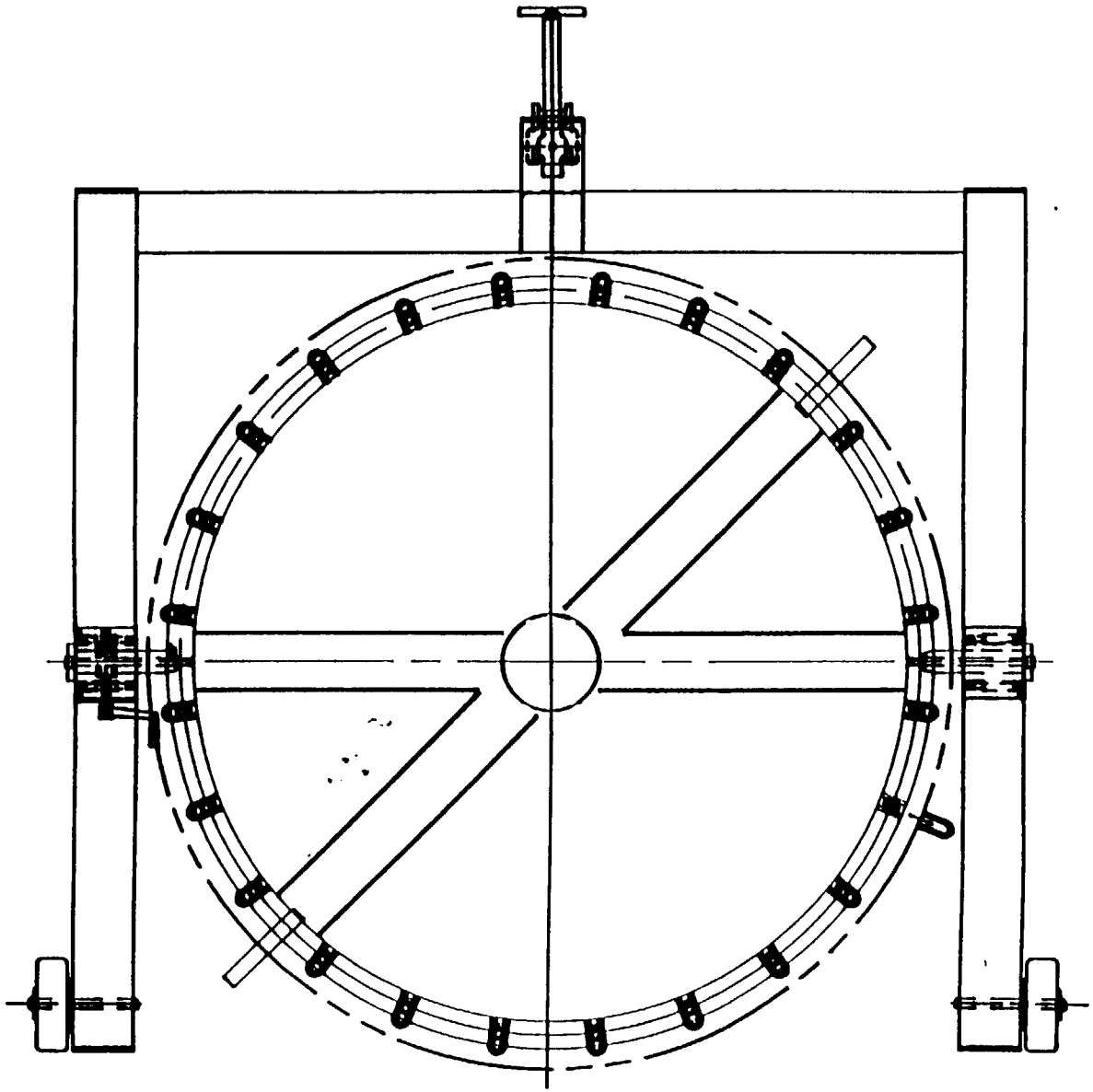

Figure 3.2.2.1-2

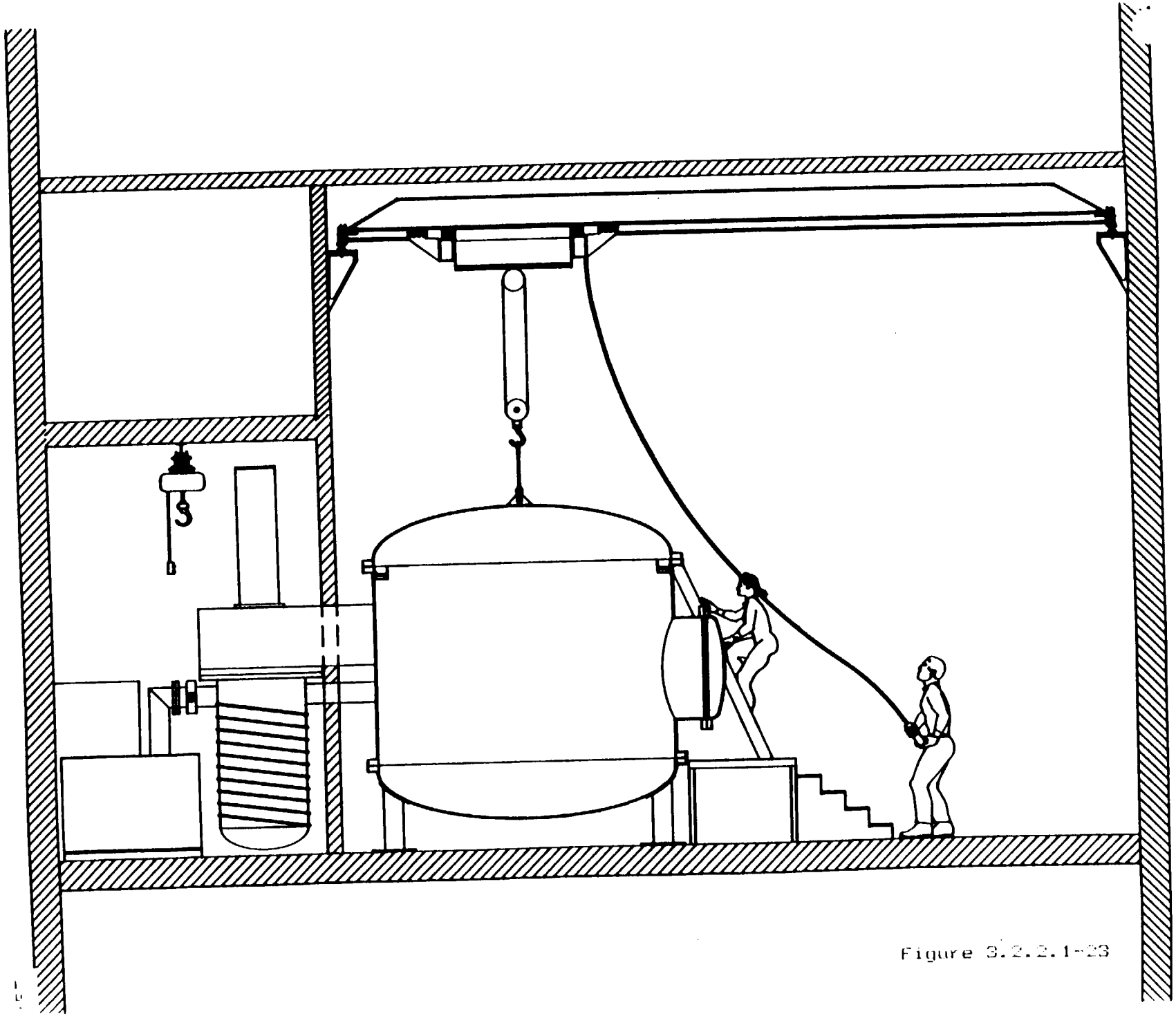

Figure 3.2.2.1-23

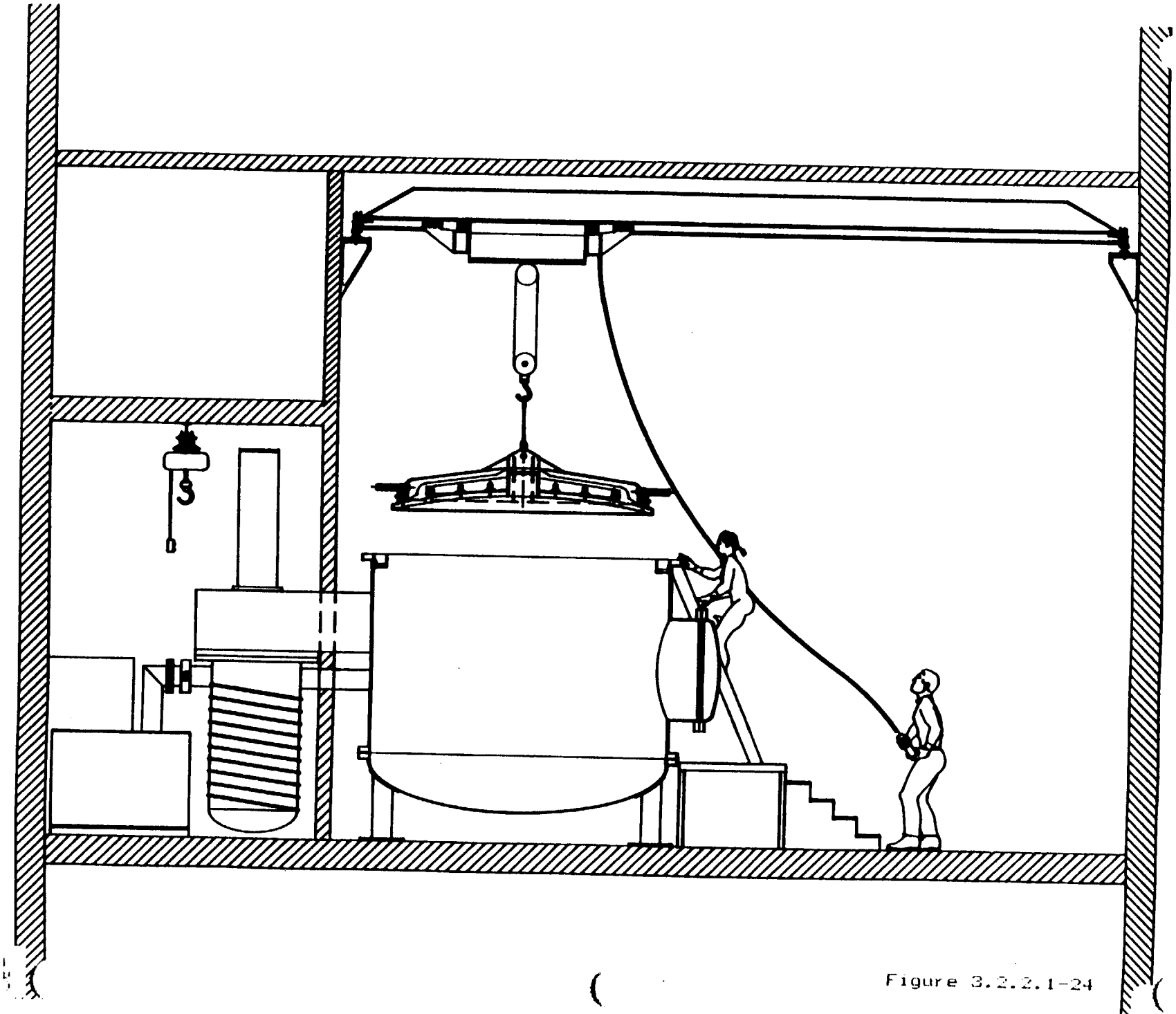

Figure 3.2.2.1-24

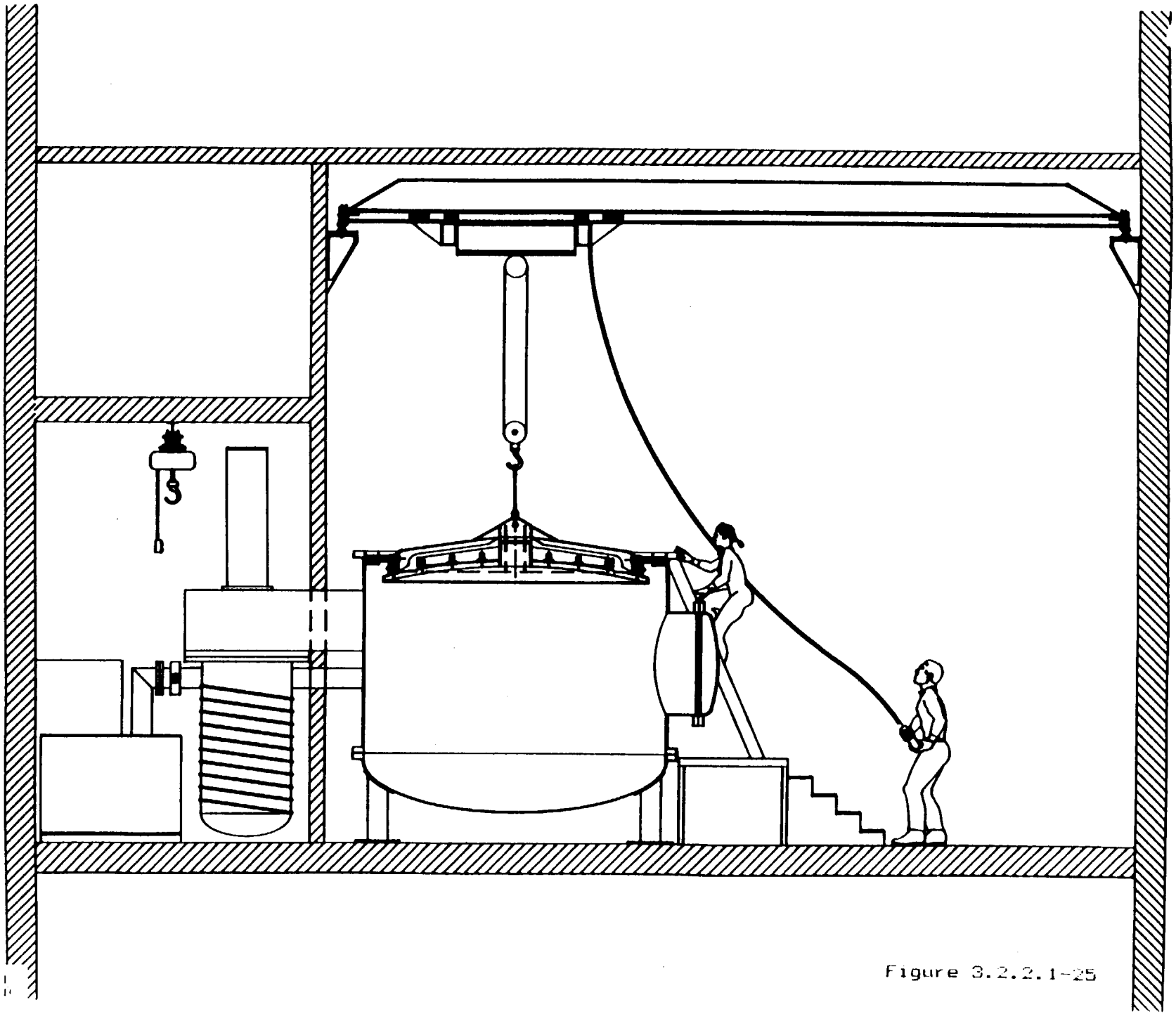

Figure 3.2.2.1-25

C-2

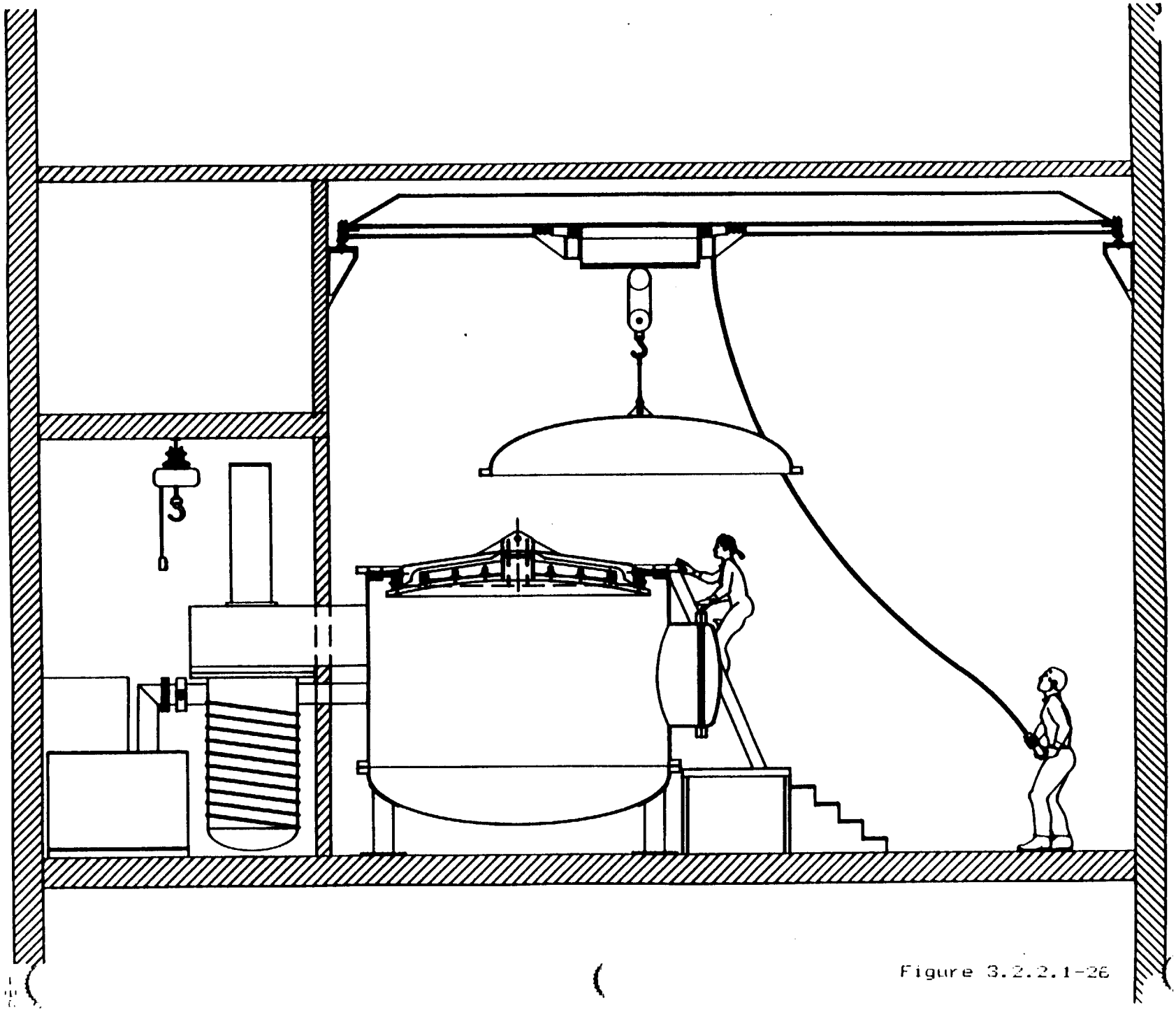

Figure 3.2.2.1-26

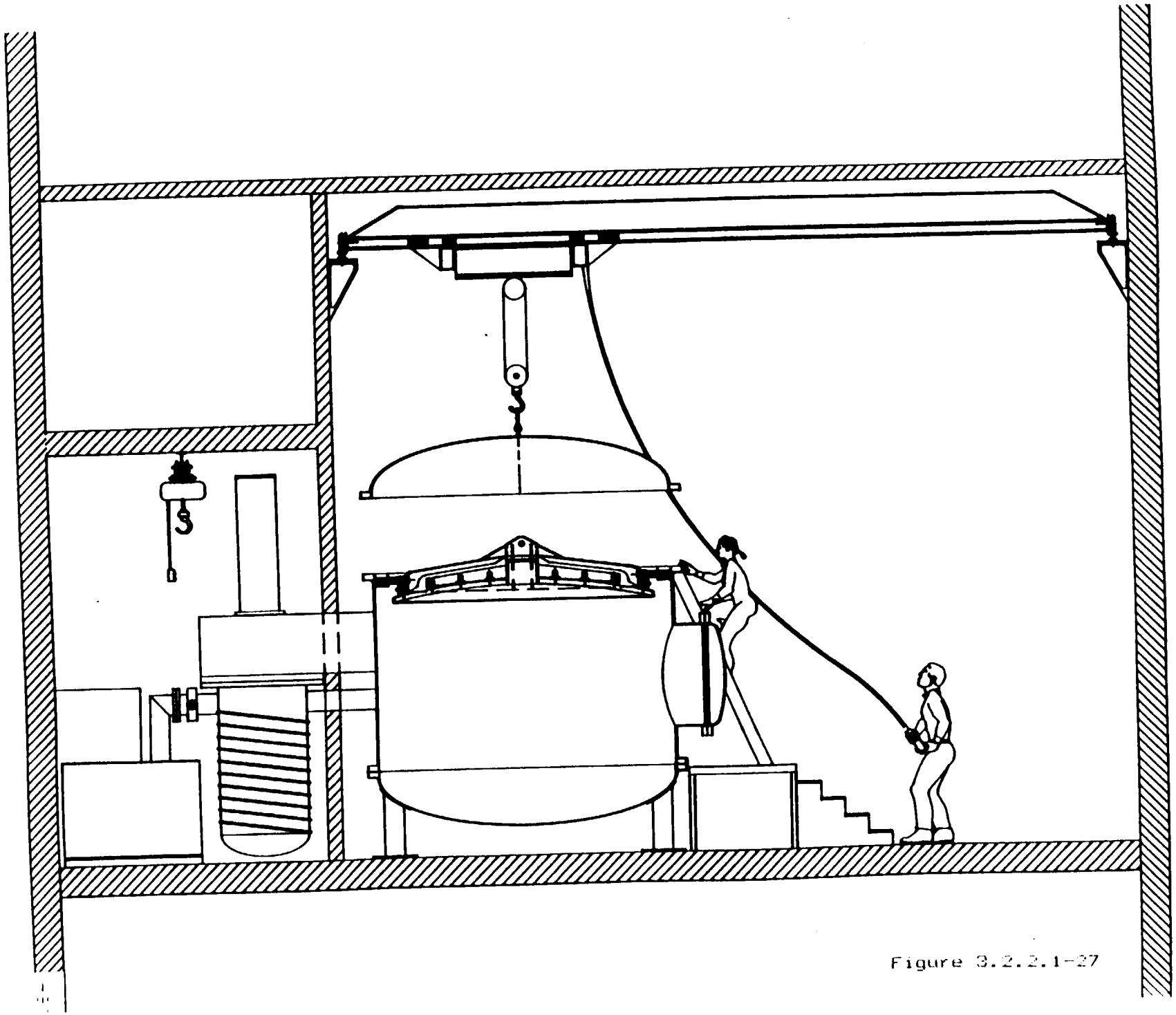

Figure 3.2.2.1-27

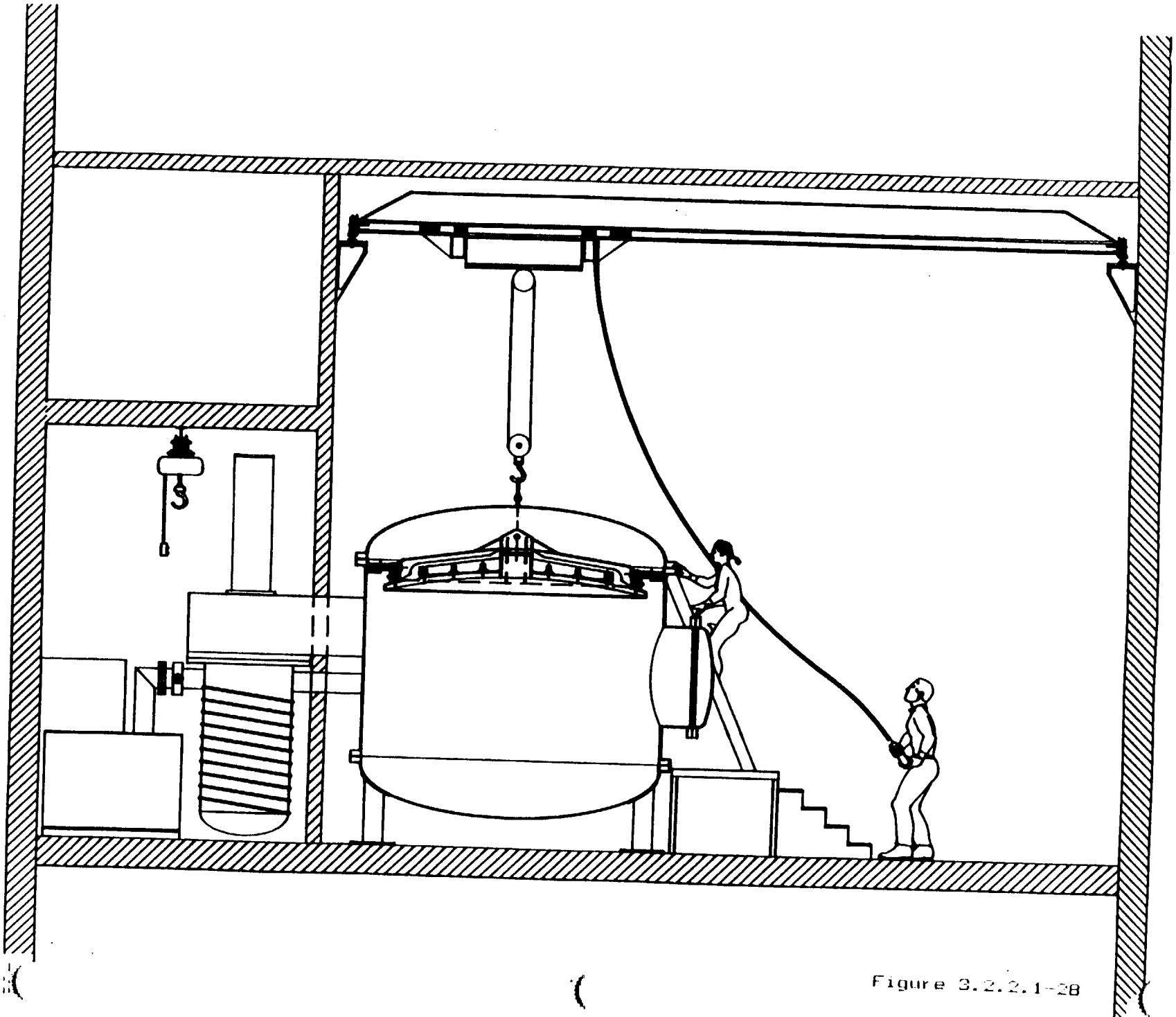

Figure 3.2.2.1-28

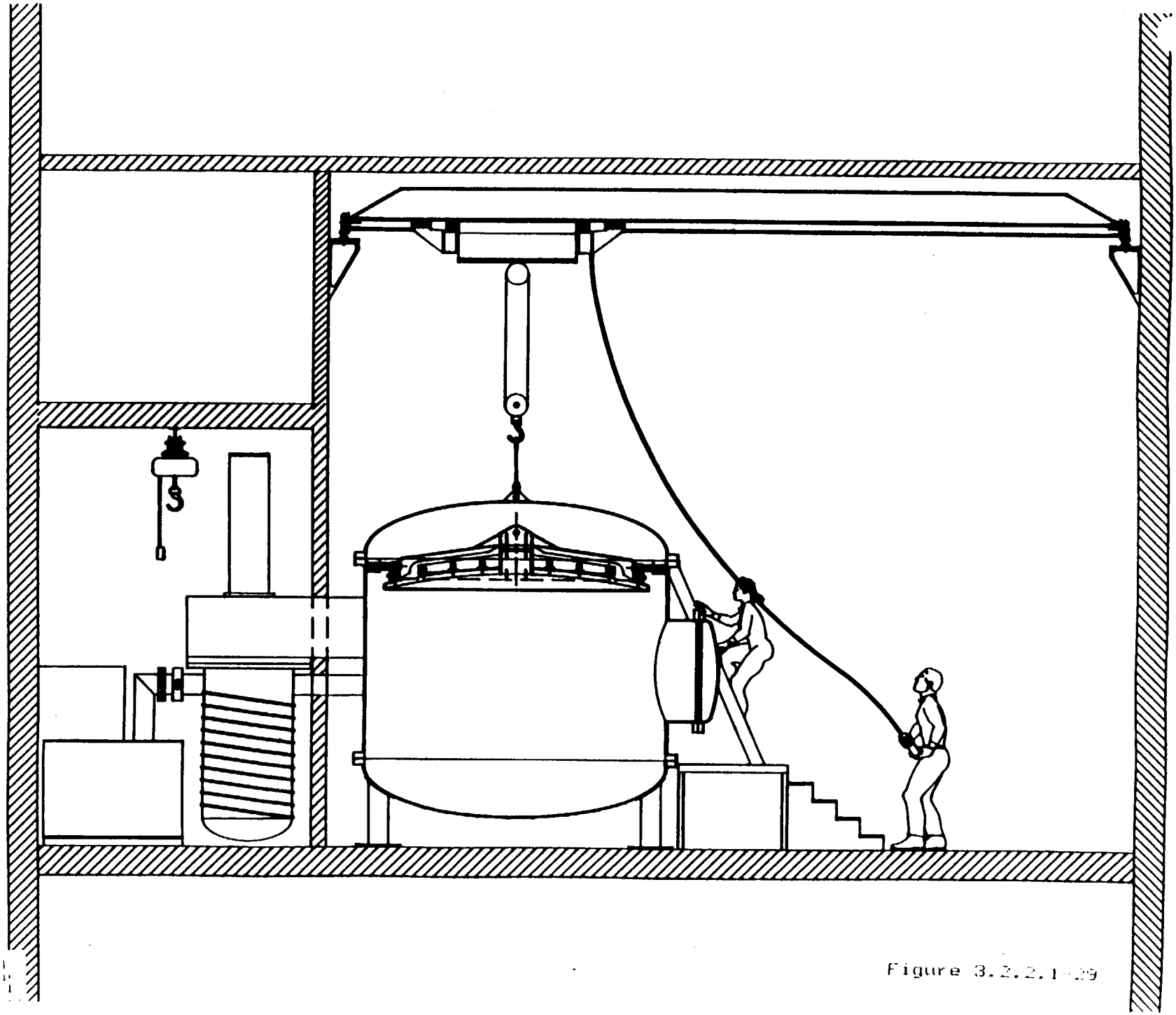

Figure 3.2.2.1-29

Figure 3.2.2.1-30

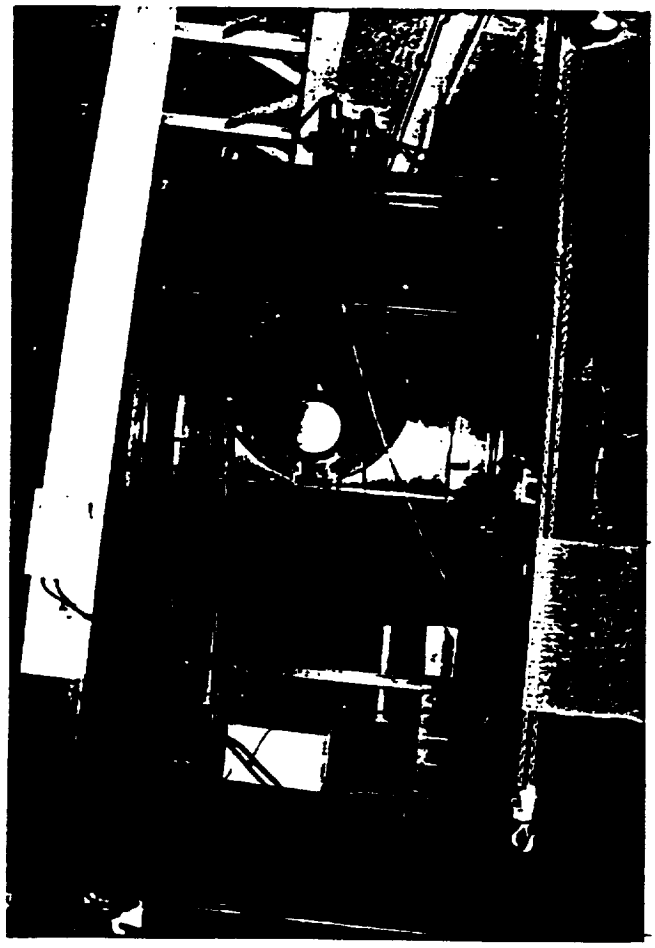

Figure 3.2.2.1-31

ORIGINAL PAGE IS
OF POOR QUALITY

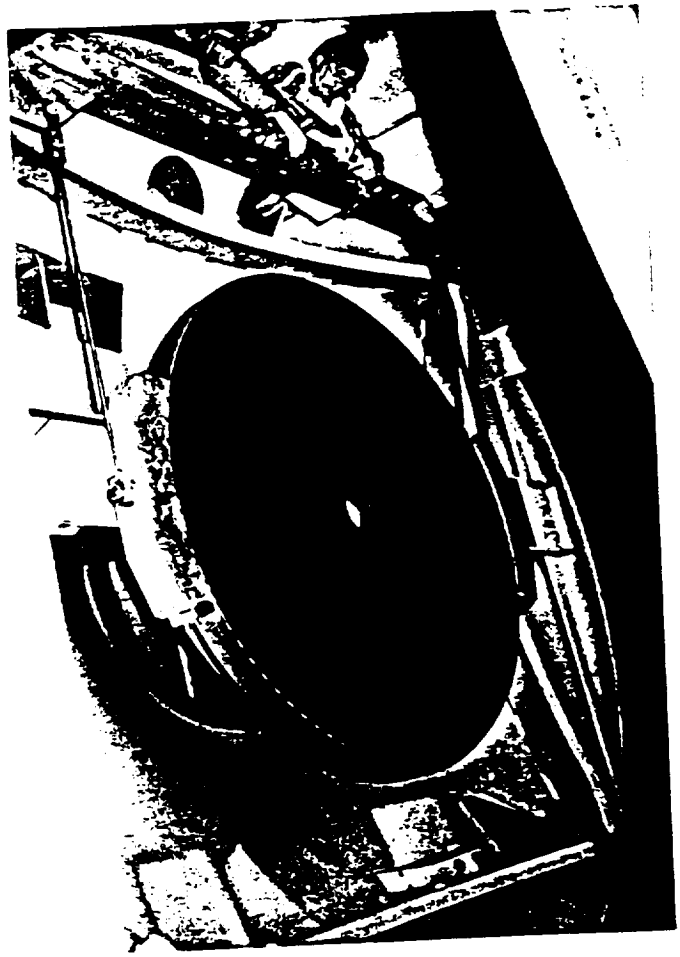

Figure 3.2.2.1-32

ORIGINAL PAGE IS
OF POOR QUALITY

3.2.2.2 Secondary and Tertiary Mirrors Handling

The secondary and tertiary mirrors of a small enough size and weight that they will be handled by a person or two from the time that they are removed from the airplane.

3.3 CLEANING AND STRIPPING

This section contains information on the equipment, procedures and supplies required to clean and strip the four SOFIA mirrors. Section 3.3.1 gives a conceptual design of what the cleaning room will look like. It includes a description of the equipment that will be needed in the room and to support the activities that occur there. Section 3.3.2 is the step by step general instructions to strip and clean the mirrors. Included are the required supplies and examples of procedures used at several optical laboratories. Section 3.3.3 has all the waste disposal and safety requirements of the facility.

3.3.1 Physical Layout and Equipment

The suggested layout for the room is given in Figure 3.3.1-0 found on the next page. Designated in the room is an area where the primary mirror is to be stripped and cleaned, a separate area to strip and clean the secondary and tertiary mirrors, and additional space to move the mirror handling equipment around. There is special equipment required to clean and strip the primary. For the other mirrors the equipment can be purchased off-the-shelf.

The room must have the proper waste disposal facilities due to the use of strong acids and bases during cleaning. This is covered in greater detail in section 3.3.3.

Additional equipment that the room will require:

- laboratory bench
- chemical storage cabinets
- cleaning supplies listed in section 3.3.2 including the acids
- acid resistant waste basket with a lid that forms a good seal
- portable bright lights to carry from one work area to another

Note that all of the above equipment does not need to be stored in the cleaning room.

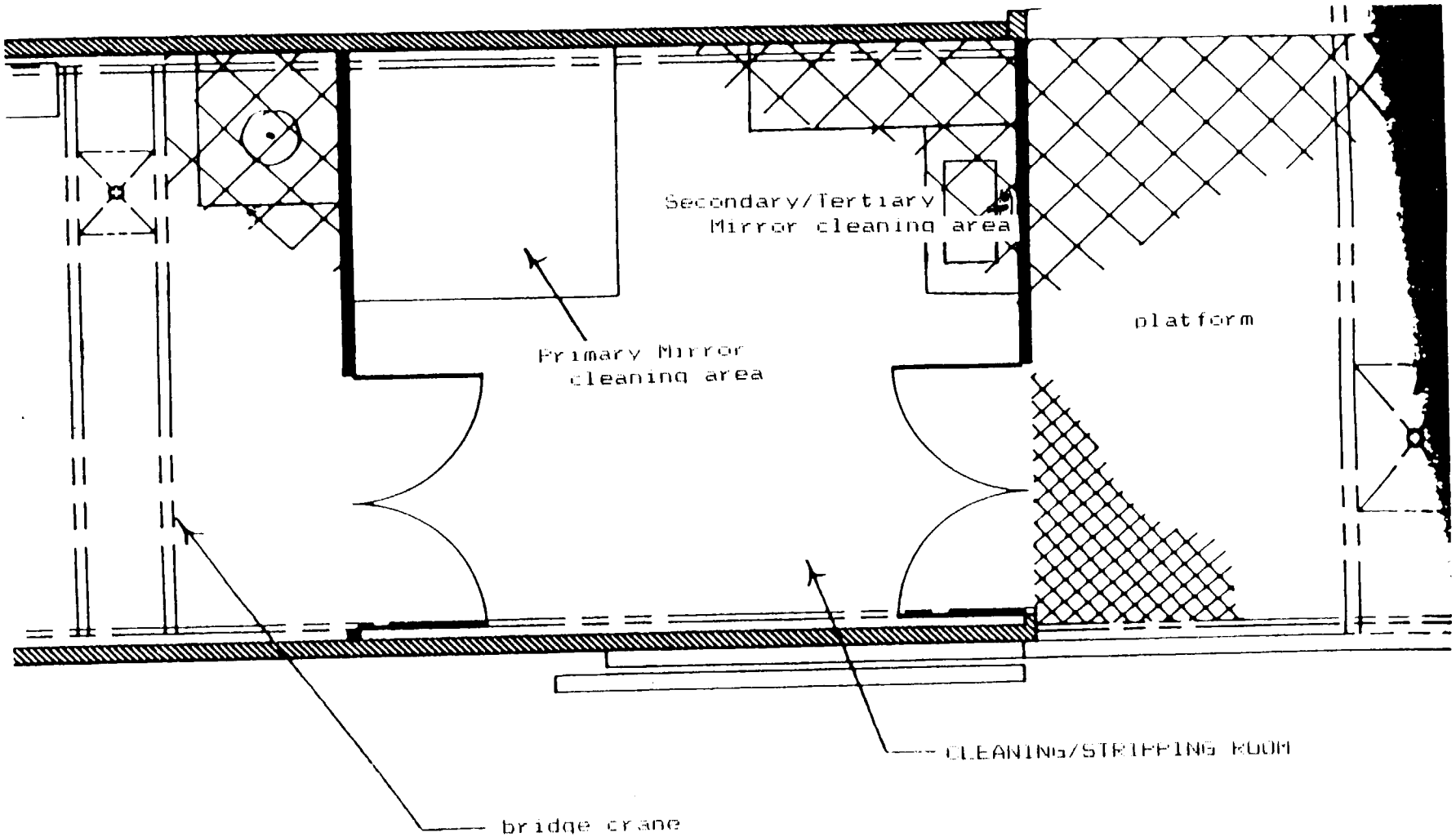
Secondary/Tertiary
Mirror cleaning area
platform
Primary Mirror
cleaning area
CLEANING/STRIPPING ROOM
bridge crane

Figure 3.3.1-0

3.3.1.1 Special Primary Mirror Cleaning Equipment

The primary mirror may be cleaned facing sidewards or facing upwards and this is dependent upon whether the mirror cell or other type of support remains attached, and, the individual's preference.

Two options exist for a stand to place the primary mirror on while cleaning. The first is to leave it on the transport cart (see Figure 3.3.1.1-0) which must then be made of materials that are corrosion resistant to the chemicals used for cleaning. If the mirror can be rotated, i.e. if the support remains attached, the transport cart must have this ability. To clean in an upright manner a stand is needed to reach the top of the mirror while standing on its side. Refer to Figure 3.3.1.1-1. Note that the transport cart must be rolled to a location in the room where a drain exists.

If the mirror cannot be rotated or the user prefers cleaning it facing up, a catwalk/bridge apparatus (Figure 3.3.1.1-2) must be designed to fit around the mirror and transport cart. The catwalk is situated 360 degrees around the cart. A bridge folds down to reach across the mirror so that the center may be reached for cleaning and stripping. A suggestion is that the catwalk/bridge be permanent and the transport cart be rolled into the center of it. The center should be where the drain exists.

The second option was given by ZEISS in the Telescope Assembly Definition Final Report. It is seen in Figure 3.3.1.1-3. The mirror is placed in to the cleaning bin via crane. A permanent catwalk is situated 360 degrees around the bin. A bridge folds down to reach across the mirror so that the center may be reached for cleaning and stripping. The bin is to be situated, on legs, several (3-4) feet above the floor. There is no need for a drain in the floor as the discharge for the bin will be attached to a hose. The hose ends in an acid resistant disposal container. When full the container is carted off for waste treatment.

Another idea, a combination of the two previous options, would be to roll the transport cart under the side of the cleaning bin. Once locked into position, the mirror would be rotated onto it's side and cleaned (see Figures 3.3.1.1-4 and -5).

ORIGINAL PAGE IS
OF POOR QUALITY

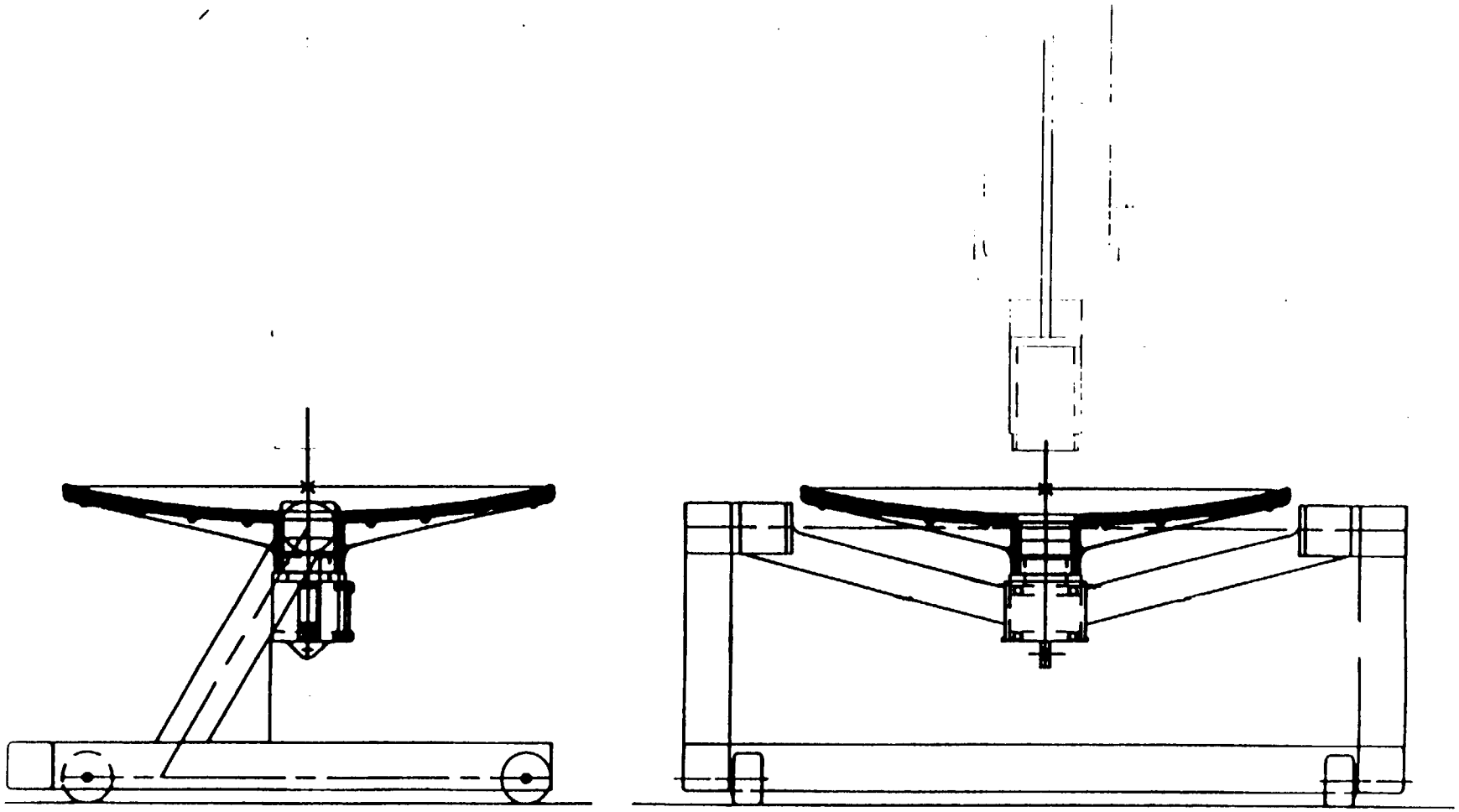

Figure 3.3.1.1-6

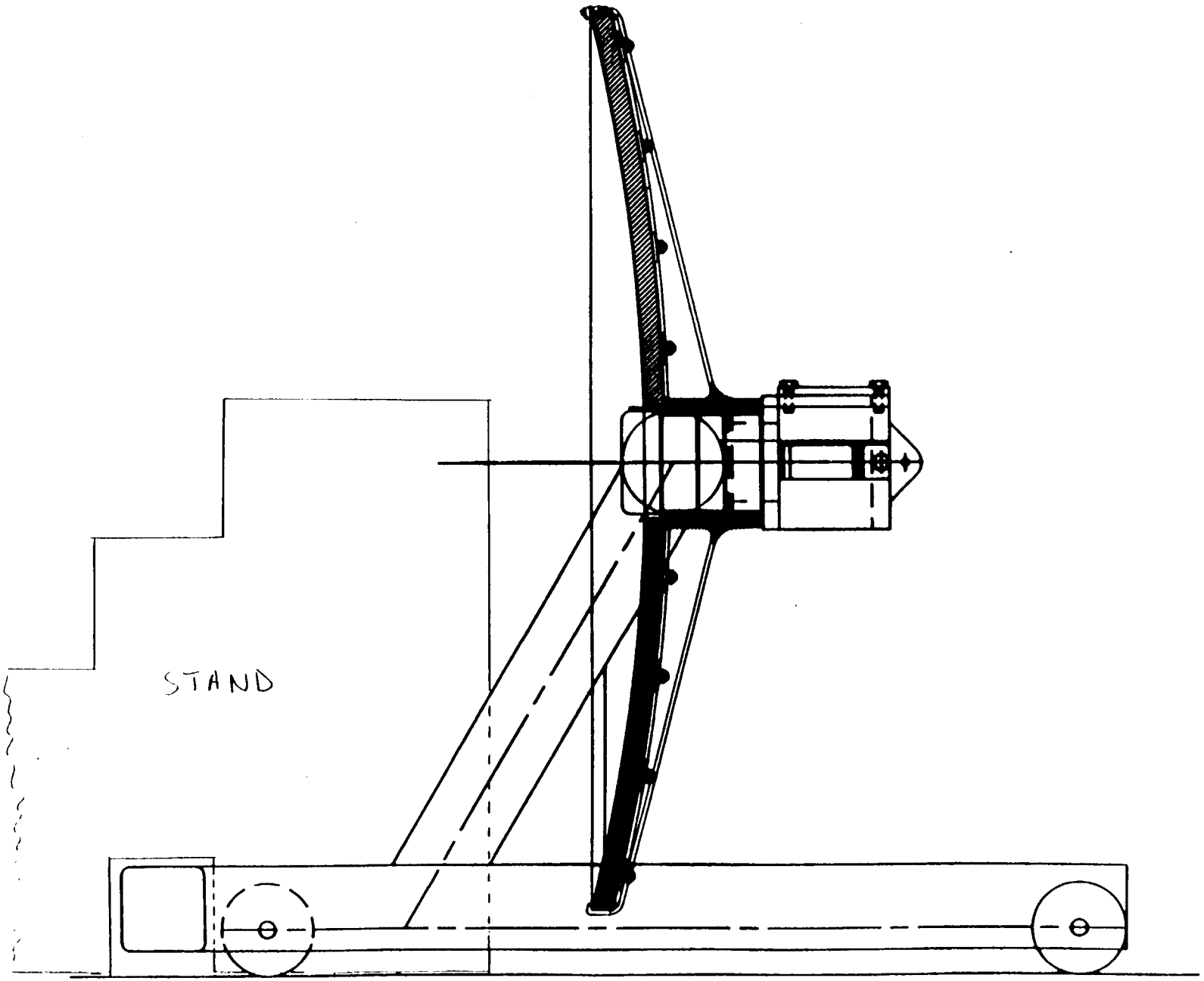

Figure 3.3.1.1-1

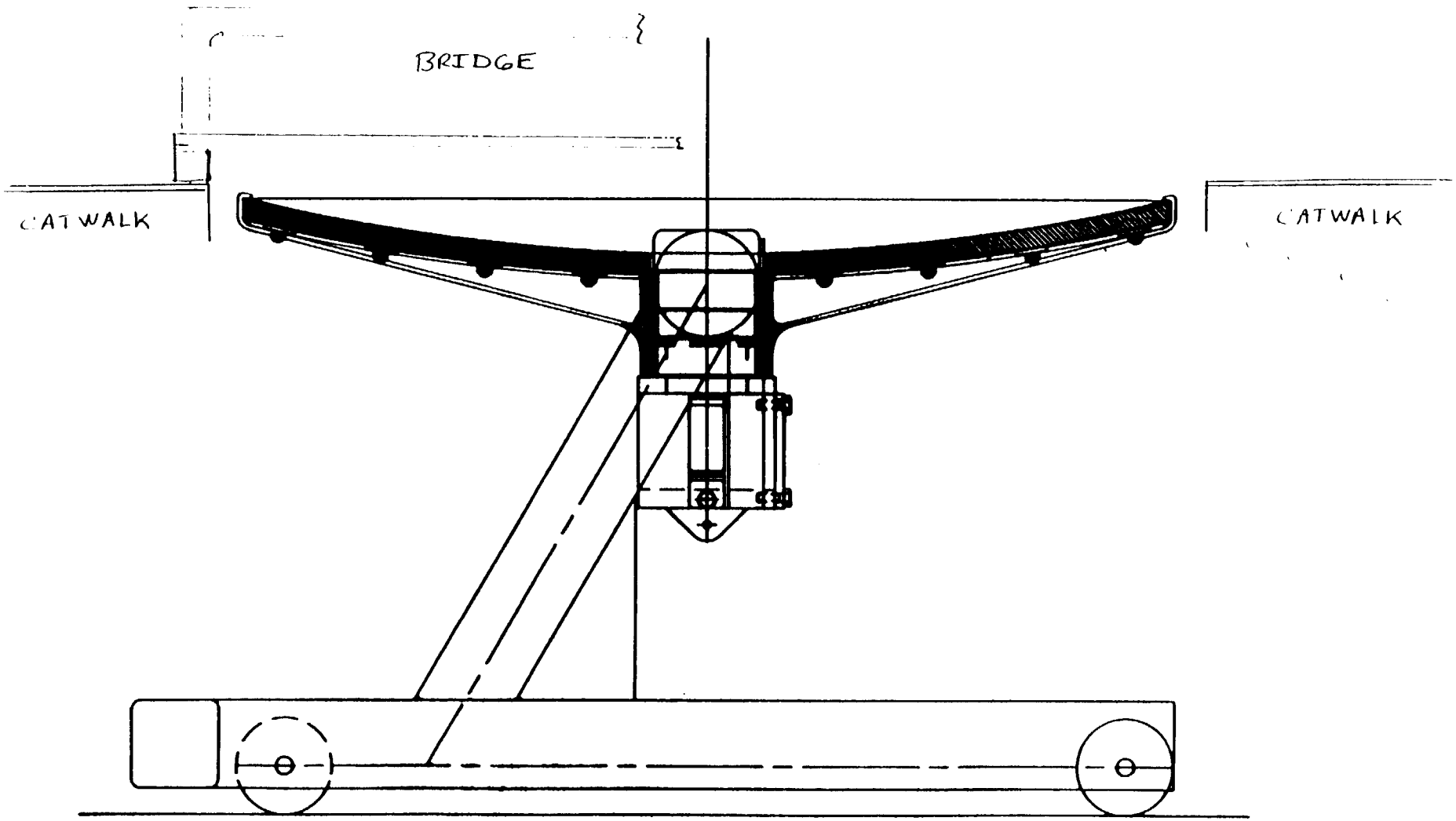

Figure 3.3.1.1-2

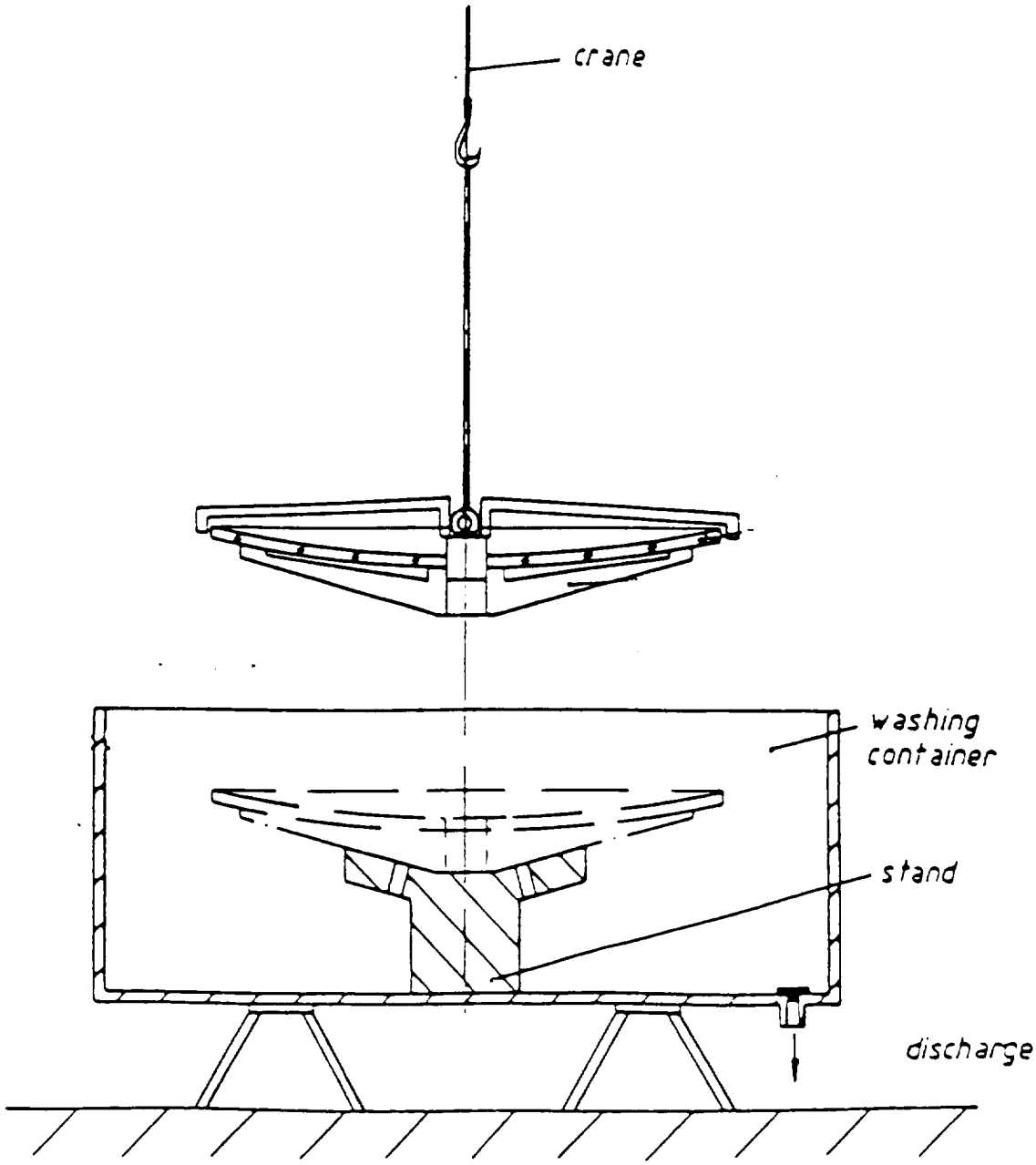

Figure 3.3.1.1-3

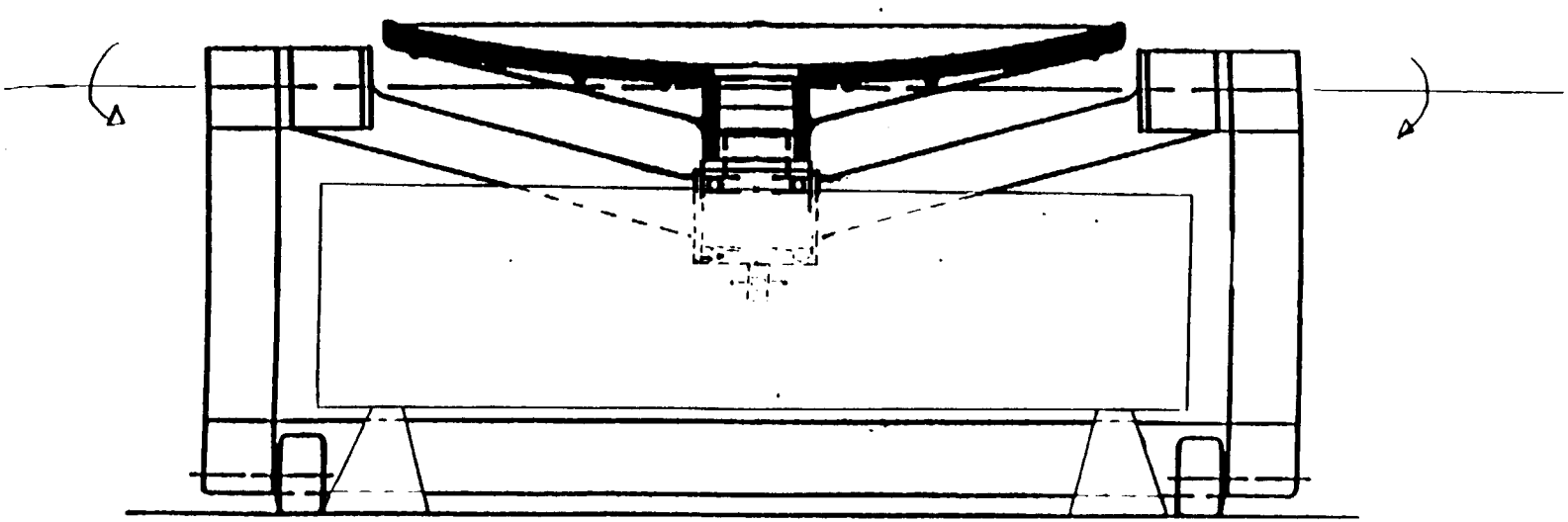

Figure 3.3.1.

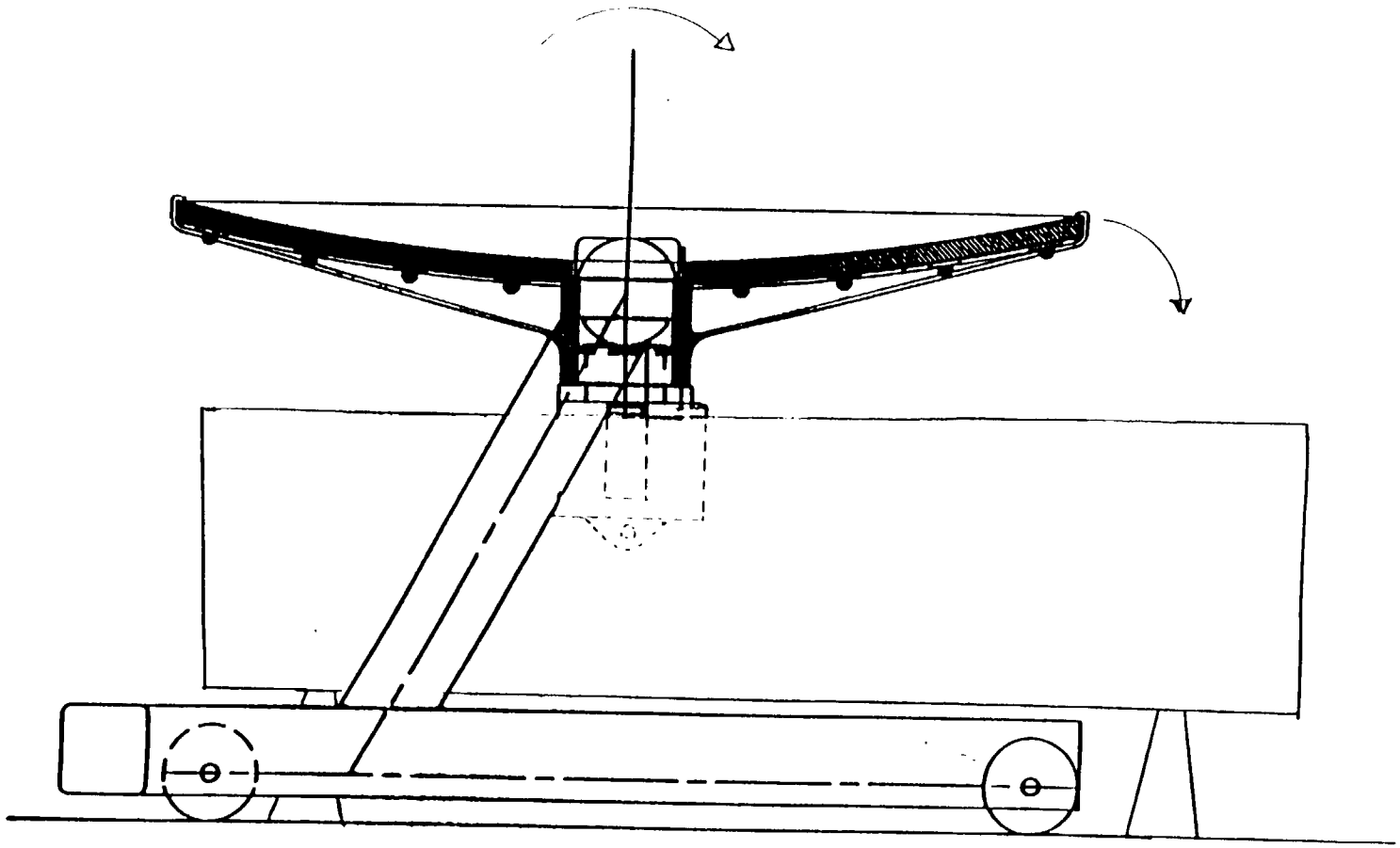

Figure 3.3.1.1-5

3.3.1.2 Secondary/Tertiary Mirrors Cleaning Equipment

The secondary and tertiary mirrors are of a small enough size that they are best cleaned in a normal sink that is both acid and corrosion resistant. The sink must be a minimum of three feet long by two feet wide by one foot deep. See Figure 3.3.1.2-0.

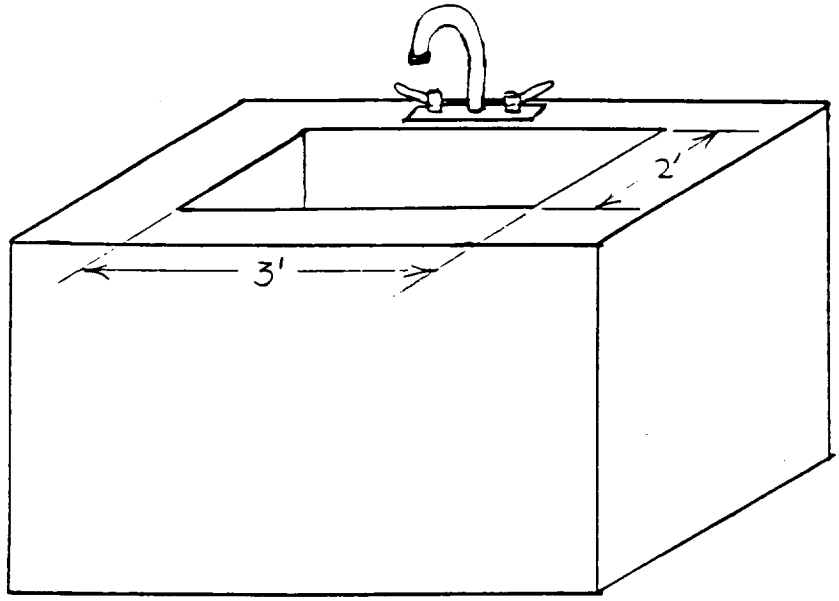

Figure 3.3.1.2-0

3.3.2 Cleaning Procedures and Supplies

The following cleaning procedure is for use with all four mirrors. More detailed procedures used at several different sites can be found at the end of this section. The first (procedure #1) is the procedure that is used at Canada-France-Hawaii Observatory in Hawaii. The second (procedure #2) is used by a unknown source. Schott suggests a procedure (#3) unique to Zerodur which can also be found at the section's end. Note that the German chemicals have American counterparts and therefore do not need to be ordered from Germany. The general procedure to clean a mirror is:

1. Wash the mirror with soapy water, flushing well to remove particulates such as dirt or bird droppings.

2. Strip the old coating with an acid mixture.

3. Flush with tap water. Note that steps 2 and 3 can be repeated before continuing on to 4.

4. Neutralize the acid with an hydroxide, making a part with calcium carbonate, rubbing to clean surface.

5. Flush with tap water.

6. Neutralize hydroxide and carbonate with acid.

7. Flush with tap water.

8. Rinse with distilled water.

9. Dry with lint-free (wipes) industrial tissue.

10. Inspect for smudges and remove with HPLC grade isopropyl alcohol.

11. Cover mirror with plastic wrap or the hard mirror cover outlined in section 3.2.1. transport to chamber, place in chamber and remove plastic wrap.

12. Remove dust with anti-static nitrogen gun, i.e. blow the dust off the surface.

Note that the choice of chemicals and the finer details of the procedure depend on the individual's choice.

The list of chemicals that may be used for cleaning are:

1. hydrochloric acid (HCl)
2. nitric acid (HNO_3)
3. cupric sulfate ($CuSO_4$)
4. calcium carbonate ($CaCO_3$)
5. sodium hydroxide ($NaOH$)
6. potassium hydroxide (KOH)
7. ammonium hydroxide (NH_3OH)
8. isopropyl alcohol
9. acetone
10. ethyl alcohol
11. trichloroethylene
12. xylenes

and the following compressed gases:

1. oxygen (O_2)
2. liquid nitrogen (LN_2)
3. nitrogen gas (N_2)
4. air

Other supplies that will be required. Again the choice is the users and not all are required.

1. natural chamois
2. natural sponges
3. distilled water
4. lint-free industrial wipes - paper towels
5. detergent

An example of cleaning a large mirror can be found in Figures 3.3.2-0 through 3.3.2-3. The mirror that is being stripped and cleaned is the 120 inch telescope's primary mirror at Lick Observatory on Mount Hamilton, California.

In Figure 3.3.2-0 a plastic sheet is being taped around the edge of the mirror. The plastic is used to keep acid from damaging the support apparatus, etc. underneath the mirror. Figure 3.3.2-1 shows the mirror being stripped. The acid is squirted onto the surface. The old coating is then rubbed off. Figure 3.3.2-2 was taken after the mirror stripping was completed. Workers are placing plastic wrap over the clean surface to keep it particle-free during transit to the vacuum coating chamber. Figure 3.3.2-3 is a demonstration of one of the final stripping/cleaning steps, the worker is inspecting for any fingerprints or smudges and removing them with alcohol. Note that it is already in the vacuum chamber.

Procedure for Stripping Mirrors of Aluminum Coating

1. Prepare a Solution of Hydrochloric Acid as follows:
   4 liters of deionized water
   4 liters of Reagent grade (1 Normal) Hydrochloric Acid
   100 grams of Cupric Sulfate crystal, Reagent grade.
   (When diluting, always add acid to water!)

2. Prepare a solution of Sodium Hydroxide:
   4 liters of solution at a concentration of 100 grams of Sodium Hydroxide pellets (Reagent Grade) to 1 liter of deionized water.

3. Protect radial supports attached to sides of mirror (if applicable).

4. Flush mirror surface with copious amounts of filtered tap water to remove loose particles of dust.

5. Wash mirror with diluted (1:50) Liqui-Nox detergent using natural sponges and a dobbing action without heavy rubbing. Repeat this washing after a thorough rinse.

6. Use Xylenes to clean any oil from the mirror surface with soft Balzer's cotton wool pads.

7. After mirror is clean, dry it's surface with natural chamois skins and inspect coating for condition, i.e. pinholes, stains, etc...

8. During washing operations, pay careful attention to cleaning out bubble-holes in the optical surface as these can conceal dirt.

9. If it is decided not to save the old aluminum coating and re-coating is necessary then apply the Hydrochloric/Cupric Sulfate solution to the mirror surface. Spread the solution by dragging soft cotton wool along the surface to even the flow of solution over the aluminum coating.

10. After 5 to 10 minutes most of the Aluminum coating will have been removed. Some rubbing action may be required.

11. Rinse with copious amounts of filtered tap water and then dry the surface with Kaydry Laboratory paper towels.

12. Inspect the surface for residual aluminum or water marks or other hazy wipe marks which have stubbornly refused to be dissolved by the Hydrochloric/Cupric Sulfate solution.

13. Apply solution of Sodium Hydroxide rubbing with Kaydry towels, rinse.

ORIGINAL PAGE IS
OF POOR QUALITY

14. If the surface still does not appear to be perfectly clean of old deposits it is necessary to flood the surface with deionized water and to sprinkle a small quantity of Reagent grade Calcium Carbonate powder upon the surface of the water film. A light rubbing action should remove any residual stains or deposits. (Note: the $CaCO_3$ powder must never by applied dry or allowed to dry upon the mirror surface.

15. The mirror surface is once again flooded with copious amounts of filtered tap water. Finish the rinse with deionized water and dry with Kaydry towels. Repeat step #14 if needed.

16. Wash mirror surface thoroughly with diluted Liqui-Nox detergent using natural sponges.

17. Rinse well with plenty of filtered tap water and then deionized water.

18 Dry part of the mirror with Kaydry towels being careful not to allow the mirror surface to dry on its own as water marks will occur. Gradually, dry all the mirror keeping the portions not being dryed at the moment wet with deionized water. Much rubbing is involved with this step and some residue of the paper toweling will remain on the mirror surface.

19. To remove the paper residue on the mirror it is necessary to brush the surface thoroughly with the set of six parallel anti-static brushes before placing the mirror inside the vacuum chamber.

20. As with all optical coatings, success depends upon obtaining an extremely clean substrate surface.

T. Gregory
July 1986

Mirror Stripping & Cleaning Supplies Inventory

ITEM
1. 5 Natural Chamois
2. 8 Natural Sponges
3. 3 Acid Vapor Masks
4. 3x4 liters Photrex Methanol Absolute (Baker Reagent)
5. 3x4 liters Trichloroethylene (Baker Regent)
6. 4x4 liters 1,1,1 - Trichloroethane (Baker Regent)
7. .5 Kg liquid Emerson & Cummings Eccostrip 93 Epoxy Remover
8. 4 liters Pierce RBS 35 Concentrate (Glass Detergent)
9. 4 liters Xylenes (VWR Reagent)
10. 12 liters Acetone (U.S.P.-F.C.C. Baker)
11. 9 liters Isopropyl Alcohol (J.T. Baker & Malinkrodt Spectro)
12. 14 liters Liqui-Nox Detergent Concentrate
13. 7.5 Kg Calcium Carbonate Powder
14. 10x12 Cartons of "Miracloth" Material
15. 10 Kg. "Dixwell" cotton
16. 5 Kg. Potassium Hydroxide Pellets (Baker Reagent)
17. 5 Kg. Sodium Hydroxide Pellets (Baker Reagent)
18. 12 liters Potassium Hydroxide .1N in Methanol (Baker Reagent)
19. 4 Kg. Cupric Sulfate 5-Hydrate, Fine Crystal (Baker Reagent)
20. 30 liters 1 Normal Hydrochloric Acid (Baker Reagent)
21. 12 Kg Nitric Acid
22. 7 liters Balzers Substrate Cleaner #1
23. 5 liters Balzers Substrate Cleaner #2
24. 240 pair "Pylox" Gloves
25. 120 pair Neoprene Gloves
26. 24 pair "Nitrile" rubber gloves
27. 4 pair protective goggles
28. 1 face sheild
29. 5 Nalgene Mixing Buckets
30. 1 Stainless Steel Mixing Bucket
31. 1 Stainless Steel Mixing Pail
32. 56 Boxes x 90 wipers each "Kaydry" paper towels (VWR)
33. 25 Bags x 30 pads each Cotton Wipers (Balzers)
34. .5 Kg "Teepol" Detergent

Thomas S. Gregory
29 April 1986

METHOD USED FOR PREPARATION OF LARGE MIRRORS FOR ALUMINIZING OR SILVERING

1. WITH RUBBER GLOVES strip off old coating with "Green River" HCL (hydrochloric acid) and $CUSO_4$ (cupric sulfate) (1 gal. HCL + 1/2 lb $CuSO_4$ + 1 gal. water) by rubbing with Kaydrys†.
2. Rinse with tap water thoroughly. (NOTE: Do not use warm water on Cer-Vit mirrors.)
3. Reapply "Green River" (HCL + $CuSO_4$ + H_2O) and rub briskly with Kaydrys to remove remainder of old coating and other residue on mirror.
4. Rinse thoroughly as in Step 2.
5. Apply a strong solution of potassium hydroxide (1/2 lb KOH with 2 gals. water) rubbing with Kaydrys and rinse with tap water.
6. Reapply KOH and rub mirror surface with calcium carbonate.
7. Rinse very thoroughly.
8. Repeat steps 5, 6 and 7 several times.
9. Apply a solution of nitric acid (HNO_3) (1 gal. HNO_3 and 1 gal. water) to surface of mirror and rub. Do not allow HNO_3 solution to sit for more than 3 minutes.
10. Rinse thoroughly for 5-10 minutes plus area around mirror.

    REMOVE GLOVES
11. Apply enough distilled water to thoroughly rinse off tap water.
12. Wipe dry quickly with Kaydrys. Do not allow water to dry by itself.
13. Mirror is now ready for aluminizing.

† Kaydrys is a Kimberly-Clark trade name for a lint-free industrial tissue similar to Kleenex (not Kimwipes).

NOTE: For Kanigen coated metal mirrors do not use any acids. Omit Steps 1, 3 and 9. Many times Step 5 will remove the aluminum coating.

DVG
July 6, 1977

PROCEDURE #3

SCHOTT

BULLETIN

Technical Information refer calls to Bob Scheller, ext 251.

Nr. 3097 Mirror coatings on ZERODUR®: Separation and cleaning methods.

The reflecting power of optical mirror coatings on mirror supports may decrease with time. In these cases, the mirror coating must be removed, and the mirror support must be re-coated or vapour-deposited.

We have optimized two separating and cleaning methods for Al mirror coatings on ZERODUR® at room temperature.

With both methods the Al coatings are removed so carefully that these processes may be repeated, at least, a hundred times. Changes of the surface (micro-roughness or the like), due to chemical reactions which may adversely affect after re-coating the use of the mirror support do not occur. Separation is supported by a gentle mechanical movement such as smooth wiping with a soft cloth in order to avoid surface injuries and scratches.

Method No. 1:

- Exposure for 10 minutes to caustic soda solution of 8% containing 0.3% of an alkaline wetting agent (for instance, Grisiron® by Farbwerke Hoechst, Frankfurt);
- Rinsing with water, three times;
- Exposure for 10 minutes to hydrochloric acid of 10%;
- Rinsing with water, twice;
- Rinsing with distilled or exchanged water, twice;
- Drying.

Method No. 2:

- Exposure for 30 minutes to hydrochloric acid of 10% containing 0.5% of copper sulfate and 0.3% of an acid wetting agent (for instance, Grisament® by Farbwerke Hoechst, Frankfurt);
- Rinsing with water, three times;
- Exposure for 10 minutes to caustic soda solution of 10%;
- Rinsing with water, twice;
- Exposure for 5 minutes to hydrochloric acid of 10%;
- Rinsing with water, twice;
- Rinsing with distilled or exchanged water, twice;
- Drying.

Rinsing with water is intended only for washing off the specific alkaline or acid solutions and may be done in running water. Checking with indicator paper the water running off will show whether or not surface has been rinsed sufficiently.

ORIGINAL PAGE IS OF POOR QUALITY

SCHOTT OPTICAL GLASS INC. DURYEA, PA 18642 TEL 717/457-7485

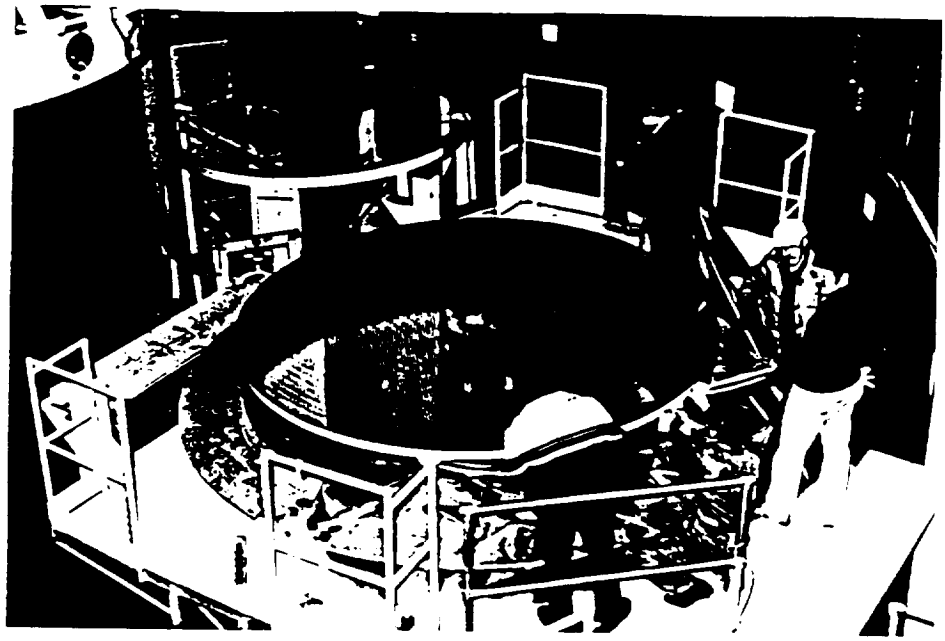

Figure 3.3.2-0

Figure 3.3.2-1

ORIGINAL PAGE IS
OF POOR QUALITY

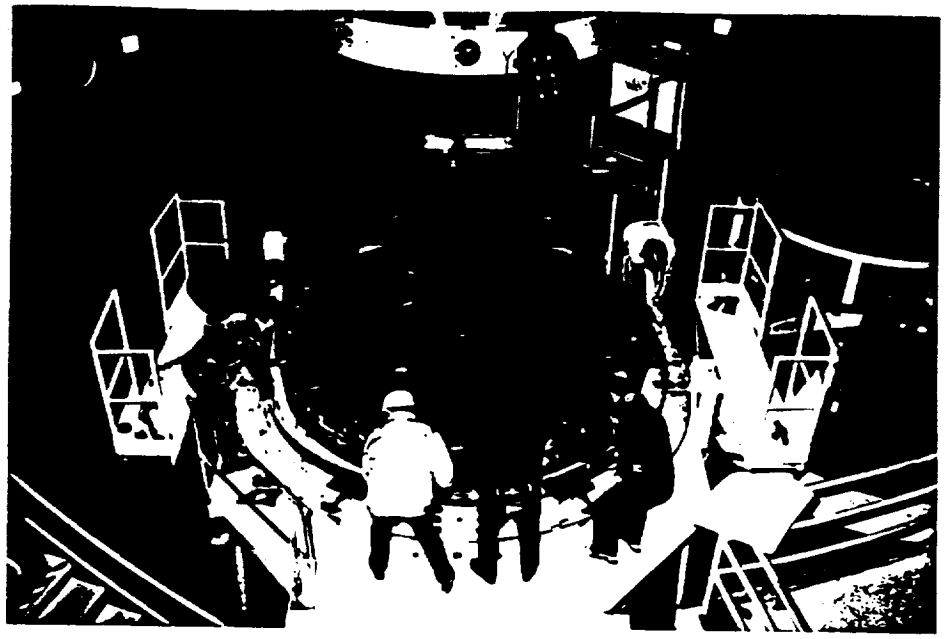

Figure 3.3.1-2

Figure 3.3.1-3

ORIGINAL PAGE IS
OF POOR QUALITY

3.3.3 Waste Disposal and Safety

The need for waste disposal and safety precautions is apparent with the use of strong acids, strong bases, and compressed gases. NASA-Ames Research Center's storage requirement for strong acids and strong bases is, they must be kept in secondary containment, i.e. the container in which they were purchased must be stored within another container that is nonsusceptible to corrosion by said chemicals. Suggested is any off the shelf chemical storage cabinet.

Several of the chemicals have special requirements. Nitric acid must be kept away from all the others especially the flammable liquids such as isopropyl alcohol. Isopropyl alcohol in a quantity greater than ten gallons demands a flammable chemical storage cabinet.

For the disposal of the chemicals there are two options, the first is to treat them in the proposed SOFIA Ground Support Facility, and the second is to have them picked up by someone and treated elsewhere. Ames has just obtained a varience from Sunnyvale, for one of it's buildings, to treat hazardous wastes and one may also be obtained for the SOFIA building. Only one chemical cannot be treated here, copper sulfate. It is regulated and has special rules attached to it's use. Once again the used chemicals must be stored in secondary containment. The container they drain into after using them on the mirror, must be placed within another container. All containers are to be acid and corrosion resistant.

The cleaning/stripping room, where the chemicals are to be used, requires proper ventilation to rid the area of the fumes.

The compressed gas cylinders need to be chained into a rack. Liquid nitrogen and oxygen must have NO SMOKING signs placed about them. All oxygen lines are required to be free of hydrocarbon grease or products as the combination is combustible. The nitrogen gas demands the placement of an oxygen deficiency alarm in the same room.

The cleaning/stripping room, which will contain all of the above requires these basics in safety equipment - eyewash station, shower, fire extinguishers, smoke detectors, sprinklers, proper warning signs and labels, and a first aid kit.

3.4 MIRROR COATING EQUIPMENT AND PROCEDURES

Contained in this section of the report is the complete description of how all four SOFIA mirrors will be recoated after stripping. The current recommendations by the telescope system contractor (ZEISS, Inc.), on materials and coatings for the four mirrors are:

Primary mirror -- Zerodur coated by bare Aluminum
Secondary mirror -- Zerodur coated by bare Aluminum
Tertiary mirrors
    beamsplitter -- BK7 with a specialized gold coating
    other -- Zerodur, Aluminum overcoated by a silicon oxide

There are three basic coating techniques - Thermal Evaporation, Sputtering, and Chemical Deposition. Each technique has many variations. Some characteristics of each technique are given in Figure 3.4-1, following this section.

Thermal Evaporation (also called Physical Vapor Deposition) is heating up a solid material until it vaporizes. The vapor then condenses (deposits) on any cooler surface it comes in contact with, i.e. the mirror.

The material may be heated in many different ways. The most widely used type of thermal evaporation is Resistive Heating. The material is heated with a resistively heated filament or boat. Figure 3.4-0 below shows several apparatus used to heat the material. Bare aluminum is most often deposited using a resistively heated filament.

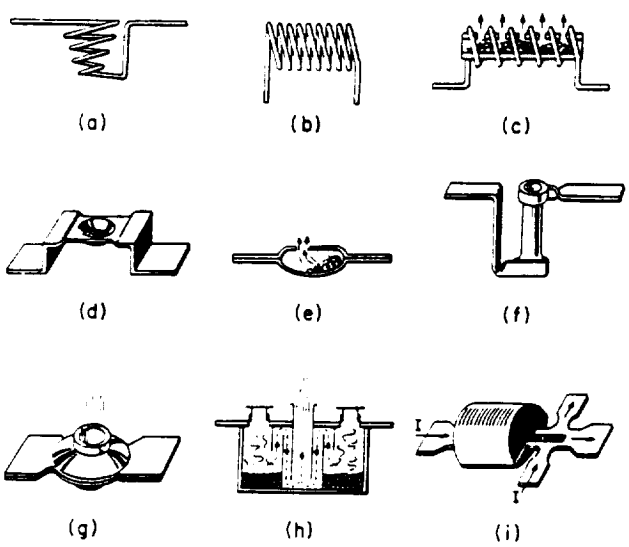

Figure 3.4-0

Some thermal-evaporation sources: (*a*) basket, (*b*) spiral, (*c*) multiple-vapor-beam source consisting of a quartz tube with several holes ~ 1 mm diameter and heated by a tungsten spiral (*Chopra, unpublished*), (*d*) dimpled boat, (*e*) asymmetric oven-type point source, (*f*) howitzer, (*g*) crucible heater, (*h*) baffled chimney (also called Drumheller source), (*i*) dual boat, flash-evaporation source. Here the liquid mixture of components is kept in the covered section of the boat and a controlled amount is allowed to pass through a narrow aperture into the open boat for flash evaporation at a much higher temperature maintained by a separate, high-resistance electrical path (*after Dale, Res. Develop., May, 1967, p. 60*).

Another common thermal evaporation method is heating of the material through the use of an electron beam gun. The electrons emitted from the gun bombard the material to be deposited. The constant collisions heat the material until it vaporizes. This is generally used with substances that have higher melting points. The silicon oxides are usually deposited in this way. Figure 3.4-2, below, provides examples of different sources that generate the electron beam.

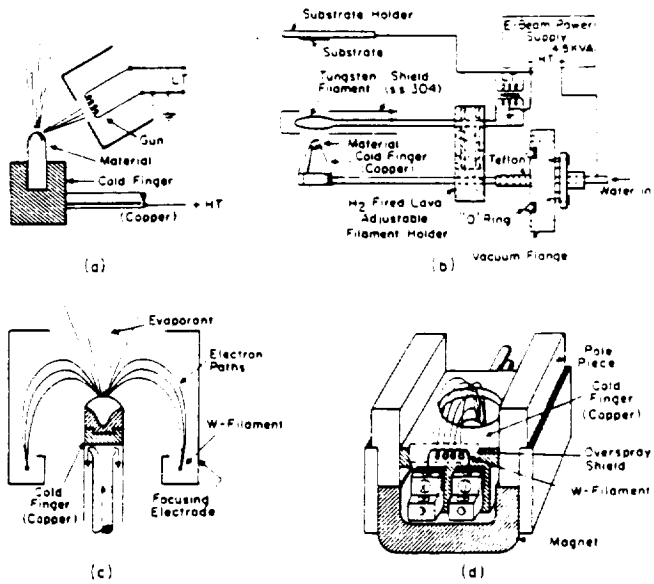

FIG. 4. Some simple electron-beam sources for thermal evaporation. (*a*) and (*b*) are work-accelerated guns designed by Robin-Kandaré et al. [36], and Chopra and Randlett [37], respectively; (*c*) uses transverse electrostatic focusing (*Unvala and Booker* [40]), and (*d*) magnetic focusing (*Varian Associates*).

Figure 3.4-2

Sputtering is essentially the ejection of atoms from the surface of the material to be deposited, by bombardment with high energy particles. The high energy particles are usually ions rather than electrons. Generally these ejected atoms condense on the substrate surface. This technique is of most use to SOFIA, not as a coating method, but rather as a cleaning method in the form of Glow Discharge. Both sputtering techniques and chemical deposition involve the use of much more complex apparatus than thermal evaporation.

To read further on methods of thin-film deposition, Reference #8 found in the Bibliography (Section 6.0) is best consulted. Appendix F has deposition suggestions for all types of materials. Figure 3.4-3 contains the excerpts for Aluminum, Gold and Silicon oxides.

There are three orientations in which to coat a mirror, the surface to be coated is facing down or facing up or facing sideways. The oldest method is facing upward. The prefered and most versatile method is facing downward. It is prefered because it is the only orientation in which any type of coating or coating method can be used. The other two orientations are restricted as to coating options.

Section 3.4.1 addresses the options for coating the primary mirror. Sections 3.4.2 and 3.4.3 cover the Secondary/Tertiary and Dichroic Tertiary mirrors respectively.

Figure 3.4-1

Some Characteristics of the Various Thin-film-deposition Techniques

Technique	Materials	Deposition rate*	Rate control	Vacuum, μ	Epitaxy	Adhesion	Remarks
Evaporation: Resistive heating	Most	L, M	Yes	<0.1	Yes	Fair	Simple, support alloying and decomposition in certain cases
Multisource	Alloys, compounds	L, M	Yes	<0.1	Yes	Fair	Stoichiometry control possible
RF heating	Conducting	L, M	Poor	<0.1	Yes	Fair	Levitation eliminates support contamination
Electron beam	Most	L-H	Poor	<0.1	Yes	Good	Versatile, gas bursts in certain cases
Flash	Alloys, compounds	M, H	No	<0.1	Yes	Good	Nearly stoichiometric films, gas bursts, spattering
Arc	Conducting	H	No	<1	Possible	Fair	Crude, spattering, very high rate
Laser	Most	H	No	<0.1	Yes	Fair	Very high rate, spattering, promising method
Exploding wire	Conducting wires	H	No	<1	Possible	Fair	High rate, crude, spattering
Sputtering: Glow discharge (diode)	Conducting	L, M	Yes	20-60	Yes	Good	Simple, widely used
Ion plating	Conducting	L, M	Yes	20-60	Yes	Good	Evaporation and desputtering in poor vacuum
Asymmetric ac and dc bias	Conducting	L, M	Yes	20-60	Yes	Good	Contamination reduced
Getter	Getter metals	L, M	Yes	20-60	Yes	Good	Reactive gases removed
Triode (assisted ionization)	Conducting	L, M	Yes	~1-60	Yes	Good	Versatile, low pressure, confined plasma
RF	Most	L-H	Poor	~1	Possible	Good	Useful, plasma effects complicated
Ion beam	Most	L-H	Poor	<0.1	Yes	Good	Sophisticated, well-defined conditions, low pressure, substrate out of plasma
Reactive	Oxides, hydrides, carbides, nitrides, sulfides	L, M	No	1-60	Yes	Excellent	Powerful, many variables control difficult
Chemical: Electrolysis	Metals	M, H	Yes		Yes	Fair	Cheap, production method
Anodization	Oxides of valve metals	L, M	Yes		Yes	Excellent	Controlled thickness of thin oxide films obtained, solution contaminants
Pyrolysis	Most	H	No	~1,000	Yes	Fair	Production method, high-temperature system, contamination problems

Some Characteristics of the Various Thin-film-deposition Techniques *(Continued)*

Technique	Materials	Deposition rate*	Rate control	Vacuum, μ	Epitaxy	Adhesion	Remarks
Hydrogen reduction	Most	H	No	~1,000	Yes	Fair	Production method for metals, high-temperature system, contamination problems
Disproportionation	Products of some halide compounds	H	No	~1,000	Yes	Fair	High-temperature contamination problem
Transfer reaction	Depends on reaction	H	No	~1,000	Yes	Fair	High-temperature system, contamination
Polymerization	Hydrocarbons	H	No		Yes	Fair	Cheap, good films, but thermally unstable
Electroless solution	Polymers	H	No		Yes	Good	Cheap, good films

*L, M, H stand for low (<0.1 Å/sec), medium (0.1 to 20 Å/sec), and high (>20 Å/sec) rates of deposition, respectively. The values are chosen arbitrarily.

20 ■ Thin Film Deposition Suggestions

W = tungsten

NAME	SYMBOL	MELTING POINT °C	DENSITY g/cm³	TEMPERATURE (°C) @ VAP. PRESS. 10^{-8} TORR	10^{-6} TORR	10^{-4} TORR	EVAPORATION TECHNIQUES: ELECTRON BEAM	CRUCIBLE	COIL	BOAT	BASKET	SPUTTER	REMARKS n = Index of refraction
Aluminum	Al	660	2.70	677	821	1010	Xlnt.	TiB_2BN ZrB_2BN	W	TiB_2BN Al_2O_3	W	RF DC Sputtergun	Alloys and wets; tungsten stranded superior
Aluminum Antimonide	AlSb	1080	4.3	—	—	—	—	—	—	—	—	RF	—
Aluminum Arsenide	AlAs	1600	3.7	—	—	1300	—	—	—	—	—	RF	—
Aluminum Bromide	$AlBr_3$	97	3.01	—	—	50	—	Graphite	—	Mo	—	RF	—
Aluminum Carbide	Al_4C_3	1400	2.36	—	—	800	Fair	—	—	—	—	RF	n = 2.7
Aluminum 2% Copper	Al2%Cu	640	2.82	—	—	—	—	—	—	—	—	RF DC Sputtergun	Wire feed and flash. Difficult from dual sources
Aluminum Fluoride	AlF_3	1257 Subl.	3.07	410	490 Sublimes	700	Poor	Graphite	—	Mo W Ta	—	RF	—
Aluminum Nitride	AlN	Subl.	3.26	—	—	1750	Fair	—	—	—	—	RF RF-Reactive	Decomposes. Reactive evaporate in 10^{-3} N_2 with glow discharge.
Aluminum Oxide (a) (alumina)	Al_2O_3	2045	3.97	—	—	1550	Xlnt.	—	—	W	W	RF-Reactive	Sapphire xlnt in EB, forms smooth hard films. n = 1.66
Aluminum Phosphide	AlP	2000	2.42	—	—	—	—	—	—	—	—	RF	—
Aluminum 2% Silicon	Al2%Si	640	2.69	—	—	1010	—	TiB_2BN	—	—	—	RF DC Sputtergun	Wire feed and flash. Difficult form dual sources
Gold	Au	1062	19.32	807	947	1132	Xlnt.	Al_2O_3 BN Vit. Carbon	W	W. Mo Coated Al_2O_3	W	DC RF	Films soft, not very adherent.
Silicon Dioxide	SiO_2	1610 - 1710	2.2-2.7	—	—	1025 influenced by composition	Xlnt.	Al_2O_3	—	—	—	RF	Quartz xlnt in EB. n = 1.47
Silicon Monoxide	SiO	1702	2.1	—	—	— 850 Sublimes	Xlnt.	Ta	W	Ta	W	RF RF Reactive	Baffle box source best for resistance evaporation. Low rate suggested n = 1.6

Figure 3.4-3

3.4.1 Primary Mirror Coating

This section consists of six subsections. Within these is all the information on the equipment and procedures to recoat the SOFIA primary mirror.

To coat with bare Aluminum it is sufficient as well as fairly standard to use thermal evaporation techniques. Sputtering has depositon rates too slow for aluminum deposition. The least complicated, most inexpensive method of evaporation deposition is resistive heating of tungsten filaments. Section 3.4.1.5 explains the details of the method and Section 3.4.1.4, the required equipment.

In Section 3.2, Mirror Handling, it was noted that there were several options for orienting the primary mirror during coating. The current suggestion is to orient it facing down. Table 3.4.1-0 compares the pros and cons of each orientation. Section 3.4.1.1 gives a physical description of what the chamber will look like in each option.

Regardless of orientation, the same pumping, control and glow discharge systems, suggested in subsections 3.4.1.2, 3.4.1.3 and 3.4.1.6 respectively, will be required. The only difference comes in the coating apparatus. It becomes more complicated when the mirror is oriented facing upward.

ORIENTATION OF PRIMARY MIRROR FOR COATING
PROS AND CONS OF THE DIFFERENT METHODS

ORIENTATION	PROS	CONS
FACING UPWARD	- no need to rotate the mirror. No danger of slipping from it's support during rotation or while suspended in the chamber. - -	- chance of mechanically damaging the mirror surface during coating - nearly impossible to perform specialized or overcoatings - complicated design for the coating apparatus
FACING SIDEWAYS	- structurally sound for the mirror. It remains in compression while suspended in the chamber. - no chance of mechanically damaging the mirror surface during coating	- impossible to perform specialized or overcoatings - chance of mirror slipping off it's support during rotation or while suspended in the chamber -
FACING DOWNWARD	- easy, uncomplicated design for the coating apparatus - any type of specialized or overcoating can be performed - no chance of mechanically damaging the mirror surface during coating	- chance of mirror slipping off it's support during rotation or while suspended in the chamber - - - -

3.4.1.1 Physical Dimensions/Description (Exterior)

The chamber is to be a mild steel cylinder (see Section 5.0-Design Notes for further on this material selection) of a minimum of 10 feet in diameter and 10 feet in height. Two dished heads will cap the ends of the cylinder (see Figure 3.4.1.1-0). Figures 3.4.1.1-1 and -2 are photographs of parts of an existing vacuum chamber. They show one of the capped ends and the cylindrical section. Throughout the bottom, top, and sides will be numerous feed-throughs for wires, etc.

If the mirror is coated facing downward (see Figure 3.4.1.1-3), it will stand on legs attached to the bottom. The top dished head will be removable so that the mirror can be placed within. The coating apparatus will be contained in the bottom dished head. A hatch/entry way is contained on the side wall of the cylinder to allow access to the coating apparatus. The pumping system also connects through the wall of the cylindrical section.

If the mirror faces upward during coating (see Figures 3.4.1.1-4 and 3.4.1.1-5), there are two options. The first option is to have a chamber identical to the one for the mirror facing down. The only exception would be that the coating apparatus would be housed in the removable top. The second option is to have a removable bottom. The cylinder and top remain permanently fixed to the wall. The bottom slides out to recieve the mirror. The coating apparatus is contained in the top dished head. A ladder must be placed inside to allow access to the coating apparatus. This ladder is not to be permanent. The pumping system is connected through the wall of the chamber.

If the mirror faces sideways, the axis of the cylinder will be oriented horozontally. The chamber will have two halves (see Figure 3.4.1.1-6). One side of the chamber will roll backwards on tracks to allow access to load the mirror. This half will contain the coating apparatus. The other section will remain stationary and is the side that the mirror is loaded onto. The pumping system will connect through the wall on the stationary side. Access to the coating apparatus is gained while the removable half is rolled back. A step ladder may be used to reach the coating apparatus.

Note that the procedures for loading the mirror within these chambers was addressed in Section 3.2.

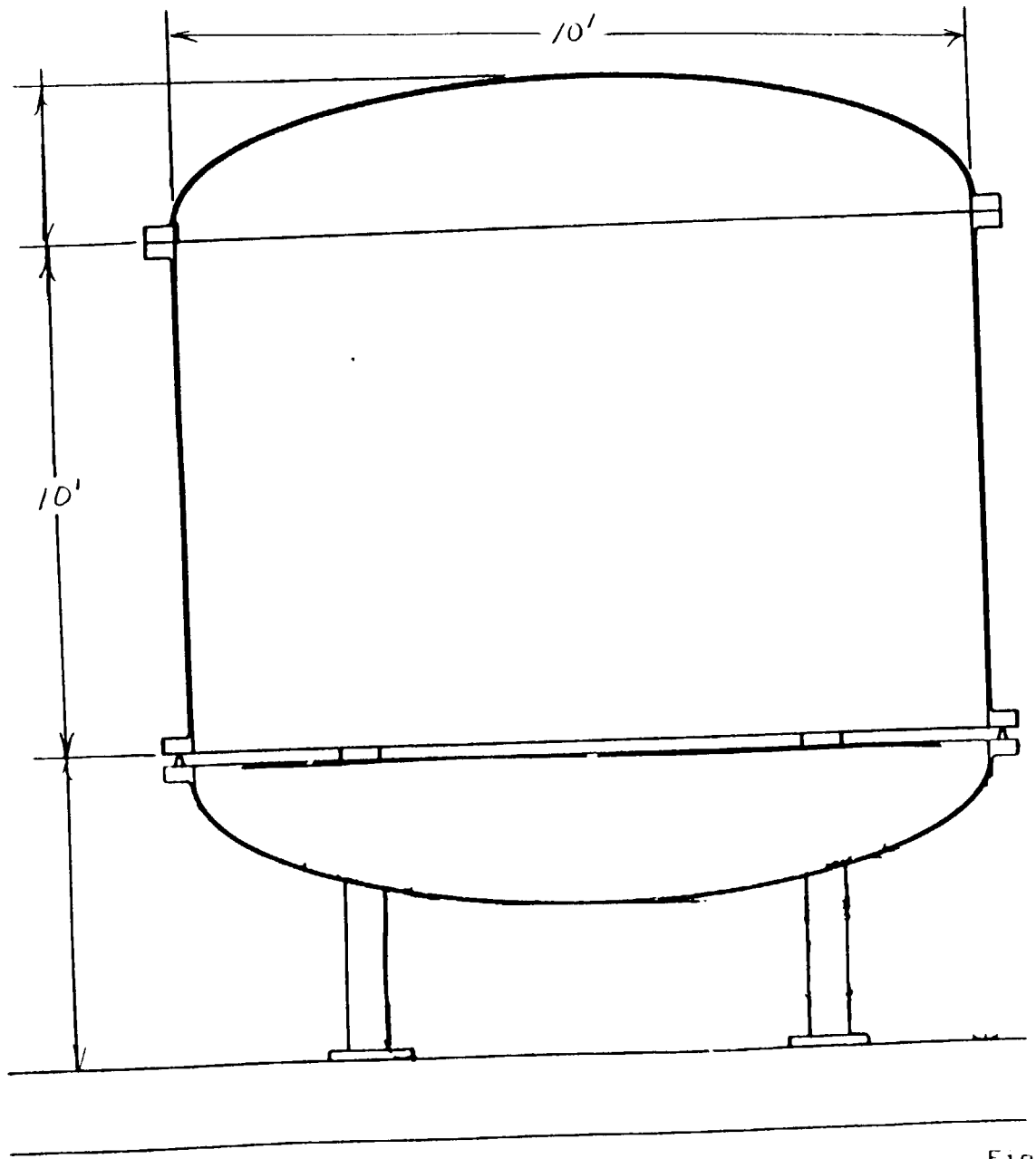

Figure 3.4.1.1-0

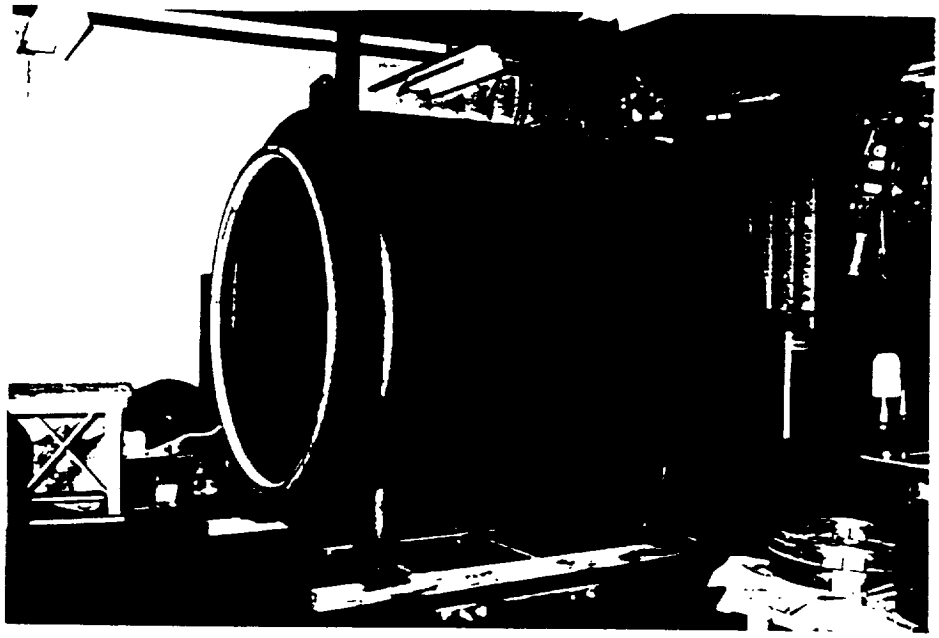

Figure 3.4.1.1-1

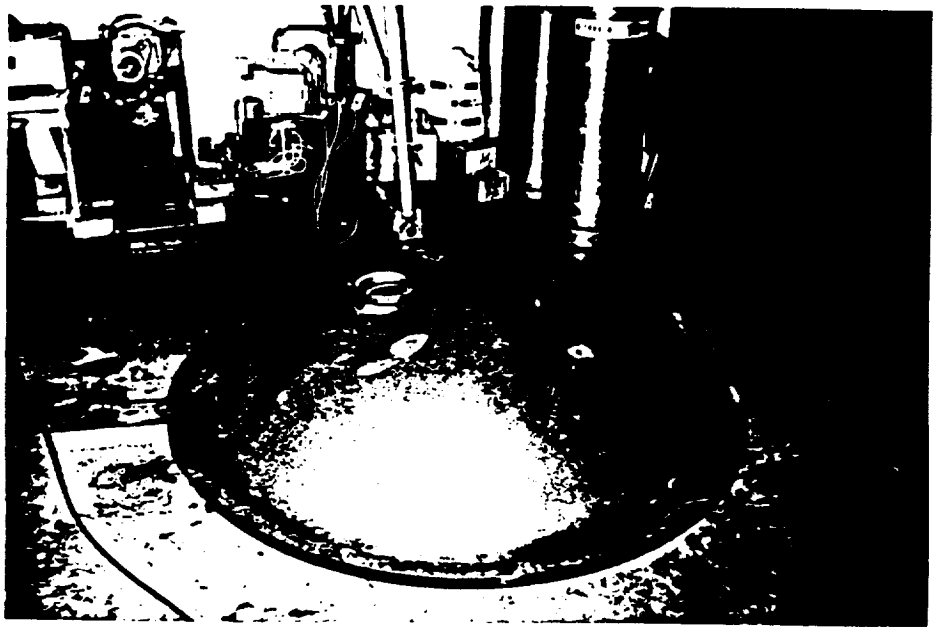

Figure 3.4.1.1-2

ORIGINAL PAGE IS
OF POOR QUALITY

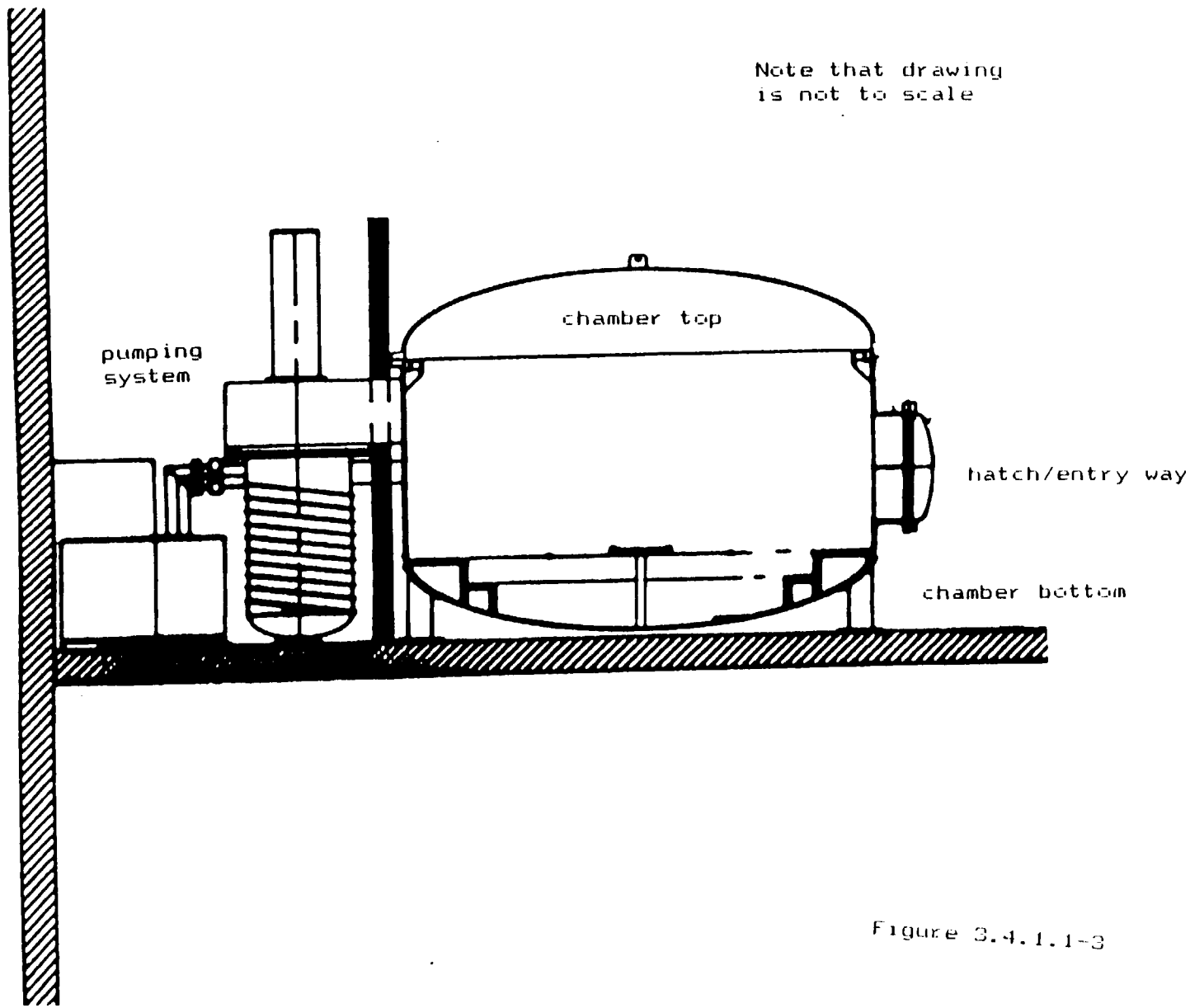

Figure 3.4.1.1-3

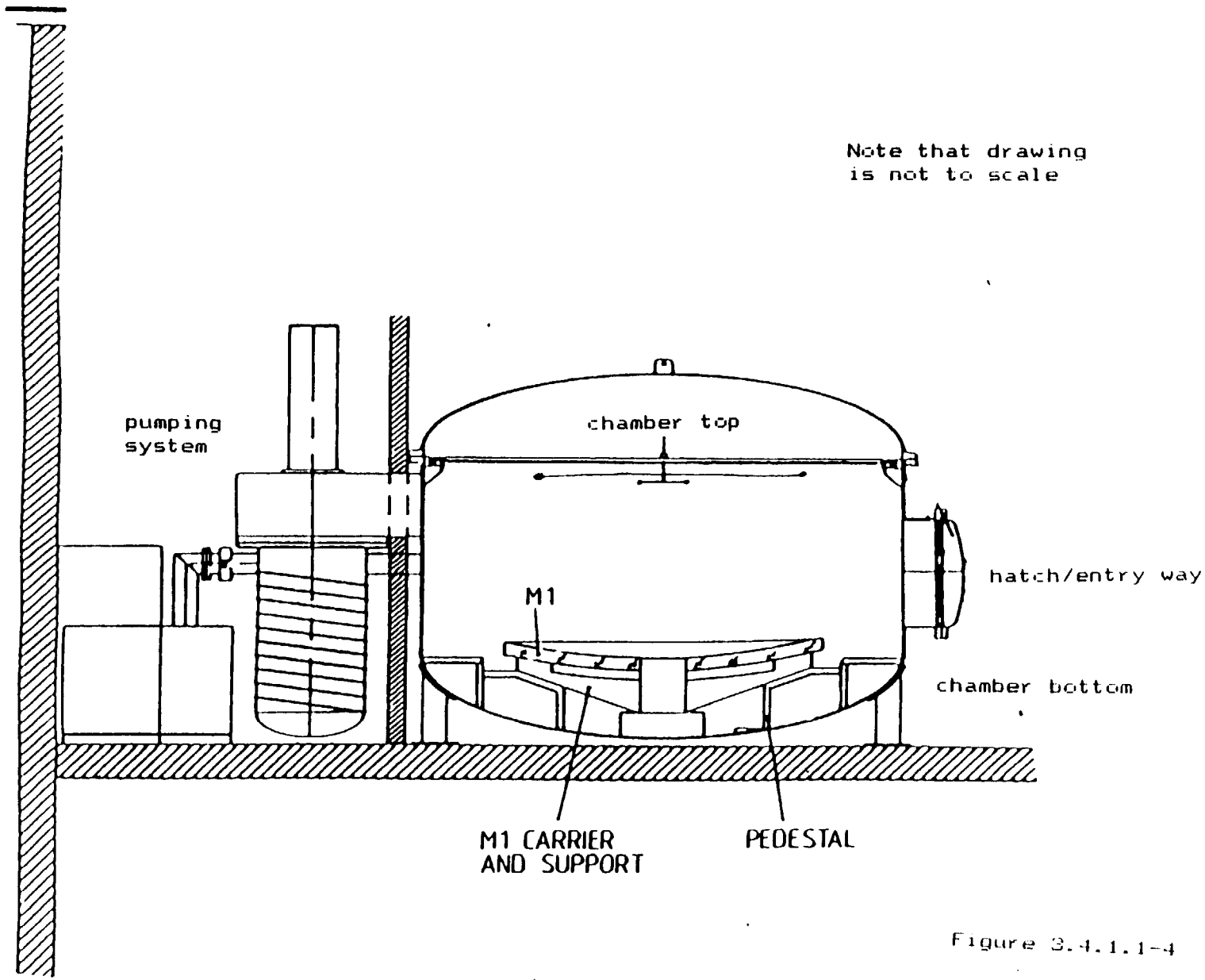

Figure 3.4.1.1-4

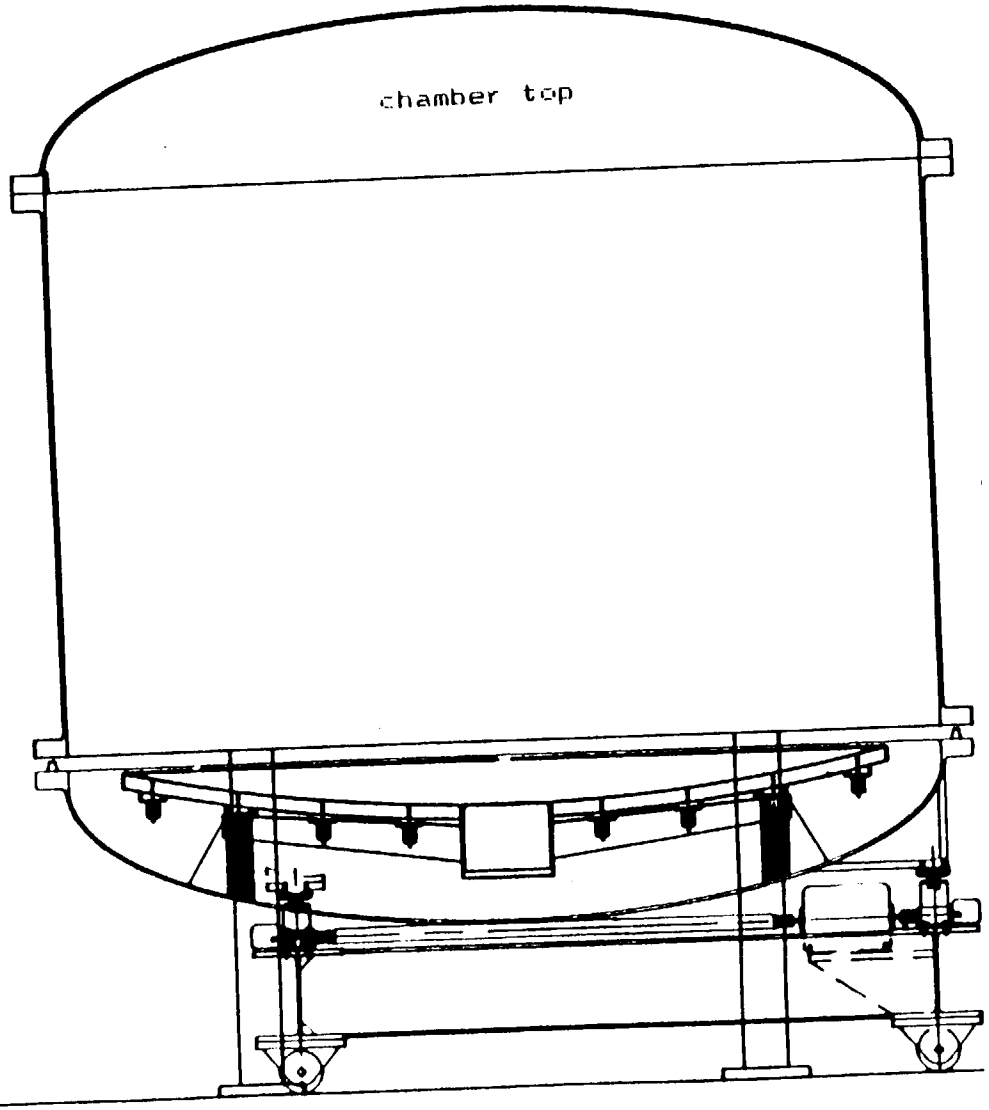

Note that drawing is not to scale

Figure 3.4.1.1-5

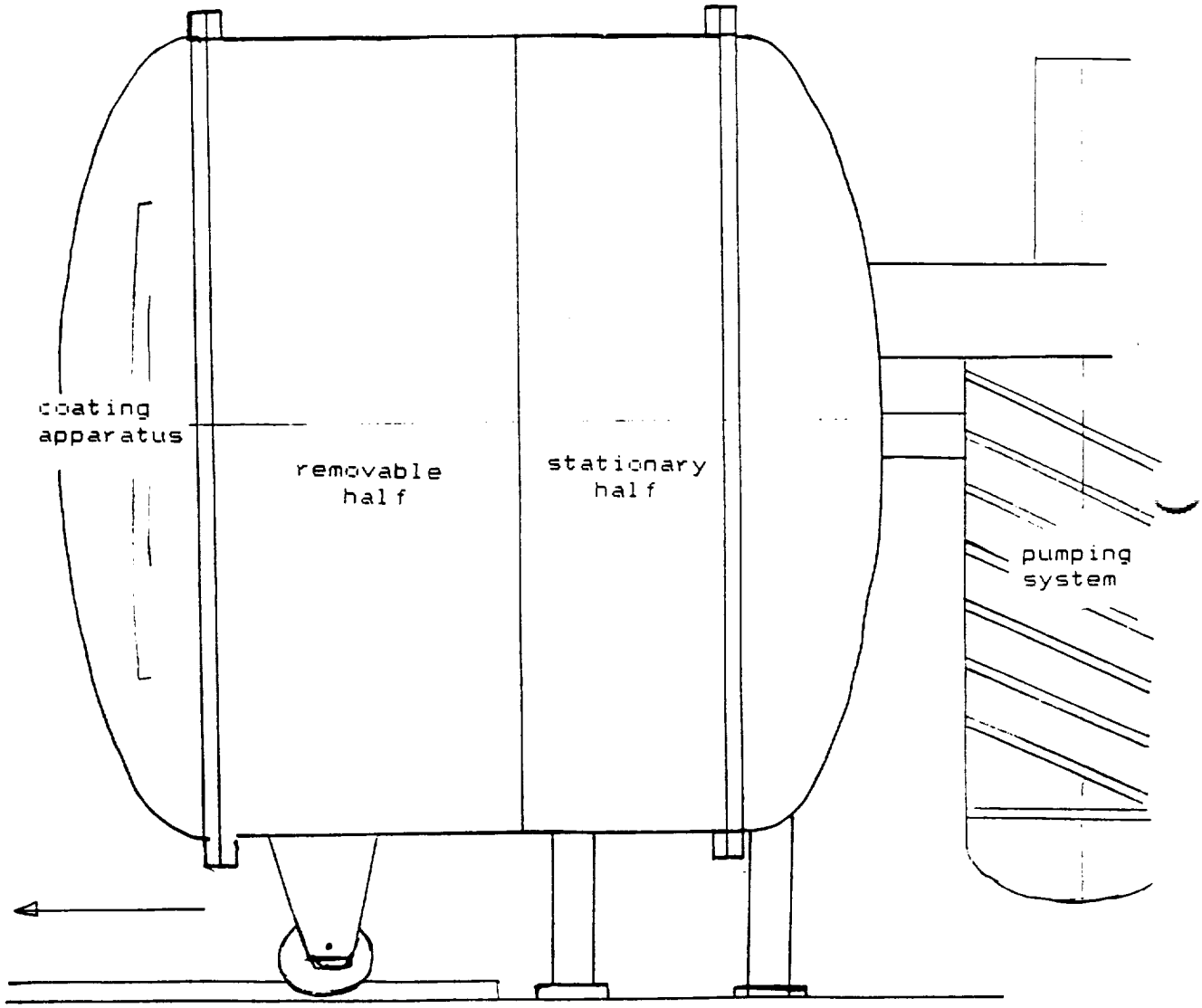

Figure 3.4.1.1-6

3.4.1.2 Pumping System

The following pumping system or its equivalent would be sufficient for the primary mirror vacuum chamber.

- Varian 35 inch Oil Diffusion Pump with 480V heater (model #NHS-35). Pumps the chamber from 10^{-3} Torr to 10^{-6} Torr.

- Stokes Mechanical Booster Pump (model #1738). The roughing pump. Pumps the chamber from 760 Torr to 10^{-3} Torr.

- CVC Right Angle High Vacuum Valve (model #VRA-356).

- CVC Multi-Coolant Baffles (model #BC-350). Assures that the oil from the diffusion pump does not enter the chamber.

The above system will pump the chamber from atmospheric pressure to 10^{-6} Torr in less than two hours. Contained at the end of this section are the manufacturers specifications for each component. A majority of the components were suggested by several sources. Figure 3.4.1.2-0 on the next page is a schematic of the pumping system. Not included here are the vacuum hoses, gauges, etc.

Examples of what the actual components look like can be seen in the photographs numbered Figures 3.4.1.2-1 through -3. The first two are diffusion pumps and the third is a mechanical booster pump.

A cryopump is an alternative to the oil diffusion pump but it is more expensive and pumps slower. Table 3.4.1.2-1 compares the use of a diffusion pump with and without a coldtrap (baffles) to a cryopump. A turbomolecular pump was looked into as an alternative to the mechanical booster roughing pump. It could not achieve the desired pumping speeds at a reasonable cost. Table 3.4.1.2-2 is a comparison of these two pumps.

Refer to Section 5.0 for design notes on the pumping system. This system will be the one required regardless of the orientation of the primary mirror during coating.

ORIGINAL PAGE IS
OF POOR QUALITY

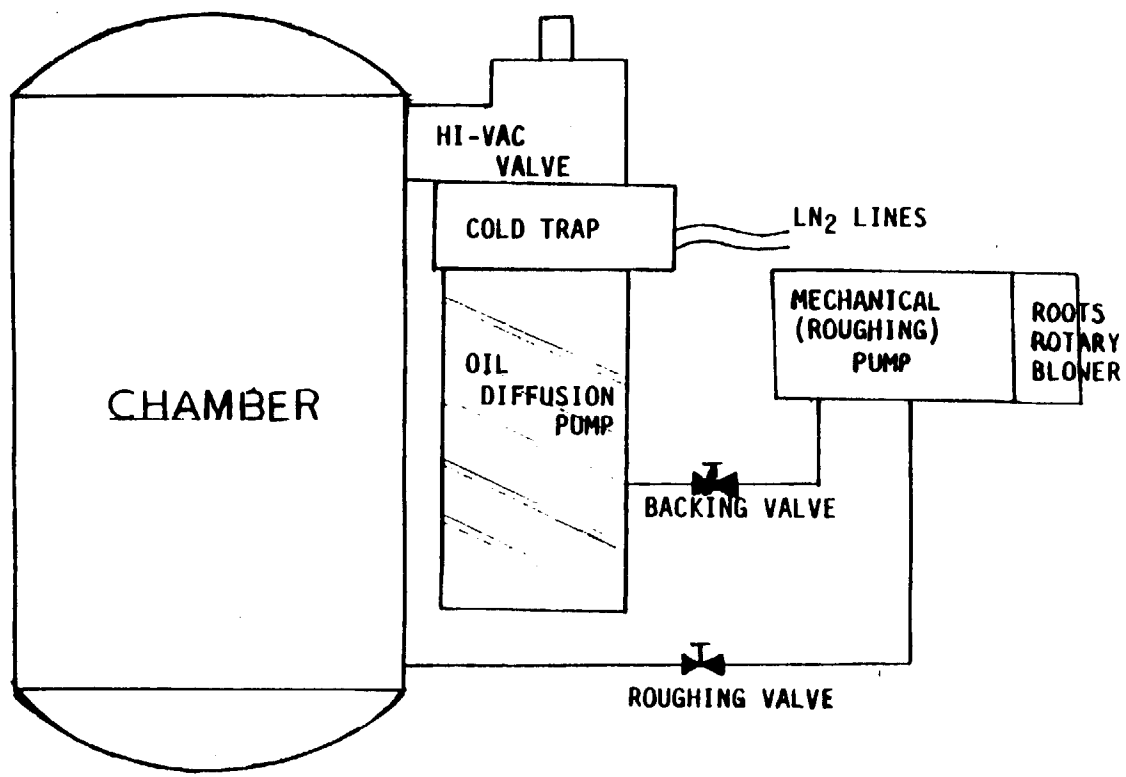

VACUUM PUMPING SYSTEM

Figure 3.4.1.2-0

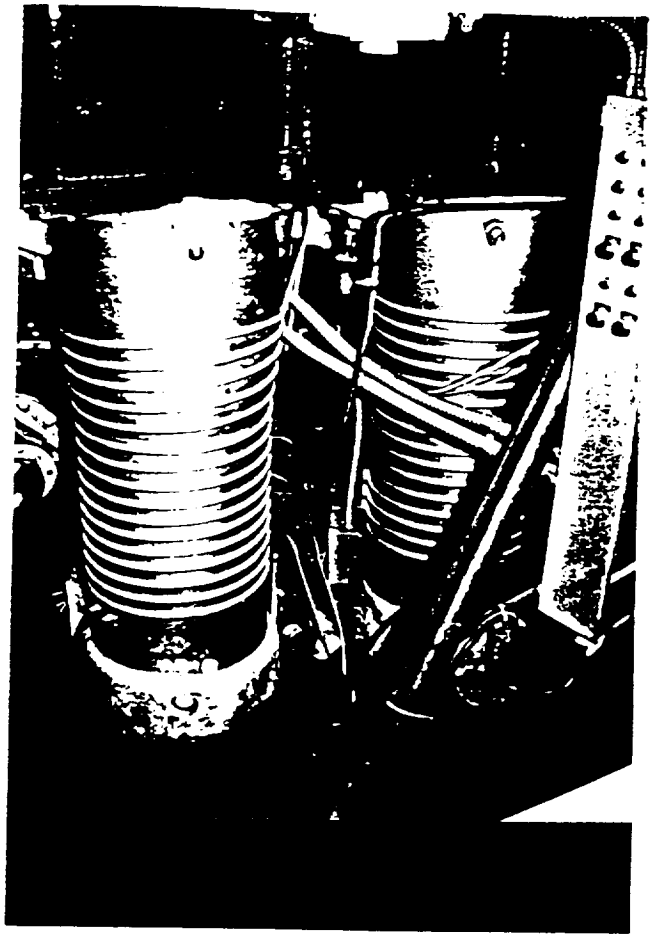

Figure 3.4.1.2-1

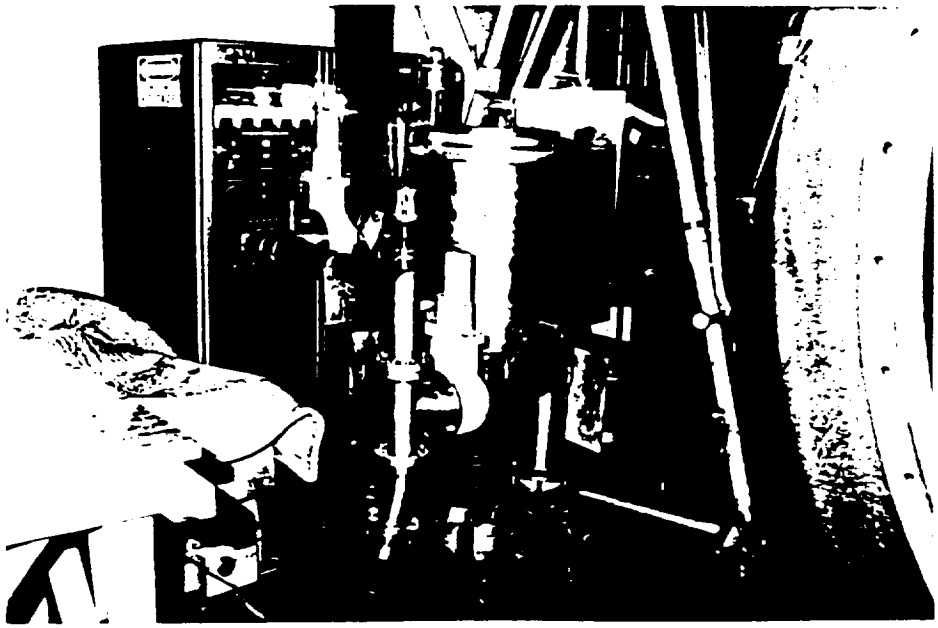

Figure 3.4.1.2-2

ORIGINAL PAGE IS
OF POOR QUALITY

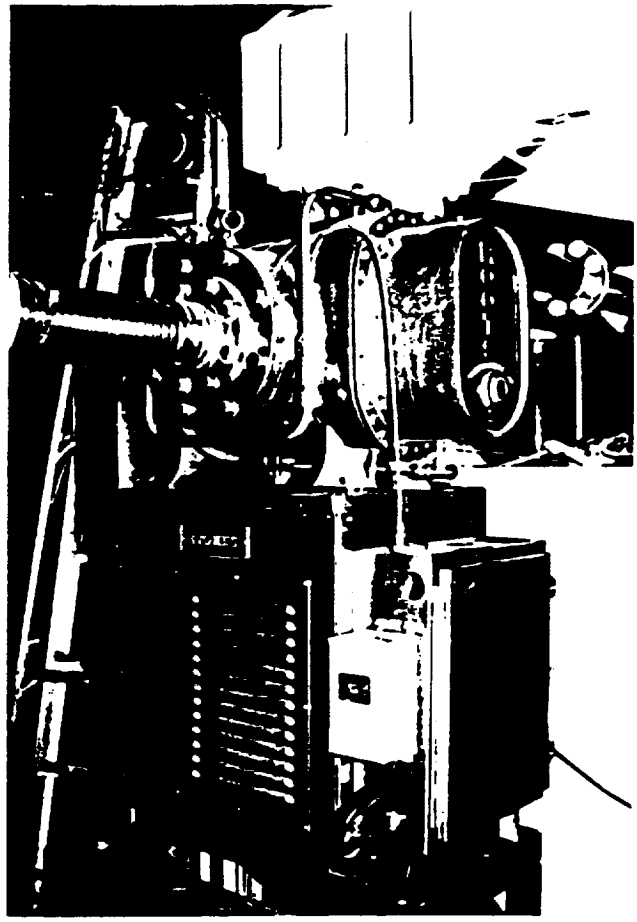

Figure 3.4.1.2-3

ORIGINAL PAGE IS
OF POOR QUALITY

TABLE 3.4.1.2-1 DIFFUSION PUMP VS. CRYOPUMP

TYPE OF PUMP	PROS	CONS
DIFFUSION PUMP	- high pumping speed - cost is relative - fairly maintenance free - can achieve a vacuum of 10^{-8} theoretically	- oil vapor backstreams into vacuum chamber if not careful - fair at removing water vapor from air
DIFFUSION PUMP WITH COLDTRAP*	- same as above plus - no oil backstreams - takes an amount of water vapor comparable to a cryopump out of the air	
CRYOPUMP	- theoretically can achieve a pumping speed of 10^{-10} - very clean, i.e. it uses no oil - very good at removing water vapor from air - fairly maintenance free	- high cost - relative pumping speed

* also refered to as baffles

TABLE 3.4.1.2-2 TURBOMOLECULAR VS. MECHANICAL BOOSTER PUMP

TYPE OF PUMP	PROS	CONS
MECHANICAL BOOSTER ROUGHING PUMP	- very high pumping speed - relatively inexpensive	- slight chance of oil backstreaming
TURBOMOLECULAR ROUGHING PUMP	- very clean, i.e. no chance of oil back-streaming	- very low pumping speed - very expensive - would need a minimum of 4 for primary mirror vacuum chamber

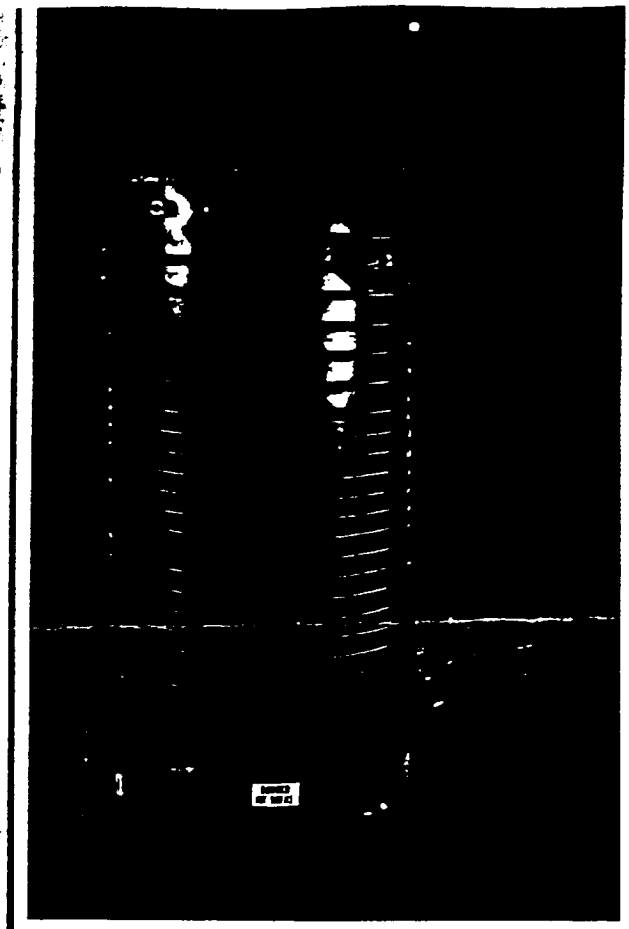

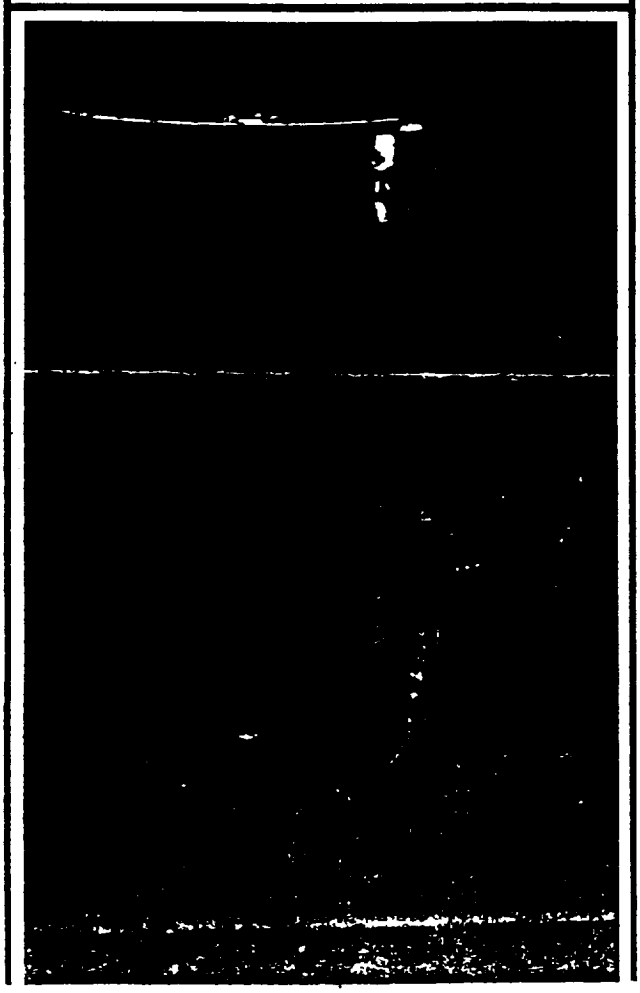

HS-32 and NHS-35
DIFFUSION PUMPS

Suggestion from Kurt J. Lesker on pumping systems.

HIGH GAS HANDLING CAPACITY

HIGH FOREPRESSURE TOLERANCE

FRACTIONATING DESIGN

MINIMUM BACKSTREAMING

AUTOMATIC PROTECTION

SIMPLE HEATER REPLACEMENT

BUILT-IN FLUID LEVEL INDICATOR

EASE OF SERVICE

lexington vacuum division
121 hartwell avenue
lexington, massachusetts 02173

varian GmbH
handwerkstrasse 5-7
D-7000 stuttgart 80 (vaihingen)
west germany

varian spa
via varian, 10040 leini
torino, italy

-144

varian

ORIGINAL PAGE IS
OF POOR QUALITY

FEATURES

HIGH GAS HANDLING CAPACITY . . . at high working pressures, maximum throughput is greater than 35 liters/second.

HIGH FOREPRESSURE TOLERANCE . . . allows the use of a 300 CFM forepump at full throughput.

FRACTIONATING DESIGN . . . jet and boiler assemblies are constructed to fractionate pump fluid, removing contamination and decomposition products, which are pumped away. Only the purest vapor emerges from the jet. This design feature is exclusive with Varian diffusion pumps.

MINIMUM BACKSTREAMING . . . patented, water-cooled cold cap reduces backstreaming by 98% with no effect on pumping speed.

AUTOMATIC PROTECTION . . . patented dual thermostats* can be used to automatically turn off the heater if there is an abnormal temperature rise. This feature protects against operation at low fluid levels, water-flow failure, and inadvertent operation at abnormally high pressures. A foreline baffle minimizes fluid loss even if the pump is accidentally released to atmosphere.

SIMPLE HEATER REPLACEMENT . . . heaters are six flat tubular elements clamped directly to boiler plate. Individual segments are easily removed and replaced when necessary.

BUILT-IN FLUID LEVEL INDICATOR . . . sight glass allows immediate, accurate pump fluid-level reading. Built-in valving allows protection against breakage and replacement of sight glass while pump is in operation.

EASE OF SERVICE . . . the jet assembly is readily dismantled and reassembled whenever inspection or cleaning may be required. Once reassembled, the assembly is mechanically held in position, preventing possible damage from being hurled against the valve elbow in the event of accidental venting of the foreline.

*U.S. Patent 3282330

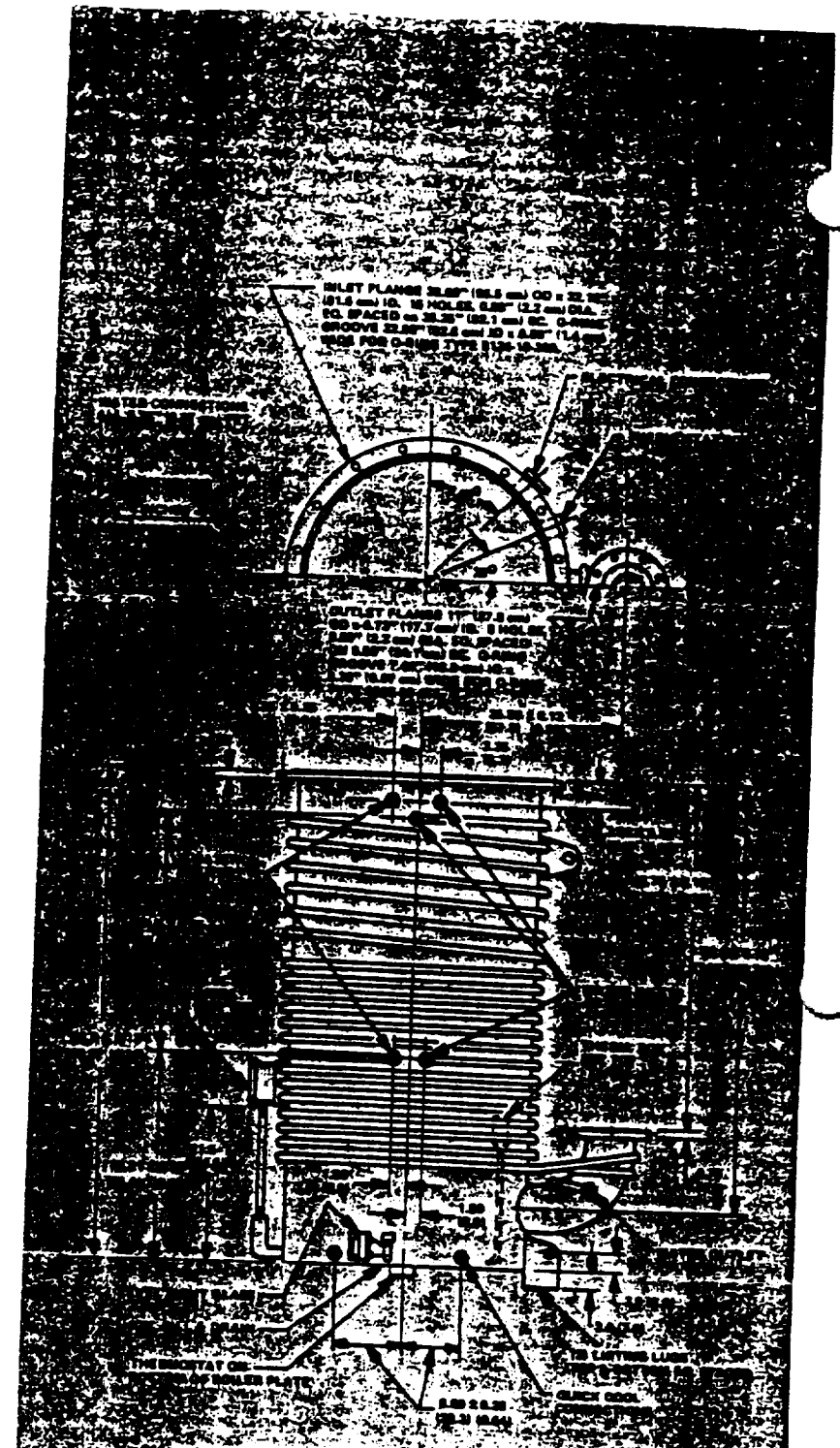

HS-32 DIFFUSION PUMP

ORIGINAL PAGE IS
OF POOR QUALITY

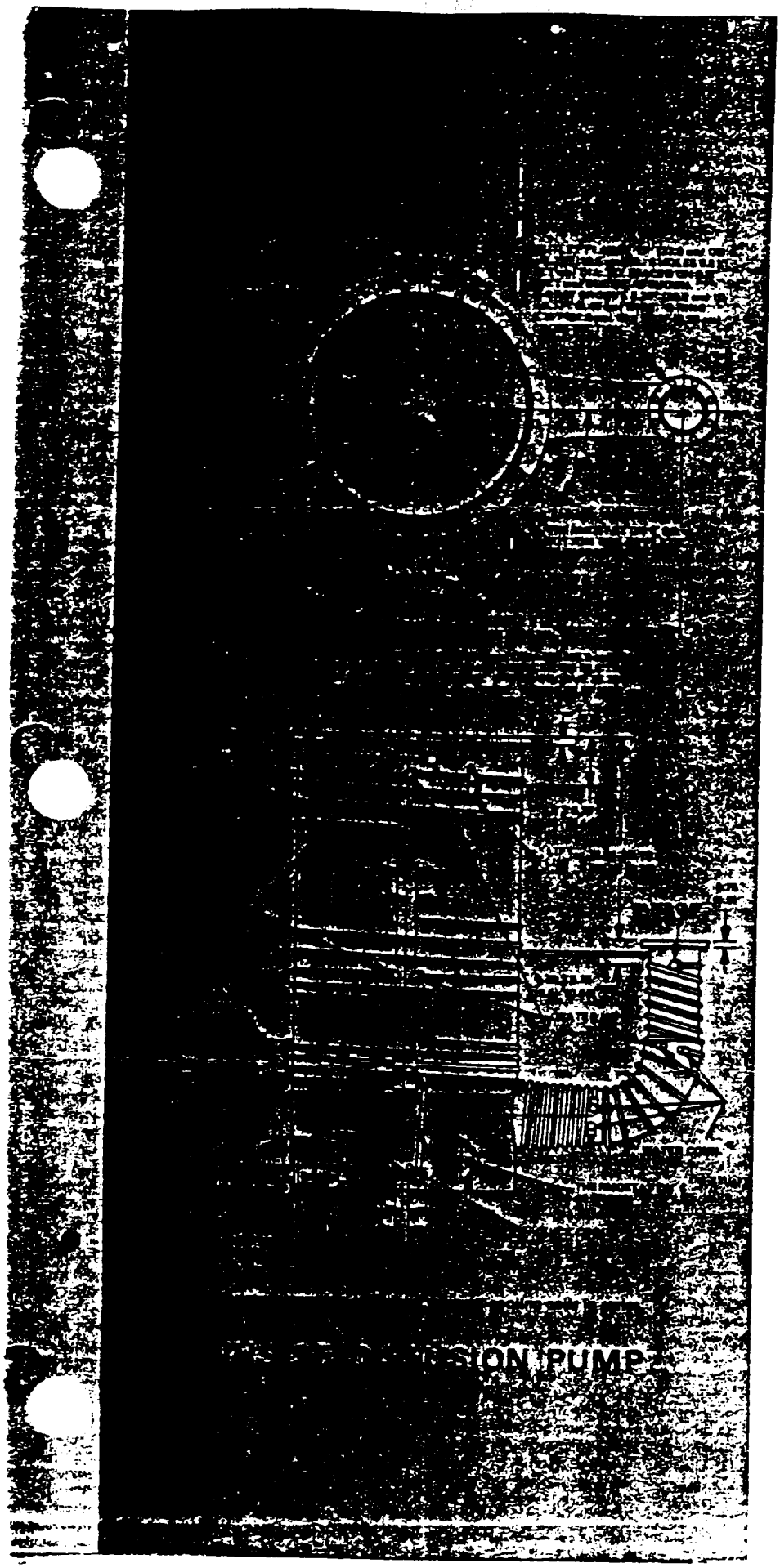

OPTIONAL HALO BAFFLE . . . re tains 60% of pump speed with no in crease in pump height, and utilize the standard cold cap with additiona water-cooled chevrons to intercep direct backstreaming emanating fron the top nozzle. The baffle remains be low the inlet flange of the pump anc adds no height to the system. The halo baffle stops backstreaming al most as effectively as an optically dense baffle, yet retains 60% of the pump speed. It is especially useful ir applications where backstreaming is critical, speed and throughput are im portant and cryogenic pumping is no necessary. The baffle can be factory installed or field retrofitted. The halc baffle can not be used with liquic nitrogen or mechanical refrigeration.

GENERAL DESCRIPTION

The HS-32 and NHS-35 Diffusion Pumps provide the high throughput, high pumping speed, and reliable performance required in industrial applications. These pumps are particularly suitable for use in large industrial coating installations, high vacuum furnaces, and metallizers.

The HS-32 and NHS-35 provide as much as 50% more pumping capacity —35 Torr-liters/second throughput— than any other pumps of comparable sizes. Since these pumps have nearly equal maximum throughput, there is no essential difference in performance as long as they are operated near the constant throughput region (above approximately 30 Torr-liters/second). At gas loads below the maximum throughput level, the NHS-35 will produce a lower pressure in the chamber because of its higher pumping speed.

ORIGINAL PAGE IS
OF POOR QUALITY

	NHS-35
[illegible]	50,000 ℓ/s
[illegible]	82,500 ℓ/s
[illegible]	1×10^{-3} to 10^{-10} Torr
[illegible] Max.	35 Torr ℓ/s Max.
No Load: [illegible] Torr	No Load: 0.55 Torr
Full Load: [illegible] Torr	Full Load: 0.40 Torr
[illegible] 0.20 cc/hr	0.17 cc/hr
[illegible] hour	1 hour
[illegible] hour	1 hour (with Quick-Cool coil)
300 CFM	300 CFM
3 gal	3 gal
D-7040 or D-7050	D-7040 or D-7050
24 kW or 16 kW	24 kW 240/480/3/50/60
220/440/3/50/60	
4 gpm at 60°-80°F	4 gpm at 60° - 80°F
[illegible]	72"
Mild steel 31-5/8" ID	Mild steel 35" ID
Mild steel	Mild steel
Mild steel, nickel plated	Stainless steel
Copper, welded to body.	Copper, welded to body,
Water connections 3/8 FPT	Water connections 5/8" OD
[illegible]	
[illegible]	Stainless steel
[illegible]	2000 lbs

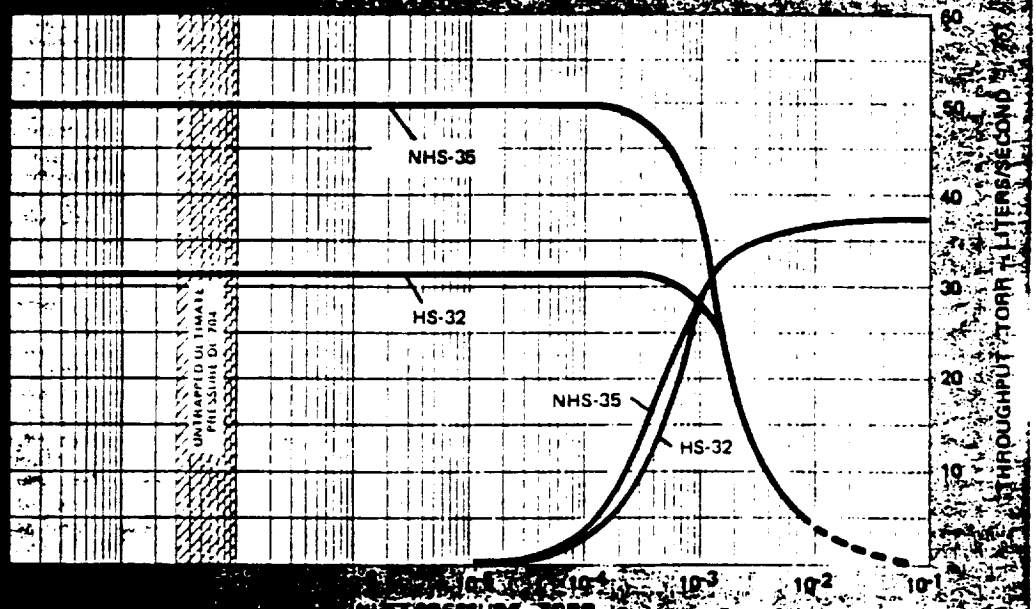

Description	Model
NHS-35 Diffusion Pump	
[illegible] with 240V heater	0169-F1730-308
[illegible] with 480V heater	[redacted]

[illegible] your local Varian Industrial Products Distribution Center or [illegible] Office. In Europe, orders should be addressed to the nearest Varian [illegible] Varian GmbH, Handwerkstrasse 5-7, D-7000 Stuttgart 80 (Vaihingen), [illegible] or to Varian SpA, Via Varian, 10040 Leini, Torino, Italy. Order all products [illegible] model number.

[illegible] Section 2

ORIGINAL PAGE IS OF POOR QUALITY

NHS-35 DIFFUSION PUMP

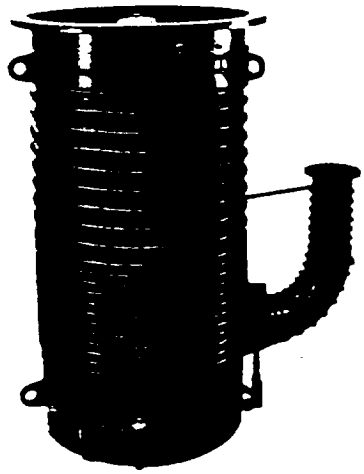

specifications

Maximum Speed:	50,000 l/s (air), 62,500 l/s (He, H_2)
Operating Range:	1×10^{-3} to 10^{-10} Torr Range
Maximum Forepressure:	No Load - 0.55 Torr Full Load - 0.40 Torr
Maximum Throughput:	35 Torr - l/s
Backing Pump:	300 CFM
Backstreaming Rate:	0.17 cc/Hr.
Warm-up Time:	60 Minutes
Cool-down Time:	60 Minutes (with quick cool)
Fluid Charge:	3 Gallons
Heater Rating:	Power 24KW Voltage 240/380/480 VAC, 50/60 Hz, 3 Ø
Body:	Mild Steel
Flanges:	Mild Steel
Jet Assembly:	Stainless Steel
Cold Cap:	Copper (nickel plated)
Quick Cool Coil:	Stainless Steel
Oil Sight Glass:	Supplied
Heater:	Tubular Heater, Insulator, Clamp Plate
Cooling Water:	4 gpm at 60° - 80°F

outline drawing inches (mm)

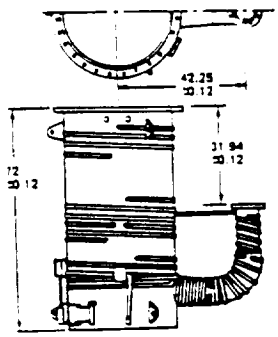

Inlet Flange			
		O-Ring Grv.	
OD	ID	ID	DIA
41.75 (1060)	35 (889)	35.38 (899)	0.56 (14)

Outlet Flange			
		O-Ring Grv.	
OD	ID	ID	DIA
11 (279)	7.72 (196)	8.20 (208)	0.17 (4.3)

Inlet:
28 Holes 0.88"(22) Diam. Eq.
Spaced on 38.5"(978) Diam.

Foreline:
8 Holes 0.81"(21) Diam. Eq.
Spaced on 9.5"(241) Diam.

speed curve

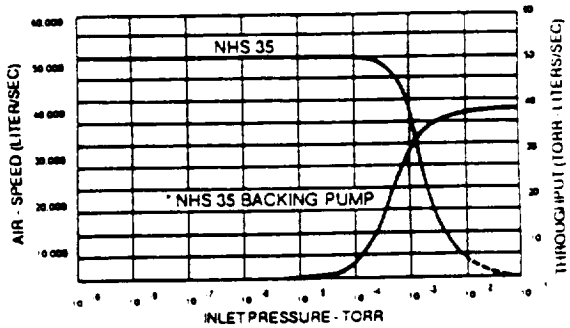

Speed curves based on standard AVS test procedures.
*Nominal backing pump speed in a typical application.

ordering information

	Order Number	Wt. (lb.)	Price
NHS-35 Diffusion Pump, O-Rings and Water-Cooled Cold Cap.			
With 240V Heater	0169-F1730-308	2000	$21,130
With 380V Heater	0169-F1730-326	2000	21,130
With 480V Heater	0169-F1730-309	2000	21,130
With 240V Heater and Halo Baffle	0169-F1730-318	2045	23,940
With 480V Heater and Halo Baffle	0169-F1730-319	2045	23,940
Replacement Heaters (6 each heater, clamp plate required)			
4000W, 240V, 380V or 480V	0181-6472-35-248	1	366
Heater Clamping Plate	0181-F1749-001	1	160
Heater Insulator	0181-F4536-001	1	77
Replacement Nickel Heater Wire	0181-6561-79-100	.5	9/Ft.
Replacement Nickel Lugs	0181-6480-56-680	1	1/Ea.
Replacement O-Ring Kit	0181-K0377-169	1	155
1 Butyl Inlet Flange O-Ring			
1 Butyl Foreline Flange O-Ring			
4 Viton Fill O-Rings			
4 Viton Drain O-Rings			

NOTE: Order oil separately - see pages 40 and 41.

Detailed information is provided in data sheet VAC 1036.

ORIGINAL PAGE IS
OF POOR QUALITY

Specifications for Stokes® Series 1700 Mechanical Booster Pumps

Suggestions P260 Brown

The specifications on these pages, and the performance curves shown on the preceding page, cover the most popular standard models of our Series 1700 Mechanical-Booster Vacuum Pumps. Our advisory service is available to help you custom-fit the right model for your application.

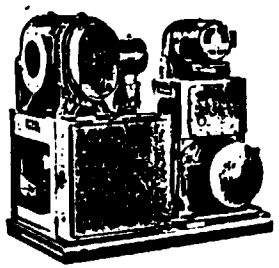

Model 1721

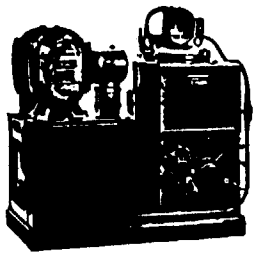

Model 1722

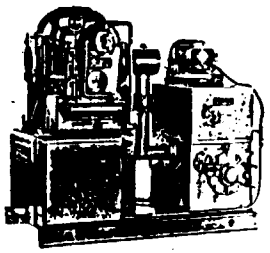

Model 1724

HC and HCS models provide for faster pumpdown capability

S models are high-speed units.

Specifications			1736	1736-S	1721	1721-S	1722	1722-S	1722-HC	1722-HCS
Model No.			1736	1736-S	1721	1721-S	1722	1722-S	1722-HC	1722-HCS
Displacement	1st Stage Blower	cfm	612	850	1300	1600	1300	1600	1300	1600
		m³/hr	1040	1444	2209	2719	2209	2718	2209	2718
	Microvac® Pump	cfm	150	150	150	150	300	300	600	600
		m³/hr	255	255	255	255	510	510	1020	1020
Normal Cut-In Pressure		Torr	25	10	15	10	25	15	75	60
Pressure Limit for Continuous Operation		Torr	8	3	3	2	15	8	25	20
Drive	1st Stage	hp	3	3	7½	10	7½	10	7½	10
		kw	2.24	2.24	5.60	7.46	5.60	7.46	5.60	7.46
	2nd Stage	hp	—	—	—	—	—	—	—	—
		kw	—	—	—	—	—	—	—	—
	Forepump	hp	7½	7½	7½	7½	10	10	two @ 10	two @ 10
		kw	5.60	5.60	5.60	5.60	7.46	7.46	14.91 total	14.91 total
Connections	Suction Flange	in.	6	6	8	8	8	8	8	8
		mm	152	152	203	203	203	203	203	203
	Discharge	in.	2 IPS	2 IPS	2 IPS	2 IPS	3 IPS	3 IPS	3 IPS (2)	3 IPS (2)
		mm	—	—	—	—	—	—	—	—
Water Requirements	1st Stage	gpm	Air Cooled							
		lpm	—	—	—	—	—	—	—	—
	2nd Stage	gpm	—	—	—	—	—	—	—	—
		gpm	1½	1½	1	1	2	2	4	4
	Forepump	lpm	5.68	5.68	3.785	3.785	7.57	7.57	15.14	15.14
Oil Requirements	1st Stage	gal	1	1	625	625	625	625	625	625
		liter	3.785	3.785	2.366	2.366	2.366	2.366	2.366	2.366
	2nd Stage	gal	—	—	—	—	—	—	—	—
		liter	—	—	—	—	—	—	—	—
	Forepump	gal	3	3	3	3	12	12	24	24
		liter	11.36	11.36	11.36	11.36	45.53	45.53	90.85	90.85
Height	Overall	in.	47⅝	47⅝	49¾	49¾	56¾	56¾	56⅝	59⅝
		mm	1218	1216	1260	1260	1438	1438	1438	1513
	To Inlet	in.	47⅝	47⅝	40¾	40¾	40¾	40¾	40¾	40¾
		mm	1216	1216	1035	1035	1035	1035	1035	1035
Length		in.	53½	53½	55¾	55¾	55¾	55¾	70	70
		mm	1359	1359	1419	1419	1407	1407	1803	1778
Width		in.	27⅝	27⅝	36 1/16	36 1/16	41¼	41¼	70⅝	70¾
		mm	705	705	919	919	1048	1048	1794	1794
Weight	Net	lb.	1775	1775	2700	2800	3500	3600	5300	5400
		kg	805	805	1225	1270	1588	1633	2404	2450

Specifications			1738	1724	1724-HC	1723	1723-HC	1723-HCS	1725	1728	1719	1720	1729*
Model No.			1738	1724	1724-HC	1723	1723-HC	1723-HCS	1725	1728	1719	1720	1729*
Displacement	1st Stage Blower	cfm	2000	2875	2875	3940	3940	4360	5740	5740	7880	7880	13,950
		m³/hr	3398	4885	4885	6695	6695	7409	9753	9753	13,390	13,390	23,704
	Microvac® Pump	cfm	300	300	600	300	600	730	600	730	600	730	300
		m³/hr	510	510	1020	510	1020	1240	1020	1240	1020	1240	510
Normal Cut-In Pressure		Torr	10	15	30	10	25	30	10	15	10	15	1st Stg 2.0 2nd Stg 25.0
Pressure Limit for Continuous Operation		Torr	3	1.0	3	0.8	1.0	2.5	1.2	1.3	1.0	1.1	0.45
Drive	1st Stage	hp	10	20	25	25	30	30	30	30	40	40	50
		kw	7.46	14.91	18.64	18.64	22.37	22.37	22.37	22.37	29.83	29.83	37.29
	2nd Stage	hp	—	—	—	—	—	—	—	—	—	—	7½
		kw	—	—	—	—	—	—	—	—	—	—	5.60
	Forepump	hp	10	10	two @ 10	10	two @ 10	30	two @ 10	30	two @ 10	30	10
		kw	7.46	7.46	14.91 total	7.46	14.91 total	22.37	14.91 total	22.37	14.91 total	22.37	7.46
Connections	Suction Flange	in.	8	8	8	10	10	10	12	12	14	14	18
		mm	203	203	203	254	254	254	305	305	356	356	457
	Discharge	in.	3 IPS	3 IPS	3 IPS (2)	3 IPS	3 IPS	5 IPS	3 IPS (2)	5 Flg	3 IPS (2)	5 Flg	3 IPS
		mm	—	—	—	—	—	—	—	127	—	127	—
Water Requirements	1st Stage	gpm		2	2	2	2	2	2	2	2½	2½	3
		lpm	—	7.57	7.57	7.57	7.57	7.57	7.57	7.57	9.46	9.46	11.35
	2nd Stage	gpm	—	—	—	—	—	—	—	—	—	—	Air Cooled
		gpm	2	2	2	2	2	2	4	5	4	5	2
	Forepump	lpm	7.57	7.57	7.57	7.57	7.57	7.57	15.14	15.14	15.14	18.93	7.57
Oil Requirements	1st Stage	gal	625	5¼	625	5¼	5¼	5¼	5¼	5¼	7¾	7¾	15
		liter	2.366	19.87	2.366	19.87	19.87	19.87	19.87	19.87	29.34	29.34	56.78
	2nd Stage	gal	—	—	—	—	—	—	—	—	—	—	½
		liter	—	—	—	—	—	—	—	—	—	—	1.9
	Forepump	gal	12	12	24	12	24	20	24	20	24	20	12
		liter	45.53	45.53	90.85	45.43	90.85	75.71	90.85	75.71	90.85	75.71	45.43
Height	Overall	in.	56¾	66¾	67	66¾	67	67	66¾	66¾	77¾	77½	78
		mm	1438	1696	1702	1696	1702	1702	1696	1696	1959	1959	1981
	To Inlet	in.	40¾	50	50	50	50	50	50	50	59¾	59¾	46¾
		mm	1035	1270	1270	1270	1270	1270	1270	1270	1508	1508	1184
Length		in.	55¾	71¾	70	71¾	80	94¾	91	98¾	101¾	109¾	128½
		mm	1407	1813	2032	1813	2032	2403	2311	2499	2575	2788	3273
Width		in.	41¼	47½	70	49¾	70	52	70	60 1/16	69 9/16	63 11/16	122¾
		mm	1048	1207	1778	1251	1778	1321	1778	1535	1767	1621	3108
Weight	Net	lb.	3600	5250	7300	5400	7450	9200	7900	9600	9200	10,900	13,300
		kg	1633	2381	3311	2450	3379	4173	3583	4354	4173	4944	6033

Electrical requirements: Full NEMA 12 controls supplied as standard on all models. 480v/60Hz/3ϕ power with transformer and 115v control circuits are standard.

*Displacement of 2nd stage blower is 1300 cfm (2209 M³/HR).

Other electrical arrangements optional.

Dimensions are subject to minor changes; confirm before construction.

ORIGINAL PAGE IS OF POOR QUALITY

CVC GOLDLINE HIGH VACUUM LARGE RIGHT ANGLE VALVES

8/22/2008

Type VRA

BENEFITS

- High Conductance Contributes To Quick Pumpdown
- Operating Mechanism Can Be Removed Without Breaking Vacuum Line Connections
- Automatic Closing In Case Of Power Failure
- Provide Positive, Vacuum-Tight Seal At Low Pressures

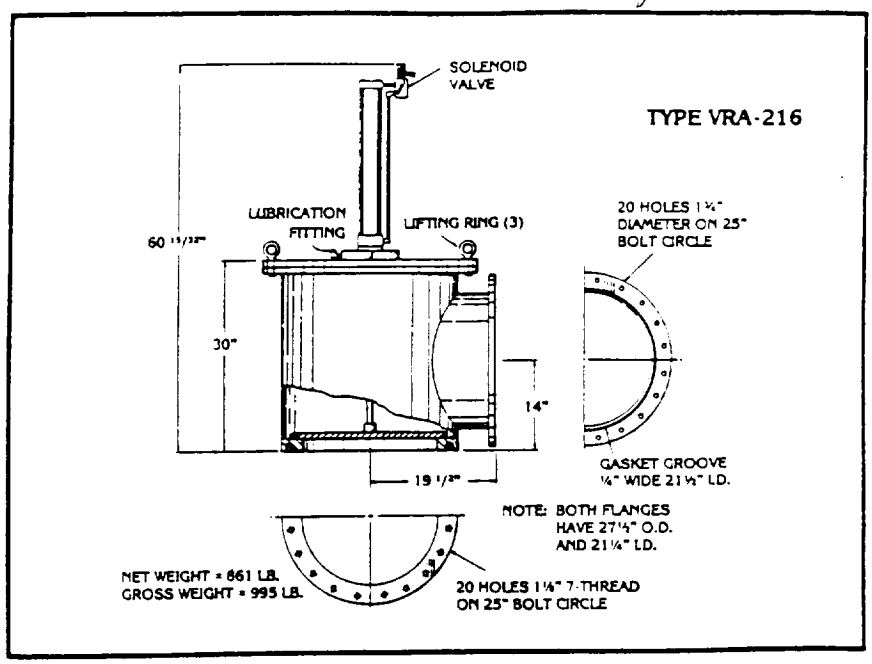

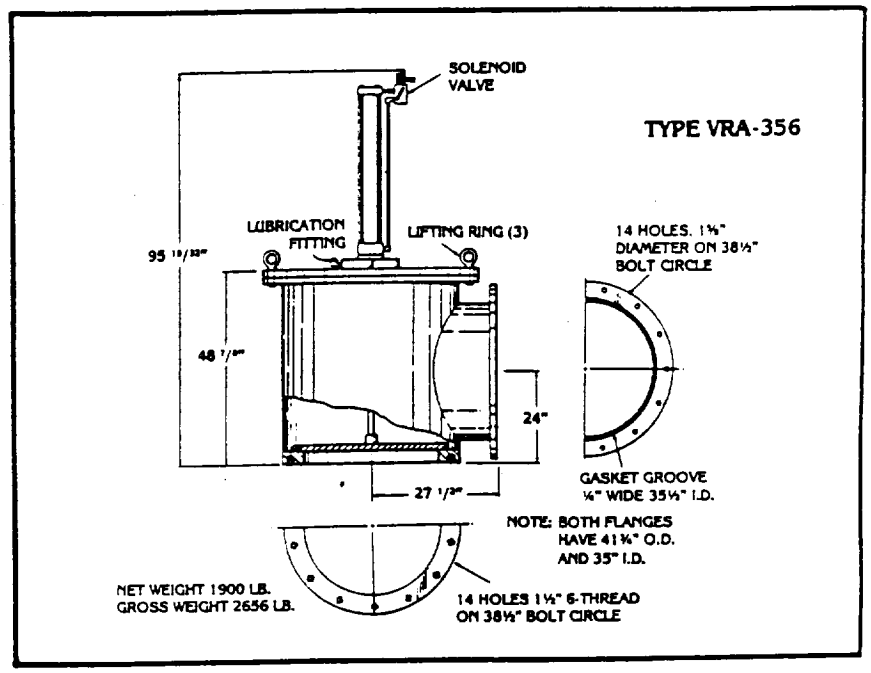

GENERAL DESCRIPTION

The right angle valves of the VRA series are divided into two groups by nominal sizes: the ½-inch to 1½-inch valves, and the 20-inch and 35-inch valves. Each group provides the most favorable combination of operating features and price within its size range.

The 20-inch and 35-inch VRA valves are made of carbon steel. They are air-operated with adjustable speed control and are O-ring sealed. The valves are fail-safe; they close if there is a power failure. Each assembled valve is given a complete helium leak test to make certain that it is leak tight. Attention to shaft and seal alignment assures vibration-free operation and long gasket life.

These valves connect directly to CVC "BlueLine" diffusion pumps or "BC" baffles of the same nominal size and to standard ASA flanges. The inlet flange of each valve is grooved and provided with an elastomer gasket; the outlet flange is ungrooved.

REQUIRED SERVICES

Compressed air at 40-150 psig is required to operate the valves. The solenoid-operated air-control valves require a 115-volt 50/60 Hz power supply.

REMOVABLE OPERATING MECHANISM

The operating mechanism for the valve plate is flange-mounted; it can be easily removed from the casing for service without breaking the vacuum line connections. The flange is O-ring sealed to the right-angle casing for leak tightness.

ORDERING INFORMATION:

VRA-216 — Right Angle Valve, 20" ASA Flanges 263017
VRA-356 — Right Angle Valve, 32" ASA Flanges 262216
Roughing ports can be supplied at time of order.

-150

CVC MULTI-COOLANT BAFFLES

Type BC

BENEFITS

- Operates Effectively With Choice Of Coolants: Water, Gas Refrigeration, or Liquid Nitrogen
- Pump Fluid Creep Is Minimized By Oleophobic Polymer
- Removable Baffle Elements Are Easy To Clean Without Breaking Vacuum Line Connections
- High Conductance Speeds System Pumpdown
- Sturdy, Corrosion-Resistant Construction For Long Life
- Accessory Gas Refrigeration System Available

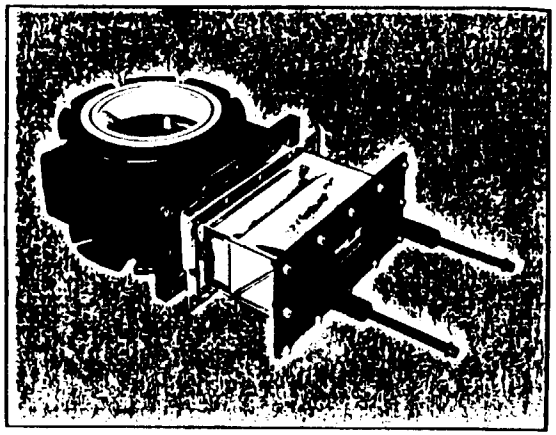

GENERAL DESCRIPTION

These CVC multi coolant baffles are supplied in two basic configurations. A two piece design is utilized in nominal sizes up to 10 inches; in larger sizes, one piece construction provides a more economic and compact baffle.

MULTI COOLANT OPERATION

Type BC baffles can be water cooled or freon refrigerated, depending upon the application. They can also be used with liquid nitrogen, although the BCN type (available in nominal sizes up to 10 inches) is designed specifically for operation with liquid nitrogen and offers many advantages for this specific coolant. The 2 inch and 10 inch BC baffles have internal reservoirs as part of the chevron insert. The 4-unit and 6 inch baffles utilize ⅛ inch tubing for the refrigerant medium.

OLEOPHOBIC POLYMER COATING

The internal surfaces of the aluminum baffle housings are coated with an oleophobic polymer. This coating retards pump fluid creep and thus contributes to a cleaner vacuum chamber.

TWO PIECE DESIGN

To simplify defrosting and cleaning, all BC baffles in the 2 to 10 inch nominal size range consist of a box type housing with a removable chevron insert. The vacuum line connections for the 4 inch to 10 inch baffles are sized for 150 pound ASA type flanges. The insert is gasket sealed to a rectangular flange on the housing and can be easily removed without breaking the vacuum line connections.

HIGH CONDUCTANCE

High conductance is characteristic of all CVC chevron baffles. Contributing to this conductance are the short flange to flange dimensions, large inner diameters, and chevrons which provide the best balance between optimum conductance and baffle efficiency. Pumpdown times are further reduced when liquid nitrogen or low temperature freon refrigeration is used.

STURDY CONSTRUCTION

The two piece BC baffles are available with casings of aluminum (4 inch, 6 inch, and 10 inch sizes). Aluminum is suitable for most applications; its low outgassing properties are particularly valuable in systems. The chevron inserts are fabricated of copper and are tin plated to decrease heat loss. Gasket grooves, which can trap atmospheric gases and release them into the system, have been eliminated from the vacuum line flanges of the smaller BC baffles. Flanges have a raised gasket surface with a 32 micro inch RMS finish. Con O Ring gaskets are supplied. These gaskets are conventional elastomer O-rings held in an aluminum retainer which locates the gasket on the seating surface and predetermines compression to the optimum value. Buna N gaskets are standard; Viton A gasket conversion kits can be purchased for all baffles up to 10 inches in nominal size.

BC baffles larger than 10 inches in nominal size are of one piece construction with the chevrons permanently mounted in a cylindrical carbon steel housing. Top and bottom flanges are drilled to match the CVC pumps and valves of the same nominal size. The top flange is grooved and supplied with a Buna N gasket.

ORDERING INFORMATION — BC BAFFLES

Model	Description	Part Number
BC21	Multi Coolant	W. Copper Tin Plated Chevrons	281824
BC31	Multi Coolant	W. Copper Tin Plated Chevrons	281823
BC41B	Multi Coolant	W. Copper Tin Plated Chevrons	268941
BC61C	Multi Coolant	W. Copper Tin Plated Chevrons	272231
BC101B	Multi Coolant	W. Reservoir and Chevrons	271904
BC210A	Multi Coolant	W. Copper Chevrons, Steel Housing	274487
BC350	Multi Coolant	W. Copper Chevrons, Steel Housing	262679

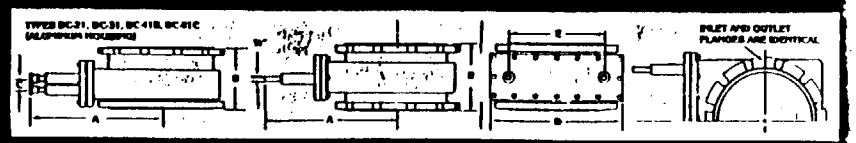

DIMENSIONS — 2 INCH TO 10 INCH BC BAFFLES

Nominal Size	Type*	A	B**	C	D	E	Flange OD	Flange ID	Flange Thick	Holes BC	Holes No.	Holes Size	Holes Offset***	Weight (LB) Net	Weight (LB) Ship
2	BC2	[illegible]	[illegible]	[illegible]	[illegible]	[illegible]	[illegible]	[illegible]	[illegible]	[illegible]	[illegible]	[illegible]	[illegible]	—	—
3	BC3	[illegible]	[illegible]	[illegible]	[illegible]	[illegible]	[illegible]	[illegible]	[illegible]	[illegible]	[illegible]	[illegible]	—	—	—
4	BC4B	[illegible]	[illegible]	[illegible]	[illegible]	[illegible]	[illegible]	[illegible]	[illegible]	[illegible]	[illegible]	[illegible]	[illegible]	23	30
6	BC6C	[illegible]	[illegible]	2¾	13	[illegible]	[illegible]	[illegible]	[illegible]	[illegible]	[illegible]	[illegible]	[illegible]	44	53
10	BC10B	[illegible]	[illegible]	[illegible]	[illegible]	[illegible]	[illegible]	[illegible]	[illegible]	[illegible]	[illegible]	[illegible]	[illegible]	68	97

*Type numbers ending in 0 designate stainless steel housing; numbers ending in 1 designate aluminum housing.

**Add 0.102" for each Con-O-Ring.

***Bolt hole offset is measured from the vertical in drawing. Cooling connections are as noted.

ACCESSORIES FOR BC BAFFLES

A Freon 12 refrigeration unit is available for use with BC type baffles. The unit is available for 115 volt operation (type BC 016A) or 230 volt operation (type BC 017A) and is easy to install.

BCN type inserts with large reservoir capacities are available for the smaller BC baffles for use with liquid nitrogen. When these inserts are used, the holding time for liquid nitrogen is materially increased over that of the standard BC type inserts.

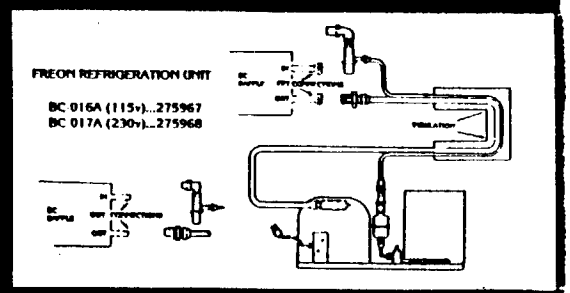

INSERT RESERVOIR DATA

Model	Capacity (Liters)	Maximum Allowable Internal Pressure (PSIG)
BC2	0.07	200
BC4B	—	200
BC6C	—	200
BC10B	5.35	160
BC210A	1.03	250
BC350	1.72	250

REPLACEMENT AND SPARE PARTS

CON O RINGS — FLANGE SEALS FOR VCS(P) VALVES AND BC(N) BAFFLES

Item		Part Number
1	Buna N Gasket	255056-0002
2	Buna N Gasket	255056-0003
4	Buna N Gasket	255056-0004
5	Buna N Gasket	255056-0006
6	Buna N Gasket	255056-0010
8	Buna N Gasket — 12" ID	255056-0011
2	Viton Gasket	255617-0002
3	Viton Gasket	255617-0003
4	Viton Gasket	255617-0004
6	Viton Gasket	255617-0006
10	Viton Gasket	255617-0010
11	Viton Gasket — 12" ID	255617-0011

ORIGINAL PAGE IS OF POOR QUALITY

3.4.1.3 Controls and Gauging System

The following control systems or their equivalents would be sufficient for the primary mirror coating chamber. The first of the two systems will control the pumpdown process and glow discharge final cleaning. The second control system controls the aluminum deposition.

Pumpdown Control System (see Figure 3.4.1.3-0):

- Varian Liquid Nitrogen Level Controller (model #972-1100). Assures that LN2 continues to go to the diffusion pump cooling baffles.

- Varian Automatic Valve Sequencer (model #971-1016). Opens and closes the vacuum valves, based on various pressure readings throughout the vacuum system, in the correct order to pump down the chamber.

- Varian 843 Ratiomatic Ionization Gauge Control Unit (model #0843-K3100-302). The interface between the pressure gauges and the Automatic Valve Sequencer. Sends signals to the valve sequencer to indicate which valve to open. Measures pressure from 2 Torr to 10^{-9} Torr.

- Varian 531 Thermocouple Gauge (model #0531-F0472-303). Measures pressure from 2 Torr to 10^{-3} Torr. Sends the pressure reading to the 843 Gauge Controller.

- Varian 563 Series Ionization Gauge Tube (model #0563-K2466-303). Measures pressure from 10^{-3} Torr to $2X10^{-10}$ Torr. Sends the pressure reading to the 843 Gauge Controller.

- Varian 815 Thermocouple Gauge Controller (model #0815-L5700-301). Monitors pressures in the chamber and foreline for the range of 760 Torr to 10^{-3} Torr. Sends signal to the Valve Sequencer.

- Varian 536 Thermocouple Gauge (model #0536-L6141-303). Measures pressure from 760 Torr to 10^{-3} Torr. Attached to the 815 Gauge Controller.

- SDC-100 High Voltage Power Supply (model #276410-2). Provides the large voltage required for glow discharge final cleaning. It attaches to the Valve Sequencer. When the correct chamber pressure is reached the voltage turns on.

Aluminum Deposition Control System (see Figure 3.4.1.3-1):

- Inficon Deposition Rate Controller (model #IC-6000). Controls the rate of deposition by controlling the electricity flow (via the Power Controller) to the tungsten filaments and by monitoring the thickness of the coating and the temperature of the filaments.

- Halmar SCR Power Controller (model #SCR-3P-48-120). Recieves instruction from the Deposition Rate Controller to either ramp up the power to the tungsten filaments or to give less.

- Intellemetrics Crystal Thin Film Thickness Monitor (model #IL800DNC). Monitors the aluminum film thickness and the rate of deposition. Feeds this information back to the Deposition Rate Controller.

- Thermocouple Temperature Sensor (model # - to be determined). Measures the temperature of the filaments. Feeds this information to the Deposition Rate Controller.

The above control systems are "turnkey" systems. Once the process has been started, the controls take care of all the details. They can also be switched to manual for complete control, by a person, of the coating process. There is the possible option of connecting the two control systems together. This needs further study.

The manufacturers' specifications sheets for the listed components are contained at the end of this section. All the controls are to be placed in a standard nineteen inch rack and located close to a vacuum chamber viewport. Figure 3.4.1.3-2 shows the desired locations of the thermocouple and ionization gauges.

An example of a vacuum chamber and it's corresponding control systems can be seen in Figures 3.4.1.3-3 and 3.4.1.3-4. Note that this vacuum system has two diffusion pumps.

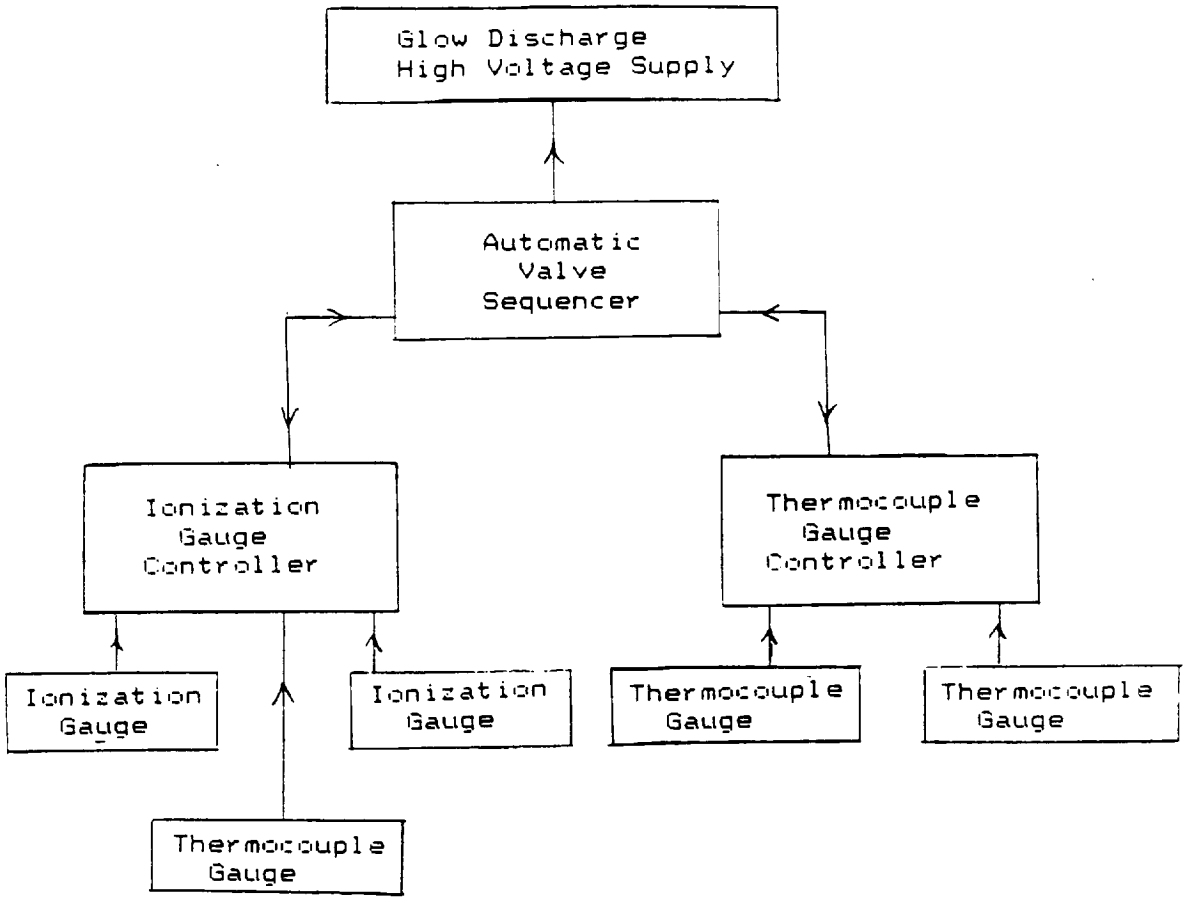
Glow Discharge
High Voltage Supply
Automatic
Valve
Sequencer
Ionization
Gauge
Controller
Thermocouple
Gauge
Controller
Ionization
Gauge
Ionization
Gauge
Thermocouple
Gauge
Thermocouple
Gauge
Thermocouple
Gauge

Figure 3.4.1.

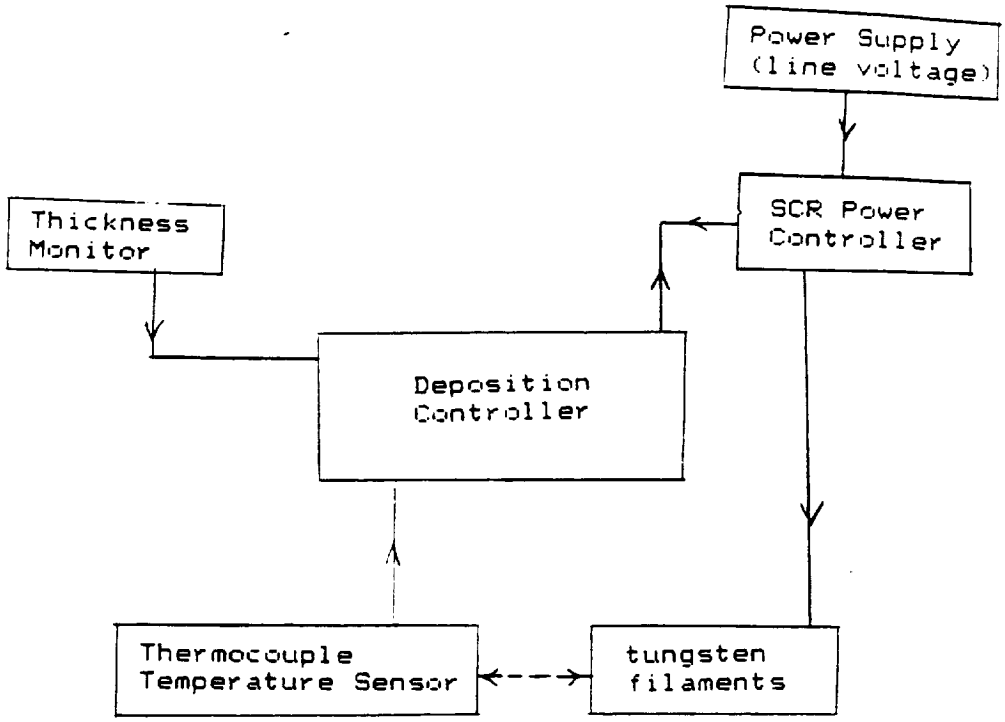

Figure 3.4.1.3-1

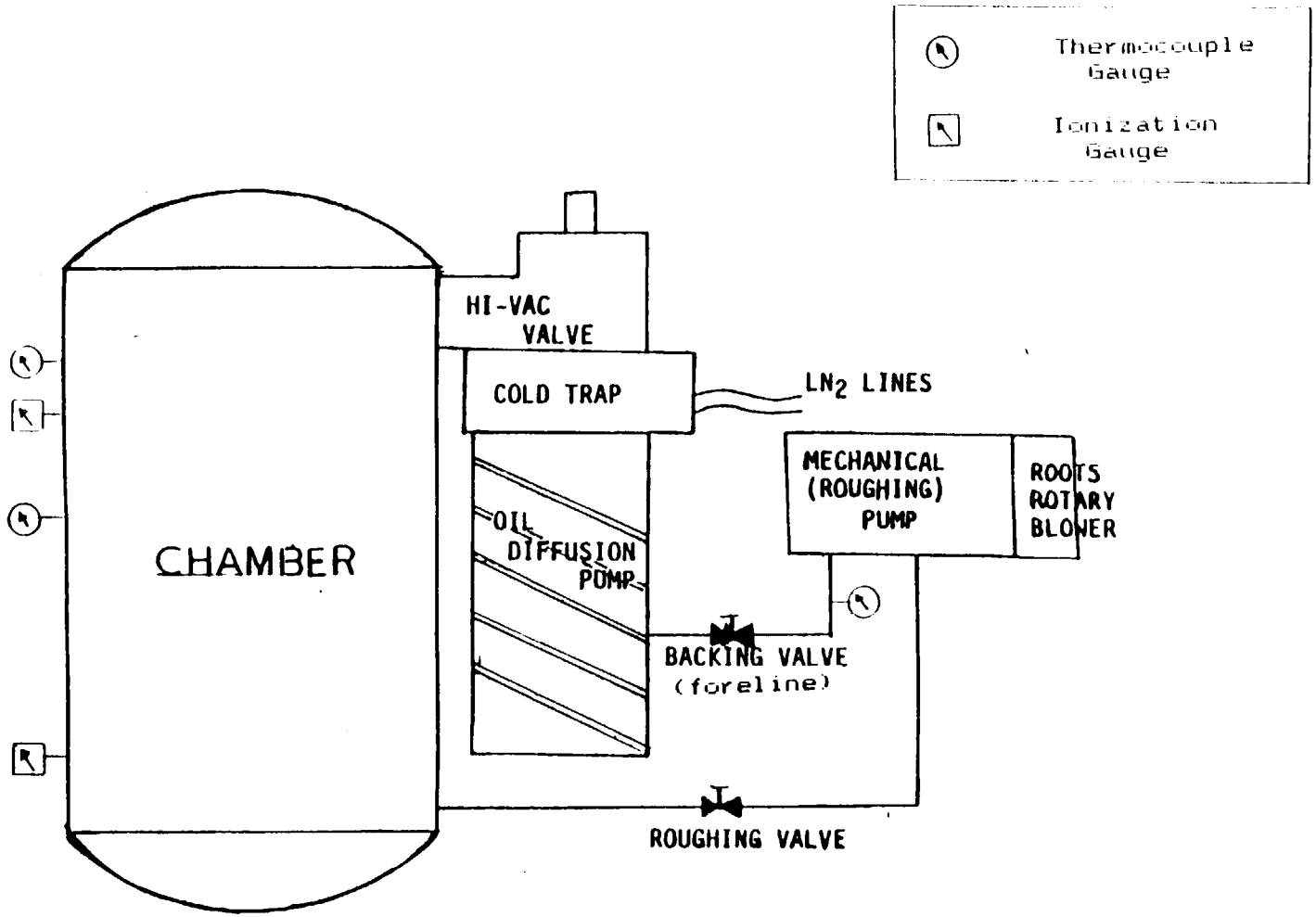

VACUUM PUMPING SYSTEM

Figure 3.4.1.3-2

FIGURE 1
GRAPHIC PANEL

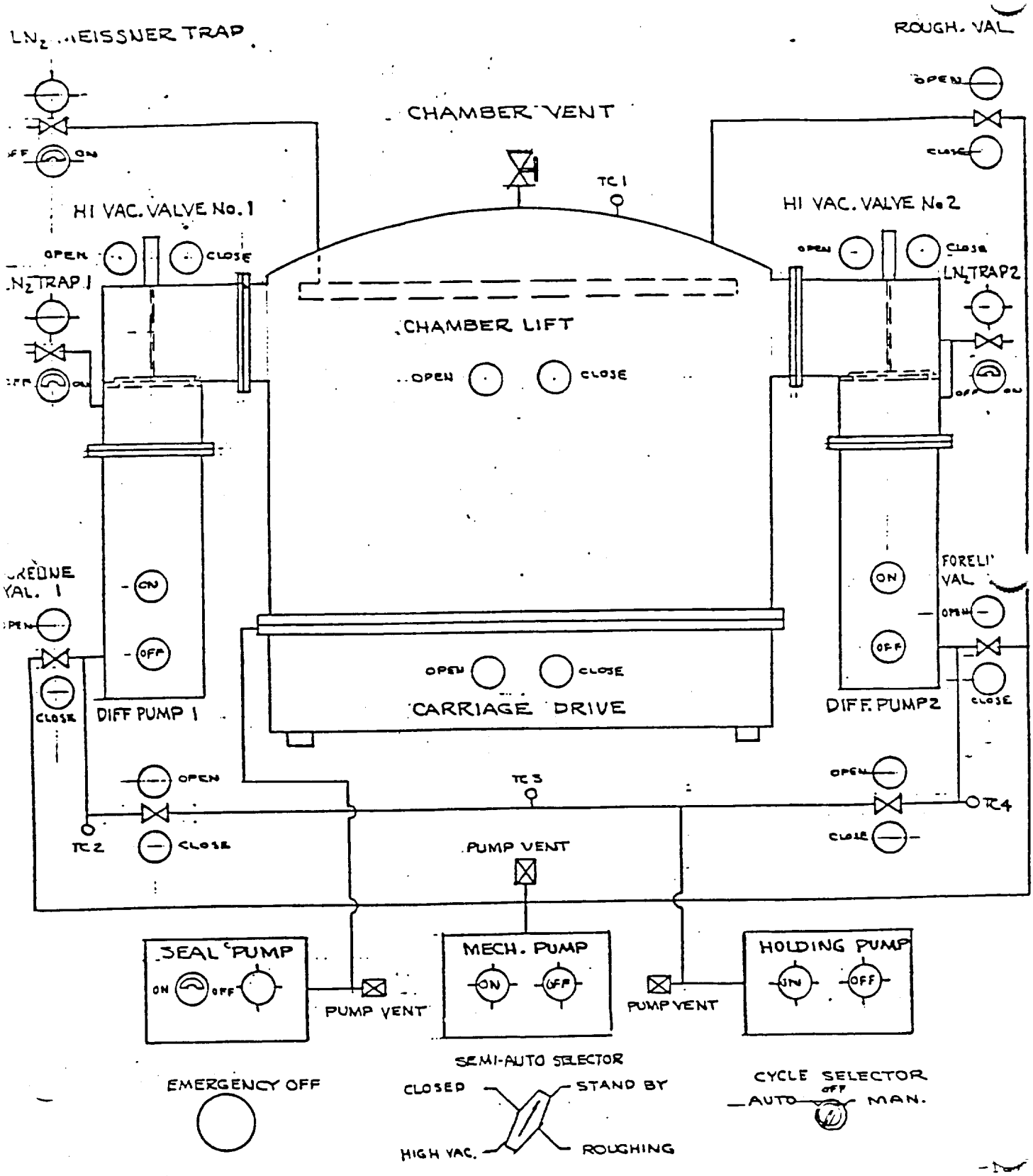

Figure 3.4.1.3-3

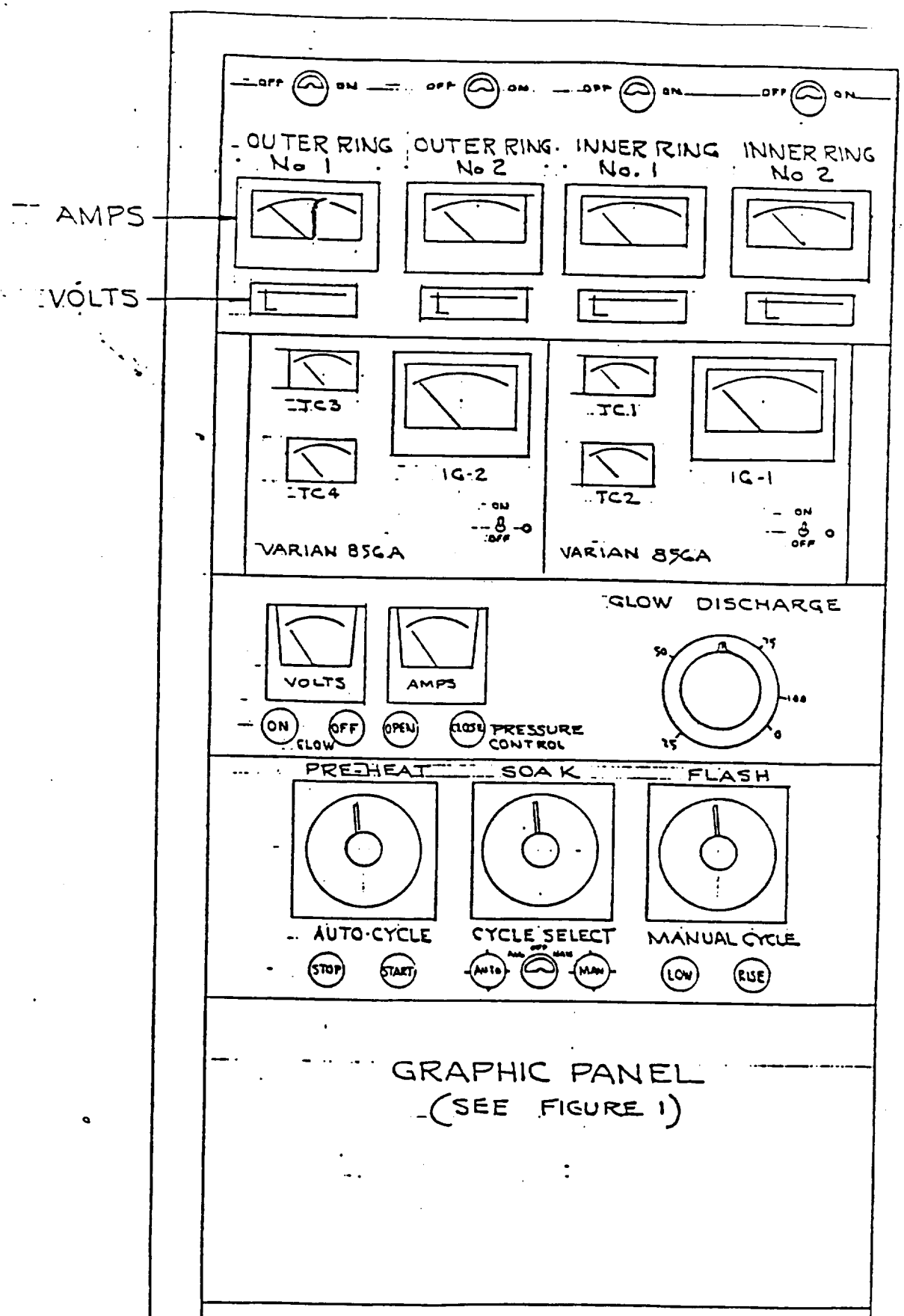

FIGURE 2

Figure 3.4.1.3-4

ORIGINAL PAGE IS
OF POOR QUALITY

Var n

Liquid Nitrogen Level Controllers

- ☐ Automatically Refills Cryogenic Baffles, Traps and Coils
- ☐ Reliable
- ☐ No Adjustments or Calibrations
- ☐ Custom Requirements on Request

The Varian Liquid Nitrogen Level Controller models provide a reliable method for controlling the level of LN_2 in a cryogenic container by regulating the transfer of LN_2 from a pressurized vessel.

A variety of applications can be addressed by the Varian LN_2 models.

For users who require zero differential level control, the single sensor models (1000 Series) is recommended.

Those users who wish to maintain a LN_2 level within a "high-low" range, may choose to regulate the LN_2 transfer by affecting the fill time (1100 Series) or the delay time (1200 Series) or may utilize a system of dual ("High-low") sensors, (2000 Series).

Each series is available with alarm and mechanical relay options. Choose the one that best suits your needs.

CUSTOM MODIFICATIONS AVAILABLE ON REQUEST

Specifications

Controllers

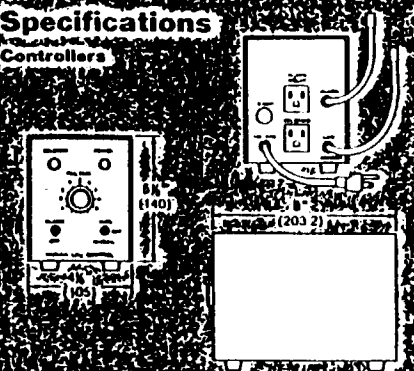

Power: 115VAC, 50/60 Hz, 7' Long Cable
Operating Modes: Auto/Manual/Off
Sensor(s): Solid-state, encapsulated, 8 feet (2440mm) long, cable
Sensor Element: ⅜" (9.5mm) long, 1½" (40mm) diameter
Indicators: Power, Solenoid
Alarm (optional): Audible, 115VAC, 3 amps
Fill Timer: Adjustable from zero to 6 minutes
Delay Timer: Adjustable from zero to 20 hours
Solenoid Relay: 115VAC, 3 amps, 50/60 Hz
Fuse: 3 amps
Weight: 2.5 lbs.

Transfer Line
972-0009, 972-0010

Sintered Bronze Splash Arrestor
972-0011

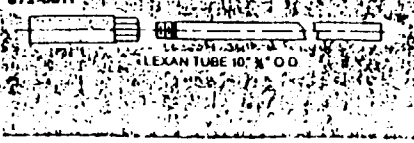

Single Level Sensor Models

(Model Series 1000)

972-1000 Single Level Sensor Model
This model uses one sensor. When it goes "dry", a low LN_2 level is indicated and the LN_2 fill operation begins. When the sensor becomes "wet", the fill operation is concluded. Thus a constant LN_2 level can be maintained within a cryogenic vessel, a wide hystereses margin prevents solenoid chatter.

972-1010 Single Level Sensor with Alarm
This model is like the 972-1000 except an audible alarm sensor and circuitry are included. When the alarm sensor goes "dry" (or optionally "wet") an audible alarm sounds. The alarm is re-set via the "alarm/off" switch.

972-1012 Single Level Sensor with Alarm and Mechanical Relay
This model is like the 972-1010 except a 115V, 3 amp relay output is included. This relay is activated (or optionally de-activated), whenever the alarm sounds. The relay is re-set only when the alarm sensor becomes "wet".

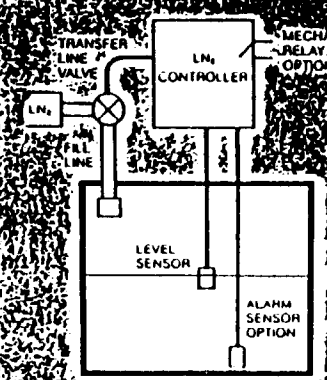

Single Level Sensor Timer Controlled Filling Cycle Models

(Model Series 1100)

972-1100 Single Level Sensor with Fill Timer
A low LN_2 level is indicated when the sensor is placed low in the cryogenic vessel. It detects a "dry" condition. The "dry" condition signals the controller to add LN_2 to the vessel for a pre-set time. The timer provides a duration of fill from zero to six minutes.

972-1110 Single Level Sensor with Fill Timer and Alarm
This model is like the 972-1100 except an audible alarm sensor and circuitry is included. Whenever the alarm sensor is placed lower in the cryogenic vessel than the LN_2 level sensor, it detects a "dry" condition, an audible alarm sounds. The alarm is controlled via an "alarm/off" switch.

972-1112 Single Level Sensor with Fill Timer, Alarm and Mechanical Relay
This model is like the 972-1110 except a 115V, 3 amp relay output is included. This relay is activated (or optionally de-activated), whenever the alarm sounds. The relay is re-set only when the alarm sensor becomes "wet".

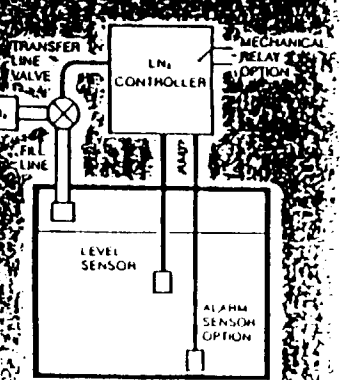

AUTOMATIC VALVE CONTROL
MODEL 971-1016

Reliable...versatile performance

THE PROVEN VALVE CONTROL FOR AUTOMATIC VACUUM SYSTEMS

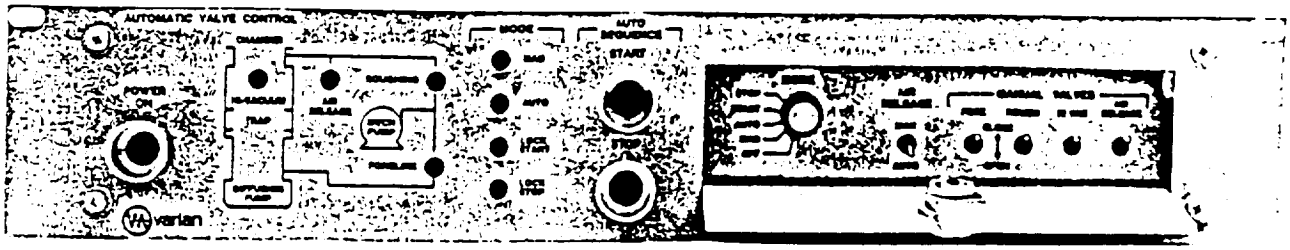

GENERAL DESCRIPTION

The Automatic Valve Control provides complete automatic vacuum system valve cycling from atmosphere to high vacuum pressures. The unit Model Number 971-1016, sequentially operates four electrically actuated, pneumatic valves with complete assurance against operator error or power failure. The unit provides repeatable, trouble-free operation in both production and laboratory applications.

Available in a standard rack mounted configuration, the valve control provides four modes of operation: Automatic, Locked Stop (standby), Locked Start (high vacuum) and Manual. All switches are located behind a hinged panel which may be locked if uninterrupted automatic control is desired. A schematic diagram on the panel locates each valve in the system and is light-keyed to indicate whether individual valves are open or closed.

This new valve control unit is designed to operate in conjunction with the Varian Model 843 Ratiomatic Ionization Gauge Control Unit*. In operation, the gauge control signals the valve control when the roughing – high vacuum crossover point is reached (interface cable is supplied with the valve control). In turn, when the valve control START, STOP or POWER-OFF switches are depressed, it remotely turns off the ion gauge filament.

* Model 843 Ion Gauge Control described in publication number VAC 1078.

MODE SELECTIONS

Automatic
The start button brings the pressure in the chamber from atmosphere to full high vacuum. In this position, the valves are automatically sequenced at the proper time.

Locked Stop (standby)
In this position only the foreline valve is open. This leaves the chamber air released and places the vacuum system in tamper-proof, standby condition ready for subsequent quick pumpdown of the chamber.

Locked Start (high vacuum)
When set to this position and the start button is depressed, the system will cycle to full high vacuum and remain in this state until the mode selector switch is altered.

Manual
When the unit is in this mode, each valve may be operated by means of individual switches located behind the lockable panel. This allows experienced personnel to operate the system in special applications, or to permit greater flexibility in maintenance or trouble shooting. The valve control does not provide any interlocks in the manual mode.

In all modes of operation, a power failure will automatically cause all valves to close. The valves will remain closed until the power-on button is manually depressed. At this time the foreline valve will open in all modes except manual. When the start button is depressed and if the chamber pressure is greater than crossover setpoint established by the ion gauge control, the system will rough pump the chamber before returning to high vacuum operation.

varian

Thin Film
Technology Division
611 Hansen Way
Palo Alto, CA 94303

Varian GmbH, D-7000
Stuttgart-Vaihingen
Handwerkstrasse 5-7
West Germany

Varian SpA
Via Varian
10040 Leini
Torino, Italy

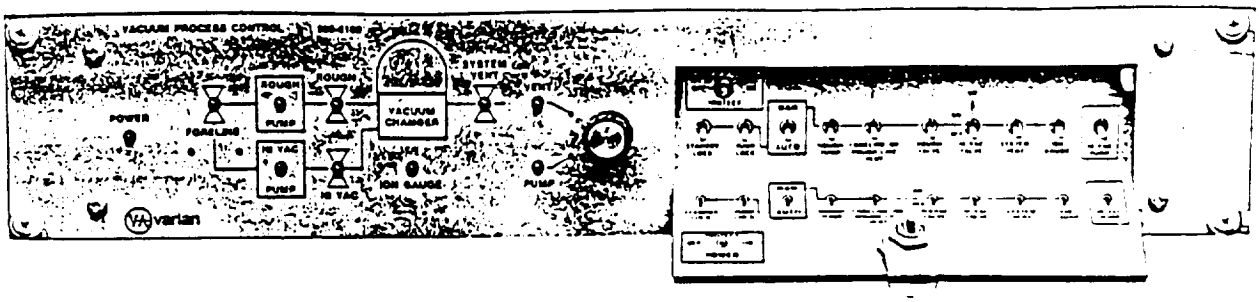

Figure 1. Vacuum Process Control, Front View

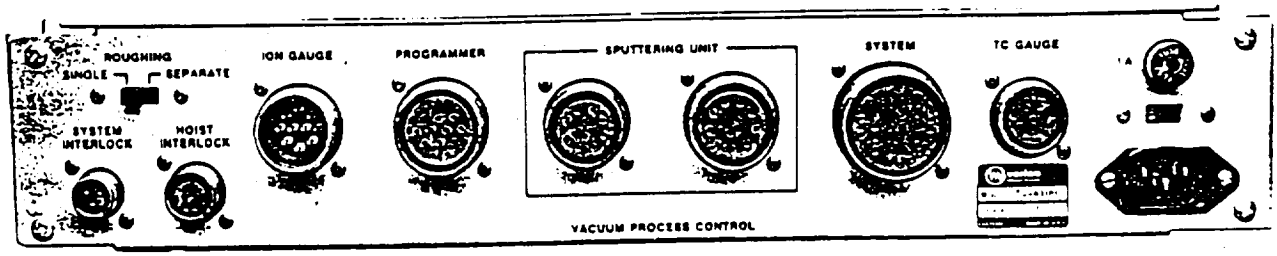

Figure 2. Vacuum Process Control, Rear View

HOT FILAMENT GAUGE CONTROLLERS

843 RATIOMATIC® IONIZATION GAUGE CONTROLLER

The 843 Ratiomatic controller eliminates emission, zero, and other adjustments. It measures pressure from 10^{-8} Torr to 2 Torr. The 843 is both an ion and thermocouple gauge controller and can be supplied with three optional process control set points - two ion gauge and one thermocouple. An automatic filament turn-on option is also available.

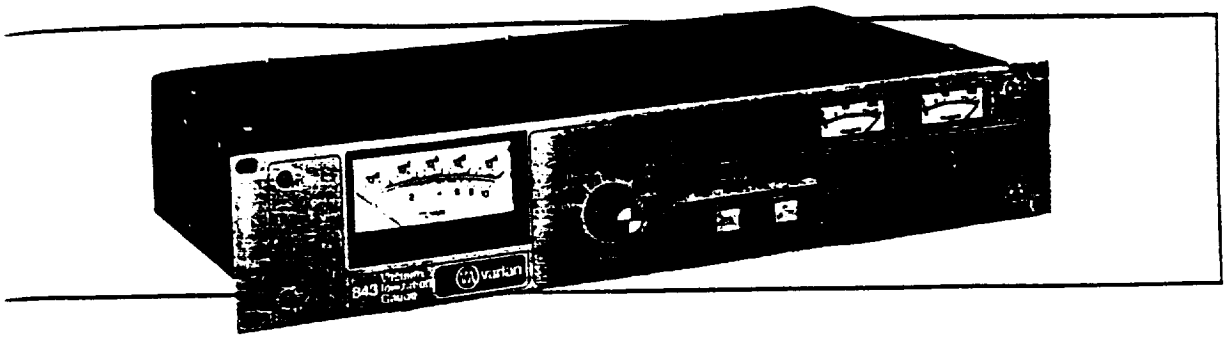

outline drawing inches(mm)

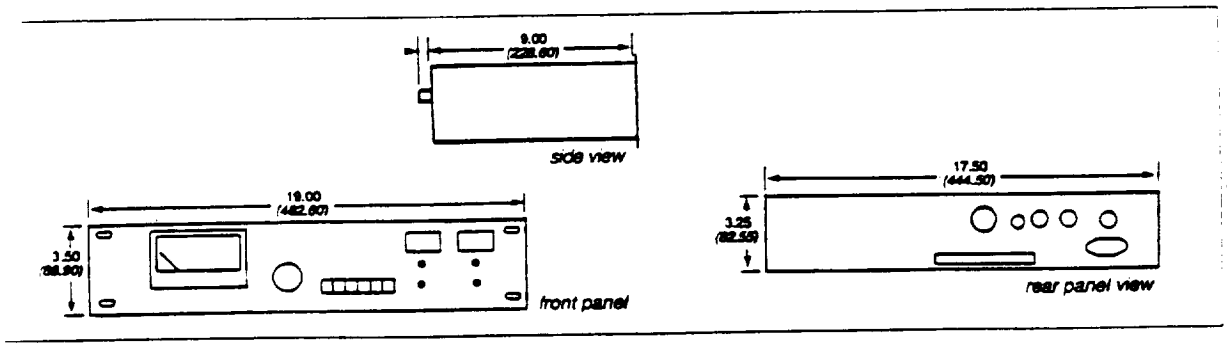

specifications

Power Required:	100W, 115/230V, 50/60 Hz
Range:	10^{-8} to 1.0×10^{-3} Torr (ion gauge); 1.0×10^{-3} to 2 Torr (TC gauge)
Degas:	50W resistance w/standard cable
Recorder Output:	0 to 5V, 1V/decade, 10^{-8} to 10^{-3} Torr
Process Control Contact Rating:	5A @ 115 VAC/24 VDC
Overpressure Point:	2×10^{-3} Torr
Recommended Gauge Tubes:	563, 571, and 572 Bayard-Alpert type ion gauge tubes; 531 thermocouple gauge tube.

ordering information

	Order Number	Wt. (lb)	Price
843 ratiomatic ionization gauge controller and standard 10' cables	0843-K3100-301	15	$ 1,150
843 with three set points, 2 ion, 1 TC	0843-K3100-302	15	1,250
Auto filament turn-on	0891-K3128-301	1	237
Replacement cables.			
10' TC cable	0881-K1649-301	1	71
10' ion gauge cable	0881-K3143-310	1	158

NOTES: (1) Includes all standard length cabling.
(2) Special-length cable quotations are available upon request.

ORIGINAL PAGE IS
OF POOR QUALITY

SIMPLIFIED CIRCUIT – UNIQUE RATIOMATIC CONCEPT ELIMINATES ONE-THIRD OF THE CIRCUITRY AND SIZE OF CONVENTIONAL ION GAUGE DESIGN.

Improved accuracy with meter displaying log and decade scales. Decade scale has the advantage of constant accuracy display er conventional linear scale.

Emission light indicates when necessary emission is established and also whether the gauge tube is contaminated beyond a useful level.

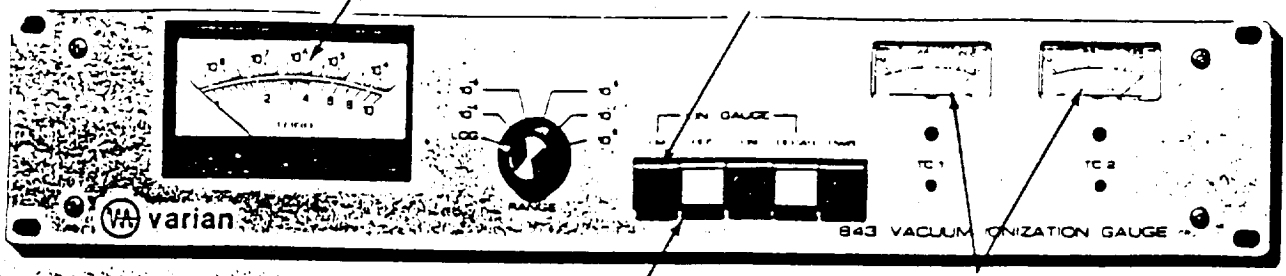

Easy to operate pushbutton controls with color coding for quick visual status information.

Two independent constant current TC circuits for continuous reading to 2 Torr. Constant current TC circuits eliminate calibration changes due to voltage drops. (Provided on 843 only.)

3 process control points option —2 ion gauge and 1 TC gauge.

115/230 volt, 50/60 Hz operation with switch change.

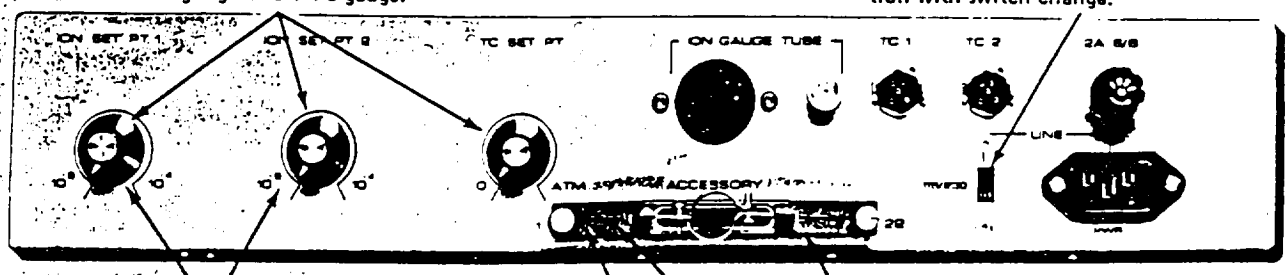

Filament status relay can be used as setpoint with fixed pressure trip of 2×10^{-3} Torr.

usily adjusted optional ion gauge setpoints are independent of range switch.

Remote filament turn-on contacts.

Setpoints are safeguarded—when gauge filament is off and gauge control is on, the meter reads full scale and the setpoints are prevented from tripping.

Continuous recorder output.

THE RATIOMATIC PRINCIPLE

The Ratiomatic gauge controls use a new principle and unique circuitry to measure gas pressure with standard hot filament vacuum ionization gauges.

Ion gauge pressure measurement is based on the following relationship:

$P = \frac{i+}{i-}(1/S)$ Where P = Pressure in Torr

i+ = Ion current (in amps)
i− = Ionizing current (in amps) (emission)
S = Gauge sensitivity ($Torr^{-1}$) (determined by gauge tube geometry)

Conventional ionization gauge controls interpret and execute this relationship with the objective being a gauge control output display that is a function of pressure. To date, this objective has been accomplished by regulating the ionizing current i− and indicating the ionized current i+ as a function of pressure.

Since voltage fluctuations, contamination by process gases, exposure to atmosphere, and changes of filament temperature at high pressures (10^{-5} and above) cause very large variations in i−, careful regulation is necessary to avoid gross errors.

The new gauge controls, using the Ratiomatic technique developed by Varian, differ from all previous controls in the interpretation of the pressure indication $P = \frac{i+}{i-}(1/S)$. As a result, the need for regulation of i− and its attendant problems are eliminated.

In the 842 and 843 circuits, this is implemented by an analog microprocessor that measures i+ and i− continuously and generates a signal voltage proportional to gas pressure, independent of the absolute values of either i+ of i−.

563 SERIES BAYARD-ALPERT TYPE STANDARD RANGE IONIZATION GAUGE TUBES

The 563 is a rugged gauge with wide range of linear response: 2×10^{-10} to 1×10^{-3} Torr. The platinum coating inside the bulb shields the gauge elements from electrostatic charges at low pressures and drains off the static charges which can build up at high pressures. The 56 s available in a variety of tubulations.

outline drawing inches(mm)

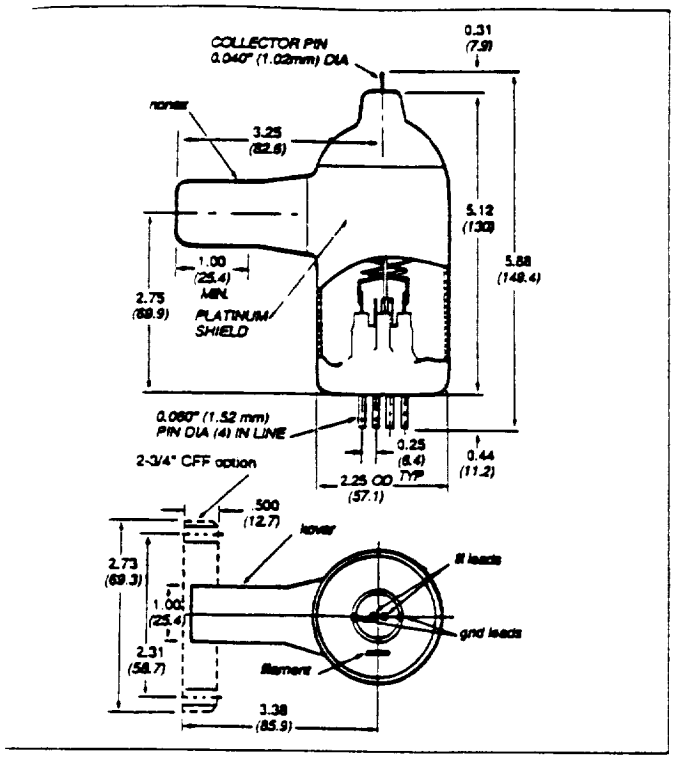

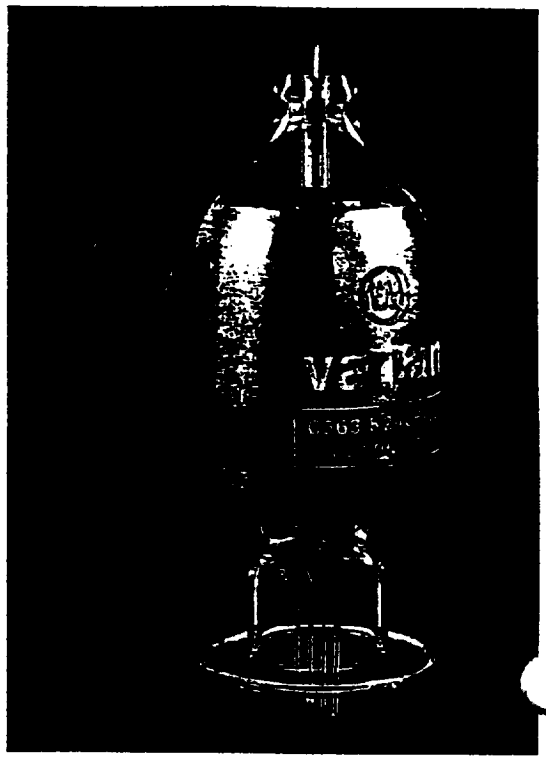

specifications

Sensitivity:	10 $(Torr)^{-1}$
Operating Ratings:	0 VDC (collector); + 180VDC to ground (grid); + 30 VDC to ground, 5 VAC nominal (filament)
X-Ray Limit:	2×10^{-10} Torr, approx.
Operating Pressure:	2×10^{-10} Torr to 1×10^{-3} Torr
Recommended Controllers:	843 ratiomatic ionization gauge controller; 844/845, 880 RS, and Multi-Gauge digital ionization gauge controllers

ordering information

	Order Number	Wt. (lb)	Price
563 ionization tube with thoria-coated iridium filament			
1" Nonex tubulation	0563-K2466-301	1	$125
1" Kovar tubulation	0563-K2466-302	1	140
On 2-3/4" ConFlat® flange	0563-K2466-303	2	205
3/4" Nonex tubulation	0563-K2466-304	1	125
3/4" Kovar tubulation	0563-K2466-305	1	135
563 sealed-off ionization gauge tube (sealed-off at ≤ 5.0×10^{-6} Torr)	0563-K2466-307	1	190
1340 compression vacuum seal, 1"	1340-F0205-382	1	120
1340 compression vacuum seal, 3/4"	1340-F0205-374	1	120

THERMOCOUPLE GAUGE CONTROLLERS AND ACCESSORIES

Additional Thermocouple Controllers can be found on pages 304 - 306.

Varian's thermocouple gauge controllers, with the exception of the model 815*, feature a 10^{-3} to 2 Torr pressure range, patented** ambient temperature compensation, line voltage regulation, and recorder output. The 531 thermocouple gauge tube is recommended for use with these controllers.

** U.S. Patent No. 3,440,884

*The 815 has a pressure range of 10^{-3} to 760 Torr.

815 FAST RESPONSE WIDE RANGE THERMOCOUPLE GAUGE CONTROLLER

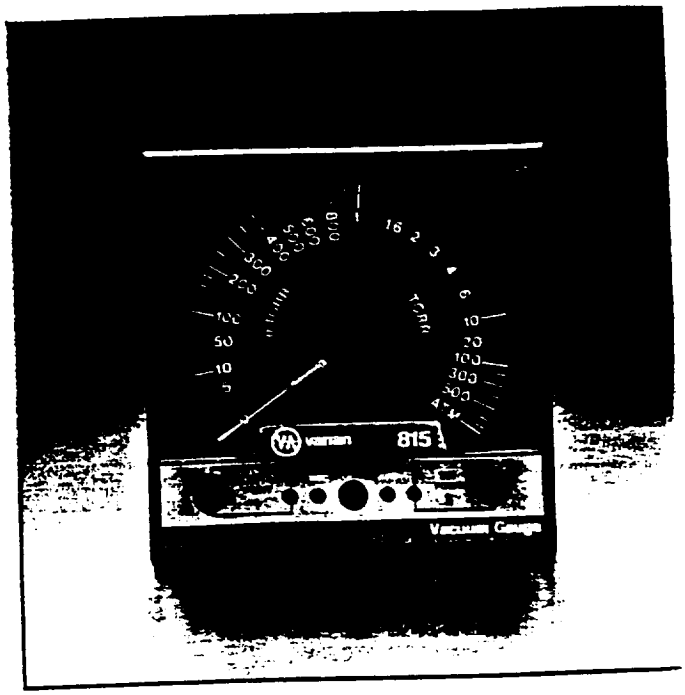

The 815 fast response thermocouple gauge controller and 536 thermocouple gauge tube are ideally suited for a wide range of applications where rapid, repetitive pumpdown from atmosphere to 10^{-3} Torr, associated accurate pressure monitoring and process control are required.

specifications

Power:	100/120/200/230/240 VAC ± 10%, 50/60 Hz (factory set), 10 W
Range:	1.0×10^{-3} Torr to atmosphere
Recorder Output:	0-10V (non linear)
Process Control Contact Ratings:	(2) S.P.D.T. Contacts, 3A @ 30 VDC/300VAC
Temperature Range:	0° C to 50° C
Response Time:	< 0.6 second for a step change in pressure from 1.0×10^{-3} Torr to atmosphere

ES

'an.
ise with

3,440,884

LER

outline drawing inches(mm)

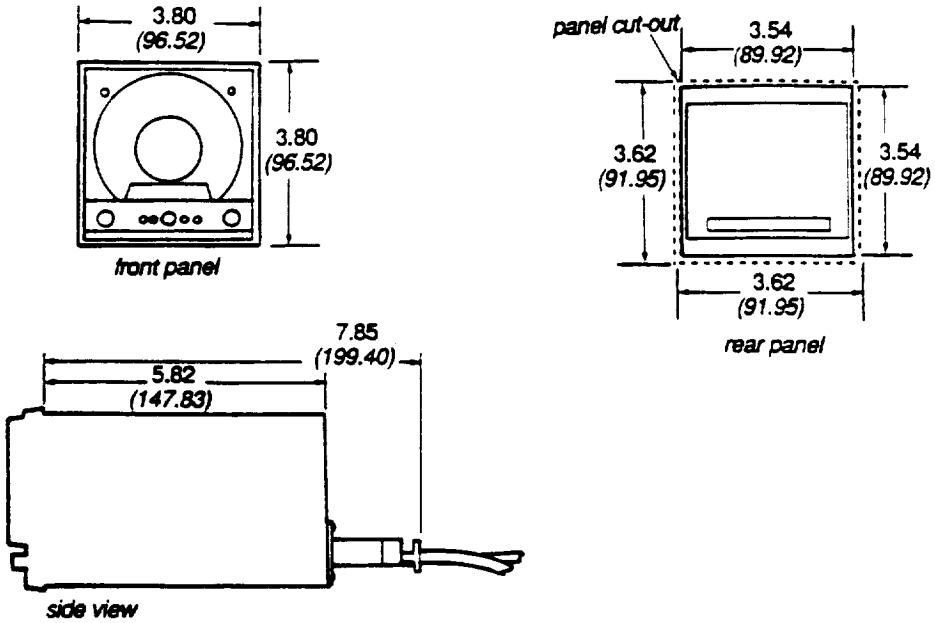

ordering information

	Order Number	Wt. (lb)	Price
815, 50/60 Hz, Torr display, with 536 gauge tube			
120 VAC	0815-L5700-301	2	$655
230 VAC	0815-L5700-302	2	655
100 VAC	0815-L5700-303	2	655
200 VAC	0815-L5700-304	2	655
240 VAC	0815-L5700-305	2	655
815, 50/60 Hz, mbar display, with 536 gauge tube			
120 VAC	0815-L5700-306	2	655
230 VAC	0815-L5700-307	2	655
100 VAC	0815-L5700-308	2	655
200 VAC	0815-L5700-309	2	655
240 VAC	0815-L5700-310	2	655
815 replacement gauge cable and bracket assembly	0881-L5722-301	2	74

531 THERMOCOUPLE & 536 BAFFLED THERMOCOUPLE GAUGE TUBES

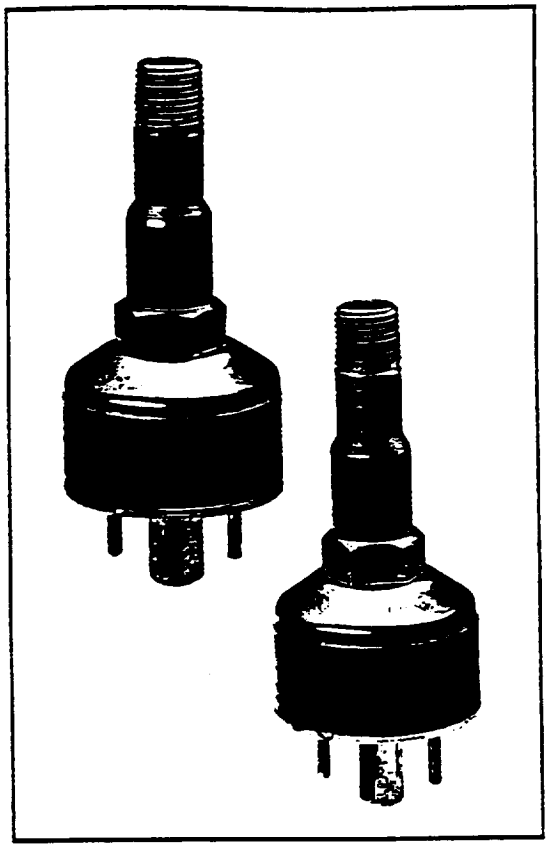

The 531 Thermocouple gauge tube is designed specifically for use with the 800 Series gauge controllers. The 531 provides continuous and accurate indication of total pressure from 10^{-3} to 2.0 Torr absolute. Developed to combine rugged dependability and outstanding performance, the 531 offers fast response and low power drain. The gauge is available in stainless steel or nickel-plated mild steel.

The 536 baffled thermocouple gauge tube is designed specifically for use with the 815 series gauge controllers. The 536 provides continuous and accurate indication of total pressure from 1×10^{-3} Torr to atmosphere. Developed to combine rugged dependability and outstanding performance, the 531 offers fast response and low power drain. The gauge is available in stainless steel.

outline drawing inches(mm)

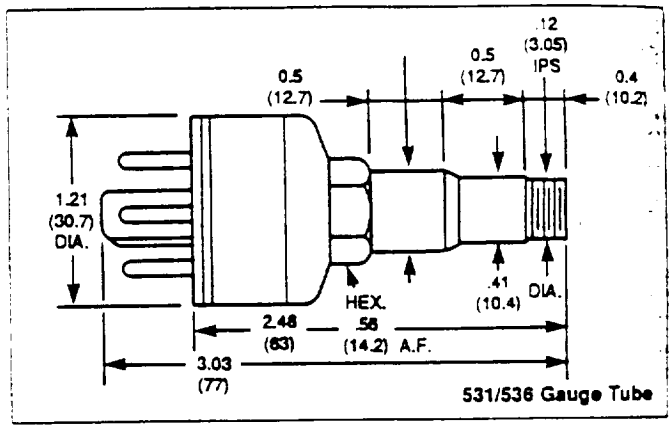

531/536 Gauge Tube

specifications

Filament Current:	165 mA (gives 11 mV across thermocouple at pressures below 10^{-3} Torr)
Response Time:	3 sec (10^{-3} to 1.0 Torr),(when used with 800 series controllers)
	< 0.6 second from 1×10^{-3} Torr to atm (when used with 815 series controllers
Range:	1.0×10^{-3} to 2 Torr
Output:	0-11 mV
Bakeability:	Approximately 150°C
Heater Resistance:	Approximately 1.4 ohms
Cable Connection:	Octal base (std.)
Pins:	Nickel-iron alloy (Ni 48%, Fe 52%)

ordering information

	Order Number	Wt. (lb)	Price
531 thermocouple gauge			
Nickel-plated mild steel	0531-F0472-301	1	$ 48
Type 304 stainless steel	0531-F0472-303	1	55

Recommended Controllers: 800 Series thermocouple controllers; 842/843 ratiomatic ionization gauge controllers; 844/845, 880RS, 880, Multi-Gauge, and digital ionization gauge controllers.

For KLAMP-FLANGE™ - female adapters, see page 249.

536 baffled TC tube type 304 stainless steel	0536-L6141-303	1	68

HIGH VOLTAGE POWER SUPPLY

TYPE SDC-100

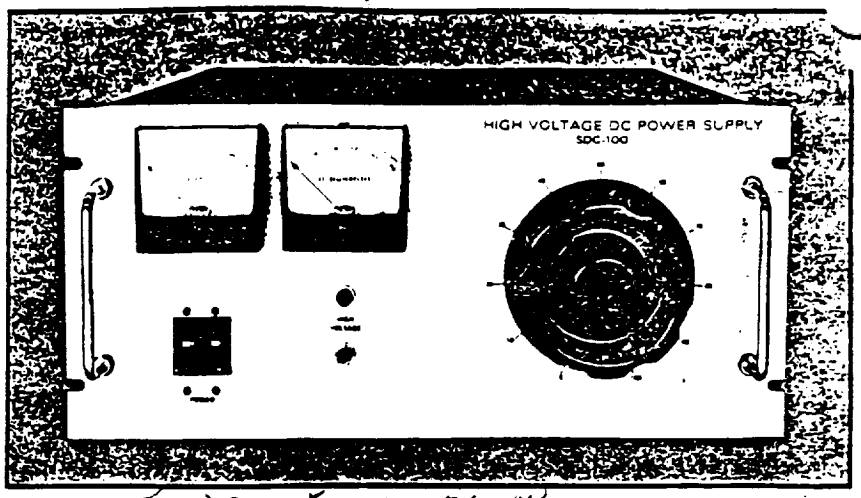

FEATURES

- 0-5000 Volts DC at 300 Milliamps Continuous Duty
- Available With Feedthroughs For Glow Discharge Cleaning
- High-Voltage Polarity Easily Reversed
- High-Reactance Power Transformer
- Safety Switch Prevents Operation When Vacuum Chamber Is At Atmospheric Pressure
- Useful for DC Diode Sputtering Or DC Biased RF Sputtering

APPLICATIONS

The SDC-100 Power Supply is rated to deliver up to 300 milliamps at 5000 volts DC on a continuous duty cycle. The intermittent duty rating is up to 500 milliamps. This unit, used with the Evaporation Kits, cleans substrate surfaces by glow discharge prior to thin-film deposition. Glow discharge cleaning, a preferred method of cleaning substrates in a vacuum, removes the last monomolecular layer which ordinary cleaning with detergents or alcohol fails to remove. To attain maximum adherence to deposited thin films, this layer must be removed.

The SDC-100 Power Supply can also be used as a power source for DC diode sputtering of thin films, electron beam and electron bombardment heating, or other applications which require a high-voltage, high-reactance power supply.

NO ARC DISCHARGE

The high-reactance transformer in the SDC-100 Power Supply limits the output voltage to a value below that required to sustain an arc discharge in vacuum.

SOLID-STATE RELIABILITY

The SDC-100 Power Supply uses silicon diode stacks which provide greater reliability than vacuum tube rectifiers. No warm-up time is required.

SPECIFICATIONS

1. Power Supply

Height	8 3/4"
Width	19"
Depth	15"
Input Power	208-240 volts, 50-60 Hertz, single phase, 15 amps maximum
DC Output Voltage	0-5000 volts, continuously variable, 300 milliamps continuous
Master Circuit Breaker	15 amps
Net Weight	140 lbs.
Shipping Weight	164 lbs.

2. Feedthroughs

Type AE-002	Fits 1/2" FPT hole; rated for 25,000 volts 10 amps DC; 100°C maximum bakeout temperature.
Type AE-004-155	Fits 1 17/32" hole; rated for 25,000 volts, 10 amps DC; 100°C maximum bakeout temperature.

ORDERING INFORMATION

Description	Part Number
High-Voltage Power Supply SDC-100	276410
High-Voltage Power Supply with AE-002 Feedthrough and Pressure Switch SDC-100-1	276410-1
High-Voltage Power Supply with AE-004-155 Feedthrough, Pressure Switch and Needle Valve SDC-100-2	276410-2

SAFETY FEATURES

A pressure-sensitive switch is provided with the SDC-100 glow discharge cleaning packages. When installed in a vacuum chamber, this switch opens the power input circuit while the chamber is at atmospheric pressure. An added design feature prevents the pressure switch from activating the power supply without the operator being aware of it. A safety interlock switch opens the power input circuit whenever the cover of the power supply is removed.

SIMPLE TO INSTALL

The SDC-100 Power Supply is available with a choice of high-voltage feedthroughs for installation in most vacuum systems. The standard cabinet can be easily mounted in a 19-inch rack. Ten-foot long high-voltage leads provide flexibility in locating the power supply.

-168.

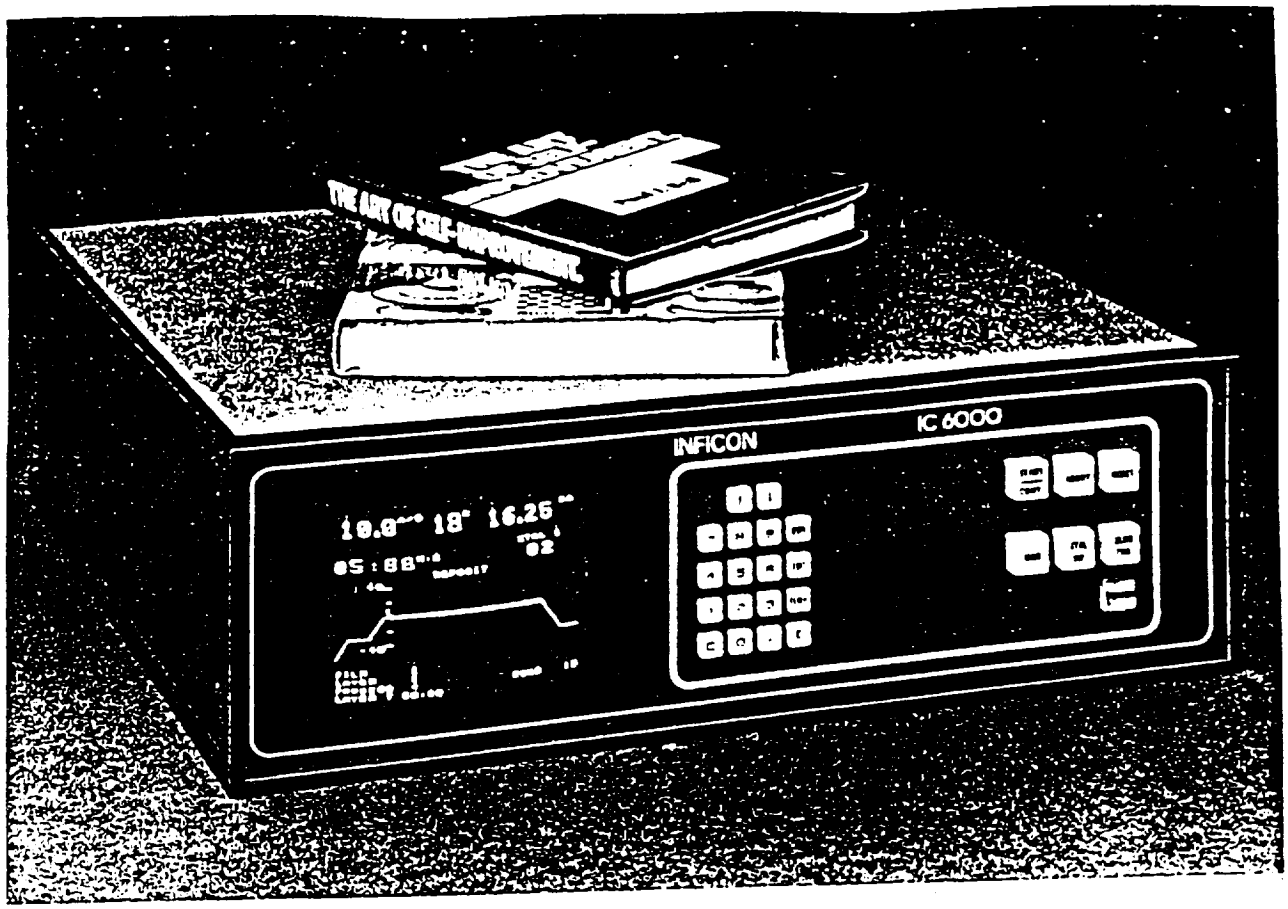

Inficon's IC-6000® deposition controller is not as good as it used to be. Now, it's even better.

We couldn't leave well enough alone. Why? Because "well enough" isn't "good enough" at Inficon. So we've taken our IC-6000, the industry's most popular multi-film vacuum deposition controller, and made it better—to give you more applications flexibility than ever before.

Here are the improvements you'll benefit from.

"Sample and Hold" is a new, powerful software option that provides a practical means of rate control for long-term sputtering and thermal evaporation processes. The "Interfacial Layering" software option permits the deposition of a transitional zone between two sequential materials.

Plus, we developed a new shuttered sensor head to improve measurement accuracy in a multi-material process by dedicating one sensor to one source.

And what makes these options even better is the fact that they can be retrofitted on any IC-6000.

Some things can't be improved upon.

So we didn't change the real-time CRT display of the deposition profile. Nor did we modify the user programmable process and I/O controls. And we still offer five sensor heads—including our patented sputtering sensor—for various applications, as well as our own CrystalSwitch™ which, in the event of crystal failure, gives you automatic, uninterrupted rate control.

We've combined these features with factory support and nationwide field service to meet your special demands—part of the reason why there are over 1,000 IC-6000s in use today.

There's more to be said and read about the "new" IC-6000.

But there's not room for it here. Please contact your Inficon sales representative—or us—to get more IC-6000 data.

Find out how we made the IC-6000 better. For you.

INFICON
LEYBOLD-HERAEUS

6500 Fly Road, East Syracuse, New York 13057
(315) 437-0377 TWX: 710 541-0594
1455 Airport Boulevard, San Jose, California 95110
(408) 279-1425 TWX: 910 338-0144
In Canada: (416) 746-0050 TWX: 610 492-1340

IC-6000® is a registered trademark of Inficon Leybold-Heraeus.
CrystalSwitch™ is a trademark of Inficon Leybold-Heraeus.

1 e-Phase, Six-SCR, Phase-Fired Models Rated 60 through 225 amperes

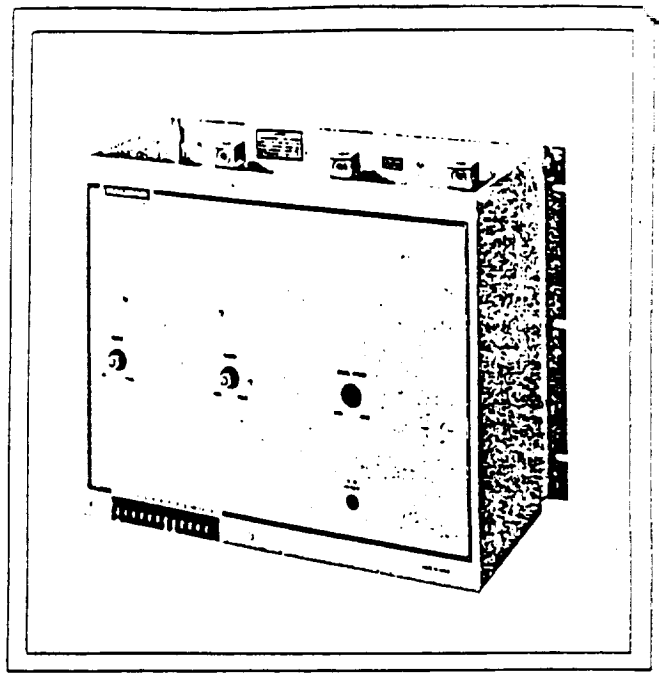

Front view, typical 60- through 225-ampere unit

Features

- Conservative thermal design increases service life, minimizes maintenance
- Compact design
- Electrically isolated heat sinks
- Phase-locked-loop synchronization
- Infinite firing-angle resolution allows stepless control
- Optical isolation of inp signal
- Power-up softstart for ductive loads
- Pulse-train gating ensures reliable SCR firing
- SCRs rated 1,400 PIV
- I^2t fuses, MOVs and dv/dt networks tect SCRs
- age regulated (current/power available)
- Power linear
- Two-year warranty
- (SA) Certification available

Description

"3P" designates Halmar's new line of three-phase, six-SCR, phase-controlled SCR Power Controls. They are used for precisely controlling ac power to resistive and inductive loads. The 3P controls all standard line voltages (120, 208, 240, 400, 480 and 575 V ac) at either 50 or 60 Hz and can be modified for non-standard voltages. Current ratings range to 1,200 amperes. This sheet covers models for 60 through 225 amperes.

A softstart feature brings output voltage up slowly to prevent saturation of inductive loads. The softstart circuit also resets after a power loss. Other features of the unit include a digitally-controlled firing circuit with optically-isolated input, phase-locked-loop synchronization, isolated pulse-train gate signals and voltage regulation. These features ensure precise, stable control and increase SCR firing precision and reliability.

P can be matched to any standard temperature ess controller. Manual output control can be by the unit's own BIAS and GAIN potentiometers, or from a remote potentiometer. Output power is proportional to the input control signal with output voltage being regulated to remain constant as line voltage changes. External SCR shutdown may be accomplished using a customer provided contact to common. Options are available for other control methods (see reverse).

I^2t fuses and MOVs protect SCRs from transient voltages and current surges. False firing (dv/dt) protection is also included. GAIN and BIAS controls and control connection terminal strip are all on the front cover. The cover is hinged to provide component and user protection as well as quick access for power wiring and maintenance.

Two-year warranty

The 3P Series has been conservatively designed and engineered to provide years of trouble-free service. The 3P Series represents a new standard in SCR Power Controls and is offered with a two-year warranty covering parts and labor.

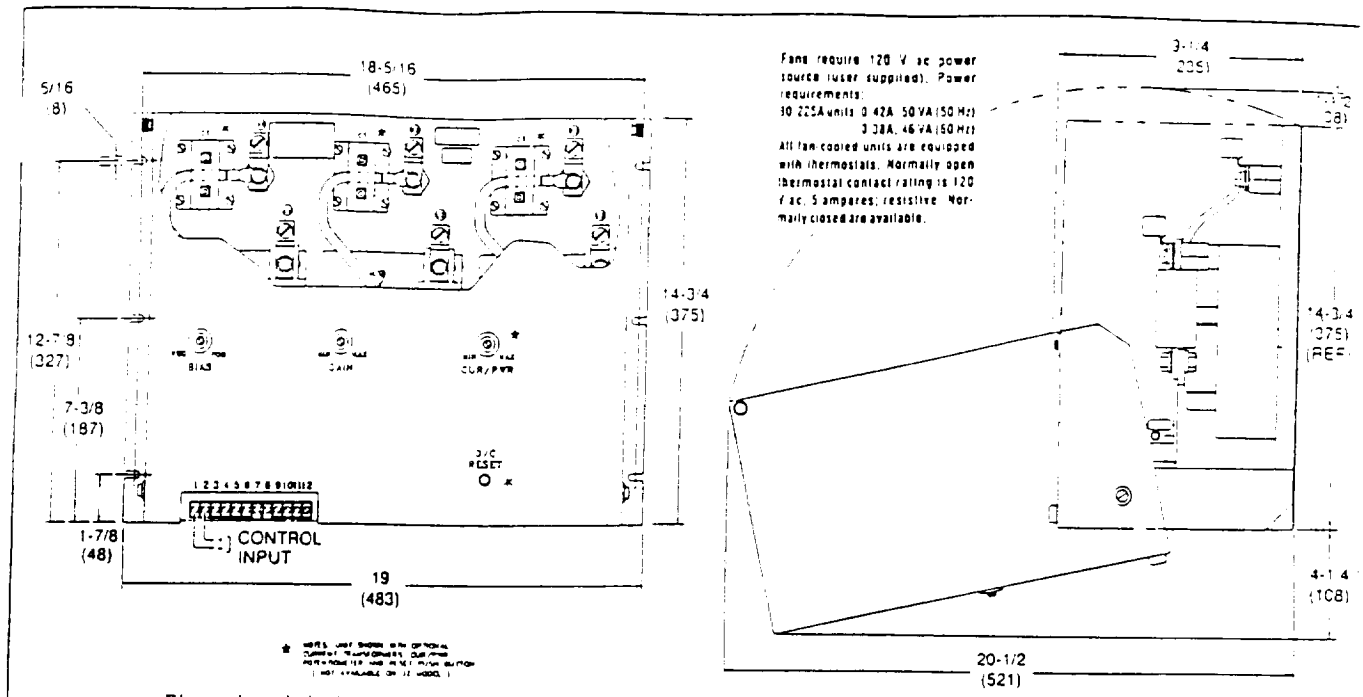

Dimensions in inches and millimeters (mm).

Specifications

1. This page shows specifics for 60- through 225-ampere models. Shipping weight for these models is approximately 40 lb., 18.2 kg.
2. See "Introduction to Phase-Fired Controls" for General Specifications.

Ordering Information

1. Specify complete Model No. from table. Then, to order any of the options add dash and letters to Model No. Example: -CR, after the Model No., adds a three-phase Current Regulation option.
2. If temperature/process controller is used, specify control signal level.

Options (all options are plug in for convenience)

Complete details for standard options are presented in "Options for Phase-Fired Controls" sheet (at end of P Series sheets). Options for three-phase controls are:
CR — Current Regulation, Three Phase.
PR — Power Regulation, Three Phase.
CL — Current Limit, Three Phase.
OC — Overcurrent Trip, Three Phase.

All options include required transformers. For information about other options, please consult factory.

Models table

LINE VOLTS	MODEL NO. SERIES	VOLTS	AMPS	OUTPUT POWER KVA
208	3P	20	60	2.9
	3P	20	90	4.3
	3P	20	120	5.8
	3P	20	180	8.6
	3P	20	225	10.8
240	3P	24	60	2.9
	3P	24	90	4.3
	3P	24	120	5.8
	3P	24	180	8.6
	3P	24	225	10.8
400	3P	40	60	4.8
	3P	40	90	7.2
	3P	40	120	9.6
	3P	40	180	14.4
	3P	40	225	18.0
480	3P	48	60	5.8
	3P	48	90	8.6
	3P	48	120	11.5
	3P	48	180	17.3
	3P	48	225	21.6
575	3P	57	60	6.9
	3P	57	90	10.3
	3P	57	120	13.8
	3P	57	180	20.7
	3P	57	225	25.9
KVA = LINE VOLTS × AMPS × 1.732 / 1000				

■ QUARTZ CRYSTAL THIN FILM MONITOR CONTROLLER

INTELLEMETRICS IL800

The IL800 thin film thickness monitor and controller is the most versatile instrument of its kind available. It uses the normal quartz crystal sensor to measures rate and thickness of the deposition process. Unlike all other thin film controllers, however, the IL800 permits synchronization between events that it controls and other instruments. This is achieved by embedding commands at any point or time in the process, either in hardware handshakes (through the input/output option) or in software (through the RS232 or IEEE options).

Increasingly, broad-based materials technology is concerned with multi-component alloys or co-deposited compounds. This demands not only flexibility of the process profile, but very sophisticated communications between numerous controllers. The IL800 has the flexibility and programmability to mesh with other process instrumentation or other IL800 units.

The process control possibilities are so numerous that we cannot describe even a small fraction. We have chosen two examples which we hope spark the imagination. The IL800's are programmed by a mnemonic code. We have displayed this code that the operator enters from the front panel into one or more IL800's and expanded this to show what these codes mean and what the instrumentation is doing at that point.

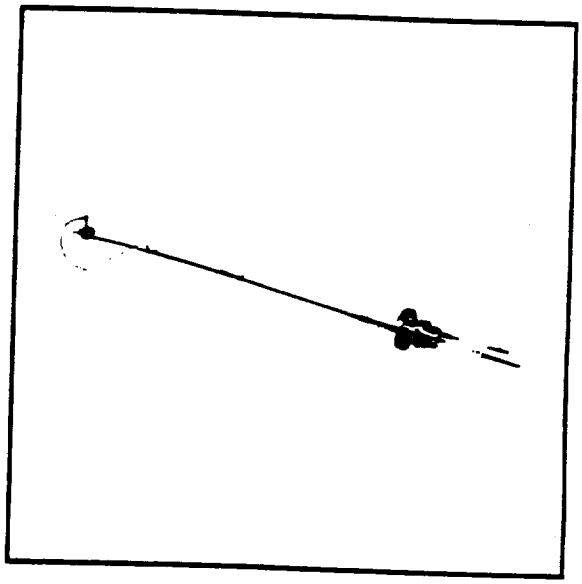

■ TECHNICAL DATA

	Programmable 0.5-5 Hz
	0.001 nms^{-1}
	.001 nm
	44 English commands
	44 English commands
	120/240 V, 50 VA
	0-40°C
	6 lbs

For Copper with Tooling Factor = 1, Sampling Frequency = 0.5 Hz

■ QUARTZ CRYSTAL THIN FILM MONITOR CONTROLLER

INTELLEMETRICS IL800

In the first example, a number of IL800's interact to direct the co-deposition of an alloy. The desired stoichiometry of the final product can only be produced if the three materials are deposited at measured rates of (1) 8 nm/sec, (2) 3 nm/sec or (3) 1.5 nm/sec. To control the sources independently, each crystal is collimated so that it only 'sees' the deposition from its 'own' source. Note that the th IL800's have program steps which check and establish the deposition rates independently for e material. But the substrate shutter, controlled by IL800 number 1, is kept closed until all units repo that all rates are as required.

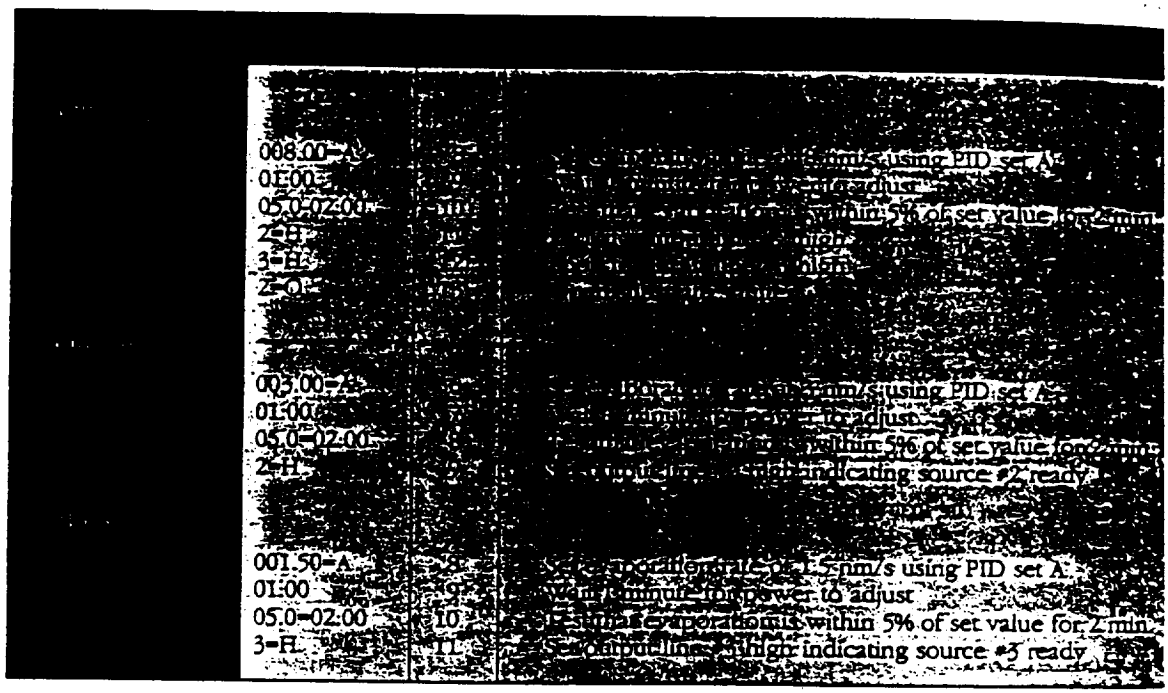

Kurt J. Leske
Comp

■ QUARTZ CRYSTAL THIN FILM MONITOR CONTROLLER

INTELLEMETRICS IL800

The real power of the IL800 is shown in this process control application, in which a 250-nm layer of silicon dioxide is sputter deposited at a rate of 2 nm/s. The process development engineers have determined that, to achieve the stoichiometry SiO_2 (and not $SiO_{1.8}$), oxygen must flow into the chamber during deposition and this flow rate must increase halfway through the deposition. The oxygen flow is controlled by a mass flow controller which responds to an analog voltage. The first flow rate requires a signal of 1.0 V, the second 2.0 V and 0.0 V turns the flow off. The initial pumpdown takes 40 minutes, and quality of the residual gases is checked by turning on a quadrupole mass spectrometer and ensuring that the residual water peak signal (the RGA is set at m/e = 18) is below 0.5 V.

1=H	1	Initialize vacuum sequencer to pump down
40:00	2	Wait 40 minutes
2=H	3	Turn on mass spectrometer
3:00	4	Wait 3 minutes
00.50=D	5	Interrogate mass spectrometer
3=H	6	Turn on buzzer (vacuum OK)
00.10	7	Wait 10 seconds
3=L	8	Turn off buzzer
25.0=01:00	9	Ramp power to 25% in 1 minute
01:00	10	Wait 1 minute
35.0=01:00	11	Ramp power to 35% in 1 minute
05:00	12	Wait 5 minutes
	13	Restart target
40.0=02:00	14	Ramp power to 40% in 2 minutes
01.00	15	Oxygen flow level 1
1=O	16	Source shutter open
002.00=A	17	Set evaporation rate of 2 nm/s using PID set A
00:30	18	Wait 30 sec
2=O	19	Substrate shutter open
	20	Thickness display to zero
125.00=nm	21	Look for thickness of 125 nm
02.00	22	Oxygen flow level 2
250.00=nm	23	Look for thickness of 250 nm
2=C	24	Close substrate shutter
1=C	25	Close source shutter
00.00	26	Oxygen flow off
35.0=01:00	27	Ramp power to 35% in 1 minute
	28	Idle
00.0=DI:00	29	Ramp power to zero in 1 minute

As these examples show, the mnemonics make the programming almost in English. The supertwist graphics LCD display has two formats: an alpha-numeric display used during programming and process display, and a graphics display of power vs. time for showing the current status as a chart.

The IL800 has an extensive array of special functions which indicate time elapse since the process started, crystal failure, failure to hold correct rate, alarms and an exceptionally easy 'test' function which lets the user check the proposed program before the initial run.

Kurt J. Lesker *Company*

■ QUARTZ CRYSTAL THIN FILM MONITOR CONTROLLER

INTELLEMETRICS IL800

In the Ordering Information, the description 'complete controller' refers to an assembly including a chassis, a crystal sensor head (single or double), an oscillator, a vacuum feedthrough, and cables. All IL800 chassis can operate double crystal sensor heads and are programmed to change over from first to second crystal automatically when failure occurs.

Unless specifically stated, the feedthroughs fit 1" base-plate ports and sensor/feedthrough combinations are non-bakeable. For units described as UHV, the feedthrough is a 2 3/4" Conflat flange and the sensor/feedthrough combination is baked to 250°C.

■ ORDERING INFORMATION - IL800 Controller

Complete Controller	RS232 & I/O	Single
Complete Controller	None	Single
Complete Controller	RS232 & I/O	Double
Complete Controller	None	Double
Chassis Only	RS232 & I/O	n/a
Chassis Only	I/O	n/a
Chassis Only	RS232	n/a
Chassis Only	None	n/a

■ ORDERING INFORMATION - Crystal Sensor Heads

1" Port	750 mm	Single
2 3/4" CF(UHV)	250 mm	Single
2 3/4" CF(UHV)	500 mm	Single
2 3/4" CF(UHV)	750 mm	Single
2 3/4" CF(HV)	750 mm	Double
Shutter/solenoid(HV)		
Crystals (pack of 10)		

■ ORDERING INFORMATION - Accessories

Oscillator (with SMB connector cable)
Cable SMB to BNC connector
Hand-held remote controller
Rack mount (holds one or two IL800's)
Digital I/O board
Serial RS232 board
2 3/4" CF adapter to 1" port (HV)

Kurt J. Lesk
Com

■ QUARTZ CRYSTAL SENSOR HEADS

INTELLEMETRICS MODEL 630

The 630 range of quartz crystal sensor heads from Intellemetrics incorporates innovative features to extend their application to processes requiring rapid change of sensor crystal or where shuttered sensor heads are needed to protect the crystal from heavy deposition. This new sensor design is fully compatible with the IL800 film thickness controller.

The Model 630 sensor head is a stainless steel investment casting with 1/8" OD stainless steel water tubes. The maximum temperature of the sensor designed for high vacuum use is 100°C.

Changing crystals in the 630 sensor head takes only seconds. A sensor crystal is pre-loaded into a sturdy cassette which snaps into and out of place on the sensor head. The operator never handles a bare crystal, with all the maneuvering and breakage difficulties that poses. Cassettes are made of stainless steel, alumina ceramic and gold plated Be-Cu electrodes. The crystal is 6.0-MHz, AT-cut plano convex quartz.

Shuttered sensors have presented many problems to users in the past. The deposition that the shutter eliminated from the crystal surface clogged the shutter's pivoting mechanism. Shutters all too readily 'froze' in place.

Intellemetrics solved this problem by actuating the shutter with the linear motion of a bellows extended against a return spring by compressed air. The bellows and spring are completely enclosed and cannot be frozen by heavy deposition. Test assemblies have been checked, under heavy deposition conditions, to give over 5000 operations without adjustment or failure.

The shutter assembly is an integral part of the double crystal sensor head and can be fitted to a single sensor head for sample and hold operations. The shutter is supplied complete with a solenoid which is driven directly from an IL800 without any modification or extra interface boards.

When ordering, select the type of sensor by its part number and add the part number for the type of feedthrough as a separate item. Specify the tube length (distance between sensor and feedthrough) as either 250 mm, 500 mm or 750 mm. The sensor head, tubes and vacuum feedthrough will be welded together and checked for leaks and operation before shipping. Sensor heads are supplied with necessary oscillators and interconnection cables (including cables and tube for solenoids if shuttered sensor is purchased).

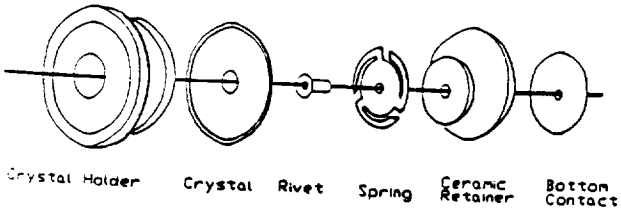

■ ORDERING INFORMATION - Model 630 Sensor Heads

Sensor (Single)	[redacted]
Sensor (Shutter)	[redacted]
Sensor	[redacted]
(Double & Shutter)	[redacted]
Feedthrough O-ring, 1" Port	[redacted]
Feedthrough 2 3/4" CF	[redacted]
Feedthrough O-ring, QF40	[redacted]

■ ORDERING INFORMATION - Model 630 Replacements

Crystal Cassette (Pack of 10)	[redacted]
Solenoid 5 VDC, 80-110 psi	[redacted]
Oscillator	[redacted]

Kurt J. Lesker Company

15

■ QUARTZ CRYSTAL SENSOR HEADS

INTELLEMETRICS MODEL 630

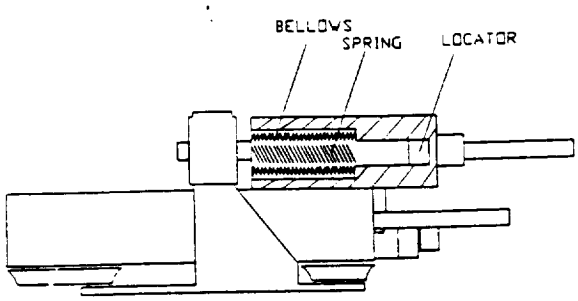

DETAIL OF SHUTTER ON DOUBLE CRYSTAL

ALL DIMENSIONS IN mm UNLESS OTHER WISE STATED

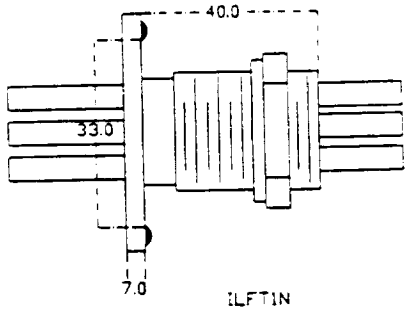

ILFT1N

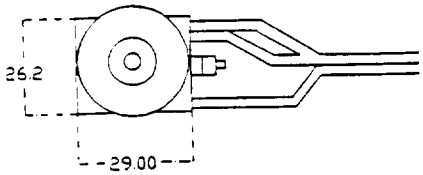

SINGLE CRYSTAL
SENSOR HEAD IL631

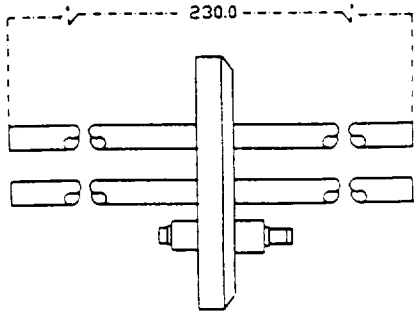

ILFTQF

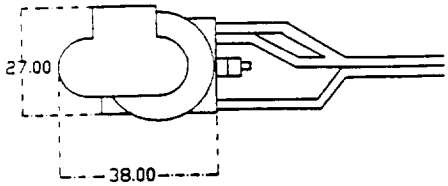

SINGLE CRYSTAL
WITH SHUTTER IL632

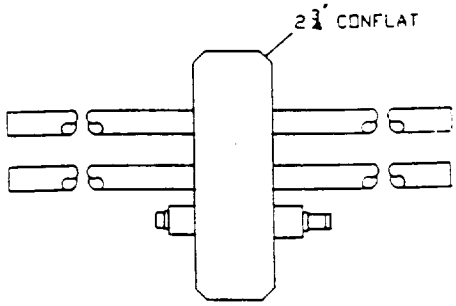

ILFTCF

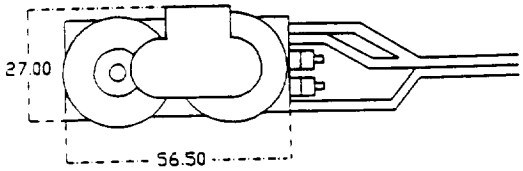

DOUBLE CRYSTAL
WITH SHUTTER IL633

Kurt J. Lesker Company

-177

3.4.1.4 Coating Apparatus (Interior)

A general form for the apparatus to perform the aluminum coating can be seen in Figure 3.4.1.4-0. It consists of an arrangement of tungsten filaments. The main pieces of equipment:

- R.D. Mathis Tungsten Filaments (model #F4-4x.030W) - used to melt and then vaporize the aluminum staples

- Midwest Tungsten Service, Inc. Stand-off Bars (model #- to be determined)- these hold the tungsten filaments.

- High Current/Low Voltage Power Supply - to be determined

The manufacturers specifications for the above items can be found at the end of this section. Note that the controls for this apparatus are given in Section 3.4.1.3. The procedure for installing filament in the chamber for the primary mirror of Canada-France-Hawaii Observatory is given in Figure 3.4.1.4-1.

Assuming that the desired thickness of the aluminum coating be 1000 Angstroms, the following tungsten filament arrangements should give a uniformity of at least 10% (±50 Angstroms):

1) One circle of forty filaments at one substrate diameter away from the mirror or

2) Three concentric circles, the outer circle 100 inches in diameter containing 24 filaments, the middle circle 50 inches in diameter containing 12 filaments, and the inner circle containing 4 filaments.

There are other arrangements that would do the job. These are the ones suggested by the William Brown, the primary mirror vacuum chamber conceptual design contractor. His full report is found in Appendix D.

Figures 3.4.1.4-6 through -5 are photographs of the coating apparatus used in the vacuum chamber for the 120 inch mirror at Lick Observatory, Mt. Hamilton, California. It consists of two concentric circles of tungsten filaments. Figure 3.4.1.4-1 shows both circles of filaments. Figure 3.4.1.4-2 is a closeup of the inner circle. The last two

figures give a view of how the coating apparatus is connected through the wall of the chamber. How SOFIA's coating apparatus is to be connected to and through the chamber wall has yet to be determined.

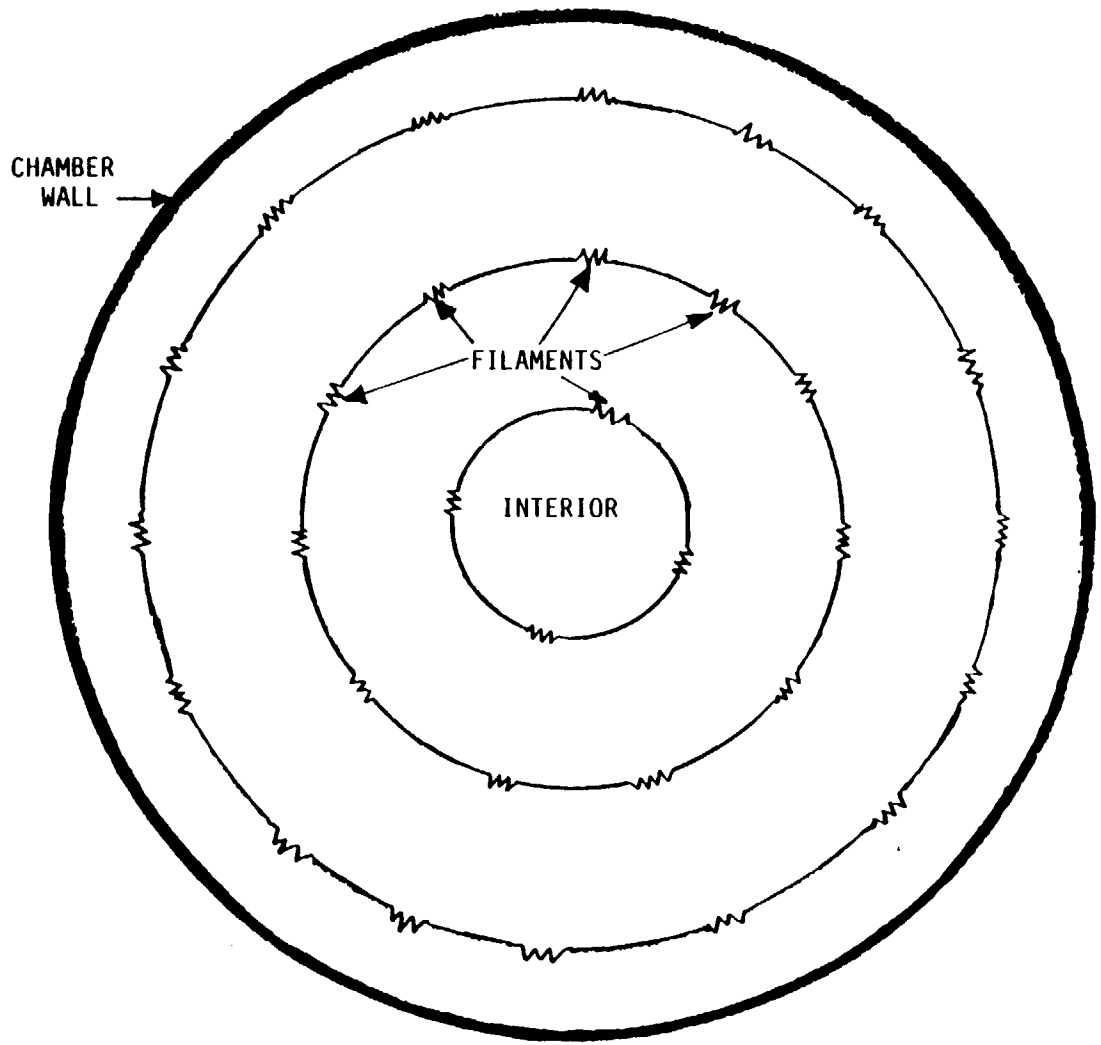

FILAMENT ARRANGEMENT

Figure 3.4.1.4-0

FILAMENT INSTALLATION

Filament type: R.D. Mathis (Order as 4 x .030 W RDM-F-16683A)

1. Install 112 new Tungsten Filaments onto the chamber electrodes using 10-32 x 3/4" stainless steel Allen Socket flat head screws. (1/8" Allen Socket opening)

2. Tighten all 224 screws using special torque wrench to insure equal contact resistance at joint.

   Torque setting=

Thomas S. Gregory
1 May 1986

Figure 3.4.1.4-1

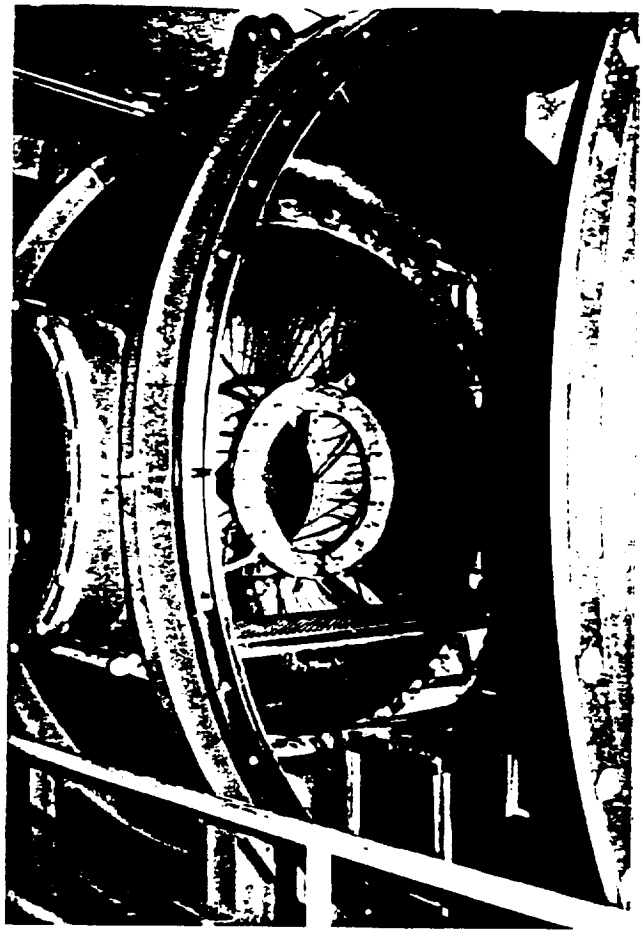

Figure 3.4.1.4-2

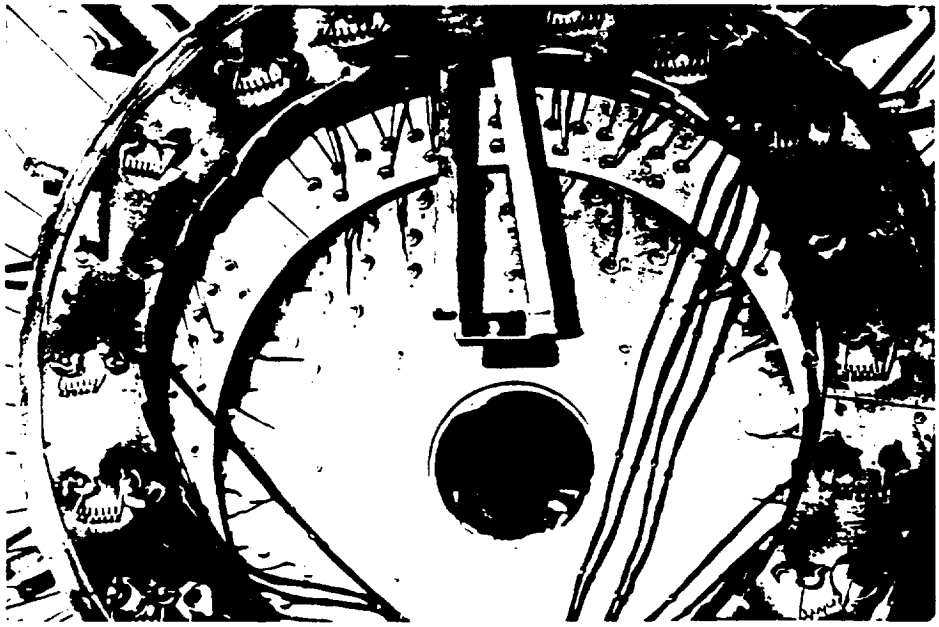

Figure 3.4.1.4-3

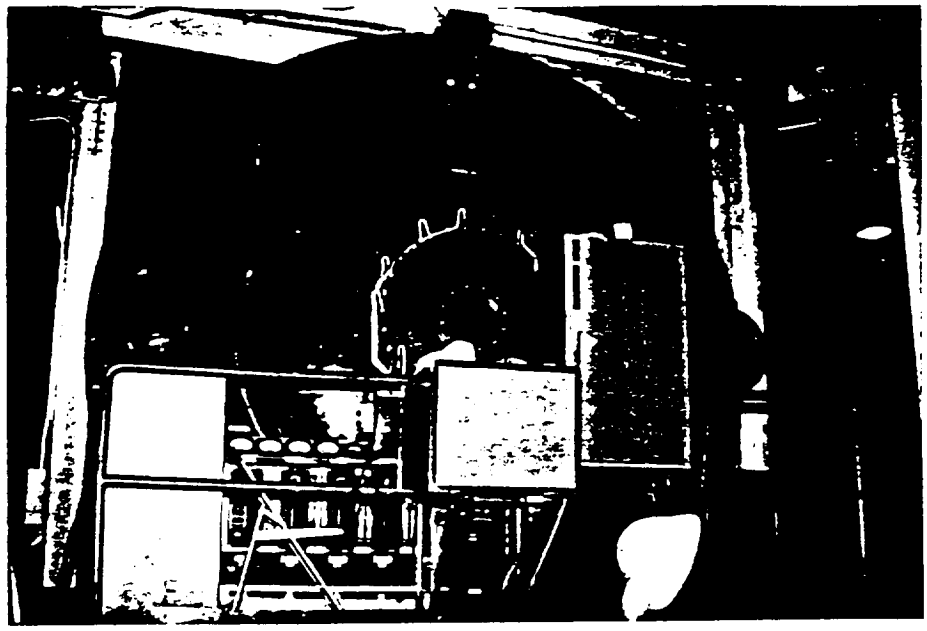

Figure 3.4.1.4-4

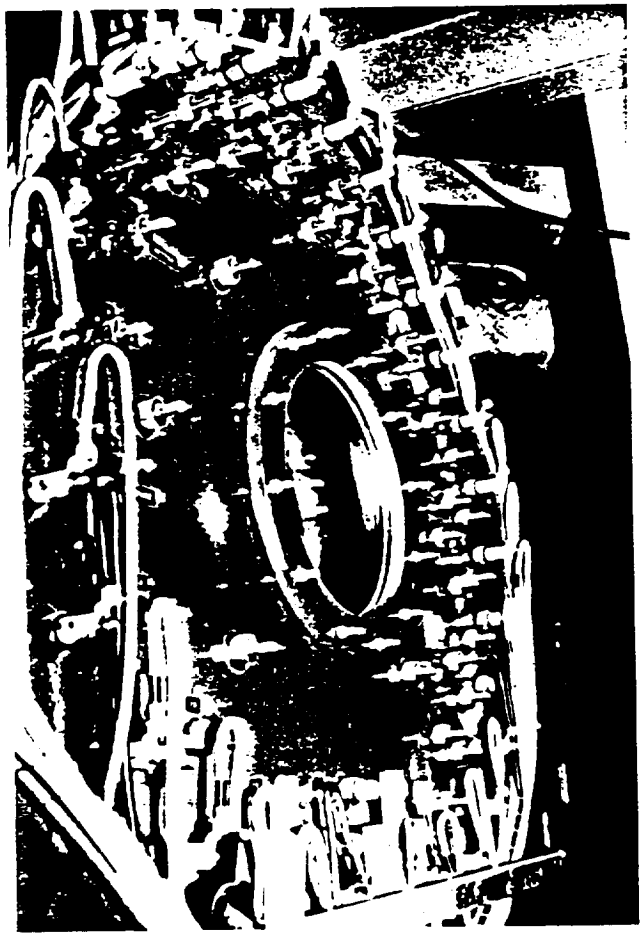

Figure 3.4.1.4-5

TUNGSTEN FILAMEN

Type Wire Size	
F1—3 x .025 W F1—3 x .030 W F1—040 W	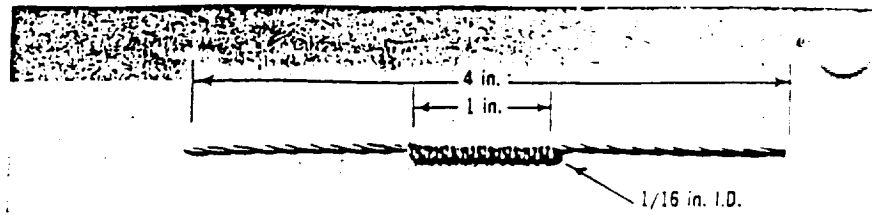
F2—3 x .025 W F2—3 x .030 W F2—4 x .030 W	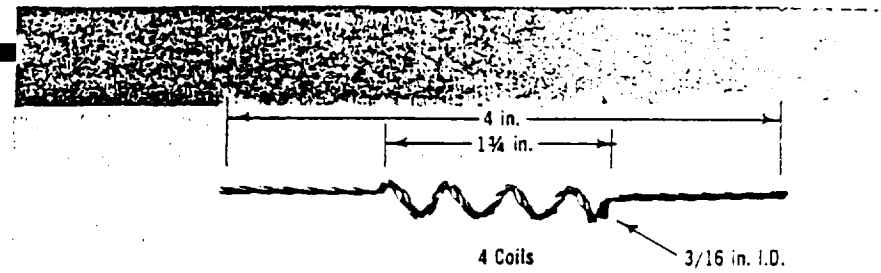
F3—3 x .025 W F3—3 x .030 W F3—2 x .040 W F3—4 x .030 W F3—040 W	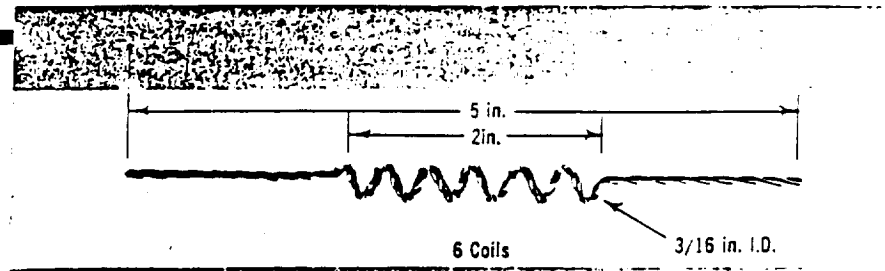
F4—3 x .025 W F4—3 x .030 W F4—4 x .030 W F4—2 x .040 W F4—040 W	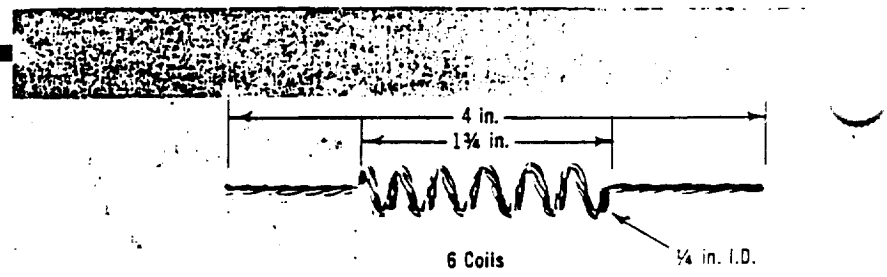
F5—3 x .025 W F5—3 x .030 W F5—4 x .030 W F5—2 x .040 W F5—3 x .040 W F5—040 W	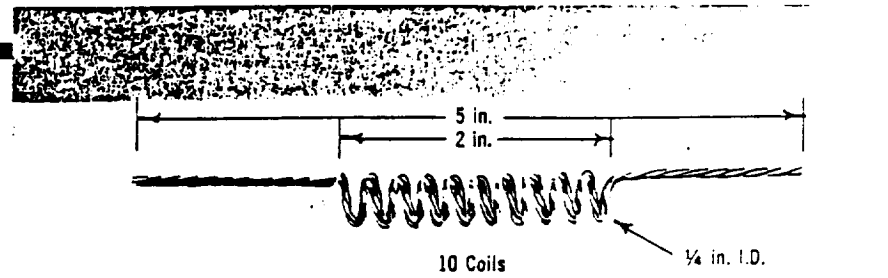
F6—3 x .025 W F6—3 x .030 W F6—4 x .030 W F6—2 x .040 W F6—3 x .040 W	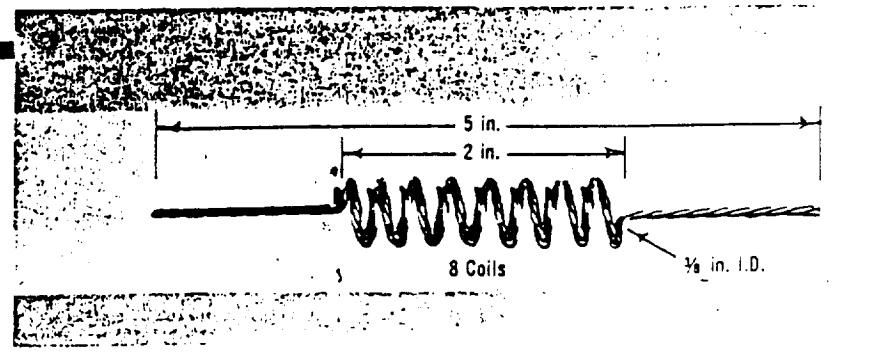

MIDWEST TUNGSTEN SERVICE

Tips

STAND-OFF BAR

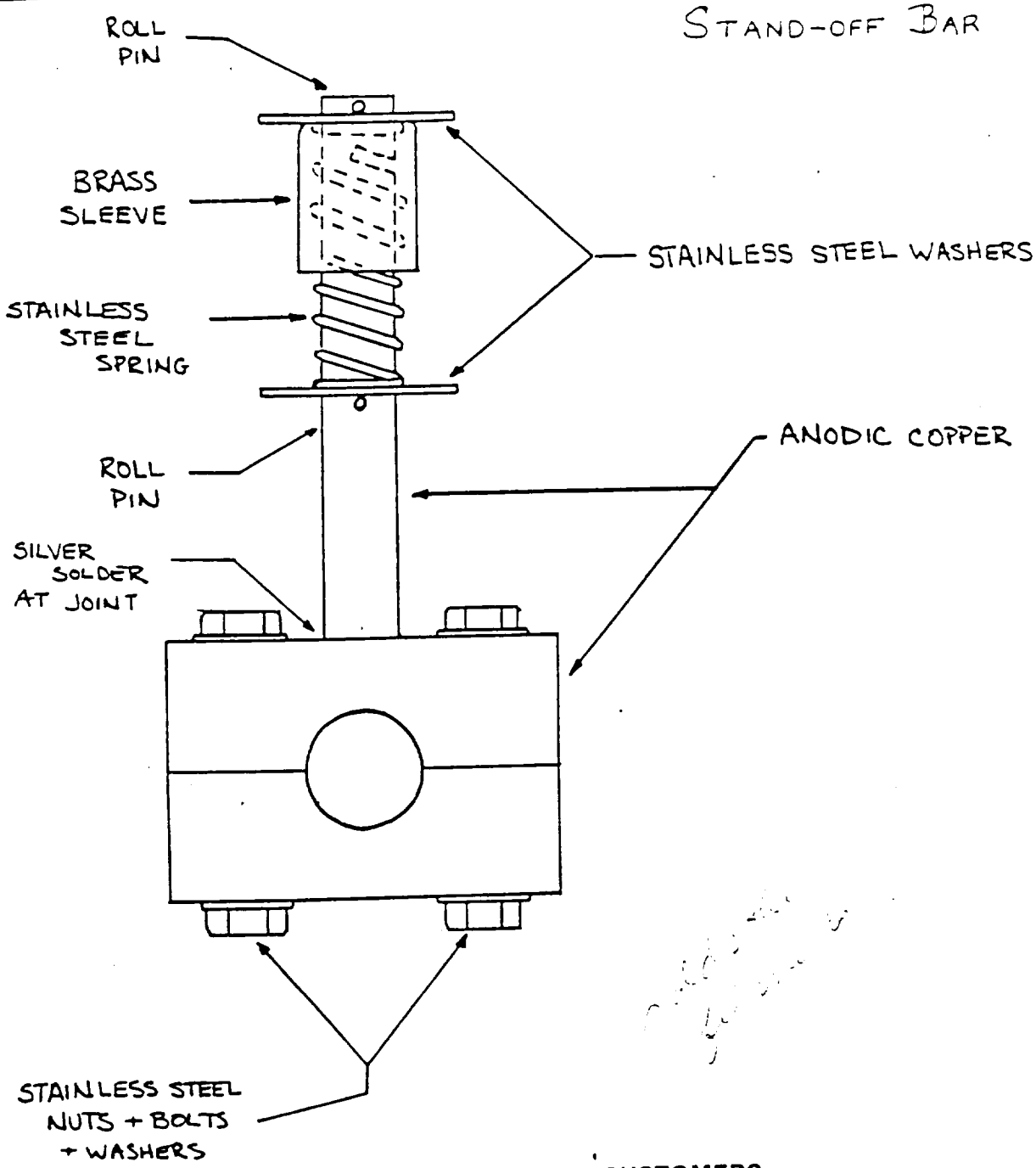

WE ARE HERE TO HELP OUR CUSTOMERS.

MIDWEST TUNGSTEN SERVICE, INC.

1-800-626-0226
Ill. 312-325-1001
Telex 6974734MTS

-185

3.4.1.5 Coating Operations and Options

The procedure for coating any mirror can be broken into three parts: the pumpdown, the actual coating, and returning the chamber to atmospheric pressure.

The Pumpdown

The pumping system was described in Section 3.4.1.2. The basic operating steps for the chamber pumpdown are:

1) Start up the pumps and control system about two hours before operation. The oil in the diffusion pump will heat up. The mechanical pump will pumpdown the foreline.

2) The mirror is placed in the chamber, and, the chamber is closed and sealed.

3) The roughing valve on the foreline is opened.

4) The mechanical pump takes the chamber from atmospheric pressure (760 Torr) to 10^{-2} Torr. This pressure is refered to as the crossover pressure.

5) The roughing valve is then closed and the backing valve is opened. Note that the vacuum valve is still closed.

6) The diffusion pump is brought down to 10^{-3} Torr by the mechanical pump.

7) The vacuum valve is opened.

8) The chamber is pumped down to about 10^{-3} Torr by the diffusion pump.

9) The vacuum valve is throttled down. The glow discharge power is turned on and a small amount of air is leaked into the chamber until a glow forms (caused by excited air molecules).

10) The glow discharge apparatus is shut off.

11) The high vacuum valve is opened fully again and the diffusion pump brings the chamber down to 10^{-6} Torr. This is where the coating process begins. Note that the backing valve is kept open.

Note that the control system should be a turnkey system that automatically performs the above steps 3-11.

The Coating

The coating apparatus consists of an arrangement of tungsten filaments. In this method, as explained in Section 4.1.5, the aluminum pieces, to be vaporized, are horseshoe shaped. They are draped over the tungsten filaments. The filaments are heated by passing a current through them. The aluminum melts over the filaments, completely coating them. A large current is passed through the filaments and the aluminum is vaporized. The aluminum condenses an all surrounding cooler surfaces, including the substrate. Tungsten is used because of it's high melting point. This procedure takes time to perfect and the system must undergo an initial stage of fine tuning. Uniformity can be controlled by how many aluminum staples are placed on a single filament. This is part of the fine tuning.

Overcoating of the primary mirror is still under investigation.

Outgasing should not be a concern in this system. The pumping system will adequately remove any particles from outgasing if it occurs, but it generally happens at a higher vacuum. A check must be made to assure that the mirror cell or support are not made of "poison" materials, i.e. those that never allow you to achieve a low enough pressure because they continually outgas.

Return to Atmospheric

The general procedure to return the tunnel to atmospheric is:

1) The vacuum valve is closed.

2) The diffusion pump is turned off. Allow it to cool down for about two hours. During this time keep cooling to the pump on.

3) Close the backing valve.

4) Turn off the mechanical pump. Allow it to cool same as the diffusion pump.

5) Open the venting valve on the chamber per manufacturer's specifications.

The chamber may be opened and the mirror removed.

The procedures followed by the Aluminizing Plant belonging to the Canada-France-Hawaii Telescope Corporation in Hawaii, are found at the end of this section (pages 189-197).

Canada - France - Hawaii Telescope Corporation

Sheet No. _____

Project NASA AMES By J. Sovka Date April 15, 192

Subject MIRROR ALUMINIZING Verified by _____ Date _____

ALUMINIZING PLANT PROCEDURES

Aluminizing Plant: -

a) Removal of Aluminum: - see attached.

b) Mirror Cleaning/Aluminizing frequency: - we currently wash the primary and secondary every 6 months. Re-aluminize every 24 months.

3.6 Meter Primary Mirror Aluminization

28 July 1986

A. Initial Inspection

On 17 May 1986 the primary mirror removed from the telescope and delivered to the aluminizing room and placed atop the mirror washing stand. On 18 May the mirror sides were cleaned and the radial support pads were wrapped in plastic for protection. The mirror surface was rinsed with tap water to remove loose dirt and then it was washed with a detergent solution of 100 parts water to 1 part Liqui-Nox concentrate. Sponges were used in a dobbing, up-down motion only so as not to scratch the aluminum surface. Oily spots were carefully dobbed-up with xylene soaked Kaydry towels. Also, bubble holes in the surface were cleaned.

The surface of the cleaned aluminum was inspected for pinholes, abrasion and scattering due to chemical attack. The surface was examined by viewing a high intensity lamp in reflection from the surface. There was a significant amount, perhaps a few percent, of scattering of the specular reflection into a halo of diffuse light. Although the coating looked generally good after washing it was felt that re-coating would produce a significant improvement.

B. Removal of Old Coating

The coating was stripped from the glass surface by flooding it with a solution of hydrochloric acid and cupric sulfate. After rinsing the mirror with tap water and drying it with Kaydry towels a solution of sodium hydroxide was used but had little effect on the more stubborn residual aluminized areas. Finally the mirror surface was flooded with de-ionized water and then sprinkled with reagent calcium carbonate powder and rubbed with Kaydry towels. The calcium carbonate was sufficient to remove the last residue of aluminum from the optical surface. The mirror was rinsed with de-ionized water and then rubbed dry with Kaydry towels. Care was taken not to allow the mirror to dry on its own by evaporation as water spots would be a likely result. Part of the mirror was kept wet while the other parts were rubbed dry. After the entire mirror surface was gradually dryed there still remained a large amount of Kaydry towel lint sticking to the glass surface as a result of the static electric produced by the rubbing of the clean glass with the paper towels. This lint was removed with polonium anti-static brushes before placing the mirror in the vacuum chamber.

C. Aluminization

Once the mirror was placed within the vacuum chamber, the roughing pump and roots rotary lobe blower evacuated the chamber to a pressure of 5 microns in about 1 hr. After the cold trap LN_2 chevrons were filled, the diffusion pumps were used to lower the pressure to below 5×10^{-5} torr. A glow discharge was performed

THICKNESS OF EVAPORATED ALUMINUM FILM

During the month of April 1986 tests of the CFHT Summit Aluminizing chamber were carried out to measure the actual thickness and uniformity of Aluminum coatings produced by the 112 filament array of evaporation souces. A set of ten test plates were used to simulate the mirror surface. For the initial test all filaments were loaded with 10 loops with a weight of .065 grams each. (Loops are from Jori Resources and are of 99.99% purity.)

The loaded filaments were heated for approximately 5 minutes while monitoring the amperage at Inner Ring #2 = 330 amps. The Inficon crystal thickness/Rate of deposition monitor at the end of the 5 minute preheat period was reading 0-1Å/second. The total accumulated thickness after the preheat was 40Å.

At this time the array voltage was increased and monitored at the Inner Ring #2 = 25 volts. This voltage was maintained for approximately 80 seconds during which time the evaporation rate reached a peak value of 28 Å/sec. After an elapsed time of 80 seconds the evaporation rate dropped to zero and all power to the array of filaments was stopped. A total indicated thickness of 652 Å was obtained. When the test plates were measured with the Angstrom-scope interferometer, the following thicknesses were obtained.

1. Test plates approximating the outer 1 meter annular surface = 884 to 913 Å.

2. Test plates approximating the inner 1 meter annular surface = 1148 kto 1207 Å.

It was concluded from these results that a superior coating uniformity could be obtained by loading outer ring filaments with 10 loops and inner ring filaments with only 8 loops each. Also, the Inficon crystal monitor readings are about 30% low presumably due to the closeness of the crystal sensor to the chamber wall (~ 150mm).

During the primary mirror aluminization in May, test plates were positioned around the circumference of the mirror and within the central hole. After evaporation the following thicknesses were obtained upon the test plates as measured with the interferometer:

a. Circumferential Test Plates = 842, 795, 795, 845, 825, 913, 913, 854, 756 Å.

b. Central Test Plate = 962 Å ± 30Å.

c. Inficon Measurement = 639 Å.

d. Maximum Deposition Rate = 27 Å/second.

to insure cleanliness of the mirror surface. After the glow discharge, the high vacuum diffusion pumps were used to bring vacuum to the 10^{-6} range. The meissner coil was filled to aid in the further reduction of pressure. Ultimately a pressure of 3×10^{-6} torr was reached in about 3 hours from the time of initial pump-down.

The individual tungsten filaments, each laden with aluminum clips were pre-heated together in a series/parallel circuit for 4 minutes to bring them all to approximately 1000°C. When the Inficon crystal thickness monitor indicated 50Å of deposited aluminum, the power to the filaments was increased to the maximum level. Within 30 seconds the Inficon monitor was reading 637Å. This thickness, according to previous tests, corresponds to an actual coating thickness of 900-950Å on the mirror surface. A deposition rate of 27Å per second was indicated upon the Inficon monitor. Interferometric tests were performed upon test plates placed at the central hole and outside the circumference of the mirror. These tests, and others performed earlier at zones simulating the mirror surface, showed the coating to be radially symmetric and even in deposited thickness to within 150Å. The probable wavefront error induced by the coating process is estimated to be less than or equal to $\lambda/15$ at visible wavelengths. During the filament firing, no drops of molten aluminum fell upon the mirror surface. The resultant coating looked brilliant and very free of scatter over its entire area and showed no signs of bloom or diffusion pump backstreaming. No wipe marks or haze due to incomplete cleaning w observed upon the mirror surface.

D. <u>Adhesion Test</u>

A scotch tape test was performed on the outer bevel and upon the actual mirror surface one inch inside the outer circumference No aluminum was removed by the tape at either site and it was concluded that excellent adhesion was achieved between the deposited aluminum and the Cer-Vit surface.

Tom Gregory
28 July 1986

ORIGINAL PAGE IS
OF POOR QUALITY

It is estimated that local mirror surface wavefront distortions caused by the coating process itself are less than $\lambda/15$ at visible wavelengths. Another test is planned for the future as it is felt that the 3.6 meter mirror surface coating is not accurately depicted with only 10 test plates and that perhaps 30 plates are necessary. This is particularly important near the chamber walls.

Tom Gregory
July 1986

ORIGINAL PAGE IS
OF POOR QUALITY

CFHT SUMMIT VACUUM CHAMBER

Pump-down Operation:

1. Check Inficon Thickness Monitor for proper crystal oscillation.
2. Close tank after inspecting bottomplate "O" rings for smooth and very light lubrication with Dow Corning High Vacuum Grease.
3. Close Air-leak and vent valves.
4. Turn cycle selector switch to manual position (key switch).
5. Connect chamber foreline manifold to roughing pump.
6. Turn on 2 glycol supply taps and adjust flow with glycol return tap to flow gauge valve of 2 1/4 gpm. (The safety flow switch enables the D.P. heating circuit at flow rates in excess of 2 gpm).
7. Start stokes roughing pump. (10 minute warmup period)
8. Check rough pump flow and oil level sight glasses.
9. The Roots Blower will start automatically after a few seconds when $p \leq 15$mm Hg.
10. Turn on air supply valve and air dryer.
11. Start the holding pump.
12. Open foreline valves #1 and #2 to evacuate the diffusion pumps.
13. Turn on Thermal couple gauges number 1 through 4.
14. The roughing pump will quickly evacuate the DP's to $p \leq 10$ microns at T.C. #2 and T.C. #4.
15. Open holding pump valves to D.P.'s
16. Close foreline valves #1 and #2.
17. Turn on DP's #1 and #2. (These will heat up only if the glycol safety flow switch senses greater than 2 gpm glycol coolant flow).
18. Connect LN_2 supply to DP Chevron traps via LN_2 manifold. (The liquid level in the traps is automatically maintained. The consumption of LN^2 is 10-20 liters/hr).
19. Connect LN_2 supply to Meissner trap.
20. Turn on seal pump.
21. Open chamber roughing valve. (It will take approximately 30 minutes for the roots blower to turn on at p=15 mm Hg. It will take an additional 30 minutes for the chamber to reach the range of p=20 microns).
22. Turn on Varian Cold Cathode gauge (pressure should be low enough to be on scale within 1 hr. after opening roughing valve. ($p = \leq 10$ microns)
23. While the chamber is roughing down it will be necessary to monitor the fore-pressure of the hot DP's as their pressure may exceed 100 microns with only the small capacity holding pump. If this should occur it is necessary to pump them down again with the large roughing pump and then to resume the chamber rough pumping after the interruption. (There is a 10 second delay built into the control circuit which delays the opening of the foreline valves after closing the chamber roughing valve).
24. When the chamber pressure is approximately 10 microns close the roughing valve and open the foreline valves to the DP's.

ORIGINAL PAGE IS
OF POOR QUALITY

25. Close the holding pump valves.
26. To start high vacuum pumping on the chamber through the diffusion pumps open the high vacuum valves #1 and #2 in succession while monitoring the foreline pressure in each to not exceed 100 microns. (As a precaution against backstreaming D.P. oil into the chamber allow about one minute between opening of the High Vacuum valve #2 after high vacuum valve #1 is opened).
27. Shortly after both high vacuum valves are opened the chamber pressure should be in the low 10^{-5} torr range. (SEE GLOW DISCHARGE PROCEDURE).
28. With the chamber empty it takes about 1 hr. after the high vacuum valves are opened to reach a chamber pressure of approximately 5×10^{-6} torr.
29. During the high vacuum mode of pumping the Meissner trap should be filled as follows. Turn on the LN_2 supply to the Meissner coil by gently opening the LN_2 supply valve less than one full turn to avoid pressure vibrations from LN_2 evaporation inside the coil. Pressure rises occur within chamber if the coil is filled too rapidly. Trap fills in approximately 30 minutes. Close valve and re-fill in 10 minutes.
30. The chamber is ready for operation at a pressure less than or equal to 5×10^{-6} torr.

Thomas S. Gregory
1 May 1986

ORIGINAL PAGE IS
OF POOR QUALITY

OUTGASSING OF FILAMENTS

To perform high temperature (>2000°c), vacuum cycle of filaments.

1. Pump chamber to $5x10^{-6}$ range (see: Pump Down Operation).

2. Turn Filament power switches to all 4 filament rings to "on" position.

3. Turn cycle selector switch to "manual" position.

4. Slowly raise power to all rings until current for inner ring #2 is about 330 amperes.

5. View all filaments or reflected light from filaments to insure they appear to heat equally and become incandescent together and with same aparent temperature.

6. After approximately 3 or 4 minutes rapidly increase the power to all filaments until therre is 25 volts of potential across inner ring #2. Hold this power level for 10 seconds to degass all filaments of impurities (low melting point metal, etc.).

7. Lower power to all filaments until all ammeters read zero.

8. Turn off all 4 filaments ring power switches.

9. Turn cycle selector switch to "off" position.

10. End of Filament outgassing (See: Shutting down system).

(Note: Tungsten melts at 3,382°c)

Thomas S. Gregory
1 May 1986

SHUTTING DOWN ALUMINIZING SYSTEM

After outgassing or aluminizing operations have been completed it will be necessary to follow these steps to discontinue vacuum chamber operation.

1. Start the holding pump.
2. Turn off LN_2 supply and disconnet dewars from Meisssner trap and LN_2 manifolds.
3. Close high vacuum valves #1 and #2.
4. Turn off chamber seal pump.
5. Turn off chamber ion gauge.
6. Turn off diffusion pumps. (Approximately 2 hr. cool down required).
7. Open holding pump valves to diffusion pumps.
8. Close foreline valves #1 & #2.
9. Turn off roughing pump. (Automatic air venting of pump).
10. Leave glycol cooling on for 2 hrs. (Do not use rapid cooling).

If chamber is to be opened:

11. Check again to be certain high vacuum valves #1 & #2 are closed. (Rapid oxidation of hot diffusion pump oil can lead to a serious explosion)!
12. Slowly open chamber air-release valve. Total venting back to atmospheric pressure takes approximately 20 minutes.
13. Disconnect the roughing pump from the chamber vacuum manifold.
14. Raise chamber about 50mm after it has been brought back to atmospheric pressure.
15. Walk around chamber to be sure all hoses and wires are free and clear and that there is ample slack to permit full upward motion of chamber.
16. Check the position of the overhead crane bridge to allow clearance and then switch crane power to "off" position.
17. Raise chamber to fully open position against up-limit switch.
18. Carriage drive switch can now be used to move bottom of vacuum chamber to desired position.
19. For best long term chamber performance it is necessary to leave the chamber at a pressure of 10 to 100 microns. This is easily done with the roughing pump only.
    (See: Pump down operation)

Thomas S. Gregory
1 May 1986

3.4.1.6 Glow Discharge

Glow discharge is the "final" cleaning of the mirror. It is done with the mirror in the chamber under a vacuum. It is used to knock off any remaining subatomic particles left on the substrate surface after stripping and cleaning. It leads to better adhesion of the new coating.

It works upon the following principles. After the vacuum chamber is pumped down, it is backfilled with a small amount of gas (oxygen or argon). The gas is stable when leaked into the chamber but then is ionized by an electric potential set up across the space within the chamber. The electric potential is created by making the wall of the chamber and an Aluminum ring situated behind the mirror, each a different charge. Electrons are stripped off, the ionization occurs. In it's excited state the gas molecule scramble around looking to gather electrons to return t equilibrium. In this quick motion the ions tend to collide with everything, the mirror included. These collisions are respondsible for knocking off any particles left on the optic's surface.

The procedure used for glow discharge final cleaning, at Canada-France-Hawaii Observatory, is contained at the end of this section. It provides greater detail on what is involved. Note that the substrate is already in the chamber and under a vacuum when the procedure starts.

The required apparatus are:

- Aluminum Ring - acts as one of the electrodes

- High Voltage/Low Current Power Source - provides the electric potential

- Needle Valve - leaks gas to be ionized into the system.

Manufacturers specifications and model numbers for these items are still to be determined. Further information on glow discharge can be found in Appendix D.

GLOW DISCHARGE OPERATION

Theory-

In order to condition the substrate surface to enhance the quality of the coated film. A glow discharge is caused to occur within the chamber which has been preevacuated to $5x10^{-5}$ torr with the substrate inside the chamber. The glow discharge is ignited by a continuous AC high voltage ARC across two insulated ring electrodes of Aluminum after the pressure within the chamber has been increased by the introduction of air to a pressure of 25 to 30 microns.

The glow discharge has several beneficial effects which are:

1. The substrate surface is degassed through heating.
2. Conversion of organic substances on the substrate into their volitile components through interaction with ionized residual gas.
3. Desorption of films on the substrate surface through electron impact.

Operation-

1. The chamber is evacuated to 5×10^{-5} torr.
2. Close high vacuum valves. Shut off chamber ion gauge.
3. Open D.P. holding pump valves.
4. Close D.P. foreline valves.
5. Open air-leak pressure control valve.
6. When pressure reaches p= 25-30 microns open chamber roughing valve.
7. Monitor chamber pressure at TC #1 while adjusting vernier throttling valve until pressure is maintained between 25-30 microns (nominal setting = 10.2).
8. Monitor pressure at TC #1 throughout glow discharge cycle of approx. 10 minutes.
9. Turn powerstat located on glow discharge panel fully counter-clockwise until at the zero setting.
10. Turn on glow discharge/
11. Turn powerstat clockwise slowly until .5 ampere is read on the ammeter. Maintain this current setting throughout glow discharge cycle. (A powerstat setting of 40% should be sufficient to maintain the .5 ampere current at an electrode potential of 1,000 to 2,000 volts.
12. After 10 minutes return powerstat to zero position and turn off the power.
13. Close pressure control valve and vernier valve.
14. After chamber has roughed to $p \leq 10$ microns close the roughing valve and open the D.P. foreline valves.
15. Close holding pump valves. Turn off holding pump.
16. Open high vacuum valves #1 & #2. After a few minutes the chamber pressure will again be at 5×10^{-5} torr.

Thomas S. Gregory

1 May 1986

3.4.2 Secondary and Tertiary Mirror Coating

Several options exist for coating the secondary and tertiary mirrors. The first is to contract them out to be coated by some company in the San Francisco Bay area familiar with their types of coatings. The second is to purchase an off-the-shelf complete vacuum chamber. The third option is to rebuild an old, unused, complete vacuum chamber stored here at Ames Research Center. The smaller vacuum chamber will operate in much the same way as that for the primary mirror with the exception of requiring an electron beam gun to do the silicon oxide overcoating on the tertiary mirror.

The cost of the first option is given in Section 4.1.2. It is possible that the recoating could be done at the same location as the Kuiper Airborne Observatory's mirrors.

The manufacturers specifications for the off-the-shelf vacuum chamber are contained at the end of this section. It is a CVC SC-5000 Belljar Evaporation System (model #296084). Note that in addition to the basic features, the following options will be required - 24 inch stainless steel belljar, LN_2 baffle insert, quartz crystal thin film controller, and single pocket electron beam evaporation. The approximate cost may be found in Section 4.1.2. Any comparable system can be used. The CVC system is already under GSA contract.

The unused system here at Ames has the same features as the new one but may be missing a part or two. It is definately missing the coating apparatus. It has some rust and would need to be cleaned and then rebuilt. There are companies in the San Francisco Bay area that do this type of work. Figures 3.4.2-0 through -5 are photographs of the vacuum chamber. The diffusion pump is an NRC (owned by Varian, Inc.) expanded 6 inch (model #0184/serial #K0245). It requires 120V, 2200W. The control system is a Vacuum Industries, Inc. one (model #902/serial #0300).

One important consideration is the chamber's past use. If it was used for work involving certain chemicals or radiation it may be harmful to use again. This must be looked into further.

The current recommendation is to get an estimate done on the cost of updating the 24 inch vacuum chamber here at NASA-Ames Research Center, then make a further decision. Note

that it is strongly suggested that the smaller mirrors not be done in the primary mirror coating chamber as it is configured to provide uniformity when coating a large optic, not a small one.

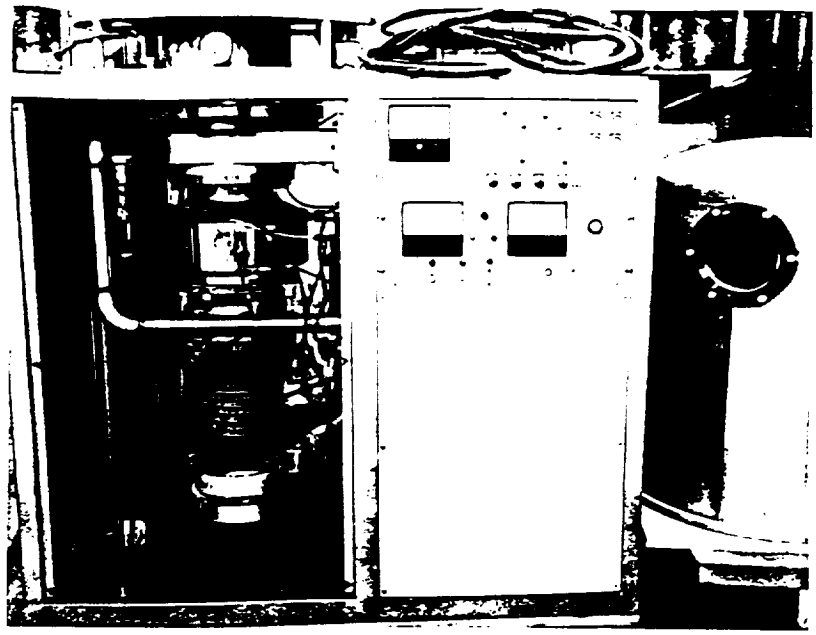

Figure 3.4.2-0

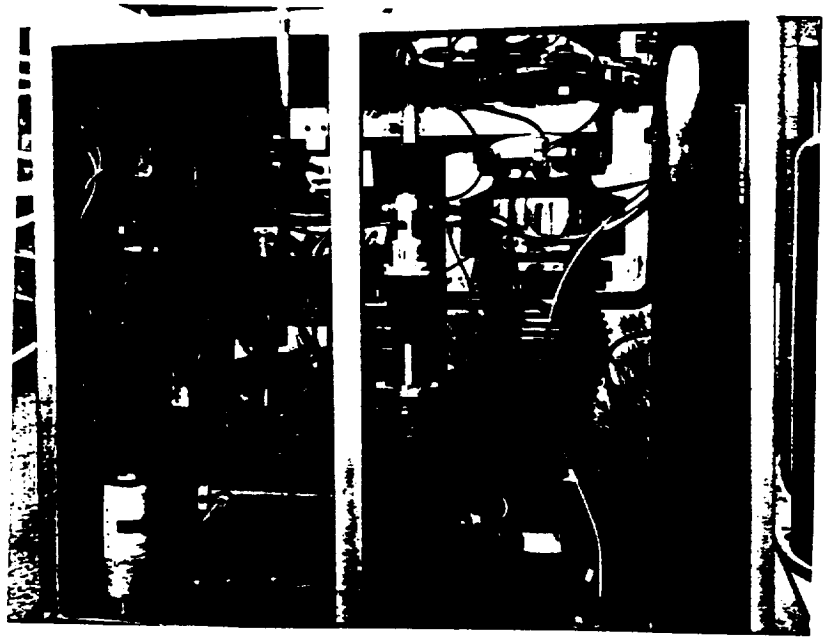

Figure 3.4.2-1

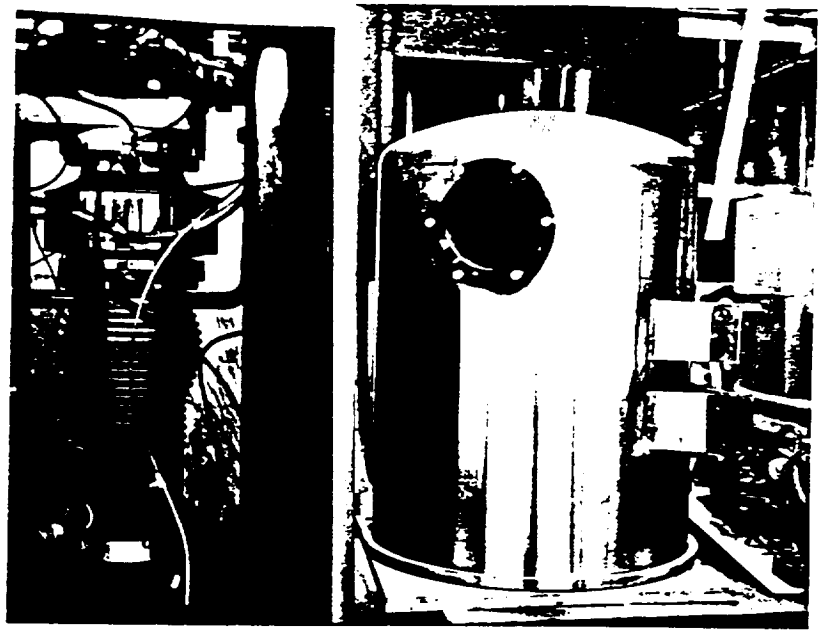

Figure 3.4.2-2

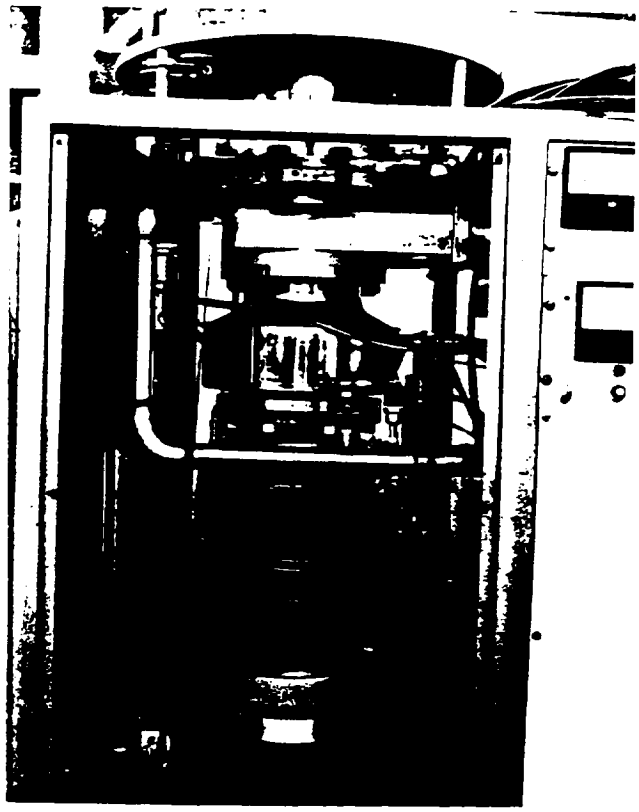

Figure 3.4.2-3

ORIGINAL PAGE IS
OF POOR QUALITY

Figure 3.4.2-4

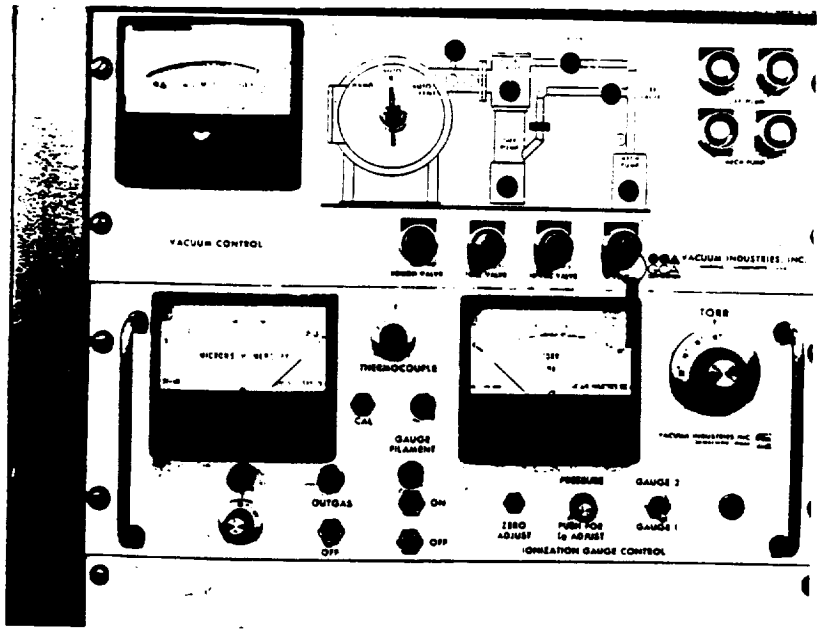

Figure 3.4.2-5

he CVC SC-5000 Belljar Evaporation System

his system features automatic control of the vacuum pump down cycle. The SC-5000 system is designed for research & development facilities and pilot plant production.*

Description	*Specifications*
Vacuum Chamber	
pyrex belljar with implosion shield	nominal 18"D x 30"H
motorized hoist	
Baseplate	
stainless steel	20" diameter
feedthroughs	15 (1") blanked off holes
	(4) 5/16" UNF blind tapped holes
High Vacuum Pumping System	
rotary vane pump	26.8 cfm
PVMS 100 diffusion pump	2500 L/S air
stainless steel valves with kf flanges	electropneumatic bellows sealed
baffles	LN_2 or multi-coolant
consumption for LN_2 baffle	0.48 liter/hour
Pumping Specifications	
1 x 10^{-6} torr	15 minutes
ultimate vacuum	5 x 10^{-7} torr with LN_2 baffle
Instrumentation	
AVC 485 automatic valve controller	atmosphere to 10^{-3} torr
GIC 410 ionization gauge	10^{-3} to 10^{-9} torr
ment Evaporation Power Supply	
KVA SCR controlled 2 electrodes rated at	600 amps
ransformer taps	5, 10, 20, 40 volts

Options

- Cryo-Torr®8 (cryo pump)
- turbomolecular pump
- 18" and 24" diameter stainless steel belljar
- 4 KVA resistance evaporation accessory
- Electron Beam Gun
- 10 kw power supply with xy sweep
- planetary dome fixture
- lift-off fixture
- stationary dome fixture
- quartz crystal monitor
- 3 kw substrate heater
- glow discharge cleaning
- ion source
- manual/automatic shutters
- high temperature heating to 950°C
- CVC 810 8" sputtering source
- 1", 2", 3" US™ Sputter Guns

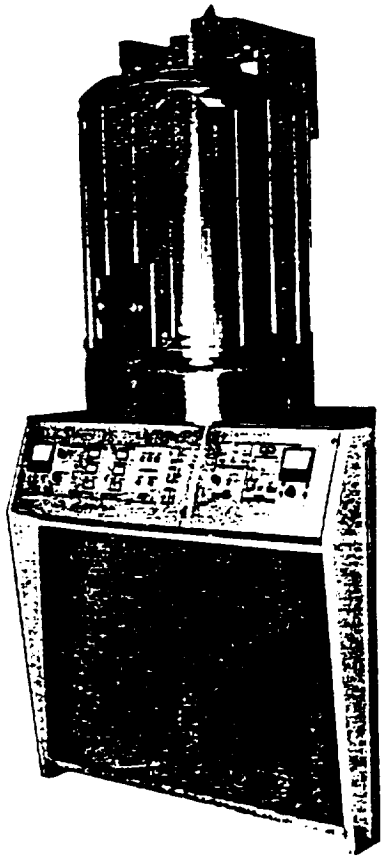

*Available under GSA contract

The CVC SC-6000 Fron

The CVC-6000 Front Loading Evaporatc requirements. Applications include thick coatings.

Description
Vacuum Chamber
304 non-magnetic stainless steel char
full front opening door
water cooling on door and chamber
chamber shielding
RGA port
2 sight ports on door
Baseplate
stainless steel
feedthroughs
High Vacuum Pumping System
rotary vane pump w/foreline trap
Cryo-Torr®10 (cryo pump)
stainless steel valves with kf flanges
Pumping Specifications
atmosphere to 1×10^{-6} torr
atmosphere to 5×10^{-7} torr
ultimate vacuum
Instrumentation
AVC 485 automatic valve controller
GIC 410 ionization gauge

Options

- 2 and 4 KVA resistance evaporatior
- single and multi pocket Electron Be
- planetary dome fixture
- lift-off fixture
- stationary dome fixture
- quartz crystal controller
- 3 kw substrate heater
- glow discharge cleaning
- gas control system
- automatic/manual shutter
- residual gas analyzer
- ion source
- 1", 2", 3" US™ Sputter Guns

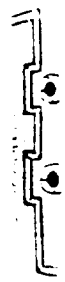

CVC COMMERCIAL EVAPORATION PRICE LIST

PART #	DESCRIPTION	PRICE
	CVC SC-5000	
296084	High Vacuum Evaporation System including	$42,000.
	— 18"D x 30"H Pyrex belljar with implosion shield.	
	— Motorized belljar hoist	
	— CVC Model PVMS-100 expanded 6" diffusion pump with 2,500 liters/second pumping speed	
	— Electro-pneumatically actuated valves	
	— Automatic valve control	
	— 20" diameter, raised stainless steel baseplate with a variety of feedthrough penetrations	
	— Tubular steel frame	
	— Leybold-Heraeus model D30A mechanical pump	
	— 2KVA resistance evaporation accessory	
	— Thermister and ionization gauges	

Prices effective November 1, 1988
Prices subject to change without notificatio
$75.00 minimum order FOB Rochester, N.Y.

OPTIONS			PRICE
PART #			
296085	1.	18" diameter stainless steel belljar	$10,000.
276168	2.	24" diameter stainless steel belljar	12,000.
296086	3.	Planetary motion substrate fixture	23,650.
296087	4.	Stationary dome fixturing	17,000.
296088	5.	3KW substrate heater	6,040.
296089	6.	Quartz crystal thin film monitor	7,700.
296090	7.	Four-pocket Electron beam evaporation accessory	52,650.
296091	8.	Glow discharge cleaning	10,500.
296092	9.	Front loading box chamber	33,000.
296093	10.	4 KVA resistance evaporation	12,000.
296094	11.	3 cm ion source	32,000.
277924	12.	Multi-coolant baffle insert	1,024.
5501326	13.	LN_2 baffle insert	2,336.
	14.	CTI 8 Cyro pump	12,000.
	15.	Quartz crystal thin film controller	8,540.
	16.	Single pocket electron beam evaporation	50,250.
	17.	2" US' Guns II dc magnetron	7,693.
	18.	3" US' Guns II dc magnetron	8,760.
	19.	2" US' Guns II rf magnetron with rf automatic matching network	12,868.
	20.	3" US' Gun II rf magnetron with rf automatic matching network	13,935.
	21.	Advanced Energy model MDX - 1000 1 KW dc magnetron power supply	5,360.
	22.	Advanced Energy model RFX-6000 watt rf magnetron/diode power supply	5,157.
	23.	Manual/automatic shutter accessory	2,200.
285198	24.	CVC 810 8" Sputtering source dc magnetron with 5KW dc power supply	27,895.
283168	25.	CVC 810 8" Sputtering source rf magnetron with 2.5KW rf magnetron/diode power supply and manual matching network	37,986.
	26.	High Tc Superconducting heat stage	20,500.

Prices effective November 1, 1988
Prices subject to change without notificatic
$75.00 minimum order FOB Rochester, N.Y

THE BASIC EVAPORATION SYSTEM

Instrumentation

Cycle decisions are made in direct response to system pressure and are carried out with built in operator and equipment safeguards. Visual displays of system status are located at eye-level for easy viewing.

The CVC SC-3000 system uses the CVC GTC 380 thermocouple gauge with bar graph display for measurement from atmosphere to 1×10^{-3} torr. For high vacuum pressure measurement from 10^{-3} to 10^{-9} torr, the CVC GIC 410 digital auto-ranging ionization gauge is supplied. The CVC 410 utilizes a miniature ionization tube, the CVC GIC-048, designed with a small envelope to minimize out-gassing.

CVC automated systems employ the CVC AVC 485 microprocessor valve controller which monitors and controls roughing and foreline vacuum pressure from atmosphere to 2×10^{-3} torr and provides fully automatic cycling of system valves. Users may select a manual mode to control all pumping functions. The CVC AVC 485 also provides automatic cryopump regeneration.

Valves

The high conductance CVC stainless steel valves help to achieve fast pump-down times. Ultra smooth interior surfaces reduce out-gassing, for low operating pressures. Each valve includes a stainless steel welded bellow seal, vacuum brazed 304 body construction, handwheel or electro-pneumatic actuation, as well as positive lock-over center mechanisms. Kf flanges are installed throughout the system.

Vacuum Pumping

Cryo pump, turbo pump, or diffusion pump high vacuum pumping packages may be specified for any of the CVC evaporation systems to meet the demands of various process requirements.

A high-capacity, high-performance, direct-drive, rotary vane pump provides fast roughing of the vacuum chamber. The mechanical pump may be located outside of the system cabinet for remote operation. A foreline trap is located between the mechanical and high vacuum pump.

Baseplate

The stainless steel baseplate includes tap holes and feedthrough penetrations to retrofit components without costly modifications.

Baffles

A full range of baffle-insert options are available. Choose from ambient, water, freon, or liquid nitrogen cooled inserts. All are interchangeable with the standard housing and can be removed quickly for routine cleaning.

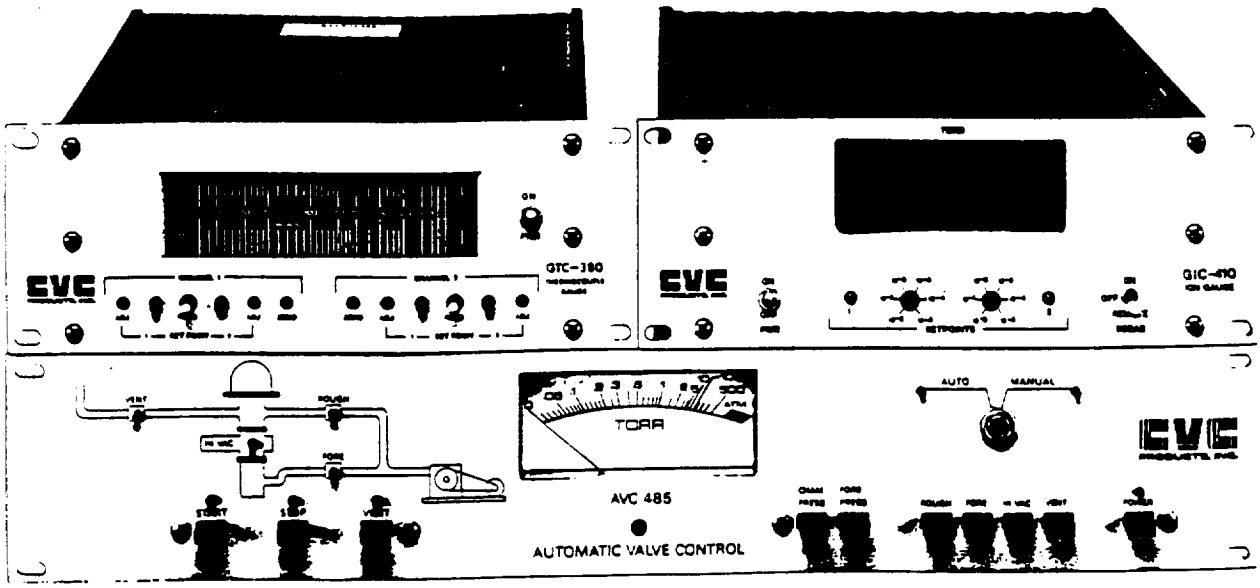

CVC Instrumentation-bottom: CVC AVC 485
top left: CVC GTC 380 top right: CVC GIC 410

ELECTRON BEAM GUNS AND POWER SUPPLIES

Single/Multi Pocket

The CVC EBG series of single crucible (7cc, 15cc, 5cc, 40cc, 100cc) electron beam sources are ideal for high volume production applications. These sources are designed to evaporate up to 50,000A³ of aluminum per minute. It features a water cooled, hopper-type crucible, flush pole design, 270° beam deflection and variable sweep.

The CVC TEBG series of multi crucible (4, 6, or 8) electron beam sources are rugged and reliable. They are available in right, left, or base drive. Standard features include: permanent magnet, 270° beam deflection and variable sweep.

Gun Dimensions

EBG Dimensions - 12½" L × 5" W × 2¾" H
Weight - 22 lbs.
Power Rating - 14 kw at 10 kv max

TEBG Dimensions - 14¾" L × 7" W × 4½" H
Weight - 42 lbs.
Power Rating - 10 kw at 10 kv max

Easy to Maintain

The crucible is easily disassembled for routine maintenance. Simply remove the copper shield from the top of the gun, loosen the crucible screws, and insert a pull-thread into the center tapped hole. The emitter assembly is attached to the base of the gun with a single screw for easy removal.

Electron Beam Power Supply

The 100% duty cycle rated 10 kw constant voltage electron beam power supply is designed to operate one or more electron beam sources continuously. Full power is activated by the 10 kw tetrode tube, permitting instantaneous recovery from arcing during evaporation. The air or water cooled tetrode tube provides adjustable high-voltage from -2 kv to -10 kv within a ± 2% regulation. This is ideal for optical coatings and applications involving dielectrics.

The sweep control includes position, amplitude and frequency adjusting potentiometers and a switch to select sweep or position. Operator and equipment safety are ensured through a full safety interlock protection system. Illuminating lights along with a 0 to 10v dc input for remote signals are standard. Additional interlocks are provided for optional accessories.

The power supply consists of a 19" rack-mounted control console and a caster-mounted power module. The two modules can be remotely installed up to approximately 60 feet.

Variable Sweep

Excellent uniformity and high rates are achieved with the standard variable sweep feature. The beam spot is adjustable to achieve optimum beam densities for evaporating a wide range of materials.

Feedthrough Kit

The feedthrough kit is an "O" ring sealed bolt-type with 2 high-voltage feedthroughs rated at 15kv, a dual low-voltage and a water feedthrough, with ⅜" OD tubes.

TEBG Electron Beam Gun and a selection of crucible options.

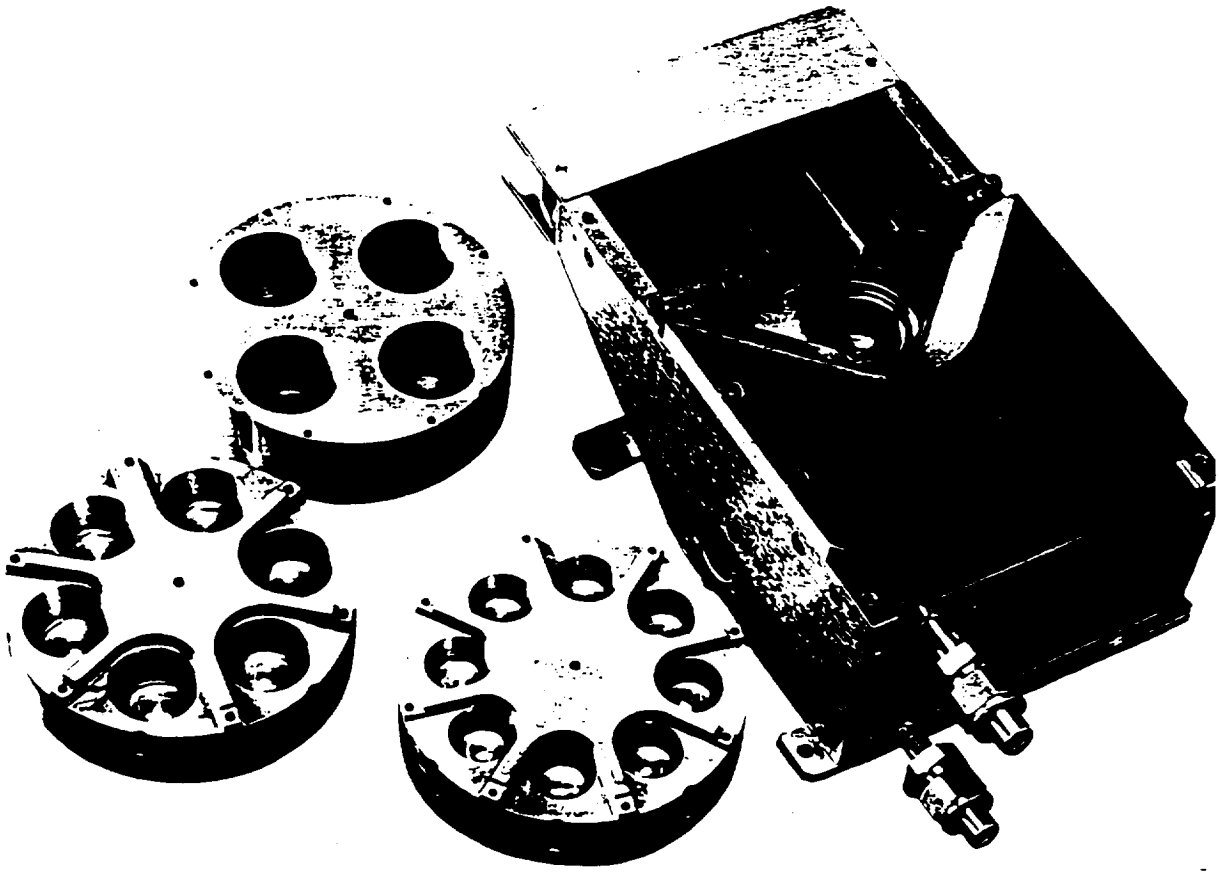

FIXTURES AND SPUTTERING SOURCES

Tri-dome Planetary Fixture

[illegible] capacity substrate fixture has been [illegible]ed for use in the SC-5000, SC-6000 and SC-9000 systems. The planetary action continuously changes the angle of incidence of the substrates during deposition, permitting uniform coating and excellent step coverage. The high speed planetary fixture rotates the three planets at up to 150 rpm. Uniformity is typically ± 5%.

With three planets, the system can accommodate 2, 3, 4 and 5 inch wafers. Broken substrates can be processed using special clips.

A crystal monitor head may be mounted directly above the source for accurate thickness and rate control.

Capacity of Wafers

SIZE*	2"	3"	4"	5"
SC-5000 18" bellijar	60	24	15	—
SC-5000 20" bellijar	87	36	18	12
SC-6000, 9000	144	63	36	21

*Other sizes available upon request.

Stationary Dome Fixture

The static deposition dome fixture is designed for evaporation systems using an Electron Beam Gun or filament evaporation sources.

Flat Planetary Fixture

The flat planetary fixture provides excellent film uniformity. This fixture is available for 18" or 24" diameter systems accommodating 3, 4 or 6 planets for a variety of substrate sizes. The stainless steel planetary fixture provides epicyclical motion achieving coating uniformities of ± 3% or better.

A stainless steel shield is used to isolate the bearings and drive mechanism from the evaporant. The stainless steel planets are round and flat and are available in six sizes.

	Planets
18" SC-5000	(3) 6½" diameter
	(4) 6" diameter
	(6) 4½" diameter
SC-6000, 7000, 9000	(3) 9½" diameter
	(4) 8½" diameter
	(6) 6½" diameter

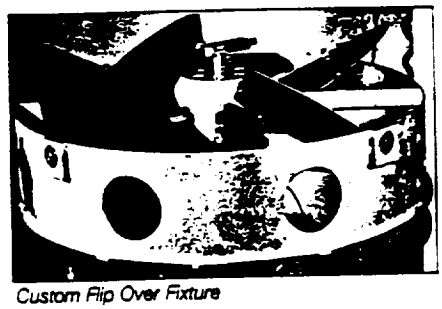

Custom Flip Over Fixture

Lift-Off Fixture

The lift-off dome fixture is designed for evaporat[illegible] systems performing lift-off processes. This prec[illegible] fixture ensures correct angle of incidence for opt[illegible]mum removal of resist.

SC-5000	(25) 3" wafers
SC-8000	(36) 3" wafers

Other wafer capacities are available on request.

Custom Fixtures

Custom fixtures are available upon request. The CVC engineering staff is available for collaboration on other fixture designs for research or unusual applications. Examples include:

- Flip over fixture
- Backside fixture
- Slope fixture
- Optical fixture

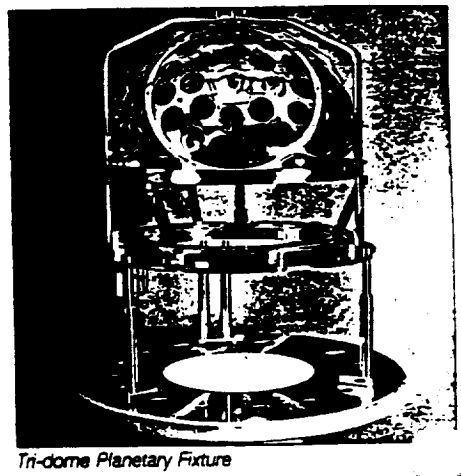

Tri-dome Planetary Fixture

Sputtering Sources

Retrofitting a sputtering source to a CVC evaporation system provides the additional flexibility of sputtering without the large investment of a second system. Advantages include:

- Improved adhesion and step coverage control
- Consistant alloy composition
- Cooler substrates

CVC 810 8" Sputtering Source

CVC 8" diameter dc or rf sputtering cathodes are available for retrofit on CVC's evaporation systems.

No cutting or special work is required. The CVC 810 mounts on the baseplate. The chamber is placed above the feedthrough ring assembly. Conduit is supplied for water and electrical lines.

The CVC 810 sputtering accessory may be specified for both rf and/or dc sputtering. Dc power supplies are available in 3, 5, 10 kw.

Rf diode/magnetron power supplies rated at 1 kw or 2.5 kw with matching networks are also available. Up to three magnetron sources may be mounted in the 24" bellijar.

CVC 810 8" rf Sputtering Source

US™ Gun Sputtering Sources

US™ Gun sources, available in 1", 2" and 3" models, are compact, easy to install into CVC evaporators and simple to maintain.

Target changes are simple and fast. No bonding is required. US™ Guns are installed in the 1" feedthroughs in the baseplate. No backing plate is required except when porous or fragile materials are used.

Targets up to ⅛" thick may be sputtered. Guns are both rf and dc compatible. When rf is specified, the gun is supplied with an autotune matching network and a 600 watt solid state rf power supply. For dc operation, a 1 kw solid state dc power supply is available.

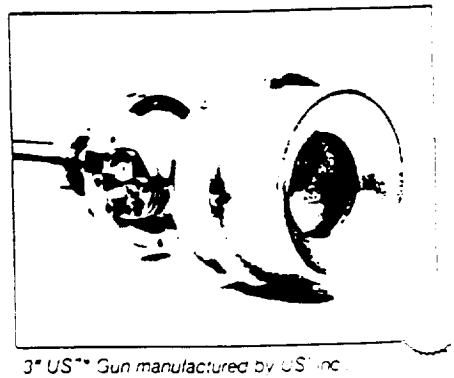

3" US™ Gun manufactured by US Inc Campbell CA

OPTIONS AND ACCESSORIES

Heaters

The 3 kw substrate heating assembly is designed for fast, efficient substrate heating. The assembly uses a polished reflector to focus the heat on the substrates. For reliable performance, tungsten halogen quartz lamps are used. The reflectors are easily removed for routine cleaning. The heater assembly is controlled using a SCR power supply that is current protected. Temperature is controlled and set with a digital P.I.D. temperature controller.

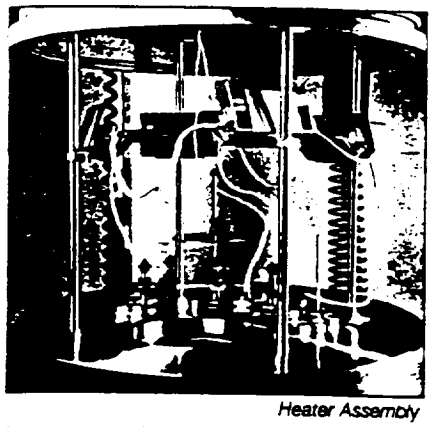

Heater Assembly

Instrumentation

Quartz Crystal Monitor

Quartz crystal monitors (QCM) provide accurate and reliable measurement of vacuum deposited metallic and dielectric films.

The QCM is a cost effective instrument for monitoring the deposition rate and thickness of electronic or optical thin films. The monitor provides direct readout of film thickness in angstroms and deposition rate in angstroms/second. Digital display, automatic ranging and simple operation are among the convenient features of the QCM.

Quartz Crystal Controller

Quartz crystal controller is menu driven and capable of 30 independent processes with 3 or more layers per process for up to 180 layers. LED display provides auto ranging rate, power, thickness and time/frequency information.

Optical Thickness Monitors

The optical thickness monitors operate using a modulated light beam transmitted through or reflected from a monitor or test slide which is coated simultaneously with other substrates. When a film is deposited a change in beam wave optical will occur. This information is translated into film thickness measurements. Units are available with halogen or laser light sources.

Substrate Cleaning

Ion Source

Ion beam sources are often used for substrate surface modification. Sources with output currents ranging from 1 to 600 mA and 50 to 2000 eV beam energy are available.

Glow Discharge Cleaning

The glow discharge cleaning accessory consists of a high voltage dc power supply, discharge electrode and gas inlet system. Glow discharge conditions the vacuum chamber and substrates eliminating surface adhering water vapor and other contaminants prior to deposition. This low energy plasma process technology operates at approximately 20 eV.

Suggested Applications

Low absorption optical films for lasers and mirrors
Anti-reflection coatings
Lift-off on GaAs
Backside gold
High Tc superconducting thin films
Aluminum coatings
Decorative films

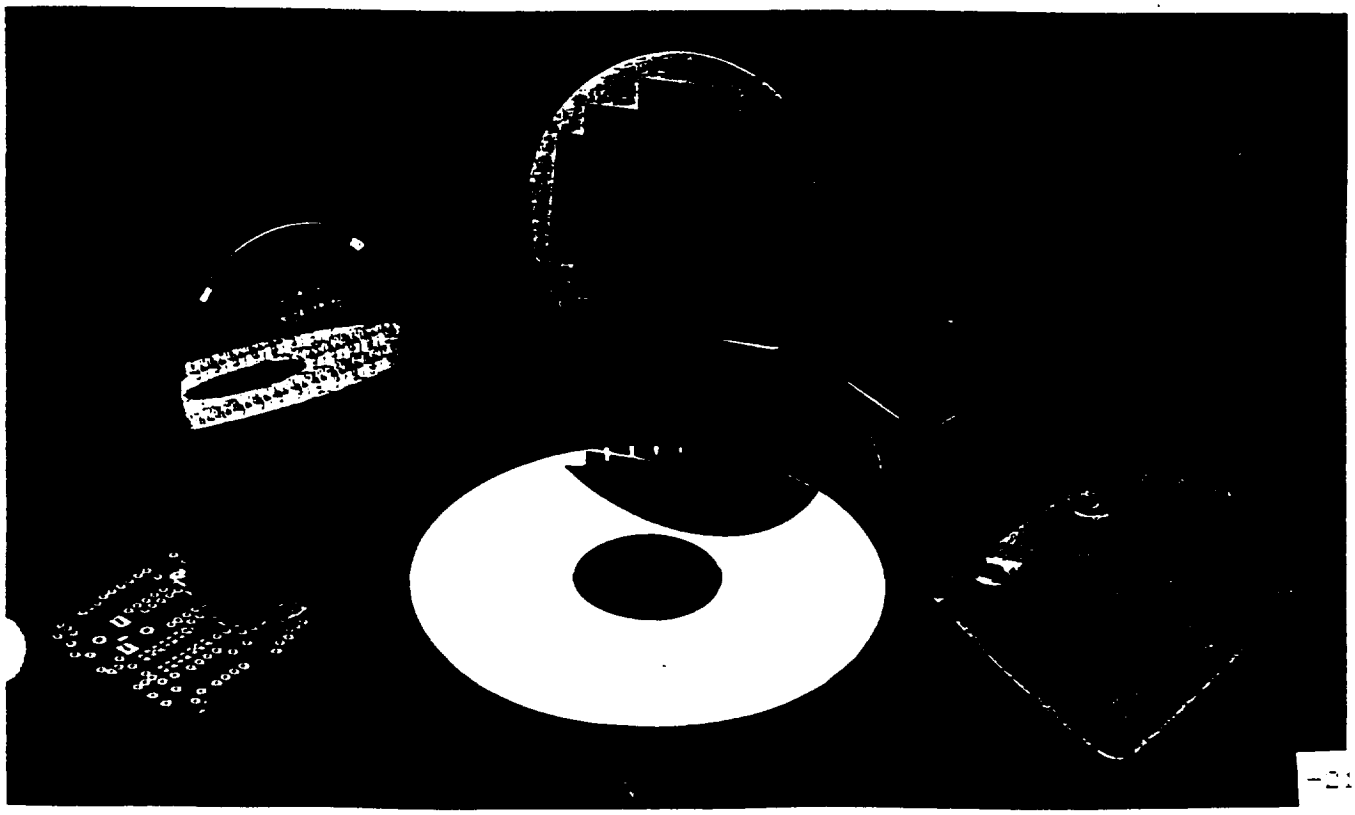

Versatile CVC evaporators accommodate a wide

a

3.4.3 Dichroic Tertiary Coating

The dichroic tertiary mirror has a very special coating hence the suggestion is that it be transported off Ames for recoating. There are several places in the San Francisco Bay area where specialized mirror coatings are done. Some of these facilities are Optical Coating Laboratory, Inc. (OCLI) in Santa Rosa and the University of California, Santa Cruz, Optical Coating Laboratory.

There is the option of coating it on site but it will require bringing in or retaining someone fairly knowledgeable in optical coatings. Depending on the composition of the coating it will, more than likely involve the use of an electron beam gun to vaporize the materials. A chamber may be purchased off the shelf that has this capability. The basic specifications for this chamber are the same as the suggested chamber for the secondary and aluminized tertiary mirrors. The additional features that this one would require are glow discharge, 4kVA resistance evaporation, and the four pocket electron beam evaporation accessory instead of the one beam. The chamber could also be used to do the coatings for the other tertiary and secondary mirrors, if configured properly. The approximate cost can be found in section 4.1.2.

4.0 BUDGET AND COST

This section contains both the estimated initial costs and the estimated yearly costs. The initial costs are broken down into that for the primary mirror coating chamber, the secondary/tertiary mirrors coating chamber, clean room conditions, the cleaning facilities, handling equipment, and facility needs. The approximate yearly cost is given for the primary mirror coating and cleaning. Attached at the end of the Budget and Cost section is a possible year to year cost for contracting out the secondary and bare aluminum coated tertiary to be recoated. The yearly costs for cleaning the smaller mirrors, recoating the dichroic tertiary, and manpower are still under investigation.

4.1 INITIAL COST

The total estimated initial cost in the most optimistic case is 1.7 million dollars (see Figure 4.1.1). In the worst case, 2.2 million dollars (see Figure 4.1.2).

4.1.1 Primary Mirror Coating Chamber

The following figures are estimates from companies that have engineered and/or built comparible vacuum chambers before. Keep in mind that this is the estimated cost for the total coating system which includes the vacuum pumping system, the vacuum chamber, and the controls to run the vacuum process.

High Vacuum Equipment Corporation: $530,000 for design and manufacture of the system.

Battelle, Northwest: $500,000.00 for design and manufacture of the system.

CVI: $1,000,000.00 for design and manufacturing of the system, using a cryopump rather than a diffusion pump, which at this time is determined not to be needed.

The following page is a list of 1988 dollar costs of some of the individual components should give some indication of where the money is spent. Note that costs may be reduced by buying vacuum equipment on the used and rebuilt market for approximately 60% of their original cost.

CHAMBER:	$100,000.00+
RAW MATERIAL	
CARBON STEEL	
FABRICATION	
PUMPING SYSTEM:	
DIFFUSION PUMP	21,130.00
MECHANICAL PUMP (includes BLOWER)	27,130.00
HIGH VACCUUM VALVE	22,208.00
BACKING VALVE	3,000.00
ROUGHING VALVE	3,000.00
VENT VALVE	3,000.00
COLD TRAP	13,913.00
ROUGHING TRAP	200.00
FORELINE TRAP	660.00
CONTROLS/GAUGES	
LIQUID NITROGEN LEVEL CONTROLLER	2,200.00
THICKNESS MONITOR	
AUTOMATIC VALVE SEQUENCER	2,000.00
SCR POWER CONTROL	
IONIZATION GAUGE CONTROLLER	1,300.00
THERMOCOUPLE GAUGE CONTROLLER	1,000.00
GLOW DISCHARGE EQUIPMENT	
MISCELLANEOUS	
FEEDTHROUGHS	5,000.00
VACUUM TUBING	
VACUUM FITTINGS	
FLANGES	5,000.00
SEALS (GASKETS)	
BACK-TO-AIR VALVE	500.00

If the chamber has the ability to overcoat, this should add at least another $100,000.00 to the base price bringing the total cost to about $600,000.00.

+ based on a figure received by Battelle Northwest Laboratory for the cost of their chamber.

4.1.2 Secondary and Tertiary Mirror Coating Chambers

There were four options mentioned in section 3.4.2 for coating the tertiary and secondary mirrors that will be done in bare aluminum. The first three options assume that the dichroic tertiary is contracted out to be recoated. Keeping this in mind, these are the estimated costs of those four options:

Option #1 - Purchase a smaller chamber to do them. $116,000.00, to purchase an off the shelf, complete system from CVC, Inc. with a 24 inch stainless steel bell jar, liquid nitrogen baffles, and quartz crystal thin film controller (further specifications can be found in section 3.4.2).

Option #2 - Contract out the mirrors to be recoated. Although sending the mirrors out to be recoated is a yearly cost it is included here as a comparison to the other options. The cost to contract them out is an estimate based on the 1988 prices to do the Kuiper Airborne Observatory (KAO) secondary and primary mirrors. In 1988 these were the actual costs:

primary (36 inches)	$2000.00
both secondaries (7.31 and 7.375 inches)	$ 600.00

Assuming that this gives $50.00/inch diameter to coat in bare aluminum at current prices and that inflation will be 5% every year for the 20 year life of SOFIA, this gives the following amounts for the full 20 years coating twice a year:

secondary (12 inches)	$40,000.00
tertiary (approximately 19 inches)	$62,826.00

Note that this is optimistic based on the inflation factor but it also includes the costs of materials used to coat and to run the facility.

Option #3 - Use equipment already available at Ames. There are several complete, unused vacuum chambers on site at Ames. They require some rebuilding, the extent of which is unknown. Until the chambers are looked at more closely and the work needed to make them operational again, the cost is unknown. There are several companies in the area which rebuild old chambers.

Option #4 - Coat both tertiaries and the secondary on site. The cost to contract someone to do the dichroic tertiary is unknown but the approximate cost to purchase a new, off-the-

shelf system that would coat all three mirrors, the secondary and two tertiaries, is $150,000. The specfications are found in section 3.4.3.

The cost of contracting out the dichroic tertiary is unknown. When the composition of the coating is known, an estimate can be made. Note that this will be a yearly cost but as in the case of the other two mirrors, that cost taken over 20 years would give a good indication as to whether it is cost effective to do it on site.

4.1.3. Clean Room

If a building is being built it is relatively inexpensive to purchase and add in the equipment to make it a Class 10,000 or Class 100,000 clean room. To achieve a Class 10,000 clean room the following cost, estimated by Air Filter Control Inc., is $3000.00. The cost to create a room of that class in a pre-existing building is about $20,000.00. Note that to save cost the standards of Class 10,000 and 100,000 can be eliminated and only the requirements listed in addition to those in section 3.1 followed.

4.1.4 Cleaning Room Equipment

The next is a list of the items to be contained in the cleaning and stripping room. Their costs were estimated by several Ames Research Center engineers based on their past experience.

furniture (sink, lab benches, etc.)	$ 10,000.00
fume hood	25,000.00
Primary mirror cleaning equipment (catwalk, bridge, holding bin)	200,000.00
waste disposal	25,000.00

4.1.5 Handling Equipment

The estimates for the following list were from the same source as those for the equipment in the cleaning and stripping room.

Secondary mirror pedestal and lift	$ 15,000.00
Tertiary mirrors stand	5,000.00
Primary mirror transport cart	50,000.00

monorail crane	5,000.00
5-ton bridge crane	95,000.00
10-ton manipulator (including crane)	---

The above estimates do not include the cost of the 10-ton manipulator, used to remove the mirrors from the plane, because the amount is uncertain at this time. Two estimates that were recieved are $1,000,000.00 and $495,000.00. The latter is based on multiplying the cost of a bridge crane by an assumed factor.

4.1.6 Facility Needs

An estimated cost for a distilled water system in the cleaning and stripping room is $5,000.00. Plumbing and "regular" electricity is provided with the building. The cost of the special electrical equipment, that will be required, is $30,000.00.

Figure 4.1.1: Optimistic Total Initial Cost

Assuming that all four mirrors are coated on site and the primary mirror coating chamber has the capability to do overcoating.

primary mirror coating chamber	$ 600,000.00
secondary/tertiary coating chamber	150,000.00
10-ton manipulator (including crane)	495,000.00
primary mirror cleaning equipment	200,000.00
cleaning/stripping room furniture	10,000.00
fume hood	25,000.00
waste disposal	25,000.00
secondary mirror holding pedistal & lift	15,000.00
tertiary mirrors stand	5,000.00
primary mirror transport cart	50,000.00
monorail crane	5,000.00
5-ton bridge crane	95,000.00
TOTAL	$1,675,000.00

Figure 4.1.2: Worst Case Total Initial Cost

Assuming that all four mirrors are coated on site and the primary mirror coating chamber has the capability to do overcoating.

primary mirror coating chamber	$ 600,000.00
secondary/tertiary coating chamber	150,000.00
10-ton manipulator	1,000,000.00
primary mirror cleaning equipment	200,000.00
cleaning/stripping room furniture	10,000.00
fume hood	25,000.00
waste disposal	25,000.00
secondary mirror holding pedistal & lift	15,000.00
tertiary mirrors stand	5,000.00
primary mirror transport cart	50,000.00
miscellaneous cranes	10,000.00
monorail crane	5,000.00
5-ton bridge crane	95,000.00
TOTAL	$2,180,000.00

4.2 YEARLY COSTS

The total yearly cost has not been estimated. There are several missing components such as the cost to send out the dichroic to be recoated or to coat it in-house. This section contains the cost of coating and cleaning the primary and an estimated cost of contracting out the secondary and tertiary mirrors (that are coated in bare aluminum) to be recoated.

4.2.1 Primary Mirror Coating and Cleaning

The yearly operating budget for cleaning and coating the primary mirror is taken from the cost to run the facilities to coat the 120 inch mirror at Lick Observatory. This budget is Figure 4.2.1.1.

4.2.2 Secondary and Bare Aluminum Coated Tertiary

See Figures 4.2.2.1 and 4.2.2.2. These contain the cost per year to contract out the mirrors to be cleaned and recoated. The price is based on the 1988 costs of recoating the mirrors from the Kuiper Airborne Observatory which worked out to be $50.00/inch of diameter. The assumption is made that inflation is 5% per year.

4.2) TBD

FIG. 4.2.1.1

YEARLY COST OF THE MIRROR COATING/CLEANING FACILITIES

COATING FACILITIES (PER COATING)

Aluminum staples	20.00
Electricity & water (x2 pump downs)	80.00
Liquid Nitrogen (x2 pump downs)	200.00
Labor (80 Manhours at $50.00/hr)	4000.00
TOTAL	5300.00

CLEANING FACILITIES (PER CLEANING)

Supplies	500.00
Labor (8 Manhours at $50.00/hr)	400.00
TOTAL	900.00

PUMP MAINTENANCE (PER MONTH)

Supplies	[illegible]
Labor (16 manhours at $50.00/hr)	800.00

OVERALL TOTAL*

coating facilities (4 x $5300.00)	21200.00
cleaning facilities (4 x $900.00)	3600.00
pump maintenance (12 x $800.00)	9600.00
about	34,400.00

* all per coating and cleaning items are multiplied by a factor of four, assuming that the mirror is recoated every six months, and the possibility of having to try twice to get a satisfactory coating.

ORIGINAL PAGE IS OF POOR QUALITY

Figure 4.2.2.1: Cost Per Year To Send Secondary Mirror Out To Be Recoated*

year	cost	
1	$ 600.00	
2	630.00	= (600.00 + .05(600.00))
3	661.50	
4	694.58	
5	729.31	
6	765.78	
7	804.07	
8	844.27	
9	886.48	
10	930.80	
11	977.34	
12	1026.21	
13	1077.52	
14	1131.40	
15	1187.97	
16	1247.37	
17	1309.74	
18	1375.23	
19	1443.99	
20	1516.19	
TOTAL	$19,840.00	IF COATED ONCE A YEAR
	$39,700.00	IF COATED TWICE A YEAR

* Assuming that the cost to contract out the recoating of a mirror in bare aluminum is in present dollars, $50.00 per inch diameter. The secondary mirror is 12 inches in diameter. Inflation is assumed 5% each year.

Figure 4.2.2.2: Cost Per Year To Send Aluminized Tertiary Mirror Out To Be Recoated*

year	cost	
1	$ 950.00	
2	997.50	= (950.00 + .05(950.00))
3	1047.38	
4	1099.75	
5	1154.74	
6	1212.48	
7	1273.10	
8	1336.76	
9	1403.60	
10	1473.78	
11	1547.47	
12	1624.84	
13	1706.08	
14	1791.38	
15	1880.95	
16	1975.00	
17	2073.75	
18	2177.44	
19	2286.31	
20	2400.63	

TOTAL $31,413.00 IF COATED ONCE A YEAR

$62,826.00 IF COATED TWICE A YEAR

* Assuming that the cost to contract out the recoating of a mirror in bare aluminum is in present dollars, $50.00 per inch diameter. The tertiary mirror is about 19 inches along the major axis of the ellipse. Inflation is assumed 5% each year.

6.0 BIBLIOGRAPHIES

1) "Construction of Ground Support Facilities for the Stratospheric Observatory for Infrared Astronomy (SOFIA)", Ames Research Center, Facilities Planning Office.

2) "SOFIA Telescope System and Related Reqirements-Specification SOF-1011", Ames Research Center,

3) "Aluminizing Plant Procedures" by Thomas Gregory, Canada-France-Hawaii Telescope Corporation. July 28, 1986.

4) Erickson, E.F. "Coating Considerations for SOFIA Telescope Mirrors." November 10, 1988.

5) "Iraqi National Astronomical Observatory Operation and Maintenance Manual-Section 7.3.7 Aluminizing Plant" by ZEISS, Inc. January 10, 1985.

6) Herter, Terry. "Considerations for Minimizing Coating Degradation, Washing and Cleanliness." September 14, 1989.

7) Benson, Nels, Georg Hass and Noel Scott. "A 72 inch High Vacuum Evaporator and It's Glow Discharge Equipment." Journal of Optical Society of America. Volume 40, number 10. October 1950. pp 687-89.

8) Macleod, H.A. "Thin-Film Optical Filters-2nd Edition." MacMillan Publishing Co. 1986.

9) Maissel, Leon and Reinhard Glang. "Handbook of Thin Film Technology." McGraw-Hill Book Co. 1970.

10) Noller, Eugene and Robert Frazer. "Aluminizing of the 7.01m Collimating Mirror for the JPL 7.62m Space Simulator." NASA-TM 33-485. Jet Propulsion Laboratory. July 15,1971. N71-32278.

11) "Telescope Assembly Definition Phase B Final Report." by ZEISS, Inc. August 1989.

APPENDIX A: TRIP REPORTS

1) LICK OBSERVATORY
2) SCHRADER SCIENTIFIC, INC.
3) BATTELLE NORTHWEST, INC.

REPORT #1: LICK OBSERVATORY

is to use substances that will not give off small particles.
- Using only lights that are flush with the ceiling so that dust will not collect on the top of them which has the possibility of falling on to the mirror.
- Place a type of trap underneath the motor of the crane to catch any oil or dirt that may fall on to the mirror.

3) Contemplate overcoating the mirror. There is a trade-off between the initial loss of reflectivity when the mirror is coated and the length of time that it will go without needing cleaning/coating. The reflectivity will not decrease, over time, to the extent that it would with an uncoated mirror.

4) Make sure that the edges of the chamber are far enough from the mirror itself to keep edge effects from occuring. The aluminum will bounce off of the walls of the chamber and cause nonuniformity of the coating, i.e. nonuniform thickness, which compromises the proper curvature of the mirror.

5) The final cleaning can be done in the chamber with the use of an ion-gun. It uses ionized particles to "blow away" any dirt/dust and old coating left after the initial cleaning and striping of the mirror. Another possible method is to employ "glow discharge", a technique where electrons bombard the substrate causing the descorption of the thin film covering it.

6) A roots rotary blower will speed up the roughing time when used in conjunction with a mechanical pump.

7) To create a better vacuum (dispose of any water vapor) and make the chamber as particle free as possible, place copper or stainless steel coils called "Meissner coils" on the inside tank wall. After the chamber is pumped down run liquid nitrogen through them, this should cause whatever molecules are left in the tank to condense on the coils. Coat immediately.

Julie A. Pollitt

PRECEDING PAGE BLANK NOT FILMED

EEE: 213-4

April 10,1989

TO: Nans Kunz, Project Manager, SOFIA, Systems Engineering Division

FROM: Julie A. Pollitt, Systems Engineering Division

SUBJECT: Shrader Scientific Trip on February 7,1989

Shrader Scientific has been contracted to do the mirror coating chamber for the new Keck Observatory scheduled to open in 1991 in Hawaii. The Keck mirror is made up of 36 individual hexagonal segments that will act together as one. Each segment is about 6 feet across. These segments will be coated separately in this chamber. Shrader was under the constraint that the chamber be constructed for $200,000 or less. They suceeded mainly by using carbon steel rather than stainless, and buying some of the pumping equipment on the secondhand market. The preliminary design work was done by several individuals, William Brown at Lick was one of them. The detail design work was done by Keck's engineers. The mirror coating facilities were 90% done and were to be shipped to Hawaii before the end of March.

The chamber is cylindrical with dished heads. It's axis is oriented vertically. The dished top of the chamber is removed, via a crane, to place the mirror inside. The chamber from the dished top down and all of the vacuum pumping system will sit beneath the floor which consists of grating. This was done for the purpose of restricting the amount of handling of the mirror. It will also protect people from the hot parts of the pumping system. The pumping system consists of a diffusion pump in series with a roughing pump.

The mirror segment will hang with the surface to be coated facing downwards. The final cleaning is to be done in the chamber using the glow discharge method. The coating technique employed, the same as at Lick Observatory, is refered to as evaporation deposition using resistive heating of tungsten filaments. The filaments are arranged in a singular circle. A hatch in the bottom dish allows easy access to the tungsten filament arrangement to drape the pieces of aluminum.

The outside of the chamber will be painted, in situ, to resist corrosion. However it will only be painted after it is checked for leaks. Paint tends to mask leaks.

They had a very strong suggestion, to design the building around the coating/cleaning facilities. This will alleviate many potential problems that arose for Shrader. There were two main problems they ran into. The first, the chamber could not fit in one piece in the access way to the room in which it was to be placed, and the second, there will be a lot of difficulty reaching and servicing the components of the pumping system as there is not enough room.

Other advice they passed on:

1) Use glow discharge to do the final cleaning in the chamber.

2) Place the mirror in either the vertical position or facing downwards in a horozontal position. This alleviates the problem of aluminum dripping, falling on to the mirror when it is being heated up by the tungsten filaments.

PRECEDING PAGE BLANK NOT FILMED

Engineering
Drawing of
Schrader Scientific
Vacuum Chamber
Not Included here
but will be in final
Report Copy

Can't go out to
a contractor
because proprietary info
of Schrader Sci.

EEE:213-4

TO: Distribution

FROM: Julie A. Pollitt, Systems Engineering Division

SUBJECT: Battelle Northwest Trip on February 28, 1989

Battelle Northwest as compared to the other sites visited was much more sophisticated. They were doing special laser quality coatings on substrates up to 2.2m (87 inches) for the U.S. government. Attached to this sheet is excerpts from a paper written by Walter T. Pawlewicz, who we met with, on the facility. Included is a description of the facility, the coating process used, the facility layout, and several photographs of it.

Julie A. Pollitt

COATING CHAMBER

The 2-meter chamber is a scaled-up and improved version of a 0.3-meter dc magnetron sputtering system in use at Pacific Northwest Laboratory (PNL) for several years [2]. Figure 1 shows the fully-scaled chamber configured for coating substrates up to 2.0 meters in diameter. The stainless steel chamber is 2.8 meters wide (112 inches), 3.2 meters high, and weighs about 4 tons. Control instruments for the sputtering equipment are also shown: pressure/flow controllers for the reactive gases, 20-kW magnetron power supply, and both single-wavelength and broad-band optical monitors. The stainless steel chamber is 2.8 meters wide (112 inches) and weighs 7500 pounds. Built in three sections so that each section could be brought down the hallway on its side with minimal ceiling clearance, it is the largest chamber that could be installed in the laboratory without removing walls or widening doorways. For substrates with diameters between 1 and 1.5 meters, the central chamber section is not needed, and the overall height is about 2.1 meters (7 feet). For larger substrates, the total chamber height is 3.2 meters (10.5 feet).

The chamber is located in a 1250-square-foot laboratory shown in Figure 2 that was specially renovated for fabrication of optics up to 2.1 meters in diameter and weighing up to 1000 pounds. The chamber abuts one laboratory wall, with a vane pump, Roots blower and cryopump in a neighboring service corridor. A dedicated gantry with two trolley hoists is used to load and unload large substrates. Substrates are cleaned in three Class-100 cleanroom modules, one of which is portable to transport the substrate to the loading area. After coating, the large optic is stored in a cleanroom module, and rapidly characterized with a portable diode-array spectrometer system.

The chamber uses a coating geometry that is novel for sputtering: central substrate rotation at the top of the chamber and offset (from the axis of rotation) symmetrically located sources at the bottom [4]. This geometry produces the coating thickness uniformity required for precision laser mirrors, and also allows coating the largest substrates using the smallest possible chamber. The long source-to-substrate distances are made possible by the long gas-scattering mean-free-path [5, 6] for metal atoms ejected from the source with average energies of 8 eV [7]. Three critical uniformity tuning parameters are the substrate height, the source offset, and the source tilt.

Figure 3 shows the chamber equipped with three 6 x 30-inch planar dc magnetron cathodes. Each is mounted on a stage for radial offset translation and independent tilt and azimuth adjustment. The cathodes are shown in the positions required for coating 2-meter substrates. For smaller-diameter substrates, the cathodes are positioned closer to the chamber center.

The large substrate is rotated at the chamber top. The rotation is currently simple, and no trim masking is used to adjust thickness uniformity. Double-planetary rotation will be added in early FY-89 to further improve uniformity. A large rotatable shutter is used for preconditioning the sputtering cathodes.

A-

FIGURE 1. 112-inch coating chamber for coating 2-meter laser optics.

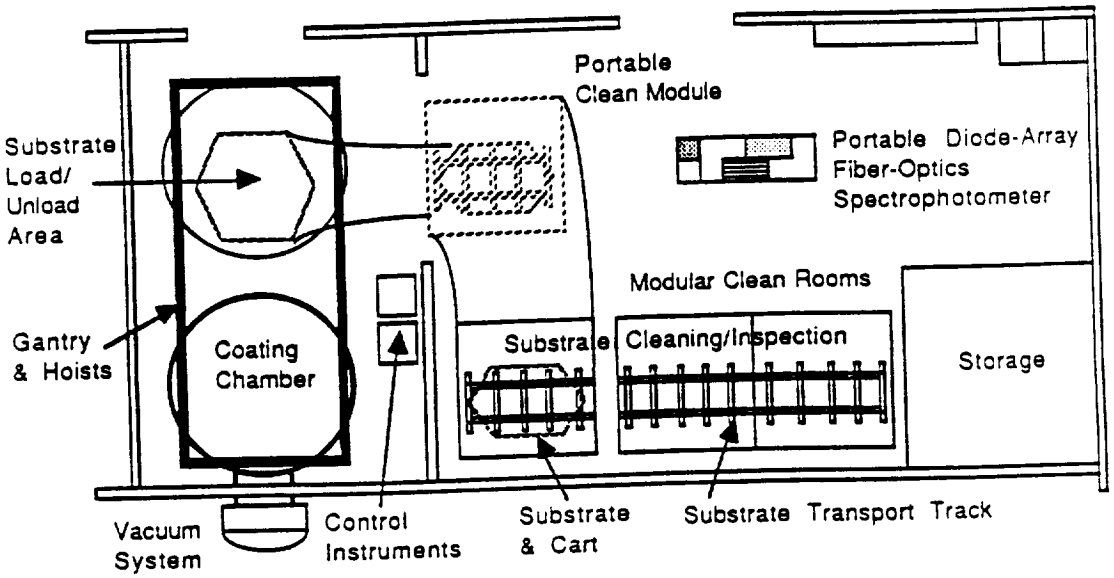

FIGURE 2. Floor plan for Large Optics Coating Laboratory.

Coating
Chamber
ASSY

Drawing #1

Engineering Drawing
of Battelle N.W.
Vacuum Chamber
assembly.
Not Included here but
will be in final copy

APPENDIX B: MIRROR CLEANING/COATING FACILITY REQUIREMENTS REPORT

NOTE that use of the Mirror Cleaning/Coating Facility Requirements Report requires locating the most recent version.

APPENDIX C: BLUEPRINTS-VIEWS OF THE MIRROR COATING AND CLEANING FACILITY

NOTE that use of these drawings requires locating the most recent versions.

SOFIA-MIRROR CLEANING/COATING FACILITY REQUIREMENTS DOCUMENT

2/90

by Julie A. Pollitt
NASA-Ames Research Center
Mechanical Systems and
Controls Branch (Code EEE)

TABLE OF CONTENTS

1.0 INTRODUCTION 1

2.0 DESCRIPTION OF THE FACILITY 2

3.0 FACILITY BUILDING REQUIREMENTS 20

3.1 General Requirements 21
3.2 Clean Room Requirements (HVAC) 26
3.3 Second Floor Platform Requirements 33
3.4 Power, Water, Air Requirements 37
3.5 Chemicals and Compressed Gases 40
3.6 Waste disposal and Safety Equipment 41
3.7 Earthquake and Vibration Requirements 42

4.0 APPENDICES

Appendix A: Background Information

"SOFIA-Additional Facility Requirements, Mirror Handling Equipment and Procedures"

"SOFIA-Mirror Stripping/Cleaning Procedures and Methods"

Appendix B: Manufacturers Equipment Specifications Sheets

Pumping System Components

Control System Components

1.0 INTRODUCTION

The Stratospheric Observatory For Infrared Astronomy (SOFIA) is a 2.5 meter telescope mounted in a Boeing 747SP jet. Telescopes consist of mirrors which gather light from space and then reflect it to the proper instruments. The mirrors themselves are ceramic pieces coated with thin layers of a metal. As time passes, the metal oxidizes and gets dirty. The mirror is no longer able to reflect a proper amount of light. It must then be removed from the telescope, cleaned, stripped of the old coating, and recoated. This will occur on the order of once or twice a year. The following report gives the ground support facility requirements to perform these duties.

It is assumed that the typical person has no prior knowledge of the facilities to clean and coat large optics. To alleviate this, Section 2.0 contains a brief description of how the facility will appear, including drawings, and the main activities that will take place within it.

Section 3.0 has the building facility needs. These needs include square footage, power, water, air, waste disposal and safety, degree of clean room requirements, earthquake, vibration and other miscellaneous needs.

Appendix B contains the manufacturers specification sheets on the equipment for the pumping system and control systems. These are provided to anticipate any questions on the power, air and water requirements. Mirror handling is addressed in Appendix A. Stripping and cleaning procedures for all four mirrors can also be found in Appendix A.

2.0 DESCRIPTION OF FACILITY

The following is a summary of a design concept for the mirror cleaning and coating facility. See Figure 2.0-0 for the conceptual plan view of the whole facility.

There are minimal requirements to assure that the mirror coatings are successful. Successful in the sense that they have a high reflectivity and good adhesion to the optical surface. A principal requirement is that the facility be "relatively" clean; hence, no dust/dirt particles remain on a mirror leaving pinholes when it is coated. Pinholes reduce reflectivity: this leads to a bad coating. Most of the activities that take place in the facility are to keep this from happening.

Mirror handling:

All of the four mirrors will be removed from the plane, as it rests in the high bay, through the use of a special device refered to as the manipulator (Figures 2.0-1, 2.0-3, and 2.0-4). The telescope cavity door is opened. The manipulator, with a device designed specifically for the purpose, extracts the secondary mirror and spider (Figure 2.0-1). These are then set aside on a stand (Figure 2.0-2). The supporting tube containing the tertiaries is removed and also set upon a stand (Figure 2.0-3). Next the manipulator, with a device to attach to the primary mirror, reaches in and extracts the mirror (Figure 2.0-4). The primary mirror is placed onto a transport cart (Figure 2.0-5) and moved into the cleaning/stripping area. The secondary is removed from the spider and the tertiary mirrors are removed from the supporting tube. All the smaller mirrors are light enough to be handled manually once out of their mounts. They are then also brought into the cleaning area.

Further lifting of the primary will be required in the coating area when it is taken off the transport cart and placed in the chamber. A bridge crane will be sufficient for this. At any time while out of the plane the primary mirror will have a plastic cover (Figure 2.0-6) except when it is being cleaned or stripped or coated. The current recommendation by the telescope system contractor, ZEISS Inc., is that the primary mirror remain facing upwards, as it does when in the telescope, if the mirror cell is removed. If the mirror cell or similar support stays attached, the transport cart must have the ability to rotate the mirror 180 degrees.

The cleaning and stripping facility:

The cleaning/stripping area consists of further segregated areas with water, ventilation, and chemical waste disposal. The cleaning procedure will closely follow that of most observatories; acids will be used for stripping the old coating off and soap will be used to wash. The choice of chemicals and the finer details of the procedure depend on one's individual preferences.

The primary mirror is cleaned/stripped on the transport cart or in an acid and corrosion resistant cleaning bin (see Figure 2.0-7). If done on the transport cart it is done in a horizontal orientation facing upwards if the mirror cell is detached (see Figure 2.0-8). If the cell remains it is convenient to clean and strip it oriented vertically (see Figure 2.0-9). In the cleaning bin it will be oriented horizontally. The final cleaning must be done in the chamber before closing it. Glow discharge may be used while the mirror is under vacuum.

The smaller secondary and tertiary mirrors can be cleaned and stripped in a corrosion and acid resistant sink.

Primary mirror coating chamber:

The chamber will be cylindrical in shape with dished ends. The axis of the cylinder will be oriented vertically or horizontally. The approximate dimensions are 10 feet in diameter by 10 feet long. It will be constructed of a mild steel (rather than a stainless) which is less expensive and sufficient for the present coating needs.

One of four options for chamber design must be chosen (see Figures 2.0-10, 2.0-11, 2.0-12). There is not yet a picture for the fourth option. The first is the mirror facing down to be coated, Figure 2.0-10. The next two are where the mirror faces upward to be coated. In Figure 2.0-11 the chamber top is removed and the mirror placed in, and in Figure 2.0-12 the bottom of the chamber is removed and the mirror placed on it. The bottom is then moved back into place. The final option is the mirror facing sideways to be coated. Note that for the mirror to be coated facing downwards or sideways it is suggested by the telescope system contractor that the mirror cell or similar support remain attached.

The least expensive and most uncomplicated method of coating is physical vapor deposition by resistive heating of tungsten filaments. To assure within 10% uniformity of the coating the chamber interior should consist of 2 or 3 concentric circles of filaments (see Figure 2.0-13). A total number of forty filaments

is needed to coat the mirror facing downward or sideways. If it must be coated looking up then the number will be greater to outweigh the loss due to the shields in place to keep the hot aluminum from falling onto the surface of the mirror.

The pumping system consists of a (Stokes) mechanical pump with a pumping speed of 300 cfm. A Roots Rotary Blower will be used in conjunction with the mechanical pump to increase the pumping speed to 2300 cfm. In series with the mechanical pump is a 35 inch oil diffusion pump. The pumping speed of the diffusion pump is 52,000 liters/sec for air. The total pumping time from atmospheric pressure to 10 Torr is about two hours. The pumping system layout is seen in Figure 2.0-14.

Diffusion pumps are notorious for backstreaming oil into the chamber. To alleviate this problem, baffles which are liquid-nitrogen cooled can be used. They are located between the high vacuum valve and the diffusion pump. A high vacuum valve attaches the diffusion pump to the vacuum chamber. A roughing valve is found between the mechanical pump and the chamber. A backing valve is situated between the diffusion pump and mechanical pump. Appropriate gauges monitor the pressures at several locations.

Secondary/Tertiary mirror coating:

The first option is to contract out all of these mirrors to be recoated. The second option is to purchase an off-the-shelf, complete vacuum coating chamber to do all three. The third option is to send the dichroic tertiary elsewhere to be coated and to purchase an off-the-shelf chamber to coat the other two. There is a fourth option which also involves sending the dichroic tertiary out. There is an old, complete vacuum chamber, of the correct size, unused and stored here at AMES which could be rebuilt. The cost to do this is unknown but there are companies in the San Francisco area that do this type of work.

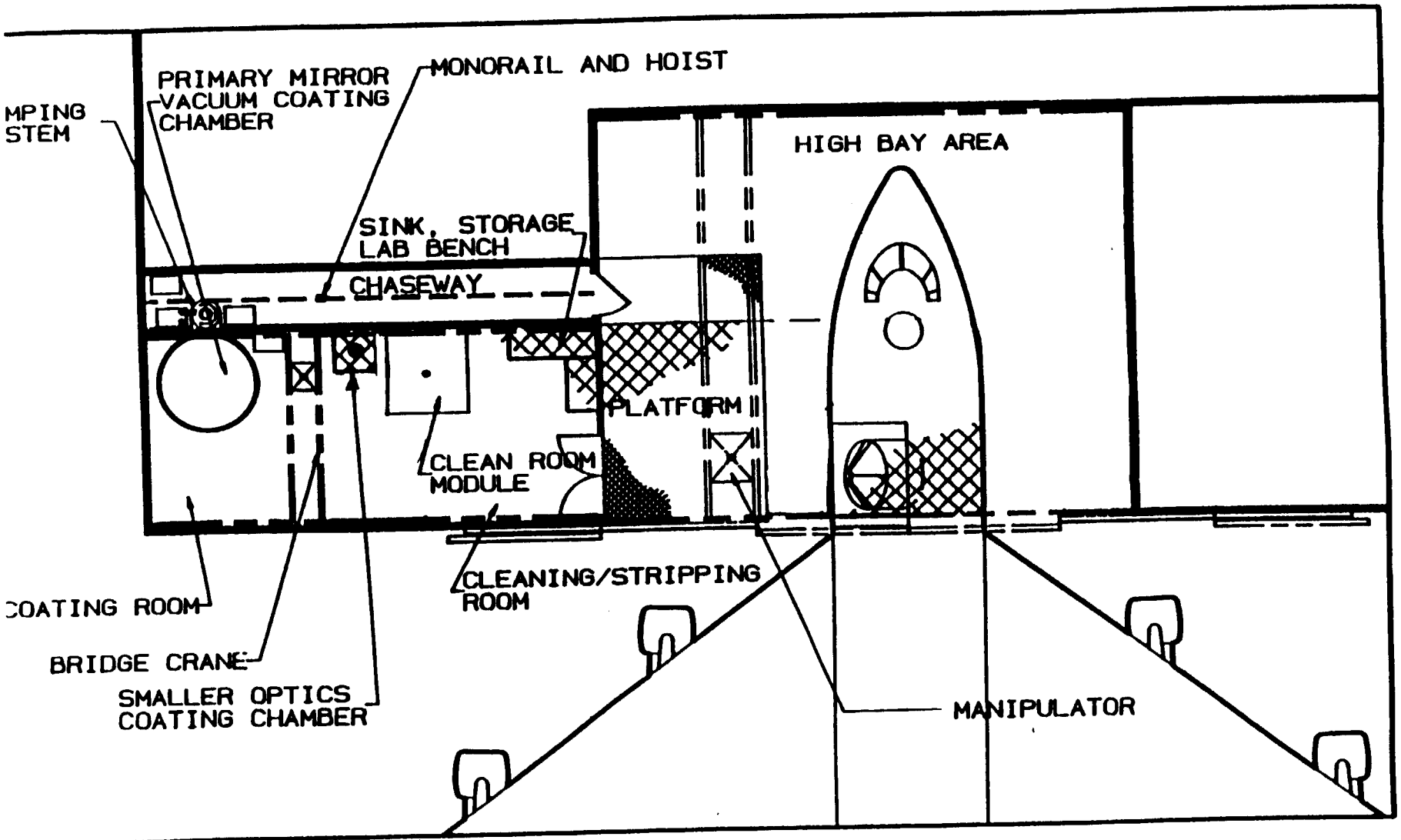

PLAN VIEW

Figure 2.0-0

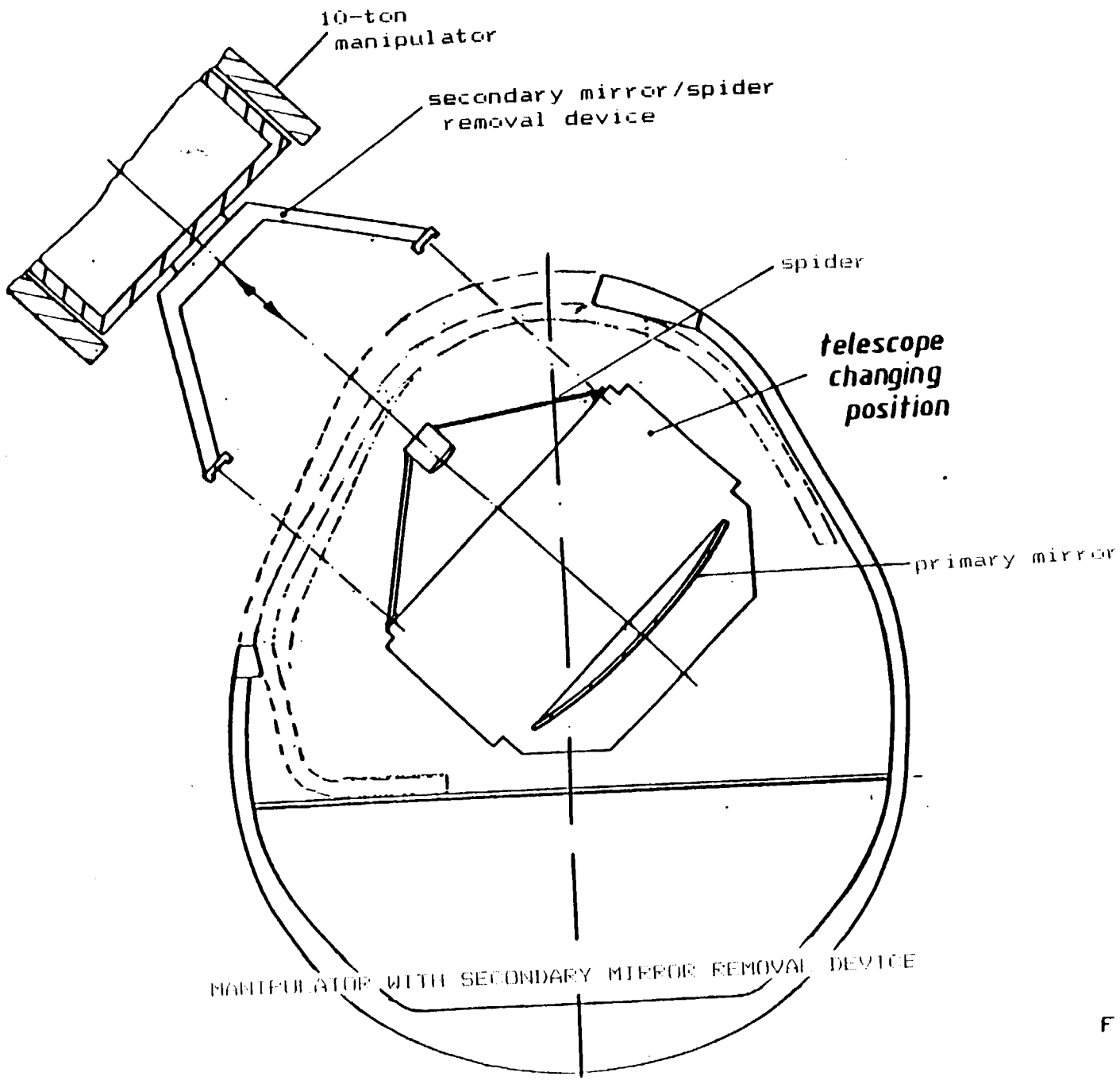
10-ton
manipulator
secondary mirror/spider
removal device
spider
telescope
changing
position
primary mirror
MANIPULATOR WITH SECONDARY MIRROR REMOVAL DEVICE

Figure 2.0-1

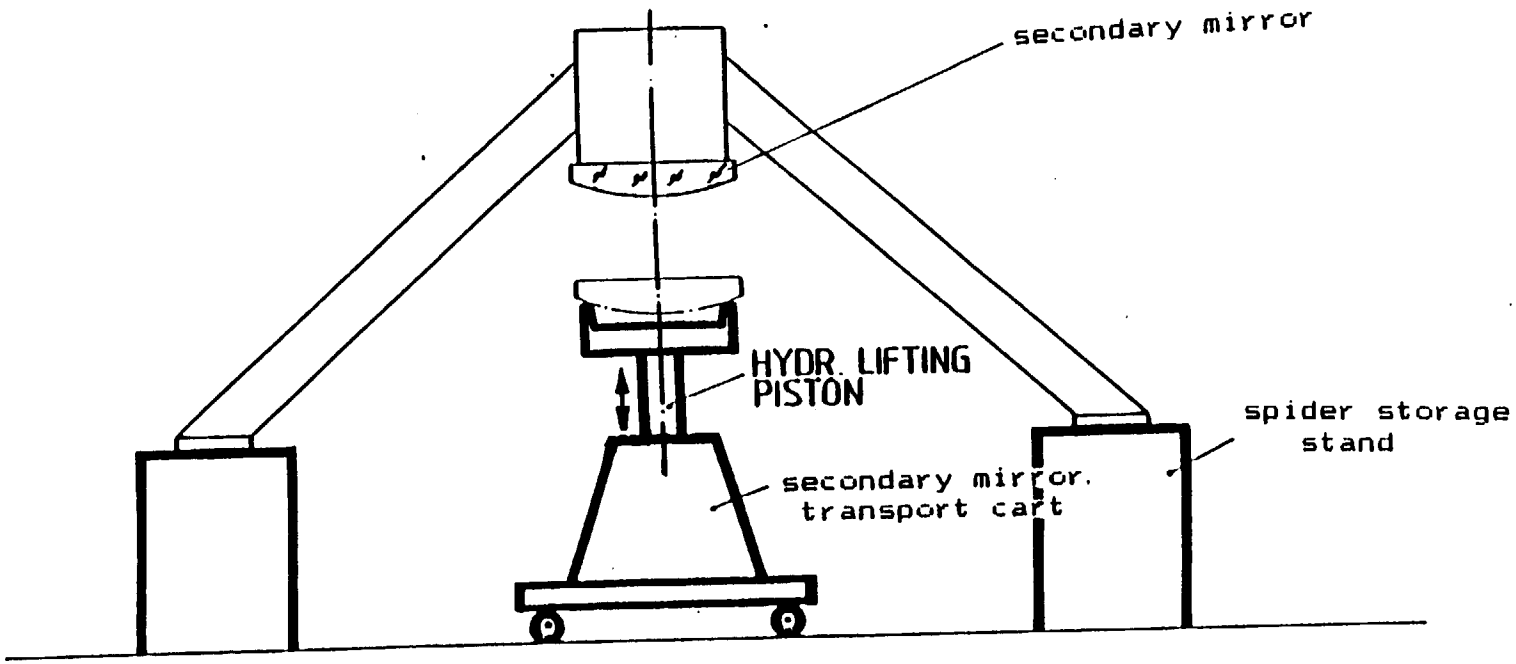

SECONDARY MIRROR SPIDER STAND

Figure 2.0-2

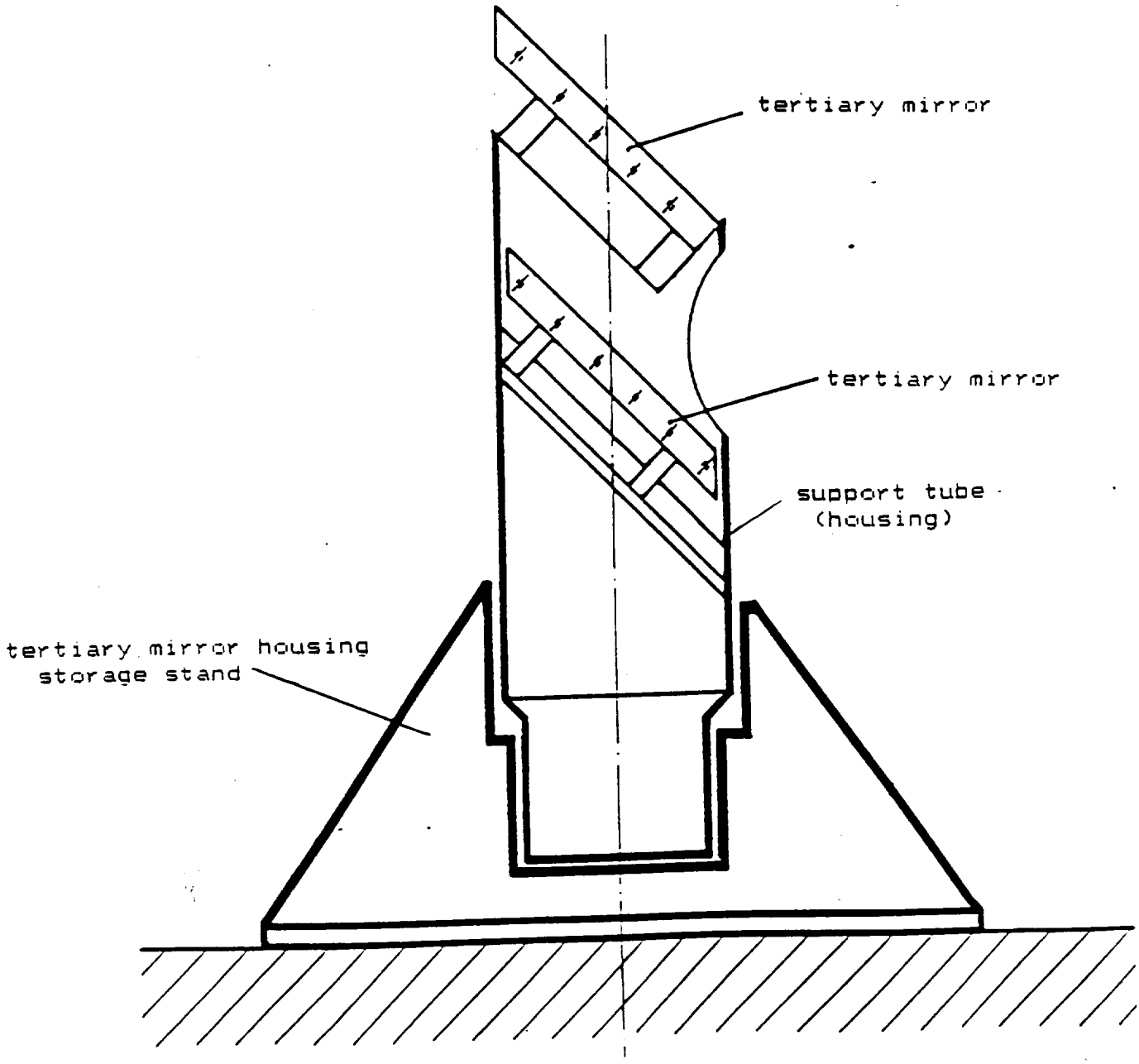

TERTIARY MIRROR'S HOUSING STAND

Figure 2.0-3

REMOVAL OF PRIMARY MIRROR

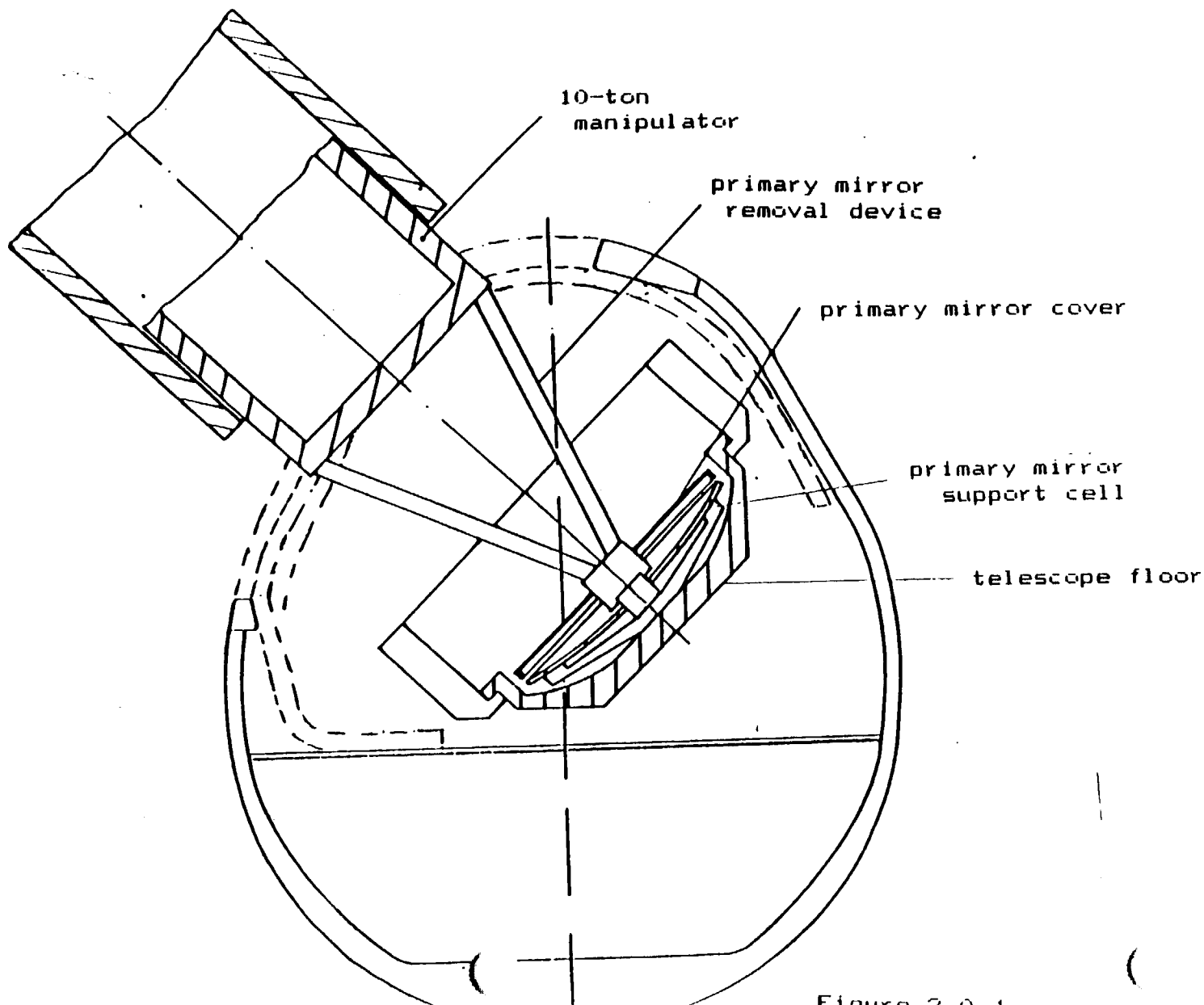

Figure 2.0.1

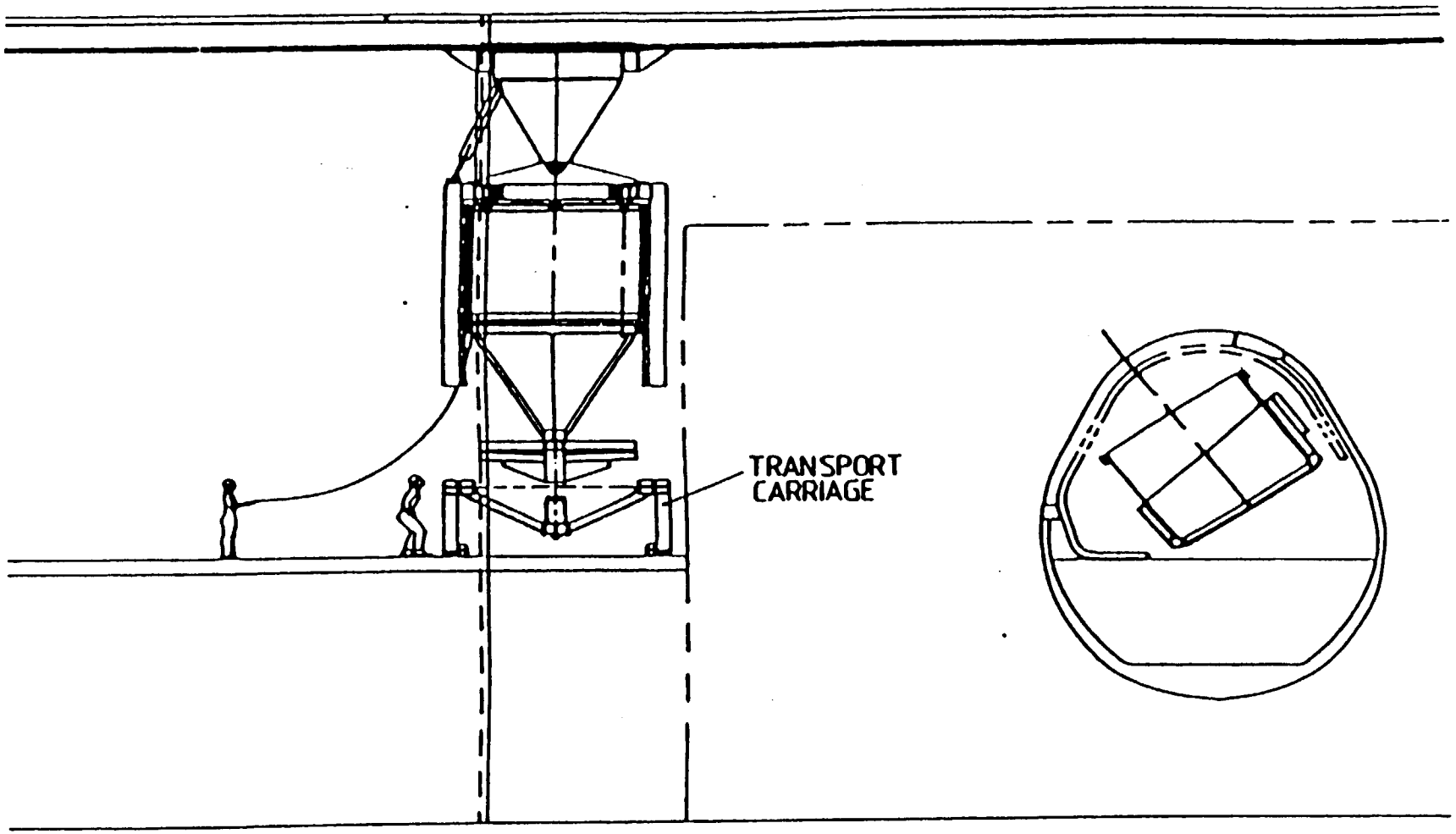

PRIMARY MIRROR TRANSPORT CART

Figure 2.0-5

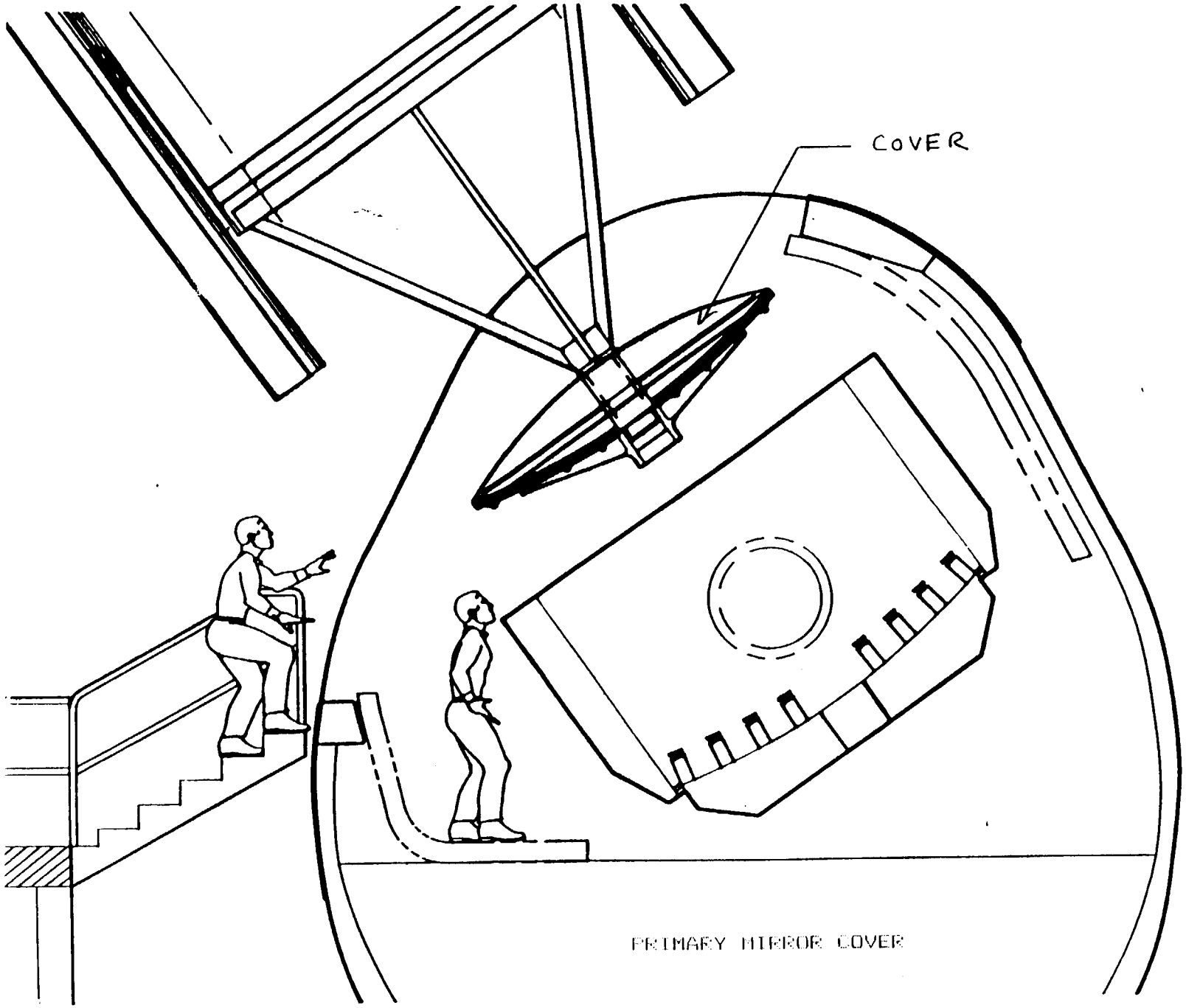

Figure 2.0-6

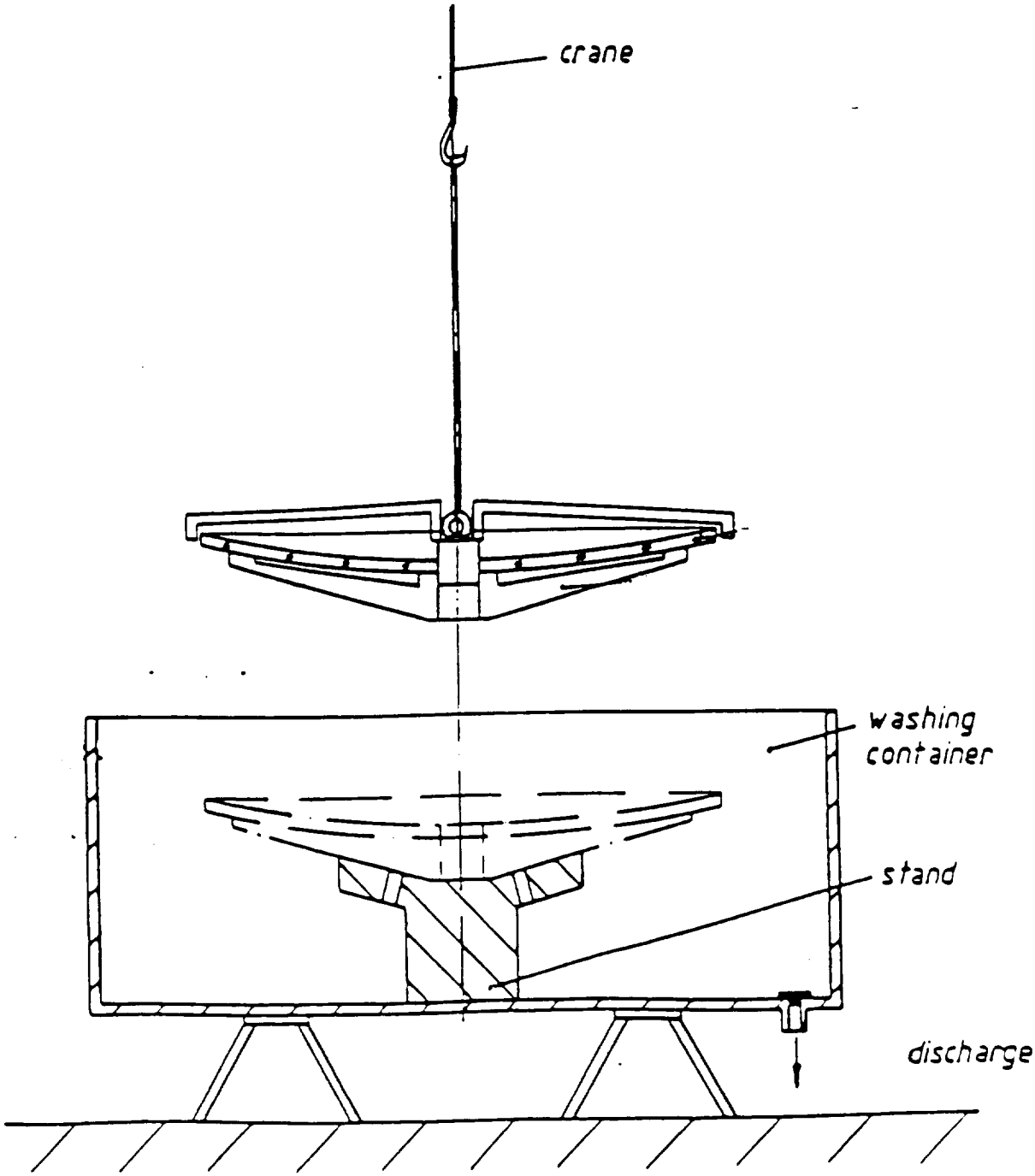

CORROSION RESISTANT CLEANING BIN

Figure 2.0-7

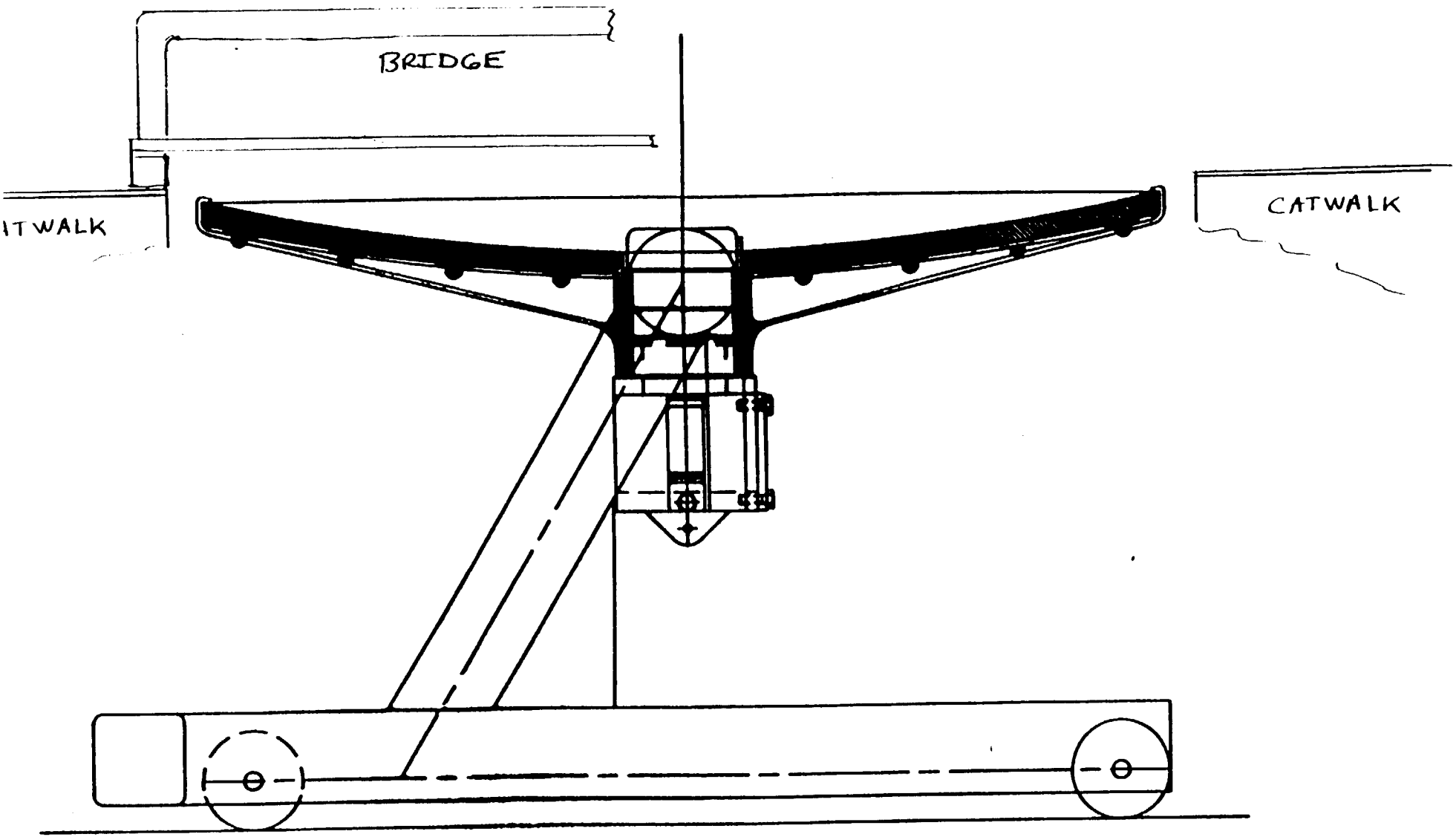

CLEANING WITH MIRROR SUPPORT CELL REMOVED

Figure 2.0-8

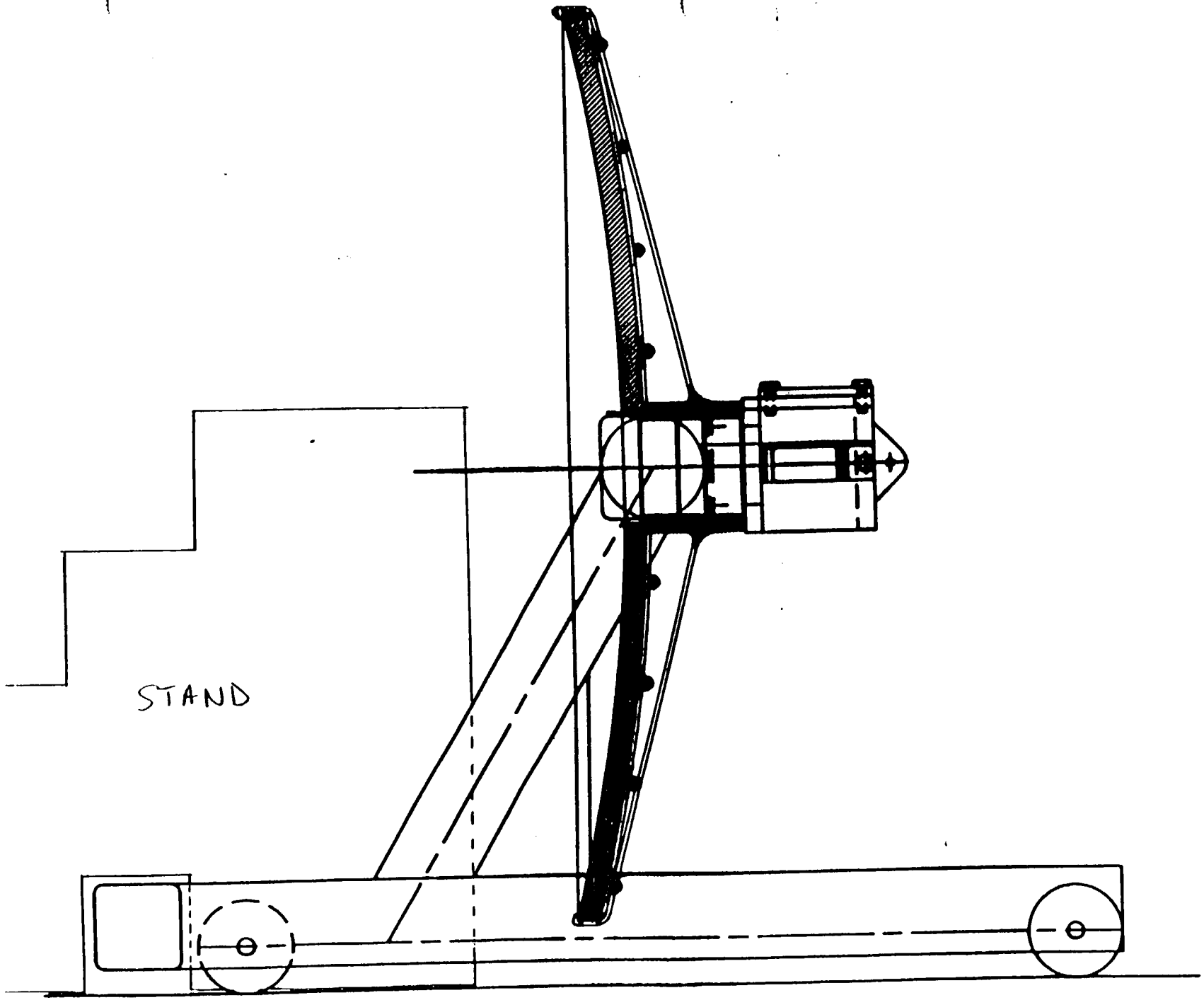

VERTICAL CLEANING POSITION

Figure 2.0-9

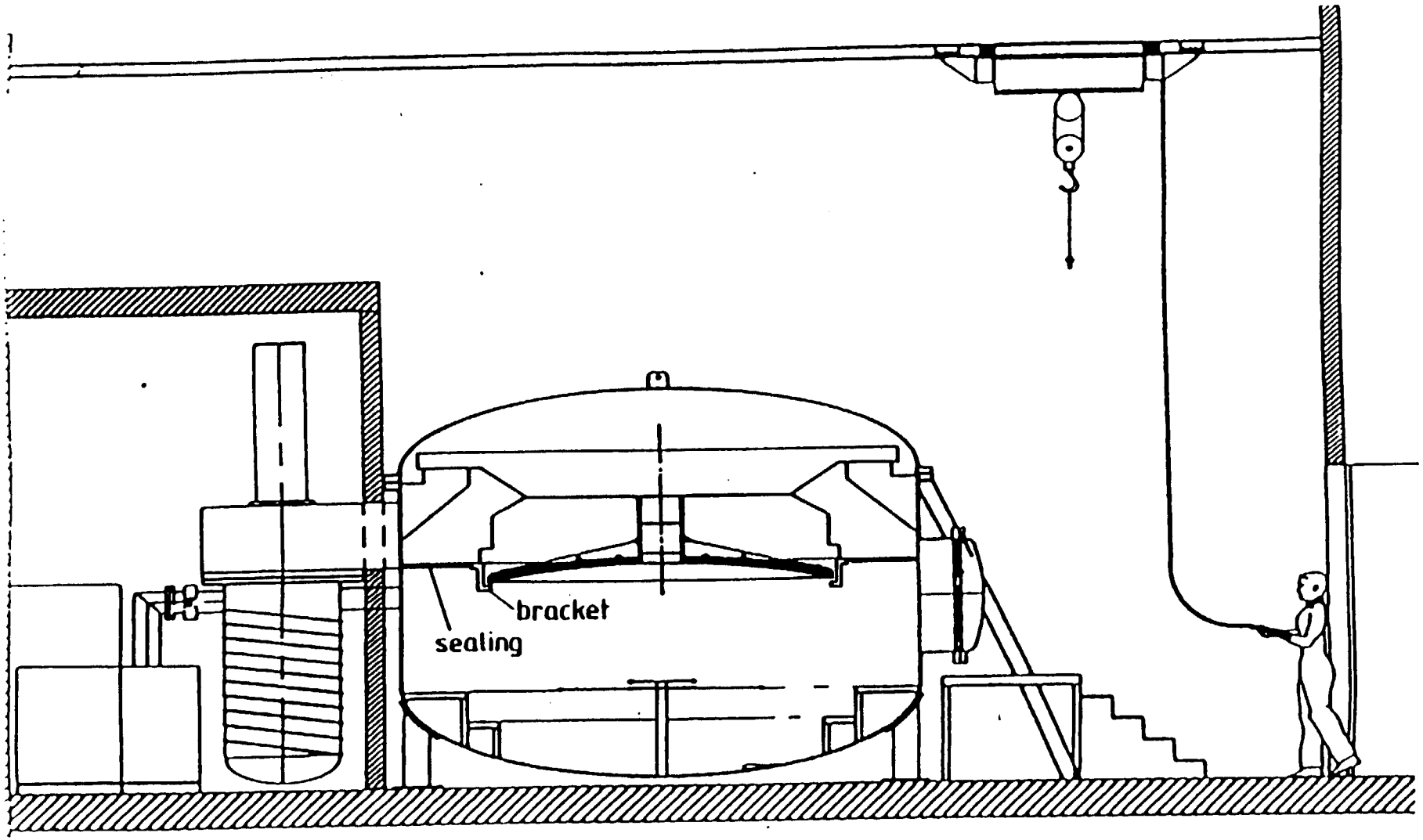

OPTION #1 - FACE DOWN MIRROR COATING

Figure 2.0-10

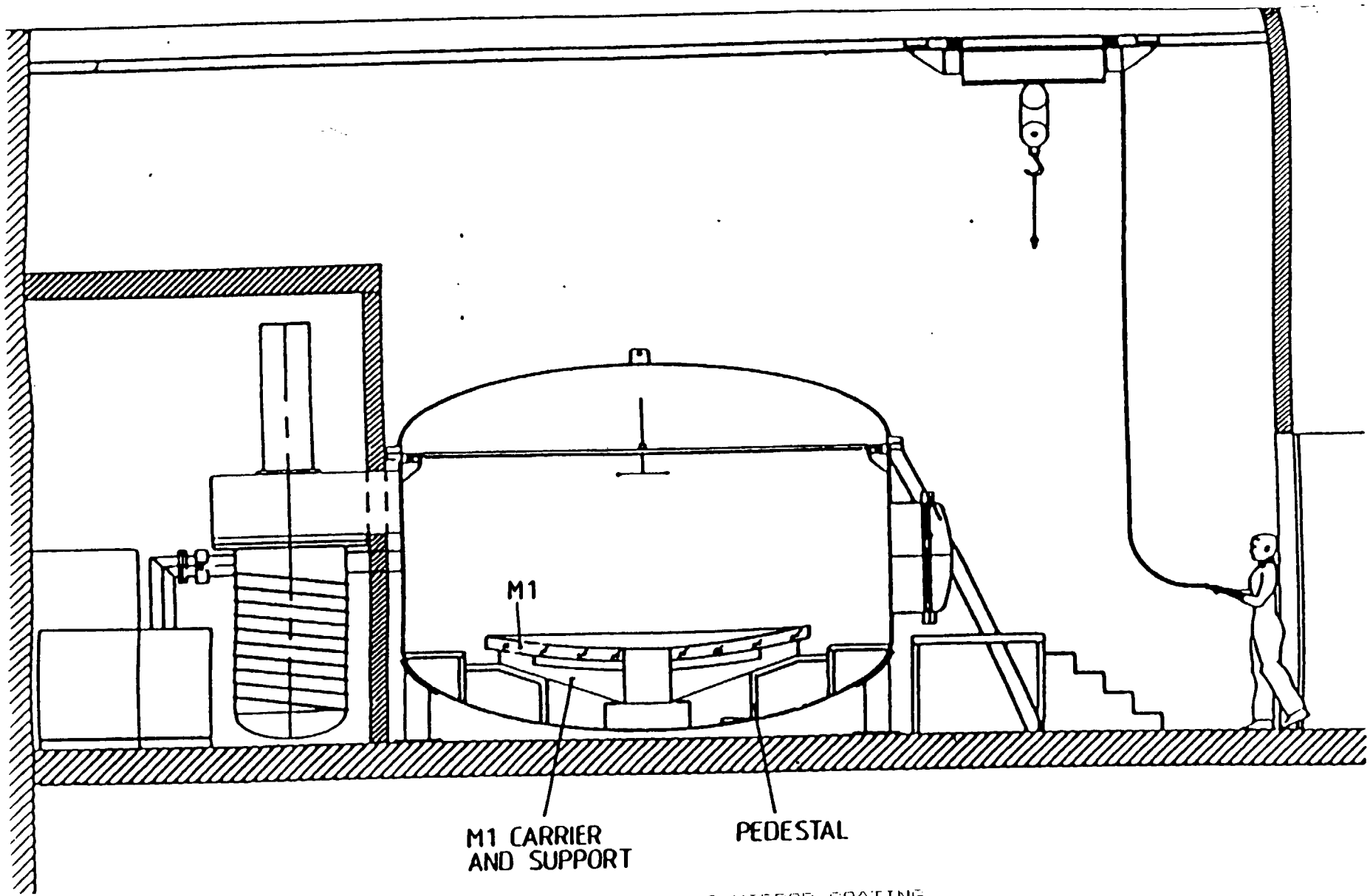

OPTION #2 - UPWARD FACING MIRROR COATING

Figure 2.0-11

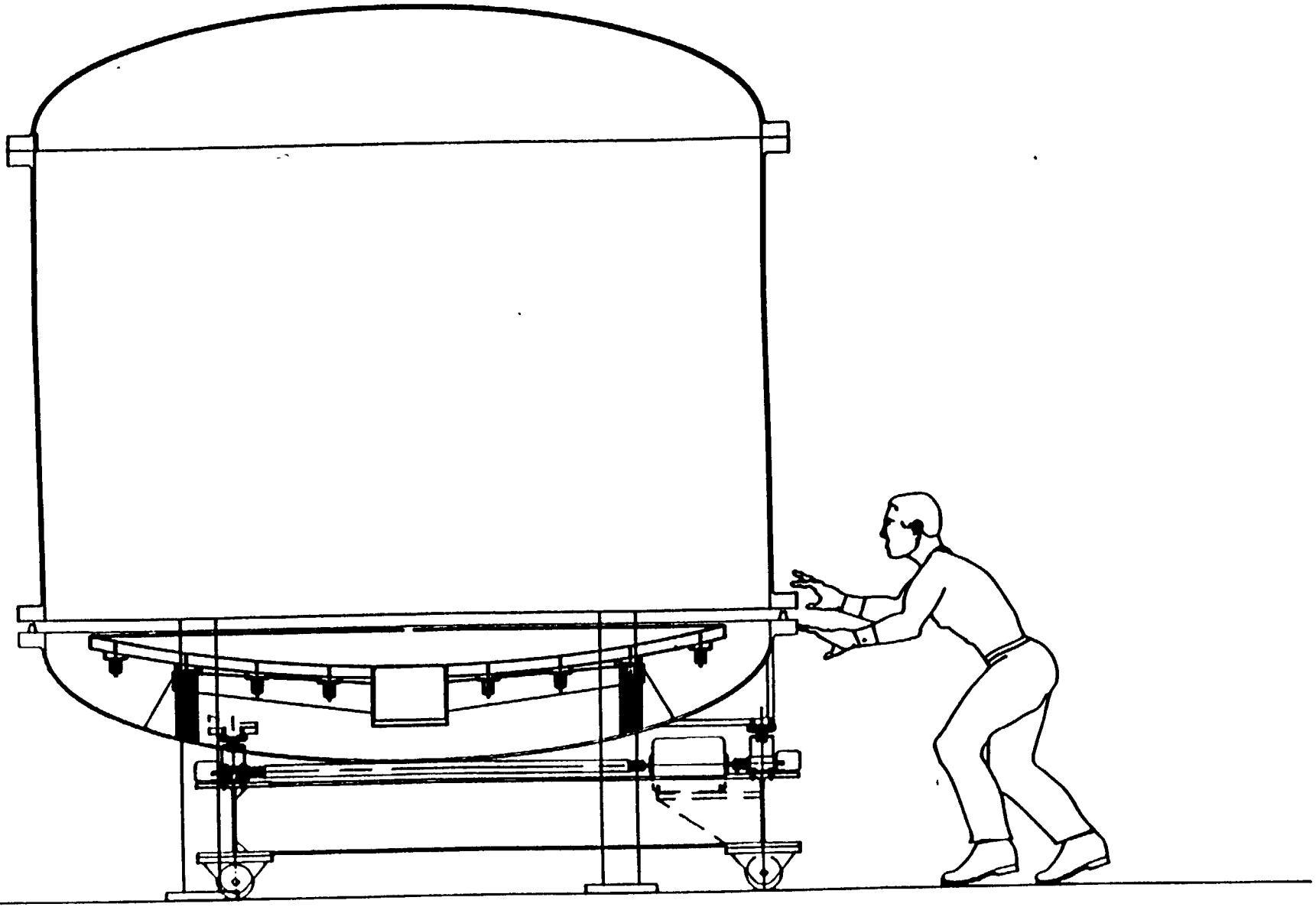

OPTION #3 - UPWARD FACING MIRROR COATING

Figure 2.0-12

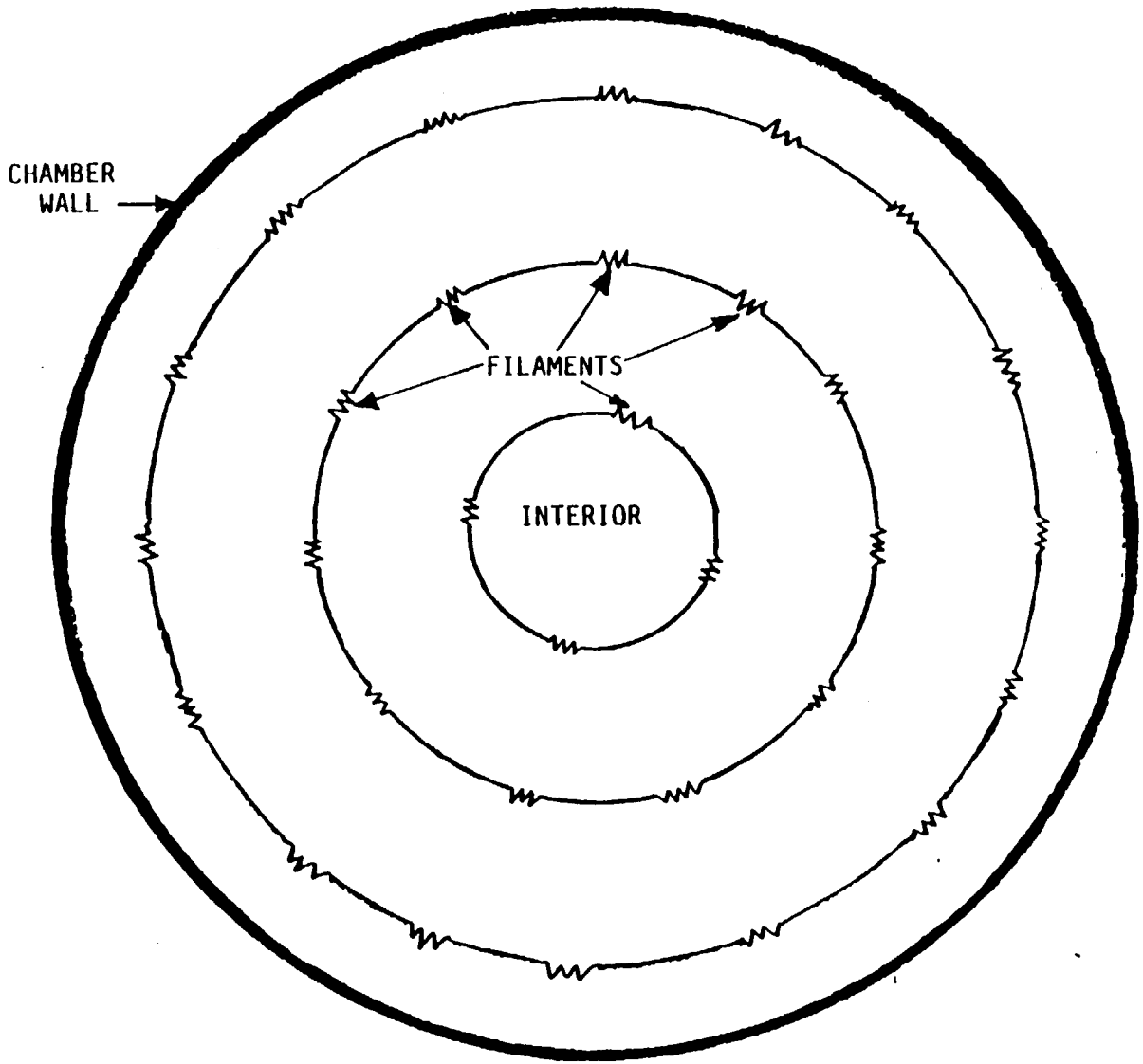

FILAMENT ARRANGEMENT

Figure 2.0-13

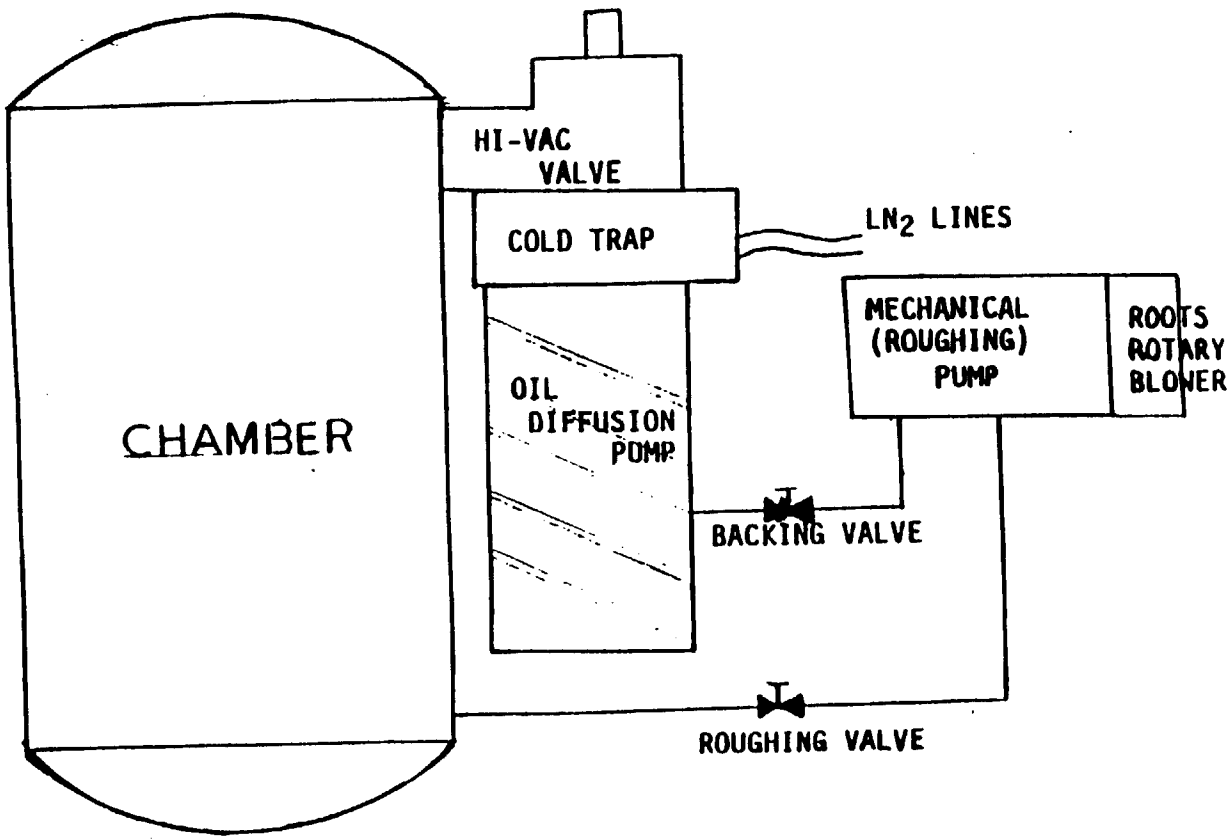

VACUUM PUMPING SYSTEM

Figure 2.0-14

3.0 FACILITY BUILDING REQUIREMENTS

The subsections contained in this portion of the report give the facility requirements. However, they are better understood by refering to Appendix A. It should be read in conjunction with this section.

3.1 General Needs

Refer to Figure 3.1-0 for a conceptual plan view of the mirror coating and cleaning facility. It will provide clarity as to where the equipment and facilities to support that equipment should be located.

The mirror, handling fixture, vacuum chamber and equipment are heavy and may require extra structural support for the floor areas including the coating area, the cleaning/stripping area, the chaseway, and, if the facility is located on the second floor, for the second floor platform (in the high bay) where the mirror is placed after being removed from the plane. The mirror will be rolled on the handling fixture throughout these areas. The present weight estimates are found in Table 3.1.

The total area that the facility will require is approximately 2500 square feet. The areas included are the chaseway, the stripping/cleaning area, and the coating area. Refer to Figure 3.1-2 for the approximate sizes and a suggested arrangement of these areas.

Three cranes will be required. The first is a bridge crane that will support the manipulator to remove the mirrors and telescope from the airplane. The bridge crane will also have to sustain a maximum moment of 111,500 foot-pounds and a weight of ten tons (see Figure 3.1-3). The second, is a monorail crane in the chase way, as seen in Figure 3.1-0, to install/remove/service the pumping system. The third is a bridge crane to move the primary mirror off of the transport cart and into the cleaning area and to move it into the vacuum chamber. One crane is used to service both the cleaning and coating areas.

The HVAC system will need to fulfill all of the clean room requirements as given in Section 3.2 of this report. The following is also required:

- controlled humidity (about 60%) in the facility. This allows for a better coating.
- air conditioning in the cleaning/coating facility. This room contains all the electronic components of the control systems. The total heat output of these components can be estimated to equal their total power input.

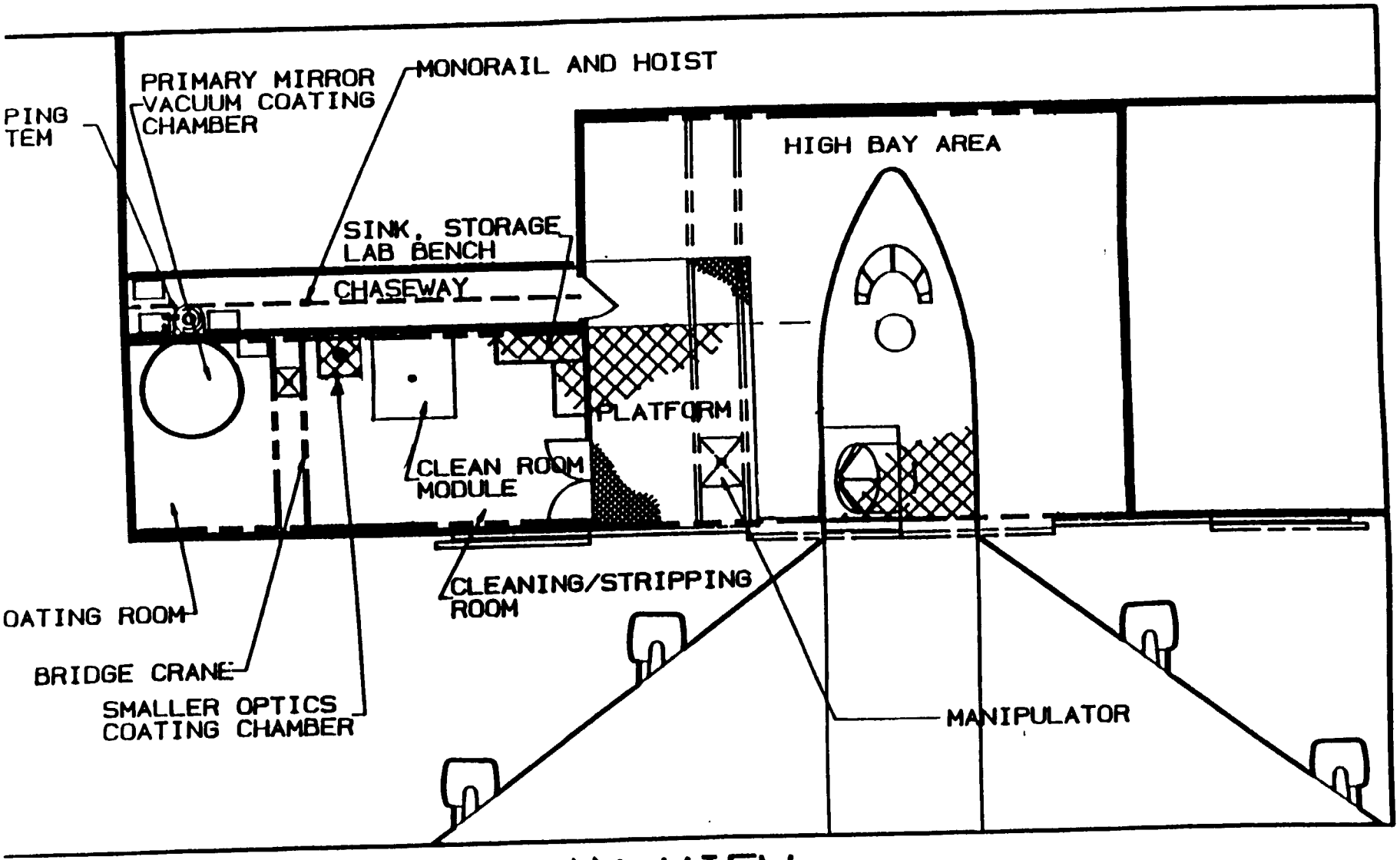

PLAN VIEW

Figure 3.1-0

TABLE 3.1 WEIGHT AND SIZE OF EQUIPMENT IN MIRROR COATING FACILITY

COMPONENT	WEIGHT (kg)	WEIGHT (lbs)	SIZE
PRIMARY MIRROR VACUUM CHAMBER	13,700	30,000	10.0' DIA.
SECONDARY MIRROR VACUUM CHAMBER	910	2000	3' x 3'
PRIMARY MIRROR TRANSPORT CART	680	1500	10' x 10'
PRIMARY MIRROR	860	1800	8.2' DIA.
PRIMARY MIRROR AND CELL	1370	3800	8.5' DIA.
PRIMARY MIRROR/CELL/TELESCOPE FLOOR	1920	4200	8.5' DIA.
SECONDARY MIRROR	4	10	1.0' DIA.
SECONDARY MIRROR AND SPIDER	160	350	10.0' DIA.
TERTIARY MIRROR	20	45	1.5' DIA.
DICHROIC TERTIARY MIRROR	20	45	1.5' DIA.
TERTIARIES AND HOUSING	80	180	1.0' DIA.
PRIMARY MIRROR CLEANING BIN	1370	3000	14.0' DIA.
TELESCOPE	3150	6930	10.0' DIA.
PUMPING SYSTEM	3650	8000	—

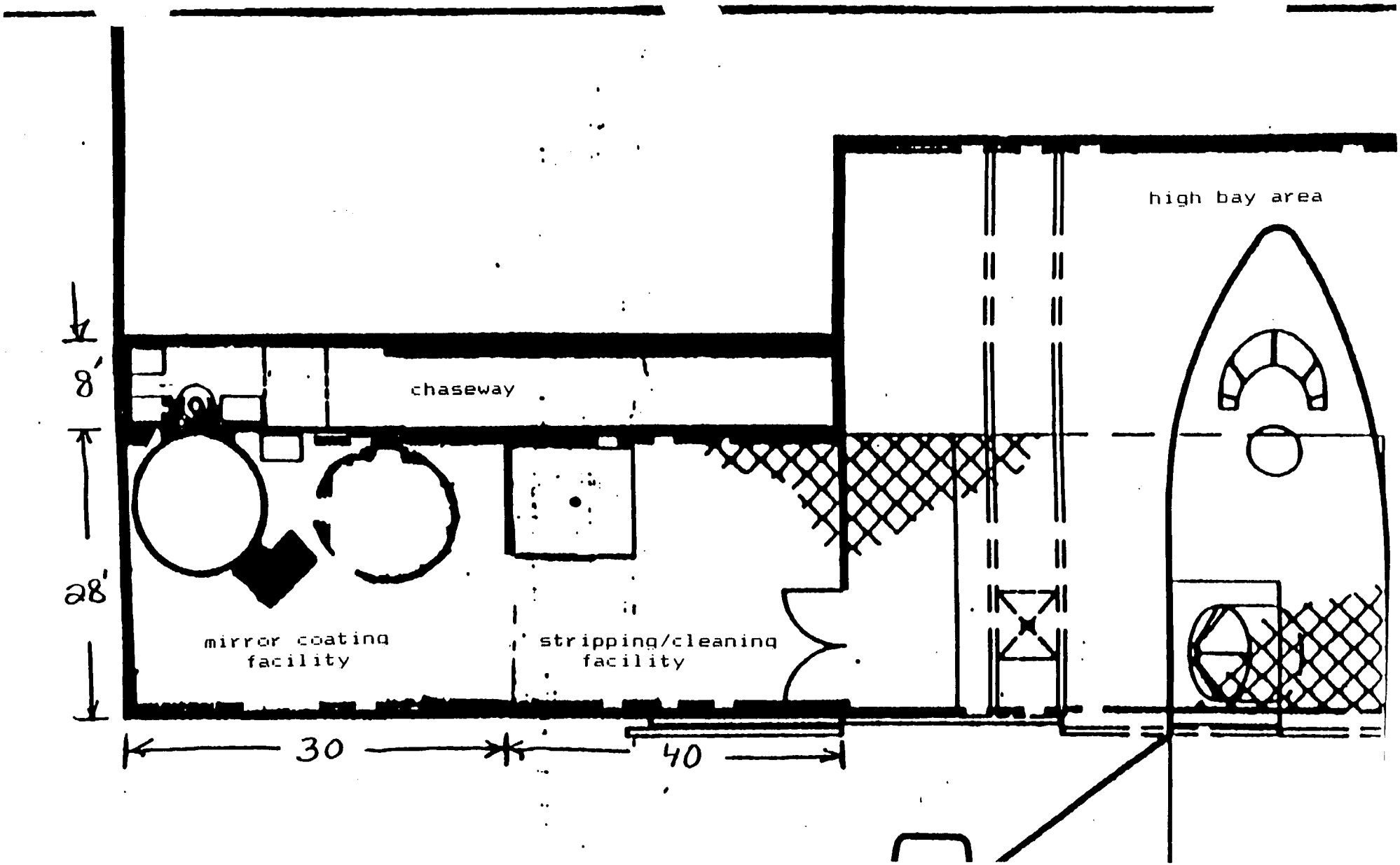

CONCEPTUAL PLAN DIMENSIONS

Figure 3.1-2

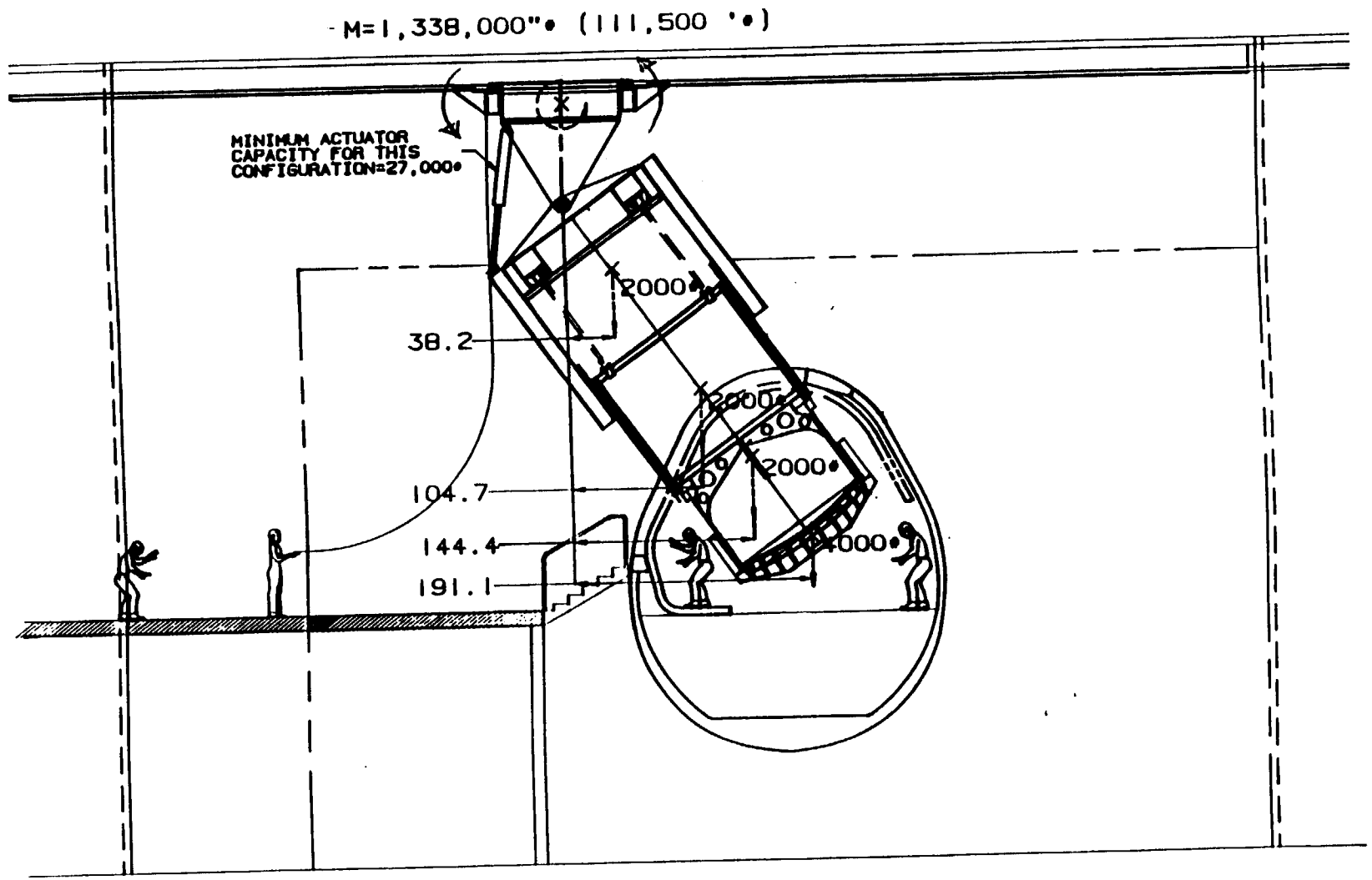

MOMENT DIAGRAM OF MANIPULATOR

Figure 3.1-3

3.2 Clean Room Requirements

Ideally, it is desired that the mirror cleaning/coating facility meet Class 100,000 clean room conditions (see Figures 3.2-1 and 3.2-2). In addition to the stated requirements on those sheets, the following design precautions will help to achieve a particle-free environment:

- the walls, floors and ceilings are to be made of non-sluffing materials (particle-free) or sealed with a washable high gloss finish.
- use lights flush with the ceiling and sealed in it. The idea is to have as little as possible hanging from the ceiling that could gather dust which would then fall on the mirror.
- maintain a slight positive pressure in the cleaning/stripping area and an even greater positive pressure in the coating area. Refer to Figure 3.2-0 for the way the air should flow, it is marked by arrows.
- place some sort of trap underneath the cranes to assure that no oil drips from them (Figure 3.2-3) or get a dripless crane.
- the use of a second floor platform (see Figures 3.2-4 and 3.2-5) in the high bay, if the facility is on the second floor. The platform allows for the construction of a permanent wall between the high bay and the mirror coating facility. This wall will provide a good seal from dirt and aircraft fumes. See section 3.3 for further explanations, dimensions, and arguements for the use of this platform.

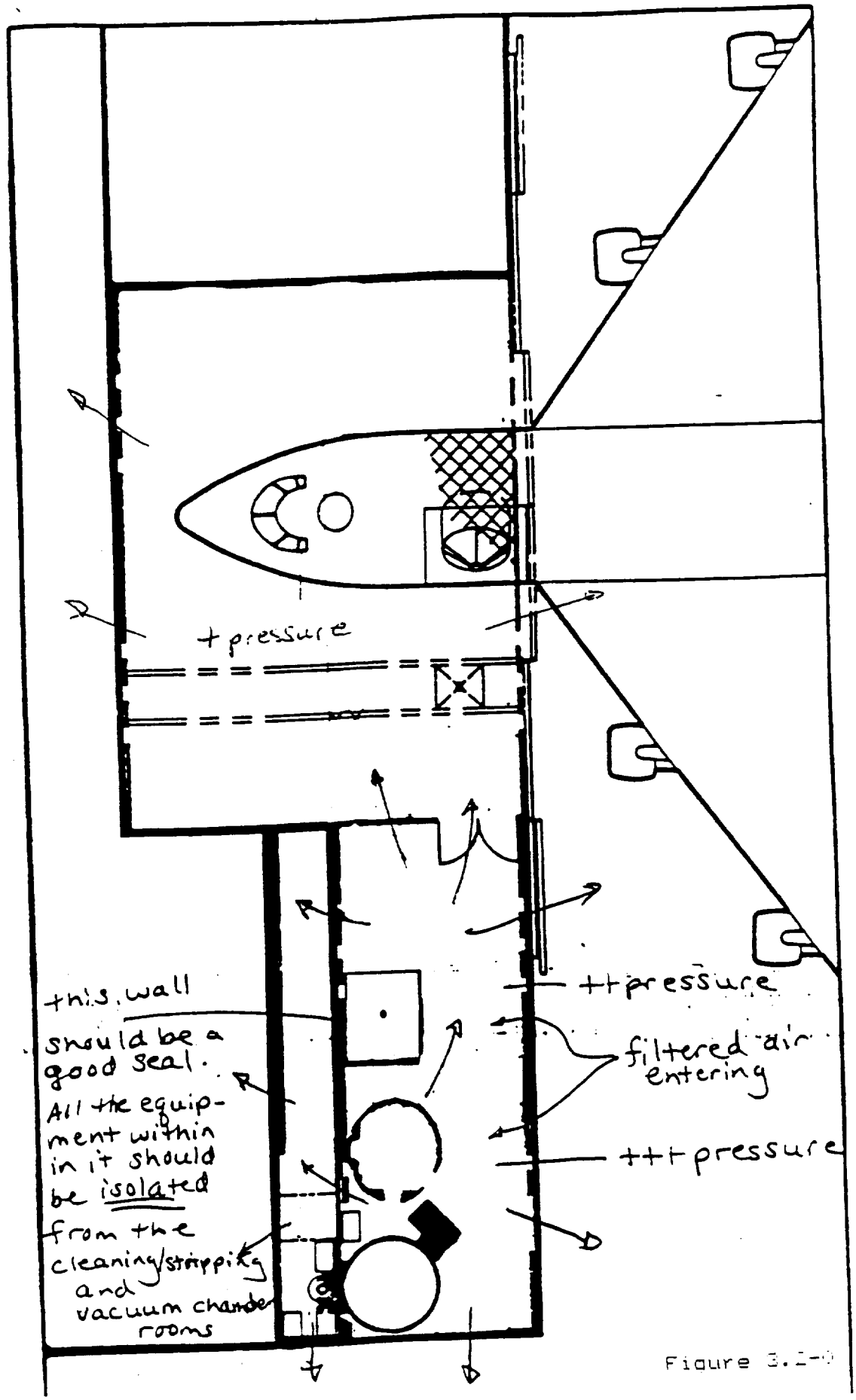
+ pressure
++ pressure
filtered air entering
+++ pressure
this wall should be a good seal.
All the equipment within in it should be isolated from the cleaning/stripping and vacuum chamber rooms

Figure 3.1-9

AIR FILTER CONTROL INC.
1023 CHESTNUT STREET P.O. BOX 5806 REDWOOD CITY, CALIFORNIA 94063 (415) 367-8310

LAMINAR FLOW METHOD

Class 10

90-100% coverage with Cambridge CAM-1 Laminar Flow Modules, 99.99% DOP. Consider using Gold-Seal CAM-1 Modules (99.999% on .12 micron particles) if higher efficiencies are desired.

Air flow at 90 FPM or more based on gross ceiling area.

Raised floor return preferred, but low side wall returns are OK if aisles are narrow, and total divergence width does not exceed 18 ft.

Class 100

80-100% coverage with Cambridge CAM-1 Laminar Flow Modules; air flow 90 ± 20 FPM based on gross ceiling area.

Low side wall returns common; acceptable divergence width 24 ft. max.

DILUTION METHOD

Class 1000

60-90 air changes per hour; does not need laminar flow modules. Low return preferred.

If room is filled with laminar flow benches, judgment might indicate (for example) the use of 50% of the bench recirculated air that is not being exhausted toward the 60-90 air change rate.

99.97% HEPAs in fan discharge or behind ceiling diffuser (makes no difference). Non-laminar air distribution devices are normally used.

If HEPAs are used in ceiling with no grilles, dumping can be expected and temperature differential of more than 6-7° will be uncomfortable.

Class 10,000

Same as Class 1000 except 50-60 air changes.

Ceiling returns commonly used, thought low returns are preferred.

Class 100,000

Outdated class; if specified, use 20-30 air changes per hour, or CFM sufficient for cooling load.

Filter Selections:

A. Cambridge 95% ASHRAE HiFlo Bag Filters will usually suffice with an occasional "spike" above 100,000 due to outside count.
B. Cambridge Micretain Absolutes (95% DOP) will always assure Class 100,000. Generally applied on pressure side of fan with Cambridge 85% HiFlo Bag Filters on suction side (sometimes 30% pleated).

* * * * *

Note: Above guidelines are based on experience factors and are not guaranteed. Clean rooms [illegible] by personnel, or are not maintained and operated

Cambridge
P.O. BOX 4906
SYRACUSE, NEW YORK 13221

RELATIVE SIZE CHART OF COMMON AIR CONTAMINANTS

PARTICLE DIAMETER, MICRONS-LOGARITHMIC SCALE

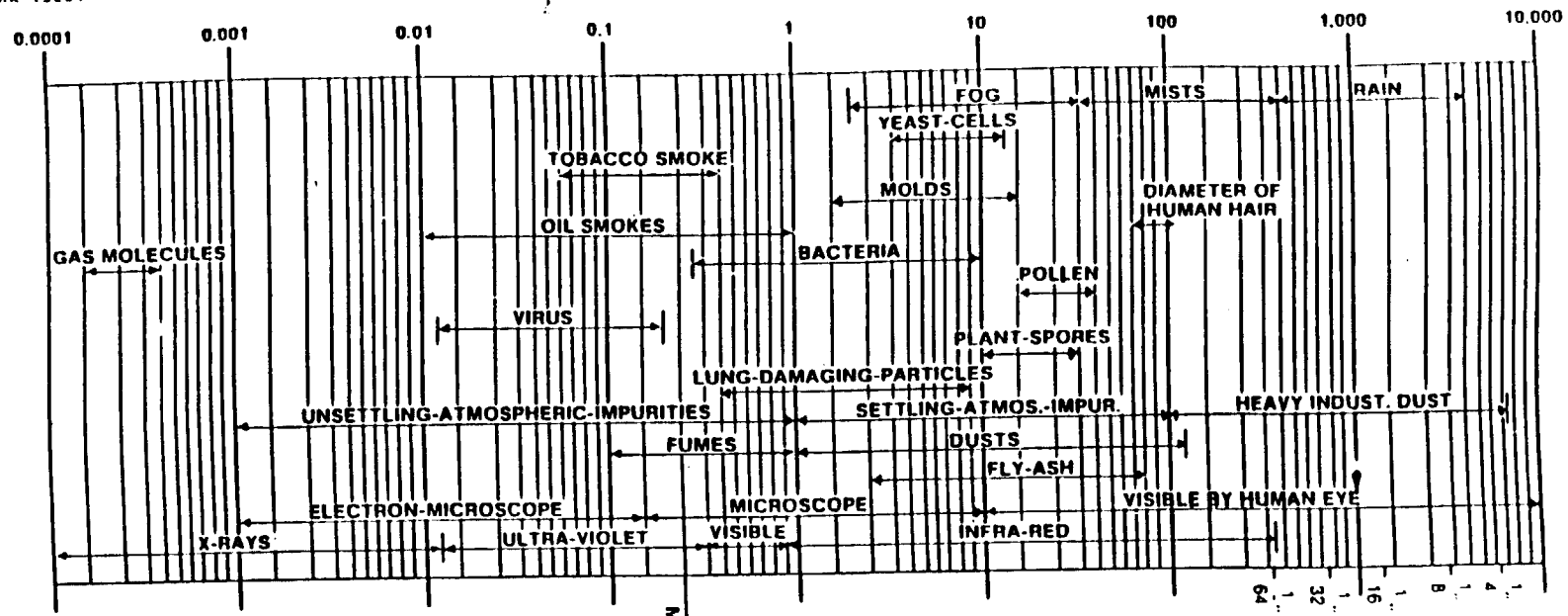

CAMBRIDGE ABSOLUTE FILTERS APPROACH 99.97% EFFICIENCY IN THIS RANGE

MICRON 0.3

ABSOLUTE FILTERS ARE OVER 99.97% EFFICIENT ON THIS RANGE OF PARTICLES

HEPA

EFFECTIVE RANGES OF POPULAR CAMBRIDGE FILTERS

60 80 94 100%	Hi-Flo 95 & Aeropac 95
70 90 95 100%	Aeropac 90
50 80 90 100%	Hi-Flo 85
50 70 90 100%	Hi-Flo 50 & 65, Aeropac 60
50 70 90 100%	Hi-Cap

THIS REPRESENTS A 10 MICRON DIAMETER PARTICLE, THE SMALLEST SIZE VISIBLE WITH THE HUMAN EYE.

THIS REPRESENTS A 0.3 MICRON DIAMETER PARTICLE, ABSOLUTE FILTERS REMOVE OVER 99.97% OF THIS SIZE.

THIS DIMENSION REPRESENTS THE DIAMETER OF A HUMAN HAIR, 100 MICRONS

1 MICRON = 1 MICROMETER = 1 MILLIONTH OF A METER

(CM-382A)
Rev 10/78

Figure 3.2-2

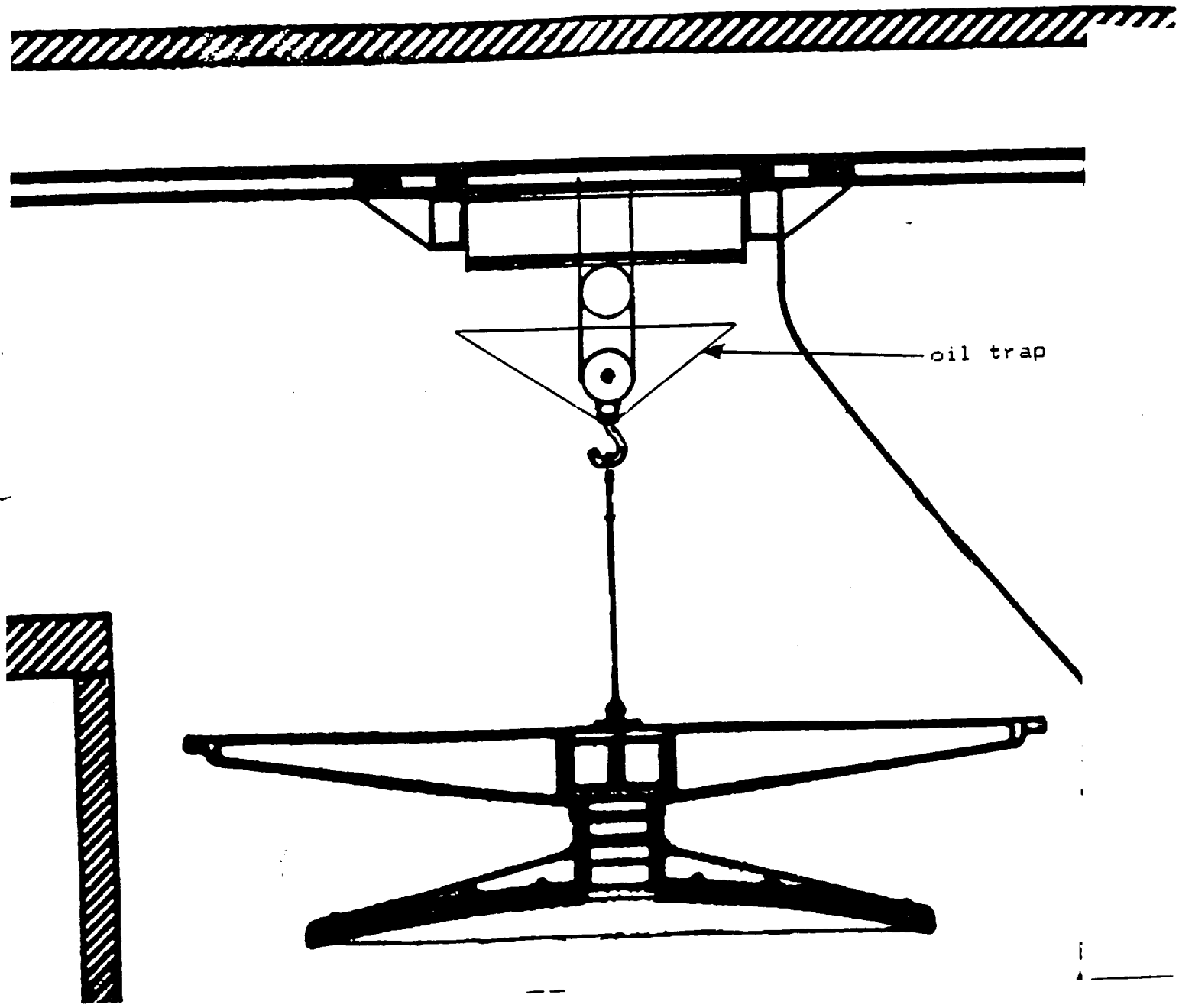

Figure 3.1-3

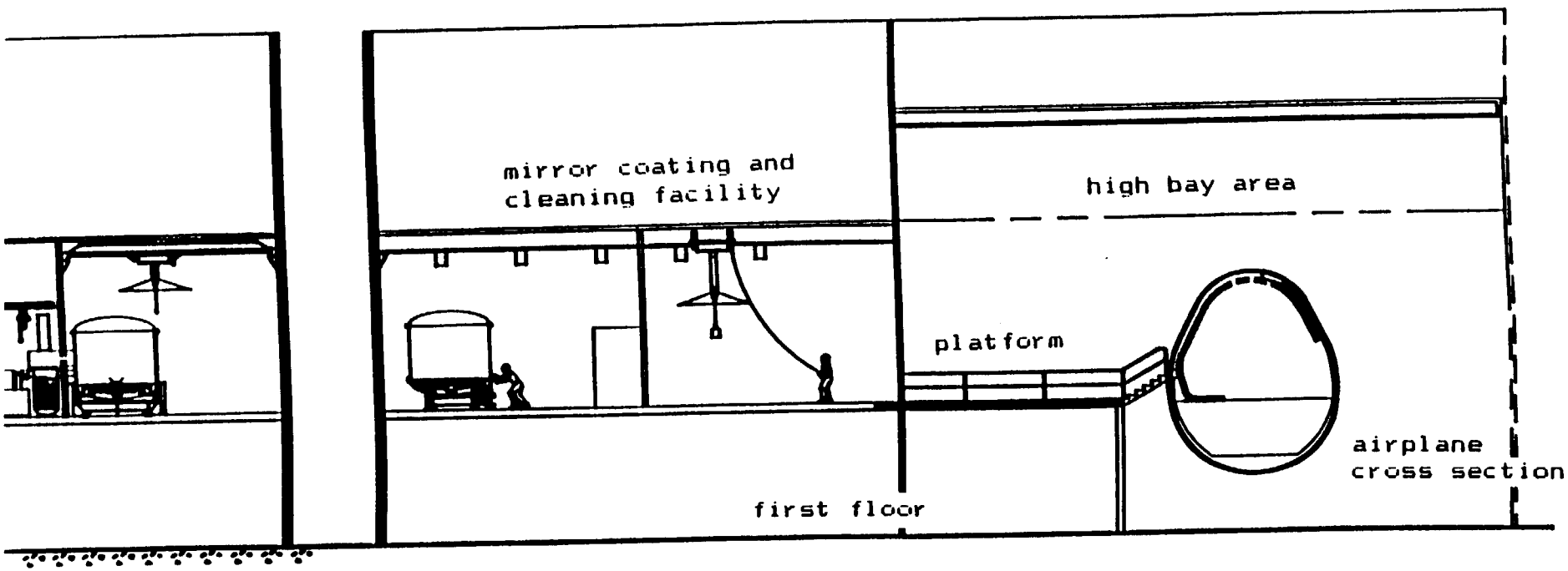

ELEVATION VIEW

Figure 3.2-4

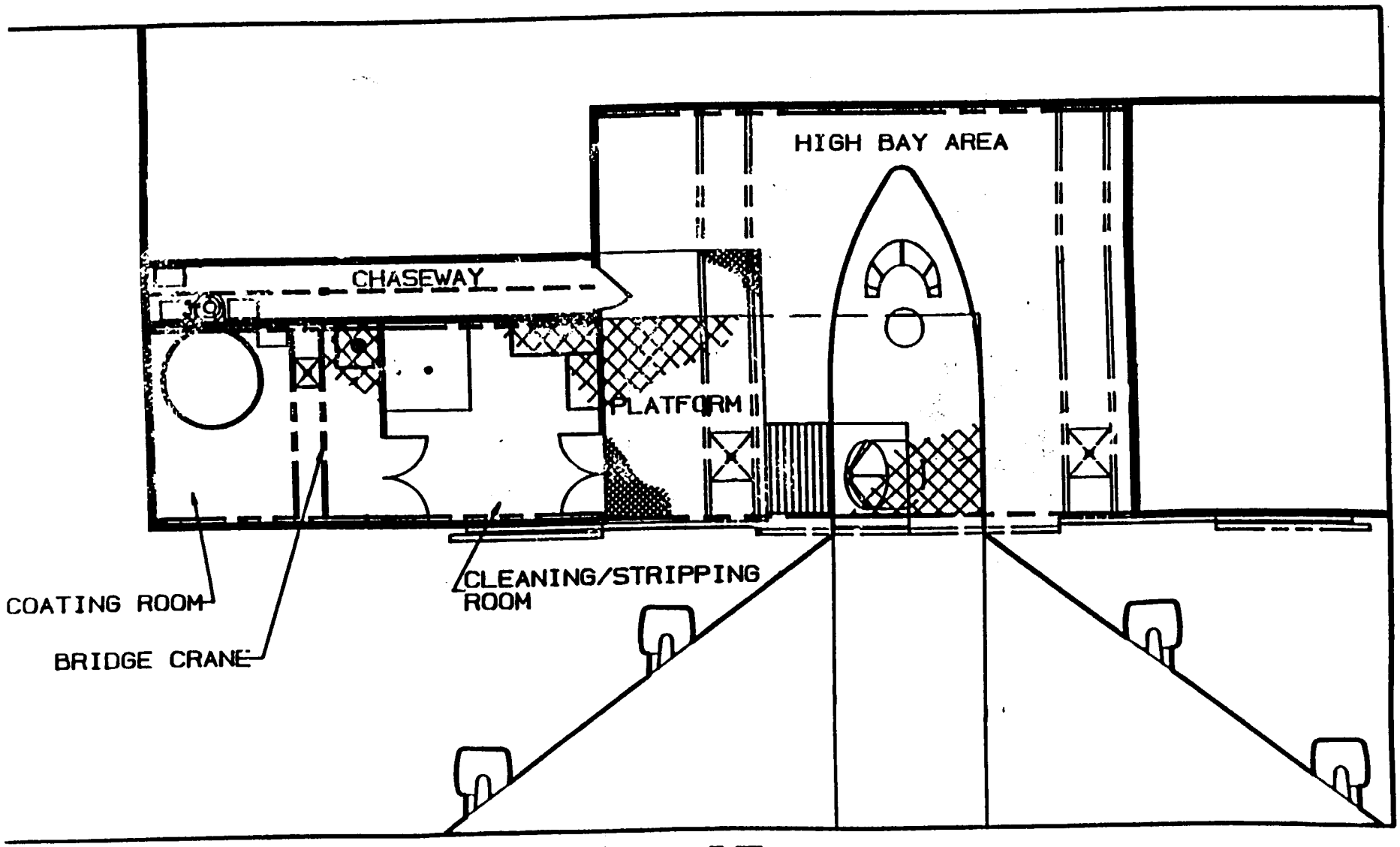

PLAN VIEW

Figure 3.2-5

3.3 Second Floor Platform Requirements

If the mirror coating/cleaning facility is located on the second floor a platform is required in the high bay. It should extend from the cleaning room to no more than 8-10 feet from the aircraft. In the other direction it should be the entire length of the cleaning room and the chase way. The minimum area requirement is 490 square feet. The minimum height from the first floor to the bottom of the platform is 16 feet. See Figures 3.3-0 and 3.3-1 for clarification. It will have several uses:

- the secondary mirror and the spider, upon removal from the plane, shall be placed on a stand located on the platform (Figure 3.3-2).
- the tertiaries and their housing shall also be placed on a stand contained on the platform (Figure 3.3-2).
- the secondary mirror spider, secondary assembly, and tertiary mirror housing will be stored on the platform while the mirrors are inside the cleaning/coating room.
- it may provide additional space for storage of other items used by the mirror cleaning and coating facility.
- and, most importantly, it allows us to keep the cleaning and coating areas much cleaner. Without the platform, a partially removable/pseudo wall would have to be constructed between the high bay and the cleaning room to allow the crane to bring the mirrors to their respective cleaning areas. This removable/pseudo wall would not provide a very good seal. With the platform, transport carts may be wheeled out to recieve the mirrors and then bring them into the facility through a door. A door is much easier to seal than a removable/pseudo wall, thereby keeping a greater number of dirt particles out of the facility.

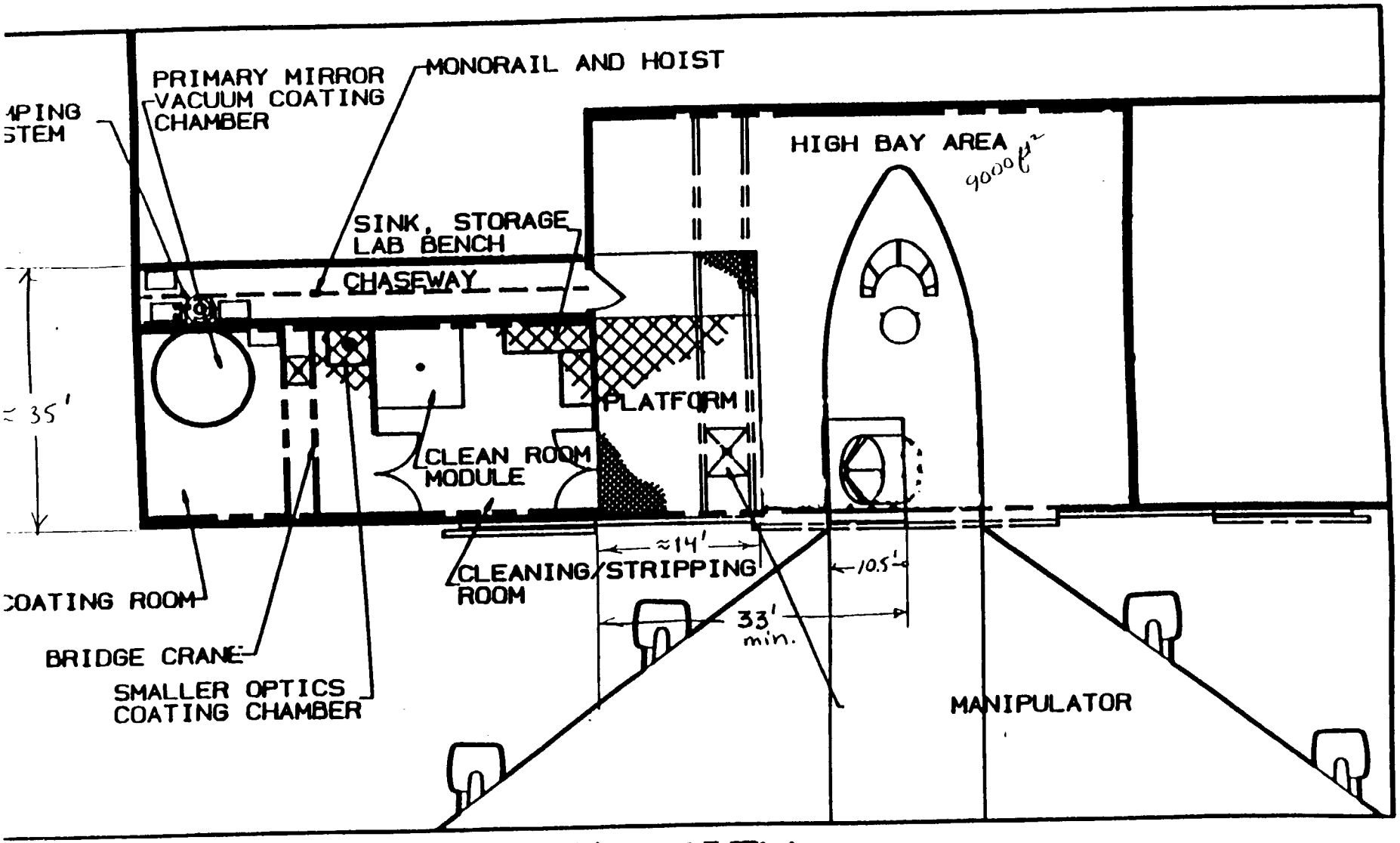

PLAN VIEW

Figure 3.3-0

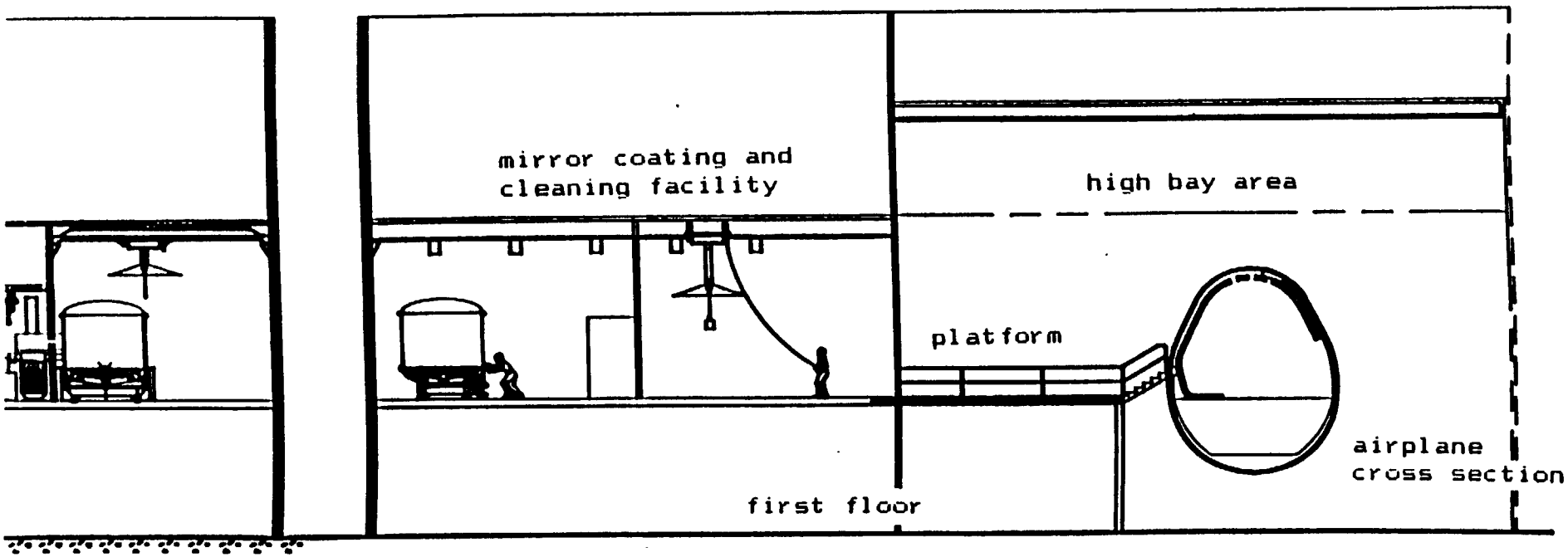

ELEVATION VIEW

Figure 3.3-1

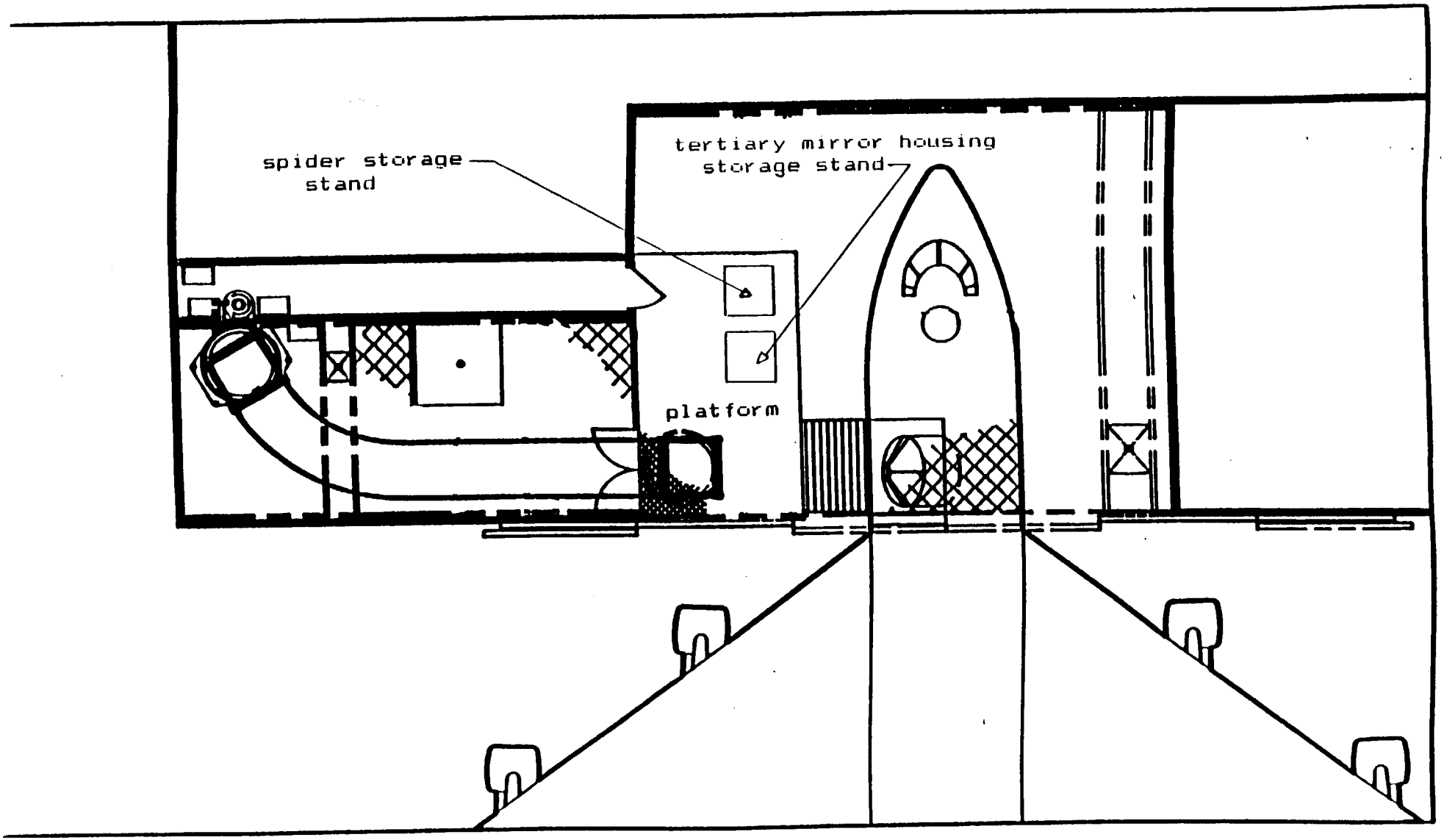
spider storage
stand
tertiary mirror housing
storage stand
platform

Figure 3.3-2

a

3.4 Power, Water, and Air Requirements

Figure 3.4-0 is a table (Table 3.4) of the power, water and air requirements for the equipment contained in the mirror cleaning and coating facility. Power needs are given in terms of a voltage, phase specification, and a maximum amperage. Footnotes that explain certain requirements are found on the page following the table. Appendix B contains the manufacturers specification sheets that the information was obtained from.

A constant source of cooling water to the vacuum pumps is required, even when a power loss occurs (eg. earthquake, etc.). It must continue for at least one hour, preferably two, after the power has gone out.

Additional items required by the facility are, a source of clean shop air, and wall outlets of the 120V type for use with 6 foot cords. Necessary in the cleaning/stripping area is a sink and a source of deionized and tap water, also a hookup for a garden hose. The plumbing and electrical wires to the various air, water, and electrical outlets are to be located in a chaseway on the other side of the wall from both of the rooms. This way they are not in the room to collect dust and are easily accessed if future connections are needed.

+ Water at 61-80 degrees Fahrenheit is to be used as a coolant for the pumps. Most tap water should be within the required temperature range.

++ Note that the pumping equipment will be situated in a separate room from the vacuum chamber and where the cleaning is done. All of the controllers and coating process equipment are contained in the room with the vacuum chamber.

3.5 Chemicals and Compressed Gases

Note that the choice of chemicals and the finer details of the cleaning/stripping procedure depend on the individual's choice. Schott Glass, Inc. suggests a procedure(including the chemicals to use) unique to Zerodur which can also be found at the section's end. Note that the German chemicals have American counterparts.

The list of chemicals that may be used for cleaning/stripping are:

1. hydrochloric acid (HCl)
2. nitric acid (HNO_3)
3. cupric sulfate ($CuSO_4$)
4. calcium carborate ($CaCO_3$)
5. sodium hydroxide ($NaOH$)
6. potassium hydroxide (KOH)
7. ammonium hydroxide (NH_3OH)
8. isopropyl alcohol
9. acetone
10. ethyl alcohol
11. trichloroethylene
12. xylenes

and the following compressed gases:

1. liquid nitrogen (LN_2)
2. nitrogen gas (N_2)
3. air

The above compressed gases will be stored in cylinders with the exception of the liquid nitrogen which is purchased in a dewar.

3.5 Waste Disposal and Safety

The need for waste disposal and safety precautions is apparent with the use of strong acids, strong bases, and compressed gases. NASA-Ames Research Center's storage requirement for strong acids and strong bases is, they must be kept in secondary containment, i.e. the container in which they were purchased must be stored within another container that is nonsusceptible to corrosion by said chemicals. Suggested is any off the shelf chemical storage cabinet.

Several of the chemicals have special requirements. Nitric acid must be kept away from all the others especially the flammable liquids such as isopropyl alcohol. Isopropyl alcohol in a quantity greater than ten gallons demands a chemical storage cabinet for flammable chemicals.

For the disposal of the chemicals there are two options, the first is to treat them in the proposed SOFIA Ground Support Facility, and the second is to have them picked up by someone and treated elsewhere. Ames recently obtained a variance from Sunnyvale for one of its buildings to treat hazardous wastes and one may also be obtained for the SOFIA building. Only one chemical cannot be treated here, copper sulfate. It is regulated and has special rules attached to its use. Once again the chemicals must be stored in secondary containment. The container they drain into after using them on the mirror, must be placed within another container. All containers are to be acid and corrosion resistant.

The cleaning/stripping area, where the chemicals are to be used, requires the proper ventilation to rid the area of the fumes.

The compressed gas cylinders need to be chained into a rack. Liquid nitrogen must have NO SMOKING signs placed about it. Nitrogen gas demands the placement of an oxygen deficiency alarm in the same room.

The cleaning/stripping room, which will contain all of the above requires these basics in safety equipment - eyewash station, shower, fire extinguishers, smoke detectors, sprinklers, proper warning signs and labels, and a first aid kit.

ORIGINAL PAGE IS
OF POOR QUALITY

3.7 Earthquake and Vibration Requirements

The following is the list of precautions that should be taken in the facility to reduce damage during an earthquake:

1) Bolt the primary mirror vacuum chamber, the secondary/tertiary mirror vacuum chamber, and the primary mirror stripping/cleaning bin to the floor.

2) Seismic connections on all utility lines especially the cooling water lines to the pumps.

3) Bolt secondary containment storage cabinents to the wall. They should also be ones that contain a tank in the bottom collect any spilled chemicals.

4) Seismic connections between the vacuum chamber and all equipment connected to it.

The mechanical roughing pump must be noise and vibration isolated.

ORIGINAL PAGE IS
OF POOR QUALITY

APPENDIX D: CONTRACTOR'S REPORT ON THE PRIMARY MIRROR COATING CHAMBER

~~Note that use of these drawings requires locating the most recent versions.~~

SOFIA MIRROR COATING FACILITY

William E. Brown

The following report gives specifications and considerations of the coating chamber and associated equipment for the SOFIA 2.5 meter primary mirror.

The vacuum chamber would consist of a mild steel cylinder ten feet in diameter and ten feet in height with removeable drum heads top and bottom. Depending on the mechanical configuration for holding the mirror, the chamber could be oriented either horizontally or vertically. Viewports and feed-thrus would be provided as needed for the auxillary equipment involved in the coating process. See the manufacturer's data sheets accompanying this report for further information on this equipment.

The basic pumping and valving system is shown schematically on the attached drawing. Requirements of electricity, water, liquid nitrogen, and compressed air are covered in the attached manufacturer's data sheets. Assuming a tank volume of about 800 cubic feet, a 300 cfm Stokes pump would evacuate the chamber to 30 microns in about ten minutes. The diffusion pump would take about another 1-1/2 hours to attain a vacuum of 10^{-6} Torr. The roughing pump can be a Stokes model 1738. The basic pump is 300 cfm with a Roots blower rated at 2000 cfm. The diffusion pump is a 35" diameter equivalent to a CVC model PMC-32C with right angle valve assembly VRA-356 and multi-coolant baffle model BC-350.

The remaining valves in the vacuum system shall be pneumatic and will be controlled by the valve sequences, which could be a commercial unit such as the Varian 971-1016, or manufactured to the exact requirement of the specific system. A 100 psi filtered air supply is needed for the system. A provision should be made for a needle valve to automatically admit gas at a controlled rate during glow discharge. This should be adjusted for a few microns of mercury to sustain the glow

PRECEDING PAGE BLANK NOT FILMED

discharge. The preferable gas for the purpose is oxygen, but long term accumulation in the roughing pump might produce an explosion hazard. Argon ould be the next best gas to use. The high vacuum valve can be "throttled down" during this process to maintain the vacuum of a few microns. Because of the time required for glow discharge cleaning, deposition should be able to be started about two hours after pumping begins. A cooling cycle should be observed after coating to allow filaments and chamber to approach equilibrium. This should be on the order of 15-30 minutes. Venting time would take about 05-30 minutes, depending on vent valve size.

The controls and gauging system will now be described. The automatic operation of the chambers pumpdown cycle should be carried out with an automatic valve sequencer that has a front panel flow chart to show the status of the cycle. Varian, as well as several other manufacturers, makes suitable units. Safety interlocks need to be provided on such items as diffusion pump heaters to insure that they are not operated if cooling water is not flowing and also that the filaments could not accidentally be activated before chamber reaches a minimum pressure. Most of these are incorporated in the valve controller. Other interlocks to prevent damage to such items as vacuum gauges are usually incorporated in the instruments themselves. Interlock switches to protect personnel from such items as high voltage, line voltage, etc. should be installed as required.

The usual complement of gauges consists of two thermocouple gauges and one ionization gauge. The thermocouple gauges, which are good to about 10^{-3} Torr, monitor chamber pressure and foreline pressure respectively. The ionization gauge measures chamber pressure below 10^{-3} Torr down to evaporation pressure (10^{-6} Torr range). When sufficient vacuum is obtained to be below the readable limits of the thermocouple gauges, then the ionization gauge is activated. This gauge is not capable of measuring atmospheric pressure as are thermocouples. Recommendations for such instrumentation are shown on the accompanying data sheets from Varian and Granville-Philips. All chamber controls

such as ion gauges, thermocouple gauges, valve sequencers, process controllers, SCR controllers, etc. should be mounted in a standard 19" wide rack which is close to one of the view ports to the inside of the chamber. The process could then be observed while in progress and if any problems are observed, the cycle could be stopped in progress by a "panic button" located prominently near the view port.

Because of the infrequency of use of the coating system (on the order of once per year) once the gauges are initially calibrated, very little should need to be done to them for many years. The most common failure is the ionization tube, which is made of glass. Recommended spare and expendable supplies are as follows: Spares: 1 thermocouple tube, 1 ionization tube, standoff insulators for the glow discharge control ring, standoff insulators for deposition filaments, many spare tungsten filaments, aluminum staples, chemicals for mirror stripping, cleaning supplies (wipes, etc.).

Internal configurations of equipment are as follows. The three possible positions for holding the 2.5 meter primary during coating are: down-looking, vertical, and up-looking. Only the last named required more consideration in filament design.

For maximum uniformity from a single ring filament source, theoretical considerations place it at one substrate diameter away from the substrate. The 2.5 meter SOFIA primary would use a ring placed about 100 inches from the substrate. A ring of forty filaments made of tungsten wire would into a helix requires about 100 amps per filament to reach 2200 degrees C. The filaments would consist of four strands of .030" diameter wire per filament in order to vaporize the aluminum and anneal the filaments. For 40 filaments, this would require a total of 4000 amps. Using 10 volt transformers, the total power consumption for the above would be 40 KVA. Because of the difficulty in calculating precise aluminum transfer to substrates and the advisaability of providing spare filaments to compensate for burn-out, greater ampacity should be made available, of the order of 80 KVA. A minimum

of 240 volts AC, 3-phase power should be provided for the filament deposition power supply. Tungsten boats for silicon monoxide overcoating could also be used with this arrangement.

The above would be adequate for a down-looking or vertically coated mirror, but for an up-looking situation the problem exists of molten metal falling on the glass surface. In the positions cited above, bent pure aluminum staples are hung on the tungsten filaments and when heated in a vacuum, they melt and wet the tungsten and evaporate from it as power is increased. There is a good likelihood that some staples will burn into and drop to the bottom of the tank. This would cause obvious problems in an up-looking mirror, creating bare spots in the coating, but more serious would be molten aluminum falling on the glass surface, damaging it. The filament supports would need to be shielded from the mirror itself and all staples must be loaded near the ends of the filament, out of the line of sight of the mirror. Each filament should also have a baffle to limit the area of the substrate which it sees. This helps keep most of the coating normal to the surface instead of depositing at a steep angle of incidence.

Aluminum in the form of wire staples or canes shall be evaporated from tungsten filaments arranged in two concentric rings. There are several configurations possible to provide good uniformities. For a 2.5 meter diameter mirror (about 100 inches), one possible arrangement would be 24 filaments on a 100" diameter circle, 12 filaments on a 50" diameter circle, and 4 filaments in the center. This would provide adequate thickness and uniformity for a 100" mirror. Aluminum shall be 5-9's purity and supplied either in cane or horseshoe forms. Filaments shall be a tungsten wire, 3 wire twisted similar to R. D. Mathis F4-3x.025W. Filament holders shall be similar to MTS stand-off bars. Other thermally evaporated materials may be deposited using boat or basket sources if the stand-off bars are universally designed. Materials not readily thermally evaporated would need an electron beam source which would require a different mounting geometry.

The coating thickness monitor can be combined with the general process controller; a recommended unit is the Inficon Model IC 6000. The monitor head is mounted inside the vacuum, everything else is outside. If we assume an opaque aluminum coating of 1000 Angstroms thickness, a uniformity of 10% would give an error tolerance of ±50 Angstroms. For visable light (5000 Angstroms), this would give a wavefront distortion of about 1/50 wavelength, which is much better than the figure on the mirror; therefore 10% would be an acceptable value. Uniformity is tested initially by inserting small witness glasses at various places in the chamber, making a deposition, and measuring the thickness of each one either with an interferometer or physically. Filament position and number of staples per filament can be adjusted to maximize uniformity. A thickness monitor can be used to measure repeatability of the process. By necessity it needs to be placed near the edge of the mirror, which generally receives a thinner coating than the mirror's center.

The mirror is mounted face down to accommodate the possible future use of an electron beam gun and other options. The cryoshroud requirements could be simply a cold trap between the diffusion pump and chamber which is filled with liquid nitrogen. If more pumping speed and greater vacuum are needed, then a meissner trap consisting of stainless steel cooling coils inside of chamber that have liquid nitrogen pumped through them just before coating. If a cold trap is used, then 160 liter cylinders of liquid nitrogen can be used together with a liquid nitrogen level controller similar to Varian Unit Series 1000. Glow discharge is effected by energizing an aluminum ring located inside the chamber. The power supply needs to be able to deliver high voltage at reasonable current, i.e. 6kv @ 30 ma CHA GAC 6000 or CVC LC-031 (no longer manufactured). The supply should be capable of either a + or - DC output. The glow discharge ring is made of pure aluminum (to avoid sputtering any alloying components) and electrically isolated from the chamber walls (ground).

[redacted]

Aluminum build-up in the chamber over a period of time needs to be addressed. The high voltage stand-off insulators for the glow discharge as well as the filament stand-offs need to be shielded from the aluminum coating which could short them to ground. Since the tank is of mild steel and deposition will only be done on the order of once a year, elaborate internal wall shields which are removable for easy cleaning can be avoided. The view ports could have either a shutter or (more highly recommended) a periscope such that coating with aluminum will only enhance the visibility inside the chamber.

Should other materials (especially high-stress dielectrics) be deposited in the chamber, flaking might occur which could contaminate the optical surface and cause pinholes. Then aluminum foil shielding would be used. Chamber should be maintained under vacuum when not in use to keep clean and dry internally. Venting should be done with dry nitrogen so chamber walls would absorb this instead of water vapor.

Specifications for Stokes® Series 1700 Mechanical Booster Pumps

The specifications on these pages, and the performance curves shown on the preceding page, cover the most popular standard models of our Series 1700 Mechanical-Booster Vacuum Pumps. Our advisory service is available to help you custom-fit the right model for your application.

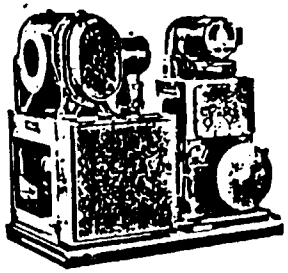

Model 1721

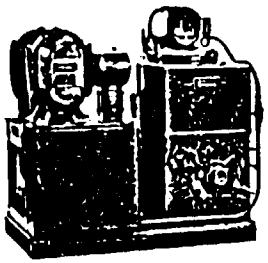

Model 1722

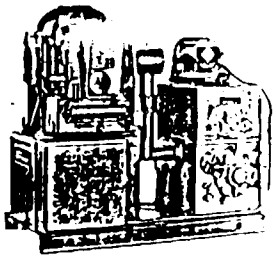

Model 1724

Specifications — HC and HCS models provide for faster pumpdown capability.

Specifications			1738	1738-S	1721	1721-S	1722	1722-S	1722-HC	1722-HCS
Displacement	1st Stage Blower	cfm	612	850	1300	1800	1300	1800	1300	1600
		m³/hr	1040	1444	2209	2719	2209	2718	2209	2718
	Microvac Pump	cfm	150	150	150	150	300	300	600	600
		m³/hr	255	255	255	255	510	510	1020	1020
Normal Cut In Pressure		Torr	25	10	15	10	25	15	75	60
Pressure Limit for Continuous Operation		Torr	8	3	3	2	15	8	25	20
Drive	1st Stage	hp	3	3	7½	10	7½	10	7½	10
		kw	2.24	2.24	5.60	7.46	5.60	7.46	5.60	7.46
	2nd Stage	hp	—	—	—	—	—	—	—	—
		kw	—	—	—	—	—	—	—	—
	Forepump	hp	7½	7½	7½	7½	10	10	two @ 10	two @ 10
		kw	5.60	5.60	5.60	5.60	7.46	7.46	14.91 total	14.91 total
Connections	Suction Flange	in.	8	8	8	8	8	8	8	8
		mm	152	152	203	203	203	203	203	203
	Discharge	in.	2 IPS	2 IPS	2 IPS	2 IPS	3 IPS	3 IPS	3 IPS (2)	3 IPS (2)
		mm	—	—	—	—	—	—	—	—
Water Requirements	1st Stage	gpm	Air Cooled							
		lpm	—	—	—	—	—	—	—	—
	2nd Stage	gpm	—	—	—	—	—	—	—	—
		lpm	—	—	—	—	—	—	—	—
	Forepump	gpm	1½	1½	1	1	2	2	4	4
		lpm	5.68	5.68	3.785	3.785	7.57	7.57	15.14	15.14
Oil Requirements	1st Stage	gal	1	1	625	625	625	625	625	625
		liter	3.785	3.785	2.366	2.366	2.366	2.366	2.366	2.366
	2nd Stage	gal	—	—	—	—	—	—	—	—
		liter	—	—	—	—	—	—	—	—
	Forepump	gal	3	3	3	3	12	12	24	24
		liter	11.36	11.36	11.36	11.36	45.53	45.53	90.85	90.85
Height	Overall	in.	47¾	47¾	49¾	49¾	56¾	56¾	56¾	59 9/16
		mm	1216	1216	1260	1260	1438	1438	1438	1513
	To Inlet	in.	47¾	47¾	40¾	40¾	40¾	40¾	40¾	40¾
		mm	1216	1216	1035	1035	1035	1035	1035	1035
Length		in.	53¾	53¾	55¾	55¾	55¾	55¾	70	70
		mm	1359	1359	1419	1419	1407	1407	1803	1778
Width		in.	27¾	27¾	36 1/16	36 1/16	41¼	41¼	70¾	70¾
		mm	705	705	919	919	1048	1048	1794	1794
Weight	Net	lb	1775	1775	2700	2800	3500	3600	5300	5400
		kg	805	805	1225	1270	1588	1633	2404	2450

S models are high-speed units.

Specifications			1738t	1724	1724-HC	1723	1723-HC	1723-HCS	1725	1726	1719	1720	1729*
Displacement	1st Stage Blower	cfm	2000	2875	2875	3940	3940	4360	5740	5740	7880	7880	13 950
		m³/hr	3398	4885	4885	6695	6695	7409	9753	9753	13 390	13 390	23 704
	Microvac Pump	cfm	300	300	600	300	600	730	600	730	600	730	300
		m³/hr	510	510	1020	510	1020	1240	1020	1240	1020	1240	510
Normal Cut In Pressure		Torr	10	15	30	10	25	30	10	15	10	15	1st Stg 2.0 2nd Stg 25.0
Pressure Limit for Continuous Operation		Torr	3	1.0	3	0.8	1.0	2.5	1.2	1.3	1.0	1.1	0.45
Drive	1st Stage	hp	10	20	25	25	30	30	30	30	40	40	50
		kw	7.46	14.91	18.64	18.64	22.37	22.37	22.37	22.37	29.83	29.83	37.29
	2nd Stage	hp	—	—	—	—	—	—	—	—	—	—	7½
		kw	—	—	—	—	—	—	—	—	—	—	5.60
	Forepump	hp	10	10	two @ 10	10	two @ 10	30	two @ 10	30	two @ 10	30	10
		kw	7.46	7.46	14.91 total	7.46	14.91 total	22.37	14.91 total	22.37	14.91 total	22.37	7.46
Connections	Suction Flange	in.	8	8	8	10	10	10	12	12	14	14	18
		mm	203	203	203	254	254	254	305	305	356	356	457
	Discharge	in.	3 IPS	3 IPS	3 IPS (2)	3 IPS	3 IPS	5 IPS	3 IPS (2)	5 Flg	3 IPS (2)	5 Flg	3 IPS
		mm	—	—	—	—	—	—	—	127	—	127	—
Water Requirements	1st Stage	gpm		2	2	2	2	2	2	2	2½	2½	3
		lpm	—	7.57	7.57	7.57	7.57	7.57	7.57	7.57	9.46	9.46	11.35
	2nd Stage	gpm	—	—	—	—	—	—	—	—	—	—	Air Cooled
		lpm	—	—	—	—	—	—	—	—	—	—	—
	Forepump	gpm	2	2	2	2	2	2	4	5	4	5	2
		lpm	7.57	7.57	7.57	7.57	7.57	7.57	15.14	15.14	15.14	18.93	7.57
Oil Requirements	1st Stage	gal	625	5¼	625	5¼	5¼	5¼	5¼	5¼	7¾	7¾	15
		liter	2.366	19.87	2.366	19.87	19.87	19.87	19.87	19.87	29.34	29.34	56.78
	2nd Stage	gal	—	—	—	—	—	—	—	—	—	—	½
		liter	—	—	—	—	—	—	—	—	—	—	1.9
	Forepump	gal	12	12	24	12	24	20	24	20	24	20	12
		liter	45.53	45.53	90.85	45.43	90.85	75.71	90.85	75.71	90.85	75.71	45.43
Height	Overall	in.	56¾	66¾	67	66¾	67	67	66¾	66¾	77¾	77¾	78
		mm	1438	1696	1702	1696	1702	1702	1696	1696	1959	1959	1981
	To Inlet	in.	40¾	50	50	50	50	50	50	50	59¾	59¾	46¾
		mm	1035	1270	1270	1270	1270	1270	1270	1270	1508	1508	1184
Length		in.	55¾	71¾	70	71¾	80	94¾	91	98¾	101¾	109¾	128½
		mm	1407	1813	2032	1813	2032	2403	2311	2499	2575	2788	3273
Width		in.	41¼	47½	70	49¾	70	52	70	60 1/16	69 9/16	63 1/16	122¾
		mm	1048	1207	1778	1251	1778	1321	1778	1535	1767	1621	3108
Weight	Net	lb	3600	5250	7300	5400	7450	9200	7900	9600	9200	10 900	13 300
		kg	1633	2381	3311	2450	3379	4173	3583	4354	4173	4944	6033

Electrical requirements: Full NEMA 12 controls supplied as standard on all models. 460/575/3/60 shop power with transformer and 115v control circuits are standard.

*Displacement of 2nd stage blower is 1300 cfm (2209 M³/HR.)

Other electrical arrangements optional. Dimensions are subject to minor changes; confirm before construction.

ORIGINAL PAGE IS OF POOR QUALITY

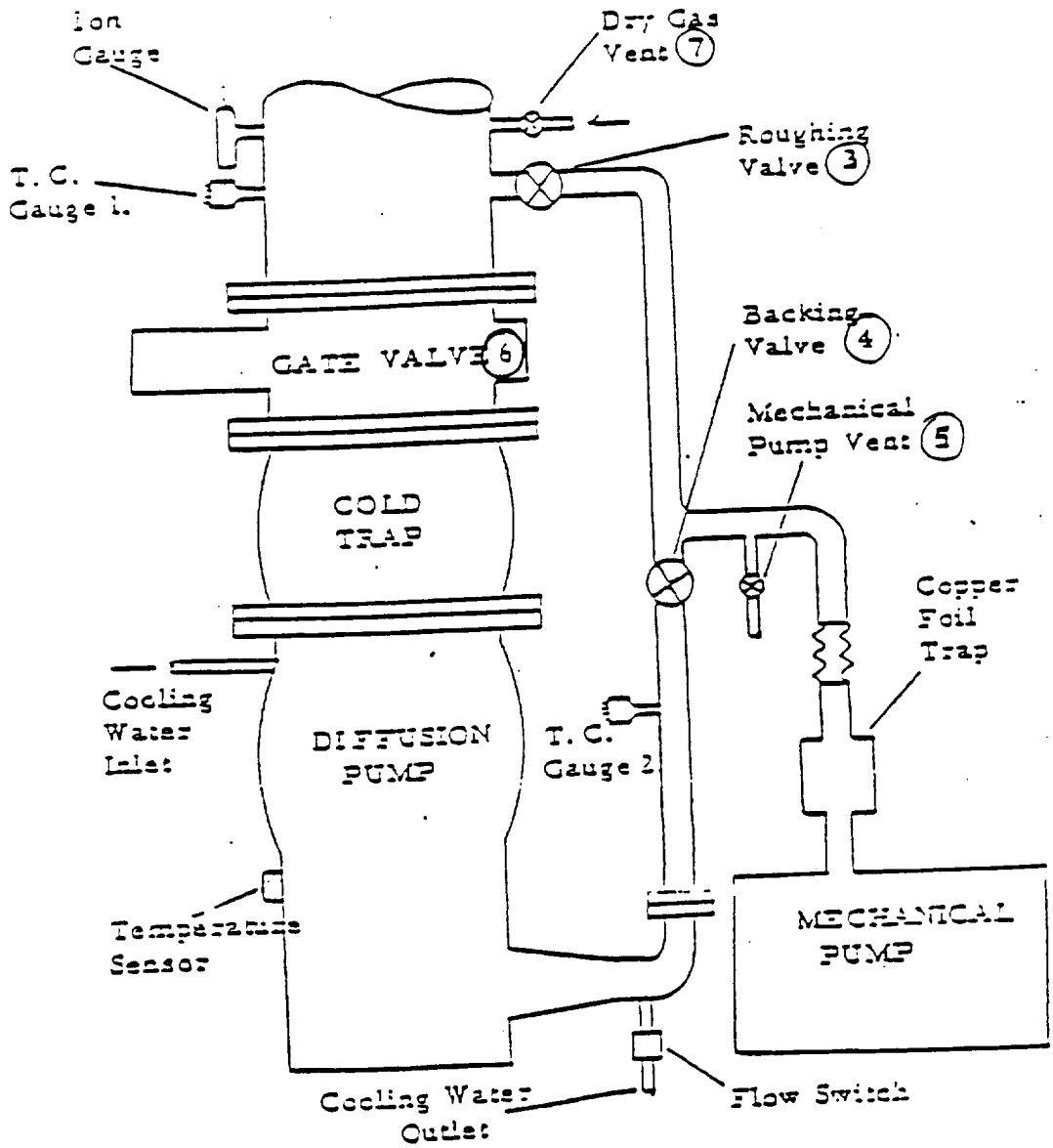

DIFFUSION PUMP SYSTEM

FEATURES

IGH GAS HANDLING CAPACITY ... at high working pressures, maxi-um throughput is greater than 35 ...r liters/second.

IGH FOREPRESSURE OLERANCE ... allows the use of a ...0 CFM forepump at full throughput.

RACTIONATING DESIGN ... jet ...d boiler assemblies are constructed ... fractionate pump fluid, removing ...ntamination and decomposition ...oducts, which are pumped away. ...nly the purest vapor emerges from ...e top jet. This design feature is ex...tive with Varian diffusion pumps.

INIMUM BACKSTREAMING ... ...e unique, water-cooled cold cap ...duces backstreaming by 98% with ...o effect on pumping speed.

UTOMATIC PROTECTION ... pat...ted dual thermostats* can be used ...automatically turn off the heater if ...ere is an abnormal temperature rise. ...his feature protects against operation ...r low fluid levels, water flow failure, ...nd inadvertent operation at abnorm...lly high pressures. A foreline baffle ...inimizes fluid loss even if the pump ...s accidentally released to atmosphere.

IMPLE HEATER REPLACEMENT ... heaters are six flat tubular ele...ents clamped directly to boiler plate. ...ndividual segments are easily re...moved and replaced when necessary.

UILT-IN FLUID LEVEL NDICATOR ... sight glass allows im...mediate, accurate pump fluid level ...eading. Built-in valving allows pro...ection against breakage and replace...ment of sight glass while pump is in ...peration.

ASE OF SERVICE ... the jet assem...bly is readily dismantled and reassem...bled whenever inspection or cleaning ...may be required. Once reassembled, ...the assembly is mechanically held in ...position, preventing possible damage ...from being hurled against the valve ...or elbow in the event of accidental ...venting of the foreline.

...U.S. Patent 3209330

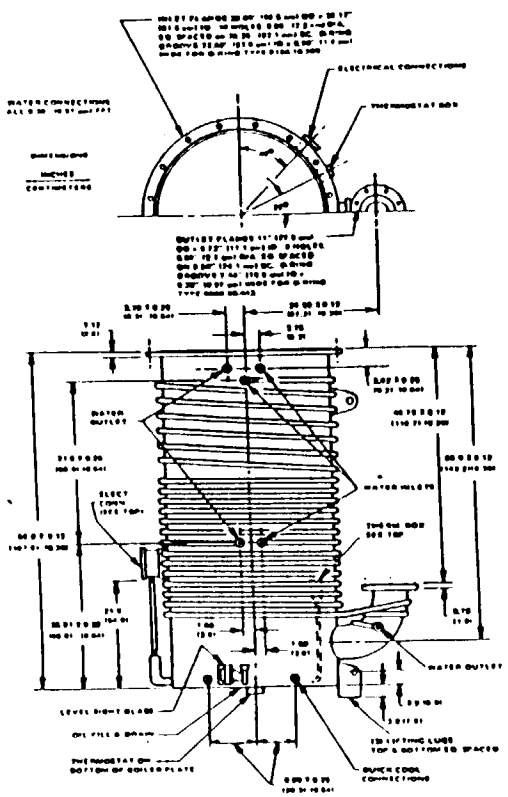

*If water pressure is sufficient, connect cooling coils in series.

HS-32 DIFFUSION PUMP

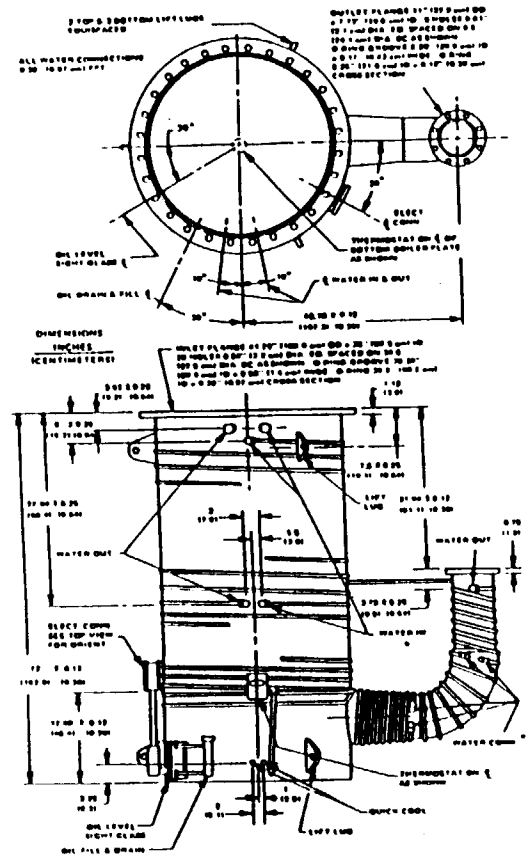

*If water pressure is sufficient, connect cooling coils in series.

NHS-35 DIFFUSION PUMP

OPTIONAL HALO BAFFLE ... ...tains 60% of pump speed with no ...crease in pump height, and utili... the standard cold cap with addition... water-cooled chevrons to interc... direct backstreaming emanating fr... the top nozzle. The baffle remains ... low the inlet flange of the pump ... adds no height to the system. T... halo baffle stops backstreaming ... most as effectively as an optic... dense baffle, yet retains 60% of ... pump speed. It is especially useful ... applications where backstreaming ... critical, speed and throughput are ...portant and cryogenic pumping is ... necessary. The baffle can be fact... installed or field retrofitted. The h... baffle can not be used with liq... nitrogen or mechanical refrigerat...

GENERAL DESCRIPTION

The HS 32 and NHS-35 Diffu... Pumps provide the high through... high pumping speed, and rel... performance required in indus... applications. These pumps are ...ticularly suitable for use in ... industrial coating installations, vacuum furnaces, and metallizers.

The HS 32 and NHS 35 provi... much as 50% more pumping ca... –35 Torr-liters/second through... than any other pumps of compa... sizes. Since these pumps have ... equal maximum throughput, th... no essential difference in perfor... as long as they are operated in ... constant throughput region. ... approximately 30 Torr-liters/se... At gas loads below the max... throughput level, the NHS 35 ... produce a lower pressure in the ... ber because of its higher pum... speed.

SPECIFICATIONS *

	HS-32	NHS-35
Maximum Speed (air)	32 000 ℓ/s	50 000 ℓ/s
Maximum Speed (helium)	40 000 ℓ/s	62,500 ℓ/s
Operating Range	1×10^{-3} to 10^{-9} Torr	1×10^{-3} to 10^{-10} Torr
Throughput at 10^{-5} Torr	35 Torr ℓ/s Max.	35 Torr ℓ/s Max.
Maximum Forepressure	No Load: 0.50 Torr Full Load: 0.35 Torr	No Load: 0.55 Torr Full Load: 0.40 Torr
Backstreaming Rate (at inlet)	Less than 0.20 cc/hr	0.17 cc/hr
Warm up Time	½ hour	1 hour
Cooling Time	1 hour	1 hour (with Quick Cool coil)
Backing Pump (Min. for full throughput)	300 CFM	300 CFM
Fluid Charge	3 gal	3 gal
Recommended Fluid	D-7040 or D-7050	D-7040 or D-7050
Power (nominal)	24 kW or 16 kW 220/440/3/50/60	24 kW 240/480/3/50/60
Cooling Water (approx)	4 gpm at 60° - 80°F	4 gpm at 60° - 80°F
Height	66"	72"
Body	Mild steel 31 5/8" ID	Mild steel 35" ID
Flange	Mild steel	Mild steel
Jet Assembly	Mild steel, nickel plated	Stainless steel
Cooling Coils	Copper, welded to body, Water connections 3/8 FPT	Copper, welded to body, Water connections 5/8" OD
Boiler Quick Cooling Coils	Stainless steel	Stainless steel
Shipping Weight	1550 lbs	2000 lbs

* Data for D-7040 pump fluid

SPEED CURVES

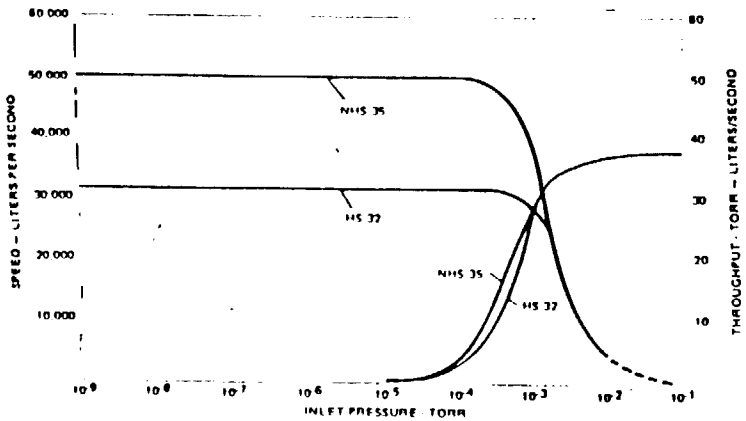

ORDERING INFORMATION

Description	Model	Description	Model
HS-32 Diffusion Pump		NHS-35 Diffusion Pump	
with 240V heater	0167 76134 308	with 240V heater	0169 F1730 308
with 480V heater	0167 76134 309	with 480V heater	0169 F1730 309

HOW TO ORDER

Address orders and inquiries to your local Varian Industrial Products Distribution Center or the nearest Varian District Office. In Europe, orders should be addressed to the nearest Varian District Office, to Varian GmbH, Handwerkstrasse 5-7, D 7000 Stuttgart 80 (Vaihingen), West Germany, or to Varian SpA, Via Varian, 10040 Leini, Torino, Italy. Order all products by name and model number.

VAC 1035C (Printed in U.S.A.) 600 Section 2

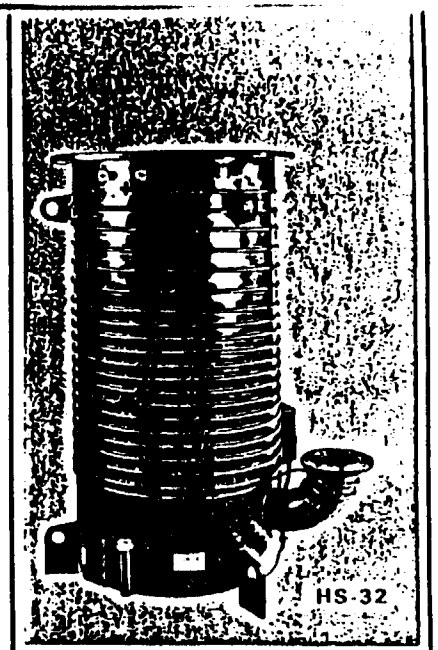

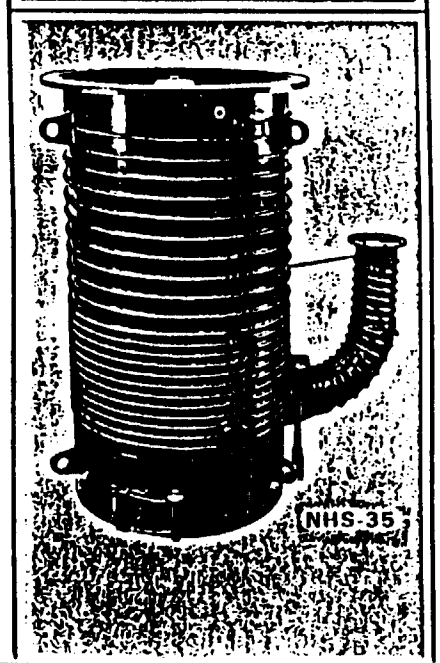

HS-32 and NHS-35
DIFFUSION PUMPS

HIGH GAS HANDLING CAPACITY

HIGH FOREPRESSURE TOLERANCE

FRACTIONATING DESI(

MINIMUM BACKSTREAMING

AUTOMATIC PROTECT

SIMPLE HEATER REPLACEMENT

BUILT-IN FLUID LEVEL INDICATOR

EASE OF SERVICE

lexington vacuum division
121 hartwell avenue
lexington, massachusetts 02173

varian GmbH
handwerkstrasse 5-7
D-7000 stuttgart 80 (vaihingen)
west germany

varian spa
via varian, 10040 leini
torino, italy

CVC 35-INCH BLUELINE PUMPS—TYPE PMC-32C (RING HEATERS) TYPE PVM-32B (DISC HEATERS)

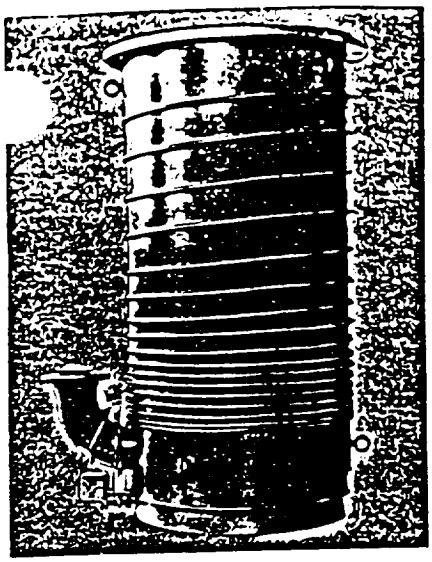

PMC-32C

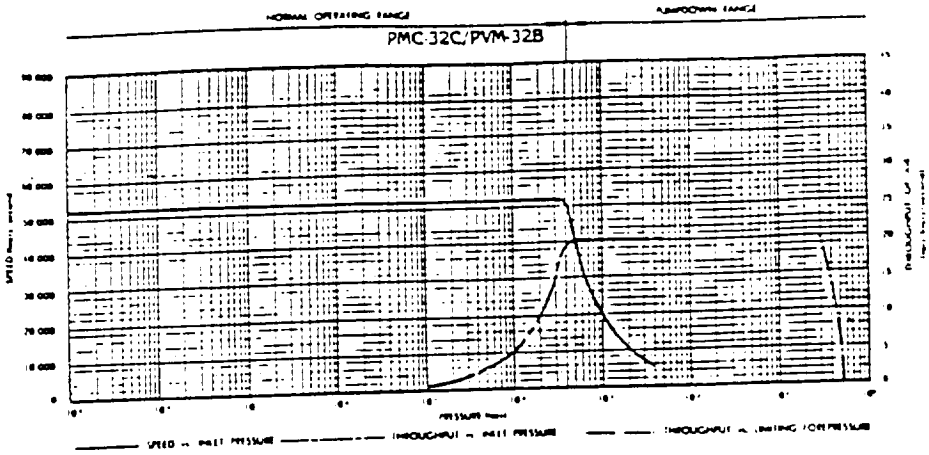

CVC PMC-32C/PVM-32B 35-INCH BLUELINE PUMP SPECIFICATIONS

Inlet Connection	Flange
O.D.	41-3/4"
I.D.	35"
Thickness	1-3/8"
Bolt Circle	38-1/2"
No. of Holes	14
Hole Diameter	1-5/8"
Gasket Groove O.D.	36-1/8"
Gasket Groove I.D.	35-5/8"

Outlet Connection	Flange
O.D.	11"
I.D.	6-1/16"
Thickness	15/16"
Bolt Circle	9-1/2"
No. of Holes	8
Hole Diameter	7/8"
Gasket Groove O.D.	8-1/4"
Gasket Groove I.D.	7-1/2"

O-Ring Material	Buna-N (Viton available on special order)
Cooling Connections	1/2" FPT
Nozzle Material	Aluminum and Stainless Steel
Casing Material	Carbon Steel
Heater Voltage (Ring/Disc Type)	230 or 460 Volt, 3 Phase
Heater Wattage	(PMC) 20 KW (PVM) 22.5 KW
Net Weight	1000 lbs.
Shipping Weight	1156 lbs.

OPERATIONAL DATA

PMC-32C (PVM-32B)
Speed (lit/sec)
Air 52000 (52000)
H^2 62000
Air throughput in pumpdown range (torr/lit/sec) 20 (20)
Backing Speed for maximum throughput (cfm) 220 (220)
Warm up time (min) 45 (50)
Cooling (°C) in 20 (20) out 45-55 (45-55)
Cooling Rate (gpm) 2 (2)
Cooldown Time (min) 30 (35)
Pump Fluid Quantity (gal) 3-1/2 (3)
Forepump (cfm) 140 (140)

MATCHING BAFFLE

BC-350 Multi-Coolant PN 262679

HIGH VACUUM VALVE

VRA-356 Right Angle Valve PN 262216

ACCESSORIES

Heater Kit Inner Ring PN 264966-3
Heater Kit Outer Ring PN 264966-4
Heater Disc PN 279503-2 for 460v
Heater Disc PN 279503-1 for 230v
Drain Gasket PN 261122-1
Sight Glass PN 282138

ORDERING INFORMATION

CVC PMC-32C/35
Crb. Stl. water cooled 20 KW, 460v, 3ϕ, (2 ring heater) 35" I.D., 32" ASA flange PN 274524

CVC PMC-32C/35
Crb. Stl. water cooled 20 KW, 230v, 3 ϕ, (2 ring heater) 35" I.D., 32" ASA flange PN 274697

CVC PVM-32B
Crb. Stl. water cooled disc heaters, 22.5 KW, 460v, 3ϕ, (30 disc heaters), 35" I.D. PN 5507312-0002

PRODUCTS, INC.
525 Lee Road,
P.O. Box 1886,
Rochester, N.Y. 14603
(716) 458-2550
Telex: 97-8269

CVC GOLDLINE HIGH VACUUM LARGE RIGHT ANGLE VALVES

Type VRA

BENEFITS

- High Conductance Contributes To Quick Pumpdown
- Operating Mechanism Can Be Removed Without Breaking Vacuum Line Connections
- Automatic Closing In Case Of Power Failure
- Provide Positive, Vacuum-Tight Seal At Low Pressures

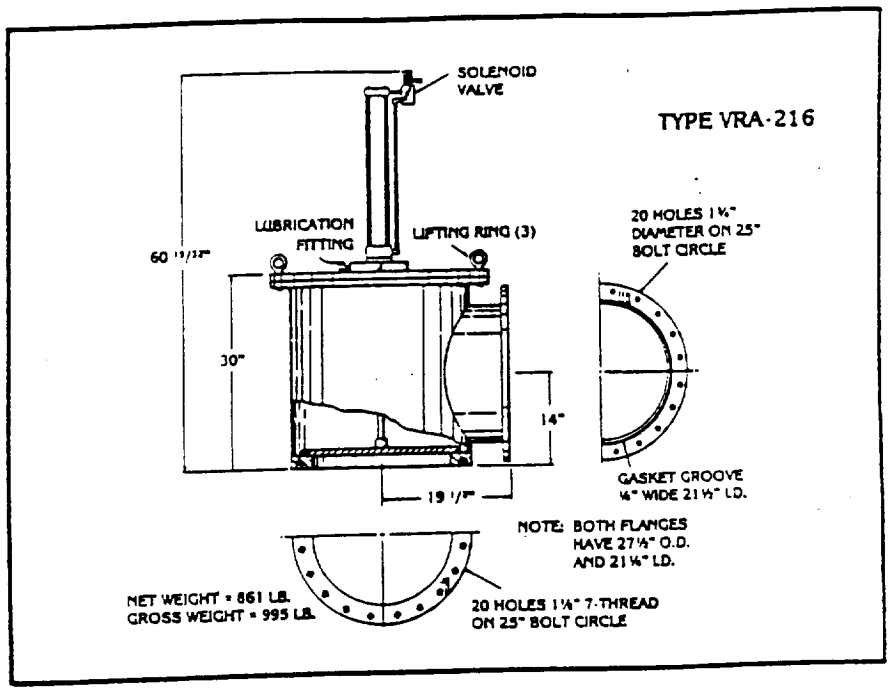

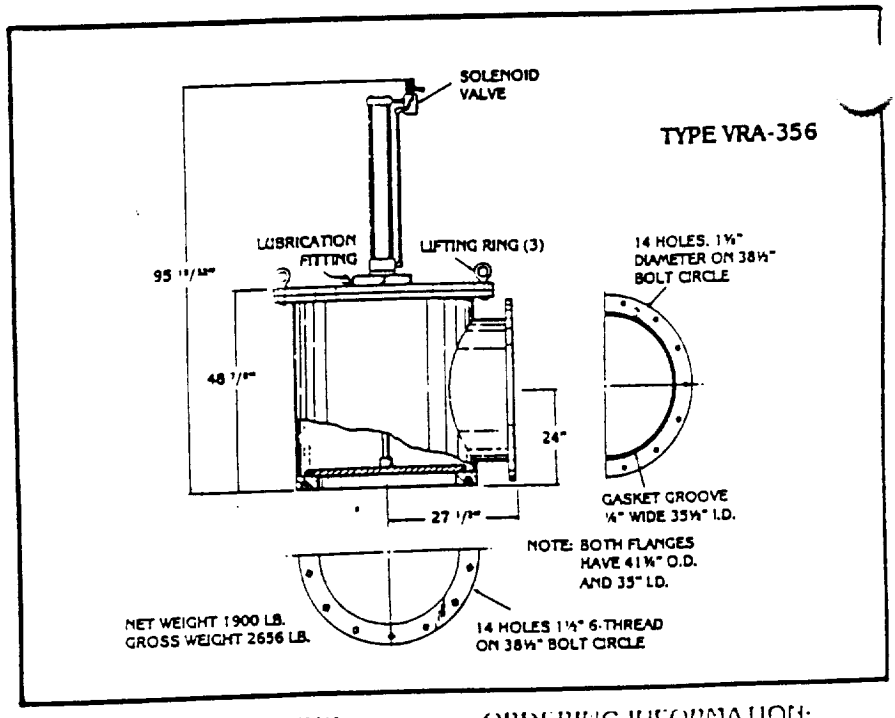

GENERAL DESCRIPTION

The right angle valves of the VRA series are divided into two groups by nominal sizes: the ½-inch to 1½-inch valves, and the 20-inch and 35-inch valves. Each group provides the most favorable combination of operating features and price within its size range.

The 20-inch and 35-inch VRA valves are made of carbon steel. They are air-operated with adjustable speed control and are O-ring sealed. The valves are fail-safe; they close if there is a power failure. Each assembled valve is given a complete helium leak test to make certain that it is leak tight. Attention to shaft and seal alignment assures vibration-free operation and long gasket life.

These valves connect directly to CVC "BlueLine" diffusion pumps or "BC" baffles of the same nominal size and to standard ASA flanges. The inlet flange of each valve is grooved and provided with an elastomer gasket; the outlet flange is ungrooved.

REQUIRED SERVICES

Compressed air at 40-150 psig is required to operate the valves. The solenoid-operated air-control valves require a 115-volt 50/60 Hz power supply.

REMOVABLE OPERATING MECHANISM

The operating mechanism for the valve plate is flange-mounted; it can be easily removed from the casing for service without breaking the vacuum line connections. The flange is O-ring sealed to the right-angle casing for leak tightness.

ORDERING INFORMATION:

VRA-216 — Right Angle Valve, 20" ASA Flanges 263017
VRA-356 — Right Angle Valve, 32" ASA Flanges ..... 262[illegible]
Roughing ports can be supplied at time of order.

CVC MULTI-COOLANT BAFFLES

Type BC

BENEFITS

- Operates Effectively With Choice Of Coolants: Water, Gas Refrigeration, or Liquid Nitrogen
- Pump Fluid Creep Is Minimized By Oleophobic Polymer
- Removable Baffle Elements Are Easy To Clean Without Breaking Vacuum Line Connections
- High Conductance Speeds System Pumpdown
- Sturdy, Corrosion Resistant Construction For Long Life
- Accessory Gas Refrigeration System Available

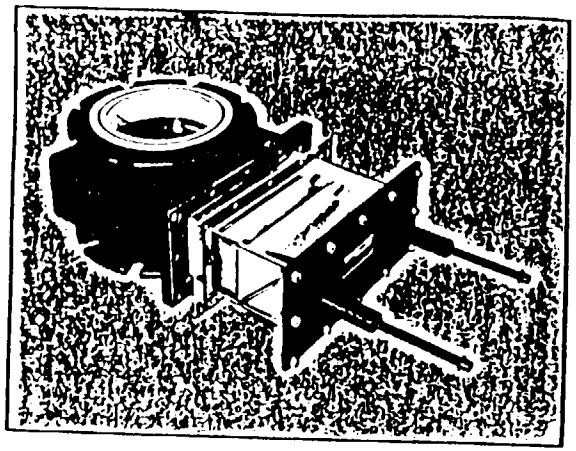

GENERAL DESCRIPTION

These CVC multi coolant baffles are supplied in two basic configurations. A two piece design is utilized in nominal sizes up to 10 inches; in larger sizes, one piece construction provides a more economic and compact baffle.

MULTI COOLANT OPERATION

Type BC baffles can be water cooled or freon refrigerated, depending upon the application. They can also be used with liquid nitrogen, although the BCN type (available in nominal sizes up to 10 inches) is designed specifically for operation with liquid nitrogen and offers many advantages for this specific coolant. The 2 inch and 10 inch BC baffles have internal reservoirs as part of the chevron insert. The 4 unit and 6 inch baffles utilize ¼ inch tubing for the refrigerant medium.

OLEOPHOBIC POLYMER COATING

The internal surfaces of the aluminum baffle housings are coated with an oleophobic polymer. This coating retards pump fluid creep and thus contributes to a cleaner vacuum chamber.

TWO PIECE DESIGN

To simplify defrosting and cleaning, all BC baffles in the 2 to 10 inch nominal size range consist of a box type housing with a removable chevron insert. The vacuum line connections for the 4-inch to 10-inch baffles are sized for 150 pound ASA-type flanges. The insert is gasket sealed to a rectangular flange on the housing and can be easily removed without breaking the vacuum line connections.

HIGH CONDUCTANCE

High conductance is characteristic of all CVC chevron baffles. Contributing to this conductance are the short flange to flange dimensions, large inner diameters, and chevrons which provide the best balance between optimum conductance and baffle efficiency. Pumpdown times are further reduced when liquid nitrogen or low temperature freon refrigeration is used.

STURDY CONSTRUCTION

The two piece BC baffles are available with casings of aluminum (4 inch, 6 inch, and 10 inch sizes). Aluminum is suitable for most applications; its low outgassing properties are particularly valuable in systems. The chevron inserts are fabricated of copper and are tin plated to decrease heat loss. Gasket grooves, which can trap atmospheric gases and release them into the system, have been eliminated from the vacuum line flanges of the smaller BC baffles. Flanges have a raised gasket surface with a 32 micro inch RMS finish. Con O Ring gaskets are supplied. These gaskets are conventional elastomer O rings held in an aluminum retainer which locates the gasket on the seating surface and predetermines compression to the optimum value. Buna N gaskets are standard; Viton A gasket conversion kits can be purchased for all baffles up to 10 inches in nominal size.

BC baffles larger than 10 inches in nominal size are of one piece construction with the chevrons permanently mounted in a cylindrical carbon steel housing. Top and bottom flanges are drilled to match the CVC pumps and valves of the same nominal size. The top flange is grooved and supplied with a Buna N gasket.

ORDERING INFORMATION — BC BAFFLES

Model		Description	Part Number
BC21	Multi Coolant	W/Copper Tin Plated Chevrons	[illegible]
BC31	Multi Coolant	W/Copper Tin Plated Chevrons	[illegible]
BC41B	Multi Coolant	W/Copper Tin Plated Chevrons	[illegible]
BC61C	Multi Coolant	W/Copper Tin Plated Chevrons	[illegible]
BC101B	Multi Coolant	W/Reservoir and Chevrons	[illegible]
BC210A	Multi Coolant	W/Copper Chevrons, Steel Housing	[illegible]
BC350	Multi Coolant	W/Copper Chevrons, Steel Housing	[illegible]

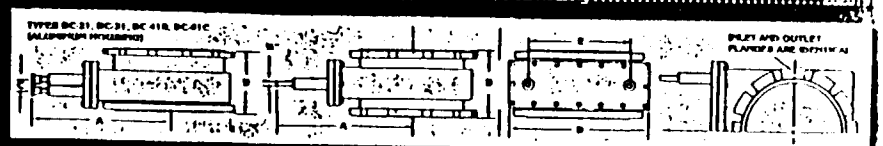

DIMENSIONS — 2-INCH TO 10-INCH BC BAFFLES

Nominal Size	Type*	A	B**	C	D	E	Flange OD	Flange ID	Flange Thick	Holes BC	Holes No.	Holes Size	Offset***	Weight (LB) Net	Weight (LB) Ship.
2"	BC 21	4.5	4 1/8	1/4	5 1/2	2 1/4	X Upper 4 Y Lower 4	2 1/4 2 1/4	1/8 1/2	3 1/4 3 1/4	6 6	3/8 3/8	30° 30°	— —	— —
3"	BC-31	4.5	4 1/2	1/4	5 1/2	4	X Upper 6 Y Lower 6	3.3 3.3	1/2 —	4.75 4.75	4 4	3/8 3/8	— —	— —	— —
4"	BC-41B	10 7/8	6 1/2	1 1/4	10 7/8	6 7/8	Both 9	5 1/4	15/32	7 1/2	8	1/2	22 1/2°	23	30
6"	BC-61C	12 29/32	7 1/8	2 1/8	13 1/4	9 1/8	Both 11	7	9/32	9 1/2	8	1/2	22 1/2°	44	53
10"	BC 101B	15 1/8	8 1/2	1 1/4	17 1/4	12 29/32	Both 16	12	11/16	14 1/2	12	1	15°	88	97

*Type numbers ending in 0 designate stainless steel housing; numbers ending in 1 designate aluminum housing.

**Add 0.102" for each Con-O-Ring.

***Bolt hole offset is measured from the vertical in drawing. Cooling connections are as noted.

ACCESSORIES FOR BC BAFFLES

A Freon-12 refrigeration unit is available for use with BC type baffles. The unit is available for 115-volt operation (type BC-016A) or 230-volt operation (type BC-017A) and is easy to install.

(BCN type inserts with large reservoir capacities are available to adapt the smaller BC baffles for use with liquid nitrogen. When these inserts are used, the holding time for liquid nitrogen is materially increased over that of the standard BC type inserts.)

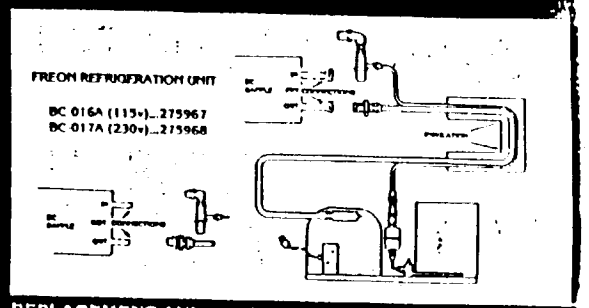

INSERT RESERVOIR DATA

Model	Capacity (Liters)	Maximum Allowable Internal Pressure (PSIG)
BC-21	0.07	200
BC-41B	—	200
BC-61C	—	200
BC-101B	5.35	160
BC-210A	1.03	250
BC-350	1.72	250

REPLACEMENT AND SPARE PARTS

CON-O-RINGS — FLANGE SEALS FOR VCS(P) VALVES AND BC(N) BAFFLES

Item	Part Number
2" Buna Gasket	265056-0001
3" Buna Gasket	265056-0002
4" Buna Gasket	265056-0003
6" Buna Gasket	265056-0006
10" Buna Gasket	265056-0010
11" Buna Gasket — 12" I.D.	265056-0011
2" Viton Gasket	265617-0001
3" Viton Gasket	265217-0002
4" Viton Gasket	265617-0004
6" Viton Gasket	265617-0006
10" Viton Gasket	265617-0010
11" Viton Gasket — 12" I.D.	265617-0011

TUNGSTEN FILAMEN

Type Wire Size	
F1—3 x .025 W F1—3 x .030 W F1—.040 W	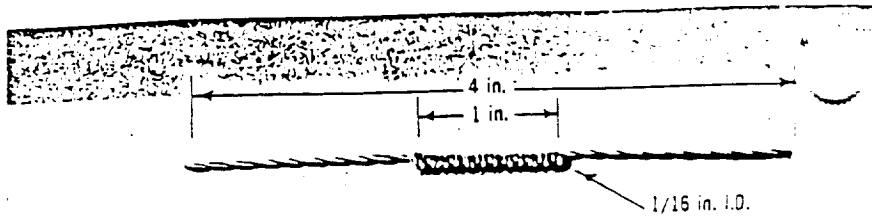
F2—3 x .025 W F2—3 x .030 W F2—4 x .030 W	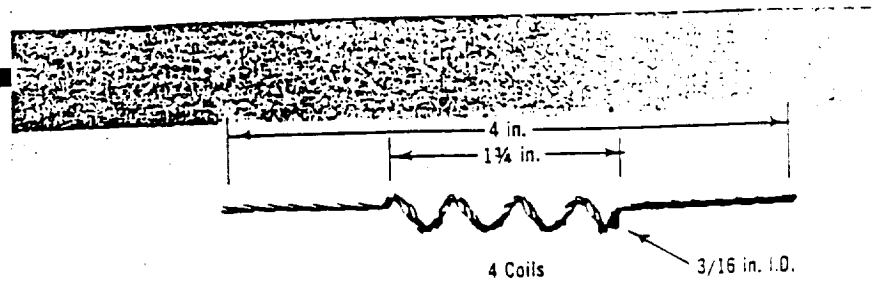
F3—3 x .025 W F3—3 x .030 W F3—2 x .040 W F3—4 x .030 W F3—.040 W	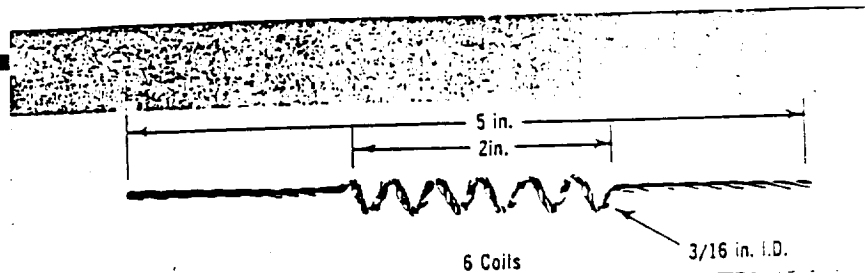
F4—3 x .025 W F4—3 x .030 W F4—4 x .030 W F4—2 x .040 W F4—.040 W	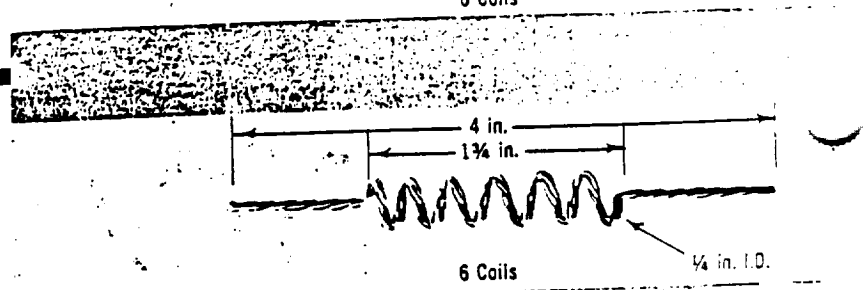
F5—3 x .025 W F5—3 x .030 W F5—4 x .030 W F5—2 x .040 W F5—3 x .040 W F5—.040 W	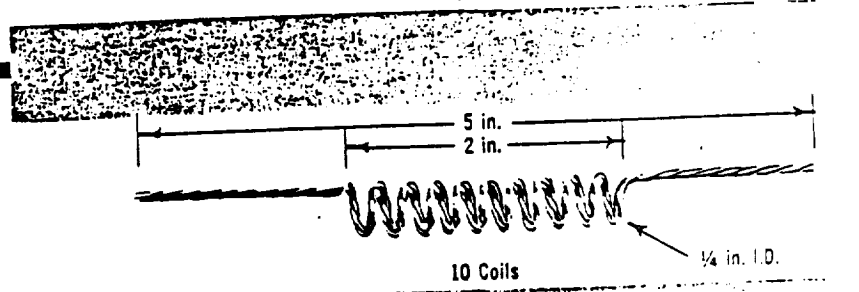
F6—3 x .025 W F6—3 x .030 W F6—4 x .030 W F6—2 x .040 W F6—3 x .040 W	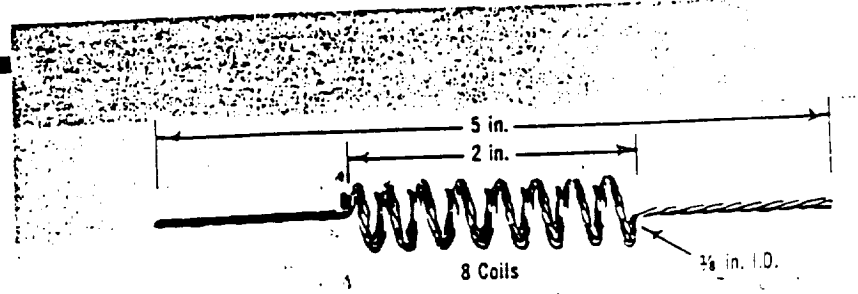

ORIGINAL PAGE IS
OF POOR QUALITY

MIDWEST TUNGSTEN SERVICE

Tips

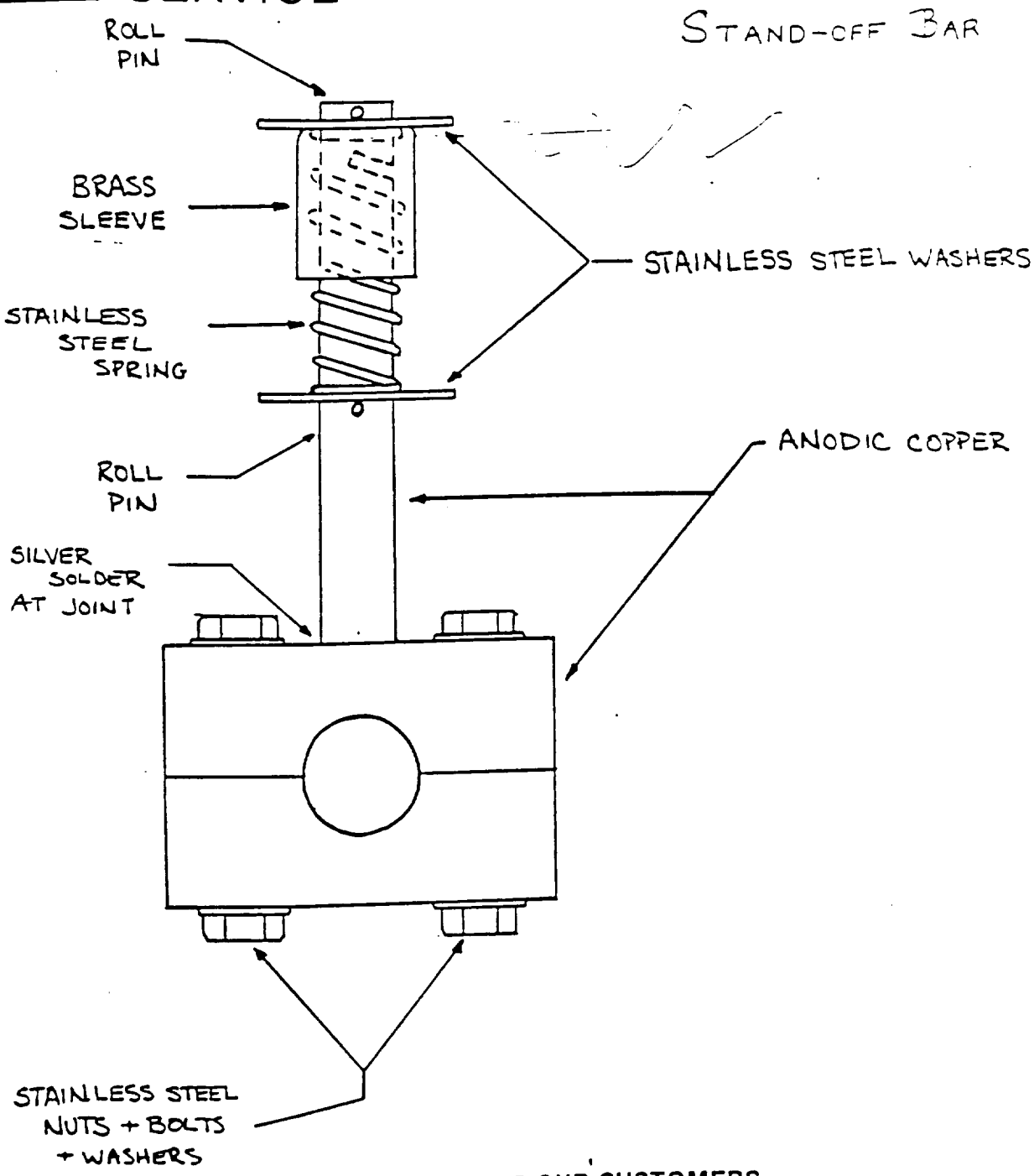

WE ARE HERE TO HELP OUR CUSTOMERS.

MIDWEST TUNGSTEN SERVICE, INC.

1-800-626-0226
Ill. 312-325-1001
Telex 6974734MTS

Varian

Liquid Nitrogen Level Controllers

- Automatically Refills Cryogenic Baffles, Traps and Coils
- Reliable
- No Adjustments or Calibrations
- Custom Requirements on Request

The Varian Liquid Nitrogen Level Controller models provide a reliable method for controlling the level of LN_2 in a cryogenic container by regulating the transfer of LN_2 from a pressurized vessel.

A variety of applications can be addressed by the Varian LN_2 models.

For users who require zero differential level control, the single sensor models (1000 Series) is recommended.

Those users who wish to maintain a LN_2 level within a "high-low" range, may choose to regulate the LN_2 transfer by affecting the fill time (1100 Series) or the delay time (1200 Series) or may utilize a system of dual ("high, low") sensors (2000 Series).

Each series is available with alarm and mechanical relay options. Choose the one that best suits your needs.

CUSTOM MODIFICATIONS AVAILABLE ON REQUEST

Specifications

Controllers

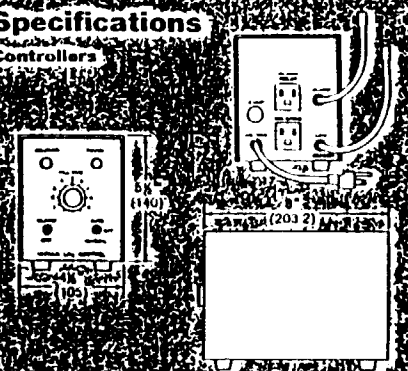

Power: 115VAC, 50/60 Hz, Long Cable
Operating Modes: Auto/Manual/Off
Sensor(s): Solid-state, encapsulated, 8 feet (2440mm) long, cable
Sensor Element: 3/8" (9.5mm) long, 1/4" (6.0mm) diameter
Indicators: Power, Solenoid
Alarm (optional): Audible, 115VAC, 3 amps
Fill Timer: Adjustable from zero to 6 minutes
Delay Timer: Adjustable from zero to 20 hours
Solenoid Relay: 115VAC, 3 amps, 50/60 Hz
Fuse: 3 amps
Weight: 2.5 lbs

Transfer Line

972-0008, 972-0010

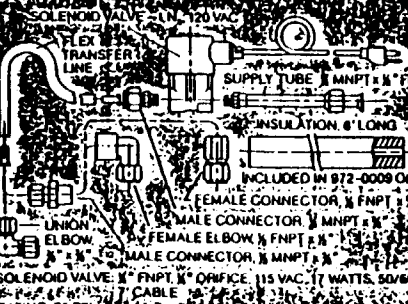

Sintered Bronze Splash Arrestor
972-0011

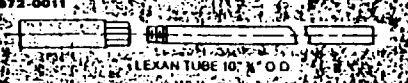

Single Level Sensor Models

(Model Series 1000)

972-1000 Single Level Sensor Model
This model uses one sensor, when it goes "dry" a low LN_2 level is indicated and the LN_2 fill operation begins. When the sensor becomes "wet" the fill operation is concluded. Thus a constant LN_2 level can be maintained within a cryogenic vessel, a wide hystereses margin prevents solenoid chatter.

972-1010 Single Level Sensor with Alarm
This model is like the 972-1000 except an audible alarm sensor and circuitry are included. When the alarm sensor goes "dry" (or optionally "wet") an audible alarm sounds. The alarm is re-set via the "alarm/off" switch.

972-1012 Single Level Sensor with Alarm and Mechanical Relay
This model is like the 972-1010 except a 115V, 3 amp relay output is included. This relay is activated (or optionally de-activated), whenever the alarm sounds. The relay is re-set only when the alarm sensor becomes "wet".

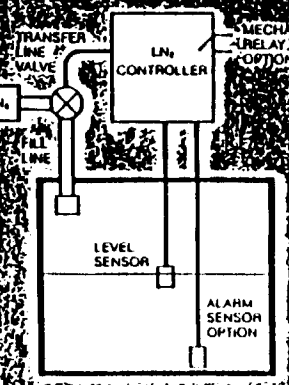

Single Level Sensor Timer Controlled Filling Cycle Models

(Model Series 1100)

972-1100 Single Level Sensor with Fill Timer
A low LN_2 level is indicated when the sensor, placed low in the cryogenic vessel, detects a "dry" condition. The "dry" condition signals the controller to add LN_2 to the vessel for a pre-set time. The timer provides a duration of fill from zero to six minutes.

972-1110 Single Level Sensor with Fill Timer and Alarm
This model is like the 972-1100 except an audible alarm sensor and circuitry is included. Whenever the alarm sensor, placed lower in the cryogenic vessel than the LN_2 level sensor, detects a "dry" condition, an audible alarm sounds. The alarm is controlled via an "alarm/off" switch.

972-1112 Single Level Sensor with Fill Timer, Alarm and Mechanical Relay
This model is like the 972-1110 except a 115V, 3 amp relay output is included. This relay is activated (or optionally de-activated), whenever the alarm sounds. The relay is re-set only when the alarm sensor becomes "wet".

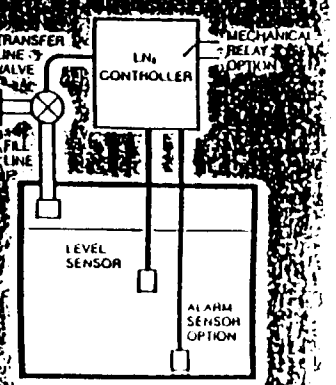

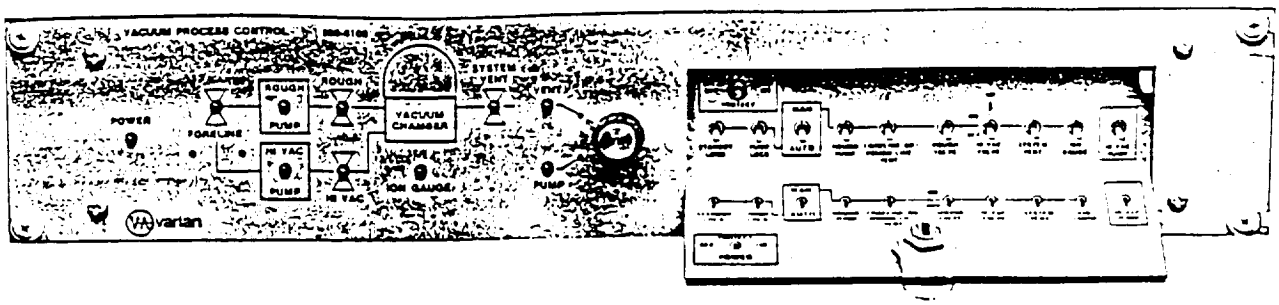

Figure 1. Vacuum Process Control, Front View

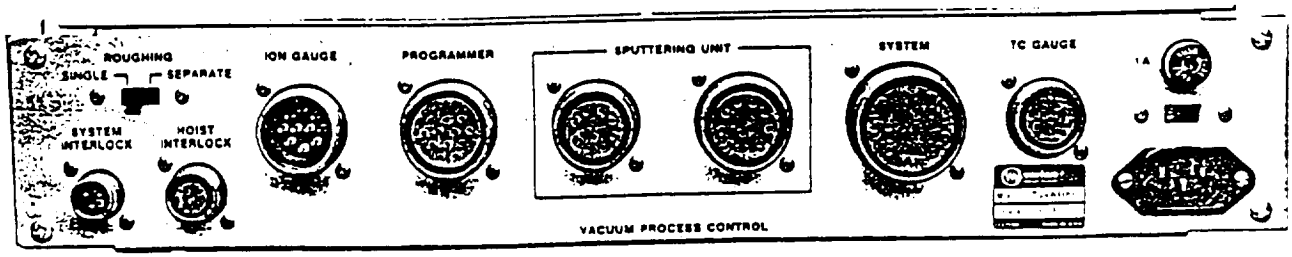

Figure 2. Vacuum Process Control, Rear View

Reliable...versatile performance

THE PROVEN VALVE CONTROL FOR AUTOMATIC VACUUM SYSTEMS

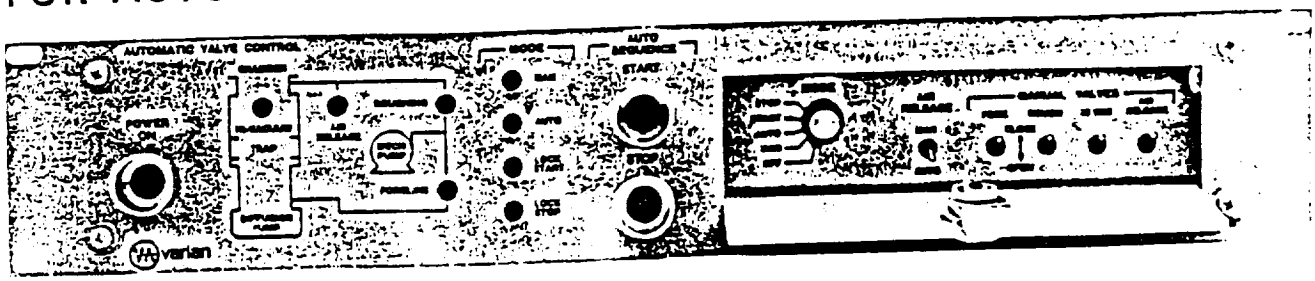

GENERAL DESCRIPTION

The Automatic Valve Control provides complete automatic vacuum system valve cycling from atmosphere to high vacuum pressures. The unit Model Number 971-1016, sequentially operates four electrically actuated, pneumatic valves with complete assurance against operator error or power failure. The unit provides repeatable, trouble-free operation in both production and laboratory applications.

Available in a standard rack mounted configuration, the valve control provides four modes of operation: Automatic, Locked Stop (standby), Locked Start (high vacuum) and Manual. All switches are located behind a hinged panel which may be locked if uninterrupted automatic control is desired. A schematic diagram on the panel locates each valve in the system and is light-key to indicate whether individual valves are open or closed.

This new valve control unit is designed to operate in conjunction with the Varian Model 843 Ratiomatic Ionization Gauge Control Unit*. In operation, the gauge control signals the valve control when the roughing – high vacuum crossover point is reached (interface cable is supplied with the valve control). In turn, when the valve control START, STOP or POWER-OFF switches are depressed, it remotely turns off the ion gauge filament.

* Model 843 Ion Gauge Control described in publication number VAC 1078.

MODE SELECTIONS

Automatic
The start button brings the pressure in the chamber from atmosphere to full high vacuum. In this position, the valves are automatically sequenced at the proper time.

Locked Stop (standby)
In this position only the foreline valve is open. This leaves the chamber air released and places the vacuum system tamper-proof, standby condition ready for subsequent quick pumpdown of the chamber.

Locked Start (high vacuum)
When set to this position and the start button is depressed, the system will cycle to full high vacuum and remain in this state until the mode selector switch is altered.

Manual
When the unit is in this mode, each valve may be operated by means of individual switches located behind the lockable panel. This allows experienced personnel to operate the system in special applications, or to permit greater flexibility in maintenance or trouble shooting. The valve control does not provide any interlocks in the manual mode.

In all modes of operation, a power failure will automatically cause all valves to close. The valves will remain closed until the power-on button is manually depressed. At this time the foreline valve will open in all modes except manual. When the start button is depressed and if the chamber pressure is greater than crossover setpoint established by the ion gauge control, the system will rough pump the chamber before returning to high vacuum operation.

varian

Thin Film
Technology Division
611 Hansen Way
Palo Alto, CA 94303

Varian GmbH, D-7000
Stuttgart-Vaihingen
Handwerkstrasse 5-7
West Germany

Varian SpA
Via Varian
10040 Leini
Torino, Italy

D–

SIMPLIFIED CIRCUIT — UNIQUE RATIOMATIC CONCEPT ELIMINATES ONE-THIRD OF THE CIRCUITRY AND SIZE OF CONVENTIONAL ION GAUGE DESIGN.

Improved accuracy with meter displaying log and decade scales. Decade scale has the advantage of constant accuracy display conventional linear scale.

Emission light indicates when necessary emission is established and also whether the gauge tube is contaminated beyond a useful level.

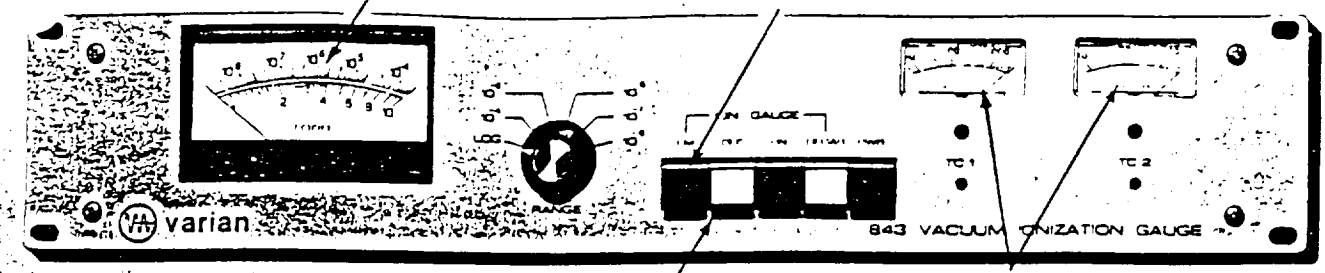

Easy to operate pushbutton controls with color coding for quick visual status information.

Two independent constant current TC circuits for continuous reading to 2 Torr. Constant current TC circuits eliminate calibration changes due to voltage drops. (Provided on 843 only.)

3 process control points option —2 ion gauge and 1 TC gauge.

115/230 volt, 50/60 Hz operation with switch change.

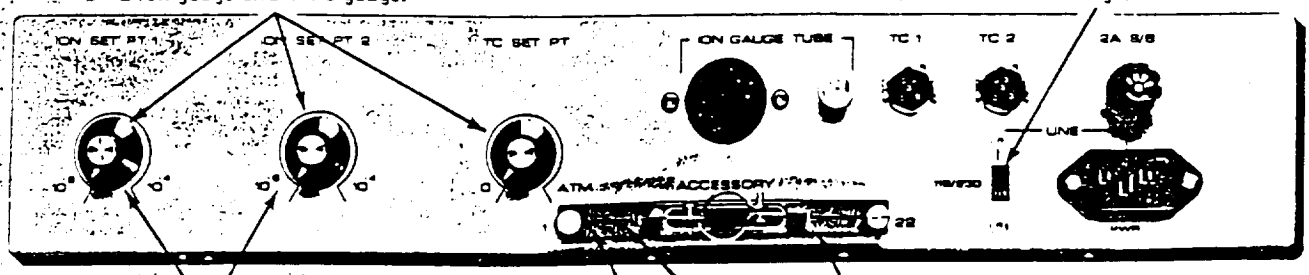

Filament status relay can be used as setpoint with fixed pressure trip of 2×10^{-3} Torr.

...ly adjusted optional ion gauge setpoints are independent of range switch.

Remote filament turn-on contacts.

Continuous recorder output.

Setpoints are safeguarded—when gauge filament is off and gauge control is on, the meter reads full scale and the setpoints are prevented from tripping.

THE RATIOMATIC PRINCIPLE

The Ratiomatic gauge controls use a new principle and unique circuitry to measure gas pressure with standard hot filament vacuum ionization gauges.

Ion gauge pressure measurement is based on the following relationship:

$P = \frac{i+}{i-}(1/S)$ Where P = Pressure in Torr

i+ = Ion current (in amps)
i− = Ionizing current (in amps) (emission)
S = Gauge sensitivity ($Torr^{-1}$) (determined by gauge tube geometry)

Conventional ionization gauge controls interpret and execute this relationship with the objective being a gauge control output display that is a function of pressure. To date, this objective has been accomplished by regulating the ionizing current i− and indicating the ionized current i+ as a function of pressure.

Since voltage fluctuations, contamination by process gases, exposure to atmosphere, and changes of filament temperature at high pressures (10^{-5} and above) cause very large variations in i−, careful regulation is necessary to avoid gross errors.

The new gauge controls, using the Ratiomatic technique developed by Varian, differ from all previous controls in the interpretation of the pressure indication $P = \frac{i+}{i-}(1/S)$. As a result, the need for regulation of i− and its attendant problems are eliminated.

In the 842 and 843 circuits, this is implemented by an analog microprocessor that measures i+ and i− continuously and generates a signal voltage proportional to gas pressure, independent of the absolute values of either i+ of i−.

GRANVILLE-PHILLIPS COMPANY

Ionization Gauge Controllers Series 260

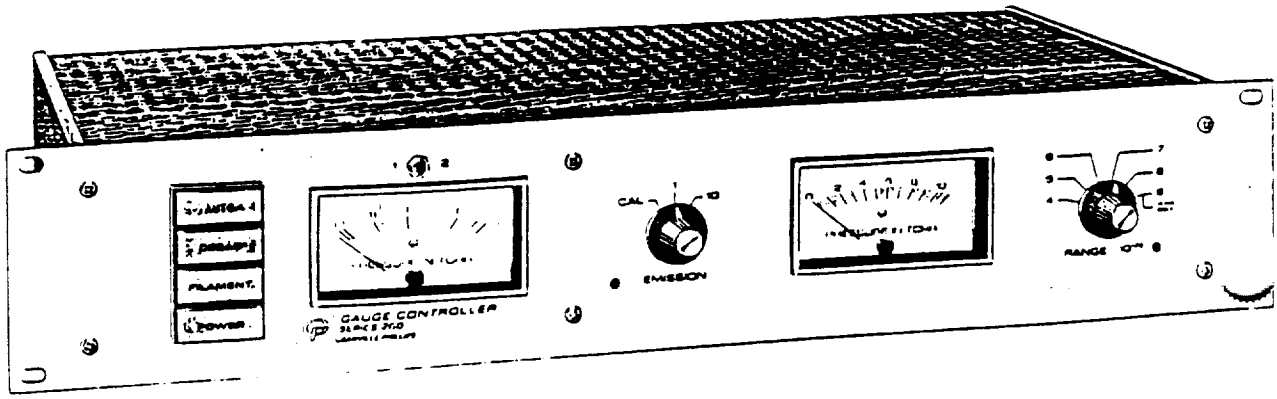

Features

- Pressure ranges from 1000 to 2 x 10^{-10} Torr
- Automatic ranging at low cost
- All solid-state circuit protects itself against any gauge tube malfunction
- Long cable operation up to 400 feet
- Process control: start process in any decade and stop it in the same or any other decade

APPLICATIONS

This family of three Ionization Gauge Controllers is designed especially for applications requiring low cost, reliable pressure measurement in the range from atmospheric pressure down to the X-ray limit of standard Bayard-Alpert ionization gauges. Each unit is designed to meet a specific price/performance need, thereby allowing the user to select and pay only for those features actually required.

The circuits have been designed to withstand all gauge tube malfunctions. As a result, these controllers can be used successfully by inexperienced operators or whenever glow discharges or tube shorts are to be expected.

The process control feature permits automatic contr vacuum processes in the range from 1 x 10^{-2} to 1 Torr. Two independent process control relays are p

© Granville-Phillips

APPENDIX E: SECTIONS OF THE ZEISS TELESCOPE ASSEMBLY DEFINITION FINAL REPORT

HALMAR SCR Power Controls Series 3P

≈ $2400.00

[illegible]-Phase, Six-SCR, [illegible]hase-Fired Models [illegible]ated 60 through 225 amperes

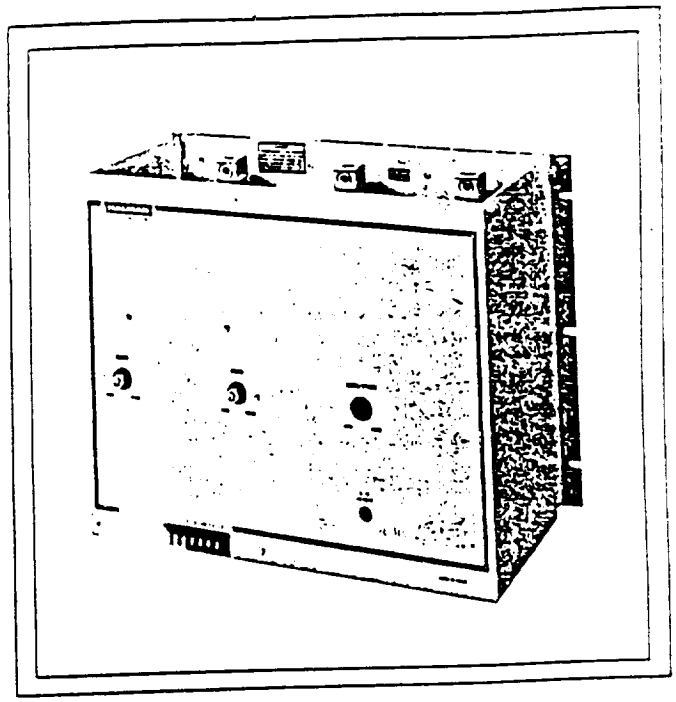

Front view, typical 60- through 225-ampere unit

[illegible]eatures

- Conservative thermal design increases service life, minimizes maintenance
- Compact design
- Electrically isolated heat sinks
- Phase-locked-loop synchronization
- Infinite firing-angle resolution allows stepless control
- Optical isolation of input signal
- Power-up softstart for inductive loads
- Pulse-train gating ensures reliable SCR firing
- SCRs rated 1,400 PIV
- I^2t fuses, MOVs and dv/dt networks p[illegible]ect SCRs
- [illegible]ge regulated (current/power available)
- Power linear
- Two-year warranty
- CSA® Certification available

Description

"3P" designates Halmar's new line of three-phase, six-SCR, phase-controlled SCR Power Controls. They are used for precisely controlling ac power to resistive and inductive loads. The 3P controls all standard line voltages (120, 208, 240, 400, 480 and 575 V ac) at either 50 or 60 Hz and can be modified for non-standard voltages. Current ratings range to 1,200 amperes. This sheet covers models for 60 through 225 amperes.

A softstart feature brings output voltage up slowly to prevent saturation of inductive loads. The softstart circuit also resets after a power loss. Other features of the unit include a digitally-controlled firing circuit with optically-isolated input, phase-locked-loop synchronization, isolated pulse-train gate signals and voltage regulation. These features ensure precise, stable control and increase SCR firing precision and reliability.

[illegible] can be matched to any standard temperature or [illegible]ss controller. Manual output control can be by the unit's own BIAS and GAIN potentiometers, or from a remo[illegible] potentiometer. Output power is proportional to the [illegible]ut control signal with output voltage being regul[illegible] to remain constant as line voltage changes. Extern[illegible] SCR shutdown may be accomplished using a customer provided contact to common. Options are available for other control methods (see reverse).

I^2t fuses and MOVs protect SCRs from transient voltages and current surges. False firing (dv/dt) protection is also included. GAIN and BIAS controls and control connection terminal strip are all on the front cover. The cover is hinged to provide component and user protection as well as quick access for power wiring and maintenance.

Two-year warranty

The 3P Series has been conservatively designed and engineered to provide years of trouble-free service. The 3P Series represents a new standard in SCR Power Controls and is offered with a two-year warranty covering parts and labor.

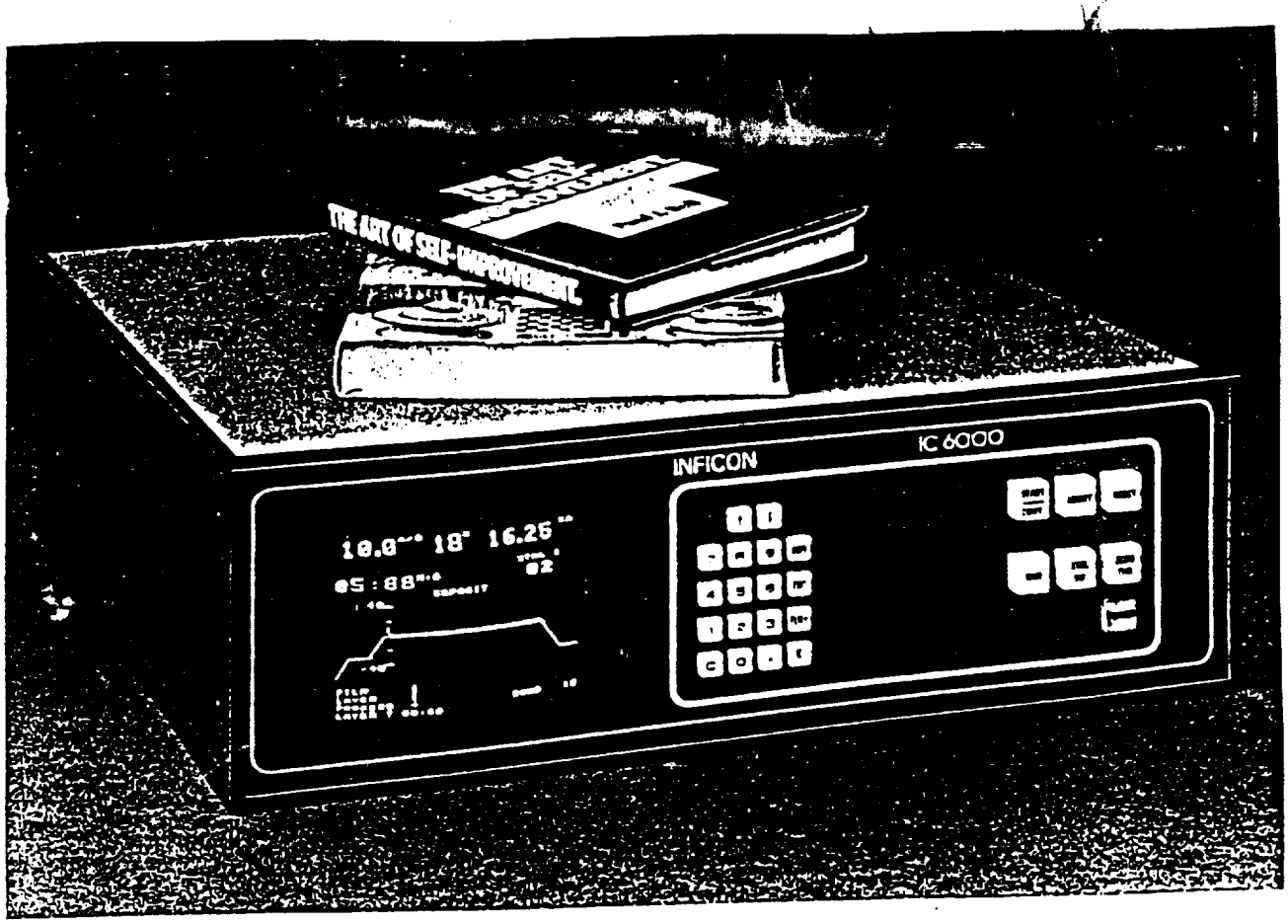

Inficon's IC-6000® deposition controller is not as good as it used to be. Now, it's even better.

We couldn't leave well enough alone. Why? Because "well enough" isn't "good enough" at Inficon. So we've taken our IC-6000, the industry's most popular multi-film vacuum deposition controller, and made it better—to give you more applications flexibility than ever before.

Here are the improvements you'll benefit from.

"Sample and Hold" is a new, powerful software option that provides a practical means of rate control for long-term sputtering and thermal evaporation processes. The "Interfacial Layering" software option permits the deposition of a transitional zone between two sequential materials.

Plus, we developed a new shuttered sensor head to improve measurement accuracy in a multi-material process by dedicating one sensor to one source.

And what makes these options even better is the fact that they can be retrofitted on any IC-6000.

Some things can't be improved upon.

So we didn't change the real-time CRT display of the deposition profile. Nor did we modify the user programmable process and I/O controls. And we still offer five sensor heads—including our patented sputtering sensor—for various applications, as well as our own CrystalSwitch™ which, in the event of crystal failure, gives you automatic, uninterrupted rate control.

We've combined these features with factory support and nationwide field service to meet your special demands—part of the reason why there are over 1,000 IC-6000s in use today.

There's more to be said and read about the "new" IC-6000.

But there's not room for it here. Please contact your Inficon sales representative—or us—to get more IC-6000 data.

Find out how we made the IC-6000 better. For you.

INFICON
LEYBOLD-HERAEUS

6500 Fly Road, East Syracuse, New York 13057
(315) 437-0377 TWX: 710 541-0594

1455 Airport Boulevard, San Jose, California 95110
(408) 279-1425 TWX: 910 338-0144

In Canada: (416) 746-0050 TWX: 610 492-1340

IC-6000® is a registered trademark of Inficon Leybold-Heraeus.
CrystalSwitch™ is a trademark of Inficon Leybold-Heraeus.

HIGH VOLTAGE POWER SUPPLY

TYPE SDC-100

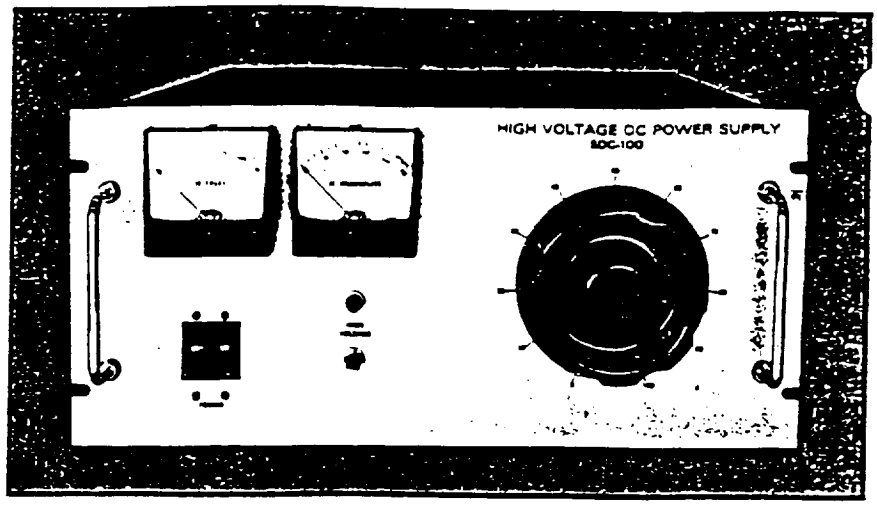

FEATURES

- 0-5000 Volts DC at 300 Milliamps Continuous Duty
- Available With Feedthroughs For Glow Discharge Cleaning
- High-Voltage Polarity Easily Reversed
- High-Reactance Power Transformer
- Safety Switch Prevents Operation When Vacuum Chamber Is At Atmospheric Pressure
- Useful for DC Diode Sputtering Or DC Biased RF Sputtering

APPLICATIONS

The SDC-100 Power Supply is rated to deliver up to 300 milliamps at 5000 volts DC on a continuous duty cycle. The intermittent duty rating is up to 500 milliamps. This unit, used with the Evaporation Kits, cleans substrate surfaces by glow discharge prior to thin-film deposition. Glow discharge cleaning, a preferred method of cleaning substrates in a vacuum, removes the last monomolecular layer which ordinary cleaning with detergents or alcohol fails to remove. To attain maximum adherence to deposited thin films, this layer must be removed.

The SDC-100 Power Supply can also be used as a power source for DC diode sputtering of thin films, electron beam and electron bombardment heating, or other applications which require a high-voltage, high-reactance power supply.

SPECIFICATIONS

1. Power Supply

Height	8 3/4"
Width	19"
Depth	15"
Input Power	208-240 volts, 50-60 Hertz, single phase, 15 amps maximum
DC Output Voltage	0-5000 volts, continuously variable, 300 milliamps continuous
Master Circuit Breaker	15 amps
Net Weight	140 lbs.
Shipping Weight	164 lbs.

2. Feedthroughs

Type AE-002	Fits 1/2" FPT hole; rated for 25,000 volts 10 amps DC; 100°C maximum bakeout temperature.
Type AE-004-155	Fits 1 17/32" hole; rated for 25,000 volts, 10 amps DC; 100°C maximum bakeout temperature.

ORDERING INFORMATION

Description	Part Number
High-Voltage Power Supply SDC-100	276410
High-Voltage Power Supply with AE-002 Feedthrough and Pressure Switch SDC-100-1	276410-1
High-Voltage Power Supply with AE-004-155 Feedthrough, Pressure Switch and Needle Valve SDC-100-2	276410-2

NO ARC DISCHARGE

The high-reactance transformer in the SDC-100 Power Supply limits the output voltage to a value below that required to sustain an arc discharge in vacuum.

SOLID-STATE RELIABILITY

The SDC-100 Power Supply uses silicon diode stacks which provide greater reliability than vacuum tube rectifiers. No warm-up time is required.

SAFETY FEATURES

A pressure-sensitive switch is provided with the SDC-100 glow discharge cleaning packages. When installed in a vacuum chamber, this switch opens the power input circuit while the chamber is at atmospheric pressure. An added design feature prevents the pressure switch from activating the power supply without the operator being aware of it. A safety interlock switch opens the power input circuit whenever the cover of the power supply is removed.

SIMPLE TO INSTALL

The SDC-100 Power Supply is available with a choice of high-voltage feedthroughs for installation in most vacuum systems. The standard cabinet can be easily mounted in a 19-inch rac' Ten-foot long high-voltage leads provide flexibility in locating the power supply.

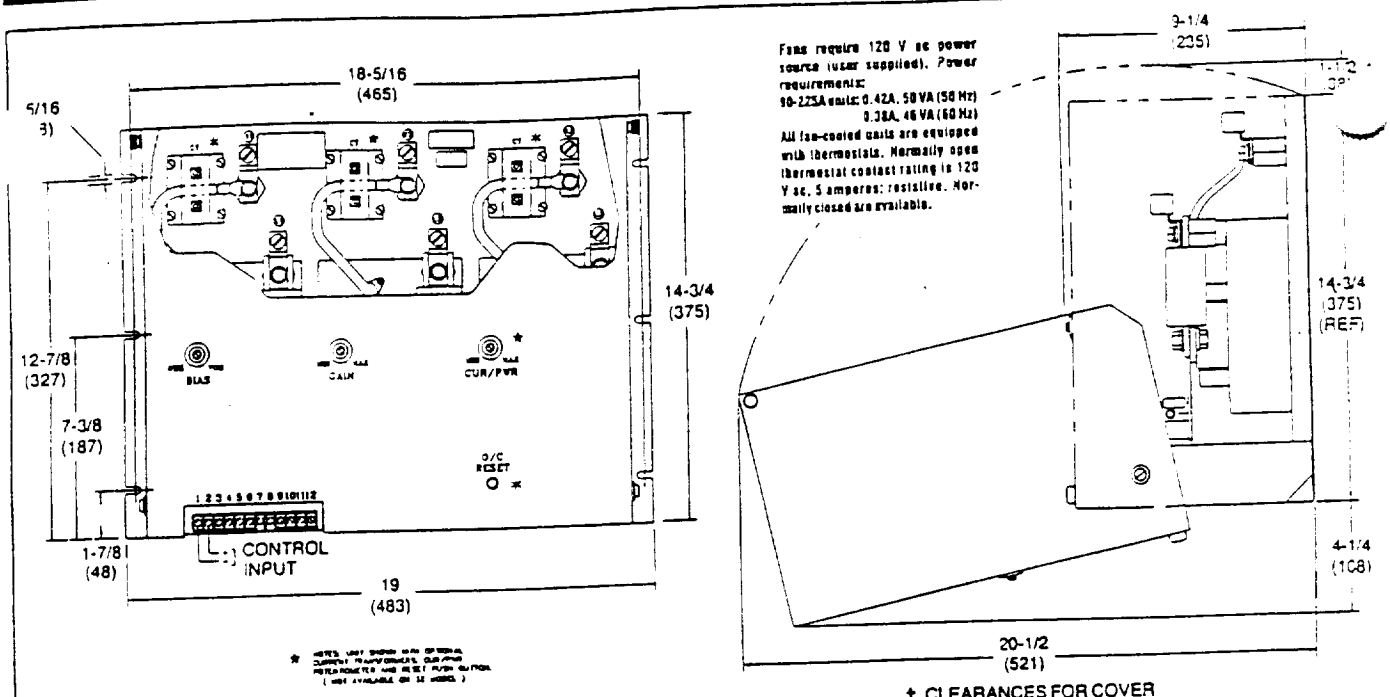

Dimensions in inches and millimeters (mm).

Specifications

1. This page shows specifics for 60- through 225-ampere models. Shipping weight for these models is approximately 40 lb., 18.2 kg.
2. See "Introduction to Phase-Fired Controls" for General Specifications.

Ordering Information

1. Specify complete Model No. from table. Then, to order any of the options add dash and letters to Model No. Example: -CR, after the Model No., adds a three-phase Current Regulation option.
2. If temperature/process controller is used, specify control signal level.

Options (all options are plug in for convenience)

Complete details for standard options are presented in "Options for Phase-Fired Controls" sheet (at end of P Series sheets). Options for three-phase controls are:

CR — Current Regulation, Three Phase.
PR — Power Regulation, Three Phase.
CL — Current Limit, Three Phase.
OC — Overcurrent Trip, Three Phase.

All options include required transformers. For information about other options, please consult factory.

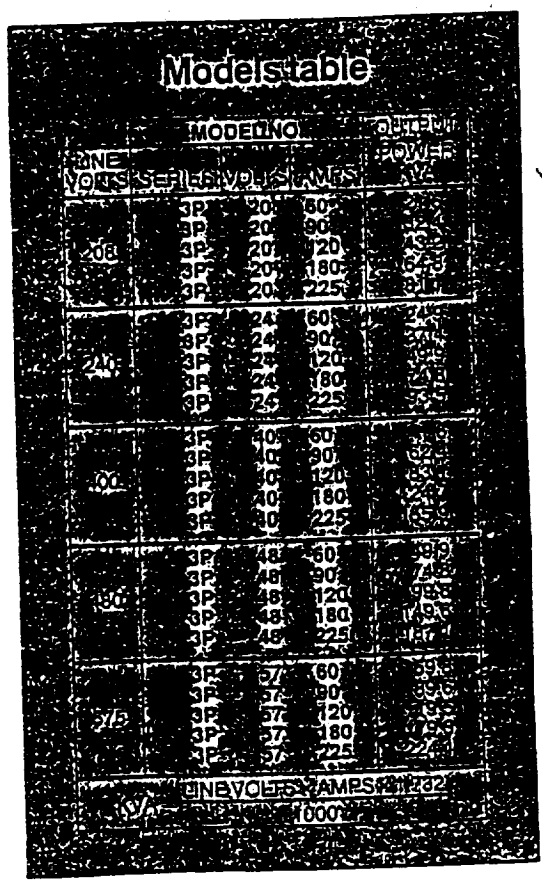

Models table

LINE VOLTS	MODEL NO. SERIES	VOLTS	AMPS	OUTPUT POWER KVA
208	3P	20	60	[illegible]
	3P	20	90	[illegible]
	3P	20	120	[illegible]
	3P	20	180	[illegible]
	3P	20	225	[illegible]
240	3P	24	60	[illegible]
	3P	24	90	[illegible]
	3P	24	120	[illegible]
	3P	24	180	[illegible]
	3P	24	225	[illegible]
400	3P	40	60	[illegible]
	3P	40	90	[illegible]
	3P	40	120	[illegible]
	3P	40	180	[illegible]
	3P	40	225	[illegible]
480	3P	48	60	[illegible]
	3P	48	90	[illegible]
	3P	48	120	[illegible]
	3P	48	180	[illegible]
	3P	48	225	[illegible]
575	3P	57	60	[illegible]
	3P	57	90	[illegible]
	3P	57	120	[illegible]
	3P	57	180	[illegible]
	3P	57	225	[illegible]

LINE VOLTS × AMPS ÷ 1000 = KVA

HALMAR

HALMAR ELECTRONICS, INC. • 900 North Hague Avenue • Columbus, Ohio USA 43
Telephone 614-275-0530 TWX 810-482-1654 Facsimile 614-274-2559
WESTERN SALES OFFICE • 1614 W. Bentrup Cl. • Chandler, AZ USA 85224

4.2.6.9.1.2 Coating

4.2.6.9.1.2.1
Remove M1 from the primary cell and transport it to the washing container, Fig. 4.2.6.9.1.2-1.

4.2.6.9.1.2.2
The primary mirror is put on special designed stand axial supports by M1 carrier this stand is part of the washing container, Fig. 4.2.6.9.1.2-2.

4.2.6.9.1.2.3
Remove dust from the mirror surface, blow it away and clean the surface with filtered water. Remove old coating with soda lye (10 %) and if necessary use hydrochloride acid (8 %). Remove remaining old coating parts with sponge and cotton pads.

4.2.6.9.1.2.4
Clean the mirror with distilled water and remove water spots with hydrochloride acid. Clean the mirror surface with aceton and pure alcohol, let it dry to remove also remaining water vapor.
Blow the mirror surface dry and clean with dry nitrogen.

4.2.6.9.1.2.5
Return the cleaned mirror by means of lifting device back into the transport carriage.

4.2.6.9.1.2.6
By means of lifting device with the help of a crane the primary mirror is put into the coating plant, Fig. 4.2.6.9.1.2-3, 4.2.6.9.1.2-4.
The mirror is set on a pedestal with sufficient axial support. M1 carrier remains in the coating plant should not extend over the mirror surface, Fig. 4.2.6.9.1.2-3.

4.2.6.9.1.2.7
Check the mirror surface and clean with aceton and alcohol if necessary.

4.2.6.9.1.2.8
Close the vacuum chamber and follow the instructions of the manufacturer, Fig. 4.2.6.9.1.2-4.

4.2.6.9.1.2.9
After the coating procedure the mirror is removed from the vacuum chamber and put in its transportation carrier. All further steps are as already described but in reserved sequence.

4.2.6.9.1.2.10
As a final step check the alignment of the mirror in the telescope and readjust if alignment is not correct.

ORIGINAL PAGE IS
OF POOR QUALITY

4.2.6.9 Mirror coating

4.2.6.9.1 Coating procedure for the primary mirror M1

4.2.6.9.1.1 Dismantling of the primary from the telescope

4.2.6.9.1.1.1
Bring the Boeing 747 SP aircraft in the position for dismantling of the primary M 1, Fig. 4.2.6.9.1.1-1.

4.2.6.9.1.1.2
The transport carriage for the primary mirror M1 should be brought into a position reachable for the mirror changing device. Transport carriage secured against unwanted movement, Fig.

4.2.6.9.1.1.3
Telescope moved to the designated position for mirror exchange and blocked in this position, Fig. 4.2.6.9.1.1-2.

4.2.6.9.1.1.4
Mirror cover opened.

4.2.6.9.1.1.5
Cavity door opened.

4.2.6.9.1.1.6
By means of the M1-changing device the spider is together with the secondary mirror removed from the telescope. The spider is set onto a specially prepared spider-stand located in the Fig. 4.2.6.9.1.1-2, 4.2.6.9.1.1-1.

4.2.6.9.1.1.7
Tertiary mirror disassembly by help of the primary-changing-device removed from the tube and placed according the spider on a tertiary stand, Fig. 4.2.6.9.1.1-1.

4.2.6.9.1.1.8
Clamps of the primary axial support to be opened, Fig .4.2.6.9.1.1-3.

4.2.6.9.1.1.9
Primary mirror M1 removed from the telescope tube by means of the primary changing-device. To protect the primary during movement, Fig. 4.2.6.9.1.1-4, ...-5, ...-6.

4.2.6.9.1.1.10
Bring the primary mirror M1 by means of the transport carriage to the coating laboratory, Fig. 4.2.6.9.1.1-7.

4.2.6.9.3 Coating of the tertiaries M3/1 and M3/2

4.2.6.9.3.1 Dismantling from the telescope, Fig .4.2.6.9.3-1

4.2.6.9.3.1.1
Dismantling is according the procedures as described under 4.2.6.9.1.1.8 through 4.2.6.9.1.1.8 with the exception of 4.2.6.9.1.1.2 and 4.2.6.9.1.1.3. All the further handling activities are manual.

4.2.6.9.3.1.2
Remove the IR-reflecting mirror M3/1 together with its cell from the supporting tube and put it in its transport box.

4.2.6.9.3.1.3
Remove interface parts separating M3/1 and M3/2.

4.2.6.9.3.1.4
Dismantle M3/2 with its cell from the support tube and put it into its transport box.

4.2.6.9.3.1.5
Both mirrors brought to the coating laboratory.

4.2.6.9.3.1.6
Mirrors dismantled from their cell.

4.2.6.9.3.1.7
Further procedures analog to that of the secondary mirror M2 as under 4.2.6.9.2.2.
Due to different layers on the mirror the coating of M3/1 and M3/2 cannot be performed in one charge.

4.2.6.9.4 **Auxiliaries**

4.2.6.9.4.1 Interface flange for lifting device 1.
Required for the transport of the primary mirror from the transport box to the coating plant. The lifting device is part of the primary cell and carries the mirror via axial support from its rear side.

4.2.6.9.4.2 1-changing-device.
Necessary for M1 dismantling.

4.2.6.9.4.3 M1 transport carriage.

4.2.6.9.4.4 Support for spider (frontring).
The high has to be adjusted to that of the M2-changing-device which goes under the mirror M2 for dismantling.

4.2.6.9.2 M2-coating procedure

4.2.6.9.2.1 Dismantling of the secondary mirror

4.2.6.9.2.1.1
Follow the procedures as under 4.2.6.9.1.1.1 through 4.2.6.9.1.1.7, expect 4.2.6.9.1.1.2 and 4.2.6.9.1.1.3.

4.2.6.9.2.1.2
M2 changing carriage which is equipped with a lifting-piston brought under the secondary mirror, Fig. 4.2.6.9.2.1-1.

4.2.6.9.2.1.3
Move the lifting-piston up till its M2-support collar has contact with the M2-cell.

4.2.6.9.2.1.4
Remove M2-cell from the wobble mechanism and lower together with the cell.

4.2.6.9.2.1.5
M2 changing carriage to be brought out from the frontring unit. All further activities are manual.

4.2.6.9.2.1.6
Remove M2 with cell from the carriage and turn mirror upside. Put into transport box.

4.2.6.9.2.1.7
Transport the secondary in its cell to the coating laboratory.

4.2.6.9.2.2 Coating

4.2.6.9.2.2.1
Remove M2 from its box, put it on a table and dismantle it from its cell.

4.2.6.9.2.2.2
Clean and dry the mirror in a washing container according the procedures as described under 4.2.6.9.1.2.3 and 4.2.6.9.1.2.7.

4.2.6.9.2.2.3
The secondary is now put into the vacuum chamber of the coating plant. A pedestal for the mirror is necessary to bring its surface to a position as specified by the manufacturer of the coating device.

4.2.6.9.2.2.4
After coating the mirror is reinstalled according to the sequence as described under 4.2.6.9.2.1, starting from 4.2.6.9.2.1.7 with transport from coating facility to the telescope.

4.2.6.9.1.1-1, ...-2.

4.2.6.9.5.1.1.7
Tertiary disassembly by help of the primary changing device removed from the tube and place according the spider on a tertiary stand, Fig. 4.2.6.9.1.1-1.

4.2.6.9.5.1.1.8
M1C removed from the telescope tube by means of the primary changing device, Fig. 4.2.6.9.5.1.1-1, ...-2, ...-3 and ...-4.

4.2.6.9.5.1.1.9
Bring the M1C by means of the transport carriage to the coating laboratory, Fig. 4.2.6.9.5.1.1-5.

4.2.6.9.5.2 Coating

4.2.6.9.5.2.1
Remove M1C from the transport carriage and transport it to the washing container by crane, Fig .4.2.6.9.5.1.2-1.

4.2.6.9.5.2.2
The M1C is put on a special designed stand, this stand is part of the washing container, Fig. 4.2.6.9.5.1.2-2.

4.2.6.9.5.2.3
Remove dust from the mirror surface, blow it away and clean the surface with filtered water. Remove old coating with soda lye (10 %) and if necessary use hydrochloride acid (8 %). Remove remaining old coating parts with sponge and cotton pads.

4.2.6.9.5.2.4
Clean the mirror with distilled water and remove water spots with hydrochloride acid. Clean the mirror surface with aceton and pure alcohol, let it dry to remove also remaining water vapor.
Blow the mirror surface dry and clean with dry nitrogen.

4.2.6.9.5.2.5
Return the cleaned M1C by means of lifting device back into the transport carriage and turn it upside down by turning drive, Fig. 17.

4.2.6.9.5.2.6
Lifting M1C by help of a crane and put it into the coating plant, Fig. 4.2.6.9.5.2-3.
The M1C is set on a pedestal with sufficient axial support. M1C lifting device will be removed out of coating plant, central connection elements should be lower down as the M1 surface and not extend over him.

4.2.6.9.5.2.7
Check the mirror surface and clean with aceton and alcohol if necessary.

4.2.6.9.4.6 M1 stand with axial support for washing container.

4.2.6.9.4.7 Washing container.

4.2.6.9.4.8 Coating plant for 2.8 m mirrors.

4.2.6.9.4.9 Support for the mirror M1 in the vacuum chamber.

4.2.6.9.4.10 M2-changing carriage.
Trolley with lifting device.

4.2.6.9.4.11 M2-support for washing.

4.2.6.9.4.12 M2-support for vacuum chamber.

4.2.6.9.4.13 M3-supports for washing containers.

4.2.6.9.4.14 M3-supports for vacuum chamber.

4.2.6.9.5 Optional primary mirror coating in the M1 cell

4.2.6.9.5.1 Coating procedure for the primary mirror M1

4.2.6.9.5.1.1
Dismantling of the primary in cell from the telescope ((Primary in cell = M1C).

4.2.6.9.5.1.1.1
Bring the Boeing 747 SP aircraft in the position for dismantling of the primary M1C, Fig. 4.2.6.9.1.1-1.

4.2.6.9.5.1.1.2
The transport carriage for the primary mirror M1C should be brought into a position reachable for the mirror changing device. Transport carriage secured against unwanted movement, Fig. 4.2.6.9.1.1-1.

4.2.6.9.5.1.1.3
Telescope moved to the designated position for mirror exchange and blocked in this position, Fig. 4.2.6.9.1.1-2.

4.2.6.9.5.1.1.4
Mirror cover opened.

4.2.6.9.5.1.1.5
Cavity door opened.

4.2.6.9.5.1.1.6
[illegible] means of the M1C-changing device the spider is together with the secondary [illegible] the spider is set onto a [illegible] spider

ORIGINAL PAGE IS
OF POOR QUALITY

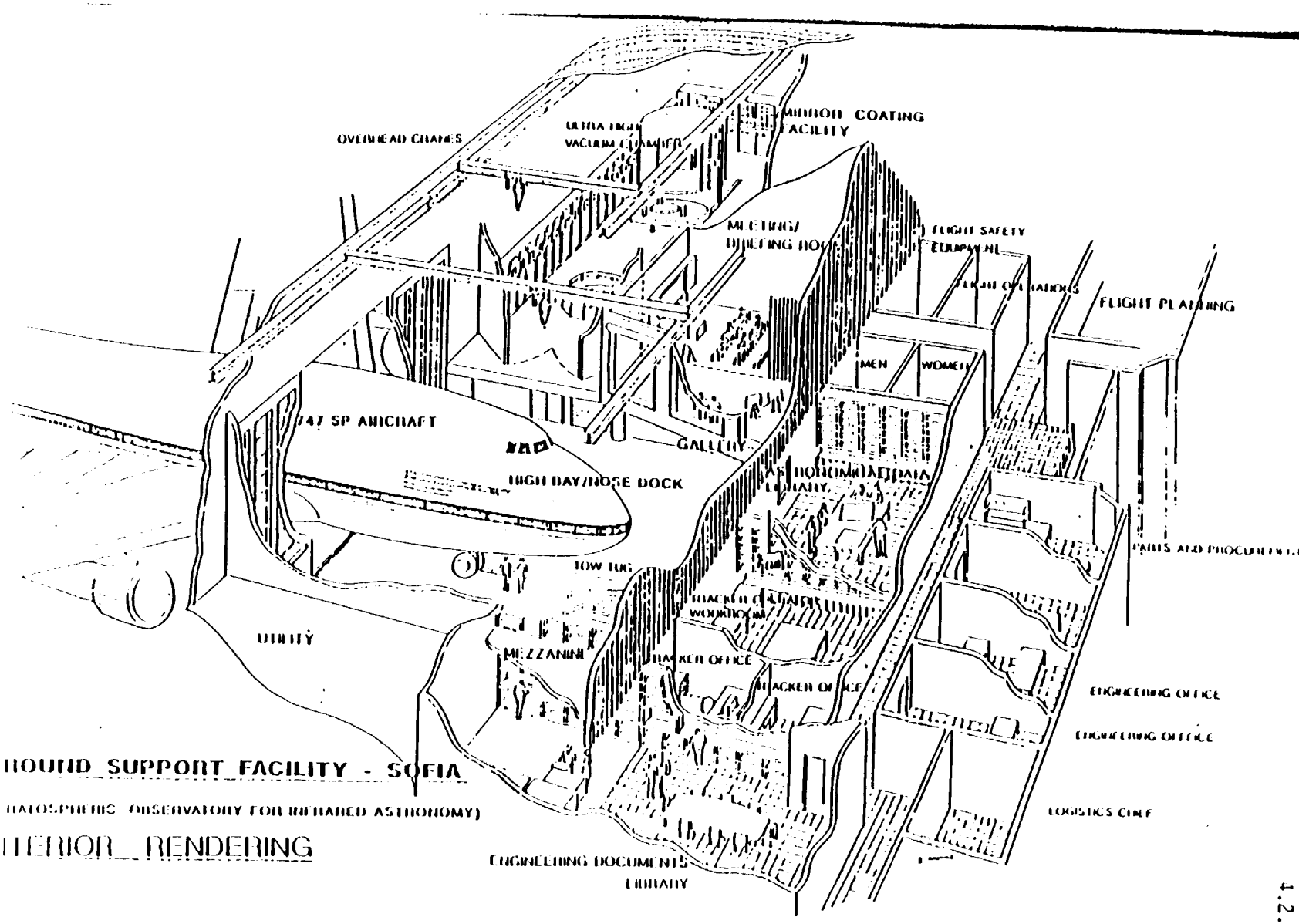

ROUND SUPPORT FACILITY - SOFIA

(ATOSPHERIC OBSERVATORY FOR INFRARED ASTRONOMY)

ITERIOR RENDERING

lescope Assembly
finition Phase B

SOFIA

MAN Dornier

ZEISS
West Germany

4.2.6.9-8

4.2.6.9.5.2.8
Close the vacuum chamber and follow the instructions of the manufacturer.

4.2.6.9.5.2.9
After the coating procedure the mirror is removed from the vacuum chamber and put in its transportation box. All further steps are as already described but in reserved sequence.

4.2.6.9.5.2.10
As a final step check the alignment of the mirror in the telescope and readjust if alignment is not corred.

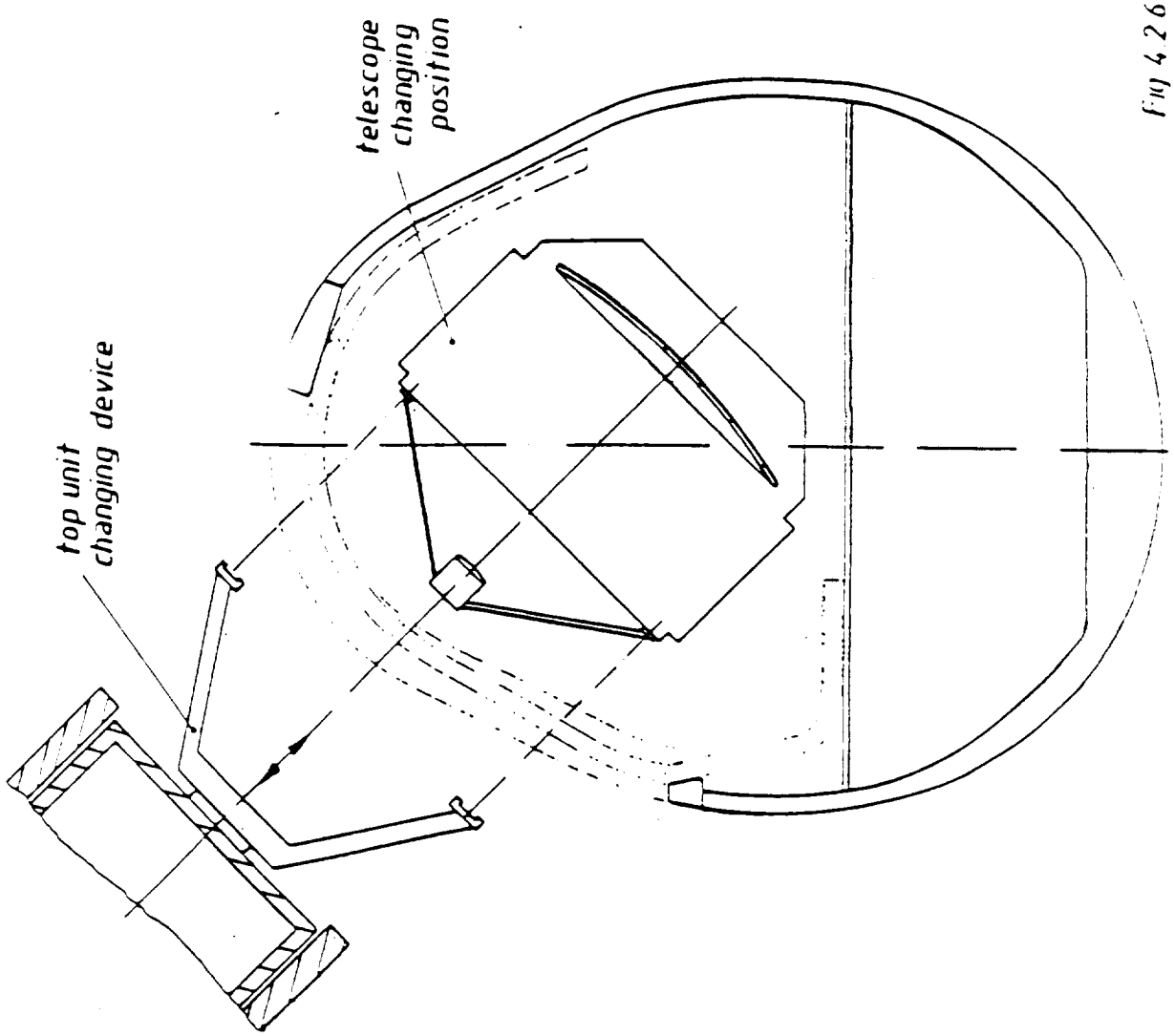

Fig 4.2.6.9-2

ORIGINAL PAGE IS
OF POOR QUALITY

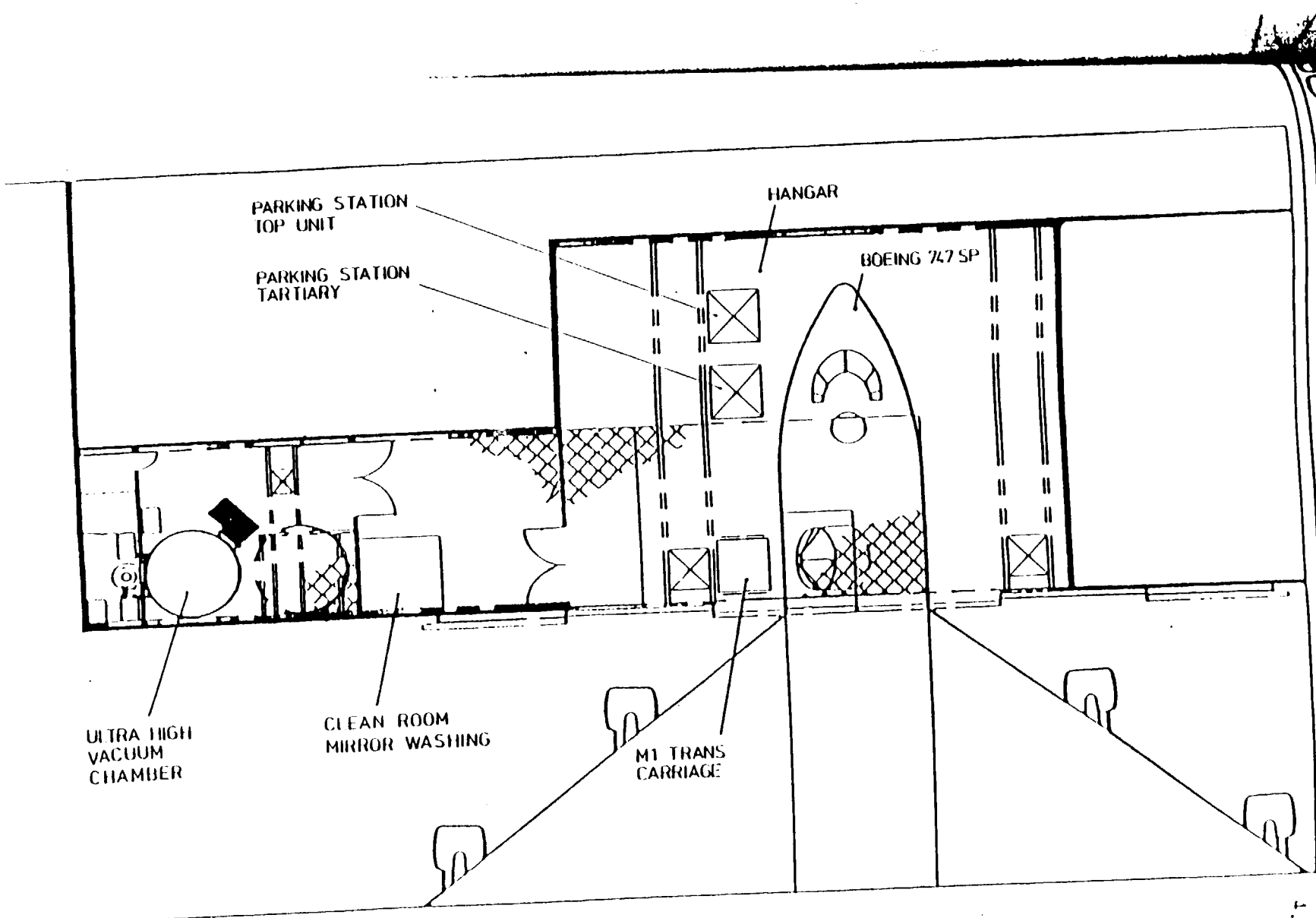

THIS DRAWING SHOWS THE MINIMUM
PLAN AREA REQUIRED FOR TELESCOPE AND
COMPONENT HANDLING, CLEANING AND COATING

Fig 426911-1

SOFIA

NASA

MAN

Dornier

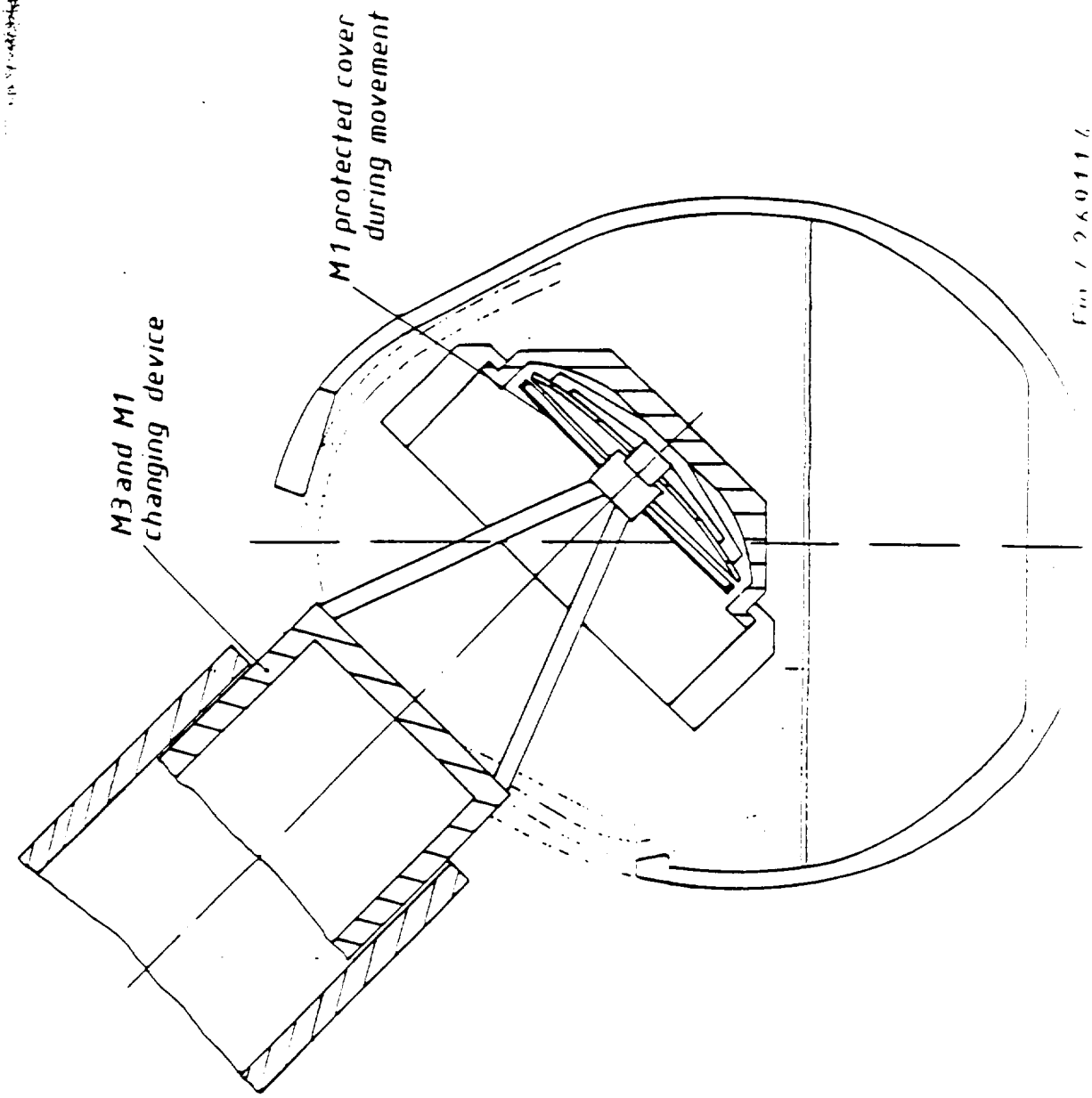

ORIGINAL PAGE IS
OF POOR QUALITY

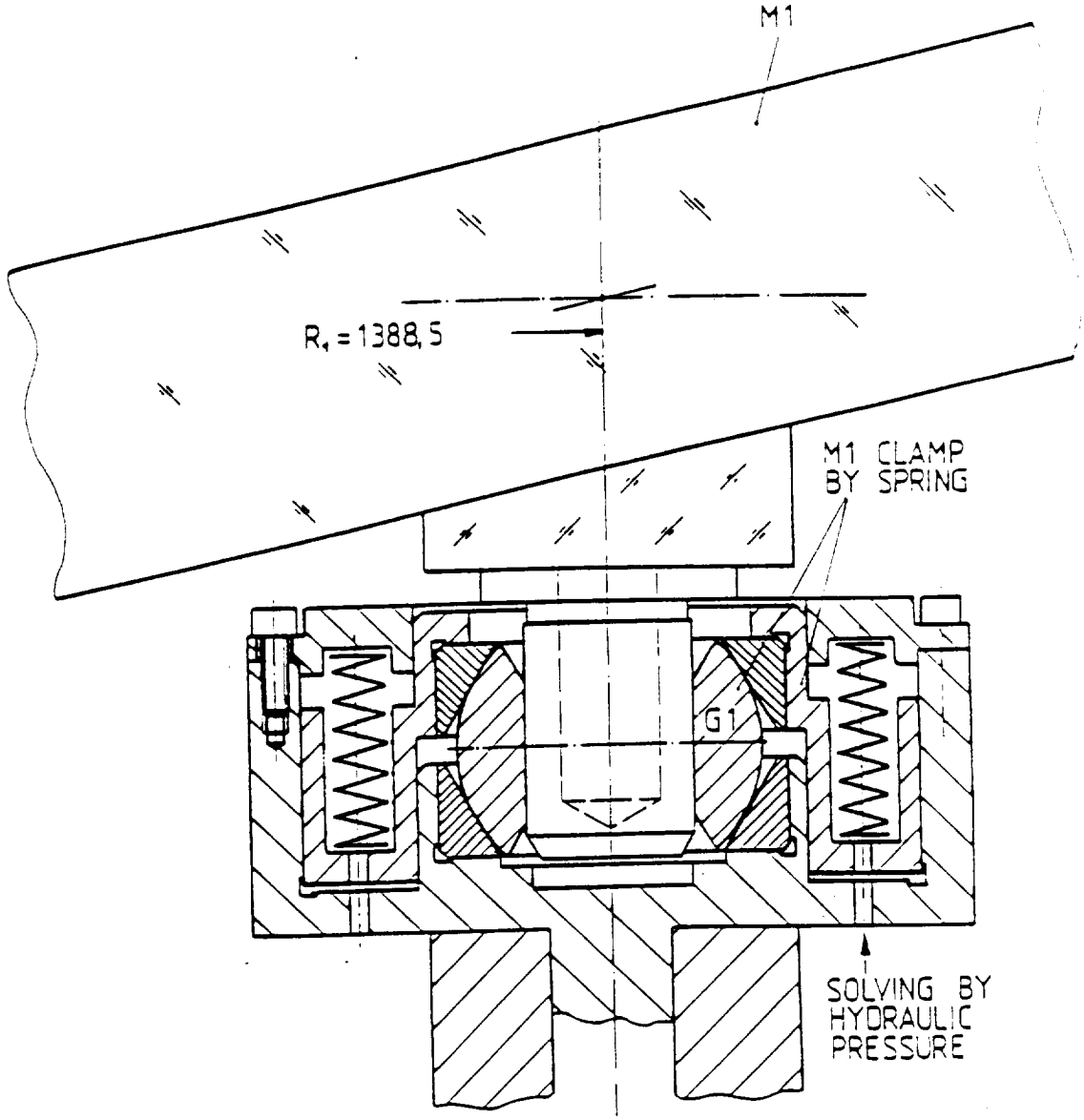
M1
R_t = 1388,5
M1 CLAMP
BY SPRING
G1
SOLVING BY
HYDRAULIC
PRESSURE

Fig. 4.2.6.9.1.1-3

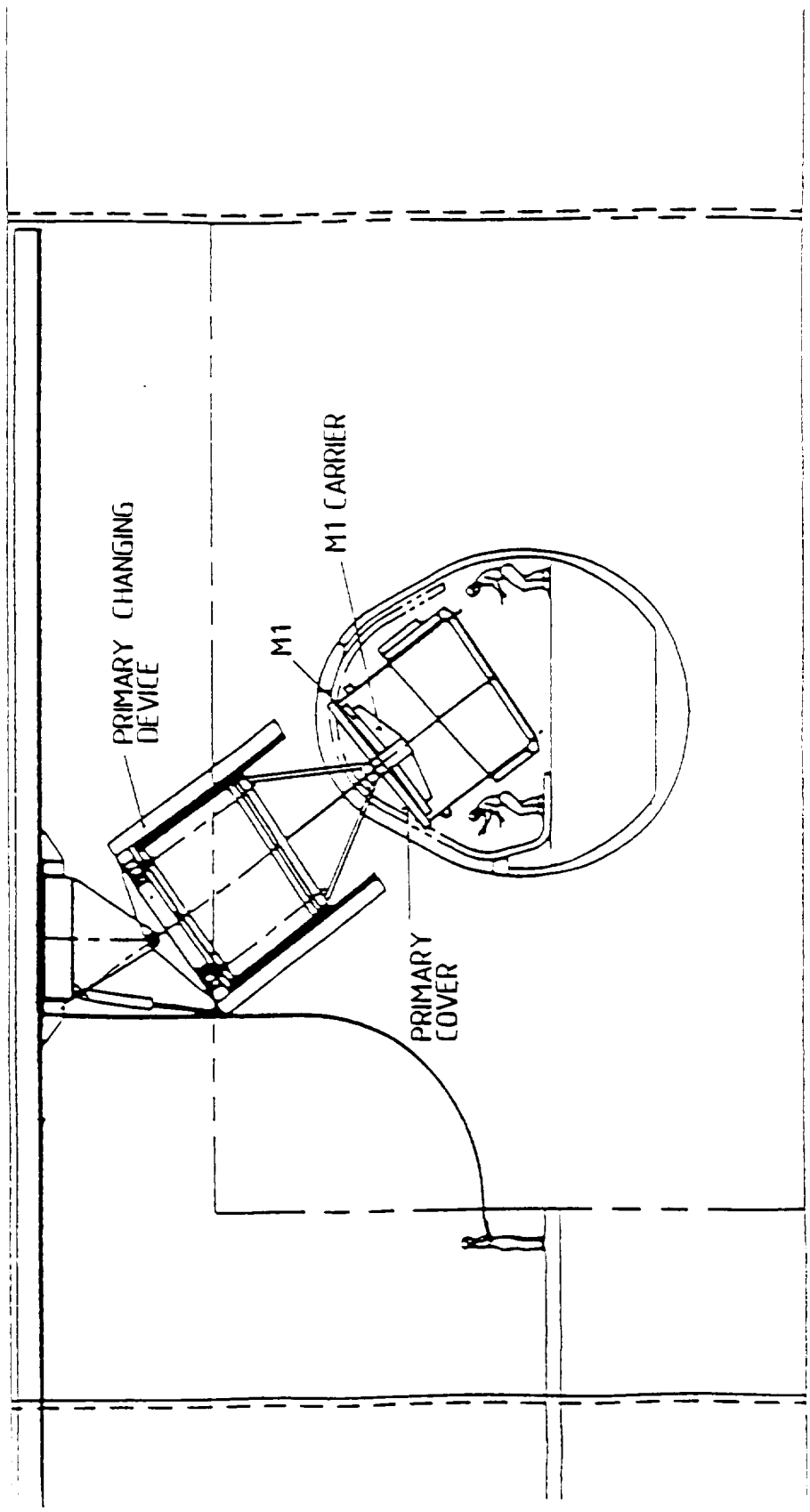

Fig 4 2 6 9 1 1 - 6

ORIGINAL PAGE IS OF POOR QUALITY

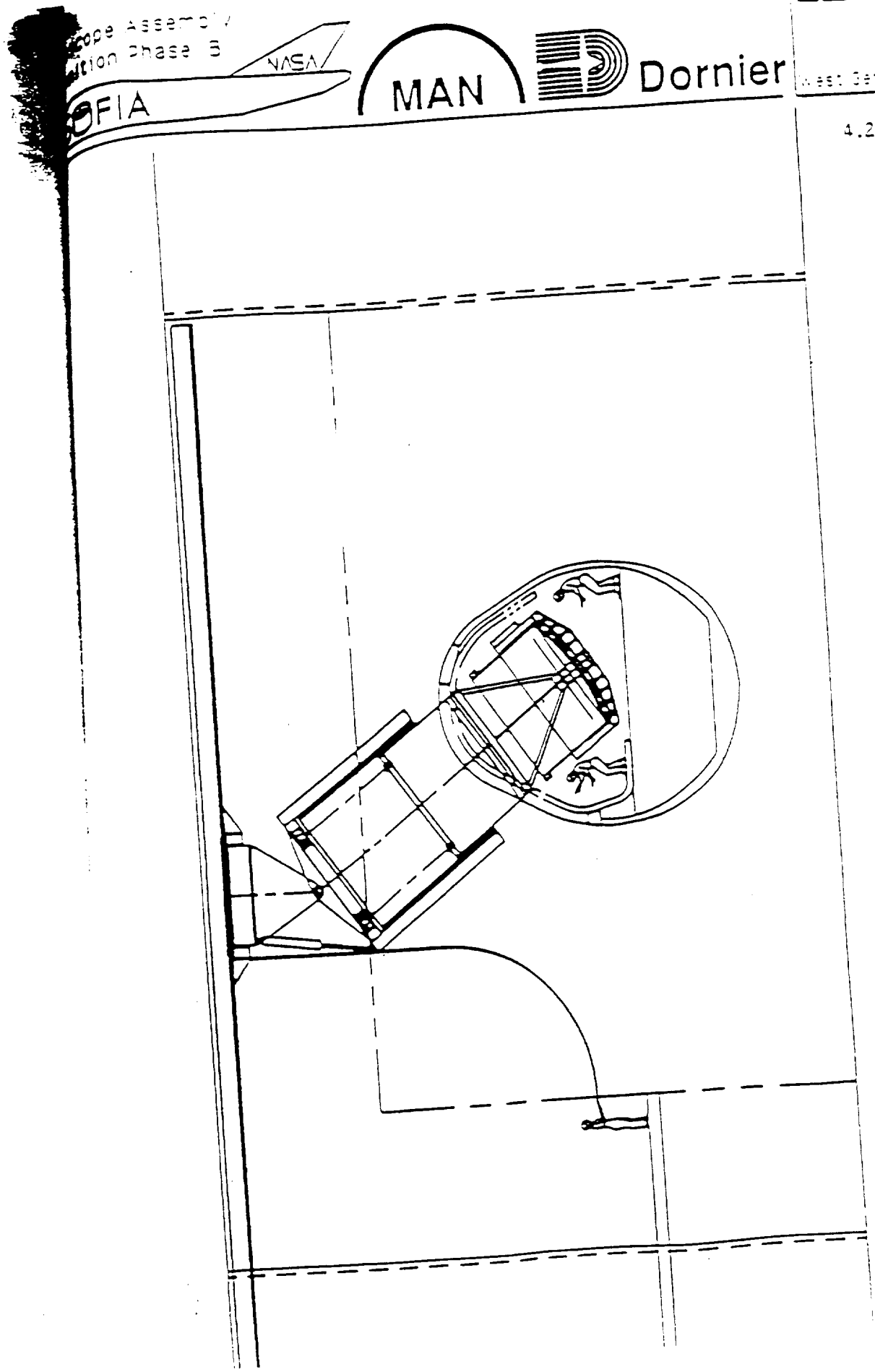

Fig 4.2.6.9.1.1-5

4.2.1.1.6 Primary mirror handling

The mirror must be handled and turned over during the generation process at SCHOTT, and during the fabrication process at Zeiss, while for recoating, integration and test no turn over is needed.

A thin meniscus is much more sensitive against handling loads than a thick mirror of common technology as handling calculations of the ESO-VLT thin meniscus have shown.

In order to define necessary handling equipment, some Finite Element (FE) calculations were done to get the allowable accelerations for the mirror under typical handling operations, shown in Table 4.2.1.1.6-1

maximum accelerations:	axially	laterally
Simple 4-point support frame	6.6 g	-
Support on inner bore diameter	3.1 g	6.9 g
Support on outer diameter	18.7 g	37.4 g
Turning the mirror over edge (on a segment of 8 degrees with constant load)	-	6.9 g

Table 4.2.1.1.6-1 Maximum Mirror Handling Loads

As Table 4.2.1.1.6-1 shows, the 60 mm thick meniscus is not a critical item which requires complex equipment, but careless handling and hard stops could break the mirror.

For installing and removing of the mirror a simple structure which carries the mirror from its reverse side on 4 support pads is sufficient. Such a device will be mounted between mirror and cell and remains there except for coating. To prevent contamination and accidently contacts of the mirror edge, the mirror surface should be covered by a cover during all external handlings. Figure 4.2.1.1.6-1 shows the mirror resting on the 4-point support frame covered with the handling cover.

- What material is the primary mirror carrier (see figure 4.2.6.9.1.2-2 below) made of and how is it attached to the back of the mirror?

Fig. 4.2.6.9.1.2-2

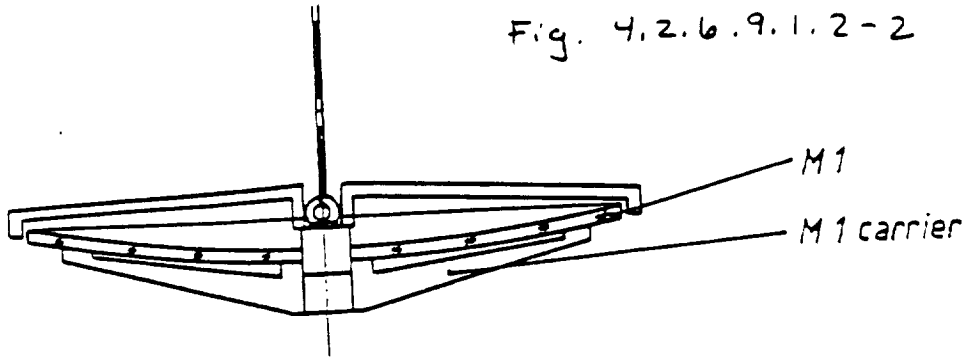

- Do the mirrors in the Tracker Telescope need to be recoated by us? How often? The same as the Acquisition Telescope?

I think that it is a good idea if some sort of solid cover is installed over the primary mirror after the plane has landed and then removed before takeoff. I believe the disadvantages to having a permanent cover, rather than the separate one, outweigh the time spent to engineer the separate cover and the ground support equipment to install it. This way the cover can travel with the mirror on its way to be cleaned, on its way to be recoated, and from the chamber back to the plane after recoating. A covering of cellophane would be sufficient on the smaller mirrors after cleaning while on transit to the vacuum chamber and after recoating while in transit back to the plane. This was a suggestion by the people at Lick Observatory. It would seem to be less likely they would be damaged. They are much less awkward to handle.

Basically the people at ZEISS did an excellent job.

Julie A. Pollitt

4.2.6.9 Mirror coating

Table of Contents

4.2.6.9.1 Coating procedure for the primary mirror M1
4.2.6.9.1.1 Dismantling of the primary from the telescope
4.2.6.9.1.2 Coating
4.2.6.9.2 M2 coating procedure
4.2.6.9.2.1 Dismantling of the secondary mirror
4.2.6.9.2.2 Coating
4.2.6.9.3 Coating of the tertiaries M3/1 and M3/2
4.2.6.9.4 Auxiliaries
4.2.6.9.5 Optional primary mirror coating in the M1 cell
4.2.6.9.5.1 Coating procedure for the primary mirror M1
4.2.6.9.5.2 Coating

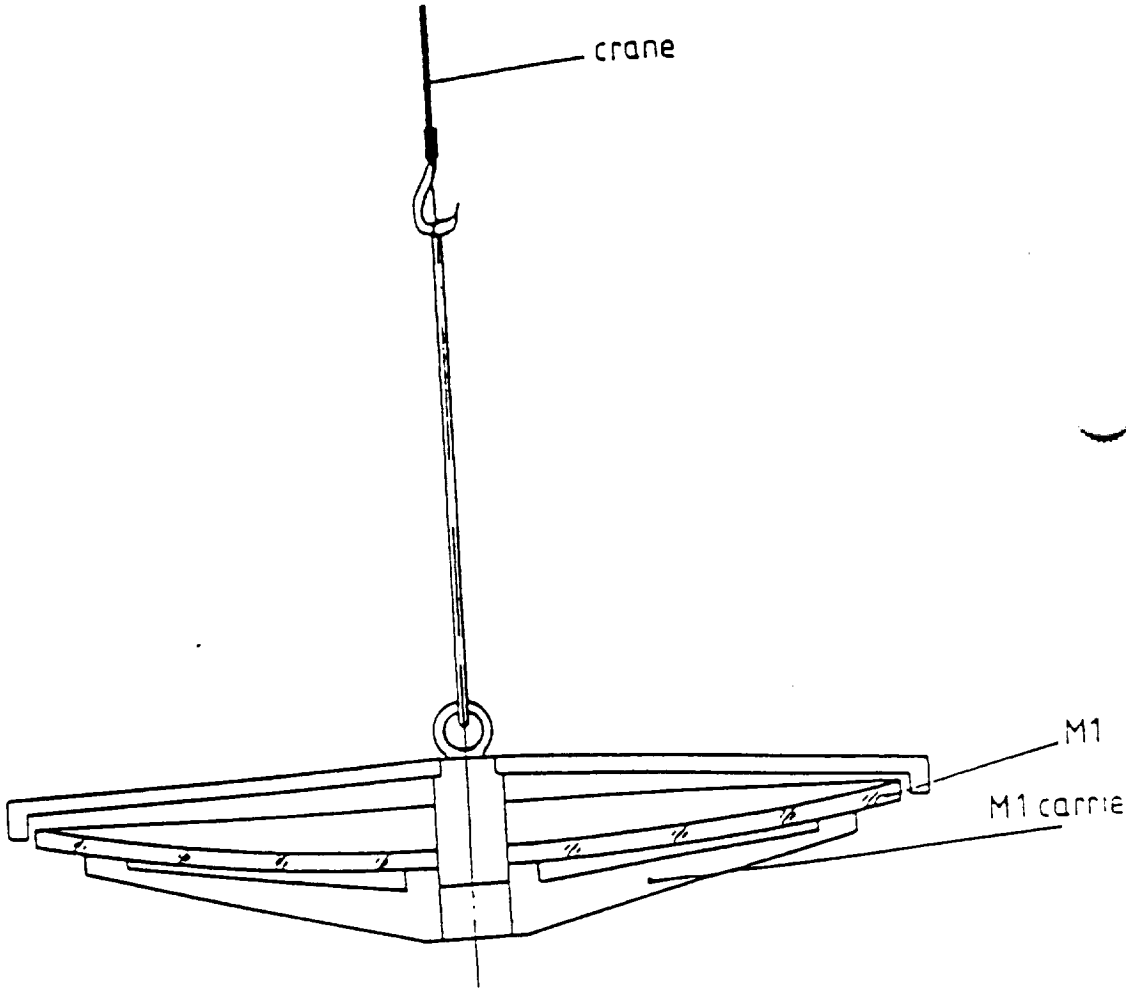

ORIGINAL PAGE IS
OF POOR QUALITY

Fig. 4.2.1.1.S-1 Primary Mirror Handling Equipment

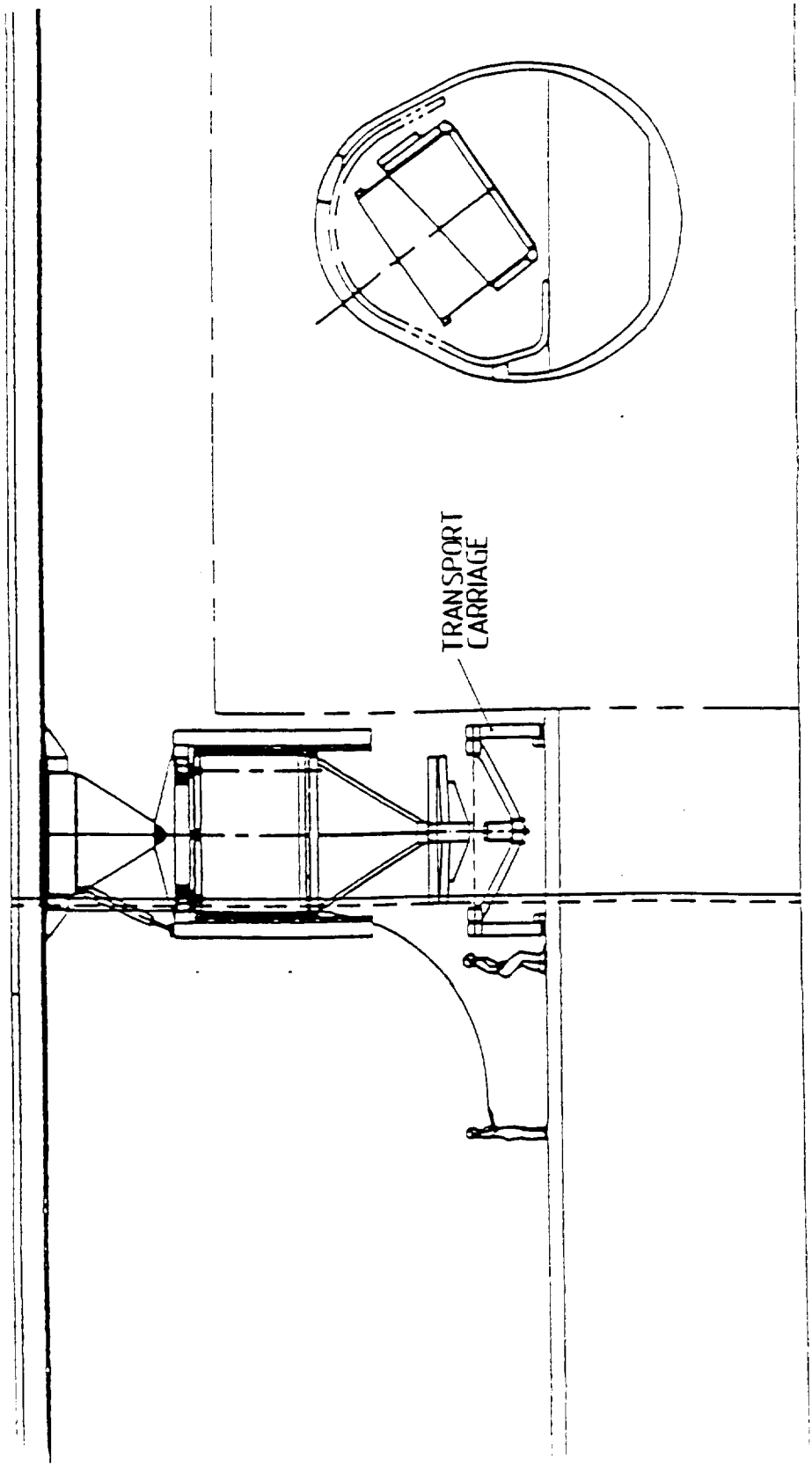

Fig 4.2.6.9.1.2-1

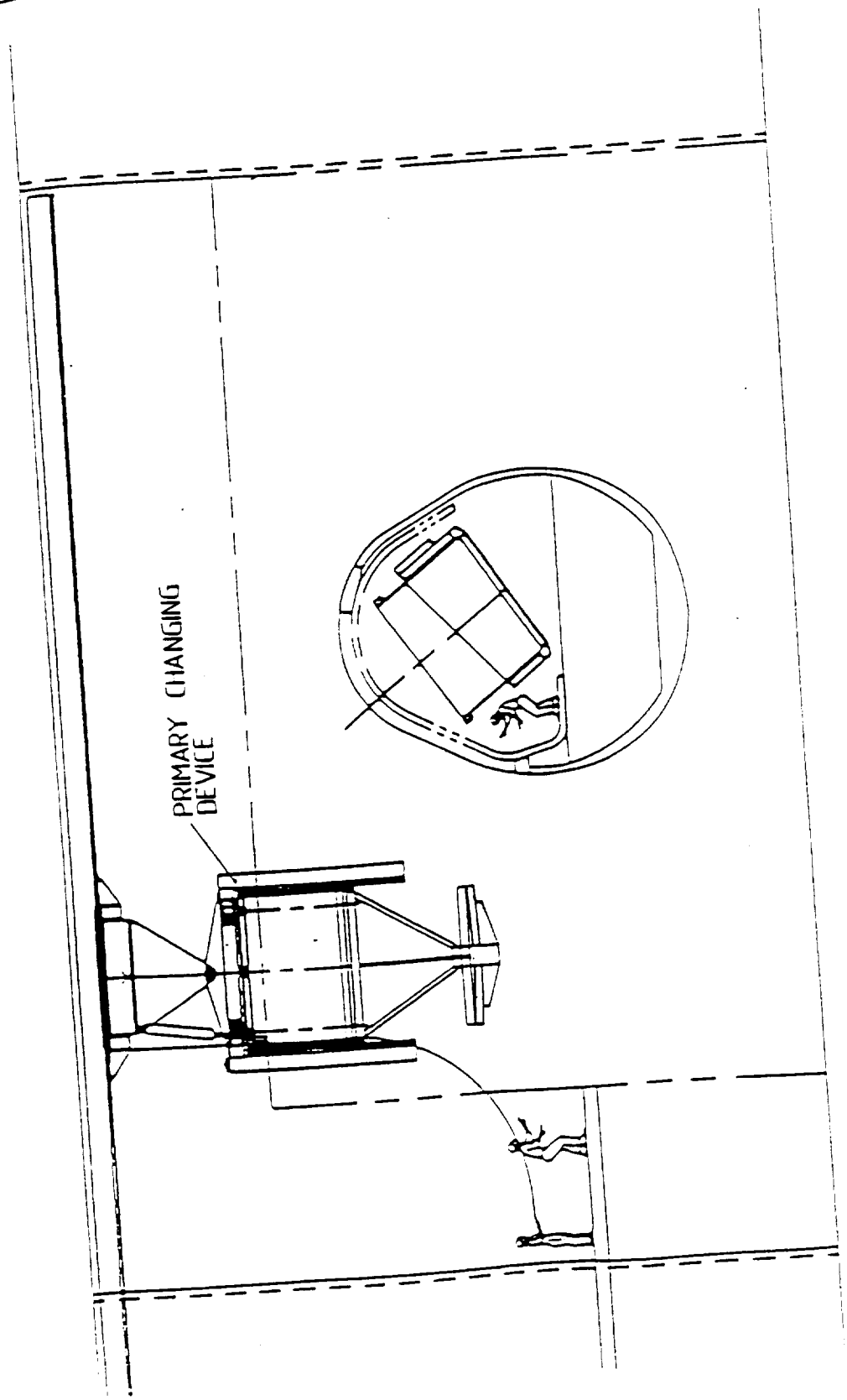

Fig 4.2.6.9.11-7

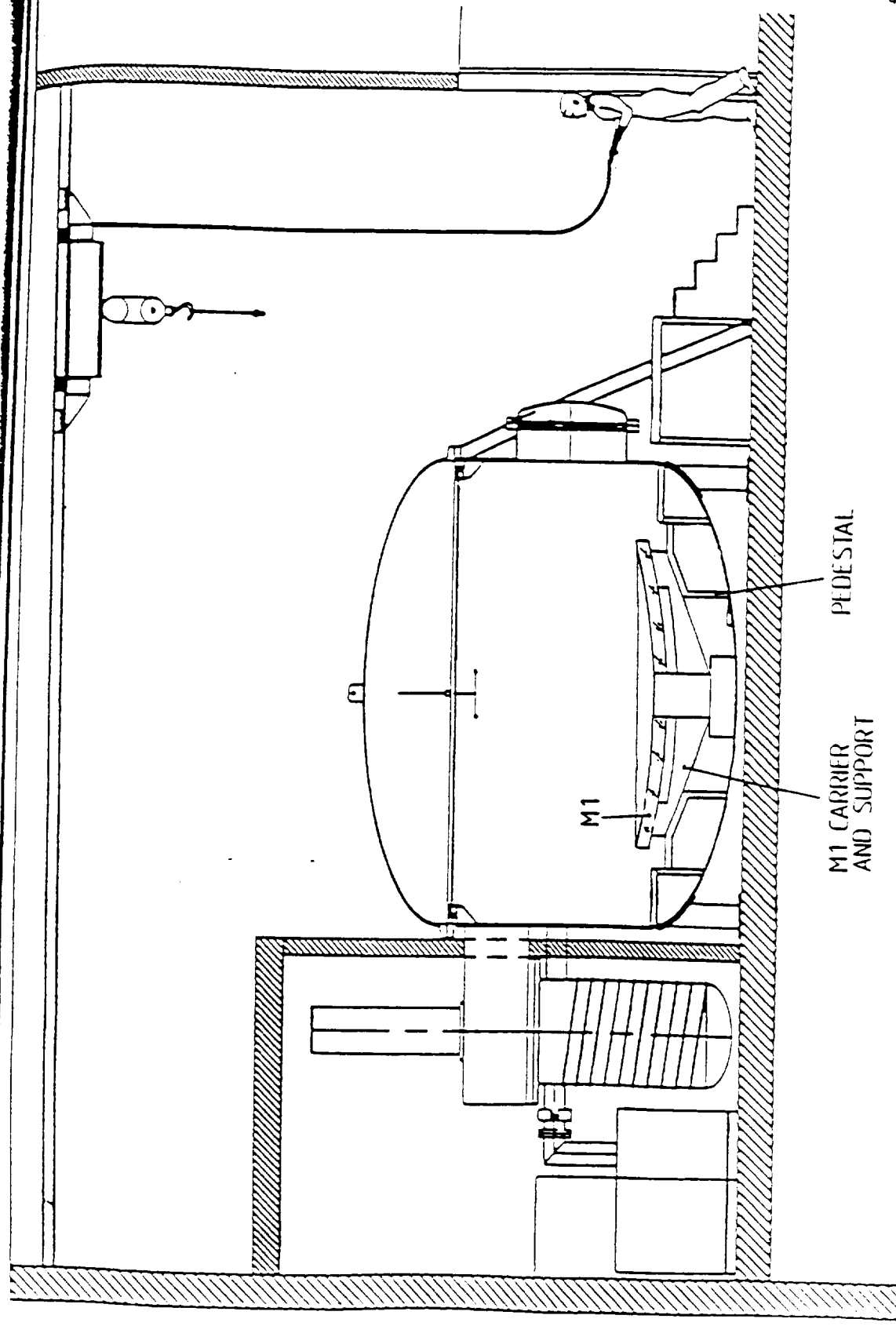

Fig 4.2.6.9.1.2-4

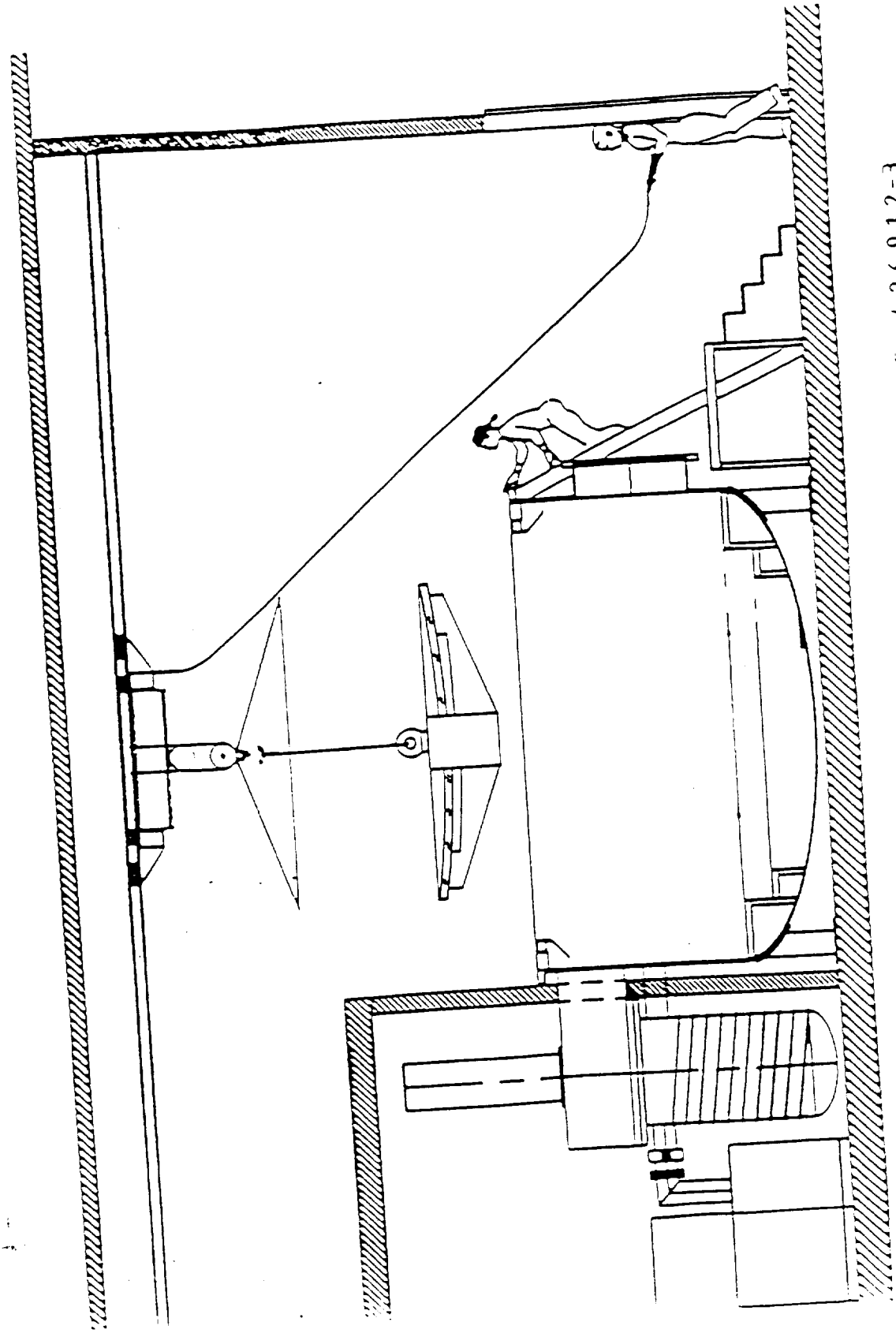

Fig. 4.2.6.9.1.2-3

PRECEDING PAGE BLANK NOT FILMED

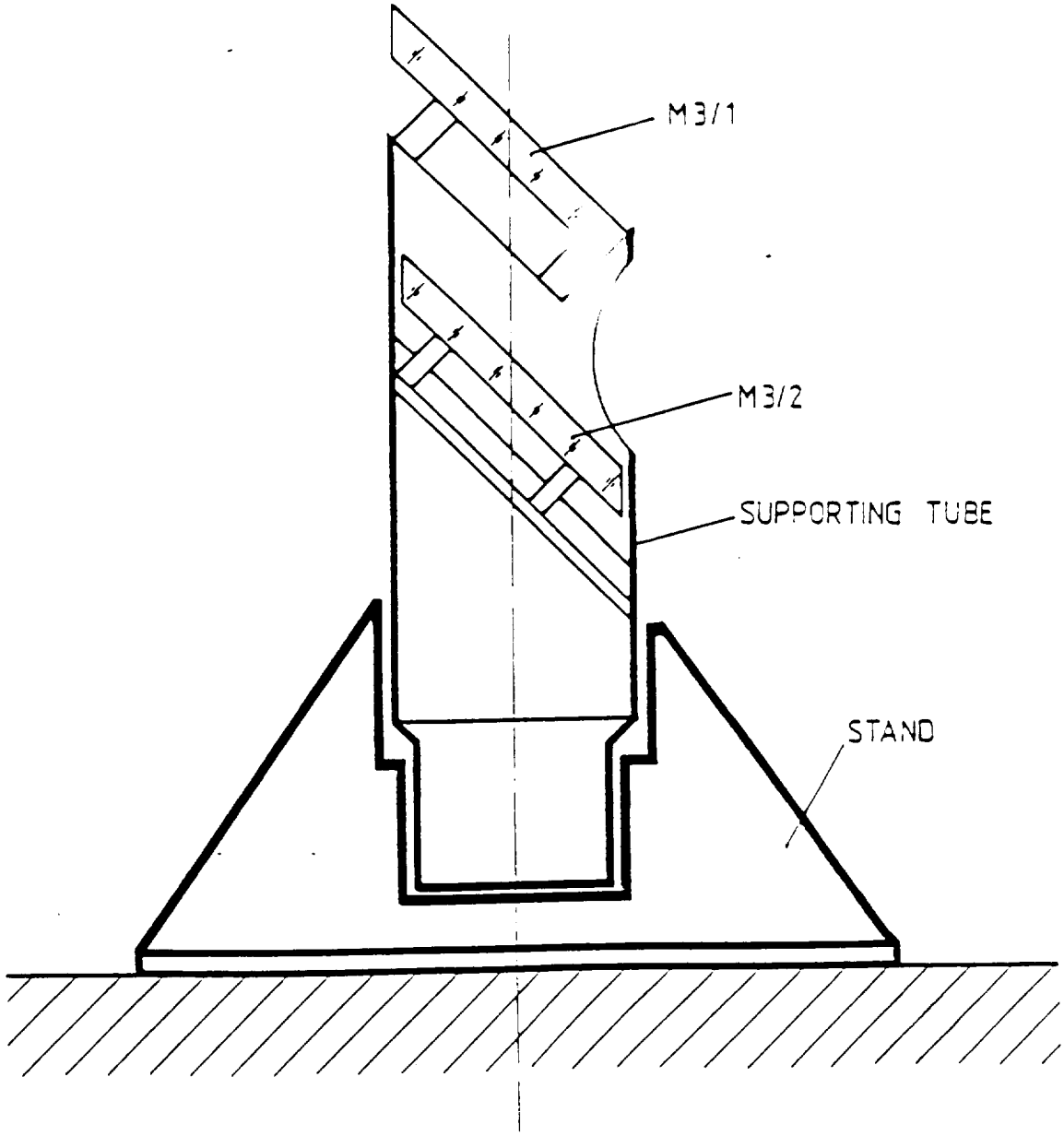

Fig. 4.2.6.9.3-1 E-21

ORIGINAL PAGE IS
OF POOR QUALITY

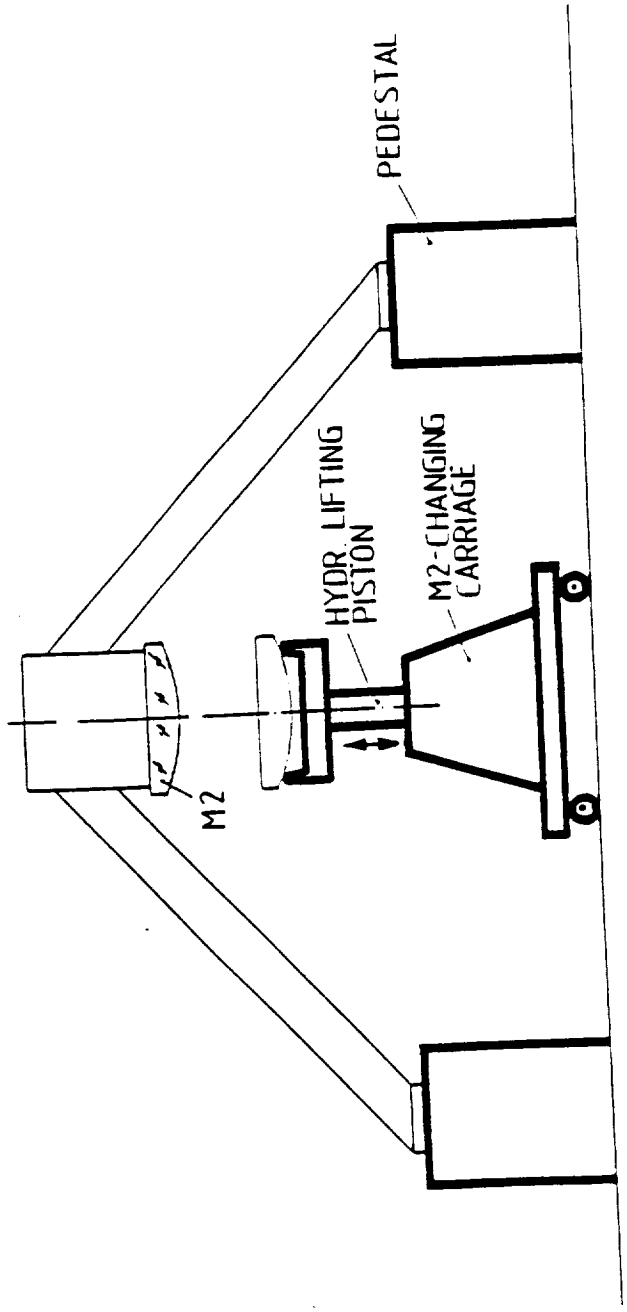

Fig. 4.2.6.9.2.1-1

PRECEDING PAGE BLANK NOT FILMED

4.2.6.9.22

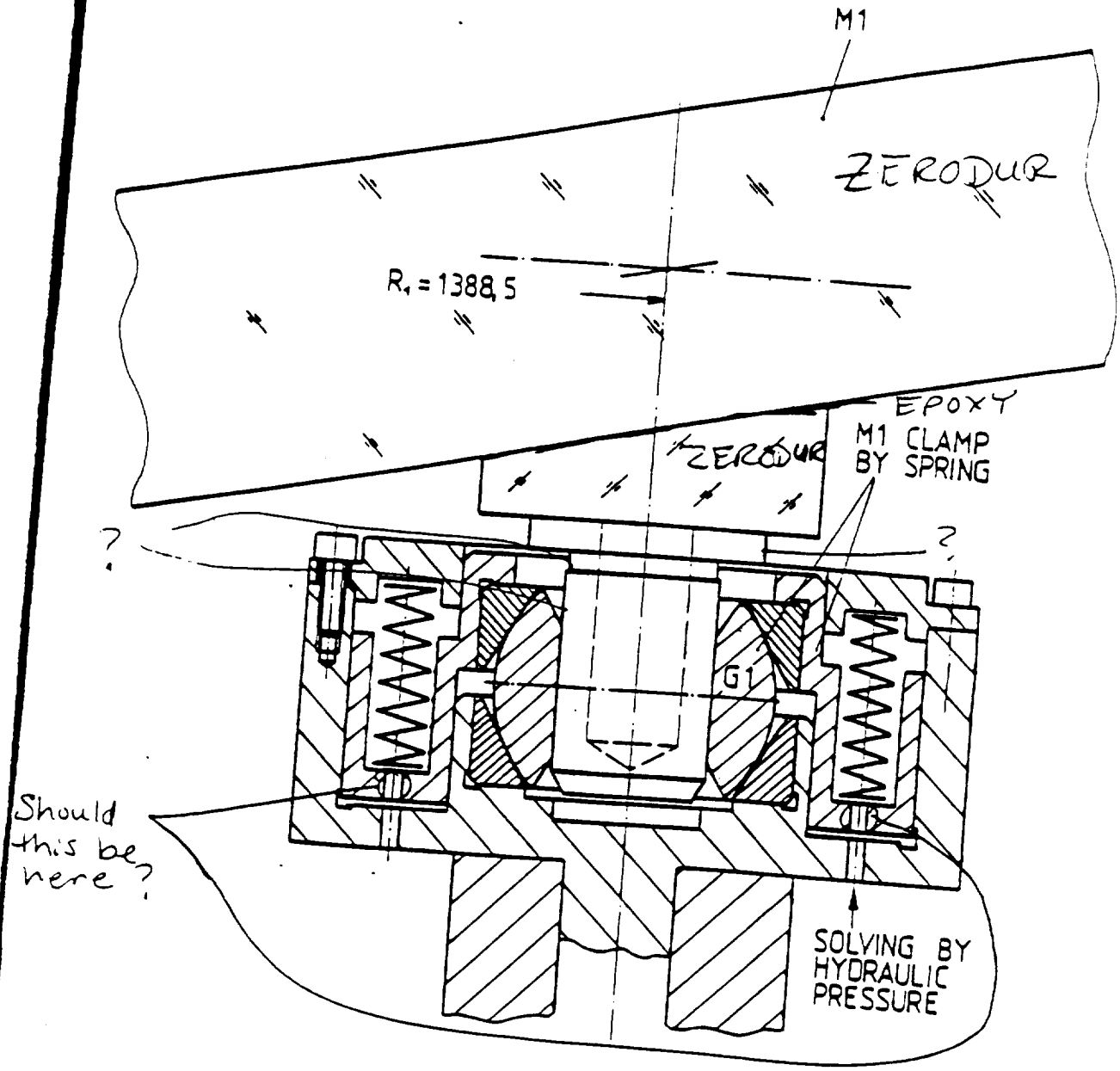
M1
ZERODUR
$R_1 = 1388,5$
EPOXY
ZERODUR
M1 CLAMP BY SPRING
?
?
G1
Should this be here?
SOLVING BY HYDRAULIC PRESSURE

August 21,1989

EEE: 213-4

TO: Nans Kunz, Aircraft Systems Project Manager

FROM: Julie A. Pollitt, Ground Support Project Engineer

SUBJECT: Response to ZEISS Final Report

After reading the final report by ZEISS on the Telescope Assembly Definition, the following questions and comments came to mind.

- What part of the connection device remains attached to the mirror when removed from the plane? Is it the part outlined in yellow (see Figure 4.2.1.2.4.6-1 on the following page)? What materials are the objects which will remain attached to the mirror made of other than the ones indicated on the following page (Figure 4.2.1.2.4.6-1)? How does the clamp work? The following excerpts were contained in the report but give no real indication.

4.2.1.2.4.6 Mirror connection device

The connection device, shown in Figure 4.2.1.2.4.6 -1 operates as a clamp system, which is pre-loaded by springs and released by hydraulic pressure. It will be described later in chapter 4.2.6.9.1.1. vol II/6

4.2.6.9.1.1.8
Clamps of the primary axial support to be opened, Fig .4.2.6.9.1.1-3.

Note that Figure 4.2.6.9.1.1-3 is the same as Figure 4.2.1.2.4.6-1. Will Vallotton and I think that there may be a mistake in Figure 4.2.1.2.4.6-1. It is marked in red.

(Continued after following page)

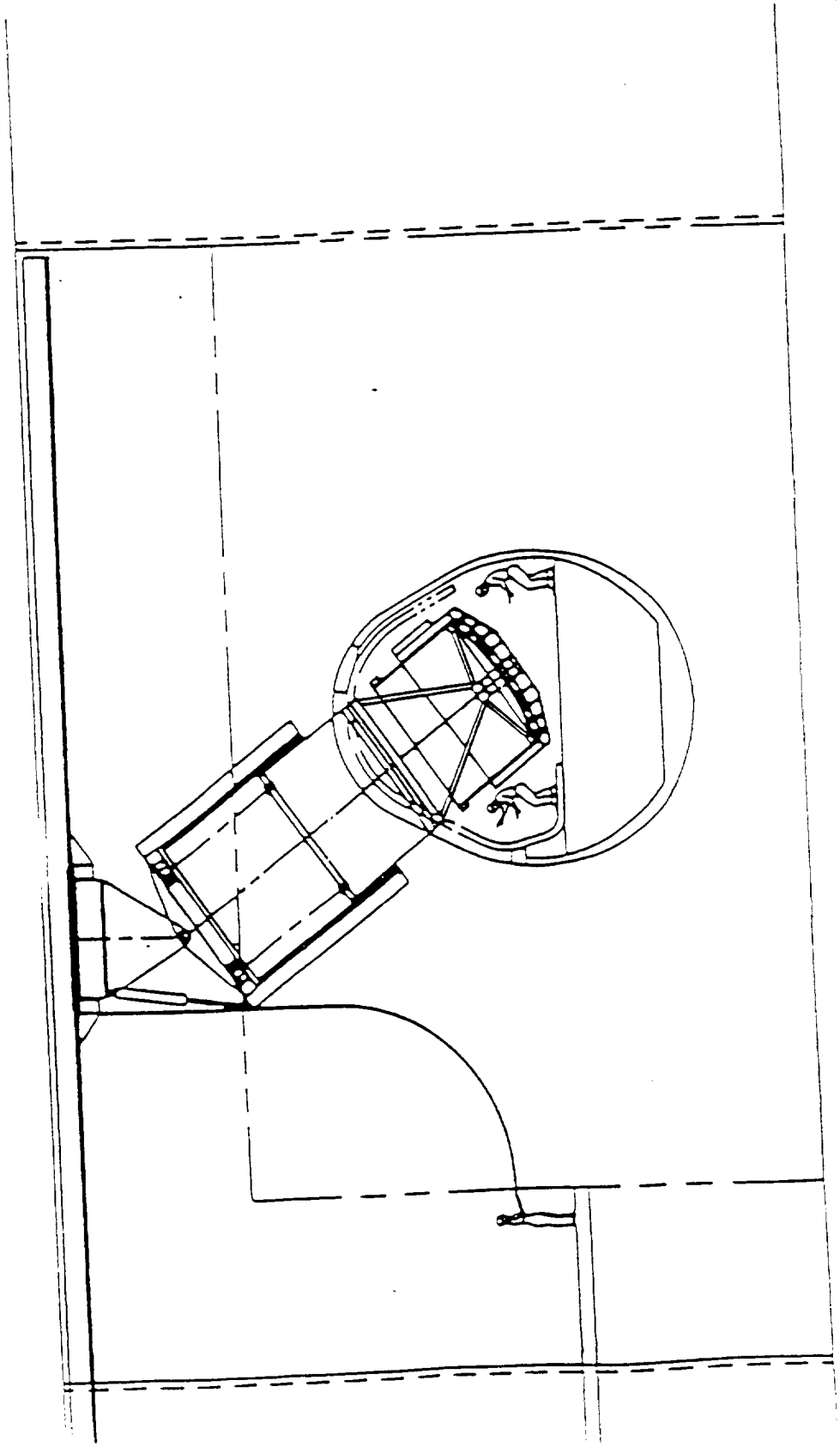

Fig. 4.2.6.9.5.1.1-1

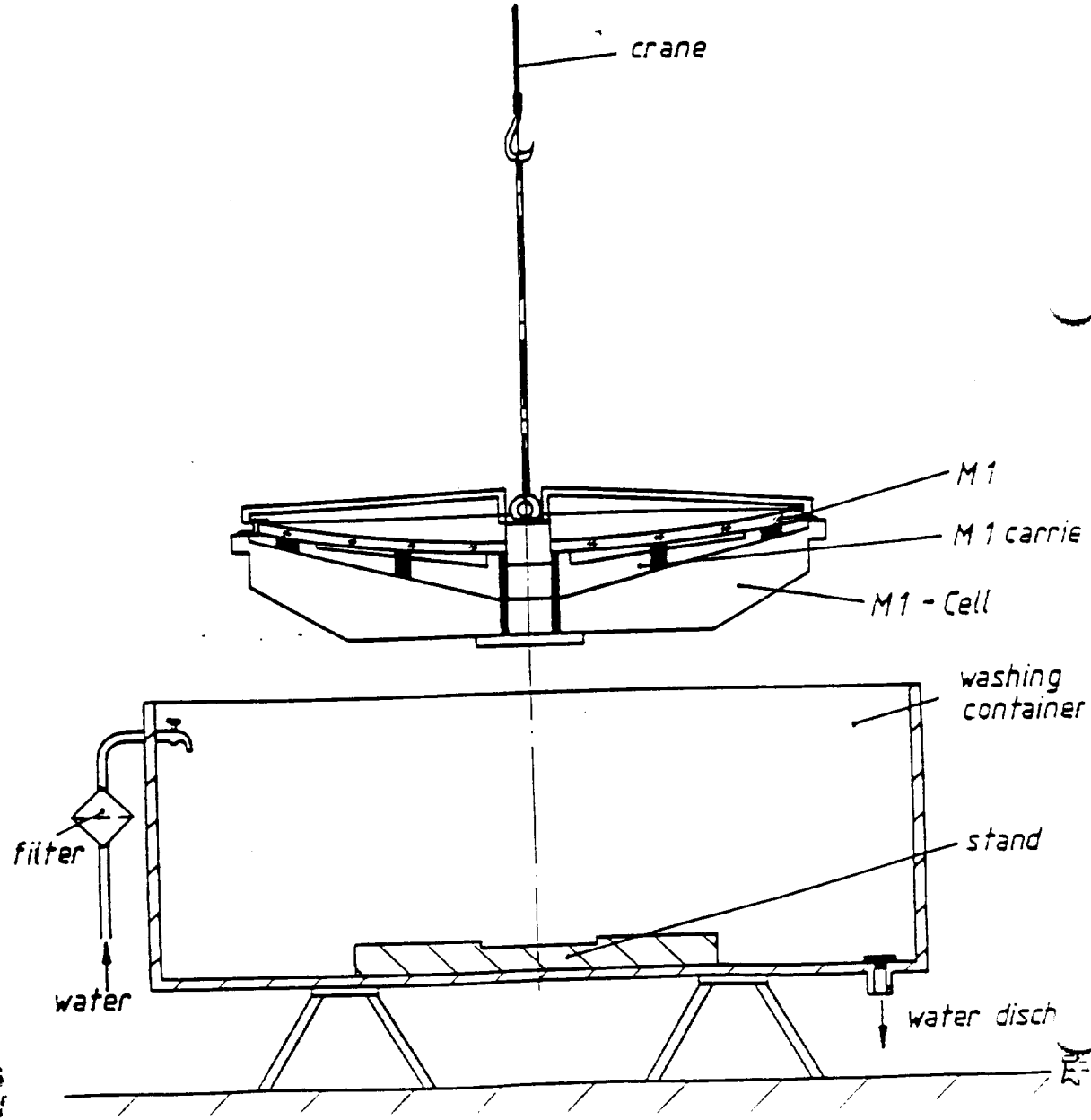

ORIGINAL PAGE IS
OF POOR QUALITY

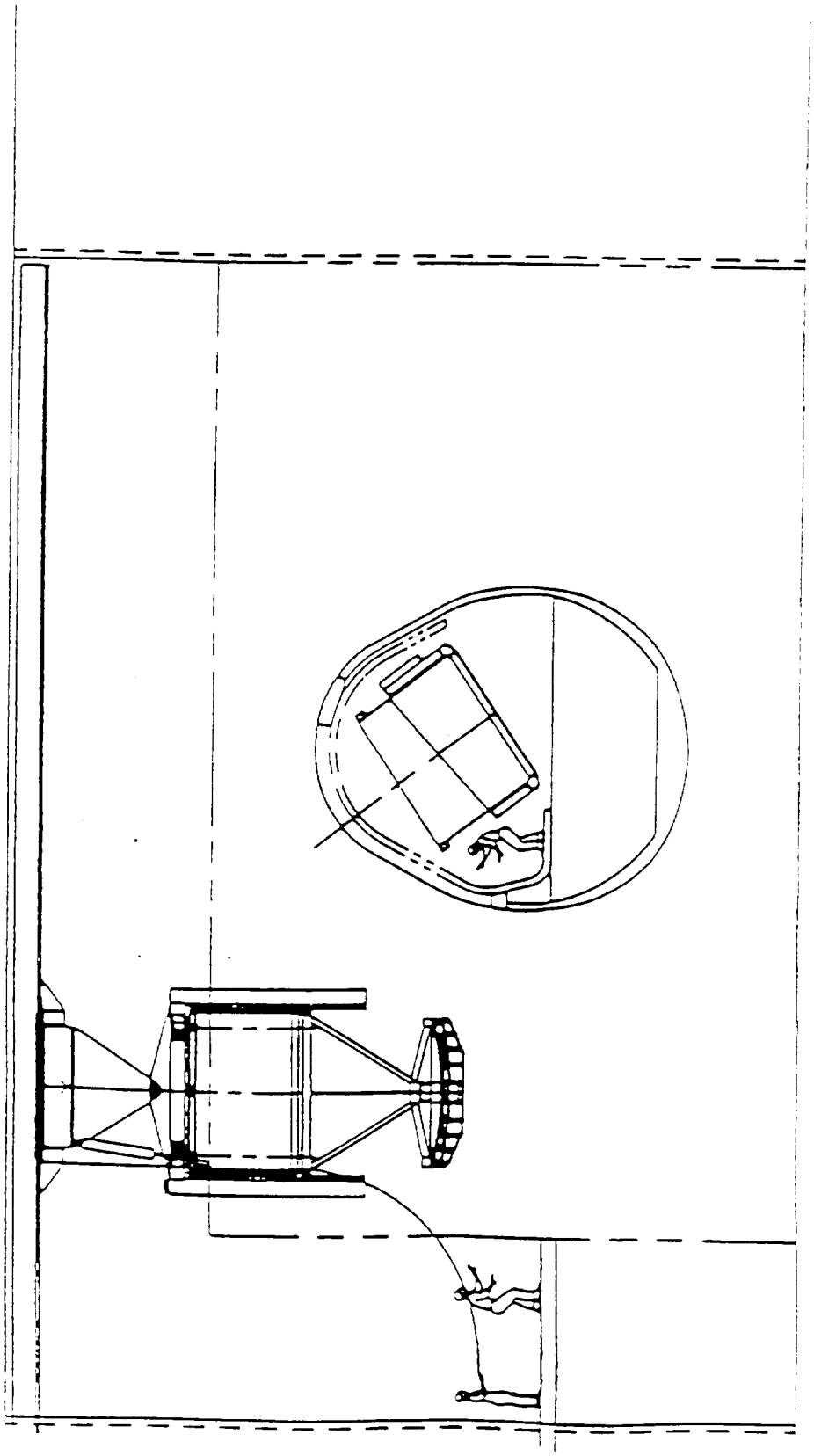

Fig. 4.2.6.9.5.11-3

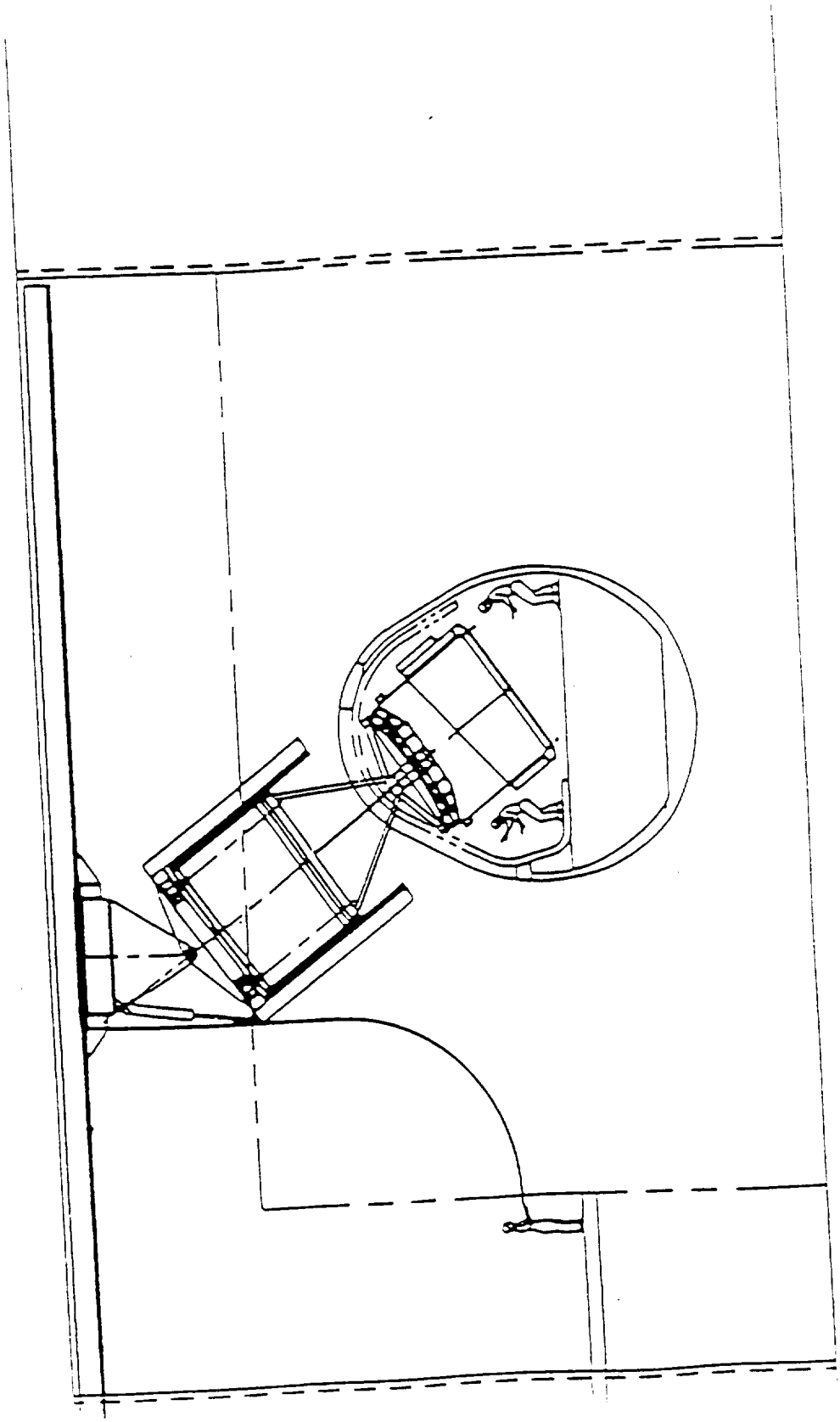

Fig. 4.2.6.9.1.1-2

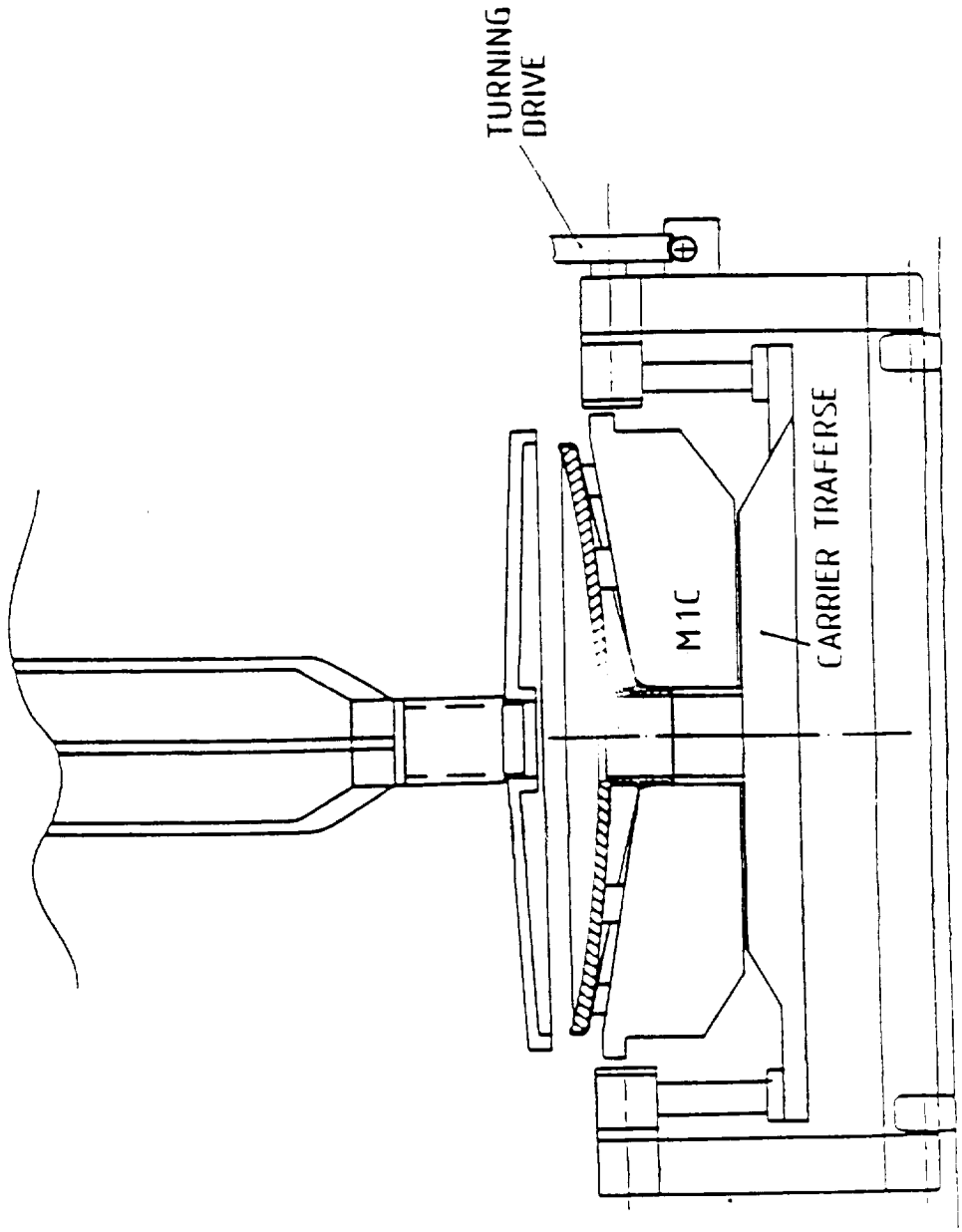

Fig 4.2.6.9.5.1.1-5

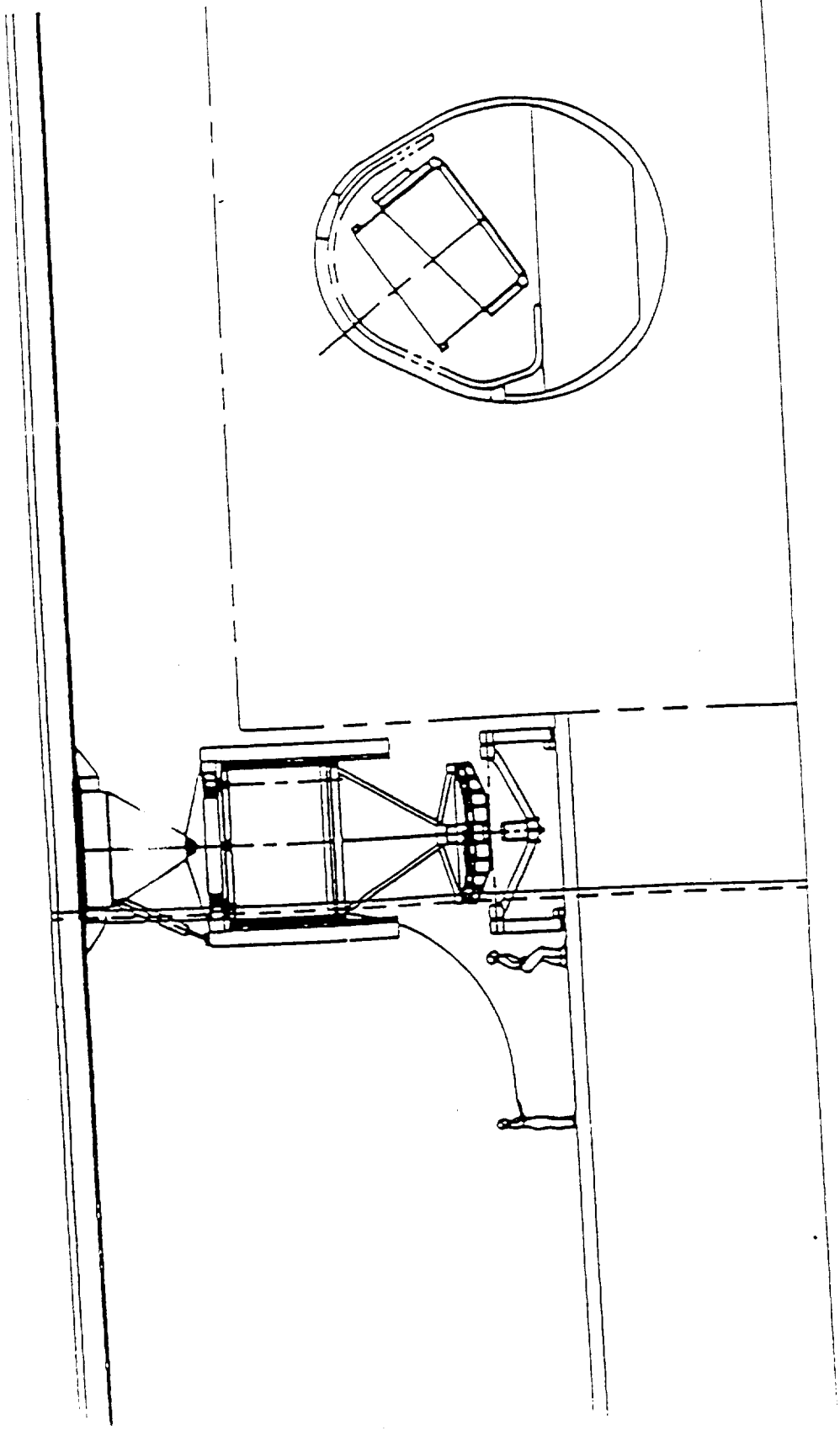

Fig. 4.2.6.9.5.1.1-4

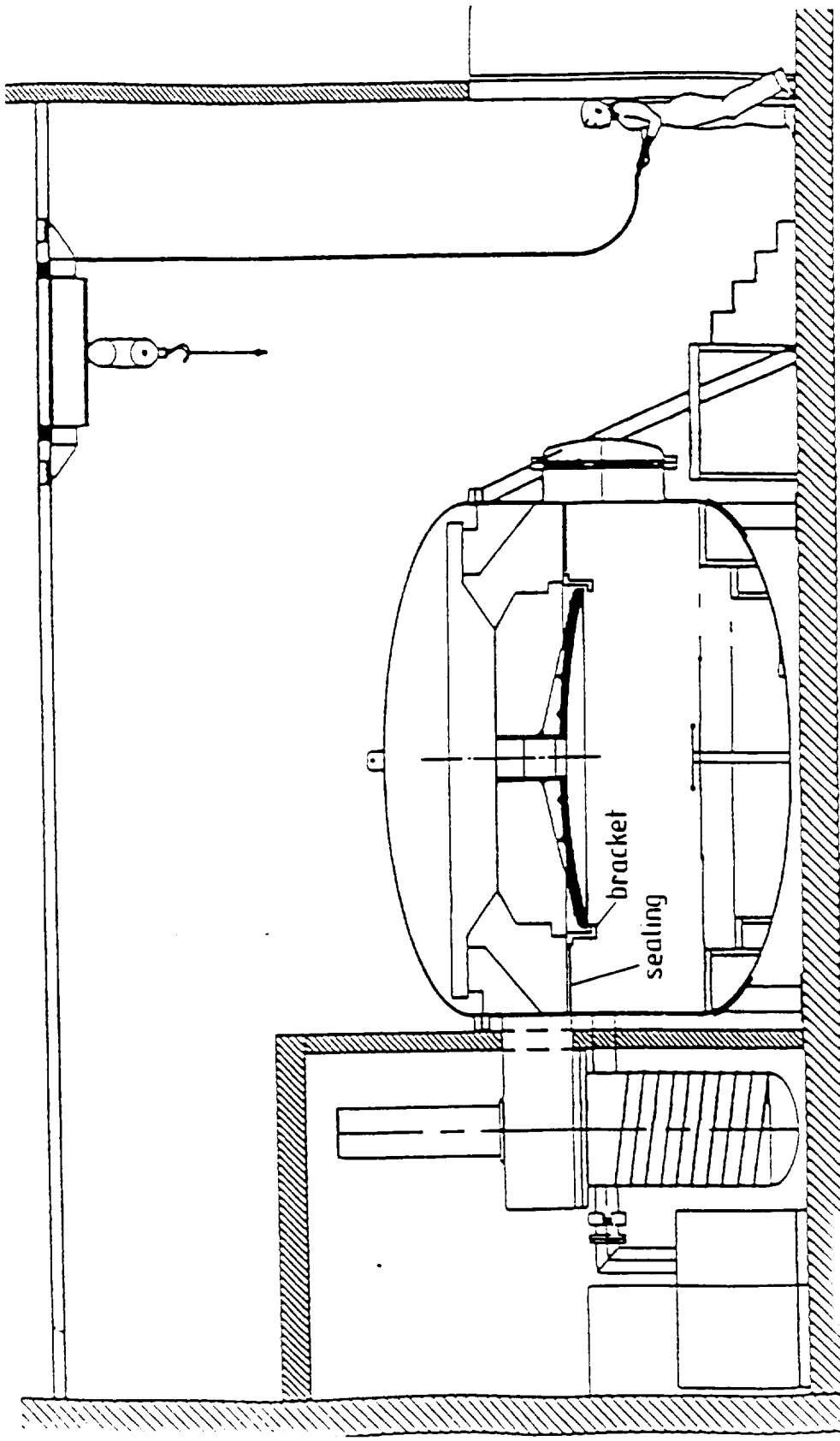

Fig. 12.6.9.5.1.2-4

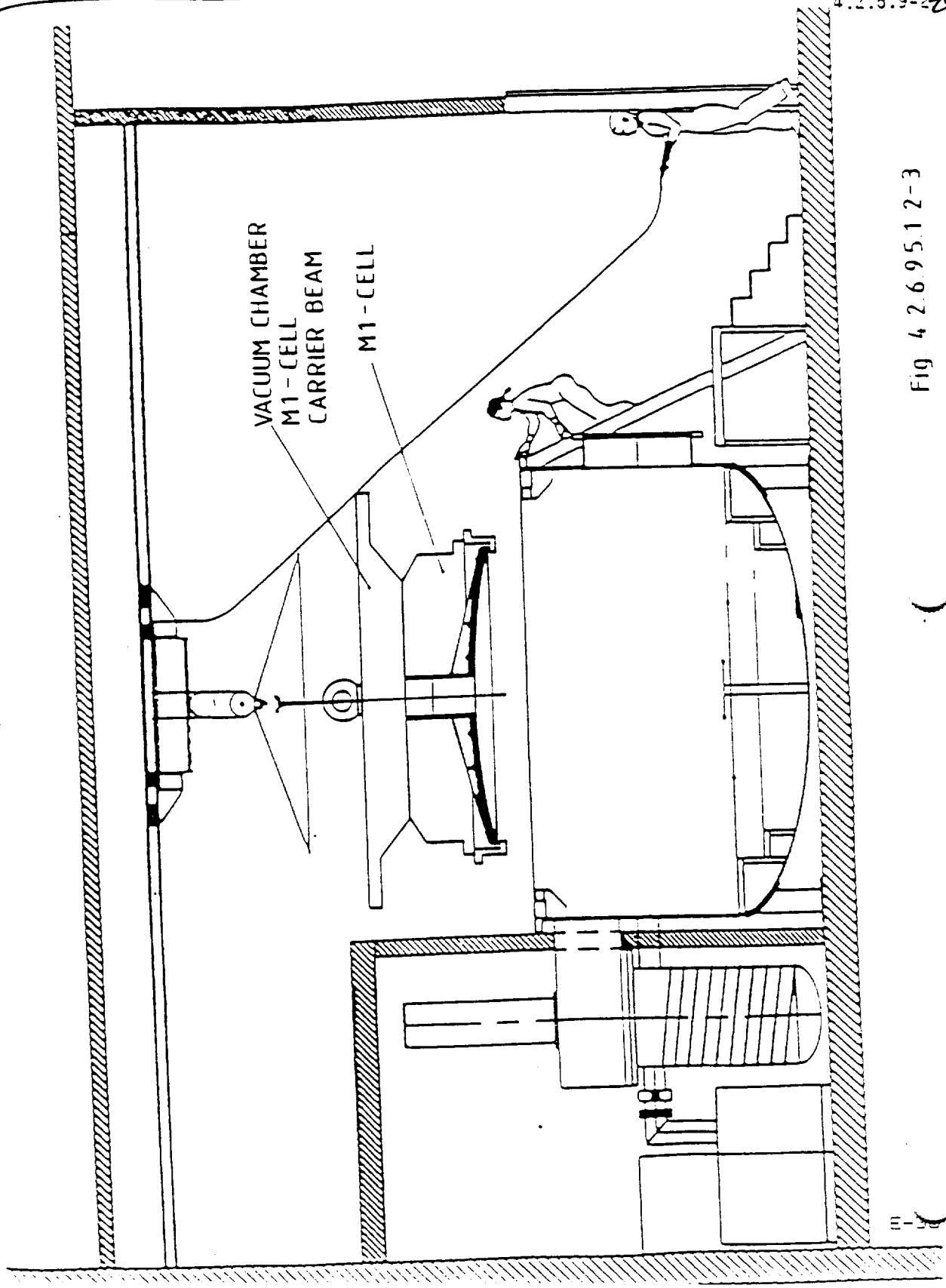

Fig 4 2 6 9 5 1 2-3

APPENDIX F: THIN-FILM DEPOSITION SUGGESTIONS

20 ■ Thin Film Deposition Suggestions

W = tungsten

NAME	SYMBOL	MELTING POINT °C	DENSITY g/cm³	TEMPERATURE (°C) @ VAP. PRESS. 10^{-8} TORR	10^{-6} TORR	10^{-4} TORR	EVAPORATION TECHNIQUES: ELECTRON BEAM	CRUCIBLE	COIL	BOAT	BASKET	SPUTTER	REMARKS n = Index of refraction
Aluminum	Al	660	2.70	677	821	1010	Xlnt.	TiB_2BN ZrB_2BN	W	TiB_2BN Al_2O_3	W	RF DC Sputtergun	Alloys and wets; tungsten stranded superior.
Aluminum Antimonide	AlSb	1080	4.3	—	—	—	—	—	—	—	—	RF	—
Aluminum Arsenide	AlAs	1600	3.7	—	—	1300	—	—	—	—	—	RF	—
Aluminum Bromide	$AlBr_3$	97	3.01	—	—	50	—	Graphite	—	Mo	—	RF	—
Aluminum Carbide	Al_4C_3	1400	2.36	—	—	800	Fair	—	—	—	—	RF	n = 2.7
Aluminum 2% Copper	Al2%Cu	640	2.82	—	—	—	—	—	—	—	—	RF DC Sputtergun	Wire feed and flash Difficult from dual sources
Aluminum Fluoride	AlF_3	1257 Subl.	3.07	410 Sublimes	490	700	Poor	Graphite	—	Mo W Ta	—	RF	--
Aluminum Nitride	AlN	Subl.	3.26	—	—	1750	Fair	—	—	—	—	RF RF-Reactive	Decomposes. Reactive evaporate in 10^{-3} N_2 with glow discharge.
Aluminum Oxide (a) (alumina)	Al_2O_3	2045	3.97	—	—	1550	Xlnt.	—	—	W	W	RF-Reactive	Sapphire xlnt in EB, forms smooth hard films. n = 1.66
Aluminum Phosphide	AlP	2000	2.42	—	—	—	—	—	—	—	—	RF	—
Aluminum 2% Silicon	Al2%Si	640	2.69	—	—	1010	—	TiB_2BN	—	—	—	RF DC Sputtergun	Wire feed and flash Difficult form dual sources.
Antimony	Sb	630	6.68	279	345	425	Poor	BN, C Al_2O_3	Mo Ta	Mo, Ta Al_2O_3 Coated	Mo Ta	RF DC Sputtergun	Toxic. Evaporates well.
Antimony Telluride	Sb_2Te_3	619	6.50	—	—	600	—	Carbon	—	—	—	RF	Decomposes over 750°C
Antimony Trioxide	Sb_2O_3	656	5.2 or 5.76	—	—	300	Good	BN, Al_2O_3	--	Pt	Pt	RF-Reactive	Toxic. Decomposes on W. n = 1.85

Thin Film Deposition Suggestions 20

NAME	SYMBOL	MELTING POINT °C	DENSITY g/cm³	TEMPERATURE (°C) @ VAP. PRESS.			EVAPORATION TECHNIQUES					SPUTTER	REMARKS n = Index of refraction
				10^{-8} TORR	10^{-6} TORR	10^{-4} TORR	ELECTRON BEAM	CRUCIBLE	COIL	BOAT	BASKET		
Antimony Triselenide	Sb_2Se_3	611	—	—	—	—	—	Carbon	—	Ta		RF	Stoichiometry variable.
Antimony Trisulphide	Sb_2S_3	550	4.64	—	—	200	—	—	—	Mo Ta	Mo Ta	—	n = 3.01. No decomposition.
Arsenic	As	814	5.73	107	150	210	Poor	Al_2O_3 BeO Vit. Carbon	—	C	—	—	Toxic. Sublimes rapidly at low temperature.
				Sublimes									
Arsenic Selenide	As_2Se_3	360	4.75	—	—	—	—	Quartz	—	—	—	RF	—
Arsenic Trisulphide	As_2S_3	300	3.43	—	—	~400	Fair	Quartz	—	Mo	—	RF	n = 2.7
Barium	Ba	710	3.5	545	627	735	Fair	Metals	W	W Ta Mo	W	RF	Wets w/o alloying — reacts with ceramics.
Barium Chloride	$BaCl_2$	962	3.86	—	—	~650	—	—	—	Ta Mo	—	RF	Use gentle preheat to outgas.
Barium Fluoride	BaF_2	1280	4.83	—	—	~700	—	—	—	—	—	RF	n = 1.47
Barium Oxide	BaO	1923	5.72 or 5.32	—	—	~1300	Poor	Al_2O_3	—	Pt	Pt	RF RF-Reactive	Decomposes slightly. n = 1.98
Barium Sulphide	BaS	—	4.25	—	—	1100	—	—	—	Mo	—	RF	n = 2.16
Barium Titanate	$BaTiO_3$	Dec.	6.0	Decomposes			—	—	—	—		RF	Decomposes, yields free Ba from single source; sputtering pref.; or co-evap. from 2 sources.
Berylium	Be	1278	1.85	710	878	1000	XInt.	BeO C Vit. Carbon	W	W Ta	W	RF DC Sputtergun	Wets W/Mo/Ta. Metal powder and oxides are toxic. Evaporates easily
Berylium Chloride	$BeCl_2$	440	1.90	—	—	~150	—	—	—	—	—	RF	—
Berylium Fluoride	BeF_2	Subl.	1.99	—	—	~200	Good	—	—	—	—	—	Toxic
Berylium Oxide	BeO	2530	3.01	—	—	1900	Good	—	—	—	W	RF RF-Reactive	Powders toxic. No decomposition from EB guns. n = 1.72
Bismuth	Bi	271	9.80	330	410	520	Good	Al_2O_3 Vit. Carbon	W	W, Mo Al_2O_3 Ta	W	DC RF	Vapors are toxic. High resistivity. No shorting of baskets.
Bismuth Fluoride	BiF_3	727	8.75	—	—	~300	—	—	—	—	—	RF	—
				Sublimes									

20 ■ Thin Film Deposition Suggestions

NAME	SYMBOL	MELTING POINT °C	DENSITY g/cm³	TEMPERATURE (°C) @ VAP. PRESS.			EVAPORATION TECHNIQUES					SPUTTER	REMARKS n = Index of refraction
				10^{-8} TORR	10^{-6} TORR	10^{-4} TORR	ELECTRON BEAM	CRUCIBLE	COIL	BOAT	BASKET		
Bismuth Oxide	Bi_2O_3	820	8.9	—	—	~1400	Poor	—	—	Pt	Pt	RF RF-Reactive	Vapors are toxic. n = 1.97
Bismuth Selenide	Bi_2Se_3	710	7.66	—	—	~650	Good	Graphite Quartz	—	—	—	RF	Sputtering preferred; or co-evaporate from 2 sources.
Bismuth Telluride	Bi_2Te_3	585	7.85	—	—	~600	—	Graphite Quartz	—	W Mo	—	RF	Sputtering preferred; or co-evaporate from 2 ources.
Bismuth Titinate	$Bi_2Ti_2O_7$	—	—	Decomposes			—	—	—	—	—	RF	Decomposes. Sputtering pref.; or co-evaporate from 2 sources in 10^{-2} O_2.
Bismuth Trisulphide	Bi_2S_3	685	7.39	—	—	—	—	—	—	—	—	RF	n ≅ 1.5
Boron	B	2100	2.36	1278	1548	1797	Xlnt.	C Vit. Carbon	—	C	—	RF	Material explodes w/rapid cooling Forms carbide with container.
Boron Carbide	B_4C	2350	2.50	2500	2580	2650	Xlnt.	—	—	—	—	RF	Similar to chromium
Boron Nitride	BN	2300	2.20	—	—	1600	Poor	—	—	—	—	RF RF-Reactive	Sputtering preferred; Decomposes.
Boron Oxide	B_2O_3	460	1.82	—	—	1400	Good	—	—	Pt Mo	—	—	n = 1.46
Boron Trisulphide	B_2S_3	310	1.55	—	—	800	—	Graphite	—	—	—	RF	—
Cadmium	Cd	321	8.64	64	120	180	Poor	Al_2O_3 Quartz	—	W. Cb Mo Ta	W Mo Ta	DC RF	Poisons vacuum systems, low sticking coefficient.
Cadmium Arsenide	Cd_3AS_2	721	6.21	—	—	—	—	Quartz	—	—	—	RF	—
Cadmium Fluoride	CdF_2	1070	6.64	—	—	~500	—	—	—	—	—	RF	n = 1.56
Cadmium Oxide	CdO	900	6.95	—	—	~530	—	—	—	—	—	Rf-Reactive	Disproportionates. n = 2.49
Cadmium Selenide	CdSe	1264	5.81	—	—	540	Good	Al_2O_3 Quartz	—	Mo Ta	—	RF	Evaporates easily. n = 2.4
Cadmium Sulphide	CdS	1750	4.82	—	—	550	Fair	Al_2O_3 Quartz	—	W Mo Ta	W	RF	Sticking co-efficient strongly affected by substrate temp. Stoichiometry variable. n = 2.4
Cadmium Telluride	CdTe	1098	6.20	—	—	450	—	—	W	W Mo Ta	Ta Mo	RF	Stoichiometry depends on substrate temperature n ≅ 2.6

Thin Film Deposition Suggestions 20

NAME	SYMBOL	MELTING POINT °C	DENSITY g/cm³	TEMPERATURE (°C) @ VAP. PRESS. 10^{-4} TORR	10^{-6} TORR	10^{-8} TORR	ELECTRON BEAM	EVAPORATION TECHNIQUES CRUCIBLE	COIL	BOAT	BASKET	SPUTTER	REMARKS n = Index of refraction
Calcium	Ca	842	1.55	272	357	459	Poor	Al_2O_3 Quartz	W	W	W	—	Corrodes in air.
				Sublimes									
Calcium Fluoride	CaF_2	1360	3.18	—	—	~1100	—	Quartz	W Mo Ta	W Mo Ta	W Mo Ta	RF	Rate control important Use gentle preheat to outgas. n = 1.23
Calcium Oxide	CaO	2580	3.35	—	—	~1700	—	ZrO_2	—	W Mo	—	RF RF-Reactive	Forms volatile oxides with W and Mo. n = 1.84
Calcium Silicate	CaO SiO_2	1540	2.90	—	—	—	Good	Quartz	—	—	—	RF	n = 1.61
Calcium Sulphide	CaS	—	2.18	—	—	1100	—	—	—	Mo	—	RF	Decomposes. n = 2.14
Calcium Titanate	$CaTiO_3$	1975	4.10	1490	1600	1690	Poor	—	—	—	—	RF	Disproportionates except in sputtering.
Calcium Tungstate	$CaWO_4$	—	6.06	—	—	—	Good	—	—	W	—	RF	n = 1.92
Carbon	C	Subl.	1.8-2.3	1657	1867	2137	Xlnt.	—	—	—	—	RF	EB preferred. Arc evaporation. Poor film adhesion
				Sublimes									
Cerium	Ce	795	8.23	970	1150	1380	Good	Al_2O_3 BeO Vit. Carbon	W	W Ta	W	DC RF	—
Ceric Oxide	CeO_2	2600	7.3	1890	2000	2310	Good	—	—	W	—	RF RF-Reactive	Very little decomposition.
				Sublimes									
Cerium Fluoride	CeF_3	1418	6.16	—	—	~900	Good	—	—	W Mo Ta	Mo Ta	RF	Use gentle preheat to outgas. n ≅ 1.7
Cerium Oxide	Ce_2O_3	1692	6.87	—	—	—	Fair	—	—	W	—	—	Alloys with source; use .015-.020 W boat. n = 1.95
Cesium	Cs	28	1.87	−16	+22	+30	—	Quartz	—	S.S.	—	—	—
Cesium Bromide	CsBr	636	4.44	—	—	~400	—	—	—	W	—	RF	n = 1.70
Cesium Chloride	CsCl	646	3.97	—	—	600	—	—	—	W	—	RF	n = 1.64
Cesium Fluoride	CsF	684	3.59	—	—	500	—	—	—	W	—	RF	—
Cesium Hydroxide	CsOH	272	3.67	—	—	550	—	—	—	Pt	—	—	—
Cesium Iodide	CsI	621	4.51	—	—	500	—	—	—	W	—	RF	n = 1.79

Thin Film Deposition Suggestions 20

NAME	SYMBOL	MELTING POINT °C	DENSITY g/cm³	TEMPERATURE (°C) @ VAP PRESS 10^{-6} TORR	10^{-4} TORR	10^{-2} TORR	EVAPORATION TECHNIQUES ELECTRON BEAM	CRUCIBLE	COIL	BOAT	BASKET	SPUTTER	REMARKS n = Index of refraction
Dysprosium	Dy	1409	8.54	625	750	900	Good	—	—	Ta	—	RF DC Sputtergun	—
Dysprosium Fluoride	DyF_3	1360	—	—	—	800	Good	—	—	Ta	—	RF	—
Dyprosium Oxide	Dy_2O_3	2340	8.16	—	—	1400	—	—	—	Ir	—	RF RF-Reactive	Loses oxygen.
Erbium	Er	1497	9.06	650	775	930	Good	—	—	W Ta	—	DC RF	—
Erbium Fluoride	ErF_3	1350	—	—	—	750	—	—	—	—	—	RF	—
Erbium Oxide	Er_2O_3	2400	8.64	—	—	1600	—	—	—	Ir	—	RF RF-Reactive	Loses oxygen.
Europium	Eu	822	5.26		360	480	Fair	Al_2O_3	—	W Ta	—	RF DC	Low tantalum solubility
Europium Fluoride	EuF_2	1380	6.5	—	—	950	—	—	—	Mo	—	RF	—
Europium Oxide	Eu_2O_3	2056	8.18	—	—	1600	Good	ThO_2	—	Ir Ta W	—	RF RF-Reactive	Loses oxygen; films clear and hard.
Europium Sulphide	EuS	—	—	—	—	—	Good	—	—	—	—	RF	—
Gadolinium	Gd	1312	7.89	760	900	1175	Xlnt.	Al_2O_3	—	Ta	—	RF DC Sputtergun	High Ta solubility.
Gadolinium Carbide	GdC_2	—	—	—	—	1500	—	Carbon	—	—	—	RF	Decomposes.
Gadolinium Oxide	Gd_2O_3	2310	7.41	—	—	—	Fair	—	—	Ir	—	RF RF-Reactive	Loses oxygen.
Gallium	Ga	30	5.90	619	742	907	Good	Al_2O_3 BeO Quartz	—	—	—	—	Alloys with refractory metals. Use EB gun.
Gallium Antimonide	GaSb	710	5.6	—	—	—	Fair	—	—	W Ta	—	RF	Flash evaporate.
Gallium Arsenide	GaAs	1238	5.3	—	—	—	Good	Carbon	—	W Ta	—	RF	Flash evaporate.
Gallium Nitride	GaN	Subl.	6.1	—	—	~200	—	Al_2O_3	—	—	—	RF RF-Reactive	Evaporate Ga in 10^{-4} N_2.
Gallium Oxide (β)	Ga_2O_3	1900	5.88	—	—	—	—	—	—	Pr W	—	RF	Loses oxygen

NAME	SYMBOL	MELTING POINT °C	DENSITY g/cm³	TEMPERATURE (°C) @ VAP. PRESS 10^{-8} TORR	10^{-6} TORR	10^{-4} TORR	ELECTRON BEAM	EVAPORATION TECHNIQUES CRUCIBLE	COIL	BOAT	BASKET	SPUTTER	REMARKS n = Index of refraction
Chiolote	$Na_3Al_3F_{14}$	—	2.9	—	—	~800	—	—	—	Mo W	—	RF	n = 1.33
Chromium	Cr	1890	7.20	837	977	1157	Good	Vit. Carbon	W	Cr-plated rod or strip	W	RF DC	Films very adherent. High rates possible.
Chromium Boride	CrB	2760	6.17	—	—	—	—	—	—	—		DC Sputtergun	—
Chromium Bromide	$CrBr_2$	842	4.36	—	—	550	—	—	—	Inconel	—	RF	—
Chromium Carbide	Cr_3C_2	1890	6.68	—	—	~2000	Fair	—	—	W	—	RF DC Sputtergun	—
Chromium Chloride	$CrCl_2$	824	2.75	—	—	550	—	—	—	Fe Inconel	—	RF	Sublimes easily.
Chromium Oxide	Cr_2O_3	2435	5.21	—	—	~2000	Good	—	—	W Mo	W	RF RF-Reactive	Disproportionates to lower oxides, reoxidizes @ 600°C in air n = 2.4
Chromium Silicide	Cr_3Si_2	—	5.5	—	—	—	—	—	—	—		DC Sputtergun	—
Chromium-Silicon Monoxide	Cr-SiO			Influenced by composition			Good	—	—	W	W	DC RF	Flash.
Cobalt	Co	1495	8.90	850	990	1200	Xlnt.	Al_2O_3 BeO	—	W Cb	W	DC RF	Alloys with refractory metals.
Cobalt Bromide	$CoBr_2$	678	4.91	—	—	400 Sublimes	—	—	—	Inconel	—	RF	—
Cobalt Chloride	$CoCl_2$	740	3.36	—	—	472 Sublimes	—	—	—	Inconel	—	RF	—
Cobalt Oxide	CoO	1935	6.4	—	—	—	—	—	—	—	—	DC-Reactive RF-Reactive	Sputtering preferred.
Copper	Cu	1083	8.92	727	857	1017	Xlnt.	Al_2O_3 TiB_2BN	W	Mo	W	DC RF	Films do not adhere well Use intermediate layer, e.g. chromium. Evapor from any source material
Copper Chloride	CuCl	422	3.53	—	—	~600	—	—	—	—	—	RF	n = 1.93
Copper Oxide	Cu_2O	1235	6.0	—	—	~600 Sublimes	Good	Al_2O_3	—	Ta	—	DC-Reactive RF-Reactive	n = 2.70
Cryolite	Na_3AlF_6	1000	2.9	1020	1260	1480	Xlnt.	Vit. Ca	—	W Mo	W Mo	RF	Large chunks reduce splitting. Little

Thin Film Deposition Suggestions 20

NAME	SYMBOL	MELTING POINT °C	DENSITY g/cm³	TEMPERATURE (°C) @ VAP. PRESS.			EVAPORATION TECHNIQUES					SPUTTER	REMARKS n = Index of refraction
				10^{-6} TORR	10^{-4} TORR	10^{-2} TORR	ELECTRON BEAM	CRUCIBLE	COIL	BOAT	BASKET		
Indium	In	157	7.30	487	597	742	Xlnt.: Mo Liner req'd.	Graphite Al_2O_3	—	W Mo	W	DC RF	Wets W and Cu; use Mo liner in guns.
Indium Antimonide	InSb	535	5.8	500	—	~400	—	—	—	W	—	RF	Decomposes; sputtering preferred; or co-evaporate from 2 sources, flash
Indium Arsenide	InAs	943	5.7	780	870	970	—	—	—	W	—	RF	Sputtering preferred, or co-evaporate from 2 sources, flash
Indium Nitride	InN	1200	7.0	—	—	—	—	—	—	—	—	RF	—
Indium Oxide	In_2O	—	6.99	—	—	650	—	—	—	—	—	RF	Decomposes.
Indium Oxide	In_2O_3	1565	7.18	—	—	~600	Poor	Al_2O_3	—	W Pt	W	RF RF-Reactive	Film In_2O
Indium Phosphide	InP	1058	4.8	—	630	730	—	Graphite	—	W Ta	W Ta	RF	Deposits P rich. Flash evaporate.
Indium Selenide	In_2Se_3	890	5.7	—	—	—	—	—	—	—	—	RF	Sputtering preferred, or co-evaporate from 2 sources flash
Indium Sesquisulphide	In_2S_3	1050	4.90	—	—	850	—	Graphite	—	—	—	RF	Film In_2S
Indium Sulphide	In_2S	653	5.87	—	—	650	—	Graphite	—	—	—	RF	—
Indium Telluride	In_2Te_3	667	5.8	—	—	—	—	—	—	—	—	RF	Sputtering preferred; or co-evaporate from 2 sources; flash
Iridium	Ir	2459	22.4	1850	2080	2380	Fair	ThO_2	—	—	—	DC RF	—
Iron	Fe	1535	7.86	858	998	1180	Xlnt.	Al_2O_3 BeO	W	W	W	DC RF	Attacks W. Films hard, smooth. Use gentle preheat to outgas.
Iron Bromide	$FeBr_2$	689	4.64	—	—	561	—	Fe	—	—	—	RF	—
Iron Chloride	$FeCl_2$	670	2.98	—	—	300	—	Fe	—	—	—	RF	—
Iron Iodide	FeI_2	592	5.31	—	—	400	—	Fe	—	—	—	RF	—
Iron Oxide	FeO	1425	5.7	—	—	—	Poor	—	—	—	—	RF RF-Reactive	Decomposes; sputtering preferred.

20 ■ Thin Film Deposition Suggestions

NAME	SYMBOL	MELTING POINT °C	DENSITY g/cm³	TEMPERATURE (°C) @ VAP. PRESS.			EVAPORATION TECHNIQUES					SPUTTER	REMARKS n = Index of refraction
				10^{-8} TORR	10^{-6} TORR	10^{-4} TORR	ELECTRON BEAM	CRUCIBLE	COIL	BOAT	BASKET		
Gallium Phosphide	GaP	1540	4.1	—	770	920	Xlnt.	Quartz	—	W Ta	W	RF	Does not decompose. Rate control important
Germanium	Ge	937	5.35	812	957	1167	Xlnt.	Quartz Al_2O_3	—	W C Ta	—	DC Rf	Excellent films from EB guns.
Germanium Monoxide	GeO	—	—	—	—	550	—	Quartz	—	—	—	RF	—
Germanium Nitride	Ge_3N_4	—	5.2	— Sublimes	—	~650	—	—	—	—	—	RF-Reactive	Sputtering preferred.
Germanium Oxide	GeO_2	1086	6.24	—	—	625	Good	Quartz Al_2O_3	—	Ta Mo	W Mo	RF-Reactive	Similar to SiO, film predominately GeO.
Germanium Telluride	GeTe	725	6.20	—	—	381	—	Quartz Al_2O_3	—	W Mo	W	RF	—
Glass, Schott 8329	—	—	2.20	—	—	—	Xlnt.	—	—	—	—	RF	Evaporable alkali gas. Melt in air before evaporating.
Gold	Au	1062	19.32	807	947	1132	Xlnt.	Al_2O_3 BN Vit. Carbon	W	W. Mo Coated Al_2O_3	W	DC RF	Films soft, not very adherent.
Hafnium	Hf	2230	13.09	2160	2250	3090	Good	—	—	—	—	DC RF	—
Hafnium Boride	HfB_2	3250	10.5	—	—	—	—	—	—	—	—	DC RF	—
Hafnium Carbide	HfC	4160	12.2	— Sublimes	—	2600	—	—	—	—	—	DC RF	—
Hafnium Nitride	HfN	2852	13.8	—	—	—	—	—	—	—	—	RF RF-Reactive	—
Hafnium Oxide	HfO_2	2812	9.68	—	—	2500	Fair	—	—	W	—	DC RF RF-Reactive	Film HfO.
Hafnium Silicide	$HfSi_2$	1750	7.2	—	—	—	—	—	—	—	—	RF	—
Holmium	Ho	1470	8.80	650 Sublimes	770	950	Good	—	W	W Ta	W	—	—
Holmium Fluoride	HoF_3	1143	—	—	—	~800	—	Quartz	—	—	—	DC RF	—
Holmium Oxide	Ho_2O_3	2370	8.41	—	—	—	—	—	—	Ir	—	RF RF-Reactive	Loses oxygen.
Inconel	Ni/Cr/Fe	1425	8.5	—	—	—	Good	—	W	W	W	DC RF	Use fine wire pre-wrapped on W. Low rate req'd for [illegible]

Thin Film Deposition Suggestions 20

NAME	SYMBOL	MELTING POINT °C	DENSITY g/cm³	TEMPERATURE (°C) @ VAP. PRESS.			EVAPORATION TECHNIQUES					SPUTTER	REMARKS n = Index of refraction
				10^{-8} TORR	10^{-6} TORR	10^{-4} TORR	ELECTRON BEAM	CRUCIBLE	COIL	BOAT	BASKET		
Lithium Fluoride	LiF	870	2.60	875	1020	1180	Good	—	—	Ni, Ta Mo W	—	RF	Rate control important for optical films. Use gentle preheat for outgas n = 1.33
Lithium Iodide	LiI	446	4.06	—	—	400	—	—	—	Mo W	—	RF	—
Lithium Oxide	Li_2O	>1700	2.01	—	—	850	—	—	—	Pt Ir	—	RF	n = 1.64
Letutium	Lu	1652	9.84	—	—	1300	Xlnt.	Al_2O_3	—	Ta	—	RF DC Sputtergun	—
Letutium Oxide	Lu_2O_3	—	9.41	—	—	1400	—	—	—	Ir	—	RF	Decomposes.
Magensium	Mg	651	1.74	185	247	327	Good	Al_2O_3 Vit. Carbon	W	W Mo Ta, Cb	W	DC RF	Extremely high rates possible.
Magnesium Aluminate	$MgAl_2O_4$	2135	3.6	—	—	—	Good	—	—	—	—	RF	Natural spinel.
Magnesium Bromide	$MgBr_2$	195	3.72	—	—	250	—	—	—	Ni	—	RF	Decomposes.
Magnesium Chloride	$MgCl_2$	116	2.32	—	—	400	—	—	—	Ni	—	RF	Decomposes n = 1.6
Magnesium Fluoride	MgF_2	1266	2.9-3.2	—	—	925	Xlnt.	Al_2O_3	—	—	—	RF	Rate control and substrate heat important for optical films. Reacts with W. Xlnt. with Mo. n = 1.38
Magnesium Iodide	MgI_2	>700	4.24	—	—	200	—	—	—	Pr		RF	—
Magnesium Oxide	MgO	2800	3.58	—	—	1300	Good	Carbon Al_2O_3	—	—		RF RF-Reactive	Evaporate in 10^{-3} of O_2 to retain stoichiometry. W produces volatile oxides. n = 1.7
Manganese	Mn	1244	7.20	507	572	647	Good	Al_2O_3 BeO	W	W Ta Mo	W	DC RF	—
Manganese Bromide	$MnBr_2$	695	4.38	—	—	500	—	—	—	Inconel	—	RF	—
Manganese Chloride	$MnCl_2$	650	2.98	—	—	450	—	—	—	Inconel	—	RF	—
Manganese Dioxide	MnO_2	—	5.02	—	—	—	Poor	—	—	W	W	RF-Reactive	Loses O_2 @ 535°C
Manganese Sulphide	MnS	—	3.99	—	—	1300	—	—	—	Mo	—	RF	Decomposes. n = 2.7
Mercury	Hg	-39	13.55	68	-42	-6	—	—	—	—	—	—	—

20 ■ Thin Film Deposition Suggestions

NAME	SYMBOL	MELTING POINT °C	DENSITY g/cm³	TEMPERATURE (°C) @ VAP. PRESS.			EVAPORATION TECHNIQUES					SPUTTER	REMARKS n = Index of refraction
				10^{-8} TORR	10^{-6} TORR	10^{-4} TORR	ELECTRON BEAM	CRUCIBLE	COIL	BOAT	BASKET		
Iron Oxide	Fe_2O_3	1565	5.24	—	—	—	Good	—	—	W	W	—	Disproportionates to Fe_3O_4 at 1530°C. n ≅ 3.0
Iron Sulphide	FeS	1195	4.84	—	—	—	—	Al_2O_3	—	—	—	RF	Decomposes.
Kanthal	FeCrAl	—	7.1	—	—	—	—	—	W	W	—	DC RF	—
Lanthanum	La	920	6.17	990	1212	1388	Xlnt.	Al_2O_3	—	W Ta		RF	Films will burn in air if scraped.
Lanthanum Boride	LaB_6	2210	2.61	—	—	—	Good	—	—	—	—	RF	—
Lanthanum Fluoride	LaF_3	1490	~6	—	—	900	Good	—	—	Ta Mo	Ta	RF	No decomposition. n ≅ 1.6
Lanthanum Oxide	La_2O_3	2250	5.84	—	—	1400	Good	—	—	W Ta	—	RF	Loses oxygen. n ≅ 1.73
Lead	Pb	328	11.34	342	427	497	Xlnt.	Al_2O_3 Quartz	W	W Mo	W Ta	DC RF	Toxic. Carefully controlled rates req'd for superconduct
Lead Chloride	$PbCl_2$	678	5.85	—	—	~325	—	Al_2O_3	—	Pt	—	RF	Little decomposition. n = 2.2
Lead Fluoride	PbF_2	822	8.24	—	—	~400	—	Al_2O_3	—	W Pt. Mo	—	RF	n = 1.75
Lead Oxide	PbO	890	9.53	—	—	~550	—	Quartz Al_2O_3	—	Pt	—	RF-Reactive	No decomposition. n ≅ 2.6
Lead Stannate	$PbSnO_3$	1115	8.1	670	780	905	Poor	Al_2O_3	—	Pt	Pt	RF	Disproportionates.
Lead Selenide	PbSe	1065	8.10	—	— Sublimes	~500	—	Graphite Al_2O_3	—	W Mo	W	RF	—
Lead Sulphide	PbS	1114	7.5	—	— Sublimes	550	—	Quartz Al_2O_3	—	W	W Mo	RF	Little decomposition. n = 3.91
Lead Telluride	PbTe	917	8.16	780	910	1050	—	Al_2O_3 Graphite	—	Pt	—	RF	Vapors toxic. Deposits Te rich. Sputtering preferred, or co-evaporate from 2 sources
Lead Titanate	$PbTiO_3$	—	7.52	—	—	—	—	—	—	Ta	—	RF	—
Lithium	Li	179	0.53	227	307	407	Good	Al_2O_3 BeO	—	Ta S.S	—	—	Metal reacts violently in air
Lithium Bromide	LiBr	547	3.46	—	—	~500	—	—	—	Ni	—	RF	n = 1.78
Lithium Chloride	LiCl	613	2.07										

Thin Film Deposition Suggestions 20

NAME	SYMBOL	MELTING POINT °C	DENSITY g/cm³	TEMPERATURE (°C) @ VAP. PRESS.			EVAPOR TECHNIQUES					SPUTTER	REMARKS n = Index of refraction
				10^{-4} TORR	10^{-6} TORR	10^{-8} TORR	ELECTRON BEAM	CRUCIBLE	COIL	BOAT	BASKET		
Niobium Nitride	NbN	2573	8.4	—	—	—	—	—	—	—	—	RF RF-Reactive	Reactive, evaporate Nb in 10^{-3} N_2.
Niobium Oxide	NbO	—	6.27	—	—	1100	—	—	—	Pt	—	RF	—
Niobium Pentoxide	Nb_2O_5	1530	4.47	—	—	—	—	—	—	W	W	RF RF-Reactive	n = 1.95
Niobium Telluride	$NbTe_x$	—	7.6	—	—	—	—	—	—	—	—	RF	Composition variable
Niobium-Tin	Nb_3Sn	—	—	—	—	—	XInt.	—	—	—	—	RF DC Sputtergun	Co-evaporate from 2 sources.
Niobium Trioxide	Nb_2O_3	1780	7.5	—	—	—	—	—	—	W	[illegible]		—
Osmium	Os	1700	22.5	2170	2430	2760	Fair	—	—	—	—	DC RF	—
Osmium Oxide	Os_2O_3	—	—	—	—	—	—	—	—	—	—	—	Decomposes, Deposit Os in 10^{-3} O_2.
Palladium	Pd	1550	12.40	842	992 Sublimes	1192	XInt.	Al_2O_3 BeO	W	W	W	DC RF	Alloys with refractory metals, rapid evaporation suggested
Palladium Oxide	PdO	870	8.31	—	—	575	—	Al_2O_3	—	—	—	RF-Reactive	Decomposes.
Parylene (Union Carbide)	C_8H_8	300–400	1.1	—	—	—	—	—	—	—	—	—	Vapor depositable plastic.
Permalloy	Ni/Fe	1395	8.7	947	1047	1307	Good	Al_2O_3 Vit. Carbon	—	W	—	DC RF	Film low in Ni content. 84% Ni source JVST Vol 7, No 6 p 573
Phosphorus	P	41.4	1.82	327	361	402	—	Al_2O_3	—	—			Metal reacts violently in air.
Phosphorus Nitride	P_3N_5	—	2.51	—	—	—	—	—	—	—	—	RF RF-Reactive	—
Platinum	Pt	1769	21.45	1292	1492	1747	XInt.	C ThO_2	W Pt	W	—	DC RF	Alloys with metals. Films soft, poor adhesion.
Platinum Oxide	PtO_2	450	10.2	—	—	—	—	—	—	—	—	RF-Reactive	—
Plutonium	Pu	635	—	—	—	—	—	—	—	W	—	DC RF	Toxic, radioactive.
Polonium	Po	254	9.4	117	170	244	—	Quartz	—	—	—	—	Radioactive
Potassium	K	64	0.86	23	60	125	—	Quartz	—	Mo	—		Metal Reacts violently in air Use gentle preheat to outgas
Potassium Bromide	KBr	730	2.75	—	—	450	—	Quartz	—	Ta Mo	—	RF	Use gentle preheat to outgas n = 1.49

NAME	SYMBOL	MELTING POINT °C	DENSITY g/cm³	TEMPERATURE (°C) @ VAP. PRESS.			EVAPORATION TECHNIQUES					SPUTTER	REMARKS n = Index of refraction
				10^{-8} TORR	10^{-6} TORR	10^{-4} TORR	ELECTRON BEAM	CRUCIBLE	COIL	BOAT	BASKET		
Mercury Sulphide	HgS	Subl.	8.10	—	— Sublimes . . .	250	—	Al_2O_3	—	—	—	RF	Decomposes.
Molybdenum	Mo	2610	10.22	1592	1822	2117	Xlnt.	—	—	—	—	DC RF	Films smooth, hard. Careful degas req'd
Molybdenum Boride	MoB_2	2100	7.12	—	—	—	Poor	—	—	—	—	RF DC Sputtergun	—
Molybdenum Carbide	Mo_2C	2687	9.18	—	—	—	Fair	—	—	—	—	RF DC Sputtergun	Evaporation of $Mo(CO)_6$ yields Mo_2C.
Molybdenum Disulphide	MoS_2	1185	4.80	—	—	50	—	—	—	—	—	RF	—
Molybdenum Silicide	$MoSi_2$	—	6.3	—	—	—	—	—	—	W	—	RF	Decomposes.
Molybdenum Trioxide	MoO_3	795	4.70	—	—	900	—	Al_2O_3 BN	—	Mo Pt	Mo	RF	Slight O_2 loss. n = 1.9
Neodymium	Nd	1024	7.00	731	871	1062	Xlnt.	Al_2O_3	—	Ta	—	DC RF	Low Ta solubility.
Neodymium Fluoride	NdF_3	1410	6.5	—	—	900	Good	Al_2O_3		Mo W	Mo Ta	RF	Very little decompostion. n = 1.6
Neodymium Oxide	Nd_2O_3	2272	7.24	—	—	1400	Good	ThO_2	—	Ta W	—	RF RF-Reactive	Loses oxygen, films clear EB preferred. n = 1.79
Nichrome IV	Ni/Cr	1395	8.50	847	987	1217	Xlnt.	Al_2O_3 Vit. Carbon BeO	W	Al_2O_3 Coated	W Ta	DC RF	Alloys with refractory metals.
Nickel	Ni	1453	8.90	927	1072	1262	Xlnt.	Al_2O_3 BeO Vit. Carbon	W	W	W	DC RF	Alloys with refractory metals. Forms smooth adherent films
Nickel Bromide	$NiBr_2$	963	4.64	—	— Sublimes	362	—	—	—	Inconel	—	RF	—
Nickel Chloride	$NiCl_2$	1001	3.55	—	— Sublimes	444	—	—	—	Inconel	—	RF	—
Nickel Oxide	NiO	1990	7.45	—	—	≈1470	—	Al_2O_3	—	—	—	RF-Reactive	Dissociates upon heating n = 2.18
Niobium (Columbium)	Nb	2468	8.55	1728	1977	2287	Xlnt.	—	—	W	—	DC RF	Attacks W source.
Niobium Boride	NbB_2	3050	6.97	—	—	—	—	—	—	—	—	RF DC Sputtergun	—
Niobium Carbide	NbC	3800	7.82	—	—	—	Fair	—	—	—	—	RF DC Sputtergun	—

Thin Film Deposition Suggestions 20

NAME	SYMBOL	MELTING POINT °C	DENSITY g/cm³	TEMPERATURE (°C) @ VAP. PRESS. 10^{-8} TORR	10^{-6} TORR	10^{-4} TORR	EVAPORATION TECHNIQUES ELECTRON BEAM	CRUCIBLE	COIL	BOAT	BASKET	SPUTTER	REMARKS n = Index of refraction
Silicon	Si	1410	2.42	992	1147	1337	Xlnt.	BeO Ta Vit. Carbon	—	W Ta	—	DC RF	Alloys with W, use heavy W boat. SiO produced above $4x10^{-4}$ Torr. EB best
Silicon Boride	SiB_6	—	—	—	—	—	Poor	—	—	—	—	RF	—
Silicon Carbide	SiC	2700	3.22	—	—	1000	—	—	—	—	—	RF	Sputtering preferred.
Silicon Dioxide	SiO_2	1610 - 1710	2.2-2.7	—	—	1025 influenced by composition	Xlnt.	Al_2O_3	—	—	—	RF	Quartz xlnt in EB. n = 1.47
Silicon Monoxide	SiO	1702	2.1	—	—	— 850 Sublimes	Xlnt.	Ta	W	Ta	W	RF RF-Reactive	Baffle box source best for resistance evaporation. Low rate suggested. n = 1.6
Silicon Nitride	Si_3N_4	Subl.	3.44	—	—	~800	—	—	—	—		RF RF-Reactive	—
Silicon Selenide	SiSe	—	—	—	—	550	—	Quartz	—	—	—	RF	—
Silicon Sulphide	SiS	Subl.	1.85	—	—	450	—	Quartz	—	—	—	RF	—
Silicon Telluride	$SiTe_2$	—	4.39	—	—	550	—	Quartz	—	—	—	RF	—
Silver	Ag	961	10.49	847	958	1105	Xlnt.	Al_2O_3 Mo	W	Ta Mo	W	DC RF	Evaporates well from any source.
Silver Bromide	AgBr	432	6.47	—	—	~380	—	Quartz	—	Ta	—	RF	n = 2.25
Silver Chloride	AgCl	455	5.56	—	—	~520	—	Quartz	—	Mo Pt	Mo	RF	n = 2.07
Silver Iodide	AgI	558	5.67	—	—	~900	—	—	—	Ta	—	RF	n = 2.21
Sodium	Na	97	0.97	74	124	192	—	Quartz	—	Ta S.S.	—		Use gentle preheat to outgas. Metal reacts violently in air.
Sodium Bromide	NaBr	755	3.20	—	—	~400	—	Quartz	—	—	—	RF	Use gentle preheat to outgas. n = 1.64
Sodium Chloride	NaCl	801	2.16	—	—	530	Poor	Quartz	—	Ta W Mo	—	RF	Cu ovens, little decomposition. Use gentle preheat to outgas. n = 1.54
Sodium Cyanide	NaCN	563	—	—	—	~550	—	—	—	Ag	—	RF	Use gentle preheat to outgas. n = 1.45

NAME	SYMBOL	MELTING POINT °C	DENSITY g/cm³	TEMPERATURE (°C) @ VAP. PRESS.			EVAPORATION TECHNIQUES					SPUTTER	REMARKS n = Index of refraction
				10^{-8} TORR	10^{-6} TORR	10^{-4} TORR	ELECTRON BEAM	CRUCIBLE	COIL	BOAT	BASKET		
Potassium Chloride	KCl	776	1.98	–	–	510	–	–	–	Ta Ni	–	RF	Use gentle preheat to outgas. n = 1.49
Potassium Fluoride	KF	880	2.48	–	–	~450	–	Quartz	–	–	–	RF	Use gentle preheat to outgas. n = 1.35
Potassium Hydroxide	KOH	360	2.04	–	–	~400	–	–	–	Pt	–	–	Use gentle heat to outgas.
Potassium Iodide	KI	723	3.13	–	–	~500	–	–	–	Ta	–	RF	Use gentle heat to outgas. n = 1.68
Praseodymium	Pr	931	6.78	800	950	1150	–	–	–	Ta	–	RF DC Sputtergun	–
Praseodymium Oxide	Pr_2O_3	2125	6.88	--	–	1400	Good	ThO_2	–	Ir	–	RF RF-Reactive	Loses oxygen.
Radium	Ra	700	5.0	246	320	416	–	–	–	–	–	–	–
Rhenium	Re	3180	20.53	1928	2207	2571	Xlnt.	–	–	–	–	DC RF	Fine wire will self-evaporate.
Rhenium Oxide	ReO_3	–	~7	–	–	–	–	–	–	–	–	RF	Evaporate Re in 10^{-3} O_2
Rhodium	Rh	1966	12.4	1277	1472	1707	Good	ThO_2 Vit. Carbon	W	W	W	DC RF	EB gun preferred.
Rubidium	Rb	38.5	1.47	-3	37	111	–	Quartz	–	–	–	DC RF	–
Rubidium Chloride	RbCl	715	2.76	–	–	~550	–	Quartz	–	–	–	RF	n = 1.49
Rubidium Iodide	RbI	642	3.55	–	–	~400	–	Quartz	–	–	–	RF	–
Ruthenium	Ru	2700	12.6	1780	1990	2260	Fair	–	–	W	–	DC RF	–
Samarium	Sm	1072	7.54	373	460	573	Good	Al_2O_3	–	Ta	–	RF DC SPuttergun	–
Samarium Oxide	Sm_2O_3	2350	7.43	–	–	–	Good	ThO_2	–	Ir	–	RF RF-Reactive	Loses O_2. Films smooth, clear.
Scandium	Sc	1539	2.99	714	837 Sublimes	1002	Xlnt.	Al_2O_3 BeO	–	W	–	RF	Alloys with Ta.
Scandium Oxide	Sc_2O_3	2300	3.86	–	–	–	–	–	–	–	–	RF RF-Reactive	
Selenium	Se	217	4.2-4.8	89	125	170	Good	Al_2O_3 Vit. C	W Mo	W Mo	W Mo	RF DC Sputtergun	Toxic. Poisons vacuum systems

Thin Film Deposition Suggestions 20

NAME	SYMBOL	MELTING POINT °C	DENSITY g/cm³	TEMPERATURE (°C) @ VAP. PRESS. 10^{-8} TORR	10^{-6} TORR	10^{-4} TORR	EVAPORATION TECHNIQUES: ELECTRON BEAM	CRUCIBLE	COIL	BOAT	BASKET	SPUTTER	REMARKS n = Index of refraction
Tellurium	Te	452	6.25	157	207	277	Poor	Al_2O_3 Quartz	W	W	W Ta	RF	Wets w/o alloying. Toxic.
Terbium	Tb	1357	8.27	800	950	1150	Xlnt.	Al_2O_3	—	Ta	—	RF	—
Terbium Fluoride	TbF_3	1176	—	—	—	~800	—	—	—	—		RF	—
Terbium Oxide	Tb_4O_7	2387	7.87	—	—	1300	—	—	—	Ir	—	RF	Partially decomposes.
Terbium Oxide	Tb_4O_7	—		—	—	—	—	—	—	Ta	—	RF	Films TbO.
Thallium	Tl	302	11.85	280	360	470	Poor	Al_2O_3 Quartz	—	W Ta	W	DC Sputtergun	Wets freely, very toxic.
Thallium Bromide	TlBr	480	7.56	— Sublimes	—	~250	—	Quartz	—	—	—	RF	Toxic
Thallium Chloride	TlCl	430	7.00	— Sublimes	—	~150	—	Quartz	—	—	—	RF	n = 2.25
Thallium Iodide (B)	TlI	440	7.09	— Sublimes	—	~250	—	Quartz—	—	—	—	RF	n = 2.78
Thallium Oxide	Tl_2O_3	717	9.65	—	—	350	—	—	—	—	—	RF	Goes to Tl_2O at at 850°C.
Thorium	Th	1700	11.7	1430 Sublimes	1660	1925	Xlnt.	—	W	W Ta Mo	W	—	Toxic, radioactive.
Thorium Carbide	ThC_2	2773	8.96	—	—	~2300	—	Carbon	—	—	—	RF DC Sputtergun	Radioactive.
Thorium Dioxide	ThO_2	3050	10.03	—	—	~2100	Good	—	—	W	—	RF RF-Reactive	Radioactive. n = 1.86, 2.20
Thorium Fluoride	ThF_4	90	6.3	—	—	~750	Fair	Vit. Carbon	—	Ni	W	RF	Radioactive
Thorium OxyFluoride	$ThOF_2$	900	9.1	—	—	—	—	—	—	Mo Ta	—	—	Radioactive. n = 1.52
Thorium Sulphide	ThS_2	—	6.80	—	—	—	—	—	—	—	—	RF	Sputtering preferred, or co evaporate from 2 sources
Thulium	Tm	1545	9.32	461 Sublimes		554	680	Al_2O_3	—	Ta	—	DC Sputtergun	—
Thulium Oxide	Tm_2O_3	—	8.90	—	—	1500	—	—	—	Ir	—	RF	Decomposes.
Tin	Sn	232	7.75	682	807	997	Xlnt.	Al_2O_3	W	Mo	W	DC RF	Wets Mo, use Ta liner in EB guns.
Tin Oxide	SnO_2	1127	6.95	— Sublimes	—	~350	Xlnt.	Quartz Al_2O_3	W	W	W	RF RF-Reactive	Films from W oxygen deficient oxidize in air. n = 2.0

20 ■ Thin Film Deposition Suggestions

NAME	SYMBOL	MELTING POINT °C	DENSITY g/cm³	TEMPERATURE (°C) @ VAP. PRESS.			EVAPORATION TECHNIQUES					SPUTTER	REMARKS n = Index of refraction
				10^{-8} TORR	10^{-6} TORR	10^{-4} TORR	ELECTRON BEAM	CRUCIBLE	COIL	BOAT	BASKET		
Sodium Fluoride	NaF	988	2.79	945	1080	1200	Poor	BeO	—	Mo Ta W	—	RF	Use gentle preheat to outgas. No decomposition. n = 1.30
Sodium Hydroxide	NaOH	318	2.13	—	—	~470	—	—	—	Pt	—	—	Use gentle preheat to outgas. n = 1.36
Spinel	MgO_3 $5Al_2O_3$	—	8.0	—	—	—	Good	—	—	—	—	RF	n = 1.72
Strontium	Sr	769	2.6	239	309	403	Good	Vit. Carbon	W	W Ta Mo	W	RF DC Sputtergun	Wets but does not alloy with refractory metals. May react violently in air.
Strontium Fluoride	SrF_2	1450	4.24	—		[illegible]	—	Al_2O_3	—	—	—	RF	n = 1.44
Strontium Oxide	SrO	2460	4.7	—	Sublimes . . .	1500	—	Al_2O_3	—	Mo	—	RF	Reacts with Mo and W. n = 1.87
Strontium Sulphide	SrS	—	3.70	—	—	—	—	—	—	Mo	—	RF	Decomposes. n = 2.11
Sulphur	S_8	115	2.0	13	19	57	—	Quartz	—	W	W	—	Poisons vacuum system.
Supermalloy	Ni/Fe/Mo	1410	8.9	—	—	—	Good	—	—	—	—	RF DC	Sputtering preferred; or co-evaporate from 2 sources, Permalloy and Mo.
Tantalum	Ta	2996	16.6	1960	2240	2590	Xlnt.	—	—	—	—	DC RF	Forms good films.
Tantalum Boride	TaB_2	3000	12.38	—	—	—	—	—	—	—	—	RF DC Sputtergun	—
Tantalum Carbide	TaC	3880	14.65	—	—	~2500	—	—	—	—	—	RF DC Sputtergun	—
Tantalum Nitride	TaN	3660	16.30	—	—	—	—	—	—	—	—	RF RF-Reactive DC Sputtergun	Reactive; evaporate Ta in 10^{-3} N_2.
Tantalum Pentoxide	Ta_2O_5	1800	8.74	1550	1780	1920	Good	Vit. Carbon	W	Ta	W	RF RF-Reactive	Slight decomposition; evaporate in 10^{-3} Torr of O_2 = 2.6
Tantalum Sulphide	TaS_2	1300	—	—	—	—	—	—	—	—	—	RF	—
Technetium	Tc	2200	11.5	1570	1800	2090	—	—	—	—	—	—	—
Teflon	PTFE	330	2.9	—	—	—	—	—	—	W	—	RF	Baffled source. Film structure doubtful

Thin Film Deposition Suggestions 20

NAME	SYMBOL	MELTING POINT °C	DENSITY g/cm³	TEMPERATURE (°C) @ VAP. PRESS			EVAPORATION TECHNIQUES					SPUTTER	REMARKS n = Index of refraction
				10^{-8} TORR	10^{-6} TORR	10^{-4} TORR	ELECTRON BEAM	CRUCIBLE	COIL	BOAT	BASKET		
Tungsten Trioxide	WO_3	1473	7.16	—	—	980	Good	—	—	W Pt	—	RF Reactive	Use gentle preheat to outgas. W reduces oxide slightly n = 1.68
Uranium	U	1132	18.7	1132	1327	1582	Good	—	W	Mo W	W	—	Films oxidize.
Uranium Carbide	UC_2	2260	11.28	—	—	2100	—	Carbon	—	—	—	RF	Decomposes
Uranium Dioxide	UO_2	2176	10.9	—	—	—	—	—	—	W	W	RF	Ta causes decompostion.
Uranium Fluoride	UF_4	~1000	—	—	—	300	—	—	—	Ni	—	RF	—
Uranium Oxide	U_3O_8	dec	8.30	—	—	—	—	—	—	W	W	RF-Reactive	Decomposes at 1300°C to Uo_2
Uranium Phosphide	UP_2	—	8.57	—	—	1200	—	—	—	Ta	—	RF	Decomposes.
Uranium Sulphide	U_2S_3	—	—	—	—	1400	—	—	—	W	—	RF	Slight decomposition.
Vanadium	V	1890	5.96	1162	1332	1547	Xint.	—	—	Mo	—	DC RF	Wets Mo. EB evaporated films preferred
Vanadium Boride	VB_2	2400	5.10	—	—	—	—	—	—	—	—	RF DC Sputtergun	—
Vanadium Carbide	VC	2810	5.77	—	—	~1800	—	—	—	—		RF DC Sputtergun	—
Vanadium Dioxide	VO_2	1967		— Sublimes	—	~575	—	—	—	—	—	RF RF-Reactive	Sputtering preferred.
Vanadium Nitride	VN	2320	6.13	—	—	—	—	—	—	—	—	RF RF-Reactive DC Sputtergun	—
Vanadium Pentoxide	V_2O_5	690	3.36	—	—	~500	—	Quartz	—	—	—	RF	—

NAME	SYMBOL	MELTING POINT °C	DENSITY g/cm³	TEMPERATURE (°C) @ VAP. PRESS.			EVAPORATION TECHNIQUES					SPUTTER	REMARKS n = Index of refraction
				10^{-8} TORR	10^{-6} TORR	10^{-4} TORR	ELECTRON BEAM	CRUCIBLE	COIL	BOAT	BASKET		
Tin Selenide	SnSe	861	6.18	—	—	~400	—	Quartz	—	—	—	RF	—
Tin Sulphide	SnS	882	5.08	—	—	~450	—	Quartz	—	—	—	RF	—
Tin Telluride	SnTe	780	6.44	—	—	~450	—	Quartz	—	—	—	RF	—
Titanium	Ti	1675	4.50	1067	1235	1453	XInt.	Vit. Carbon TiC	—	Ta	—	DC RF	Alloys with refractory metals; evolves gas on first heating.
Titanium Boride	TiB_2	2980	4.50	—	—	—	Poor	—	—	—	—	RF DC Sputtergun	—
Titanium Carbide	TiC	3140	4.93	—	—	~2300	—	—	—	—	—	RF DC Sputtergun	—
Titanium Dioxide (rutile)	TiO_2	1640	4.29	—	—	~1300	Fair	—	—	—	W	RF RF-Reactive	Sub-oxide, must be reoxidized to rutile. Ta reduces TiO_2 to TiO and Ti. n = 2.4
Titanium Monoxide	TiO	1750	4.93	—	—	1500	Good	Vit. Carbon	—	W Ta	—	RF	Use gentle preheat to outgas. n ≈ 2.2
Titanium Nitride	TiN	2930	5.43	—	—	—	Good	—	—	Mo	—	RF RF-Reactive DC Sputtergun	Sputtering preferred. Decomposes with thermal evaporation.
Titanium Sesquioxide	Ti_2O_3	2130	4.6	—	—	—	Good	—	—	W	—	RF	Decomposes
Titanium Silicide	$TiSi_2$	—	—	—	—	—	—	—	—	—	—	RF Dc Sputtergun	—
Tungsten	W	3410	19.3	2117	2407	2757	Good	—	—	—	—	RF DC Sputtergun	Forms volatile oxides. Films hard & adherent.
Tungsten Boride	WB_2	2900	12.75	—	—	—	Poor	—	—	—	—	RF	—
Tungsten Carbide	W_2C	2860	17.15	1480	1720	2120	XInt.	—	—	C	—	RF DC Sputtergun	—
Tungsten DiSulphide	WS_2	1250	7.5	—	—	—	—	—	—	—	—	RF	—
Tungsten Selenide	WSe_2	—	9.0	—	—	—	—	—	—	—	—	RF	—
Tungsten Silicide	WSi_2	2900	9.4	—	—	—	—	—	—	—	—	RF DC Sputtergun	—
Tungsten	WTe_2	—	9.49				—	Quartz	—	—	—	RF	—

Thin Film Deposition Suggestions 20

NAME	SYMBOL	MELTING POINT °C	DENSITY g/cm³	TEMPERATURE (°C) @ VAP. PRESS			EVAPORATION TECHNIQUES					SPUTTER	REMARKS n = Index of refraction
				10^{-8} TORR	10^{-6} TORR	10^{-4} TORR	ELECTRON BEAM	CRUCIBLE	COIL	BOAT	BASKET		
Zinc Bromide	$ZnBr_2$	394	4.22	—	—	~300	—	Carbon	—	W	—	RF	Decomposes.
Zinc Fluoride	ZnF_2	872	4.84	790	905	1035	—	Quartz	—	Pt Ta	—	RF	—
Zinc Nitride	Zn_3N_2	—	—	—	—	—	—	—	—	Mo		RF	Decomposes.
Zinc Oxide	ZnO	1975	5.61	—	—	~1800	—	—	—	—	—	RF-Reactive	—
Zinc Selenide	ZnSe	1526	5.42	—	—	660	—	Quartz	W Mo	Ta W Mo	W	RF	Use gentle preheat to outgas. Evaporates well. n = 2.6
Zinc Sulphide n	ZnS	1830	4.09	—	— Sublimes	~800	Good	Quartz	—	Ta Mo	—	RF	Use gentle preheat to outgas. Films partially decompose. Sticking co-efficient varies w/substrate temp. 2.3
Zinc Telluride	ZnTe	1238	6.0	—	—	~600	—	—	—	Mo Ta	—	RF	Use gentle preheat to outgas. n = 2.8
Zircon	$ZrSiO_4$	2550	4.56	—	—	—	—	—	—	—	—	RF	—
Zirconium	Zr	1852	6.40	1477	1702	1987	Xlnt.	—	—	W	—	RF DC	Alloys with W. Films oxidize readily.
Zirconium Boride	ZrB_2	3040	6.08	—	—	—	Good	—	—	—	—	RF DC Sputtergun	—
Zirconium Carbide	ZrC	3540	6.73	—	—	~2500	—	—	—	—	—	RF DC Sputtergun	—
Zirconium Nitride	ZrN	2980	7.09	—	—	—	—	—	—	—	—	RF RF-Reactive DC Sputtergun	Reactively evaporate in 10^{-3} n_2 atmosphere.
Zirconium Oxide	ZrO_2	2700	5.6	—	—	~2200	Good	—	—	W	—	RF RF-Reactive	Films oxygen deficient, clear and hard. n = 2.05
Zirconium Silicide	$ZrSi_2$	—	4.88	—	—	—	—	—	—	—	—	RF DC Sputtergun	—

NAME	SYMBOL	MELTING POINT °C	DENSITY g/cm³	TEMPERATURE (°C) @ VAP. PRESS.			EVAPORATION TECHNIQUES					SPUTTER	REMARKS n = Index of refraction
				10^{-8} TORR	10^{-6} TORR	10^{-4} TORR	ELECTRON BEAM	CRUCIBLE	COIL	BOAT	BASKET		
Vanadium Silicide	VSi_2	—	4.42	—	—	—	—	—	—	—	—	RF	—
Ytterbium	Yb	824	6.98	520	590	690	Good	—	—	Ta	—	DC RF	—
Ytterbium Fluoride	YbF_3	1157	—	—	—	~800	—	—	—	—	—	RF	—
Ytterbium Oxide	Yb_2O_3	2346	9.17	—	—	~1500	—	—	—	Ir	—	RF RF-Reactive	Loses oxygen.
Yttrium	Y	1509	4.48	830	973	1157	Xlnt.	Al_2O_3	—	W Ta	W	RF DC Sputtergun	High Ta solubility.
Yttrium Aluminum Oxide	$Y_3Al_5O_{12}$	1990	—	—	—	—	Good	—	W	—	—	RF	Films not ferroelectric.
Yttrium Fluoride	YF_3	1387	4.0	—	—	—	—	—	—	—	—	RF	—
Yttrium Oxide	Y_2O_3	2680	4.84	—	—	2000	Good	C	—	W	—	RF RF-Reactive	Loses oxygen, films smooth and clear. n = 1.79[1]
Zinc	Zn	419	7.14	127	177	250	Xlnt.	Al_2O_3 Quartz	W	Mo W Ta	W	DC RF	Evaporates well under wide range of of conditions.
Zinc Antimonide	Zn_3Sb_2	546	6.3	—	—	—	—	—	—	—	—	RF	—

APPENDIX G: ARGUMENTS FOR THE USE OF A SECOND FLOOR PLATFORM IN THE HIGH BAY

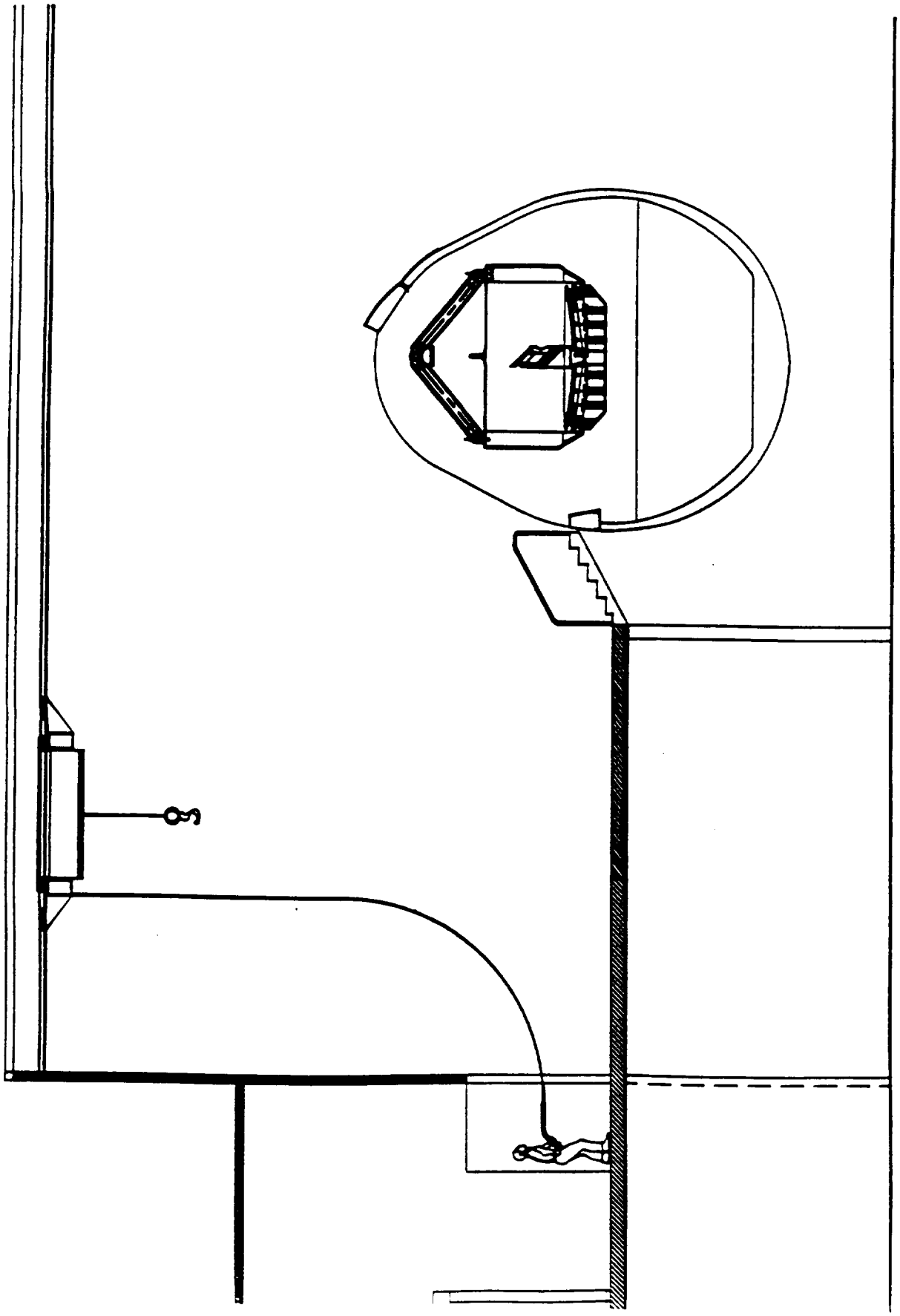

3
PRECEDING PAGE BLANK NOT FILMED

Space Administration

Ames Research Center
Moffett Field, California 94035

Reply to Attn of: FFF:213-4

December 7, 1989

TO: Lou Haughney, Code OMM

FROM: Norm Yetka, Mechanical Systems and Controls Branch

SUBJECT: Hanger Work Platform-Comments to the Facilities Requirements Document

The SOFIA System Integration and Test activity and subsequent maintenance will require a way to access the cavity in the side of the aircraft. In planning these activities, we are attempting to use equipment/facilities already planned. This is intended to minimize the cost of specialized equipment to be purchased for I&T use only. It is our understanding that a permanent platform, (attached to the hanger), has been proposed as part of the mirror coating and handling facility requirements. This platform could be used for I&T activities if it is also configured for that purpose.

Attached is a sketch that Will Vallotton put together that shows a concept for a platform that could be used for both mirror handling and I&T/maintenance activities. Part of the platform or stairs should be movable to allow for retraction during aircraft maneuvering and then can be extended to mate with the aircraft for I&T/maintenace, mirror handling operations.

If you have any questions, I can be reached at extension 4-6320.

Norm Yetka

cc:
Jim Eilers
Julie Pollitt

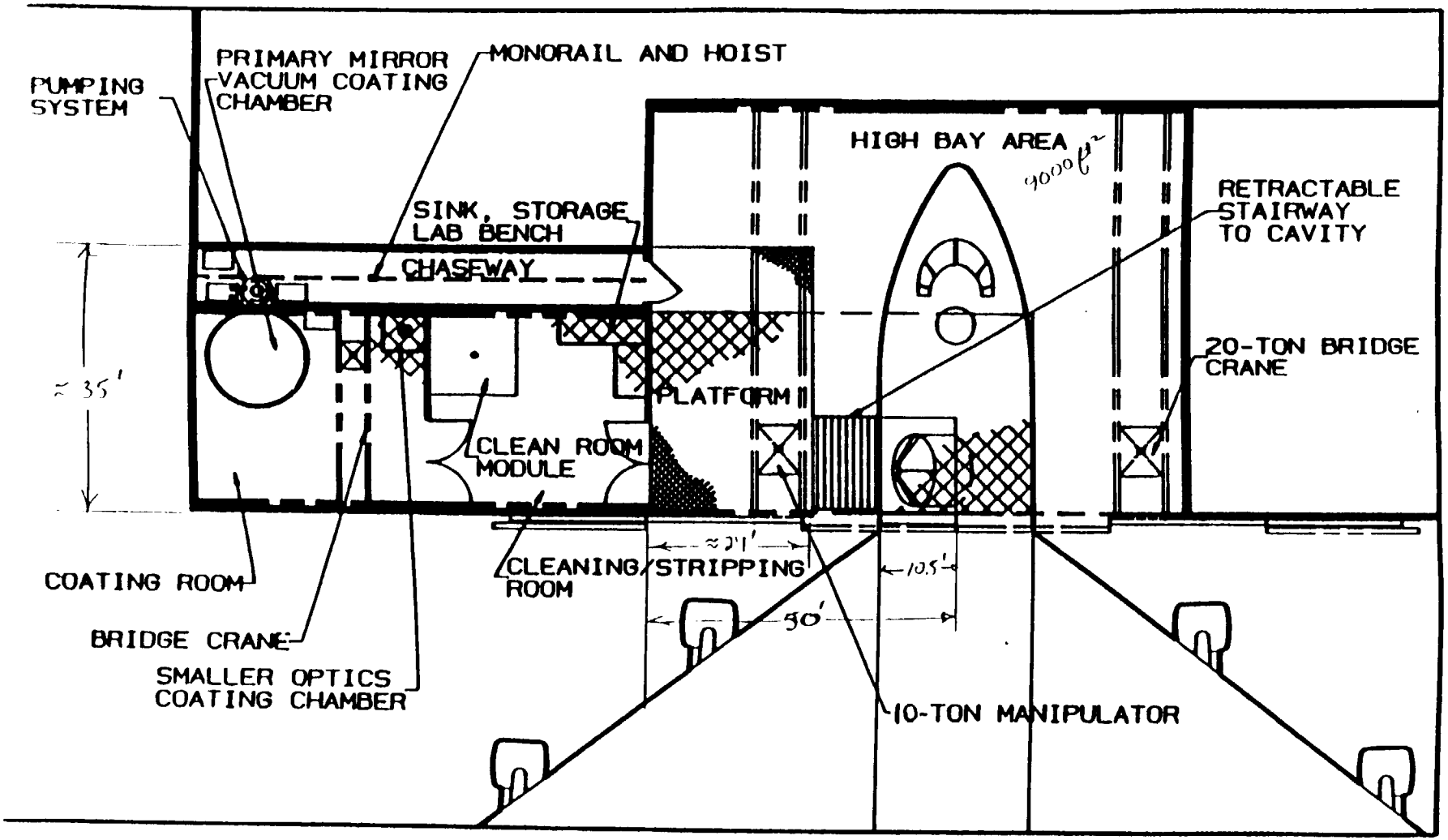
PUMPING SYSTEM
PRIMARY MIRROR VACUUM COATING CHAMBER
MONORAIL AND HOIST
HIGH BAY AREA
9000 ft²
RETRACTABLE STAIRWAY TO CAVITY
SINK, STORAGE LAB BENCH
CHASEWAY
20-TON BRIDGE CRANE
≈ 35'
PLATFORM
CLEAN ROOM MODULE
≈ 21'
CLEANING/STRIPPING ROOM
10.5'
50'
COATING ROOM
BRIDGE CRANE
SMALLER OPTICS COATING CHAMBER
10-TON MANIPULATOR

PLAN VIEW

EEE:213-4

December 5, 1989

TO: Dale Burrious

FROM: Julie A. Pollitt, Project Engineer, SOFIA

SUBJECT: Further Requirements for the Mirror Coating and Cleaning Facility

It has come to my attention that I had not included the following requirement. A second floor platform is required in the high bay. It should extend from the cleaning room to as close as possible to the aircraft. In the other direction it should be the entire length of the cleaning room and the chase way. The minimum area is 850 square feet. See the attached figure for clarification. It will have several uses:

- the secondary mirror and it's spider, upon removal from the plane, shall be placed on a stand located on the platform.
- the tertiaries and their housing shall also be placed on a stand contained on the platform.
- the secondary mirror spider and tertiary mirror housing will be stored on the platform while the mirrors are inside the cleaning and coating rooms.
- it may provide additional space for storage of other items used by the mirror cleaning and coating facility.
- and, most importantly, it allows us to keep the cleaning and coating rooms much cleaner. Without the platform, a partially removable/psuedo wall would have to be constructed between the high bay and the cleaning room to allow the crane to bring the mirrors to their respective cleaning areas. This removable/pseudo wall would not provide a very good seal. With the platform, transport carts may be wheeled out to recieve the mirrors and then bring them into the facility through a door. A door is much easier to seal than a removable/pseudo wall, thereby keeping a greater number of dirt particles out of the facility.

If you have any comments or questions please call me at (415) 694-3832 during the day or (415) 969-5865 in the evenings.

Julie A. Pollitt

Julie A. Pollitt

cc: Lou Haughney:211-12

3.4.1.5 Coating Operations and Options

The procedure for coating any mirror can be broken into three parts: the pumpdown, the actual coating, and returning the chamber to atmospheric pressure.

The Pumpdown

The pumping system was described in Section 3.4.1.2. The basic operating steps for the chamber pumpdown are:

1) Start up the pumps and control system about two hours before operation. The oil in the diffusion pump will heat up. The mechanical pump will pumpdown the foreline.

2) The mirror is placed in the chamber, and, the chamber is closed and sealed.

3) The roughing valve on the foreline is opened.

4) The mechanical pump takes the chamber from atmospheric pressure (760 Torr) to 10^{-2} Torr. This pressure is refered to as the crossover pressure.

5) The roughing valve is then closed and the backing valve is opened. Note that the vacuum valve is still closed.

6) The diffusion pump is brought down to 10^{-3} Torr by the mechanical pump.

7) The vacuum valve is opened.

8) The chamber is pumped down to about 10^{-3} Torr by the diffusion pump.

9) The vacuum valve is throttled down. The glow discharge power is turned on and a small amount of air is leaked into the chamber until a glow forms (caused by excited air molecules).

10) The glow discharge apparatus is shut off.

Extra

11) The high vacuum valve is opened fully again and the diffusion pump brings the chamber down to 10^{-6} Torr. This is where the coating process begins. Note that the backing valve is kept open.

Note that the control system should be a turnkey system that automatically performs the above steps 3-11.

The Coating

The coating apparatus consists of an arrangement of tungsten filaments. In this method, as explained in Section 3.4.1.5, the aluminum pieces, to be vaporized, are horseshoe shaped. They are draped over the tungsten filaments. The filaments are heated by passing a current through them. The aluminum melts over the filaments, completely coating them. A large current is passed through the filaments and the aluminum is vaporized. The aluminum condenses on all surrounding cooler surfaces, including the substrate. Tungsten is used because of it's high melting point. This procedure takes time to perfect and the system must undergo an initial stage of fine tuning. Uniformity can be controlled by how many aluminum staples are placed on a single filament. This is part of the fine tuning.

Overcoating of the primary mirror is still under investigation.

Outgasing should not be a concern in this system. The pumping system will adequately remove any particles from outgasing if it occurs, but it generally happens at a higher vacuum. A check must be made to assure that the mirror cell or support are not made of "poison" materials, i.e. those that never allow you to achieve a low enough pressure because they continually outgas.

Extra

Return to Atmospheric

The general procedure to return the tunnel to atmospheric is:

1) The vacuum valve is closed.

2) The diffusion pump is turned off. Allow it to cool down for about two hours. During this time keep cooling to the pump on.

3) Close the backing valve.

4) Turn off the mechanical pump. Allow it to cool same as the diffusion pump.

5) Open the venting valve on the chamber per manufacturer's specifications.

The chamber may be opened and the mirror removed.

The procedures followed by the Aluminizing Plant belonging to the Canada-France-Hawaii Telescope Corporation in Hawaii, are found at the end of this section (pages 189-197).

Extra