NASA Contractor Report 4627

IN-05
023902
P. 367
400

Impact of Agility Requirements on Configuration Synthesis

Patrick J. O'Neil, Gregory Nyberg, Robin deTurk, Daniel W. Seal, and Christian E. Grethlein

(NASA-CR-4627) IMPACT OF AGILITY REQUIREMENTS ON CONFIGURATION SYNTHESIS (McDonnell-Douglas Aerospace) 367 p

N95-11952

Unclas

00/05 0023902

Contract NAS1-18763
Prepared for Langley Research Center

September 1994

NASA Contractor Report 4627

Impact of Agility Requirements on Configuration Synthesis

Patrick J. O'Neil, Gregory Nyberg, Robin deTurk, Daniel W. Seal, and Christian E. Grethlein
McDonnell Douglas Corporation, McDonnell Douglas Aerospace • St. Louis, Missouri

National Aeronautics and Space Administration
Langley Research Center • Hampton, Virginia 23681-0001

Prepared for Langley Research Center
under Contract NAS1-18763

September 1994

ACKNOWLEDGMENTS

This report documents work performed by McDonnell Douglas Aerospace (MDA) for NASA Langley Research Center, Hampton, Virginia as Task Assignment No. 21 under the NASA Contract NAS1-18763 with McDonnell Douglas Space Systems Company, Huntington Beach (MDSSC-HB), CA. The period of performance was 10 November 1992 to 31 March 1994.

Mr. Michael J. Logan of the Vehicle Integration Branch was the program monitor for NASA Langley Research Center. Mr. Patrick O'Neil was the Program Manager at MDA-East where the work was performed and Mr. Greg Nyberg was the Principal Investigator. Mr. Robin deTurk was responsible for the mission effectiveness analysis, while Mr. Dan Seal and Mr. Chris Grethlein coordinated the technology assessments in the avionics and advanced materials areas, respectively.

The writers would like to thank the following MDA personnel for their valuable contributions to this effort: Mr. Joe Burnes (configuration design), Mr. Garry Billman (aerodynamic performance), Mr. Ernie Schuster (propulsion), Mr. Leo Fitzgibbons (mass properties), Mr. Len Scruggs (signature characteristics), and Mr. Tom Wendel (flying qualities). We also gratefully acknowledge Mr. Dave Riley for his assistance in defining the scope of the technical effort.

PAGE 11 INTENTIONALLY BLANK

SUMMARY

A configuration design study was performed by McDonnell Douglas Aerospace (MDA) for the NASA Langley Research Center to determine the impact of agility-based requirements on the design of multi-role aircraft. Design guidelines and methodologies were developed which can guide the aircraft designer in the selection of aerodynamic, controls, avionics, propulsion, and materials technologies for a given level of both agility and observables requirements. A matrix of nine aircraft was generated to investigate the quantitative effects of agility-based requirements and observables requirements on vehicle design and sizing. This matrix of aircraft indicates the relatively large TOGW penalty associated with high levels of agility when applied to a vehicle with significant observables requirements. However, the matrix also suggests that optimal integration of certain advanced technologies, such as in tailless fighter design synthesis, might have significant advantages over designs incorporating more conventional technologies. Finally, the study identifies the types of technologies required to achieve high agility under different observables requirements and allows some assessment of the current risks associated with these technologies and how future research might be focused toward reducing such risks.

TABLE OF CONTENTS

Page

LIST OF FIGURES xi

1.0 INTRODUCTION 1-1

2.0 AGILITY METRICS AND METHODS 2-1

2.1 AGILITY METRICS 2-1

2.2 WEIGHTS METHODS 2-2

2.3 HIGH-AOA AERODYNAMIC METHODS 2-3

2.3.1 Forebody-Wing Non-Linear Data 2-4

2.3.2 Aft-Body Correlations 2-5

2.3.3 Control-Power Correlations 2-5

2.3.4 Lateral/Directional Aerodynamic Characteristics 2-6

2.4 ROLL-AND-CAPTURE METHODS 2-6

2.5 OTHER METHODS 2-8

3.0 TECHNOLOGY ASSESSMENT 3-1

3.1 AERODYNAMIC/CONTROL TECHNOLOGIES 3-1

3.1.1 Forebody Vortex-Control Devices 3-1

3.1.2 Wing Control Technologies 3-7

3.1.3 Aft-Body/Empennage Control Technologies 3-14

3.1.4 Other Control Technologies 3-19

3.1.5 Other Aerodynamic Technologies 3-23

3.2 STRUCTURES/MATERIALS TECHNOLOGIES 3-25

3.2.1 Materials Technologies 3-25

3.2.2 Advanced Manufacturing Techniques 3-28

3.2.3 Advanced Structural Techniques 3-29

3.3 AVIONICS TECHNOLOGIES 3-29

3.3.1 Architectures 3-31

3.3.2 Radar Technologies 3-33

3.3.3 Sensor Technologies 3-36

3.3.4 Navigation/Communication Technologies 3-38

3.3.5 Fire Control/Target Designation Systems 3-39

3.3.6 Components/Materials Technologies 3-40

3.3.7 Advanced Displays 3-41

3.3.8 Self-Protection Systems 3-41

3.4 ENGINE CYCLE TRADES 3-42

3.4.1 Study Aircraft Description 3-42
3.4.2 Engine Parametrics 3-43
3.4.3 Sensitivity to Aircraft/Mission Parameters 3-43
4.0 CONFIGURATION SELECTION 4-1
4.1 GENERATING INITIAL CANDIDATES 4-1
4.1.1 Rules for Observables Levels "A", "B", and "C" 4-1
4.1.2 Internal Arrangement/Weapons Carriage Options 4-2
4.1.3 Planform Selection/Controls Sizing 4-2
4.1.4 Initial Candidate Configurations 4-2
4.2 CONFIGURATION DOWNSELECT PROCESS 4-3
4.2.1 Best Candidates Retained for Assessment 4-3
4.2.2 Quantitative and Qualitative Assessment 4-3
4.2.3 Design Review Process 4-3
4.2.4 Downselection of Type A Configurations 4-5
4.2.5 Downselection of Type B Configurations 4-6
4.2.6 Downselection of Type C Configurations 4-8
4.3 CONFIGURATION REFINEMENT 4-11
4.3.1 Selection of Controls Technologies 4-12
4.3.2 Inlet/Nozzle Issues 4-14
4.3.3 Lateral-Acceleration Issues 4-14
4.4 FINAL CONFIGURATION MATRIX 4-15
5.0 VEHICLE SIZING AND PERFORMANCE 5-1
5.1 MISSION/PERFORMANCE REQUIREMENTS 5-1
5.2 SIZING/PERFORMANCE METHODS 5-1
5.2.1 Aerodynamics Methods 5-1
5.2.2 Performance/Sizing Methods 5-2
5.3 SIZING RESULTS 5-2
5.3.1 Sized Vehicles - Baseline Missions 5-3
5.3.2 Sized Vehicles - Modified Missions 5-4
6.0 CONFIGURATION CRITICAL ASSESSMENT 6-1
6.1 SUITABILITY OF CONFIGURATIONS 6-1
6.2 IMPACT OF AGILITY ON COMBAT EFFECTIVENESS 6-2
6.3 OTHER COSTS/IMPACTS OF AGILITY 6-4
6.4 LESSONS LEARNED 6-5
7.0 TECHNOLOGY DEVELOPMENT AND VALIDATION 7-1
7.1 HIGH RATE PITCH/YAW VECTORING 7-1

7.2 ADVANCED AERODYNAMIC CONTROLS 7-2
7.3 STRUCTURES AND MATERIALS TECHNOLOGIES 7-3
8.0 CONCLUSIONS 8-1
9.0 REFERENCES 9-1
APPENDIX - CONCEPTUAL DESIGN DRAWINGS A-1

LIST OF FIGURES

Figure 1.0.1 Program Overview

Figure 2.1.1 Agility Design Goals
Figure 2.1.2 Bleed Rate vs. Turn Rate Example
Figure 2.2.1 Empty-Weight Prediction Accuracy
Figure 2.2.2 Center of Gravity Equations
Figure 2.2.3 Accuracy of C.G. Prediction Methods
Figure 2.2.4 Mass Moment of Inertia Equations
Figure 2.2.5 Accuracy of Inertia Prediction Methods
Figure 2.3.1 Typical Forebody-Wing Pitching-Moment Data
Figure 2.3.2 Longitudinal Aerodynamics for Study Based on ADWT Tests
Figure 2.3.3 Wing Planforms Available in Database
Figure 2.3.4 Example of ADWT Parametric Test Data
Figure 2.3.5 Empirical Aerodynamic Data Calculation Example
Figure 2.3.6 Forebody Shape Correlation for Pitching Moment
Figure 2.3.7 Aft-Body Lift and Pitching Moment Correlations
Figure 2.3.8 Aft-Body Lift and Moment Correlations
Figure 2.4.1 Time to Roll and Capture Requirements
Figure 2.4.2 Pilot Reversal Depends on Maximum Roll Rate
Figure 2.4.3 Validation of 2-DOF Model with F/A-18 SDF Model
Figure 2.4.4 Time-to-Roll-and-Capture 90 deg. Sensitivities
Figure 2.4.5 Control Power Requirements vs. Roll Time
Figure 2.4.6 Effect of Roll Damping on Roll Requirements
Figure 2.5.1 Method for Estimating Roll Damping
Figure 2.5.2 Vortex-Lattice Roll-Damping Predictions
Figure 2.5.3 First-Order Transonic Drag Correlation
Figure 2.5.4 Acceleration Time vs. Thrust, Drag, Weight
Figure 2.5.5 Mission Radius Trends Used for Initial Sizing Analysis

Figure 3.1.1 Summary of Controls Technologies Qualitative Assessments
Figure 3.1.2 Summary of Aerodynamic/Controls Weights Data
Figure 3.1.3 Max Nose-Down Control - Deflectable Chines
Figure 3.1.4 Max Yaw Control - Deflectable Chines
Figure 3.1.5 Max Nose-Down Control - Chine Venting
Figure 3.1.6 Max Yaw Control - Chine Venting
Figure 3.1.7 Max Yaw Control - Forebody Strakes/Fins
Figure 3.1.8 Max Nose-Down Control - Forebody Flaps
Figure 3.1.9 Max Yaw Control - Forebody Flaps
Figure 3.1.10 Max Nose-Down Control - Forebody Fences
Figure 3.1.11 Max Yaw Control - Forebody Fences
Figure 3.1.12 Max Nose-Down Control - Forebody Blowing
Figure 3.1.13 Max Yaw Control - Forebody Blowing
Figure 3.1.14 Blowing Coefficient Available vs. Bleed
Figure 3.1.15 Comparison of HARV and Porous Forebody Data
Figure 3.1.16 Roll Control Power - Conventional Ailerons
Figure 3.1.17 Aileron Roll Control Power Variation with AOA

Figure 3.1.18 Adverse Yaw Due to Aileron Roll Control
Figure 3.1.19 Max Nose-Down Control - Elevons
Figure 3.1.20 Max Yaw Control - Wing-Mounted Split Devices
Figure 3.1.21 Tail-On vs. Tail-Off Pitching Moment - Horiz./V-Tails
Figure 3.1.22 Tail-On vs. Tail-Off Pitching Moment - Horiz./V-Tails
Figure 3.1.23 Max Nose-Down Control - Horiz./V-Tails
Figure 3.1.24 Max Nose-Down Control - Horiz./V-Tail
Figure 3.1.25 Max Yaw Control - V-Tail/All-Moving Vertical
Figure 3.1.26 Roll Control - V-Tail/All-Moving Vertical
Figure 3.1.27 Yaw Control Power - Vertical Tail with Rudder
Figure 3.1.28 Rudder Yaw Control Power Variation with AOA
Figure 3.1.29 Max Nose-Down Control - Thrust-Blown Elevons
Figure 3.1.30 Max Pitch Control Power - Air Dams and Split Body Flaps
Figure 3.1.31 Max Yaw Control Power - Pop-Up Yaw Effectors
Figure 3.1.32 Canard-On vs. Canard-Off Nose-Up Moment
Figure 3.1.33 Canard Pitching Moment Variation with AOA
Figure 3.1.34 Maximum Yaw Control Power - Differential Canards
Figure 3.1.35 Canard Yaw Control Power Variation with AOA
Figure 3.1.36 Max Nose-Down Control - Elevons/Ailerons vs. Thrust Vectoring
Figure 3.1.37 Thrust Vectoring Weight Increments Used in Study
Figure 3.2.1 Summary of Structures/Materials Technology Assessment
Figure 3.3.2 Summary of Avionics Technologies Ratings
Figure 3.4.1 MDA Model 2002 Used for Sensitivity Study
Figure 3.4.2 TOGW Sensitivity to Engine OPR, CET, and PT2/PT0
Figure 3.4.3 TOGW Sensitivity to Engine THR and BPR
Figure 3.4.4 TOGW vs. Bypass Ratio
Figure 3.4.5 TOGW Sensitivities at Constant BPRs

Figure 4.0.1 Overall Configuration Selection Process
Figure 4.1.1 RCS Considerations
Figure 4.1.2 Weapon Carriage Design Options
Figure 4.1.3 Internal Arrangement Considerations
Figure 4.1.4 Internal Arrangements - Type A/Side by Side Carriage
Figure 4.1.5 Internal Arrangements - Type A/Tandem Carriage
Figure 4.1.6 Internal Arrangements - Type A/Wing Carriage
Figure 4.1.7 Internal Arrangements - Type B/Side by Side Carriage
Figure 4.1.8 Internal Arrangements - Type B/Tandem Carriage
Figure 4.1.9 Internal Arrangements - Type B/Wing Carriage
Figure 4.1.10 Internal Arrangements - Type C/Side by Side Carriage
Figure 4.1.11 Internal Arrangements - Type C/Tandem Carriage
Figure 4.1.12 Internal Arrangements - Type C/Wing Carriage
Figure 4.1.13 Candidate Internal Arrangements
Figure 4.1.14 Initial Candidate Concept Development
Figure 4.1.15 Initial Set of Candidate Configurations
Figure 4.2.1 Type "A" Candidate Configurations
Figure 4.2.2 Type "B" Candidate Configurations
Figure 4.2.3 Type "C" Candidate Configurations
Figure 4.2.4 Type "A" Configurations - Empty Weight Breakdowns
Figure 4.2.5 Type "A" Configurations - Performance/Sizing Data

Figure 4.2.6 Type "A" Configurations - Summary of Results
Figure 4.2.7 Type "B" Configurations - Empty Weight Breakdowns
Figure 4.2.8 Type "B" Configurations - Performance/Sizing Data
Figure 4.2.9 Type "B" Configurations - Summary of Results
Figure 4.2.10 Type "C" Configurations - Empty Weight Breakdowns
Figure 4.2.11 Type "C" Configurations - Performance/Sizing Data
Figure 4.2.12 Type "C" Configurations - Summary of Results
Figure 4.2.13 Initial Matrix Defined During Design Review
Figure 4.3.1 Calculated Aerodynamics
Figure 4.3.2 Lateral/Directional Max Control Powers
Figure 4.3.3 Lateral/Directional Max Control Powers
Figure 4.3.4 Lateral/Directional Max Control Powers
Figure 4.3.5 Lateral/Directional Max Control Powers
Figure 4.3.6 Aerodynamic/Controls Technologies Selected
Figure 4.4.1 Configuration Matrix
Figure 4.4.2 Configuration 296-2401
Figure 4.4.3 Configuration 296-2402
Figure 4.4.4 Configuration 296-2403
Figure 4.4.5 Configuration 296-2404
Figure 4.4.6 Configuration 296-2405
Figure 4.4.7 Configuration 296-2406
Figure 4.4.8 Configuration 296-2407
Figure 4.4.9 Configuration 296-2408
Figure 4.4.10 Configuration 296-2409
Figure 4.4.11 Technologies Incorporated in Study Aircraft
Figure 4.4.12 Observables Technologies Incorporated in Study Aircraft

Figure 5.1.1 Baseline A/G Mission - Battlefield Air Interdiction
Figure 5.1.2 Baseline A/A Mission - Defensive Counter Air
Figure 5.1.3 Agility Study EM Sizing Constraints
Figure 5.2.1 ACE (Aircraft Configuration Evaluation) Flowchart
Figure 5.2.2 Agility Study Drag Methodology
Figure 5.2.3 Area Distribution Comparison
Figure 5.2.4 Transonic Zero-Lift Drag Comparison
Figure 5.2.5 Agility Study Results by Configuration
Figure 5.2.6 Computer-Aided Design Evaluation (CADE) Process
Figure 5.3.1 Sizing Results - Configuration 2401
Figure 5.3.2 Sizing Results - Configuration 2402
Figure 5.3.3 Sizing Results - Configuration 2403
Figure 5.3.4 Sizing Results - Configuration 2404
Figure 5.3.5 Sizing Results - Configuration 2405
Figure 5.3.6 Sizing Results - Configuration 2406
Figure 5.3.7 Sizing Results - Configuration 2407
Figure 5.3.8 Sizing Results - Configuration 2408
Figure 5.3.9 Sizing Results - Configuration 2409
Figure 5.3.10 Summary of Vehicle Sizing Results
Figure 5.3.11 Weight Breakdown for Configuration 2401
Figure 5.3.12 Weight Breakdown for Configuration 2402
Figure 5.3.13 Weight Breakdown for Configuration 2403

Figure 5.3.14 Weight Breakdown for Configuration 2404
Figure 5.3.15 Weight Breakdown for Configuration 2405
Figure 5.3.16 Weight Breakdown for Configuration 2406
Figure 5.3.17 Weight Breakdown for Configuration 2407
Figure 5.3.18 Weight Breakdown for Configuration 2408
Figure 5.3.19 Weight Breakdown for Configuration 2409
Figure 5.3.20 BAI Mission Fuel Usage Comparison
Figure 5.3.21 Alternate vs. Baseline Mission Sizing Results

Figure 6.1.1 Transonic Acceleration Sensitivities
Figure 6.2.1 Relative Importance Of Selected Tactical Maneuvers
Figure 6.2.2 Importance of Three Levels of Agility in Effectiveness of Selected Tactical Maneuvers

1.0 INTRODUCTION

The combat and tactical needs of advanced fighters have called for increasing levels of aircraft agility across the entire flight envelope. Because the agility characteristics of a configuration can be strongly influenced by design decisions made during the earliest stages of conceptual design, it is important to investigate the design impact of agility requirements and to develop guidelines to assist in the initial selection and sizing of major aircraft components during conceptual design. It is also important to identify key technologies which have an impact on aircraft agility and assess their relative importance and risk.

This study investigates the design impact of agility through a matrix of nine aircraft as shown in Figure 1.0.1. This matrix combines three levels of agility and three levels of observables in order to ascertain the inter-relationships between these two sets of requirements. The agility levels (low, medium, and high) are defined in Section 2.1, with most current multi-role fighters falling in the low-to-medium agility range. Observables levels A, B, and C will be described in more detail in Section 4.1.1. Needless to say, achieving high agility with significant observables requirements (Type C) becomes a very challenging design problem.

Significant methodology development was required to complete this study. Methods for calculating high angle-of-attack aerodynamics and control effectiveness at the conceptual-design level generally do not currently exist. In addition, agility calculations require good estimates of weights, inertias, and c.g. locations from limited configuration geometry data in order to be accurate. Some first-order methodologies for all of these issues were developed in this effort and are discussed in this report.

Using the newly-developed methodology and an assessment of many advanced aerodynamic, controls, avionics, structures, materials, and engine technologies, candidate configurations were developed for each of the nine positions in the agility/observables design matrix. These candidate configurations covered a wide variety of aircraft type, weapons carriage concepts, control concepts, and observables characteristics.

Qualitative and quantitative assessments of the candidate configurations were evaluated during an internal design review to select the final configuration concept for each of the nine positions in the matrix. Subsequent refinement and controls selection yielded the final nine configurations. These were then taken through the normal Level-1 design process which included computer-aided design to produce wireframe definitions, first-order aerodynamics analysis, and a standard sizing/performance analysis. This analysis provided the weight and performance impacts of the different agility and observables levels.

Finally, a configuration critical assessment was accomplished on the final nine aircraft, including an assessment of operational effectiveness and a brief assessment of the risks associated with the key technologies used in the baseline aircraft.

Agility Design Study Overview

Configuration Study Matrix

OBSERVABLES	AGILITY: Low	Medium	High
Conventional (Type A)			
Moderate (Type B)			
Low (Type C)			

Nine Configurations

Controls and Technologies

- Aerodynamic Controls (Canards, etc)
- Thrust-Vector Control (TVC)
- Advanced Aerodynamic Controls
- Advanced Propulsion Controls
- Variable Geometry Wings/Controls
- High-Rate Fixed-Aperture TVC
- L.O. Carriage of Ext. Conv. Stores
-
-

Products: ① Impact of Agility Requirements on Design Decisions

② Design Guidelines for Technology Incorporation

94-101

Figure 1.0.1

2.0 AGILITY METRICS AND METHODS

The Agility Design Study employed a set of agility metrics defined in cooperation with the NASA LaRC contract monitor. In order to calculate these metrics on concepts lacking little design maturity, a significant number of new methods needed to be developed, including: first-order weights, center-of-gravity, and inertia methods; high-angle-of-attack longitudinal aerodynamic methods; and methods for simulating a roll-and-capture maneuver and predicting control requirements.

2.1 AGILITY METRICS

A set of five agility metrics were used in this study to define aircraft agility as Low, Medium, or High. Figure 2.1.1 details these metrics and the levels chosen to represent the three levels of agility.

Maximum Energy Bleed Rate

This metric is similar to the traditional energy/maneuverability (EM) performance measures, but was intended to be a measure of the energy bleed rate at the vehicle's maximum turn rate, or maximum lift. Defined this way, the metric has significant value when comparing two aircraft with similar maximum turn rates. However, as indicated by Figure 2.1.2, it can be confusing when comparing aircraft with significantly different maximum turn rates. Vehicle B clearly has a better overall turn performance, with higher maximum turn rates and less energy bleed at a given turn rate. However, as originally defined, the maximum energy bleed-rate metric would suggest vehicle A has a higher agility level, since its bleed rate at its maximum turn rate is lower than that of vehicle B. For this reason, it was decided to apply the maximum bleed-rate metric at a fixed (high) level of turn rate, thereby eliminating this potentially confusing condition.

Time-to-Roll-and-Capture 90°

This metric measures the aircraft's ability to make coordinated rolling maneuvers at high angles of attack. The requirement to capture the bank-angle change represents a significantly more difficult maneuver than simply rolling through the required bank-angle change. Because initial results indicated that adverse sideslip is undesirable during the maneuver (due to high levels of lateral stability), it was decided to require yaw acceleration sufficient to fully coordinate the roll maneuver.

Minimum Nose-Down Pitch Acceleration

The importance of nose-down pitch acceleration available at the worst-case condition (normally high angle of attack and stall speed) has been studied by a number of researchers (Reference 1). Recent NASA HANG program guidelines define a level of 0.07 rad/sec^2 as the minimum for Safety of Flight, while 0.25 rad/sec^2 is defined as Tactically Desirable. As Figure 2.1.1 indicates, the levels chosen for this study fall in the same range, varying from 0.05 to 0.35

rad/sec^2. An air-to-air flight condition was incorporated in the metric as well as the stall-speed condition.

Maximum Angle of Attack

The maximum angle-of-attack metric measures an aircraft's ability to safely operate at angles of attack above maximum lift, so-called post-stall maneuvering. Vehicles capable of operating at very high angles of attack must have the proper balance of forebody, wing, and aftbody, and must also have sufficient nose-up and nose-down control power throughout the angle-of-attack envelope. For this study, the three agility levels require 25°, 40°, and 70° angle-of-attack capability, while maintaining the minimum levels of nose-down pitch control specified by the previous metric.

Maximum Lateral Acceleration

The previous four metrics help define an agility level in terms of axial, pitch, and roll agility. This final metric was designed to measure a vehicle's ability to generate lateral acceleration (sideforce), thereby rounding out the metric set. Previous studies (References 2, 3) have indicated the tactical value of some level of direct sideforce control for air-to-ground maneuvering, making wings-level turns and fuselage-aiming modes of operation possible. Less has been done with direct sideforce in an air-to-air situation at high angles of attack, possibly due to the assumption that missiles are the major threat in air-to-air engagements, and missile effectiveness is relatively unaffected by uncoordinated aircraft maneuvers.

For this study, very aggressive levels of lateral acceleration were defined as goals in the air-to-ground configuration. These are levels which would require significant additional surfaces (vertical canards, etc) on many of the study configurations. It was decided to treat this metric as a goal only, evaluating the lateral-acceleration capability of final configurations and suggesting the additional technologies or controls which would be required to meet the goals in Figure 2.1.1.

2.2 WEIGHTS METHODS

A number of new weights methods were developed for calculating agility levels and for the initial screening of candidate configurations. It was important to have accurate estimates of center-of-gravity (c.g.) location and inertias in order to predict the time to roll and capture, maximum angle of attack, and nose-down pitch acceleration.

Empty Weight

An MDA proprietary conceptual-design-level weights method was employed to estimate vehicle empty weights directly from each vehicle's geometric characteristics. This method uses easily-obtained parameters such as wing aspect ratio, thickness-to-chord, fuselage width, fuselage depth, inlet duct length, etc. Figure 2.2.1 presents the accuracy of this conceptual-design method for a

wide variety of aircraft. These empty weight predictions were used in conjunction with standard weights methods (Level 1) to calculate preliminary c.g. location and inertias. However, the final vehicle sizing analysis (Section 5.0) employed the Level 1 techniques.

Center-of-Gravity Location

An accurate estimate of c.g. location is vital to estimating high-angle-of-attack control-power requirements and maximum angles of attack. A 1% error in c.g. location (as a percent of body length) can translate to a 3-4% error relative to the wing mean aerodynamic chord (MAC), which when multiplied by typical maximum normal force coefficients of 2.0-2.5 can produce an error in pitching moment of almost +/- 0.10. This error is on the order of the entire nose-down control authority of some aircraft at high angles of attack.

For this study, a series of new c.g. estimation equations were developed using a wide variety of existing aircraft and advanced-design concepts which have been weighed using higher-level weights and c.g. equations. Figure 2.2.2 details these new c.g. estimation equations. Figure 2.2.3 shows the resulting c.g. predictions relative to the actual c.g. locations of the vehicles used in the correlations, indicating that the accuracy should be sufficient for the initial screening of concepts and agility determination.

Pitch, Roll, Yaw Inertias

While not as critical as c.g. location, the pitch, roll, and yaw inertias of the vehicle are also important to the calculation of nose-down pitch acceleration and time to roll and capture. A new set of inertia-prediction equations were developed for this study using a variety of existing aircraft. Figure 2.2.4 details the equations, while Figure 2.2.5 indicates their accuracy on the aircraft used in the correlation. While the errors are larger than those of the c.g. prediction methods, the relative sensitivity to inertia levels is small enough that the accuracy should be sufficient.

Products of inertia (primarily Ixz) tend to be much less important than the primary inertia terms (Ixx, Iyy, Izz) unless the maneuver is generating very large yaw rates (i.e., spin conditions). For the purposes of estimating control-power requirements to perform the pitch-down, roll-and-capture, and lateral-acceleration maneuvers, products of inertia were assumed to be zero.

The empty weight, c.g. location, and inertia methods detailed above were used during the screening of candidate configurations and the sizing of controls for a given level of agility.

2.3 HIGH-AOA AERODYNAMIC METHODS

The Agility Design Study emphasized vehicle agility at moderate to high angles of attack, requiring accurate estimates of aerodynamic data well above the typical linear angle-of-attack range. New conceptual-design methods were developed to provide

this high-angle-of-attack aerodynamic data, relying primarily on empirical techniques and the large database of wind-tunnel data gathered in MDA's Advanced-Design Wind Tunnel (ADWT) in the past 3-5 years.

2.3.1 Forebody-Wing Non-Linear Data

Calculating nose-down pitch acceleration and maximum angle of attack requires non-linear aerodynamic methodology, and as shown in Figure 2.3.1, non-linear effects can be important even when the desired angle of attack is only 25-30°.

The method chosen to predict non-linear aerodynamic data must be capable of predicting many difficult phenomena, including forebody vortex strength, trajectory, and burst, wing maximum lift and stall characteristics, and any forebody-wing interaction effects. Analytic codes consistent with these requirements are not useful in an advanced-design or conceptual-design environment at this time. Set-up and analysis time requirements for these tools are often prohibitive and solution accuracy is at best inconsistent. For these reasons, it was decided to pursue a purely empirical-based methodology for the prediction of non-linear forebody and wing aerodynamic data.

Recent parametric testing in MDA's ADWT facility provided a set of over 600 force and moment runs with a wide variety of forebody and wing geometries, as detailed in Figure 2.3.2. These tests were subsonic-only, and measured lift, drag, and moment from 0-80° angle of attack on a series of flat-plate models. No lateral/directional runs were made, but significant parametric canard and horizontal-tail control-power data were obtained.

Figure 2.3.3 indicates the breadth of wing-planform geometries in the database. Each wing was tested as wing-alone and with 6 to 12 different forebody geometries. The empirical-based methodology is currently limited to these existing wing planforms since it relies on the wind-tunnel database for wing-related data.

The effect of forebody geometry is calculated using the forebody-on test data available for each wing planform in the database. Figure 2.3.4 shows a typical set of test data for one of the wings in the database (Wing #13) with wing-alone data and six different forebodies. The lift and pitching moment curves varied dramatically depending on forebody geometry, exhibiting changes in maximum lift, wing stall, forebody pitch-up, and forebody-stall phenomena.

The tested forebodies differed in size, shape, length, and width, creating variations in forebody geometric parameters such as planform area and moment area. The intention was that these would be examined and then correlated with the exhibited forebody-on aerodynamic characteristics. Initial attempts to correlate the data proved somewhat difficult, as the complex nature of the forebody-wing interaction created test data which would not correlate well with simple multiple-regression schemes using the forebody geometric properties.

For this reason, a purely empirical approach was retained which searches the wind-tunnel database for the forebody-wing geometries closest to the candidate geometry in terms of the key forebody geometry parameters (chosen to be forebody area, moment-

area, and width/length). As shown in Figure 2.3.5, data for the candidate geometry could then be estimated by surface-fitting the data for the three "nearest" neighboring test-data points and then interpolating to the desired forebody geometry. In this manner, all of the non-linearities and forebody-wing interactions present in the test data are automatically retained in the predictions (as compared to component build-up methods for handling the fuselage and wing aerodynamics). This process was used to predict all of the non-linear aerodynamic data for a given candidate by estimating the angle of attack, lift, moment, and drag at both the maximum lift point and the maximum nose-up pitch point and then spline fitting these data with data from other simpler empirical methods which are routinely used at low (10°) and very high (80°) angles of attack.

One final correction had to be made for these forebody-wing predictions. Since all of the test data was generated with essentially flat-plate models, it was necessary to estimate the reduction in forebody effects for cross-sections found on typical aircraft. Figure 2.3.6 presents the correlations developed using wind-tunnel test data for a variety of forebody-wing geometries with different forebody cross-section shapes. Sharp-chined and "wedge"-shaped forebodies exhibit forebody effects very similar to the full flat-plate data, while ellipsoid and cylindrical forebodies produce significantly less nose-up pitch at moderate angles of attack. These correlations were considered sufficient for conceptual-design use, and are especially accurate for vehicles which have sharp or wedge-shaped chines.

Validation of the empirical-only non-linear methods is not as critical as it would be for a semi-empirical or analytical method, since the empirical method always matches the test data exactly if the configuration being analyzed matches a test configuration. If there is no wing planform in the test database that matches the desired wing, a suitable substitute wing can usually be employed with reasonable success.

2.3.2 Aft-Body Correlations

Another important component in overall vehicle lift and moment characteristics is the increment due to an aft-body or trailing-edge extension. This aft-body area is typically less important than forebody area on a per-square-foot basis, but it can contribute some noticeable lift and stability. Again, an empirical approach was taken for the prediction of lift and moment increments due to aft-body area at high angles of attack. Test data for a variety of aft-body areas and shapes were examined and correlated using aft-body area ratio and volume ratio.

Figure 2.3.7 and 2.3.8 show the correlations used for aft-body increments to lift and moment at the maximum lift condition and the maximum nose-up moment condition, respectively. Similar correlations were developed for the low (10°) and very high (80°) angle-of-attack conditions using analytic methods (Vortex Lattice) and the high-angle-of-attack test database previously described.

2.3.3 Control-Power Correlations

The final piece in the high-angle-of-attack longitundinal aerodynamics methodology is the estimation of maximum nose-up and nose-down control powers. Again, an

empirical approach was taken after examining a wide variety of test data on many types of controllers. In most cases the control-power data could be correlated using area-ratio and volume-ratio values, but in others it was necessary to include parameters such as dihedral or cant angle.

The correlations for the many types of controls analyzed in this study are contained in Section 3.0, the Aerodynamic/Control Technologies Assessment. Most of the control power data came from wind tunnel test data for current MDC aircraft (F/A-18, F-15, AV-8B, YF-23, etc) and from a wide variety of advanced-design concepts tested in the MDC ADWT facility.

2.3.4 Lateral/Directional Aerodynamic Characteristics

Estimating lateral≥≥/directional characteristics for full wing-body-tail configurations remains a significant challenge in the advanced design setting. Unless test data for a similar configuration exists and can be used as the basis for an incremental approach, the designer is usually forced to use a component build-up approach of some type. Build-up approaches can work reasonably well at low (linear) angles of attack, but often fail to capture vortex-related interactions at higher angles of attack.

For this study, the only metric which required estimates of lateral-directional derivatives (above the simple check of $Cn\beta_{dynamic}$) was the lateral acceleration metric. The time-to-roll-and-capture maneuver was performed with very little sideslip (to avoid departure), and the other metrics (bleed rate, maximum angle of attack, nose-down pitching moment) were performed at zero sideslip.

A significant database of both advanced design and mature configurations provided both wing-body lateral-directional data and component incremental data (e.g., tail-on versus tail-off directional stability). MDC proprietary testing of a wide variety of forebody geometries (lengths, widths, chine geometries) provided additional data used to estimate the characteristics of the study configurations. The lateral-acceleration discussion in Section 2.5 describes how these estimates were used to determine maximum trimmable sideslip angle, maximum lateral acceleration, and additional controller sizing. Figure 2.3.9 shows the lateral and directional stability estimates for the study vehicles (2401 through 2409) compared with two mature aircraft (YF-23 and F/A-18) and a tailless advanced design concept (Model 1303).

2.4 ROLL-AND-CAPTURE METHODS

Methodology was developed which estimates the pitch, roll, and yaw control power requirements to meet a given time-to-roll-and-capture-90° (TRC90) requirement. Inputs to the routine include the desired TRC90, the desired roll mode time constant, a flight condition, and some basic aircraft geometry and aerodynamic data. Besides maximum control power requirements, time histories of a number of aircraft variables are available for output.

As shown in Figure 2.4.1, the calculations are broken up into two different modules. The first module determines the maximum roll rate and pilot inputs required to achieve the desired TRC90 value. A time history of the required body axis rates and

accelerations (roll and yaw) are output. These time histories are then used by the second module to calculate the control power required to accomplish this maneuver.

Time History Module

A one-degree-of-freedom stability-axis-roll time-history calculation forms the basis for this module. Given a maximum roll rate, a roll mode time constant, and a pilot input strategy, a stability axis roll time history is calculated (a first-order, 40 rad/sec bandwidth actuator is also assumed). Then, given a value of angle of attack, body-axis roll and yaw time histories are determined. Two iteration loops are wrapped around these basic calculations: The innermost loop iterates on pilot strategy until a 90° bank angle change is achieved with TRC90 as a fallout, the outermost loop then iterates on maximum roll rate to achieve the desired TRC90.

A straightforward pilot strategy is used in these calculations. The maneuver begins with a full stick input to initiate the roll. This input is rate limited and is presently set up so that is takes 0.25 seconds to achieve full input. This value is representative of pilot inputs in combat situations.

At the appropriate time (found via iteration), the pilot input is reversed to stop the roll (the same pilot input rate (%/second) is used). The extent of this input reversal is a function of maximum roll rate, as shown in Figure 2.4.2, and is based on the results of MDA fixed-based simulations conducted in 1988 to gather TRC90 data for a wide range of lateral dynamics.

The maneuver is considered complete when the roll rate is less than approximately ±0.1°/sec. It is assumed that the pilot is able to neutralize his stick input at the end of the maneuver while the roll rate is small.

To determine the acceptability of using a simplified time history model, F/A-18 TRC90 values were calculated and compared to results obtained from a full six-degree-of-freedom model. As indicated by Figure 2.4.3, excellent agreement is obtained when the optimal or 100%-reversal values are compared. When the more reasonable piloted-simulation-based stick reversal values obtained from Figure 2.4.2 are used, the TRC90 values are typically 0.5 seconds higher.

Control Power Module

The Control Power Module takes the time histories produced by the Time History Module and calculates the pitch, roll, and yaw control power required to achieve this response. Flight condition, aircraft inertias, and aerodynamic damping are all accounted for in these calculations.

The time-history information includes roll- and yaw-rate versus time as well as the derivatives of roll- and yaw-rate versus time. These derivatives can be thought of as the required overall roll and yaw accelerations required to perform the maneuver at the desired TRC90. By re-arranging the basic roll/yaw linear equations of motion, they can be solved for the roll and yaw acceleration required

from the control surfaces, whatever they may be, in order to produce this time history of overall roll and yaw acceleration. These roll and yaw accelerations are then converted to rolling and yawing moments, and the largest values for each, both positive and negative, are returned as the result of this module. These moments then become the maximum control-power requirements which the vehicle must meet in order to achieve the given TRC90 value.

Sample Results/Sensitivities

The time to roll and capture 90° bank angle can depend on many different factors and parameters. As shown in Figure 2.4.4, it depends highly on the maximum roll rate and roll-mode time constant (representing the roll "speed" and "acceleration" available), as well as the amount of stick reversal used (roll "braking" power). Achieving the high agility level, defined in this study to be a TRC90 of 1.5 seconds, will require a high roll rate, high roll acceleration (low value of roll-mode time constant), and at least a moderate amount of stick reversal.

Figure 2.4.5 illustrates the dramatic increase in roll and yaw control requirements for a typical multi-role aircraft as TRC90 approaches the 1.5-second level. The yaw-control requirements appear to be the most severe in this case, consistent with the high yaw inertia and relatively low roll inertia of most fuselage-wing fighters.

Finally, Figure 2.4.6 shows the impact of roll damping on the roll-control requirements versus time for the same typical multi-role aircraft with a TRC90 of 2.5 seconds. As this figure indicates, removing the roll damping reduces the amount of initial roll-control power required to "accelerate" the roll maneuver, but doubles the amount of roll control required to "brake" or stop the maneuver. Conversely, increasing the roll damping increases initial roll-control requirements but decreases the roll-control required to arrest the maneuver.

Because roll damping appeared to be an important factor in the roll-control determination, new methods, described in the next section, were developed for estimating roll damping for a given configuration.

2.5 OTHER METHODS

A number of additional methods were created to support the calculations of the various agility metrics. The most important of these will be detailed in this section.

Roll-Damping (C_{lp})

As discussed in the previous section, the level of roll damping can be very important in the calculation of the time to roll and capture 90°, since the maximum roll-control requirements to initiate and arrest the maneuver are dependent on the level of roll damping.

Figure 2.5.1 shows the general methodology employed for the calculation of roll damping over the angle-of-attack range. At low angles of attack, a vortex-lattice

analysis is performed to generate the roll-damping value. At higher angles of attack, the empirical wind-tunnel database is interrogated to determine the wing normal force and normal-force slope. Then, using a wing lift distribution assumed to be constant versus span above the stall angle of attack (see Reference 4), the roll damping can be calculated from the induced angle-of-attack and induced velocity increments in the standard manner used in the program DYNAMIC (Reference 4).

Figure 2.5.2 shows the general trend in roll-damping coefficient at low angle of attack for the 30+ wings in the empirical database. While the roll damping does generally increase (magnitude) with higher aspect-ratio wings, other factors such as sweep and taper ratio affect the results and make a simple correlation difficult. It was for this reason that the vortex-lattice-predicted roll-damping values were used directly for each of the wings in the test database. Furthermore, an empirical interpolation approach could not be used because there were no dynamic-derivative test data available for the wings in the database.

Transonic Acceleration Time

Examination of the missions, agility metrics, and required energy/maneuver (EM) performance points suggested that the transonic acceleration from Mach 0.8 to 1.5 at 30,000 ft in 60 seconds would likely size the engines for most configurations. For this reason, a simple, first-order method was developed to estimate the transonic acceleration performance given only basic configuration information (e.g., thrust, maximum cross-sectional area).

One key element in the transonic acceleration is the peak transonic wave drag, which occurs at approximately Mach 1.20 for moderately-swept wings. A correlation was developed using the maximum cross-sectional area of a vehicle, a qualitative measure of the shape of the area distribution, and the overall length/diameter of the aircraft, versus the zero-lift drag value calculated by the NASA Wave Drag program at Mach 1.2. Figure 2.5.3 shows this correlation along with the drag for a number of advanced-design concepts which have been analyzed with the standard Level 1 aerodynamics methods.

The next step was to relate the transonic acceleration time directly to this simple transonic drag value. A series of transonic acceleration runs were made with the standard MDA performance/sizing code (CADE) for a variety of thrust, transonic drag, and wing-loading values using a typical multi-role aircraft. As shown in Figure 2.5.4, the acceleration time proved to be a well-behaved function of simply the transonic (Mach 1.2) thrust minus drag divided by the maneuver weight. Combining this correlation with the drag correlation in Figure 2.5.3, the thrust (engine size) required to meet the transonic acceleration requirement could be estimated directly from the basic vehicle geometry and maneuver weight.

Fuel-Fraction Requirements

The empty-weight-prediction methods described earlier provide a first-order estimate of the empty weight of the vehicle. To estimate the takeoff weight or

maneuver weight (required by the c.g. and inertia methods, as well as other methods) an estimate of the fuel weight must be made. Figure 2.5.5 shows the selected method for estimating the fuel fraction required for a given mission radius during the initial screening of concepts. This method is obviously not suitable for the final vehicle-sizing analysis, but it does reflect the trends in fuel fraction versus cruise efficiency (measured by the span over square-root of wetted area) and can therefore help select the best candidate concepts.

Lateral Acceleration

The lateral (sideforce) acceleration metric proved to be one of the most difficult metrics to estimate, only because the lateral/directional aerodynamic data required to calculate the metric is very difficult to estimate accurately. Lateral/directional aerodynamic data becomes very non-linear at higher angles of attack. For example, the roll-due-to-sideslip is fairly well-behaved until the wing begins to stall and separate and the forebody vortices begin to dominate the flowfield, at which time the data becomes highly configuration dependent. No current empirical or semi-empirical methods exist which can predict this behavior, and only the most costly and complex analytic methods (i.e., Full Navier-Stokes CFD) come even close to adequately modeling the important physical phenomena.

For this study, it was decided to limit the calculation of this metric to low angles of attack, when the lateral/directional derivatives are relatively well-behaved and can be estimated using existing empirical and semi-empirical techniques (References 5 and 6).

To calculate the maximum trimmable sideforce at a given flight condition, the roll, yaw, and sideforce derivatives versus sideslip are calculated, along with the maximum roll and yaw control power from all available control devices. The maximum sideslip angle is then found at which the control devices can just trim all of the resulting rolling and yawing moments, with a limit of 10 degrees of sideslip dictated by inlet restrictions. The resulting sideforce coefficient is converted into a lateral acceleration using the dynamic pressure, reference wing area, and vehicle weight. Additional controllers such as vertical fins and canards are treated in a similar manner, increasing sideforce both directly and indirectly through the additional sideforce required to trim the resulting yawing moment.

Agility Design Goals

Metric	Flight Conditions	Low	Medium	High
Maximum Energy Bleed Rate (Ps)	A-A: 0.6M/15K, 16°/sec	-800 ft/s	-450 ft/s	-100 ft/s
	A-G: 450 kts/SL, 18°/sec	-800 ft/s	-450 ft/s	-100 ft/s
Time-to-Roll-and-Capture 90° (sec)	A-A: 0.6M/15K, CLmax	3.0 sec	2.5 sec	1.5 sec
	A-G: 450 kts/SL, Nz = 5.0	2.0 sec	1.5 sec	1.0 sec
Min. Nose-Down Pitch Acceleration (rad / sec^2)	A-A: 0.6M/15K, Cm*	-0.05	-0.15	-0.35
	Vstall, Cm*	-0.05	-0.15	-0.35
Maximum Angle-of-Attack (deg)	Subsonic, Nz ≤ Limit Nz	25 deg	40 deg	70 deg
Maximum Lateral Accleration	A-A: 0.6M/15K, CLmax	0.25 g	0.4 g	1.0 g
	A-G: 450 kts/SL, Nz = 1.0	0.6 g	1.2 g	2.0 g

LARC93-004

Figure 2.1.1

Bleed Rate vs. Turn Rate Example

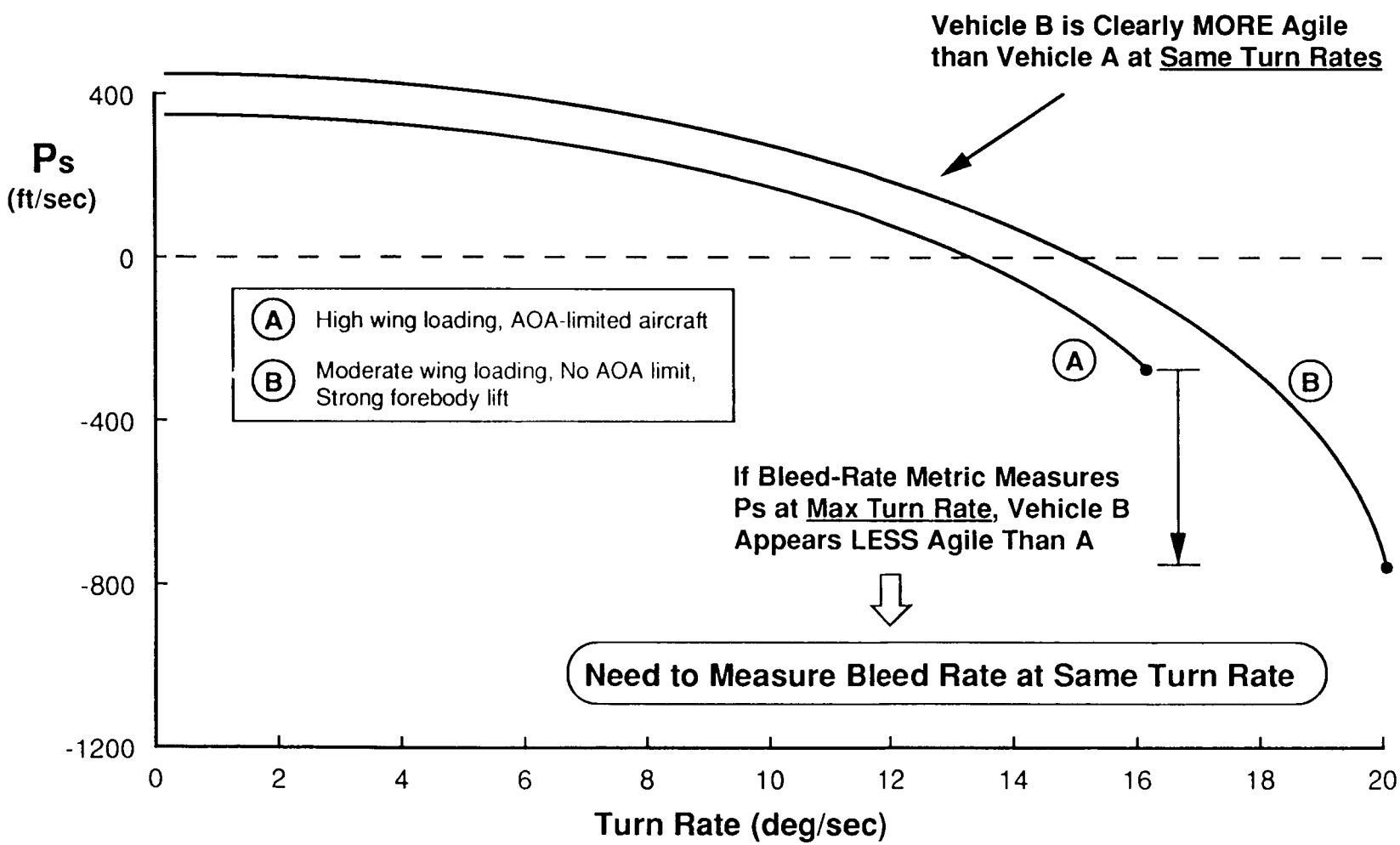

LARC93-207

Figure 2.1.2

Empty-Weight Prediction Accuracy

Vehicle	Estimated Empty Weight	Actual Empty Weight	%ERR
A-5A	33366	33013	1.1%
A-6E	26223	26674	-1.7%
A-7E	19244	19068	0.9%
AV-8B	12594	12629	-0.3%
A-10A	22118	23038	-4.0%
F-4B	27376	27705	-1.2%
F-5E	10144	9698	4.6%
F-14A	39379	40378	-2.5%
F-15A	27184	26858	1.2%
F-16A	15308	15125	1.2%
F-18A	22491	22923	-1.9%
F-101C	26433	26591	-0.6%
F-105B	25052	25524	-1.8%
F-106B	25419	24850	2.3%
F-111F	46710	47878	-2.4%

Figure 2.2.1

Center of Gravity Equations

Zero-Fuel C.G.

LZFCG = (in.)

```
[(KWING)(LWING)
+KHT(LHT)
+KVT(LVT)
+KHC(LHC)
+KQE(LQE)
+15.6(KENG)(LEGFACE)
+KPILOT(LPILOT)
+4.7(LPILOT+15)
+KDIST(LDIST)]
/(100-KFUEL)
```

Takeoff C.G.

LACCG = (in.)

```
[(100-KFUEL)(LZFCG)
+KFUELW(LFUELW)
+FFUELF(LFUELF)]
/100
```

KWING	=	Wing Percentage= 9.2 + 1.5(KNAVY)
KHT	=	Movable Tail KHT= 12.6[SHT/SW] ; No Tail: KHT= 0
KVT	=	Vertical Tail (fixed) KVT= 1.5 ; No Tail: KVT= 0
KHC	=	Horizontal Canard KHC= 11.5[SHC/SW] ; No Canard: KHC= 0
KQE	=	Quiet Elevon KQE= 13.1[SQE/SW] ; No Elevon: KQE= 0
KENG	=	Engine Weight Percentage= 5.13[ENGWT/(TOGW-FUEL)]
KPILOT	=	Pilot Weight Percentage= 1.7+1.8(NC)
KNAVY	=	Navy A/C: KNAVY= 1.0 ; USAF A/C: KNAVY= 0
KDIST	=	Distributed Weight= 100-[KFUEL+KWING+KHT+KVT+KHC+ +KQE+15.6(KENG)+KPILOT+4.7]
KFUEL	=	Fuel Fraction (%) , Air to Air Mission
KFE	=	Fuselage Fuel Forward of Engine Face KFE= 1.0 Fuselage Fuel Forward & Aft of Engine Face KFE= 1.2
KFUELW	=	KFUEL[WWF(PWF)/TFUEL]
KFUELF	=	KFUEL[WFF(PFF)/TFUEL]
LWING	=	(LEMAC-LNOSE)+MAC{.5+.2[Tan((AWLE+AWTE)/2)]}
LHT	=	(LEHTMAC-LNOSE)+.5(HTMAC)
LVT	=	(LEVTMAC-LNOSE)+.5(VTMAC)
LHC	=	(LEHCMAC-LNOSE)+.5(HCMAC)
LQE	=	(LQEHL-LNOSE)
LEGFACE	=	(Engine Face FS)-LNOSE
LPILOT	=	(Pilot Eye FS)-LNOSE
LFUS	=	Length From Tip of Radome to Tip of Tail Cone.
LDIST	=	.5(LWING)+.25(LFUS)
AWLE	=	Wing LE Sweep (deg.)
AWTE	=	Wing TE Sweep (deg.)
LFUELW	=	.94(LWING)
LFUELF	=	.31(KFE)(LWING+LEGFACE+LPILOT)
PFF	=	Percent/100 of Fuselage Fuel
PWF	=	Percent/100 of Wing Fuel
WFF	=	Total Fuselage Fuel (lb.)
WWF	=	Total Wing Fuel (lb.)
TFUEL	=	Total Aircraft Fuel (lb.)

LARC93-141

Figure 2.2.2

Accuracy of C.G. Prediction Methods

			ZERO FUEL C.G.			TAKEOFF C.G.		
Vehicle	Nose FS	Fuse Len	Actual	Est	% ERR	Actual	Est	% ERR
F-15C	116.3	704	445.7	445.9	0.0%	438.5	436.4	-0.5%
F-16A	-5.0	555	326.8	326.1	-0.2%	325.6	327.1	0.5%
F-18A	60.5	628	402.0	404.0	0.5%	393.7	391.1	-0.7%
F-117	100.0	661	367.3	370.8	1.0%	373.5	362.2	-3.0%
A-12	0.0	447	248.0	256.0	3.2%	255.3	269.5	5.6%
1101*	0.0	659	403.0	401.0	-0.5%	391.6	386.0	-1.4%
1201*	0.0	672	369.7	377.0	2.0%	370.1	368.7	-0.4%
1202*	0.0	650	364.5	367.9	0.9%	361.7	363.9	0.6%
1301*	0.0	664	388.5	388.2	-0.1%	390.4	396.2	1.5%
1801*	0.0	627	386.6	392.2	1.4%	391.4	390.7	-0.2%
2002C*	33.9	630	379.8	381.3	0.4%	373.1	374.1	0.3%

* MDA Advanced Design Configurations

Figure 2.2.3

Mass Moment of Inertia Equations

Roll Inertia: $I_{ROLL} = (.396(WEIGHT)/1000)\ [1+WWF(PWF)/(WWF+WFF)]^{0.6}\ (BW/12)^2$

Pitch Inertia: $I_{PITCH} = (4.45(WEIGHT)/1000)\ [LMIDMAC/12 + LENFACE/12]\ (LFUS/12)^{0.6}$

Yaw Inertia: $I_{YAW} = .96[\ I_{ROLL}\ (est) + I_{PITCH}\ (est)\ ]$

Inertia Estimation Parameter Definition:

BW	=	Wing Span (in.)
LENFACE	=	(Engine Face FS) - LNOSE (in.)
LFUS	=	Length From Tip of Radome to Tip of Tail Cone. (in.)
LMIDMAC	=	(50%MAC FS) - LNOSE (in.)
LNOSE	=	Tip of Radome FS (in.)
PWF	=	Percent/100 of Wing Fuel
WEIGHT	=	Maneuver Weight: 50% Internal Fuel + Weapon Load
WFF	=	Total Fuselage Fuel (lb.)
WWF	=	Total Wing Fuel (lb.)

LARC93-142

Figure 2.2.4

Accuracy of Inertia Prediction Methods

		ROLL INERTIA (Ixx)			PITCH INERTIA (Iyy)			YAW INERTIA (Izz)		
Vehicle	Weight	Estimate	Actual	%ERR	Estimate	Actual	%ERR	Estimate	Actual	%ERR
F-2H	20561	14158	14589	-3.0%						
F-3H	30058	16552	18657	-11.3%						
F-4E	44892	31573	30479	3.6%	142015	155541	-8.7%	166644	177925	-6.3%
F-15C	41991	38533	36165	6.5%	178988	176945	1.2%	208820	207879	0.5%
F-18A	34299	20342	19574	3.9%	127361	120949	5.3%	144431	133707	8.0%
F-101	39152	24436	19960	22.4%	146878	144857	1.4%	164461	154189	6.7%
AV-8B	20218	9820	9763	0.6%	31623	32918	-3.9%	38265	39772	-3.8%
A-12	72280	210314	217800	-3.4%	121303	116600	4.0%	318352	324200	-1.8%

Figure 2.2.5

Typical Forebody-Wing Pitching-Moment Data

- ADWT Wind-Tunnel Data
- Controls Neutral

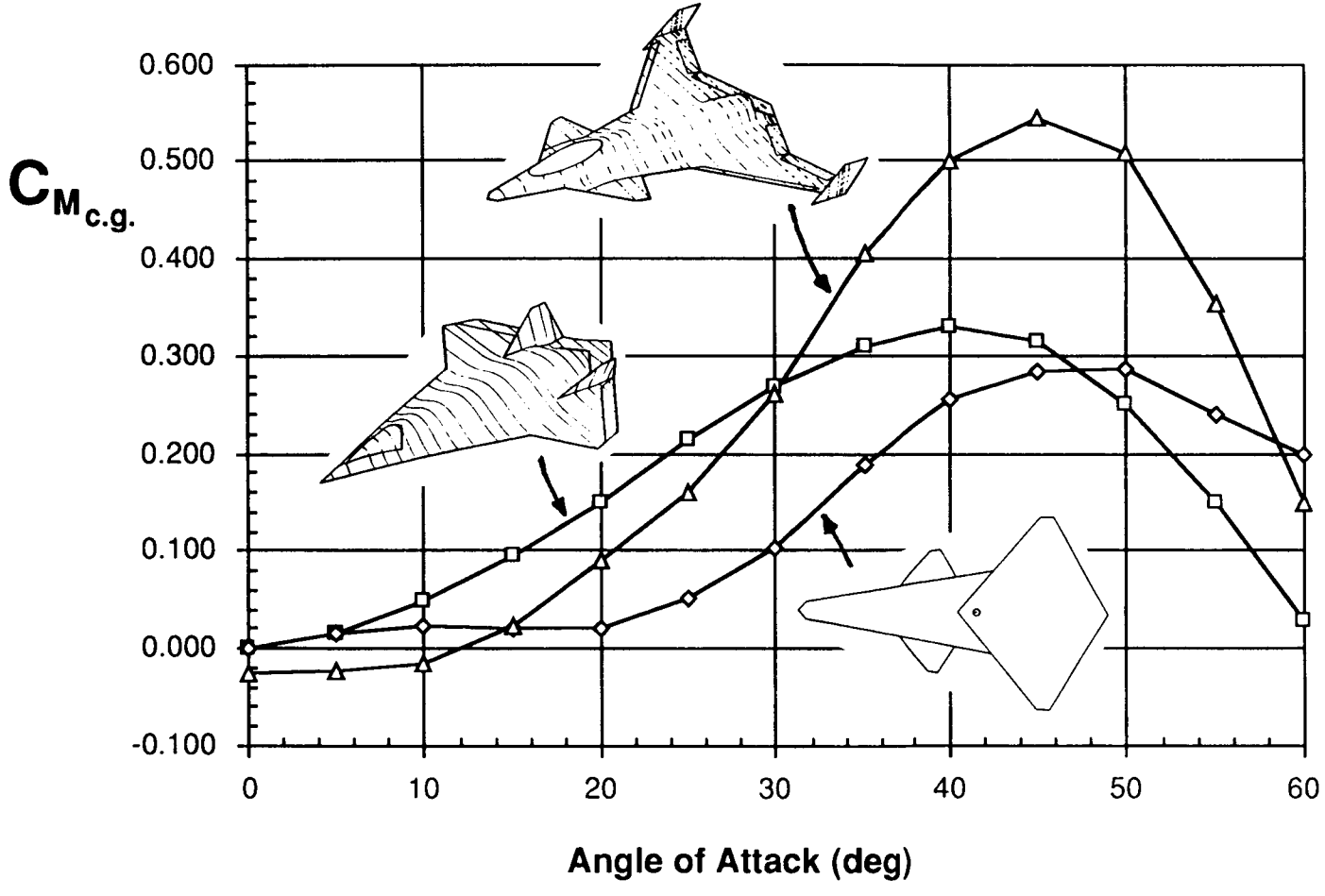

LARC93-110

Figure 2.3.1

Longitudinal Aerodynamics for Study Based on ADWT Tests #192/205/216

- Subsonic, Flat-Plate Models, AOA 0-80°

Test #	F&M Runs	Tunnel Hrs	Wing/Fuselage Geometry Tested
192	257	128	10 wings, 25 forebodies, 6 aftbodies
205	178	Unknown	10 wings, 12 forebodies
216	250	112	29 wings, 12 forebodies
	685	>300	48 different wings, 25 forebodies

LARC93-010

Figure 2.3.2

Wing Planforms Available in Database

- Wide Variety of Sweeps, Aspect Ratios, and Taper Ratios
- Database Includes Lift, Drag, and Moment at 0-80° AOA

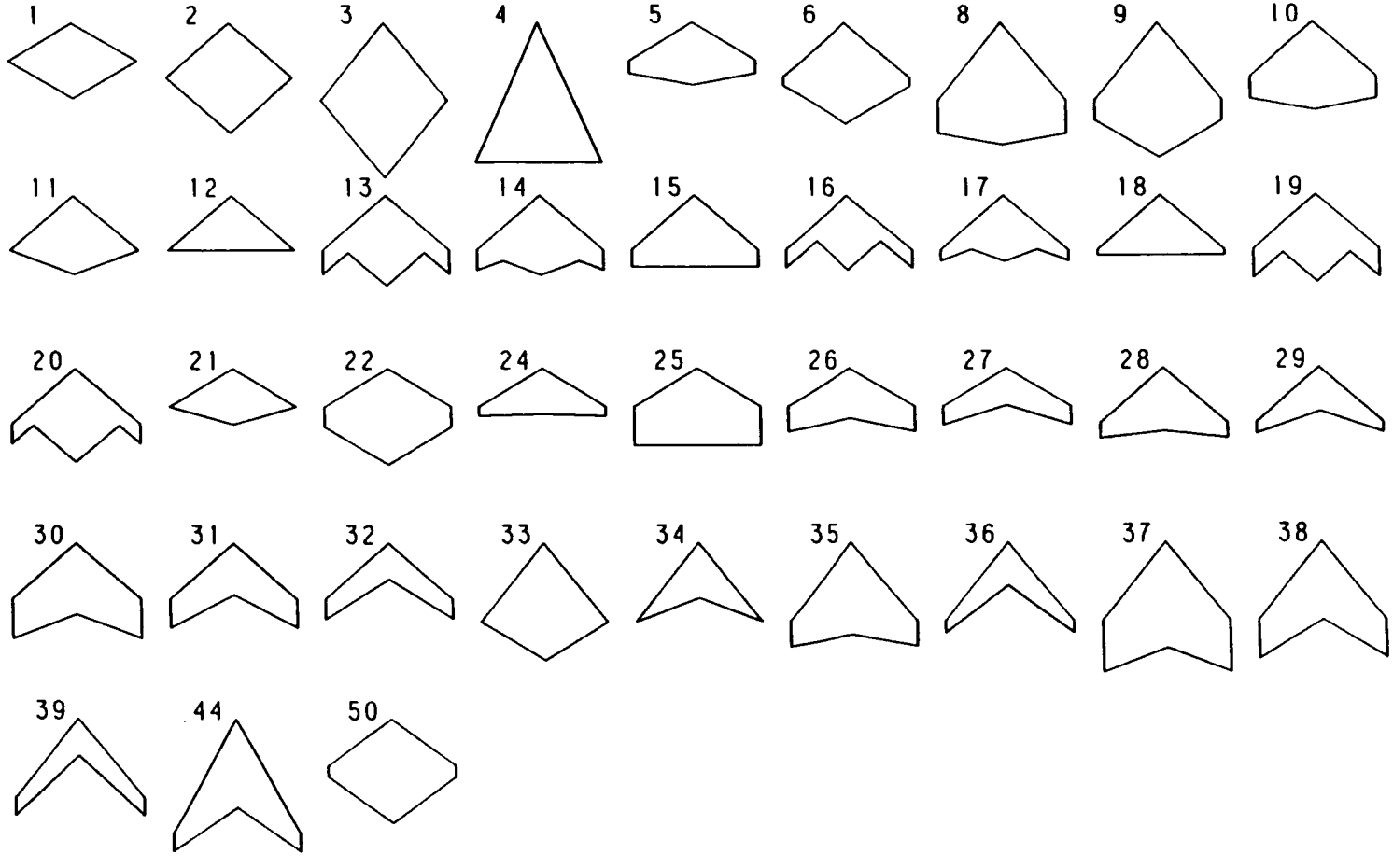

LARC93-012

Figure 2.3.3

Example of ADWT Parametric Test Data (U)

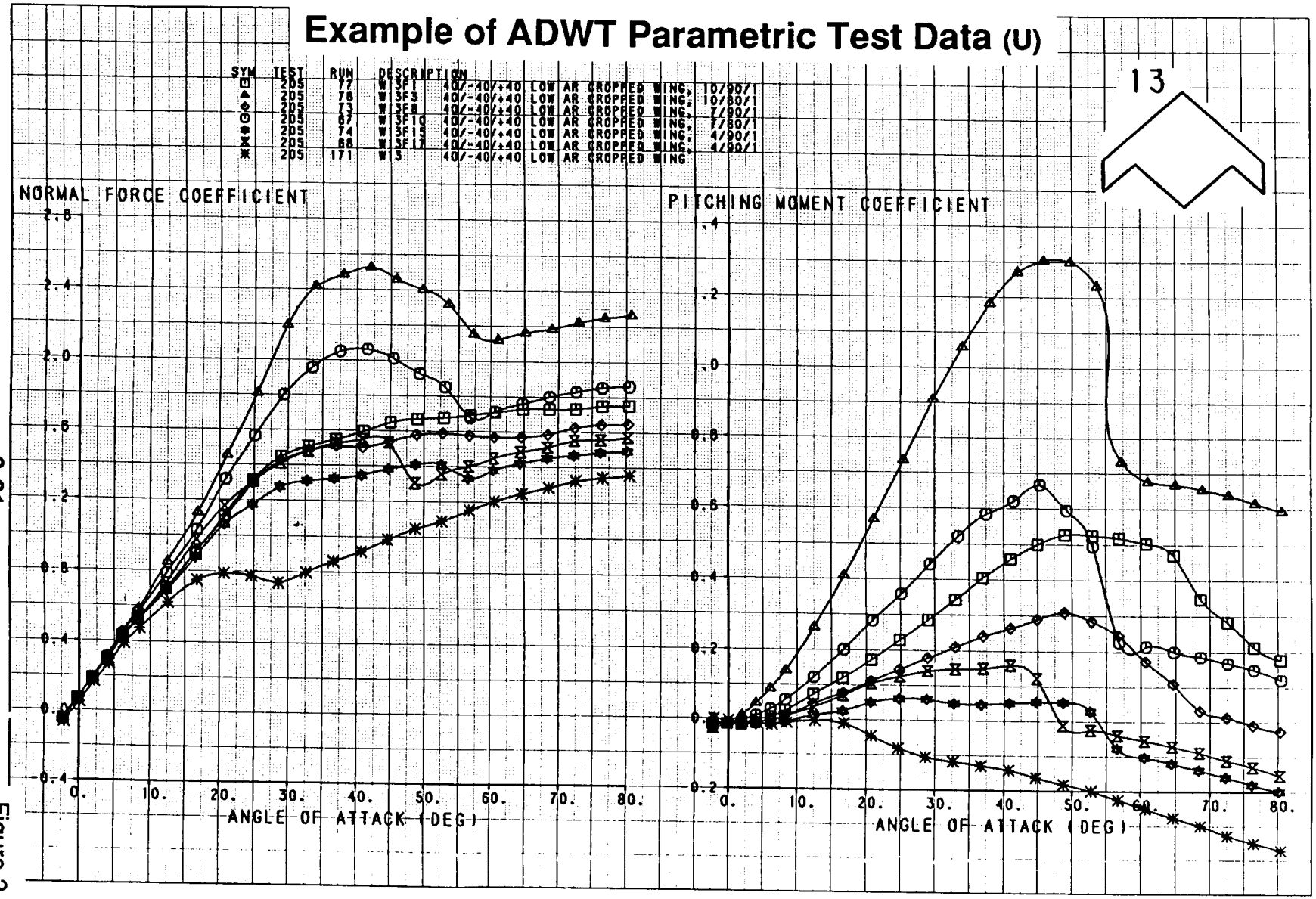

Figure 2.3.4

Empirical Aerodynamic Data Calculation Example

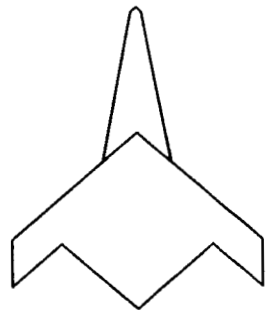

WING #13

Maximum C_L Data

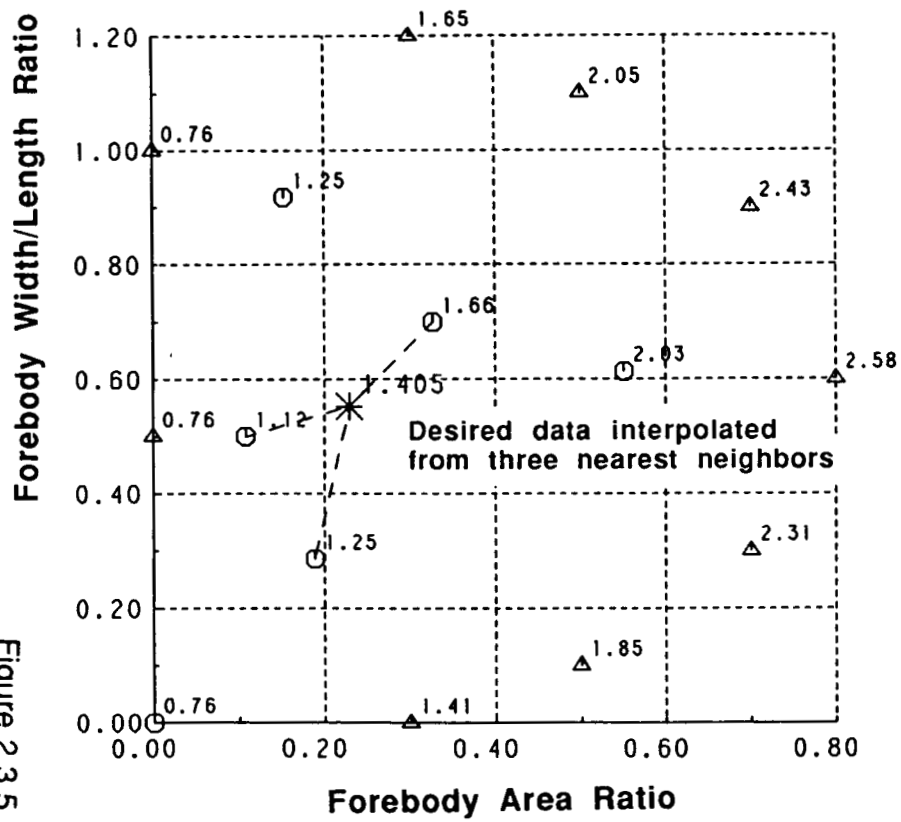

Forebody-Wing C_{M^*} Data

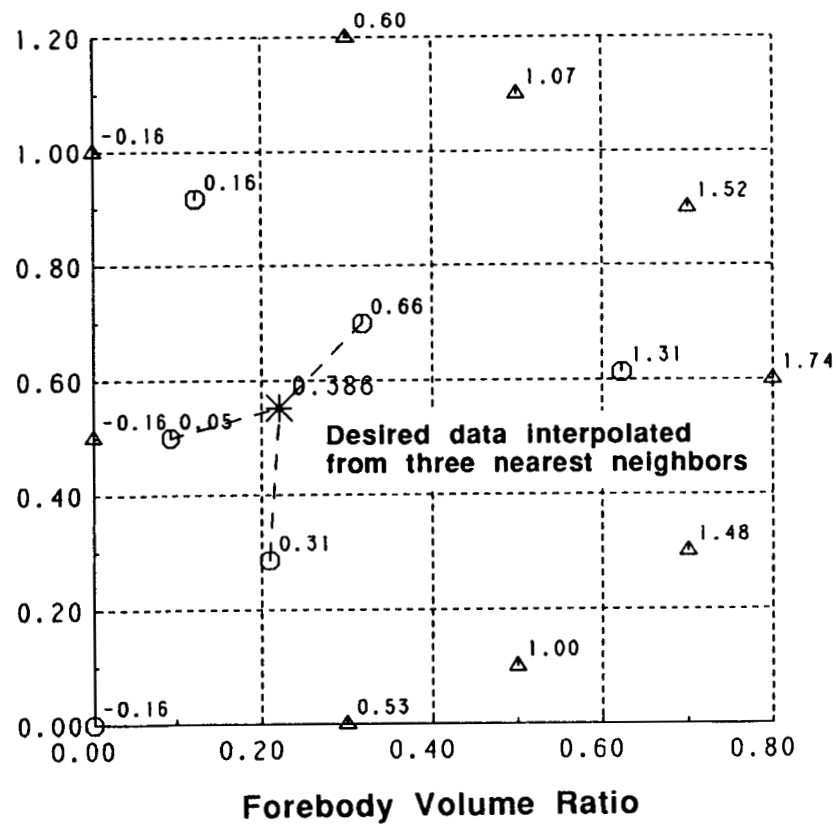

Figure 2.3.5

Forebody Shape Correlation for Pitching Moment

Ratio of ΔCm_{FB} / $\Delta Cm_{Flat\ Plate\ FB}$

• Correlation based on ADWT Test Data

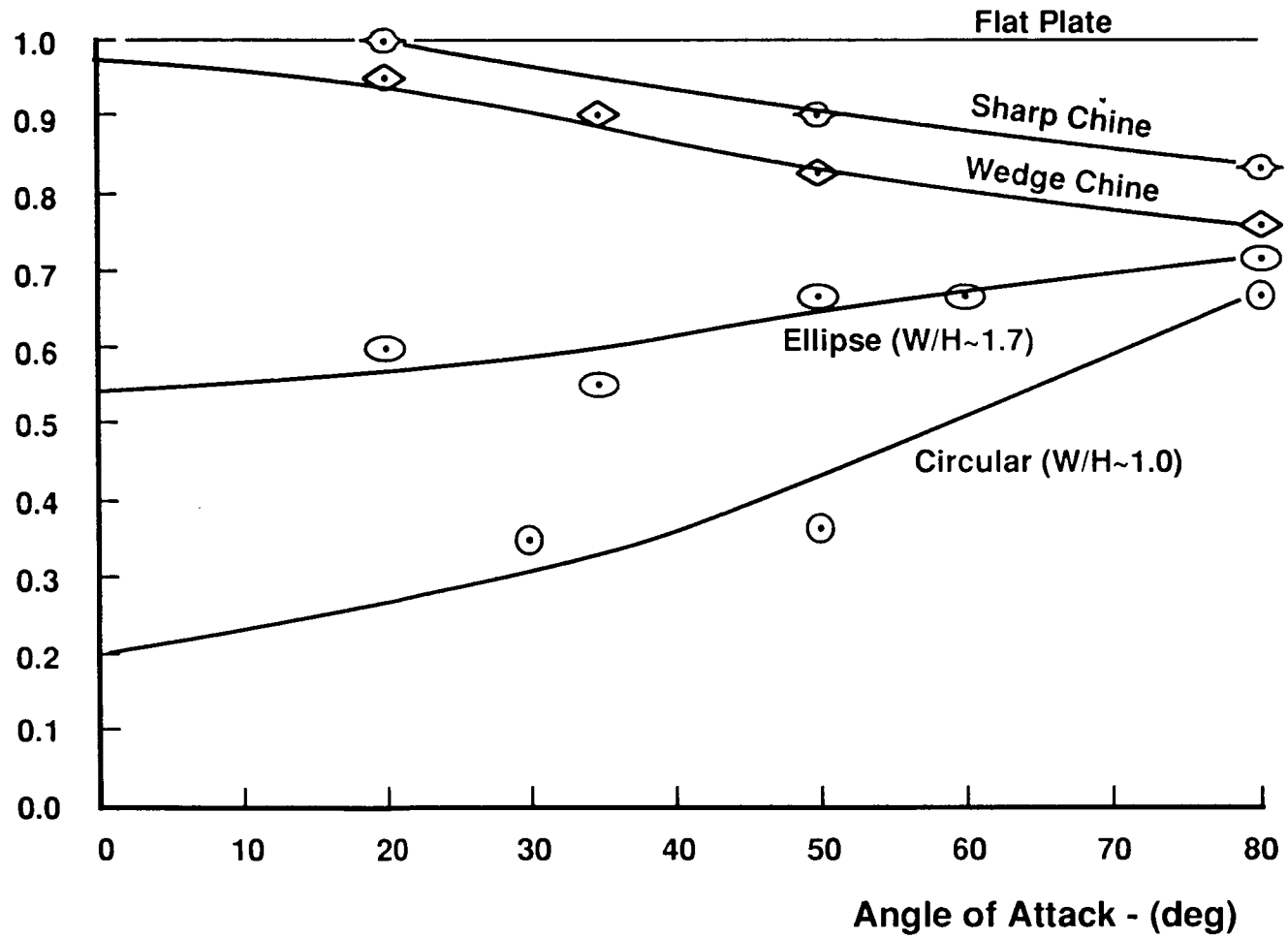

LARC93-143B

Figure 2.3.6

Aft-Body Lift and Moment Correlations

Increments at Maximum Lift Condition (C_{Lmax})

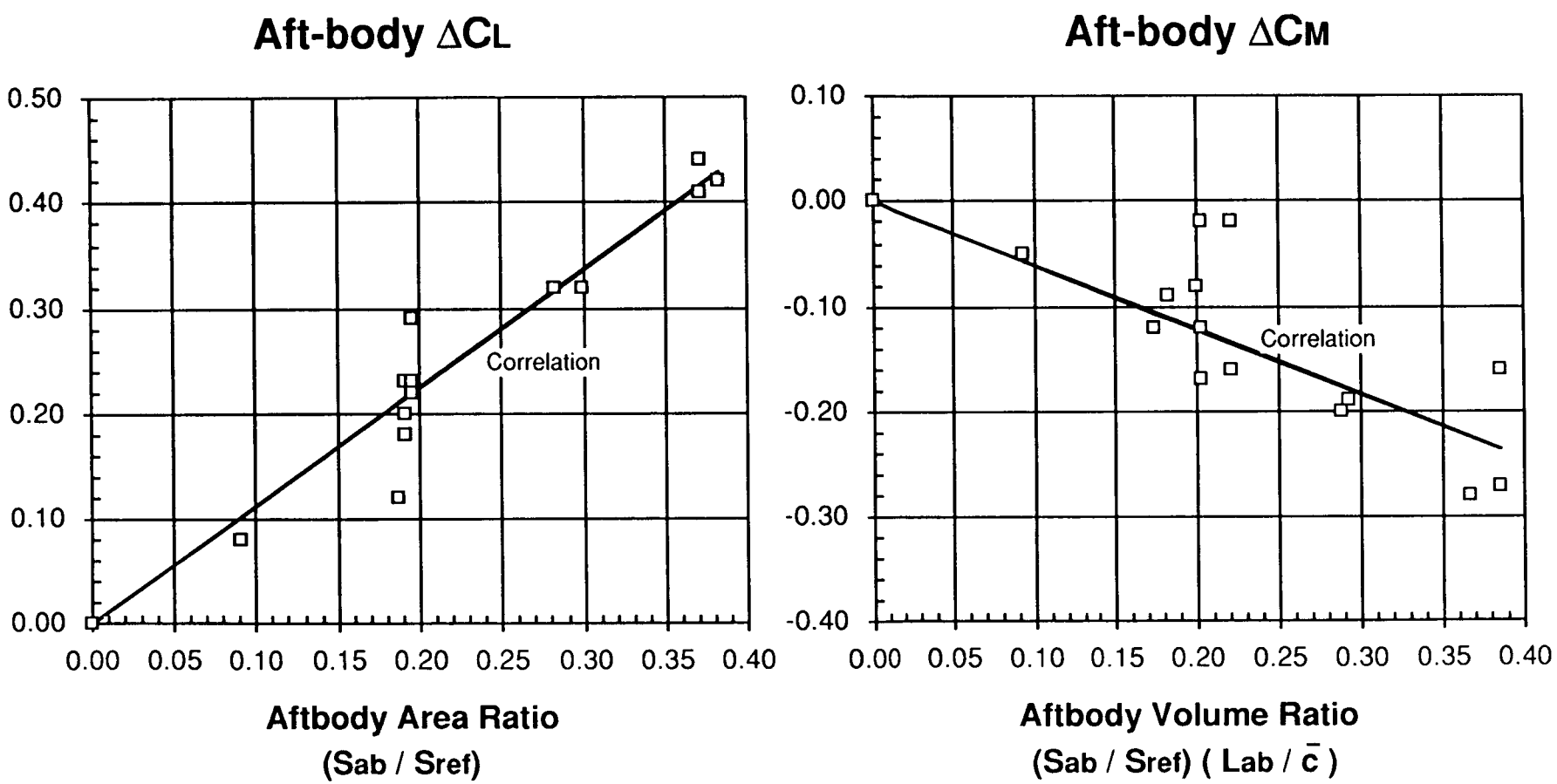

LARC93-200

Figure 2.3.7

Aft-Body Lift and Moment Correlations

Increments at Maximum Moment Condition (C_{Mmax})

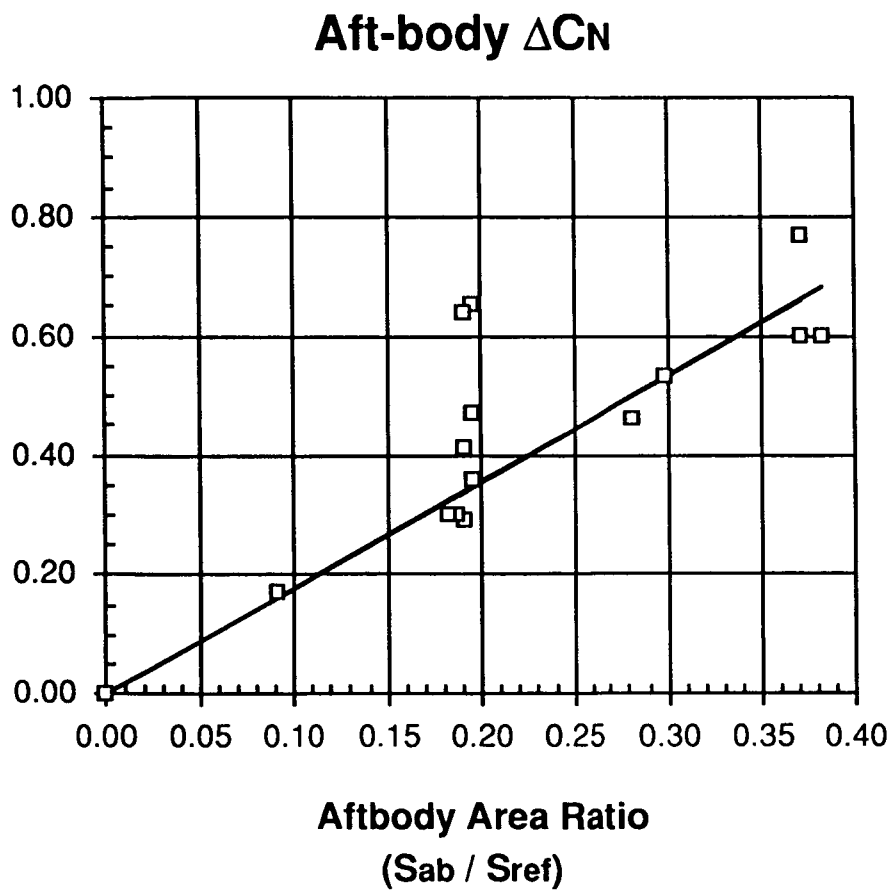

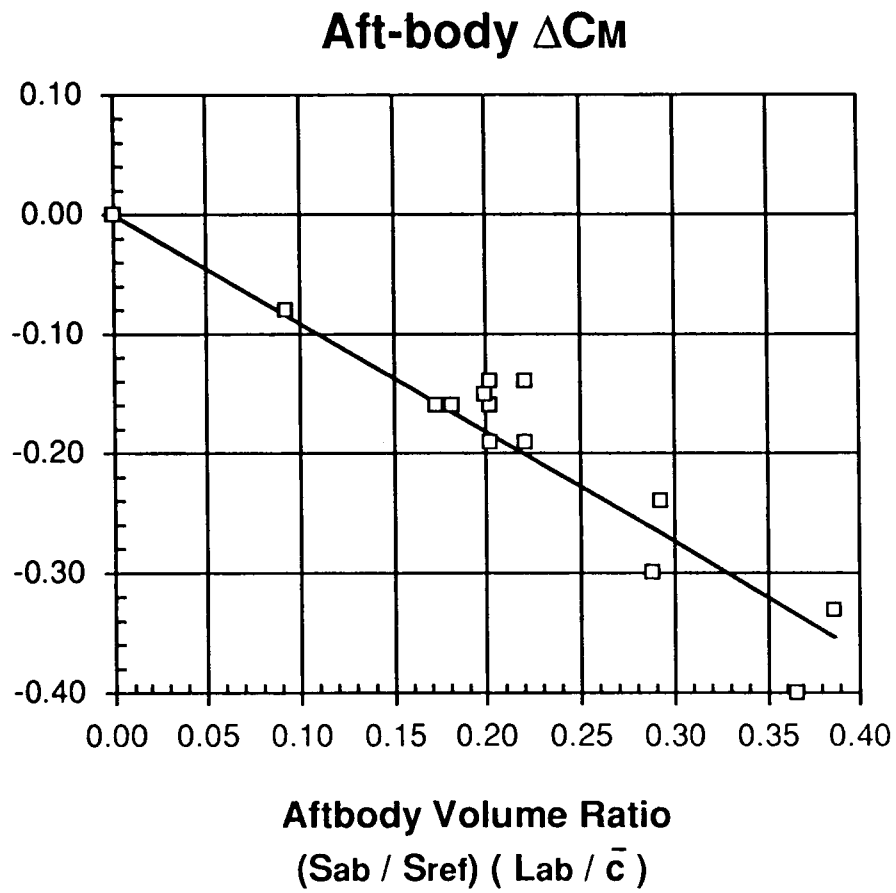

LARC93-201

Figure 2.3.8

Lateral/Directional Stability Comparison

- Subsonic, 10° AOA
- Based on ADWT Data and Linear Methods

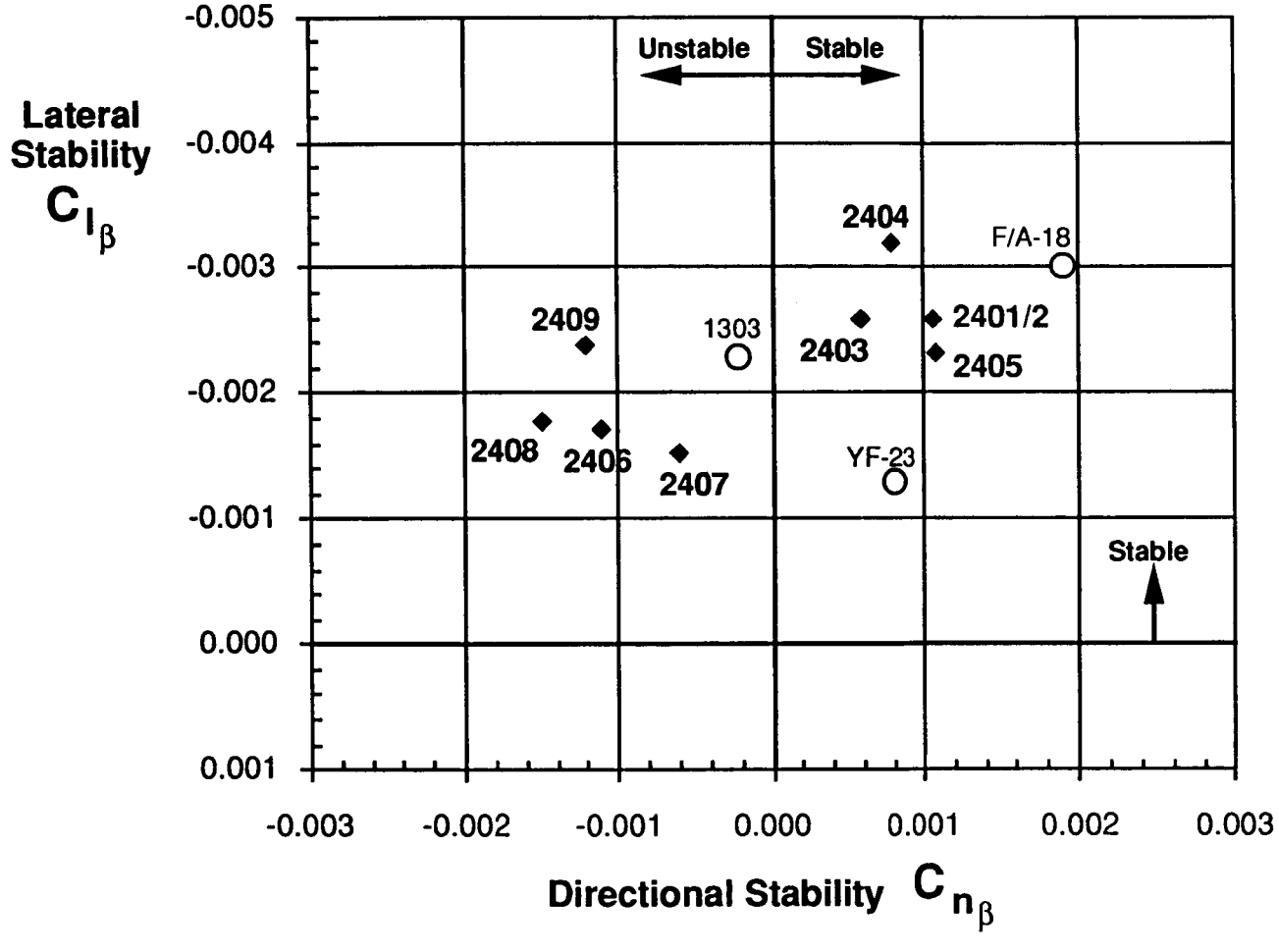

LARC93-102

Figure 2.3.9

Time To Roll & Capture Requirements

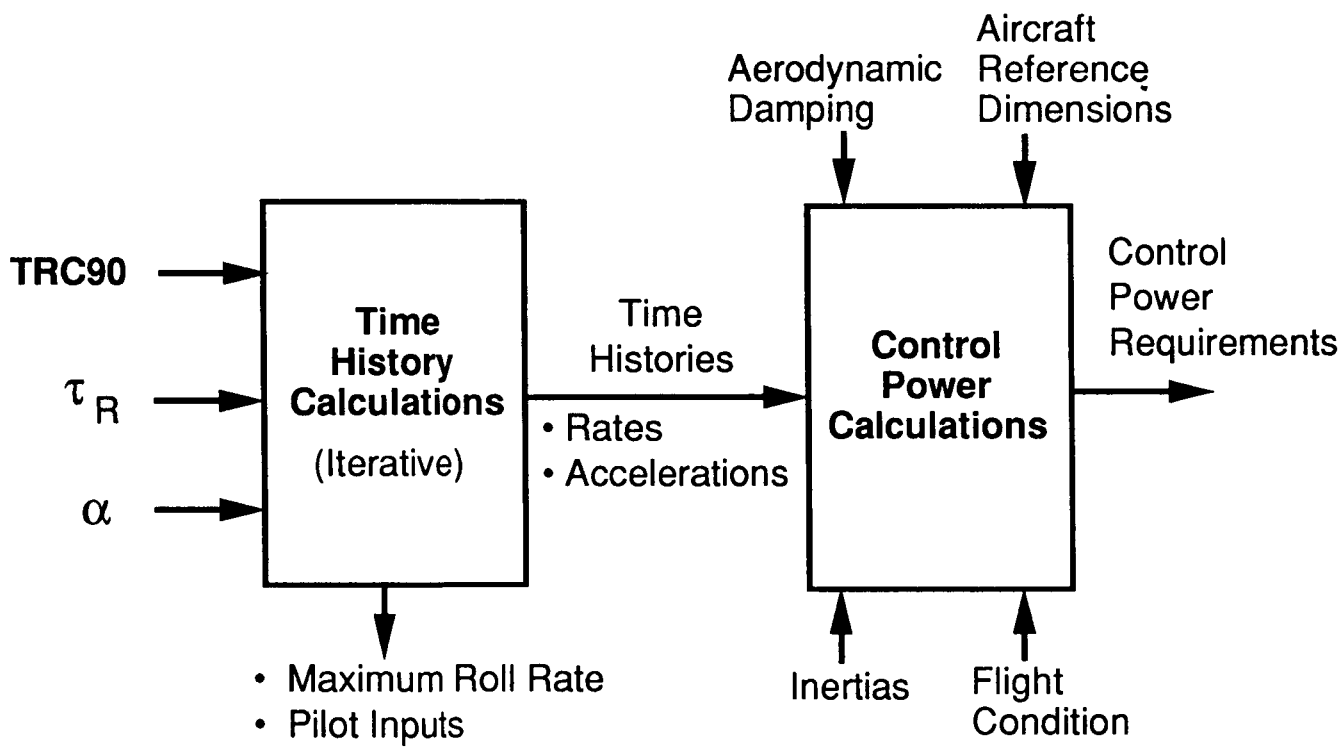

Figure 2.4.1

Pilot Reversal Depends on Maximum Roll Rate

- **Based on Piloted Simulation Studies**

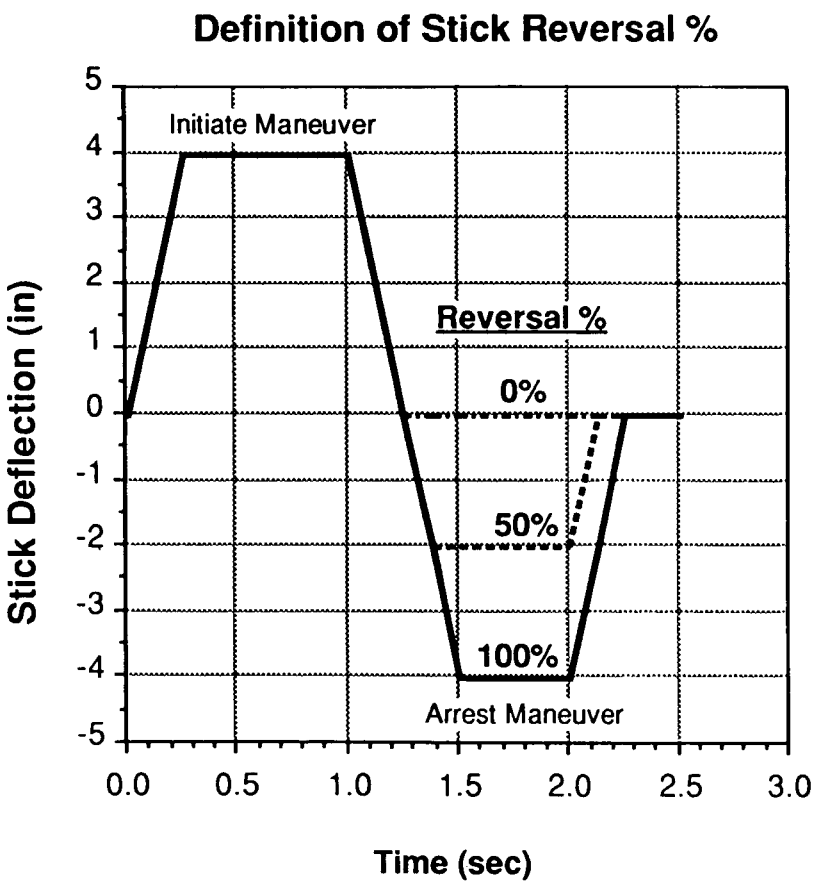

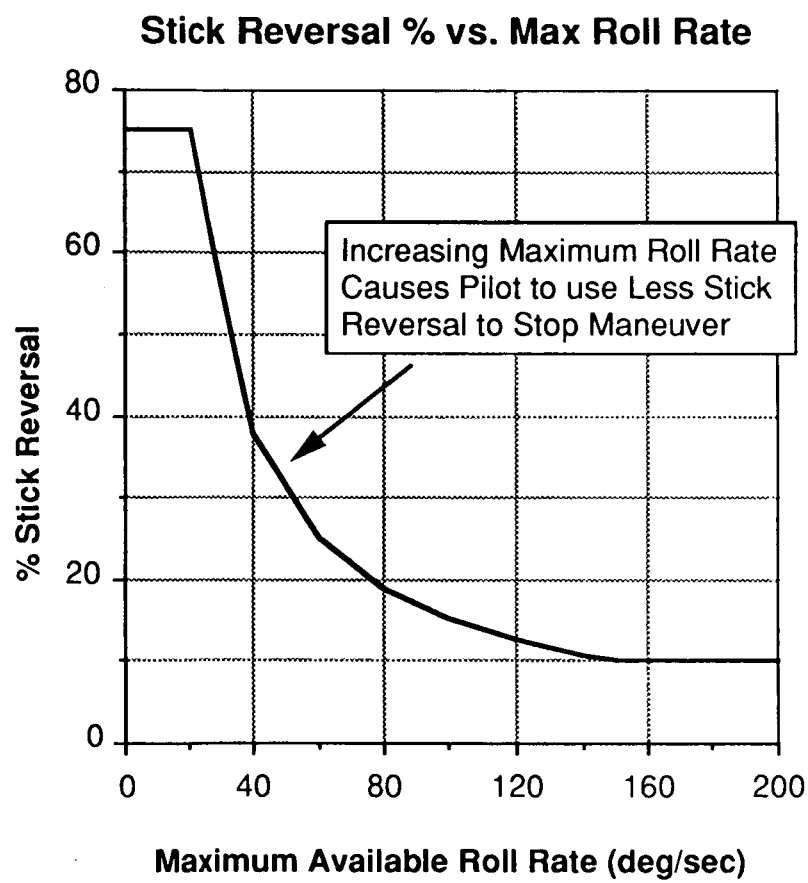

LARC93-203

Figure 2.4.2

Validation of 2-DOF Model with F/A-18 SDF Model

- F/A-18 Aerodynamic Data
- 0.6M / 15,000 ft

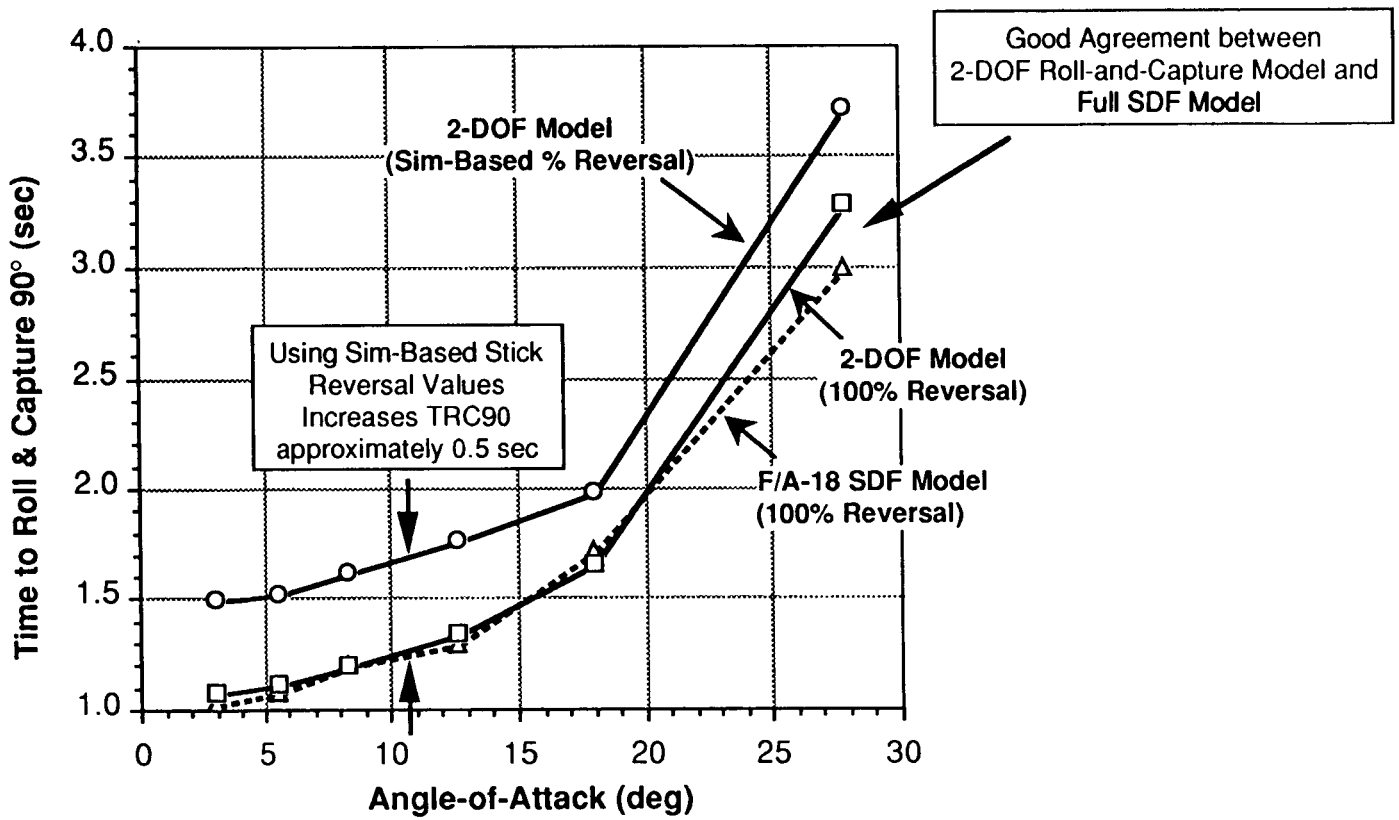

LARC93-204

Figure 2.4.3

Time-to-Roll-and-Capture 90° Sensitivities

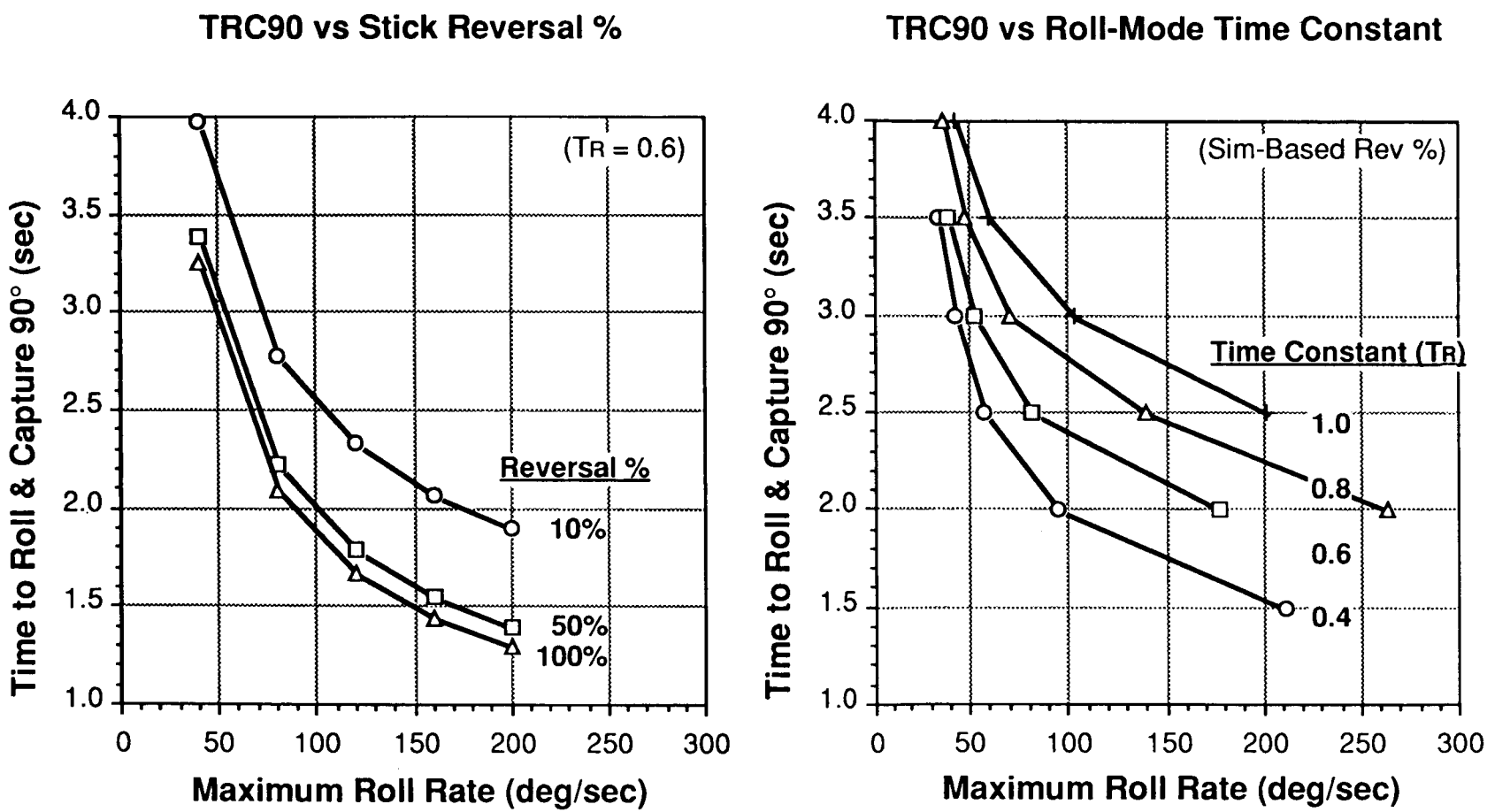

LARC93-205

Figure 2.4.4

Control Power Required vs Roll Time

- Typical Multi-Role Aircraft Aerodynamics/Weights
- Mach 0.6 / 15,000 ft / 32° AOA
- Roll-Mode Time Constant (T_R) of 0.40 sec

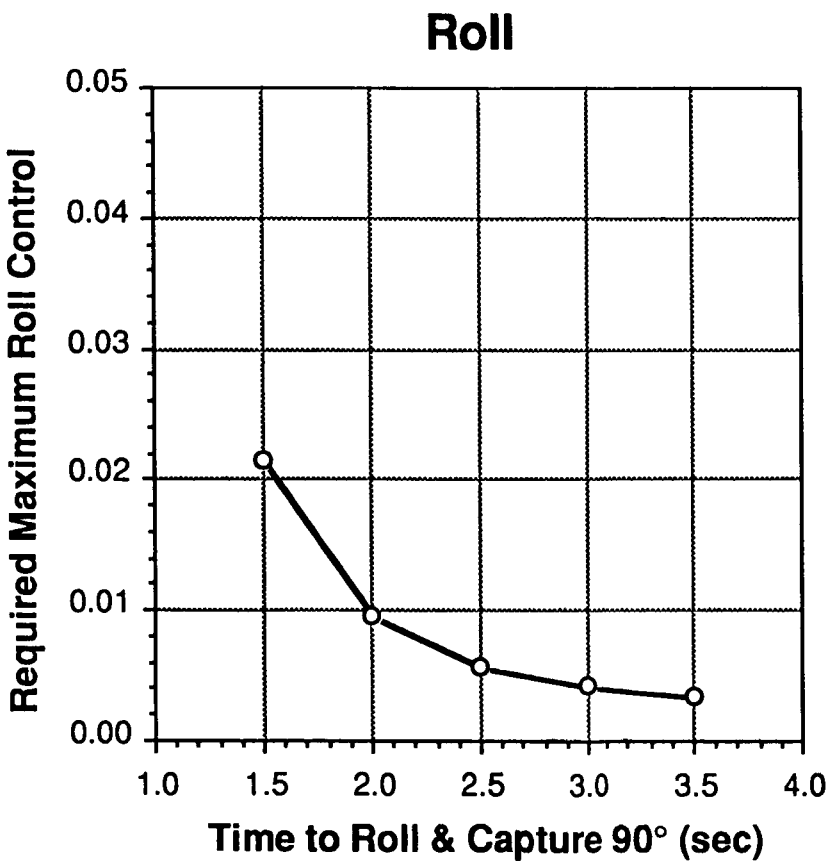

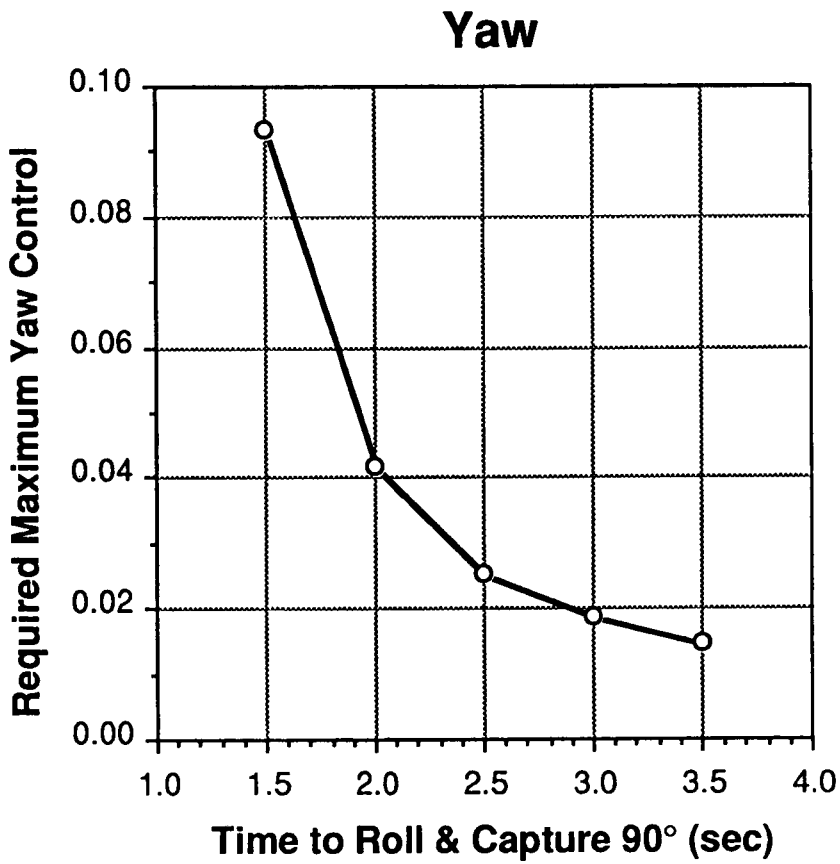

LARC93-206

Figure 2.4.5

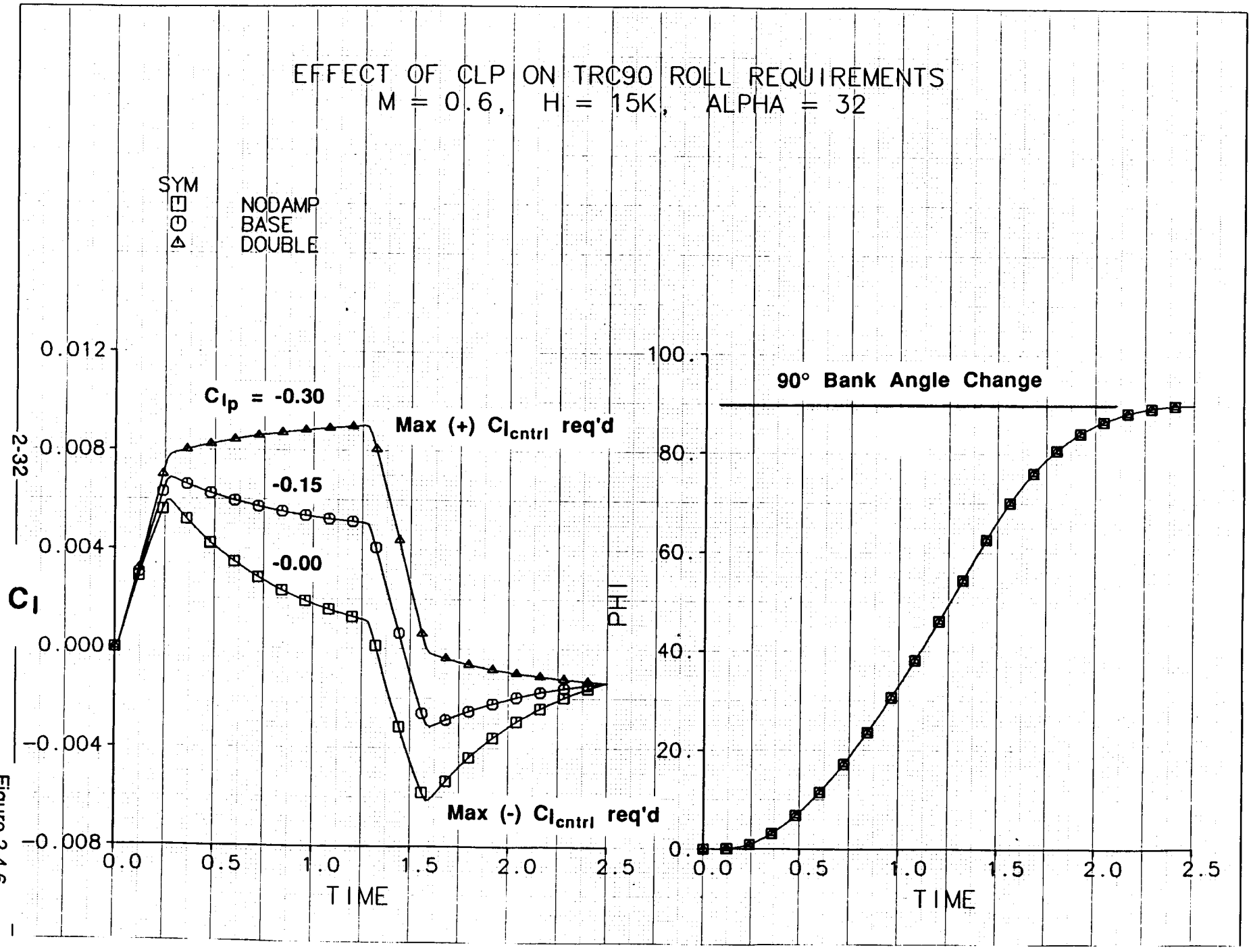
EFFECT OF CLP ON TRC90 ROLL REQUIREMENTS
M = 0.6, H = 15K, ALPHA = 32
SYM
NODAMP
BASE
DOUBLE
C_{lp} = -0.30
-0.15
-0.00
Max (+) C_{lcntrl} req'd
Max (-) C_{lcntrl} req'd
C_l
0.012
0.008
0.004
0.000
-0.004
-0.008
0.0
0.5
1.0
1.5
2.0
2.5
TIME
90° Bank Angle Change
PHI
100.
80.
60.
40.
20.
0.
TIME

Figure 2.4.6

Method for Estimating Roll Damping

- Combines Analytic Approach at Low AOA with Empirical Approach at High AOA

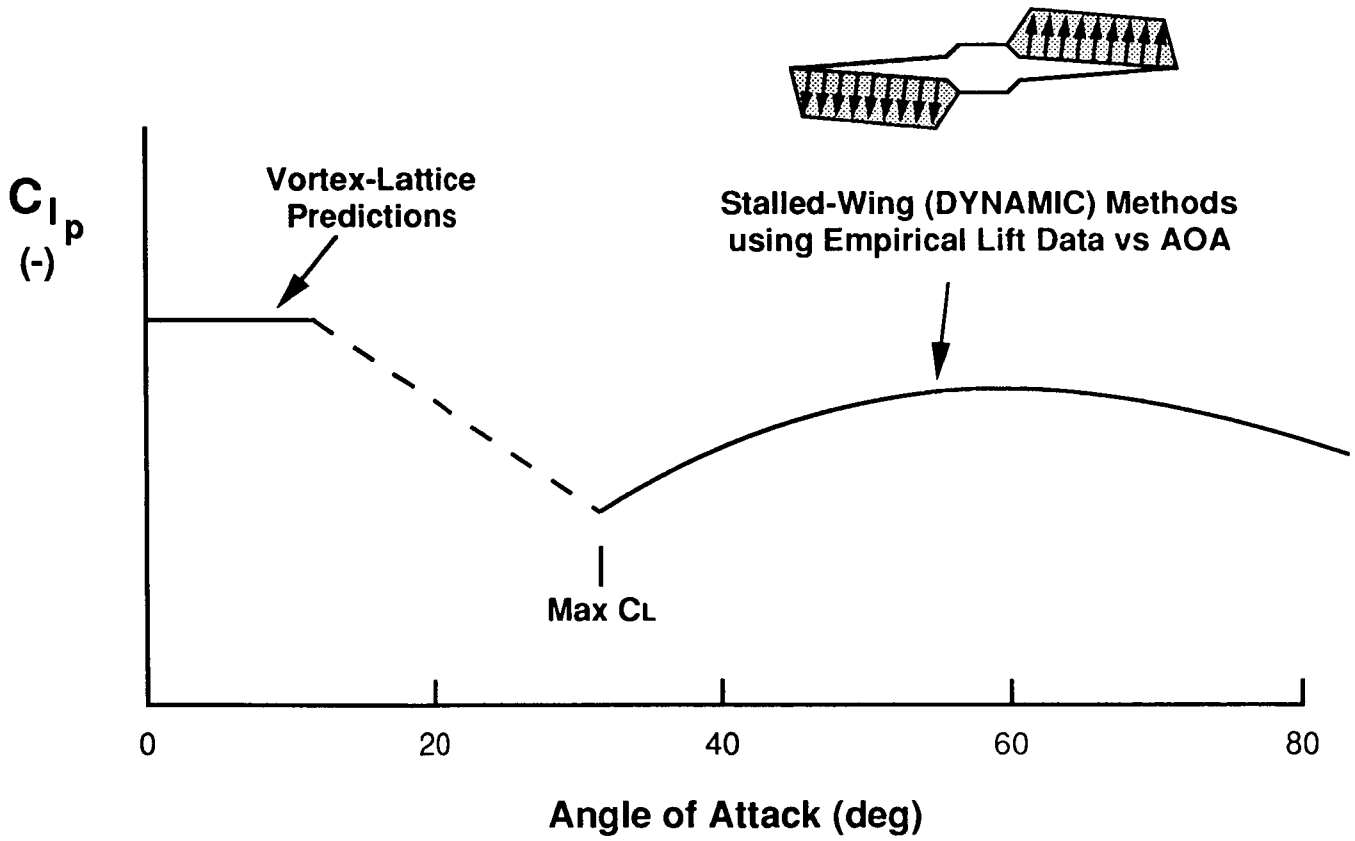

LARC93-210

Figure 2.5.1

Vortex-Lattice Roll-Damping Predictions

- Wing planforms in ADWT Test Database
- Varying taper ratio, sweep, aspect ratio

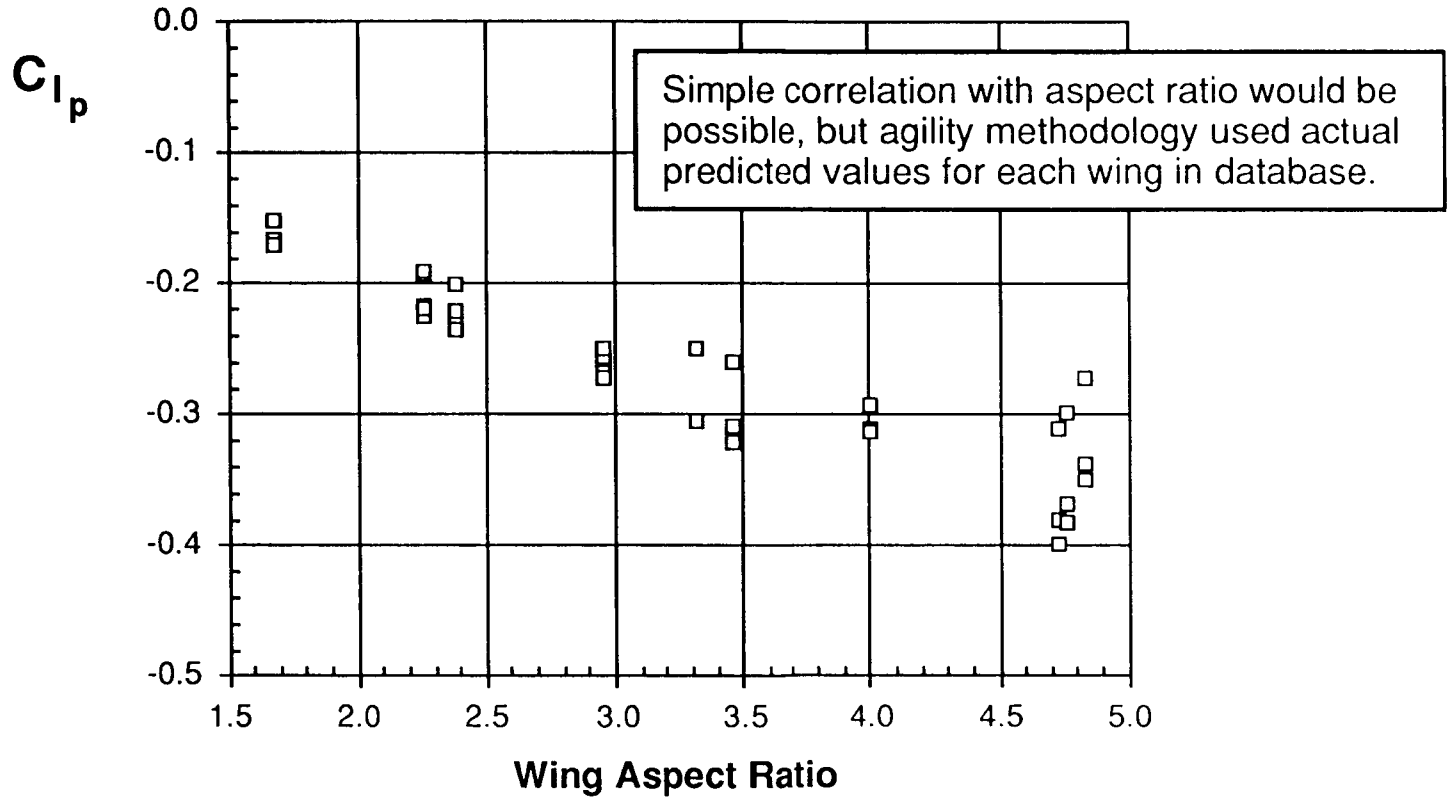

LARC93-211

Figure 2.5.2

First-Order Transonic Drag Correlation

- Based on NASAWAVE Drag Estimates
- Used to Estimate Transonic Accel Performance

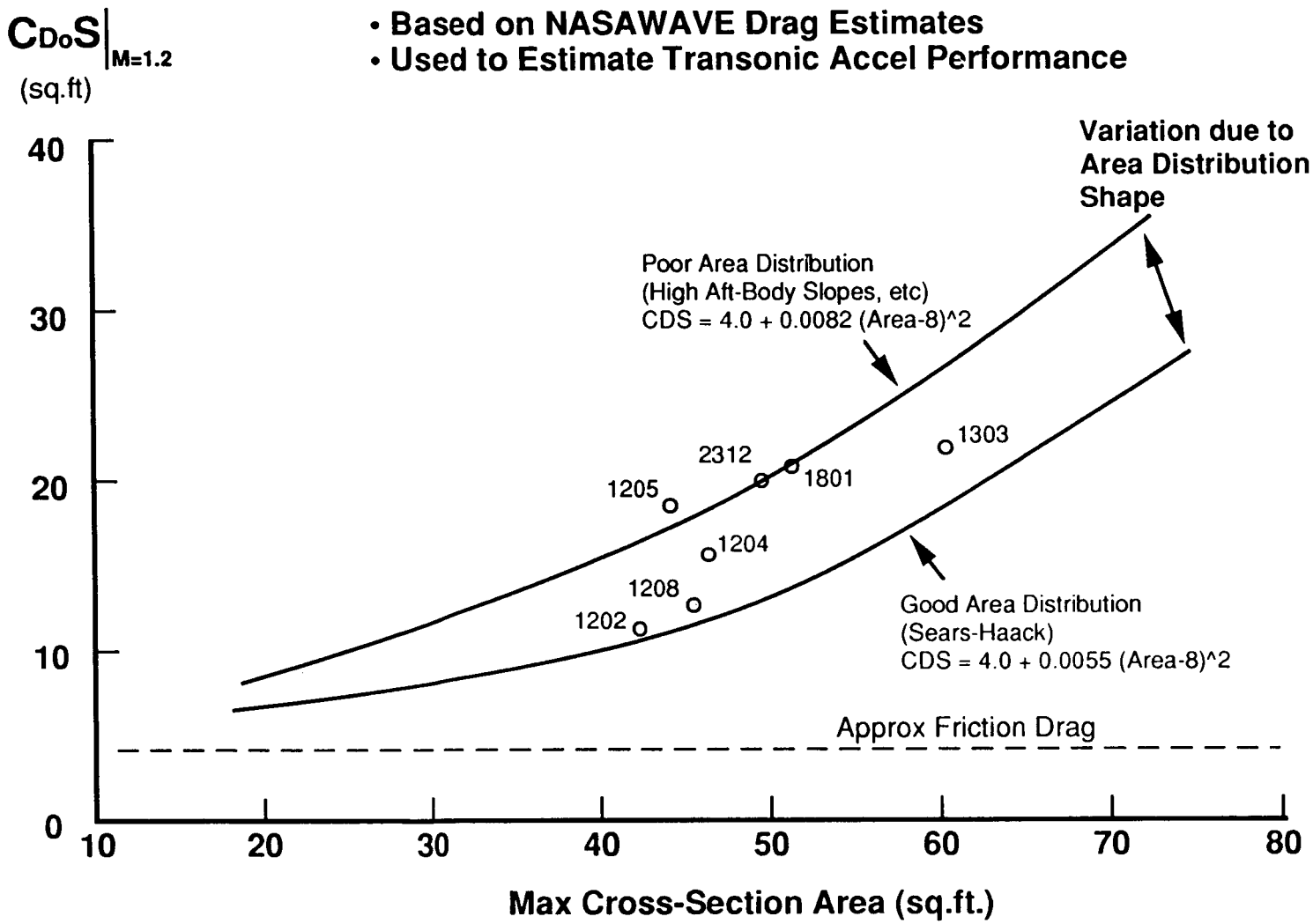

LARC93-144B

Figure 2.5.3

Acceleration Time vs. Thrust, Drag, Weight

- Mach = 0.80 - 1.50 / 30,000 ft / Max A/B
- Internal/External Stores
- Moderate Wing Loading (80-90 psf)

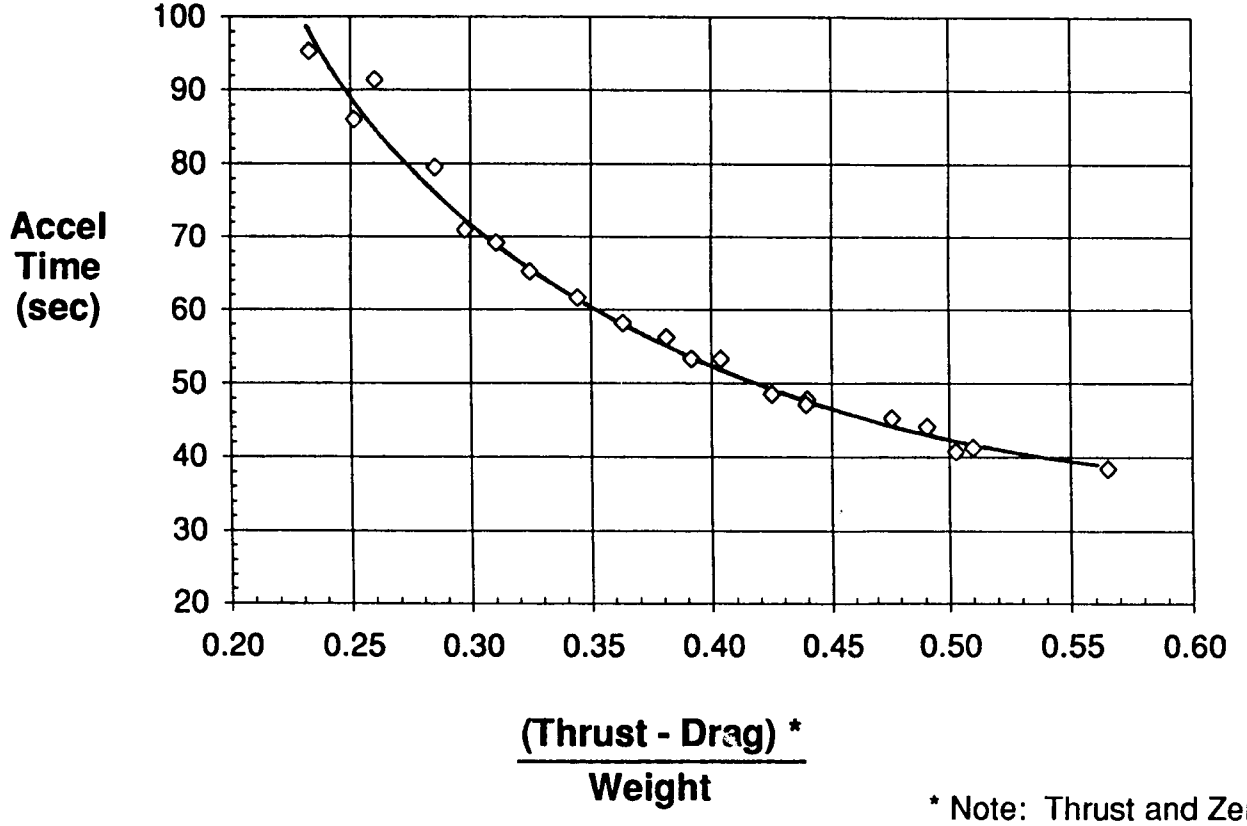

* Note: Thrust and Zero-Lift Drag are measured at Mach 1.2 only.

LARC93-021

Figure 2.5.4

Mission Radius Trends Used for Initial Sizing Analysis

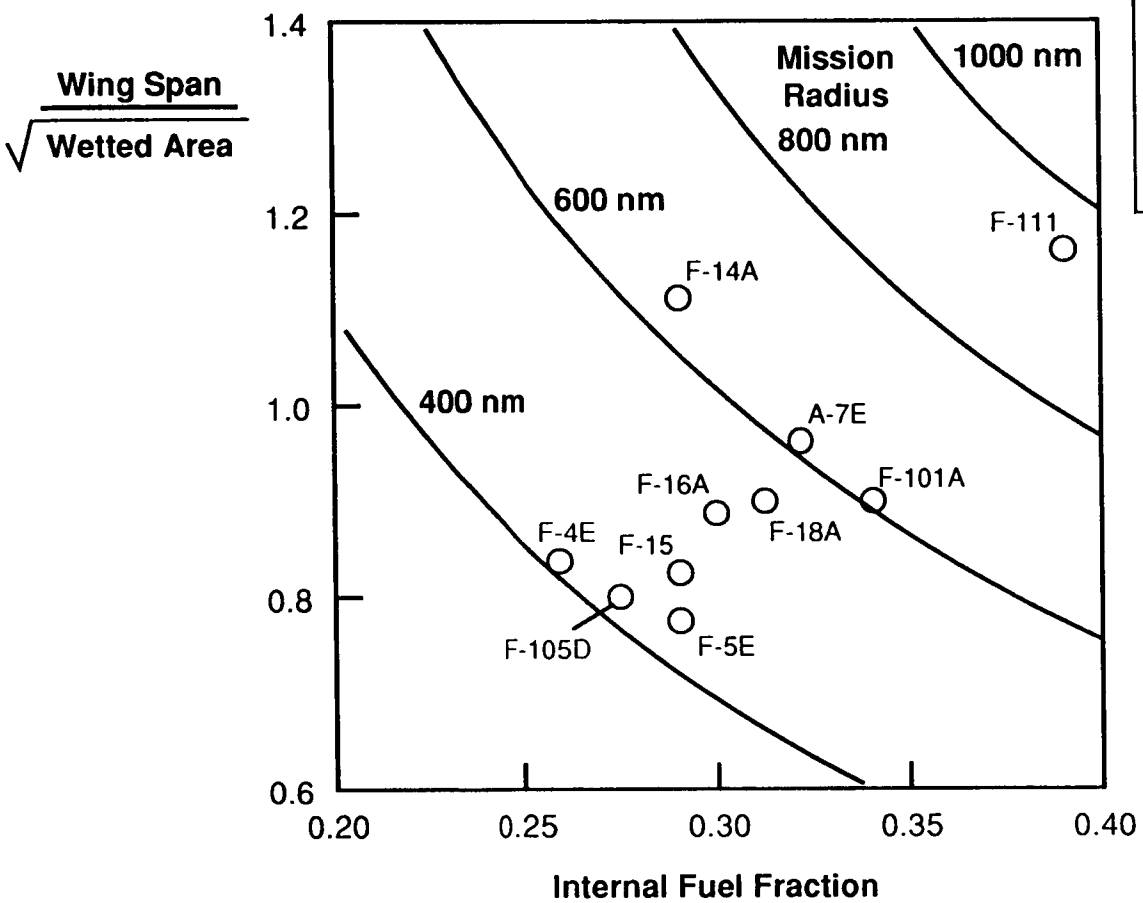

Assumptions

- Optimum Subsonic Cruise
- SFC = 1.10
- 40% Fuel Allowance for T.O., Climb, and Landing

LARC93-147

Figure 2.5.5

3.0 TECHNOLOGY ASSESSMENT

3.1 AERODYNAMIC/CONTROL TECHNOLOGIES

This assessment will cover a wide variety of aerodynamic and control technologies, providing both quantitative and qualitative ratings of effectiveness, weight, observables, and integration issues. Where possible, recent advanced-design wind-tunnel data of various concepts will be presented to allow head-to-head control power comparison. In some cases the effectiveness data will be presented as correlations based on the key geometric parameters; these correlations having been generated from wind-tunnel data as part of the Agility Design Study.

Integration and observables issues will be discussed in a qualitative manner, since these issues tend to be highly configuration-dependent. The weight impact of each technology will be compared and contrasted using available aircraft and advanced-concept weights data. Again, these impacts can be very dependent on the particular configuration, but it should be possible to compare the various controls and technologies in a somewhat quantitative manner using the available weights data.

Figure 3.1.1 presents a summary of the controls technologies evaluated in this study and their relative ratings for aerodynamic control potential, relative observables impact, and relative ease of integration on a typical aircraft. In this rating system, a (1) represents desirable characteristics (i.e., high control effectiveness, good observables, straightforward integration) while (5) represents an undesirable characteristic.

The choice of aerodynamic and controls technologies for a given aircraft will depend on the specific requirements (e.g., observables, agility) as well as the sensitivity to weight and integration issues. This assessment is designed to point out the important issues and help guide the selection of the appropriate set of technologies given a specific set of requirements.

Figure 3.1.2 contains weights information for a variety of aerodynamic and controls technologies on both production and advanced-design aircraft. While not a complete source of such information, this list does contain enough weights information to allow some conclusions about the relative weight impact of various aerodynamic and control technologies.

3.1.1 Forebody Vortex-Control Devices

Forebody vortex-control devices are capable of producing large forces and moments at moderate to high angles of attack by altering the strength, separation location, burst location, or trajectories of the two main forebody vortices. The amount of control power available is therefore directly related to the strength of these vortices. A detailed assessment and comparison of all forebody vortex-control devices is beyond the scope of this effort, but it is possible to examine a number of the most popular devices and compare their relative merits.

Deflectable Chines

Deflectable chines are portions of the forebody chine which are hinged or otherwise articulated, allowing them to be deflected up or down either symmetrically (both sides of forebody deflect up or down together), one at a time, or asymmetrically (one up, one down). Symmetric up deflections are effective in reducing the forebody area, cross-section width-to-height, and chine sharpness, causing a significant nose-down pitching moment increment. As shown in Figure 3.1.3, the amount of nose-down pitch can become very large when a relatively large fraction of the forebody area is deflected.

Figure 3.1.4 indicates that deflectable chines can also provide relatively large yawing moments, normally by asymmetric deflection of the two sides. While the increments shown in Figure 3.1.4 are respectable, deflectable chines are actually less efficient that other forebody devices (for a given control size) at producing yaw control.

Large deflectable chines can be very difficult to integrate unless the forebody chine is both very sharp (thin) and straight, allowing a straight hingeline. Deflectable chines will cause additional edges and breaks in the chine, which in some cases will require additional treatment to meet a given level of observables. Forces and hinge moments on the deflectable chines are high since they present a large surface area and are directly below the forebody vortices.

Deflectable Chines		Low α	High α
Aerodynamic Control Potential:	Pitch	4	1
	Roll	--	--
	Yaw	4	2
Observables: 5	Integration: 4		

Chine Venting

Similar to deflectable chines, chine vents operate by reducing the effective forebody area and width-to-height ratio, weakening the main forebody vortices. As Figure 3.1.5 shows, the amount of nose-down control power is comparable to deflectable chines when the vents are opened symmetrically. Figure 3.1.6 indicates that some amount of yaw control is also available with chine venting on one side at a time, but as with deflectable chines this control power is somewhat limited and less efficient than other control concepts.

Chine vents present formidable integration and observables challenges if substantial amounts of control power are required. Unlike the deflectable chines, however, the actual chine edge could remain fixed, helping observables to some degree. Chine venting is most compatible with vehicles having very large, wide forebodies (such as the aft-wing concept in Figure 3.1.5) since the cross-section remains relatively thin inboard of the chine.

Chine Venting		Low α	High α
Aerodynamic Control Potential:	Pitch	4	1
	Roll	--	--
	Yaw	5	3
Observables: 4	Integration: 4		

Forebody Strakes/Fins

This category covers small mechanical forebody devices, normally very near the nose, which are deflected one at a time to affect the cross-flow separation and resulting asymmetric vortex locations. Figure 3.1.7 indicates that significant yaw control is attainable with very small devices, especially on (roughly) circular cross-section forebodies where the separation point and vortex location are very sensitive to nose geometry (e.g., F/A-18, F-15).

While there is less data available on the effectiveness of strakes and fins on chined forebodies, it would appear that there is less effectiveness when the separation point is fixed at the chine edge. Data also indicates that symmetric deflection of forebody strakes and fins has very little effect on vortex strength or location, yielding little if any nose-down pitch control. There is often, however, some nose-down pitching moment associated with one-at-a-time deflection for yaw, which could be helpful in a high-roll-rate maneuver (to overcome inertial coupling) but could also complicate flight control design.

Forebody strakes and fins need to be very close to the nose to keep their size to a minimum (i.e., on the radome itself). Unfortunately, it may be difficult to produce an actuated strake or fin which can be placed on the radome without adversely affecting radar performance. Advanced radar technology which eliminates the conventional radome could alleviate this concern.

Forebody Strakes/Fins		Low α	High α
Aerodynamic Control Potential:	Pitch	5	4
	Roll	--	--
	Yaw	5	1
Observables: 3	Integration: 3		

Forebody Flaps

Forebody flaps are flaps or spoilers on the upper surface of the forebody designed to alter the trajectory and/or burst location of one or both main forebody vortices. A variety of locations, sizes, and shapes have been tested, and the effectiveness of forebody flaps actually depends more on their placement and orientation than on their size.

Figure 3.1.8 shows the nose-down control power available from relatively small flaps placed on the upper-aft "shoulders" of the forebody. While the control power is somewhat small compared with the maximum levels produced by deflectable chines or chine venting, the forebody flaps produce a nose-down moment which is more constant with angle-of-attack, possibly simplifying their integration into a flight-control system.

Figure 3.1.9 indicates the level of yaw control which can be produced by deflecting one forebody flap at a time. The amount of yaw control available from upper-aft "shoulder"-mounted flaps is fairly small due their location and the lack of side-facing forebody area in this region. Conversely, forebody flaps placed out on the chines and further forward on the forebody are able to produce much higher levels of yaw control, albeit with fairly large flaps, as shown in Figure 3.1.9.

Depending on their location and size, upper-aft-mounted forebody flaps can be fairly easy to integrate on a moderate observables-level aircraft. Actuation is similar to a fuselage-mounted speedbrake, much simpler than deflectable chines or chine venting.

Forebody Flaps		Low α	High α
Aerodynamic Control Potential:	Pitch	5	2
	Roll	--	--
	Yaw	5	3
Observables: 2	Integration: 2		

Forebody Fences

Forebody fences are long, narrow fences which affect the cross-flow separation. They typically produce control power by delaying the formation of the main forebody vortices. A wide variety of sizes, shapes, and locations have been tested on representative chined forebodies. The optimum design for nose-down control seems to be a fairly long, narrow fence (length-to-width of 8-10), located on the lower surface of the forebody just inboard of the chine. Figure 3.1.10 shows a sample of the nose-down control power available from fairly small forebody fences. This figure indicates that the maximum level of control power is less than some other controls, but like forebody flaps the control is more constant with angle of attack, possibly simplifying flight control design.

Less data is available for yaw control generated by forebody fences, but the data in Figure 3.1.11 suggests that the level of yaw control will likely be comparable to other forebody devices.

Forebody fences are easier than some of the forebody controls to integrate, since they do not require articulating or venting the actual chine. However, the complex curvature present on the lower surface of most forebodies can make integrating a long, narrow, hinged forebody fence more difficult.

Forebody Fences		Low α	High α
Aerodynamic Control Potential:	Pitch	5	2
	Roll	--	--
	Yaw	5	4
Observables: 2	Integration: 3		

Forebody Blowing

One area which has been of great interest in recent years is the use of forebody port or slot blowing to alter cross-flow separation and vortex formation. Most of this research has concentrated on controlling the asymmetric yawing moments produced by circular cross-section forebodies at high angles of attack. Less work is available for chined forebodies and on pitch control capabilities in general.

Producing nose-down pitch control on a chined forebody normally requires a fairly high blowing coefficient ($C\mu$). Figure 3.1.12 shows the pitch control available on a typical chined forebody employing the most efficient form of blowing (upward, symmetric, slot blowing on the chine). The control power is comparable to forebody flaps and fences, but falls short of controls such as deflectable chines and chine venting. Other forms of blowing (outward or downward slots, ports, etc) produce even less nose-down moment for the same blowing coefficient.

Figure 3.1.13 shows a sample of the data available on forebody blowing for yaw control. The levels of yaw control are very substantial, even for fairly small blowing coefficients. Different methods of blowing seem to be required for different cross-section geometries, with outward slot blowing at the chine being very effective for chined forebodies, while axial asymmetric port blowing appears promising for circular cross sections. The outward slot blowing has the additional benefit of producing yaw control at all angles of attack due to the jet momentum itself.

Integration of a slot or port blowing system would not be as simple as some of the small actuated devices already discussed, but does allow for a fixed moldline with fewer breaks and gaps. The amount of engine bleed air required to produce a given blowing coefficient ($C\mu$) is dependent on flight dynamic pressure, as shown in Figure 3.1.14, and can amount to a significant loss in engine airflow at some flight conditions. The resulting loss in engine performance needs to be

considered along with the forebody-blowing system-weight and integration issues when choosing the optimum control effectors for a given design.

Forebody Blowing		Low α	High α
Aerodynamic Control Potential:	Pitch	4	3
	Roll	--	--
	Yaw	4	1
Observables: 1	Integration: 3		

Forebody Porosity

Porous forebodies are a relatively new concept in forebody vortex control, offering the advantages of fixed outer moldline while remaining a passive system, requiring no blowing or suction to operate. A region of the forebody would be porous (approximately 20% porosity) with a shallow cavity behind the porosity allowing different areas to communicate via pressure signals.

While the physics which govern the passive porosity concept are not completely understood, initial wind-tunnel testing indicates that porosity can both eliminate the asymmetric yawing moments present on circular forebodies at high angles of attack as well as produce significant yaw control by selectively "closing" the porosity in certain areas or by isolating areas from one another, thereby inhibiting pressure communication.

NASA-LaRC data, shown in Figure 3.1.15, indicates that passive porosity can be used to produce a level of control authority comparable to that produced by the mechanical forebody strakes employed on the F/A-18 HARV aircraft. This suggests that both concepts are producing similar changes in cross-flow separation and vortex formation but are using different means.

Passive porosity offers the same fixed-moldline advantages as forebody blowing and allows for better observables characteristics than many of the actuated concepts. Integration is an unknown at this time but is expected to be relatively straightforward. A passive porosity system doesn't require engine bleed, and it may be possible to produce a porous radome which results in minimal degradation in radar performance.

Forebody Porosity		Low α	High α
Aerodynamic Control Potential:	Pitch	5	3
	Roll	--	--
	Yaw	5	1
Observables: 2	Integration: 2		

3.1.2 Wing Control Technologies

Conventional Ailerons

Figure 3.1.16 presents a basic correlation of aileron roll control power at low angles of attack versus an appropriate "flapped-wing" volume ratio. The Agility Design Study used this correlation plus corrections for aileron chord versus wing chord to define the low angle of attack roll control power of ailerons and wing-mounted elevons.

Aileron control power degrades quickly with angle of attack, as shown in Figure 3.1.17. It appears that control power degrades quickest for aircraft having highly-swept wings with little taper ($\lambda \sim 1.0$). Ailerons on tapered trapezoidal wings ($\lambda < 0.3$) with forward-swept trailing edges appear to stay effective at higher angles of attack. High levels of roll control at high angles of attack will nevertheless be difficult to achieve with ailerons. The chosen correlation parameter, leading-edge sweep minus trailing-edge sweep, captures most of this wing-planform effect and seems to correlate well with the data.

One drawback of conventional ailerons is the fairly high level of adverse yaw produced at moderate to high angles of attack. Because yaw control is often a limiting factor during high angle-of-attack roll maneuvers, the level of adverse yaw due to roll can be a very important factor in the design and sizing of the lateral/directional control devices.

Figure 3.1.18 presents the correlation used in this study for the ratio of adverse yaw divided by maximum (low-angle-of-attack) roll control power. This ratio is presented as a function of angle of attack and the chosen correlation parameter, wing trailing-edge sweep. Note that at high angles of attack (40°+), the maximum adverse yaw can approach 40% of the maximum roll control. Because roll control at this high angle of attack may be less than 30-40% of maximum, the adverse yaw may actually exceed the beneficial roll control.

Ailerons		Low α	High α
Aerodynamic Control Potential:	Pitch	--	--
	Roll	1	3
	Yaw	--	--
Observables: 2	Integration: 1		

Conventional Elevons

Although conventional wing-mounted elevons and flaperons are effective in producing additional wing lift (due to effective camber), the level of pitch control available will be driven by the wing location relative to the center of gravity. Figure 3.1.19 presents the elevon nose-down control power correlation used in the Agility Design Study, based on test data for aft-wing configurations.

As shown in Figure 3.1.19, the control power available is reduced at higher angles of attack, but the amount available in the 30-50° angle-of-attack range is still a significant fraction of the maximum level at low angle of attack. Elevons are easier to integrate than many other kinds of controls, but do introduce breaks and additional edges which can have an impact on observables.

Elevons		Low α	High α
Aerodynamic Control Potential:	Pitch	1	3
	Roll	2	4
	Yaw	--	--
Observables: 2	Integration: 1		

Leading-Edge Slats / Flaps

Leading-edge slats and flaps are normally used to improve aircraft lift/drag characteristics at high angles of attack and to increase maximum lift. In most cases they are deflected automatically along an angle-of-attack schedule, but they can also be used as active control devices in certain circumstances. The F/A-18 uses leading-edge flaps for roll control at high dynamic-pressure conditions to take advantage of aeroelastic effects (wing twist) resulting in more effective roll control than conventional ailerons at these conditions.

Leading-edge flaps are fairly easy to integrate, but can present design challenges depending on the specific observables requirements.

Leading-Edge Slats/Flaps		Low α	High α
Aerodynamic Control Potential:	Pitch	2	2
	Roll	2	4
	Yaw	--	--
Observables: 3	Integration: 2		

Thrust-Blown Flaps / Elevons (Wing-Mounted)

Most applications for wing-mounted thrust-blown flaps and elevons are high-lift, short-field takeoff and landing aircraft, or aircraft designed for carrier operation. The blowing can dramatically increase maximum lift coefficient by energizing the boundary layer and delaying separation, or by the simple increase in local dynamic pressure from the jet and jet-induced flows.

While wing-mounted thrust-blown flaps and elevons are a very desirable control concept for aircraft having significant high-lift requirements (e.g., C-17 short-field operation, carrier-based attack aircraft), the need for very high maximum lift coefficients on Air Force fighter/attack aircraft rarely justifies such controls.

Thrust-Blown Flaps/Elevons (Wing)		Low α	High α
Aerodynamic Control Potential:	Pitch	1	2
	Roll	2	4
	Yaw	--	--
Observables: 2	Integration: 3		

Split Ailerons

As shown in Figure 3.1.20, split ailerons and other wing-mounted drag devices can produce significant amounts of yaw control which tends to be relatively independent of angle of attack. These levels of yaw control are not sufficient for primary control in most cases (exceptions would include certain attack or bomber aircraft such as the B-2) but may be sufficient to supplement or back up other yaw controllers.

Split wing-mounted devices usually allow straightforward integration and have observables characteristics that are consistent with conventional ailerons and elevons.

Split Ailerons		Low α	High α
Aerodynamic Control Potential:	Pitch	--	--
	Roll	--	--
	Yaw	3	2
Observables: 2	Integration: 2		

Spoilers

Devices that act to spoil the airflow over a portion of the wing can be an effective means for aero control. A rolling and yawing moment is produced from the lift reduction and drag increase that results from a typical spoiler. In most cases, the yawing moment cooperates with the rolling moment to allow roll coordination at high angles of attack. The effectiveness of a particular spoiler will vary with lift coefficient and is sensitive to whether it is installed on the upper or lower wing surface. Conceivably, spoilers could provide significant control augmentation for tailless or reduced-tail aircraft that rely primarily on thrust vectoring for control.

Spoilers		Low α	High α
Aerodynamic Control Potential:	Pitch	--	--
	Roll	2	3
	Yaw	3	4
Observables: 3	Integration: 2		

All-Moving Wing Tips

Variable incidence wings or wing tips were originally developed as a means for providing direct lift on fighter and attack aircraft. However, they have also been shown to be effective in controlling the span loading, thereby reducing drag. Also, through negative wing tip incidence at high angles of attack, an effective washout can be produced causing a delay in wing stall for higher maximum lift.

The aerodynamic advantages of variable incidence wings are offset to a large degree by the weight penalty that is proportional to the planform area of the movable panel. However, the typical weight growth factors do not apply because there is usually a resulting benefit in fuel efficiency which can partially compensate for the empty-weight impact. In addition to the weight issue, the inherent flutter and control system sensitivities will limit the practical extent to which large portions of the wing can be actuated for lift management.

Var. Incidence Wing / All-Moving Wing		Low α	High α
Aerodynamic Control Potential:	Pitch	2	2
	Roll	2	3
	Yaw	--	--
Observables: 3	Integration: 4		

Porous Wing Leading / Trailing Edges

Porous wing surfaces have long been studied as a means by which the local pressure field can be altered to achieve a desired aerodynamic effect. Concepts employing active suction or blowing through porous skins have been developed to effect boundary layer control, thereby altering gross flowfield features particularly at higher lift coefficients. Other concepts employ a cavity or plenum region below a porous surface to allow pressure communication from one region of the wing to another to create an incremental force or to improve shock / boundary layer interaction characteristics. The degree to which the local flowfield can be influenced, and the ease by which the resulting effect can be controlled, will determine the usefulness of the porosity concepts as flight control effectors.

An attractive feature of the porous surface concept is the possibility that the corresponding subsystems could be much lighter than conventional subsystems since actuation is accomplished by controlling the subtle flow through the wing skin. This avoids the conventional mechanical challenge of imparting large forces to a device separate from the wing structure. However, the existing data is presently insufficient to provide the necessary design guidance for integrating wing control effectors that are based on the porosity concepts.

Porous Wing Leading / Trailing Edges		Low α	High α
Aerodynamic Control Potential:	Pitch	4	2
	Roll	4	2
	Yaw	--	--
Observables: 2	Integration: 3		

Leading-Edge Suction / Blowing

It has long been known that the vortex flowfield characteristics associated with highly swept wings at high angle-of-attack can be manipulated through the use of blowing or suction devices. The aerodynamic benefits include lift enhancement from an energized vortex, control of vortex asymmetries, vortex burst delay, and control of the vortex trajectory over the wing. Aerodynamic control can be achieved when the blowing or suction is selectively applied to induce these effects, thereby providing an incremental force or moment. However, for most blowing or suction schemes there must be prior knowledge of the vortex shedding location and the subsequent vortex trajectory.

The practical application of leading-edge blowing or suction concepts to advanced design tasks is hindered by the following considerations:

1. The design space is restricted to wings of sufficient sweep to produce a concentrated vortical core.

2. The required blowing coefficients (particularly those that rely on jet momentum to affect the vortex flow structure) could significantly impact propulsion performance. This degradation, however, may be momentary and confined to a limited portion of the flight regime.

3. The aero performance benefits must outweigh the considerable weight, complexity and supportability considerations that would be be associated with a blowing or suction subsystem.

4. The issues related to aircraft signature need further investigation. Slots or pores in the vicinity of the leading edge may present an unacceptable compromise to observability goals. On the other hand, if such control devices eliminate or reduce the requirement for conventional control effectors, such as leading-edge slats, their presence might be justifiable.

Leading-Edge Suction / Blowing		Low α	High α
Aerodynamic Control Potential:	Pitch	5	2
	Roll	4	2
	Yaw	--	--
Observables: 4	Integration: 5		

Tangential Leading-Edge Blowing

Tangential leading-edge blowing concepts operate on the suction surface of highly swept delta-class wings to control the characteristics of the vortex-dominated flowfield. Research over the last decade has shown that effective vortex control including burst management can be achieved by blowing tangentially to the leading edge radius. A Coanda effect is thereby induced which causes the boundary layer to remain attached over a larger portion of the leading-edge region which influences vortex formation and burst characteristics. The potential for practical application of such concepts for aerodynamic control is hindered by the following considerations:

1. The appropriate design space is limited to highly swept wings with rounded leading edges.

2. Subsystem requirements add complexity and weight during design integration.

3. The engine bleed to achieve the necessary blowing coefficients can affect propulsion performance.

4. The observed control-moment reversal from pre-stall to post-stall conditions will add to control system complexity.

5. Extrapolating the blowing requirements and slot specifications to full-scale integration is a difficult process. Large-scale and high Reynolds number data is required for high-confidence designs.

If allowed to mature, the tangential blowing concepts could play a role in the flight control of advanced aircraft - particularly on LO designs which seek to eliminate conventional leading-edge devices. The cost and weight penalties might be offset by the added capability provided by such a device, such as lateral control at high angles of attack where conventional effectors have become ineffective.

Tangential Leading-Edge Blowing		Low α	High α
Aerodynamic Control Potential:	Pitch	5	2
	Roll	4	1
	Yaw	--	--
Observables: 2	Integration: 5		

3.1.3 Aft-Body/Empennage Control Technologies

Horizontal Tail / V-Tail

Horizontal tails are the most common way to provide both increased pitch stability and longitudinal control. New technologies such as fly-by-wire flight controls and relaxed static stability make the stability benefits of horizontal tails less important. Furthermore, new observables requirements drive empennage design away from classic horizontal tail plus vertical tail solutions toward V-tail or tailless configurations.

An all-inclusive, general assessment of horizontal tails and V-tails is difficult to make, since the level of aircraft stability, agility requirements, and observables requirements all have a major impact on the decision process. It is possible, however, to quantify some of the basic aerodynamic and weights characteristics of horizontal tails and V-tails in order to compare them with other candidate control concepts in a general sense.

Unlike forebody controls, which do not lend themselves to correlation on the basis of size and location, tail control power and tail-on increments can normally be correlated by an appropriate volume ratio based on tail true area and distance to the aircraft center of gravity. One remaining parameter is the tail dihedral angle, and as shown in Figure 3.1.21 this angle can have a dramatic impact on tail stability and pitching moment increments.

Figure 3.1.22 shows the final correlation used in the Agility Design Study for tail-on pitching moment increments as a function of tail volume, dihedral angle, and angle of attack. Horizontal tails provide the largest nose-down increments in pitching moment for a given (true) tail volume, while many V-tail configurations actually cause a nose-up moment in the 20-40° AOA region where the forebody vortices tend to track just below the V-tail surfaces. Horizontal tails can exhibit a strong nose-down phenomenon in the 40-50° AOA region depending on their aspect ratio, leading-edge sweep, and other geometric parameters.

While the tail-on increment is important, the maximum nose-down control power above and beyond this increment is also very important, since any longitudinal pinch point will occur at maximum nose-down control conditions. Figure 3.1.23 shows some raw data on maximum nose-down pitch control normalized again by tail (true) volume ratio. As with the tail-on increment, the tail dihedral angle is a very important parameter determining the amount of control power available. Figure 3.1.24 presents the final correlation used in the Agility Design Study for additional nose-down control power available.

There are some angles of attack (30-50°) where V-tails actually have more nose-down control power than horizontal tails with the same (true) volume ratio. This is most likely caused by the proximity of the forebody vortices to the V-tails at these angles of attack. Even so, the combined tail-on increment plus maximum control

power available still favors pure horizontal tails in situations where total nose-down capability at high angles of attack is critical to the design.

Parameters not included in the correlation that need further work include corrections for high or low levels of downwash, the tail spanwise location relative to the forebody vortices, the effect of tail planform on tail lift-curve slope, and differences in tail stall characteristics.

Both horizontal tails and V-tails are fairly easy to integrate on aircraft with relatively long aft-bodies, and both controls are consistent with low observables. Horizontal tails are significantly better at pitch control, especially at high angles of attack, and provide more benefit in pitch stability for their size. However, V-tails can produce reasonable levels of pitch control at moderate angles of attack (20-30°) and have the added directional stability and yaw-control benefits. As usual, the best control depends on the control-power requirements and overall vehicle design.

Horizontal Tails		Low α	High α
Aerodynamic Control Potential:	Pitch	1	3
	Roll	3	4
	Yaw	--	--
Observables: 2	Integration: 1		

V-Tails		Low α	High α
Aerodynamic Control Potential:	Pitch	2	5
	Roll	3	3
	Yaw	2	3
Observables: 2	Integration: 2		

Vertical Tail (All-Moving)

V-tails and all-moving vertical tails can produce a significant amount of yaw control power at low to moderate angles of attack. Figure 3.1.25 shows the final yaw control-power correlation used for the Agility Design Study as a function of tail dihedral angle, angle of attack, and a volume based on total side projected area.

The familiar forebody-vortex-related effects can be seen in the 20-50° angle of attack region, where V-tails with moderate dihedral angles can exhibit a temporary increase in yaw control power. At low angles of attack, the control power tends to collapse to be a function of side-projected volume ratio only, while at high angles of attack the control power available depends strongly on dihedral angle.

Along with the desired yaw control, there is almost always an undesirable (adverse) roll control produced by all-moving verticals and V-tails mounted on top of the aft body. The data shown in Figure 3.1.26 represents the best correlation

which could be derived for this roll-control side-effect as a function of tail dihedral angle, angle of attack, and the volume ratio based on a projected roll-axis area and moment arm.

The roll-control correlation again collapses at low angles of attack to the same value for all dihedral ratios, indicating that the key parameter at low angles of attack is the roll-area-based volume ratio. At the moderate angles of attack, however, the same vortex-related phenomenon which increased the yaw control for V-tails also increases the adverse roll effect. The importance of adverse roll-due-to-yaw depends on the available roll control from other sources (such as ailerons) and the specific agility-related roll requirements which drive overall roll-control requirements.

Vertical tails are fairly easy to integrate on most configurations, although they sometimes affect the aft-body area distribution.

Vertical Tail (All-Moving)		Low α	High α
Aerodynamic Control Potential:	Pitch	--	--
	Roll	--	--
	Yaw	1	4
Observables: 4	Integration: 2		

Vertical Tail (with Rudder)

As shown in Figure 3.1.27, there is a wealth of rudder yaw-control effectiveness data available for low angles of attack. The data correlates very well when the appropriate volume ratio (based on rudder plus effective vertical side-projected area) is used. This correlation and a few minor corrections for rudder area versus effective vertical area are used to define the yaw control power available at zero angle of attack.

The yaw control available from a vertical tail and rudder control surface drops rapidly as the angle of attack increases and the wing begins to blank the tail surface. As shown in Figure 3.1.28, this effect can cut the rudder effectiveness in half by 30° angle of attack. It appears from the data examined that vertical tails placed on the wing to take advantage of the leading-edge vortex tend to maintain their rudder control effectiveness at higher angles of attack as compared to fuselage-mounted verticals. For the purposes of this study, the more conservative correlation based on fuselage-mounted verticals was employed.

Vertical Tail (Rudder)		Low α	High α
Aerodynamic Control Potential:	Pitch	--	--
	Roll	--	--
	Yaw	1	5
Observables: 4	Integration: 1		

Thrust-Blown Elevons (Aft-Body Mounted)

A thrust-blown elevon concept is being developed by MDA under the Air Force contract: "Aero Configuration/Weapons Fighter Technology" (Reference 7). Consequently, a substantial high and low speed database is available for estimating control effectiveness for thrust-blown elevons in the jet-off condition. Figure 3.1.29 shows the variation of nose-down control power with angle of attack for three of the concepts tested, and also indicates the general planform shape of typical thrust-blown elevons designed to preserve planform alignment and avoid exposing new edges when deflected.

As shown in Figure 3.1.29, the amount of control power stays relatively high at moderate to high angles of attack (30-40°) and correlates well with elevon volume ratio. This data represents jet-off conditions, and it is expected that thrust-blown elevons will have significant "passive thrust vectoring" effects in jet-on conditions. Wind-tunnel testing of this effect is planned under MDA Internal Research and Development (IRAD) activities.

Thrust-blown elevons are easily integrated on configurations which have wide, thin ("shelf") aft bodies. Planform alignment rules typically require a slightly flared aftbody to allow elevons of useful size. Depending on the engine nozzle design and after-burner requirements, some advanced high-temperature materials may be required to allow the elevon to make use of the passive thrust-vectoring effect. Of the control concepts evaluated, thrust-blown elevons are one of the best in terms of observables.

Thrust-Blown Elevons (Aft-Body)		Low α	High α
Aerodynamic Control Potential:	Pitch	1	2
	Roll	--	--
	Yaw	--	--
Observables: 1	Integration: 3		

Body Flaps

Normal body flaps, which are essentially plain (or fully-hinged) flaps located on the aftbody or trailing-edge extension of the wing, can be treated as elevons or thrust-blown elevons (without the passive vectoring effects) depending on their particular location and design. Figure 3.1.19 or 3.1.29 can then be used to estimate the nose-down control power.

Other types of body flaps which more closely resemble split flaps on the lower fuselage surface need to be treated differently. Although it should be possible to design such a split body flap to have effects similar to a plain flap, as shown in Figure 3.1.30 the pitch control can actually be the opposite of the intended direction (nose-up instead of nose-down) due to local separation effects. This might be useful in some cases where nose-up pitch is required, but this assessment is concentrating on nose-down pitch control as the most common requirement at high angle of attack.

Body Flap (Plain)		Low α	High α
Aerodynamic Control Potential:	Pitch	1	3
	Roll	--	--
	Yaw	--	--
Observables: 2	Integration: 2		

Body Flap (Split)		Low α	High α
Aerodynamic Control Potential:	Pitch	5	3
	Roll	--	--
	Yaw	--	--
Observables: 2	Integration: 1		

Air Dams

Air dams are similar to lower-fuselage split body flaps but are intended to deflect a full 90° and produce pitching moment by the resulting drag increment and increase in surface pressure on the fuselage ahead of the air dam. While not as effective as other devices, as Figure 3.1.30 shows the pitching-moment increment for a fairly large air dam might be large enough to warrant its inclusion in a vehicle concept as a secondary controller complementing a more efficient device.

Integration and observables issues are not severe, but air dams do require a fairly wide, flat aft body to integrate well and provide a large enough deflectable surface to be effective. The air dams must also be located as far back as possible on the aft-body to avoid the same separation-related pitch-control reversal produced by the split body flaps.

Air Dams		Low α	High α
Aerodynamic Control Potential:	Pitch	3	5
	Roll	--	--
	Yaw	--	--
Observables: 2	Integration: 3		

Pop-up Yaw Effectors

Pop-up aft-body yaw effectors have been studied on a variety of advanced-design concepts at MDA. As shown in Figure 3.1.31, typical aft-body yaw effectors have relatively low control powers relative to vertical tails and forebody vortex-control devices, although large pop-up devices will tend to approach the control power of vertical tails. In most cases, pop-up aft-body yaw effectors will be most useful as a secondary yaw controller at low angles of attack.

In terms of integration and observables issues the pop-up devices are similar to forebody flaps, although they will normally have to be larger to obtain a reasonable amount of control power. It may also be difficult to find a location for a pop-up yaw device on a vehicle which already has vertical tails or V-tails.

Pop-up Yaw Effectors		Low α	High α
Aerodynamic Control Potential:	Pitch	--	--
	Roll	--	--
	Yaw	3	3
Observables: 2	Integration: 3		

3.1.4 Other Control Technologies

Canard

Canard-wing aircraft have been popular since the very start of aviation, but relatively few canard-wing designs are flying today as military or commercial aircraft. Problems with canard stall on approach and high rate requirements for unstable aircraft are two possible explanations for this. Also, integration constraints often make it difficult to achieve sufficient control power to meet carrier-suitability requirements for rotation at take-off.

Nevertheless, canards add significant design freedom when attempting to meet observables levels and agility levels simultaneously by providing an alternative to the standard body-wing-tail design. This controls assessment, however, will concentrate only on the effectiveness of canards as control devices, rather than attempt to address all of the other benefits and drawbacks of canards as a configuration design option.

Figure 3.1.32 presents nose-up pitching moment increments caused by the addition of various canards (at fixed 0° deflection) to a generic forebody-wing configuration. There can be a wide variation in these canard-on increments due to factors such as canard span vs wing span, canard vertical displacement (above wing), etc, but for the purposes of this study the correlation shown in Figure 3.1.32 was adopted as representative of all canards of reasonable size, shape, and location.

Figure 3.1.33 presents the final correlations used in the Agility Design Study for canard pitching-moment increments, relative to the maximum level at zero deflection, for various combinations of canard deflection and angle of attack. The canard stall at high angles of attack (for 0° deflection) is clearly evident, and maximum nose-down control appears to be rather limited, although the control continues to be available up to very high angles of attack.

Canards, even those without dihedral, can use differential deflection to produce significant levels of yaw control, especially at moderate to high angles of attack where the canards have a direct impact on forebody vortex strength and trajectory. As shown in Figure 3.1.34, the maximum amount of yaw control correlates relatively well with the basic canard volume ratio (using wing span rather than chord) with a correction based on the canard dihedral angle.

Figure 3.1.35 presents the rather complicated correlation for maximum yaw control available versus angle of attack for a given symmetric canard deflection. Generally, the canards will be close to the weathercocked position (canard deflection + angle of attack = 0°), and Figure 3.1.35 indicates that significant yaw control is available up to very high angles of attack with the canards in this weathercocked position. While not shown, it was also found that beneficial coordinating rolling moment accompanied this yawing moment, making canards even more desirable as a high angle-of-attack yaw controller.

Canards introduce additional (usually fairly short) edges into the frontal sector of the aircraft, possibly having a significant observables impact. However, planform alignment and proper treatment can eliminate most of these concerns. Canards are normally fairly easy to integrate on forebody-wing vehicles, as long as the forebody is long enough to accommodate the canard and cockpit without adversely affecting pilot visibility.

Canard		Low α	High α
Aerodynamic Control Potential:	Pitch	1	3
	Roll	--	--
	Yaw	3	2
Observables: 3	Integration: 2		

Vertical Fins / Other Fins

Vertical fins, including chin fins, dorsal fins, vertical canards and other small fins, are commonly used for one of two major reasons:

1. Increase directional stability without increasing vertical tail size, perhaps late in a development program when tail-size has been frozen, or

2. Provide second directional-control surface to augment existing directional controller or to provide for direct sideforce capability.

When a second vertical surface is used to produce direct sideforce control, it is often placed on the vehicle centerline below the cockpit and actuated to produce a vertical all-moving canard. Significant forces can be generated by such a device, and the placement ahead of the center of gravity creates a yawing moment which the primary yaw controller, normally vertical tails, trim out by producing even more sideforce. It is important to ensure that the primary yaw controller device has sufficient control power to trim the large yawing moments produced by such vertical canard devices.

An integration concern for advanced aircraft is the directional stability impact of forward-mounted vertical surfaces. For example, tailless vehicles which rely on thrust vectoring for directional stability augmentation would have difficulty with such surfaces, unless the surfaces can be retracted at flight conditions where directional stability becomes most critical.

Vertical Fins / Other Fins		Low α	High α
Aerodynamic Control Potential:	Pitch	--	--
	Roll	--	--
	Yaw	2	2
Observables: 4	Integration: 4		

Thrust Vectoring

Thrust vectoring has been studied extensively in recent years under widely varied requirements, missions, and technology levels. Some of these investigations have resulted in flight validated vectoring systems (e.g., F-15 STMD, F/A-18 HARV, X-31, F-22). While thrust vectoring has been studied and employed as a secondary controller, its use as a primary controller is less-well understood.

As shown in Figure 3.1.36, the amount of control power (as measured by moment coefficient) available from thrust vectoring on a multi-role fighter concept exceeds the conventional control power at low speeds (low dynamic pressures), but is reduced at higher speeds. Fortunately, the control-power requirements also tend to drop as speed increases, since the aircraft structural limit reduces the maximum angle of attack at high speeds (and control-power requirements are often a function of angle of attack).

Thrust-vectoring designs consistent with a wide variety of observables levels have been proposed and studied in the past few years. Relatively straightforward designs such as the vectoring axi-symmetric nozzle should be standard in the very near future, while other more complex designs featuring fixed aperture, fluidic control, and other advanced techniques have until only recently been studied in depth.

No general conclusions can be made about the desirability of thrust vectoring over other control technologies -- it must be considered on an aircraft-by-aircraft basis in the context of specific operational requirements. Nevertheless, previous studies have indicated that thrust vectoring is competitive with other control technologies in many situations, especially when observables requirements make other conventional control concepts undesirable.

The amount of weights data available at this time is rather limited, but estimates have been made for the weight impact of an advanced thrust vectoring system on a typical multi-role fighter concept. Figure 3.1.37 shows estimates for the weight impact of thrust vectoring as a function of the general observables requirement (Type A, B, or C) and the type of vectoring required (single vs two-axis, low-rate vs high-rate).

Thrust Vectoring		Low α	High α
Aerodynamic Control Potential:	Pitch	2	2
	Roll	--	--
	Yaw	2	2
Observables: 2	Integration: 3		

Fluidic Thrust Vectoring

Fluidic thrust vectoring (FTV) holds great promise for advanced aircraft control applications. Certain advanced FTV concepts have demonstrated significant deflection capability (+- 10 degrees) through relatively subtle fluidic injection into the primary nozzle flow stream. Since minimal moving parts are involved in most FTV concepts, multi-plane vectoring can be achieved at high rates (120 deg/sec) with very little weight penalty.

The feasibility of FTV systems on advanced aircraft, however, will involve more issues than simply the minimization of the weight and cost factors that are typically associated with conventional vectoring concepts. Full-system investigations must be conducted to clarify the role of an FTV concept in a total flight control system design. Likely design constraints related to deflection limits, compressor bleed, hysteresis, and failure modes must be fully understood so that credible design solutions may be developed that also include appropriate measures of aero control augmentation.

Fluidic Thrust Vectoring			Low α	High α
Aerodynamic Control Potential:		Pitch	2	2
		Roll	--	--
		Yaw	2	2
Observables: 1	Integration:	2		

3.1.5 Other Aerodynamic Technologies

Mission Adaptive Wing

The purpose of the mission-adaptive wing (MAW) concept is to maintain aerodynamic efficiency in all flight regimes by reconfiguring the wing surface to achieve the optimum shape for minimum drag or lift management. The MAW technology has matured to the point of flight demonstration and validation on the AFTI-111 aircraft. Still, further progress must be made before the MAW can be incorporated with confidence in advanced design applications. Presently, it is not obvious that the flutter implications, subsystem complexity and the requirement for sophisticated active controls will outweigh the performance benefits associated with MAW technology. Also, it is likely that the leading and trailing-edge deflections (and therefore control authority) will be limited by material and structural constraints related to the wing skins and sub-structure.

Even though a mission adaptive wing has the potential to be lighter with a flexibility that allows it to be self-optimizing in the various flight modes, it is difficult to conceive that such a system could match the benefits of slotted flaps for high lift generation. Therefore, the potential of the MAW concept to meet carrier-suitability requirements without augmentation is uncertain. However, the concept is very consistent with the LO design goals which seek to minimize separate control

devices and their exposed edges. In some cases then, it is possible that these benefits could outweigh the added weight or complexity that results from incorporating the MAW concept in the wing design of special purpose aircraft.

Laminar Flow-Control Wing

The drag benefits of sustained laminar flow over wing surfaces (e.g., fuel economy, enhanced performance) are well established - as are the obstacles for any applications of technology that aim to realize these benefits. Over 50 years of research has led to both active (e.g., boundary layer suction) and passive (geometry shaping) approaches which delay boundary layer transition to turbulent flow. However, most of these concepts are restricted to a very narrow design space or they introduce complexities that adversely impact the system cost or supportability characteristics.

Wing sweep, surface roughness, and the nature of the freestream flow environment are the key parameters affecting boundary layer stability. Leading-edge sweeps greater than 20 degrees can be very destabilizing due to the crossflow induced by the chordwise pressure distribution. Yet, in most cases, the performance benefits associated with these higher wing sweep angles cannot be sacrificed to achieve the pay-off that would be attained through sustained laminar flow over the wing. Furthermore, the surface smoothness requirements that are necessary to maintain laminar flow on even straight wings, are difficult to achieve in production or maintain in operation.

Because of these concerns, the routine application of laminar flow control technology, other than the gains provided by geometric shaping, has had little impact on full-scale production programs. However, for special purpose aircraft, the pay-off of laminar flow may out-weigh the cost and complexity issues. Also, many of the surface quality and maintenance issues related to laminar boundary layer control go hand-in-hand with the outer moldline requirements of advanced low-observable aircraft.

Forward Sweep Wing

Aircraft featuring forward swept wings (FSW) were initially introduced during World War II with a specific intent on improving low-speed handling qualities. However, the inherent wing structural divergence problems were practically insurmountable and few FSW concepts were matured. With the advent of composite materials, design solutions were proposed that would solve the classical wing divergence problem associated with the FSW while taking advantage of the long-anticipated aerodynamic and integration benefits.

Prior to flight validation in the X-29 program, the FSW technology was expected to result in much lighter vehicles with improved lift characteristics, enhanced transonic performance through reduced drag, and greatly improved configuration design freedom. However, there continues to be considerable debate regarding the design value of FSW technology although it is generally agreed that the available design space was considerably enlarged. The particular advantages (or

disadvantages) of the FSW technology cannot be generalized since the applicability of the FSW to a given design problem is strongly dependent on the total system requirements.

For example, vehicle requirements that stress the issues related to center-of-gravity and cross-sectional area management, or specific subsystem packaging constraints, might benefit with a FSW design integration. However, there is no clear aerodynamic reason favoring (or opposing) the use of forward swept wings, except by way of issues that are usually of secondary importance. For example, improved laminar boundary-layer stability would result from the lower inherent FSW leading-edge sweep. But if the vehicle signature is of primary concern, then the aero benefits due to less sweep could not be expected to offset the compromises to signature in the forward sector.

3.2 STRUCTURES/MATERIALS TECHNOLOGIES

A number of structures and materials technologies are important in the design of a multi-role aircraft that stresses both agility and observables. Figure 3.2.1 shows a summary of these important technologies, indicating their relative impact on both agility and observables. The figure also shows the decision whether or not to include each technology in the baseline technology set.

3.2.1 Materials Technologies

Advanced Aluminum-Lithium Alloys

Lithium-Aluminum alloys are relatively new in metallurgical circles. They are very low density alloys with remarkably high levels of stiffness, ideal attributes for aerospace structural materials. These alloys are just now finding their way into products, such as the new MD-90 commercial aircraft. In the next 15 years or so, they will become even more commonplace in high performance aerospace products, perhaps even replacing titanium in certain applications, thus yielding considerable cost savings.

Advanced Titanium Alloys / Powder Metallurgy Technologies

The cutting edge in titanium technology is the emerging series of titanium alloys especially formulated for powder metallurgy technologies. New alloys, such as IMI 679 and IMI 829 are "Super-Alpha" alloys which have the same service temperature range (up to 600°C) as conventional alloys. The advantages of powder metallurgy are evident, especially for titanium, where material costs are already high. By shaping 'green' parts from powder and then sintering, near-net-shape parts can be produced, eliminating costly machining. In the future, more economical processes like powder metallurgy will only become more common.

Ceramic Technologies

There are considerable efforts underway to incorporate more ceramic materials into aircraft designs, for both structural and signature reasons. New ceramic

compounds and alloys, too numerous to mention, are being developed and evaluated for such applications as NASP, HSCT, supersonic stealth aircraft and missiles.

Rare-Earth Alloy Materials

Rare Earths, contrary to their name, are quite common, comprising over 30% of the earth's crust. Among them are such exotic elements as cerium, lanthanum, promethium, and gadolinium. Also known as "lanthanides", these elements are common constituents of catalytic converters, glass, steel, and magnets. Other than some unique electronic applications, they do not have much potential for structural or signature considerations in aircraft design.

Carbon/Graphite Based Composites

It is important to distinguish between carbon and graphite in fiber terminology. Graphite is an aggregate of carbon atoms arranged in layers of hexagonal lattices. This structural arrangement provides extremely high strengths and stiffnesses in the two planar axes. However, graphite's strength and Young's Modulus in the transplanar axis are very poor (graphite is highly anisotropic), making it an unsuitable structural material except for very unique applications. 'Carbon' fiber, on the other hand, is composed of amorphous carbon and its properties are isotropic (same in all directions). Carbon fibers are high strength (3.1×10^6 psi) and high modulus (45×10^6 psi) materials which are very lightweight. As aircraft structural designs keep evolving, carbon reinforced composites will play an increasingly significant role. Many grades of carbon fibers are conductive, providing a variety of electrical capabilities for radar cross-section reduction.

Boron Based Composites

Boron Fibers have been used in composites since the late 1950s. They are the stiffest of the major types of fiber (60×10^6 psi). The vertical tail on the F-4 is a boron-epoxy structure. However, it is also the most expensive of the major fibers (Boron: $320/lb, Carbon: $30/lb, Glass: $2/lb). Since the advent of carbon fibers in the late 70s, boron has been relegated to applications requiring the highest strength and stiffness possible. Even then, the economics make it hard to justify its use.

Kevlar Based Composites

Kevlar fiber was first introduced in the early 1970s as the first high performance organic fiber. It is made from a liquid crystalline para-aramid polymer and forms a highly crystalline structure, thus making the resulting fiber very strong and very tough. Kevlar has been incorporated into a variety of applications, such as rocket motor casings, fuel tanks, pressure vessels, and bullet-proof vests. Kevlar's one inherent weakness is its poor compressive properties. Even at moderate compression loads, Kevlar fibers can buckle. Therefore, Kevlar is best suited for applications where most of the experienced loads are in tension. Also, because of

its extremely high impact resistance, Kevlar can enhance aircraft survivability when used for armor on airframes.

Fiberglass Based Composites

Glass fibers are the oldest and most established class of inorganic fibers and are still the most commonly used. They are also the least expensive of all the aerospace-grade fibers ($2/lb), making them a highly attractive candidate for composite applications where cost is a critical issue. In addition to their stiffness ($>8x10^6$ psi), many grades of glass fibers have low dielectric constants (<2.5), thus making them suitable for lower-observables applications. Although glass fibers are no longer state-of-the-art, they will continue to play key roles in structural design for decades.

Advanced Thermosetting Resins

Although a variety of new resins with a myriad of chemical compositions are currently under development, it seems unlikely that epoxy will be replaced in the near future in its role as the ultimate utility resin. Most current work is in the area of high temperature systems for use in extreme environments, such as those encountered in hypersonic flight and space applications. Among these, bismaleimide (BMI) and polyimide resins such as PMR-15 are now becoming common in aircraft designs. For example, the wing of the AV8-B Harrier II aircraft is mostly carbon/BMI composite.

Both the BMI and polyimide resins lend themselves to a variety of processing techniques, such as hand lay-up, fiber placement, filament winding, and resin transfer molding. However, as is the case with most high-temperature resins, both are highly toxic and must be handled in compliance with an ever-growing list of EPA and OSHA regulations.

Cyanate ester is one new resin which has become commercially available just recently which holds great promise for the composites industry. Although its service temperature range is not as high as a BMI, it still surpasses epoxies, thus allowing its consideration for higher-temperature applications. It is a much safer resin to handle than the more traditional high performance resins, and it lends itself to some of the more innovative manufacturing processes, like resin transfer molding (RTM). Also, its low dielectric properties make it an ideal material for low observables applications. By the 2005-2010 time frame, cyanate ester will have established itself as one of the "staples" of the polymer industry, finding uses in aerospace and transportation applications.

Thermoplastic Materials

Thermoplastic polymers, like their thermosetting cousins offer high-impact strength and reduced weight over their metal counterparts. Unlike thermosets, thermoplastic polymers do not undergo any chemical reactions during processing, making them nearly non-toxic, a key advantage when conducting safety and

facilities planning. Because they can melt, their service temperature range is lower than a thermoset, but many are serviceable up to 275°F.

Some of the higher temperature thermoplastics, such as polyether etherketone (PEEK) and polyetherimide (PEI) can be used for secondary structures on subsonic aircraft. The F-117's twin tails are all-thermoplastic structures. Although thermoplastics have proved themselves in certain design applications, they are used infrequently at present. Reasons cited for this is the perceived risk involved and the lack of available information for design guidance.

As the aerospace industry develops more confidence in thermoplastics they will be more fully utilized. And as the demand for thermoplastics rises, the associated costs will decrease. The environmental compliance issues will act as an incentive for further usage. Thermoplastics are already heavily used in the low observables community. Electrical properties vary greatly, depending on the specific polymer and its reinforcement.

3.2.2 Advanced Manufacturing Techniques

Resin Transfer Molding

The high cost of hand lay-up has driven the development of lower cost processes to produce high performance composite parts. Resin Transfer Molding (RTM) has the potential to bring down the per-unit costs of parts. The RTM process consists of a fabric preform being placed into a closed mold and injected with a thermosetting resin which permeates the fabric and fills the mold. After a heat cure, the net-shape part is removed, requiring only a small amount of trimming.

In the past, preforms had to be laid in by hand, ply by ply, making the process very labor-intensive and consequently not realizing much savings over hand lay-up. But now, new looms and fabric machines are computerized and fully programmable, greatly reducing preform costs. A preform made by this automated process can then be dropped into the mold as a single piece, eliminating costly and time consuming hand work. Due to the high fiber volumes of these parts, shrinkage is minimal, allowing tolerances as tight as the mold itself. In the future, the resin mixing, injecting, and curing is likely to be fully automated, making RTM one of the most economical ways to fabricate high performance composites.

Superplastic Forming

Many metals, when deformed at very low strain rates, can strain considerably before breaking. A process called superplastic forming takes advantage of this characteristic. A metal form, usually a plate or sheet, is slowly deformed into a given shape by a high pressure ram or mold. The degree of deformation attainable is usually greater than what is achievable by forging or stamping. The advantage to this technique is the ability to produce a complex geometry, one-piece part with structural integrity and lower costs over machining and other metal forming methods. This process is ideally suited for manufacturing components like radomes, nacelles, electronic enclosures, and engine ducts.

Diffusion Bonding

Diffusion bonding is commonly used in the manufacture of metal matrix composites (MMCs). Individual sheets of metal and reinforcements are placed in layers and consolidated by hot isostatic pressing and heat. While in the press, the high temperature increases the vapor pressure of the constituent materials. Due to the intimacy of the layers, many molecules in vapor phase migrate between the layers, effectively bonding them together. After sufficient time in the mold, it is cooled and opened, yielding a unified composite piece.

Single Crystal Metallic Parts

The weakest points in any metal are the grain boundaries between the individual metal crystals. When molten metal starts to condense into a solid, a multitude of crystals start nucleating. They grow by incorporating the liquid metal around them until they meet another crystal, stopping growth at that point. The interface between these crystals is the grain boundary, which is usually amorphous and higher in impurities. Over the past decade or so, many companies, primarily engine manufacturers, have been developing single crystal metal parts. The cooling process of the molten metal is controlled such that only a single crystal forms. Thus, the final metal part is one large crystal with significantly higher structural and thermal performance over a polycrystalline part. Engine fan blades and other high-strength, high temperature parts made from this process will soon start appearing on aircraft.

3.2.3 Advanced Structural Techniques

Co-Curing

Co-cured composite structures can have significant weight and labor cost savings. The lack of fasteners in such a structure could yield up to a 5% weight savings. Significant cost savings can be realized through less assembly work and inspection. However, co-cured parts usually require expensive and complex tooling. For any given application, a trade study between a co-cured structure and an assembled structure should be evaluated for tooling costs, cycle time, labor cost, inspection, and life cycle costs. There is no generalized rule to identify co-curing as the method of choice, as each design situation is unique. But as usual, economics is paramount.

3.3 AVIONICS TECHNOLOGIES

Avionics can have both a direct and indirect impact on aircraft agility and observability. First, the overall weight of an avionics suite directly impacts aircraft thrust-to-weight ratio and in turn aircraft responsiveness. Second, the size and location of sensor apertures can impact airframe design which affects aircraft agility as well as observability. Integration of individual avionic systems can provide direct benefits to aircraft agility and observability through weight and size reductions. Integration of key avionic functions also provides indirect benefits to agility by allowing the pilot to more fully exploit the benefits of a highly agile aircraft.

In general, weight has a significant impact on aircraft flight performance and agility. Since avionics weight accounts for approximately 5-10% of the overall weight of a dry aircraft, it is not an insignificant contributor to an aircraft's agility characterisitics. For example, the F-15E aircraft avionics suite weighs 3,664 pounds while the F/A-18 C/D baseline aircraft avionics weight is approximately 1,487 pounds, not including the missionized avionics for airborne weapons control and Electronic Warfare avionics. The missionized avionics can add as much as an additional 1,336 pounds to the total avionics weight. Fully loaded, the total F/A-18 C/D avionics weight can reach 2,823 pounds. This weight differential of 821 pounds as compared to the F-15E is due to a combination of advanced technologies and higher levels of avionics integration in the F/A-18. This trend towards advanced technology insertion and higher levels of avionics integration to achieve lighter weight avionics for equivalent functionality should continue in the future, making an 1800 pound target avionic suite for the agile fighter a reality. Internal trade studies recently completed by the advanced avionic architectures IRAD have shown that a robust avionics architecture for a multi-role fighter class aircraft with a 2002 Technology Availability Date could weigh between 1,200 to 1,600 pounds depending on the level of avionics integration and advanced technologies incorporated.

There are two methods to reduce avionic weight: **technology insertion** and **avionics integration**. Technology insertion is the selective exploitation of advanced technologies to achieve equivalent avionic functionality in a smaller/lighter package. Through insertion of advanced semiconductor and packaging technologies, avionic functions which previously required an entire black box can now be accomplished on a single common line replaceable module. However, technology insertion alone cannot be expected to provide the drastic weight reductions consistent with the goals of the next generation agile fighter aircraft. Advances in avionics integration will also play a key role

Avionics integration is defined as the merging of similar avionic functions into a single system to eliminate redundant functions or hardware. Effective integration of individual avionic functions can provide some agility benefits in a piloted fighter aircraft, not only by reducing weight, but also by allowing the pilot to effectively exploit the benefits of a highly responsive aircraft. Technology evolution has allowed avionics integration to occur at the common line replaceable module level. Modular avionics will allow the construction of an extremely lightweight baseline avionics suite for an agile fighter which could then be rapidly reconfigured or "missionized" by simply plugging in the appropriate avionic modules. Some of the key technologies include:

Avionic Technology Focus Area	Benefit
• Integrated RF Sensor System	Weight Savings
• Integrated Electro-Optic (EO) system	Weight Savings
• Advanced G-Suit	Pilot Assistance
• Fully Articulating Seats	Pilot Assistance
• Helmet Mounted Displays	Pilot Assistance

An indirect contributor to aircraft agility and observability charactersistics is the location and sizes of sensor apertures. For instance, large apertures can adversely impact the

airframe structure with consequences to both weight and signature. Future trends are towards fewer, smaller, multi-function Radio Frequency (RF) and Electro-Optic (EO) apertures distributed throughout the aircraft. RF Systems such as the Integrated Electronic Warfare System (INEWS), Integrated Communication Navigation Identification Avionics (ICNIA) system, and Radar will be combined into a single Integrated Sensor System (ISS). EO systems such as the Navigation FLIR, Targeting FLIR, and Laser Designator and Ranger will combined into a single multi-function EO system. The integration of these avionic functions will significantly reduce pilot workload while providing a 50% weight savings, 50% cost savings and 300% improvement in avionics reliability over current generation avionics.

Figure 3.3.1 summarizes the results of the avionics technology assessment. Shown are the impacts of each technology to observables and agility, directly or indirectly through weight reduction, as well as the set of technologies which would make up the baseline avionics suite for a multi-role aircraft with the Technology Availability Date of 2000-2010 and a target avionics weight of 1800 lbs.

3.3.1 Architectures

JIAWG/PAVE PILLAR Class Integrated Avionics

The PAVE PILLAR program was an Air Force initiative established in the early 1980's which defined the concept of the first truly integrated avionics suite. Previous generation aircraft incorporated "federated" avionic architectures with individual avionic subsystems or black boxes which were "integrated" over a common data bus medium, such as a 1553 data bus. This federated approach to avionics integration results in a much higher overall avionics size and weight. PAVE PILLAR exploited new technologies, such as Very High Speed Integrated Circuits (VHSIC), Very Large Scale Integration (VLSI), and innovative avionic integration strategies to develop a small family of common avionic modules which would achieve significant reductions in avionics Life Cycle Cost. The technologies and integration strategies developed under PAVE PILLAR will result in a much lighter weight avionic suite compared to a federated avionic suite with equivalent functionality.

In 1987, the DoD established the Joint Integrated Avionics Working Group (JIAWG) to define standards for common avionics modules for tri-service applications. The architectural concepts defined by PAVE PILLAR and subsequently standardized through JIAWG have been successfully transitioned to the USAF F-22 Advanced Tactical Fighter aircraft and the US Army RAH-66 helicopter.

Building upon the successes of the PAVE PILLAR program, the Air Force established the PAVE PACE initiative in 1990 to extend the PAVE PILLAR philosophy to meet the new challenges anticipated for aircraft in the early 21st century. Avionic systems in current generation aircraft typically account for approximately 30% of the fly-away cost of the aircraft. The avionic sensor suite (RF , EO, and IR sensors) in turn typically account for 70% of the overall avionics cost.

The PAVE PACE program is targeting affordable avionics by exploiting Microwave Monolithic Integrated Circuit (MMIC) technologies to build a family of common Radio Frequency (RF) modules for Radar, CNI, and EW. This RF "Integrated Sensor System" (ISS) will exploit new technologies in avionics packaging, cooling, and innovative avionic integration strategies to achieve avionics at 1/2 the cost, 3 times increase in reliability, and 1/2 the weight of current avionic systems. A high agility fighter in 2000-2010 will contain an Integrated Sensor System (ISS). An ISS provides **significant benefits** to an agile fighter through avionics weight reduction.

Integrated Electronic Warfare System (INEWS class)

The development of JIAWG modular EW avionics is known as INtegrated Electronic Warfare System (INEWS). Modular system components (receivers, processors, oscillators, etc) are easily reconfigured to specialized needs. INEWS will easily accommodate new modules without total redesign to meet new system capabilities. The INEWS system is still in development, but eventually will save significant weight and cost tailoring to meet the mission requirements. INEWS will be replaced with an ISS in the 2000-2010 timeframe, providing **significant benefits** to an agile fighter through avionics weight reduction.

Integrated Com, Nav, IFF System (ICNIA class)

ICNIA is a system which was developed coincident with Pave Pillar to provide the ATF, LHX and A-12 with an integrated approach to CNI avionics. The system minimizes the duplication of resources, thus reducing the power, size and weight of typical aircraft CNI suites. Due to the openness of the architecture, functions can be added or deleted with minimal impact on the existing avionic architecture. The compactness of the architecture may aid an agile aircraft by minimizing the size and weight of the CNI avionics. ICNIA will be replaced with an ISS in the 2000-2010 timeframe, providing **significant benefits** to an agile fighter through avionics weight reduction.

Federated Systems Architecture (less fully integrated)

Federated avionic architectures are based on the "integration" of individual avionic subsystems or "black boxes" over a common data bus medium, such as a 1553 data bus. The federated approach to avionic architectures results in a much higher overall avionics Life Cycle Cost (LCC) and weight. Fighter aircraft in the year 2000 will incorporate integrated avionics because of the need to reduce aircraft LCC.

Common Module Hardware, JIAWG LRU's

The Joint Integrated Avionics Working Group (JIAWG) is the DoD tri-service standardization activity for common modular avionics hardware. Common avionics modules provide drastic reductions in aircraft Life Cycle Costs (LCC) by allowing two level aircraft maintenance and support structures. Module

acquisition and support costs are reduced due to production volume for tri-service applications. Common modular avionics allow the implementation of highly integrated avionic architectures which provide significant reductions in LCC and weight over federated avionic systems. Because of these benefits, common modular avionics will most assuredly be included on an agile fighter in the year 2000. Common modular avionics provides **significant benefits** to aircraft agility through reduction of overall avionics weight.

Ultra High Speed Data Busses

Highly integrated avionic architectures will require ultra high speed fiber optic data busses (>2 Gbits/sec) to provide serial point-to-point interconnection between numerous (up to 100) modular avionic resources. These busses will more than likely be incorporated into a photonic switched network similar to that used by the telephone company for long distance communications. Fiber optic data busses will help to reduce aircraft weight by eliminating heavier wire interconnects. Fiber optic data busses will also help to reduce aircraft observability because of reduced electromagnetic emissions versus wire based communication systems. An agile fighter in the year 2000 will probably contain a mix of conventional data busses and ultra high speed data busses or photonic switched data networks. Fiber optic data busses technology can provide **significant benefits** to aircraft observability through reduced electromagnetic emissions.

3.3.2 Radar Technologies

Air-to-Air Track-While-Scan Mode Radar

Track While Scan (TWS) is a key Air-to-Air (A/A) radar mode of operation which can track multiple targets while scanning for others within a defined search volume. This mode requires an "agile" antenna to revisit multiple targets while maintaining target tracks and completing the scan pattern selected. Upgrades replace old mechanically scanned antennas with heavier, more agile electrically scanning antennas (ESAs) to improve the TWS capability. This radar software mode drives the hardware size, cost, and weight. A future multi-role fighter aircraft will probably include TWS function as part of an overall Integrated Sensor System (ISS). TWS functionality provides **no impact** to aircraft agility or observability.

Air-to-Ground Mapping or Real Beam Mode Radar

Both the F-15 and F-18 have Air-to-Ground capability which adds to the weight and complexity of the radar system. Future air-to-ground modes of operation must improve to more precisely deliver ordnance, increasing the weight and cost. Several radar modes are used for air-to-ground aircraft operation, including Synthetic Aperture Radar (SAR). A future multi-role fighter aircraft will probably include this function as part of an Integrated Sensor System (ISS). Real beam ground mapping functionality provides **no impact** to aircraft agility or observability.

SAR Mode Radar

SAR modes are used to make detailed radar maps locating targets very precisely. This key A/G radar mode is one of the most complex and demanding radar modes. The resolution of the radar image has improved over the past 10 years by adding significant hardware and software modifications. Future modifications proposed include additional processing power, larger apertures, and costly software to improve this key radar function.

The agility of the aircraft is limited when making the radar maps. SAR maps cannot be made flying straight ahead. SAR maps require some angle off the velocity vector to get significant differential doppler. As this minimum angle is at least 5° and, more reasonably, 10°, the aircraft must maneuver to point toward the target after it makes its SAR map. When this is done, the accuracy of weapon delivery is reduced, since it takes some time to do this maneuver. SAR maps can be made while the aircraft is maneuvering. The F-15 is capable of making low resolution SAR maps while doing fairly rapid maneuvers. The motion compensation problem becomes much more difficult as finer SAR resolution is required. Higher resolution maps also require longer integration times (tens of seconds) demanding the pilot to remain off angle for a longer period. A future multi-role fighter aircraft will probably include the SAR function as part of an overall Integrated Sensor System (ISS). However, as described above, aircraft agility can be **negatively impacted** when making high resolution SAR maps.

Electronically Steered Array

A antenna beam can be steered either mechanically, physically moving the array or dish antenna, or electronically. The newer antenna arrays are composed of thousands of small elements which are phased or electrically aligned to generate a beam pattern. ESAs have much more complex hardware and can increase the radar system cost by 30 to 50%, while increasing the weight significantly in the nose. However, ESAs provide numerous benefits in performance and reliability over mechanically steered arrays, and will therefore probably be included on all future aircraft and major retrofits. An ESA could **negatively impact** aircraft agility (depending on aperture size and location) but **positively impact** aircraft observability if the ESA is not located in the aircraft nose.

Airframe Mounted Array

Several types of mounting for antenna arrays are implemented on fighter aircraft, two of which are pod-mounted and airframe-mounted. The pod usually contains all of the electronic apparatus, including system hardware, which is easily reconfigurable for special missions. The more common airframe mounting of arrays can limit the system flexibility. Airframe mounted arrays are used when permanent system capability or covert applications apply. Large detection range radars require bulky, heavy, and costly arrays permanently mounted usually with complicated mounting schemes. Several smaller arrays, permanently mounted, are part of baseline aircraft systems. Covert applications can require heavier radomes, additional special material, and unique mounting constraints. Aerodynamics are often compromised to achieve the spatial coverage required. The additional permanent weight, volume, and spatial coverage requirements would definitely impact the flight performance characteristics and bottom line costs.

Hybrid Steering (mechanical and electronic)

Hybrid steering of an antenna array is accomplished by using a combination of mechanical and electrical devices to steer an array or antenna dish. Three common methods of steering the antenna are: mechanical, electrical, and hybrid. Steering mechanically requires the use of leaky, unreliable hydraulics to point the array or antenna dish. Antenna steering electronically is accomplished by either adjusting phase on each element of the stationary array, as described above, or by replacing the hydraulic actuators with electronic devices to physically move the array or dish. However, steering the antenna with electronics adds more weight and cost than mechanical steering. The compromise is to use a combination (hybrid) of mechanical and electrical devices to move the array. Usually, movement in azimuth and adjustments for roll, pitch, and yaw for movable arrays of dishes are made electronically while elevation is made hydraulically. It is expected that future aircraft will **not** use a hybrid steering, opting instead for full two-dimensional electronic steering.

LPI TF/TA Mode Radar or Separate Radar Altimeter

Low Probability of Intercept (LPI) techniques include power management of RF emissions in air-to-ground (A/G) missions using lower levels of radiated power to perform the essential Terrain Following/Terrain Avoidance (TF/TA) radar mode. More advanced radar systems measure the altitude during the LPI TF/TA mode, avoiding the requirement for additional emissions of the altitude measurement. LPI refers to the use of techniques that lower the chances that surveillance will pick up the RF emission. LPI can be enhanced by reducing power, by spreading out the frequency spectrum, by reducing the sidelobes in the direction of the emitter, or by choosing an RF that will not be monitored, if there is such an RF. More advanced radars may integrate the altimeter function into the fire control radar. LPI functionality will **positively impact** aircraft observability.

All Aspect Radar System

The words "all aspect" usually refer to the capability of the radar to search for targets coming toward the aircraft (nose, or closing, targets) and those flying away (tail, or opening, targets). When long range radars were first installed in fighter aircraft around 1960, the HPRF (high pulse repetition frequency) waveform was used because it provides detection ranges several times that of LPRF systems. When the radar is looking down, there is a return from the earth (clutter) that the radar must handle. If the target is a nose target, the radar can reject the clutter in frequency, getting a resulting detection range that is affected only slightly by the residual of clutter after rejection is performed.

The problem with HPRF is that if a target is opening (running away), it will be indistinguishable in frequency from clutter. To handle this, a gating in time is needed to help resolve the target from clutter. Until 1975 and the F-15's APG-63, no one had the processor speed to do this. MPRF (medium pulse repetition frequency) does both time and frequency rejection of clutter, but at the expense of average power and non-clutter detection range.

Although MPRF is the standard today, the term "all aspect" still persists, harkening back to the aircraft radars that could not detect an opening target in a lookdown situation. By itself, an all aspect radar could **negatively impact** aircraft agility if not sized correctly for the aircraft mission. However, the all aspect radar will be replaced with an ISS in the 2000-2010 timeframe, providing **significant benefits** to an agile fighter through avionics weight reduction.

3.3.3 Sensor Technologies

Navigation FLIR

The Navigation Forward Looking Infrared Imaging Set (FLIR) provides the pilot with an infrared video picture of the lower forward sector ahead of the aircraft to provide a view of the "real world" terrain on the HUD, day or night, and during impaired atmospheric visibility. The navigation FLIR system also contains a terrain following radar system. Current generation FLIR systems are mounted in a self-contained pod installed installed under the aircraft. This results in higher aircraft drag, and higher observability. Another approach is to use an internally mounted FLIR which is retractable or one that uses optical windows on the aircraft. This approach provides improved aerodynamics and signature characteristics as compared to pod mounted systems, and would therefore probably be included on a highly agile fighter. FLIR capability will, in general, **negatively impact** aircraft agility (due to added weight) and observability (due to pod or IR windows).

Targeting FLIR

The Targeting FLIR provides the pilot with an infrared video picture of the lower forward sector ahead of the aircraft to locate and identify ground targets, day or night, and during impaired atmospheric visibility. The targeting FLIR system also contains automatic target tracker, Laser Designator and Ranger (LDR) and automatic target recognition electronics. As with the Navigation FLIR, the

Targeting FLIR is traditionally housed in a pod installed under the aircraft, resulting in higher aircraft drag, and higher observability. Future developments will combine the functions of navigation/targeting FLIR and laser target designation and ranging into a single integrated Electro-Optical (EO) sensor system which will significantly reduce overall system weight. This integrated EO system would probably be internally mounted on the next generation fighters.

Staring Focal Plane Array FLIR

A staring focal plane array FLIR contains a large two dimensional array of IR sensors which "stare" at a designated coverage outside of the aircraft. This approach eliminates the need for the mechanical gimbaling system found in traditional FLIRs, and should result in higher reliability and reduced system weight.

Mechanically Steered FLIR Sensor

Current generation FLIR systems use a gimballed IR sensor head to mechanically steer the sensor. Mechanical steering requires the use of leaky, unreliable hydraulics. It is expected that future aircraft will **not** use a mechanically steered FLIR sensor, opting instead for full two-dimensional staring focal plane array FLIR.

Low Light TV Sensor

A low light TV sensor is used to generate a video picture of the designated coverage outside of the aircraft under low ambient light conditions. This video can then be displayed on one of the cockpit displays or on a helmet mounted display. This feature is desirable to provide the pilot with a "real world" view of the terrain below the aircraft and would probably be found in most future fighter aircraft. A low light TV sensor provides **no impact** to aircraft agility or observability.

Integrated Airframe/Weapon Sensor Synchronization

Synchronization of the airframe sensors to the weapon sensors can provide significant benefits in weight reduction and targeting accuracy. Synchronization of the airframe sensors to the weapon sensors should reduce overall aircraft weight by eliminating redundant sensor functions that may be present in the airframe or weapon. This capability should provide **significant benefits** to aircraft agility by reducing weight and allowing the pilot to achieve better weapons accuracy while maneuvering.

"Smart Skins" Sensors

The term "Smart Skins" can apply to a variety of sensor types. The first type of sensor consists of a relatively simple sensor, typically optical, which is embedded in an aircraft structure (typically composite) to perform monitoring of aircraft parameters such as structural load analysis. With the ability to continuously monitor wing loads and deflections, lighter and more flexible wings can be designed for optimum aircraft performance. The types of sensors to accomplish this are commonly referred to as "smart structures". Another more complex type of

smart skin sensor involves embedding an electronic sensor array with associated control/processors into an aircraft structure. This type of "smart skin" can have tremendous benefits to aircraft agility and observability. Aircraft weight can be reduced because the sensor apertures can be optimally sized and located in the aircraft structure. Aircraft observability is reduced because the sensor can made to be conformal to the aircraft structure. "Smart Skins" are currently in the very early stages of development, and would therefore probably not find extensive use on a 2000 TAD aircraft. However, an agile fighter in the year 2000 would contain an Integrated Sensor System (ISS) which accommodates the functions of Radar, CNI, and EW using a common set of modular RF hardware and conformal multi-function apertures. "Smart Skins" technology can provide **significant benefits** to aircraft agility and observability through through size and weight reductions of the sensor apertures.

3.3.4 Navigation/Communication Technologies

On-Board Automated Navigation/Mission Planning System

Pilots currently use ground-based mission planning systems to plan the aircraft mission based on latest known target and threat locations. Unfortunately target and threat locations can change, requiring the need to dynamically re-plan the mission en-route. An On-Board Automated Navigation/Mission Planning System would provide the capability to receive and act upon updated target or threat information. Using this updated information, a new route to the target area can automatically be generated. Because of the need for dynamic mission re-planning, future fighter aircraft will include an On-Board Automated Navigation/Mission Planning System. This system will add slightly to the avionics weight but will have **minimal impact** to overall aircraft agility.

JTIDS Data Link System

The Joint Tactical Information Distribution System (JTIDS) is a spread-spectrum, digital, line-of-sight communication system being developed and fielded by the US government. JTIDS provides both an aircraft-to-aircraft link as well as a aircraft-to-C^3I platform link. JTIDS information provided to the aircrew includes information on threats, aircraft within the vicinity, flight group coordination messages, and secure voice. JTIDS also provides a relative navigation mode whereby aircraft within a flight group know their relative positions to a high degree of certainty. An agile aircraft could benefit greatly by utilizing the JTIDS message network. Targeting information from off-board sensors could be routed to the aircraft, thereby allowing it to carry only those tactical sensors which are deemed critical. JTIDS would provide **significant benefits** to aircraft agility by reducing avionics weight using off-board sensor assets.

GPS System

The Global Positioning System (GPS) is a satellite system through which a user can calculate his three-dimensional position around the earth to within 10 meters. The system also gives each user an accurate time reference signal. The system employs a constellation of non-geosynchronus satellites whereby the user has at

least three satellites "visible" at any given time. Each satellite transmits information peculiar to itself which enables the user the accurately triangulate his position. GPS in itself has **no impact** on aircraft agility or observability.

RLG INS System

The Ring Laser Gyro (RLG) Inertial Navigation System (INS) is a self-contained, fully automatic dead reckoning system. The RLG INS detects aircraft velocity, position, and attitude changes, and provides a continuous indication of aircraft position by double integration of acceleration since leaving a starting point. The INS provides the primary source of aircraft position, attitude, and ground speed. A strapdown RLG INS provide approximately 60% weight reduction over traditional gimballed INS (the F-15E RLG INS weighs 60 pounds and the F/A-18 mechanically-gimballed INS weighs 146 pounds). Future INS developments include replacing the RLG sensor assembly with Fiber Optic Gyros (FOG) for additional weight savings and using a smaller/lighter/less accurate INS aided with Global Positioning System (GPS) data. An agile fighter in the year 2000 will most likely have a RLG or FOG INS system aided with GPS. A RLG INS provides only **minimal benefits** to aircraft agility (through weight reduction), and provides **no impact** on aircraft observability.

3.3.5 Fire Control/Target Designation Systems

Integrated Fire/Flight Control System

Integrated Fire/Flight Control (IFFC) increases aircraft lethality and survivability and reduces pilot workload by integrating the pilot with the flight control and fire control systems. In air-to-air scenarios, IFFC enables all-aspect gunnery and assists the pilot in flight path optimization for gun/missile encounters. IFFC provides **significant benefits** to agility by allowing the pilot to shoot off-boresight while maneuvering the aircraft. Because of the numerous benefits of IFFC, this feature would undoubtedly be included on all future fighter aircraft.

Laser Designation

The Laser Designator system emits a beam of laser light to "illuminate" a ground target to provide and optical path to "steer" laser guided munitions to the target area. The laser designator is traditionally housed in a pod installed under the aircraft. This results in higher aircraft drag and higher observability. Future developments will combine the functions of laser target designation and ranging into a single integrated Electro-Optical (EO) sensor system which is installed internally.

Laser Ranging/Designation (LRD) System

The Laser Designator and Ranger (LDR) system emits a beam of laser light to "illuminate" a ground target. Once the target is illuminated, part of the light is reflected back off of the target, received by the LDR system, and used to calculate distance to the target to provide for more accurate weapons delivery. The LDR system is typically considered to be an integral part of the Targeting FLIR system. As mentioned earlier,

the Targeting FLIR is traditionally housed in a pod installed under the aircraft. Future developments will combine the functions of navigation/targeting FLIR and laser target designation and ranging into a single internally mounted integrated Electro-Optical (EO) sensor system.

3.3.6 Components/Materials Technologies

VHSIC Phase I Components

The Very High Speed Integrated Circuits (VHSIC) program was a DoD/Industry initiative to research and develop breadboard microelectronics targeted primarily towards digital computer applications (processors, memory, etc). Benefits of VHSIC technology are increased speed, throughput, and memory density.

VHSIC Phase II Components

VHSIC Phase II was a follow-on program to build and test operational systems for insertion into production systems. VHSIC Phase II components were first transitioned under the PAVE PILLAR program to develop a small family of common avionic modules which would achieve significant reductions in avionics Life Cycle Cost. VHSIC technology can provide **significant benefits** to aircraft agility through reduction of overall avionics weight.

MMIC Components

The evolving Microwave Monolithic Integrated Circuit (MMIC) technology is common in high frequency equipment (receivers, transmitters, phased arrays, etc) similar to low frequency integrated circuit (IC) chips being common to digital computers. Two of the more frequently used MMIC component fabrication materials are silicon (Si) and gallium arsinide (GaAs). Silicon components are cheaper to fabricate but have limited high frequency (up to approximately 3 GHz) application. GaAs is used for higher frequency microwave devices. The MMIC components continue to play a key part in reducing cost, weight, and volume.

The USAF PAVE PACE program is heavily leveraging MMIC technology to develop an Integrated Sensor System (ISS) which accommodates the functions of Radar, CNI, and EW using a common set of modular RF hardware and conformal multi-function apertures. MMIC technology can provide **significant benefits** to aircraft agility through reduction of overall avionics weight.

GaAs Components

GaAs substrates are processed to fabricate the devices (amplifiers, switches, limiters, etc) forming the MMIC chip capable of operating at tens of gigahertz. More highly integrated GaAs MMIC devices continue to replace the heavy and bulky microwave components. Depending on the application and production volume, cost can also be reduced by using GaAs. GaAs technology can provide **significant benefits** to aircraft agility through reduction of overall avionics weight.

3.3.7 Advanced Displays

Helmet Mounted Display

Helmet Mounted Displays (HMD) are miniature video projection systems in the pilot's helmet which can display vital aircraft information directly onto the pilot's helmet visor. The information displayed can include aircraft information typically found on the Heads Up Display (HUD) such as aircraft pitch angle, angle of attack, ground speed, altitude, and shoot queues. HMDs help to increase the pilot's situational awareness by providing ready access to pertinent data, and therefore help to increase survivability. Current generation HMDs are monochrome and somewhat bulky, although breakthroughs in performance and size are occurring rapidly. Full function HMDs will probably replace HUDs in the post 2000 time frame. Color HMDs are currently in the experimental stage, but should be widely available by the year 2010. HMDs provide **significant benefits** to aircraft agility by providing the pilot with better situational awareness.

3.3.8 Self-Protection Systems

Laser Hardening Technologies

Laser weapons represent a major threat to the pilot. There are a variety of technologies for providing laser protection for the pilot, ranging from very simple to very complex, depending on the severity of the laser threat.

Low level threats may be defeated through optical coatings on the cockpit canopy or pilot's helmet visor. More serious laser threats must be countered through the use of an Electronic Imaging System (EIS). The EIS involves the use of an opaque helmet visor, a system to track the pilot's head movement, and numerous video cameras to view the outside world. In the event of a laser threat, the visor is deployed and the pilot then "sees" the outside world projected on the inside of his visor. The cameras automatically track his head motions to provide the pilot with full situational awareness. An EIS or its equivalent may be mandatory on future aircraft if laser threats continue to proliferate.

Laser hardening by itself provides **no impact** to aircraft agility or observability. However, the EIS concept could provide **significant benefits** in the design of agile and low-observable aircraft if used as the primary flight instrument in a "windowless" aircraft.

Missile Warning/UV Plume Detection System

Missile Warning/UV Plume Detection Systems contain several IR/UV sensor arrays (typically 4 to 6 arrays) distributed around the airframe to provide full hemispherical coverage of missile launch detection. These sensors are essentially staring focal plane array sensors and have **minimal impact** on aircraft agility.

Passive Self Protection Systems (chaff/flare expendables)

Passive Self Protection Systems are an integral part of an aircraft's Electronic Warfare (EW) suite and are used to dispense self-protect countermeasure "decoys" to confuse enemy tracking systems. The passive self-protect system contains an internally-mounted dispensing system which can be used either manually or automatically to deploy countermeasure decoys such as "chaff" to confuse radar guided missiles, or "flares" to confuse IR guided or heat seeking missiles. All future fighter aircraft will probably contain some sort of passive self-protect system to dispense countermeasure decoys. Passive self-protection systems in general have **no impact** on aircraft agility or observability.

Active Self Protection System (ASPJ, IR jammer, or similar)

Two sensor types are common for self protection, RF and IR. The Navy ASPJ (AN/ALQ-165) is one of several avionic RF Electronic Warfare (EW) systems to counter enemy radar. RF signals are emitted to confuse the enemy radar system causing incorrect target information. There are other systems on the aircraft to counter Infrared (IR) threats. The EW suite also dispenses flares hotter than the aircraft exhaust to provide a false target to heat-seeking missiles. The importance of EW to aircraft survival is increasing as weapons improve. Significant cost and weight is associated with the EW equipment. Unfortunately, EW system installation often **negatively impacts** aerodynamics by adding apertures and equipment, the removing or redesign of airframe structures, and the addition of long lengths of heavy cable. Not every aircraft carries active RF countermeasures, but most carry chaff/flare dispensers.

3.4 ENGINE CYCLE TRADES

As part of the overall technology assessment for the Agility Design Study, it was necessary to evaluate the impact of engine cycles and technology on overall vehicle performance and sizing. A brief study was conducted to determine the optimum engine cycles and technologies for a multi-role class aircraft with a variety of mission, performance, weight, and aerodynamic levels.

The study used MDA's Computer Aided Design and Evaluation (CADE) aircraft sizing code. The CADE sizing code is described in detail in section 5.1.4.
The study missions and energy/maneuvering (EM) requirements are also described later, in section 5.2. The dominant (sizing) mission was the air-to-ground (A/G) Battlefield Air Interdiction (BAI) mission. The air-to-air (A/A) Defensive Counter Air (DCA) mission was by far the less demanding of the two missions, using only 80-83% of the available internal fuel to meet the required radius.

3.4.1 Study Aircraft Description

In order to study the sensitivity of aircraft takeoff gross weight (TOGW) to various mission requirements and engine parameters, an existing set of sizing/performance inputs for a multi-role class aircraft, Model 2002 was employed. Figure 3.4.1 shows isometric views of Model 2002. The propulsion information was generated using Pratt

and Whitney Customer Computer Deck CCD1178-10.3, with F/A-18C/D installation losses.

3.4.2 Engine Parametrics

This study was conducted in two parts. The first part determined which of several engine parameters were players in minimizing aircraft TOGW, given the mission and EM/acceleration requirements. In the second part these engine parameters were varied along with the airframe parameters and mission and EM/acceleration requirements to determine TOGW sensitivities to guide the engine technology decision.

The parameters investigated in the first and second parts of the study are shown in the table below:

ENGINE PARAMETER	RANGE STUDIED
Bypass Ratio, BPR	0.3 - 1.8
Throttle Ratio, THTR	1.04 - 1.10
Inlet Recovery, PT2/PT0	Baseline (F/A-18), -1%, -2%
Overall Pressure Ratio, OPR	31.0 - 35.0
Combustor Exit Temperature, CET	3400 - 3600 °F

AIRFRAME, MISSION OR EM/ACCEL PARAMETER	RANGE STUDIED
BAI Cruise Altitude	15K, 35K
EM Point Nz_{sust}	Baseline, +0.5g
Accel time	60 sec, 80 sec
Supersonic Wave Drag	Baseline, ±6 sq ft C_DS
Drag Due-to-Lift	Baseline, ±20%
Dead Weight Increment	0, ±2000 lbs
DCA Dash Mach Number	1.4, 1.5, 1.6

Figures 3.4.2 and 3.4.3 depict the results of the first half of this study, where engine parameters were varied one-at-a-time about a baseline case and the airframe was sized using the baseline missions and EM/acceleration points. The results indicate that all parameters should be maximized with the exception of bypass ratio (BPR). For the baseline BAI mission and EM/acceleration requirements the optimum BPR appears to be approximately 1.4. The payoff is not very large, with only a 400 lb TOGW variation across the BPR range, suggesting that it might be possible for the optimum bypass ratio to change if mission and/or airframe parameters changed. This possibility was investigated in the second half of the trade.

3.4.3 Sensitivity to Aircraft/Mission Parameters

Using the results in Figures 3.4.2 and 3.4.3, the decision was made to vary only BPR during the second portion of the study, holding all other engine parameters at or near

their maximum values. The baseline engine parameters then became an OPR of 35, CET of 3600 °F, and a THR of 1.07 (since there was little payoff in going to 1.10).

The second portion of this study varied engine bypass ratio, mission parameters, EM/acceleration requirements, and airframe parameters such as weight and drag to identify the key parameters which affect the optimal engine cycle for a multi-role class aircraft. With this information, the best engine cycle could be chosen for each of the nine (9) vehicles in the agility/observables matrix by examining only these key parameters, rather than repeating an engine-cycle trade nine times.

Figure 3.4.4 shows the sensitivity of sized-aircraft TOGW to engine bypass ratio for each of the individual variations made to airframe parameters and mission and EM/acceleration requirements. With the exception of changing the BAI cruise altitude to 35,000 ft, every curve shows the optimized airframe occurring at a BPR of approximately 1.40. For the higher BAI cruise altitude, the curve flattens out and the optimum occurs at a BPR of 0.80. This suggests that the BAI mission, and in particular the relatively low cruise altitude (15,000 ft), are driving the optimum engine cycle to the higher levels of bypass ratio.

Additional insight can be gained by forcing the airframe to size to the DCA mission, allowing the BAI mission radius to become a fallout. Under these conditions, the optimum BPR was found to be less than or equal to 0.3, again suggesting that the optimal BPR level is being driven primarily by the BAI mission. Also, when the DCA mission was used for sizing, the optimum TOGW was approximately 28,000 lbs, roughly 8500 lbs less than the baseline vehicle sized to the BAI mission.

Figure 3.4.5 presents the same TOGW sensitivities as Figure 3.4.4, but more clearly shows the actual TOGW increments associated with each mission, EM/acceleration, or airframe parameter change. It is clear that the increments are relatively insensitive to the engine cycle, suggesting that there is unlikely to be a large variation in optimum engine cycle for vehicles of different characteristics.

Summary of Controls Technologies Qualitative Assessments

	Aerodynamic Control Potential						Ratings	
	Pitch		Roll		Yaw			
Angle of attack:	Low	High	Low	High	Low	High	Observ.	Integ.
Forebody Controls								
Deflectable Chines	4	1	-	-	4	2	5	4
Chine Venting	4	1	-	-	5	3	4	4
Forebody Strakes/Fins	5	4	-	-	5	1	3	3
Forebody Flaps	5	2	-	-	5	3	2	2
Forebody Fences	5	2	-	-	5	4	2	3
Forebody Blowing	4	3	-	-	4	1	1	3
Forebody Porosity	5	3	-	-	5	1	2	2
Wing Controls								
Ailerons	-	-	1	3	-	-	2	1
Elevons/Flaperons	1	3	-	-	-	-	2	1
Leading-Edge Slats / Flaps	2	2	2	4	-	-	3	2
Thrust-Blown Flaps / Elevons	1	2	-	-	-	-	2	3
Split Ailerons	-	-	-	-	3	2	2	2
Spoilers	-	-	2	3	3	4	3	2
All-Moving Wing Tips	2	2	2	3	-	-	3	4
Porous Wing Edges	4	2	4	2	-	-	2	3
Leading-Edge Suction / Blowing	5	2	4	2	-	-	4	5
Tangential Wing Blowing	5	2	4	1	-	-	2	5
Aft-Body Controls								
Horizontal Tail	1	3	3	4	-	-	2	1
V-Tail	2	5	3	3	2	3	2	2
Vertical Tail (All-Moving)	-	-	-	-	1	4	4	1
Vertical Tail (with Rudder)	-	-	-	-	1	5	4	1
Thrust-Blown Elevons	1	2	-	-	-	-	1	3
Body Flaps (Plain)	1	3	-	-	-	-	2	2
Body Flaps (Split)	5	3	-	-	-	-	2	3
Air Dams	3	5	-	-	-	-	2	3
Pop-up Yaw Effectors	-	-	-	-	3	3	2	3
Other Controls Technologies								
Canard	1	3	-	-	3	2	3	2
Vertical Fins / Other Fins	-	-	-	-	2	2	4	4
Thrust Vectoring	2	2	-	-	2	2	2	3
Fluidic Thrust Vectoring	2	2	-	-	2	2	1	2

(Ratings are on a 1-5 scale, with (1) representing high control potential/easy integration)

Figure 3.1.1

Summary of Aerodynamic/Controls Weights Data

Technology / Control Device	"Average" Weight	"Average" Unit Weight	Aircraft	Weight (lbs)	Size (sq ft)	Unit Wgt (lb/sqft)
Forebody Vortex-Control Technologies						
Forebody Strakes/Fins	208	13.9	F/A-18 HARV	208	15.0	13.9
Forebody Flaps	148	14.9	MRF 1206	148	9.9	14.9
Forebody Fences	135	12.6	MRF 1206	135	10.7	12.6
Wing Control Technologies						
Conventional Ailerons (Tailed Aircraft)	N/A	6.9	F-15A	172	26.5	6.5
			F/A-18A	176	24.4	7.2
Conventional Ailerons (Other Aircraft)	N/A	12.3	YF-23	368	28.2	13.0
			F-117	547	38.6	14.2
			MRF 2002	231	23.8	9.7
Conventional Elevons / Flaperons	N/A	9.8	F-16A	333	31.3	10.6
			YF-23A	463	50.6	9.2
			F-117	508	46.0	11.0
			MRF 2002	172	20.5	8.4
Leading-Edge Slats	N/A	12.3	F-4E	616	36.5	16.9
			F-14A	378	46.2	8.2
			F-111F	510	56.4	9.0
			T-45A	187	12.4	15.1
Leading-Edge Flaps	N/A	12.0	F-5E	135	12.3	11.0
			F-16C	479	36.7	13.1
			F/A-18	589	46.2	12.7
			YF-23	598	49.6	12.1
			Adv Concept	179	15.8	11.3
Thrust-Blown Flaps / Elevons (Delta)	N/A	2.3	A-12	63	27.0	2.3
Split Ailerons (Delta)	N/A	4.5	Adv Concept	253	56.5	4.5
Spoilers	N/A	11.0	F-4B	120	10.9	11.0
			F-14A	331	21.2	15.6
			F-105B	237	18.7	12.7
			A-12	1142	102.8	11.1
Wing Blowing (Delta)	N/A	3.6	F-4B LE Flaps	170	41.0	4.2
			A-5A TE Flaps	230	69.0	3.3
			F-4B TE Flaps	52	29.0	1.8

Figure 3.1.2

Summary of Aerodynamic/Controls Weights Data

Technology / Control Device	"Average" Weight	"Average" Unit Weight	Aircraft	Weight (lbs)	Size (sq ft)	Unit Wgt (lb/sqft)
Aft-Body / Empennage Control Technologies						
Horizontal Tail	N/A	11.4	F-14A	1734	140.0	12.4
			F-15A	1408	111.0	12.7
			F-16C	753	64.0	11.8
			F/A-18	828	88.0	9.4
			Adv Concept	1049	100.0	10.5
V-Tail	N/A	13.4	YF-23	2652	197.0	13.5
			Adv Concept	1533	115.0	13.3
All-Moving Vertical Tail	N/A	9.4	A-5A	927	101.0	9.2
			F-117	892	95.0	9.4
Vertical Tail with Rudder	N/A	7.1	F-14A	936	118.0	7.9
			F-15A	780	124.0	6.3
			F-16A	457	55.0	8.3
			F/A-18	645	104.0	6.2
			Adv Concept	717	104.0	6.9
Air Dams	241	15.8	MRF 1206	241	15.3	15.8
Other Control Technologies						
Canard	N/A	11.7	X-29	489	36.0	13.6
			F-15 SMTD	1432	88.0	16.3
			Adv Concept	717	64.0	11.2
			Adv Concept	826	64.0	12.9
			Adv Concept	927	85.0	10.9
Vertical Fin / Other Fins (Fixed)	N/A	4.1	F-14A	89	19.0	4.7
			F-16A	44	13.0	3.4
			F-111F	91	25.0	3.6
			AV-8B	29	6.0	4.8
Mechanical Thrust Vectoring	See Figure 3.1.37		F-15 SMTD	1060	-	-
			MRF 1207	500	-	-
Fixed-Aperture Thrust Vectoring	See Figure 3.1.37		Adv Concept	1090	-	-
			MRF 1208	900	-	-
Other Aerodynamic Technologies						
Forward Sweep Wing (Delta)	N/A	1.3	X-29A	190	189.0	1.0
			Adv Concept	850	560.0	1.5

Figure 3.1.2 (cont)

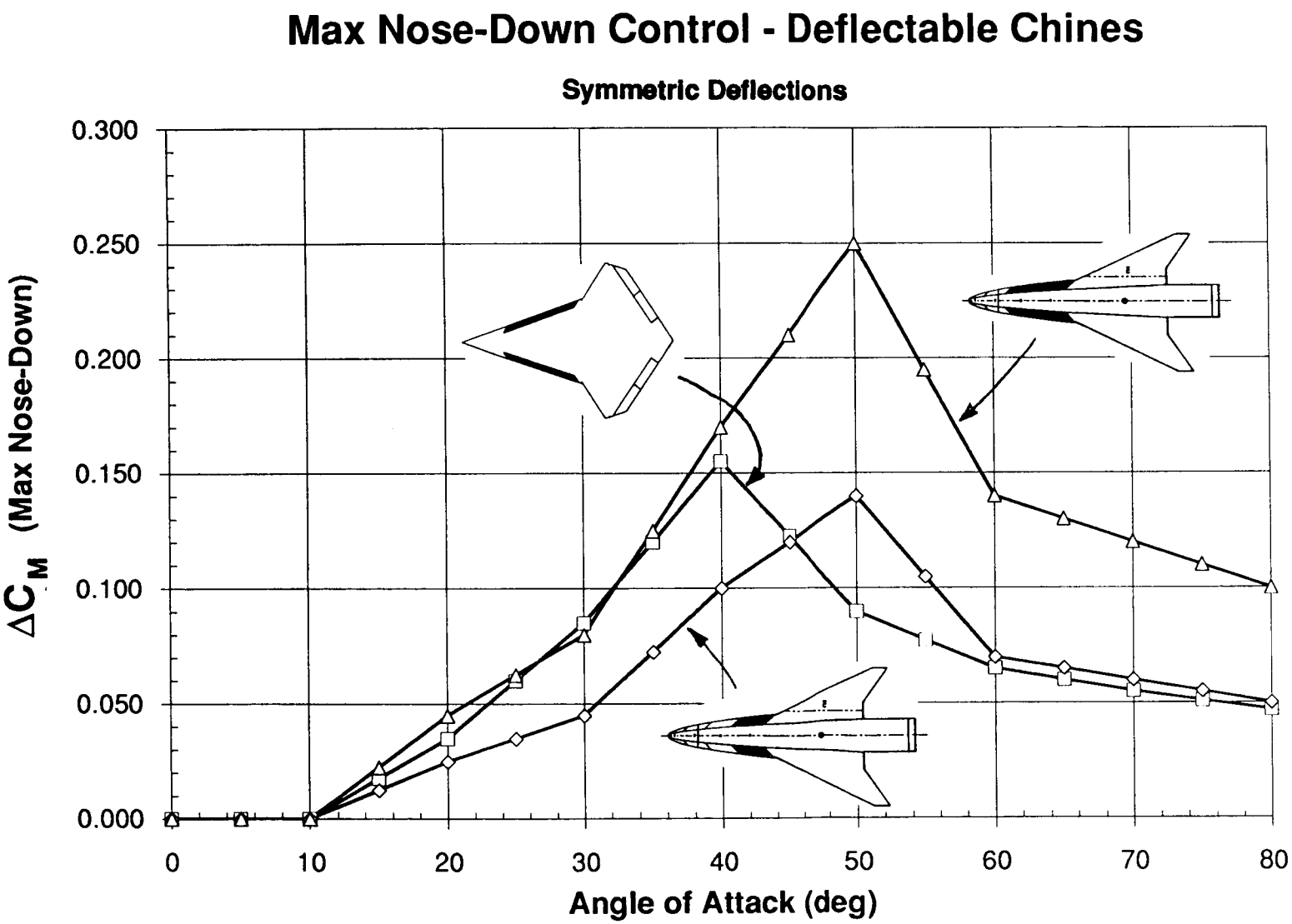
Max Nose-Down Control - Deflectable Chines
Symmetric Deflections
0.300
0.250
0.200
0.150
0.100
0.050
0.000
ΔC_M (Max Nose-Down)
0
10
20
30
40
50
60
70
80
Angle of Attack (deg)

Figure 3.1.3

Max Yaw Control - Deflectable Chines

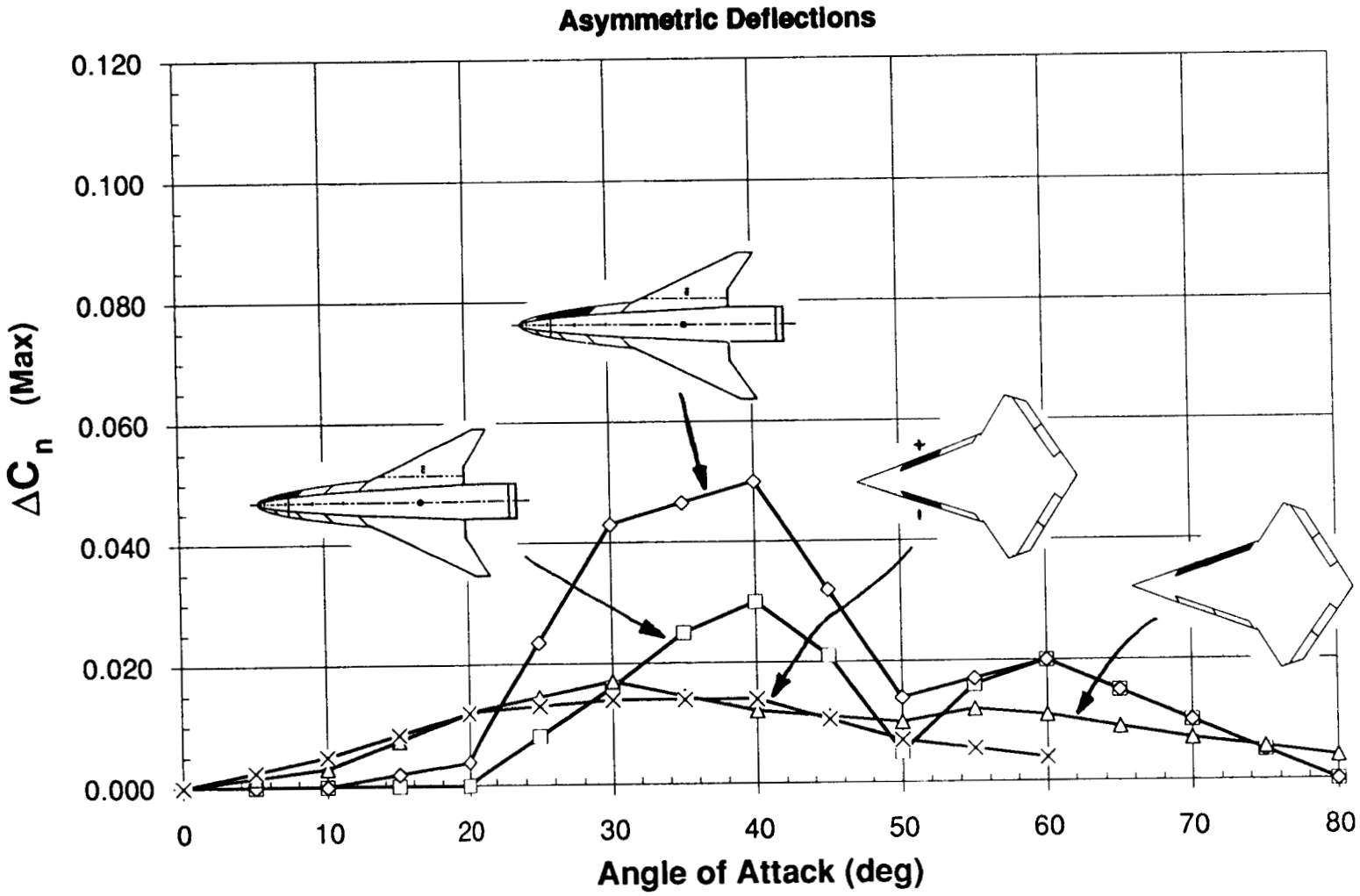

Figure 3.1.4

Max Nose-Down Control - Chine Venting

Symmetric Deflections

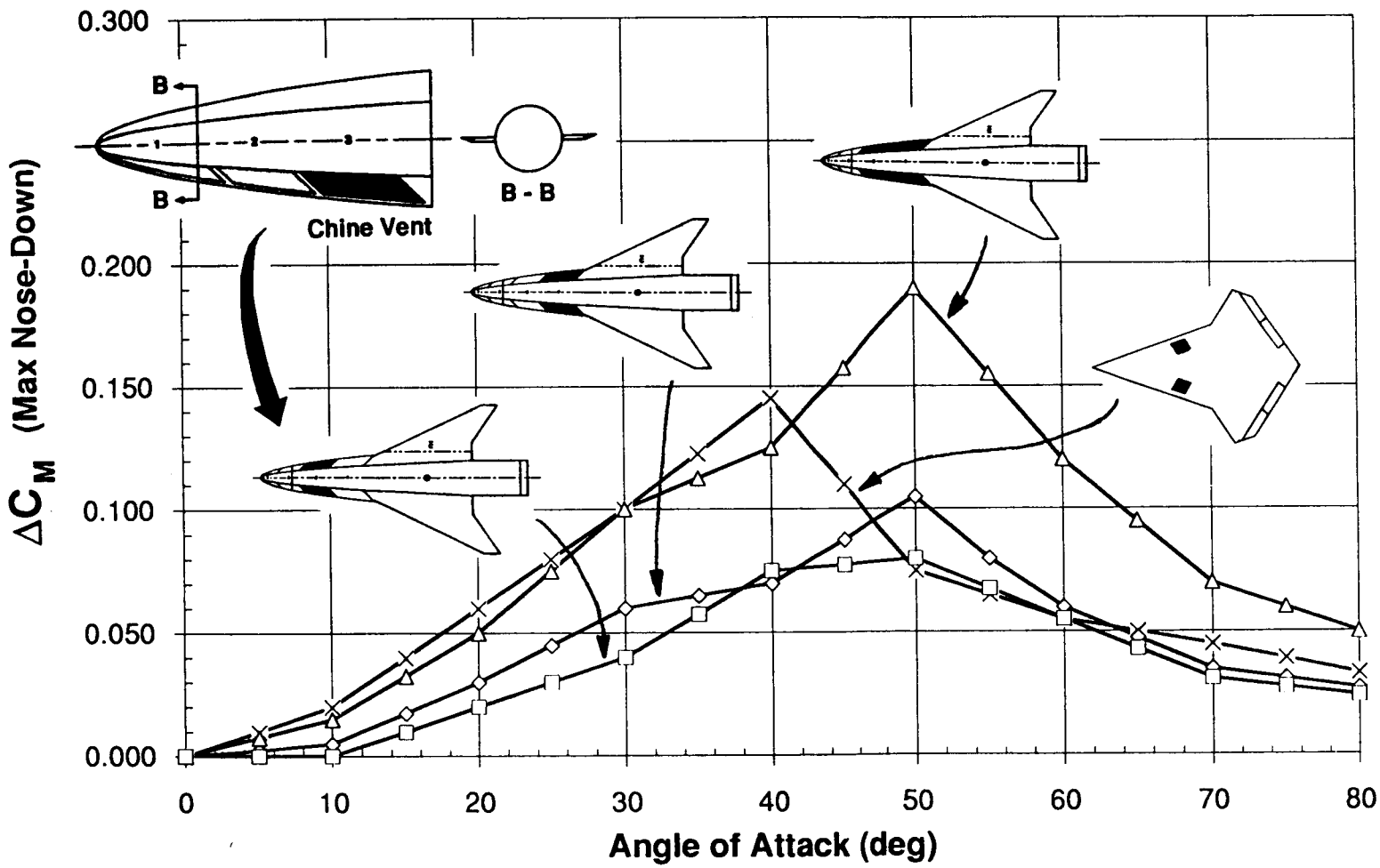

Figure 3.1.5

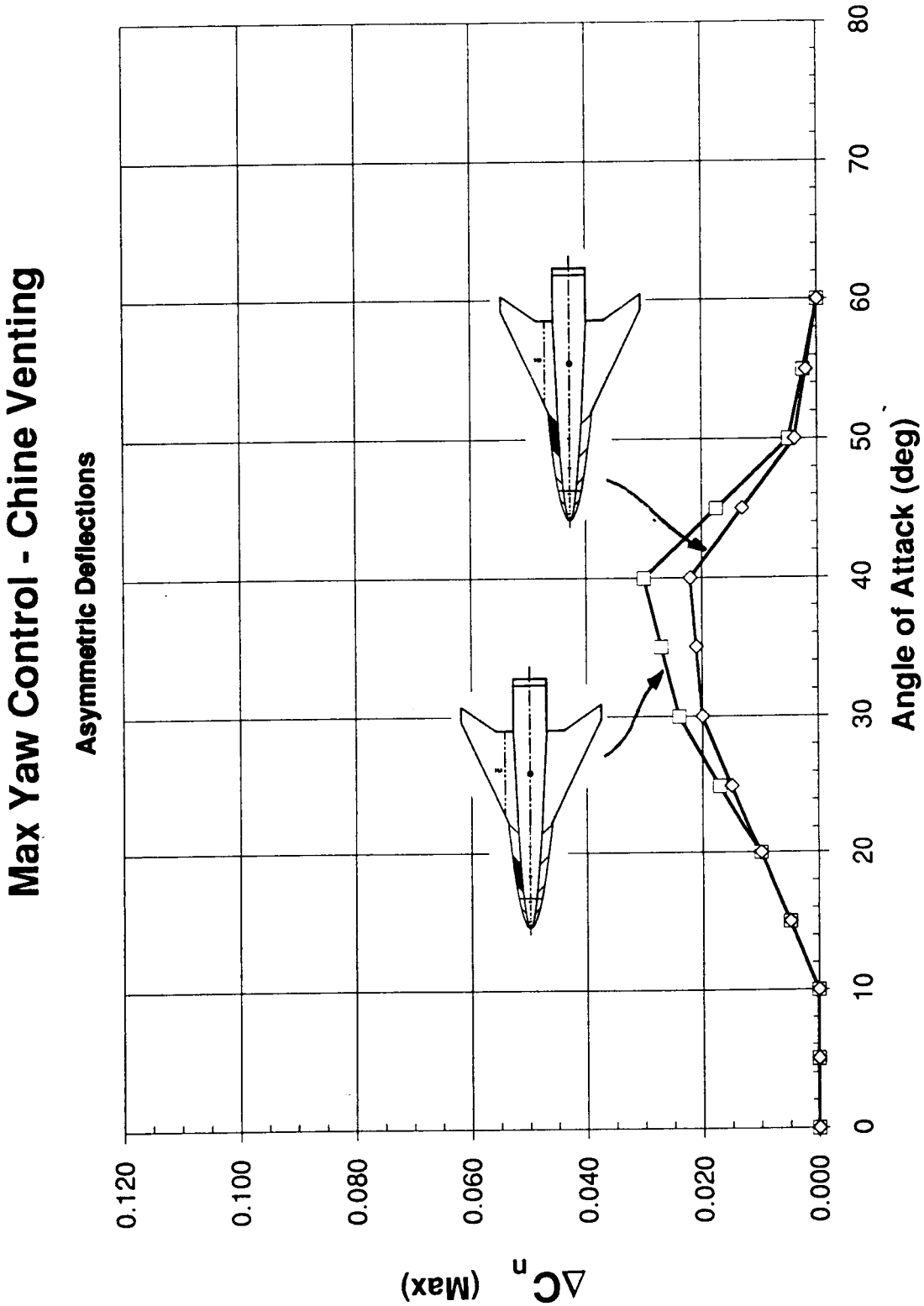
Max Yaw Control - Chine Venting
Asymmetric Deflections
0.120
0.100
0.080
0.060
0.040
0.020
0.000
ΔC_n (Max)
0
10
20
30
40
50
60
70
80
Angle of Attack (deg)

Figure 3.1.6

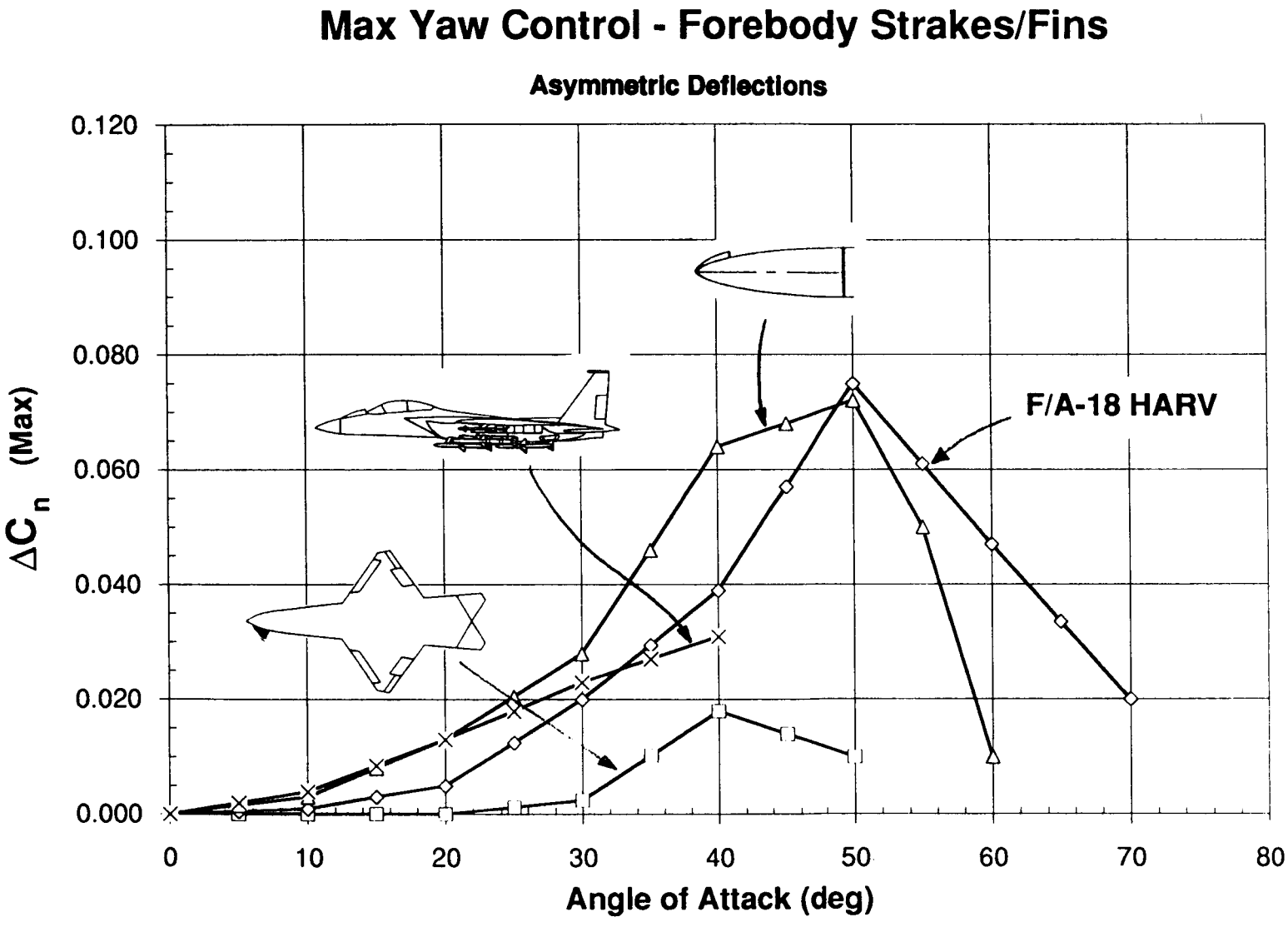
Max Yaw Control - Forebody Strakes/Fins
Asymmetric Deflections
0.120
0.100
0.080
0.060
0.040
0.020
0.000
ΔC_n (Max)
0
10
20
30
40
50
60
70
80
Angle of Attack (deg)
F/A-18 HARV

Figure 3.1.7

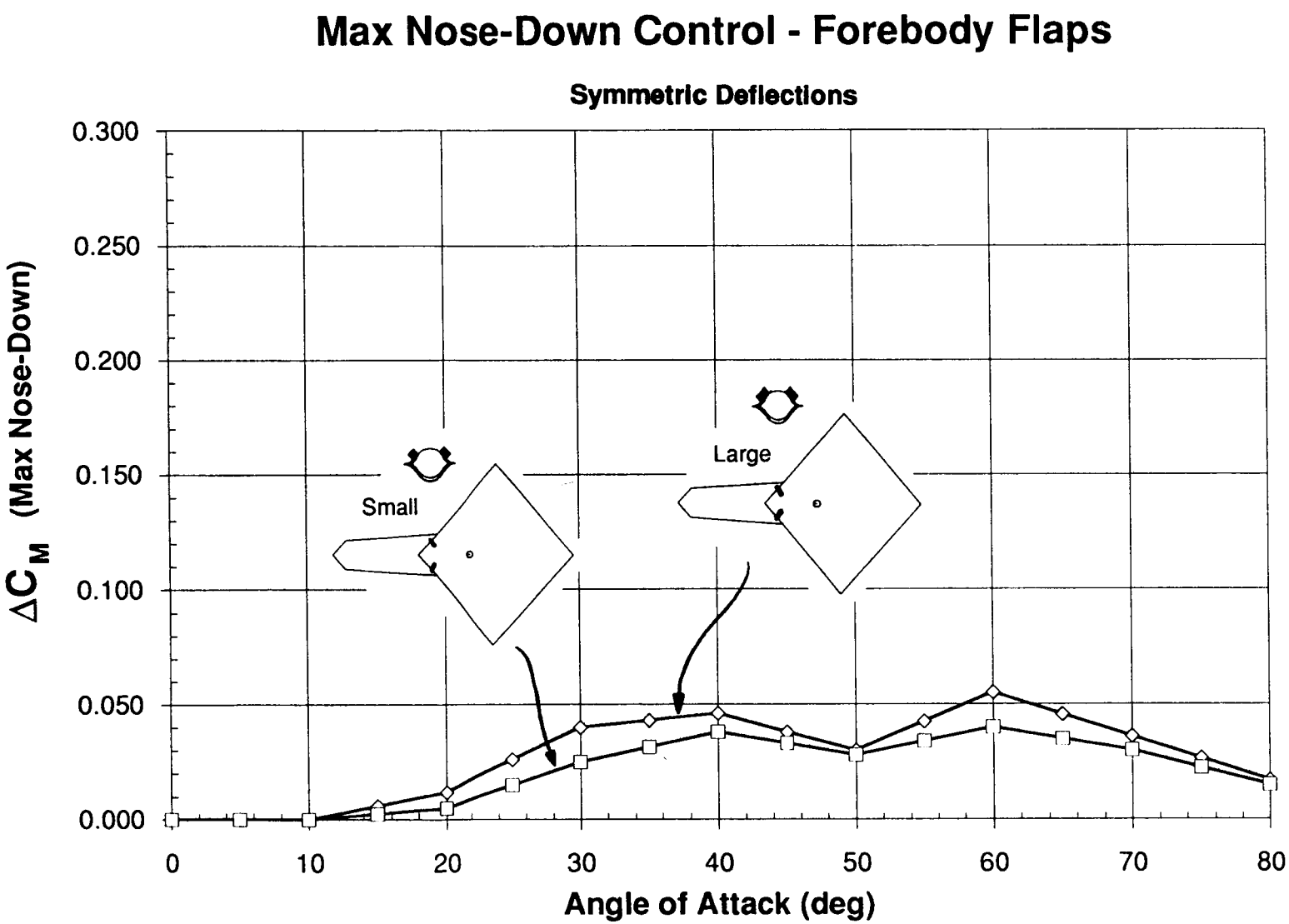
Max Nose-Down Control - Forebody Flaps
Symmetric Deflections
0.300
0.250
0.200
0.150
0.100
0.050
0.000
ΔC_M (Max Nose-Down)
Small
Large
0
10
20
30
40
50
60
70
80
Angle of Attack (deg)

Figure 3.1.8

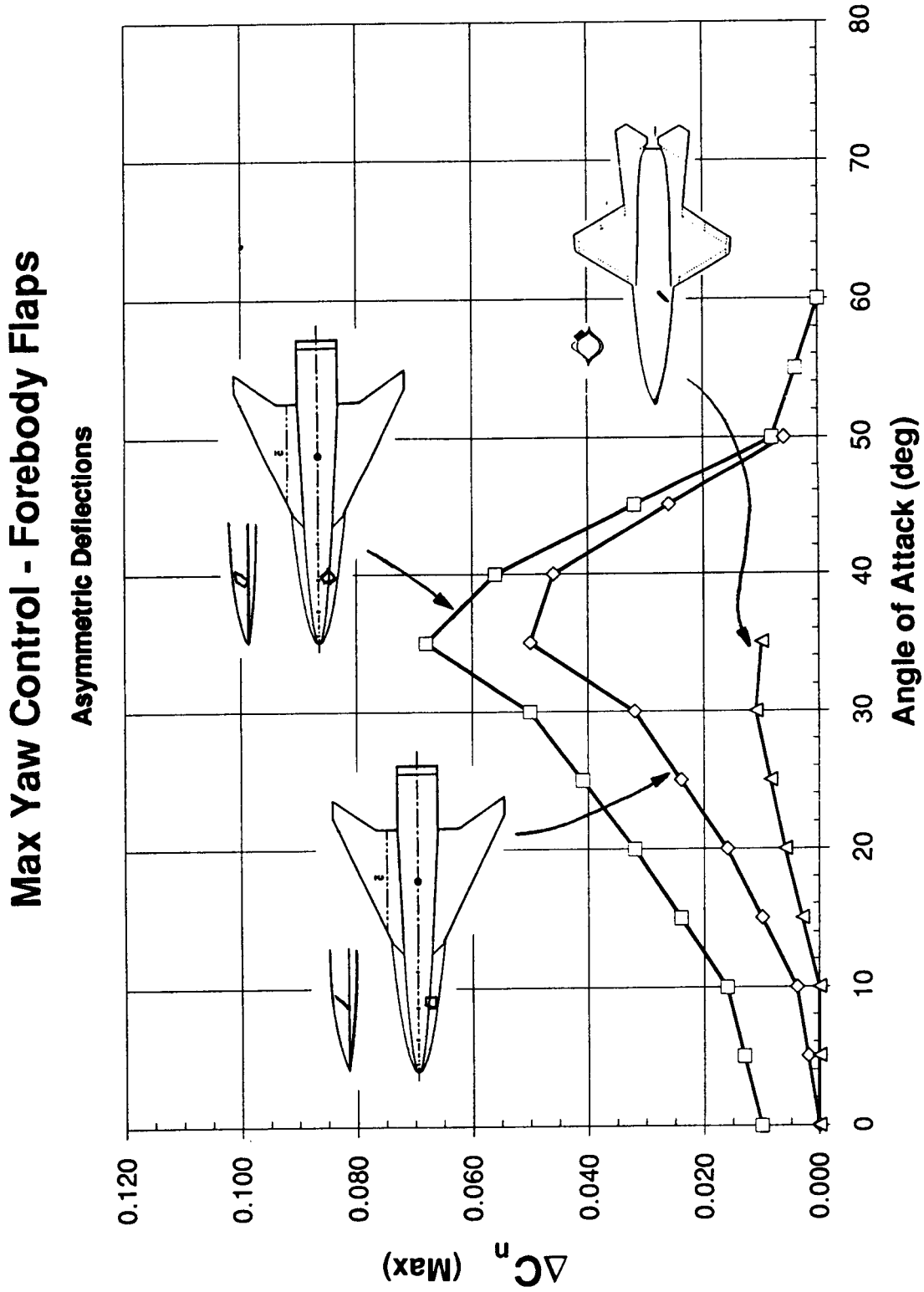
Max Yaw Control - Forebody Flaps
Asymmetric Deflections
ΔC_n (Max)
0.120
0.100
0.080
0.060
0.040
0.020
0.000
0
10
20
30
40
50
60
70
80
Angle of Attack (deg)

Figure 3.1.9

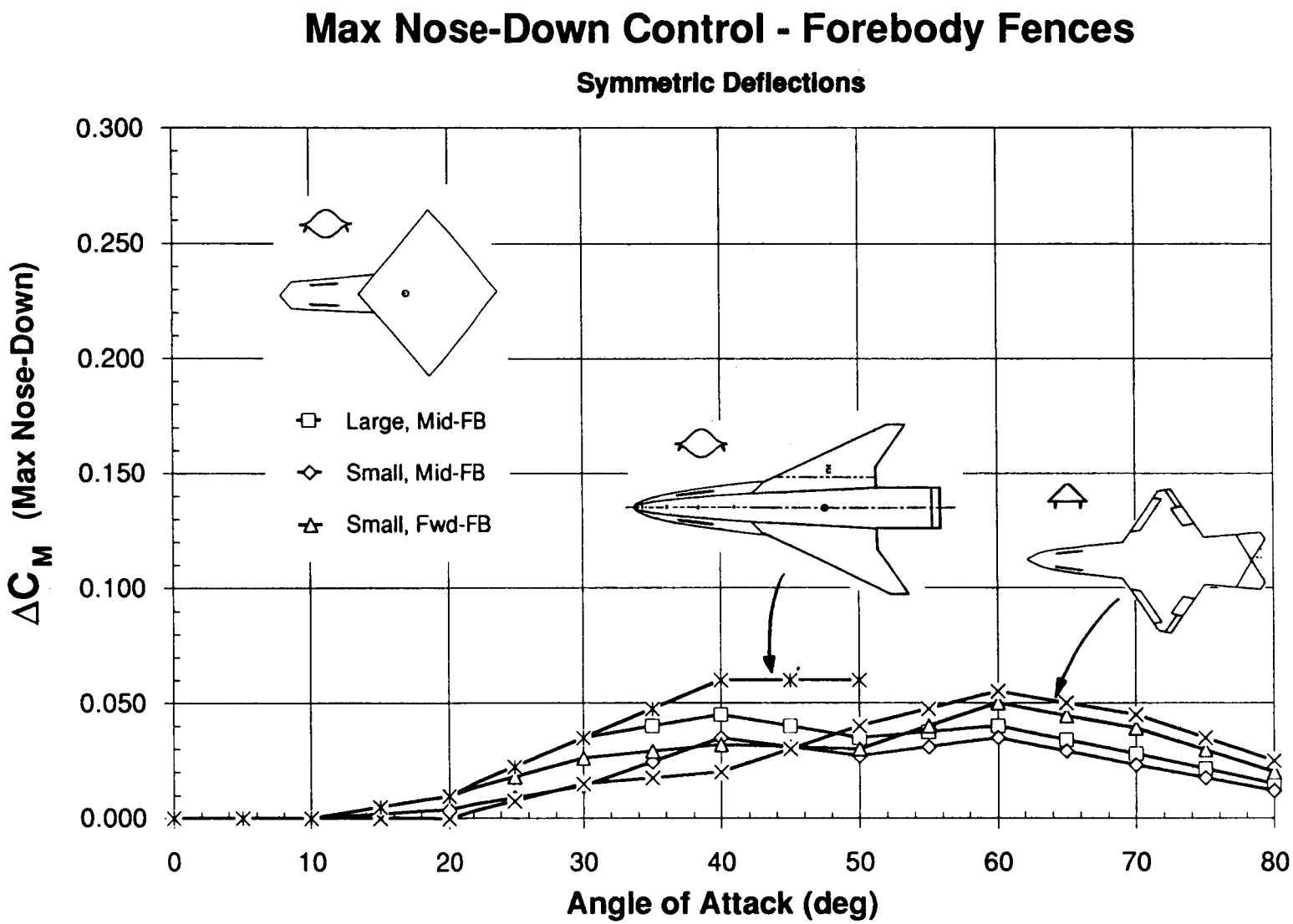
Max Nose-Down Control - Forebody Fences
Symmetric Deflections
0.300
0.250
0.200
0.150
0.100
0.050
0.000
ΔC_M (Max Nose-Down)
Large, Mid-FB
Small, Mid-FB
Small, Fwd-FB
0
10
20
30
40
50
60
70
80
Angle of Attack (deg)

Figure 3.1.10

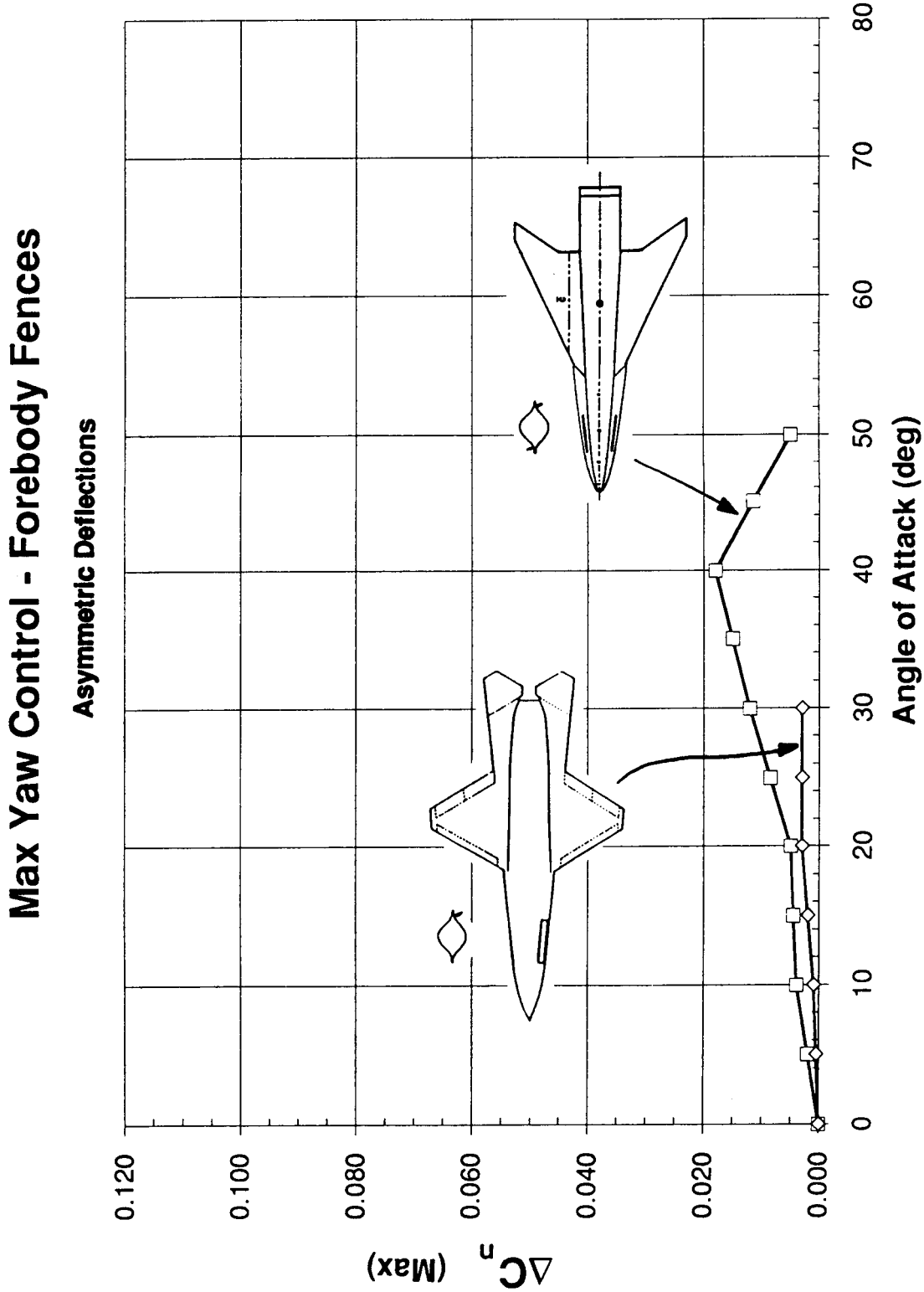
Max Yaw Control - Forebody Fences
Asymmetric Deflections
ΔC_n (Max)
0.120
0.100
0.080
0.060
0.040
0.020
0.000
0
10
20
30
40
50
60
70
80
Angle of Attack (deg)

Figure 3.1.11

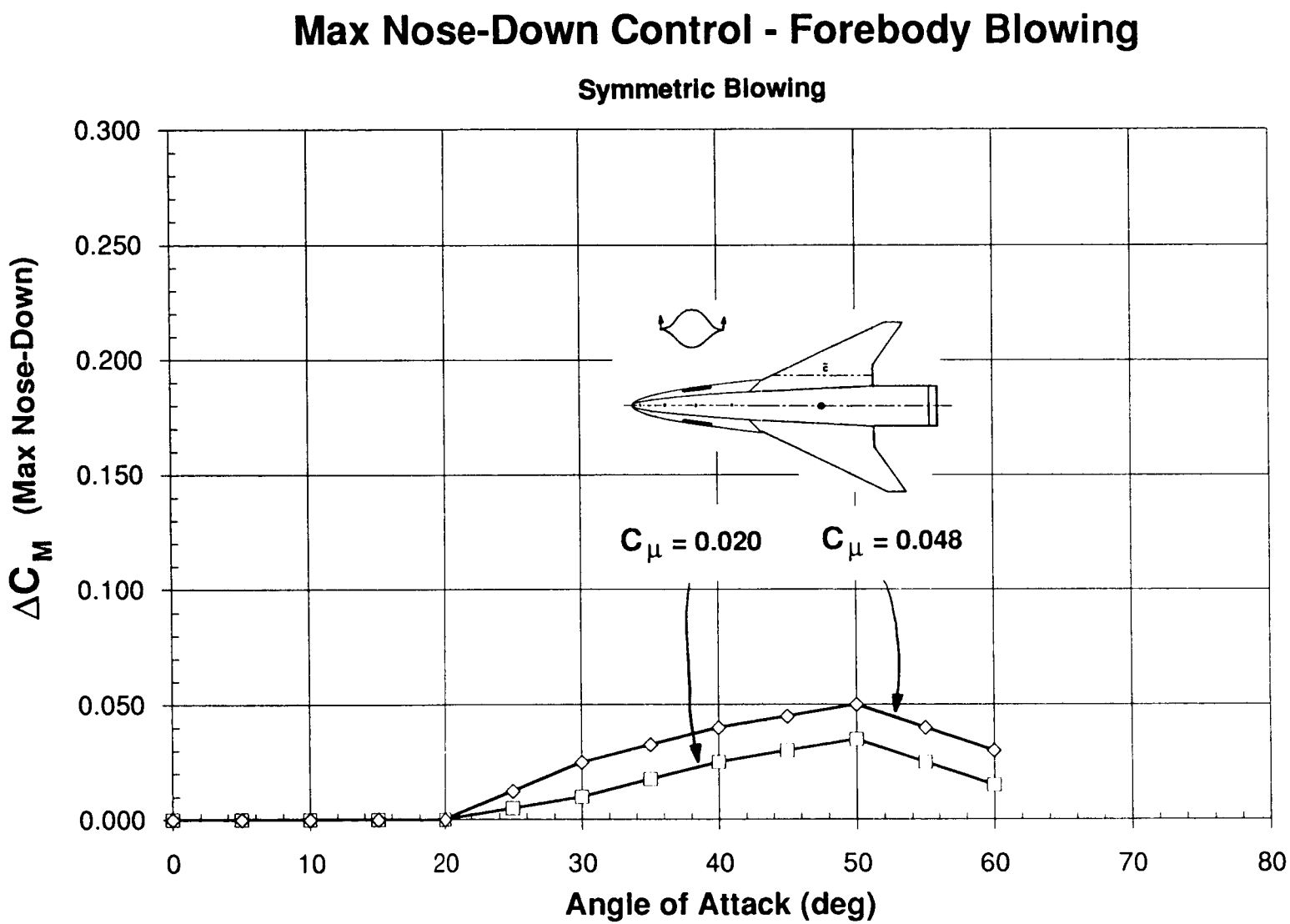
Max Nose-Down Control - Forebody Blowing
Symmetric Blowing
0.300
0.250
0.200
0.150
0.100
0.050
0.000
ΔC_M (Max Nose-Down)
0
10
20
30
40
50
60
70
80
Angle of Attack (deg)
C_μ = 0.020
C_μ = 0.048

Figure 3.1.12

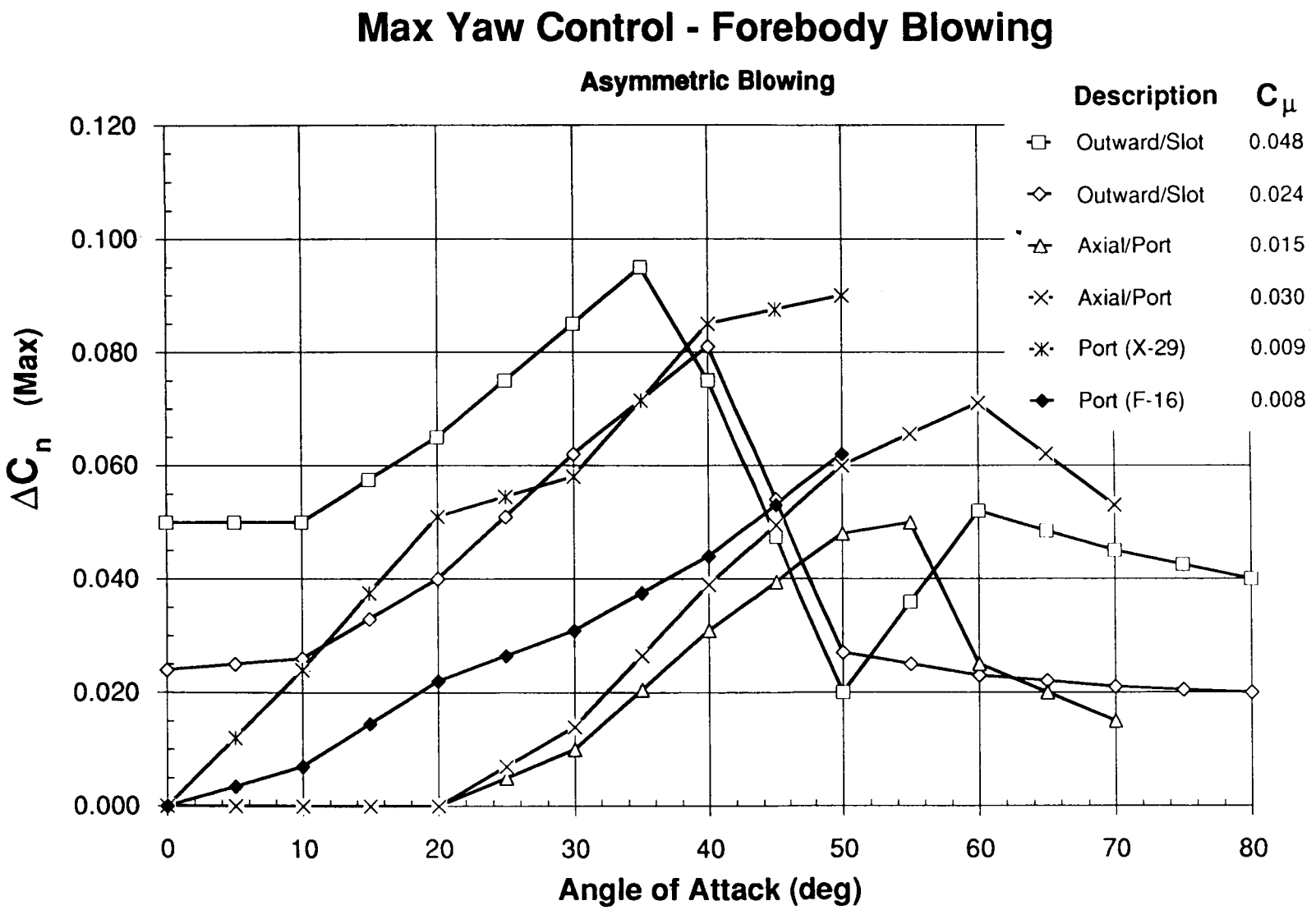
Max Yaw Control - Forebody Blowing
Asymmetric Blowing
Description
C_μ
Outward/Slot 0.048
Outward/Slot 0.024
Axial/Port 0.015
Axial/Port 0.030
Port (X-29) 0.009
Port (F-16) 0.008
ΔC_n (Max)
0.120
0.100
0.080
0.060
0.040
0.020
0.000
0
10
20
30
40
50
60
70
80
Angle of Attack (deg)

Figure 3.1.13

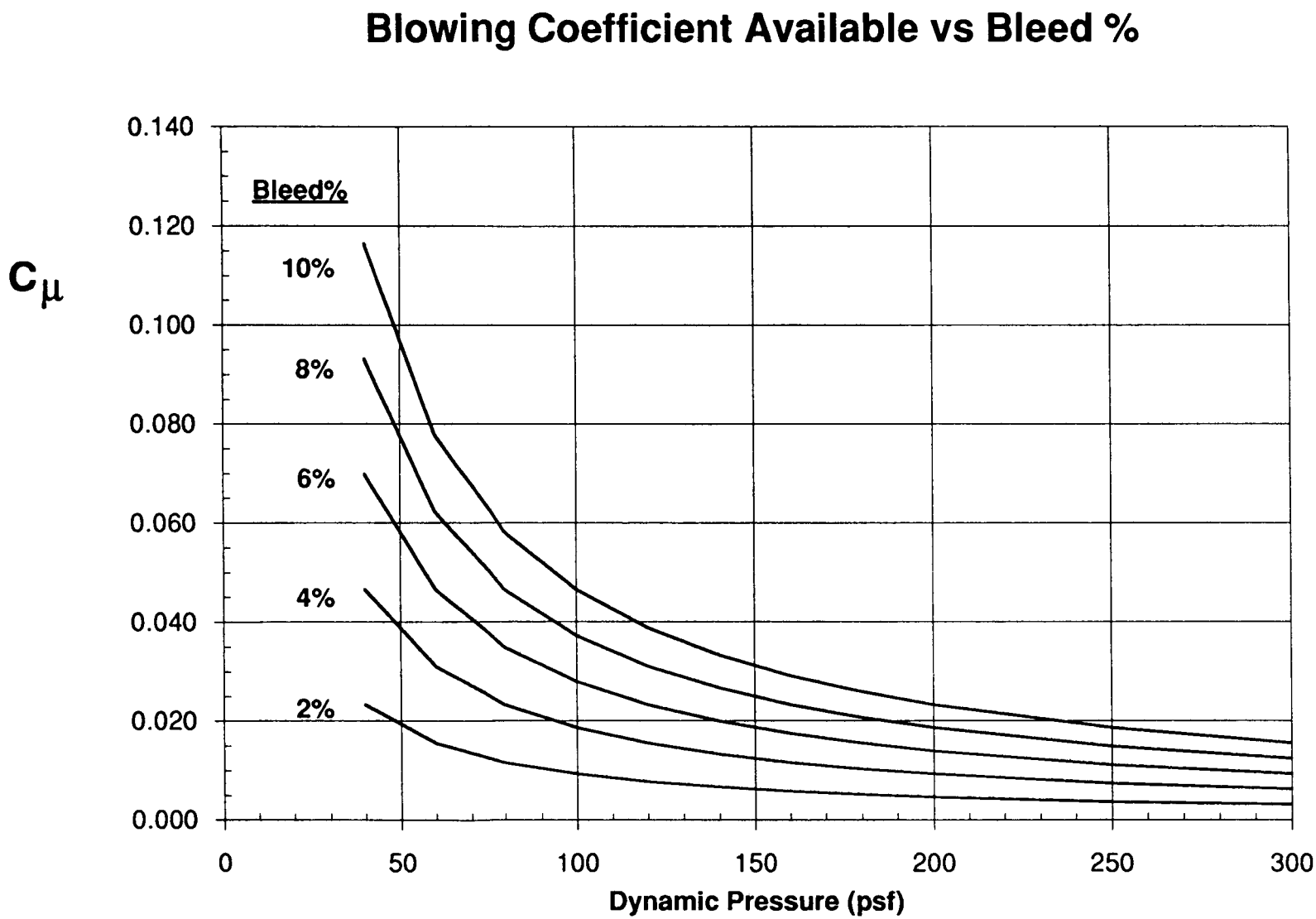
Blowing Coefficient Available vs Bleed %
C_μ
0.140
0.120
0.100
0.080
0.060
0.040
0.020
0.000
Bleed%
10%
8%
6%
4%
2%
0
50
100
150
200
250
300
Dynamic Pressure (psf)

Figure 3.1.14

Comparison of HARV and Porous Forebody Data

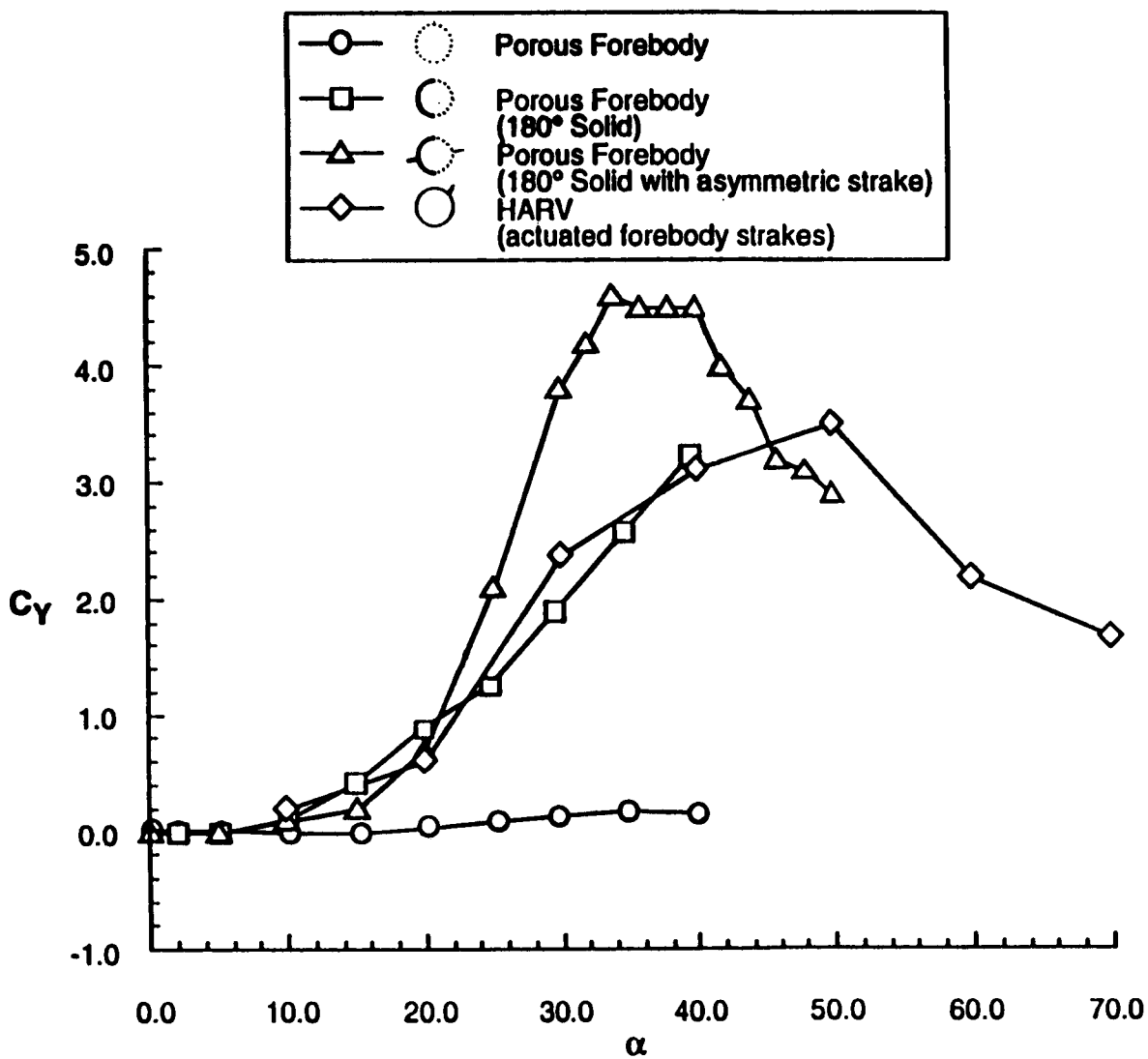

Figure 3.1.15

Roll Control Power - Conventional Ailerons

(per degree)

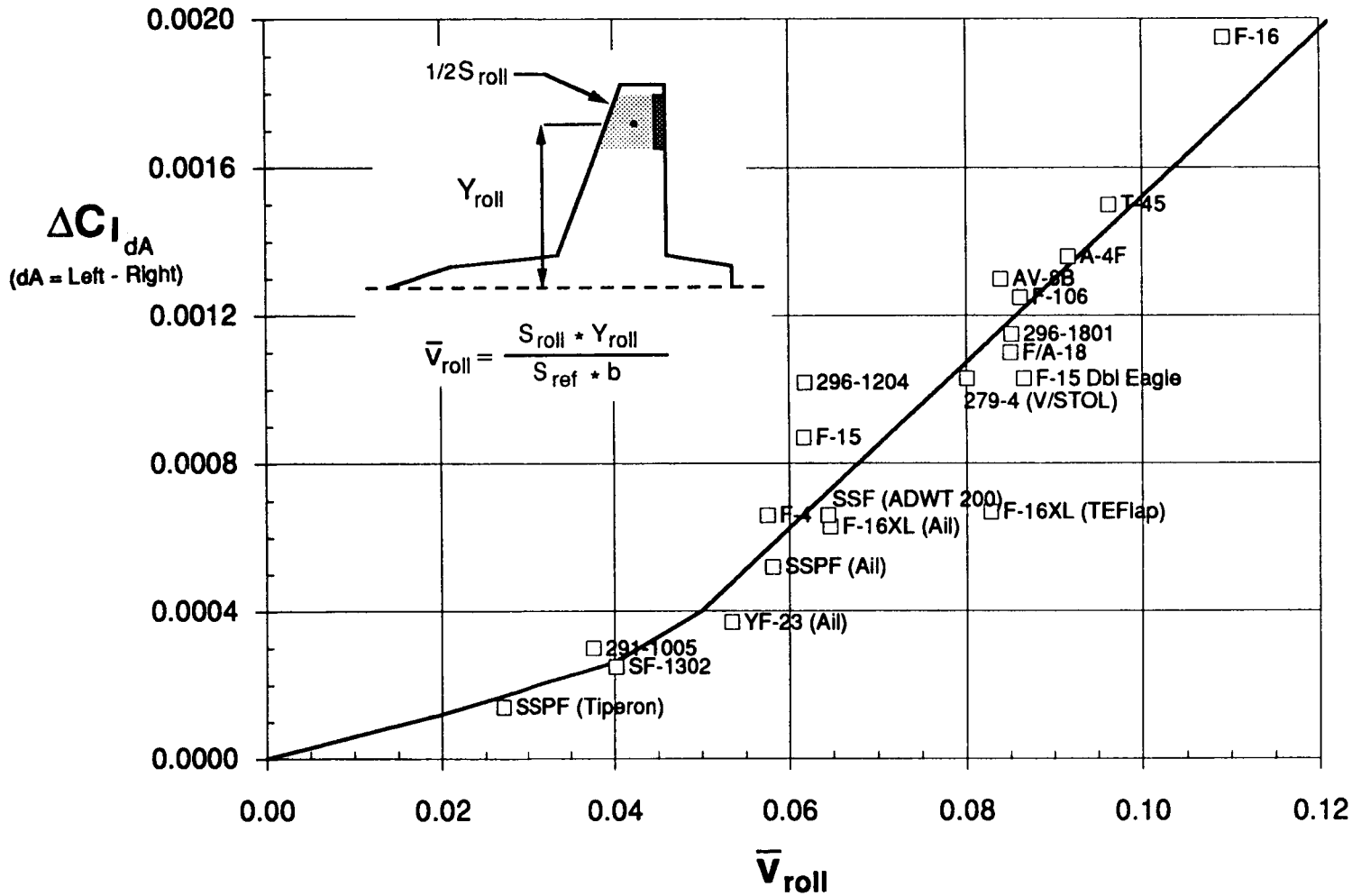

Figure 3.1.16

Aileron Roll Control Power Variation with AOA

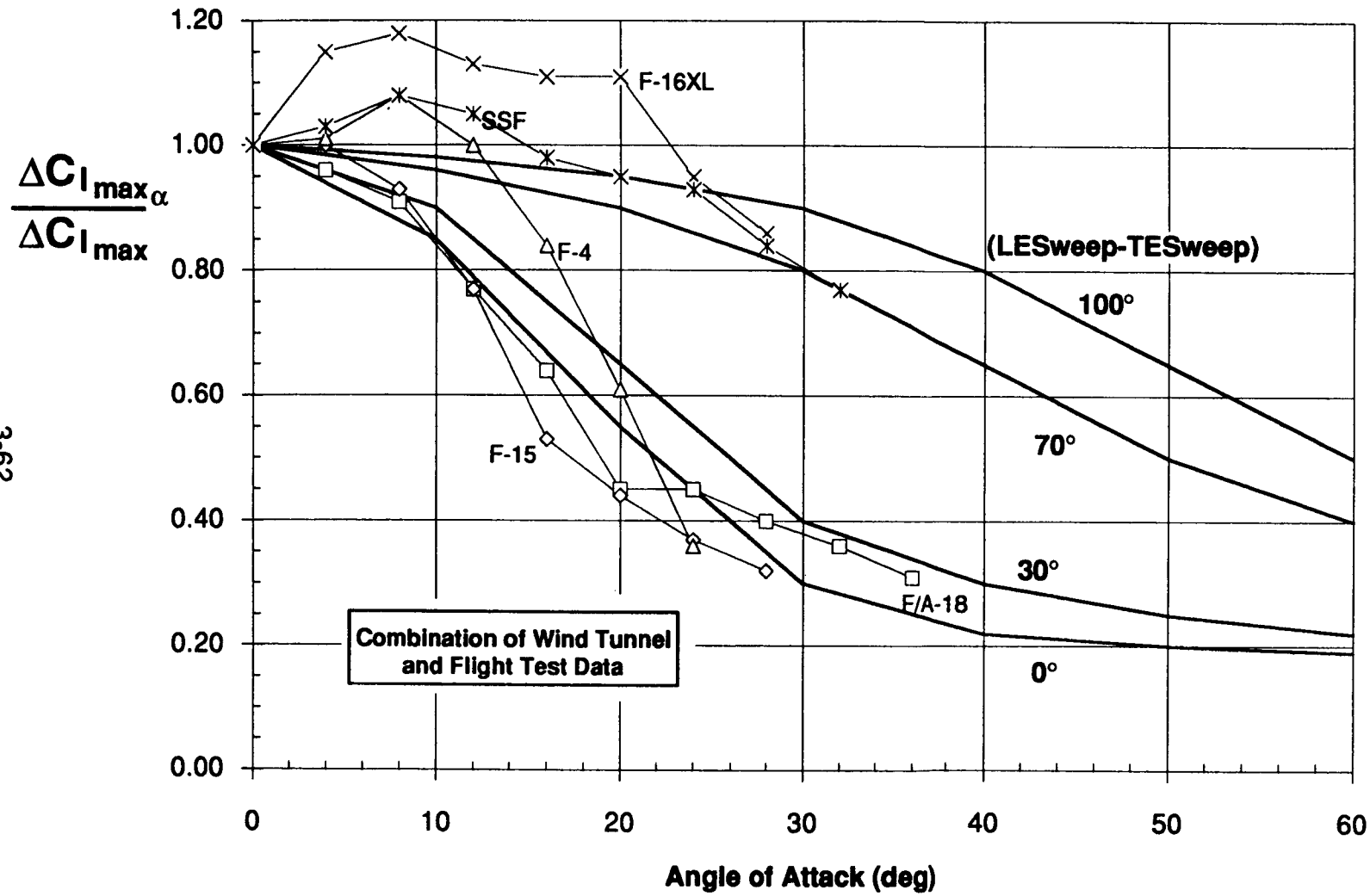

Figure 3.1.17

Adverse Yaw due to Aileron Roll Control

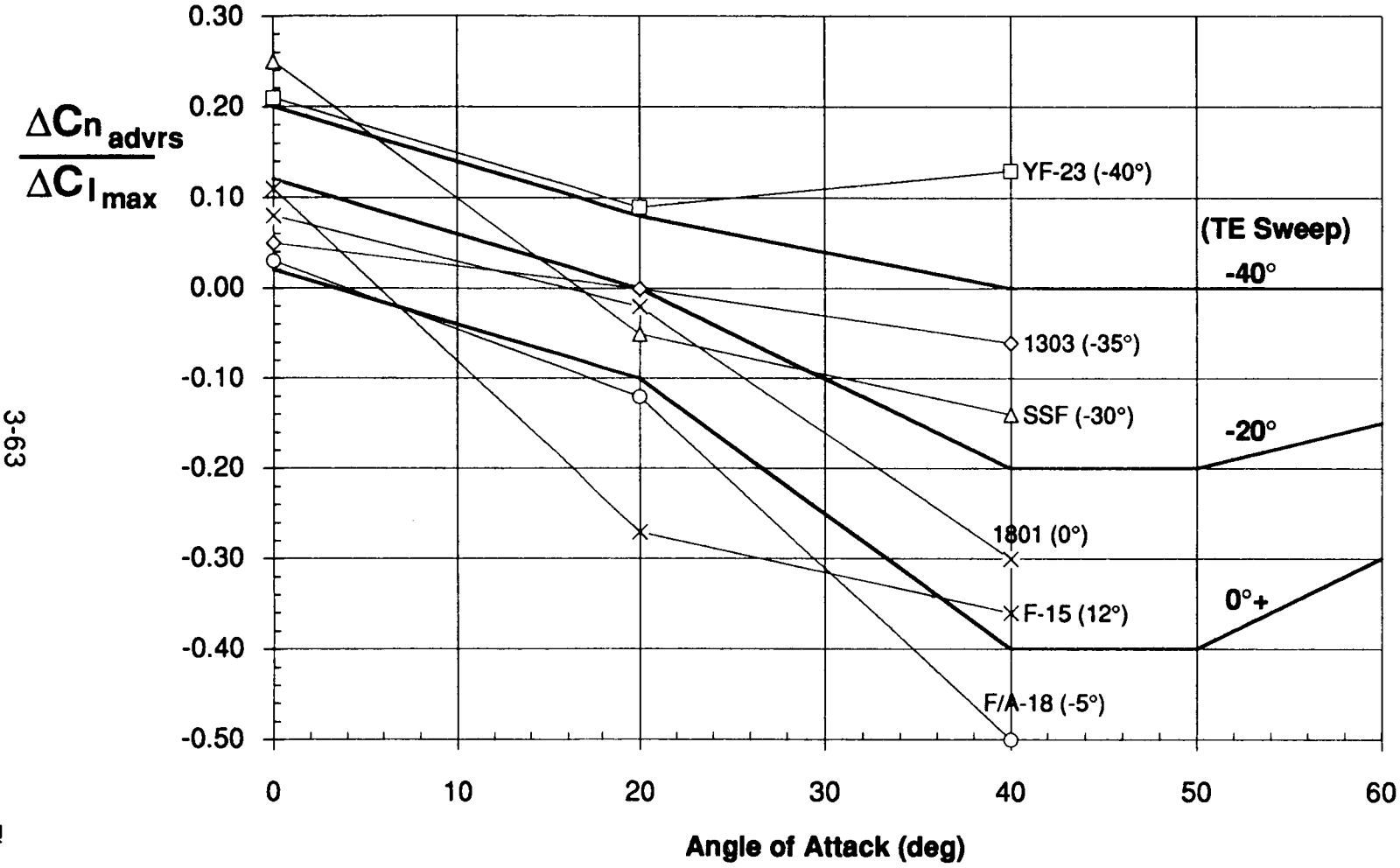

Figure 3.1.18

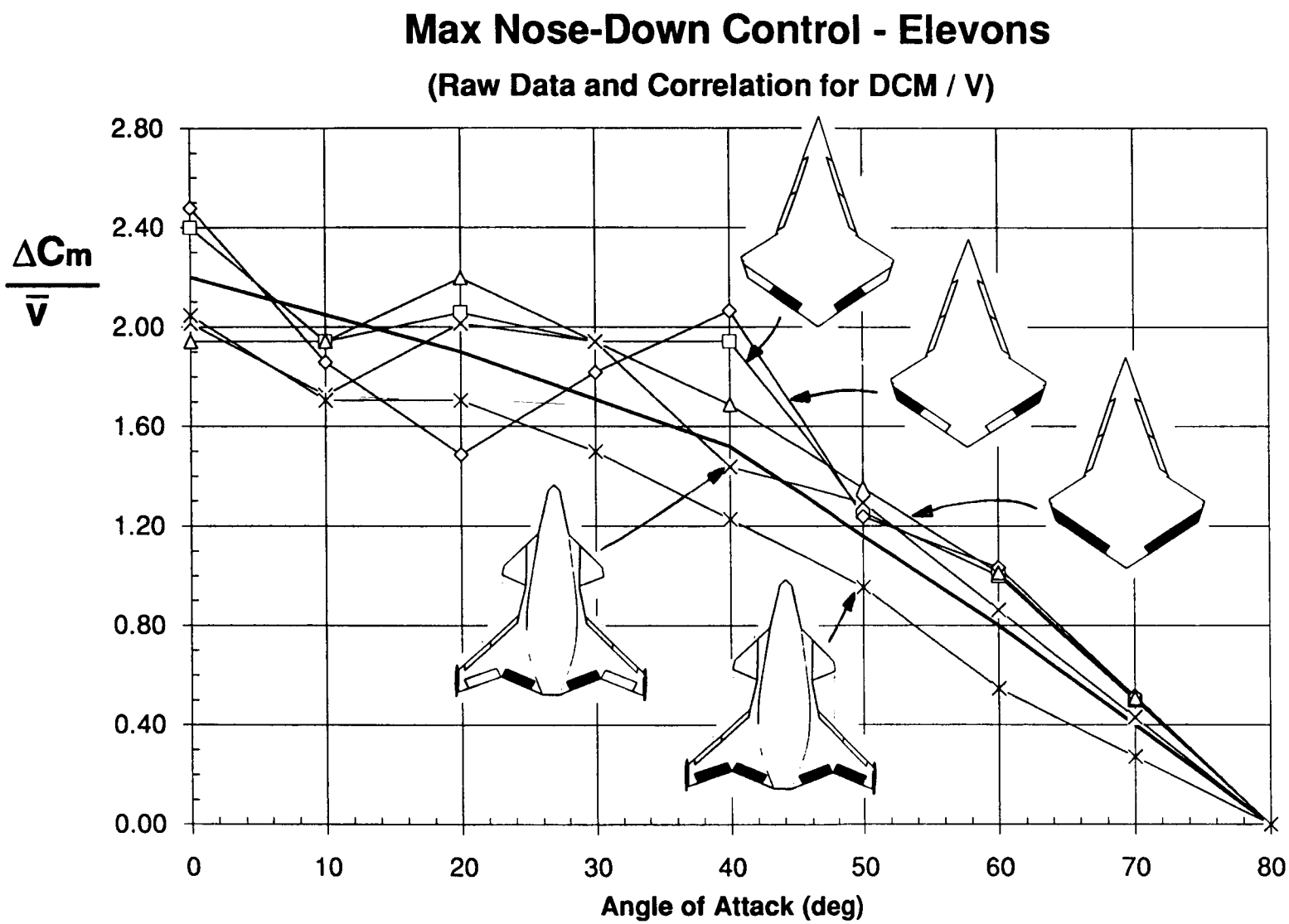
Max Nose-Down Control - Elevons
(Raw Data and Correlation for DCM / V)
ΔCm / V̄
2.80
2.40
2.00
1.60
1.20
0.80
0.40
0.00
0
10
20
30
40
50
60
70
80
Angle of Attack (deg)

Figure 3.1.19

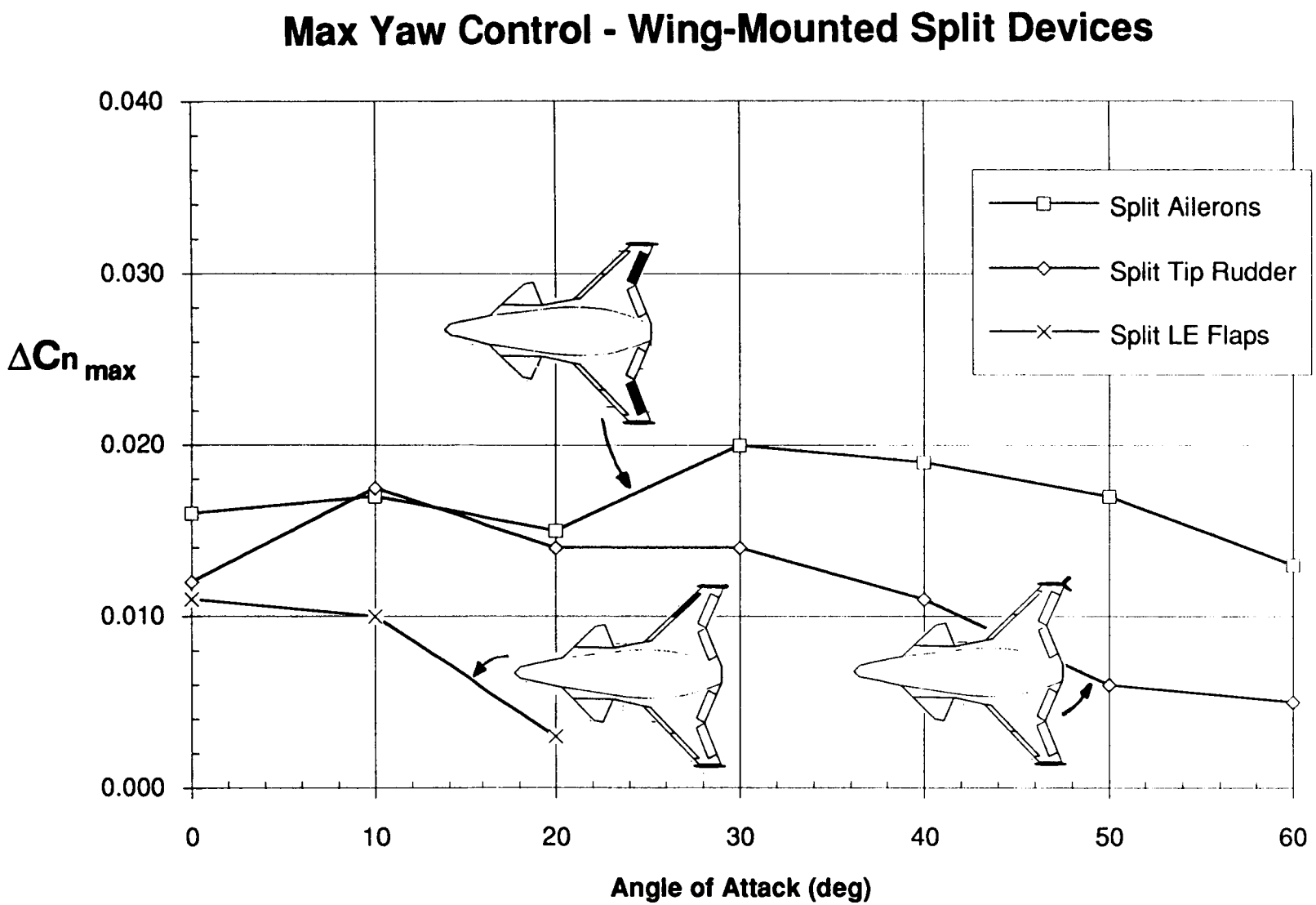
Max Yaw Control - Wing-Mounted Split Devices
0.040
0.030
0.020
0.010
0.000
ΔCn max
0
10
20
30
40
50
60
Angle of Attack (deg)
Split Ailerons
Split Tip Rudder
Split LE Flaps

Figure 3.1.20

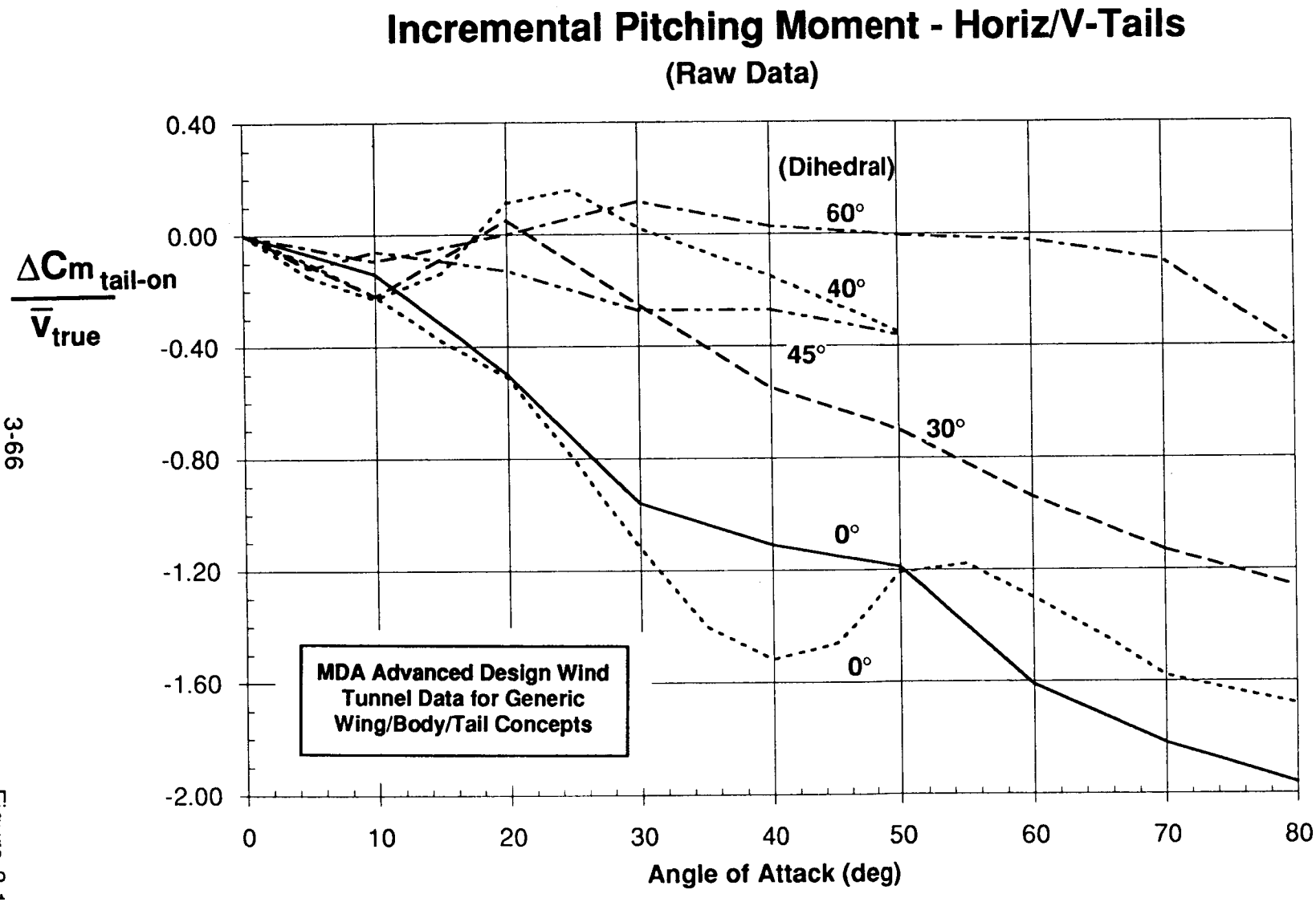
Incremental Pitching Moment - Horiz/V-Tails
(Raw Data)
$\frac{\Delta Cm_{tail\text{-}on}}{\bar{V}_{true}}$
0.40
0.00
-0.40
-0.80
-1.20
-1.60
-2.00
0
10
20
30
40
50
60
70
80
Angle of Attack (deg)
(Dihedral)
60°
40°
45°
30°
0°
0°
MDA Advanced Design Wind Tunnel Data for Generic Wing/Body/Tail Concepts

Figure 3.1.21

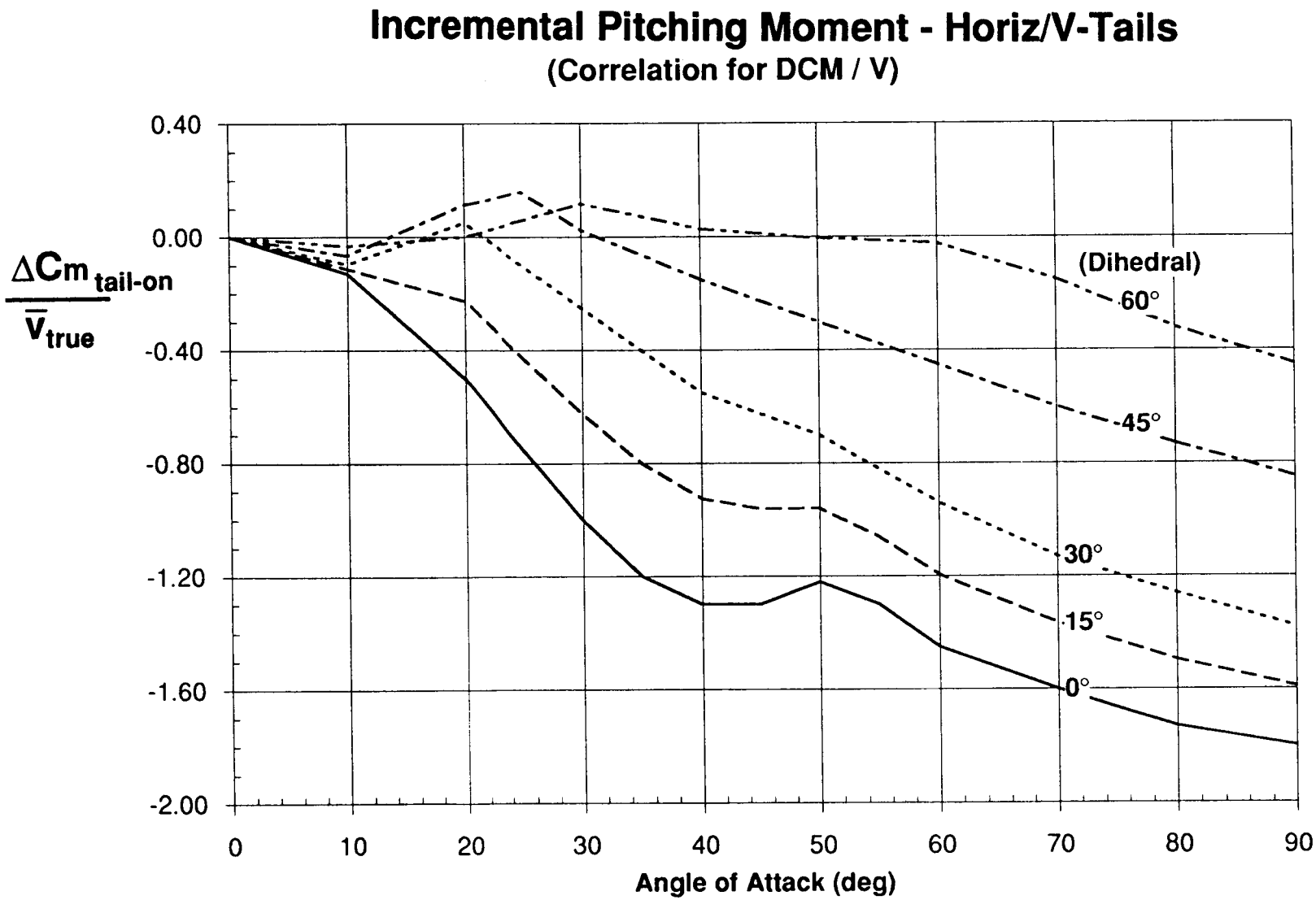
Incremental Pitching Moment - Horiz/V-Tails
(Correlation for DCM / V)
0.40
0.00
-0.40
-0.80
-1.20
-1.60
-2.00
ΔCm tail-on / V̄true
(Dihedral)
60°
45°
30°
15°
0°
0
10
20
30
40
50
60
70
80
90
Angle of Attack (deg)

Figure 3.1.22

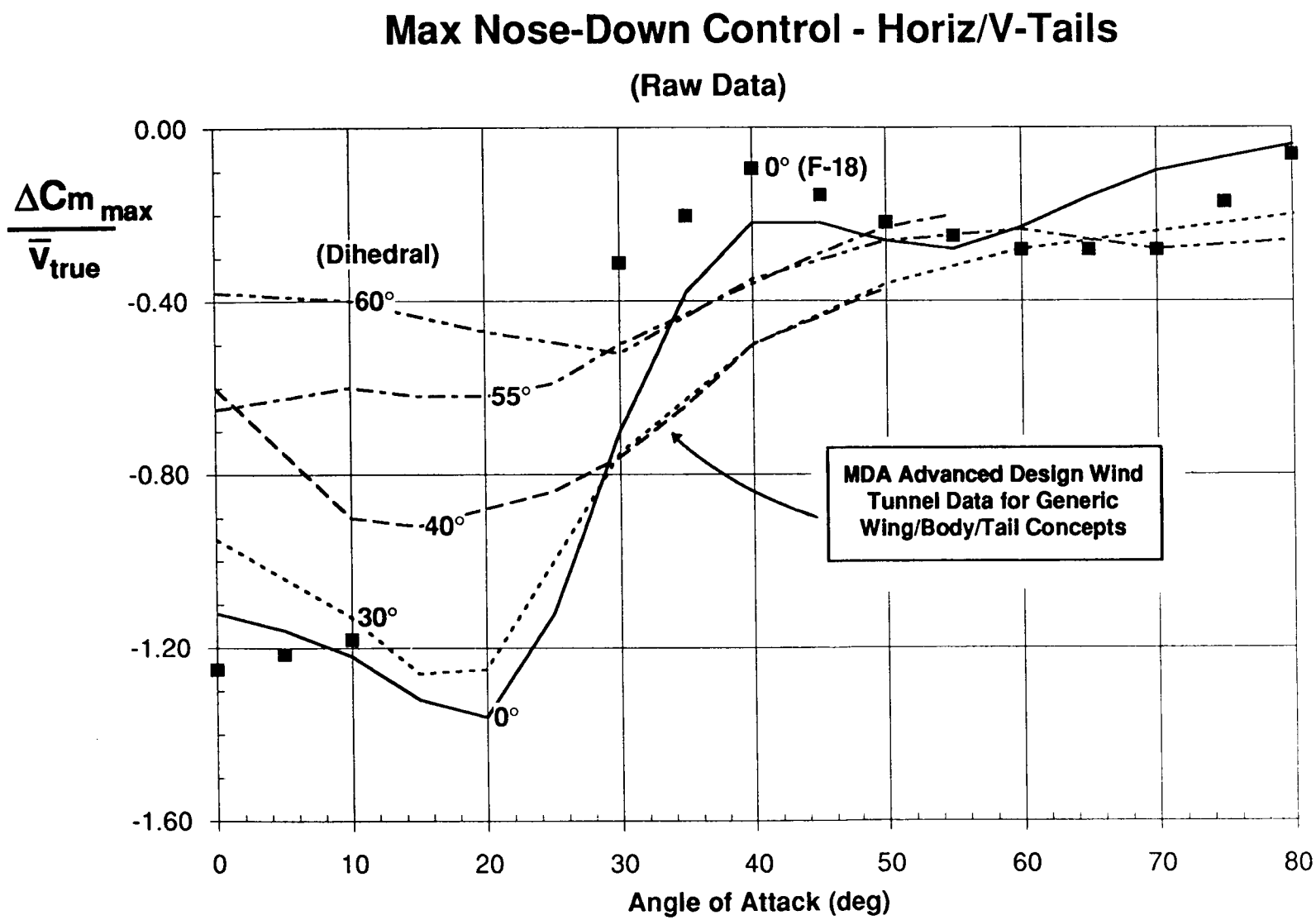
Max Nose-Down Control - Horiz/V-Tails
(Raw Data)
$\frac{\Delta Cm_{max}}{\bar{V}_{true}}$
0.00
-0.40
-0.80
-1.20
-1.60
(Dihedral)
60°
55°
40°
30°
0°
0° (F-18)
MDA Advanced Design Wind Tunnel Data for Generic Wing/Body/Tail Concepts
0
10
20
30
40
50
60
70
80
Angle of Attack (deg)

Figure 3.1.23

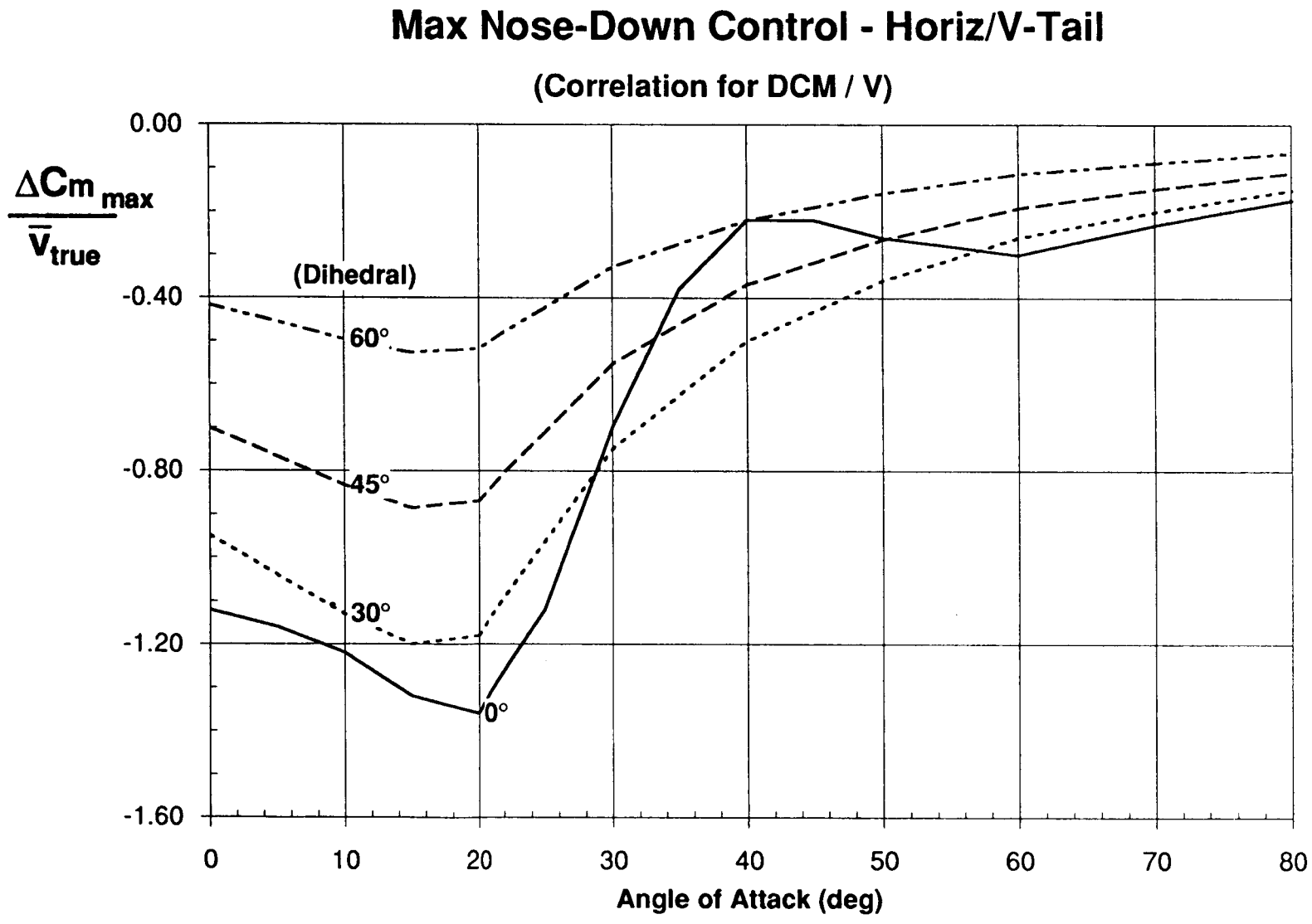
Max Nose-Down Control - Horiz/V-Tail
(Correlation for DCM / V)
$\frac{\Delta Cm_{max}}{\bar{V}_{true}}$
0.00
-0.40
-0.80
-1.20
-1.60
(Dihedral)
60°
45°
30°
0°
0
10
20
30
40
50
60
70
80
Angle of Attack (deg)

Figure 3.1.24

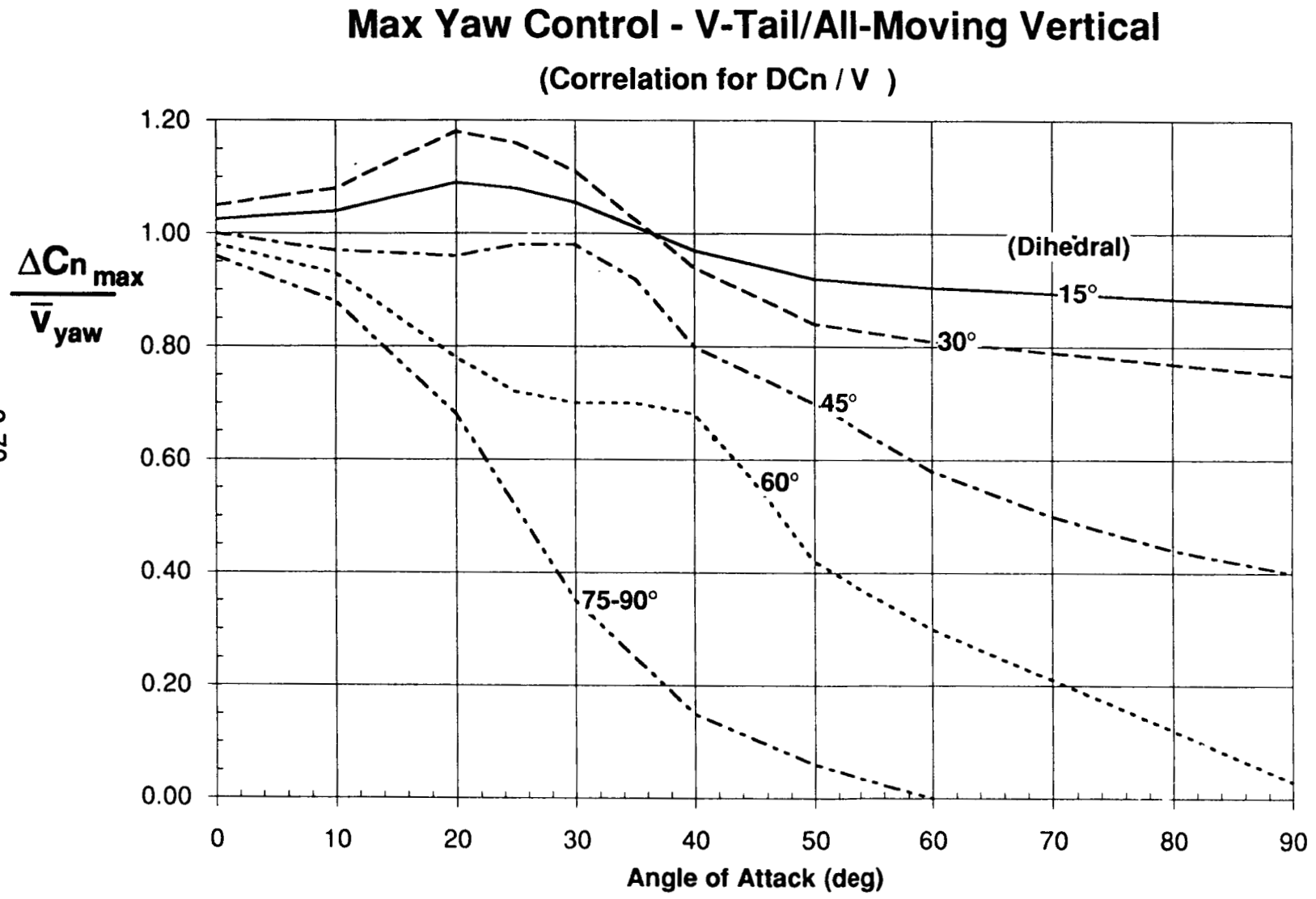
Max Yaw Control - V-Tail/All-Moving Vertical
(Correlation for DCn / V)
$\frac{\Delta Cn_{max}}{\bar{V}_{yaw}}$
1.20
1.00
0.80
0.60
0.40
0.20
0.00
0
10
20
30
40
50
60
70
80
90
Angle of Attack (deg)
(Dihedral)
15°
30°
45°
60°
75-90°

Figure 3.1.25

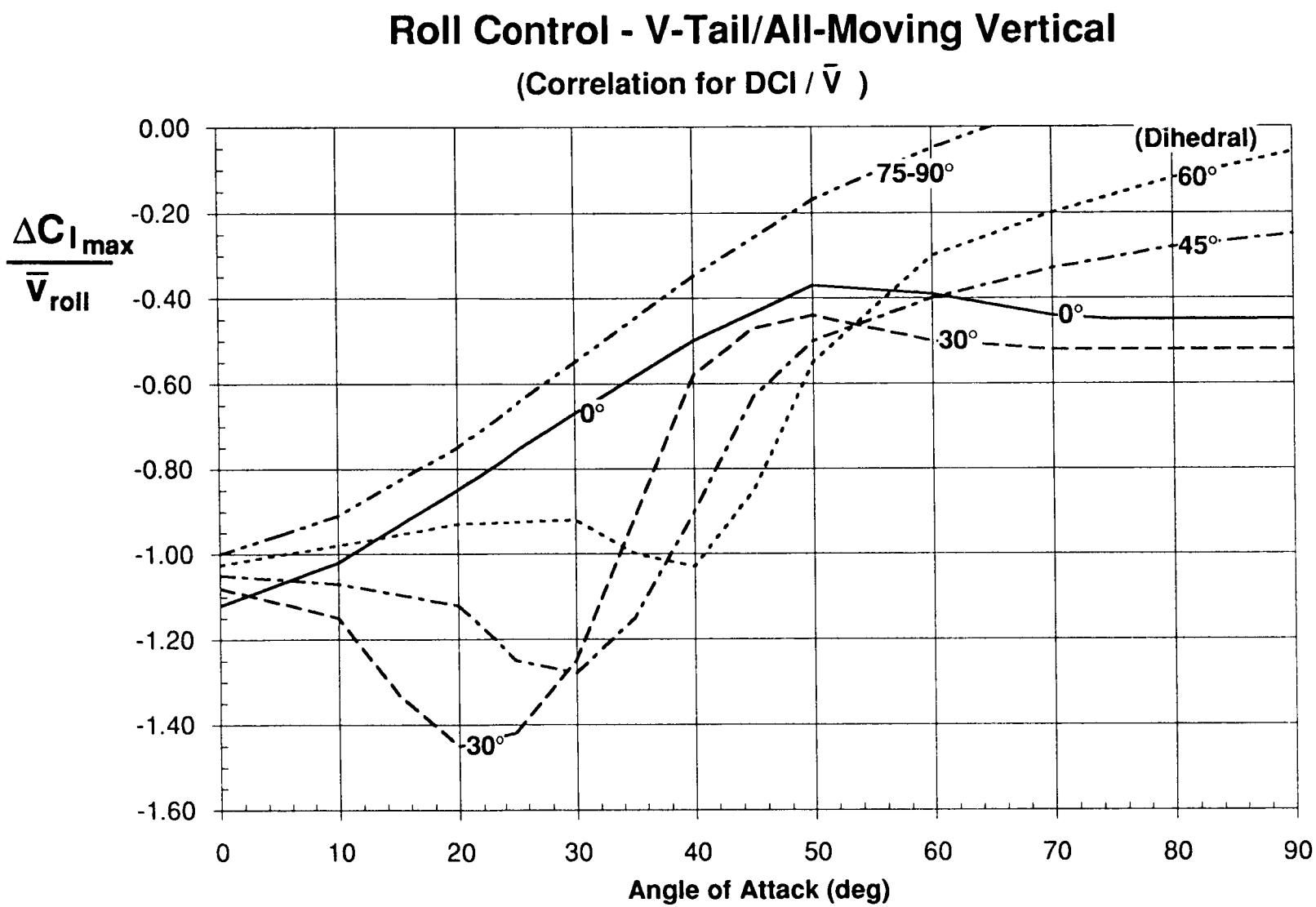
Roll Control - V-Tail/All-Moving Vertical
(Correlation for DCl / $\bar{V}$)
$\frac{\Delta C_{l_{max}}}{\bar{V}_{roll}}$
0.00
-0.20
-0.40
-0.60
-0.80
-1.00
-1.20
-1.40
-1.60
0
10
20
30
40
50
60
70
80
90
Angle of Attack (deg)
(Dihedral)
75-90°
60°
45°
0°
30°
0°
30°

Figure 3.1.26

Yaw Control Power - Vertical Tail with Rudder

(per degree)

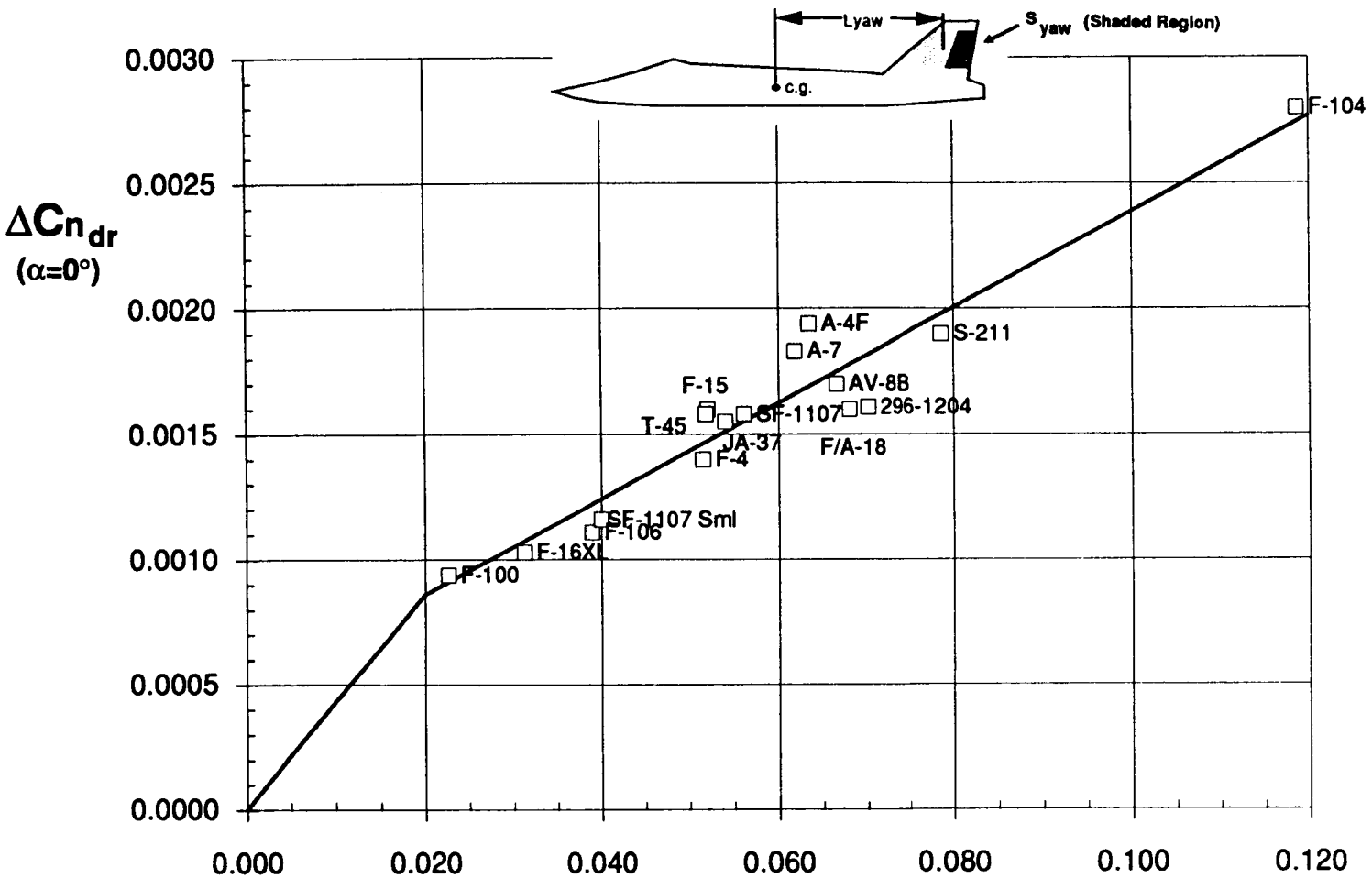

$$\bar{V} = \frac{S_{yaw}}{S} \cdot \frac{L_{yaw}}{b}$$

Figure 3.1.27

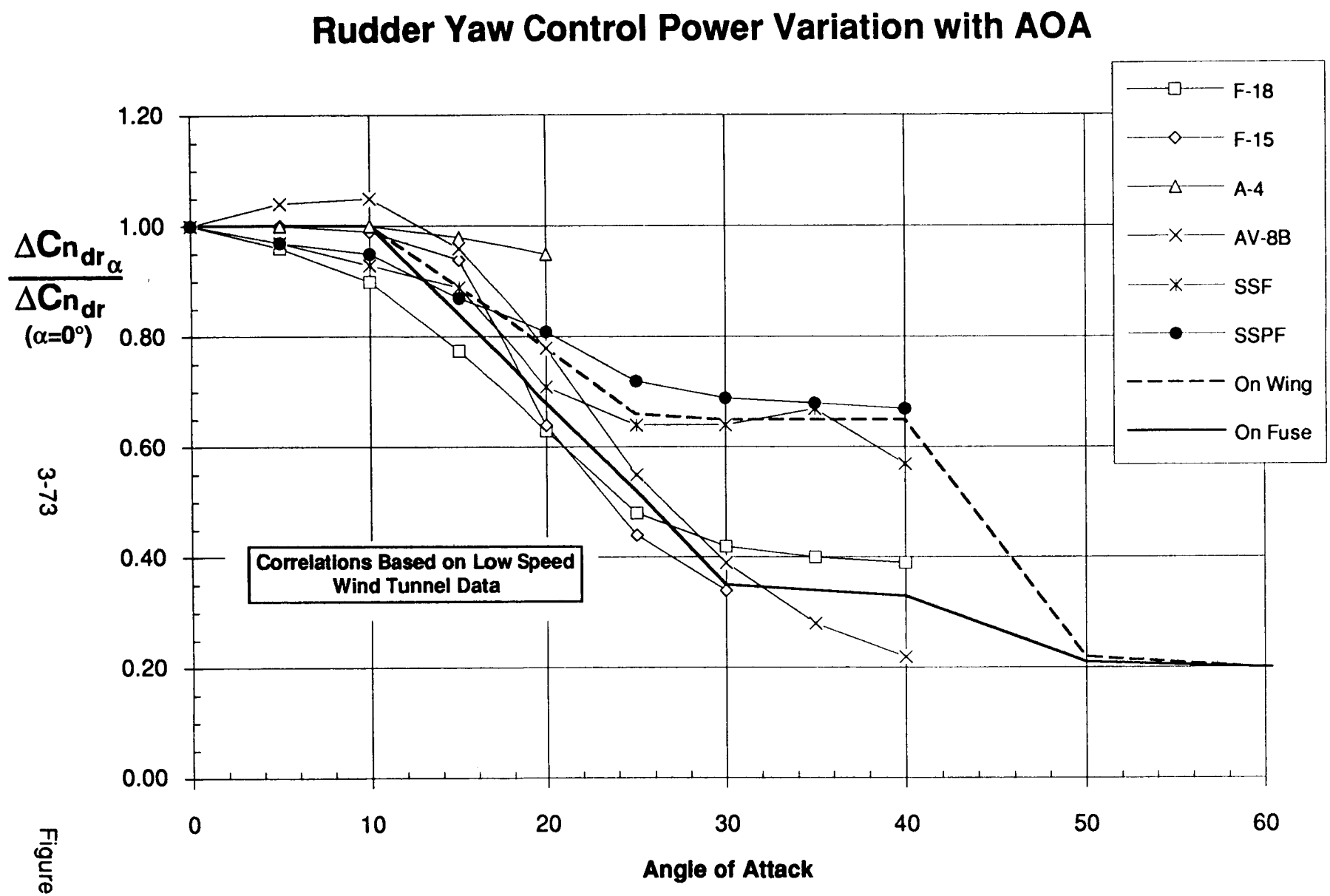
Rudder Yaw Control Power Variation with AOA
$\frac{\Delta Cn_{dr_\alpha}}{\Delta Cn_{dr}}$ (α=0°)
1.20
1.00
0.80
0.60
0.40
0.20
0.00
0
10
20
30
40
50
60
Angle of Attack
Correlations Based on Low Speed Wind Tunnel Data
F-18
F-15
A-4
AV-8B
SSF
SSPF
On Wing
On Fuse

Figure 3.1.28

Max Nose-Down Control - Thrust-Blown Elevons

(Raw Data and Correlation for DCM / V)

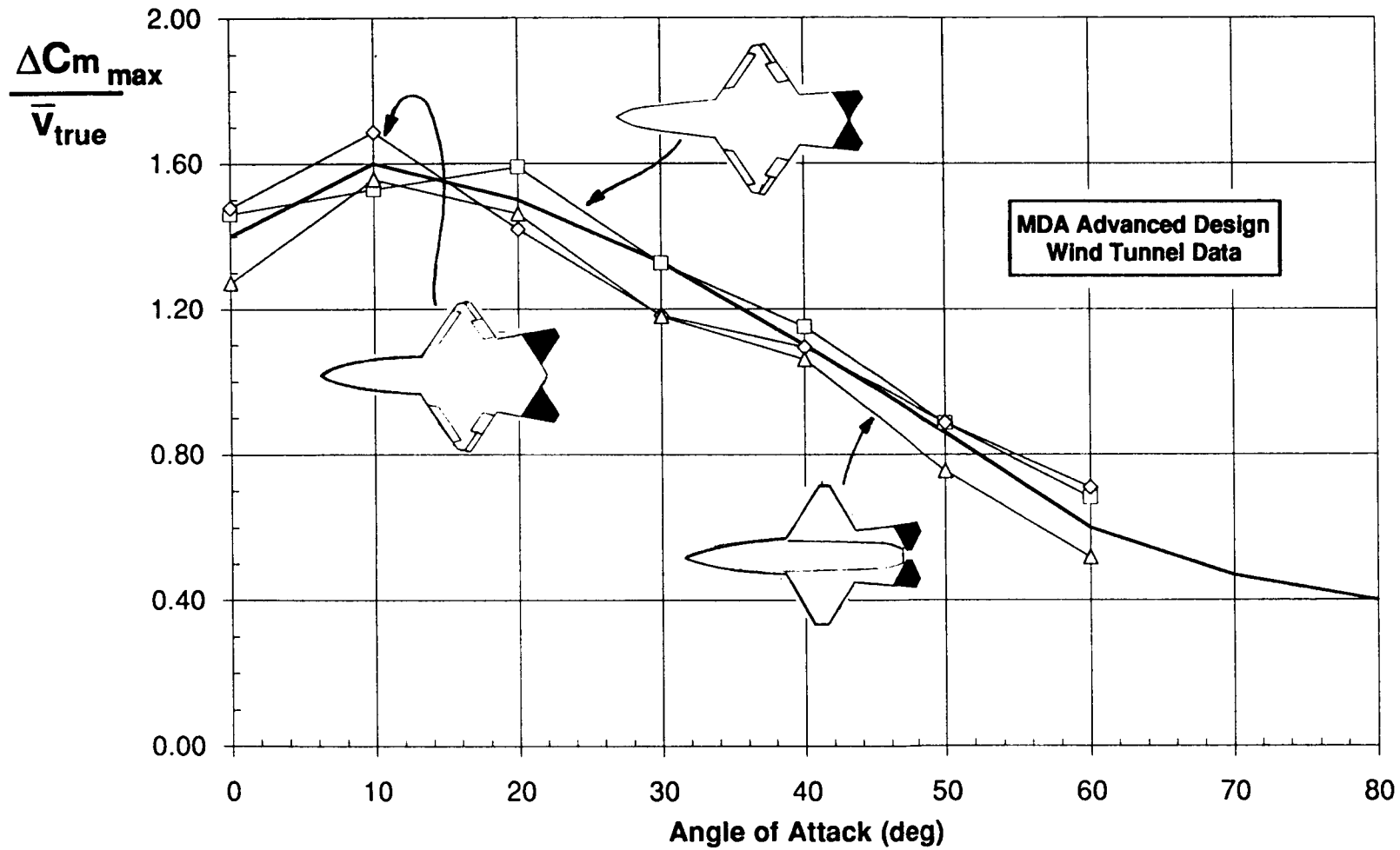

Figure 3.1.29

Max Pitch Control Power - Air Dams and Split Body Flaps

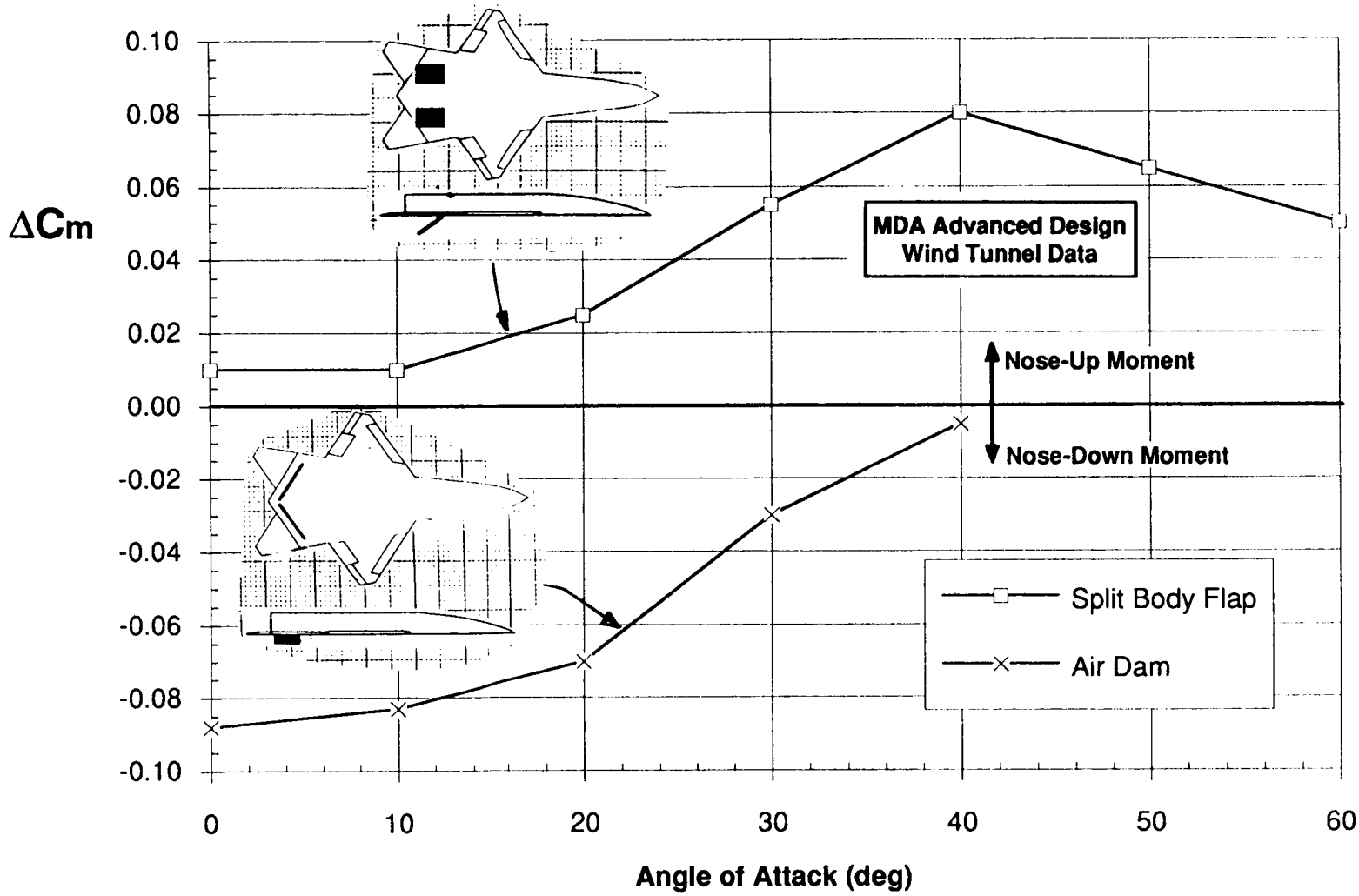

Figure 3.1.30

Max Yaw Control Power - Pop-Up Yaw Effectors

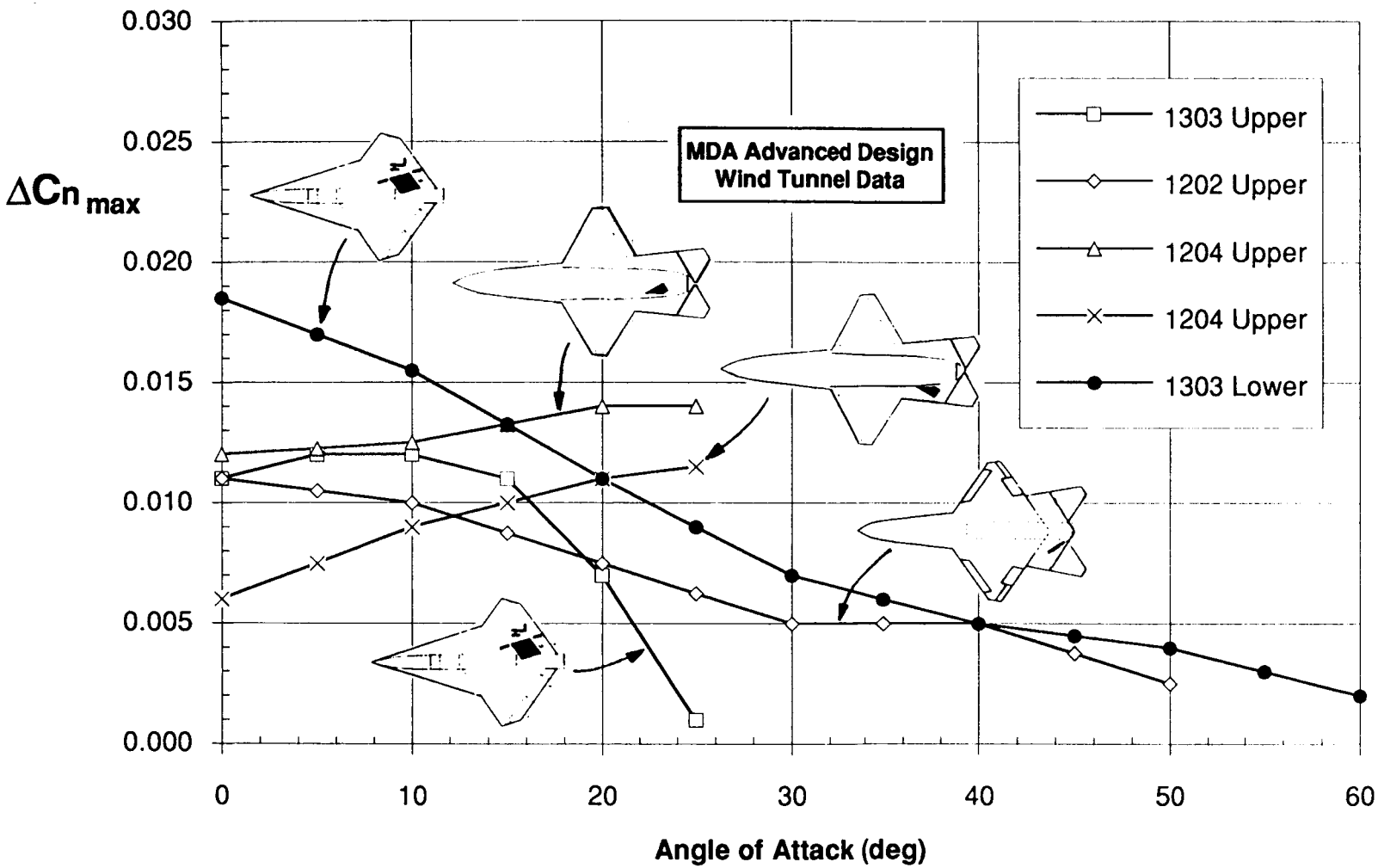

Figure 3.1.31

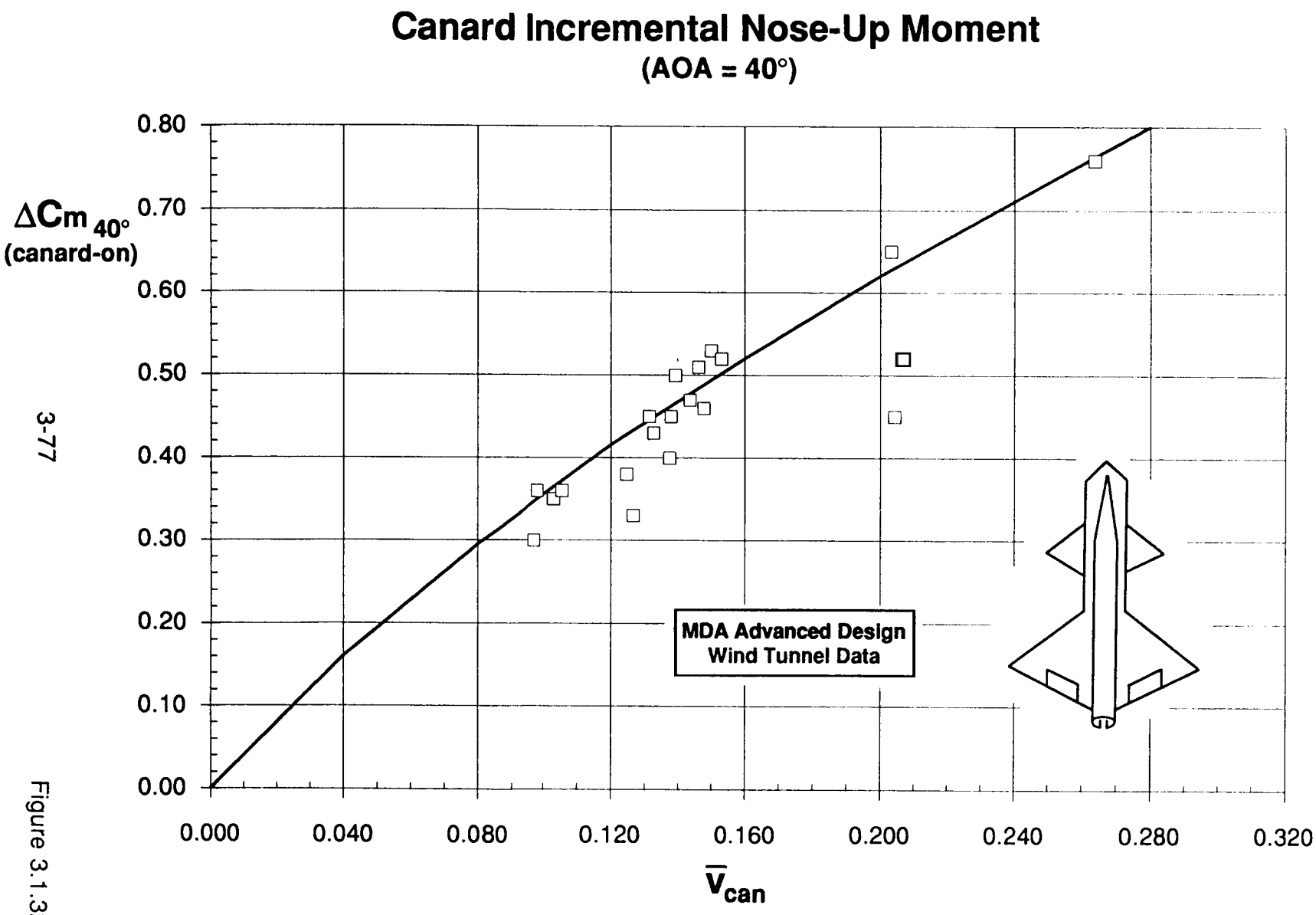
Canard Incremental Nose-Up Moment
(AOA = 40°)
ΔCm 40°
(canard-on)
0.80
0.70
0.60
0.50
0.40
0.30
0.20
0.10
0.00
0.000
0.040
0.080
0.120
0.160
0.200
0.240
0.280
0.320
V̄can
MDA Advanced Design
Wind Tunnel Data

Figure 3.1.32

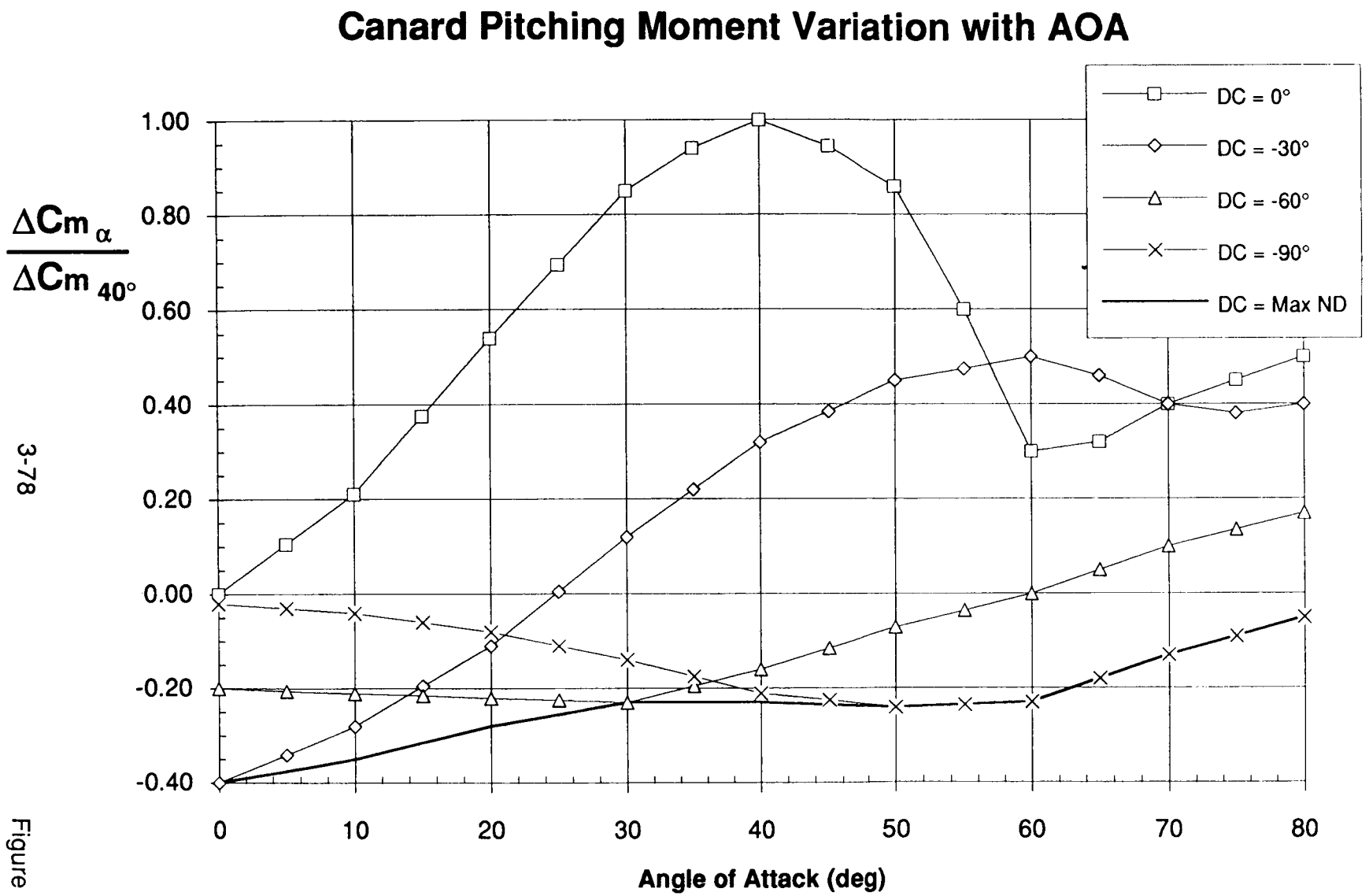
Canard Pitching Moment Variation with AOA
DC = 0°
DC = -30°
DC = -60°
DC = -90°
DC = Max ND
ΔCm α / ΔCm 40°
1.00
0.80
0.60
0.40
0.20
0.00
-0.20
-0.40
0
10
20
30
40
50
60
70
80
Angle of Attack (deg)

Figure 3.1.33

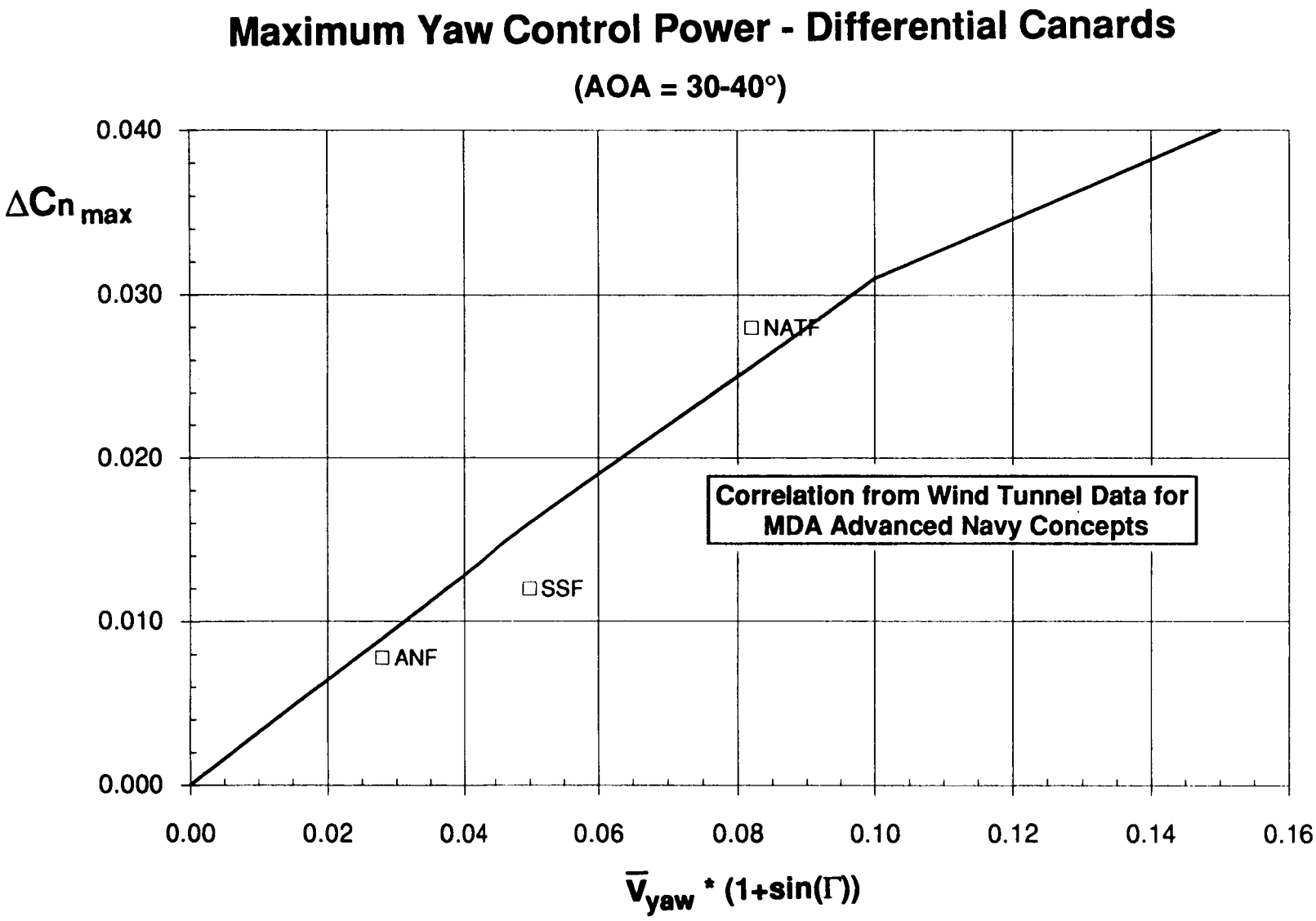
Maximum Yaw Control Power - Differential Canards
(AOA = 30-40°)
ΔCn max
0.040
0.030
0.020
0.010
0.000
0.00
0.02
0.04
0.06
0.08
0.10
0.12
0.14
0.16
V̄yaw * (1+sin(Γ))
NATF
SSF
ANF
Correlation from Wind Tunnel Data for
MDA Advanced Navy Concepts

Figure 3.1.34

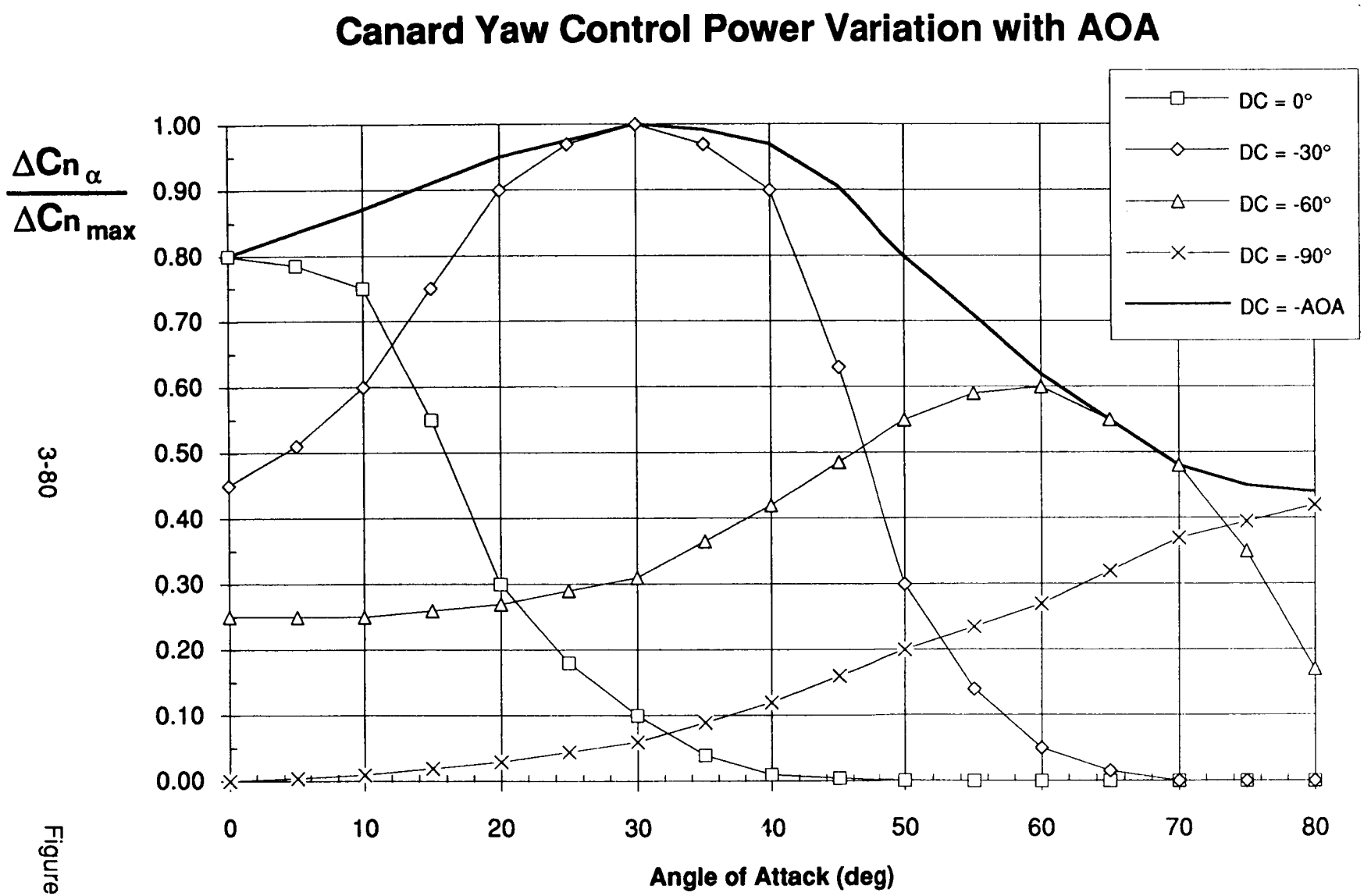
Canard Yaw Control Power Variation with AOA
$\frac{\Delta Cn_\alpha}{\Delta Cn_{max}}$
1.00
0.90
0.80
0.70
0.60
0.50
0.40
0.30
0.20
0.10
0.00
0
10
20
30
40
50
60
70
80
Angle of Attack (deg)
DC = 0°
DC = -30°
DC = -60°
DC = -90°
DC = -AOA

Figure 3.1.35

Max Nose-Down Control - Elevons/Ailerons vs Thrust Vectoring

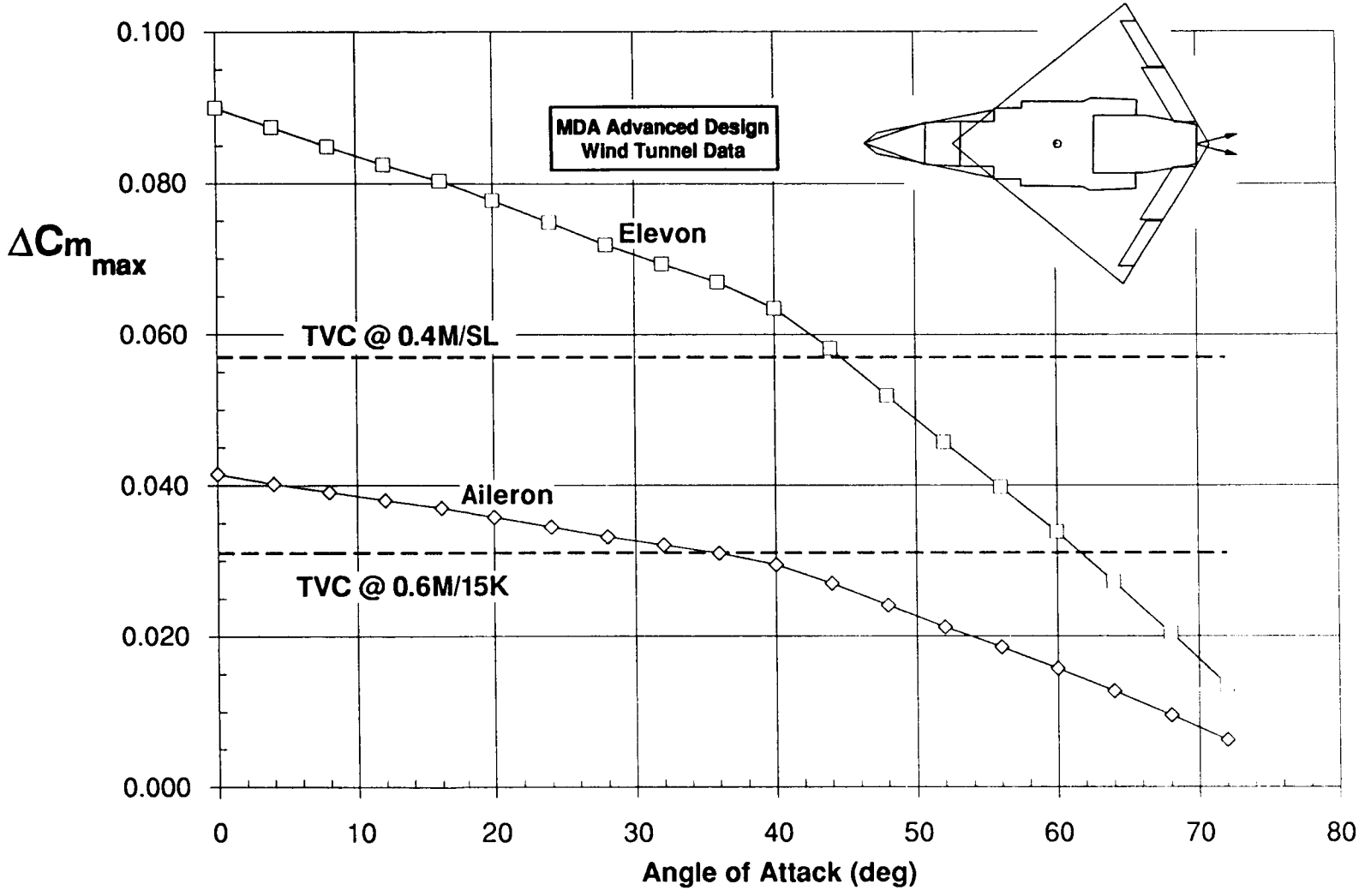

Figure 3.1.36

Agility Design Study

Thrust Vectoring Weight Increments Used in Study

	Observables Level		
	Type A	Type B	Type C
Single-Axis Low Rate	100	200	300
Two Axis Low Rate	150	300	500
Single-Axis High Rate	150	300	500
Two Axis High Rate	250	450	700

Includes total aircraft weight increment for adding thrust vectoring capability to a given nozzle. Does not reflect shaping or treatment required for a non-thrust vectoring nozzle in each observables class. Based on twin engine, 40,000# total SLS thrust.

Figure 3.1.37

Summary of Structures/Materials Technology Assessment

	Agility Impact	Observ. Impact	Include on Baseline Aircraft
Materials			
Adv. Aluminum-Lithium Alloys	1	-	Yes (Structure)
Adv. Titanium Alloys / Powder Metallurgy	3	-	No
Ceramic Technologies	3	1	Yes (Edges, Hot Parts)
Rare-Earth Alloy Materials	5	5	No
Carbon/Graphite-Based Composites	1	1	Yes (Structure, Skins)
Boron-Based Composites	1	5	No (Too Costly)
Kevlar-Based Composites	4	-	Yes
Fiberglass-Based Composites	3	1	Yes (RAM, RAS)
Advanced Thermosetting Resins	4	1	Yes
Thermoplastic Materials	3	1	Yes (cyanate ester)
Adv. Manufacturing Techniques			
Resin Transfer Molding	-	1	Yes
Superplastic Forming	3	3	No
Diffusion Bonding	3	3	No
Single-Crystal Metallic Parts	3	3	No
Adv. Structural Techniques			
Co-Curing	1	1	Yes

Figure 3.2.1

Summary of Avionics Technologies and Observables/Agility Ratings

Avionics Subsystem or Technology Focus Area	Include on Baseline A/C	Observ. Rating	Agility Rating
Architectures			
JIAWG/Pave Pillar Class Integrated Avionics	YES	3	1
Integrated Electronic Warfare System (INEWS class)	YES (1)	1	1
Integrated Com, Nav, IFF System (ICNIA class)	YES (1)	3	1
Federated Systems Architecture (less fully integrated)	NO	3	5
Common Module Hardware, JIAWG LRU's	YES	3	1
Ultra High Speed Data Busses	YES	1	3
Radar Technologies			
Air-to-Air Track-While-Scan Mode Radar	YES (1)	3	3
Air-to-Ground Mapping or Real Beam Mode Radar	YES (1)	3	3
SAR Mode Radar	YES (1)	3	5
Electronically Steered Array	YES (1)	1	5
Airframe Mounted Array	YES	1	1
Hybrid Steering (mechanical and electronic)	NO	3	3
LPI TF/TA Mode Radar or Separate Radar Altimeter	YES	1	3
All Aspect Radar System	YES (1)	3	5
Sensor Technologies			
Navigation FLIR	YES (2)	5	5
Targeting FLIR	YES (2)	5	5
Staring Focal Plane Array FLIR	YES	5	3
Mechanically Steered FLIR Sensor	NO	5	3
Low Light TV Sensor	YES	3	3
Integrated Airframe/Weapon Sensor Synchronization	YES	3	1
"Smart Skins" Sensors	NO	1	1
Navigation/Communication Technologies			
On-Board Automated Nav/Mission Planning System	YES	3	3
JTIDS Data Link System	YES	3	1
GPS System	YES	3	3
RLG INS System	YES	3	3
Fire Control/Target Designation Systems			
Integrated Fire/Flight Control System	YES	3	1
Laser Designation	YES (2)	3	3
Laser Ranging/Designation System	YES (2)	3	3

Figure 3.3.1

Summary of Avionics Technologies and Observables/Agility Ratings

Avionics Subsystem or Technology Focus Area	Include on Baseline A/C	Observ. Rating	Agility Rating
Components/Materials Technologies			
VHSIC Phase I Components	YES	3	1
VHSIC Phase II Components	YES	3	1
MMIC Components	YES	3	1
GaAs Components	YES	3	1
Advanced Displays			
Helmet Mounted Display - Monochrome	YES	3	1
Helmet Mounted Display - Color	YES	3	1
Self-Protection Systems			
Laser Hardening Technologies	YES	3	3
Missile Warning/UV Plume Detection System	YES	3	3
Passive Self-Protection Systems (chaff/flares)	YES	3	3
Active Self-Protection System (ASPJ, IR Jammer, ...)	YES	1	5

Observables and Agility Rating System:
Rating of 1 (significant positive impact) through 5 (significant negative impact)

Notes:
(1) INEWS, ICNIA, and Radar functions will be combined into a single Integrated Sensor System suite
(2) Navigation FLIR, Targeting FLIR, and Laser Designation/Ranging functions will be combined into a single Integrated Electro-Optical (EO) Sensor System suite

Figure 3.3.1 (cont)

MDA-E Model 2002
Used for Sensitivity Study

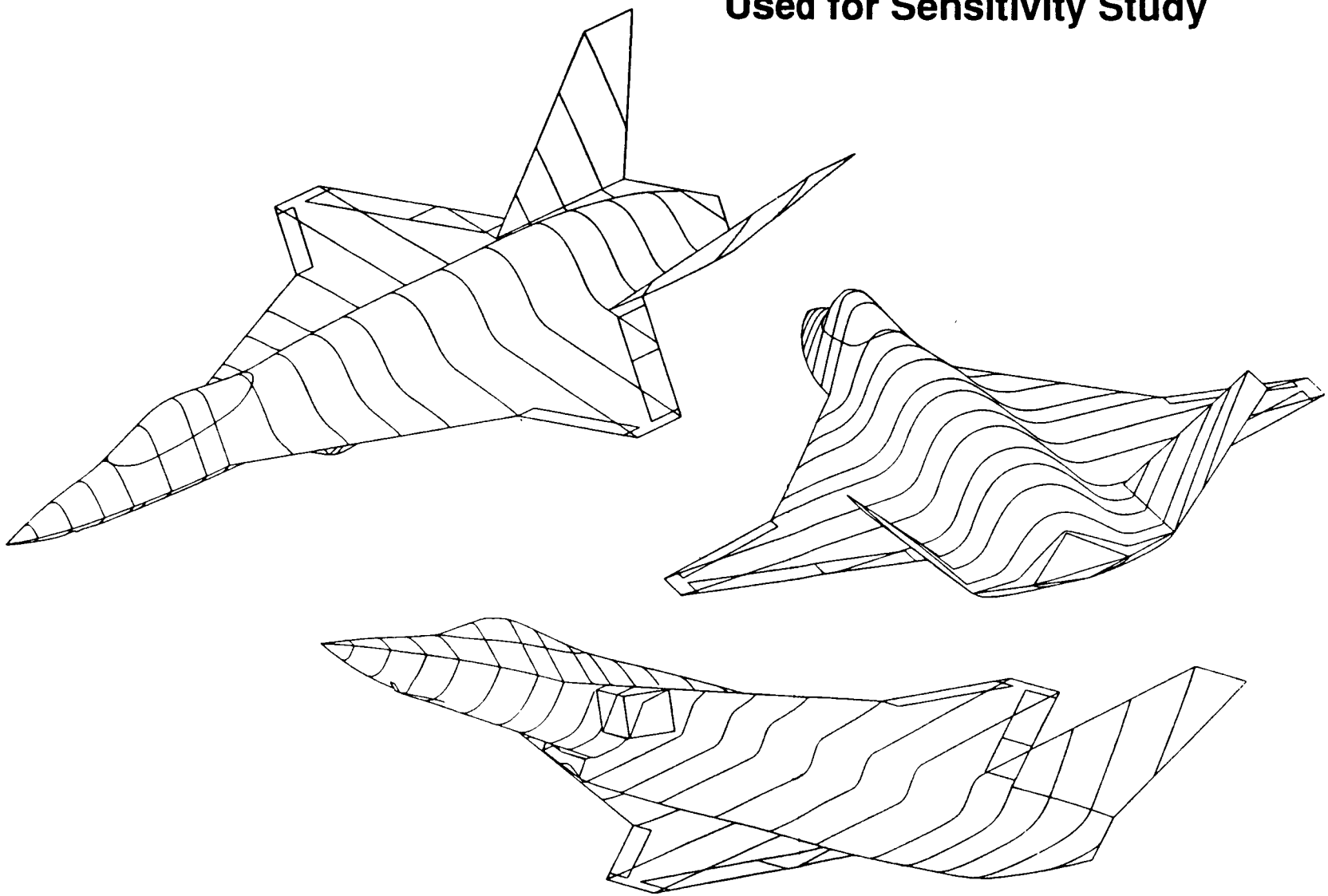

Figure 3.4.1

TOGW Sensitivity to Engine OPR, CET, and P_{T2}/P_{T0}

- Parameters varied one at a time
- Baseline parameters: OPR 35, BPR 1.4, CET 3600, THR 1.07

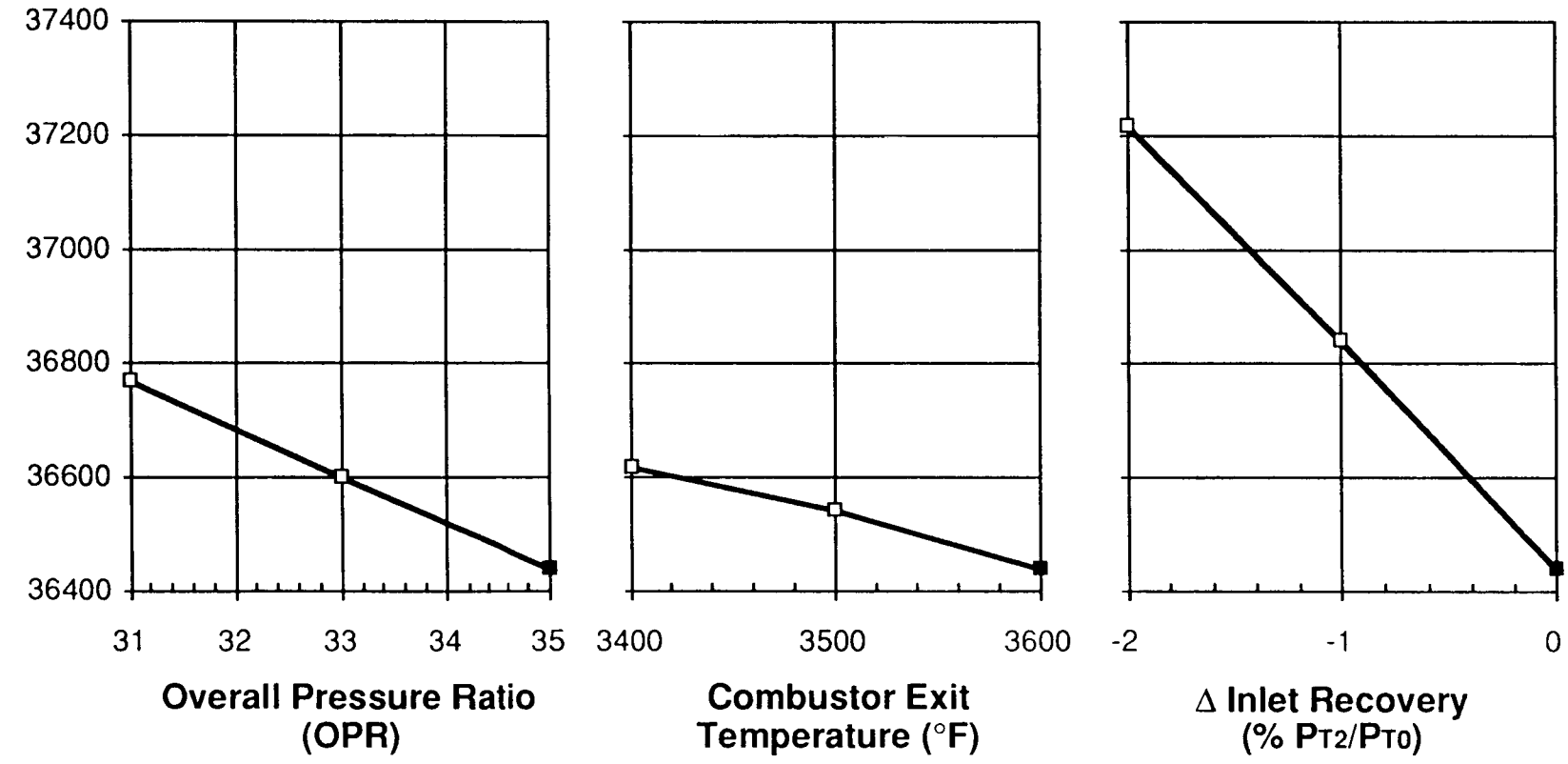

LARC93-220

Figure 3.4.2

TOGW Sensitivity to Engine THR and BPR

- Parameters varied one at a time
- Baseline parameters: OPR 35, BPR 1.4, CET 3600, THR 1.07

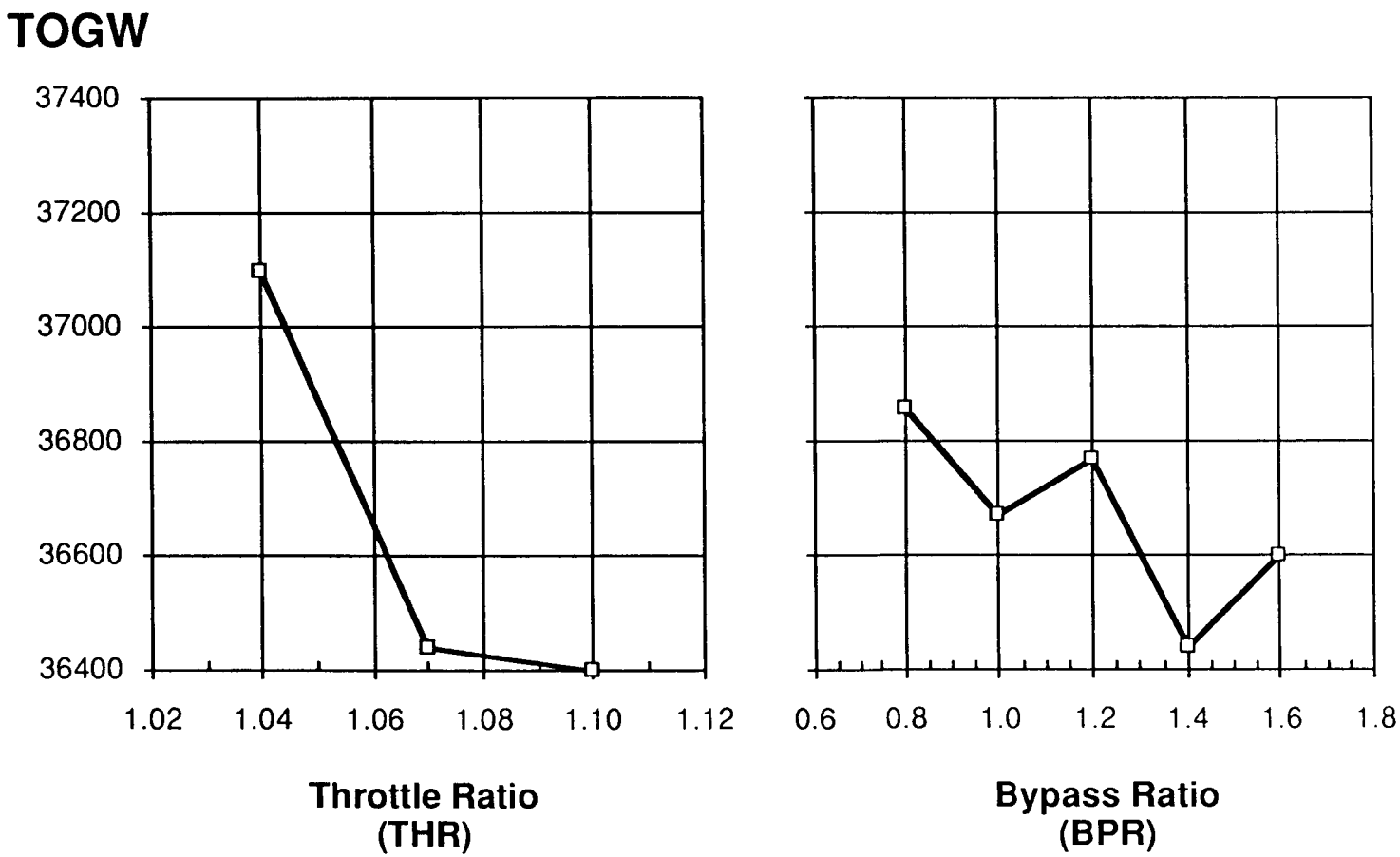

LARC93-221

Figure 3.4.3

TOGW vs Bypass Ratio

- Baseline Study Mission / EM Performance
- MRF 2002 Vehicle Aerodynamics / Weights
- Baseline Engine: OPR 35, CET 3600, THR 1.07

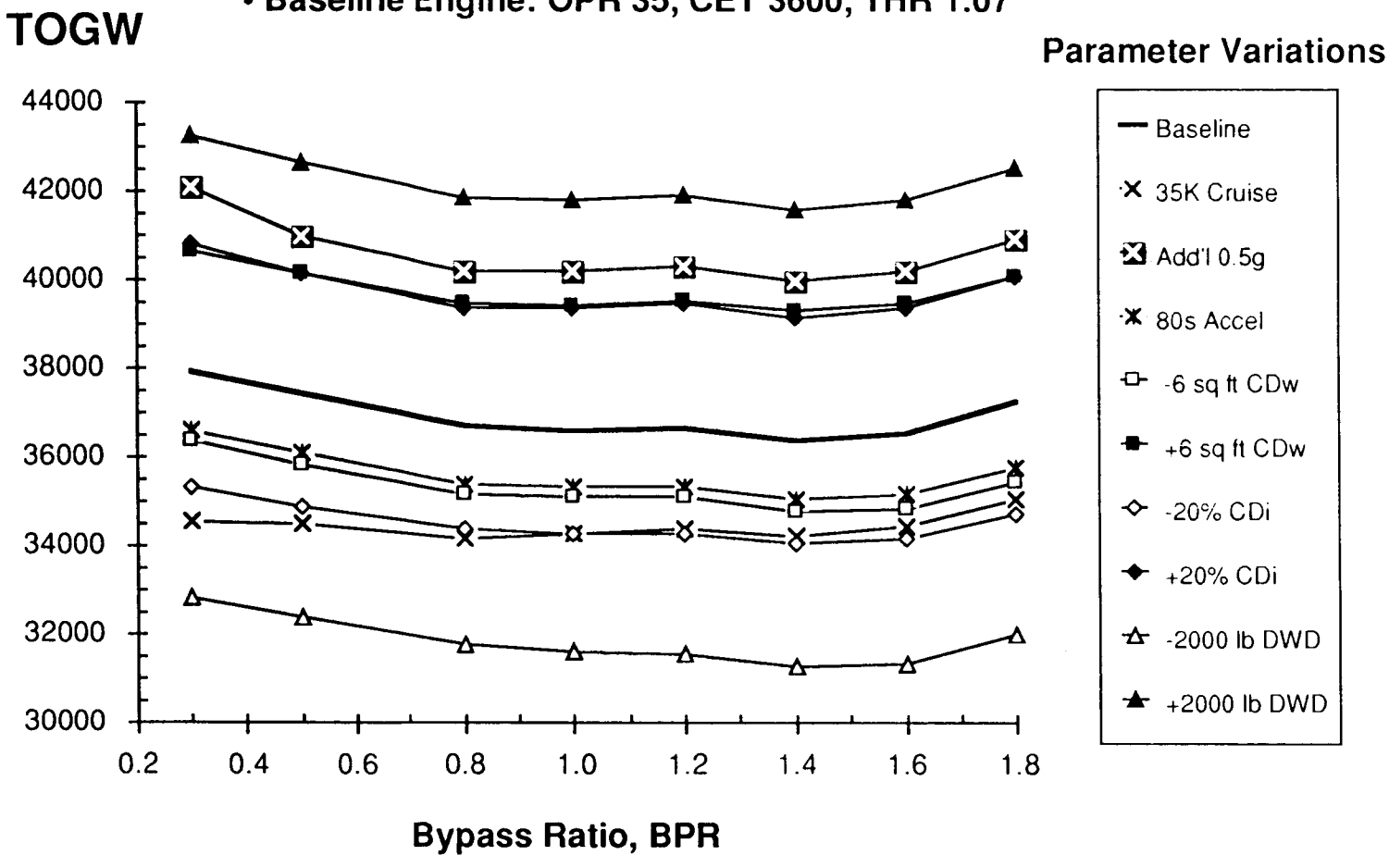

LARC93-222

Figure 3.4.4

TOGW Sensitivities at Constant BPRs

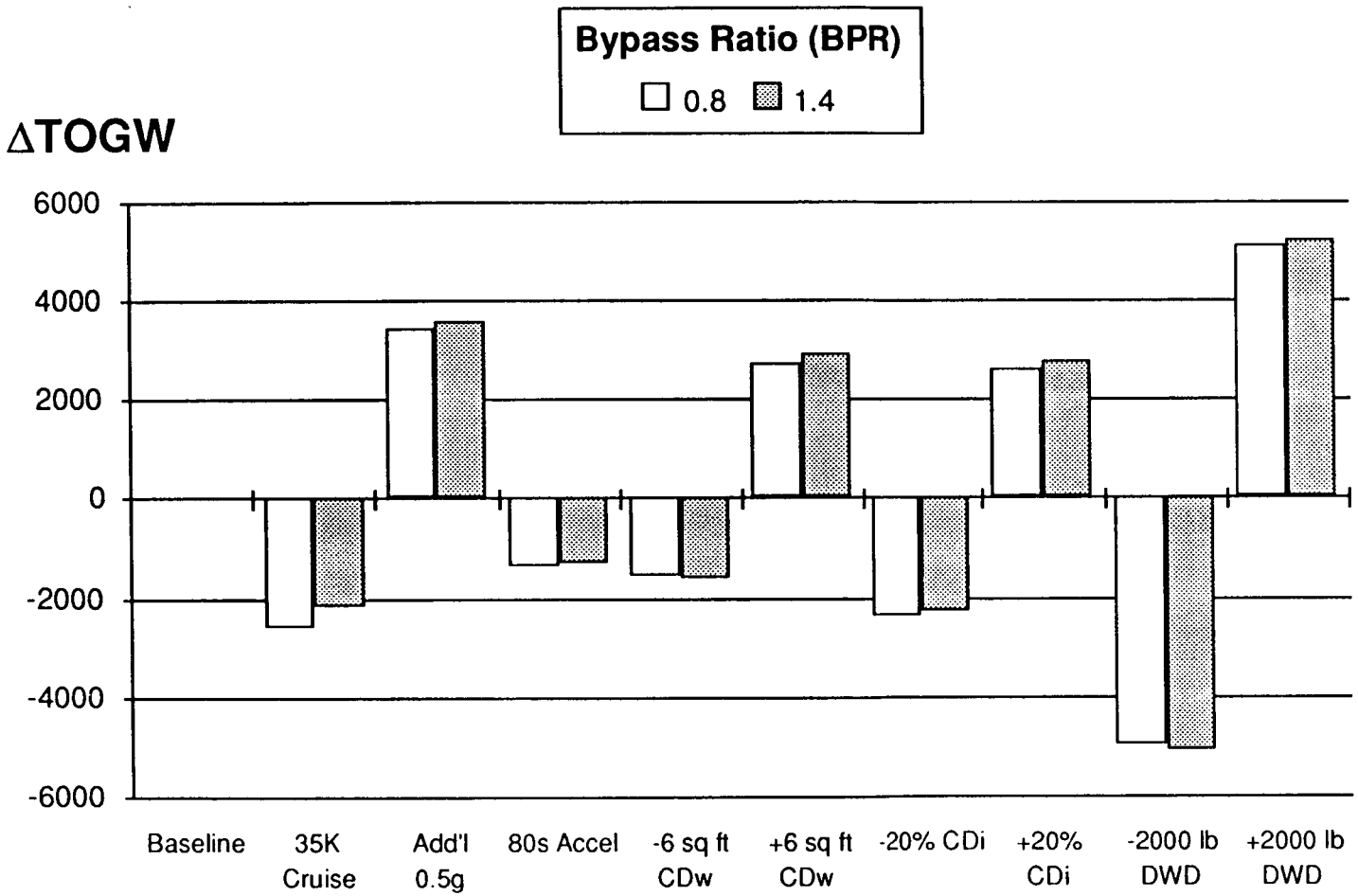

LARC93-230

Figure 3.4.5

4.0 CONFIGURATION SELECTION

The overall configuration selection process is illustrated in Figure 4.0.1, indicating the step-by-step selection process:

- Generating a large set of initial candidates covering a wide range of planforms and controls concepts,
- Screening these candidates by observables and agility potential to narrow the field to the 8-10 best concepts for each observables level,
- Making quantitative and qualitative assessments of these concepts,
- An internal Design Review with key MDA personnel to review the concepts and choose the nine baseline configuration concepts for the matrix,
- A final configuration refinement and technology selection using additional analysis and the results of the Technology Assessment.

The following sections detail the selection process and provide rationale for each of the decisions made during the process.

4.1 GENERATING INITIAL CANDIDATES

4.1.1 Rules for Observables Levels "A", "B", and "C"

While observables technology was not the emphasis in this study, it was necessary to define three different observables levels for use in the overall agility/observables configuration matrix. To avoid confusion regarding the "levels" of observables involved in this study and certain definitions of "low" or "very low" observables levels which may exist elsewhere, a simple set of three levels were defined for this study as Types "A", "B", and "C", in order of increasing observables requirements.

Figure 4.1.1 provides a description of the observables-related criteria imposed on the three levels (A, B, and C) used in this study. Type A aircraft have essentially no observables requirements, while Type C have significant requirements in terms of edge alignment and orientation, chine shaping, and weapons carriage.

The decision to use semi-submerged weapons with a small shroud for the Type B configurations was based on previous work with the shroud concept for the multi-role fighter design (see Figure 4.1.2). Unpublished wind-tunnel data suggests that the drag of a shrouded concept can be competitive with external carriage, thereby providing a solution with acceptable observables levels for the Type B aircraft without resorting to internal weapons carriage. The Type C aircraft will use internal weapons carriage to be consistent with aggressive signature requirements.

4.1.2 Internal Arrangement/Weapons Carriage Options

The "backbone" of the conceptual configuration development process used in this study is a series of candidate internal arrangement options. These internal arrangements were developed using the set of considerations outlined in Figure 4.1.3. A wide variety of internal arrangement options were developed by combining different:

- Numbers of engines (single, twin)
- Weapons carriage concepts (external, semi-submerged with shroud, internal)
- Weapons carriage locations (side-by-side, tandem, wing-mounted)
- Observables requirements (minimum radii, inlet/nozzle length, etc)

Figures 4.1.4 through 4.1.12 show a subset of the internal arrangements available for each of the three observables classes. Major subsystems are located, providing the minimum outer-moldline requirements which the planform must accommodate. Minimum nose length and nozzle length are also determined (based on observables requirements), yielding a minimum overall vehicle length. In general, minimum planform requirements (such as forebody width and overall vehicle length) imposed by the internal arrangements increase as observables requirements increase. Vehicle planforms designed to contain these internal arrangements will therefore reflect these requirements by increasing in size. The full set of candidate internal arrangements used in the planform selection process is shown in Figure 4.1.13.

4.1.3 Planform Selection/Controls Sizing

The selection of candidate configuration planforms and controls was accomplished by combining the methodologies developed for this study with the internal arrangement options, empirical non-linear aerodynamic database, and technology assessment information. As shown in Figure 4.1.14, a single tool integrated all of this information and allowed an engineer to create a candidate concept in an iterative fashion which accommodated the chosen internal arrangement and met the desired agility and observables requirements. Planform arrangement details (i.e. wing location, forebody width, etc) could be modified and analyzed until the engineer was satisfied with the concept. Control concepts could also be traded and sized to a given agility level to select the best combination of controls for a given planform concept.

4.1.4 Initial Candidate Configurations

This process was repeated for a wide variety of configuration types, yielding the set of initial candidate configurations shown in Figure 4.1.15. These configurations have roughly the same level of agility (equal to the medium level defined in the study), and were designed to cover many different classes of aircraft, include flying-wing, conventional body-wing-tail, and multi-surface aircraft. At this stage there was a cognizance of the air-to-air and air-to-ground missions and performance requirements (described in Section 5.0) but there was little assessment or screening of the individual concepts. Instead, the process was treated as a "brainstorming" session to promote creativity and establish a wide design space. This approach was intended to ensure that aircraft concepts were considered that represented high pay-off agility or

observables solutions, even though they may have been less than ideal in terms of addressing mission and performance requirements.

4.2 CONFIGURATION DOWNSELECT PROCESS

The configuration downselect process outline in Figure 4.0.1 continued with the important steps of screening the initial set of candidates, assessing them for performance and non-performance issues, and downselecting to a single concept for each position in the agility/observables matrix.

4.2.1 Best Candidates Retained for Assessment

The initial set of candidates (Figure 4.1.15) were screened and sorted into the three observables levels using a qualitative assessment based on the number of edges, planform alignment of edges, number and types of control surfaces, etc. The most promising candidates in each observables level were refined, if necessary, to ensure the correct control sizing for the medium level of agility and the correct level of observables. Figures 4.2.1 through 4.2.3 show the resulting 8-10 candidates retained in each of the observables levels A, B, and C, respectively.

4.2.2 Quantitative and Qualitative Assessment

The weights, agility, and performance methodologies developed in this study were applied to the 8-10 candidates in each observables level, generating a set of quantitative estimates for items such as empty weight, required fuel fraction, required engine size, and predicted takeoff gross weight given the baseline study mission. These quantitative assessments are detailed in Figures 4.2.4 through 4.2.12. Note that these performance and weights numbers are not based on the standard Level 1 methods used in final vehicle sizing and performance analysis (Section 5), but reflect the conceptual-level methods outlined in Section 2.0 of this report.

In addition, qualitative assessments for items such as observables ("shades of gray" within each level), validity of the internal arrangement (i.e., ease of integrating fuel tanks, inlets), and the concept's potential to reach the high agility level were also made. This last qualitative rating was important, since these candidates had control concepts sized for only medium agility, and it can be difficult to extend some concepts to high agility due to limits in control size, or inherent pitching-moment characteristics at very high angles of attack. These qualitative ratings were an important piece in the final configuration selection process, since the predicted TOGW values and other quantitative measures were often similar.

4.2.3 Design Review Process

Design review meetings were held on May 25 and May 27, 1993 to select the baseline concepts for the agility/observables matrix from the 8-10 candidates identified for each of the three observables classes. The design review focused on the quantitative and qualitative assessments for each of the candidates, and kept in mind the overall goals of the study which were to identify the impact of agility on design decisions, and the identification of technologies important in the design of future multi-role aircraft.

Participating in the design review process were:

Dave Evans	Configuration Development Manager (Signature / Counter Systems Applications)
John Klein	Technical Specialist - Aerodynamics & Flight Controls (STOVL Strike Fighter)
Andy Anderson	Aerodynamics & Flight Controls Group Manager (MD/LTV A/FX Program)
Don Althen	Configuration Synthesis Group Manager (Advanced Aircraft)
John Hoef	Aerodynamics Group Manager (Adv. Program)
Kevin Citrus	Aerodynamics & Flight Controls Group Manager (Integrated Guidance, Navigation, and Control Group)
Jim Buckley	Technical Specialist (Integrated Guidance, Navigation, and Control)
Garry Billman	Lead Engineer - Aerodynamics & Flight Controls (Signature / Counter Systems Applications)
Len Scruggs	Observables Group Manager (Adv. Program)
Matt Anderson	Senior Engineer - Mass Properties (Adv. Program)
Joe Burnes	Senior Engineer - Configuration Design
Greg Nyberg	Senior Engineer - Aerodynamics & Flight Controls (Signature / Counter Systems Applications) (Agility Study Principal Investigator)
Pat O'Neil	Unit Chief - Aerodynamics & Flight Controls (Signature / Counter Systems Applications) (Agility Study Program Manager)

It proved to be easier to identify the less desirable configurations first and eliminate them from the competition, leaving only a handful of configurations for each observables level which needed to be considered in detail. The mission and performance requirements themselves, detailed in Section 5.2, remove a number of the configurations on the basis of low aspect ratio, poor area-distribution shape, or large engine thrust required to meet the bleed-rate agility metric.

The following sections detail the decisions made in the design review as the candidate configurations were compared and winners chosen for each of the positions in the agility/observables matrix.

4.2.4 Downselection of Type A Configurations

Eliminate A01 in favor of A02

Concepts A01 and A02 are essentially the same planform at two different wing areas (with slightly different control concepts), and A01 has a significantly higher engine thrust required to meet the bleed-rate metric due to its higher wing loading. For this reason, concept A01 was eliminated in favor of A02.

Eliminate A05 and A08

These aft-wing configurations have poorly-shaped area distributions with high closure slopes. The supersonic dash and transonic acceleration requirements therefore have a significant effect on fuel sizing and engine thrust for these concepts. In addition, concept A05 has a low aspect ratio which is inconsistent with the high cruise efficiency required for the 450-nm BAI cruise at 15,000 ft.

Eliminate A03

This concept is not competitive with the remaining Type A concepts due to:

- High wing loading producing a high engine thrust required for the bleed-rate metric;
- High wing sweep producing higher wing weights and increased adverse yaw due to roll control;
- Poor overall area-distribution shape which will impact supersonic dash and transonic acceleration performance;
- Relatively high difficulty in integrating structure and packaging the internal components efficiently;

Concepts Remaining: A02 A04 A06 A07

Eliminate A07

Weights analysis indicated an empty-weight increment of approximately 1500 lbs associated with the variable-sweep wing. The performance benefits of a variable-sweep wing will be less for a land-based aircraft (allowing higher landing speeds) with no CAP mission requirement. In addition, there appears to be little inherent agility advantage to variable-sweep wings, since increases in span tend to increase roll and yaw inertia as quickly as control power.

Eliminate A04 in favor of A06

Concepts A04 and A06 are very similar, sharing the same wing area, aspect ratio, and control concept. Both suffer from a fairly high maximum cross-sectional area

and a non-ideal area-distribution shape as a direct consequence of the higher aspect-ratio wing. The trailing-edge sweep on concept A04 produces more adverse yaw due to roll, reducing its agility slightly for the same control size.

Finalists after these decisions: A02 and A06

The basic decision remaining is high aspect ratio (A06 = 4.73) versus moderate aspect ratio (A02 = 3.46). The quantitative data for empty weight, BAI mission fuel fraction, engine size required, etc. do not provide a clear winner. The qualitative assessments of agility potential and internal-arrangement validity are likewise inconclusive, although it is expected that the larger root chord on A02 will provide a better integration with the fuselage.

Final Decision: Retain A02 as baseline concept

Concept A02 will be retained as the basic planform concept for all three agility levels. It has the best balance of aspect ratio (cruise performance, bleed-drag metric) and area distribution (supersonic dash performance, transonic acceleration), and provides a good platform for trading and evaluating agility-related technologies.

The specific control concepts to be used to achieve the three agility levels were not defined during the design review, but it was expected that the high-agility aircraft would require both pitch/yaw thrust vectoring and forebody vortex-control devices, while the moderate-agility aircraft will require only yaw vectoring.

4.2.5 Downselection of Type B Configurations

Eliminate B01, B05, and B08

Similar to the aft-wing Type A concepts, these aft-wing concepts also suffer from a poorly-shaped area distribution which tends to increase transonic and supersonic drag significantly for a given maximum cross-sectional area. The engine thrusts required by these concepts to meet the transonic acceleration requirement are approximately 10,000 lbs higher than others in this class. In addition, B05 has a poor rating for observables due primarily to the nearly unswept wing trailing edge. Concept B08 also has poor agility potential, given the significant pitch vectoring and advanced controls required just to meet the moderate agility requirements.

Eliminate B10

Although the tandem weapons carriage and high wing-sweep angle on this concept significantly reduces transonic and supersonic drag, the benefit is essentially lost when the engine is sized to meet the subsonic bleed-rate metric. In addition, the high wing-sweep produces a heavy wing structure, difficulty in arranging internal structure and components, and severe adverse yaw due to roll which limits the agility potential of this concept.

Concepts Remaining: B02 B03 B04 B06 B07 B09

Eliminate B06

Although this concept had the lowest predicted TOGW and average qualitative ratings for observables, internal arrangement, and agility potential, the wing design (taper ratio of zero) has inherent structural inefficiencies and would be difficult to manufacture. Clipping the wing-tips to eliminate these concerns would reduce the aspect ratio and produce a concept resembling B02 with an aft-swept wing trailing edge and a higher wing loading, two characteristics known to adversely impact agility and engine thrust requirements.

Eliminate B09

This aft-wing concept suffers from high transonic drag as did the other aft-wing concepts, albeit with a slightly lower maximum cross-sectional area. However, the use of a canard for primary pitch control produces large trim-drag penalties for this concept and causes a significant increase in engine size required for the bleed-rate agility metric. Therefore, this concept is not competitive with other concepts in the class which use more efficient controls such as elevons for longitudinal trim.

Eliminate B07

This concept has the highest predicted TOGW in the class, due primarily to the large wetted area which produces a high empty weight and relatively low wing span which produces a high fuel-fraction requirement. In addition, all of the controls and edges produce a poor qualitative observables rating, and achieving sufficient yaw control at high angles of attack is difficult due to the aft-swept wing trailing edge and short vertical-tail moment arms.

Concepts Remaining: B02 B03 B04

The remaining concepts differ in two important ways: wing aspect ratio and control concept.

Aspect ratio varies from a low of 2.23 (concept B04) to a high of 4.73 (B03). Previous studies conducted for multi-role fighters with similar mission and performance requirements have indicated that the optimum wing aspect ratio falls in the range of 2.5 to 3.5 for typical moderate-observables wing planforms when all pertinent performance and weight factors are included. For this study, we are requiring a wing leading-edge sweep of at least 30 degrees for the Type B observables class, yielding a maximum aspect ratio of 3.45 for a simple trapezoidal wing planform with a zero taper ratio. The higher aspect ratio of concept B03 is achieved by sweeping the wing trailing edge aft, which has negative implications for both observables and agility.

Both B02 and B03 use V-tails for both pitch and yaw control, and therefore suffer substantial trim penalties to achieve even the moderate agility level. Concept B02 requires advanced forebody devices just to achieve the moderate pitch-agility level, and B03 requires abnormally large ailerons and V-tails to achieve moderate roll agility. Concept B04, on the other hand, employs two separate and efficient controls: canted

vertical tails for yaw control, and thrust-blown elevons for pitch control. This combination produces moderate pitch and roll agility with little difficulty, but has a higher wetted area than comparable V-tails. However, the B04 concept has a low wing aspect ratio and suffers from poor cruise performance and high engine thrust requirements for the bleed-rate metric.

Final Decision: Combine best features of B02, B03, B04

None of the three remaining candidates stand out as a clear winner, but certain elements from each of them appear desirable. A composite configuration was developed which captured the best features of each, tailoring the control concept to the required agility level.

The baseline Type B concept had a 30/30 trapezoidal wing with a non-zero taper ratio (approximately 0.10), yielding an aspect ratio of 2.85. The moderate-agility aircraft was very similar to concept B04, albeit with the new higher aspect-ratio wing. The specific control concepts were not determined until the configuration refinement step, detailed in a later section, but it was expected that the low agility aircraft would employ V-tails only rather than thrust-blown elevons plus canted verticals. The high agility aircraft would replace the canted verticals with high-rate yaw vectoring to eliminate the adverse roll-due-to-yaw effects, and would also incorporate advanced forebody controls such as forebody slot blowing to increase the high-angle-of-attack yaw control.

4.2.6 Downselection of Type C Configurations

The challenge for Type C was to find a configuration which met the requirements for observables, could carry the large GBU-24's and AIM-9's internally, and could achieve a high level of agility. The internal carriage options reduce down to two basic categories:

- "Wing-Mounted Carriage" with the weapons bays separated by the engine bay or bays (Concepts C02, C04, C06, C07, and C08),
- "Side-by-Side Carriage" with the GBU-24 bays ahead of the engine bay or bays (Concepts C01, C03, C05, and C09)

Wing-mounted carriage generally produces smaller, shorter vehicles and lends itself to designs with very good observables (C06, C07). The biggest drawback is the very large maximum cross-sectional area associated with this approach. The transonic acceleration requirement and supersonic dash portion of the baseline air-to-air mission tend to preclude vehicles with such high transonic drag.

Side-by-side carriage generally produces vehicles having better transonic area distributions, but the fuselage length required to place the weapons bays in front of the engine bay(s) tends to produce larger, longer vehicles having distinct forebody/wing designs. The additional edges introduced by the forebody/wing design have an adverse impact on signature, but forebodies do provide a good platform for advanced

vortex-control devices and provide an extra degree of freedom in the overall longitudinal balancing.

Eliminate C08

Although this concept has a respectable TOGW based on cruise performance and empty weight, it has very high transonic and supersonic drag and requires very large ailerons and thrust-blown elevons just to meet the moderate agility level. The concept is simply not compatible with the multi-role, supersonic-capable nature of the mission/performance requirements.

Eliminate C05

A qualitative observables assessment of concept C05 indicates that although it does have the required internal weapons carriage and sufficient wing leading- and trailing-edge sweep angles, the sheer number of controls and edges combine to yield an overall observables rating which is inconsistent for the Type C class.

Eliminate C02

High transonic drag, poor agility potential, high wetted area, low aspect ratio, poor qualitative assessment of observables, and the highest predicted TOGW in the class combine to eliminate concept C02 from the competition.

Eliminate C04

This concept suffers from the same wing-mounted-carriage drawbacks as others in the class (i.e., high transonic and supersonic drag), but does represent a good balance of observables and agility potential. Unfortunately, the very low aspect ratio and high wetted area combine to produce the second highest TOGW in the class, and the low aspect ratio also produces a high engine thrust requirement for the bleed-rate metric.

Eliminate C07 in favor of C06

These two concepts represent the best designs from an observables standpoint and have nearly identical design features, differing only in the wing trailing-edge sweep angle. Empty weight and predicted TOGW are nearly identical, and transonic/supersonic drag is equally high for both of them. However, concept C06 has a higher aspect ratio and a slightly better aerodynamic balance, allowing it to meet the moderate agility level with simpler or smaller controls than C07. In addition, C06 also has more design flexibility since the leading-edge sweep angle could be increased independently from the trailing-edge angle to further improve the internal packaging or aerodynamic characteristics.

Concepts Remaining: C01 C03 C06 C09

Eliminate C01 in favor of C03

These two concepts are similar in design, differing primarily in the wing leading-edge sweep angle (C01 = 35 deg, C03 = 50 deg) and the wing area. Because both concepts carry the same payload with the same internal carriage concept, they will be similar in size and wetted area, with the reduced wing area of C01 essentially replaced by the larger forebody area. While both concepts have a fairly low aspect ratio and would have difficulty achieving the high agility level, the higher wing area and slightly smaller forebody on C03 make that concept slightly more desirable than C01 for reasons of bleed engine-size requirements and agility potential.

Evaluate C03, C06, and C09 as a Family of Concepts

The remaining concepts, C03, C06, and C09 create a family of concepts with different forebody sizes (C06 has none, C03 has a small forebody, and C09 has a fairly large forebody). The qualitative observables ratings vary from best (C06 = 1) to average (C09 = 3) in the same order, while the agility potential ratings are also in order but favoring C09 over C06. This suggests that this family represents a good starting point for the three agility levels if no other factors intervene.

Retain C06 as the Low-Agility Concept

Concept C06 represents a good choice for the low agility level if the high transonic/supersonic drag levels can be addressed by some slight planform or internal arrangement modifications.

Retain C03 as the Medium-Agility Concept

Both C03 and C09 can meet the medium agility level with a reasonable set of controls and/or advanced controls, and the empty weights and predicted TOGWs are very similar. Because C03 can meet the moderate agility level with thrust vectoring and other advanced controls having less adverse impact on observables, it was decided to retain C03 as the baseline concept for the moderate-agility aircraft.

Retain C09 as the High-Agility Concept

Concept C09 represents the best chance out of the Type C candidates for achieving the high agility level while meeting all the mission / performance requirements. There may be some significant modifications or advanced technologies required, and it may be that the higher aspect-ratio wing is not compatible with the roll-and-capture metric (due to high inertias).

The final product of this design-review process was a set of baseline concepts for the agility/observables matrix. This initial matrix of configurations is illustrated in Figure 4.2.13. The specific control technologies and configuration details were not determined during the design review, but instead were part of the configuration refinement to be discussed next.

4.3 CONFIGURATION REFINEMENT

Once the baseline concepts for the agility/observables matrix were determined during the design review, it was necessary to review and re-analyze them once more in order to finalize configuration issues such as the number of engines, inlet/nozzle concepts, and the final selection of controls technologies for each of the nine aircraft. More detailed analyses were performed on each of the nine concepts, including the development of a Unigraphics geometry model reflecting most of the geometry features.

Both single and twin-engine concepts were considered during the generation of initial candidate concepts and the selection of the 8-10 best candidates for each observables class. However, it was found that the estimated engine thrust required to meet the transonic acceleration requirement favored twin-engine concepts (see thrust required in Figures 4.2.5, 4.2.8, 4.2.11) in terms of aft-body depth requirements and overall integration with aft-body control concepts (e.g., thrust-blown elevons favor a shallow, wide aft-body rather than one that is deep and narrow). The only exception to this in the final matrix is the flying-wing configuration (Type C/Low Agility) in which the side-by-side weapons carriage and relatively short fuselage make twin engines difficult to integrate. For this concept a single-engine installation was chosen despite the implied engine size required to meet the acceleration requirement.

At this stage in the configuration process, a new set of configuration numbers were assigned to the nine aircraft in the agility/observables matrix. As the table below indicates, these configuration numbers varied from 2401 for the low-agility/Type A aircraft to 2409 for the high-agility/Type C aircraft.

	Low	Medium	High
Type A	2401	2402	2403
Type B	2404	2405	2406
Type C	2407	2408	2409

Configuration Designations for Final Agility/Observables Matrix

4.3.1 Selection of Controls Technologies

Although the same tool used to generate the initial configurations was used for the selection of controls technologies, the more detailed Unigraphics geometry was used to define the planform geometry and allowable controls. Various control concepts, sizes, and arrangements were investigated for each of the nine aircraft, with a goal of minimizing the number of controls and their sizes as well as the level of technology required to meet the control objectives.

Figures 4.3.1 and 4.3.2 show the types of aerodynamic results used to select and size the controls for a given aircraft. These figures reflect the final control sizes, geometric definitions and control-mixing values used on the low-agility/Type B aircraft (2404).

Figure 4.3.1 presents the longitudinal lift and moment predictions using the final set of controls. As shown in this figure, the forebody produces a significant nose-up pitching moment which the canted V-tails can just trim at the required 25° angle of attack. Indeed, the size and dihedral angle of the V-tails were determined in part by this very requirement.

Another key agility requirement was the time-to-roll-and-capture 90° metric, which for the low-agility aircraft was 3.0 seconds. Figure 4.3.2 presents the control-power estimates for each lateral/directional controller present on the 2404 aircraft, along with the required levels of roll and yaw control power at each angle of attack defined by the 2-DOF roll-and-capture simulation (Section 2.4). As shown on the left half of Figure 4.3.2, the total amount of yaw control available from all controllers (using mixing) equals the required amount at an angle of attack of approximately 30°. This angle of attack is essentially the angle for maximum lift and is above the required 25° AOA. Note that the use of V-tail mixing (65% pitch, 35% yaw) reduces the amount of yaw control available for the roll maneuver, since the V-tail is also performing the longitudinal trimming.

The right half of Figure 4.3.2 shows the roll-control requirements (for the 3.0-second roll-and-capture maneuver) and the total available roll control including mixing and the adverse roll-due-to-yaw of the V-tails. Again, the required and available levels cross at approximately 25° AOA, yielding an acceptable solution.

This type of analysis was performed for each of the nine aircraft to define controls technologies, sizes, and mixing ratios. The process was iterative, requiring the engineer or designer to modify the controls and re-analyze the aircraft many times to find the best combination of controls technologies for each aircraft.

The three high-agility aircraft (2403, 2406, and 2409) proved to be a significant challenge to existing, conventional controls technologies. As shown in Figures 4.3.3 through 4.3.5, the amount of yaw control required to perform the roll-and-capture maneuver in 1.5 seconds (high agility level) becomes very large as the angle of attack increases. At the same time, the level of yaw control from most conventional controls tends to decrease with angle of attack. (See the vertical tail/rudder data in Figure 4.3.3).

For the Type A aircraft, 2403, the deficiency between required and available yaw control at the maximum-lift angle of attack is fairly small due to the yaw-vectoring and rudder contributions. (See left half of Figure 4.3.3). Further increases in yaw vectoring or tail size appeared to be a poor means to eliminate the control deficiency.

A number of high-angle-of-attack yaw-control technologies were discussed in the technology assessment (Section 3). Because the 2403 aircraft has no significant observables requirements, the key elements to discriminate between controls technologies become the yaw-control potential, integration issues, and weight. Referring to Figures 3.1.1 and 3.1.2, the best candidate control concepts appear to be forebody strakes/fins, forebody blowing, forebody porosity, and split ailerons. Forebody strakes and forebody porosity are more desirable in terms of weight, while split ailerons are easier to integrate on the configuration. Forebody strakes similar to the strakes used in the F/A-18 HARV program were chosen for aircraft 2403 due to the wealth of information available on these devices and their relatively low weight impact.

The Type B high-agility aircraft (2406) was designed to be a tailless concept, employing high-rate yaw vectoring for both control and directional-stability augmentation. Split ailerons are also included in the configuration as a backup all-angle-of-attack yaw-control device. For the purposes of sizing additional controllers, only the yaw-vectoring control power is included since it is the primary yaw-control device. The resulting deficiency in yaw-control power illustrated in Figure 4.3.4 was eliminated with a forebody-blowing control concept known to be effective on chined forebodies (see Section 3.1.1 or Figure 3.1.13). The significant control power requirements eliminated from consideration some of the smaller and simpler control devices such as forebody fences, flaps, and vents as well as aft-body pop-up devices. The chosen forebody-blowing concept will provide the necessary control power at a mass-flow rate of approximately 15 lbs/sec at the Mach 0.6/15K flight condition, or about 5% of a typical 40,000-lb (twin-engine) powerplant. The expected short duration of routine blowing operations, and the rather limited portion of the flight envelope where the blowing would be used (i.e., low speed - high angle of attack) may be compatible with this significant demand on the propulsion system.

The Type C high-agility aircraft (2409) was also designed to be tailless. High-rate yaw vectoring provided primary yaw control and directional-stability augmentation, while split ailerons provided backup control. This concept also had a significant canard surface, which used mixing of collective and differential deflections to provide additional yaw control at high angles of attack. As shown in Figure 4.3.5, however, even with the yaw vectoring and canard yaw control there was still a small deficiency in the yaw control and the maximum lift condition (approximately 30° angle of attack).

The selection of an additional control to eliminate this deficiency was difficult for two major reasons:

- The configuration could not employ forebody yaw-control devices, since the use of differential canard deflection uses vortex-related phenomena to produce the yaw control and there is no reason to expect additional vortex controls would be effective;

- The configuration was Type C, indicating aggressive signature requirements.

Again examining Figure 3.1.1 from the technology assessment, it appeared that pop-up effectors and vertical fins were the only likely candidates. While a vertical fin or canard would produce more control power than an aft-body pop-up, the relatively small control-power deficiency and the poorer observables characteristics of the vertical fin concept prompted the use of a set of small (8.5 sqft) aft-body pop-up devices to provide the required control power.

The final controls technologies used for the nine aircraft are shown in Figure 4.3.6. As expected, the number and complexity of the controls generally grows with increasing agility level and observables level. Note that various forms of thrust vectoring appear on six of the nine aircraft, four of the concepts will be tailless, and canards will be employed on only one aircraft.

4.3.2 Inlet/Nozzle Issues

Because the scope of this study did not include detailed inlet and nozzle integration issues, they were not investigated in great depth. In general, however, sufficient internal volume was set aside for inlet and nozzle concepts consistent with each vehicle's observables level during the Unigraphics configuration definition.

As the drawings of the nine vehicles indicate (see Appendix), some thought was given to the choice of basic inlet type relative to the agility level and observables level. For example, while the low-agility Type C aircraft (2407) used a top-mounted inlet, since the angle-of-attack limit of 25° was consistent with such an inlet, the other Type C aircraft required a chin-mount inlet having much longer ducts.

Nozzle design was handled in a similar manner, with attention given to the choice of conventional variable-exit design vs. fixed-aperture design, extra nozzle length and volume to accomodate vectoring requirements.

4.3.3 Lateral-Acceleration Issues

The methods described in Section 2.5 were used to estimate the lateral acceleration capability of the baseline study aircraft using the controls and technologies selected to meet the other agility metrics. As shown by the results in Figure 4.3.7, most of the as-drawn aircraft do have reasonably good maximum lateral acceleration capability (0.6 - 0.8g's) without additional controllers, since the controls allow the aircraft to trim a sideslip angle up to 10 degrees or more. The exception is 2407, the tailless Type"C" aircraft, which can only trim to approximately 5 degrees sideslip.

To estimate the additional controller requirements which might be required to meet the very high (2.0 g's) lateral-acceleration level, a flapped chin fin was added to the 2403 and 2406 vehicles. The maximum trimmable sideslip angle and lateral acceleration were then re-computed with this additional controller present. Figure 4.3.7 indicates the additional lateral-acceleration capability with a reasonable (approximately 12 sq.ft.) chin fin added to the vehicles. Adding the fin to the 2406 vehicle did not improve its

capability as much as the 2403 due to the relaxed lateral stability which causes additional trim requirements on the 2406. The capability on the 2403 vehicle nearly reaches the desired level with a fin size as indicated in Figure 4.3.8.

4.4 FINAL CONFIGURATION MATRIX

Figure 4.4.1 presents the final agility/observables matrix defined by this configuration selection and refinement process. The aircraft cover a wide range of designs, from conventional wing-tail concepts to tailless aircraft and flying wings. The differences between Type A aircraft at different agility levels are relatively small, primarily due to the relative ease with which conventional aircraft can be made more agile. The Type C aircraft, on the other hand, require significant design modifications to meet higher agility levels, in part because of the lack of conventional vertical-tail surfaces, but also due to their generally higher weight.

Figures 4.4.2 through 4.4.10 show the basic geometry definitions of the nine final aircraft. Appendix A contains more detailed drawings and geometric data for each vehicle, as well as perimeter and area distributions, cross-section cuts, etc.

Figures 4.4.11 and 4.4.12 contain a summary of the technologies included in each of the aircraft. Many of the technologies listed are common to all nine aircraft, representing the expected "state-of-the-art" technologies in the 2005-2010 timeframe. Although it is likely that most fighter and attack aircraft will include most of these technologies in the future, it is also true that cost and supportability issues may drive some advanced technologies out of future designs. Cost and supportability analyses, though certainly key to engineering design decisions, were beyond the scope of this present investigation.

Overall Configuration Selection Process

- Payload
- Mission / EM Requirements
- General Agility Requirements

- Configurations Sorted into Observables Classes
- Design Parameters Refined / Optimized
- Controls Selected and Sized for Medium Agility

- Empty Weight & Fuel Fraction Prediction
- Engine Sizing for Bleed-Rate Metric / Accel Req'mt
- Observables Assessment, High Agility Potential

Choose Basic Planform/Control Concept

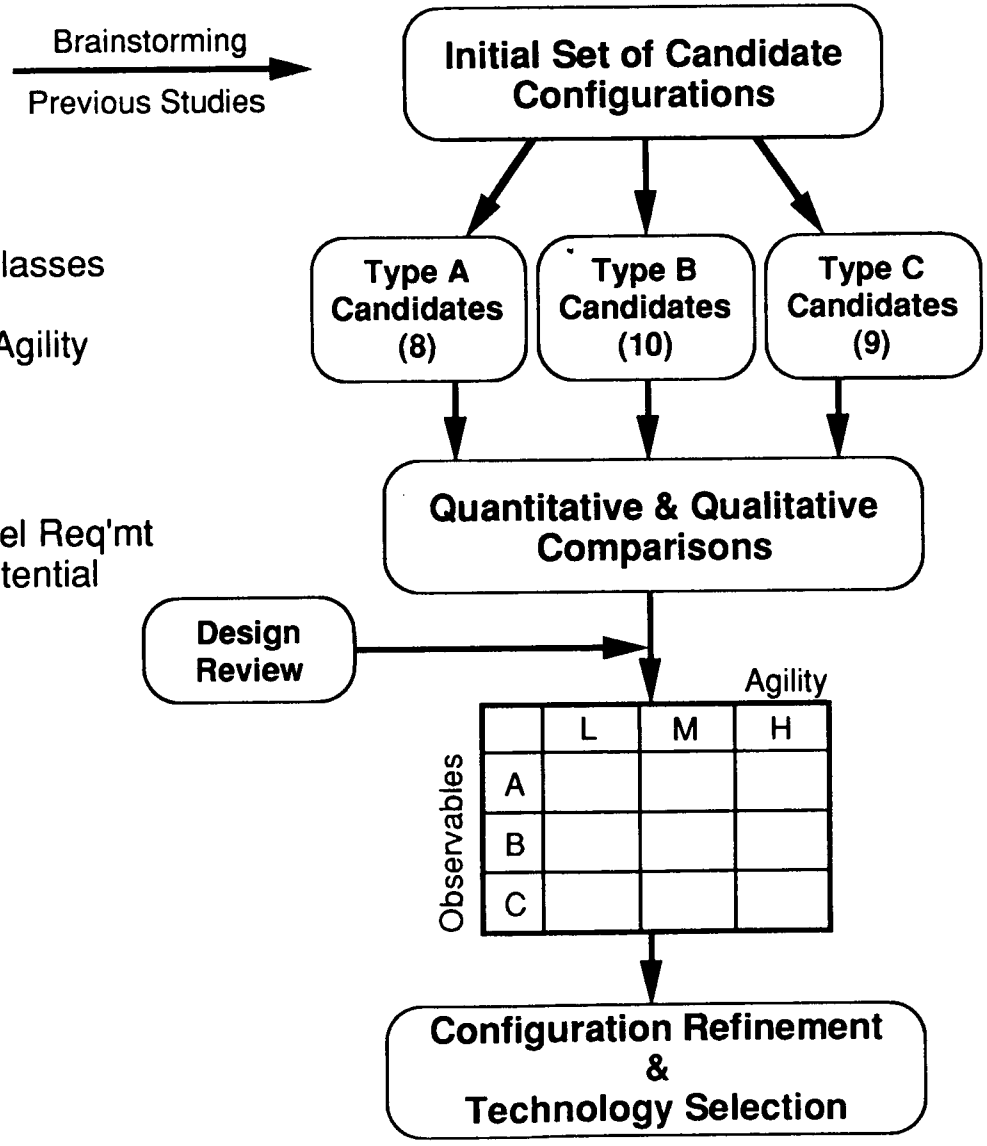

LARC93-145

Figure 4.0.1

RCS CONSIDERATIONS

CHARACTERISTIC	TYPE A	TYPE B	TYPE C
FRONTAL SECTOR AZIMUTH: ELEVATION:	 NONE NONE	 ±30° ±20°	 ±50° ±30°
AREA OF CONCERN:	NONE NONE	NOSE TAIL	NOSE TAIL BEAM
THREAT DRIVERS:	NONE	AIR TO AIR	AIR TO AIR SURFACE TO AIR
EDGE TYPE:	90° SIDE WALL 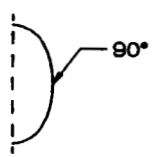	SHARP EDGE (RAS AND/OR RAM) 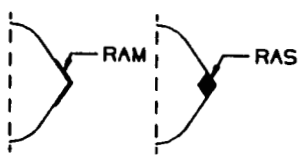	CHINE (RAS AND/OR RAM) 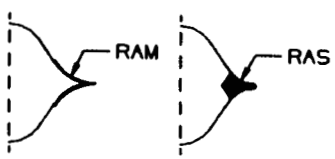
STORES CARRIAGE:	EXTERNAL	SEMI-SUBMERGED AND/OR SHROUDED	INTERNAL

Figure 4.1.1

Weapon Carriage Design Options

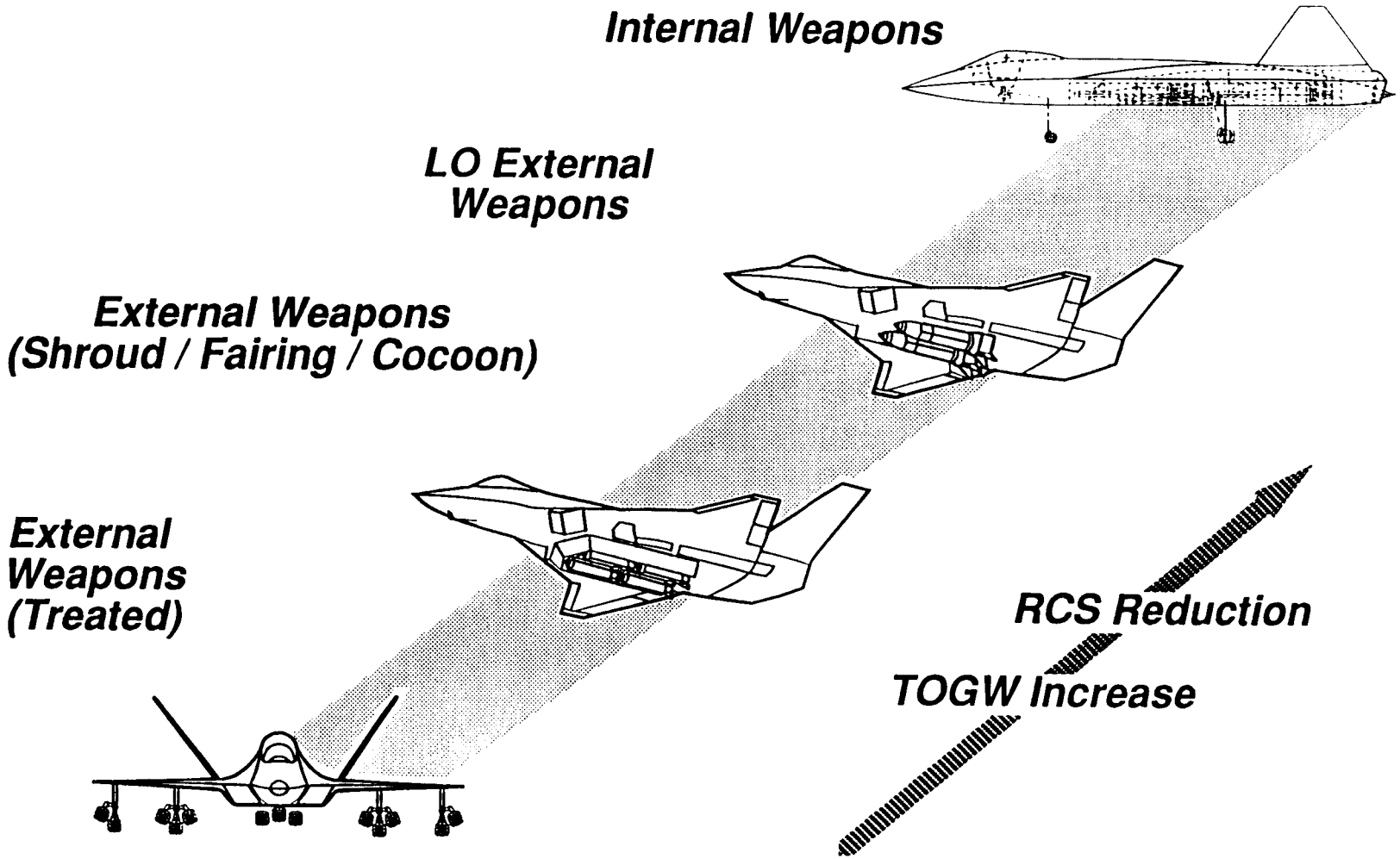

Figure 4.1.2

INTERNAL ARRANGEMENT CONSIDERATIONS

MAJOR SUBSYSTEMS:

- COCKPIT (F/A-18)
- STORES:
  - GBU-24: (28 x 28 x 173)
  - AMRAAM: (18 x 18 x 150)
  - AIM-9: (17 x 17 x 113)
- MAIN LANDING GEAR (30" DIAMETER)
- ENGINE/NOZZLE:
  - SINGLE: (45.5 x 176-224)
  - DOUBLE: (33.8 x 153-201)
- HYDRAULIC LAUNCHERS:
  - GBU-24: (14 x 17 x 100)
  - AMRAAM/AIM-9: (14 x 11 x 100)

ASSUMPTIONS:

- MID-WING / MID-CHINE ARRANGEMENT
- AIRCRAFT NOISE POINT 95"-120" AHEAD OF COCKPIT
- NOSE LANDING GEAR FOLDS UNDERNEATH COCKPIT
- 12.5" BULKHEAD/STRUCTURE CLEARANCE AROUND ENGINE(S)

Figure 4.1.3

TYPE A SIGNATURE CLASS

	SINGLE ENGINE	TWO ENGINE
SIDE-BY-SIDE CARRIAGE	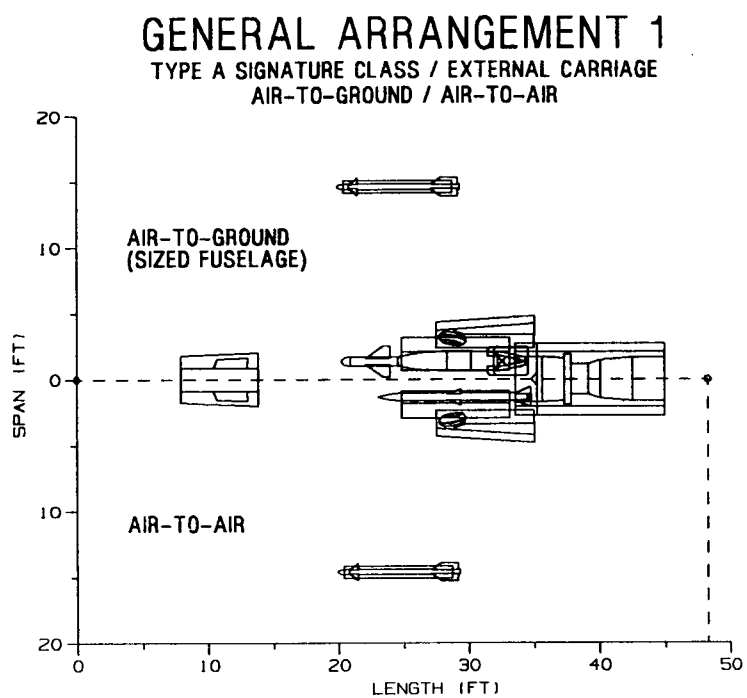	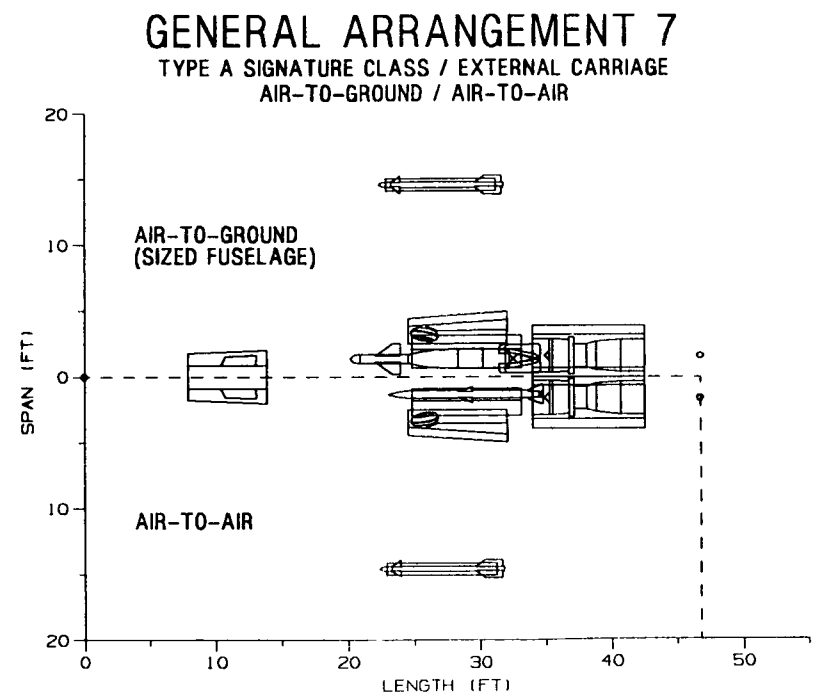

Figure 4.1.4

TYPE A SIGNATURE CLASS

	SINGLE ENGINE	TWO ENGINE
TANDEM CARRIAGE	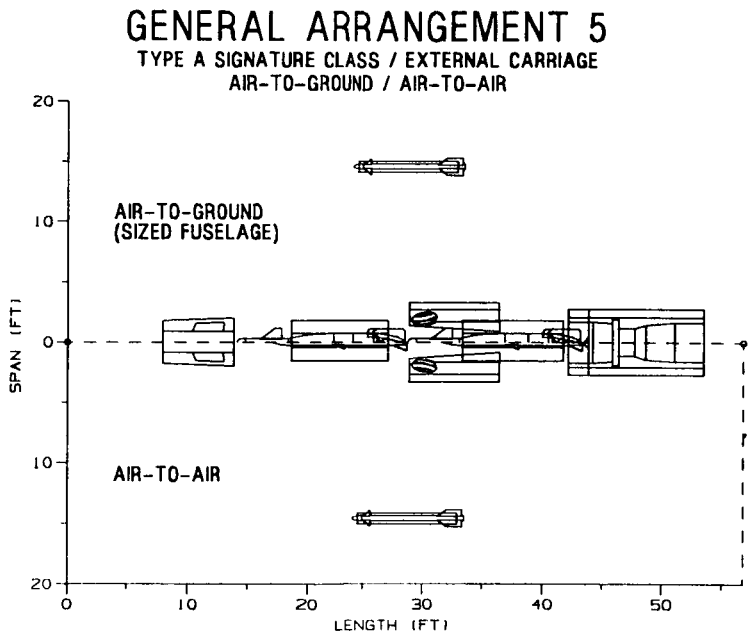	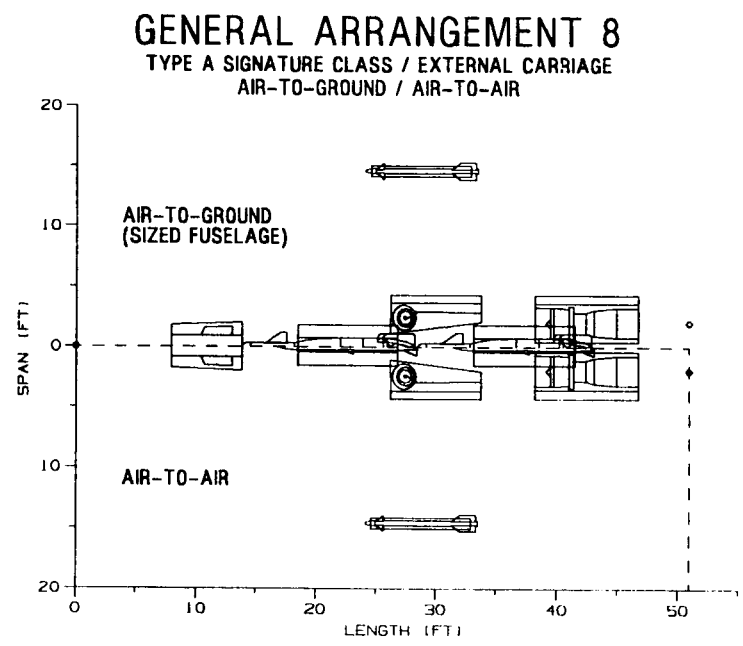

Figure 4.1.5

TYPE A SIGNATURE CLASS

	SINGLE ENGINE	TWO ENGINE
WING CARRIAGE	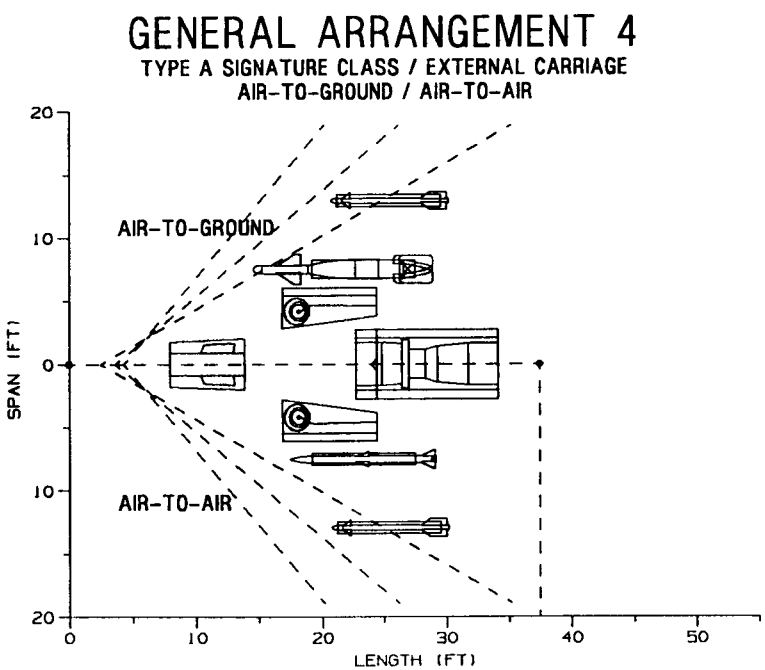	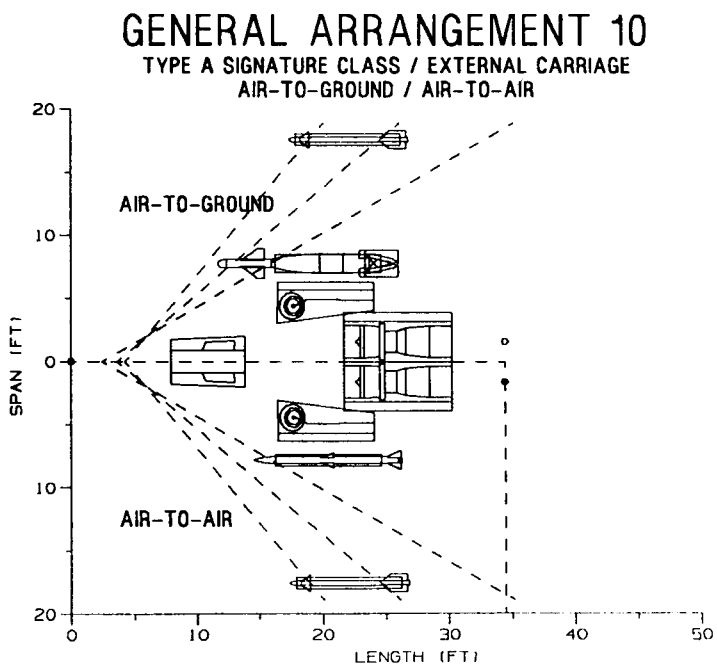

Figure 4.1.6

TYPE B SIGNATURE CLASS

	SINGLE ENGINE	TWO ENGINE
SIDE-BY-SIDE CARRIAGE	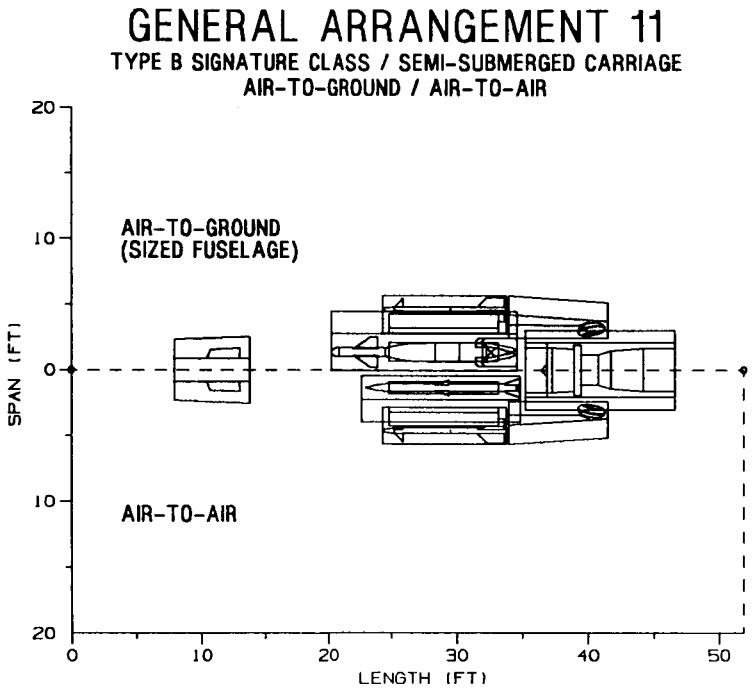	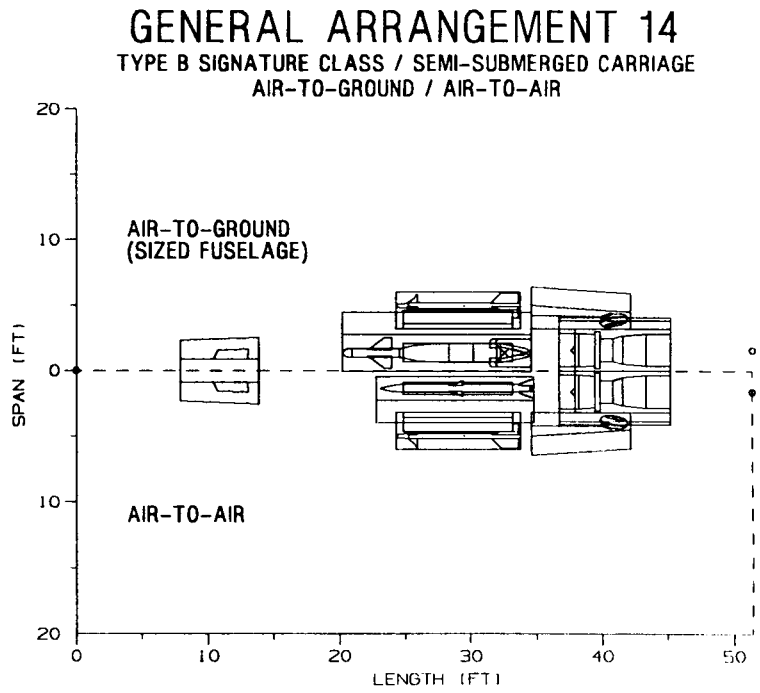

Figure 4.1.7

TYPE B SIGNATURE CLASS

	SINGLE ENGINE	TWO ENGINE
TANDEM CARRIAGE	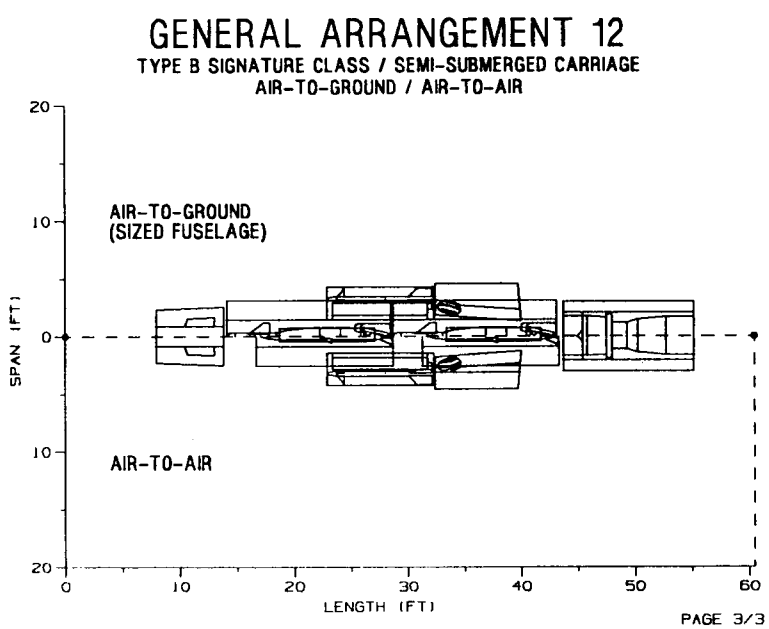	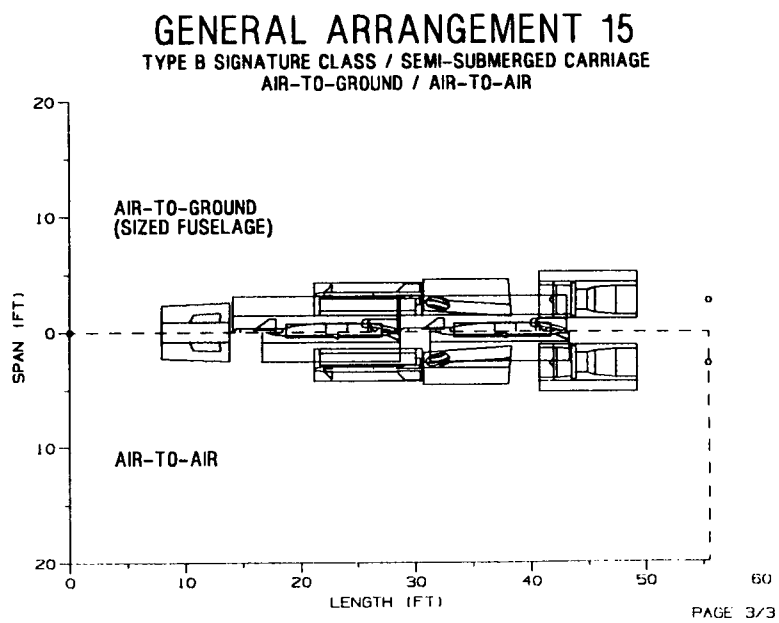

Figure 4.1.8

TYPE B SIGNATURE CLASS

	SINGLE ENGINE	TWO ENGINE
WING CARRIAGE	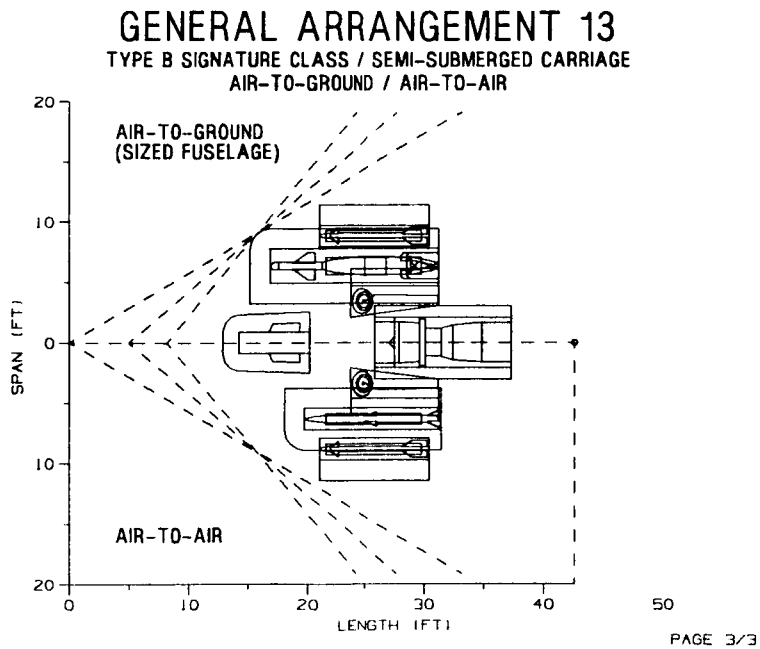	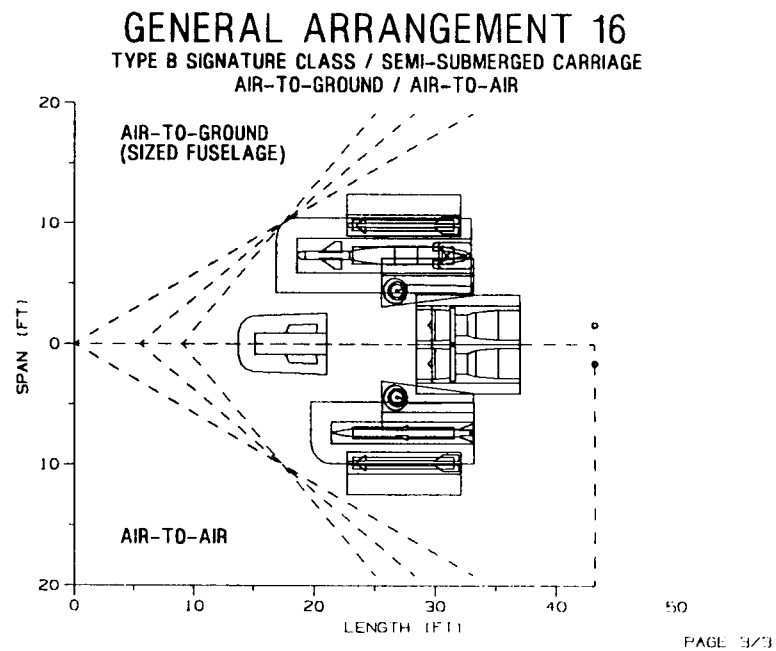

Figure 4.1.9

TYPE C SIGNATURE CLASS

	SINGLE ENGINE	TWO ENGINE
SIDE-BY-SIDE CARRIAGE	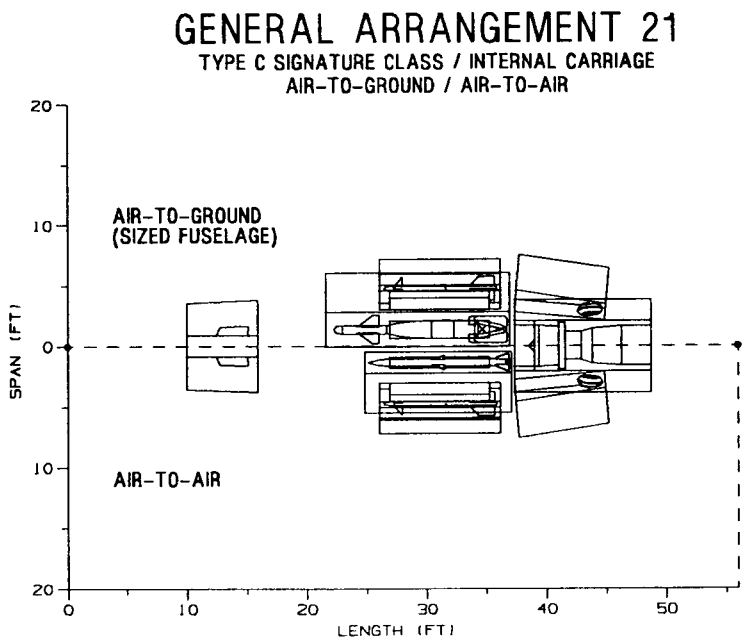	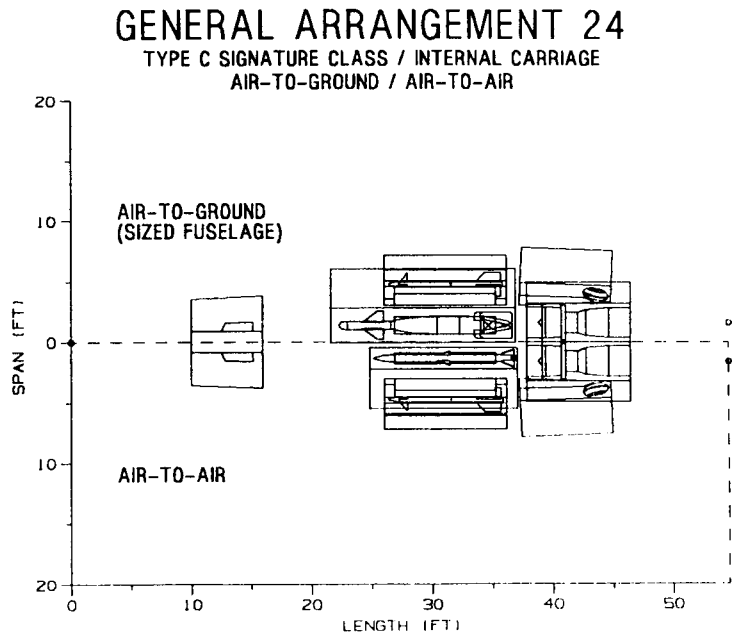

Figure 4.1.10

TYPE C SIGNATURE CLASS

	SINGLE ENGINE	TWO ENGINE
TANDEM CARRIAGE	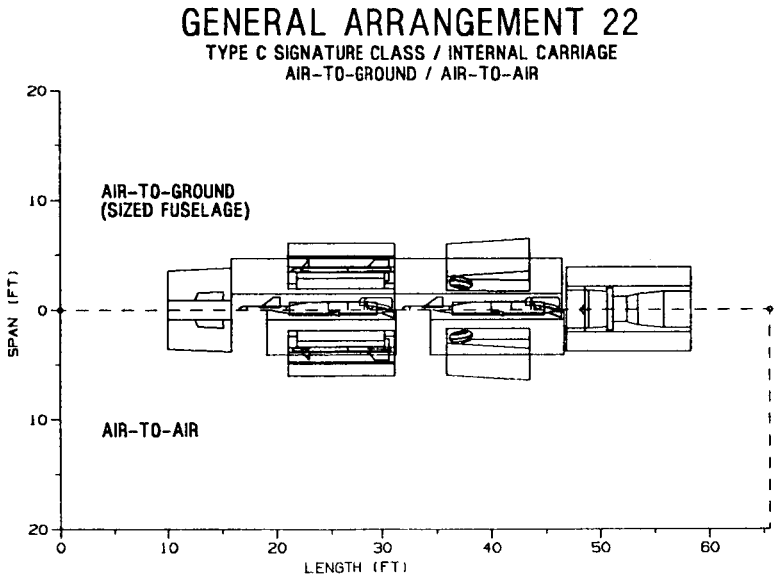	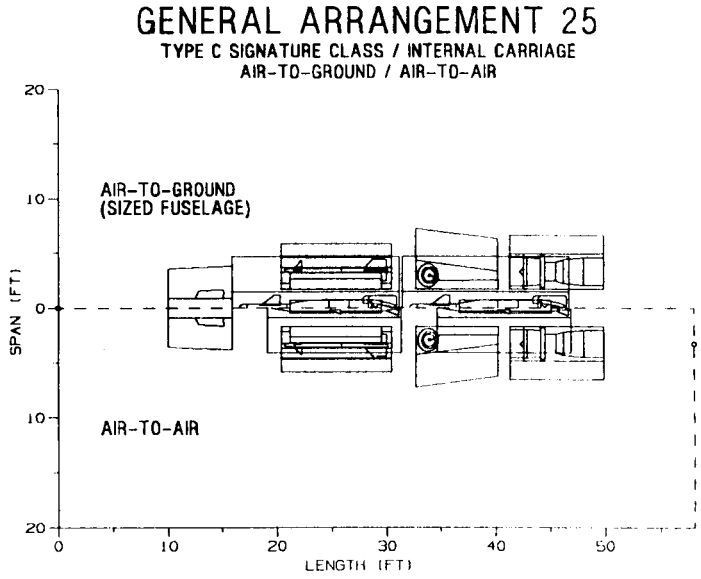

Figure 4.1.11

TYPE C SIGNATURE CLASS

	SINGLE ENGINE	TWO ENGINE
WING CARRIAGE	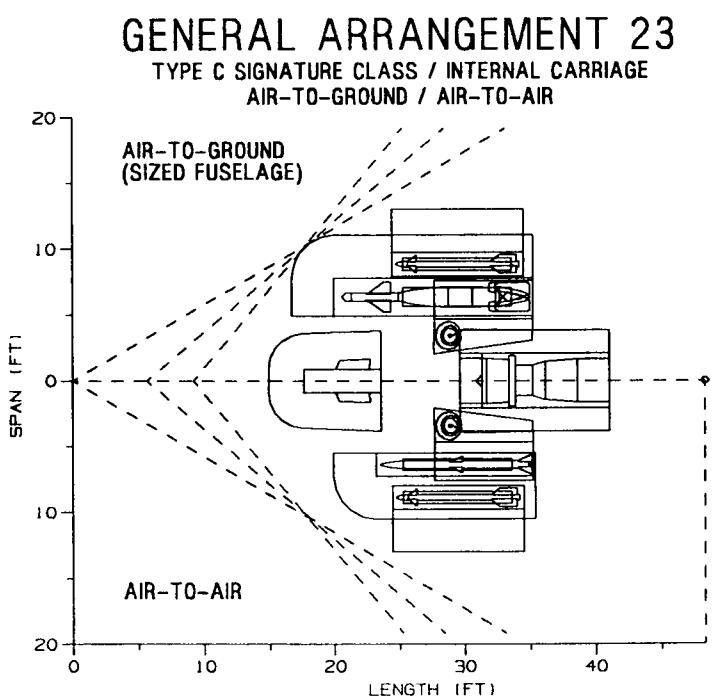	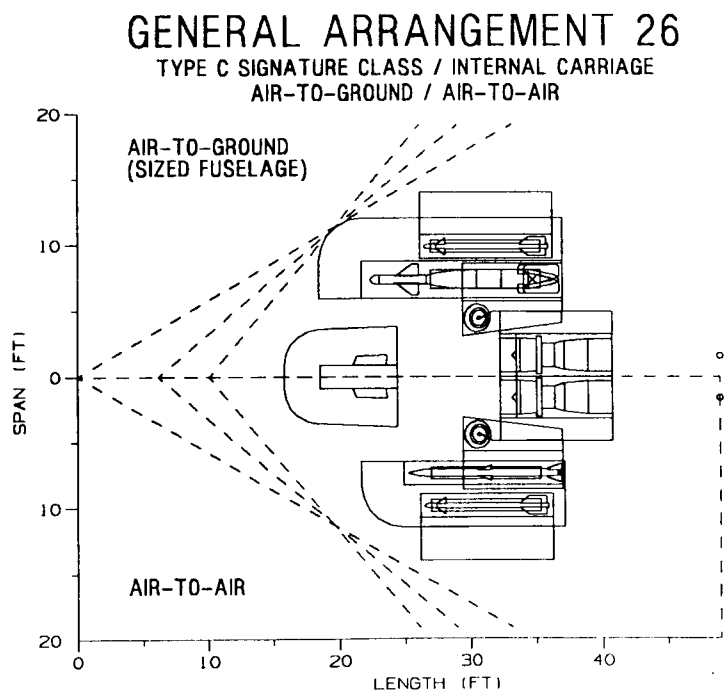

Figure 4.1.12

Candidate Internal Arrangements

Observables Class

Type "A"

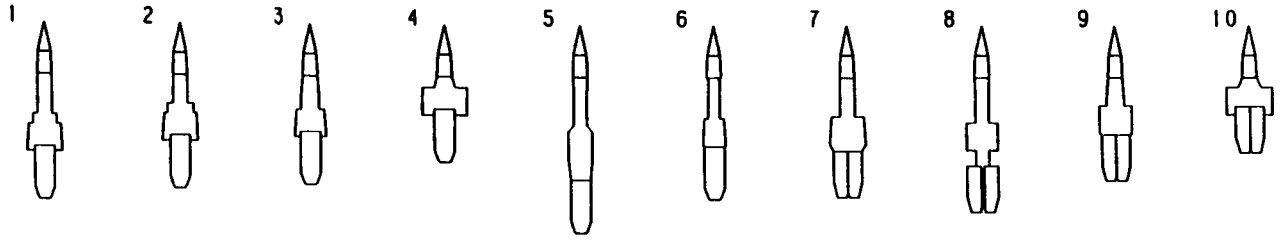

Type "B"

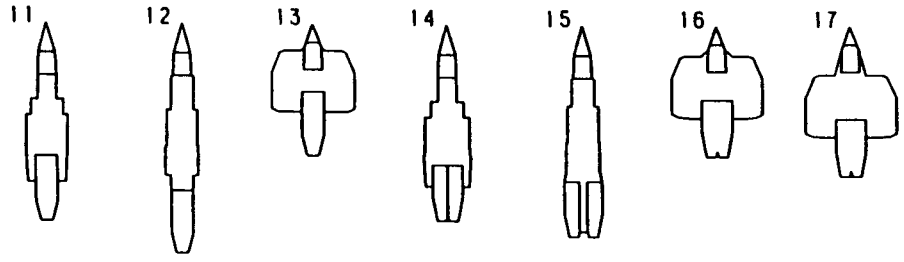

Type "C"

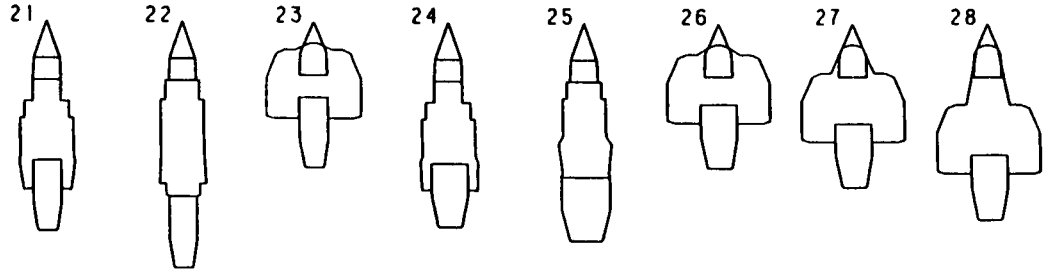

Payload: (2) GBU-24 + (2) AIM-9 (A-G), or (2) AIM-120 + (2) AIM-9 (A-A)
Observables Class Impacts Moldline Requirements and Weapons Carriage Provisions for Cockpit (F/A-18), Payload, Landing Gear, Inlet, Engine(s) and Nozzle

LARC93-011

Figure 4.1.13

Initial Candidate Concept Development

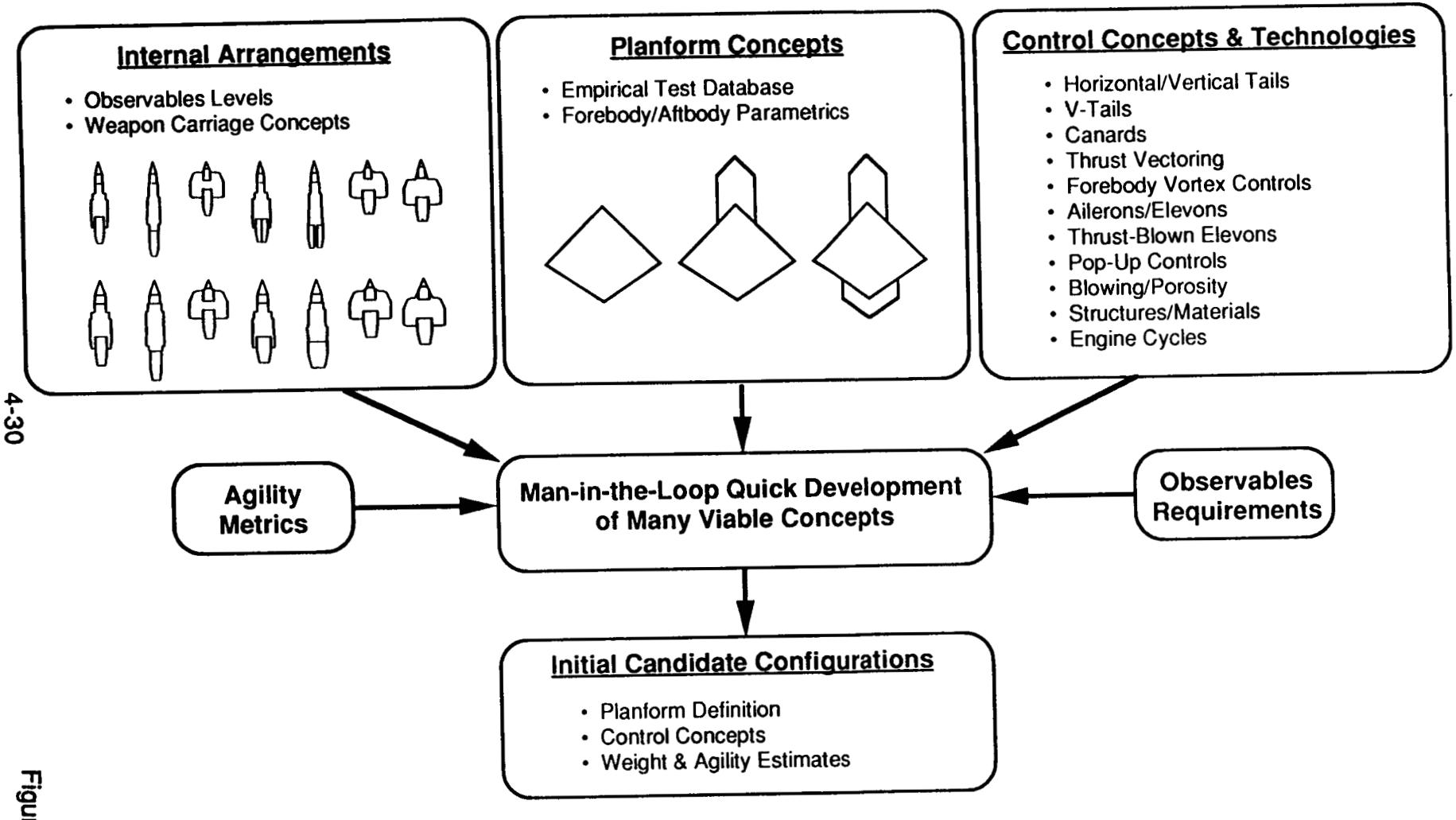

LARC93-146

Figure 4.1.14

Initial Set of Candidate Configurations

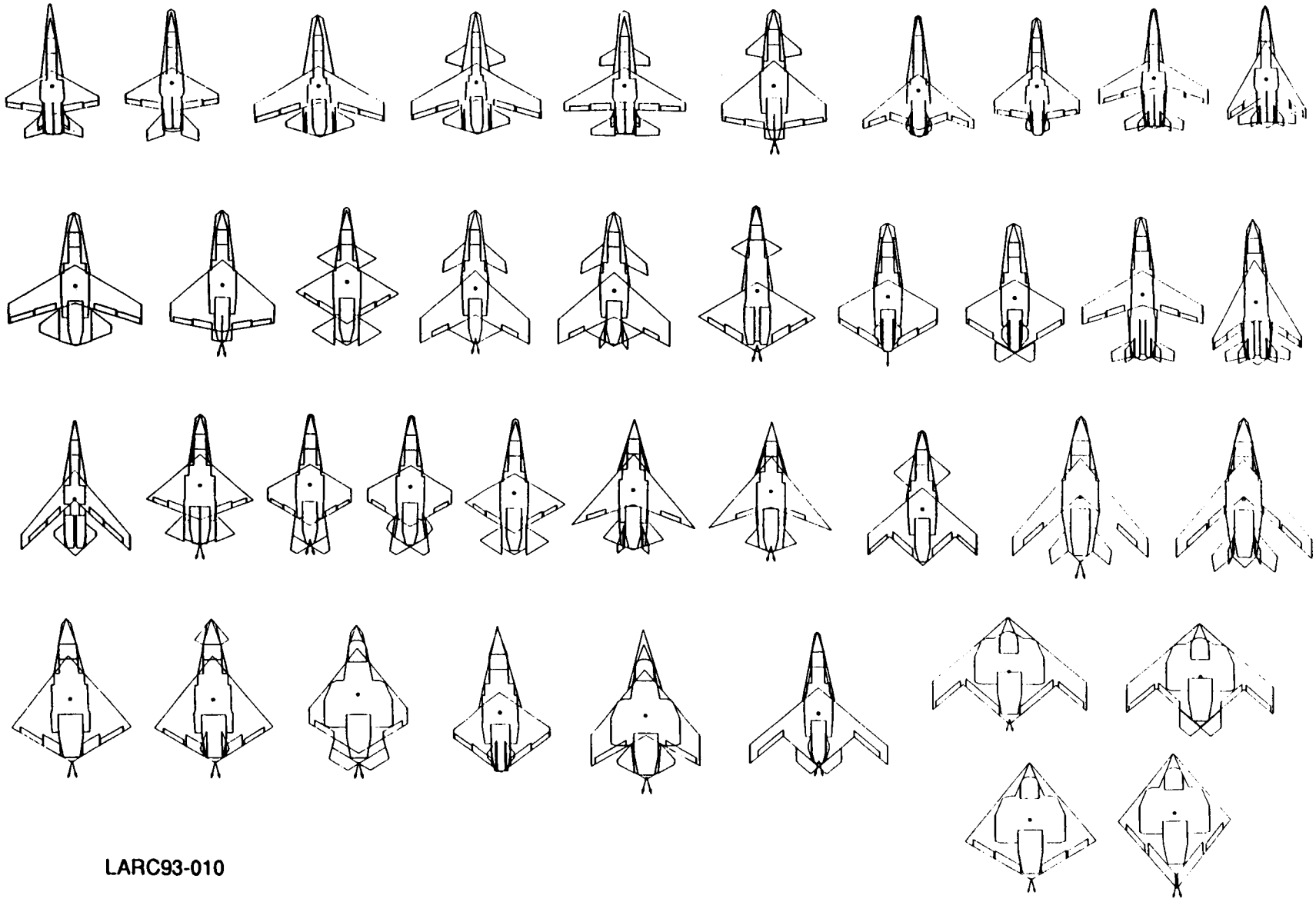

LARC93-010

Figure 4.1.15

Type "A" Candidate Configurations

- External Weapons
- No Observables Requirements
- Medium Agility Level used to size Controls

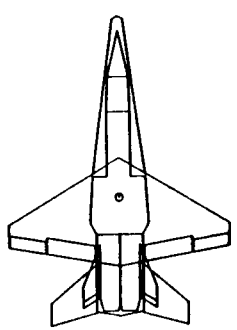

A01

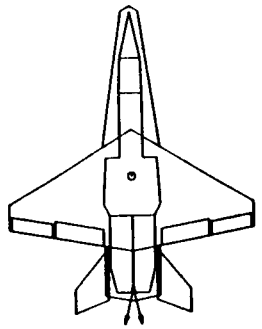

A02

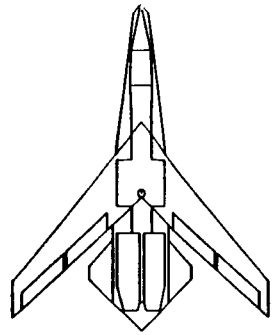

A03

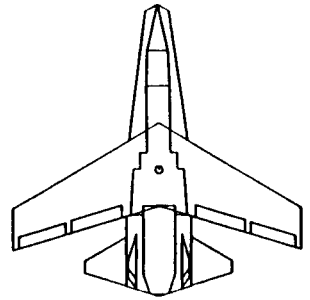

A04

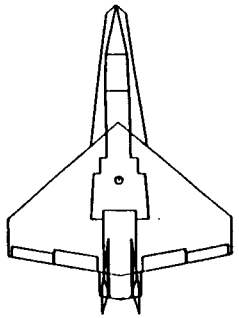

A05

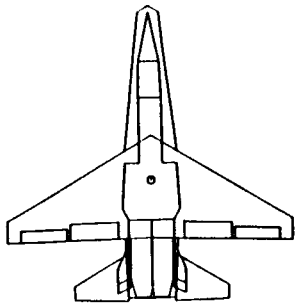

A06

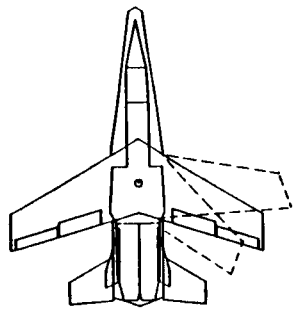

A07

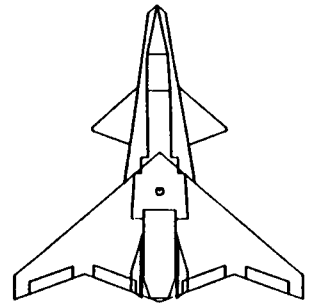

A08

LARC93-015

Figure 4.2.1

Type "B" Candidate Configurations

- Semi-Submerged / Shrouded Weapons
- Some Observables Requirements
- Medium Agility Level used to size Controls

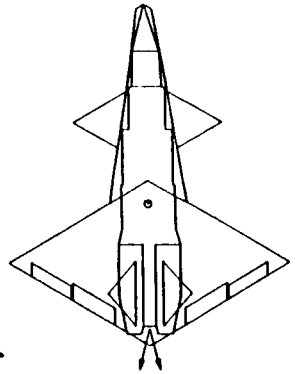

B01

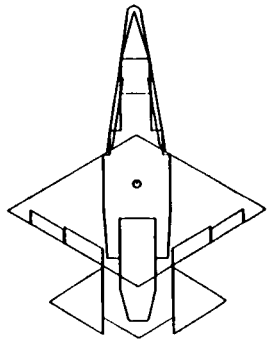

B02

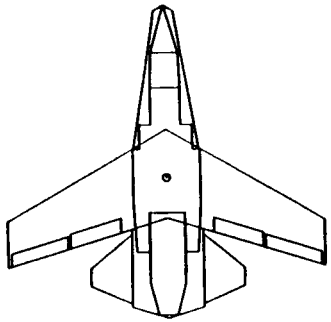

B03

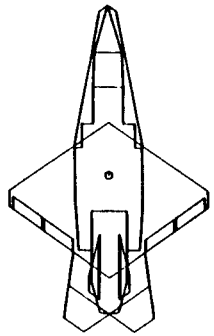

B04

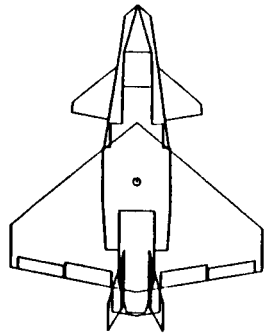

B05

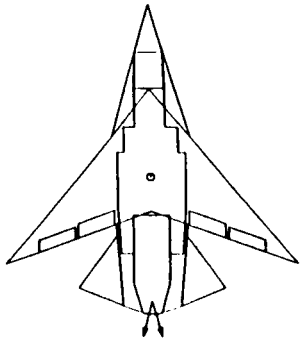

B06

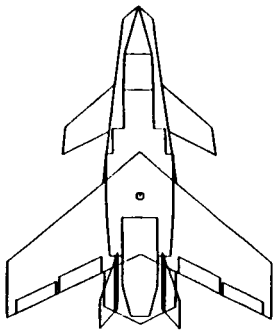

B07

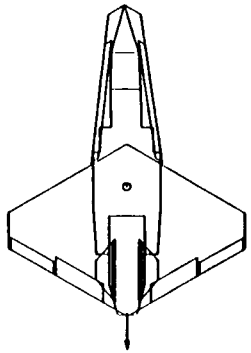

B08

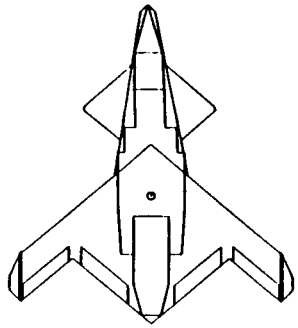

B09

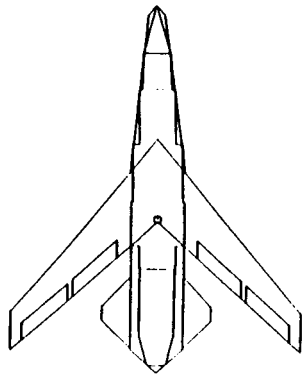

B10

LARC93-016

Figure 4.2.2

Type "C" Candidate Configurations

- Internal Weapons Only
- Significant Observables Requirements
- Medium Agility Level used to size Controls

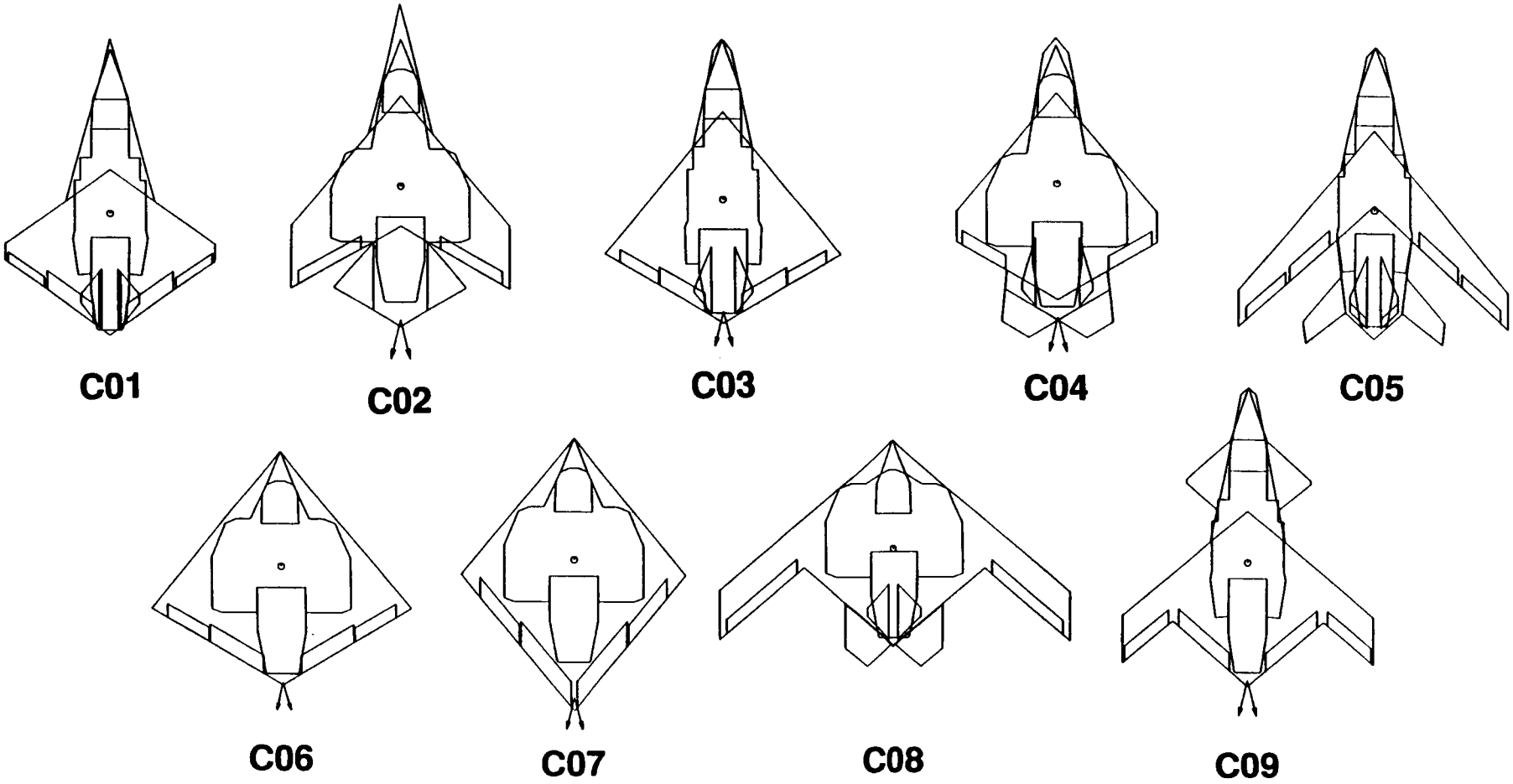

LARC93-017

Figure 4.2.3

Type "A" Configurations - Empty Weight Breakdowns

	A01	A02	A03	A04	A05	A06	A07	A08
Wing Area (sqft)	400	500	400	500	600	500	400	600
Span (ft)	37.2	41.6	44.0	48.6	37.8	48.6	43.5	49.0
Aspect Ratio	3.46	3.46	4.83	4.73	2.38	4.73	4.73	4.00
Wetted Area	1732	1806	1748	2107	1815	1988	1870	2080
Empty Weight	**21691**	**22201**	**22686**	**22621**	**20786**	**22854**	**23330**	**22500**
(EW-Eng-Avion) / Swet	9.17	9.08	9.66	7.98	8.26	8.58	9.37	8.03
Empty Weight Breakdown								
Wing	2447	2873	3640	3647	2505	3360	3963	3177
Fuselage	4234	4410	4718	4625	4360	4256	4320	4780
H-Tail	486	558	321	338	0	544	444	0
Vertical Tail	514	0	0	390	460	474	504	409
Other Aero Control	0	0	0	0	0	0	0	308
Flt Controls + Hydraulics	1217	1324	1156	1294	1061	1314	1220	1426
Inlet	469	512	527	330	403	582	555	403
Engine	4000	4000	4000	4000	4000	4000	4000	4000
Nozzle	0	200	0	0	0	0	0	0
Fuel System	1200	1200	1200	873	873	1200	1200	873
Landing Gear	1530	1530	1530	1530	1530	1530	1530	1530
Avionics	1800	1800	1800	1800	1800	1800	1800	1800
Other Weight	3794	3794	3794	3794	3794	3794	3794	3794
RAM/RAS Treatment	0	0	0	0	0	0	0	0

Figure 4.2.4

Type "A" Configurations - Performance/Sizing Data

	A01	A02	A03	A04	A05	A06	A07	A08
Wing Area (sqft)	400	500	400	500	600	500	400	600
Span (ft)	37.2	41.6	44.0	48.6	37.8	48.6	43.5	49.0
Aspect Ratio	3.46	3.46	4.83	4.73	2.38	4.73	4.73	4.00
Wetted Area	1732	1806	1748	2107	1815	1988	1870	2080
Span / Sqrt (Swet)	0.894	0.979	1.051	1.060	0.888	1.091	1.006	1.074
Required Fuel Fraction	0.338	0.313	0.294	0.292	0.340	0.284	0.306	0.288
Fixed Engine EW	21691	22201	22686	22621	20786	22854	23330	22500
Fixed Engine TOGW	**32785**	**32316**	**32126**	**31941**	**31517**	**31930**	**33599**	**31609**
Engine Sizing for Accel Requirement (0.8-1.5M, 30K, 60 secs)								
Maximum C-Section Area	51.2	55.0	47.1	50.8	55.8	54.4	52.1	53.2
Area Distribution Rating	2	1	5	3	5	3	2	5
Est CdS @ 1.2M/30K	15.5	16.1	16.5	16.5	22.7	18.7	16.0	20.8
Req Thrust @ 1.2M/30K	22262	22677	22934	22941	27044	24400	22584	25729
Req SLS Thrust	30037	30596	30942	30953	36488	32920	30471	34714
Delta Engine Weight	(996)	(940)	(906)	(905)	(351)	(708)	(953)	(529)
Engine Sizing for Bleed Rate Metric (0.6M, 15K, -450 fps @ 16 °/sec)								
Req. SLS Thrust	57000	44000	55000	35000	51000	35000	40000	35000
Delta Engine Weight	1700	400	1500	(500)	1100	(500)	0	(500)
Sized Engine EW	23391	22601	24186	22121	21886	22354	23330	22000
Sized Engine TOGW	**35354**	**32899**	**34250**	**31235**	**33185**	**31231**	**33599**	**30907**

Figure 4.2.5

Type "A" Configurations - Summary of Results

	A01	A02	A03	A04	A05	A06	A07	A08
Wing Area (sqft)	400	500	400	500	600	500	400	600
Span (ft)	37.2	41.6	44.0	48.6	37.8	48.6	43.5	49.0
Aspect Ratio	3.46	3.46	4.83	4.73	2.38	4.73	4.73	4.00
Wetted Area	1732	1806	1748	2107	1815	1988	1870	2080
Fixed Engine EW	21691	22201	22686	22621	20786	22854	23330	22500
Fixed Engine TOGW	**32785**	**32316**	**32126**	**31941**	**31517**	**31930**	**33599**	**31609**
SLS Thrust Req'mt	**57000**	**44000**	**55000**	**35000**	**51000**	**35000**	**40000**	**35000**
Sized Engine TOGW	**35354**	**32899**	**34250**	**31235**	**33185**	**31231**	**33599**	**30907**
Observables Rating	**N/A**	**N/A**	**N/A**	**N/A**	**N/A**	**N/A**	**N/A**	**N/A**
Int. Arrange. Rating	**2**	**1**	**3**	**2**	**1**	**2**	**3**	**2**
High Agility Potential	**2**	**2**	**3**	**3**	**4**	**2**	**2**	**3**

Figure 4.2.6

Type "B" Configurations - Empty Weight Breakdowns

	B01	B02	B03	B04	B05	B06	B07	B08	B09	B10
Wing Area (sqft)	650	550	600	500	750	500	600	700	650	500
Span (ft)	47.4	43.6	53.3	33.4	42.3	49.2	44.7	39.8	43.8	49.2
Aspect Ratio	3.46	3.45	4.73	2.23	2.38	4.84	3.33	2.26	2.95	4.83
Wetted Area	2362	2011	2371	1923	2382	1906	2480	2180	2158	2121
Empty Weight	**27597**	**25781**	**27443**	**24499**	**26191**	**26356**	**27268**	**25044**	**26358**	**27424**
(EW-Eng-Avion) / Swet	9.02	9.69	8.92	9.46	8.35	10.52	8.45	8.60	9.29	9.96
Empty Weight Breakdown										
Wing	3031	2720	4355	2142	3127	3492	3734	2756	3280	4693
Fuselage	5717	5607	5425	5545	5157	5366	5416	5227	5421	5425
H-Tail	0	787	753	0	0	466	0	0	0	472
Vertical Tail	490	0	0	366	516	0	479	326	352	0
Other Aero Control	401	0	0	240	320	0	535	0	354	0
Flt Controls + Hydraulics	1604	1485	1474	1070	1654	1427	1537	1216	1595	1379
Inlet	695	362	400	385	396	413	450	428	428	491
Engine	4500	4500	4500	4500	4500	4500	4500	4500	4500	4500
Nozzle	300	100	100	100	100	500	100	300	100	100
Fuel System	1282	932	932	932	932	932	932	932	932	932
Landing Gear	1645	1645	1645	1645	1645	1645	1645	1645	1645	1645
Avionics	1800	1800	1800	1800	1800	1800	1800	1800	1800	1800
Other Weight	4589	4589	4589	4589	4589	4589	4589	4589	4589	4589
RAM/RAS Treatment	1543	1254	1470	1185	1455	1226	1551	1325	1362	1398

Figure 4.2.7

Type "B" Configurations - Performance/Sizing Data

	B01	B02	B03	B04	B05	B06	B07	B08	B09	B10
Wing Area (sqft)	650	550	600	500	750	500	600	700	650	500
Span (ft)	47.4	43.6	53.3	33.4	42.3	49.2	44.7	39.8	43.8	49.2
Aspect Ratio	3.46	3.45	4.73	2.23	2.38	4.84	3.33	2.26	2.95	4.83
Wetted Area	2362	2011	2371	1923	2382	1906	2480	2180	2158	2121
Span / Sqrt (Swet)	0.975	0.972	1.095	0.761	0.866	1.127	0.897	0.852	0.943	1.067
Required Fuel Fraction	0.314	0.315	0.283	0.384	0.347	0.276	0.338	0.352	0.323	0.290
Fixed Engine EW	27597	25781	27443	24499	26191	26356	27268	25044	26358	27424
Fixed Engine TOGW	**40241**	**37641**	**38295**	**39789**	**40134**	**36406**	**41162**	**38656**	**38957**	**38621**
Engine Sizing for Accel Requirement (0.8-1.5M, 30K, 60 secs)										
Maximum C-Section Area	69.9	61.8	63.4	58.8	68.5	55.0	59.8	67.4	61.3	44.8
Area Distribution Rating	5	1	3	1	5	2	4	5	5	4
Est CdS @ 1.2M/30K	35.4	19.9	25.0	18.2	34.0	17.6	24.2	32.9	27.3	14.2
Req Thrust @ 1.2M/30K	36634	26358	29742	25214	35703	24847	29190	34986	31248	22560
Req SLS Thrust	49427	35562	40128	34018	48170	33524	39384	47203	42160	30438
Delta Engine Weight	443	(944)	(487)	(1098)	317	(1148)	(562)	220	(284)	(1456)
Engine Sizing for Bleed Rate Metric (0.6M, 15K, -450 fps @ 16 °/sec)										
Req. SLS Thrust	41000	51000	35000	50000	51000	51000	47500	50000	57000	51000
Delta Engine Weight	(400)	600	(1000)	500	600	600	250	500	1200	600
Sized Engine EW	28040	26381	26956	24999	26791	26956	27518	25544	27558	28024
Sized Engine TOGW	**40887**	**38517**	**37615**	**40602**	**41053**	**37234**	**41540**	**39428**	**40731**	**39466**

Figure 4.2.8

Type "B" Configurations - Summary of Results

	B01	B02	B03	B04	B05	B06	B07	B08	B09	B10
Wing Area (sqft)	650	550	600	500	750	500	600	700	650	500
Span (ft)	47.4	43.6	53.3	33.4	42.3	49.2	44.7	39.8	43.8	49.2
Aspect Ratio	3.46	3.45	4.73	2.23	2.38	4.84	3.33	2.26	2.95	4.83
Wetted Area	2362	2011	2371	1923	2382	1906	2480	2180	2158	2121
Fixed Engine EW	27597	25781	27443	24499	26191	26356	27268	25044	26358	27424
Fixed Engine TOGW	**40241**	**37641**	**38295**	**39789**	**40134**	**36406**	**41162**	**38656**	**38957**	**38621**
SLS Thrust Req'mt	**49427**	**51000**	**40128**	**50000**	**51000**	**51000**	**47500**	**50000**	**57000**	**51000**
Sized Engine TOGW	**40887**	**38517**	**37615**	**40602**	**41053**	**37234**	**41540**	**39428**	**40731**	**39466**
Observables Rating	**2**	**1**	**4**	**2**	**5**	**3**	**4**	**2**	**2**	**1**
Int. Arrange. Rating	**3**	**3**	**2**	**2**	**2**	**2**	**3**	**3**	**2**	**4**
High Agility Potential	**3**	**4**	**4**	**2**	**3**	**3**	**2**	**4**	**2**	**3**

Figure 4.2.9

Type "C" Configurations - Empty Weight Breakdowns

	C01	C02	C03	C04	C05	C06	C07	C08	C09
Wing Area (sqft)	800	850	1000	950	600	1200	1200	1250	850
Span (ft)	42.2	43.8	47.6	39.9	53.8	52.1	50.0	70.7	50.1
Aspect Ratio	2.23	2.26	2.26	1.68	4.83	2.26	2.08	4.00	2.95
Wetted Area	2502	2733	2539	2721	2749	2400	2400	2950	2568
Empty Weight	**30543**	**33683**	**32193**	**31848**	**34294**	**31219**	**31065**	**33845**	**32948**
(EW-Eng-Avion) / Swet	9.49	9.84	10.00	9.21	10.00	10.17	10.11	9.17	10.18
Empty Weight Breakdown									
Wing	2814	3919	3176	2838	4959	3738	3051	6189	3893
Fuselage	6843	6869	6762	6409	6848	5744	6224	5217	6861
H-Tail	0	492	0	0	730	0	0	0	0
Vertical Tail	388	0	399	288	444	0	0	425	0
Other Aero Control	0	0	0	420	0	0	0	480	453
Flt Controls + Hydraulics	1374	1852	1501	1471	1637	1615	1616	1600	1888
Inlet	488	686	749	734	557	604	637	426	591
Engine	5000	5000	5000	5000	5000	5000	5000	5000	5000
Nozzle	400	800	800	700	400	1000	1000	400	800
Fuel System	990	1362	1362	1362	990	1362	1362	1360	990
Landing Gear	1762	1762	1762	1762	1762	1762	1762	1762	1762
Avionics	1800	1800	1800	1800	1800	1800	1800	1800	1800
Other Weight	5664	5664	5664	5664	5664	5664	5664	5664	5664
RAM/RAS Treatment	3020	3477	3218	3400	3503	2930	2949	3522	3246

Figure 4.2.10

Type "C" Configurations - Performance/Sizing Data

	C01	C02	C03	C04	C05	C06	C07	C08	C09
Wing Area (sqft)	800	850	1000	950	600	1200	1200	1250	850
Span (ft)	42.2	43.8	47.6	39.9	53.8	52.1	50.0	70.7	50.1
Aspect Ratio	2.23	2.26	2.26	1.68	4.83	2.26	2.08	4.00	2.95
Wetted Area	2502	2733	2539	2721	2749	2400	2400	2950	2568
Span / Sqrt (Swet)	0.844	0.838	0.944	0.765	1.027	1.063	1.021	1.302	0.989
Required Fuel Fraction	0.355	0.357	0.323	0.383	0.300	0.291	0.302	0.244	0.310
Fixed Engine EW	30543	33683	32193	31848	34294	31219	31065	33845	32948
Fixed Engine TOGW	**47348**	**52376**	**47573**	**51578**	**49000**	**44025**	**44491**	**44758**	**47780**
Engine Sizing for Accel Requirement (0.8-1.5M, 30K, 60 secs)									
Maximum C-Section Area	81.7	110.3	86.2	107.2	74.7	116.2	109.9	111.5	87.3
Area Distribution Rating	5	4	4	3	3	4	4	5	4
Est CdS @ 1.2M/30K	48.5	82.8	50.0	71.4	34.5	92.1	82.1	91.8	51.3
Req Thrust @ 1.2M/30K	45333	68015	46281	60495	36008	74212	67608	74041	47177
Req SLS Thrust	61164	91767	62443	81620	48582	100127	91217	99897	63652
Delta Engine Weight	1116	4177	1244	3162	(142)	5013	4122	4990	1365
Engine Sizing for Bleed Rate Metric (0.6M, 15K, -450 fps @ 16 °/sec)									
Req. SLS Thrust	44000	51000	38000	51000	48000	35000	37000	35000	48000
Delta Engine Weight	(600)	100	(1200)	100	(200)	(1500)	(1300)	(1500)	(200)
Sized Engine EW	31659	37860	33437	35010	34152	36232	35187	38835	34313
Sized Engine TOGW	**49079**	**58871**	**49412**	**56699**	**48798**	**51094**	**50394**	**51356**	**49759**

Figure 4.2.11

Type "C" Configurations - Summary of Results

	C01	C02	C03	C04	C05	C06	C07	C08	C09
Wing Area (sqft)	800	850	1000	950	600	1200	1200	1250	850
Span (ft)	42.2	43.8	47.6	39.9	53.8	52.1	50.0	70.7	50.1
Aspect Ratio	2.23	2.26	2.26	1.68	4.83	2.26	2.08	4.00	2.95
Wetted Area	2502	2733	2539	2721	2749	2400	2400	2950	2568
Fixed Engine EW	30543	33683	32193	31848	34294	31219	31065	33845	32948
Fixed Engine TOGW	**47348**	**52376**	**47573**	**51578**	**49000**	**44025**	**44491**	**44758**	**47780**
SLS Thrust Req'mt	**61164**	**91767**	**62443**	**81620**	**48582**	**100127**	**91217**	**99897**	**63652**
Sized Engine TOGW	**49079**	**58871**	**49412**	**56699**	**48798**	**51094**	**50394**	**51356**	**49759**
Observables Rating	**2**	**4**	**2**	**3**	**5**	**1**	**1**	**2**	**3**
Int. Arrange. Rating	**3**	**4**	**2**	**3**	**3**	**3**	**3**	**5**	**3**
High Agility Potential	**3**	**2**	**3**	**3**	**3**	**4**	**4**	**5**	**2**

Figure 4.2.12

Initial Matrix Defined During Design Review

Observables Class	Agility Level		
	Low	Medium	High
Type "A"	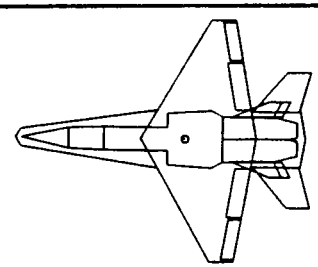	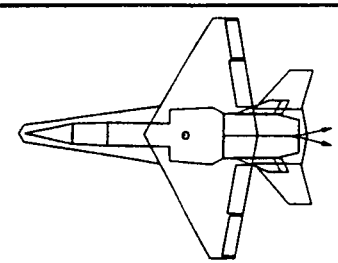	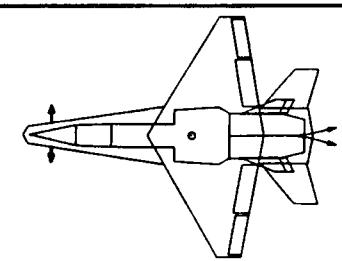
Type "B"	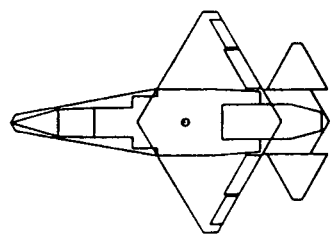	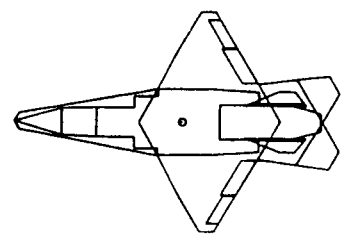	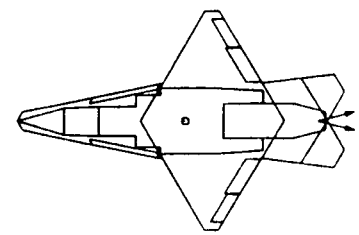
Type "C"	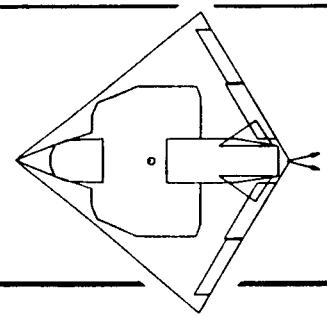	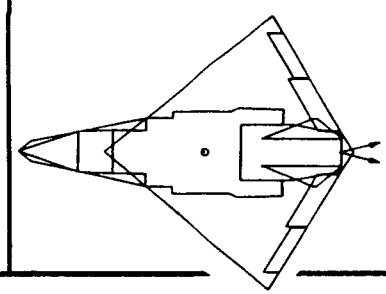	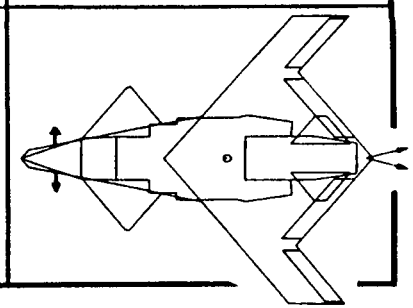

LARC93-005

Figure 4.2.13

CALCULATED AERODYNAMICS

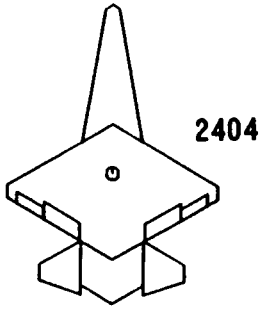

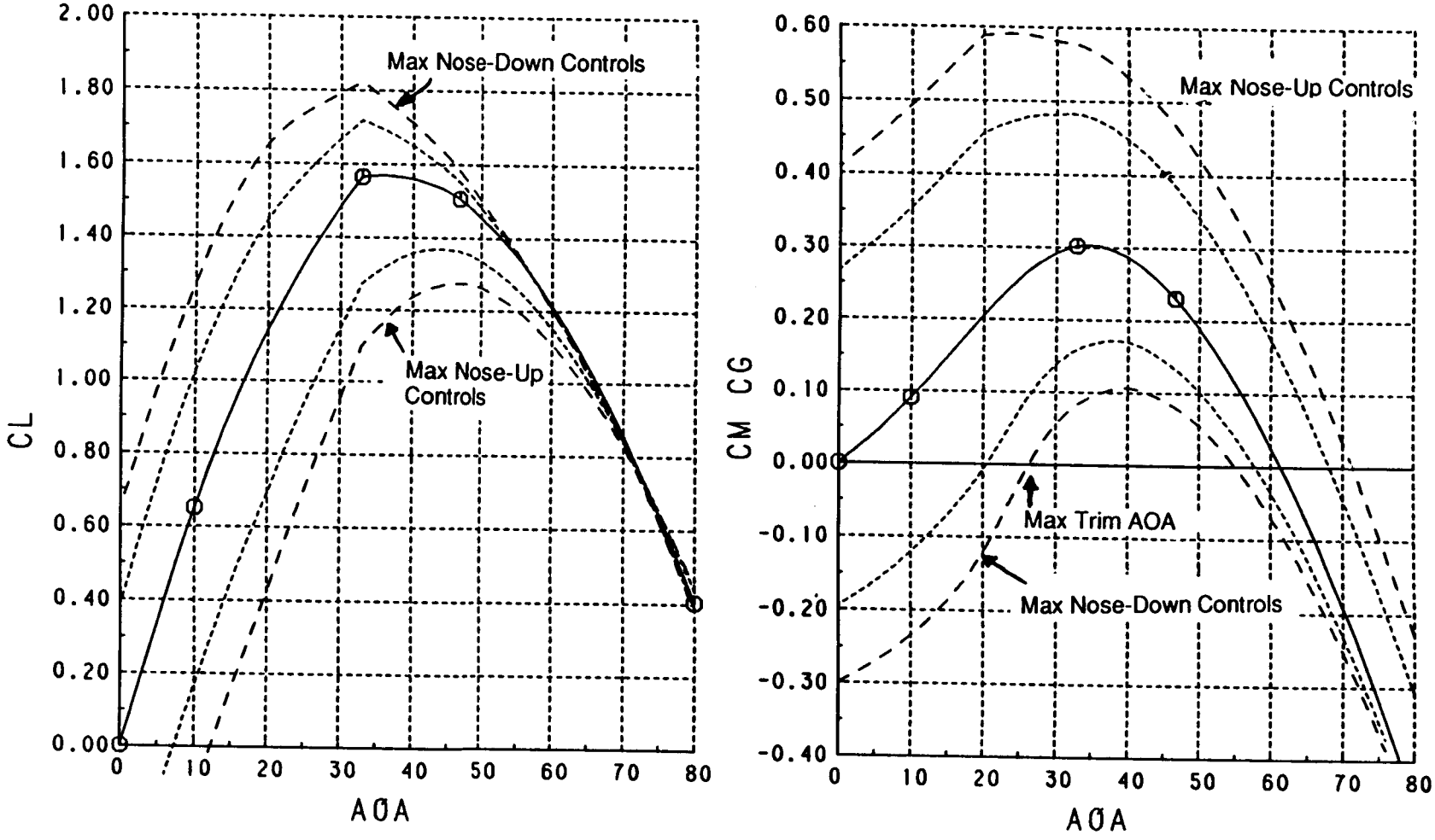

Figure 4.3.1

LATERAL/DIRECTIØNAL MAX CØNTRØL PØWERS

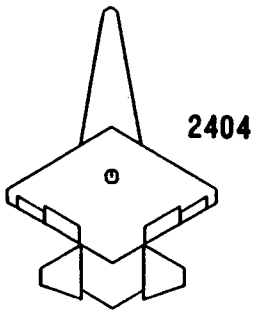

- HØRIZ/V-TAIL (MAXIMUM)
- ELEVØN
- AILERØN
- TØTAL USED W/ MIXING
- REQD FØR TRC90 (+) (INITIATE)
- REQD FØR TRC90 (-) (ARREST)

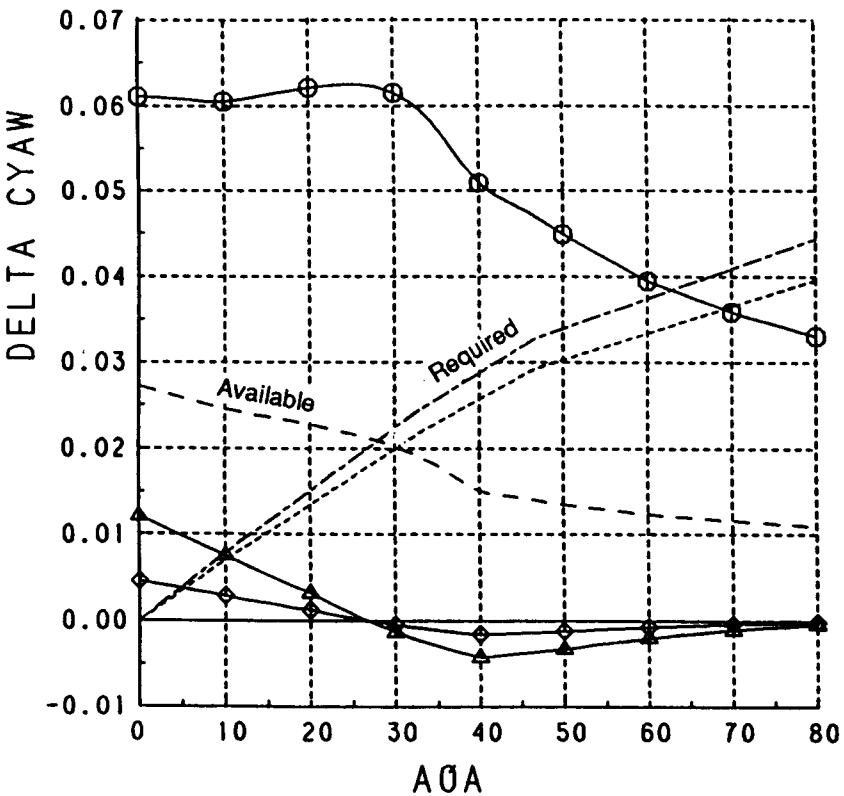

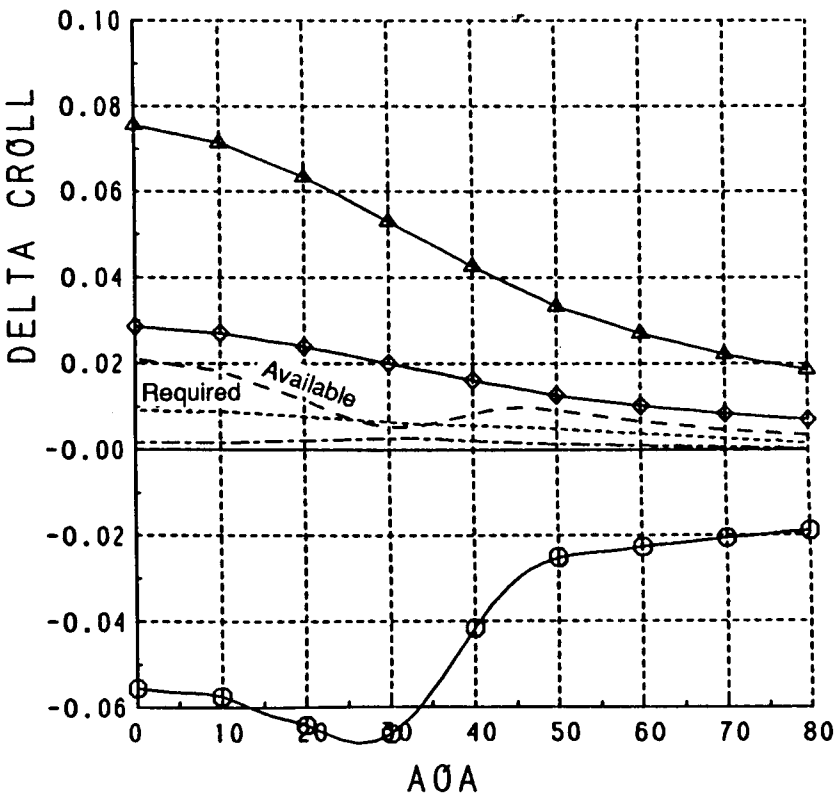

Figure 4.3.2

LATERAL/DIRECTIONAL MAX CONTROL POWERS
2403

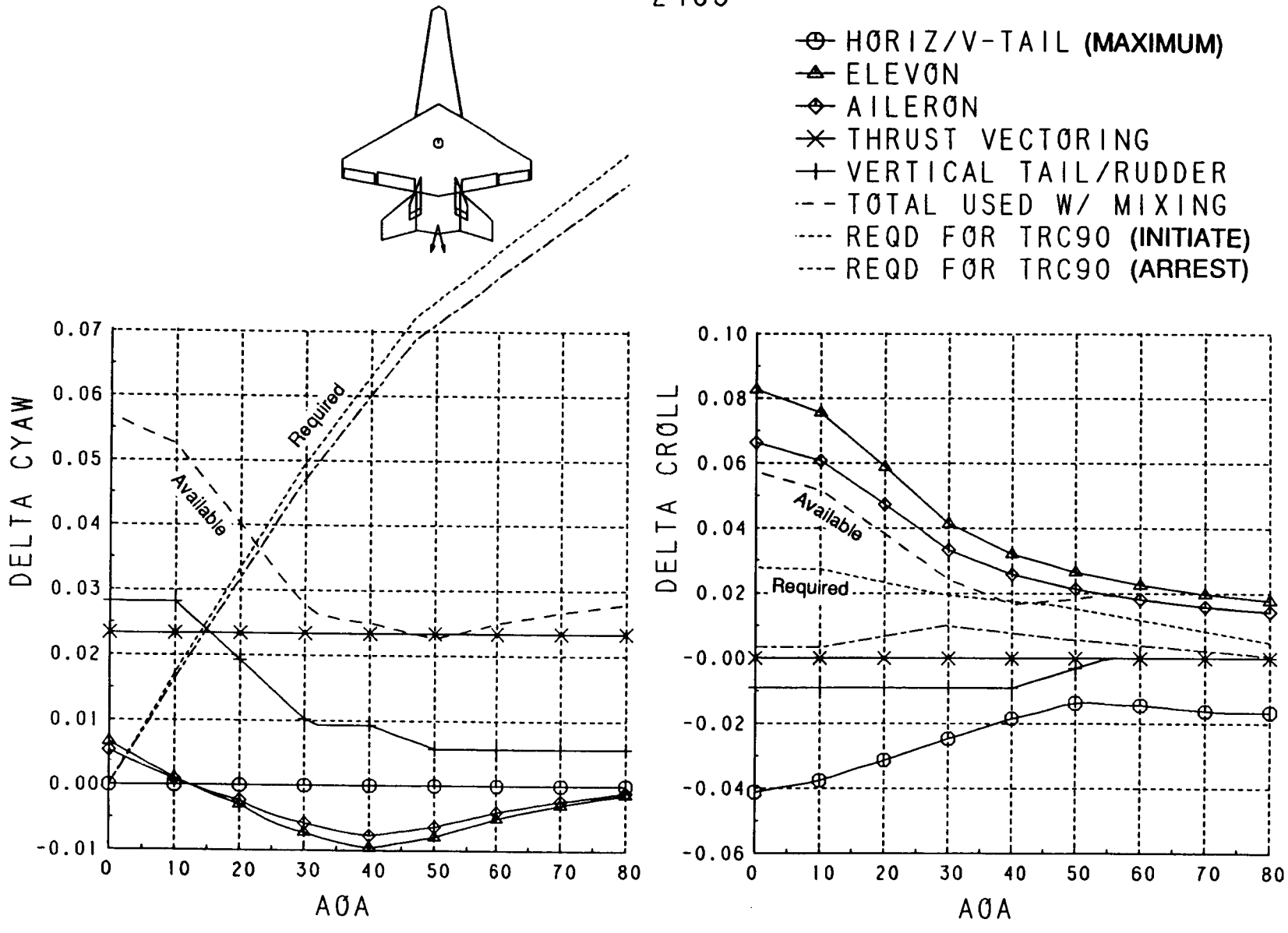

Figure 4.3.3

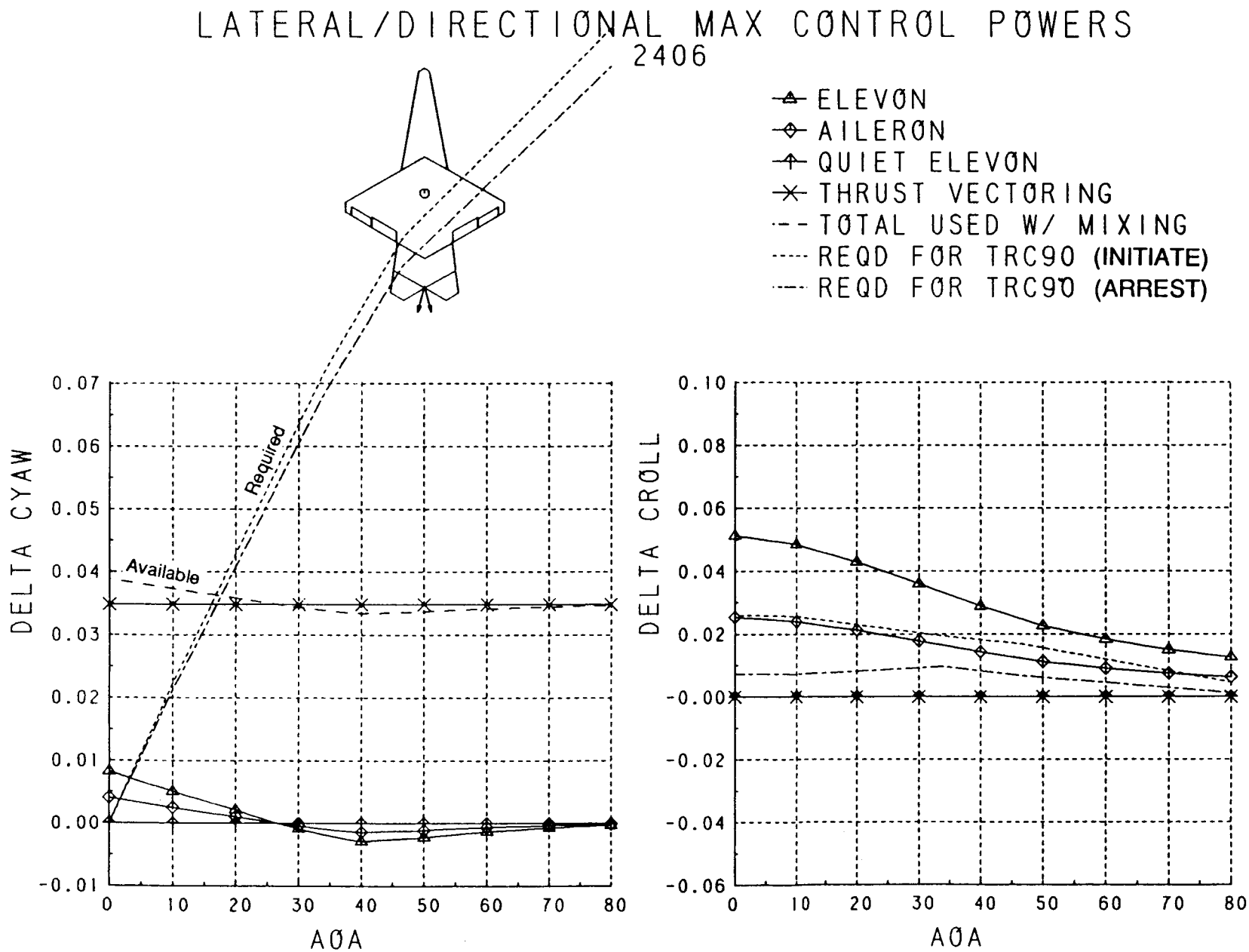
LATERAL/DIRECTIONAL MAX CONTROL POWERS
2406
ELEVON
AILERON
QUIET ELEVON
THRUST VECTORING
TOTAL USED W/ MIXING
REQD FOR TRC90 (INITIATE)
REQD FOR TRC90 (ARREST)
Required
Available
DELTA CYAW
0.07
0.06
0.05
0.04
0.03
0.02
0.01
0.00
-0.01
0
10
20
30
40
50
60
70
80
AOA
DELTA CROLL
0.10
0.08
0.06
0.04
0.02
-0.00
-0.02
-0.04
-0.06
0
10
20
30
40
50
60
70
80
AOA

Figure 4.3.4

LATERAL/DIRECTIONAL MAX CONTROL POWERS
2409

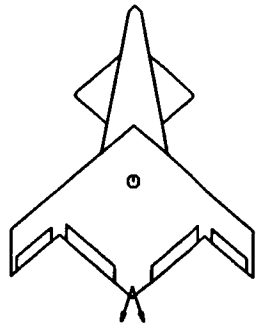

CANARD
ELEVON
AILERON
THRUST VECTORING
TOTAL USED W/ MIXING
REQD FOR TRC90 (INITIATE)
REQD FOR TRC90 (ARREST)

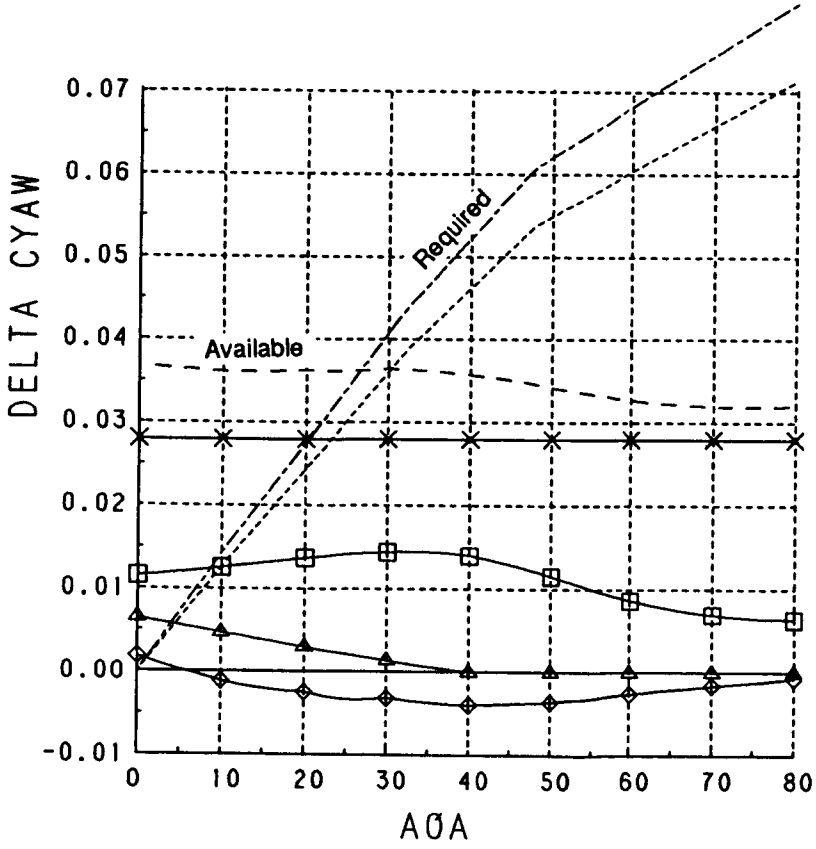

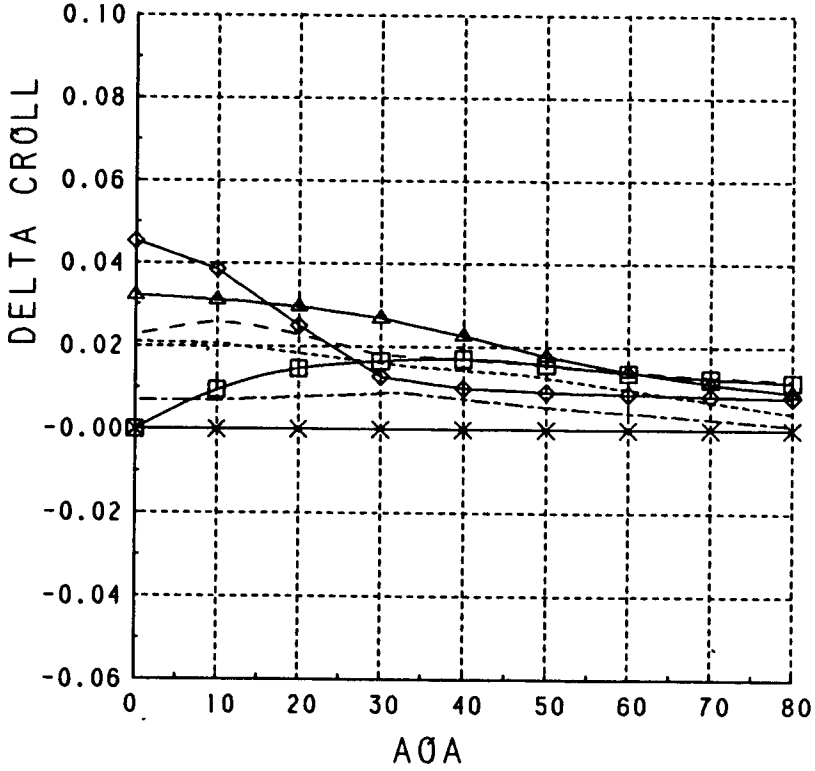

Figure 4.3.5

Aerodynamic/Controls Technologies Selected

Observables Class	Agility Level		
	Low	Medium	High
Type "A"	**2401** Flaperons (35 sq ft) Ailerons (25) Horizontal Tails (80) Vert Tail/Rudder (80)	**2402** Flaperons (45 sq ft) Ailerons (30) Horizontal Tails (80) Vert Tail/Rudder (80) Yaw TVC (10°)	**2403** Flaperons (45 sq ft) Ailerons (30) Horizontal Tails (95) Vert Tail/Rudder (80) Pitch/Yaw TVC (15°/15°) Forebody Device (Strake)
Type "B"	**2404** Flaperons (40 sq ft) Ailerons (20) Vee-Tails (120)	**2405** Flaperons (30 sq ft) Ailerons (20) Thrust-Blown Elevons (60) All-Moving Vert Tail (70) Passive Pitch TVC (5°)	**2406** Flaperons (30 sq ft) Split Ailerons (20) Thrust-Blown Elevons (60) Tailless Concept Pitch/Yaw TVC (10°/15°) FB Device (Slot Blowing)
Type "C"	**2407** Elevons (75 sq ft) Split Ailerons (45) Tailless Concept Pitch/Yaw TVC (15°/15°)	**2408** Elevons (65 sq ft) Split Ailerons (40) Tailless Concept Pitch/Yaw TVC (20°/20°)	**2409** Elevons (65 sq ft) Split Ailerons (40) Canard (110) Tailless Concept Pitch/Yaw TVC (20°/20°) Aft-Body Pop-Up Device

LARC93-005C

Figure 4.3.6

Lateral Acceleration Capability

- 450 kts, SL, Low AOA (0-10°)
- Air-to-Ground Weapons, 50% Fuel
- Based on ADWT Data and Linear Methods

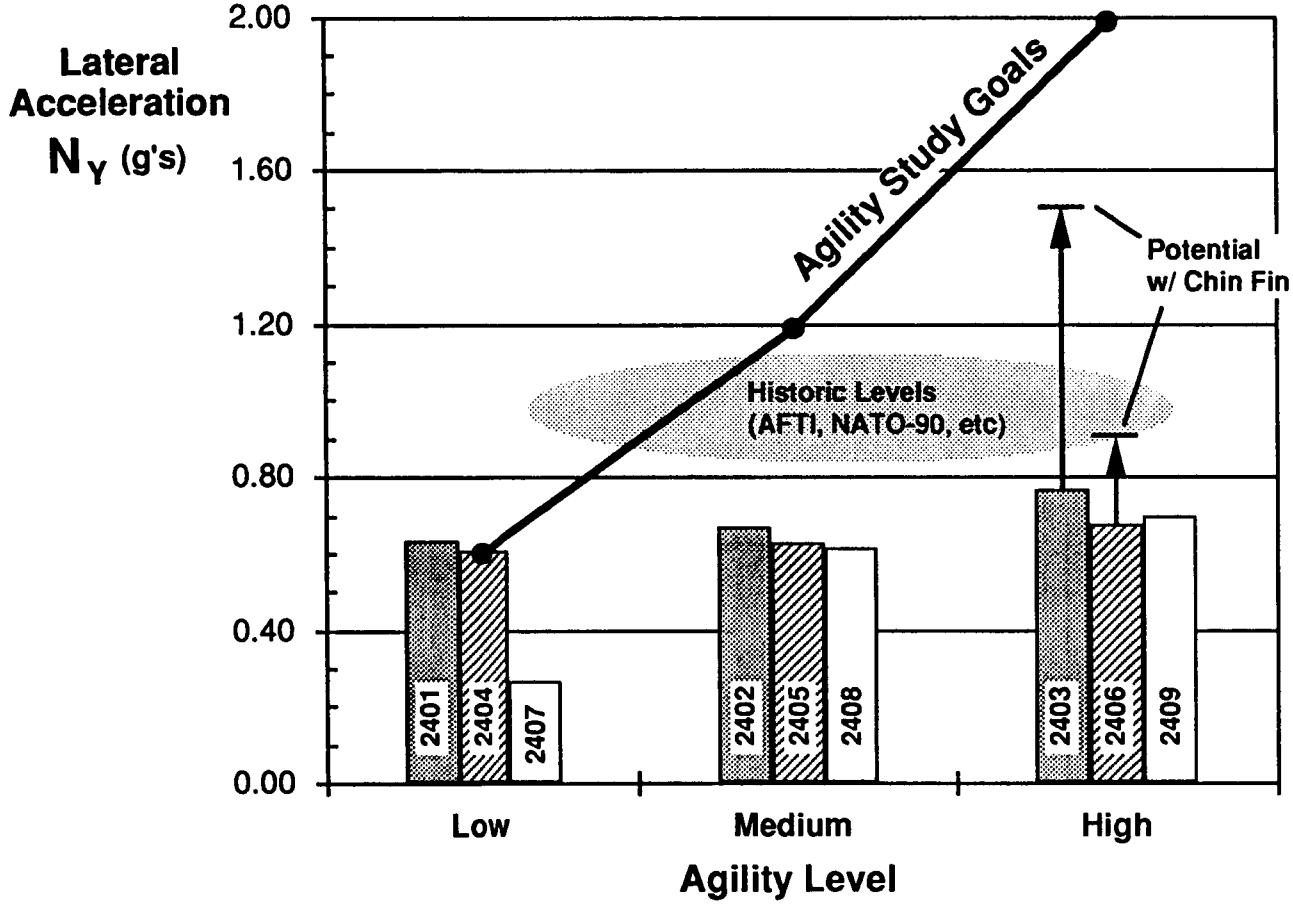

LARC93-103

Figure 4.3.7

Configuration 2403 with Chin Fin

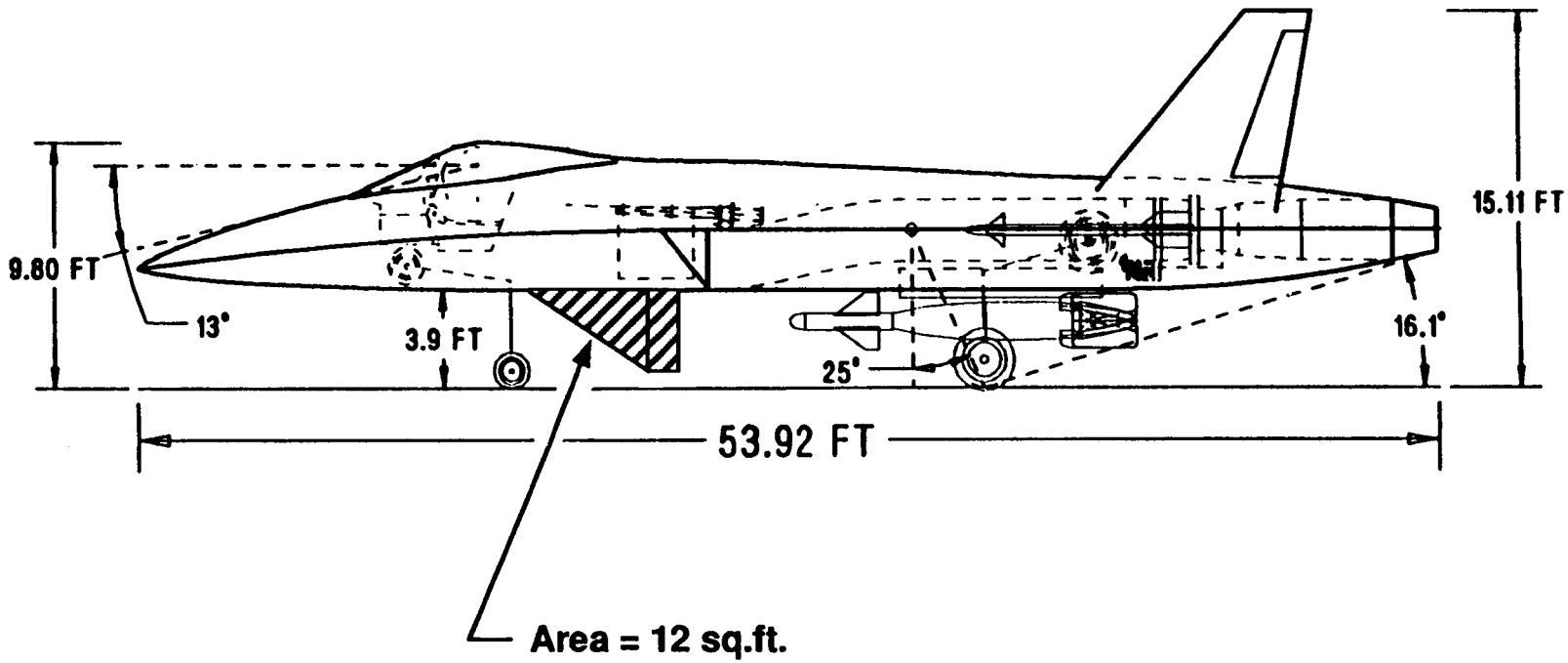

Figure 4.3.8

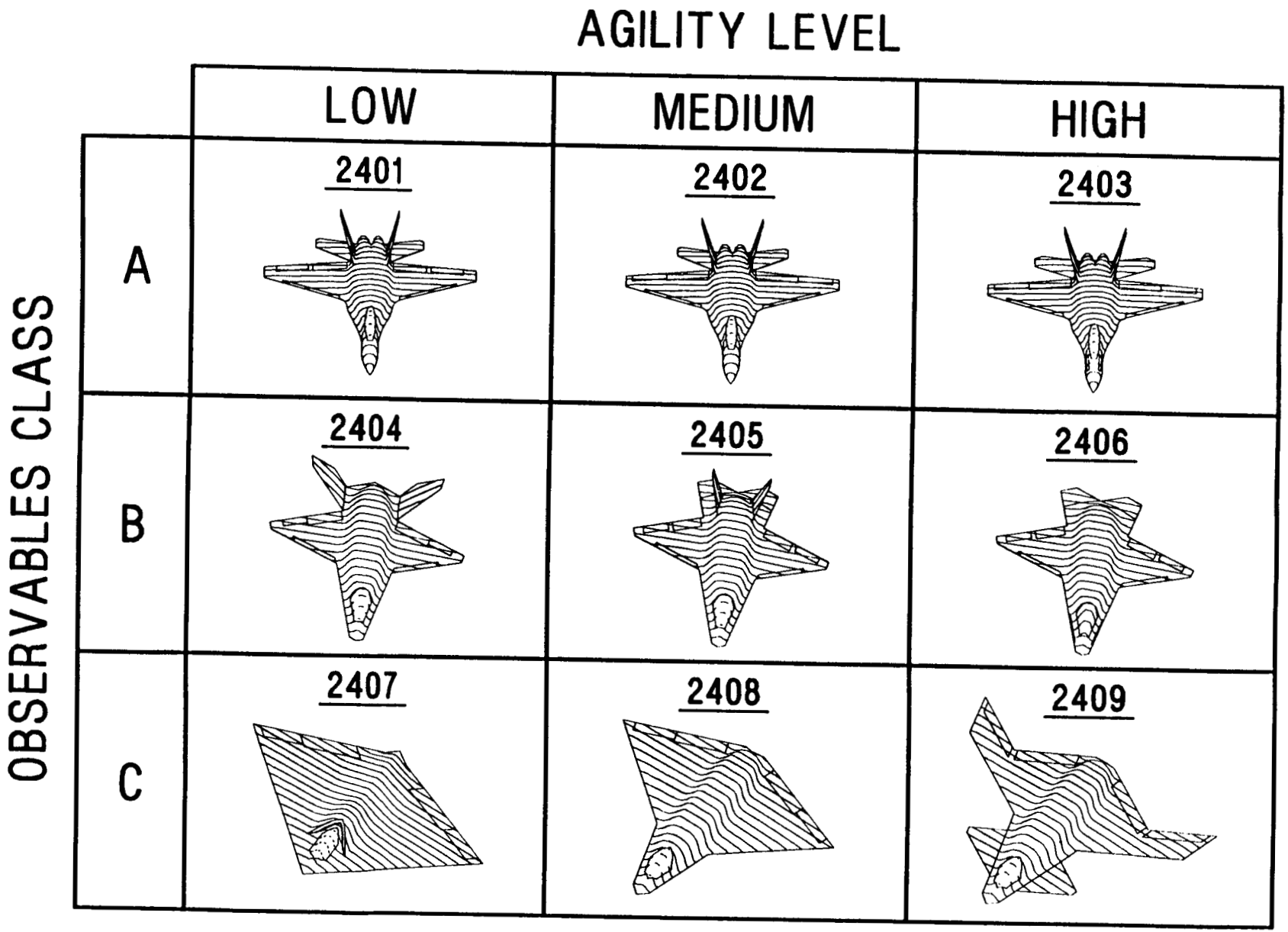
AGILITY LEVEL
LOW
MEDIUM
HIGH
OBSERVABLES CLASS
A
B
C
2401
2402
2403
2404
2405
2406
2407
2408
2409

Figure 4.4.1

Concept 2401
Type "A" Observables
Low Agility

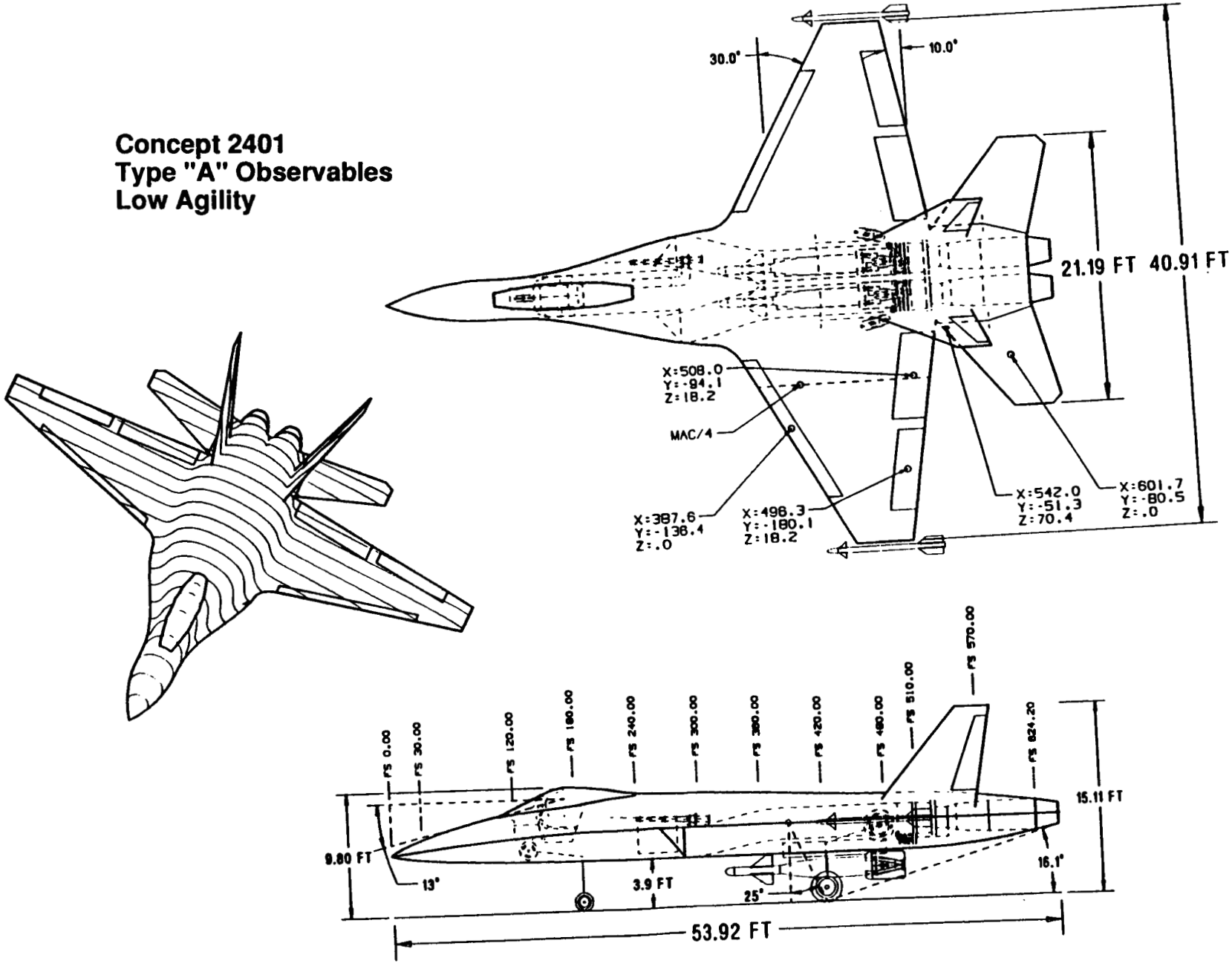

Figure 4.4.2

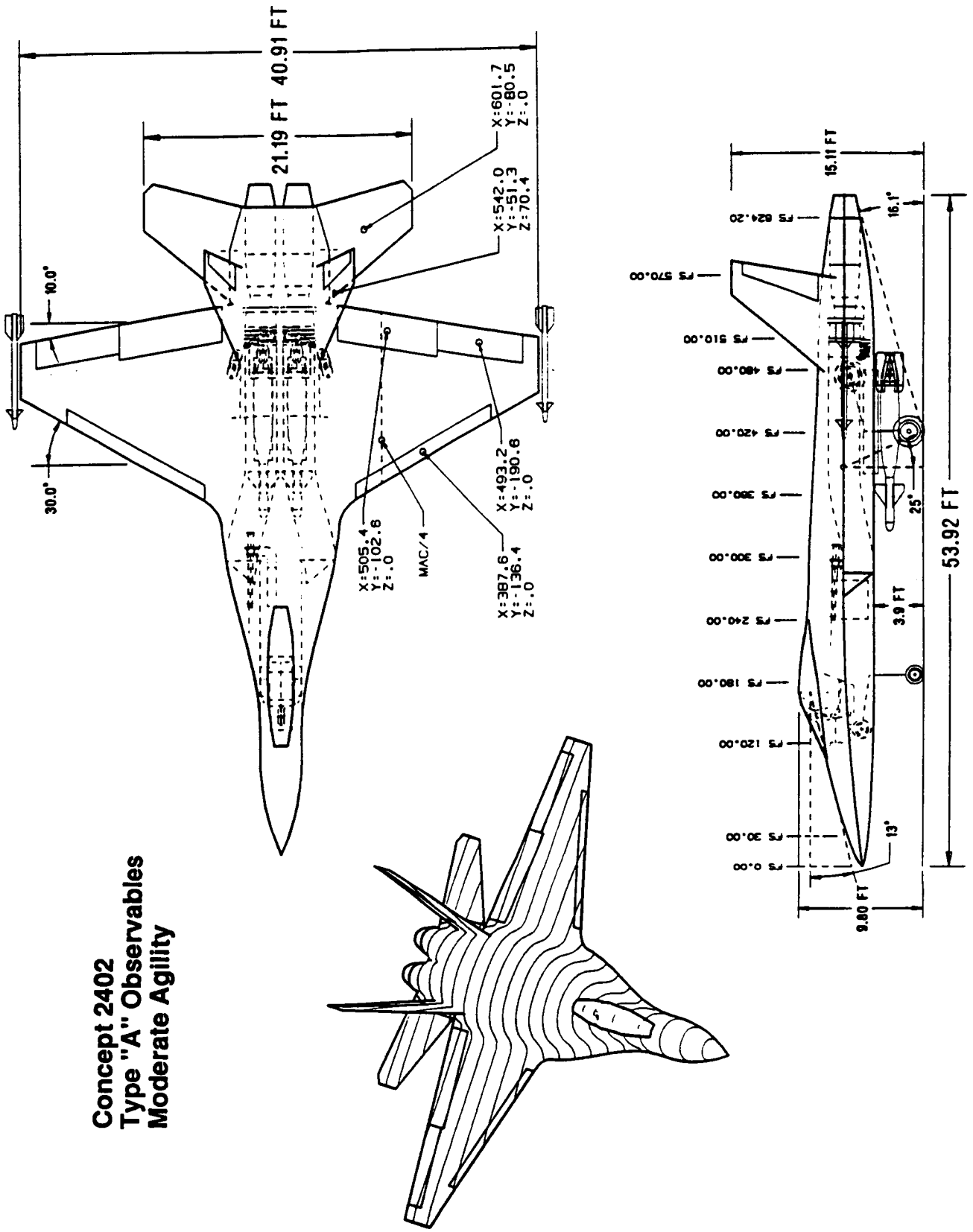
Concept 2402
Type "A" Observables
Moderate Agility
40.91 FT
21.19 FT
10.0°
30.0°
X:601.7
Y:-80.5
Z:.0
X:542.0
Y:-51.3
Z:70.4
X:493.2
Y:-190.6
Z:.0
X:505.4
Y:-102.6
Z:.0
MAC/4
X:387.6
Y:-136.4
Z:.0
15.11 FT
16.1°
FS 624.20
FS 570.00
FS 510.00
FS 480.00
FS 420.00
FS 360.00
FS 300.00
FS 240.00
FS 180.00
FS 120.00
FS 30.00
FS 0.00
25°
3.9 FT
53.92 FT
13°
9.80 FT

Figure 4.4.3

Concept 2403
Type "A" Observables
High Agility

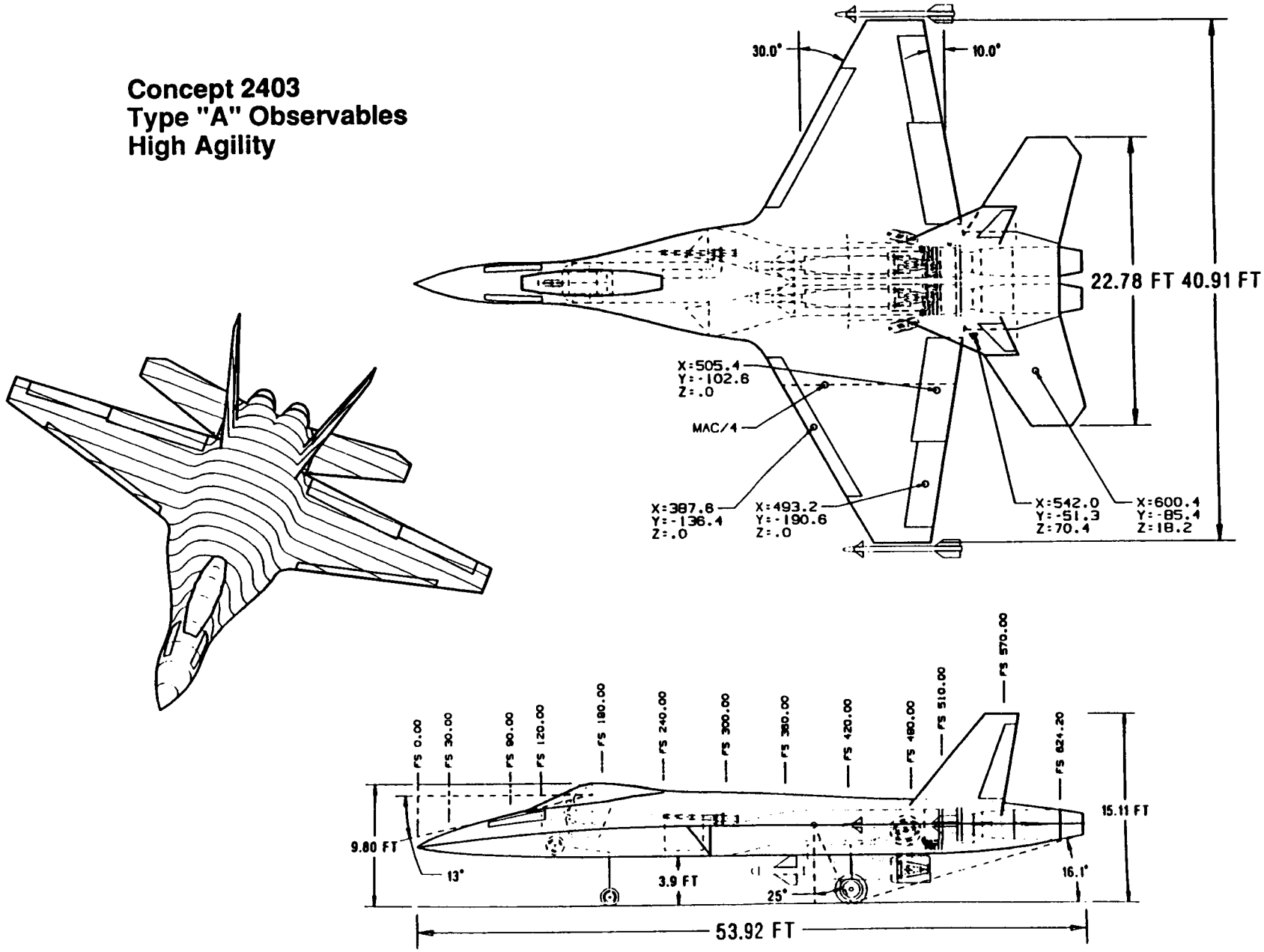

Figure 4.4.4

Concept 2404
Type "B" Observables
Low Agility

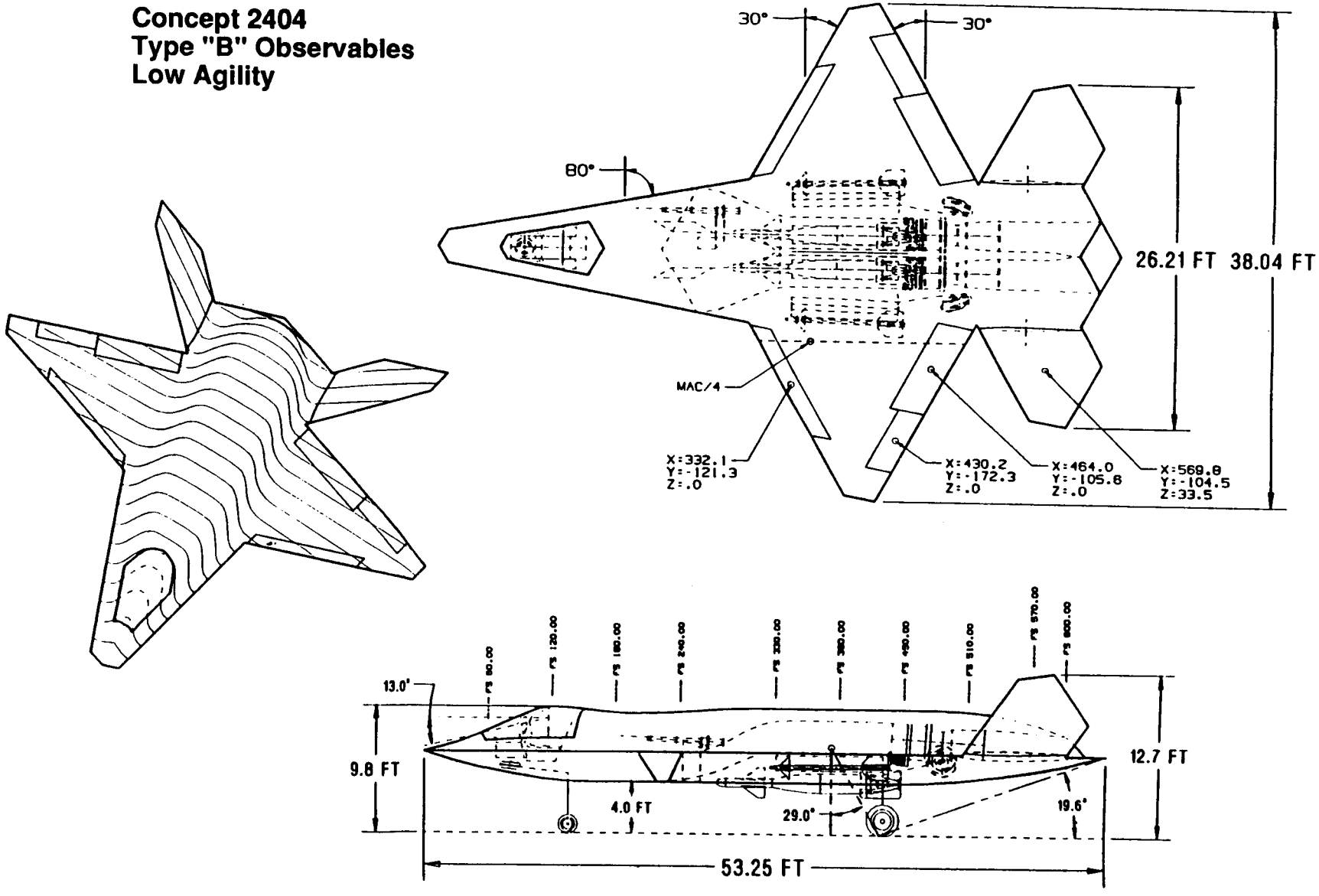

Figure 4.4.5

Concept 2405
Type "B" Observables
Moderate Agility

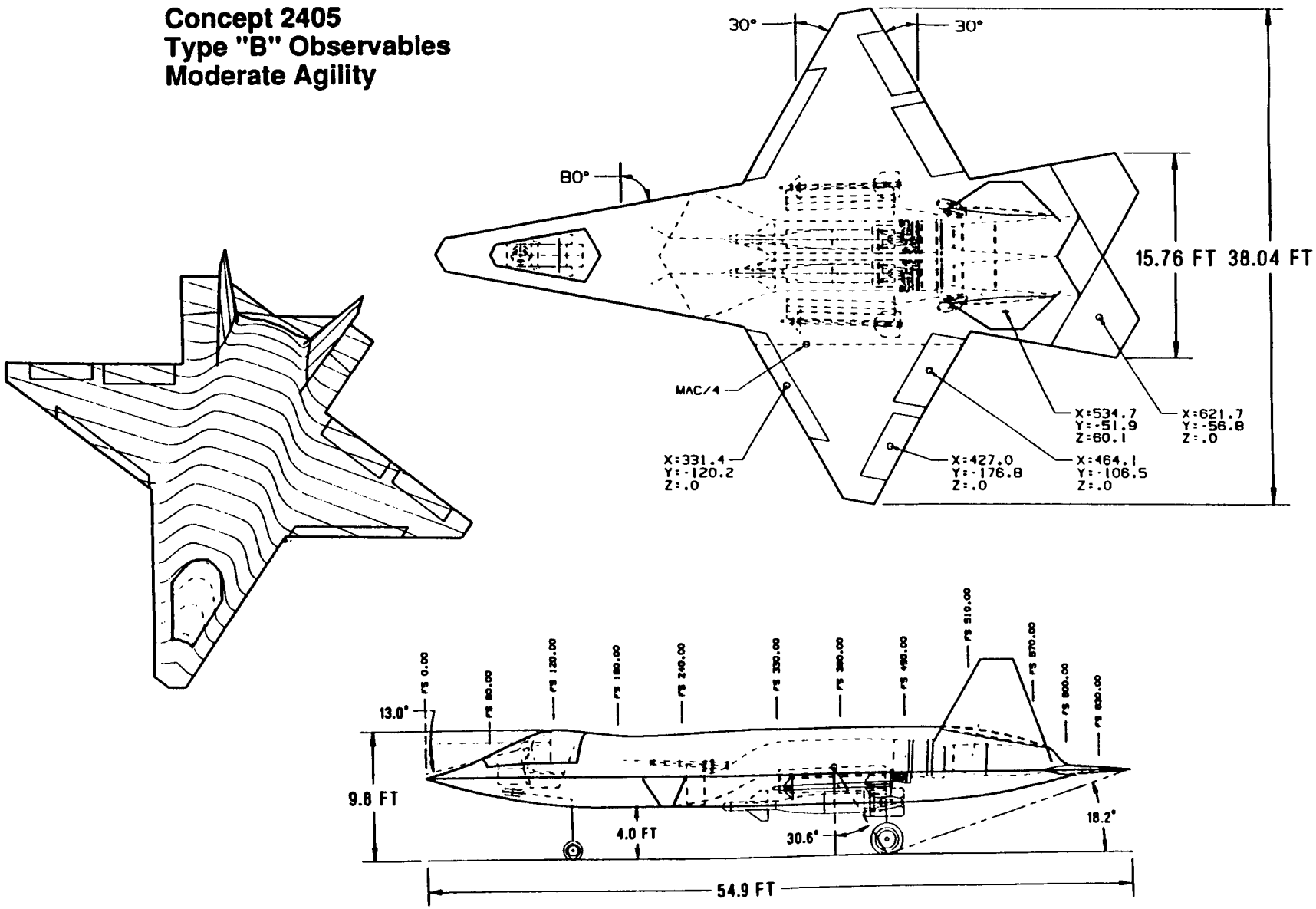

Figure 4.4.6

Concept 2406
Type "B" Observables
High Agility

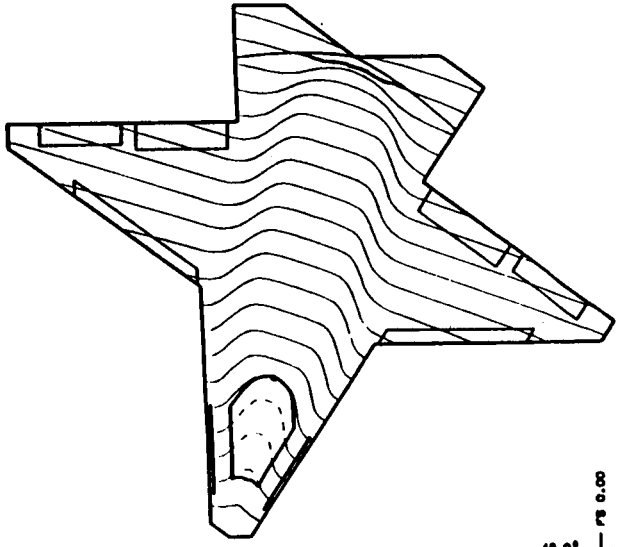

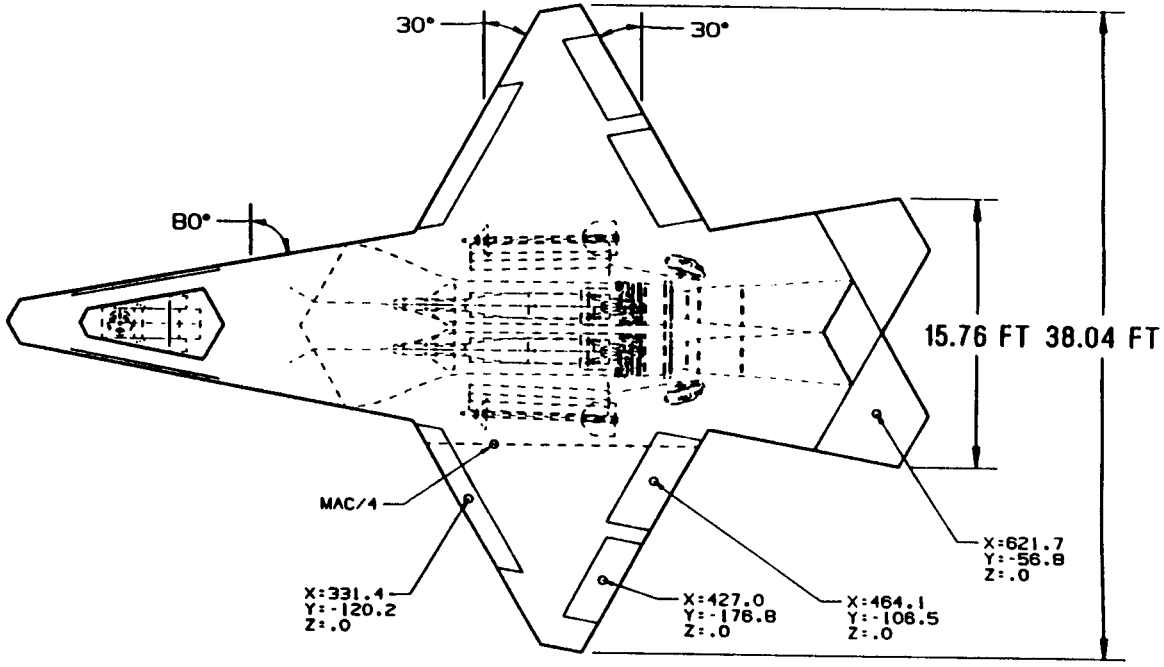

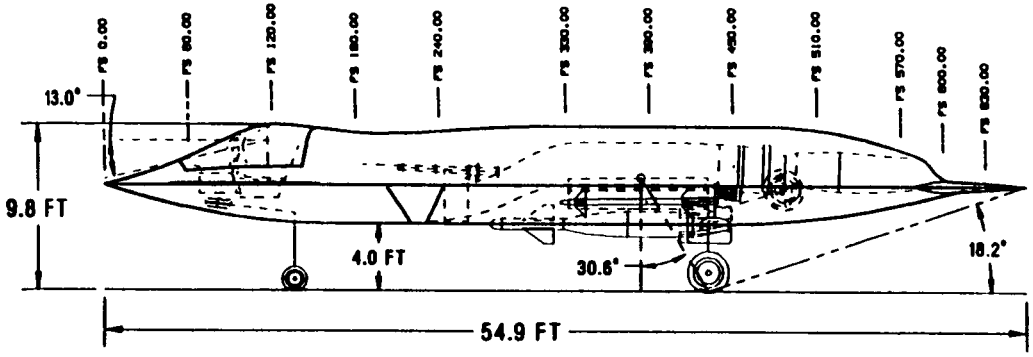

Figure 4.4.7

Concept 2407
Type "C" Observables
Low Agility

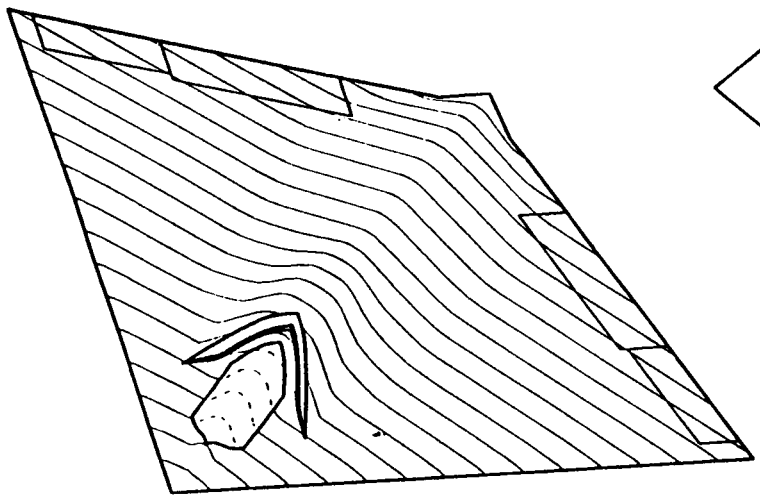

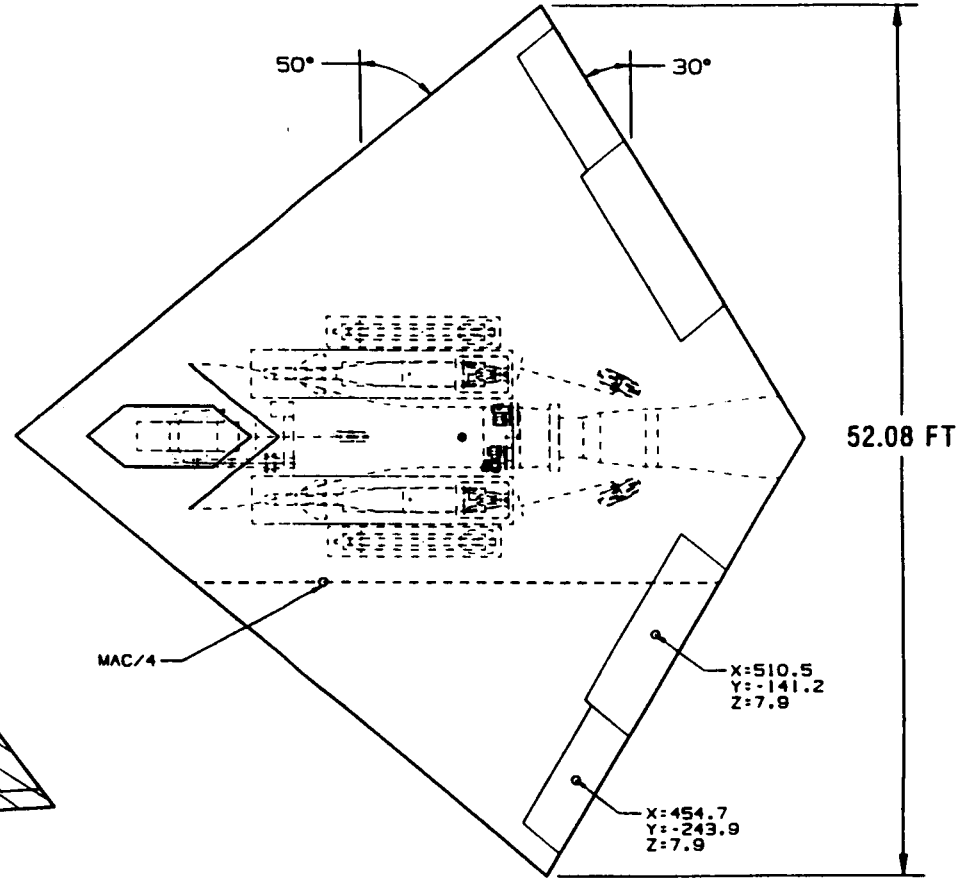

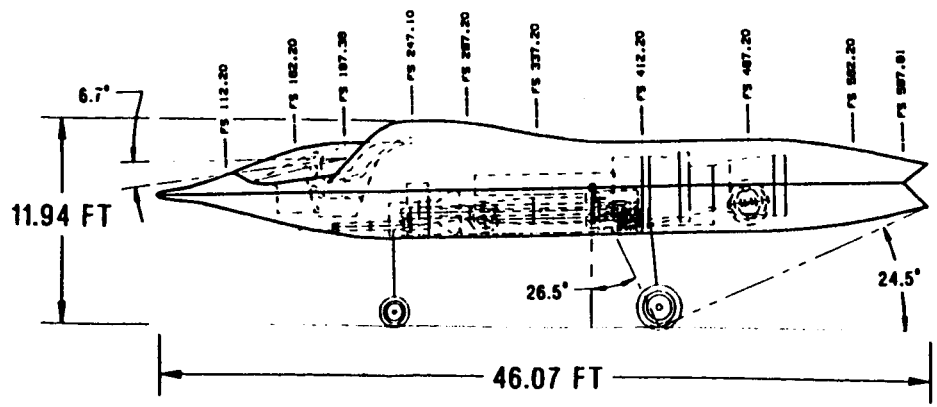

Figure 4.4.8

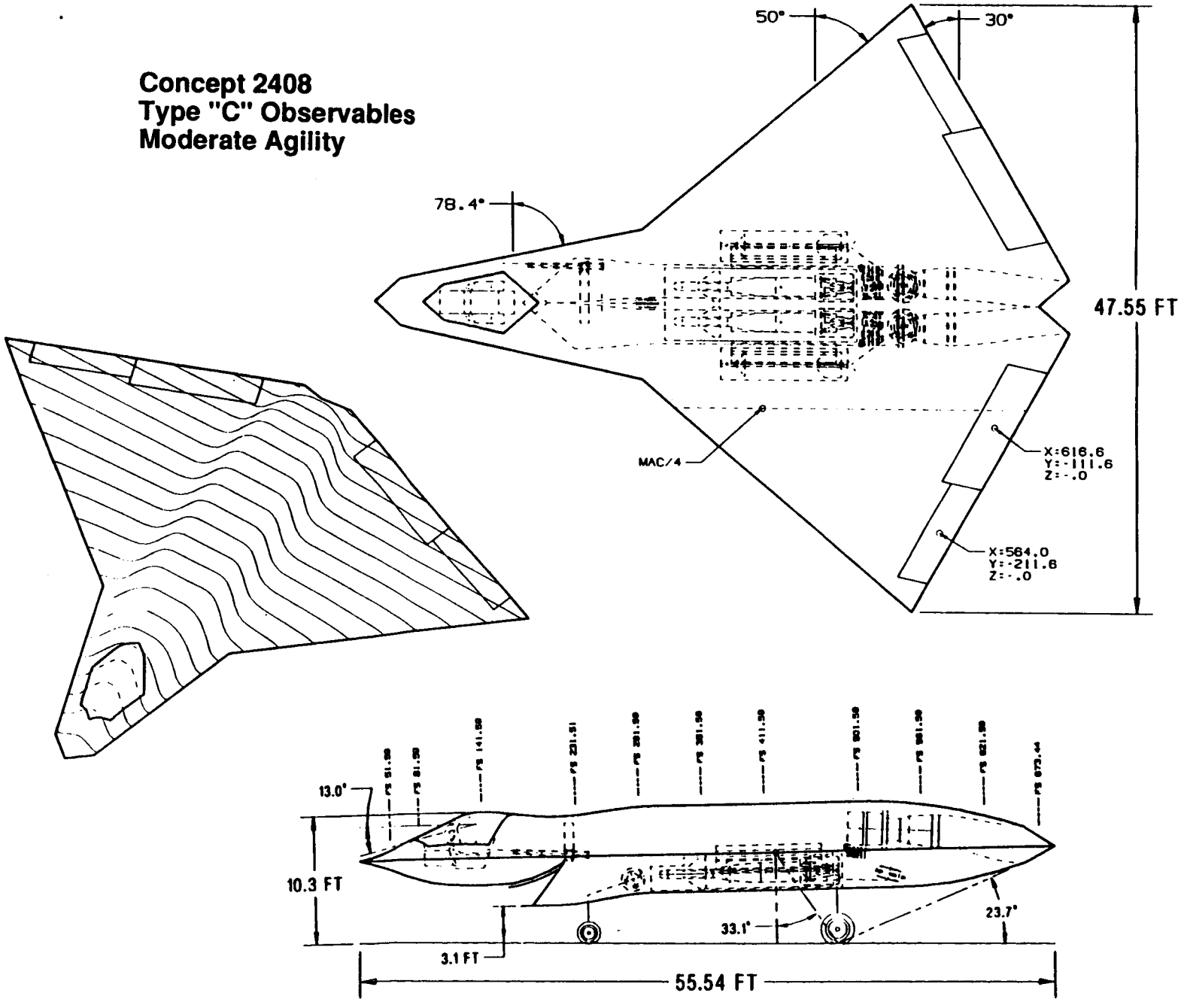
Concept 2408
Type "C" Observables
Moderate Agility
50°
30°
78.4°
47.55 FT
MAC/4
X:616.6
Y:-111.6
Z:-.0
X:564.0
Y:-211.6
Z:-.0
13.0°
10.3 FT
3.1 FT
33.1°
23.7°
55.54 FT

Figure 4.4.9

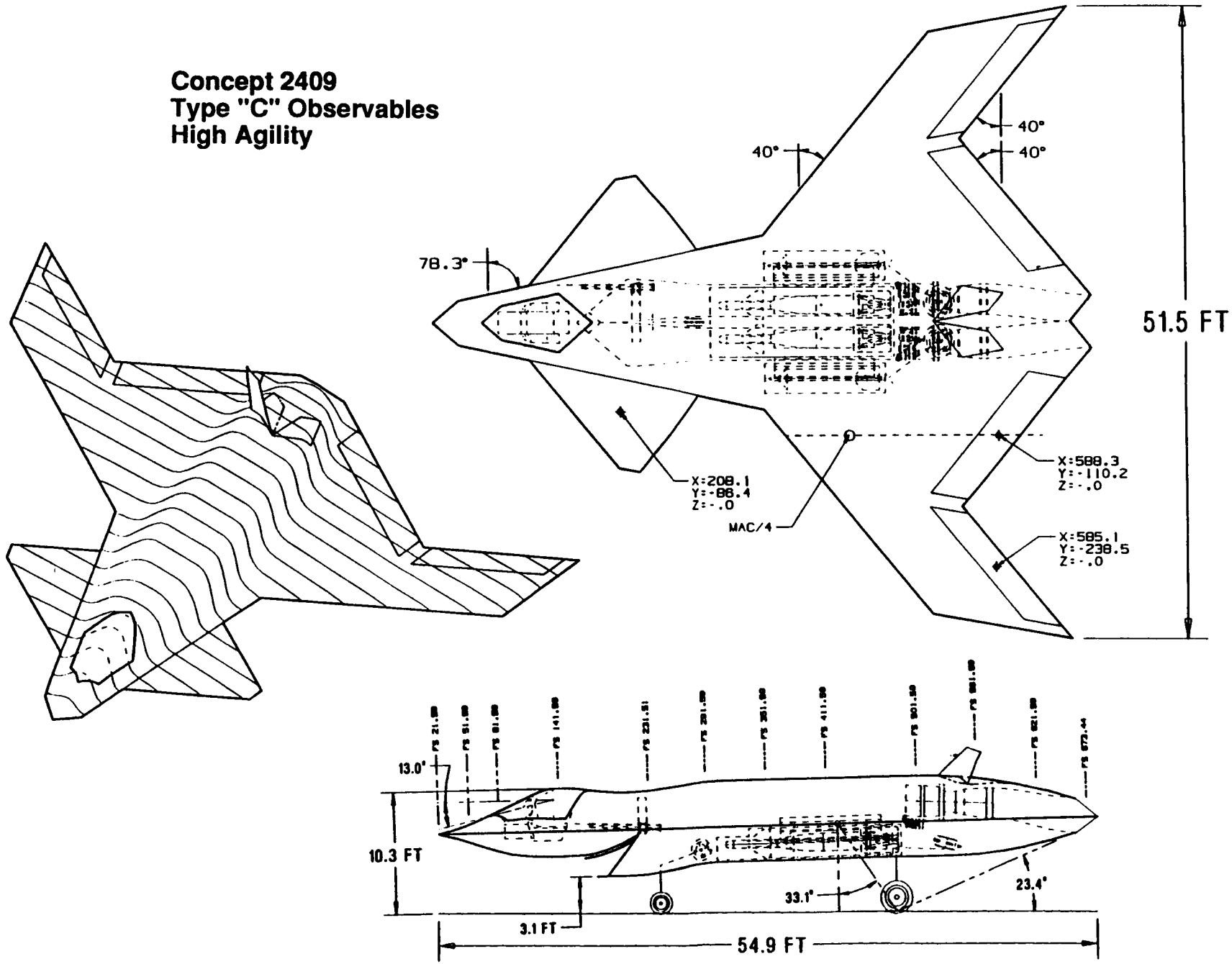
Concept 2409
Type "C" Observables
High Agility
40°
40°
40°
78.3°
51.5 FT
X:208.1
Y:-86.4
Z:-.0
MAC/4
X:588.3
Y:-110.2
Z:-.0
X:585.1
Y:-238.5
Z:-.0
13.0°
10.3 FT
33.1°
23.4°
3.1 FT
54.9 FT

Figure 4.4.10

Technologies Incorporated in Study Aircraft

	Observables Class								
	Type A			Type B			Type C		
Agility Level:	L	M	H	L	M	H	L	M	H
Technologies / Configuration:	2401	2402	2403	2404	2405	2406	2407	2408	2409
Integrated RF Sensor System	X	X	X	X	X	X	X	X	X
Integrated Electro-Optic System	X	X	X	X	X	X	X	X	X
Adv. Materials Technologies	X	X	X	X	X	X	X	X	X
Adv. Manufacturing Techniques	X	X	X	X	X	X	X	X	X
Adv. Structural Techniques	X	X	X	X	X	X	X	X	X
Gen 6 Engine Technology	X	X	X	X	X	X	X	X	X
Shrouded/Semi-Submerged Weapons				X	X	X			
Internal Weapons							X	X	X
Adv. Aerodynamic Controls			X		X	XX	X	X	XX
Mechanical Thrust Vectoring		X	X						
Fixed-Aperture Thrust Vectoring						X	X	X	X
Fluidic Vectoring							X		

LARC93-150

Figure 4.4.11

Observables Technologies Incorporated in Study Aircraft

Observables Technologies	Observables Class: Type A	Type B	Type C
Edges	X	X	X
Seals- Surfaces	X	X	X
Seals- Doors	X	X	X
Canopy Coating	X	X	X
Inlet Lip & Duct Coating	X	X	X
Special IFR	X	X	X
Bubble Canopy	X		
Slab Sided Canopy		X	X
Outer ML Skin Ply		X	X
Skin Deflection Criteria		X	X
Special Door Latches		X	X
Doors vs. Louvers		X	X
Antenna Design		X	X
Radar & Radome Design		X	X
Engine Front Coating		X	
Engine Front Frame			X
Exhaust Shaping		X	X
Exhaust Coating			X
Average Observables Weight Increment	500 lb	1100 lb	1600 lb

LARC93-140

Figure 4.4.12

5.0 VEHICLE SIZING AND PERFORMANCE

5.1 MISSION/PERFORMANCE REQUIREMENTS

The agility study baseline missions are defined in Figures 5.1.1 and 5.1.2 and include an Air-to-Ground (BAI) mission and an Air-to-Air (DCA) mission. The A/G mission is challenging due to the long (450-nm) cruise leg at an altitude of 15,000 ft. The A/A mission is generally much less challenging, requiring a total radius of only 200-nm and allowing more efficient cruise altitudes.

Both missions include a very substantial warm-up/takeoff fuel allowance of 2 minutes at maximum A/B power. An alternate set of missions with more typical warm-up fuel allowances were also evaluated as a separate study (see Section 5.3.2).

Figure 5.1.3 presents the energy- and maneuver-performance requirements imposed on the study vehicles. The bleed-rate agility metric becomes similar to a maneuver-performance point for the reasons outlined in Section 2.1, although the bleed-rate requirement changes with agility level. The most demanding of the performance requirements in Figure 5.1.3 is the acceleration requirement, 0.8-1.5M in 60 seconds, held constant for all nine aircraft.

5.2 SIZING/PERFORMANCE METHODS

5.2.1 Aerodynamics Methods

The basis for the standard Level-1 aerodynamic analysis is the MDA Aircraft Configuration Evaluation (ACE) system, illustrated in Figure 5.2.1. The ACE system ties the many aerodynamic analysis tools together with a common geometry model and allows the collection of their individual outputs into a final set of input aerodynamic data for the CADE sizing code. ACE allows a geometry to be defined either by the configurator using the higher-fidelity Unigraphics CAD system or by the aerodynamicist directly using the mouse-based sketchpad program. For this study, the configurator supplied the final geometry data.

Industry-standard aerodynamic codes such as Woodward and NASA Wave Drag, plus MDA wave drag and induced drag tools such as EN-30 and INDUCED were employed to generate aerodynamic data for each of the aircraft. Figure 5.2.2 details some of the assumptions used in the zero-lift drag and drag-due-to-lift calculations. Results of the various aerodynamic results are combined within ACE and feed directly into the CADE sizing/performance code.

While the aircraft differed aerodynamically, the greatest variation was in the level of transonic drag. As shown in Figure 5.2.3, there was a wide variation in area distribution characteristics both in terms of maximum cross-sectional area and the general shape of the distribution. These differences translate into the transonic drag variation shown in Figure 5.2.4. Note that these results agree reasonably well with the first-order correlation defined earlier in the study (Section 2.5) and used for the initial screening of concepts.

Examining Figures 5.2.3 and 5.2.4 it is clear that the large cross-sectional area of configuration 2407 and its very blunt area distribution combine to produce a very high level of transonic drag. Configuration 2408, while it has a similar maximum cross-sectional area, has significantly less transonic wave drag due to the shape of its area distribution. For a similar reason, the tailless concept 2406 has a low wave drag, comparable to the 2401-2403 concepts, despite having a larger maximum cross-sectional area.

Figure 5.2.5 shows the zero-lift drag of the nine matrix configurations as a function of Mach number. Again, it is obvious that the internal-carriage (Type C) aircraft are paying a big penalty in transonic and supersonic drag, especially configuration 2407 with its blunt area distribution. This will ultimately translate into a larger engine size required to meet the challenging transonic-acceleration requirement.

5.2.2 Performance/Sizing Methods

The standard MDA performance and sizing code CADE (Computer-Aided Design and Evaluation) was used in this study to calculate vehicle performance and to size each of the nine aircraft to the mission and performance requirements. A general description of the CADE sizing process can be seen in Figure 5.2.6, showing the nested loops within the program which iterate to find the sized-vehicle characteristics. The code has built-in scaling laws which allow the engine, fuel, and wing to size independently. The resulting vehicle geometry, weights, controls, and aerodynamic characteristics are calculated automatically. The outputs of CADE include a full weight statement for the scaled vehicle and all mission and maneuver performance data.

For this study, the sizing of each of the nine aircraft in the configuration matrix included a number of constraints used to size the wing and engine (Figure 5.1.3) while the mission sized the fuel requirements. In addition, a maximum limit of 90 lbs/sq.ft. wing loading and a thrust-to-weight limit of 1.20 were chosen based on MDA's experience with multi-role aircraft. For example, the 90 lbs/sq.ft. wing loading limit was selected to enable operations from a shortened/repaired runway typical during combat situations. Thrust-to-weight levels above 1.20 seemed unrealistic for a multi-role aircraft with long mission legs (a lower thrust-to-weight engine gives a better engine/airframe match, resulting in a more optimum mission specific fuel consumption).

These groundrules were selected at the start of the sizing process and were somewhat arbitrary. A detailed Concept Exploration & Development (CE&D) study would re-examine these assumptions after the initial sizing in light of the resulting military utility and develop or reaffirm the sizing criteria. This detailed analysis is beyond the scope of this study.

5.3 SIZING RESULTS

Each of the nine aircraft were sized using the CADE sizing code, described in the previous section. This analysis was performed on both the baseline study mission set and an alternate set of missions with a more conventional warm-up fuel allowance, combat segment, and fuel-flow safety factor.

5.3.1 Sized Vehicles - Baseline Missions

Summaries of the sizing results for each of the nine aircraft are presented in Figures 5.3.1 through 5.3.9. Each of these figures indicates the maneuver-performance requirements which sized the engines and wings for the given aircraft.

A number of the aircraft are on the wing-loading constraint of 90 lbs/sq.ft., indicating that the sustained-Nz maneuver-performance requirements used for the study are not as difficult for these aircraft to meet as the acceleration requirement. This is true for all of the Type A configurations and two of the Type B configurations. Model 2406 has a lower transonic drag, thereby requiring smaller engines to meet the transonic acceleration requirement. As shown in Figure 5.3.6, this has the effect of making the sustained-Nz maneuver-performance requirement become important once again in the sizing process.

Figures 5.3.7 through 5.3.9 show the sizing results for the Type C aircraft. The high transonic drag of these configurations makes the acceleration requirement impossible to achieve within the constraints on maximum thrust-to-weight. Configuration 2407, with its very high transonic drag (see Figure 5.2.4 or 5.2.5), would require a thrust-to-weight of almost 1.60 to achieve the 60-second acceleration requirement. At the maximum thrust-to-weight of 1.20, it has a maximum speed of approximately Mach 1.0. Similarly, configurations 2408 and 2409 also require thrust-to-weight levels higher than 1.20 in order to meet the requirement, albeit only slightly higher.

The sizing process normally allows wing size to be optimized as well as fuel and engine size. However, the wing size was not allowed to decrease during the sizing process for the Type C configurations, since the wing area was set by the internal arrangement requirements (engines, internal weapons bays, etc) and these vehicles have very little design flexibility. Wing area could increase above this minimum level if the optimization process favored it, but the relatively difficult acceleration requirement combined with the modest sustained-Nz requirements tended to favor smaller wings.

Figure 5.3.10 summarizes the sized-vehicle TOGW results for the nine aircraft. It is apparent from the figure that vehicle weight does generally increase as the observables requirements and agility requirements increase. It appears that agility requirements have less impact on vehicle weight for the conventional (Type A) aircraft, which benefit from the efficient tail control surfaces and can easily accomodate advanced controls technologies with a minimal weight impact. It also appears that increasing agility on aircraft in the Type C class is more costly in terms of TOGW. Additional controls and technologies must be brought on board, and the basic configuration must be modified to balance aerodynamically.

One interesting feature is the reduction in TOGW which appears in the Type B aircraft at the high agility level (configuration 2406). As drawn, model 2406 has a weight very similar to model 2405, since the removal of vertical tails saves weight and the addition of forebody chine blowing and high-rate yaw vectoring adds approximately the same weight. However, removing the vertical tails also has an impact on transonic drag (as shown in Figure 5.2.5) which reduces the engine size required for the transonic acceleration performance requirement. This reduced engine size helps Model 2406

directly by reducing engine weight but also indirectly by reducing the large amount of fuel used during the 2-minute maximum A/B warm-up. The combination of these effects yields a sized-vehicle TOGW for configuration 2406 which is actually lower than the two other lower-agility Type B concepts.

Figures 5.3.11 through 5.3.19 detail the as-drawn and sized weights for the nine configurations in the matrix.

5.3.2 Sized Vehicles - Modified Missions

A brief additional study was performed to determine the impact of a modified set of missions on overall vehicle sizing and trends with agility and observables. The baseline missions (see Figures 5.1.1 and 5.1.2) had a number of features which differed from Multirole Fighter (MRF) missions used in previous studies conducted at MDA. The greatest difference was in the warm-up fuel, which was 2 minutes idle plus 2 minutes maximum A/B power for the study baseline mission compared with 20 minutes idle in a typical MRF mission. The modified missions incorporated the following changes:

- 20 minutes idle power warm-up versus 2 min idle plus 2 min Max A/B,
- Cruise altitude for A/G mission set at 25,000 ft versus 15,000 ft in baseline,
- Combat energy allowance of 50,000 ft versus small number of turns in baseline,
- Overall fuel-flow safety factor of 1.05 versus 1.00,
- Mission radius left the same at 600nm for A/G and 200nm A/A.

Figure 5.3.20 shows a breakdown of fuel used during each segment of the mission in terms of percentage of total internal fuel. The changes in mission parameters had a large effect on the amount of fuel used for warm-up and taxi, dropping it from nearly 17% of total internal fuel to a more typical 5%. As shown in the figure, the higher cruise altitude produced more fuel used during the climb segments, and the increased combat allowance amounts to approximately 7-8% of internal fuel versus only 3% in the baseline study mission. The overall effect was to de-emphasize the warm-up/taxi fuel and increase the importance of the climb and combat segments.

All nine vehicles were sized for this modified set of missions using the same set of maneuver-performance requirements plus an additional air-to-ground requirement of 5.5 g's sustained at 0.8M/10K at military power. As Figure 5.3.21 indicates, the modified mission yielded sized vehicles slightly smaller than the baseline mission, with Type B vehicles falling in the range of 39-41,000 lbs rather than 43-45,000 lbs for the baseline mission. These sizes are more in line with previous MRF-related studies using missions similar to the modified missions in this study. Note that the trends versus agility level and observables class in Figure 5.3.21 are very consistent for the

two mission sets. The sensitivity to agility at the Type C observables class is slightly lower for the modified mission set, but otherwise the trends appear identical.

Baseline A/G Mission - Battlefield Air Interdiction

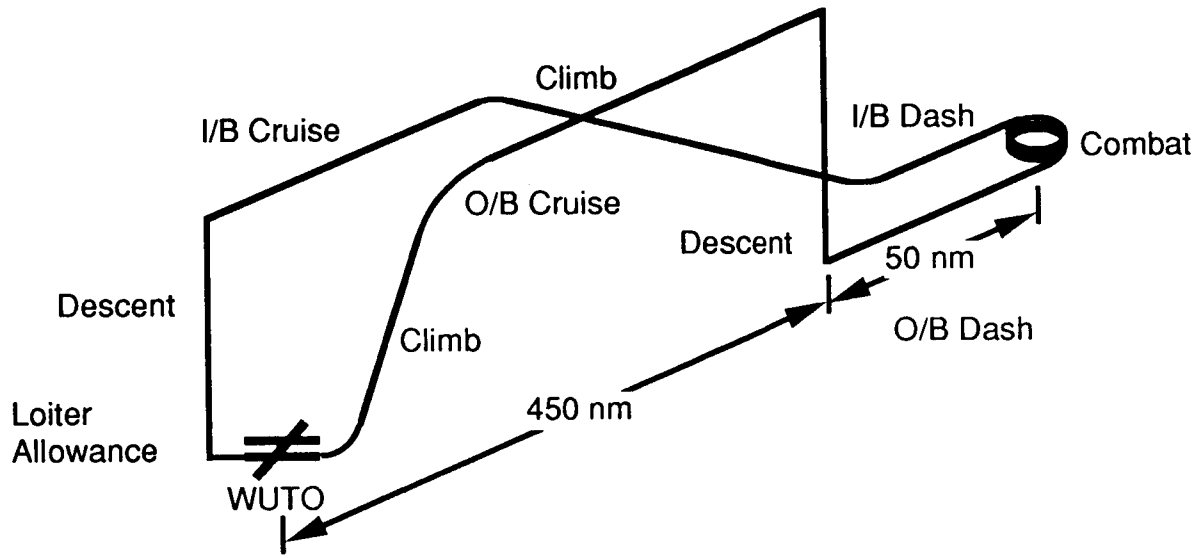

WUTO: 2 min @ SL Idle, 2 min @ SL A/B, SL Accel to Best Climb Mach
Climb: Min Fuel, Best Climb Mach
O/B Cruise: Opt Mach/15K, 450 nm
Descent: No Time, Fuel, or Distance Credit
O/B Dash: M0.9/200 ft, 50 nm
Combat: (1) 360° Sustained 5g Turn @ M0.8/200 ft, Drop (1) GBU-24
(1) 360° Sustained 5g Turn @ M0.8/200 ft, Drop (1) GBU-24
(1) 360° Sustained 5g Turn @ M0.8/200 ft, Launch (1) AIM-9
I/B Dash: Same as O/B Dash
Climb: Min Fuel, Best Climb Mach
I/B Cruise: Same as O/B Cruise
Descent: No Time, Fuel, or Distance Credited
Loiter Allowance: 20 min Loiter @ Opt Mach/5K, 5 min @ SL Idle

LARC93-115

Figure 5.1.1

Baseline A/A Mission - Defensive Counter Air

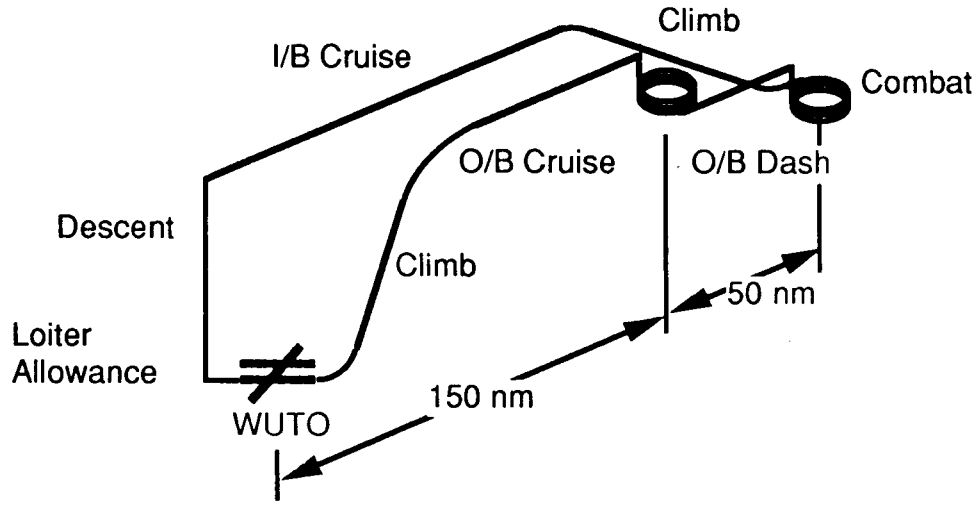

WUTO: 2 min @ SL Idle, 2 min @ SL A/B, SL Accel to Best Climb Mach
Climb: Min Fuel, Best Climb Mach
O/B Cruise: Opt Mach/"Avg Opt" Constant Altitude, 150 nm
Descent: No Time, Fuel, or Distance Credited
Loiter: M0.8/30K, 30 min.
O/B Dash: M1.5/30K, 50 nm
Descent: No Time, Fuel, or Distance Credited
Combat: (1) 360° Sustained Turn @ 0.8M/20K/MAX, Launch (2) AIM-120's
(1) 360° Sustained Turn @ 0.8M/20K/MAX, Launch (1) AIM-9
Climb: Min Fuel, Best Climb Mach to "Avg Opt" Constant Altitude
I/B Cruise: Opt Mach/"Avg Opt" Constant Altitude
Descent: No Time, Fuel, or Distance Credited
Loiter Allowance: 20 min Loiter @ Opt Mach/5K, 5 min @ SL Idle

LARC93-116

Figure 5.1.2

Agility Study EM Sizing Constraints

Type	Mach	Alt	Load	Requirement
P_S @ 5.5g	0.6	15K	A/A	P_S ≥ -800 fps (Low Agility) ≥ -450 fps (Medium Agility) ≥ -100 fps (High Agility)
P_S @ 7.5g	0.68 (450 KTAS)	SL	A/G	
Sustained g	0.9	SL	A/G	$N_z \geq 6.5$ g
Sustained g	0.9	35K	A/A	$N_z \geq 3.5$ g
Sustained g	0.9	20K	A/A	$N_z \geq 6.5$ g
Accel	0.8 - 1.5	30K	A/A	$t \leq 60$ sec

Loadings:

A/A: (2) AIM-120, (2) AIM-9, 500 rds 20mm Ammo
A/G: (2) GBU-24, (2) AIM-9, 500 rds 20mm Ammo

LARC93-117

Figure 5.1.3

ACE (Aircraft Configuration Evaluation) Flowchart

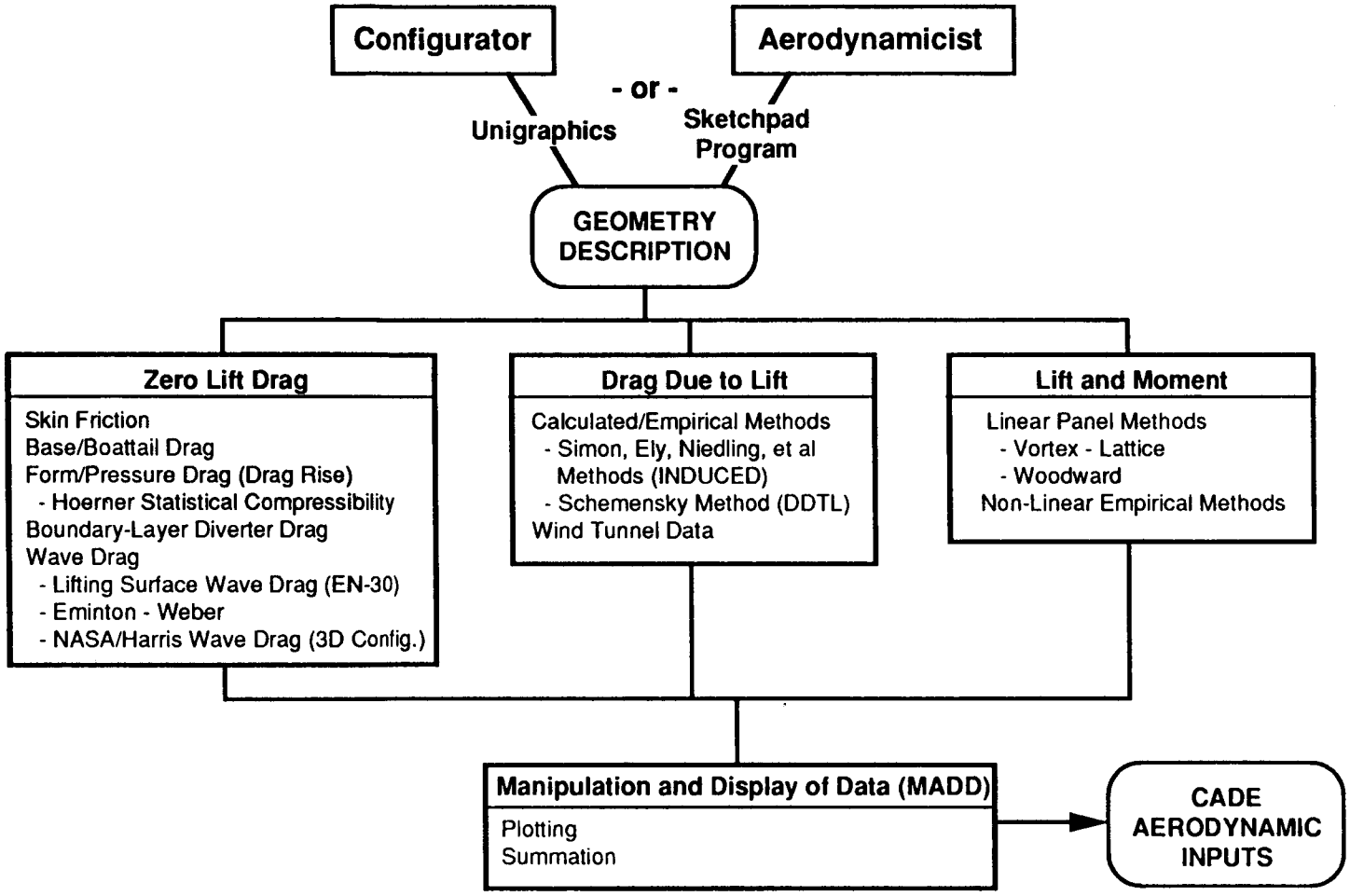

LARC93-124

Figure 5.2.1

Agility Study Drag Methodology

Drag Item	Description
Friction, C_{D_f}	• Schoenherr Skin Friction • Sommer and Short T' Compressibility
Roughness, C_{D_R}	• $C_{D_R} = C_f\,(S_{wet}/S_{ref})$ • LO | M<1 | M>1 A | .00065 | .00085 B | .00032 | .00042 C | 0 | 0
Interference, $C_{D_{INT}}$	• $C_{D_{INT}} = 1.05\,C_{D_f}$
Wave Drag, C_{D_W}	Fuselage • NASAWAVE, (Fuse + Airfoils) - (Airfoils) Airfoils • EN-30 (MDA Empirical Method) • Pressure Drag Correlation, $f(M, t/c, \Lambda_{LE}, x_{t/c\,MAX})$
Drag Due-to-Lift, C_{D_i}	• Simon, Ely, Niedling, AFFDL-TR-71-84 • $C_{D_i} = L'\,C_L^2$ • C_{L_α} from WOODWARD • $L' = 1/\pi ARe$ $(M \le 0.8)$ $(e = f(AR, \lambda, A_{MAX}, d/b)$ Fairing $(0.8 < M < 1.1)$ $1 / C_{L_\alpha}$ $(M \ge 1.1)$

LARC93-121

Figure 5.2.2

Area Distribution Comparison

• Capture Area Removed

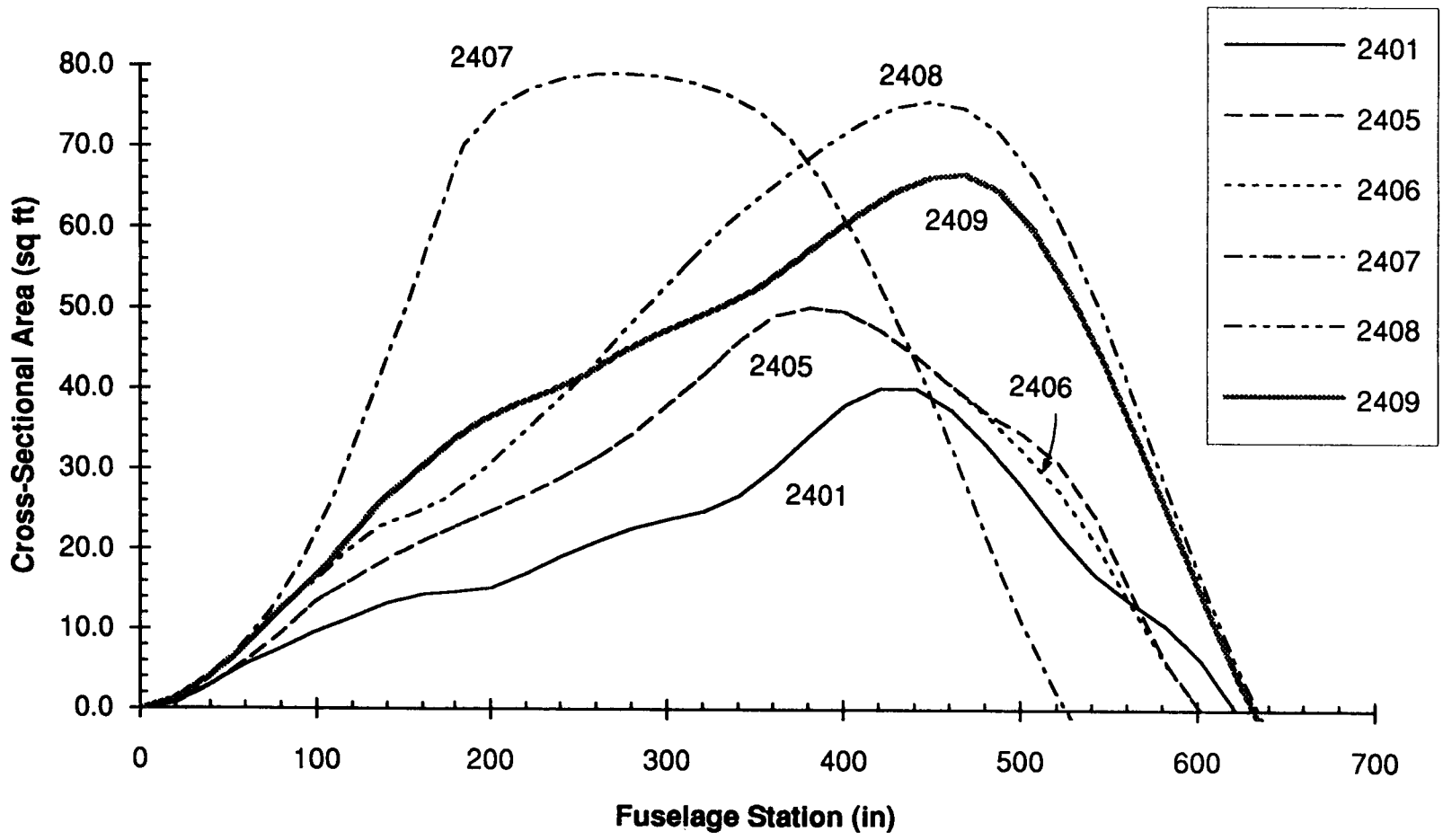

LARC93-122

Figure 5.2.3

Transonic Zero-Lift Drag Comparison

• Calculated Using Standard Level-1 Aero Methods

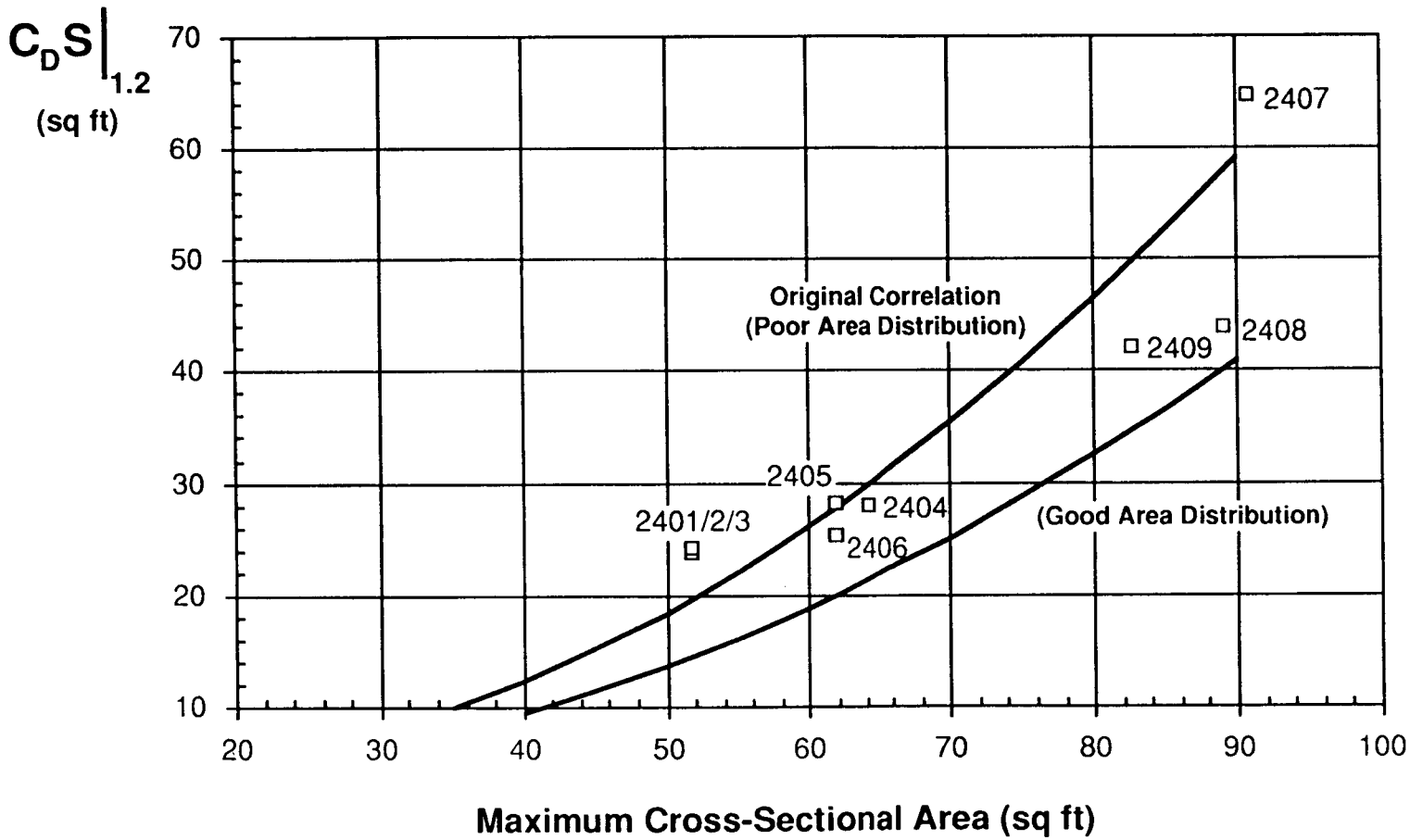

LARC93-123

Figure 5.2.4

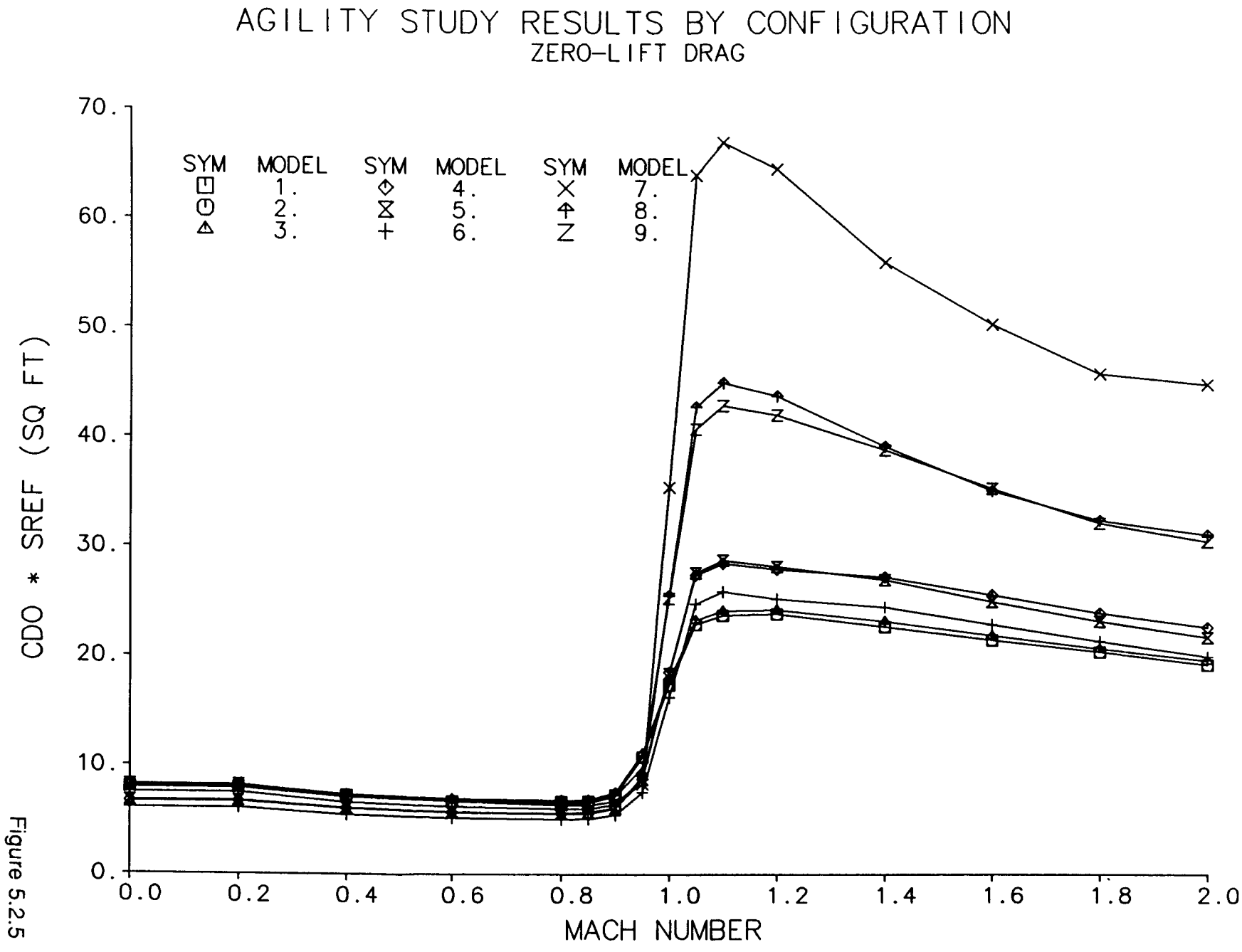
AGILITY STUDY RESULTS BY CONFIGURATION
ZERO-LIFT DRAG
SYM MODEL
1.
2.
3.
SYM MODEL
4.
5.
6.
SYM MODEL
7.
8.
9.
CDO * SREF (SQ FT)
70.
60.
50.
40.
30.
20.
10.
0.
0.0
0.2
0.4
0.6
0.8
1.0
1.2
1.4
1.6
1.8
2.0
MACH NUMBER

Figure 5.2.5

Computer-Aided Design Evaluation (CADE) Process

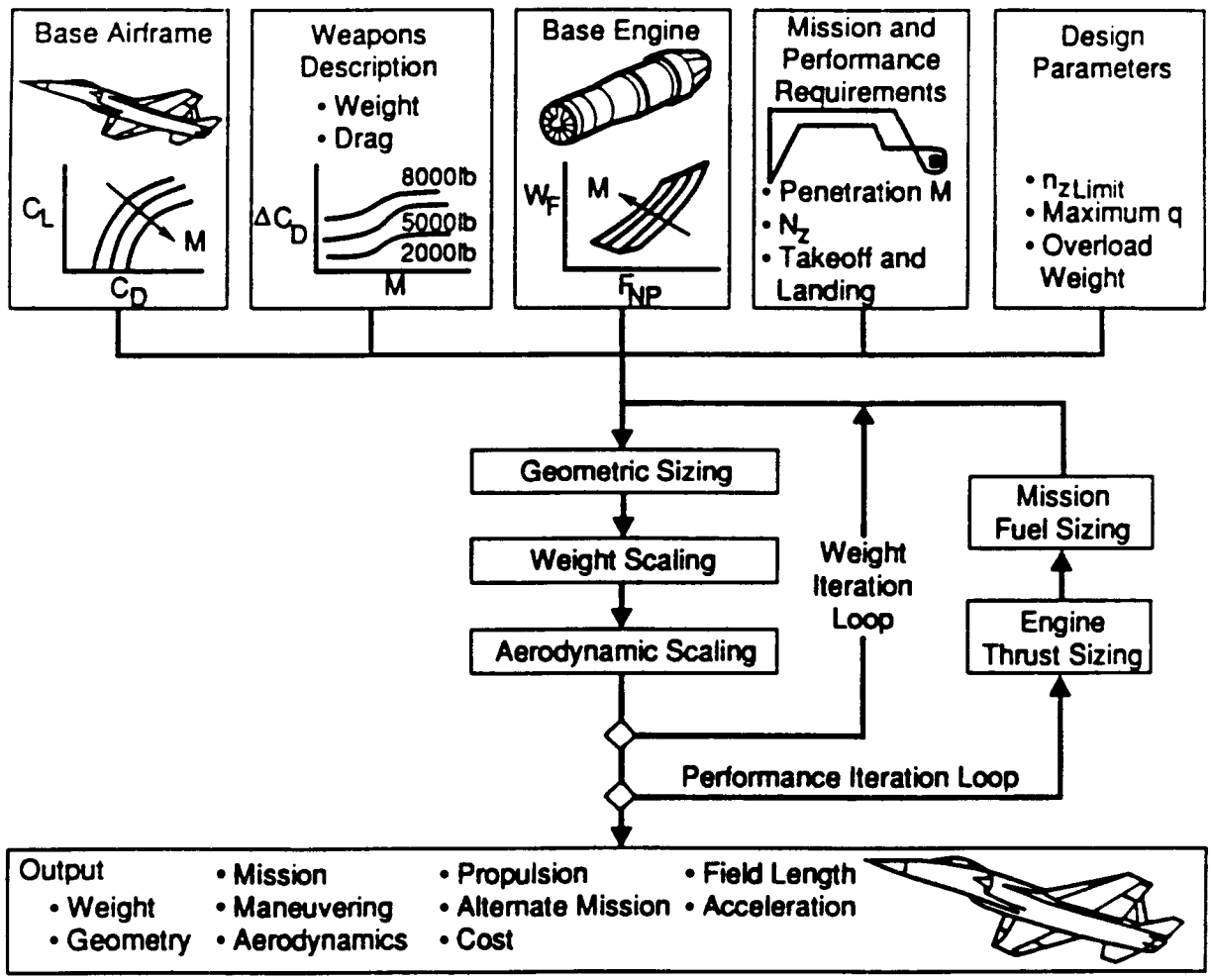

Figure 5.2.6

Sizing Results - Config. 2401

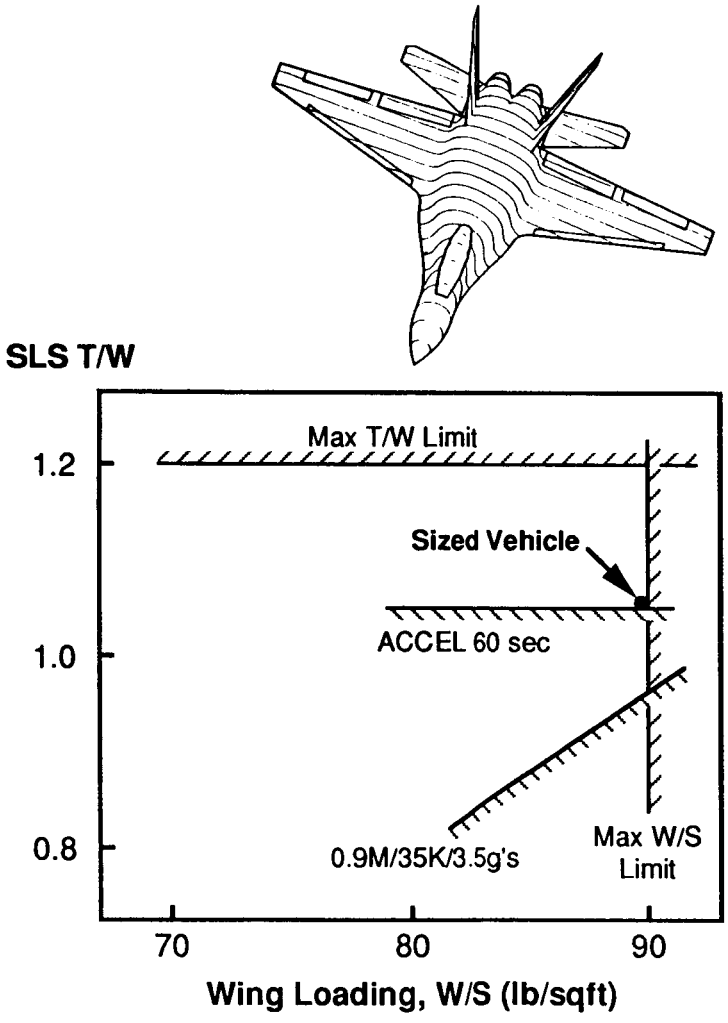

TOGW (A/A)	39122 lb
Empty Weight	22002 lb
Internal Fuel	14651 lb
Fuel Fraction	0.374
Wing Area	435 sqft
Wing Span	38.2 ft
W/S	89.9 lb/sqft
Inst SLS T/W	1.05
BAI Mission Radius	500 nm
DCA Mission Radius	496 nm
Nzst @ 0.9M/35K (A/A)	3.7 g's
Nzst @ 0.9M/20K (A/A)	6.8 g's
Nzst @ 0.9M/SL (A/G)	> 9.0 g's
Accel 0.8-1.5M/30K (A/A)	60 sec
Ps @ 5.5g/0.6M/15K (A/A)	38 ft/sec
Ps @ 7.5g/450kt/SL (A/G)	316 ft/sec

LARC93-131

Figure 5.3.1

Sizing Results - Config. 2402

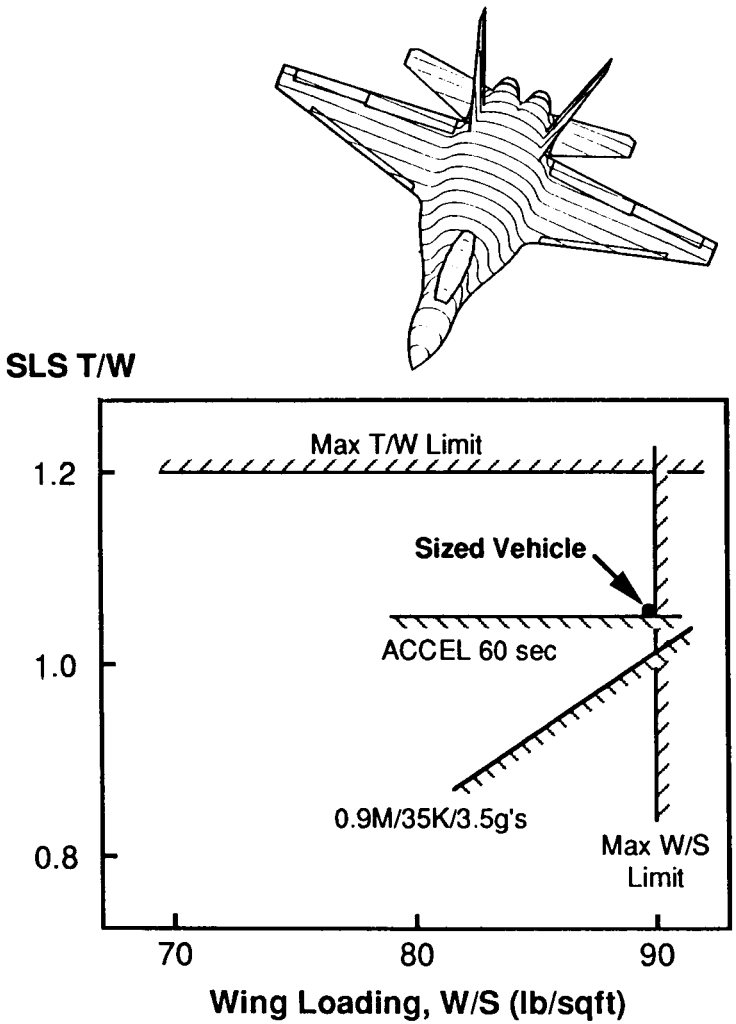

TOGW (A/A)	39645 lb
Empty Weight	22384 lb
Internal Fuel	14790 lb
Fuel Fraction	0.373
Wing Area	440 sqft
Wing Span	38.4 ft
W/S	90.1 lb/sqft
Inst SLS T/W	1.05
BAI Mission Radius	500 nm
DCA Mission Radius	494 nm
Nzst @ 0.9M/35K (A/A)	3.6 g's
Nzst @ 0.9M/20K (A/A)	6.8 g's
Nzst @ 0.9M/SL (A/G)	> 9.0 g's
Accel 0.8-1.5M/30K (A/A)	60 sec
Ps @ 5.5g/0.6M/15K (A/A)	34 ft/sec
Ps @ 7.5g/450kt/SL (A/G)	313 ft/sec

LARC93-132

Figure 5.3.2

Sizing Results - Config. 2403

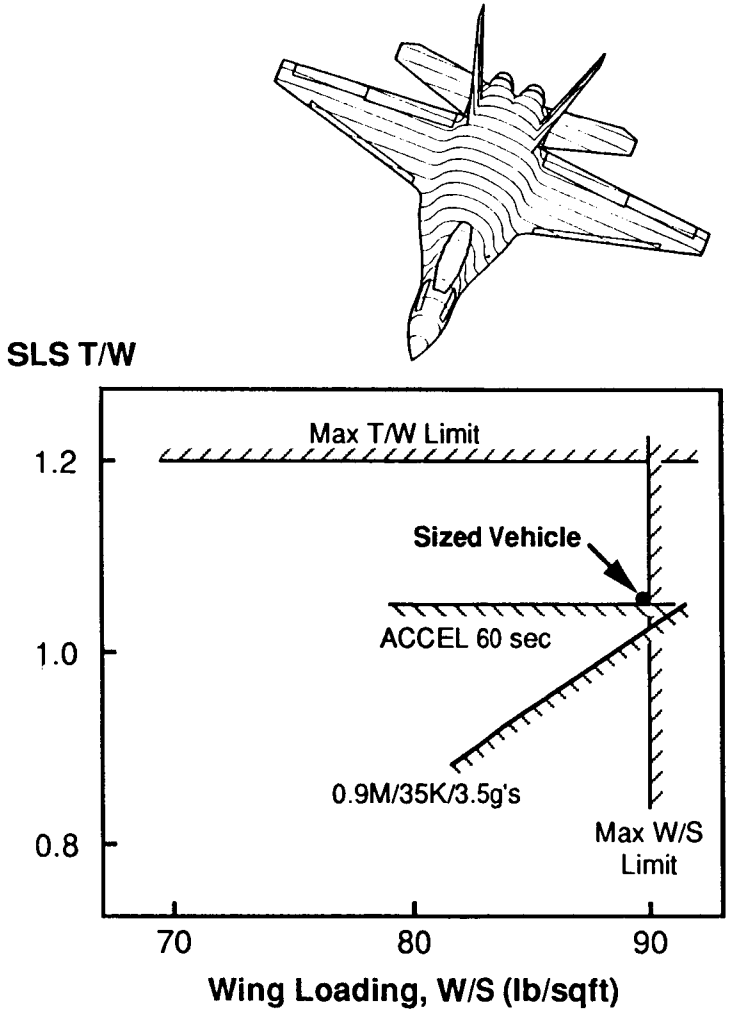

TOGW (A/A)	40988 lb
Empty Weight	23165 lb
Internal Fuel	15348 lb
Fuel Fraction	0.374
Wing Area	455 sqft
Wing Span	39.0 ft
W/S	90.1 lb/sqft
Inst SLS T/W	1.05
BAI Mission Radius	500 nm
DCA Mission Radius	495 nm
Nzst @ 0.9M/35K (A/A)	3.6 g's
Nzst @ 0.9M/20K (A/A)	6.7 g's
Nzst @ 0.9M/SL (A/G)	> 9.0 g's
Accel 0.8-1.5M/30K (A/A)	60 sec
Ps @ 5.5g/0.6M/15K (A/A)	37 ft/sec
Ps @ 7.5g/450kt/SL (A/G)	323 ft/sec

LARC93-133

Figure 5.3.3

Sizing Results - Config. 2404

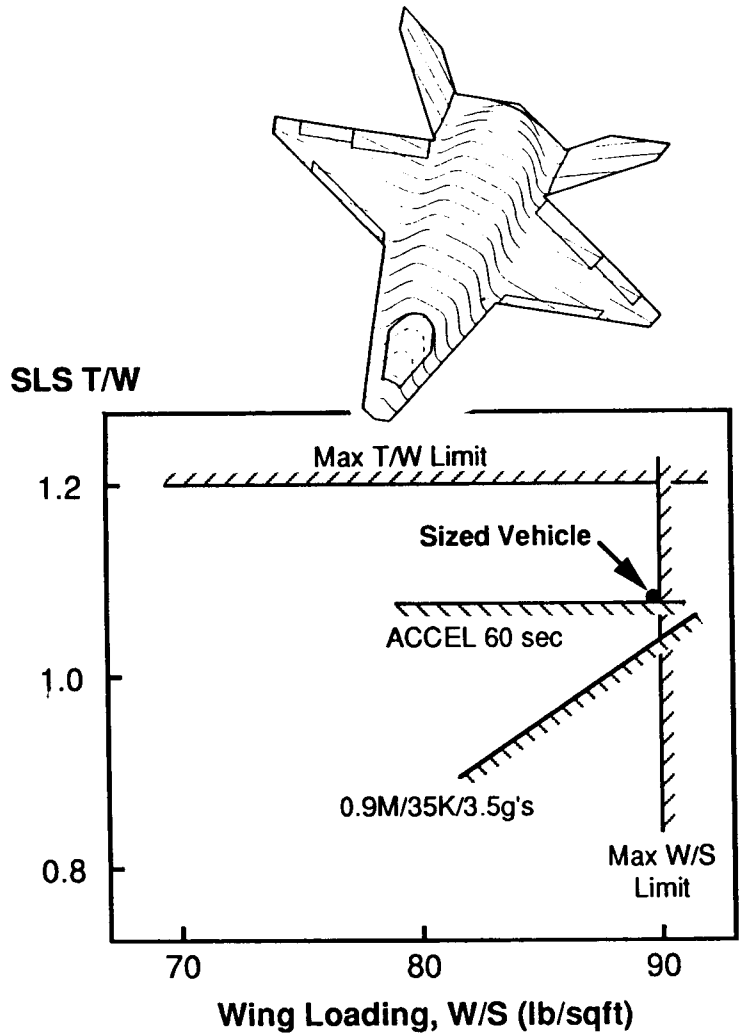

TOGW (A/A)	44203 lb
Empty Weight	24105 lb
Internal Fuel	17011 lb
Fuel Fraction	0.385
Wing Area	490 sqft
Wing Span	37.6 ft
W/S	90.2 lb/sqft
Inst SLS T/W	1.07
BAI Mission Radius	500 nm
DCA Mission Radius	549 nm
Nzst @ 0.9M/35K (A/A)	3.6 g's
Nzst @ 0.9M/20K (A/A)	6.7 g's
Nzst @ 0.9M/SL (A/G)	> 9.0 g's
Accel 0.8-1.5M/30K (A/A)	60 sec
Ps @ 5.5g/0.6M/15K (A/A)	-2 ft/sec
Ps @ 7.5g/450kt/SL (A/G)	257 ft/sec

LARC93-134

Figure 5.3.4

Sizing Results - Config. 2405

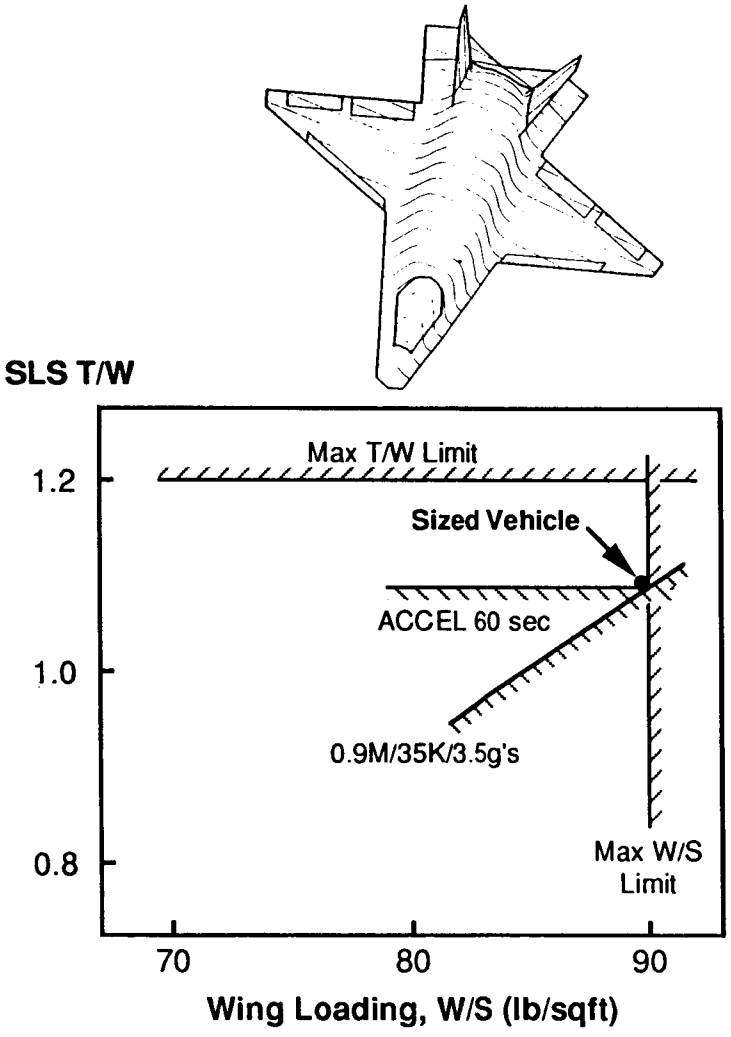

TOGW (A/A)	45482 lb
Empty Weight	24768 lb
Internal Fuel	17621 lb
Fuel Fraction	0.387
Wing Area	500 sqft
Wing Span	38.0 ft
W/S	91.0 lb/sqft
Inst SLS T/W	1.08
BAI Mission Radius	500 nm
DCA Mission Radius	550 nm
Nzst @ 0.9M/35K (A/A)	3.5 g's
Nzst @ 0.9M/20K (A/A)	6.5 g's
Nzst @ 0.9M/SL (A/G)	> 9.0 g's
Accel 0.8-1.5M/30K (A/A)	60 sec
Ps @ 5.5g/0.6M/15K (A/A)	1 ft/sec
Ps @ 7.5g/450kt/SL (A/G)	270 ft/sec

LARC93-135

Figure 5.3.5

Sizing Results - Config. 2406

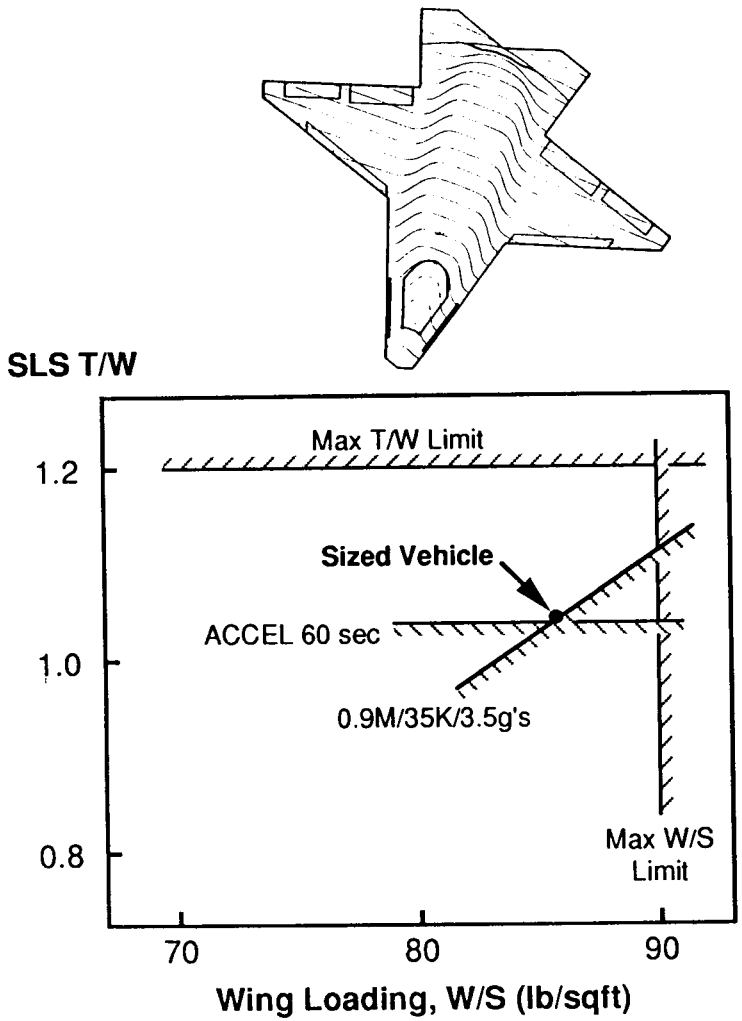

TOGW (A/A)	42991 lb
Empty Weight	23811 lb
Internal Fuel	16101 lb
Fuel Fraction	0.375
Wing Area	500 sqft
Wing Span	38.0 ft
W/S	86.0 lb/sqft
Inst SLS T/W	1.04
BAI Mission Radius	500 nm
DCA Mission Radius	566 nm
Nzst @ 0.9M/35K (A/A)	3.5 g's
Nzst @ 0.9M/20K (A/A)	6.5 g's
Nzst @ 0.9M/SL (A/G)	> 9.0 g's
Accel 0.8-1.5M/30K (A/A)	60 sec
Ps @ 5.5g/0.6M/15K (A/A)	2 ft/sec
Ps @ 7.5g/450kt/SL (A/G)	248 ft/sec

LARC93-136

Figure 5.3.6

Sizing Results - Config. 2407

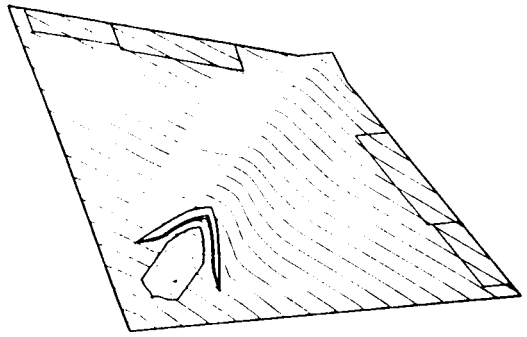

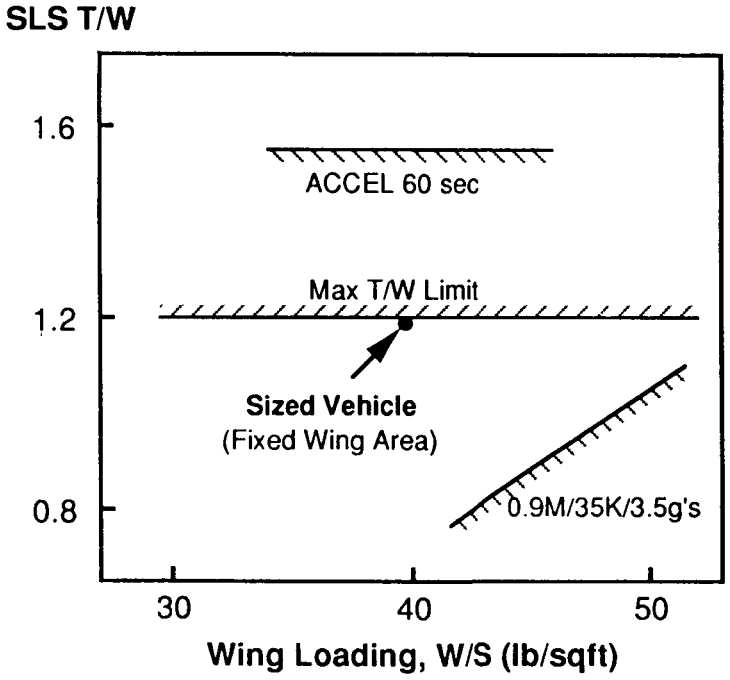

TOGW (A/A)	47380 lb
Empty Weight	28371 lb
Internal Fuel	16000 lb
Fuel Fraction	0.338
Wing Area	1200 sqft
Wing Span	52.1 ft
W/S	39.5 lb/sqft
Inst SLS T/W	1.20
BAI Mission Radius	500 nm
DCA Mission Radius	579 nm
Nzst @ 0.9M/35K (A/A)	4.9 g's
Nzst @ 0.9M/20K (A/A)	> 9.0 g's
Nzst @ 0.9M/SL (A/G)	> 9.0 g's
Accel 0.8-1.5M/30K (A/A)	(Max M=1.0)
Ps @ 5.5g/0.6M/15K (A/A)	302 ft/sec
Ps @ 7.5g/450kt/SL (A/G)	761 ft/sec

LARC93-137

Figure 5.3.7

Sizing Results - Config. 2408

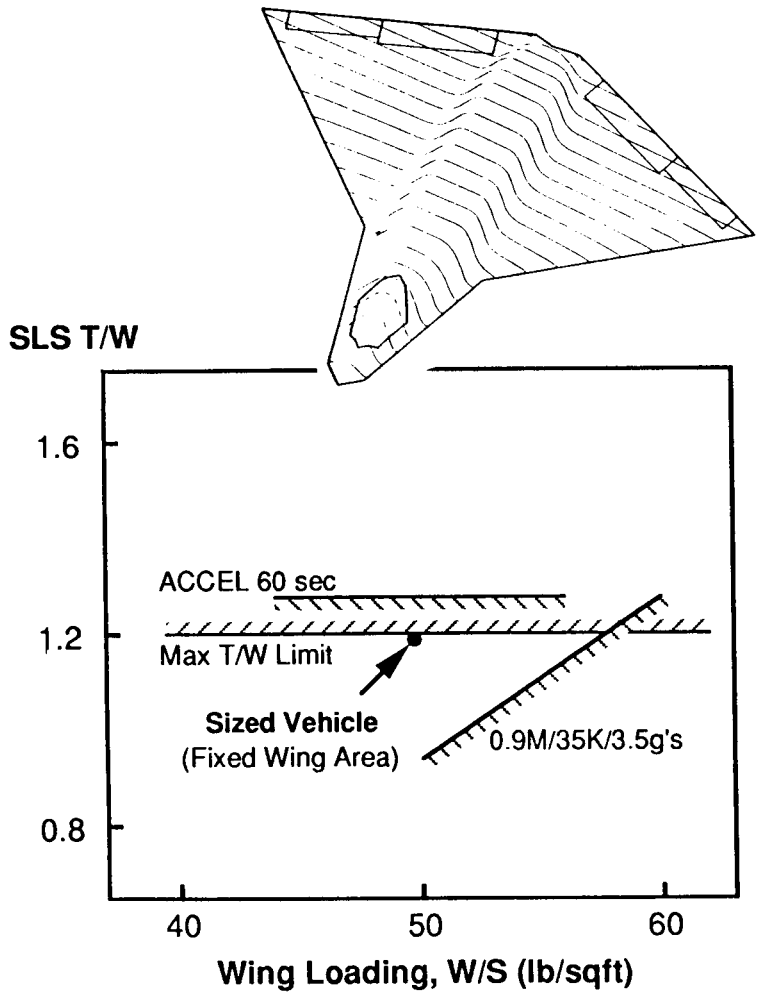

TOGW (A/A)	49784 lb
Empty Weight	29707 lb
Internal Fuel	17049 lb
Fuel Fraction	0.343
Wing Area	1000 sqft
Wing Span	47.5 ft
W/S	49.8 lb/sqft
Inst SLS T/W	1.20
BAI Mission Radius	500 nm
DCA Mission Radius	334 nm
Nzst @ 0.9M/35K (A/A)	4.4 g's
Nzst @ 0.9M/20K (A/A)	8.3 g's
Nzst @ 0.9M/SL (A/G)	> 9.0 g's
Accel 0.8-1.5M/30K (A/A)	83 sec
Ps @ 5.5g/0.6M/15K (A/A)	215 ft/sec
Ps @ 7.5g/450kt/SL (A/G)	671 ft/sec

LARC93-138

Figure 5.3.8

Sizing Results - Config. 2409

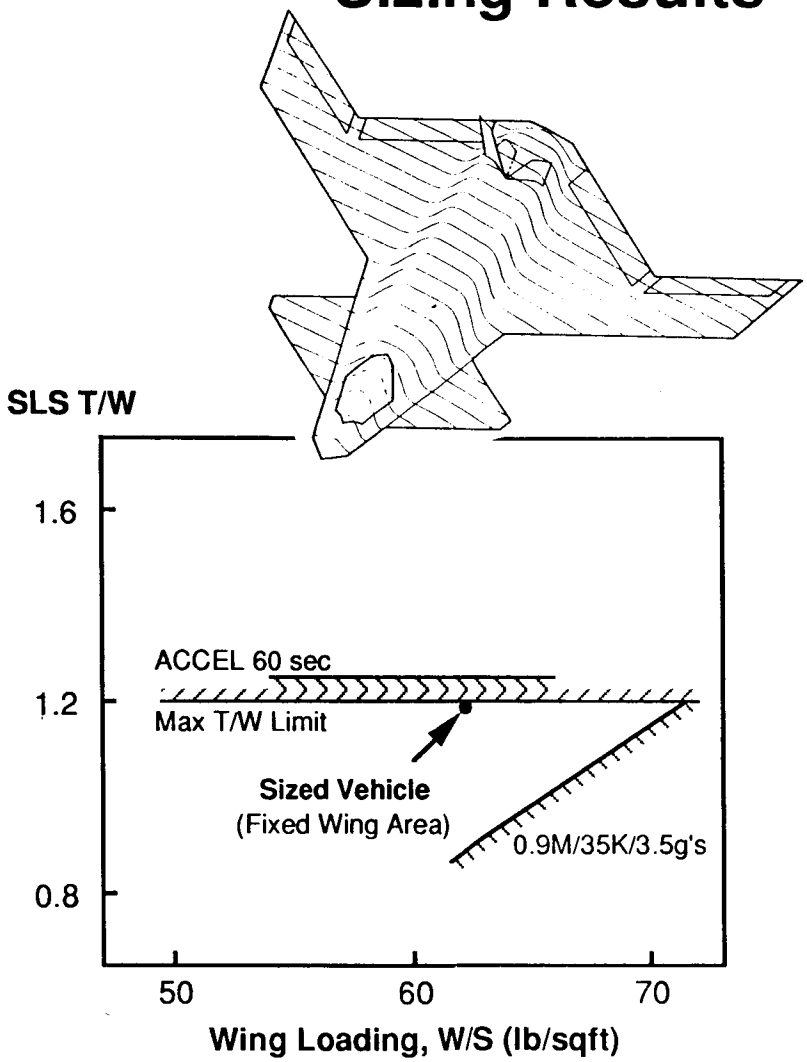

TOGW (A/A)	53316	lb
Empty Weight	31970	lb
Internal Fuel	18303	lb
Fuel Fraction	0.343	
Wing Area	862	sqft
Wing Span	51.5	ft
W/S	61.9	lb/sqft
Inst SLS T/W	1.20	
BAI Mission Radius	500	nm
DCA Mission Radius	368	nm
Nzst @ 0.9M/35K (A/A)	4.3	g's
Nzst @ 0.9M/20K (A/A)	8.0	g's
Nzst @ 0.9M/SL (A/G)	> 9.0	g's
Accel 0.8-1.5M/30K (A/A)	72	sec
Ps @ 5.5g/0.6M/15K (A/A)	243	ft/sec
Ps @ 7.5g/450kt/SL (A/G)	698	ft/sec

LARC93-139

Figure 5.3.9

Summary of Vehicle Sizing Results

- **Baseline Mission / Maneuver Performance**

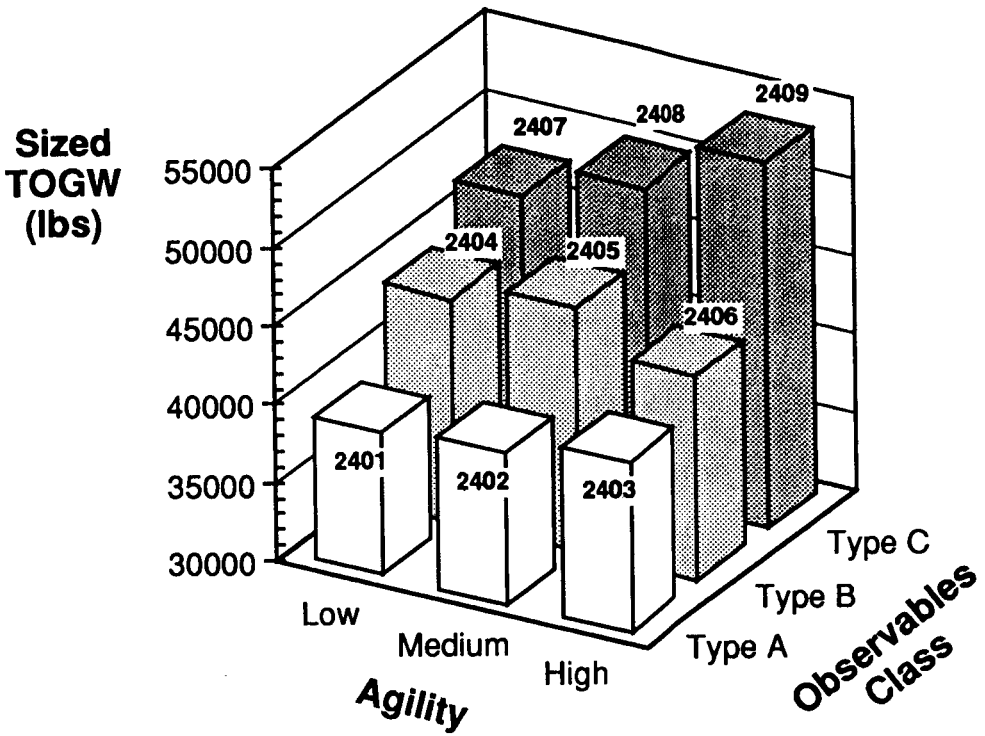

LARC93-160

Figure 5.3.10

CONFIG 2401 - TYPE A, LOW AGILITY, BASELINE MISSIONS

AIRCRAFT WEIGHT CHARACTERISTICS

	BASE A/C	SIZED A/C
WING	3300.	3178.
HORIZONTAL TAIL	562.	475.
VERTICAL TAIL	456.	480.
FUSELAGE GROUP	4220.	4765.
FIXED ITEMS	315.	315.
SHELL MATERIAL	1281.	1437.
BENDING MATERIAL	773.	944.
WING REACTION MATERIAL	147.	151.
FUEL PROVISIONS	280.	406.
ENGINE THRUST PROV.	46.	48.
AIR INDUCTION PROV.	157.	203.
HORIZONTAL TAIL PROV.	185.	203.
VERTICAL TAIL PROV.	61.	65.
LANDING GEAR PROV.	394.	415.
ENGINE CAVITY PROV.	124.	121.
RADOME	116.	116.
WINDSHIELD/CANOPY	341.	341.
LANDING GEAR GROUP	1193.	1259.
NLG STRUCTURE	153.	150.
NLG WHEELS & TIRES	27.	28.
NLG CONTROLS	70.	69.
MLG STRUCTURE	412.	409.
MLG WHEELS & TIRES	224.	235.
MLG BRAKES	133.	182.
MLG CONTROLS	174.	186.
ENGINE GROUP	3732.	3964.
ENGINE	3564.	3789.
ENGINE SECTION	128.	135.
ENGINE CONTROLS	40.	40.
AIR INDUCTION	787.	1017.
FUEL SYSTEM	1063.	1179.
SURFACE CONTROLS	882.	889.
HYDRAULICS	403.	397.
AUXILIARY GEAR	147.	159.
USABLE FUEL	11000.	14651.
WING	4100.	3327.
FUSELAGE	6900.	11324.
FIXED EMPTY WEIGHT ITEMS	4240.	4240.
SECONDARY POWER GROUP	432.	432.
ELECTRICAL GROUP	695.	695.
ENVIRONMENTAL CONTROL SYSTEM	580.	580.
AVIONIC GROUP	1800.	1800.
CREW STATION GROUP	450.	450.
ARMAMENT GROUP	283.	283.
FIXED USEFUL LOAD ITEMS	793.	793.
GUN & INSTALLATION	205.	205.
AMMUNITION	205.	205.
CREW	235.	235.
ENGINE OIL	100.	100.
MISC. EQUIPMENT	48.	48.
WEAPONS	1530.	1530.
TOTAL EMPTY WEIGHT	20985.	22002.
TOTAL USEFUL LOAD	13433.	17120.
TAKEOFF GROSS WEIGHT	34418.	39122.

Figure 5.3.11

CONFIG 2402 - TYPE A, MEDIUM AGILITY, BASELINE MISSIONS

AIRCRAFT WEIGHT CHARACTERISTICS

	BASE A/C	SIZED A/C
WING	3362.	3265.
HORIZONTAL TAIL	562.	479.
VERTICAL TAIL	456.	481.
FUSELAGE GROUP	4220.	4786.
FIXED ITEMS	315.	315.
SHELL MATERIAL	1281.	1444.
BENDING MATERIAL	773.	948.
WING REACTION MATERIAL	147.	152.
FUEL PROVISIONS	280.	408.
ENGINE THRUST PROV.	46.	48.
AIR INDUCTION PROV.	157.	205.
HORIZONTAL TAIL PROV.	185.	204.
VERTICAL TAIL PROV.	61.	66.
LANDING GEAR PROV.	394.	419.
ENGINE CAVITY PROV.	124.	122.
RADOME	116.	116.
WINDSHIELD/CANOPY	341.	341.
LANDING GEAR GROUP	1193.	1263.
NLG STRUCTURE	153.	151.
NLG WHEELS & TIRES	27.	28.
NLG CONTROLS	70.	70.
MLG STRUCTURE	412.	412.
MLG WHEELS & TIRES	224.	235.
MLG BRAKES	133.	180.
MLG CONTROLS	174.	187.
ENGINE GROUP	3874.	4136.
ENGINE	3644.	3894.
ENGINE SECTION	190.	202.
ENGINE CONTROLS	40.	40.
AIR INDUCTION	787.	1026.
FUEL SYSTEM	1063.	1183.
SURFACE CONTROLS	930.	941.
HYDRAULICS	430.	426.
AUXILIARY GEAR	147.	159.
USABLE FUEL	11000.	14790.
WING	4100.	3385.
FUSELAGE	6900.	11405.
FIXED EMPTY WEIGHT ITEMS	4240.	4240.
SECONDARY POWER GROUP	432.	432.
ELECTRICAL GROUP	695.	695.
ENVIRONMENTAL CONTROL SYSTEM	580.	580.
AVIONIC GROUP	1800.	1800.
CREW STATION GROUP	450.	450.
ARMAMENT GROUP	283.	283.
FIXED USEFUL LOAD ITEMS	793.	793.
GUN & INSTALLATION	205.	205.
AMMUNITION	205.	205.
CREW	235.	235.
ENGINE OIL	100.	100.
MISC. EQUIPMENT	48.	48.
WEAPONS	1530.	1530.
TOTAL EMPTY WEIGHT	21264.	22384.
TOTAL USEFUL LOAD	13433.	17261.
TAKEOFF GROSS WEIGHT	34697.	39645.

Figure 5.3.12

CONFIG 2403 - TYPE A, HIGH AGILITY, BASELINE MISSIONS

AIRCRAFT WEIGHT CHARACTERISTICS

	BASE A/C	SIZED A/C
WING	3362.	3374.
HORIZONTAL TAIL	669.	592.
VERTICAL TAIL	456.	483.
FUSELAGE GROUP	4287.	4966.
FIXED ITEMS	364.	364.
SHELL MATERIAL	1281.	1473.
BENDING MATERIAL	773.	979.
WING REACTION MATERIAL	147.	158.
FUEL PROVISIONS	280.	418.
ENGINE THRUST PROV.	46.	49.
AIR INDUCTION PROV.	157.	213.
HORIZONTAL TAIL PROV.	203.	229.
VERTICAL TAIL PROV.	61.	66.
LANDING GEAR PROV.	394.	435.
ENGINE CAVITY PROV.	124.	125.
RADOME	116.	116.
WINDSHIELD/CANOPY	341.	341.
LANDING GEAR GROUP	1193.	1288.
NLG STRUCTURE	153.	155.
NLG WHEELS & TIRES	27.	29.
NLG CONTROLS	70.	71.
MLG STRUCTURE	412.	423.
MLG WHEELS & TIRES	224.	238.
MLG BRAKES	133.	183.
MLG CONTROLS	174.	190.
ENGINE GROUP	3874.	4306.
ENGINE	3644.	4057.
ENGINE SECTION	190.	209.
ENGINE CONTROLS	40.	40.
AIR INDUCTION	787.	1067.
FUEL SYSTEM	1063.	1198.
SURFACE CONTROLS	991.	1020.
HYDRAULICS	461.	468.
AUXILIARY GEAR	147.	162.
USABLE FUEL	11000.	15347.
WING	4100.	3559.
FUSELAGE	6900.	11788.
FIXED EMPTY WEIGHT ITEMS	4240.	4240.
SECONDARY POWER GROUP	432.	432.
ELECTRICAL GROUP	695.	695.
ENVIRONMENTAL CONTROL SYSTEM	580.	580.
AVIONIC GROUP	1800.	1800.
CREW STATION GROUP	450.	450.
ARMAMENT GROUP	283.	283.
FIXED USEFUL LOAD ITEMS	793.	793.
GUN & INSTALLATION	205.	205.
AMMUNITION	205.	205.
CREW	235.	235.
ENGINE OIL	100.	100.
MISC. EQUIPMENT	48.	48.
WEAPONS	1530.	1530.
TOTAL EMPTY WEIGHT	21530.	23165.
TOTAL USEFUL LOAD	13433.	17824.
TAKEOFF GROSS WEIGHT	34963.	40988.

Figure 5.3.13

CONFIG 2404 - TYPE B, LOW AGILITY, BASELINE MISSIONS

AIRCRAFT WEIGHT CHARACTERISTICS

	BASE A/C	SIZED A/C
WING	2957.	3113.
VEE-TAILS	912.	873.
FUSELAGE GROUP	5256.	5993.
FIXED ITEMS	622.	622.
SHELL MATERIAL	1698.	1949.
BENDING MATERIAL	704.	883.
WING REACTION MATERIAL	147.	165.
FUEL PROVISIONS	317.	422.
ENGINE THRUST PROV.	46.	52.
AIR INDUCTION PROV.	147.	204.
HORIZONTAL TAIL PROV.	354.	409.
LANDING GEAR PROV.	405.	460.
ENGINE CAVITY PROV.	161.	173.
RADOME	116.	116.
WINDSHIELD/CANOPY	539.	539.
LANDING GEAR GROUP	1218.	1325.
NLG STRUCTURE	159.	166.
NLG WHEELS & TIRES	27.	29.
NLG CONTROLS	70.	73.
MLG STRUCTURE	431.	458.
MLG WHEELS & TIRES	224.	237.
MLG BRAKES	133.	172.
MLG CONTROLS	174.	191.
ENGINE GROUP	3928.	4582.
ENGINE	3760.	4389.
ENGINE SECTION	128.	153.
ENGINE CONTROLS	40.	40.
AIR INDUCTION	832.	1152.
FUEL SYSTEM	1129.	1244.
SURFACE CONTROLS	925.	968.
HYDRAULICS	423.	444.
AUXILIARY GEAR	154.	170.
USABLE FUEL	13000.	17012.
WING	4100.	3978.
FUSELAGE	8900.	13035.
FIXED EMPTY WEIGHT ITEMS	4240.	4240.
SECONDARY POWER GROUP	432.	432.
ELECTRICAL GROUP	695.	695.
ENVIRONMENTAL CONTROL SYSTEM	580.	580.
AVIONIC GROUP	1800.	1800.
CREW STATION GROUP	450.	450.
ARMAMENT GROUP	283.	283.
FIXED USEFUL LOAD ITEMS	793.	793.
GUN & INSTALLATION	205.	205.
AMMUNITION	205.	205.
CREW	235.	235.
ENGINE OIL	100.	100.
MISC. EQUIPMENT	48.	48.
WEAPONS	2125.	2125.
TOTAL EMPTY WEIGHT	21974.	24105.
TOTAL USEFUL LOAD	16048.	20100.
TAKEOFF GROSS WEIGHT	38022.	44205.

Figure 5.3.14

CONFIG 2405 - TYPE B, MEDIUM AGILITY, BASELINE MISSIONS

AIRCRAFT WEIGHT CHARACTERISTICS

	BASE A/C	SIZED A/C
WING	2957.	3187.
THRUST-BLOWN ELEVONS	515.	515.
VERTICAL TAIL	579.	609.
FUSELAGE GROUP	5196.	6036.
FIXED ITEMS	622.	622.
SHELL MATERIAL	1698.	1987.
BENDING MATERIAL	704.	909.
WING REACTION MATERIAL	147.	170.
FUEL PROVISIONS	317.	434.
ENGINE THRUST PROV.	46.	54.
AIR INDUCTION PROV.	147.	213.
HORIZONTAL TAIL PROV.	204.	242.
VERTICAL TAIL PROV.	90.	99.
LANDING GEAR PROV.	405.	474.
ENGINE CAVITY PROV.	161.	178.
RADOME	116.	116.
WINDSHIELD/CANOPY	539.	539.
LANDING GEAR GROUP	1218.	1348.
NLG STRUCTURE	159.	169.
NLG WHEELS & TIRES	27.	29.
NLG CONTROLS	70.	74.
MLG STRUCTURE	431.	467.
MLG WHEELS & TIRES	224.	240.
MLG BRAKES	133.	175.
MLG CONTROLS	174.	194.
ENGINE GROUP	3928.	4694.
ENGINE	3760.	4496.
ENGINE SECTION	128.	157.
ENGINE CONTROLS	40.	40.
AIR INDUCTION	832.	1206.
FUEL SYSTEM	1129.	1260.
SURFACE CONTROLS	968.	1027.
HYDRAULICS	443.	474.
AUXILIARY GEAR	154.	173.
USABLE FUEL	13000.	17620.
WING	4100.	4100.
FUSELAGE	8900.	13520.
FIXED EMPTY WEIGHT ITEMS	4240.	4240.
SECONDARY POWER GROUP	432.	432.
ELECTRICAL GROUP	695.	695.
ENVIRONMENTAL CONTROL SYSTEM	580.	580.
AVIONIC GROUP	1800.	1800.
CREW STATION GROUP	450.	450.
ARMAMENT GROUP	283.	283.
FIXED USEFUL LOAD ITEMS	793.	793.
GUN & INSTALLATION	205.	205.
AMMUNITION	205.	205.
CREW	235.	235.
ENGINE OIL	100.	100.
MISC. EQUIPMENT	48.	48.
WEAPONS	2125.	2125.
TOTAL EMPTY WEIGHT	22159.	24768.
TOTAL USEFUL LOAD	16048.	20714.
TAKEOFF GROSS WEIGHT	38207.	45482.

Figure 5.3.15

CONFIG 2406 - TYPE B, HIGH AGILITY, BASELINE MISSIONS

AIRCRAFT WEIGHT CHARACTERISTICS

	BASE A/C	SIZED A/C
WING	3033.	3190.
THRUST-BLOWN ELEVONS	581.	580.
FUSELAGE GROUP	5351.	5873.
FIXED ITEMS	867.	867.
SHELL MATERIAL	1698.	1872.
BENDING MATERIAL	704.	839.
WING REACTION MATERIAL	147.	162.
FUEL PROVISIONS	317.	397.
ENGINE THRUST PROV.	46.	51.
AIR INDUCTION PROV.	147.	187.
HORIZONTAL TAIL PROV.	204.	226.
LANDING GEAR PROV.	405.	451.
ENGINE CAVITY PROV.	161.	167.
RADOME	116.	116.
WINDSHIELD/CANOPY	539.	539.
LANDING GEAR GROUP	1218.	1303.
NLG STRUCTURE	159.	166.
NLG WHEELS & TIRES	27.	28.
NLG CONTROLS	70.	72.
MLG STRUCTURE	431.	455.
MLG WHEELS & TIRES	224.	234.
MLG BRAKES	133.	160.
MLG CONTROLS	174.	187.
ENGINE GROUP	4256.	4791.
ENGINE	4060.	4573.
ENGINE SECTION	156.	178.
ENGINE CONTROLS	40.	40.
AIR INDUCTION	832.	1059.
FUEL SYSTEM	1129.	1219.
SURFACE CONTROLS	838.	869.
HYDRAULICS	463.	485.
AUXILIARY GEAR	154.	167.
USABLE FUEL	13000.	16101.
WING	4100.	4100.
FUSELAGE	8900.	12001.
FIXED EMPTY WEIGHT ITEMS	4275.	4275.
SECONDARY POWER GROUP	432.	432.
ELECTRICAL GROUP	695.	695.
ENVIRONMENTAL CONTROL SYSTEM	615.	615.
AVIONIC GROUP	1800.	1800.
CREW STATION GROUP	450.	450.
ARMAMENT GROUP	283.	283.
FIXED USEFUL LOAD ITEMS	793.	793.
GUN & INSTALLATION	205.	205.
AMMUNITION	205.	205.
CREW	235.	235.
ENGINE OIL	100.	100.
MISC. EQUIPMENT	48.	48.
WEAPONS	2125.	2125.
TOTAL EMPTY WEIGHT	22130.	23811.
TOTAL USEFUL LOAD	16048.	19180.
TAKEOFF GROSS WEIGHT	38178.	42991.

Figure 5.3.16

CONFIG 2407 - TYPE C, LOW AGILITY, BASELINE MISSIONS

AIRCRAFT WEIGHT CHARACTERISTICS

	BASE A/C	SIZED A/C
WING	6330.	6406.
FUSELAGE GROUP	6432.	6255.
FIXED ITEMS	1965.	1965.
SHELL MATERIAL	1567.	1441.
BENDING MATERIAL	880.	829.
WING REACTION MATERIAL	257.	263.
FUEL PROVISIONS	317.	317.
ENGINE THRUST PROV.	53.	59.
AIR INDUCTION PROV.	133.	143.
LANDING GEAR PROV.	435.	443.
ENGINE CAVITY PROV.	170.	140.
RADOME	116.	116.
WINDSHIELD/CANOPY	539.	539.
LANDING GEAR GROUP	1354.	1372.
NLG STRUCTURE	175.	176.
NLG WHEELS & TIRES	35.	35.
NLG CONTROLS	70.	70.
MLG STRUCTURE	492.	497.
MLG WHEELS & TIRES	249.	251.
MLG BRAKES	148.	155.
MLG CONTROLS	185.	188.
ENGINE GROUP	5331.	6242.
ENGINE	5136.	6020.
ENGINE SECTION	155.	182.
ENGINE CONTROLS	40.	40.
AIR INDUCTION	754.	809.
FUEL SYSTEM	1303.	1303.
SURFACE CONTROLS	1048.	1058.
HYDRAULICS	514.	520.
AUXILIARY GEAR	162.	165.
USABLE FUEL	16000.	16000.
WING	7100.	7100.
FUSELAGE	8900.	8900.
FIXED EMPTY WEIGHT ITEMS	4240.	4240.
SECONDARY POWER GROUP	432.	432.
ELECTRICAL GROUP	695.	695.
ENVIRONMENTAL CONTROL SYSTEM	580.	580.
AVIONIC GROUP	1800.	1800.
CREW STATION GROUP	450.	450.
ARMAMENT GROUP	283.	283.
FIXED USEFUL LOAD ITEMS	809.	809.
GUN & INSTALLATION	205.	205.
AMMUNITION	205.	205.
CREW	235.	235.
ENGINE OIL	116.	116.
MISC. EQUIPMENT	48.	48.
WEAPONS	2050.	2050.
TOTAL EMPTY WEIGHT	27468.	28371.
TOTAL USEFUL LOAD	19019.	19019.
TAKEOFF GROSS WEIGHT	46487.	47390.

Figure 5.3.17

CONFIG 2408 - TYPE C, MEDIUM AGILITY, BASELINE MISSIONS

AIRCRAFT WEIGHT CHARACTERISTICS

	BASE A/C	SIZED A/C
WING	5769.	5958.
FUSELAGE GROUP	7045.	7415.
FIXED ITEMS	2149.	2149.
SHELL MATERIAL	1805.	1940.
BENDING MATERIAL	1014.	1121.
WING REACTION MATERIAL	229.	244.
FUEL PROVISIONS	317.	345.
ENGINE THRUST PROV.	53.	61.
AIR INDUCTION PROV.	218.	248.
LANDING GEAR PROV.	435.	460.
ENGINE CAVITY PROV.	170.	192.
RADOME	116.	116.
WINDSHIELD/CANOPY	539.	539.
LANDING GEAR GROUP	1354.	1410.
NLG STRUCTURE	175.	179.
NLG WHEELS & TIRES	35.	36.
NLG CONTROLS	70.	71.
MLG STRUCTURE	492.	507.
MLG WHEELS & TIRES	249.	255.
MLG BRAKES	148.	168.
MLG CONTROLS	185.	193.
ENGINE GROUP	5331.	6458.
ENGINE	5136.	6229.
ENGINE SECTION	155.	189.
ENGINE CONTROLS	40.	40.
AIR INDUCTION	1092.	1243.
FUEL SYSTEM	1303.	1333.
SURFACE CONTROLS	967.	992.
HYDRAULICS	474.	488.
AUXILIARY GEAR	162.	170.
USABLE FUEL	16000.	17049.
WING	7100.	7100.
FUSELAGE	8900.	9949.
FIXED EMPTY WEIGHT ITEMS	4240.	4240.
SECONDARY POWER GROUP	432.	432.
ELECTRICAL GROUP	695.	695.
ENVIRONMENTAL CONTROL SYSTEM	580.	580.
AVIONIC GROUP	1800.	1800.
CREW STATION GROUP	450.	450.
ARMAMENT GROUP	283.	283.
FIXED USEFUL LOAD ITEMS	809.	809.
GUN & INSTALLATION	205.	205.
AMMUNITION	205.	205.
CREW	235.	235.
ENGINE OIL	116.	116.
MISC. EQUIPMENT	48.	48.
WEAPONS	2050.	2050.
TOTAL EMPTY WEIGHT	27737.	29707.
TOTAL USEFUL LOAD	19019.	20079.
TAKEOFF GROSS WEIGHT	46756.	49786.

Figure 5.3.18

CONFIG 2409 - TYPE C, HIGH AGILITY, BASELINE MISSIONS

AIRCRAFT WEIGHT CHARACTERISTICS

	BASE A/C	SIZED A/C
WING	5340.	5616.
HORIZONTAL CANARD	647.	642.
FUSELAGE GROUP	7800.	8521.
FIXED ITEMS	2259.	2259.
SHELL MATERIAL	2040.	2293.
BENDING MATERIAL	1036.	1213.
WING REACTION MATERIAL	240.	265.
FUEL PROVISIONS	317.	371.
ENGINE THRUST PROV.	53.	64.
AIR INDUCTION PROV.	218.	268.
HORIZONTAL CANARD PROV.	377.	455.
LANDING GEAR PROV.	435.	478.
ENGINE CAVITY PROV.	170.	201.
RADOME	116.	116.
WINDSHIELD/CANOPY	539.	539.
LANDING GEAR GROUP	1354.	1446.
NLG STRUCTURE	175.	182.
NLG WHEELS & TIRES	35.	37.
NLG CONTROLS	70.	72.
MLG STRUCTURE	492.	517.
MLG WHEELS & TIRES	249.	260.
MLG BRAKES	148.	179.
MLG CONTROLS	185.	198.
ENGINE GROUP	5438.	6909.
ENGINE	5136.	6531.
ENGINE SECTION	262.	338.
ENGINE CONTROLS	40.	40.
AIR INDUCTION	1060.	1302.
FUEL SYSTEM	1303.	1368.
SURFACE CONTROLS	1125.	1174.
HYDRAULICS	552.	578.
AUXILIARY GEAR	162.	175.
USABLE FUEL	16000.	18301.
WING	6100.	6099.
FUSELAGE	9900.	12201.
FIXED EMPTY WEIGHT ITEMS	4240.	4240.
SECONDARY POWER GROUP	432.	432.
ELECTRICAL GROUP	695.	695.
ENVIRONMENTAL CONTROL SYSTEM	580.	580.
AVIONIC GROUP	1800.	1800.
CREW STATION GROUP	450.	450.
ARMAMENT GROUP	283.	283.
FIXED USEFUL LOAD ITEMS	809.	809.
GUN & INSTALLATION	205.	205.
AMMUNITION	205.	205.
CREW	235.	235.
ENGINE OIL	116.	116.
MISC. EQUIPMENT	48.	48.
WEAPONS	2050.	2050.
TOTAL EMPTY WEIGHT	29021.	31970.
TOTAL USEFUL LOAD	19019.	21343.
TAKEOFF GROSS WEIGHT	48040.	53313.

Figure 5.3.19

BAI Mission Fuel Usage Comparison

- Modified vs Original Study Mission
- Configuration 2405 (Type B, Medium Agility)
- 0.8 BPR, Max OPR Gen 6 Engine

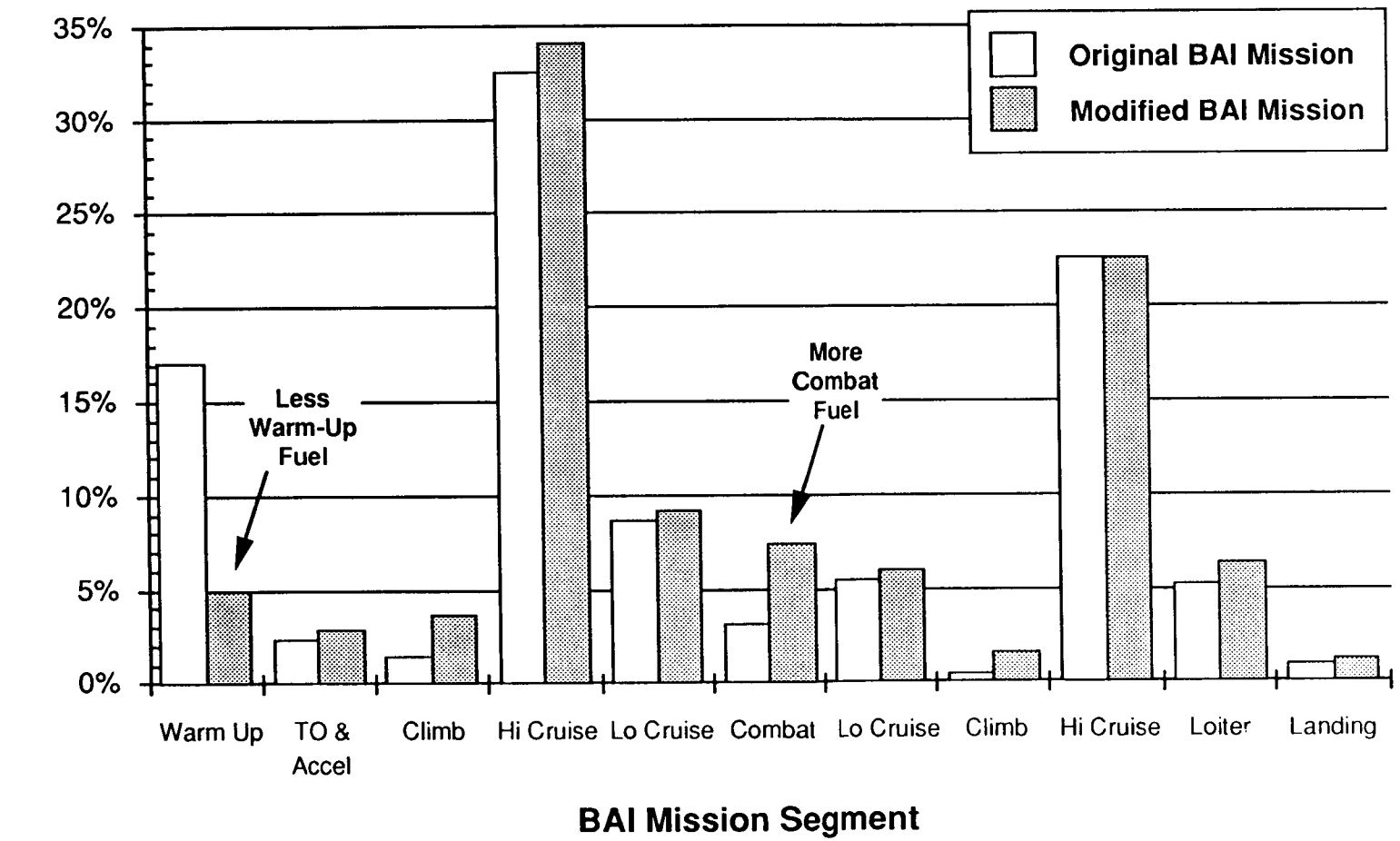

LARC93-101

Figure 5.3.20

Alternate vs. Baseline Mission Sizing Results

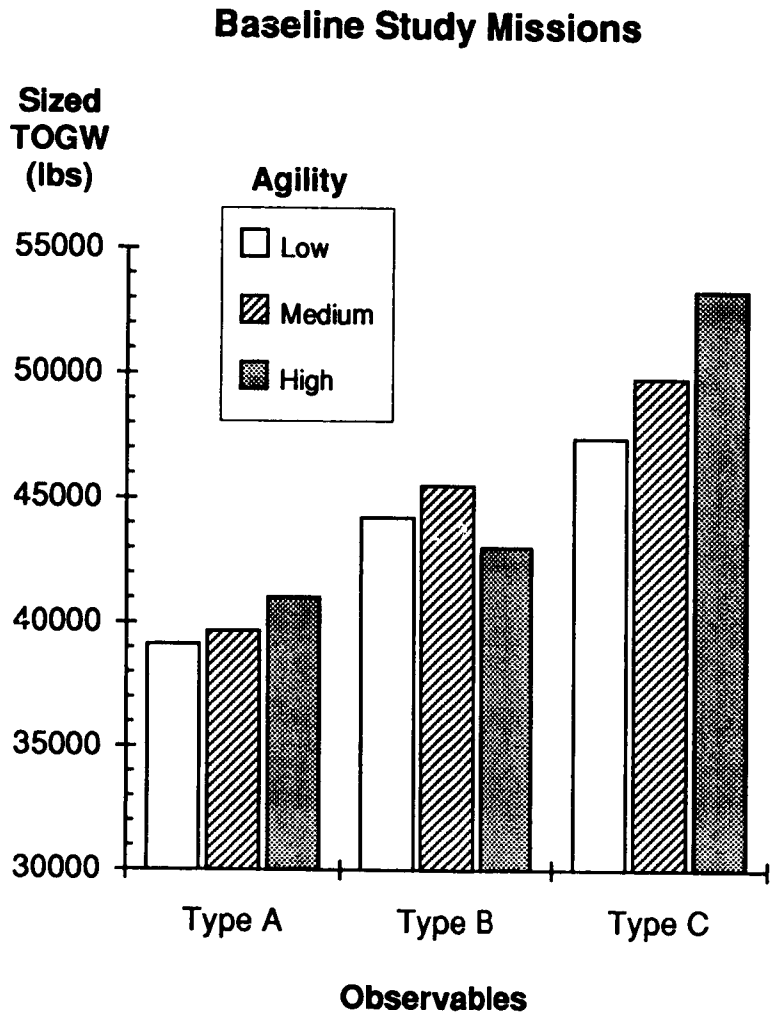

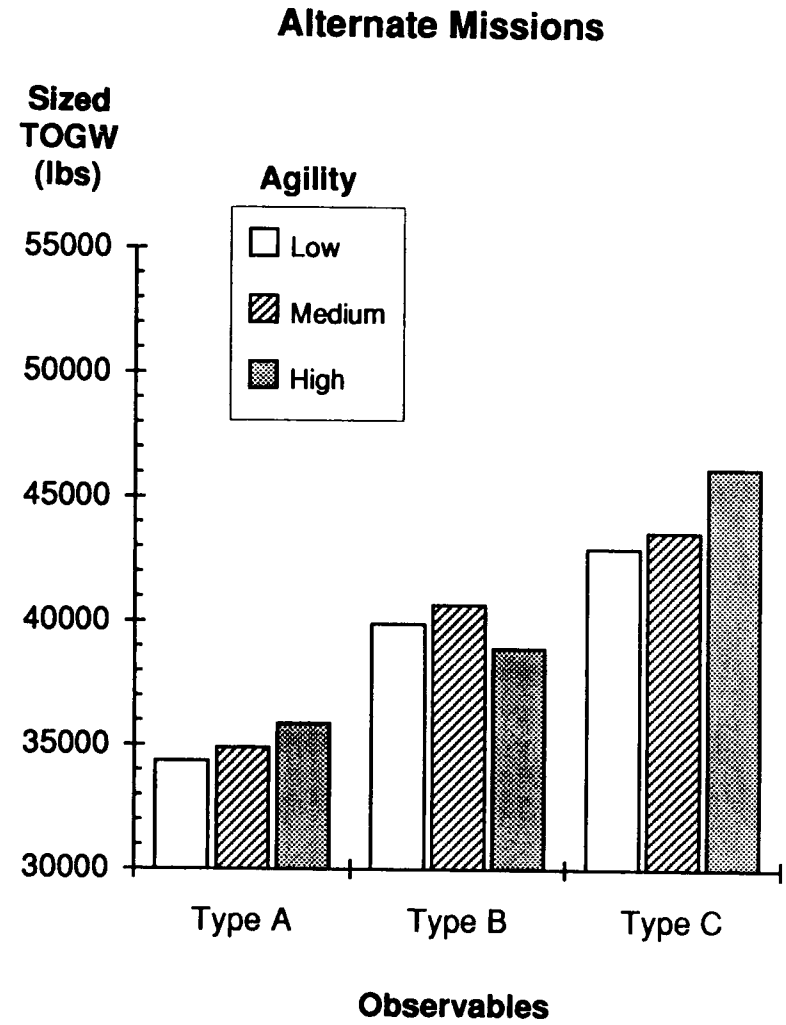

LARC93-161

Figure 5.3.21

6.0 CONFIGURATION CRITICAL ASSESSMENT

This section will consider the suitability of each of the matrix configurations relative to the design missions, the impact of agility on combat effectiveness, and lessons learned about the impact of agility on design decisions.

6.1 SUITABILITY OF CONFIGURATIONS

It appears from Section 5 that aircraft weight by itself does not make any of the configurations unsuitable for the design mission, although all of the concepts have a relatively high fuel fraction requirement (34-38%) with the original baseline mission. The heaviest sized vehicle in the matrix was 2409 (high agility, Type C observables) at a TOGW of 53300 lbs. This is not unreasonable for an aircraft with these mission, payload, agility, and observables requirements. With a thrust-to-weight of 1.20, it will require 64000 lbs of thrust at SLS conditions, again not unreasonable for such an aircraft. Therefore, none of the aircraft appear unworkable from a sized-vehicle weight point of view.

Maximum speed, however, does begin to differentiate between the concepts. As Figure 6.1.1 indicates, the Type C aircraft all have difficulty achieving the acceleration performance goal of 60-seconds for Mach 0.8-1.5 at 30,000 ft. The maximum thrust-to-weight limit of 1.20, discussed in Section 5, effectively limits the maximum speed or acceleration capability of the Type C aircraft. Increasing the thrust-to-weight further would eventually allow these aircraft to meet the goal, but would yield unbalanced and unrealistic aircraft in terms of size, weight, and fuel fraction (recall that the baseline mission includes 2 minutes of maximum A/B power for warm-up, severely penalizing aircraft with large engines).

It would appear that the 2407 vehicle is not appropriate for the design mission and performance requirements because it is unable to achieve Mach 1.5, let alone accelerate to this speed in the required time. Concepts 2408 and 2409 are capable of Mach 1.5, and only miss achieving the acceleration requirement by a small margin, thereby making them suitable for the design mission set. The difference is in the transonic wave drag, and ultimately in the area distribution shape of the 2407 vehicle. As shown in Section 5.2 (Figures 5.2.3 and 5.2.4), the 2407 vehicle has a very abrupt increase in the area distribution due to the need to integrate the internal weapons bays, inlet ducts, engines, and other subsystems in roughly the same region of the aircraft. Model 2408, on the other hand, benefits from the forebody-wing design which yields a more gentle initial area buildup, as shown in Figure 5.2.3. Model 2407 might be able to achieve a similar area distribution benefit if wing leading-edge sweep was increased substantially, yielding a longer and more slender configuration. It is unlikely that such a low-aspect-ratio wing would be consistent with the 600-nm A/G mission, however.

All of the Type A and B configurations are consistent with the design mission and performance requirements, albeit with high fuel fractions. These high fuel fractions are due in large part to the large amount (2000-3000 lbs) of fuel used in the warm-up segment of the baseline mission and the low (15,000 ft) cruise altitude for the Air-to-Ground mission. Fuel fractions drop to a more reasonable 30-33% for the alternate mission set discussed in Section 5.3.2.

A number of non-performance related issues must be addressed when evaluating the suitability of these vehicles. Four of the aircraft are directionally-unstable tailless designs, representing an increase in complexity, risk, and reliance on high-rate vectoring for primary yaw control and directional-stability augmentation. The three high-agility aircraft have advanced aerodynamic control effectors. While the forebody strakes used on the Type A aircraft (2403) have been studied and tested extensively as part of the F/A-18 HARV program, there is less data available on the chine-blowing concept used for 2406 and the pop-up yaw effectors used for 2409. However, neither aircraft uses these as primary control effectors, but rather as control augmenters to achieve the very high yaw control required to meet the 1.5-second time-to-roll-and-capture metric at high angles of attack.

6.2 IMPACT OF AGILITY ON COMBAT EFFECTIVENESS

This section addresses the issue of identifying and defining the strengths and weaknesses of each matrix configuration as well as the impact of agility on combat effectiveness. However, individual configurations will not be evaluated in isolation. Instead, significant features will be introduced and discussed and those configurations which incorporate those features will be identified. The assessment concentrates on the value of agility in two mission areas: Air Interdiction and Defensive Counter-Air.

The benefits of agility are identified in terms of the five agility metrics defined in Section 2.1. This section will also attempt to define the costs of increased levels of agility, as well as we are able to understand them without the benefit of having empirical data or operational experience relating to these high levels of agility. This cost assessment will therefore be limited to a very top-level analysis.

In general, it is safe to conclude that agility does indeed contribute to combat effectiveness. It should be noted, however, that the same can be said of lower signature. Nevertheless, the assessment did conclude quite conclusively that there are a number of mission segments, albeit a limited number, in which benefits would be realized for increased levels of agility.

Quality-Function Deployment (QFD) methodology was used to derive insight and conclusions. A group of five analysts with operational and/or agility-analysis experience provided the core of expertise for this evaluation. The matrix in Figure 6.2.1 identifies and quantifies the importance of these tactical maneuvers during various mission segments.

The weights assigned to the mission segments in Figure 6.2.1 are the group's subjective assessment of the criticality of each mission segment to the overall mission performance and survivability. These weights are listed in the far right column of the matrix, with a higher weight assigned to those mission segments in which the risk to survival was higher.

The evaluation rating values in the center of the matrix in Figure 6.2.1 reflect the relationship between each tactical maneuver and the mission segment on the left. The ratings were completed using the standard QFD evaluation criteria: "1" signifying a

weak relationship, "3" a moderate relationship, and "9" a strong relationship. By combining these relationship ratings and the mission-segment weighting values, the overall importance of each tactical maneuver to mission success can be estimated. This "score" is simply the sum of each relationship rating multiplied by the appropriate mission-segment weighting value. Only those tactical maneuvers which scored above "20" were carried into the next phase of the analysis.

Several observations can be made from the data presented in Figure 6.2.1. First, it is clear that there are major segments of both the Air Interdiction (AI) and Defensive Counter-Air (DCA) missions in which agility plays little or no part at all. For instance, during the cruise or loiter phases of either mission, there are few, if any, tactical maneuvers in which high levels of agility could be of any help to the pilot.

A second major observation is that the highest potential payoff for performing an agility-related tactical maneuver is in the air combat phase of a mission. Although not presented in this manner, it is important to note that air combat can occur on any mission -- air combat is not limited to DCA missions.

A third observation was derived from the process itself, rather than the quantitative scores. In only one phase of air combat, within visual range (WVR), did agility provide significant benefits. When "air combat" was evaluated, the "beyond visual range" (BVR) portion did not score highly in terms of enhancement due to increased agility.

Finally, it was observed that tactical maneuvers resulting from increased agility are potentially useful in many mission, if we can extrapolate the results of the two missions investigated. Agility seems to have the potential to benefit combat effectiveness in offensive (i.e., target-attack) maneuvering as well as defensive (i.e., self-defense) maneuvering.

The maneuvers which might be performed with enhanced levels of agility caused quite a bit of discussion and controversy. The group had to repeatedly revisit a previous assessment as new knowledge and insight was achieved. As an example, the group found it difficult and cumbersome to think in terms of maximum angle of attack permitting two separated (but related) tactical enhancements: a velocity vector change in magnitude without changing direction, and a velocity vector change in direction with little change in magnitude. Since the agility metrics were defined in non-operational terms, the group had to make some mental adjustments and then try to keep track of them in the ensuing deliberations. With combat effectiveness the primary measure of merit, it might have been better to define pitch agility in terms of a nose-up pitch rate rather than the maximum angle-of-attack metric chosen for the study.

These observations, together with the quantitative ranking and normalized importance scores, provide a meaningful point of departure for further assessments. The next step is to carry forward the highest-ranked (most effective) tactical maneuvers and evaluate the impact of higher levels of agility on their achievement and effectiveness.

It is important to note that this assessment is constrained by a fairly consistent and conventional frame of reference, or paradigm, shared by the individuals participating in this evaluation. That is to say, there may be some risk in evaluating the effects of

certain maneuvers and agility measures with which the group had no experience. For example, the group did not have a good feel for the impact of different levels of lateral-acceleration capability on overall mission success, simply because no one in the group had explored this capability to-date. Nevertheless, the group did perform the evaluation of the importance of each agility metric to the key tactical maneuvers selected in the previous assessment.

As shown in Figure 6.2.2, the agility metric judged the most important based on aggregate score was the maximum angle of attack metric. Specific excess power was judged to be second, and time-to-roll-and-capture was third. Maximum lateral acceleration and nose-down pitch rate were judged to be less important contributors to mission success. This ranking was determined in a manner similar to the previous analysis by combining the weights for each of the tactical maneuvers (their importance to mission success) and ratings of the importance of each agility metric to each of these tactical maneuvers. The resulting scores are an assessment of the importance of each agility metric to overall mission success.

It appears that the single highest contribution to enhancing mission success with agility was the presence of the highest possible maximum angle of attack. This can be traced to the high importance of certain tactical maneuvers (D, K, N, etc.) on the air-combat phase of the mission combined with a high ranking of the importance of angle-of-attack capability on these maneuvers. Notice that the highest level of angle-of-attack agility appears to be twice as effective as the moderate level in performing those tactical maneuvers. This is consistent with the definitions of low, medium, and high angle-of-attack agility, defined as 25, 40, and 70° maximum angle-of-attack capability. A similar sensitivity is also present in the specific-energy metric.

On the other hand, the benefit for increasing roll agility slightly, as measured by the time-to-roll-and-capture, did not appear to be as dramatic. Increasing the agility level from low to intermediate resulted in only a small effectiveness gain, but increasing the agility to the high level of roll agility produced a large effectiveness gain. This seems to suggest that if effort is expended to increase roll agility above the current levels, it should be increased all the way to a "high" level of roll agility to capture significant effectiveness benefits.

6.3 OTHER COSTS/IMPACTS OF AGILITY

The cost to achieve higher levels of agility can be difficult to ascertain. Very little is known about integrating high levels of agility along with reduced signature. All low-signature aircraft built and flown to-date have been optimized for low signature at the expense of performance and/or agility. As the results of this study indicates, a truly agile aircraft will likely have a number of advanced aerodynamic technologies and controls as well as high-rate thrust-vectoring, all of which can make the achievement of low observables levels more difficult.

For comparative purposes, the critical assessment group attempted to assess the relative value of signature reduction and agility enhancement on mission success and survivability. With respect to survivability, it is usually better to avoid an engagement than to win an engagement. Signature reduction minimizes the probability of detection

or tracking by a threat system. Enhanced agility increases survivability primarily by minimizing the probability of a hit, given an engagement. Therefore, for agility to become a significant factor, the signature reduction must have already failed its job. While having both is preferable, of course, if they become mutually exclusive it is felt that signature reduction is more important, due in part to its effectiveness in nearly all mission phases.

One cost of increasing agility, other than the obvious costs in the area of weight (as shown in Section 5), cost, or manufacturing complexity (both time and risk), is the adverse effect of a high level of agility on the aircraft pilot or crew. It is certainly possible to exceed the roll, pitch, and yaw limits of a pilot by integrating highly-effective control mechanisms. The group felt strongly that the high end of the agility spectrum would pose an extremely stressful environment for the crew and that, as a result, overall effectiveness increases might not be realized to the extent predicted. Similar effects have been discussed relative to fixed-based simulation of high-agility maneuvers (Reference 8).

The issue of degraded situational awareness (SA) came up several times throughout the group's discussions and deliberations. There was a definite feeling that SA would likely deteriorate rapidly with high levels of agility, increasing the likelihood of vertigo and disorientation. More study is warranted to guide the determination of the optimum level of agility.

Another important consideration when incorporating high agility levels in an aircraft is the cost or design impact on weapons integration or the weapons themselves. There is little point in spending considerable effort to increase aircraft agility unless the pilot is able to employ at least the primary and preferably all weapons during the resultant high-agility maneuvers. In this study, high levels of agility were judged to provide some positional or time advantage, yet, in many cases, the aircraft would have to return to a more "conventional" flight envelope to employ its missiles. The analysis attempted to reflect these limitations in the ratings and weightings used.

In summary, there are combat-effectiveness benefits to be gained from increasing the level of agility in an aircraft, as shown by a QFD analysis which considered a wide variety of tactical maneuvers and their impact on mission success. The agility metric judged most important in this analysis was the maximum angle-of-attack metric, while the nose-down pitch-rate metric was judged least important. Many issues need further study, including: weapon design and integration issues, pilot situational awareness, air-crew safety and other human factors, as well as the development costs for the technologies required to achieve high levels of agility. In addition, further simulation or operations research is also need to determine whether the five specific metrics chosen for this study are the most appropriate set for the measurement of overall aircraft agility.

6.4 LESSONS LEARNED

A number of lessons were learned during this study regarding the impact of agility on design decisions and the limitations of current data, methods, and control concepts when designing to high levels of agility.

Limitations of Conventional Control Concepts

It became evident early in the study that conventional control concepts (horizontal and vertical tails, V-tails, etc) were not capable of generating the high levels of control power required to meet the high agility-level requirements. These controls had unfavorable characteristics at high angles of attack, ranging from a complete loss of effectiveness (in the case of vertical tail/rudders) to an adverse pitch-up caused by the forebody vortices (in the case of most V-tails). It became necessary to introduce at least some level of thrust vectoring in all of the high-agility aircraft, and advanced aerodynamic control effectors in six of the nine aircraft. The challenge is to know when conventional controls will not be cost-effective (in terms of weight, drag, etc) and what alternative control concepts are available which can replace the conventional controls. This study indicates that moderate-agility aircraft can still be designed with controls that are somewhat conventional (i.e., Concepts 2402, 2405), but that high-agility aircraft will generally require non-conventional approaches.

High-AOA Yaw Control Most Difficult to Achieve

When designing to high levels of lateral agility on vehicles having relatively low roll inertia and high yaw inertia, it is well known that yaw-control requirements will drive the control-sizing at higher angles of attack. This study confirmed this with a number of additions and caveats.

It was found that adverse yaw due to roll effectors at high angles of attack can be very important. Conventional ailerons and elevons can produce as much adverse yaw as proverse roll, significantly increasing the yaw-control requirements. In addition, the control selected to produce yaw must have a low level of adverse roll due to yaw, or the situation simply gets worse. This was one of the major reasons yaw vectoring appeared on six of the nine aircraft, since yaw vectoring produces pure yaw control at all angles of attack.

When advanced controls are used, especially forebody vortex-control effectors, there is much more design freedom in producing high angle-of-attack yaw control. Conventional controls and thrust vectoring can then be designed and sized for the less-demanding conditions, while the advanced control is sized to make up the difference at the most-demanding conditions. This combination is lighter and more efficient than sizing the conventional controls to accomplish everything.

Tailless Concepts Provide Significant Benefits

One of the surprises in this study was the low TOGW of the tailless high-agility Type B aircraft, 2406. As discussion in Section 5, the primary reason was the reduced transonic wave drag due to the removal of the vertical tails. The engine size required to meet the challenging transonic-acceleration metric was smaller, yielding a lighter sized vehicle. This result is consistent with previous studies of tailless aircraft similar to 2406 (Reference 9).

In terms of agility, tailless aircraft have certain characteristics that are advantageous for achieving high levels of lateral/directional agility at high angles of attack. Both roll and yaw damping are reduced, and there is no adverse roll due to yaw control. Advanced pop-up yaw controls can be placed where the tails would normally be, if desired, thereby adding additional design freedom.

Need for Better High-AOA Aerodynamic Data/Methods

One fact became very clear throughout this study: there are no truly conceptual-design methods for estimating important high-angle-of-attack aerodynamic characteristics for non-conventional aerodynamic configurations. If methods are available at all, they are typically very time consuming and complicated, making them unusable in a conceptual-level design process.

The approach of collecting empirical data for many aircraft configurations and comparing the new configuration with those in the database worked well for this study, but the process has a number of limitations. First, there was very limited lateral-directional data in the database due to the nature of the testing (mainly flat-plate models). Second, the types of configuration concepts tested and included in the database effectively limits the types of concepts which can be considered in the design process. For example, the database had no wings with a leading-edge sweep greater than 50°, so it was difficult to analyze aircraft having wing sweeps beyond 50°.

In order to address agility requirements early in the design process, a method is needed for estimating the important parameters at high angles of attack (maximum pitching moment, maximum lift, lateral stability, etc) from very general planform and sheer-view descriptions of the vehicle. In addition, better methods for estimating control powers at high angles of attack are needed, including more data on the interaction effects with the wing, forebody vortices, and other controls. The control-power correlations used in this study (included in Section 3) attempted to account for these interactions by relying on empirical test data for control-on increments and control powers, thereby producing design-space limitations similar to those described earlier.

Need for Integrated Environment for Design/Analysis

Finally, it is clear that a conceptual-design process cannot be efficient unless all of the geometry, weights, performance, aerodynamics, and other tools used in the process are integrated into a single interactive environment. The designer needs to be able to make changes to the vehicle and have immediate feedback in terms of aerodynamic data, sized-vehicle TOGW, or agility level. At the very least, conversion of data to different formats for use by each module in the system must be eliminated.

Transonic Acceleration Sensitivities

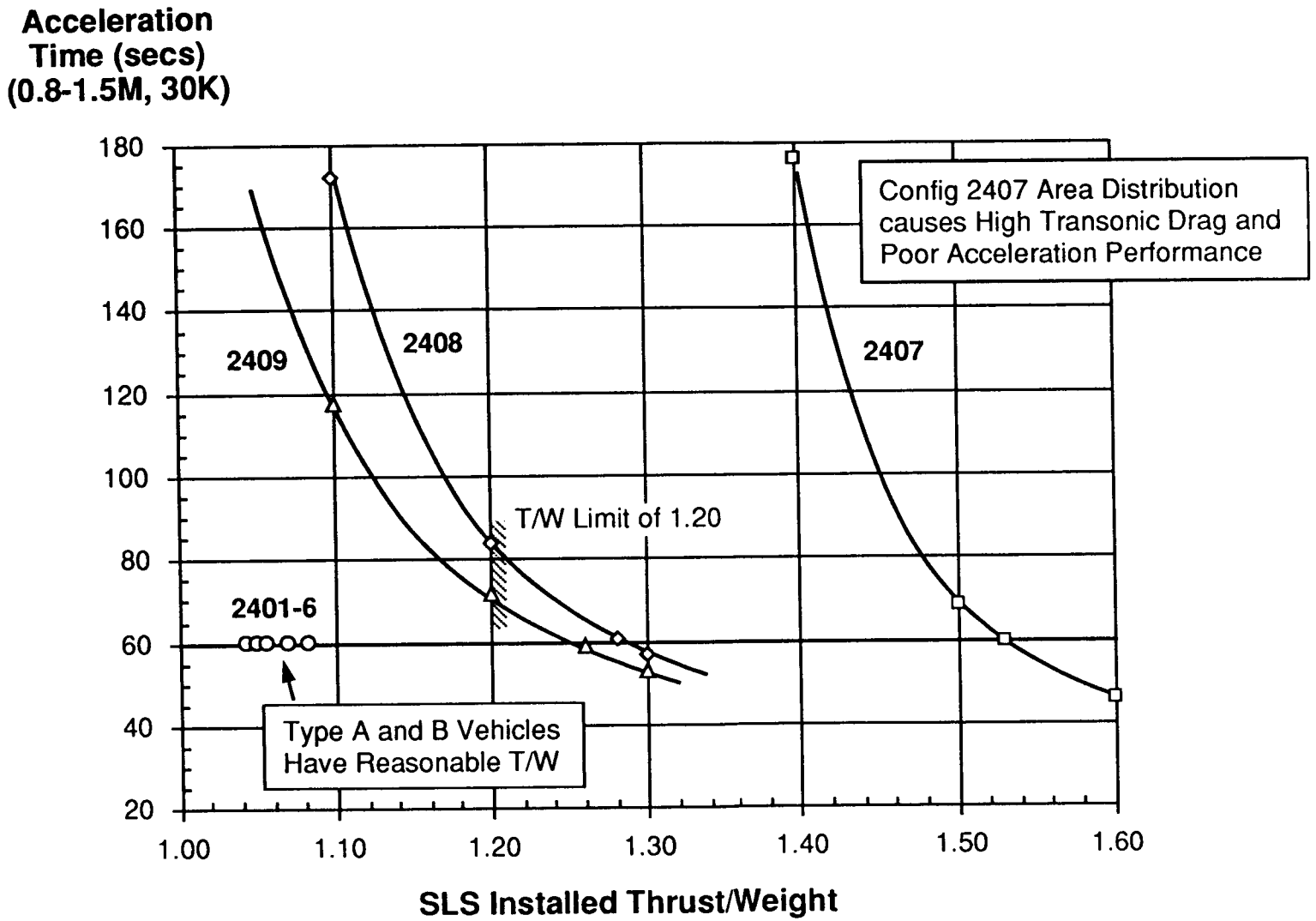

LARC93-240

Figure 6.1.1

Relative Importance of Selected Tactical Maneuvers during Critical Mission Segments

	Mission Segment	Tactical Maneuvers A	B	C	D	E	F	G	H	I	J	K	L	M	N	O	P	Mission Segment Weight*
BAI Mission	Cruise								1									1
	Low Dash								3				1	1				3
	Wpn Dlvry		1	1		1		3									1	9
	Cntr Srf Thrt								3			3						9
DCA Mission	Cruise																	1
	Loiter																	1
	Dash											1						3
	A/A Combat	3	1		9	3				3	3	3			9			9
	Raw Score**	27	18	9	81	36	-	27	37	27	27	57	3	3	81	9		
	Ranking	6			1	5		6	4	6	6	3			1			

Tactical Maneuvers

A - Position Nose to Intimidate
B - Fire Gun from Unusual Attitude
C - Expand Wpns. Del. Envelope
D - Gain Positional Advantage
E - Reduce Time to Employ Wpn.
F - Save Fuel
G - Attack Closely Packed Targets
H - Spike Pointing
I - Bug Out / Disengage
J - Remain Inside Opp. Turn Circle
K - React To Or Defeat Weapon
L - Faster Remask During T. F.
M - T.A. With Less Susceptibility
N - Counter Aircraft Maneuver
O - Provide Post-Delivery Wpn. Support
P - Influence Post-Merge Fight

Notes: * Weightings and ratings are 0-9, with 9 indicating greatest importance
** Raw Scores = Sum (Weight X Relative Importance Ranking)

Figure 6.2.1

LARC-93-165

Importance of Three Levels of Agility in the Effectiveness of Selected Tactical Maneuvers

Nine Selected Tactical Maneuvers

Tactical Maneuver	Specific Energy L	Specific Energy M	Specific Energy H	Time Roll&Capture L	Time Roll&Capture M	Time Roll&Capture H	Nose-Down PRate L	Nose-Down PRate M	Nose-Down PRate H	Max AOA L	Max AOA M	Max AOA H	Max Beta L	Max Beta M	Max Beta H	Tactical Maneuver Weight*
A Position Nose	0	0	0	1	1	3	0	1	1	1	3	9	0	1	3	6.75
D Gain Positional Adv	1	3	9	1	1	3	0	0	0	1	3	3	0	1	1	20.25
E Reduce Wp Emply Time	0	1	1	0	1	3	0	1	1	0	1	3	0	0	1	9.00
G Attack Clsly Pckd Targets	0	0	1	0	1	3	0	0	0	0	3	3	0	1	3	6.75
H Spike Pointing	0	0	0	3	3	3	0	0	0	1	3	3	1	3	9	9.25
I Bug Out / Disengage	1	3	9	0	1	1	0	1	3	0	0	0	0	0	0	6.75
J Remain Ins Opp Turn Circ	0	1	3	0	0	0	0	0	0	1	3	9	0	0	1	6.75
K React or Defeat Weapon	0	1	3	1	3	9	0	0	0	1	3	9	0	0	0	14.25
N Counter A/C Maneuver	1	3	9	1	1	3	0	1	1	1	3	9	0	0	1	20.25
Raw Score	47	172	504	89	140	352	0	43	56	78	262	568	9	62	180	
Ranking	12	6	2	8	7	3	15	13	11	9	4	1	14	10	5	

Note: * Weight is normalized score from previous table

LARC-93-166

Figure 6.2.2

7.0 TECHNOLOGY DEVELOPMENT AND VALIDATION

The application of emerging technologies in the conceptual design tasks of this program has highlighted their potential for dramatic payoff for the next generation of advanced weapons systems. However, as long as affordability remains a key design constraint, the technology maturation process that aims at relevant, useful systems must necessarily focus on risk and cost reduction. Using the conclusions of the previous sections, the following discussion identifies certain key technologies that, if brought to maturity, could significantly enhance aircraft agility for highly survivable aircraft. Key elements of appropriate developmental plans are also noted.

7.1 HIGH RATE PITCH/YAW VECTORING

As summarized in Section 6.0, to reach the aggressive agility levels prescribed by this effort, it is essential that high rate, multi-plane thrust vectoring capabilities be included in the primary flight control system. However, the integration of such nozzle systems must be accomplished without compromising overall system performance, weight, and IR/RCS signatures if its full potential to LO aircraft is to be realized. To add to the challenge, affordability issues impose additional requirements that are difficult to meet with conventional vectoring nozzle approaches.

Technologies that are consistent with the above requirements include fixed aperture nozzles, simple throat control mechanisms, and fluidic vectoring schemes. The PIANO program (Refererence 10) has conducted an assessment of the existing nozzle aerodynamic database and has identified significant deficiencies which must be addressed before these technologies can be exploited. These deficiencies can be grouped as follows:

1. Nozzle performance, thrust efficiency, thrust vectoring capability, and drag.
2. Nozzle induced effects upon aircraft lift, drag, and moments.
3. Influence of LO planform characteristics on vectoring nozzle design and performance requirements.

To address these deficiencies, it has been recommended (Reference 10) that extensive wind tunnel testing be conducted on advanced nozzle concepts installed on highly parametric jet-effects models of relevant LO aircraft. This testing should be comprehensive, including the entire Mach range, and should include parametrics of nozzle and airframe design features. Reference 10 outlines the specific testing elements as part of a technology development plan for integrating advanced vectoring nozzles into LO fighter aircraft.

Over the long term, propulsion system affordability can be most easily ensured if developments are based on existing or developing engines such as the Pratt and Whitney F119 (F-22), the PW7000 (potential for A/F-X), or the General Electric F414 (F/A-18 E/F). The Air Force IHPTET IV program (Reference 11) continues the development of fixed aperture exhaust system technologies that are compatible with these engines, and their potential derivatives.

7.2 ADVANCED AERODYNAMIC CONTROLS

The conceptual design activities of this present effort have clearly established the need for control power generation beyond that which could be expected from conventional control concepts. For example, aggressive signature goals characteristically result in directionally unstable designs which rely on thrust vectoring for primary control along with control augmentation from non-traditional aerodynamic devices. The control devices which hold the most promise include high angle-of-attack vortex-control devices (e.g., forebody pneumatics, conformal pop-up devices) and devices which operate in and on the boundary layer (e.g., passive porosity, separation control concepts).

Questions remain regarding the expected full-scale flight-control effectiveness of many of the advanced control concepts, especially those which may be susceptible to Reynolds number or scale effects. For many of the non-traditional approaches to control which operate on the boundary layer or vortex flowfield, further wind tunnel testing is necessary to validate the conclusions derived thus far from data acquired at relatively low-speed, with small-scale models.

The flight demonstration of a fully integrated aero/propulsion flight control system for agile LO fighters is still far from being realized. Much work has been accomplished at the technology component level to develop comprehensive databases defining the individual contributions of certain control effectors. However, this data must be applied with caution since the resulting aerodynamic effects are often highly sensitive to the specific design application. To advance the knowledge base in this area the system-level aspects, regarding advanced aerodynamic and propulsion controls integration, need to be investigated more fully. Before "LO agility" can be realized in routine design practice the following issues need to be addressed:

1. The development of approaches to achieving flight control that optimize the contributions of advanced aerodynamic and propulsion controls to provide all-envelope capabilities while satisfying standard flying qualities criteria (Failure modes must be evaluated in the context of flight critical hardware such as vectoring nozzles),

2. Advanced aerodynamic controls operating in <u>dynamic</u> flowfield environments (e.g., It is not obvious that the vehicle motion that is produced by a forebody vortex control device can be halted on command by that same or a companion device),

3. Subsystem integration issues (e.g., The field-of-view impacts of advanced aerodynamic control concepts on performance of avionics sensor systems).

7.3 STRUCTURES AND MATERIALS TECHNOLOGIES

The following are emerging technologies that were identified earlier as "high payoff" but which would require focused efforts toward risk reduction to be production ready and economical by the 2010 timeframe:

Advanced Aluminum-Lithium Alloys - Lithium-Aluminum alloys are relatively new to the aerospace industry. Their low density and high stiffness characteristics make them attractive for advanced weapon systems. These alloys are just now finding their way into products, so the manufacturing experience base is small. However, the increasing interest in exploiting their capabilities should expand their usage in aerospace, transportation, and automotive industries, thereby reducing costs.

Advanced Titanium Alloys / Powder Metallurgy Technologies - Like Lithium-Aluminum, powder metallurgy products will continue to be improved and find more frequent application, resulting in reduced technical risk and cost.

Carbon/Graphite Based Composites - Carbon composites are continually being used in new applications, such as in the repair and reinforcement of old bridges and other structures. However, most carbon composites are still very expensive, at $30 to $40 a pound. This is due primarily to the high cost of the carbon fibers. Currently, there are only a handful of carbon fiber producers worldwide, and only a single domestic producer. Weight considerations will continue to create a strong incentive for the aircraft designers to incorporate less metal and more composites, particularly carbon reinforced materials. Since affordability will be a primary concern in future systems, the costs of carbon-based composites and their associated manufacturing processes must be reduced to achieve maximum design benefit from these materials.

Advanced Thermosetting Resins - As regulatory pressure from the EPA and OSHA continue to mount, the use of highly toxic (albeit high performance) resins will be increasingly cost-prohibitive. All high-performance resins will require special handling protocols, causing significant investments to be made in special equipment, such as personal protection gear and filtering systems. These costs might be reduced if the regulatory agencies replaced their current regulations with broader, more realistic industrial policies. At the same time, material suppliers need to develop less toxic formulations of their products, while industry is seeks out less toxic alternatives in their fabrication processes.

Thermoplastic Materials - Thermoplastic polymers have found applications in almost every industry, and they are almost completely non-toxic. However, they have not significantly penetrated the aerospace sector because of several key problems. First, they do not offer the temperature service range that their thermosetting counterparts provide. Second, high performance thermoplastics, such as Polyetheretherketone, or PEEK, are very expensive (upwards of $70 a pound). Third, the material/chemical industry has little interest in developing improved versions of existing products due to the shrinking demand in the defense industry. Therefore, if thermoplastic materials are to find routine

application in the aerospace industry, innovative design strategies must be found to increase their utilization while reducing costs.

Advanced Manufacturing Techniques - Resin Transfer Molding - The relatively high cost of hand lay-up procedures has encouraged the development of lower cost processes for producing high performance composite parts. Resin Transfer Molding (RTM) has the potential for lowering the per-unit costs of parts. To accomplish this, the RTM process needs to be scaled-up, and new tooling concepts developed, if moderate-to-high-volume production is to be realized. In addition, current quality assurance techniques need to be matured to allow full implementation.

Advanced Structural Techniques - Co-Curing - As co-curing becomes more common, the experience base and tooling expertise will grow, resulting in more efficient and cost-effective schemes.

8.0 CONCLUSIONS

The Agility Design Study used a systematic configuration design process to quantify the impact of agility-based design requirements on the decisions made during the initial stages of aircraft synthesis. Current-day technologies, as well as those emerging, were assessed in terms of their potential for contributing to design solutions that meet moderate to highly aggressive agility and observability goals. The more promising of these technologies were incorporated into vehicle definitions that covered a wide design space represented by varying degrees of agility and observability. By sizing the aircraft to meet representative multi-role mission and performance requirements, the impact of the specific design-for-agility decisions on system-level characteristics could be determined.

The following are observations and conclusions that would relate to any design task the seeks to address agility requirements early in conceptual design:

- Achieving high agility levels requires significant additional control power (especially at high angle of attack). This is beyond what can be typically achieved with conventional aerodynamic control effectors (e.g., ailerons, vertical tails, etc.)

- The basic aircraft planform must be consistent with the desired agility characteristics (i.e., good-forebody-wing aerodynamic balance). This also implies that attempting to enhance agility on an existing system may have to contend with an inherently unsuitable planform.

- Aggressive agility and signature requirements are not mutually exclusive, but require advanced controls technologies. The technologies that were identified as high payoff included high-rate, multiplane vectoring and advanced vortex (or boundary-layer) control devices.

- Incorporating advanced technologies to achieve aggressive agility requirements will have weight and cost implications unless the configuration is optimized around the aircraft control options. An important corollary to this is that retrofitting existing aircraft systems with advanced control technologies will not obtain the weight and performance benefits that may be obtained by optimal integration of the technologies on new systems.

Finally, a few comments are in order with respect to the analytical capabilities available for estimating agility characteristics of concepts in the initial design stages. For the angle of attack range where nonlinear aerodynamics dominate, there are currently no computational tools or procedures that can be used routinely with confidence. In the present study, the confidence in the aircraft stability and control estimates derives from the availability of a relevant high angle-of-attack aerodynamics database to serve as benchmark data. However, other conceptual design tasks beyond this program may involve geometries and issues outside the design space that is addressed by the available empirical data. In many cases, it is not feasible to generate the necessary test data, and unrealistic to extrapolate from existing data trends. Consequently, it is often necessary to rely on available analytical techniques that have questionable application

to high angle of attack aerodynamics. Therefore, if agility requirements are to impact the initial stages of concept synthesis, it is essential that nonlinear aerodynamic analysis capabilities be improved.

9.0 REFERENCES

1. Nguyen, L.T. and Foster, J.V., "Development of a Preliminary High-Angle-of-Attack Nose-Down Pitch Control Requirement for High-Performance Aircraft", NASA TM 101684, February 1990.

2. Brulle, R.V., Moran, W.A., and Marsh, R.G., Direct Side Force Control Criteria for Dive Bombing", AFFDL-TR-76-78, Volume I, September 1976.

3. VLF Battlefield Fighter Development Plan, MDC A4536, November 1976.

4. Thomas, R.W., "Analysis of Aircraft Stability and Design Methods, AFWAL-TR-84-3038, May 1984.

5. Ellison, D.E., and Malthan, L.V., "USAF Stability and Control Datcom", Revised July 1963.

6. Williams, J.E. and Vukelich, S.R., "The USAF Stability and Control Digital Datcom", AFFDL-TR-79-3032, April 1979.

7. "Aero Configuration / Weapons Fighter Technology", Wright Laboratory Contract F33615-89-R-3004, July 1989.

8. Wilson, D.J., Riley, D.R., and Citurs, K.D., "Aircraft Maneuvers for the Evaluation of Flying Qualities and Agility", Volume 1: Maneuver Development Process and Initial Maneuver Set, WL-TR-93-3081, August 1993.

9. Mace, J. and Nyberg, G., "Fighter Airframe/Propulsion Integration - A McDonnell Aircraft Perspective", AIAA-92-3333, July 1992.

10. McDonnell Douglas Corporation: "Propulsion Integration for Aerocontrol Nozzles," WL-TR-91-3009, 1991.

11. Wright Laboratory/POMX: FY 1993 Aero Propulsion and Power Directorate Technology Investment Plans and Roadmaps, APS-93-1-1, July 1992.

APPENDIX

Conceptual Design Drawings

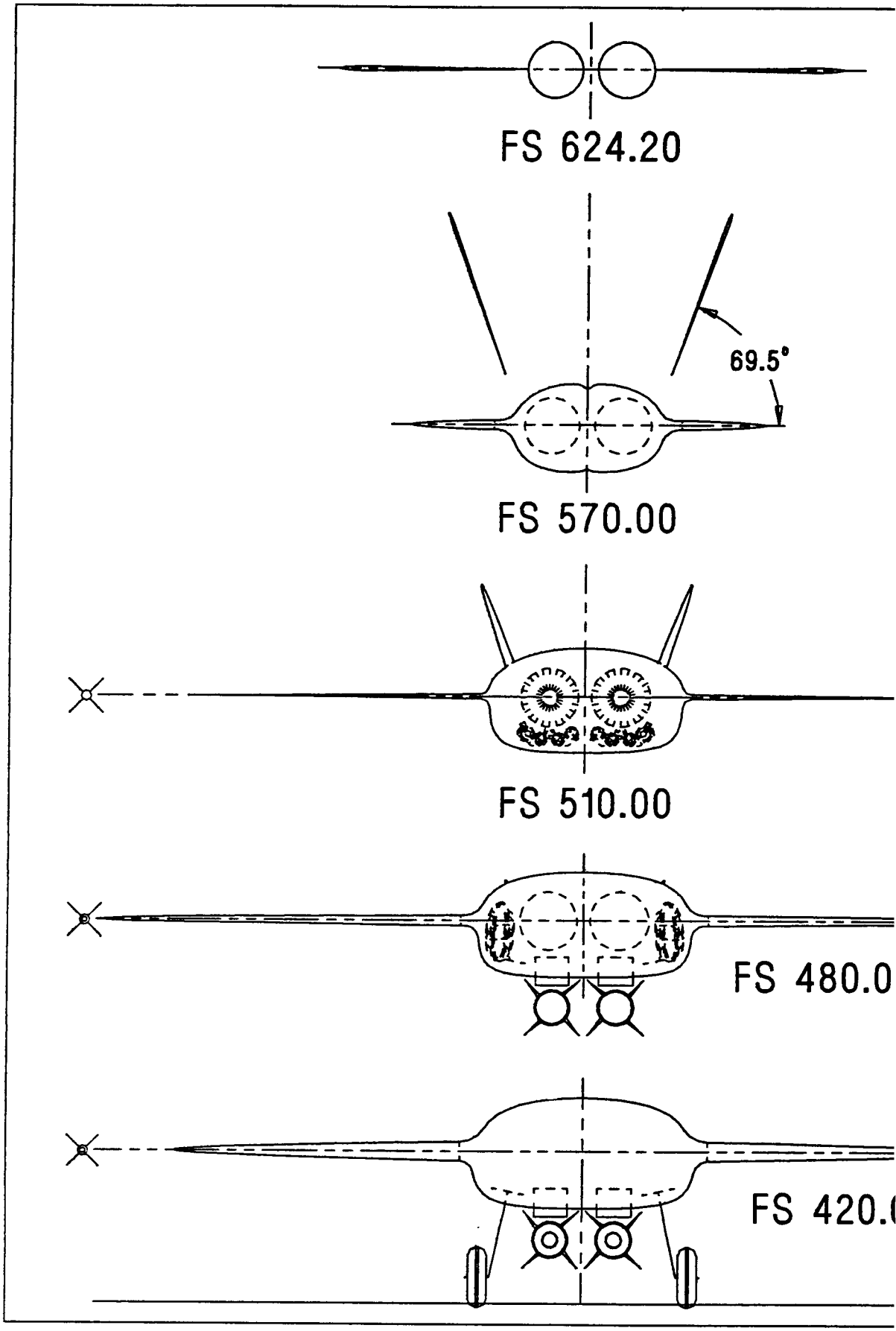
FS 624.20
69.5°
FS 570.00
FS 510.00
FS 480.0
FS 420.

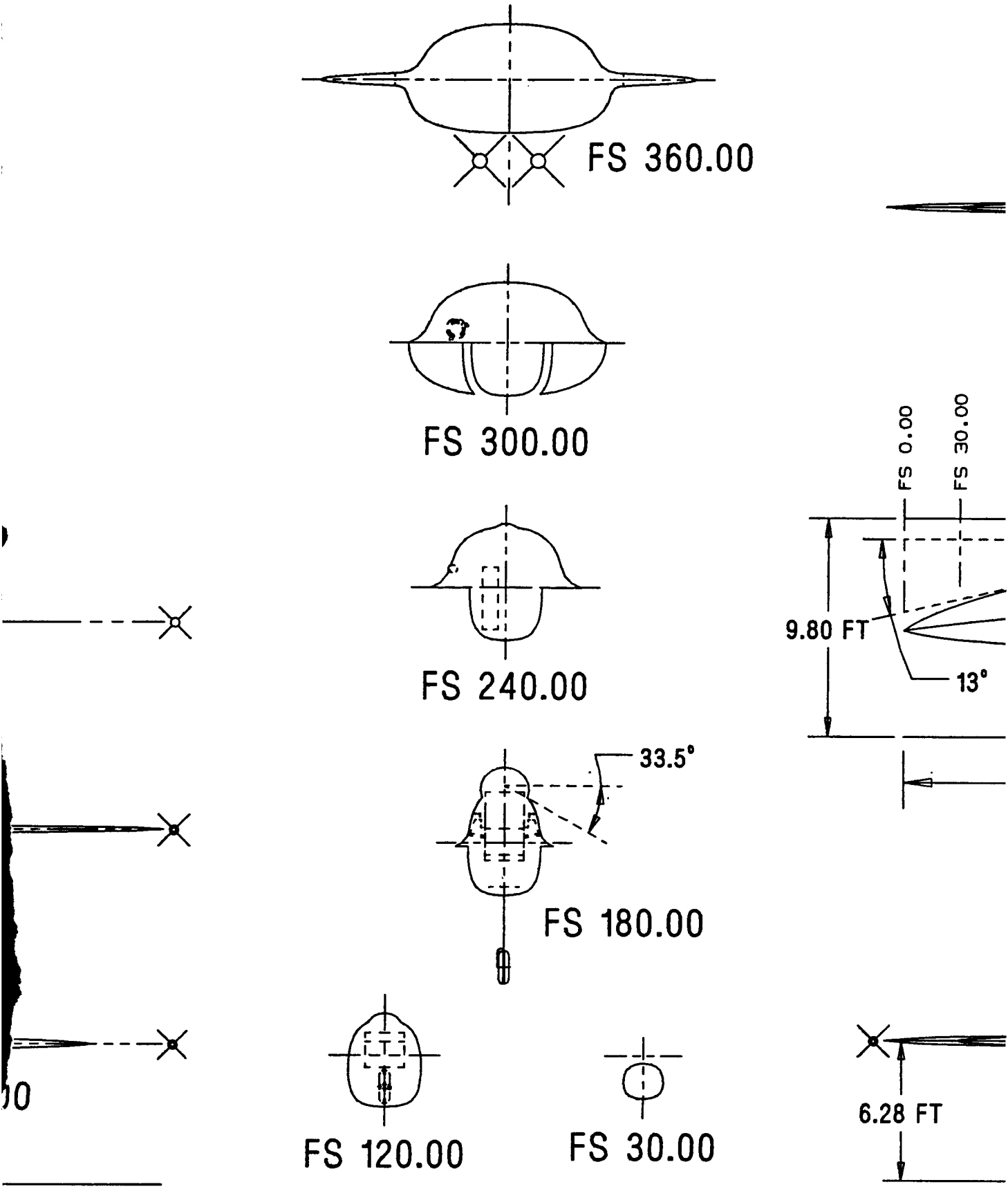
FS 360.00
FS 300.00
FS 240.00
FS 180.00
FS 120.00
FS 30.00
FS 0.00
FS 30.00
9.80 FT
13°
33.5°
6.28 FT

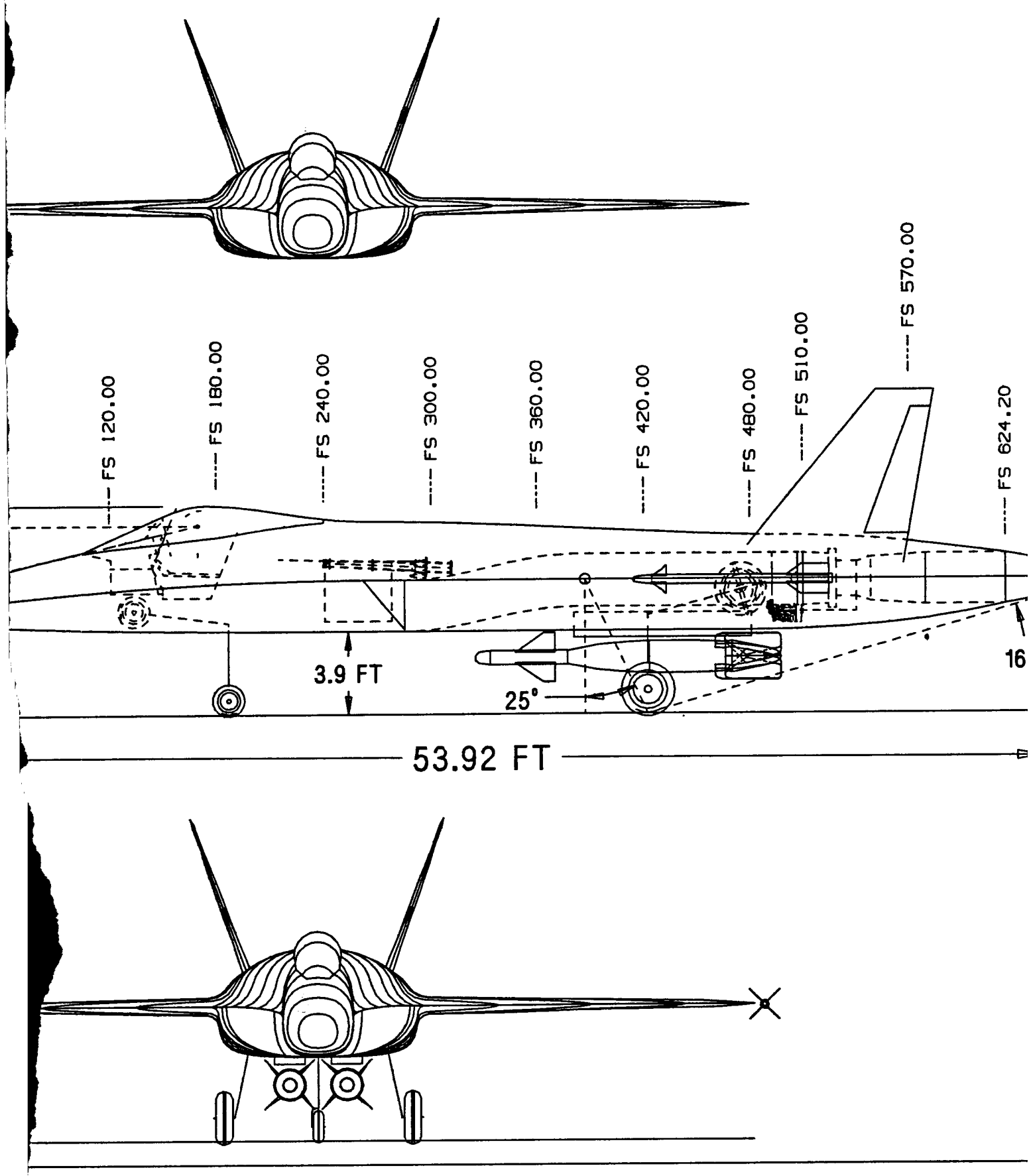
FS 120.00
FS 180.00
FS 240.00
FS 300.00
FS 360.00
FS 420.00
FS 480.00
FS 510.00
FS 570.00
FS 624.20
3.9 FT
25°
16
53.92 FT

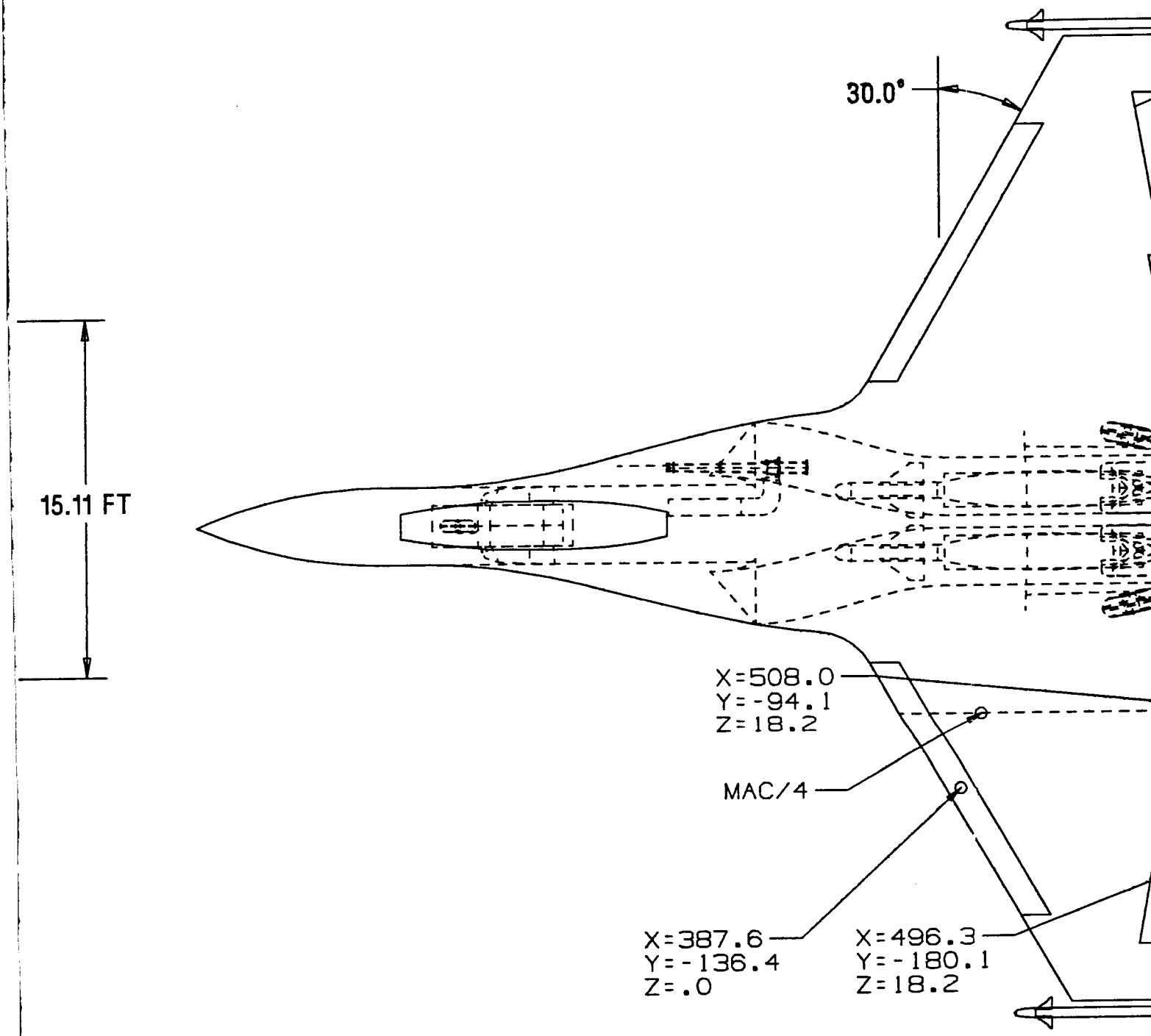
30.0°
15.11 FT
X=508.0
Y=-94.1
Z=18.2
MAC/4
X=387.6
Y=-136.4
Z=.0
X=496.3
Y=-180.1
Z=18.2

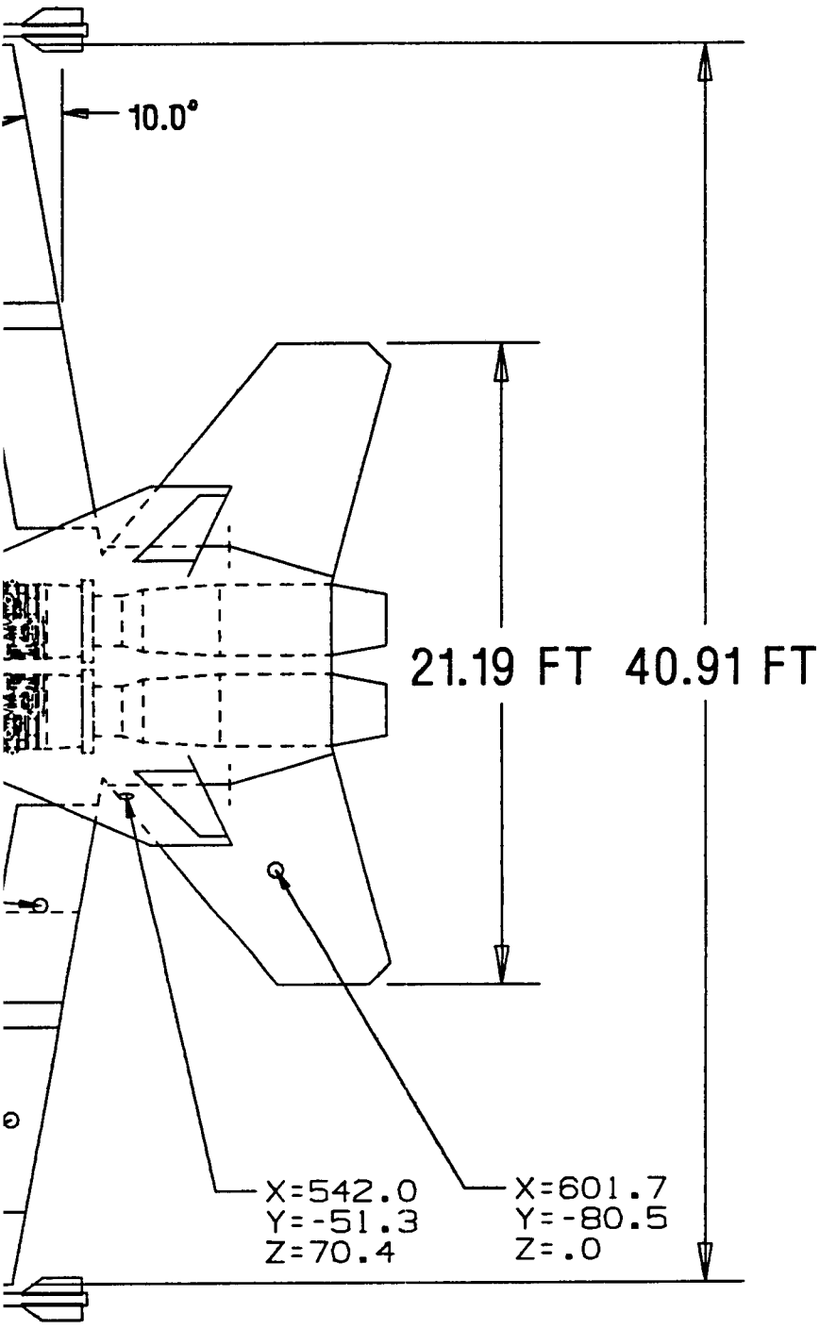

CHARACTERISTICS	WING	"VEE"-TAIL EACH TRUE	VERT. TAIL EACH TRUE	HORZ. TAIL EACH TRUE	CANARD EACH TRUE	THRUST-BLOWN ELEVON EACH TRUE
S (FT2) THEO	500.0	-	52.7	47.1	-	-
S (FT2) EXPO	335.7	-	42.9	40.9	-	-
ASPECT RATIO	3.247	-	3.346	2.69	-	-
TAPER RATIO	0.228	-	0.315	0.472	-	-
REF. SPAN (FT)	40.91	-	18.78	15.37	-	-
1/2 REF. SPAN (IN)	245.46	-	112.69	92.28	-	-
ROOT CHORD (IN)	239.16	-	102.49	99.79	-	-
TIP CHORD (IN)	54.18	-	32.31	47.09	-	-
MAC (IN)	168.12	-	73.49	78.59	-	-
YBAR (IN)	98.02	-	48.22	75.50	-	-
L.E. OF MAC (IN)	357.32	-	469.69	599.29	-	-
F.S. 1/4 MAC (IN)	399.85	-	518.08	578.44	-	-
S.L./W.L. MAC (IN)	88.62/18.20	-	48.32/91.68	75.59/18.20	-	-
SWEEP OF L.E.	30.0°	-	38.2°	40.0°	-	-
SWEEP OF T.E.	-10.0°	-	9.4°	15.0°	-	-
AIRFOIL CR	64A	-	64A	64A	-	-
AIRFOIL CT	64A	-	64A	64A	-	-
T/C ROOT	5%	-	5%	5%	-	-
T/C TIP	5%	-	5%	5%	-	-
INCIDENCE	-	-	-	-	-	-
DIHEDRAL	-	-	69.5°	-	-	-
TOE	-	-	-	-	-	-
TWIST	-	-	-	-	-	-
CAMBER	-	-	-	-	-	-
STATIC MARGIN (%)	-	-	-	-	-	-

PROPULSION		
ENGINE NAME	GENS-20000	
SCALE FACTOR	-	
NUMBER OF ENGINES	2	
ENGINE WEIGHT (EA)	1482	lbs
CAP. AREA TOTAL	8.89	FT²
B.L.D. AREA TOTAL	4.0	FT²
FNBLBU (EA)	18250	lbs
FNBLSI (EA)	-	lbs
NOZZLE AREA TOTAL	4.5	FT²
ASPECT RATIO	-	
INCIDENCE	-	degrees
TILT	-	degrees
ROLL	-	degrees
TOE	-	degrees
TVC PITCH (+)	-	degrees
TVC PITCH (-)	-	degrees
TVC YAW (+/-)	-	degrees

CONTROLS	AREA (TOTAL) TRUE (FT²)	DEFLECTION +	DEFLECTION -	TRUNNION LOCATION
AILERON	28.0	-	-	-
ELEVON	35.0	-	-	-
L.E. FLAP	27.1	-	-	-
T.E. FLAP	-	-	-	-
VERT. TAIL RUDDER	18.8	-	-	-
HORIZ. TAIL	81.9	-	-	-
VEE-TAIL	-	-	-	-
THRUST-BLOWN ELEVON	-	-	-	-
-	-	-	-	-
-	-	-	-	-
-	-	-	-	-

WETTED AREA		
FUSELAGE	914.2	FT²
INLET	-	FT²
CANOPY	33.3	FT²
CANARD (HORZ)	-	FT²
CANARD (VERT)	-	FT²
WING	832.9	FT²
HORIZ. TAIL	159.2	FT²
VERT. TAIL	169.8	FT²
VEE-TAIL	-	FT²
EXPOSED ENG.	22.8	FT²
TOTAL	1931.2	FT²

AIRCRAFT VOLUME CHARACTERISTICS		
FUSELAGE	852.1	FT³
CAPTURE	323.0	FT³
WING	116.9	FT³
CANARD	-	FT³
VEE-TAIL	-	FT³
HORIZ. TAIL	15.9	FT³
VERT. TAIL	14.3	FT³
EXPOSED ENGINE	-	FT³
TOTAL A/C VOLUME	1322.2	FT³
MAX CROSS-SECTION	51.8	FT²
MAX FUSELAGE CROSS-SECTION	38.1	FT²
L/D	8.84	

AIRCRAFT CHARACTERISTIC ESTIMATES (USED FOR AIRCRAFT SIZING)	
T.O.G.W.	38000 lbs EST.
FUEL WEIGHT	20% T.O.G.W.

LANDING GEAR	NOSE GEAR	MAIN GEAR
TIRE SIZE	18.00X5.50	30.00X7.70
STROKE	10.0	10.0
PRESSURE	275 PSI	225 PSI

ARMAMENT
(2) GBU-24 LBS (EXTERNAL) OR (2) AIM-120 MISSILES (EXTERNAL)
(2) AIM-9 MISSILES (EXTERNAL)
20 MM GUN / 500 ROUNDS AMMO.
(2) HARD POINTS (HYDRAULIC RACKS)

296-2401 SH 1 OF 2

DSGN JOE BURNES 07-10-88	NASA - AGILITY TYPE A OBSERVABLES LOW AGILITY
	SIZE Z — 296-2401
	SCALE NOTED WT — SHEET 1 OF 2

296-2401 SURFACE A

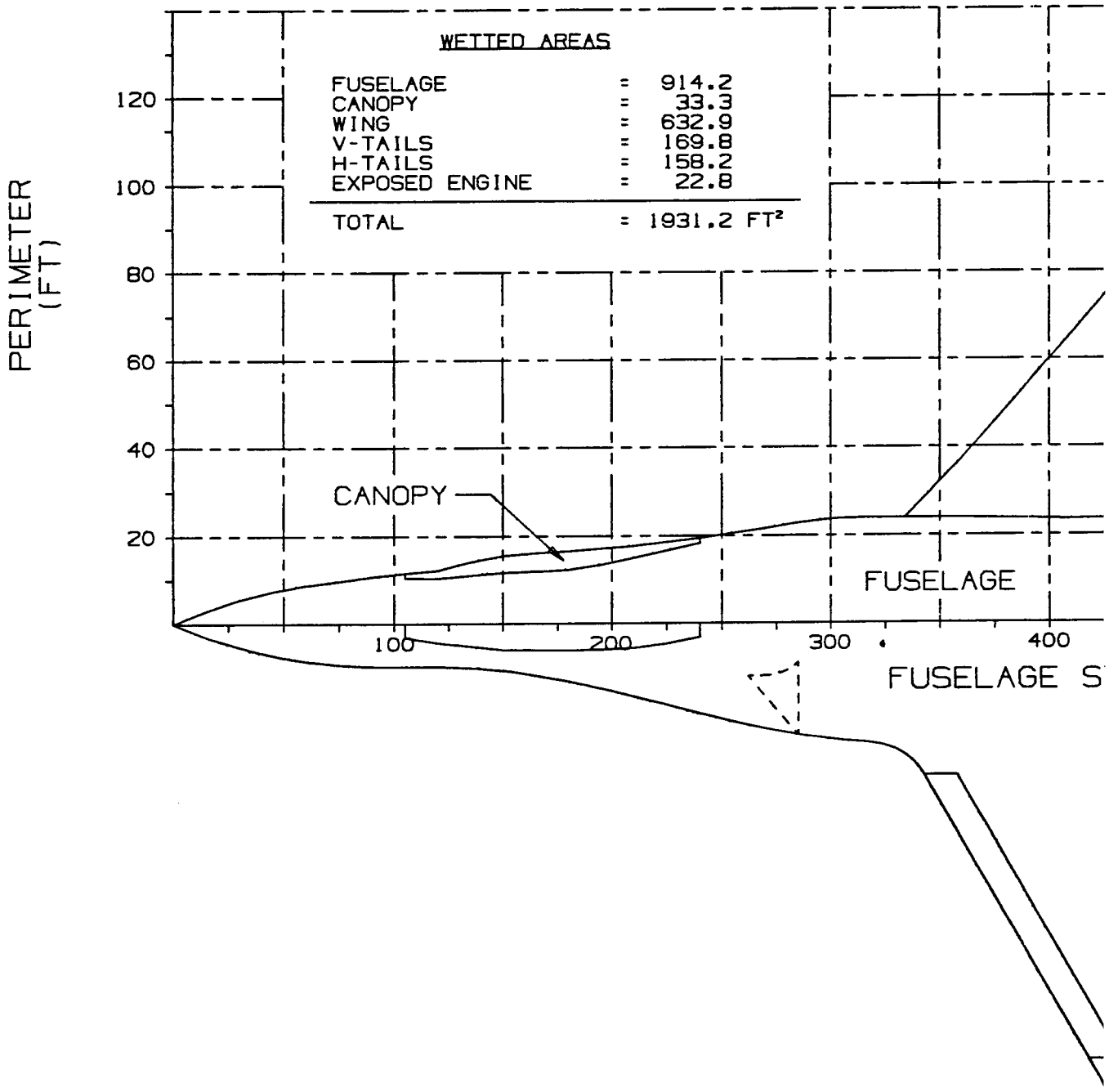

REA PLOT

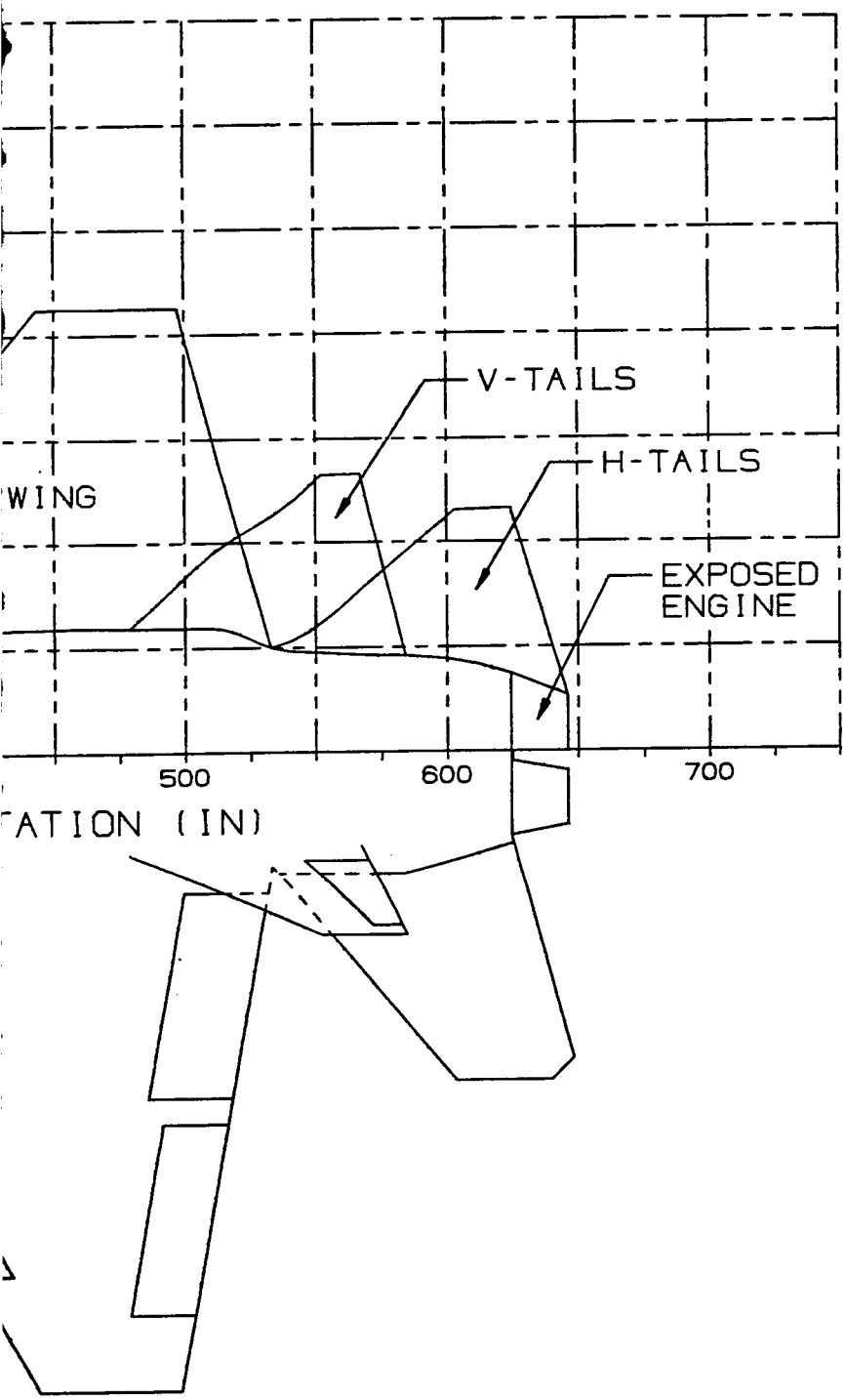
V-TAILS
H-TAILS
WING
EXPOSED
ENGINE
500
600
700
ATION (IN)

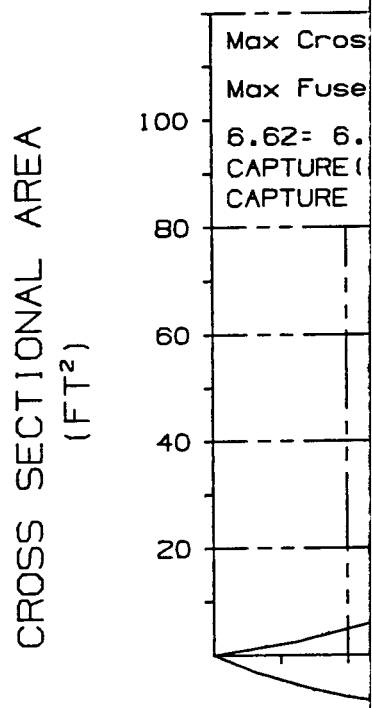
CROSS SECTIONAL AREA
(FT²)
100
80
60
40
20
Max Cros
Max Fuse
6.62= 6.
CAPTURE (
CAPTURE

296-2401 CROSS SECTIONAL AREA PLO

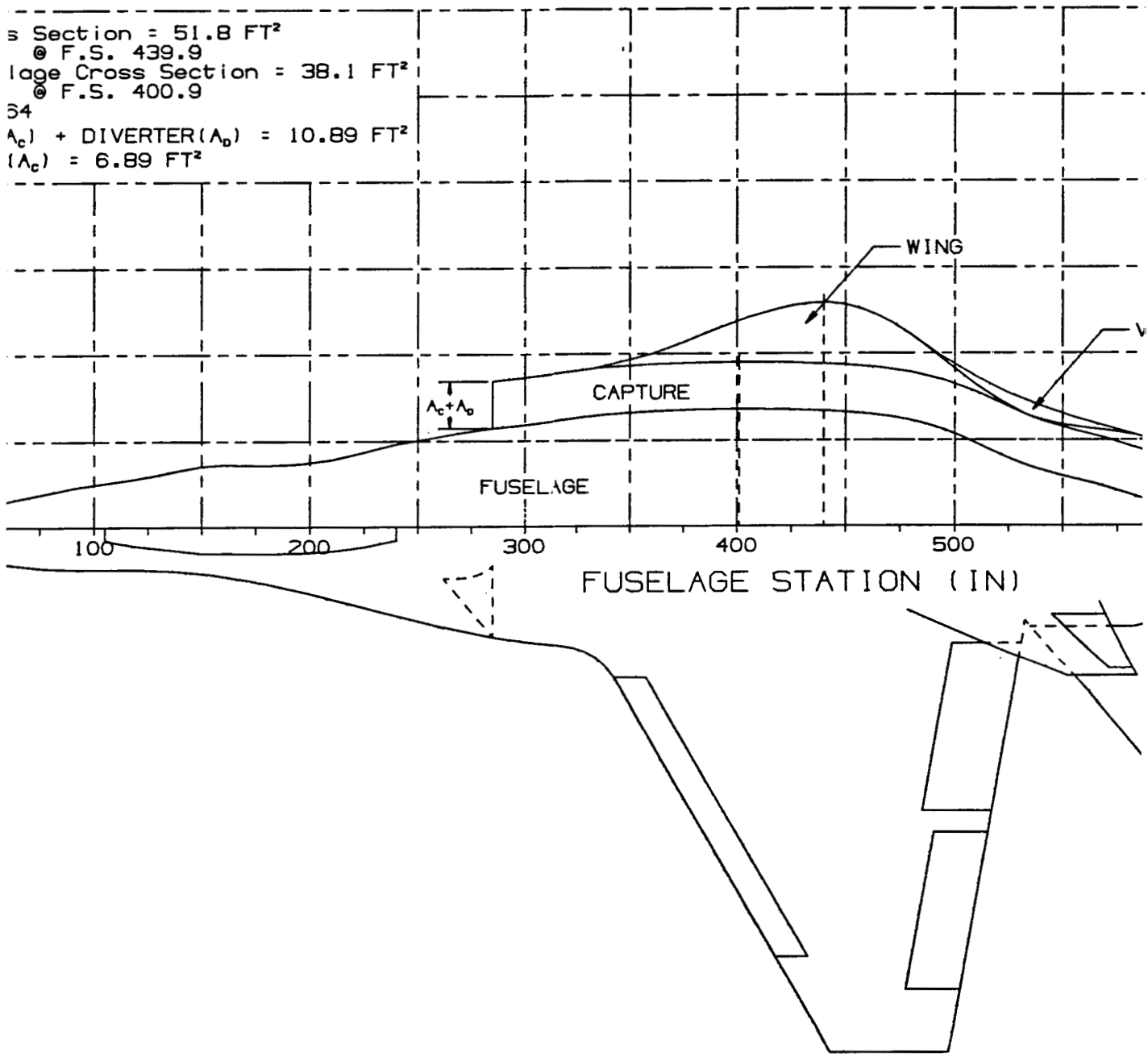

T

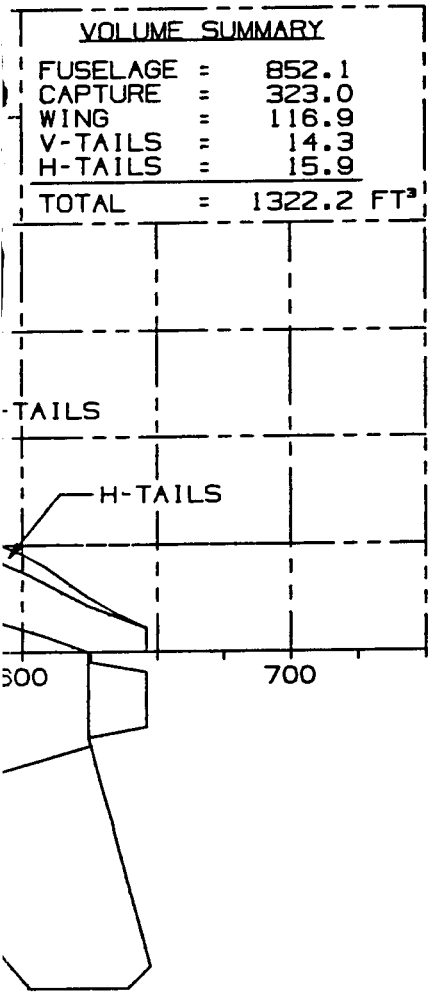
VOLUME SUMMARY
FUSELAGE = 852.1
CAPTURE = 323.0
WING = 116.9
V-TAILS = 14.3
H-TAILS = 15.9
TOTAL = 1322.2 FT³
-TAILS
H-TAILS
300
700

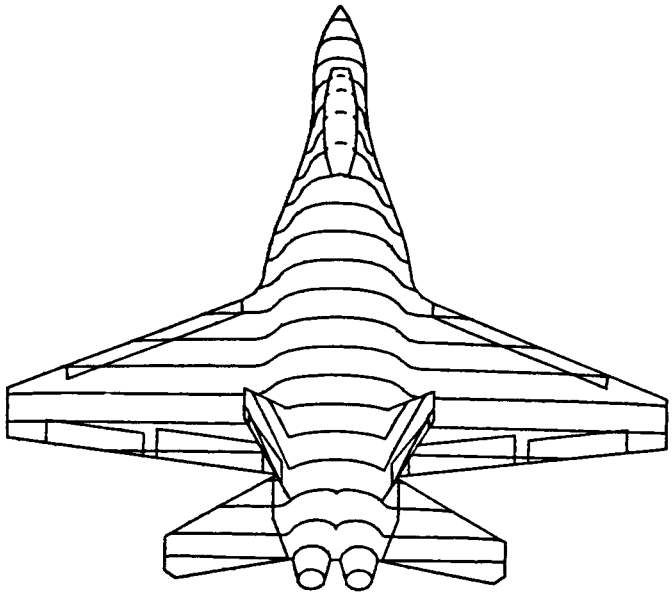

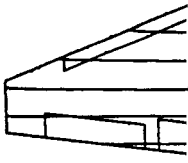

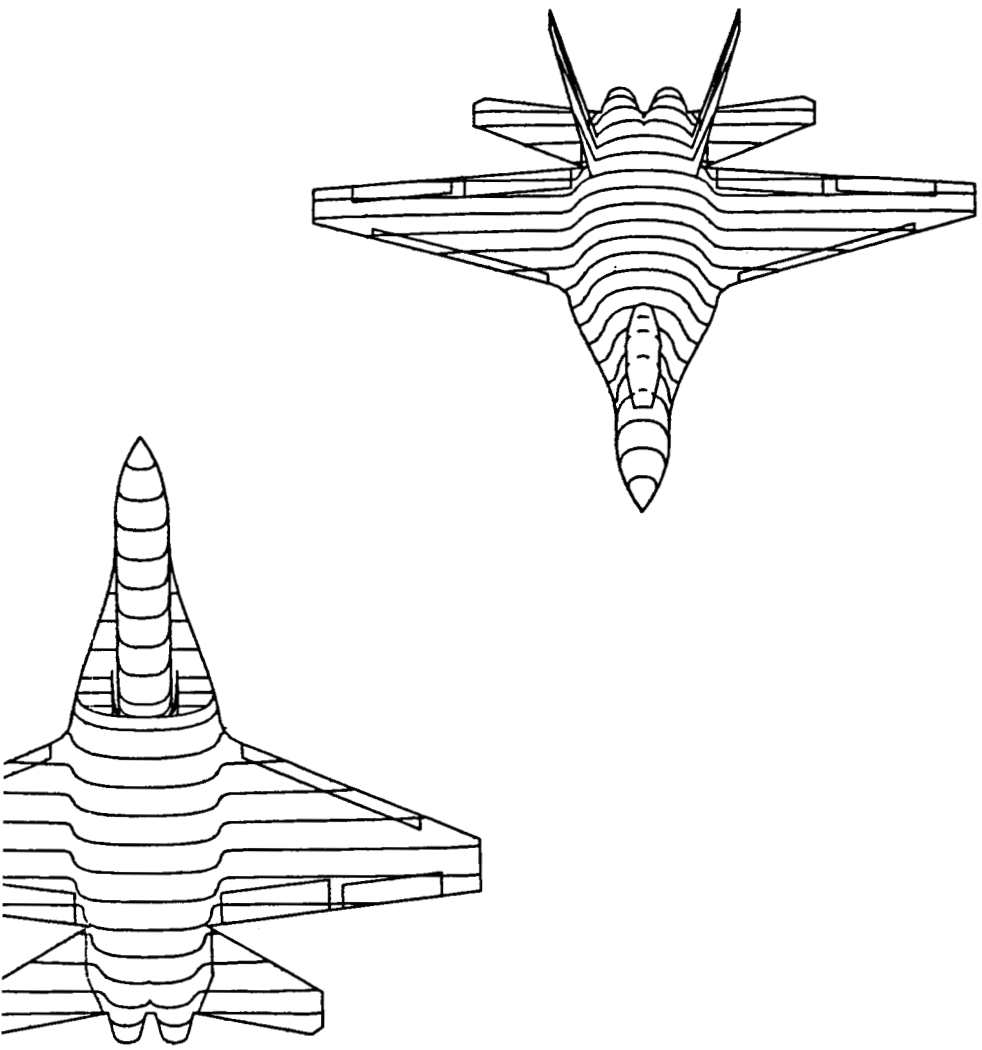

DSGN JOE BURNES	NASA - AGILITY TYPE A OBSERVABLES LOW AGILITY
	SIZE Z — 296-2401
	SCALE NOTED — WT — SHEET 2 OF 2

296-2401 SH 2 OF 2

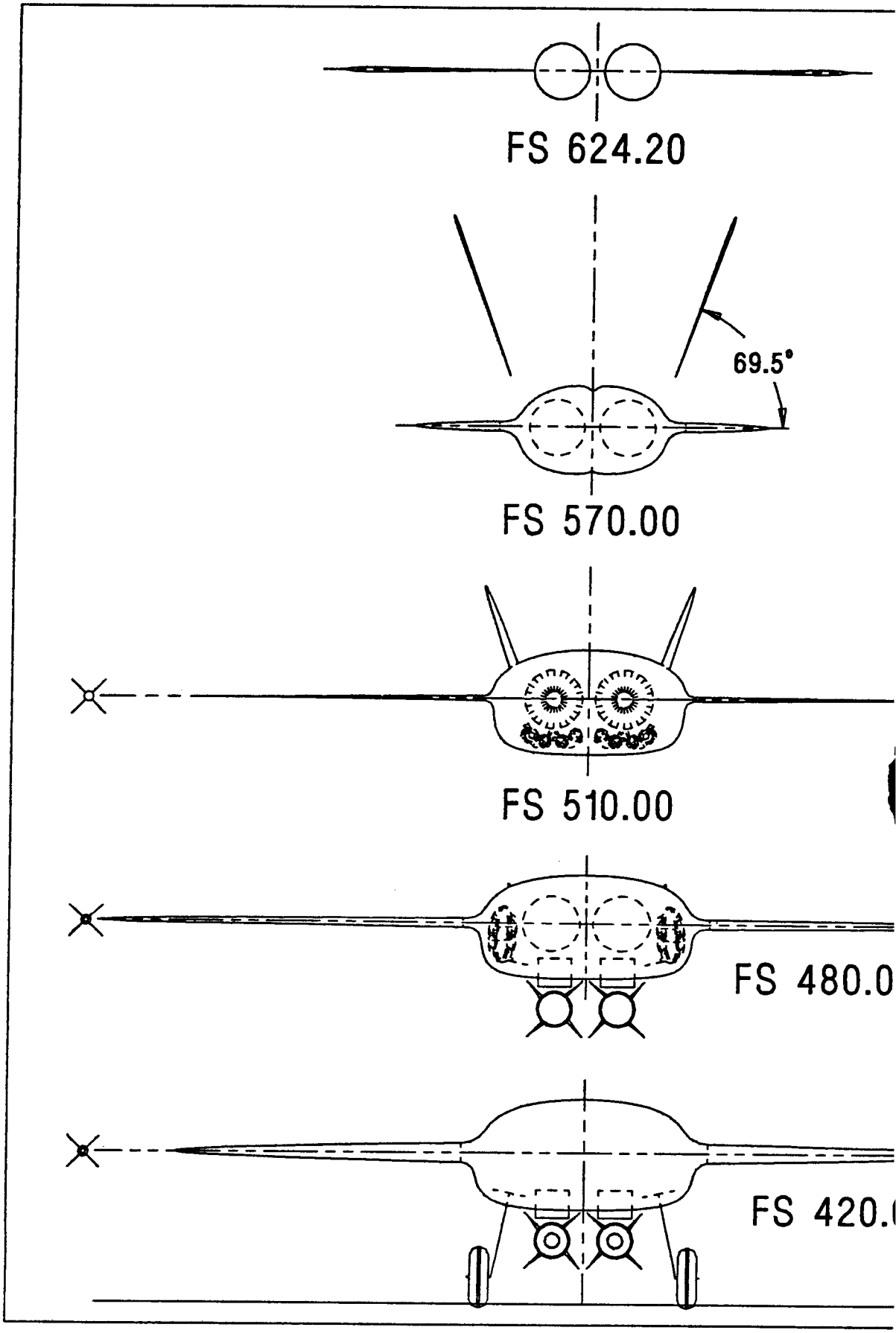
FS 624.20
69.5°
FS 570.00
FS 510.00
FS 480.0
FS 420.

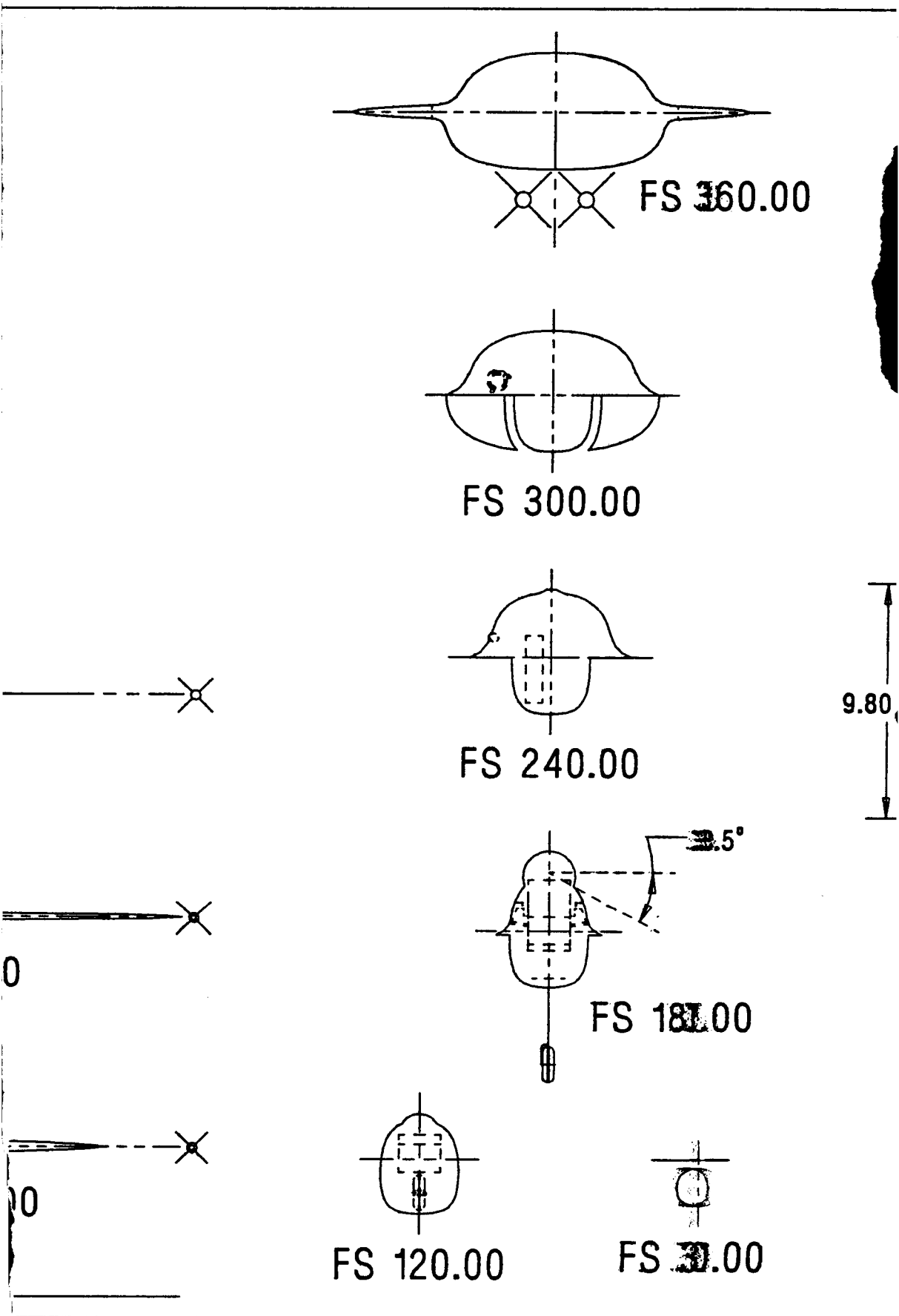
FS 360.00
FS 300.00
FS 240.00
9.80
FS 180.00
FS 120.00
FS 30.00

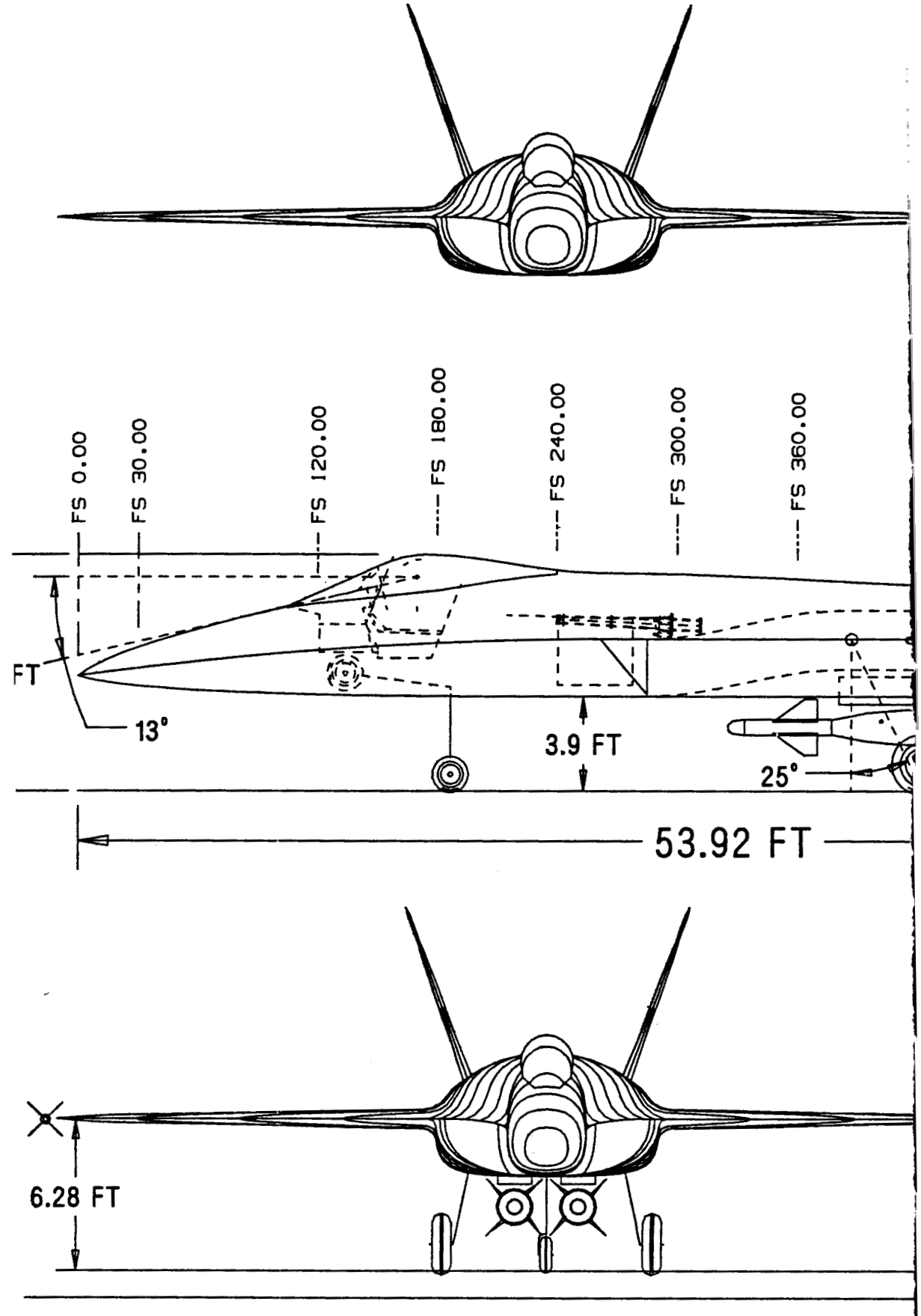
FS 0.00
FS 30.00
FS 120.00
FS 180.00
FS 240.00
FS 300.00
FS 360.00
FT
13°
3.9 FT
25°
53.92 FT
6.28 FT

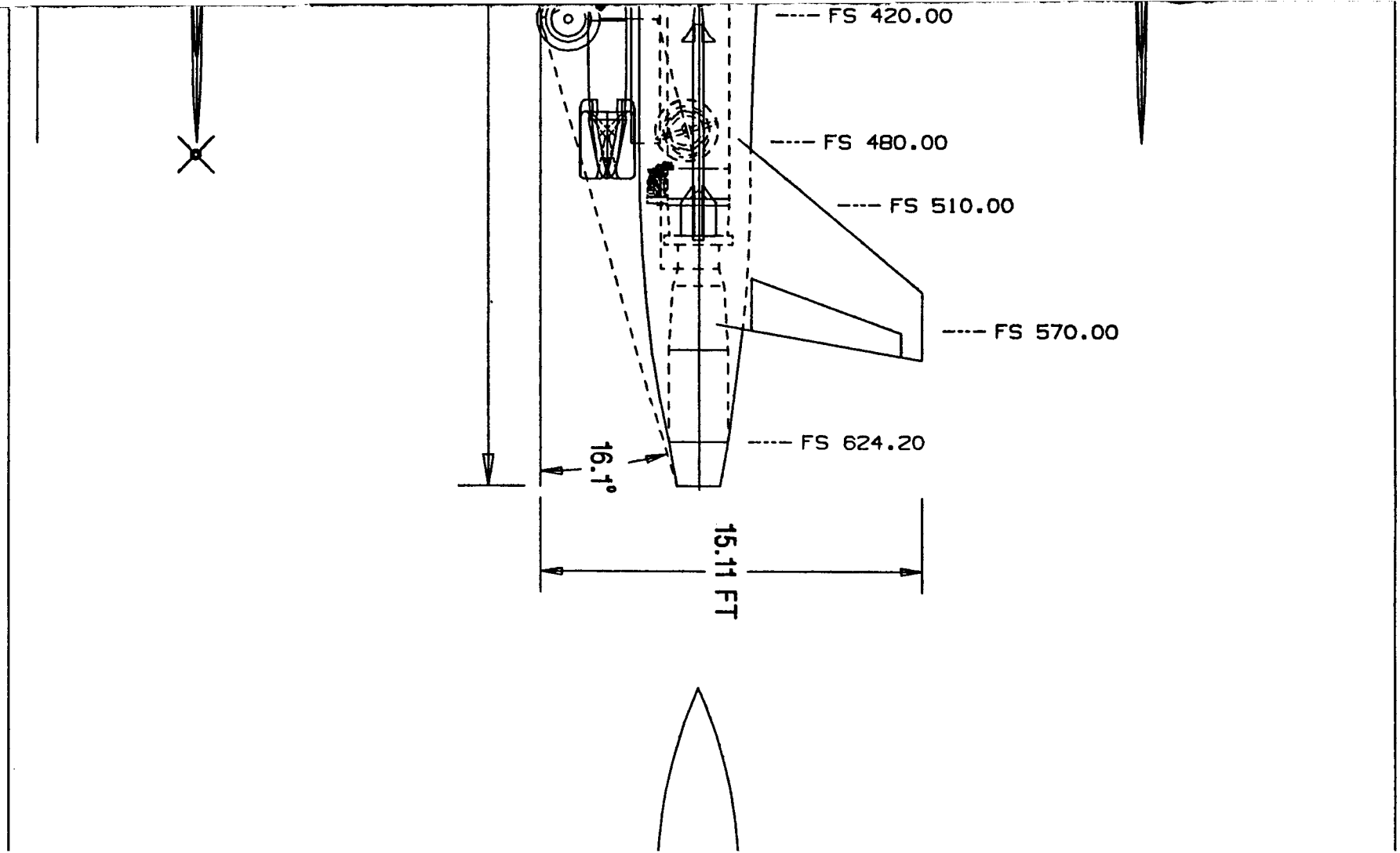
FS 420.00
FS 480.00
FS 510.00
FS 570.00
FS 624.20
16.1°
15.11 FT

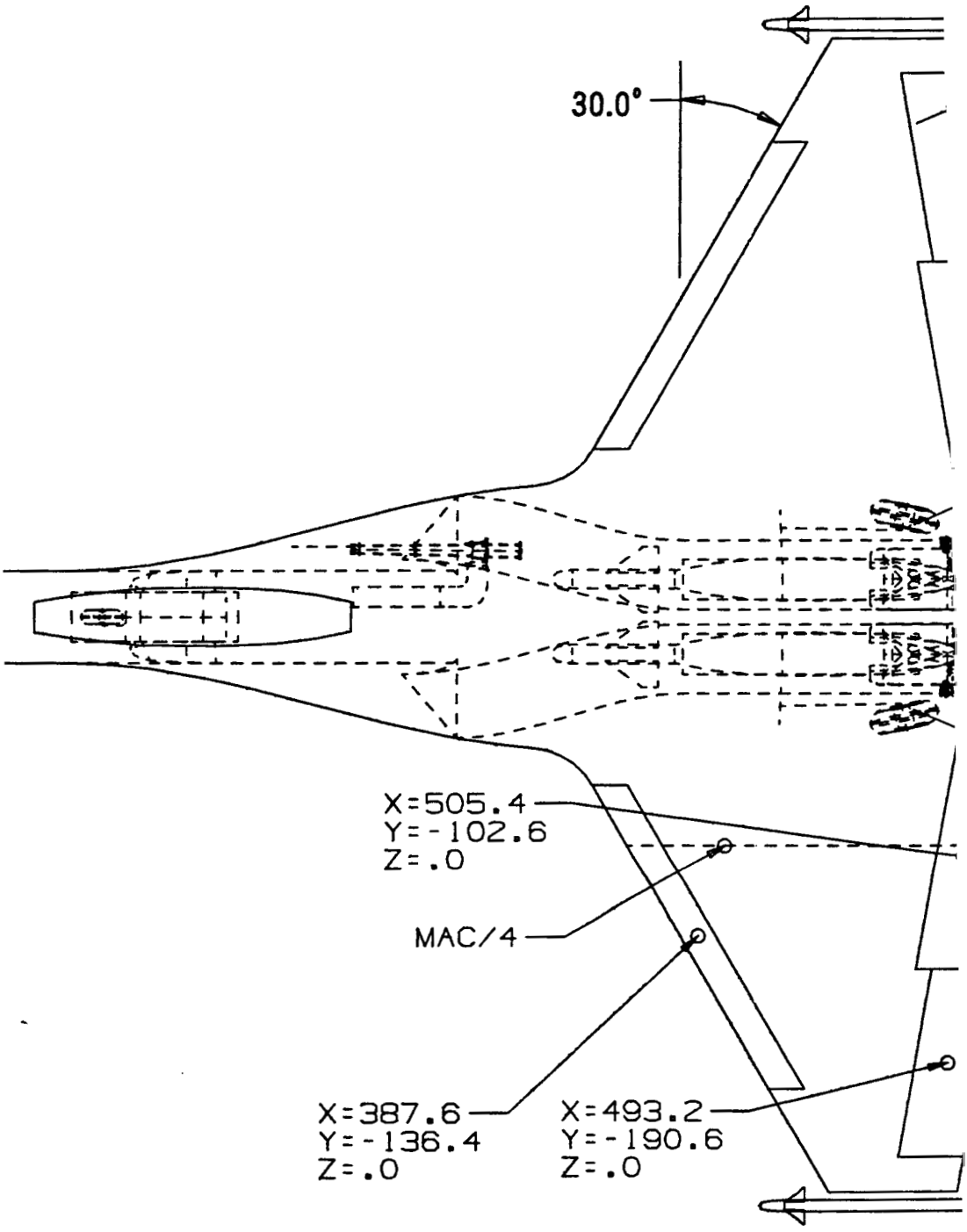
30.0°
X=505.4
Y=-102.6
Z=.0
MAC/4
X=387.6
Y=-136.4
Z=.0
X=493.2
Y=-190.6
Z=.0

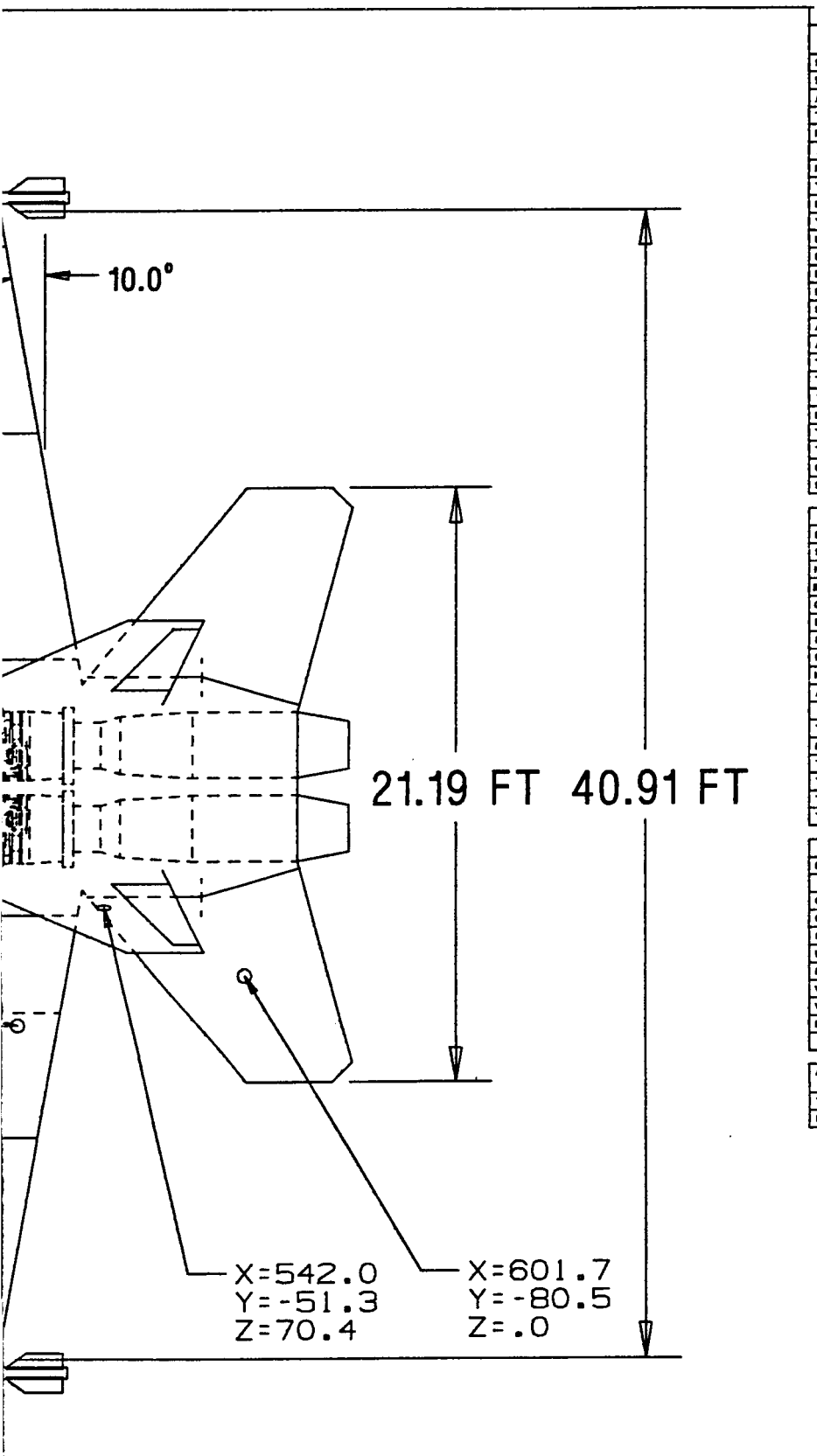
10.0°
21.19 FT
40.91 FT
X=542.0
Y=-51.3
Z=70.4
X=601.7
Y=-80.5
Z=.0

CHARACTERISTICS	WING	"VEE"-TAIL EACH TRUE	VERT. TAIL EACH TRUE	HORZ. TAIL EACH TRUE	CANARD EACH TRUE	THRUST-BLOWN ELEVON EACH TRUE
THED	800.0	-	52.7	47.1	-	-
EXPO	335.7	-	42.8	40.9	-	-
RATIO	3.347	-	3.246	2.89	-	-
ATIO	0.228	-	0.315	0.472	-	-
AN (FT)	40.91	-	18.78	15.37	-	-
. SPAN (IN)	245.46	-	112.69	92.26	-	-
ORD (IN)	239.18	-	102.49	89.79	-	-
RD (IN)	54.18	-	32.31	47.09	-	-
)	188.12	-	73.49	78.59	-	-
N)	98.92	-	48.22	75.50	-	-
MAC (IN)	357.32	-	469.69	559.29	-	-
MAC (IN)	399.85	-	518.06	579.44	-	-
.. MAC (IN)	98.62/18.20	-	48.22/61.65	75.50/18.20	-	-
L.E.	30.0°	-	38.2°	40.0°	-	-
T.E.	-10.0°	-	9.4°	15.0°	-	-
CR	64A	-	64A	64A	-	-
CT	64A	-	64A	64A	-	-
	5%	-	5%	5%	-	-
	5%	-	5%	5%	-	-
E	-	-	-	-	-	-
	-	-	60.5°	-	-	-
	-	-	-	-	-	-
	-	-	-	-	-	-
	-	-	-	-	-	-
ARGIN 1%)	-	-	-	-	-	-

PROPULSION		
AME	GENS-20000	
CTOR	-	
ENGINES	2	
EIGHT (EA)	1482	lbs
TOTAL	8.89	FT²
REA TOTAL	4.0	FT²
EA)	19250	lbs
EA)	-	lbs
REA TOTAL	4.5	FT²
ATIO	-	
	-	degrees
	-	degrees
	-	degrees
	-	degrees
(+)	-	degrees
(-)	-	degrees
+/-)	X.X	degrees

CONTROLS	AREA (TOTAL) TRUE (FT²)	DEFLECTION +	DEFLECTION -	TRUNNION LOCATION
AILERON	20.5	-	-	-
ELEVON	45.3	-	-	-
L.E. FLAP	27.1	-	-	-
T.E. FLAP	-	-	-	-
VERT. TAIL RUDDER	18.8	-	-	-
HORIZ. TAIL	81.8	-	-	-
VEE-TAIL	-	-	-	-
THRUST-BLOWN ELEVON	-	-	-	-
-	-	-	-	-
-	-	-	-	-
-	-	-	-	-

AIRCRAFT VOLUME CHARACTERISTICS		
FUSELAGE	852.1	FT³
CAPTURE	223.0	FT³
WING	118.9	FT³
CANARD	-	FT³
VEE-TAIL	-	FT³
HORIZ. TAIL	18.9	FT³
VERT. TAIL	14.3	FT³
EXPOSED ENGINE	-	FT³
TOTAL A/C VOLUME	1322.2	FT³
MAX CROSS-SECTION	51.8	FT²
MAX FUSELAGE CROSS-SECTION	28.1	FT²
L/D	8.84	

WETTED AREA		
	814.2	FT²
	-	FT²
	33.3	FT²
ORZ)	-	FT²
ERT)	-	FT²
	832.8	FT²
IL	158.2	FT²
-	189.8	FT²
	-	FT²
NB.	22.8	FT²
AL	1631.2	FT²

LANDING GEAR	NOSE GEAR	MAIN GEAR
TIRE SIZE	18.00X5.50	20.00X7.70
STROKE	10.0	10.0
PRESSURE	275 PSI	225 PSI

CHARACTERISTIC ESTIMATES FOR AIRCRAFT SIZING	
	35000 lbs EST.
T	33% T.O.G.W.

ARMAMENT
(2) GBU-24 LGB (EXTERNAL) OR (2) AIM-120 MISSILES (EXTERNAL)
(2) AIM-9 MISSILES (EXTERNAL)
20 MM GUN / 500 ROUNDS AMMO.
(2) HARD POINTS (HYDRAULIC RACKS)

DSGN JOE BURNES 07-19-95

NASA - AGILITY
TYPE A OBSERVABLES
MODERATE AGILITY

SIZE Z | 296-2402

SCALE NOTED NT | SHEET 1 OF 2

SHEET 1 OF 2 296-2402

296-2402 SURFACE A

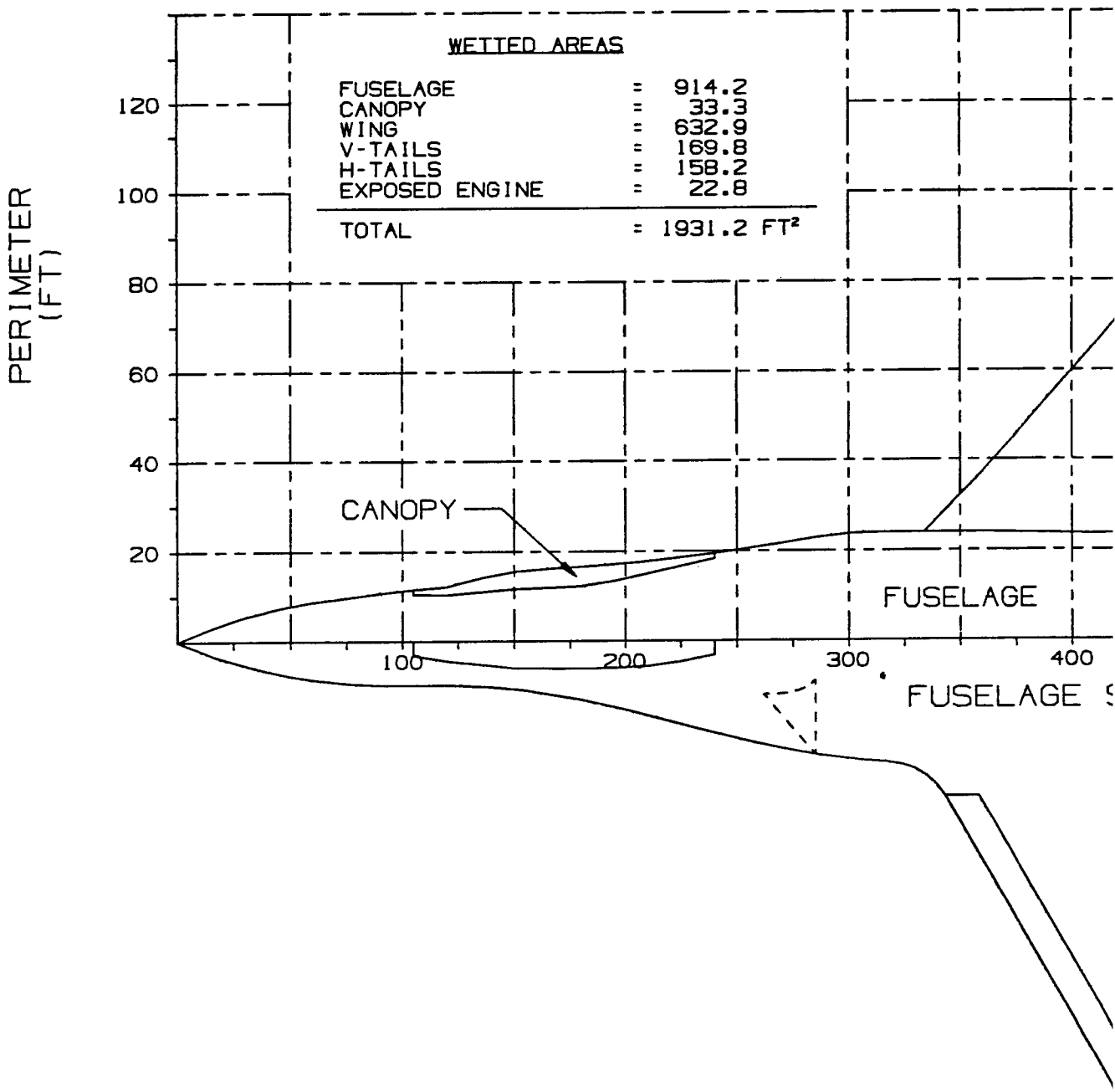

AREA PLOT

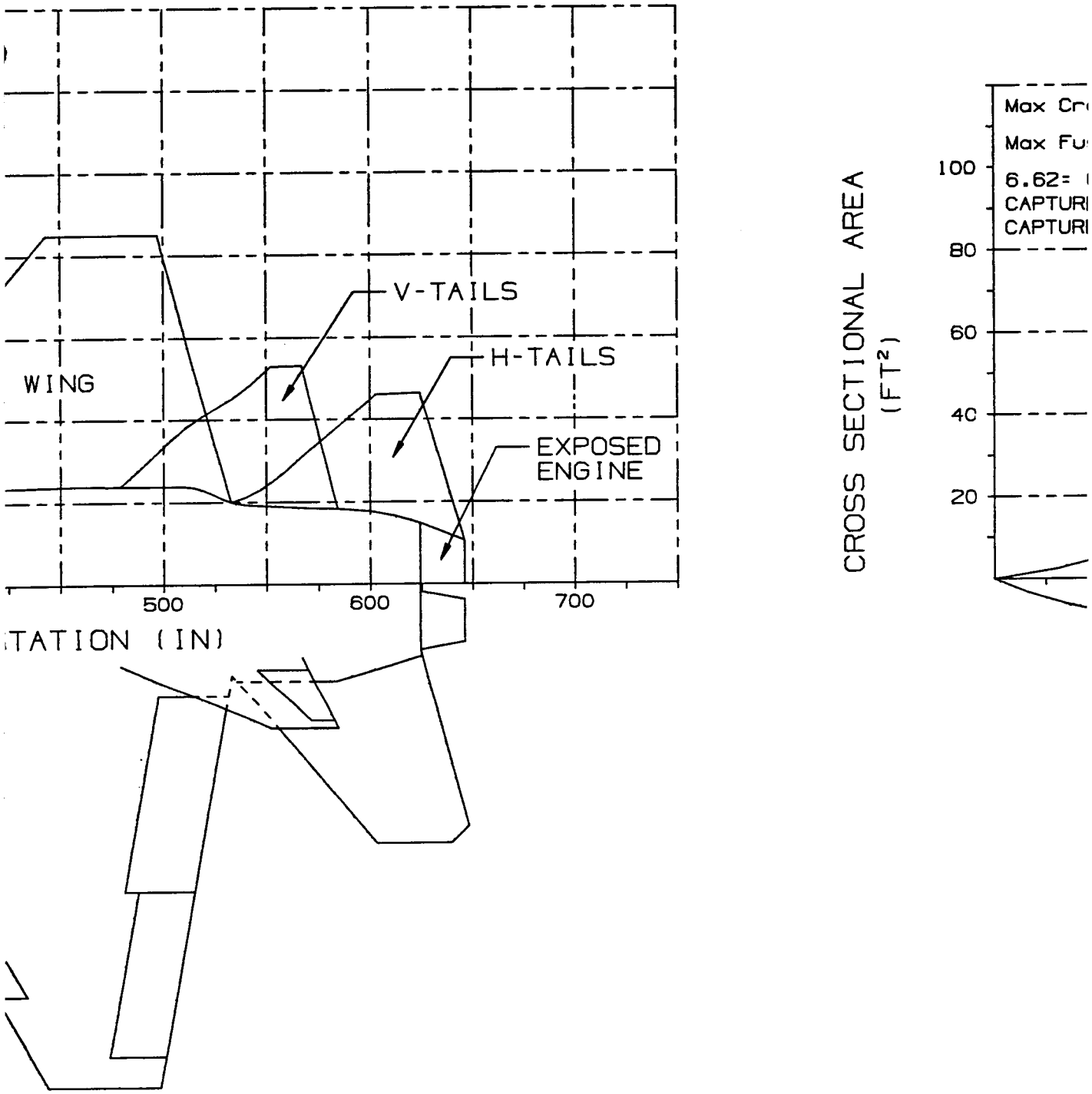
V-TAILS
H-TAILS
WING
EXPOSED
ENGINE
500
600
700
TATION (IN)
CROSS SECTIONAL AREA
(FT²)
100
80
60
40
20
Max Cr
Max Fu
6.62=
CAPTURI
CAPTURI

296-2402 CROSS SECTIONAL AREA PL

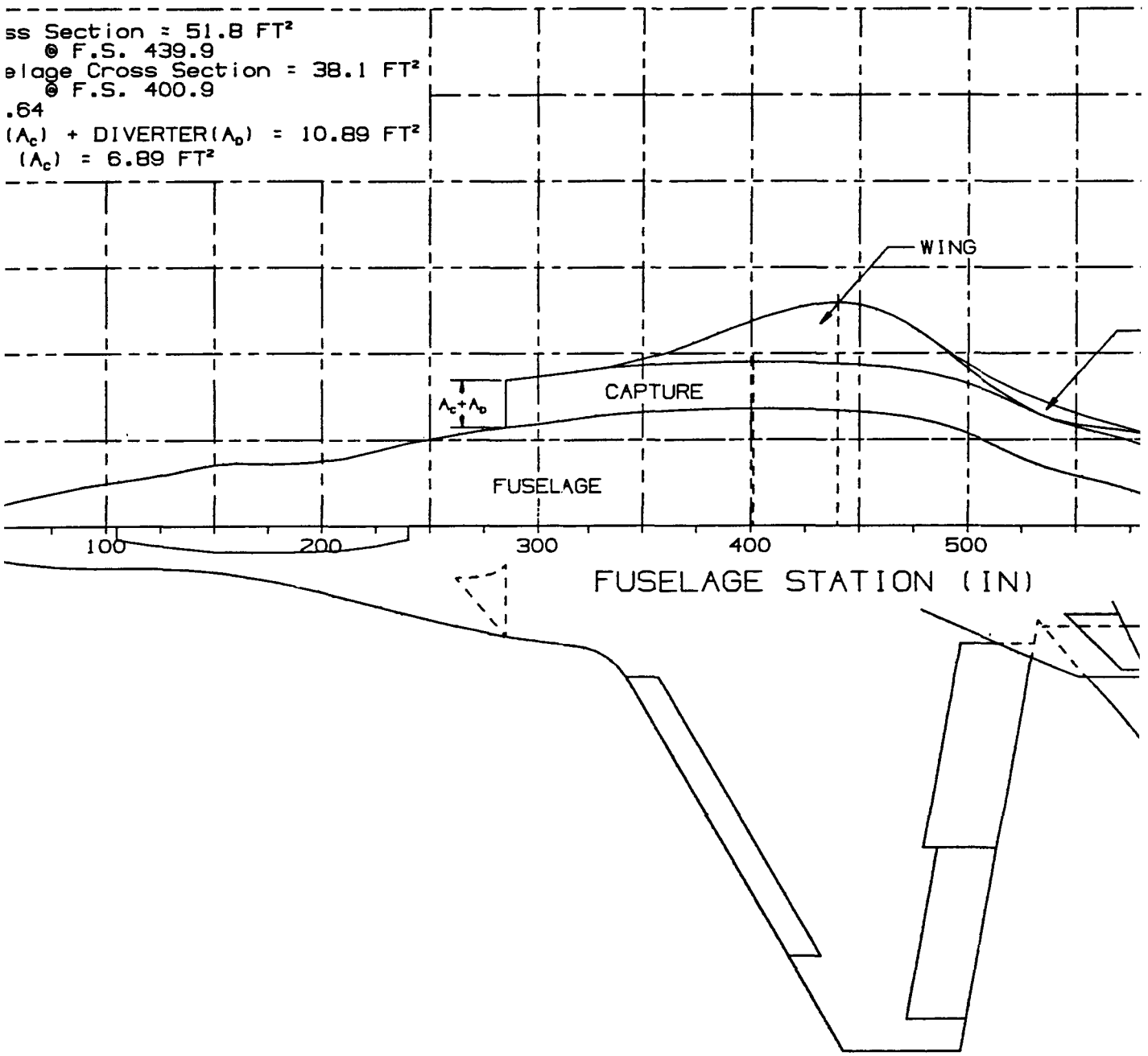

)T

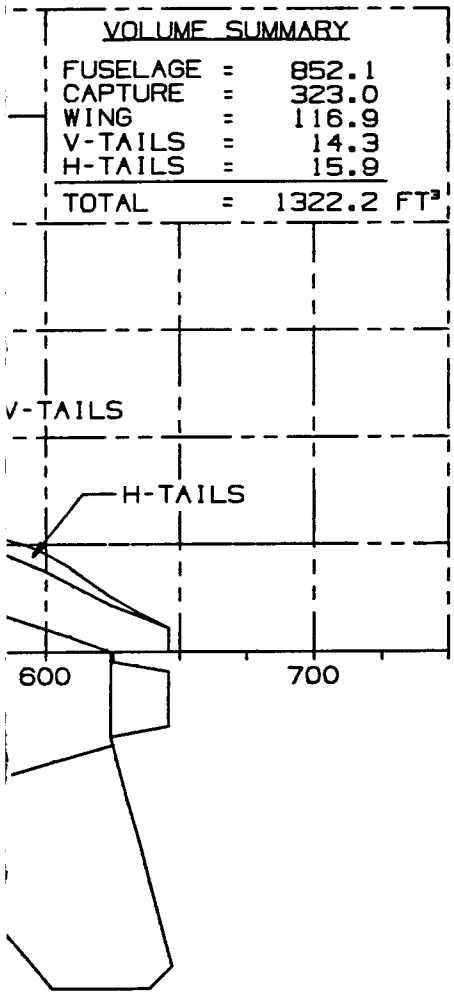
VOLUME SUMMARY
FUSELAGE = 852.1
CAPTURE = 323.0
WING = 116.9
V-TAILS = 14.3
H-TAILS = 15.9
TOTAL = 1322.2 FT³
V-TAILS
H-TAILS
600
700

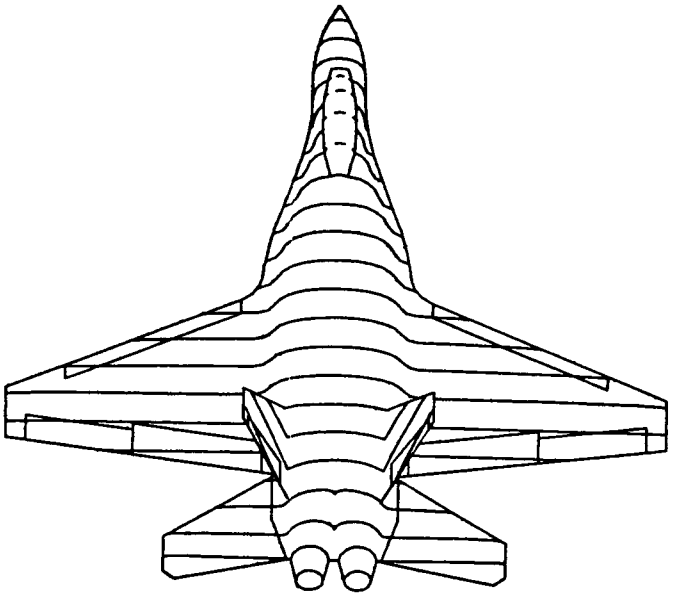

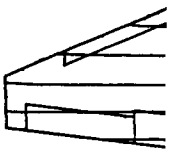

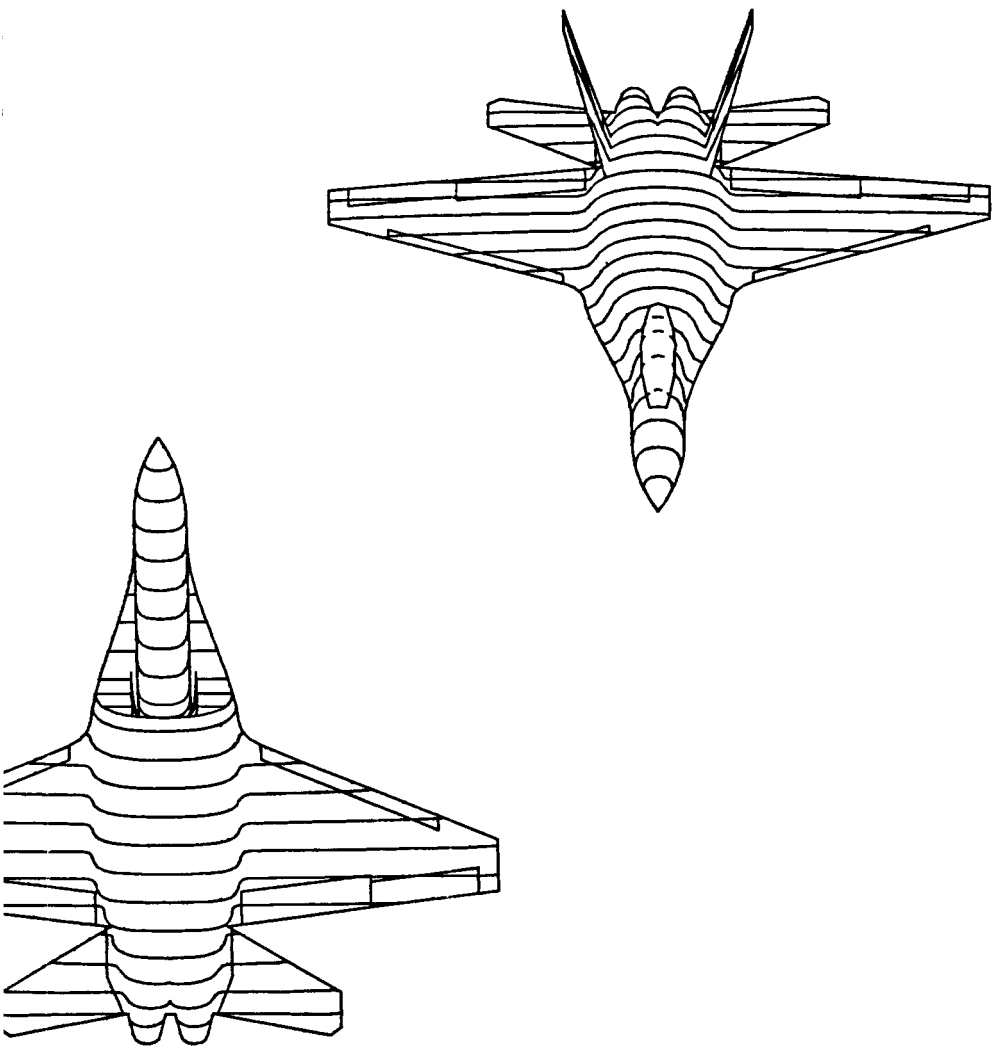

DSGN JOE BURNES	NASA - AGILITY TYPE A OBSERVABLES MODERATE AGILITY
SIZE Z	296-2402
SCALE NOTED	SHEET 2 OF 2

296-2402 SHEET 2 OF 2

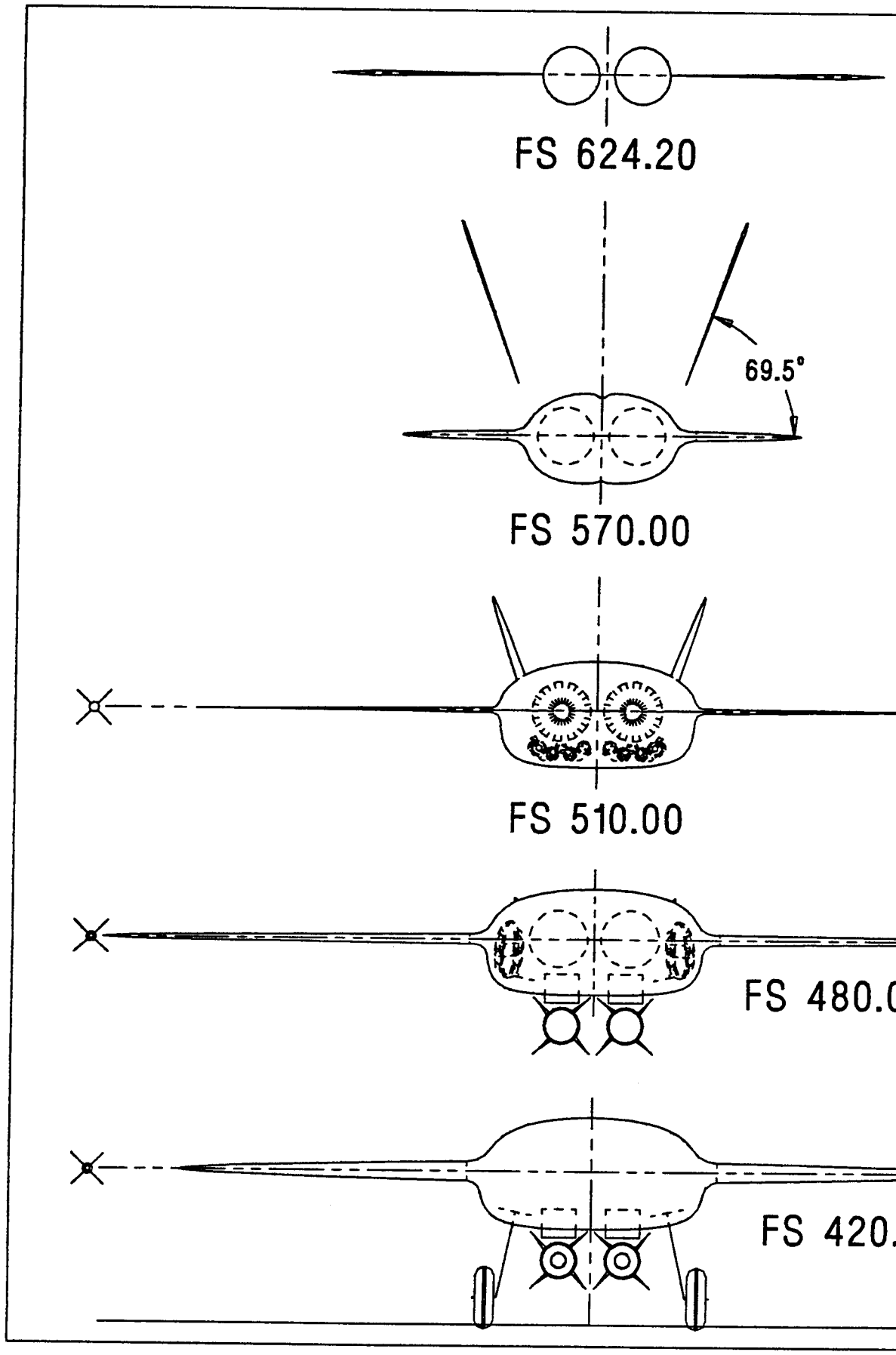
FS 624.20
69.5°
FS 570.00
FS 510.00
FS 480.0
FS 420.

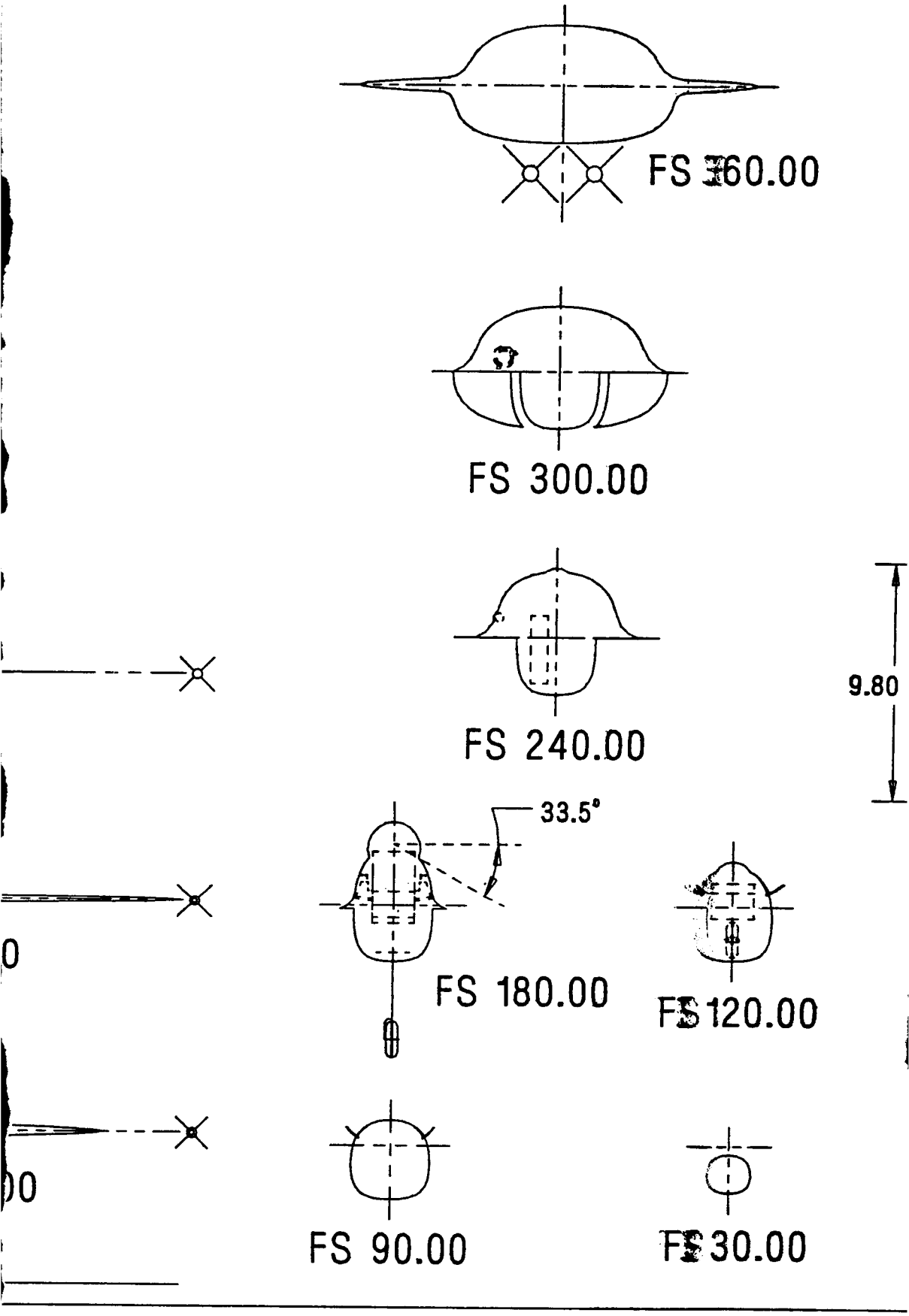
FS 360.00
FS 300.00
FS 240.00
9.80
33.5°
FS 180.00
FS 120.00
FS 90.00
FS 30.00

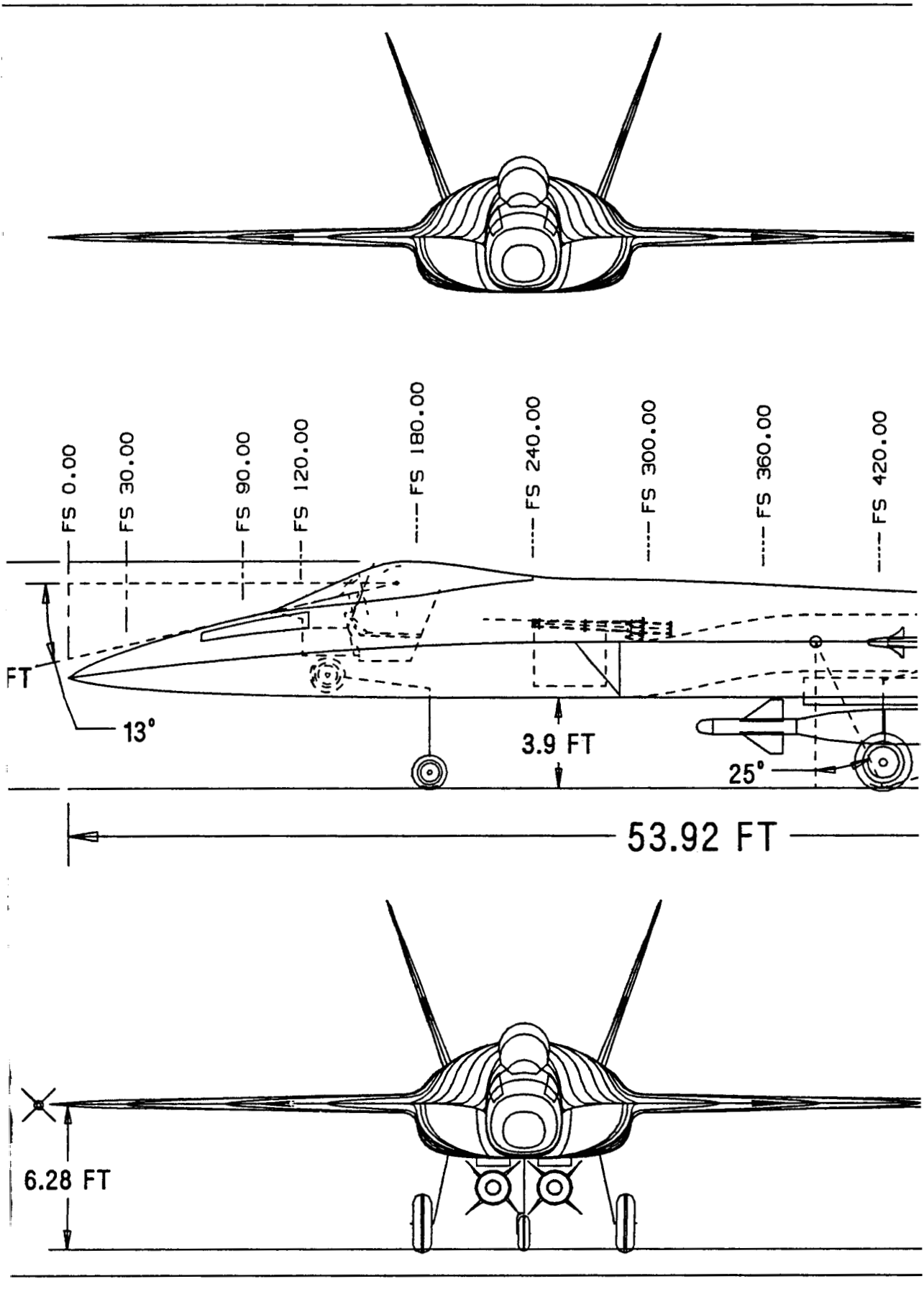
FS 0.00
FS 30.00
FS 90.00
FS 120.00
FS 180.00
FS 240.00
FS 300.00
FS 360.00
FS 420.00
FT
13°
3.9 FT
25°
53.92 FT
6.28 FT

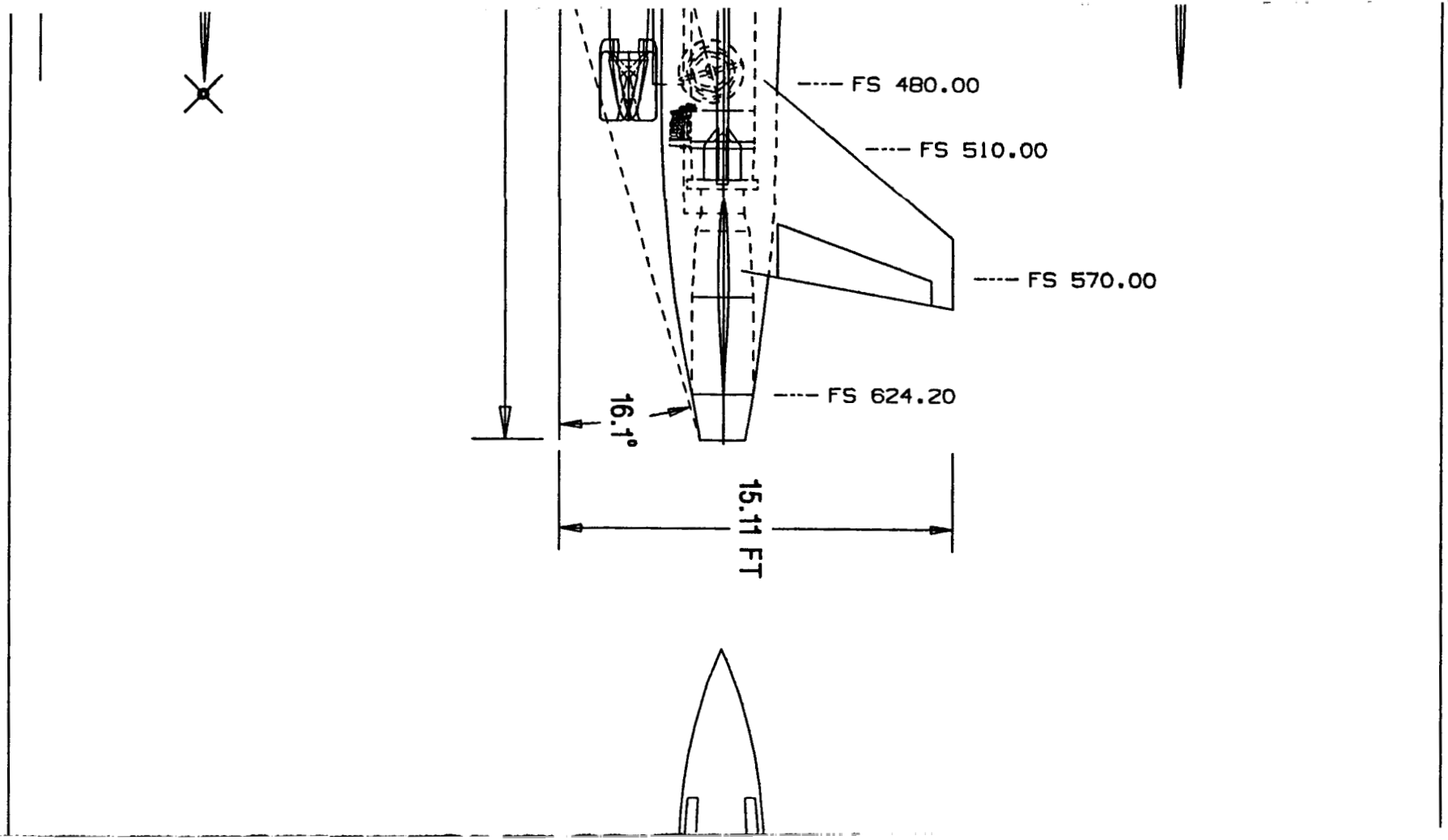
FS 480.00
FS 510.00
FS 570.00
FS 624.20
16.1°
15.11 FT

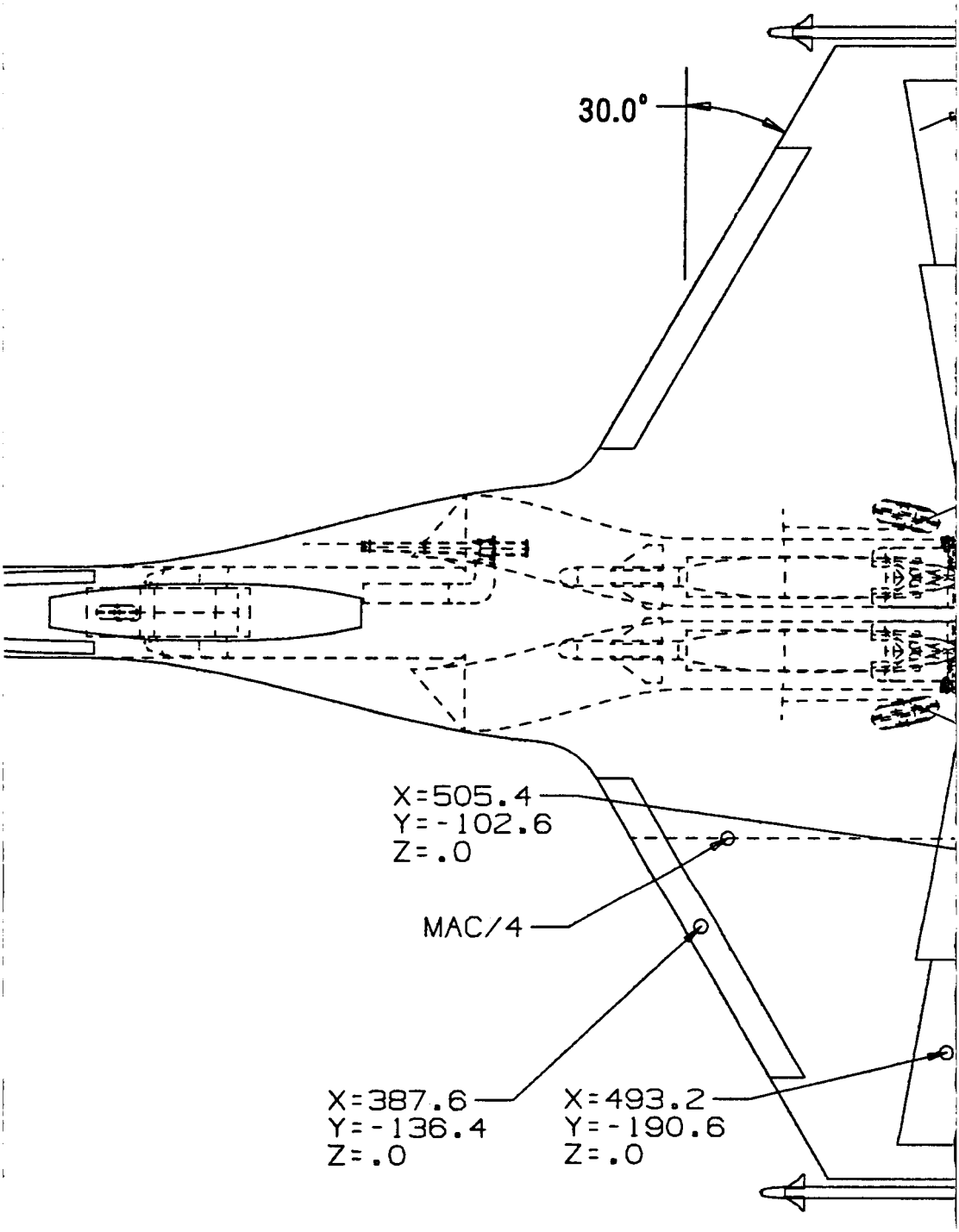
30.0°
X=505.4
Y=-102.6
Z=.0
MAC/4
X=387.6
Y=-136.4
Z=.0
X=493.2
Y=-190.6
Z=.0

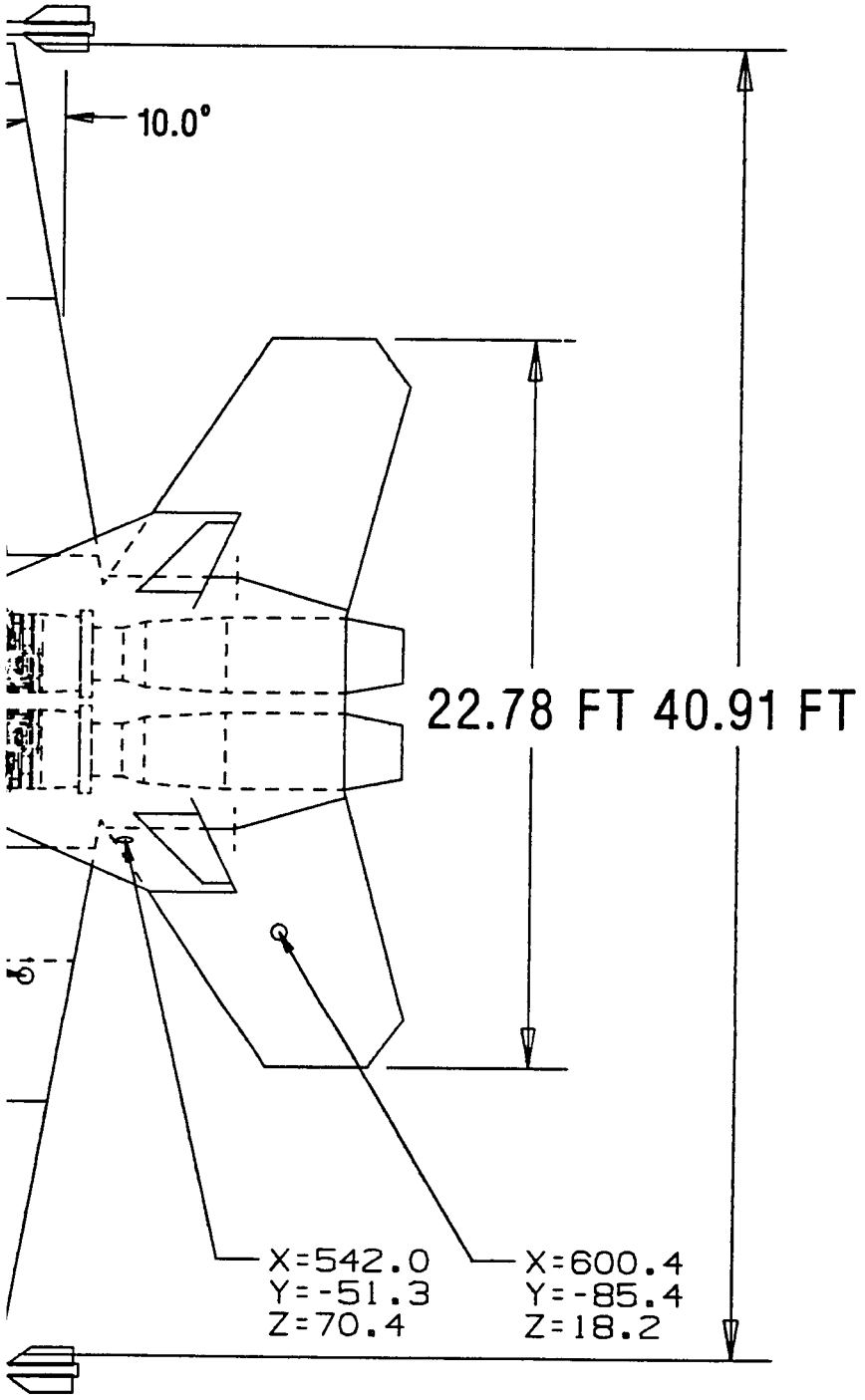
10.0°
22.78 FT 40.91 FT
X=542.0
Y=-51.3
Z=70.4
X=600.4
Y=-85.4
Z=18.2

CHARACTERISTICS	WING	"VEE"-TAIL EACH TRUE	VERT. TAIL EACH TRUE	HORZ. TAIL EACH TRUE	CANARD EACH TRUE	THRUST-BLOWN ELEVON EACH TRUE
) THED	800.0	-	52.7	54.8	-	-
) EXPO	285.7	-	42.8	47.6	-	-
RATIO	3.347	-	3.348	2.625	-	-
RATIO	0.228	-	0.315	0.579	-	-
PAN (FT)	40.91	-	16.76	16.98	-	-
F. SPAN (IN)	245.46	-	112.89	101.77	-	-
HORD (IN)	239.16	-	102.48	98.30	-	-
ORD (IN)	54.18	-	32.31	88.93	-	-
NI	188.12	-	73.48	78.48	-	-
IN)	96.92	-	48.32	81.25	-	-
F MAC (IN)	357.32	-	488.68	557.87	-	-
/4 MAC (IN)	328.85	-	518.09	577.83	-	-
.L. MAC (IN)	98.92/18.20	-	48.32/81.68	81.25/18.20	-	-
OF L.E.	20.0°	-	38.2°	24.0°	-	-
OF T.E.	-10.0°	-	8.4°	15.0°	-	-
L CR	64A	-	64A	64A	-	-
L CT	64A	-	64A	64A	-	-
OT	5X	-	5X	5X	-	-
P	5X	-	5X	5X	-	-
NOE	-	-	-	-	-	-
NL	-	-	50.3°	-	-	-
	-	-	-	-	-	-
	-	-	-	-	-	-
	-	-	-	-	-	-
MARGIN (%)	-	-	-	-	-	-

PROPULSION		
NAME	GEND-20000	
FACTOR	-	
OF ENGINES	2	
WEIGHT (EA)	1482	lbs
EA TOTAL	8.89	FT²
AREA TOTAL	4.0	FT²
(EA)	18250	lbs
(EA)	-	lbs
AREA TOTAL	4.5	FT²
RATIO	-	
OE	-	degrees
	-	degrees
	-	degrees
	-	degrees
CH (+)	X.X	degrees
CH (-)	X.X	degrees
(+/-)	X.X	degrees

CONTROLS	AREA (TOTAL) TRUE (FT²)	DEFLECTION +	DEFLECTION -	TRUNNION LOCATION
AILERON	20.5	-	-	-
ELEVON	45.2	-	-	-
L.E. FLAP	27.1	-	-	-
T.E. FLAP	-	-	-	-
VERT. TAIL RUDDER	18.8	-	-	-
HORIZ. TAIL	65.20	-	-	-
VEE-TAIL	-	-	-	-
THRUST-BLOWN ELEVON	-	-	-	-
-	-	-	-	-
-	-	-	-	-
-	-	-	-	-

WETTED AREA		
E	914.2	FT²
	-	FT²
	33.9	FT²
(HORZ)	-	FT²
(VERT)	-	FT²
	632.9	FT²
TAIL	189.2	FT²
AIL	169.9	FT²
L	-	FT²
ENG.	22.9	FT²
TOTAL	1982.2	FT²

AIRCRAFT VOLUME CHARACTERISTICS		
FUSELAGE	852.1	FT³
CAPTURE	222.0	FT³
WING	118.9	FT³
CANARD	-	FT³
VEE-TAIL	-	FT³
HORIZ. TAIL	18.9	FT³
VERT. TAIL	14.3	FT³
EXPOSED ENGINE	-	FT³
TOTAL A/C VOLUME	1325.2	FT³
MAX CROSS-SECTION	51.8	FT²
MAX FUSELAGE CROSS-SECTION	38.1	FT²
L/D	8.64	

T CHARACTERISTIC ESTIMATES	
ED FOR AIRCRAFT SIZING)	
.	38030 lbs EST.
IGHT	23% T.O.G.W.

LANDING GEAR	NOSE GEAR	MAIN GEAR
TIRE SIZE	18.00X5.50	30.00X7.70
STROKE	10.0	10.0
PRESSURE	275 PSI	295 PSI

ARMAMENT
(2) GBU-24 LGB (EXTERNAL) OR (2) AIM-120 MISSILES (EXTERNAL)
(2) AIM-9 MISSILES (EXTERNAL)
20 MM GUN / 500 ROUNDS AMMO.
(2) HARD POINTS (HYDRAULIC RACKS)

DSGN JOE BURNES 07-23-88

NASA - AGILITY
TYPE A OBSERVABLES
HIGH AGILITY

SIZE Z 296-2403

SCALE NOTED WT SHEET 1 OF 2

296-2403 SH 1 OF 2

296-2403 SURFACE A

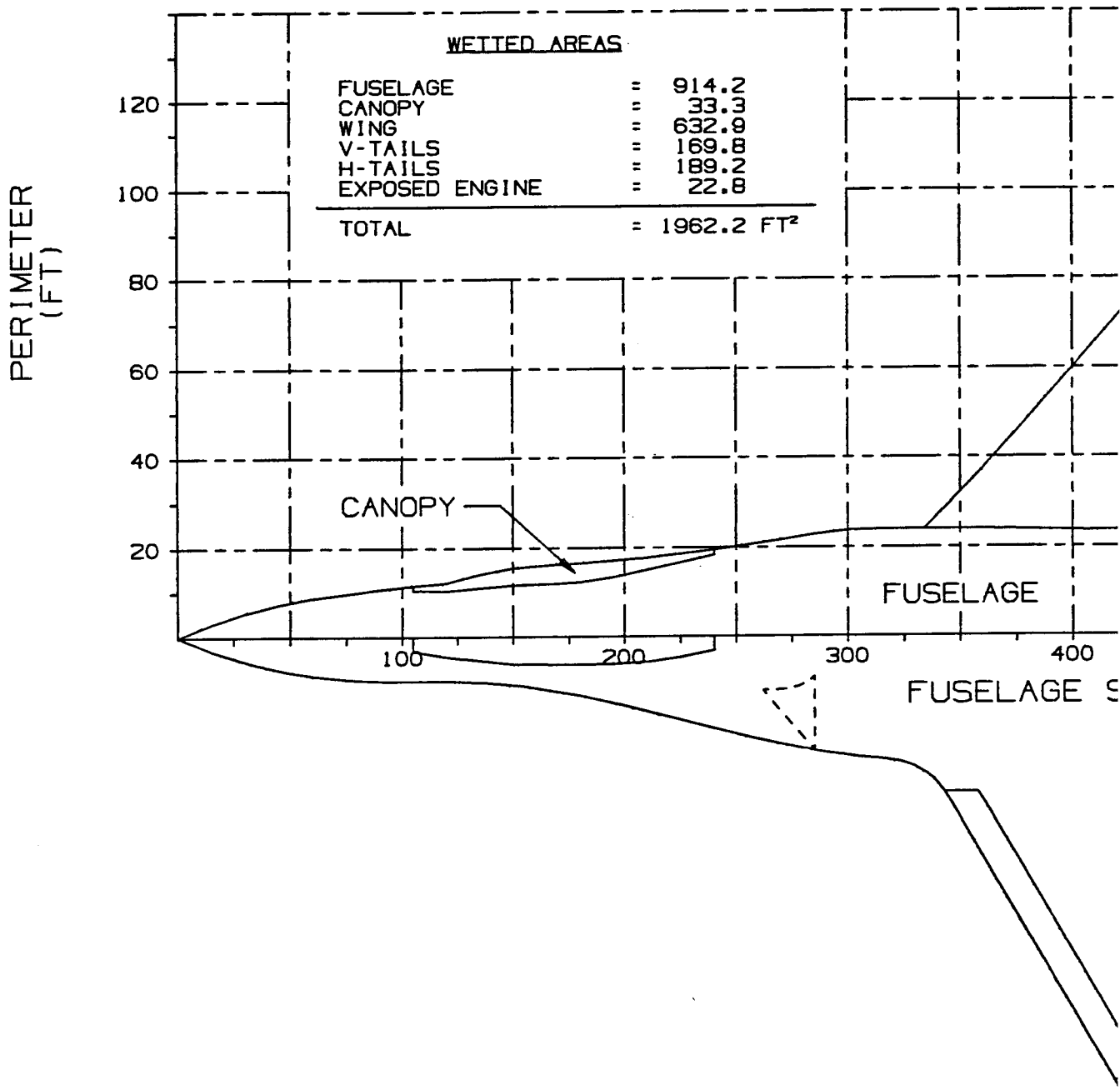

REA PLOT

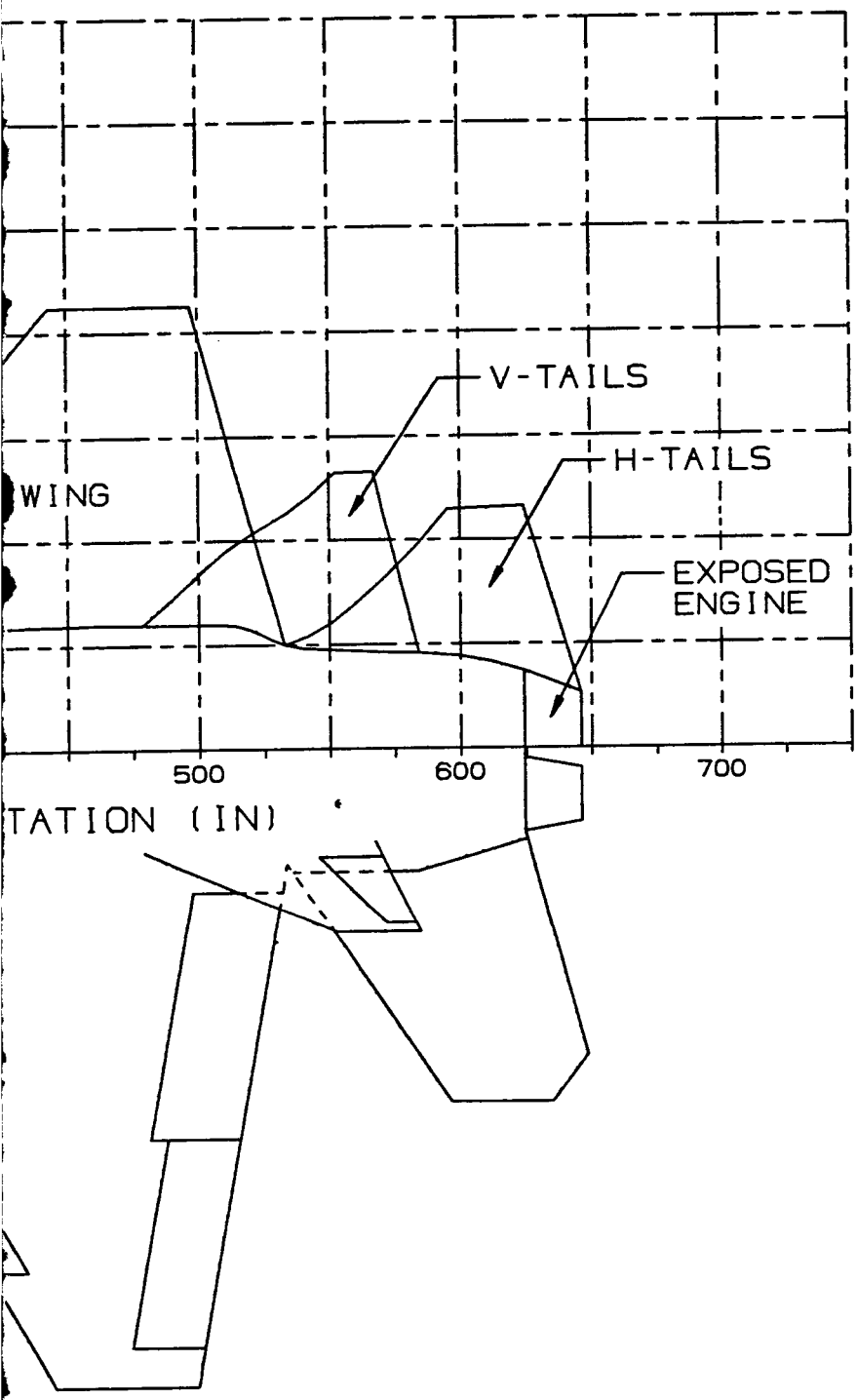
V-TAILS
H-TAILS
WING
EXPOSED
ENGINE
500
600
700
TATION (IN)

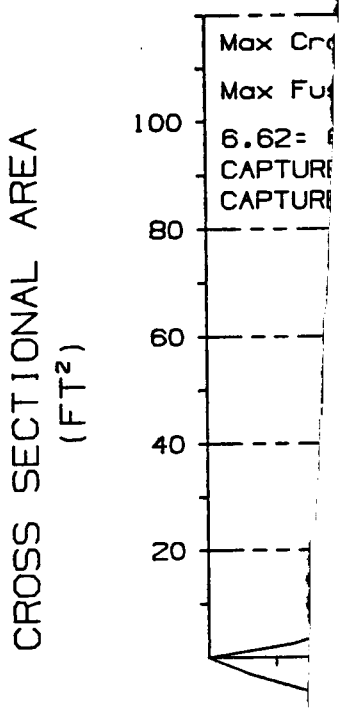
CROSS SECTIONAL AREA
(FT²)
100
80
60
40
20
Max Cr
Max Fu
6.62=
CAPTURE
CAPTURE

296-2403 CROSS SECTIONAL AREA PLO

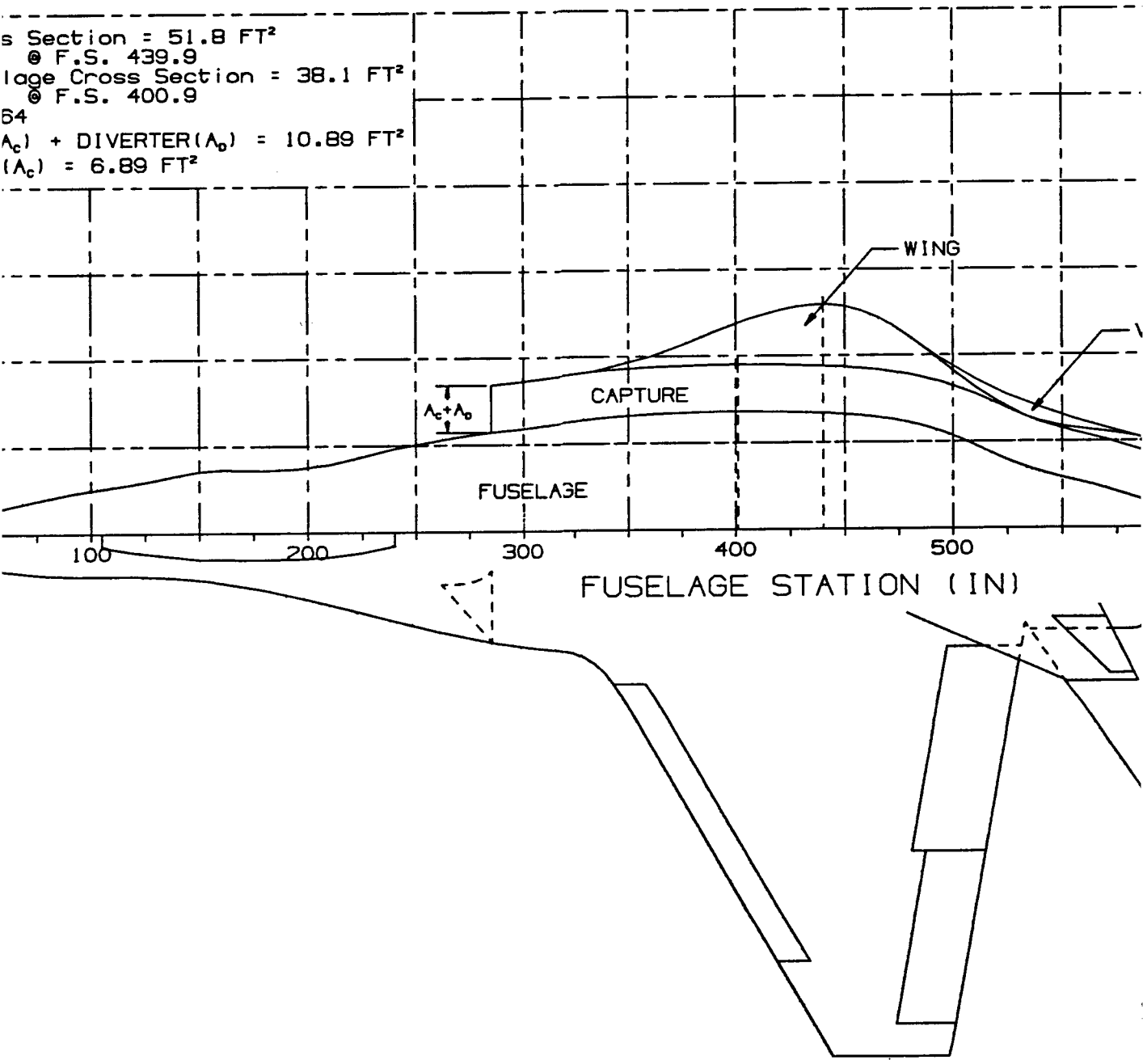

T

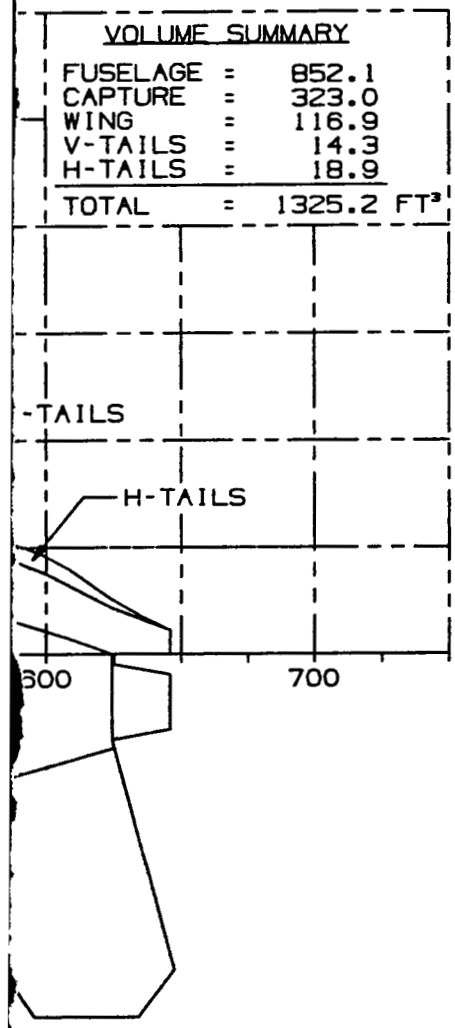
VOLUME SUMMARY
FUSELAGE = 852.1
CAPTURE = 323.0
WING = 116.9
V-TAILS = 14.3
H-TAILS = 18.9
TOTAL = 1325.2 FT³
-TAILS
H-TAILS
600
700

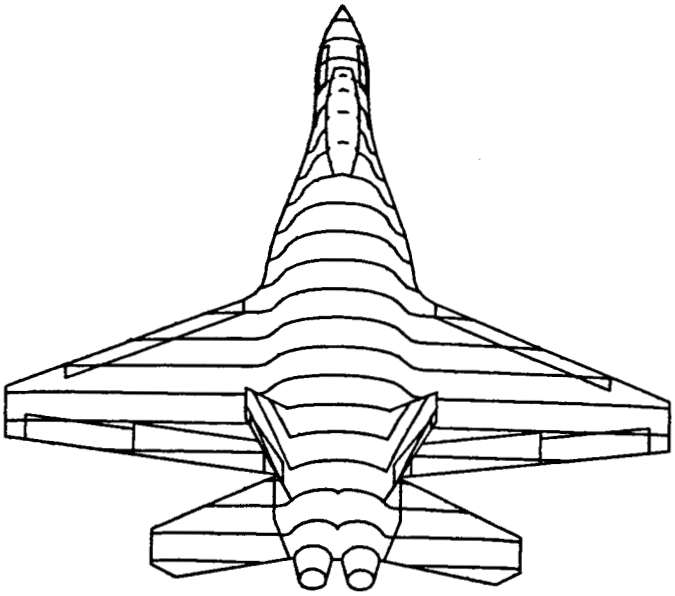

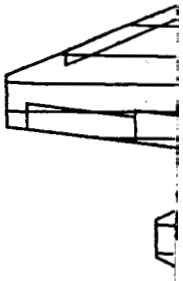

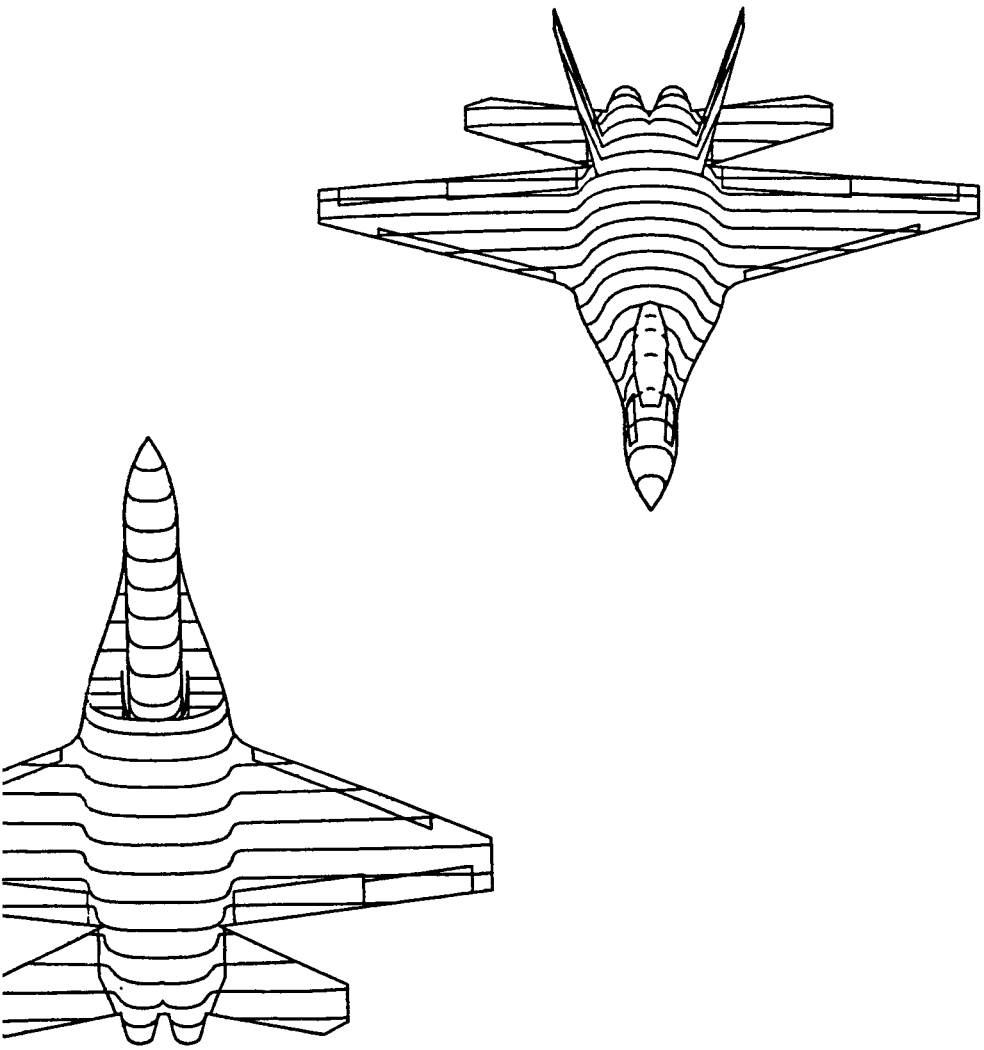

DSGN JOE BURNES	07-23-89	NASA - AGILITY TYPE A OBSERVABLES HIGH AGILITY
CHK		
APR		
MFG		
		SIZE Z — 296-2403
		SCALE NOTED ON — SHEET 2 OF 2

296-2403 SH 2 OF 2

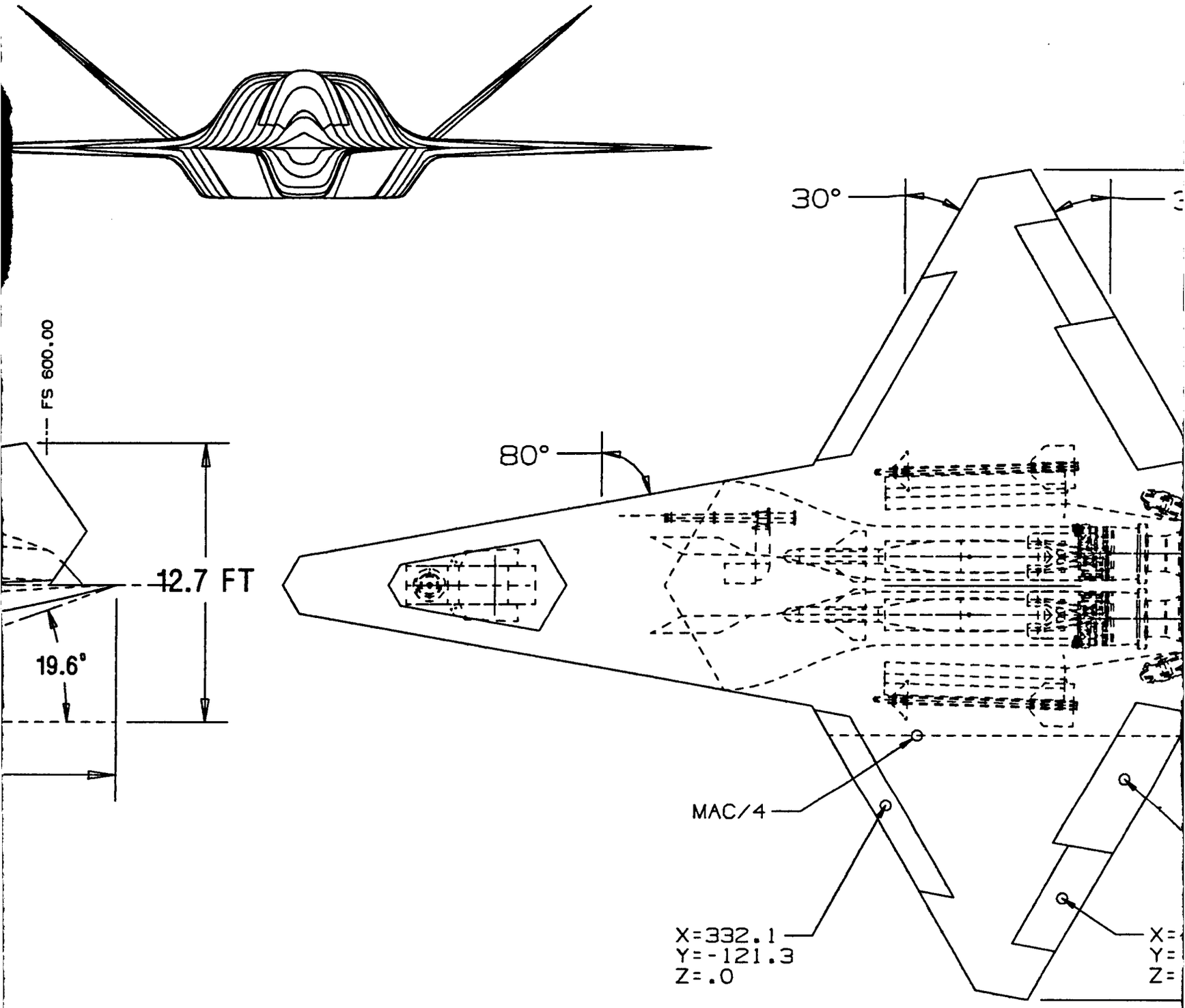
FS 600.00
12.7 FT
19.6°
80°
30°
MAC/4
X=332.1
Y=-121.3
Z=.0

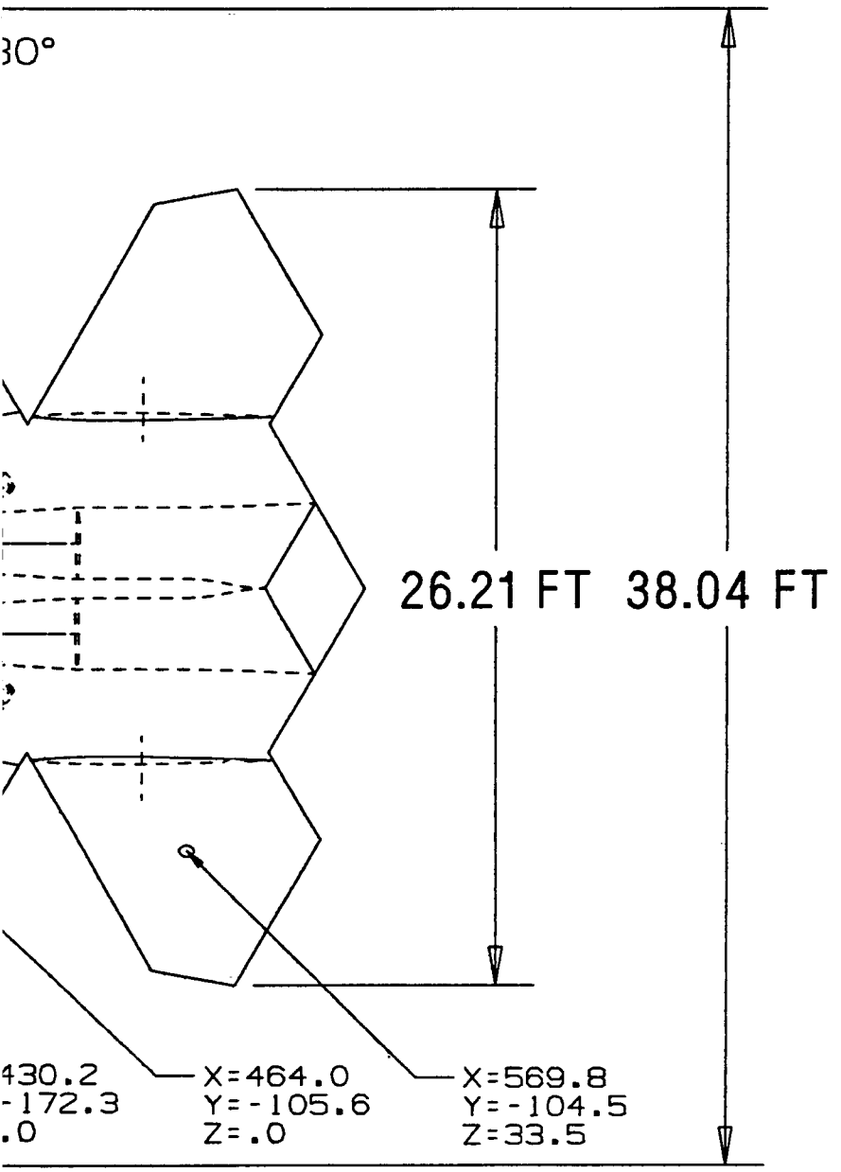

CHARACTERISTICS	WING	"VEE"-TAIL EACH TRUE	VERT. TAIL EACH TRUE	HORZ. TAIL EACH TRUE	CANARD EACH TRUE	THRUST-BLOWN ELEVON EACH TRUE
S (FT2) THEO	800.0	65.3	-	-	-	-
S (FT2) EXPO	257.2	59.9	-	-	-	-
ASPECT RATIO	2.89	2.94	-	-	-	-
TAPER RATIO	0.100	0.344	-	-	-	-
REF. SPAN (FT)	38.04	16.8	-	-	-	-
1/2 REF. SPAN (IN)	228.2	113.1	-	-	-	-
ROOT CHORD (IN)	289.8	133.2	-	-	-	-
TIP CHORD (IN)	29.0	33.1	-	-	-	-
MAC (IN)	194.9	93.2	-	-	-	-
YBAR (IN)	82.1	102.3	-	-	-	-
L.E. OF MAC (IN)	200.7	527.4	-	-	-	-
F.S. 1/4 MAC (IN)	349.4	580.7	-	-	-	-
B.L./W.L. MAC (IN)	82.1/0.0	102.3/31.8	-	-	-	-
SWEEP OF L.E.	20°	23.8°	-	-	-	-
SWEEP OF T.E.	-30°	-29.8°	-	-	-	-
AIRFOIL CR	64A (MOD)	64A (MOD)	-	-	-	-
AIRFOIL CT	64A (MOD)	64A (MOD)	-	-	-	-
T/C ROOT	5%	5%	-	-	-	-
T/C TIP	5%	5%	-	-	-	-
INCIDENCE	-	-	-	-	-	-
DIHEDRAL	-	40.0°	-	-	-	-
TOE	-	-	-	-	-	-
TWIST	-	-	-	-	-	-
CAMBER	-	-	-	-	-	-
STATIC MARGIN (%)	-	-	-	-	-	-

PROPULSION		
ENGINE NAME	GENS-20000	
SCALE FACTOR	-	
NUMBER OF ENGINES	2	
ENGINE WEIGHT (EA)	1482	lbs
CAP. AREA TOTAL	8.89	FT²
B.L.D. AREA TOTAL	3.97	FT²
FNELSU (EA)	18260	lbs
FNELSI (EA)	-	lbs
NOZZLE AREA TOTAL	4.5	FT²
ASPECT RATIO	3.5	
INCIDENCE	-	degrees
TILT	-3	degrees
ROLL	-	degrees
TOE	-	degrees
TVC PITCH (+)	-	degrees
TVC PITCH (-)	-	degrees
TVC YAW (+/-)	-	degrees

CONTROLS	AREA (TOTAL) TRUE (FT²)	DEFLECTION +	DEFLECTION -	TRUNNION LOCATION
AILERON	19.9	-	-	-
ELEVON	39.0	-	-	-
L.E. FLAP	24.1	-	-	-
T.E. FLAP	-	-	-	-
VERT. TAIL	-	-	-	-
HORIZ. TAIL	-	-	-	-
VEE-TAIL	119.9	-	-	-
THRUST-BLOWN ELEVON	-	-	-	-
-	-	-	-	-
-	-	-	-	-
-	-	-	-	-

WETTED AREA		
FUSELAGE	1088.2	FT²
INLET	-	FT²
CANOPY	40.3	FT²
CANARD (HORZ)	-	FT²
CANARD (VERT)	-	FT²
WING (INNER)	947.0	FT²
HORIZ. TAIL	-	FT²
VERT. TAIL	-	FT²
VEE-TAIL	239.2	FT²
EXPOSED ENG.	-	FT²
TOTAL	1924.7	FT²

AIRCRAFT VOLUME CHARACTERISTICS		
FUSELAGE	1289.2	FT³
CAPTURE	222.3	FT³
WING	108.7	FT³
CANARD	-	FT³
VEE-TAIL	48.7	FT³
HORIZ. TAIL	-	FT³
VERT. TAIL	-	FT³
EXPOSED ENGINE	5.8	FT³
TOTAL A/C VOLUME	1776.2	FT³
MAX CROSS-SECTION	84.3	FT²
MAX FUSELAGE CROSS-SECTION	39.8	FT²
L/D	5.89	

AIRCRAFT CHARACTERISTIC ESTIMATES (USED FOR AIRCRAFT SIZING)		
T.O.G.W.	40,000	EST.
FUEL WEIGHT	33% T.O.G.W.	

LANDING GEAR	NOSE GEAR	MAIN GEAR
TIRE SIZE	18.00X5.50	30.00X7.70
STROKE	10.0	10.0
PRESSURE	215 PSI	295 PSI

ARMAMENT
(2) GBU-24 LGB (SEMI-SUBMERGED) OR (2) AIM-120 MISSILES (SEMI-SUBMERGED)
(2) AIM-9 MISSILES (SEMI-SUBMERGED)
20 MM GUN / 500 ROUNDS AMMO.
(4) HARD POINTS (HYDRAULIC RACKS)

DSGN JOE BURNES	08-12-03	NASA - AGILITY TYPE B OBSERVABLES LOW AGILITY
D-P		
STR		
PD		
CE		
		SIZE Z — 296-2404
		SCALE NOTED WT — SHEET 1 OF 2

296-2404 SH 1 OF 2

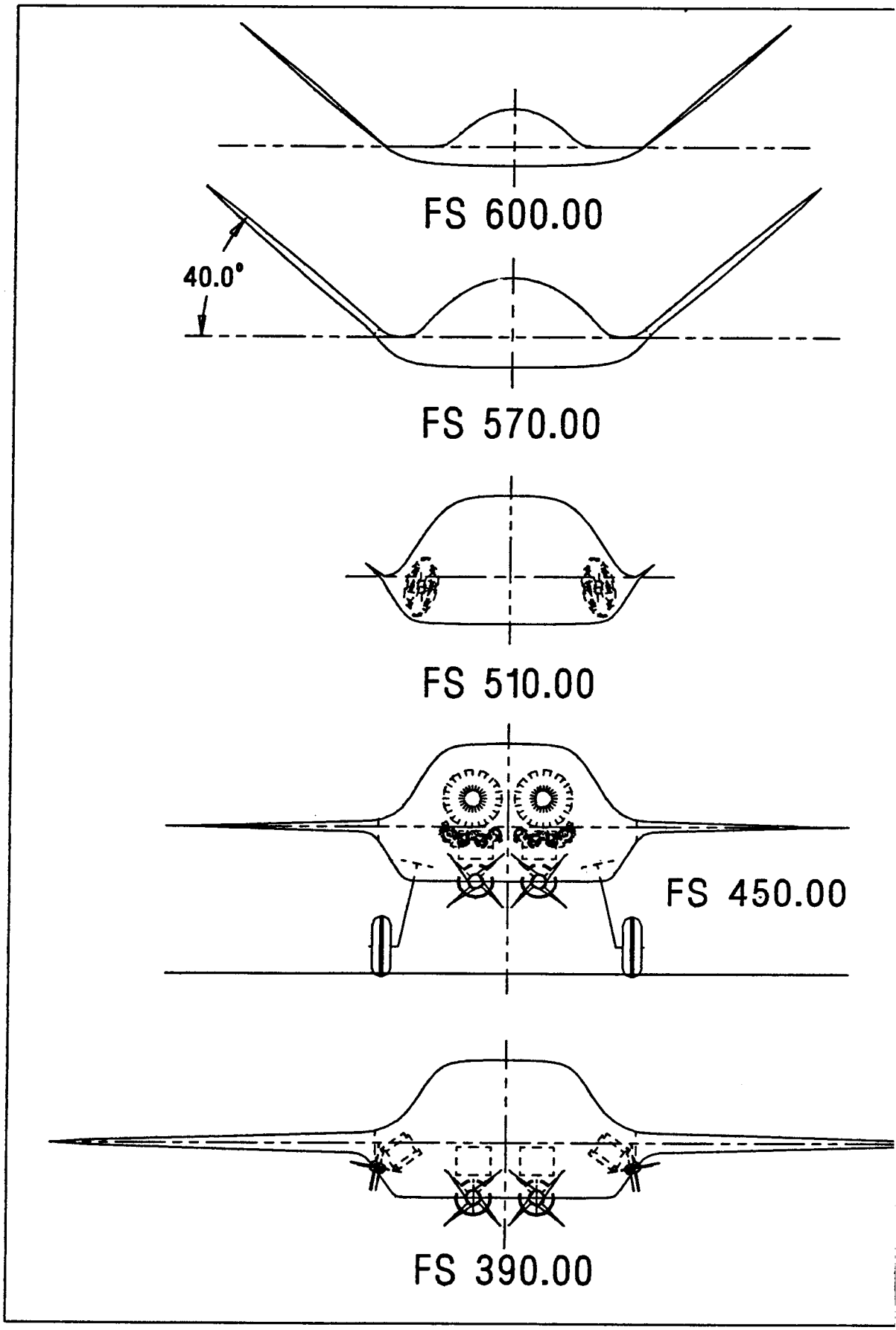
FS 600.00
40.0°
FS 570.00
FS 510.00
FS 450.00
FS 390.00

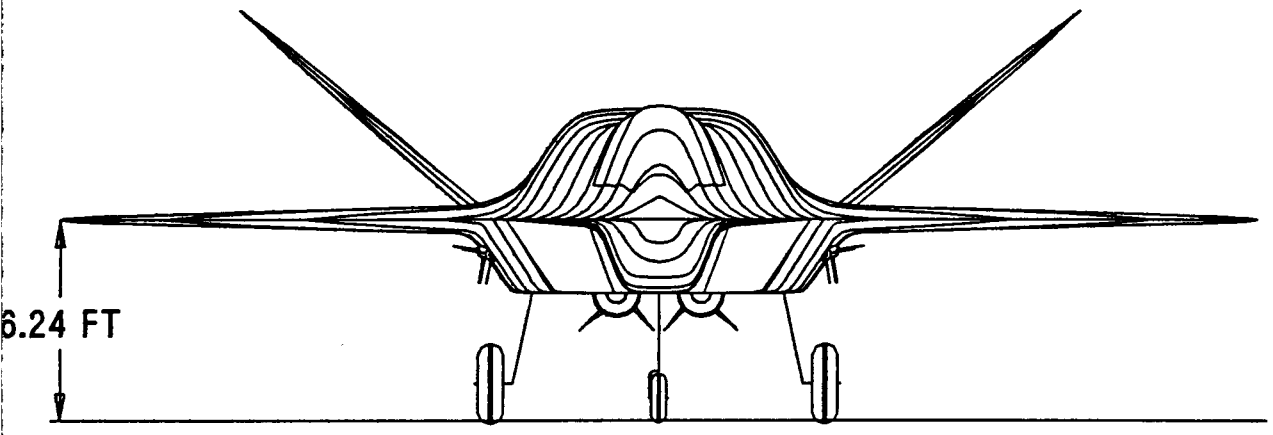

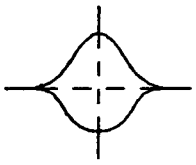

FS 60.00

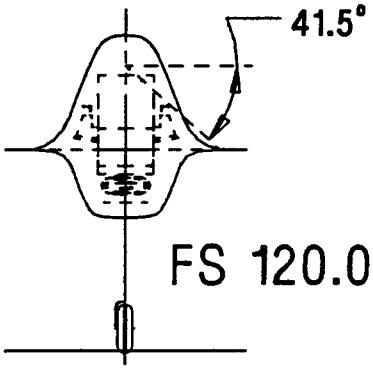

FS 120.00

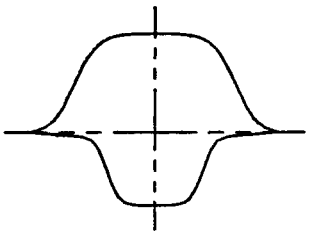

FS 180.00

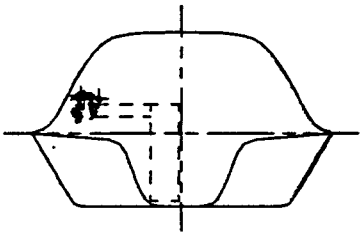

FS 240.00

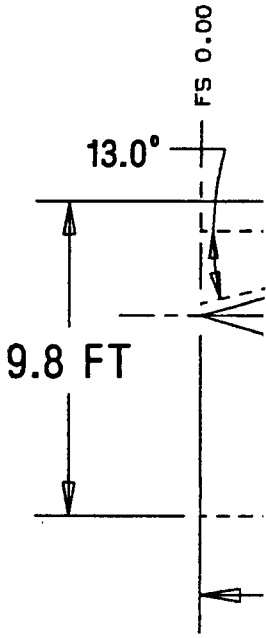

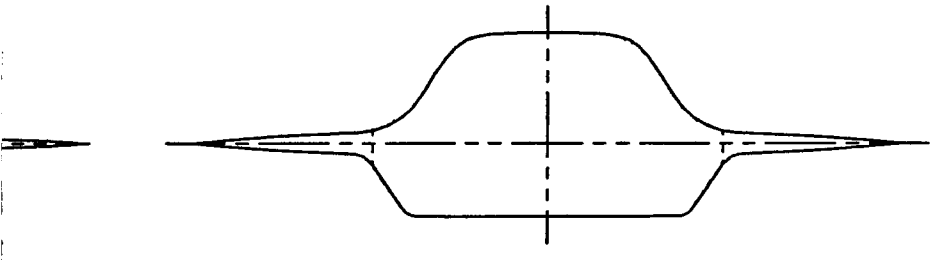

FS 330.00

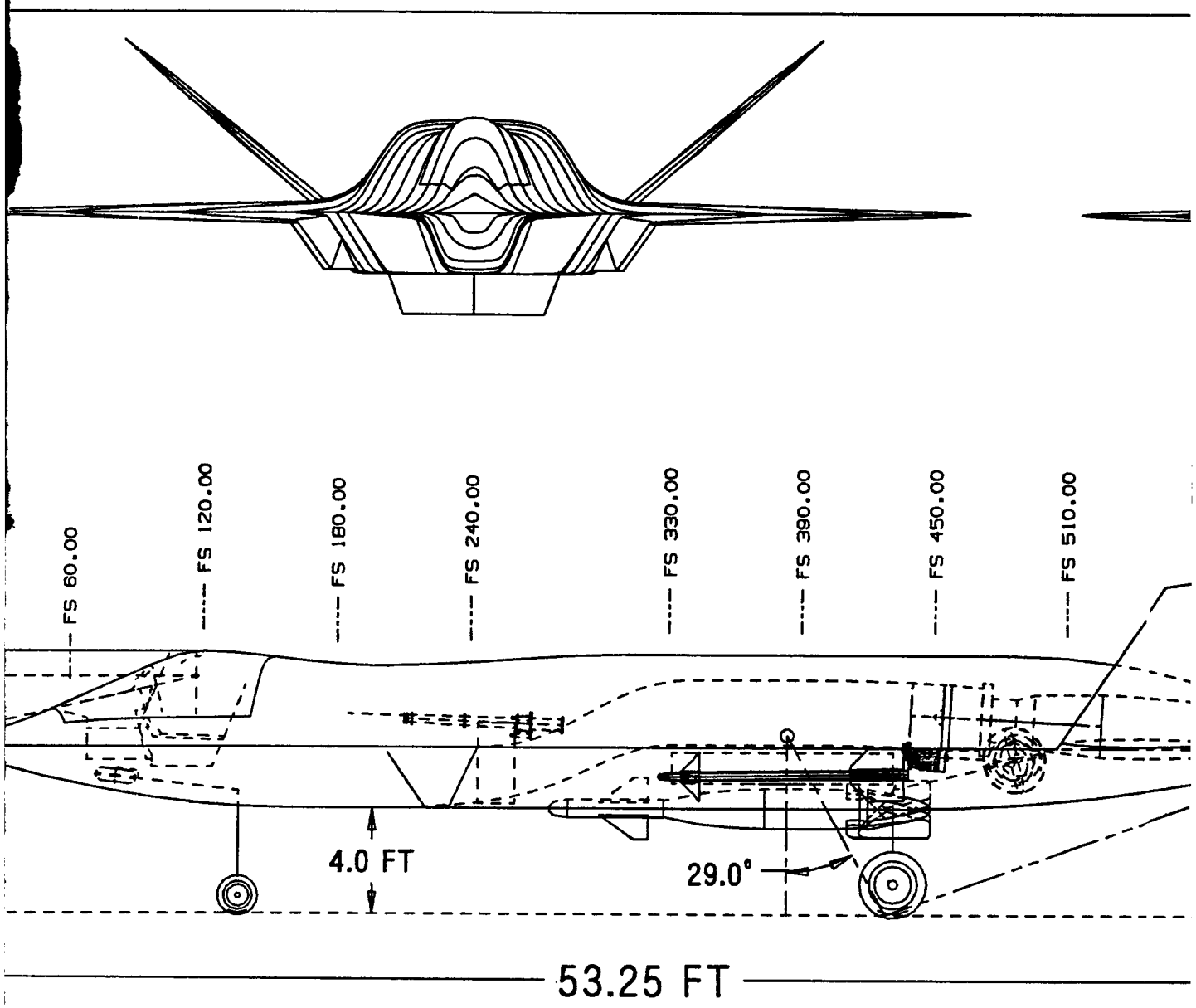
FS 60.00
FS 120.00
FS 180.00
FS 240.00
FS 330.00
FS 390.00
FS 450.00
FS 510.00
4.0 FT
29.0°
53.25 FT

296-2404 SU

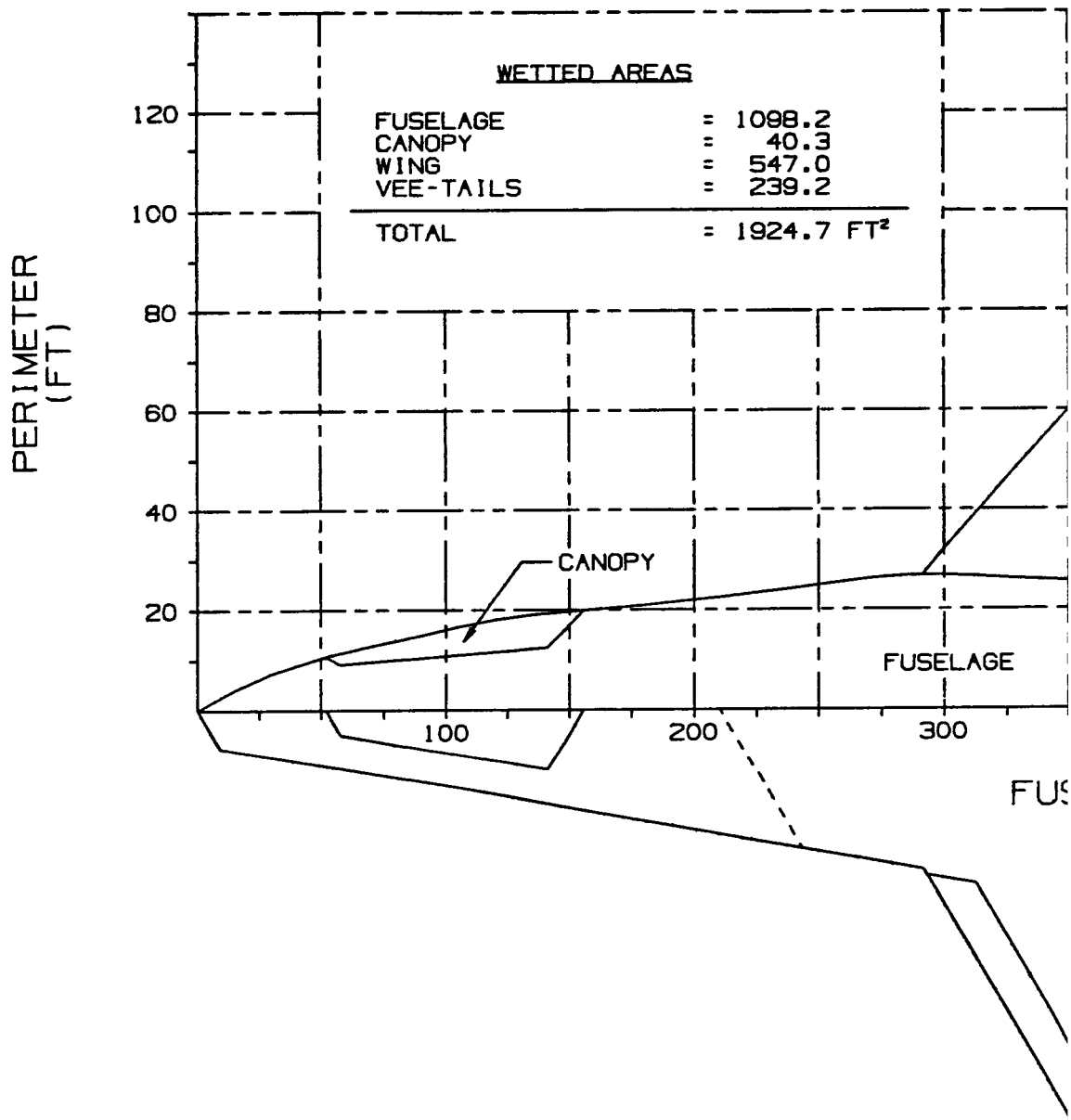
WETTED AREAS
FUSELAGE = 1098.2
CANOPY = 40.3
WING = 547.0
VEE-TAILS = 239.2
TOTAL = 1924.7 FT²
PERIMETER (FT)
120
100
80
60
40
20
CANOPY
FUSELAGE
100
200
300
FUS

RFACE AREA PLOT

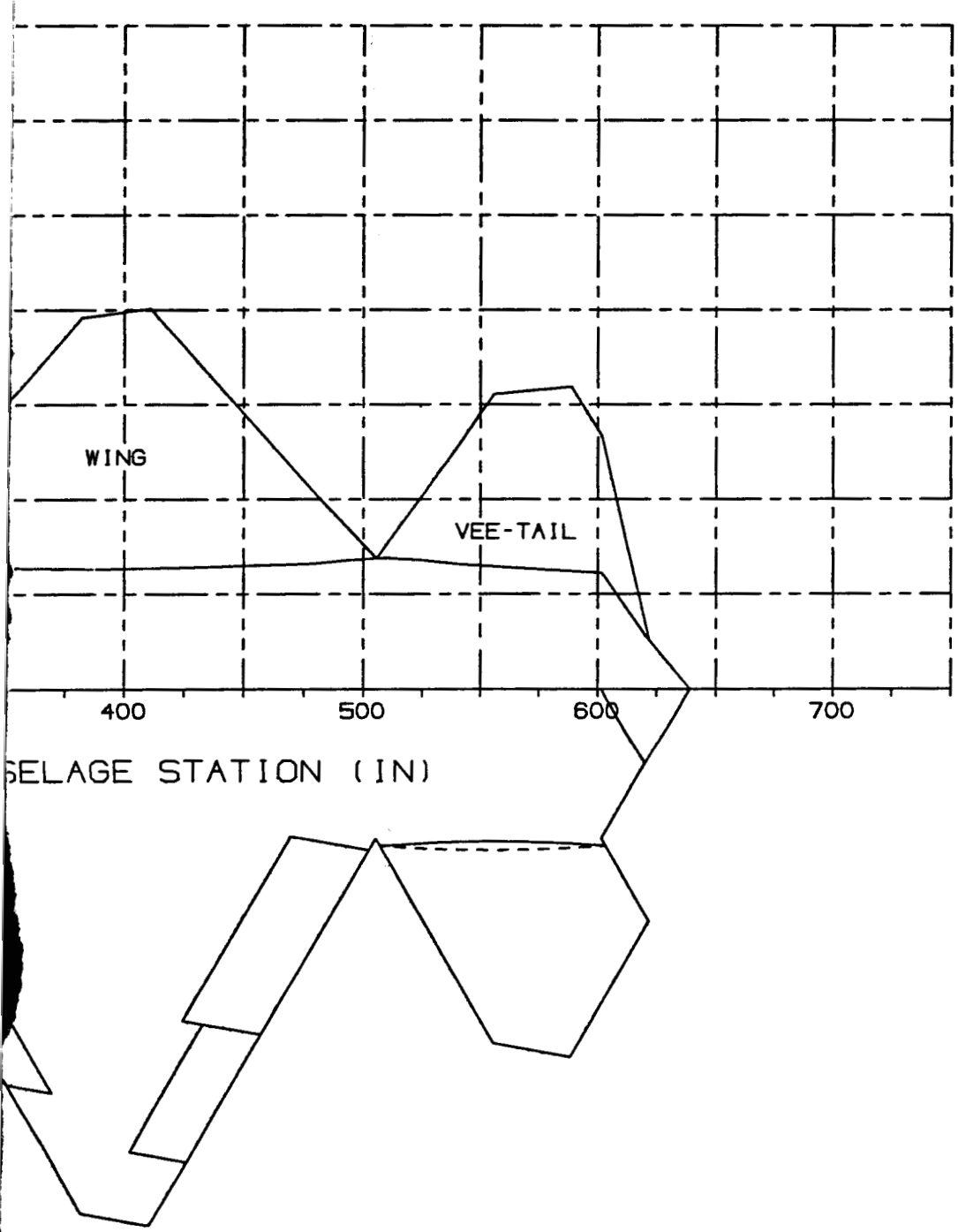

CROSS SECTIONAL AREA

296-2404 CROSS SECTIONAL

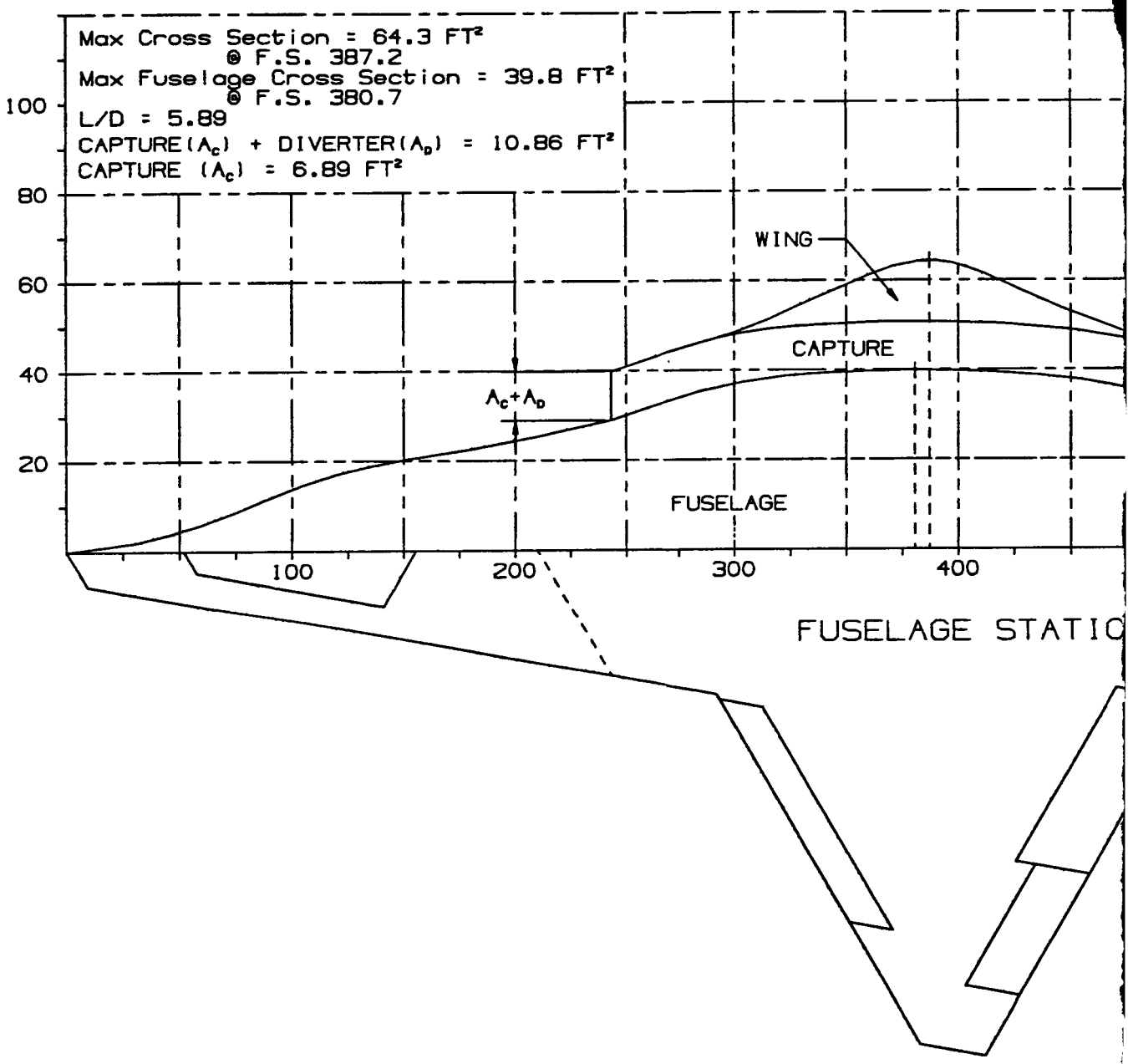

AREA PLOT

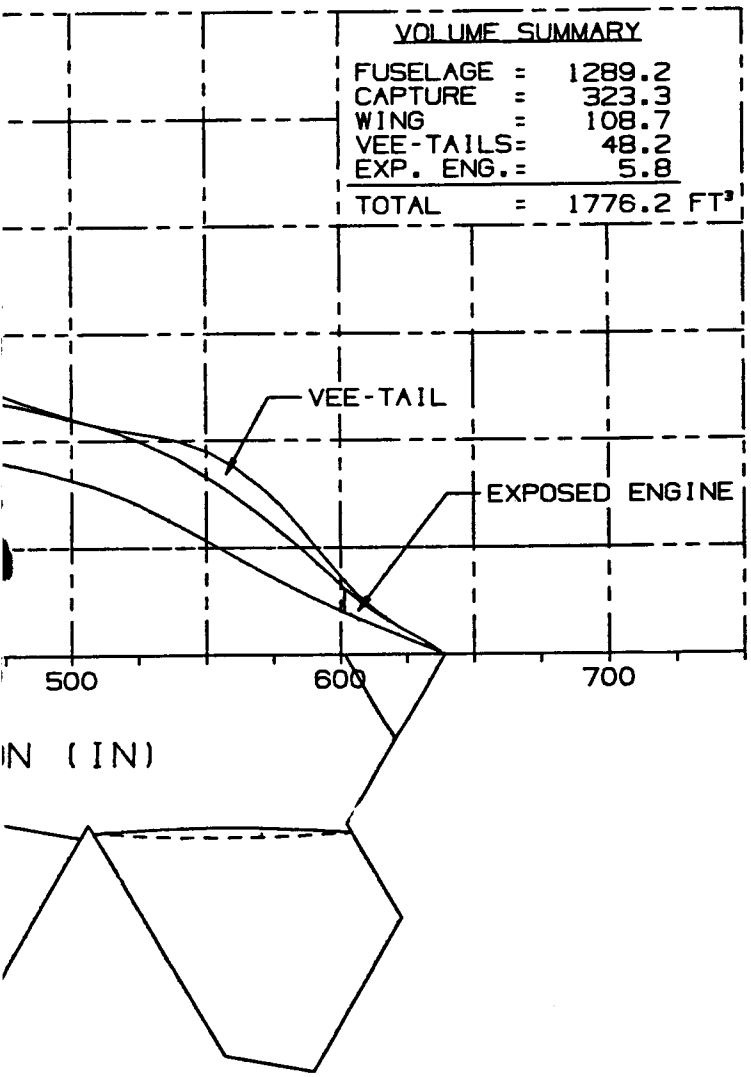
VOLUME SUMMARY
FUSELAGE = 1289.2
CAPTURE = 323.3
WING = 108.7
VEE-TAILS= 48.2
EXP. ENG.= 5.8
TOTAL = 1776.2 FT³
VEE-TAIL
EXPOSED ENGINE
500
600
700
IN (IN)

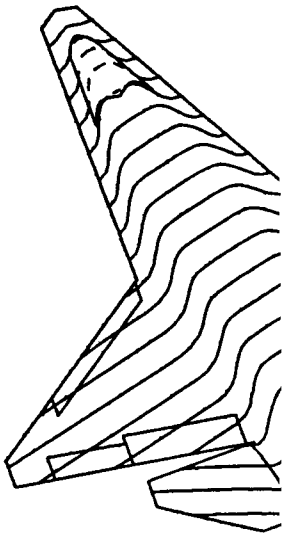

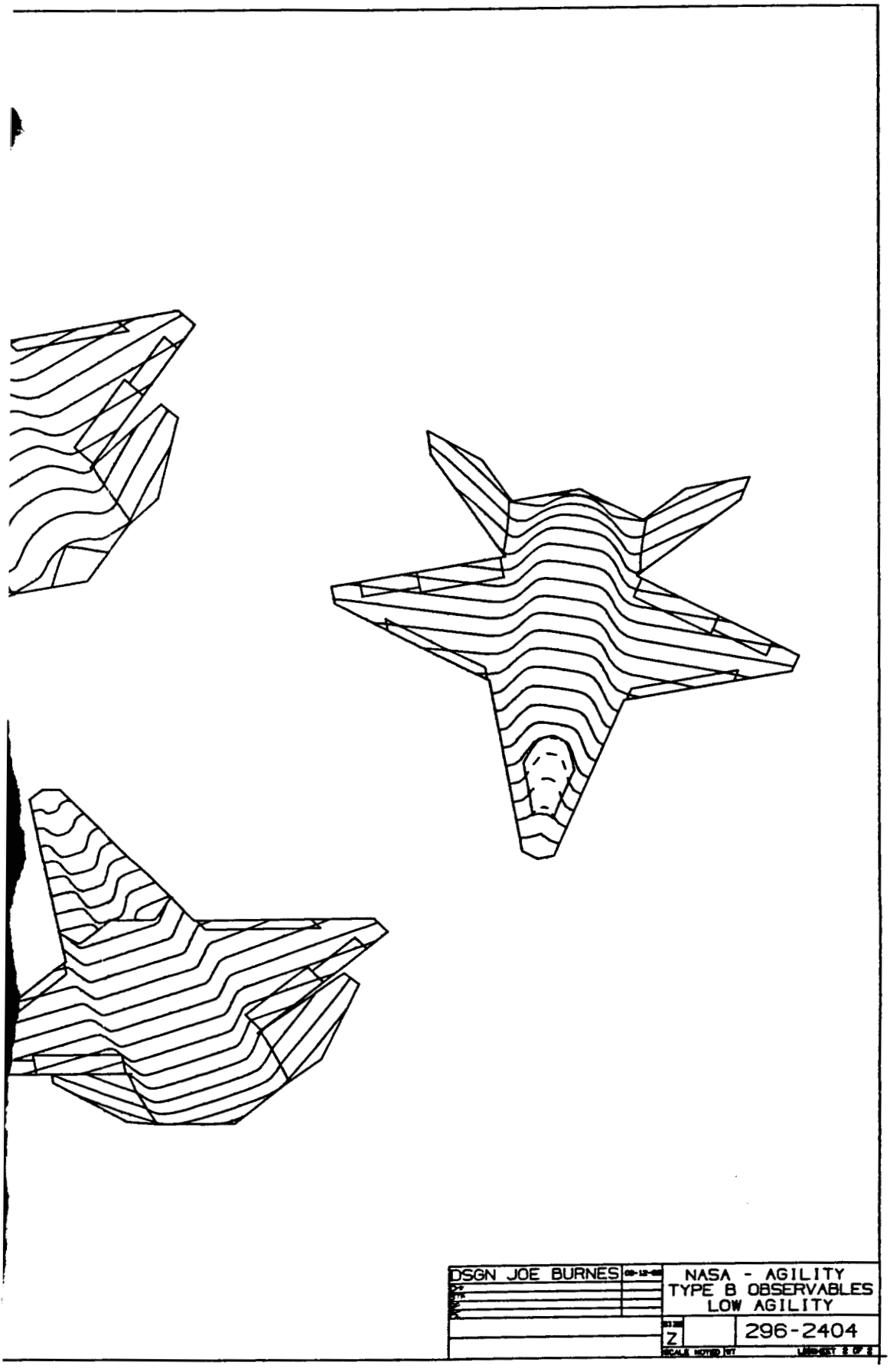
DSGN JOE BURNES
NASA - AGILITY
TYPE B OBSERVABLES
LOW AGILITY
Z
296-2404
SCALE NOTED IN
SHEET 2 OF 2
296-2404 SH 2 OF 2

FS 630.00

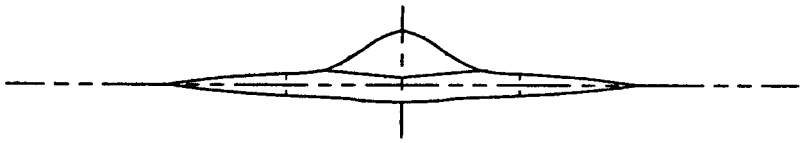

FS 600.00

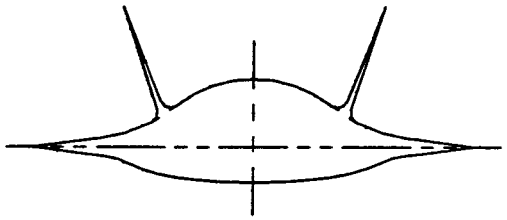

FS 570.00

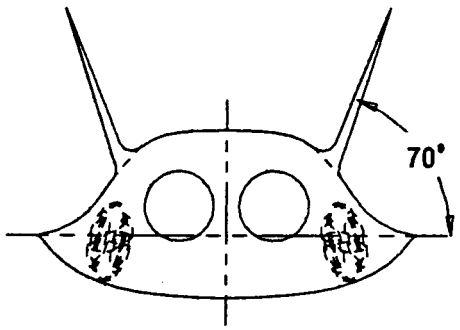

FS 510.00

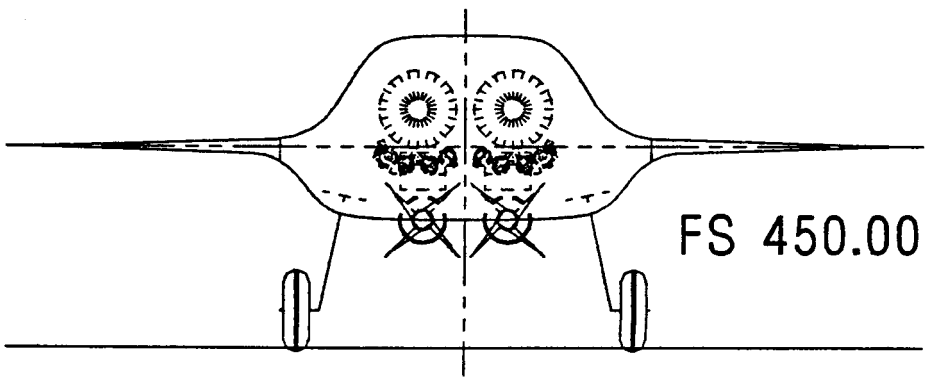

FS 450.00

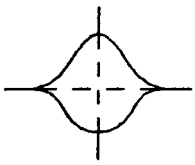

FS 60.00

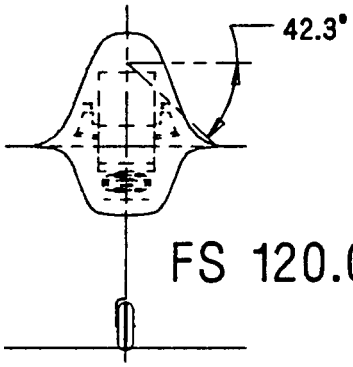

FS 120.00

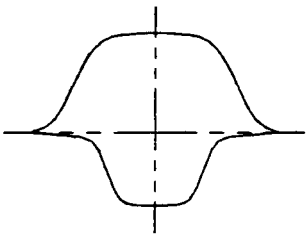

FS 180.00

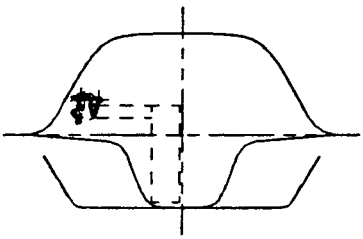

FS 240.00

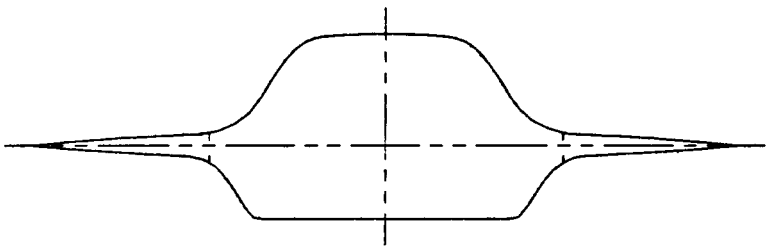

FS 330.00

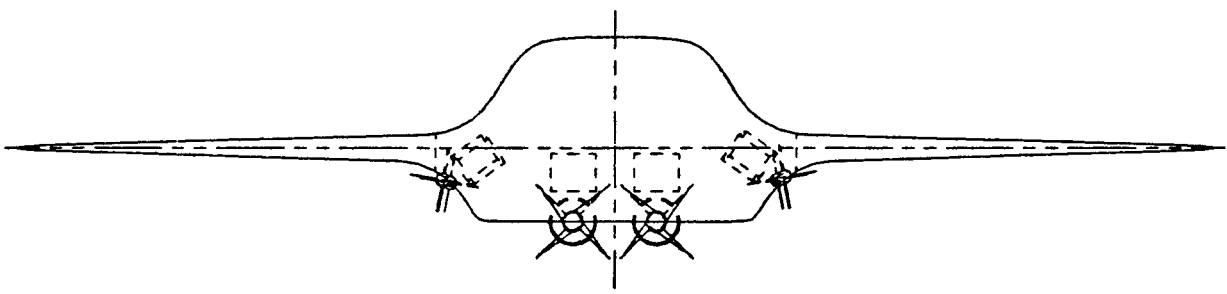

FS 390.00

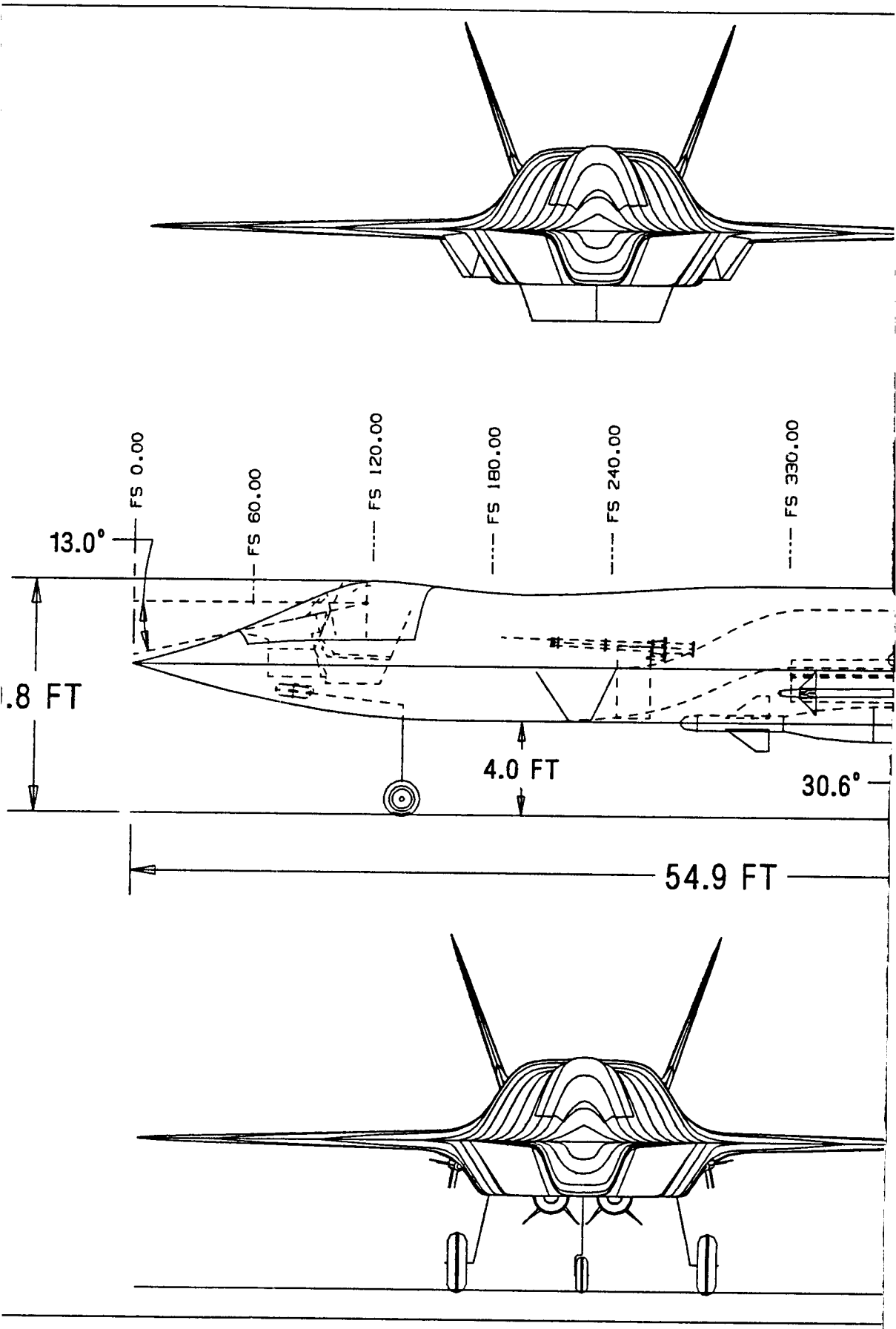
FS 0.00
FS 60.00
FS 120.00
FS 180.00
FS 240.00
FS 330.00
13.0°
.8 FT
4.0 FT
30.6°
54.9 FT

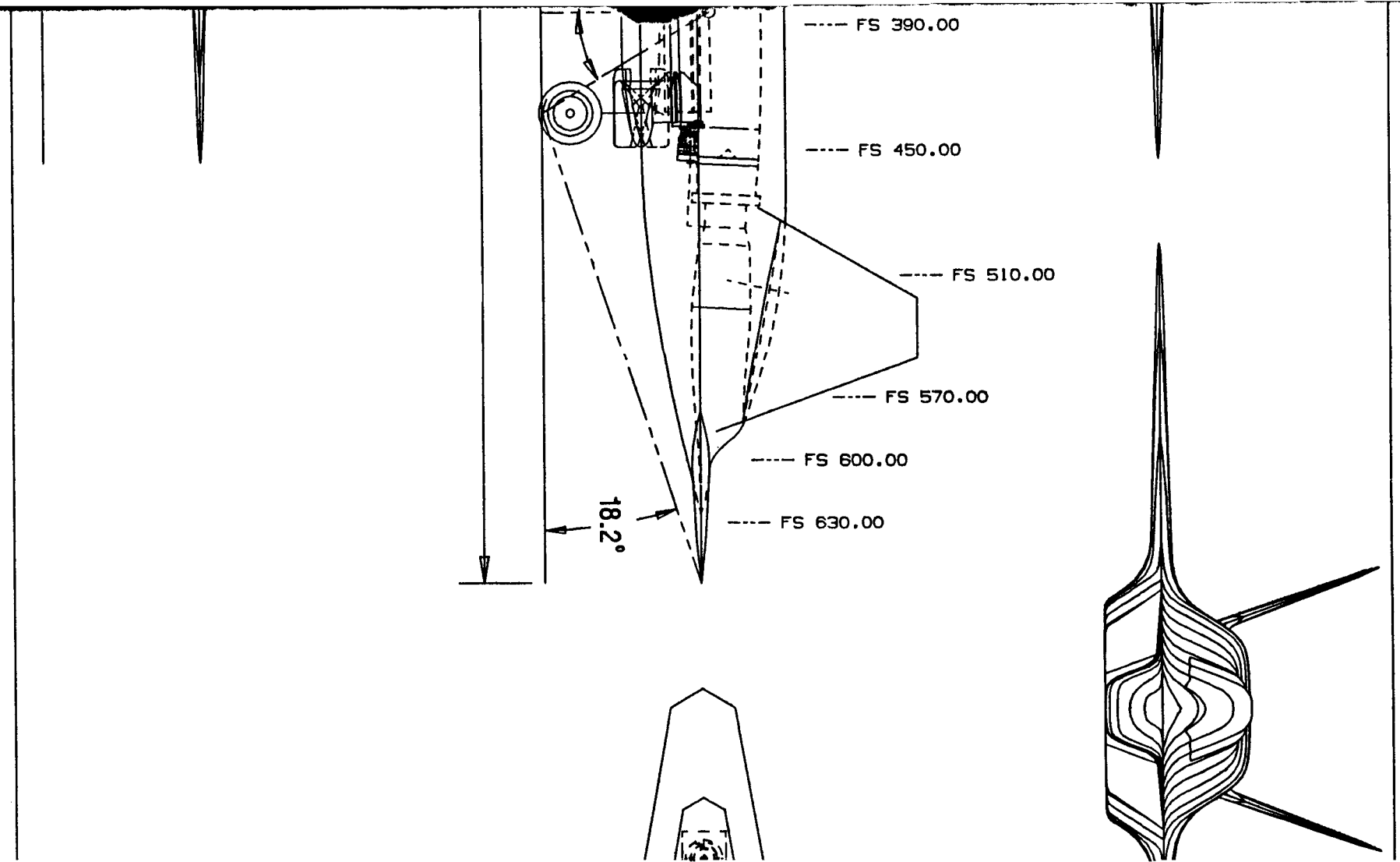
FS 390.00
FS 450.00
FS 510.00
FS 570.00
FS 600.00
FS 630.00
18.2°

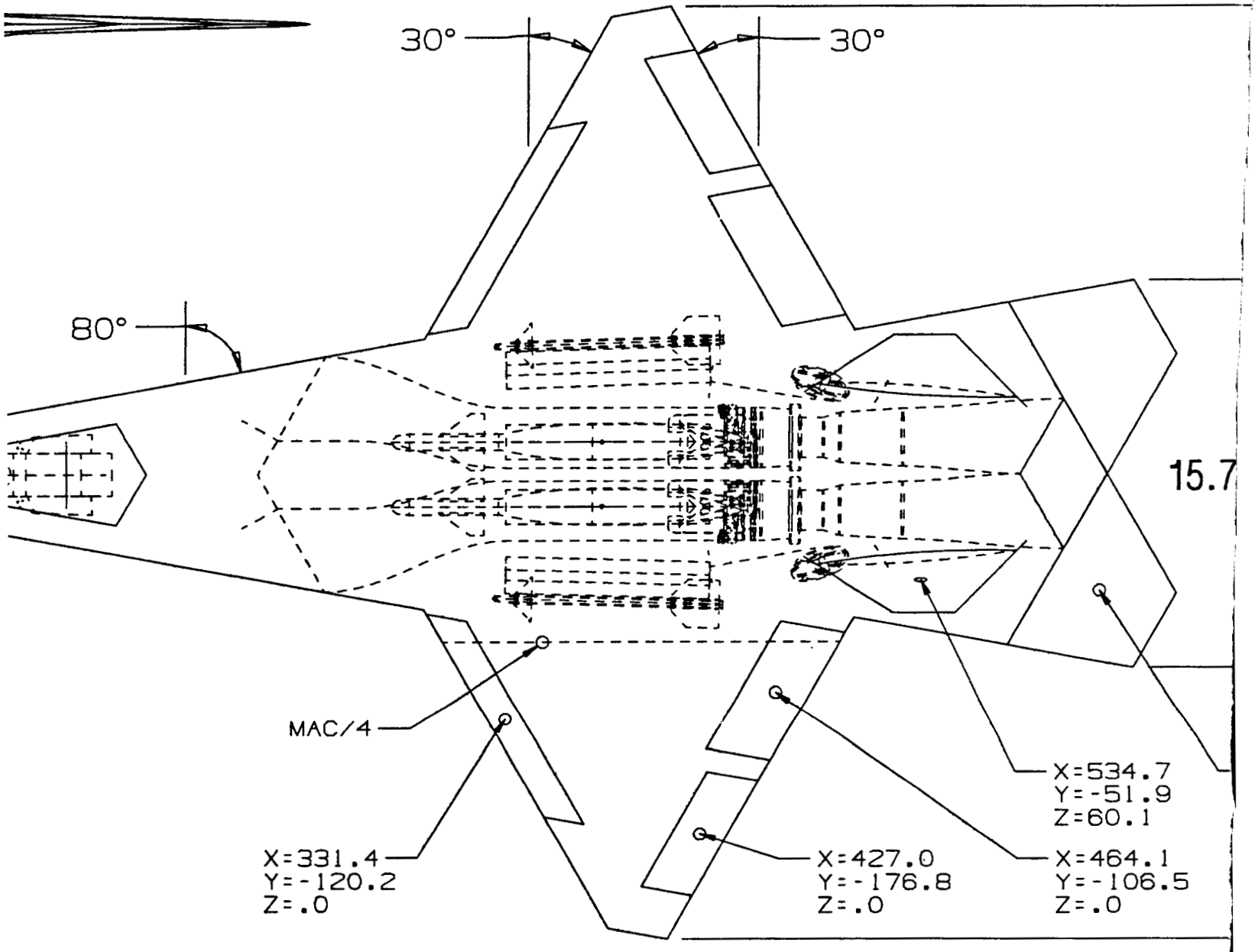
30°
30°
80°
15.7
MAC/4
X=331.4
Y=-120.2
Z=.0
X=427.0
Y=-176.8
Z=.0
X=464.1
Y=-106.5
Z=.0
X=534.7
Y=-51.9
Z=60.1

FT 38.04 FT

=621.7
=-56.8
=.0

CHARACTERISTICS	WING	CANTED TAIL EACH TRUE	VERT. TAIL EACH TRUE	HORZ. TAIL EACH TRUE	CANARD EACH TRUE	THRUST-BLOWN ELEVON EACH TRUE
S (FT2) THEO	500.0	80.49	-	-	-	-
S (FT2) EXPO	262.43	44.12	-	-	-	28.02
ASPECT RATIO	2.89	3.74	-	-	-	-
TAPER RATIO	0.100	.271	-	-	-	.432
REF. SPAN (FT)	38.04	18.3	-	-	-	-
1/2 REF. SPAN (IN)	228.2	110.0	-	-	-	-
ROOT CHORD (IN)	289.8	110.8	-	-	-	98.5
TIP CHORD (IN)	28.0	30.0	-	-	-	41.8
MAC (IN)	194.8	77.2	-	-	-	-
YBAR (IN)	82.1	49.8	-	-	-	-
L.E. OF MAC (IN)	200.7	492.9	-	-	-	-
F.S. 1/4 MAC (IN)	349.4	511.8	-	-	-	-
B.L./W.L. MAC (IN)	82.1/0.0	53.6/49.66	-	-	-	-
SWEEP OF L.E.	30°	28.5°	-	-	-	70.5°
SWEEP OF T.E.	-30°	-18.9°	-	-	-	-20.0°
AIRFOIL CR	64A (MOD)	BICONVEX	-	-	-	BICONVEX
AIRFOIL CT	64A (MOD)	BICONVEX	-	-	-	BICONVEX
T/C ROOT	5%	5%	-	-	-	8%
T/C TIP	5%	5%	-	-	-	8%
INCIDENCE	-	-	-	-	-	-
DIHEDRAL	-	70.0°	-	-	-	-
TOE	-	-	-	-	-	-
TWIST	-	-	-	-	-	-
CAMBER	-	-	-	-	-	-
STATIC MARGIN (%)	-	-	-	-	-	-

PROPULSION		
ENGINE NAME	GENS-20000	
SCALE FACTOR	-	
NUMBER OF ENGINES	2	
ENGINE WEIGHT (EA)	1482	lbs
CAP. AREA TOTAL	8.89	FT²
B.L.D. AREA TOTAL	3.70	FT²
FNELSU (EA)	19250	lbs
FNELSI (EA)	-	lbs
NOZZLE AREA TOTAL	4.5	FT²
ASPECT RATIO	3.8	
INCIDENCE	-	degrees
TILT	-3	degrees
ROLL	-	degrees
TOE	-	degrees
TVC PITCH (+)	-	degrees
TVC PITCH (-)	-	degrees
TVC YAW (+/-)	-	degrees

CONTROLS	AREA (TOTAL) TRUE (FT²)	DEFLECTION +	DEFLECTION -	TRUNNION LOCATION
AILERON	21.8	-	-	-
ELEVON	30.4	-	-	-
L.E. FLAP	24.1	-	-	-
T.E. FLAP	-	-	-	-
VERT. TAIL	-	-	-	-
HORIZ. TAIL	-	-	-	-
VEE-TAIL	119.8	-	-	-
THRUST-BLOWN ELEVON	58.1	-	-	-
CANTED TAILS	70.5	-	-	-
-	-	-	-	-
-	-	-	-	-

WETTED AREA		
FUSELAGE	1117.0	FT²
INLET	-	FT²
CANOPY	40.3	FT²
CANARD (HORZ)	-	FT²
CANARD (VERT)	-	FT²
WING (INNER)	528.3	FT²
HORIZ. TAIL	-	FT²
CANTED TAIL	173.5	FT²
BLOWN ELEVON	115.3	FT²
EXPOSED ENG.	-	FT²
TOTAL	1972.4	FT²

AIRCRAFT VOLUME CHARACTERISTICS		
FUSELAGE	1242.8	FT³
CAPTURE	228.0	FT³
WING	101.3	FT³
CANARD	-	FT³
CANTED TAIL	19.9	FT³
HORIZ. TAIL	-	FT³
BLOWN ELEVON	18.4	FT³
EXPOSED ENGINE	-	FT³
TOTAL A/C VOLUME	1708.3	FT³
MAX CROSS-SECTION	81.9	FT²
MAX FUSELAGE CROSS-SECTION	39.8	FT²
L/D	8.19	

AIRCRAFT CHARACTERISTIC ESTIMATES (USED FOR AIRCRAFT SIZING)		
T.O.G.W.	40,000	EST.
FUEL WEIGHT	32% T.O.G.W.	

LANDING GEAR	NOSE GEAR	MAIN GEAR
TIRE SIZE	18.00X5.50	30.00X7.70
STROKE	10.0	10.0
PRESSURE	215 PSI	295 PSI

ARMAMENT
(2) GBU-24 LGB (SEMI-SUBMERGED) OR (2) AIM-120 MISSILES (SEMI-SUBMERGED)
(2) AIM-9 MISSILES (SEMI-SUBMERGED)
20 MM GUN / 500 ROUNDS AMMO.
(4) HARD POINTS (HYDRAULIC RACKS)

SHEET 1 OF 2 296-2405

DSGN JOE BURNES	09-12-90	NASA - AGILITY TYPE B OBSERVABLES MODERATE AGILITY
		SIZE Z — 296-2405
		SCALE NOTED WT — LB/SHEET 1 OF 2

296-2405 S

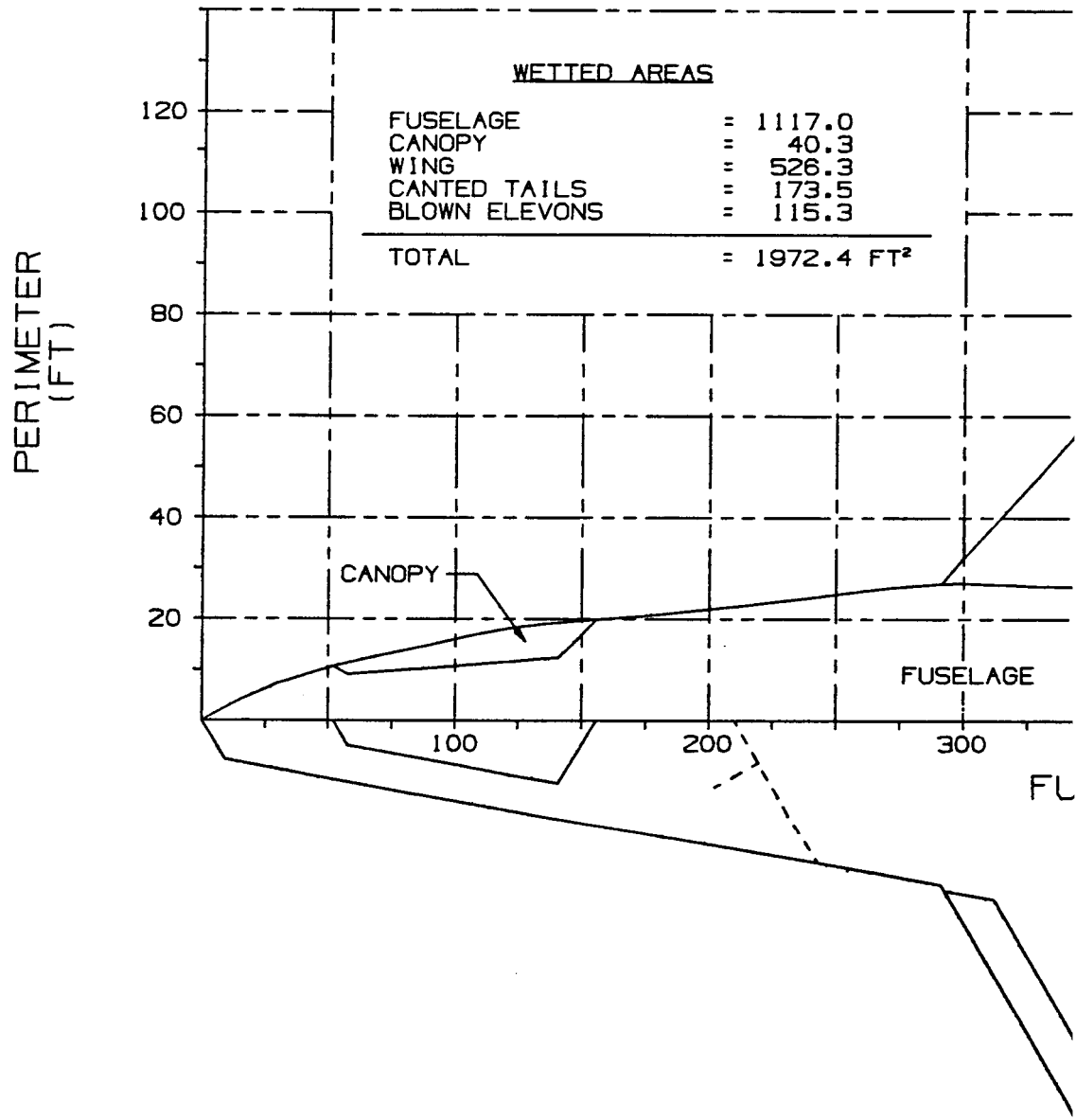
WETTED AREAS
FUSELAGE = 1117.0
CANOPY = 40.3
WING = 526.3
CANTED TAILS = 173.5
BLOWN ELEVONS = 115.3
TOTAL = 1972.4 FT²
PERIMETER (FT)
120
100
80
60
40
20
CANOPY
FUSELAGE
100
200
300
FL

URFACE AREA PLOT

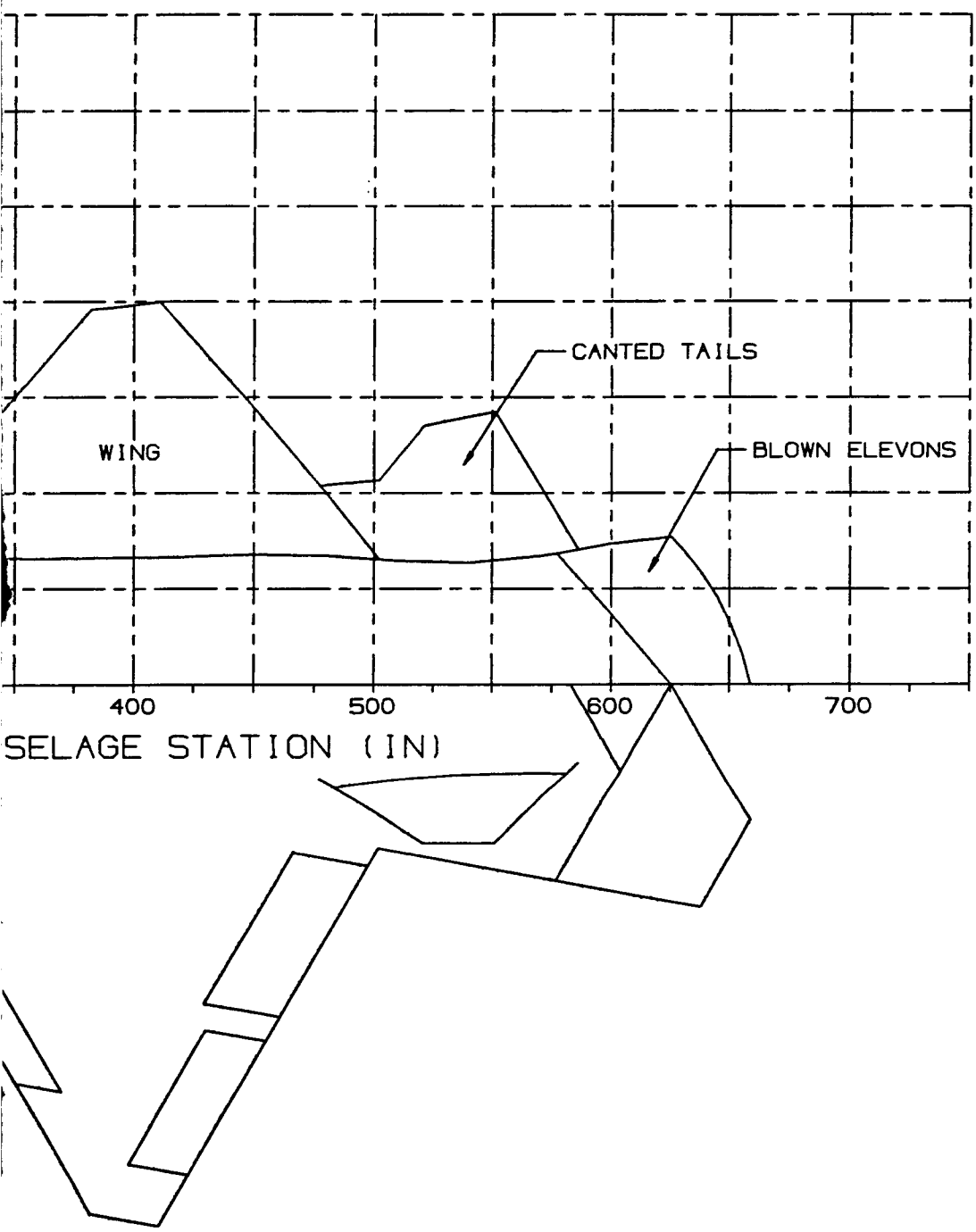

CROSS SECTIONAL AREA

296-2405 CROSS SECTIONAL

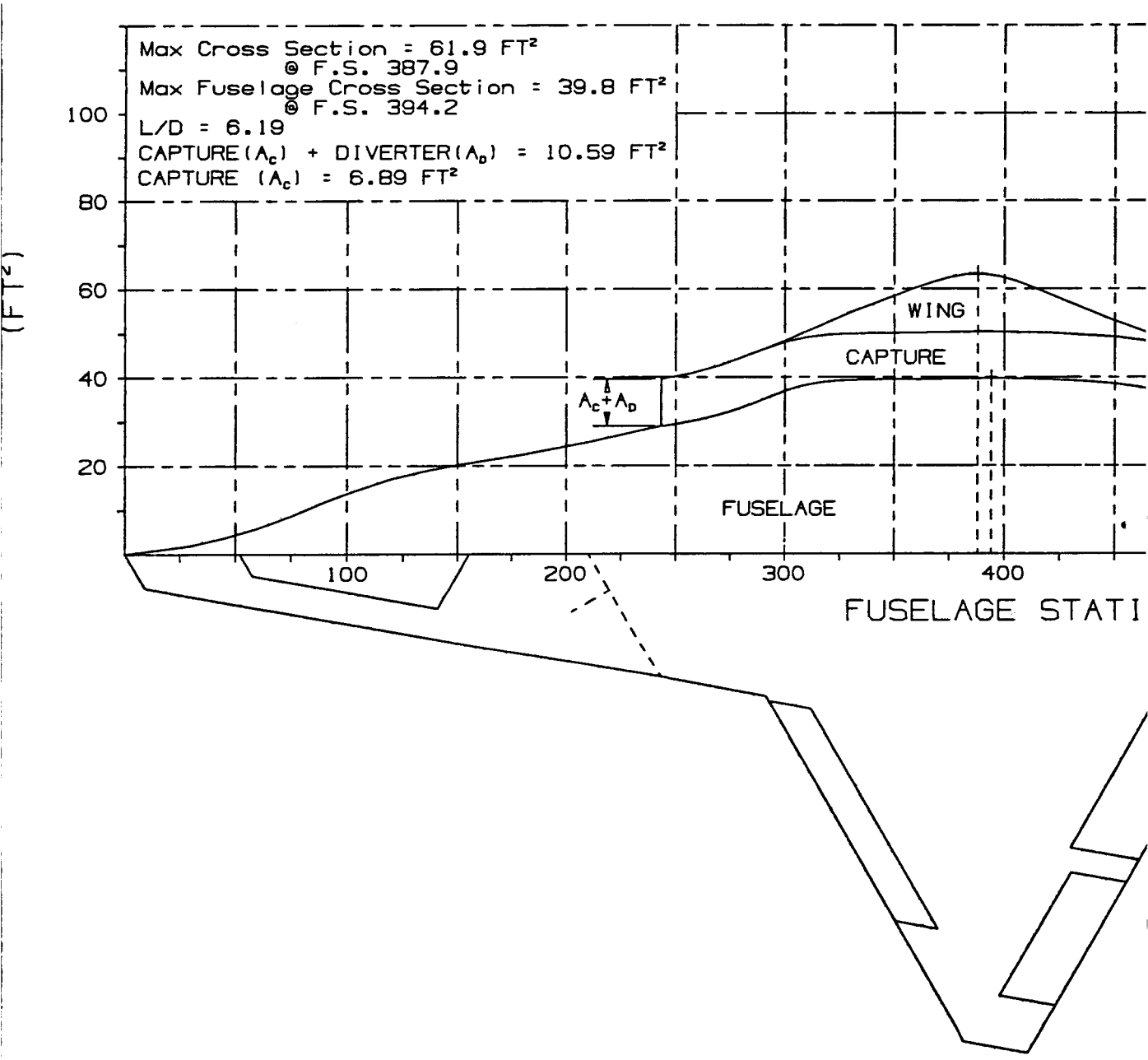

L AREA PLOT

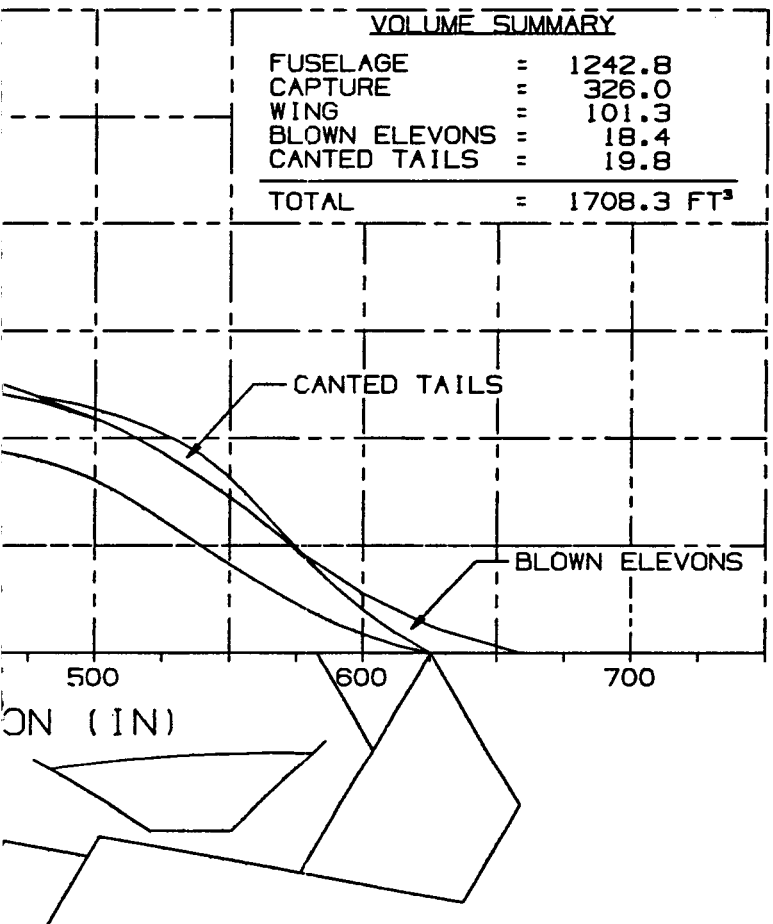
VOLUME SUMMARY
FUSELAGE = 1242.8
CAPTURE = 326.0
WING = 101.3
BLOWN ELEVONS = 18.4
CANTED TAILS = 19.8
TOTAL = 1708.3 FT³
CANTED TAILS
BLOWN ELEVONS
500
600
700
ON (IN)

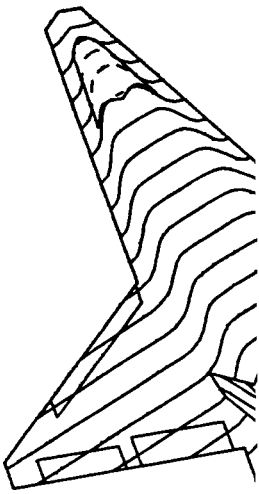

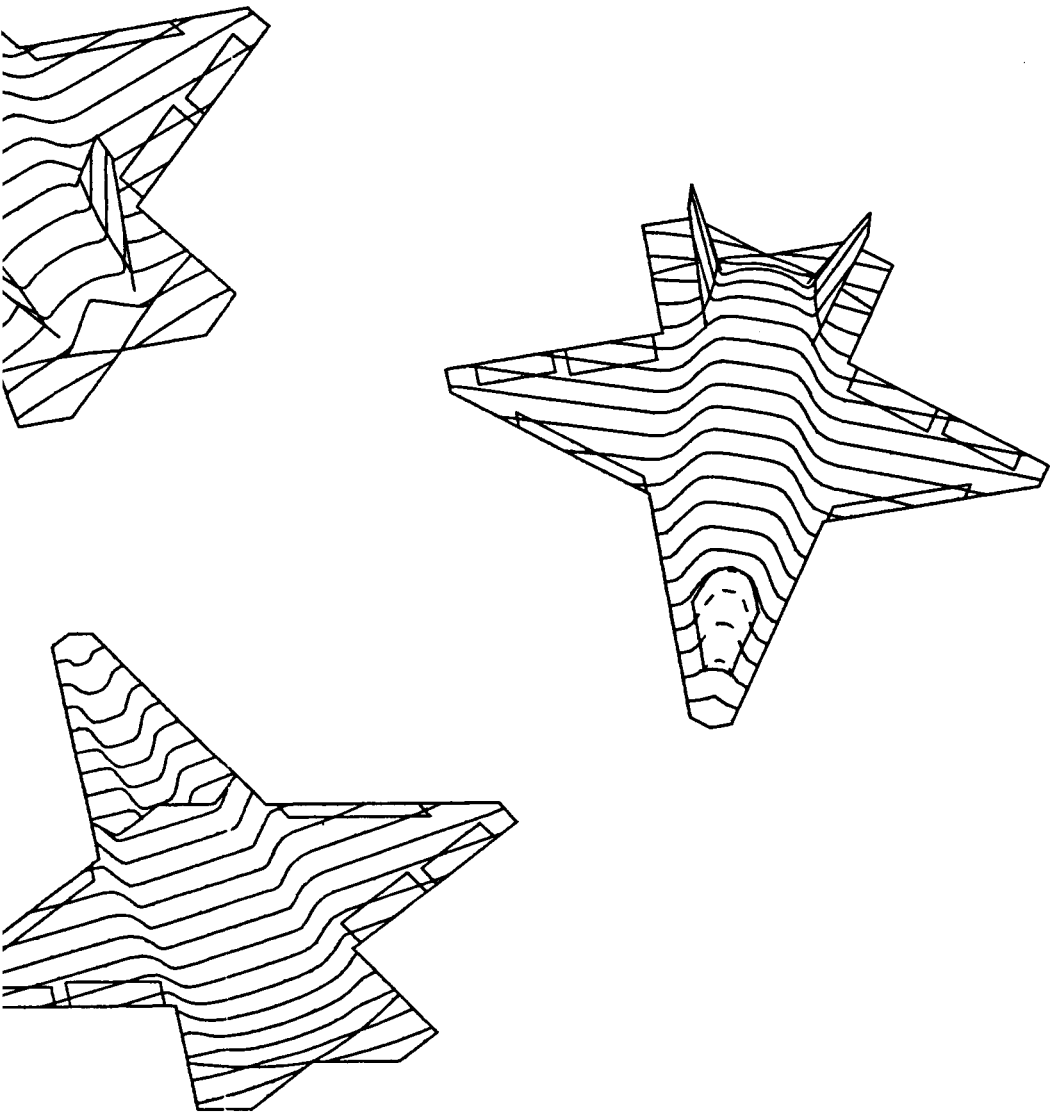

DSGN JOE BURNES	NASA - AGILITY TYPE B OBSERVABLES MODERATE AGILITY
SIZE Z	296-2405
SCALE NOTED IN	SHEET 2 OF 2

296-2405 SH 2 OF 2

FS 630.00

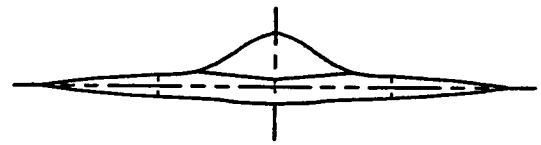

FS 600.00

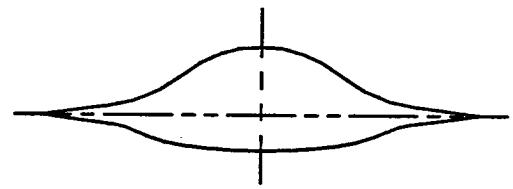

FS 570.00

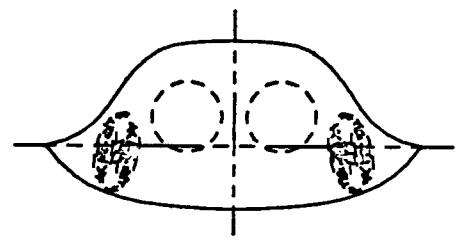

FS 510.00

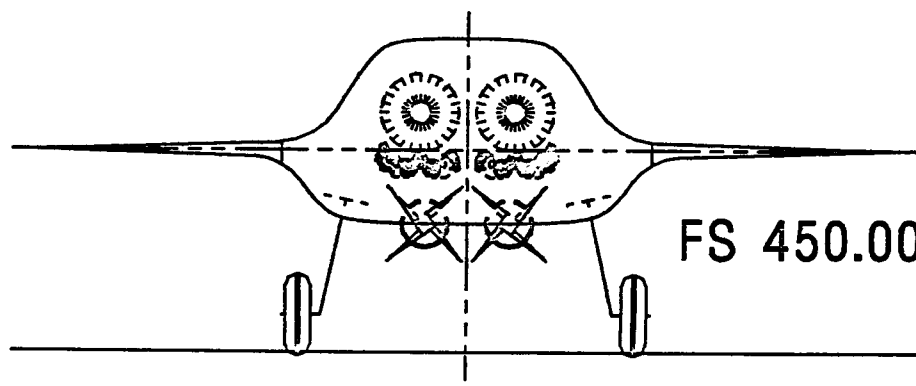

FS 450.00

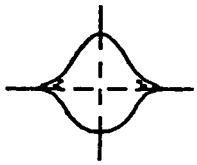

FS 60.00

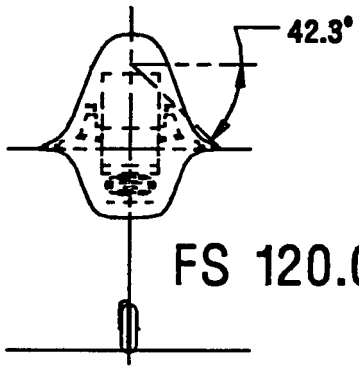

FS 120.00

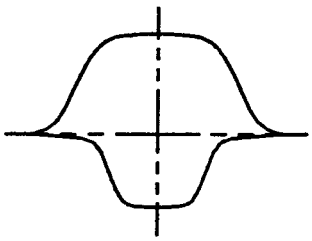

FS 180.00

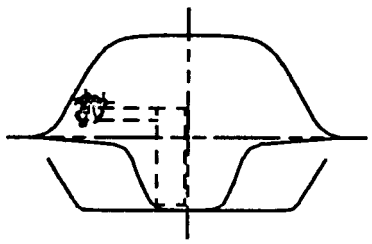

FS 240.00

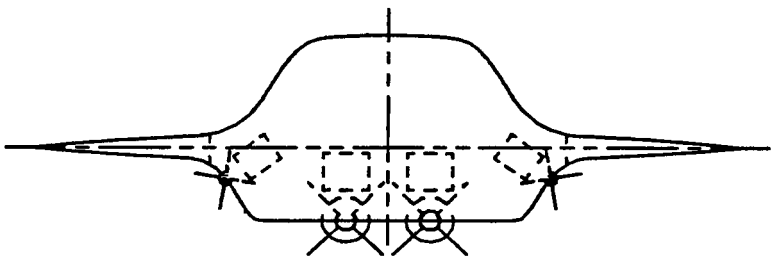

FS 330.00

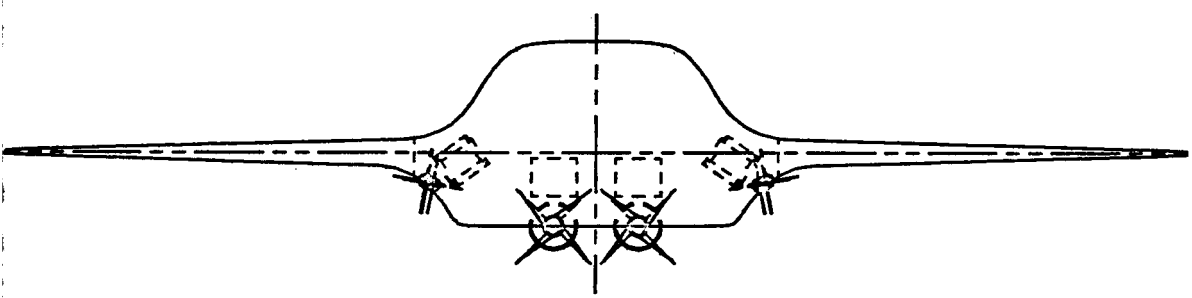

FS 390.00

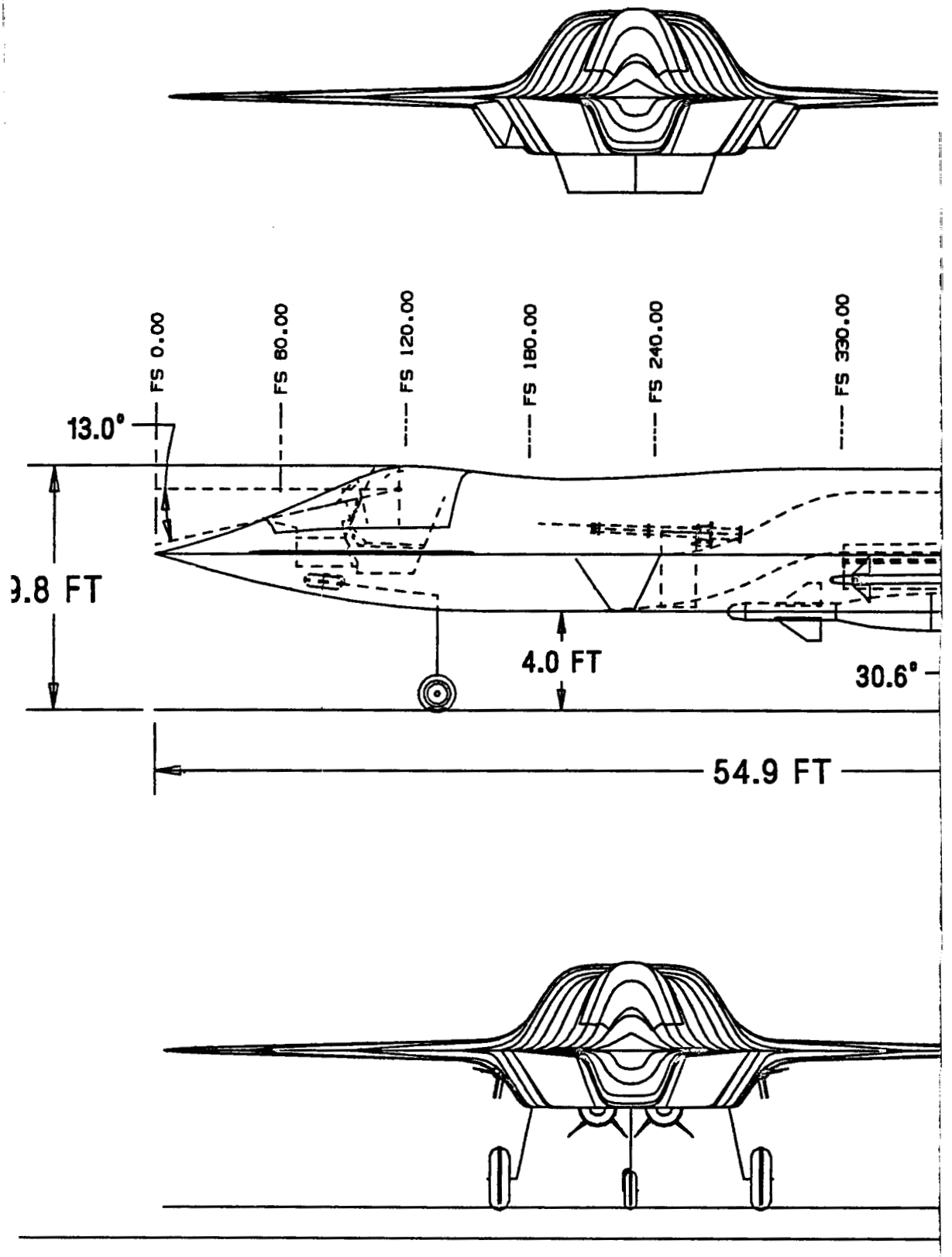
FS 0.00
FS 60.00
FS 120.00
FS 180.00
FS 240.00
FS 330.00
13.0°
9.8 FT
4.0 FT
30.6°
54.9 FT

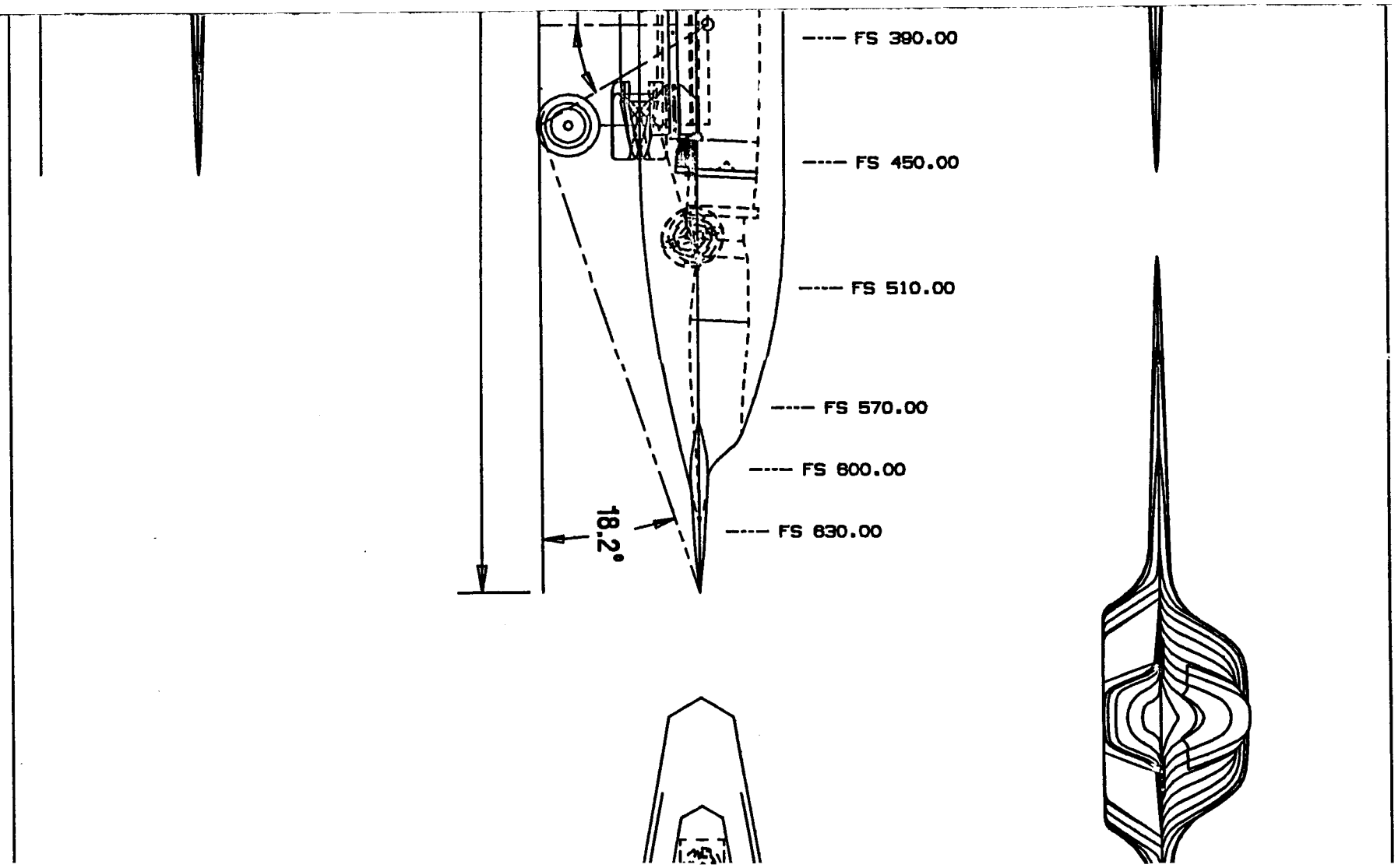
FS 390.00
FS 450.00
FS 510.00
FS 570.00
FS 600.00
FS 630.00
18.2°

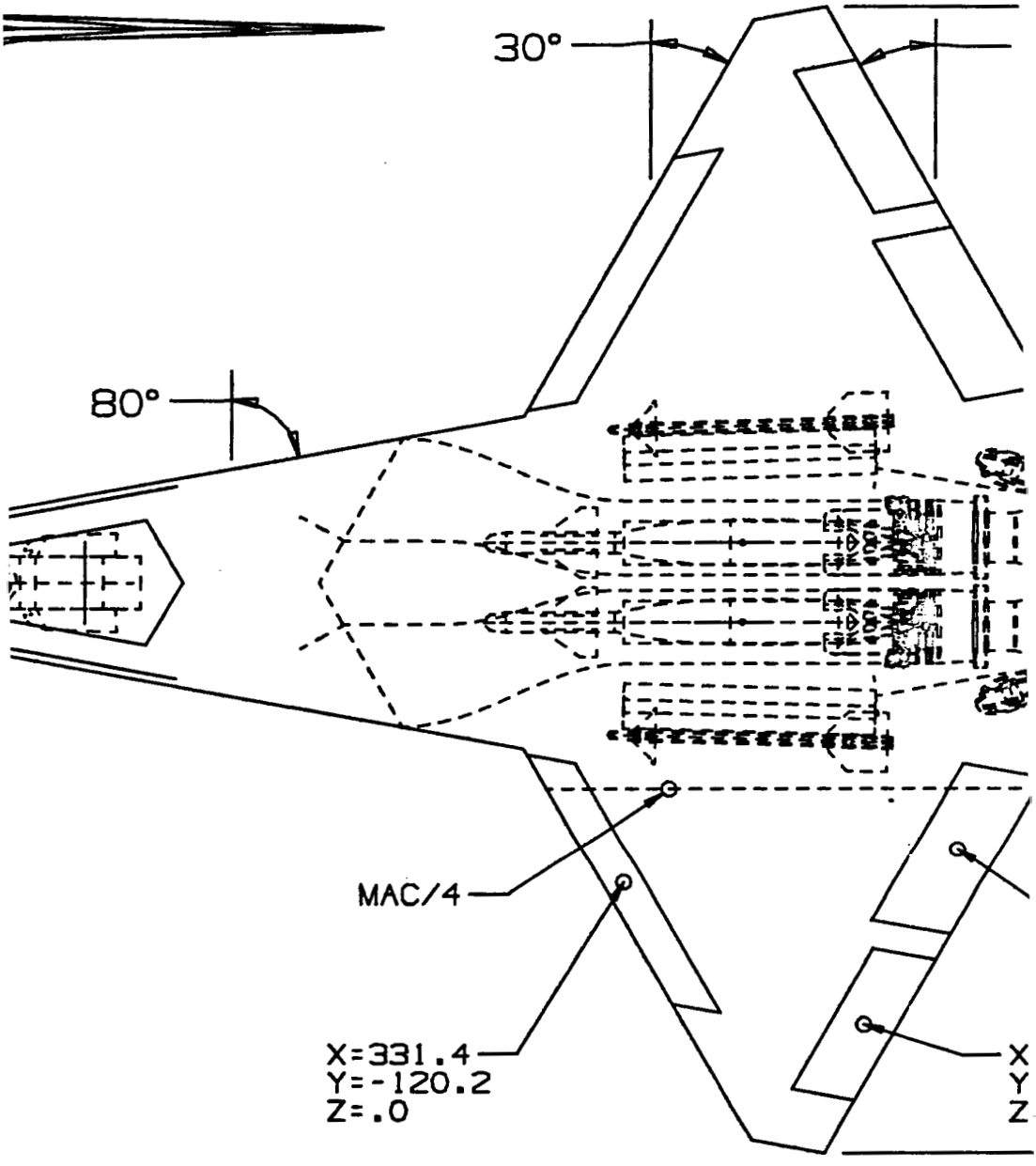
30°
80°
MAC/4
X=331.4
Y=-120.2
Z=.0

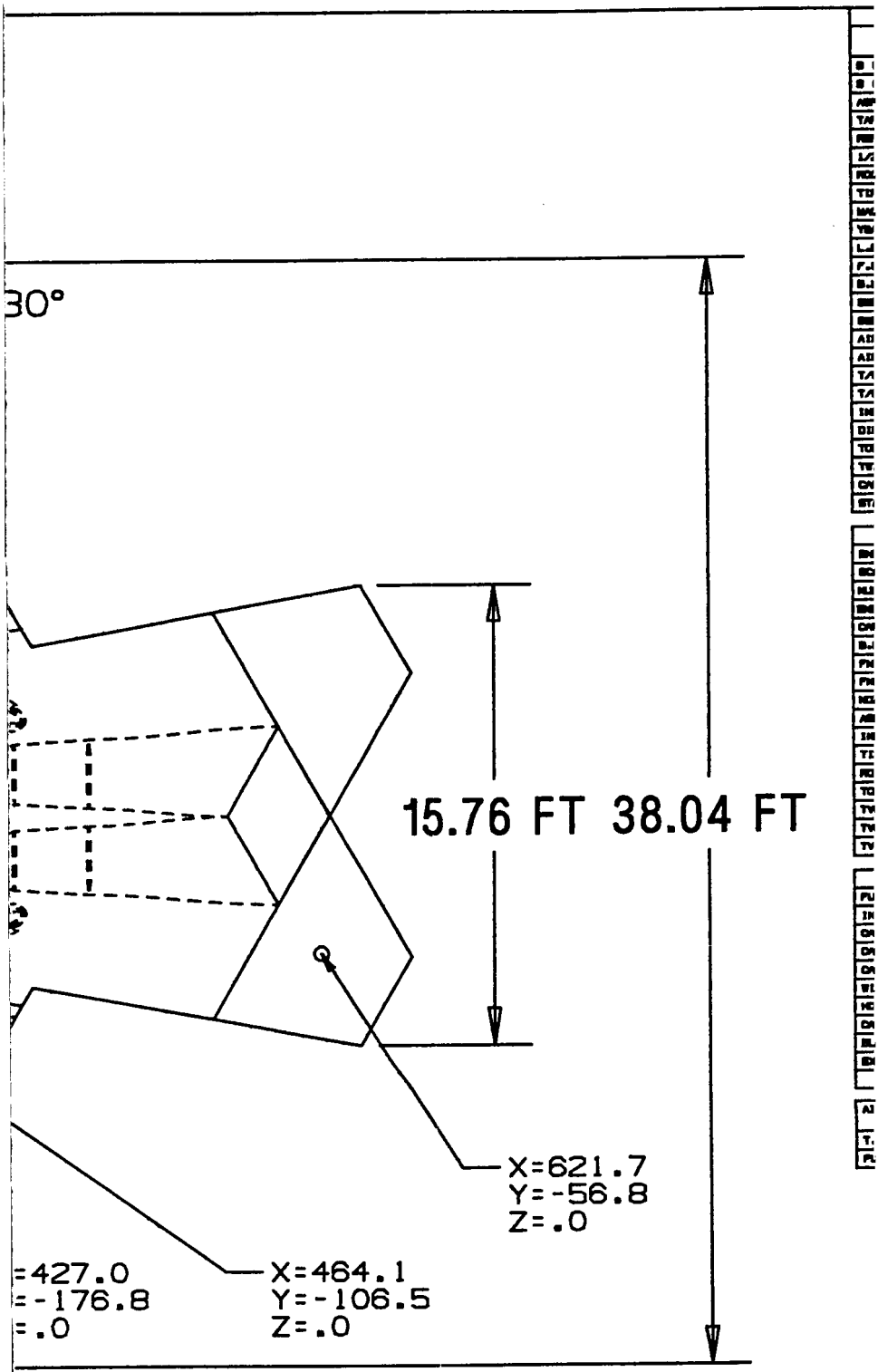
30°
15.76 FT
38.04 FT
X=621.7
Y=-56.8
Z=.0
=427.0
=-176.8
=.0
X=464.1
Y=-106.5
Z=.0

CHARACTERISTICS	WING	CANTED TAIL (EACH TAIL)	VERT. TAIL (EACH TAIL)	HORIZ. TAIL (EACH TAIL)	CANARD (EACH TAIL)	THRUST-SLOSH ELEVON (EACH TAIL)
D THEO	[illegible]	-	-	-	-	-
D EXPO	[illegible]	-	-	-	-	[illegible]
T RATIO	[illegible]	-	-	-	-	-
RATIO	0.100	-	-	-	-	[illegible]
PAN (FT)	[illegible]	-	-	-	-	-
F. SPAN (IN)	[illegible]	-	-	-	-	-
HORD (IN)	[illegible]	-	-	-	-	[illegible]
ORD (IN)	[illegible]	-	-	-	-	[illegible]
N	[illegible]	-	-	-	-	-
IN)	[illegible]	-	-	-	-	-
F MAC (IN)	[illegible]	-	-	-	-	-
/4 MAC (IN)	[illegible]	-	-	-	-	-
.L. MAC (IN)	[illegible]	-	-	-	-	-
OF L.E.	[illegible]	-	-	-	-	[illegible]
OF T.E.	[illegible]	-	-	-	-	[illegible]
L CR	[illegible]	-	-	-	-	BICONVEX
L CT	[illegible]	-	-	-	-	BICONVEX
OT	[illegible]	-	-	-	-	[illegible]
P	[illegible]	-	-	-	-	[illegible]
NCE	-	-	-	-	-	-
L	-	-	-	-	-	-
	-	-	-	-	-	-
	-	-	-	-	-	-
	-	-	-	-	-	-
MARGIN (IN)	-	-	-	-	-	-

PROPULSION		
NAME	[illegible]	
ACTOR	-	
OF ENGINES	2	
WEIGHT (EA)	[illegible]	lbs
EA TOTAL	[illegible]	FT²
AREA TOTAL	2.70	FT²
(EA)	[illegible]	lbs
(EA)	-	lbs
AREA TOTAL	[illegible]	FT²
RATIO	[illegible]	
DE	-	degrees
	-2	degrees
	-	degrees
	-	degrees
N (+)	X.X	degrees
N (-)	X.X	degrees
(+/-)	X.X	degrees

CONTROLS	AREA (TOTAL) TILE (FT²)	DEFLECTION +	DEFLECTION -	TRUNNION LOCATION
AILERON	21.8	-	-	-
ELEVON	30.4	-	-	-
L.E. FLAP	24.1	-	-	-
T.E. FLAP	-	-	-	-
VERT. TAIL	-	-	-	-
HORIZ. TAIL	-	-	-	-
VEE-TAIL	-	-	-	-
THRUST-SLOSH ELEVON	[illegible]	-	-	-
CANTED TAILS	-	-	-	-
FS SLOT SLOSHING	0.72	-	-	-
-	-	-	-	-

AIRCRAFT VOLUME CHARACTERISTICS		
FUSELAGE	[illegible]	FT³
CAPTURE	[illegible]	FT³
WING	101.3	FT³
CANARD	-	FT³
CANTED TAIL	-	FT³
HORIZ. TAIL	-	FT³
SLOSH ELEVON	18.4	FT³
EXPOSED ENGINE	-	FT³
TOTAL A/C VOLUME	[illegible]	FT³
MAX CROSS-SECTION	81.9	FT²
MAX FUSELAGE CROSS-SECTION	28.8	FT²
L/D	8.18	

WETTED AREA		
	1117.0	FT²
	-	FT²
	40.8	FT²
HORIZ)	-	FT²
(VERT)	-	FT²
NER)	[illegible]	FT²
AIL	-	FT²
AIL	-	FT²
EVON	118.2	FT²
ENG.	-	FT²
OTAL	[illegible]	FT²

LANDING GEAR	NOSE GEAR	MAIN GEAR
TIRE SIZE	[illegible]	[illegible]
STROKE	10.0	10.0
PRESSURE	215 PSI	[illegible] PSI

CHARACTERISTIC ESTIMATES D FOR AIRCRAFT SIZING)	
	40,000 EST.
GHT	[illegible] T.O.G.W.

ARMAMENT
(2) GBU-24 LGB (SEMI-SUBMERGED) OR (2) AIM-120 STEERLES (SEMI-SUBMERGED)
(2) AIM-9 STEERLES (SEMI-SUBMERGED)
20 MM GUN / 500 ROUNDS AMMO.
(4) HARD POINTS (HYDRAULIC RACKS)

SHEET 1 OF 2

296-2406

DSGN JOE BURNES

NASA - AGILITY
TYPE B OBSERVABLES
HIGH AGILITY

SIZE Z | 296-2406

SCALE NOTED IN | SHEET 1 OF 2

296-2406 SU

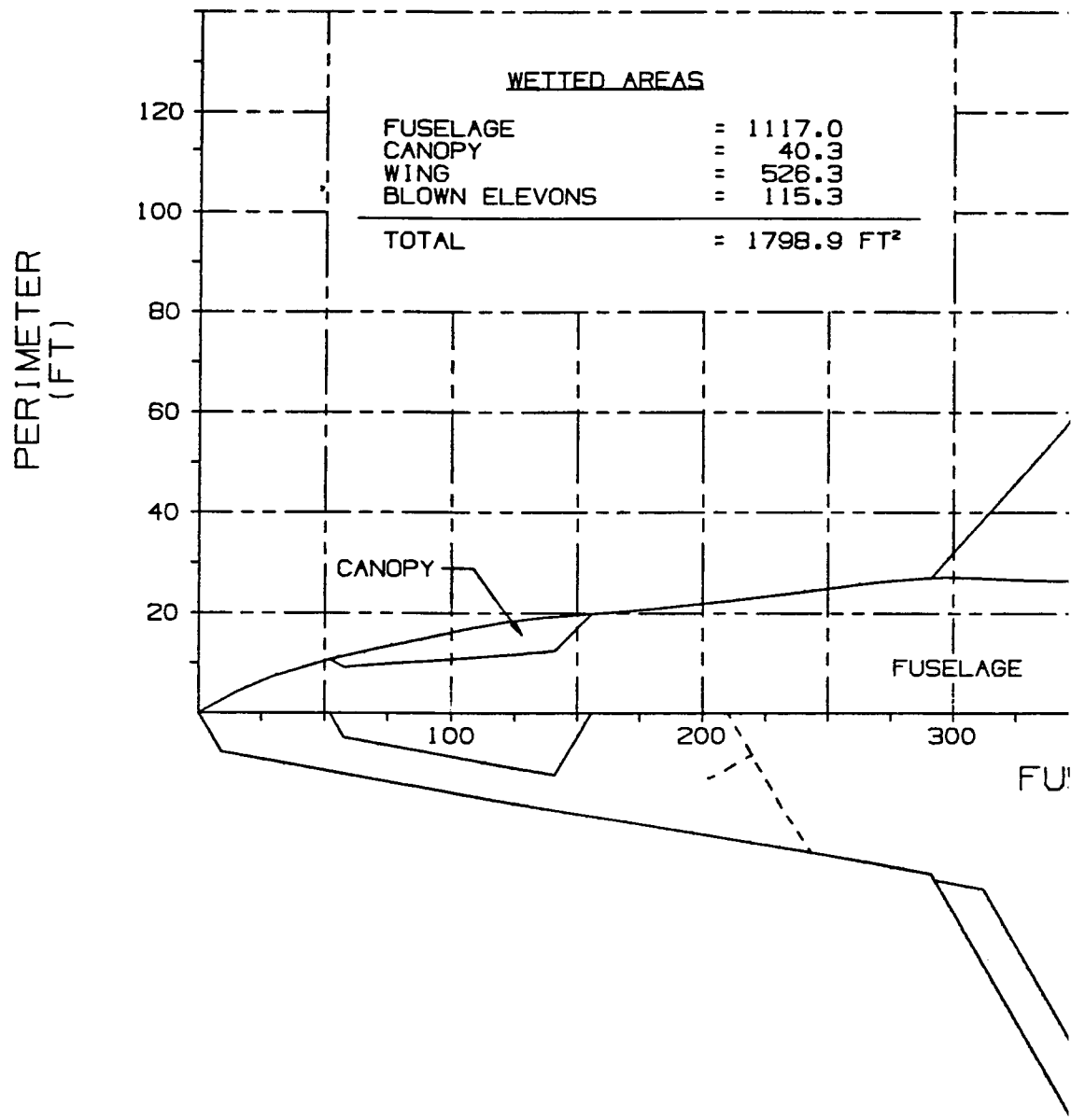
WETTED AREAS
FUSELAGE = 1117.0
CANOPY = 40.3
WING = 526.3
BLOWN ELEVONS = 115.3
TOTAL = 1798.9 FT²
PERIMETER (FT)
120
100
80
60
40
20
CANOPY
FUSELAGE
100
200
300
FU

URFACE AREA PLOT

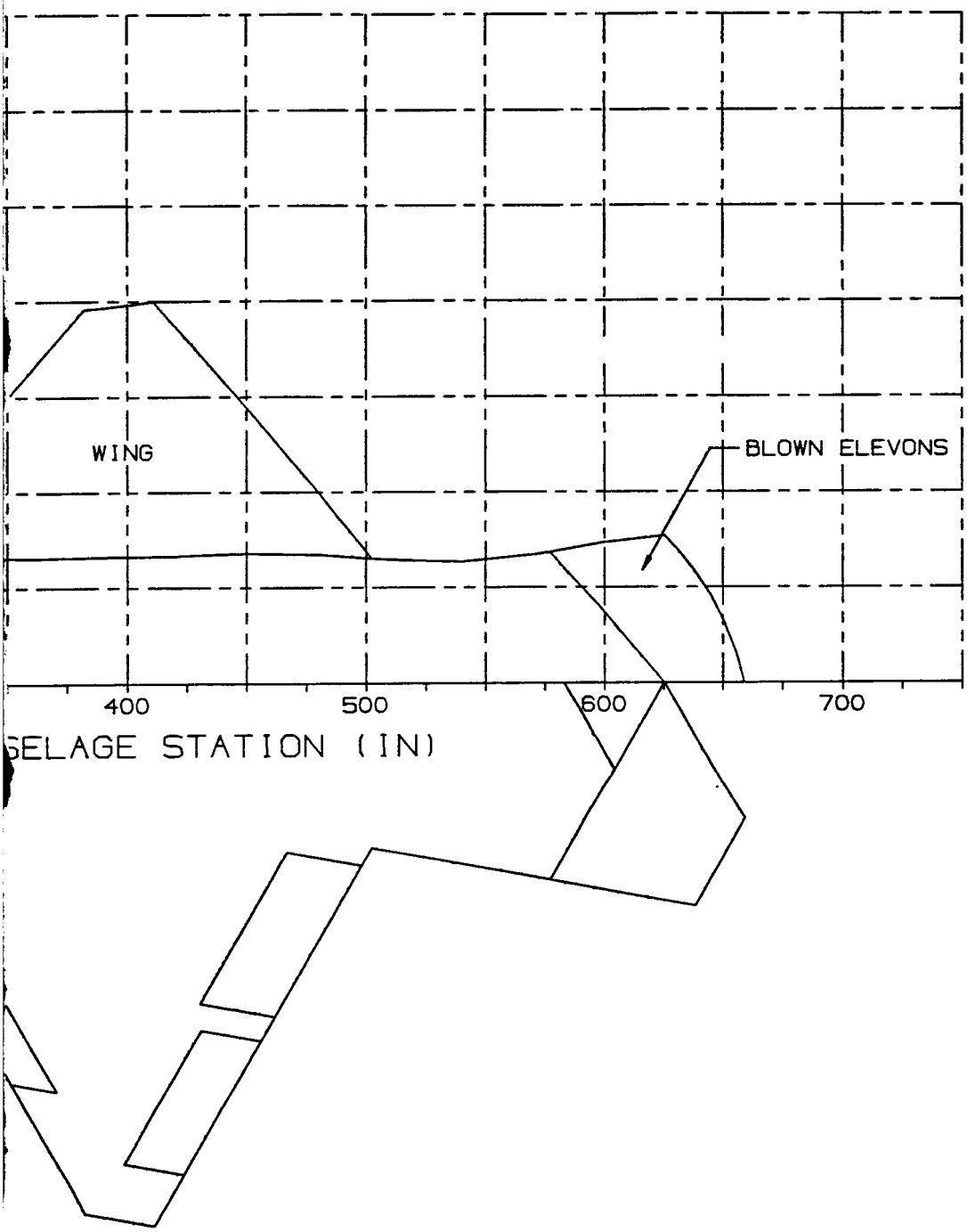

CROSS SECTIONAL AREA

296-2406 CROSS SECTIONAL

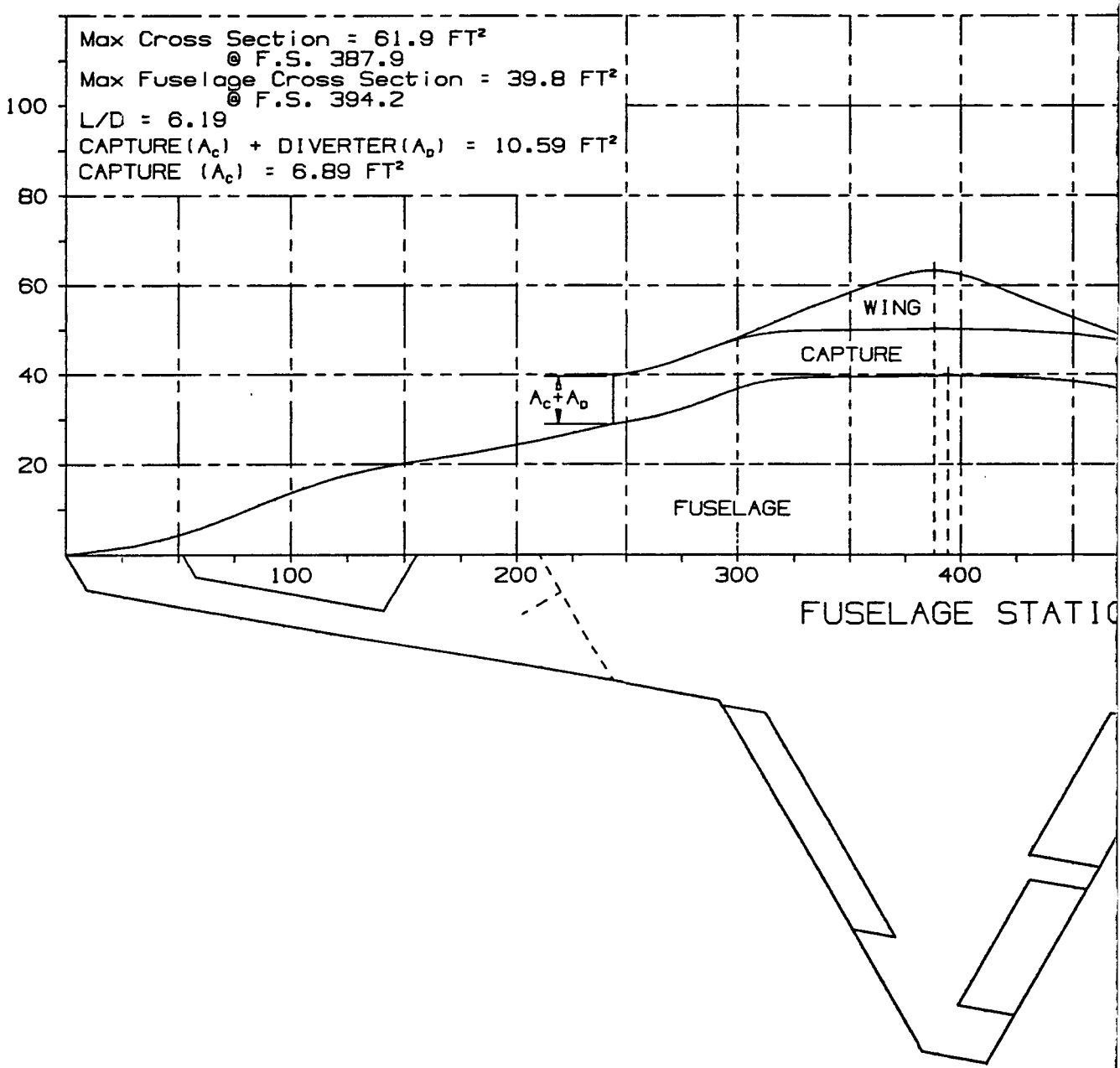

. AREA PLOT

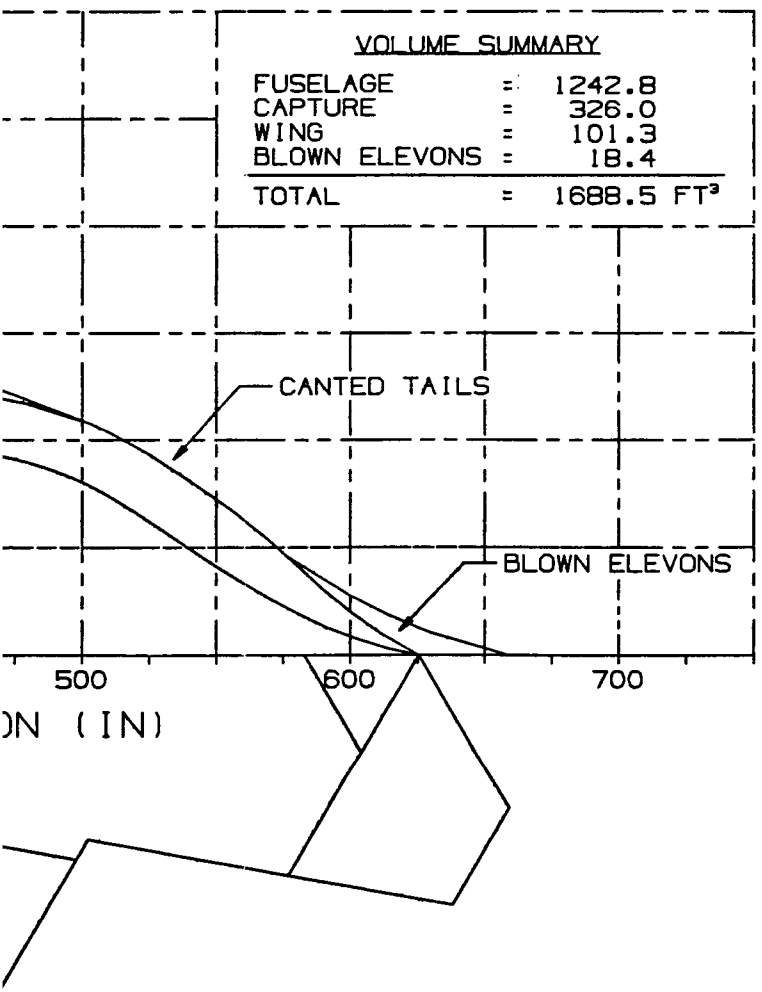
VOLUME SUMMARY
FUSELAGE = 1242.8
CAPTURE = 326.0
WING = 101.3
BLOWN ELEVONS = 18.4
TOTAL = 1688.5 FT³
CANTED TAILS
BLOWN ELEVONS
500
600
700
)N (IN)

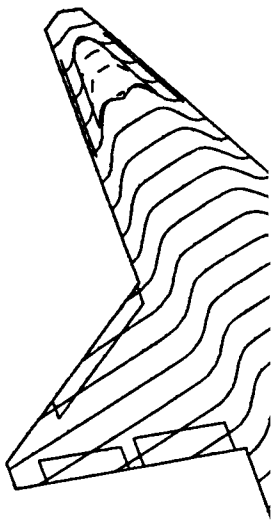

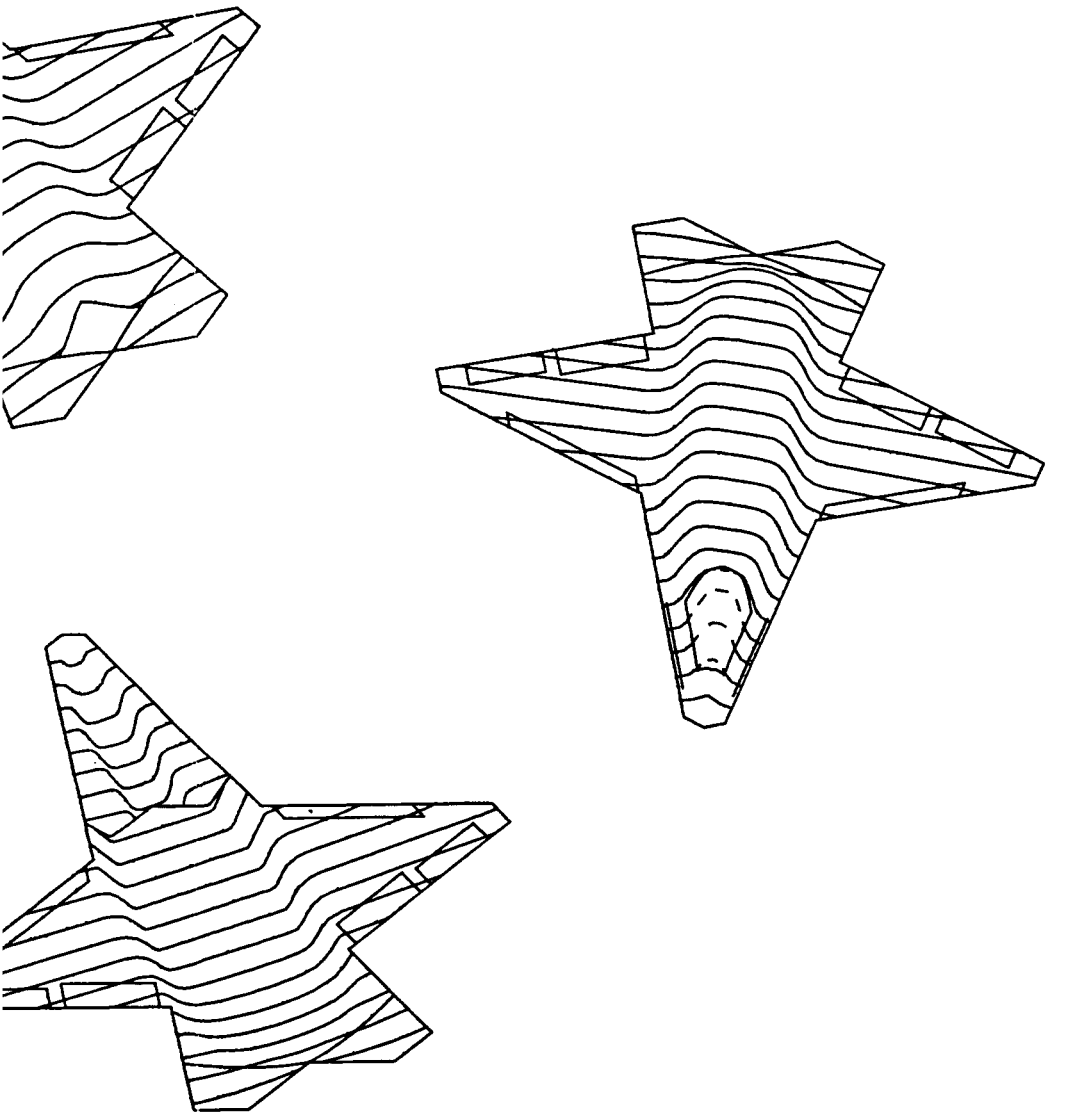

DSGN JOE BURNES	NASA - AGILITY TYPE B OBSERVABLES HIGH AGILITY
	SIZE Z — 296-2406
	SCALE NOTED BY — SHEET 2 OF 2

296-2406 SH 2 OF 2

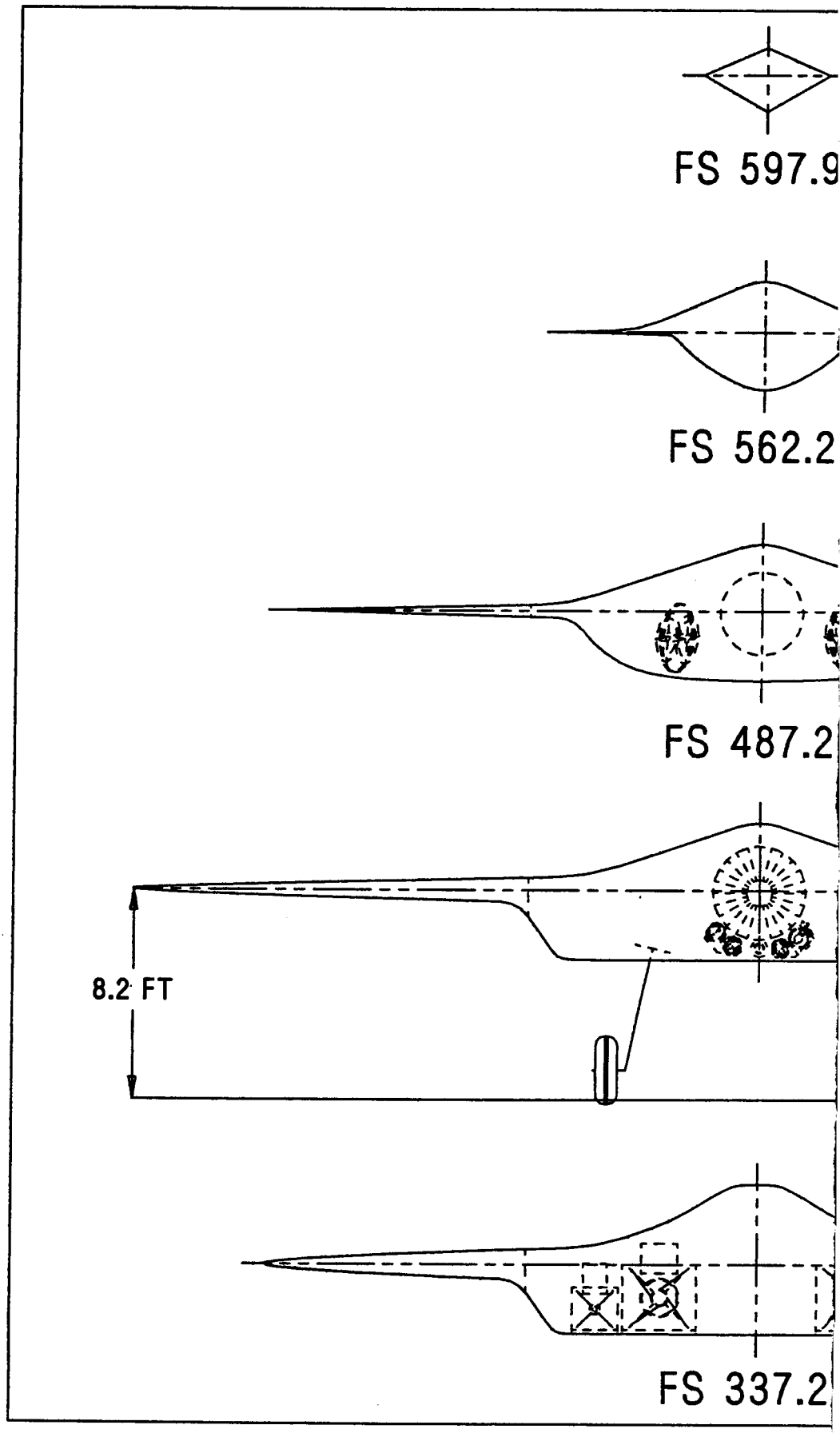
FS 597.9
FS 562.2
FS 487.2
8.2 FT
FS 337.2

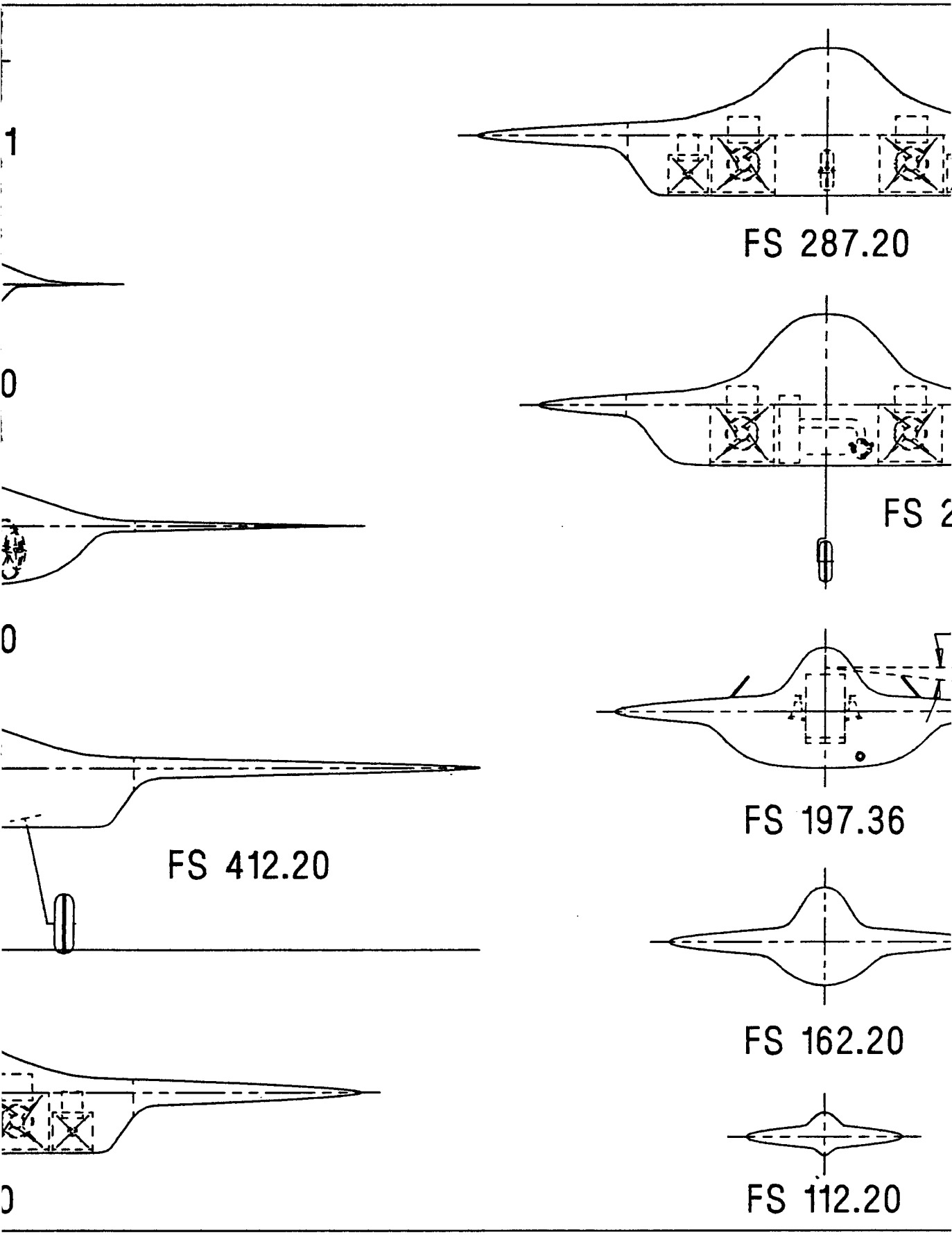
1
FS 287.20
0
FS 2
0
FS 197.36
FS 412.20
FS 162.20
0
FS 112.20

47.10

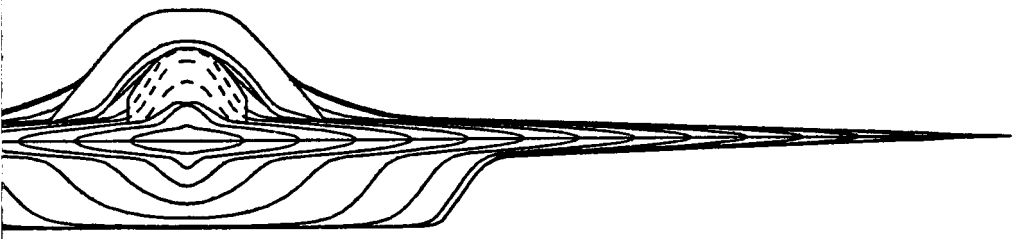

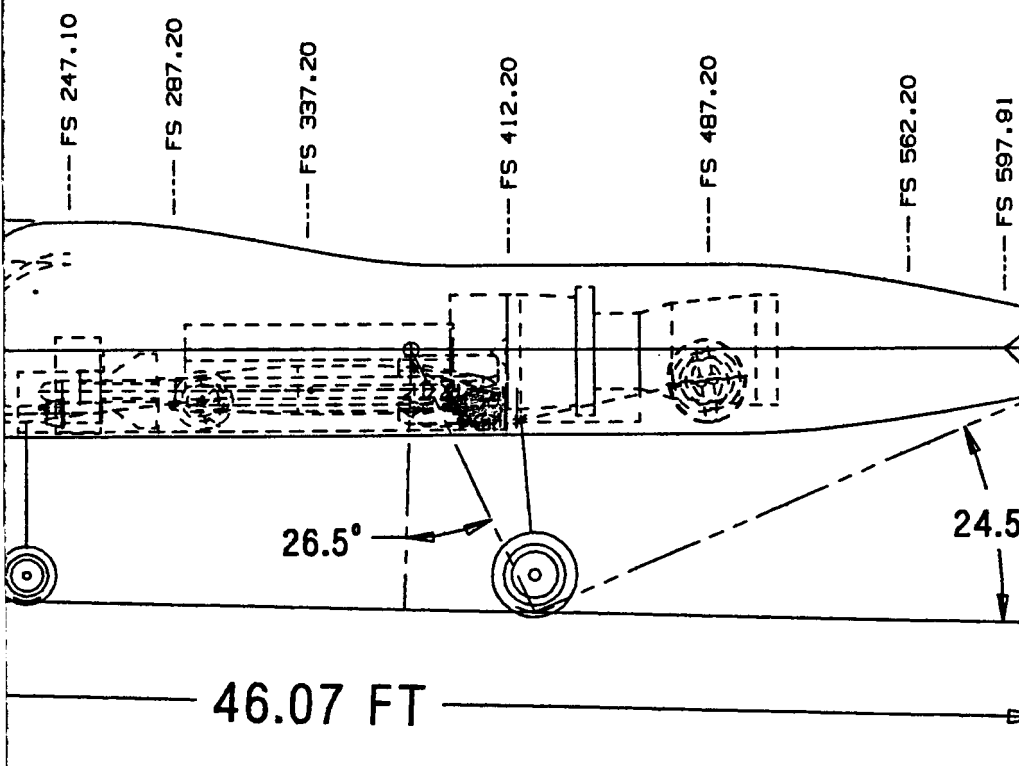
FS 247.10
FS 287.20
FS 337.20
FS 412.20
FS 487.20
FS 562.20
FS 597.81
26.5°
24.5°
46.07 FT

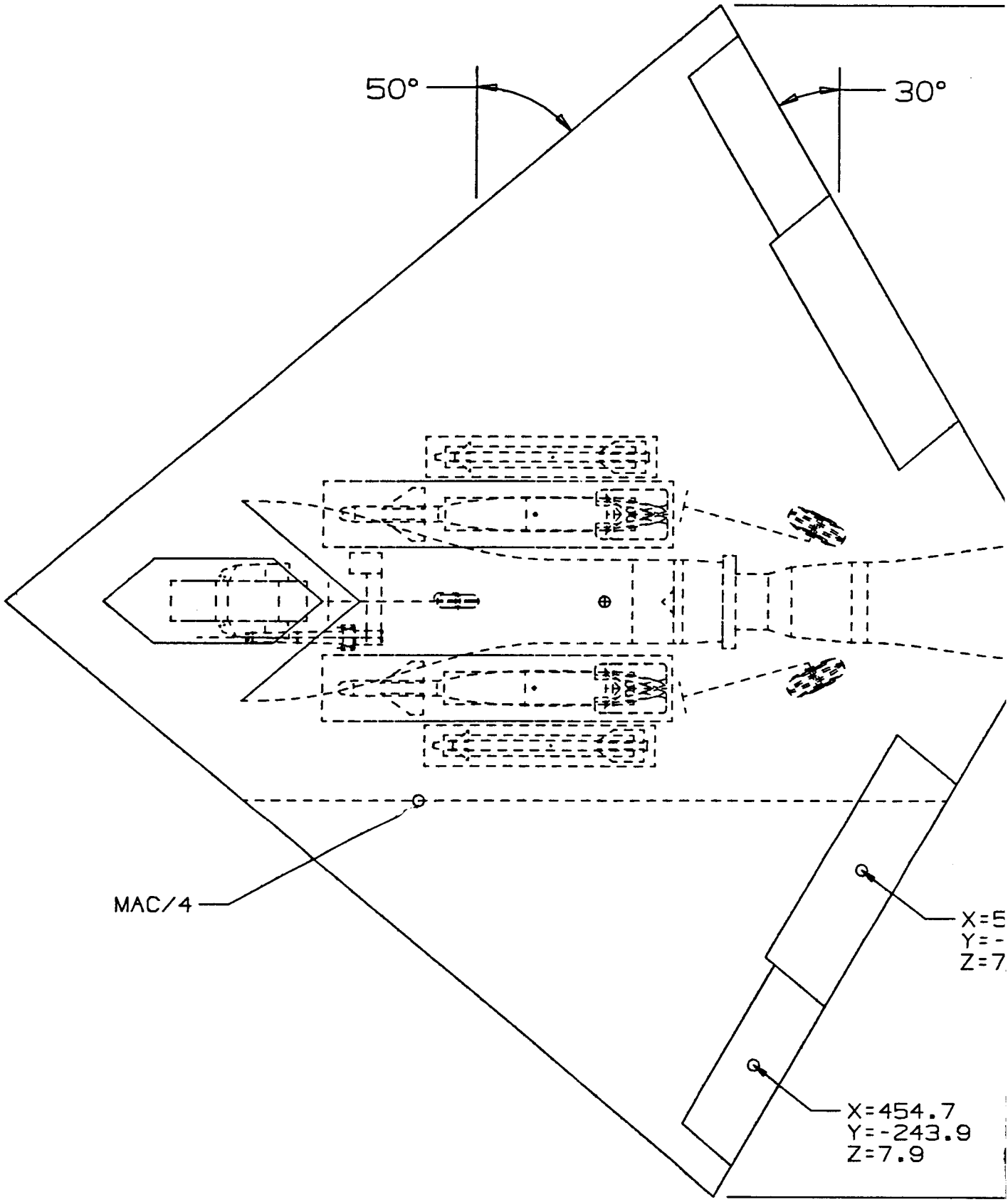
50°
30°
MAC/4
X=5
Y=-
Z=7
X=454.7
Y=-243.9
Z=7.9

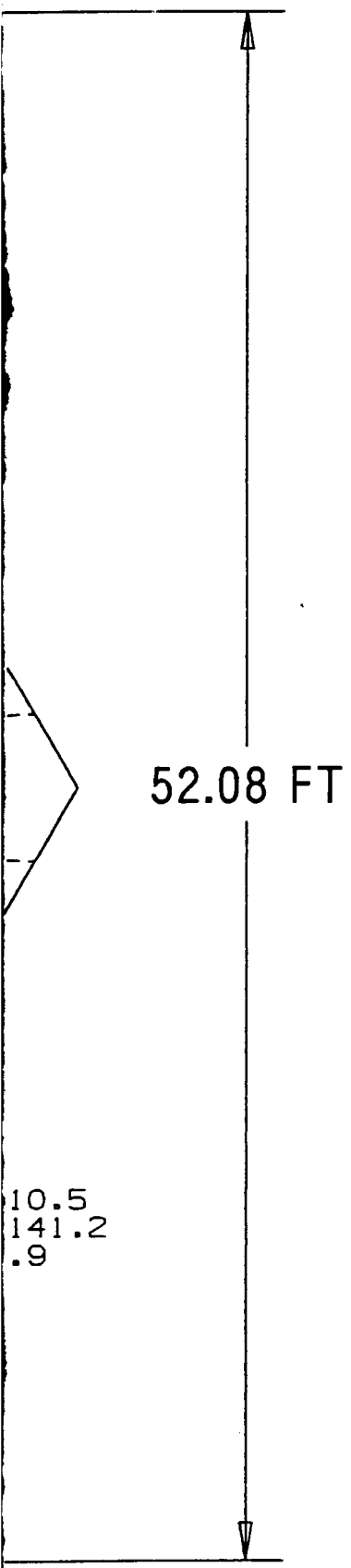

CHARACTERISTICS	WING	"VEE"-TAIL EACH TRUE	VERT. TAIL EACH TRUE	HORIZ. TAIL EACH TRUE	CANARD EACH TRUE	THRUST-BLOWN ELEVON EACH TRUE
S (FT²) THEO	1200.0	-	-	-	-	-
S (FT²) EXPO	512.2	-	-	-	-	-
ASPECT RATIO	2.28	-	-	-	-	-
TAPER RATIO	-	-	-	-	-	-
REF. SPAN (FT)	52.08	-	-	-	-	-
1/2 REF. SPAN (IN)	312.5	-	-	-	-	-
ROOT CHORD (IN)	552.84	-	-	-	-	-
TIP CHORD (IN)	0.0	-	-	-	-	-
MAC (IN)	369.8	-	-	-	-	-
YBAR (IN)	104.2	-	-	-	-	-
L.E. OF MAC (IN)	188.3	-	-	-	-	-
F.S. 1/4 MAC (IN)	278.5	-	-	-	-	-
S.L./S.L. MAC (IN)	104.2/7.9	-	-	-	-	-
SWEEP OF L.E.	50°	-	-	-	-	-
SWEEP OF T.E.	-30°	-	-	-	-	-
AIRFOIL CR	64A	-	-	-	-	-
AIRFOIL CT	64A	-	-	-	-	-
T/C ROOT	4%	-	-	-	-	-
T/C TIP	4%	-	-	-	-	-
INCIDENCE	-	-	-	-	-	-
DIHEDRAL	-	-	-	-	-	-
TOE	-	-	-	-	-	-
TWIST	-	-	-	-	-	-
CAMBER	-	-	-	-	-	-
STATIC MARGIN (%)	-	-	-	-	-	-

PROPULSION		
ENGINE NAME	GEN-52570	
SCALE FACTOR	-	
NUMBER OF ENGINES	1	
ENGINE WEIGHT (EA)	2008	lbs
CAP. AREA TOTAL	8.5	FT²
S.L.D. AREA TOTAL	2.0	FT²
FNSLSU (EA)	52570	lbs
FNSLSI (EA)	-	lbs
NOZZLE AREA TOTAL	5.0	FT²
ASPECT RATIO	2.00	
INCIDENCE	-	degrees
TILT	-	degrees
ROLL	-	degrees
TOE	-	degrees
TVC PITCH (+)	X.X	degrees
TVC PITCH (-)	X.X	degrees
TVC YAW (+/-)	X.X	degrees

WETTED AREA		
FUSELAGE	1445.2	FT²
INLET	-	FT²
CANOPY	28.3	FT²
CANARD (HORZ)	-	FT²
CANARD (VERT)	-	FT²
WING (INNER)	1032.3	FT²
HORIZ. TAIL	-	FT²
VERT. TAIL	-	FT²
VEE-TAIL	-	FT²
EXPOSED ENG.	-	FT²
TOTAL	2513.8	FT²

AIRCRAFT CHARACTERISTIC ESTIMATES (USED FOR AIRCRAFT SIZING)		
T.O.G.W.	50000	EST.
FUEL WEIGHT	33% TOGW	

CONTROLS	AREA (TOTAL) TRUE (FT²)	DEFLECTION +	DEFLECTION -	TRUNNION LOCATION
AILERON	45.0	-	-	-
ELEVON	75.0	-	-	-
L.E. FLAP	-	-	-	-
T.E. FLAP	-	-	-	-
VERT. TAIL	-	-	-	-
HORIZ. TAIL	-	-	-	-
VEE-TAIL	-	-	-	-
THRUST-BLOWN ELEVON	-	-	-	-
-	-	-	-	-
-	-	-	-	-
-	-	-	-	-

AIRCRAFT VOLUME CHARACTERISTICS		
FUSELAGE	1778.9	FT³
CAPTURE	259.1	FT³
WING	288.8	FT³
CANARD	-	FT³
VEE-TAIL	-	FT³
HORIZ. TAIL	-	FT³
VERT. TAIL	-	FT³
EXPOSED ENGINE	-	FT³
TOTAL A/C VOLUME	2403.8	FT³
MAX CROSS-SECTION	80.8	FT²
MAX FUSELAGE CROSS-SECTION	88.0	FT²
L/D	4.28	

LANDING GEAR	NOSE GEAR	MAIN GEAR
TIRE SIZE	22.00X8.50	32.00X7.70
STROKE	10.0	10.0
PRESSURE	275 PSI	295 PSI

ARMAMENT
(2) GBU-24 LGB (INTERNAL) OR (2) AIM-120 MISSILES (INTERNAL)
(2) AIM-9 MISSILES (INTERNAL)
20 MM GUN / 500 ROUNDS AMMO.
(4) HARD POINTS (HYDRAULIC RACKS)

296-2407 SH 1 OF 2

DSGN JOE BURNES

NASA - AGILITY
TYPE C OBSERVABLES
LOW AGILITY

Z 296-2407

SCALE NOTED WT LBSHEET 1 OF 2

296-2407 SURFA

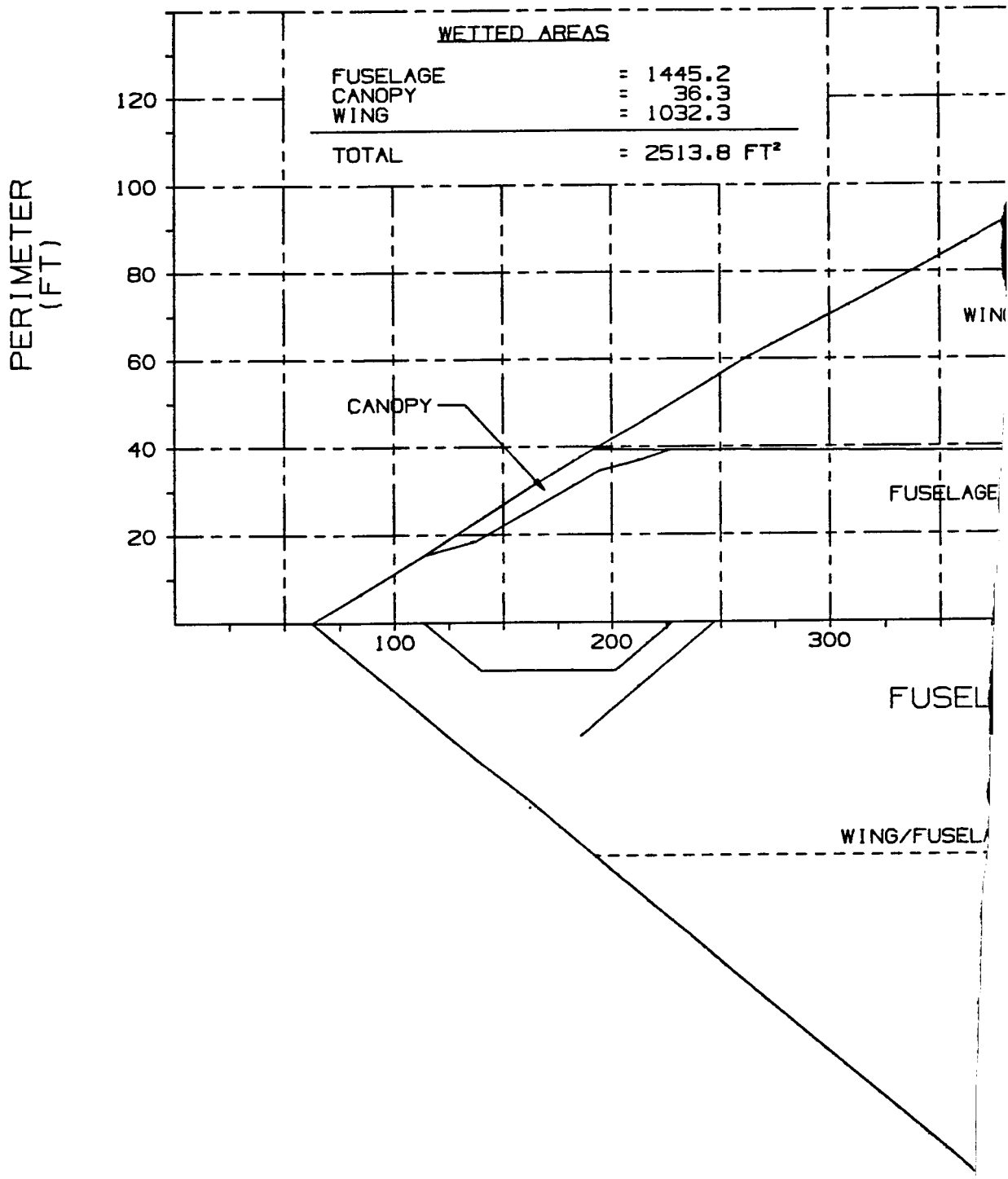

ACE AREA PLOT

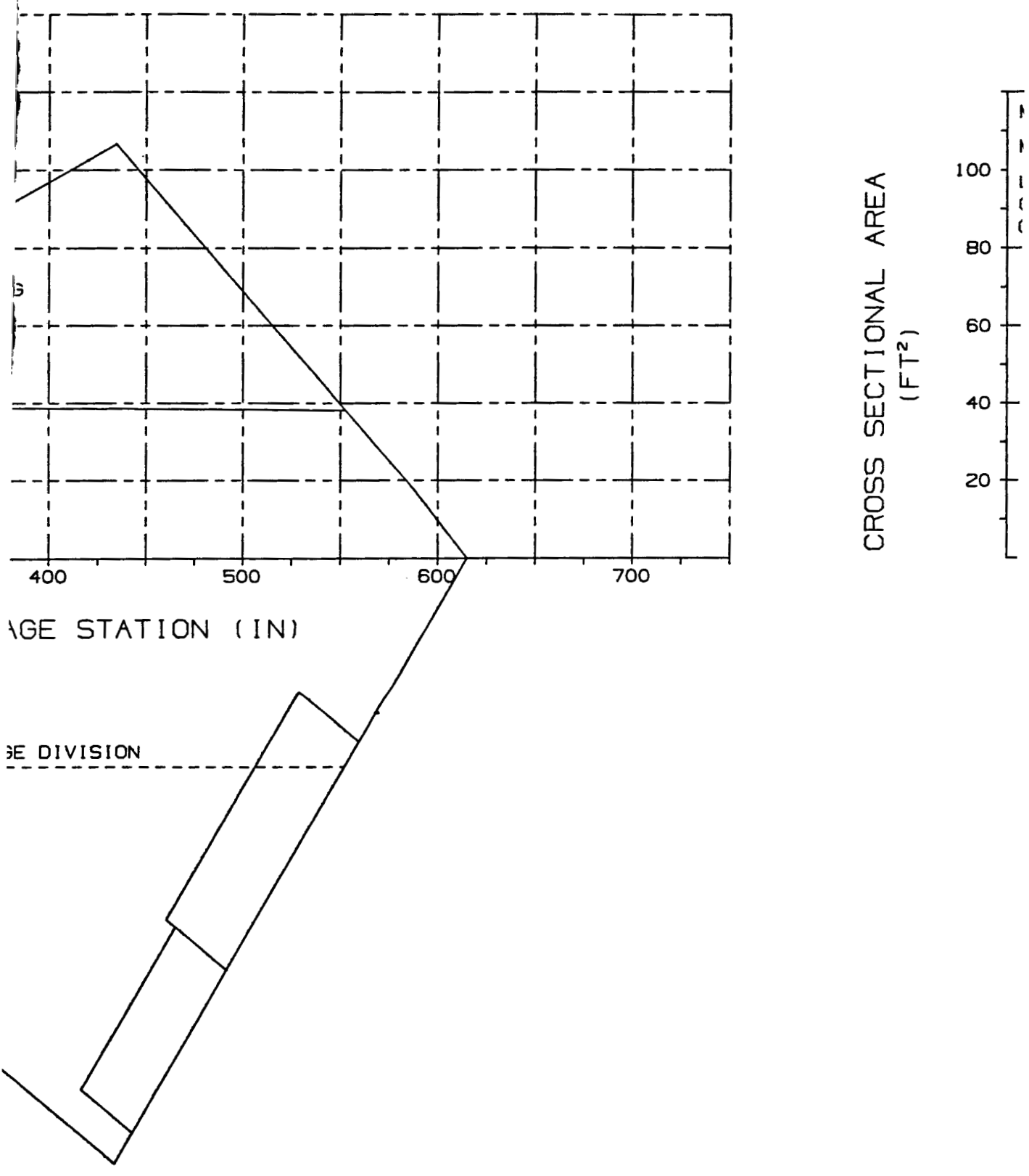

296-2407 CROSS SECTIONAL AREA

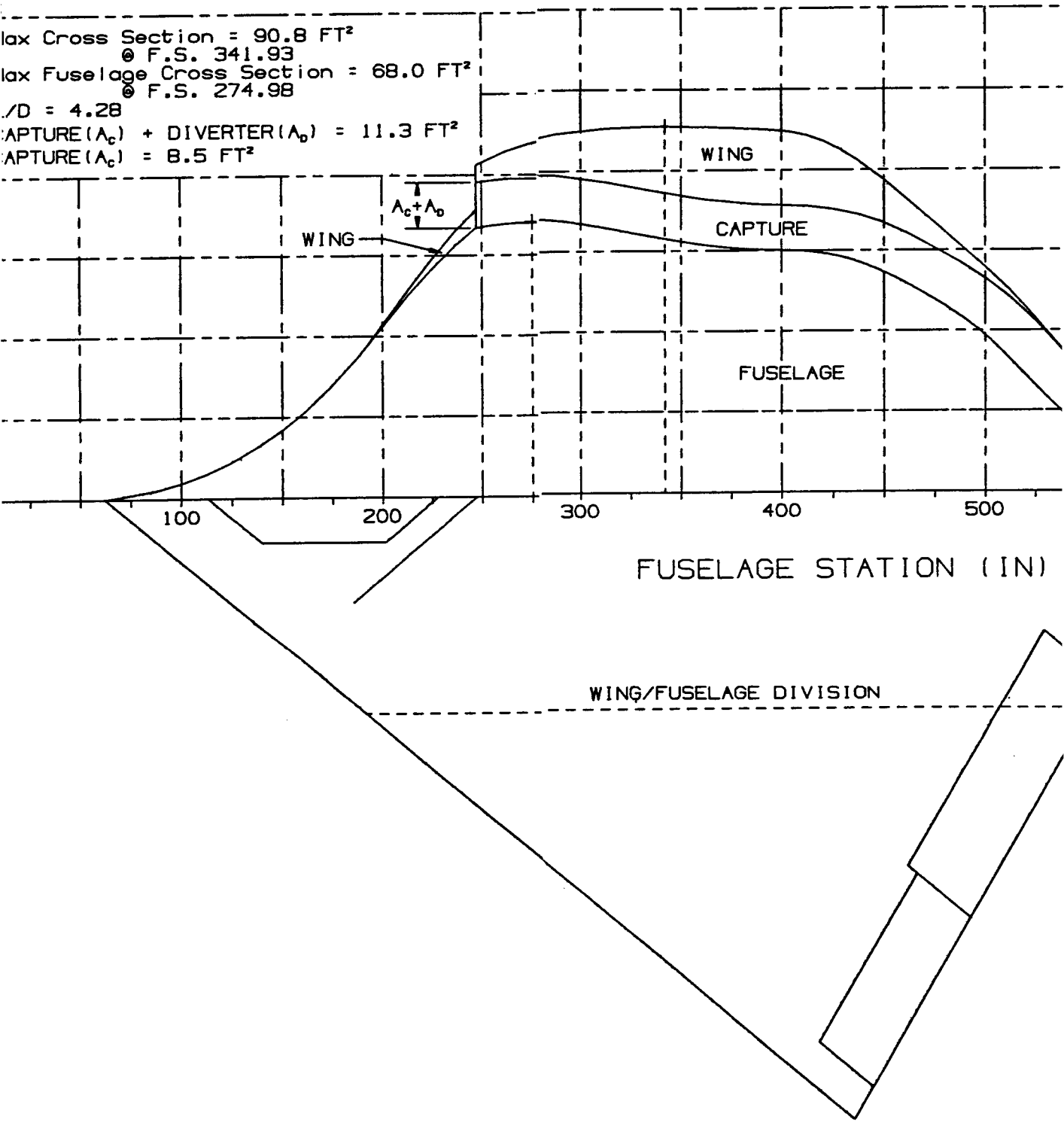

PLOT

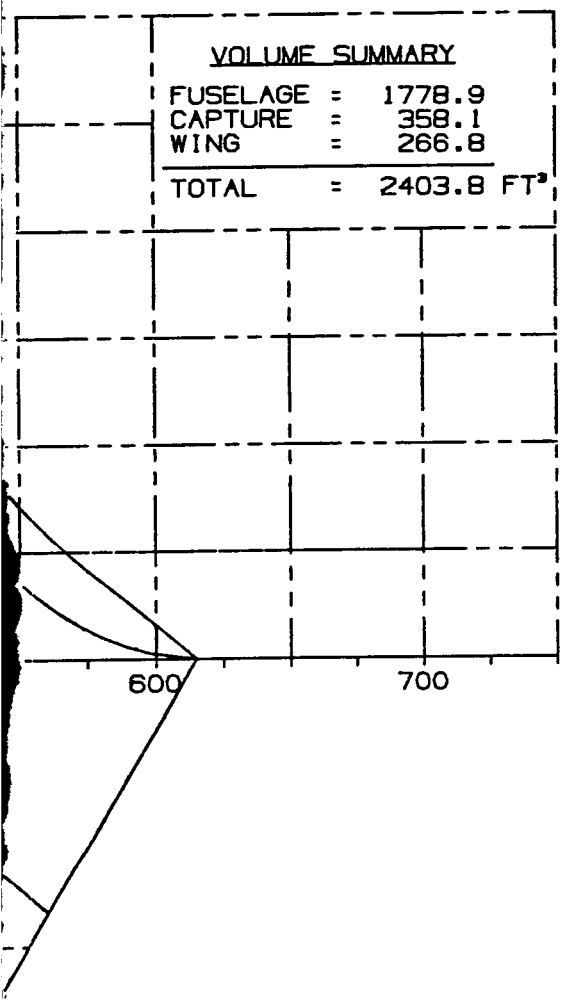
VOLUME SUMMARY
FUSELAGE = 1778.9
CAPTURE = 358.1
WING = 266.8
TOTAL = 2403.8 FT³
600
700

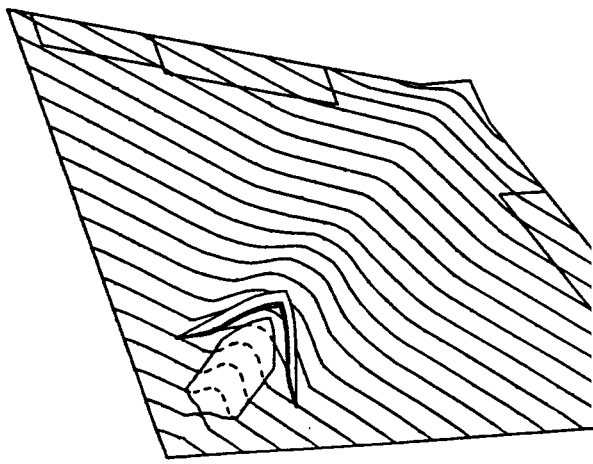

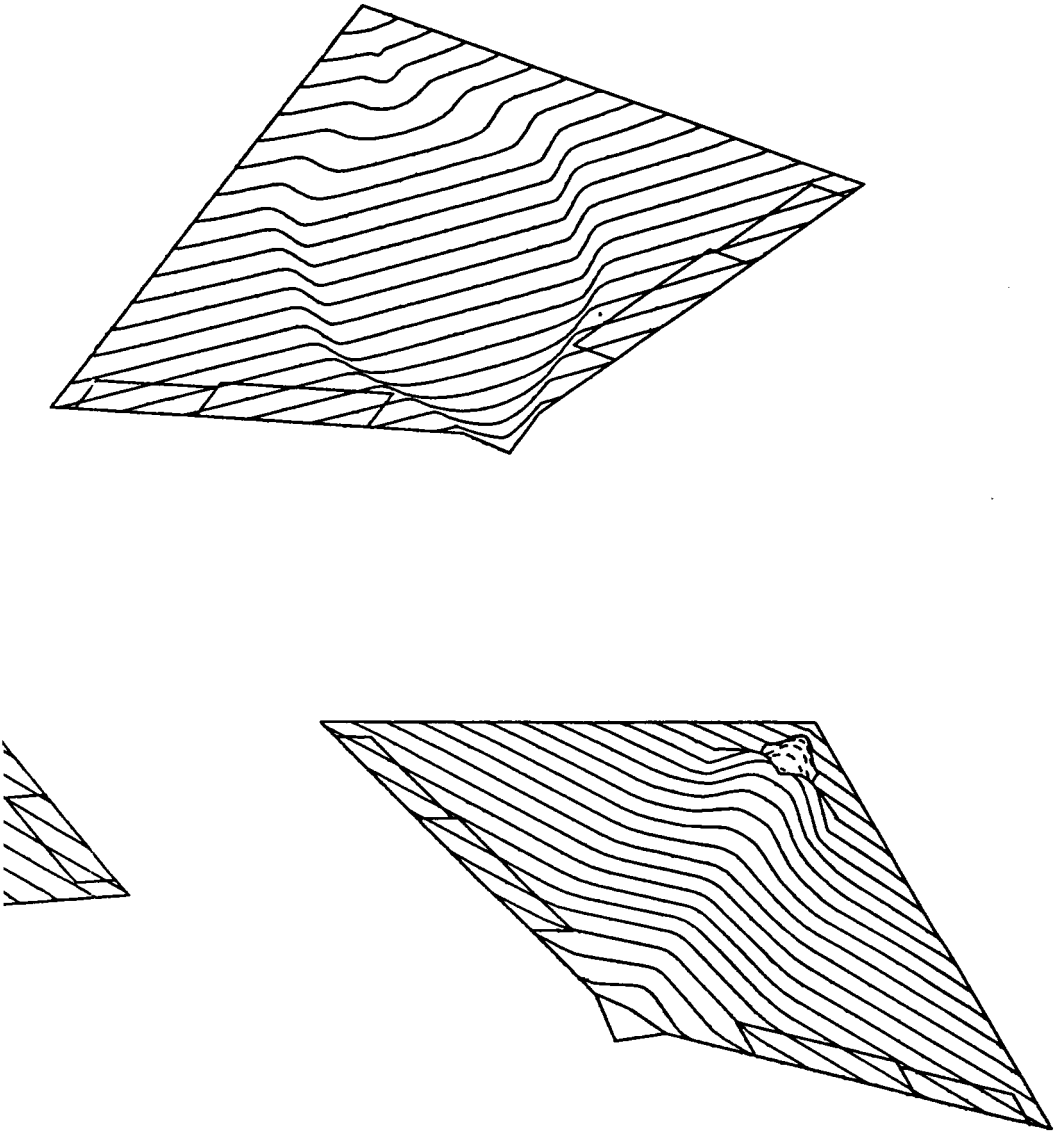

DSGN JOE BURNES	NASA - AGILITY TYPE C OBSERVABLES LOW AGILITY
	SIZE Z — 296-2407
	SCALE NOTED IN1 — LOGIC SHEET 2 OF 2

296-2407 SH 2 OF 2

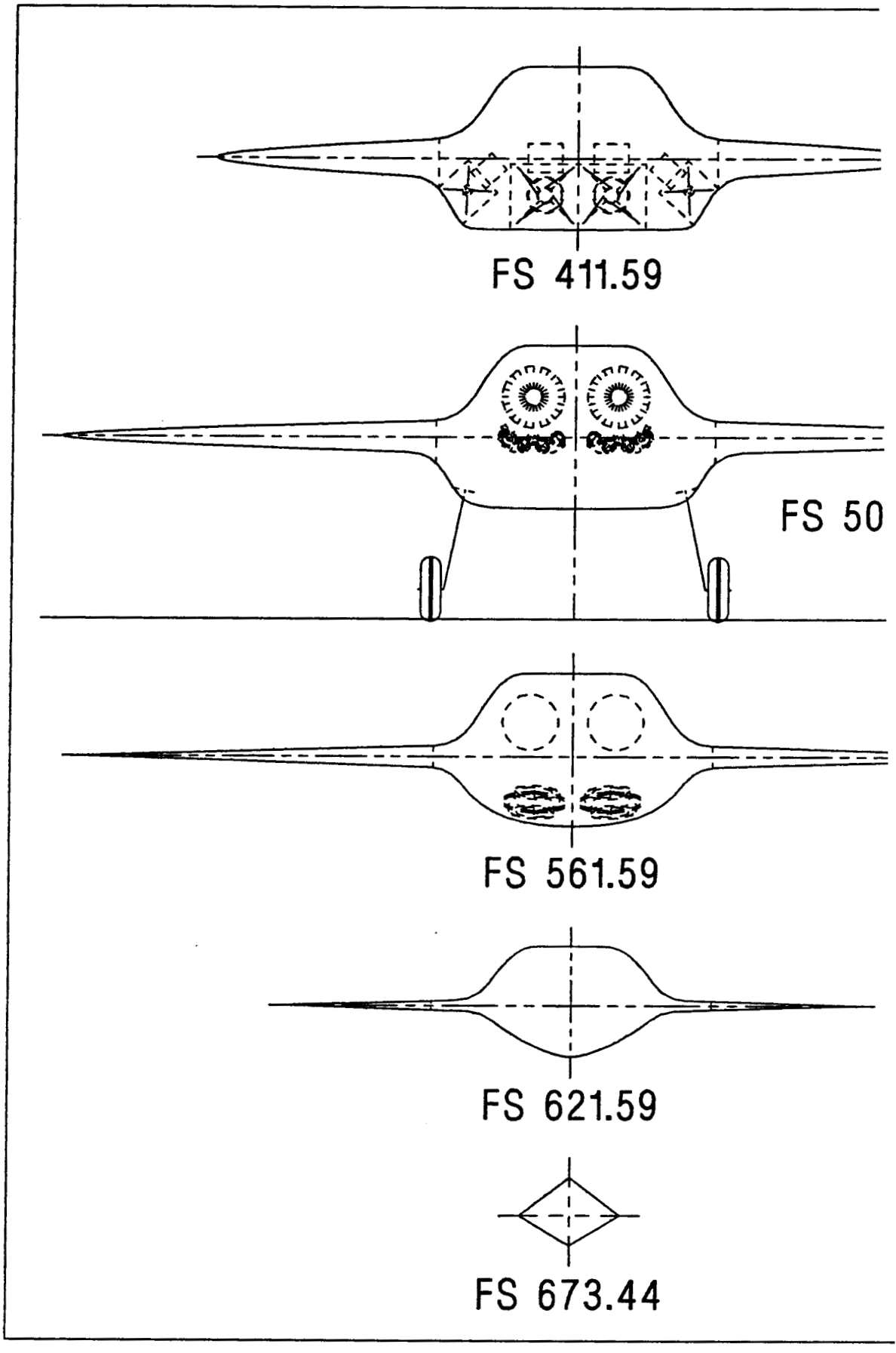
FS 411.59
FS 50
FS 561.59
FS 621.59
FS 673.44

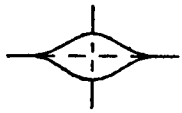

FS 51.59

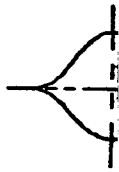

FS 8

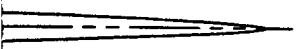

1.59

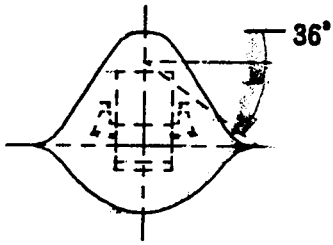

FS 141.59

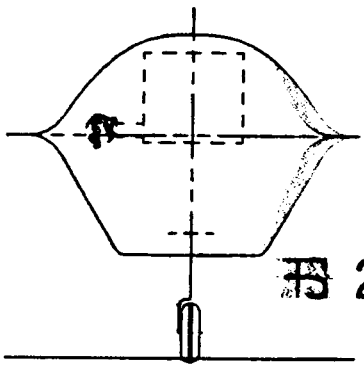

FS 231.51

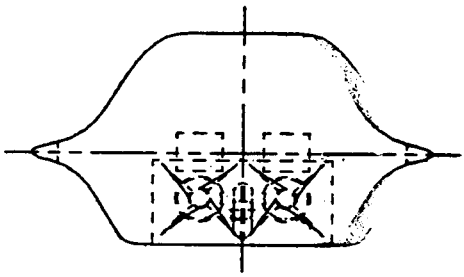

FS 291.59

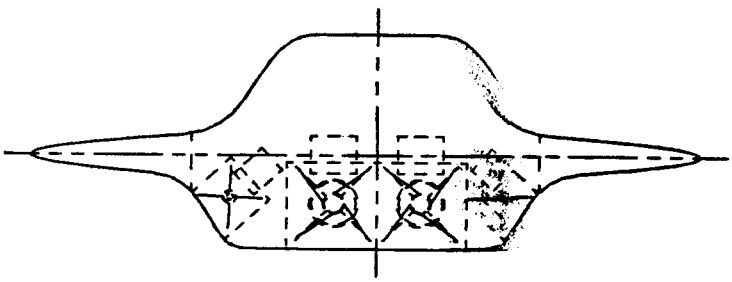

FS 351.59

1.59

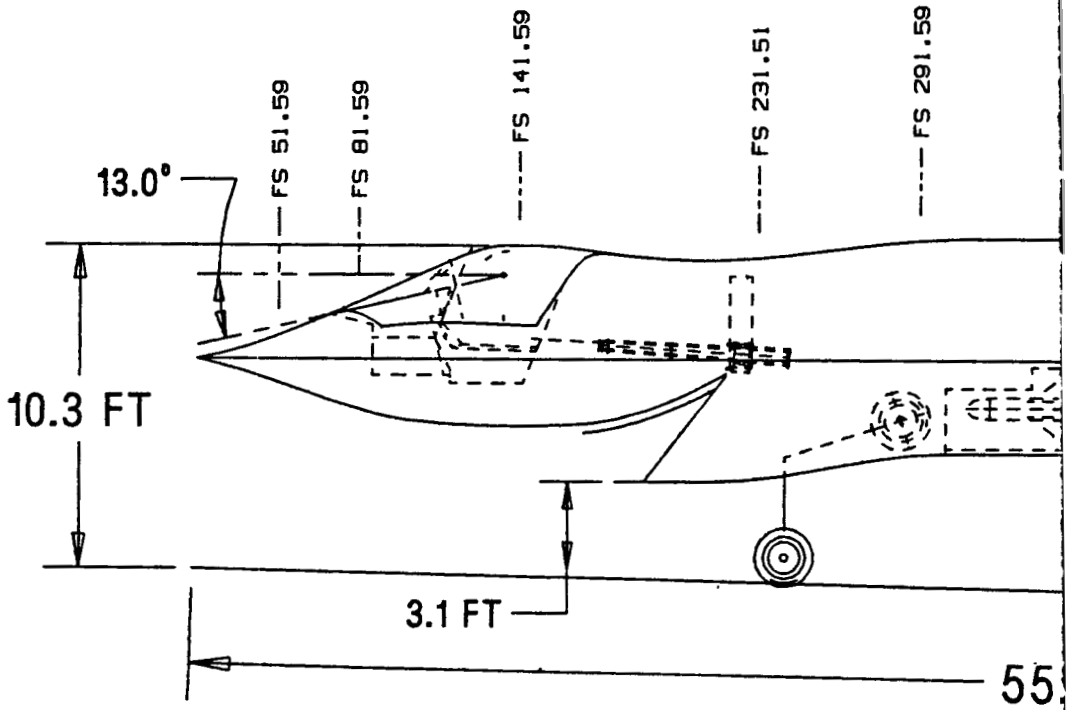

7.5 F

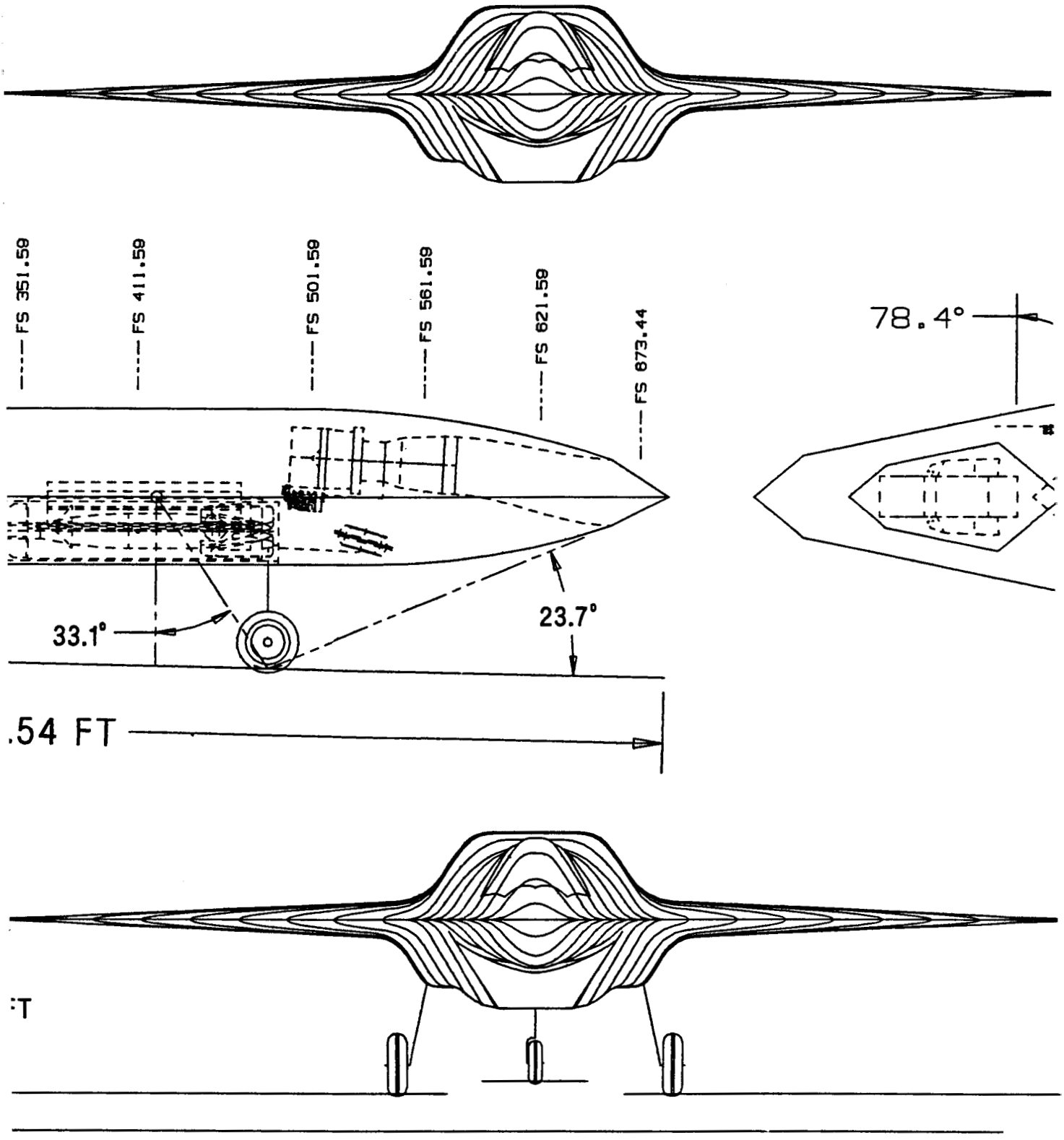
FS 351.59
FS 411.59
FS 501.59
FS 561.59
FS 621.59
FS 873.44
78.4°
33.1°
23.7°
.54 FT

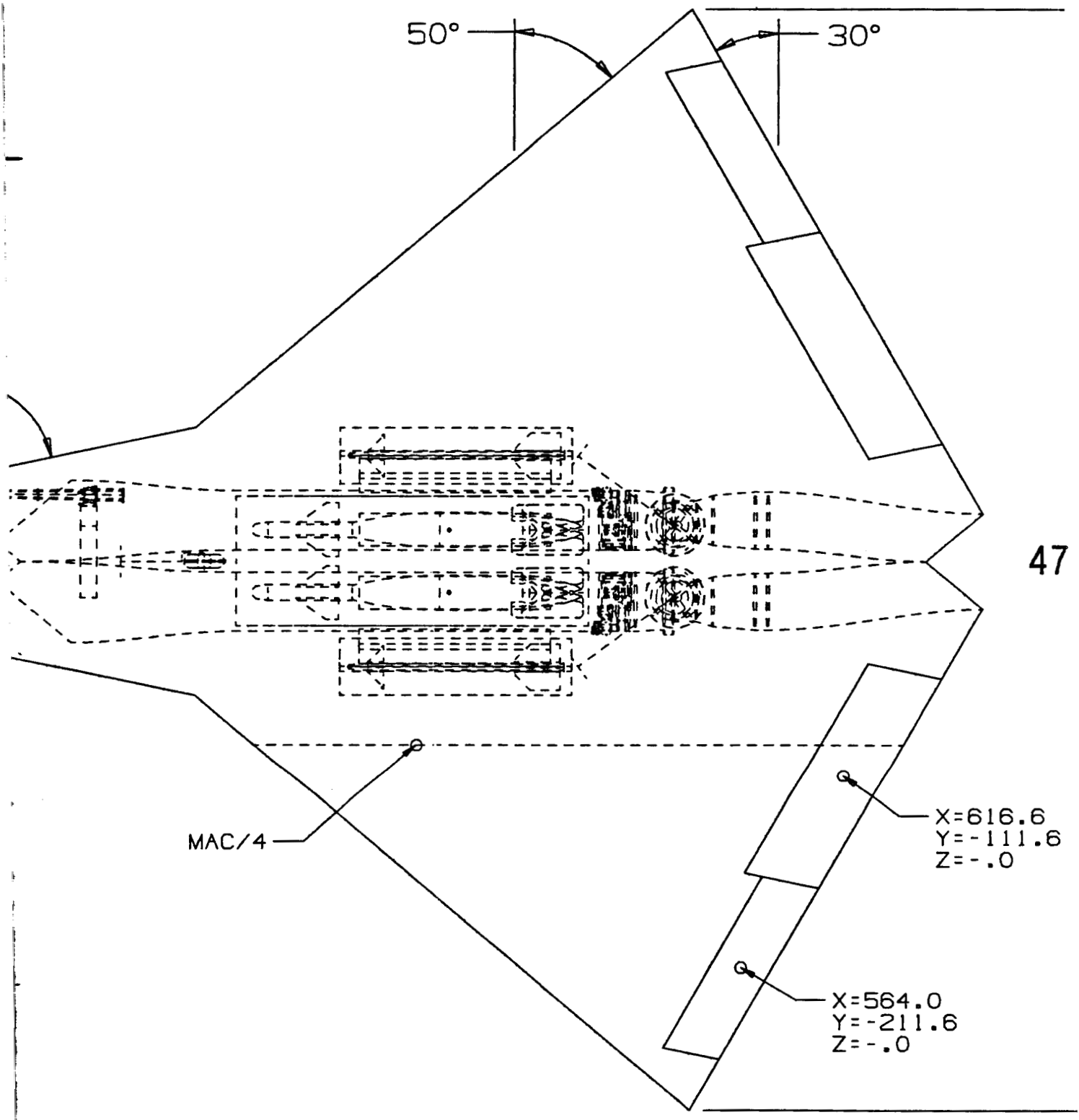
50°
30°
MAC/4
X=616.6
Y=-111.6
Z=-.0
X=564.0
Y=-211.6
Z=-.0

55 FT

CHARACTERISTICS	WING	"VEE"-TAIL EACH TRUE	VERT. TAIL EACH TRUE	HORZ. TAIL EACH TRUE	CANARD EACH TRUE	THRUST-BLOWN ELEVON EACH TRUE
S (FT2) THEO	1000.0	-	-	-	-	-
S (FT2) EXPO	574.1	-	-	-	-	-
ASPECT RATIO	2.281	-	-	-	-	-
TAPER RATIO	-	-	-	-	-	-
REF. SPAN (FT)	47.55	-	-	-	-	-
1/2 REF. SPAN (IN)	285.3	-	-	-	-	-
ROOT CHORD (IN)	507.73	-	-	-	-	-
TIP CHORD (IN)	-	-	-	-	-	-
MAC (IN)	338.48	-	-	-	-	-
YBAR (IN)	65.10	-	-	-	-	-
L.E. OF MAC (IN)	310.90	-	-	-	-	-
F.S. 1/4 MAC (IN)	395.02	-	-	-	-	-
B.L./W.L. MAC (IN)	65.10/0.00	-	-	-	-	-
SWEEP OF L.E.	50°	-	-	-	-	-
SWEEP OF T.E.	-30°	-	-	-	-	-
AIRFOIL CR	64A	-	-	-	-	-
AIRFOIL CT	64A	-	-	-	-	-
T/C ROOT	5%	-	-	-	-	-
T/C TIP	5%	-	-	-	-	-
INCIDENCE	-	-	-	-	-	-
DIHEDRAL	-	-	-	-	-	-
TOE	-	-	-	-	-	-
TWIST	-	-	-	-	-	-
CAMBER	-	-	-	-	-	-
STATIC MARGIN (%)	-	-	-	-	-	-

PROPULSION		
ENGINE NAME	GE90-25300	
SCALE FACTOR	-	
NUMBER OF ENGINES	2	
ENGINE WEIGHT (EA)	1709	lbs
CAP. AREA TOTAL	9.0	FT²
B.L.D. AREA TOTAL	3.3	FT²
FNGLBU (EA)	25300	lbs
FNGLSI (EA)	-	lbs
NOZZLE AREA TOTAL	5.8	FT²
ASPECT RATIO	1.447	
INCIDENCE	-	degrees
TILT	-3	degrees
ROLL	-	degrees
TOE	-	degrees
TVC PITCH (+)	X.X	degrees
TVC PITCH (-)	X.X	degrees
TVC YAW (+/-)	X.X	degrees

CONTROLS	AREA (TOTAL) TRUE (FT²)	DEFLECTION +	DEFLECTION -	TRUNNION LOCATION
AILERON (SPLIT)	40.0	-	-	-
ELEVON	85.0	-	-	-
L.E. FLAP	-	-	-	-
T.E. FLAP	-	-	-	-
VERT. TAIL	-	-	-	-
HORIZ. TAIL	-	-	-	-
VEE-TAIL	-	-	-	-
THRUST-BLOWN ELEVON	-	-	-	-
-	-	-	-	-
-	-	-	-	-
-	-	-	-	-

WETTED AREA		
FUSELAGE	1249.2	FT²
INLET	-	FT²
CANOPY	37.8	FT²
CANARD (HORZ)	-	FT²
CANARD (VERT)	-	FT²
WING	1154.8	FT²
HORIZ. TAIL	-	FT²
VERT. TAIL	-	FT²
VEE-TAIL	-	FT²
EXPOSED ENG.	-	FT²
TOTAL	2440.6	FT²

AIRCRAFT VOLUME CHARACTERISTICS		
FUSELAGE	1727.1	FT³
CAPTURE	462.1	FT³
WING	405.8	FT³
CANARD	-	FT³
VEE-TAIL	-	FT³
HORIZ. TAIL	-	FT³
VERT. TAIL	-	FT³
EXPOSED ENGINE	-	FT³
TOTAL A/C VOLUME	2635.0	FT³
MAX CROSS-SECTION	69.2	FT²
MAX FUSELAGE CROSS-SECTION	51.3	FT²
L/D	5.22	

AIRCRAFT CHARACTERISTIC ESTIMATES (USED FOR AIRCRAFT SIZING)	
T.O.G.W.	50000 LBS EST.
FUEL WEIGHT	33% T.O.G.W.

LANDING GEAR	NOSE GEAR	MAIN GEAR
TIRE SIZE	22.00X6.50	32.00X7.70
STROKE	10.0	10.0
PRESSURE	275 PSI	255 PSI

ARMAMENT
(2) GBU-24 LBS (INTERNAL) OR (2) AIM-120 MISSILES (INTERNAL)
(2) AIM-9 MISSILES (INTERNAL)
20 MM GUN / 500 ROUNDS AMMO.
(4) HARD POINTS (HYDRAULIC RACKS)

296-2408 SH 1 OF 2

DSGN JOE BURNES	03-09-99	NASA - AGILITY TYPE C OBSERVABLES MODERATE AGILITY
CHK		
STR		
SP		
PK		
SIZE Z	296-2408	
SCALE NOTED	WT	LOG SHEET 1 OF 2

296-2408 SURFACE

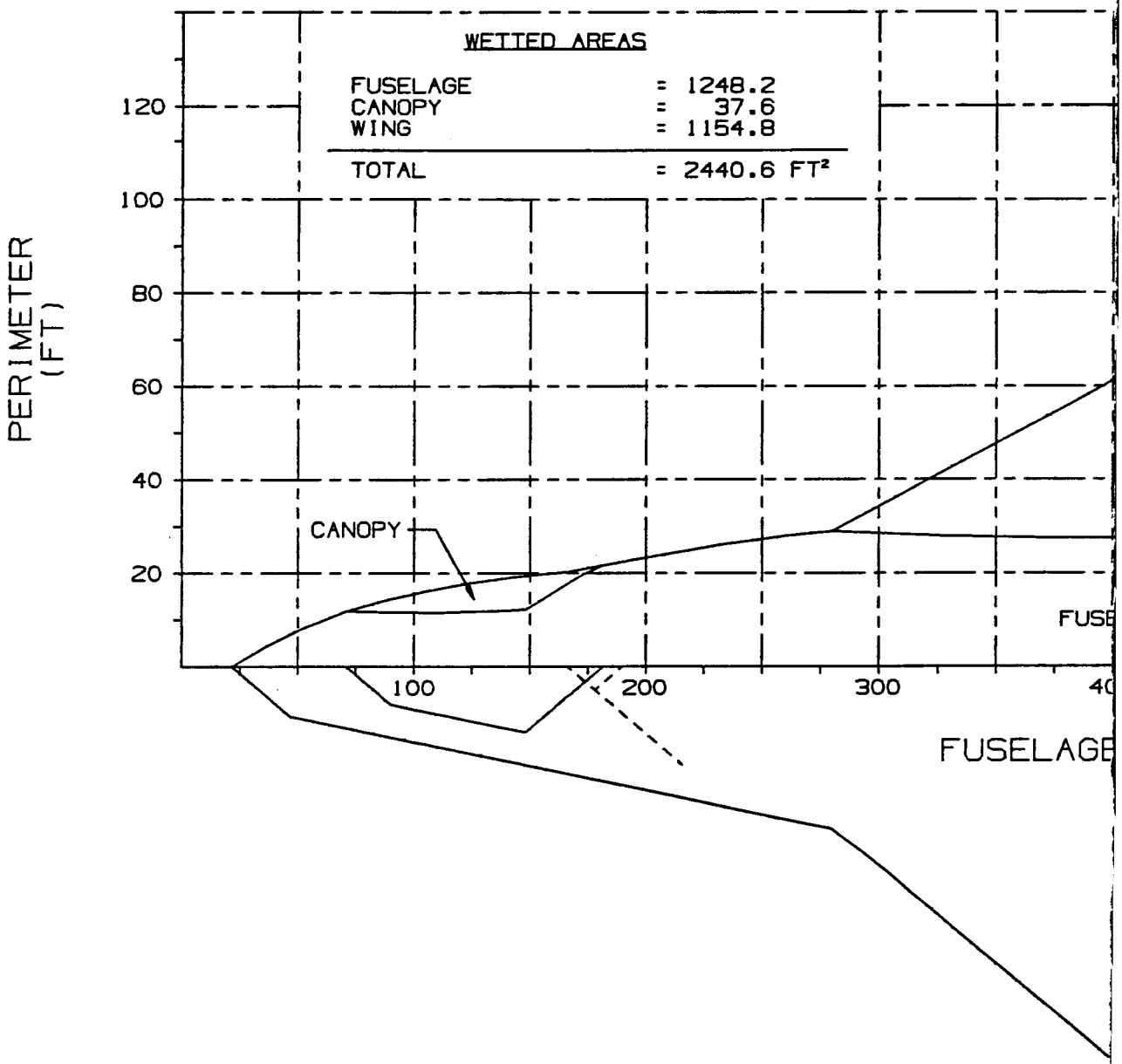

E AREA PLOT

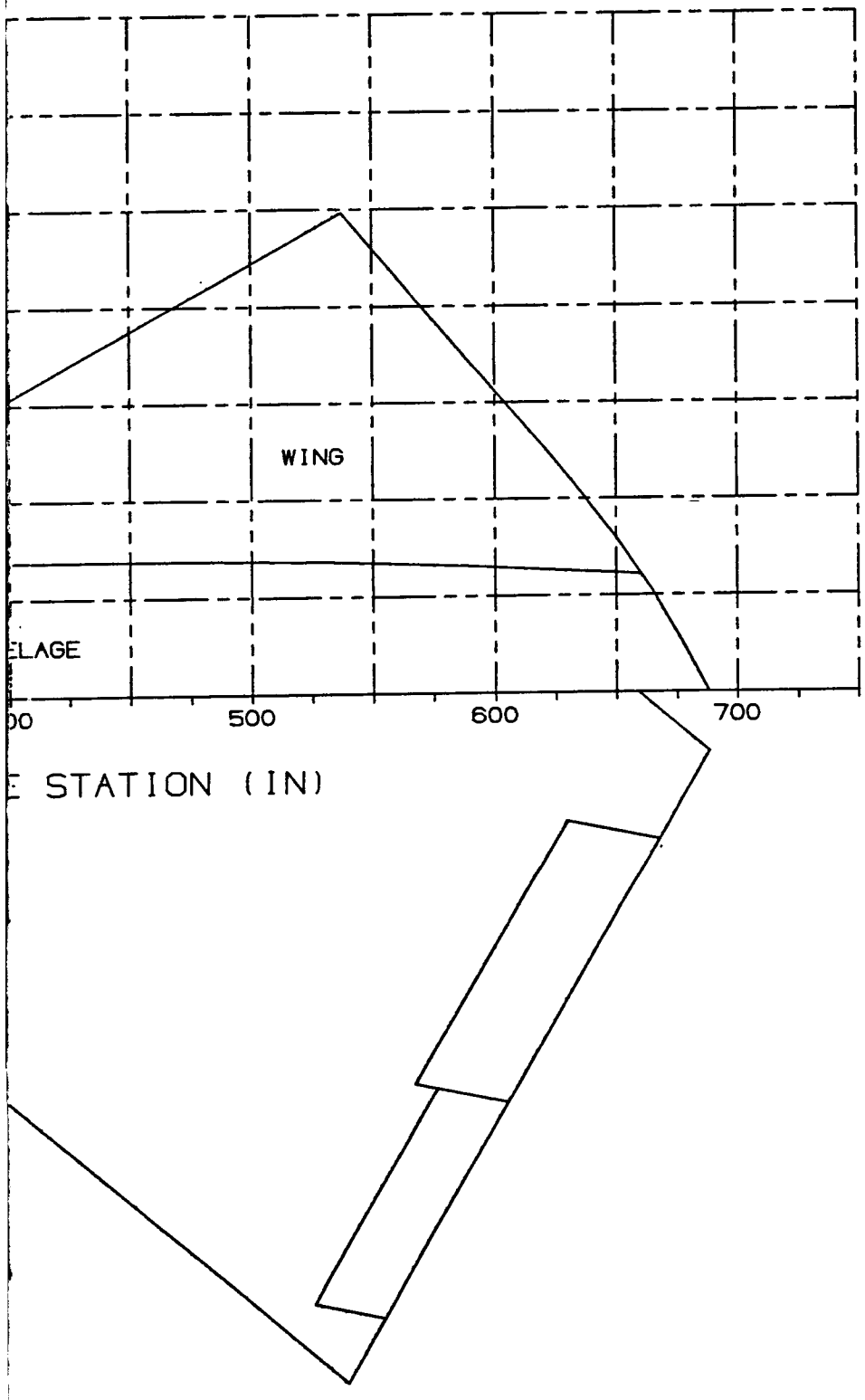
WING
ELAGE
00
500
600
700
E STATION (IN)

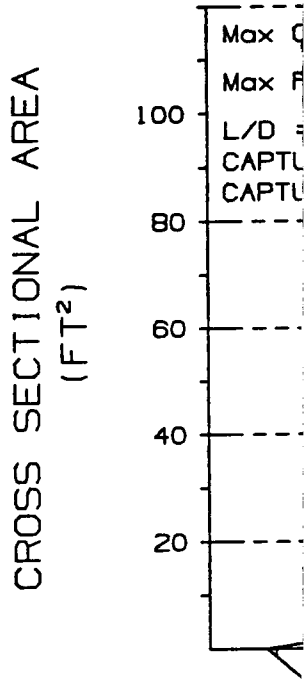
CROSS SECTIONAL AREA
(FT²)
100
80
60
40
20
Max
Max
L/D
CAPTU
CAPTU

296-2408 CROSS SECTIONAL AREA PL

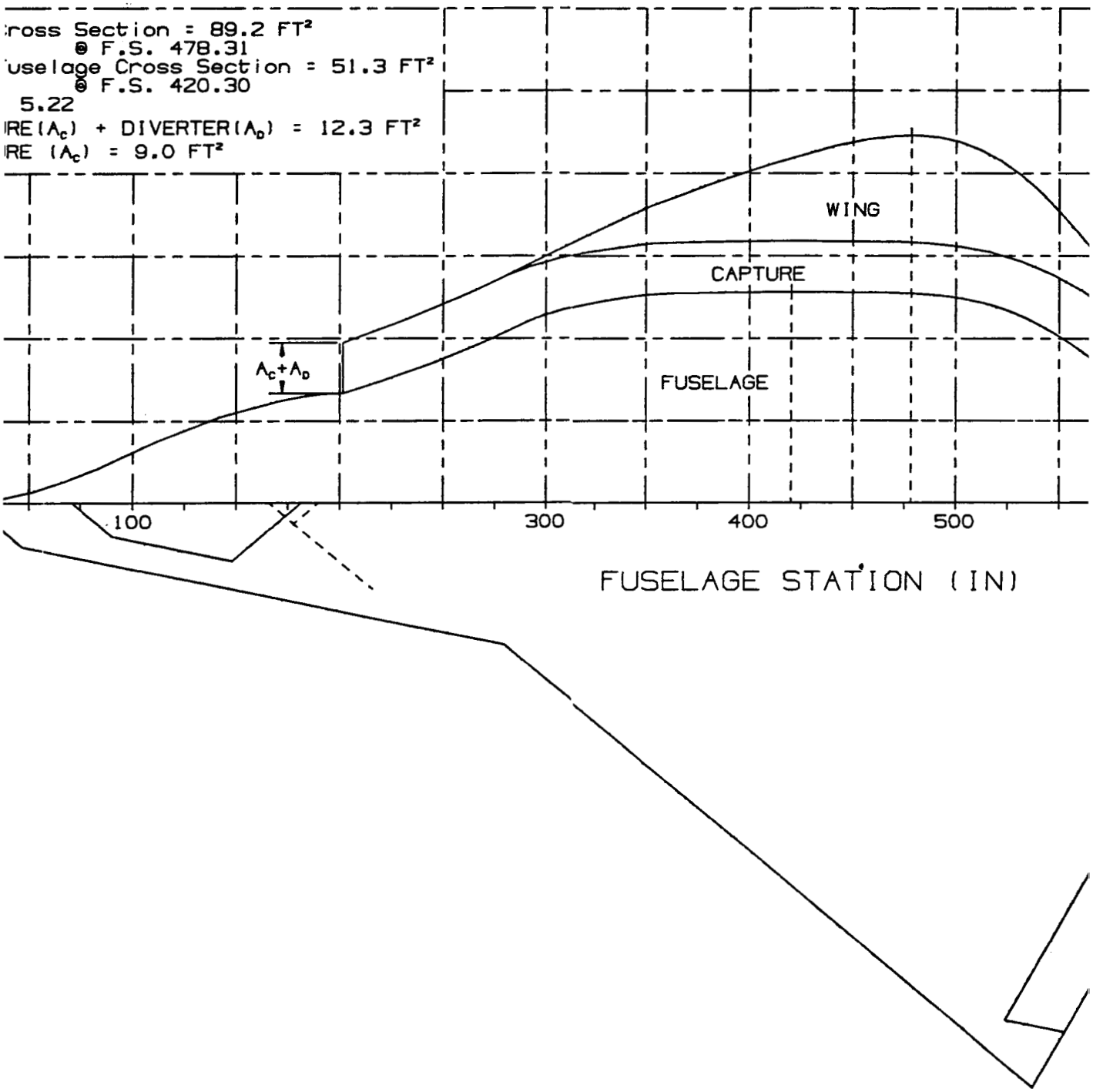

0T

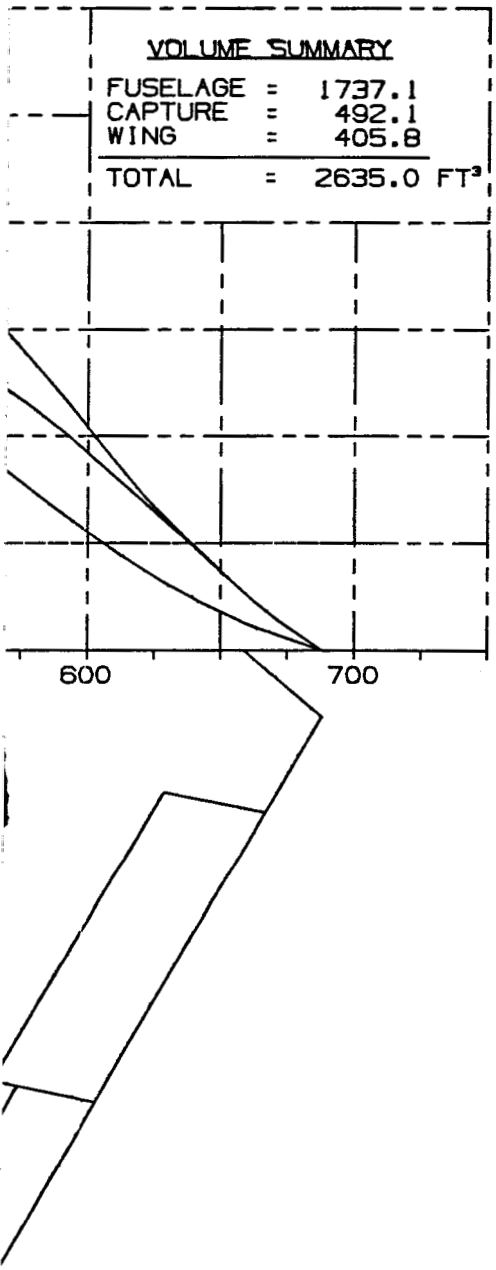
VOLUME SUMMARY
FUSELAGE = 1737.1
CAPTURE = 492.1
WING = 405.8
TOTAL = 2635.0 FT³
600
700

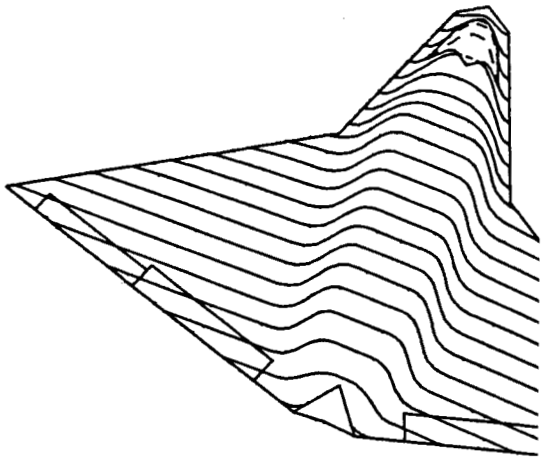

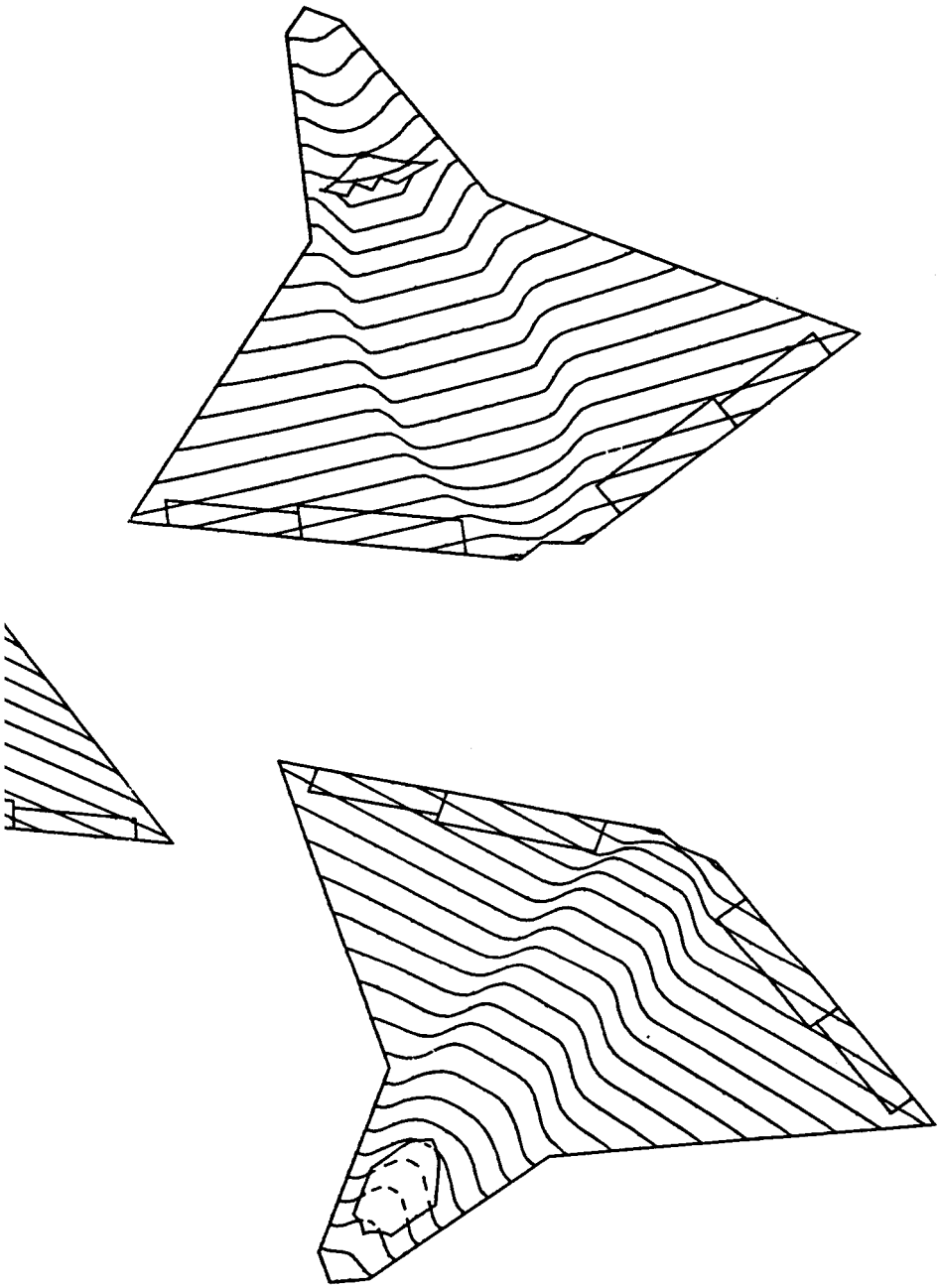

DSGN JOE BURNES	NASA - AGILITY TYPE C OBSERVABLES MODERATE AGILITY
SIZE Z	296-2408
SCALE NOTED	SHEET 2 OF 2

296-2408 SH 2 OF 2

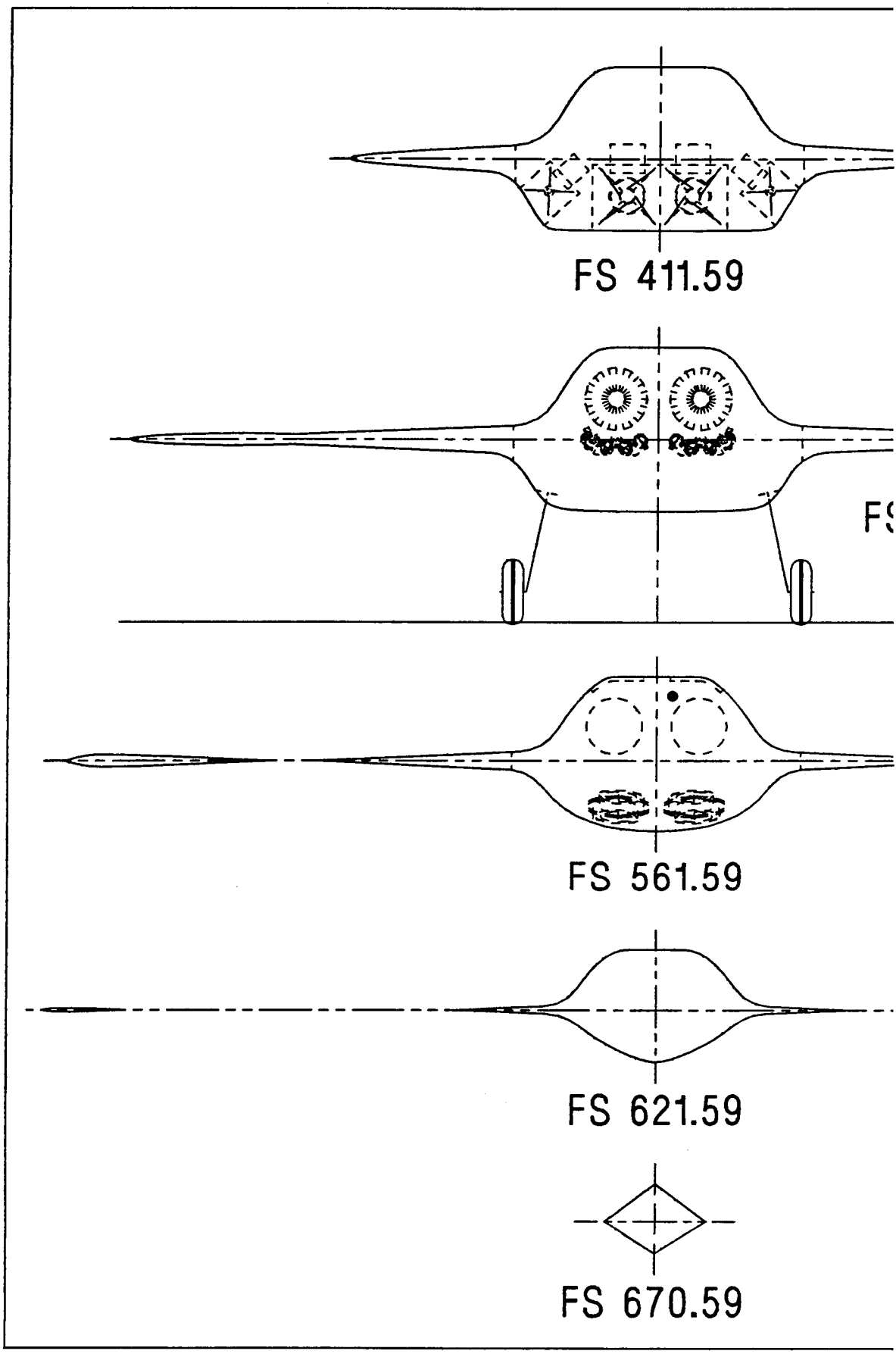
FS 411.59
FS
FS 561.59
FS 621.59
FS 670.59

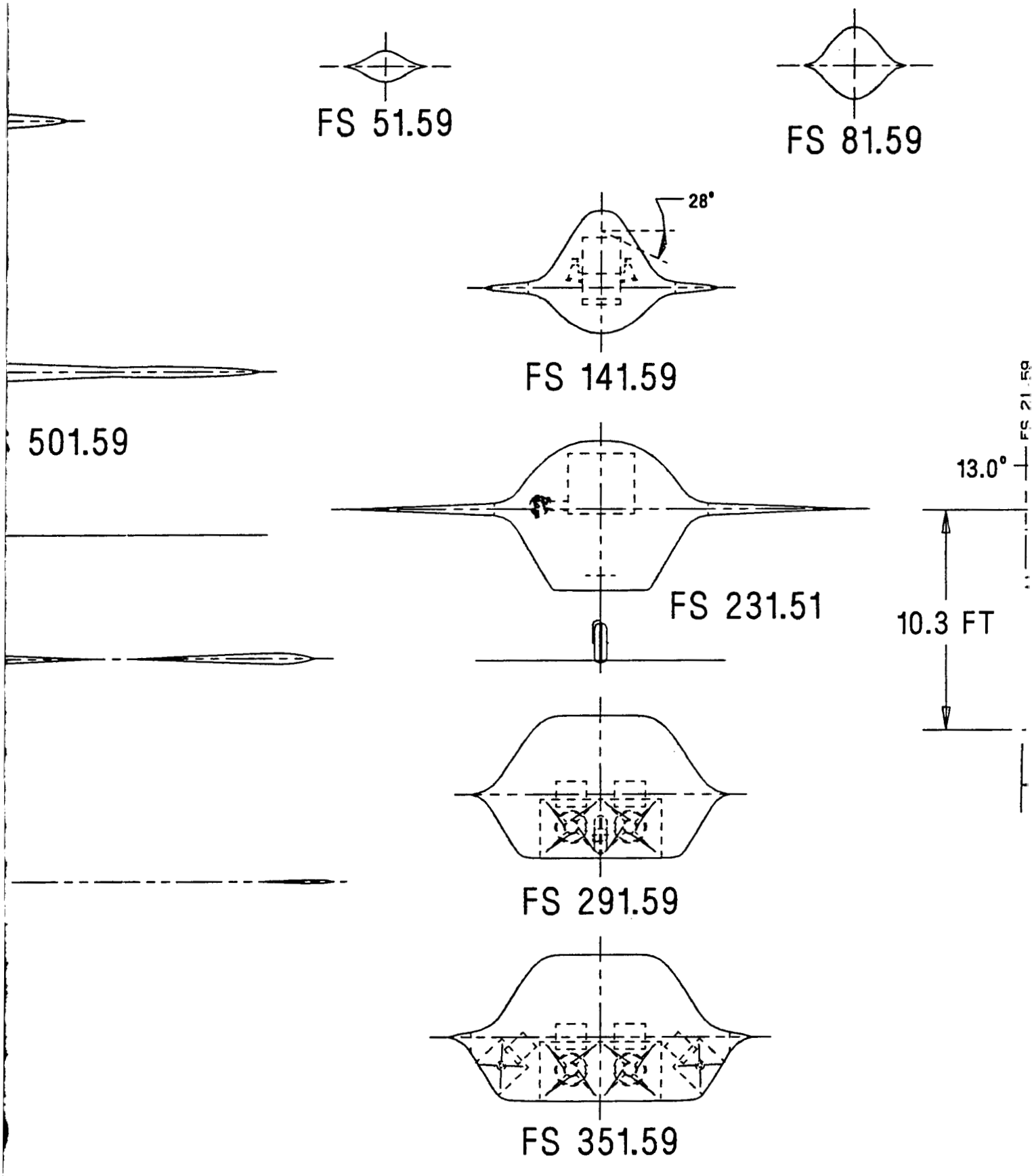
FS 51.59
FS 81.59
28°
FS 141.59
501.59
13.0°
FS 231.51
10.3 FT
FS 291.59
FS 351.59

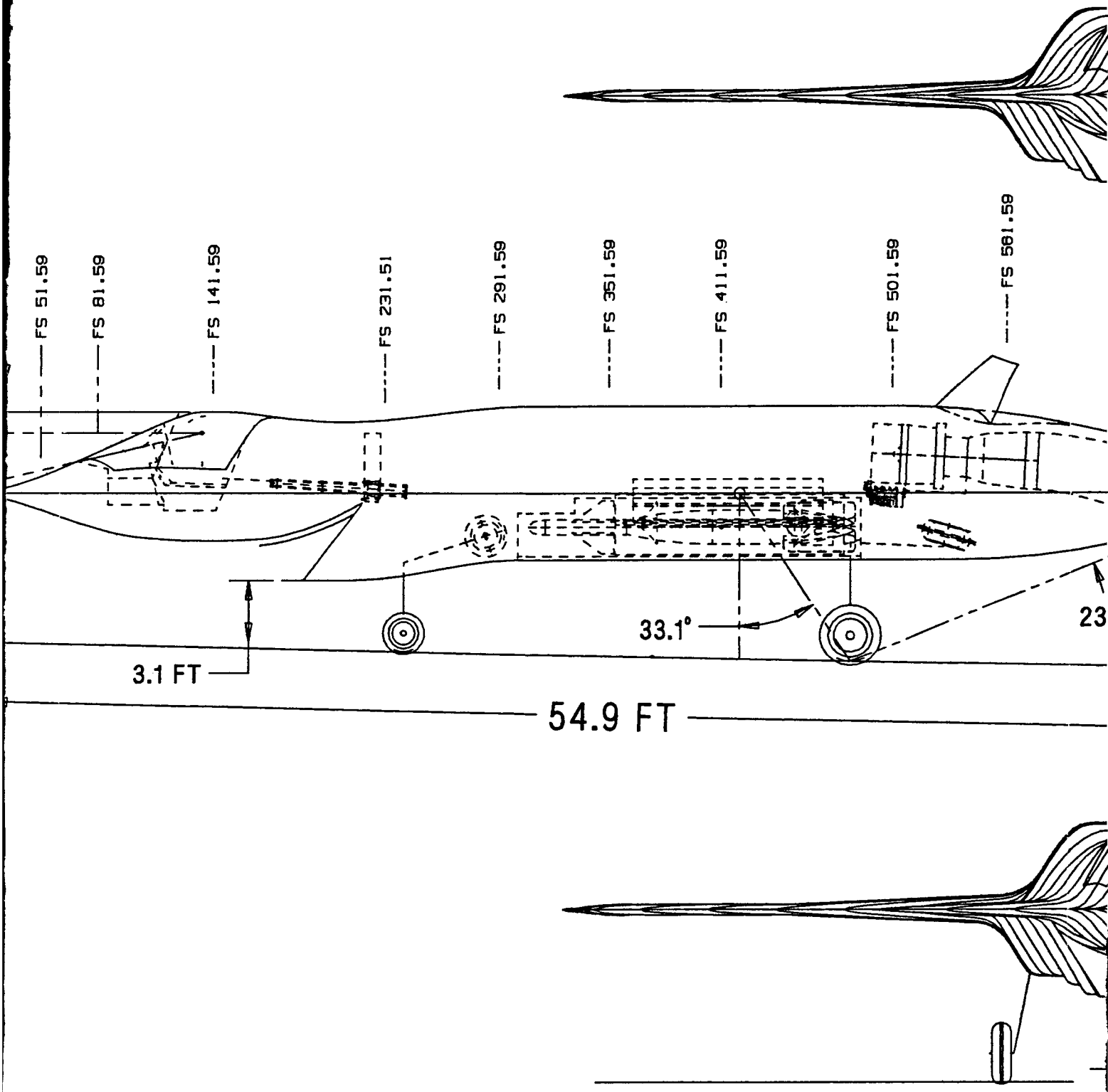
FS 51.59
FS 81.59
FS 141.59
FS 231.51
FS 291.59
FS 351.59
FS 411.59
FS 501.59
FS 561.59
33.1°
23
3.1 FT
54.9 FT

40°
FS 873.44
78.3°
4°
X=208.1
Y=-86.4
Z=-.0
MAC/4

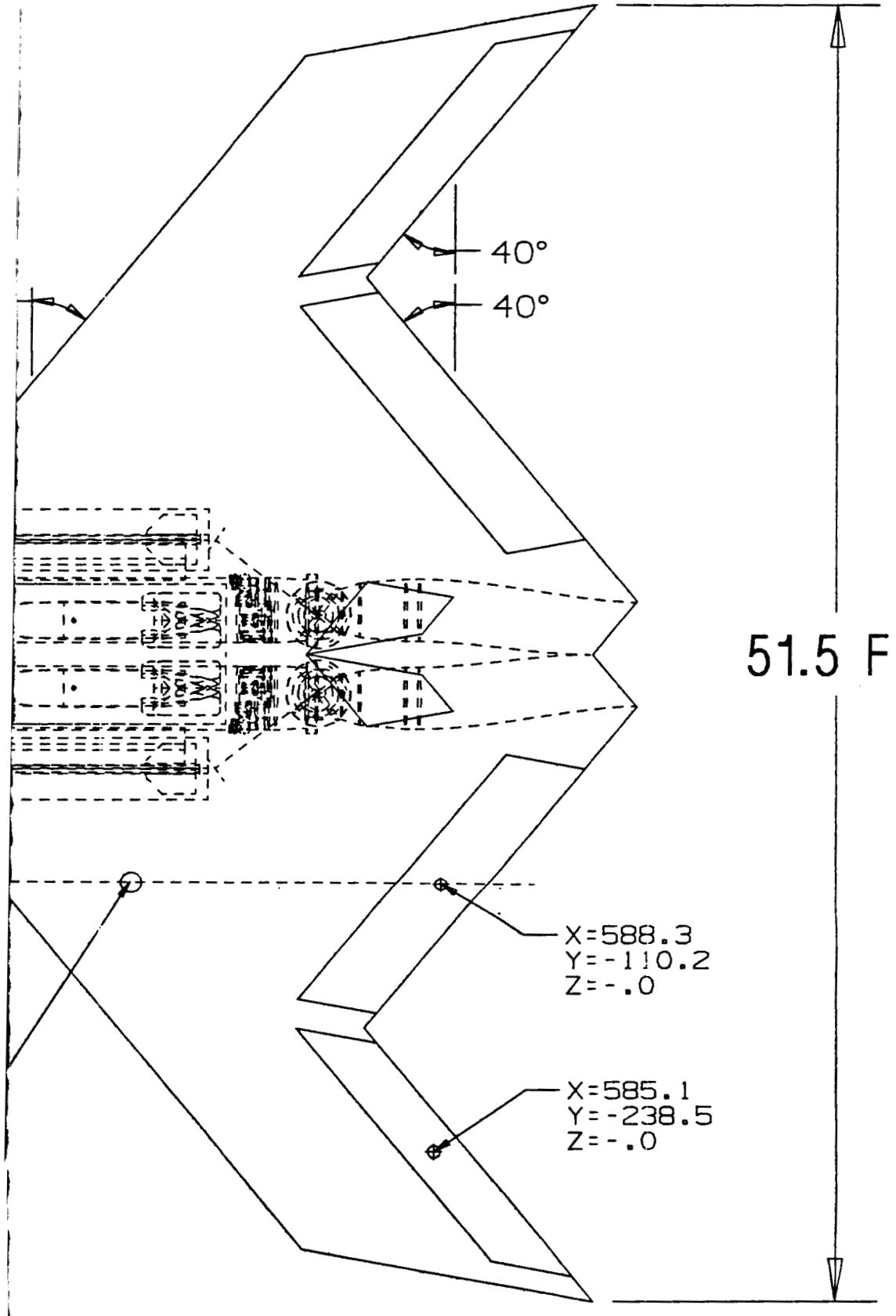
40°
40°
51.5 F
X=588.3
Y=-110.2
Z=-.0
X=585.1
Y=-238.5
Z=-.0

CHARACTERISTICS	WING	"VEE"-TAIL EACH TRUE	VERT. TAIL EACH TRUE	HORZ. TAIL EACH TRUE	CANARD EACH TRUE	THRUST-BLOWN ELEVON EACH TRUE
S (FT2) THEO	881.8	-	-	-	139.3	-
S (FT2) EXPO	531.0	-	-	-	57.8	-
ASPECT RATIO	3.08	-	-	-	2.03	-
TAPER RATIO	0.281	-	-	-	0.080	-
REF. SPAN (FT)	51.5	-	-	-	23.8	-
1/2 REF. SPAN (IN)	309.0	-	-	-	142.8	-
ROOT CHORD (IN)	419.0	-	-	-	280.2	-
TIP CHORD (IN)	117.9	-	-	-	20.9	-
MAC (IN)	258.7	-	-	-	174.4	-
YBAR (IN)	109.8	-	-	-	51.1	-
L.E. OF MAC (IN)	375.4	-	-	-	130.8	-
F.S. 1/4 MAC (IN)	439.8	-	-	-	174.1	-
B.L./W.L. MAC (IN)	109.8/0.0	-	-	-	51.1/-3.8	-
SWEEP OF L.E.	40°	-	-	-	40°	-
SWEEP OF T.E.	-40°/40°	-	-	-	-40°	-
AIRFOIL CR	64A	-	-	-	64A	-
AIRFOIL CT	64A	-	-	-	64A	-
T/C ROOT	5%	-	-	-	5%	-
T/C TIP	5%	-	-	-	5%	-
INCIDENCE	-	-	-	-	-	-
DIHEDRAL	-	-	-	-	-	-
TOE	-	-	-	-	-	-
TWIST	-	-	-	-	-	-
CAMBER	-	-	-	-	-	-
STATIC MARGIN (%)	-	-	-	-	-	-

PROPULSION		
ENGINE NAME	GE90-25300	
SCALE FACTOR	-	
NUMBER OF ENGINES	2	
ENGINE WEIGHT (EA)	1709	lbs
CAP. AREA TOTAL	9.0	FT²
B.L.D. AREA TOTAL	2.3	FT²
FWBLSU (EA)	25300	lbs
FWBLSI (EA)	-	lbs
NOZZLE AREA TOTAL	5.8	FT²
ASPECT RATIO	1.447	
INCIDENCE	-	degrees
TILT	-2	degrees
ROLL	-	degrees
TOE	-	degrees
TVC PITCH (+)	X.X	degrees
TVC PITCH (-)	X.X	degrees
TVC YAW (+/-)	X.X	degrees

CONTROLS	AREA (TOTAL) TRUE (FT²)	DEFLECTION +	DEFLECTION -	TRUNNION LOCATION
AILERON (SPLIT)	60.2	-	-	-
ELEVON	70.3	-	-	-
L.E. FLAP	-	-	-	-
T.E. FLAP	-	-	-	-
VERT. TAIL	-	-	-	-
HORIZ. TAIL	-	-	-	-
VEE-TAIL	-	-	-	-
THRUST-BLOWN ELEVON	-	-	-	-
-	-	-	-	-
-	-	-	-	-
-	-	-	-	-

WETTED AREA		
FUSELAGE	1244.9	FT²
INLET	-	FT²
CANOPY	37.5	FT²
CANARD (HORZ)	230.8	FT²
CANARD (VERT)	-	FT²
WING	999.3	FT²
HORIZ. TAIL	-	FT²
VERT. TAIL	-	FT²
VEE-TAIL	-	FT²
EXPOSED ENG.	-	FT²
TOTAL	2512.3	FT²

AIRCRAFT VOLUME CHARACTERISTICS		
FUSELAGE	1729.8	FT³
CAPTURE	535.1	FT³
WING	253.9	FT³
CANARD	28.1	FT³
VEE-TAIL	-	FT³
HORIZ. TAIL	-	FT³
VERT. TAIL	-	FT³
EXPOSED ENGINE	-	FT³
TOTAL A/C VOLUME	2686.7	FT³
MAX CROSS-SECTION	82.7	FT²
MAX FUSELAGE CROSS-SECTION	51.4	FT²
L/D	5.35	

AIRCRAFT CHARACTERISTIC ESTIMATES (USED FOR AIRCRAFT SIZING)	
T.O.G.W.	50000 LBS EST.
FUEL WEIGHT	33% T.O.G.W.

LANDING GEAR	NOSE GEAR	MAIN GEAR
TIRE SIZE	22.00X8.50	32.00X7.70
STROKE	10.0	10.0
PRESSURE	275 PSI	295 PSI

ARMAMENT
(2) GBU-24 LGB (INTERNAL) OR (2) AIM-120 MISSILES (INTERNAL)
(2) AIM-9 MISSILES (INTERNAL)
20 MM GUN / 500 ROUNDS AMMO.
(4) HARD POINTS (HYDRAULIC RACKS)

DSGN JOE BURNES 08-14-03
DR
STR
PD
PE

NASA - AGILITY
TYPE C OBSERVABLES
HIGH AGILITY

SIZE Z 296-2409

SCALE NOTED WT SHEET 1 OF 2

296-2409 SURFACI

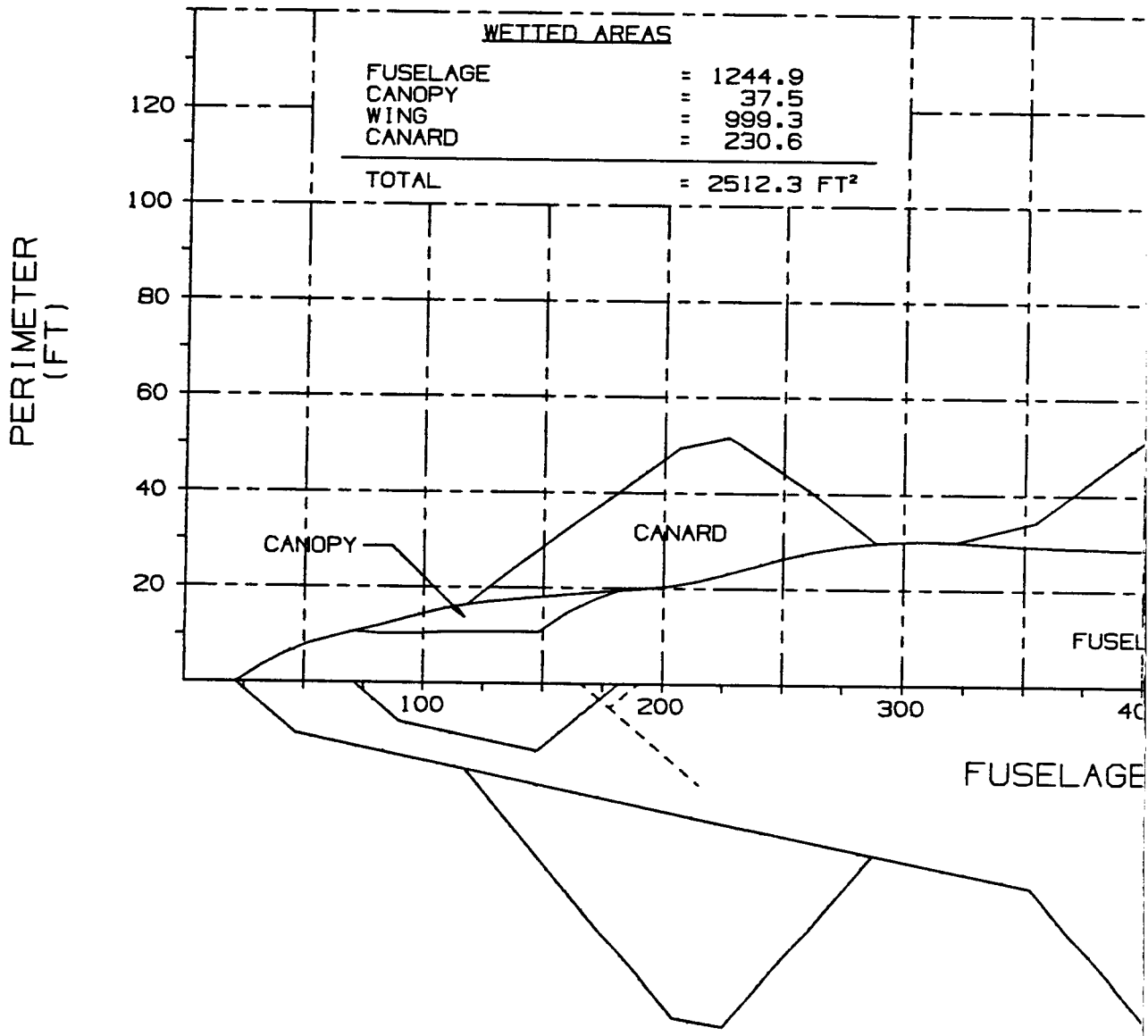

E AREA PLOT

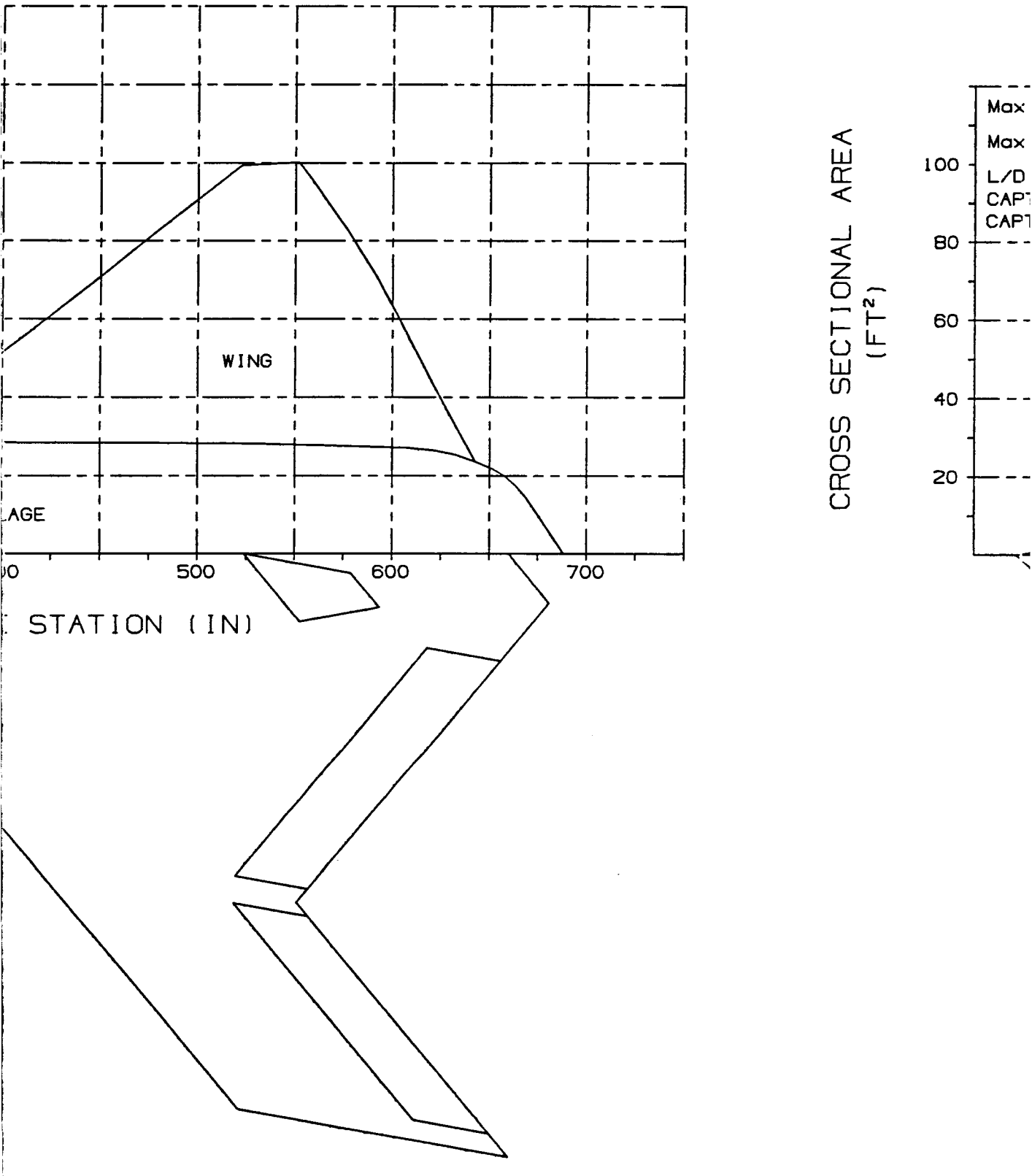
WING
LAGE
500
600
700
STATION (IN)
CROSS SECTIONAL AREA
(FT²)
100
80
60
40
20
Max
Max
L/D
CAP
CAP

296-2409 CROSS SECTIONAL AREA PI

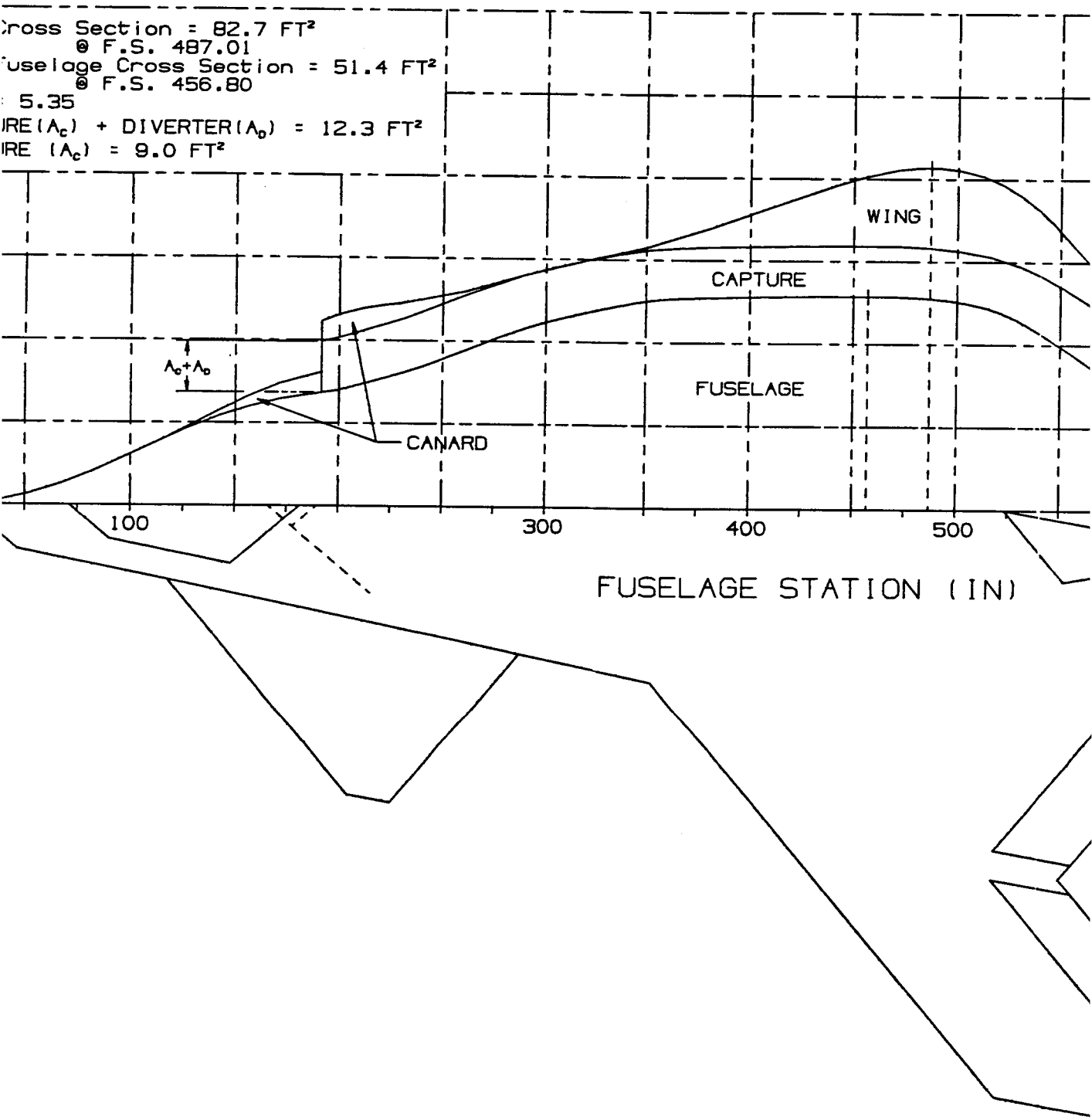

.OT

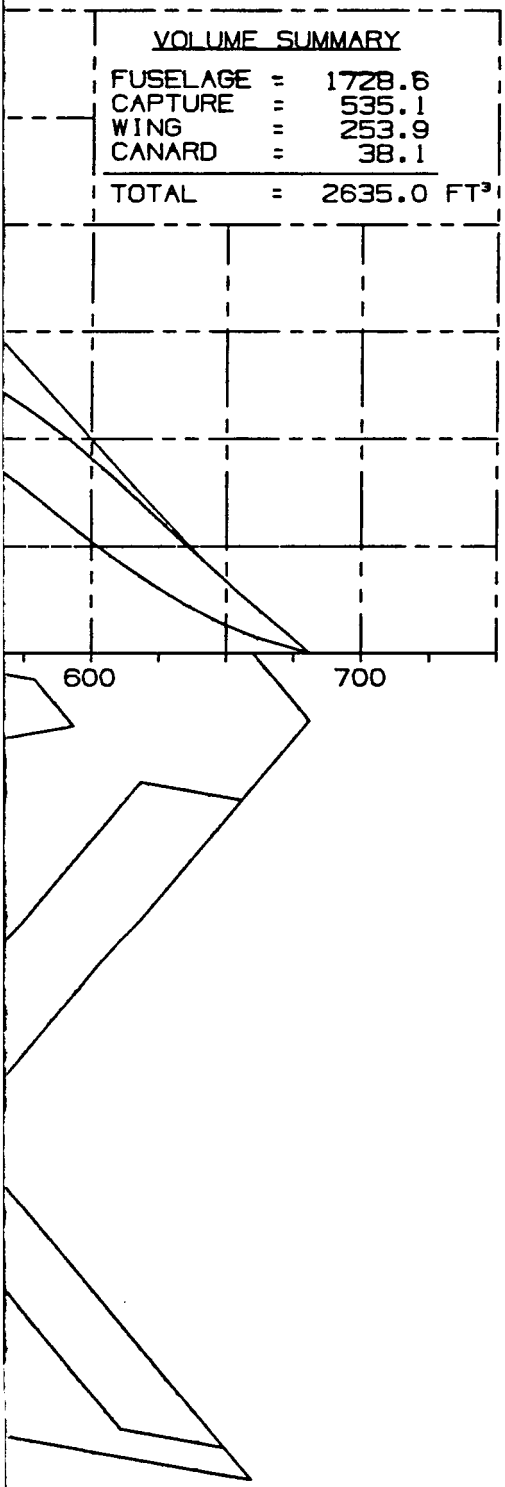
VOLUME SUMMARY
FUSELAGE = 1728.6
CAPTURE = 535.1
WING = 253.9
CANARD = 38.1
TOTAL = 2635.0 FT³
600
700

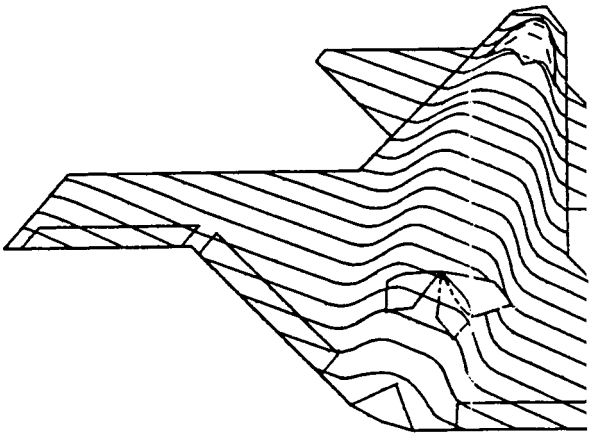

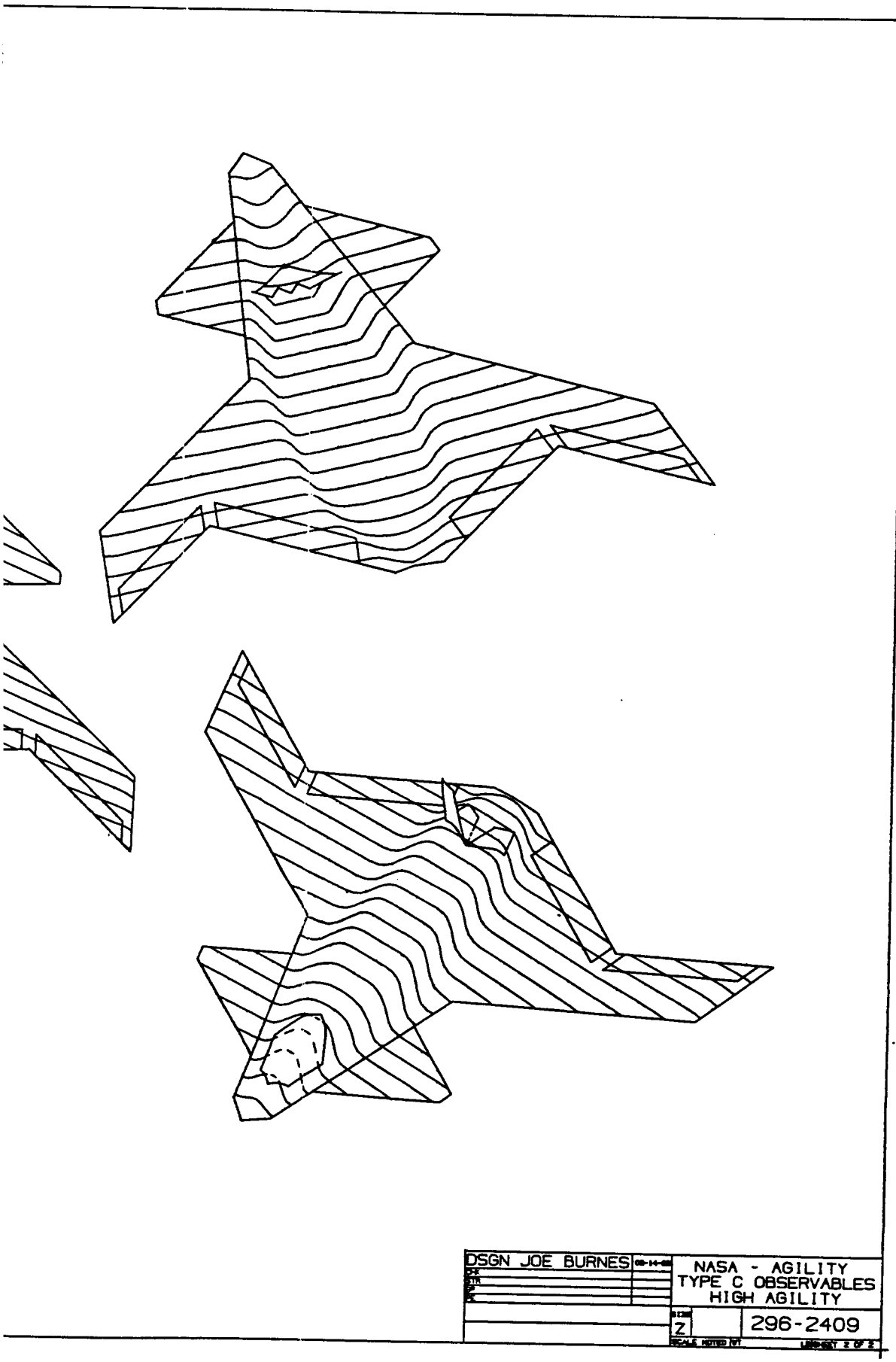
DSGN JOE BURNES
NASA - AGILITY
TYPE C OBSERVABLES
HIGH AGILITY
Z
296-2409
SCALE NOTED (V)
SHEET 2 OF 2
SAE-5408 SH 5 OF 5

REPORT DOCUMENTATION PAGE

Form Approved
OMB No. 0704-0188

Public reporting burden for this collection of information is estimated to average 1 hour per response, including the time for reviewing instructions, searching existing data sources, gathering and maintaining the data needed, and completing and reviewing the collection of information. Send comments regarding this burden estimate or any other aspect of this collection of information, including suggestions for reducing this burden, to Washington Headquarters Services, Directorate for Information Operations and Reports, 1215 Jefferson Davis Highway, Suite 1204, Arlington, VA 22202-4302, and to the Office of Management and Budget, Paperwork Reduction Project (0704-0188), Washington, DC 20503.

1. AGENCY USE ONLY (*Leave blank*)	2. REPORT DATE	3. REPORT TYPE AND DATES COVERED
	September 1994	Contractor Report

4. TITLE AND SUBTITLE

Impact of Agility Requirements on Configuration Synthesis

5. FUNDING NUMBERS

C NAS1-18763
TA 21

WU 505-68-70-09

6. AUTHOR(S)

Patrick J. O'Neil, Gregory Nyberg, Robin deTurk, Daniel W. Seal, and Christian E. Grethlein

7. PERFORMING ORGANIZATION NAME(S) AND ADDRESS(ES)

McDonnell Douglas Corporation
McDonnell Douglas Aerospace
P. O. Box 516
St. Louis, MO 63166-0516

8. PERFORMING ORGANIZATION REPORT NUMBER

9. SPONSORING / MONITORING AGENCY NAME(S) AND ADDRESS(ES)

National Aeronautics and Space Administration
Langley Research Center
Hampton, VA 23681-0001

10. SPONSORING / MONITORING AGENCY REPORT NUMBER

NASA CR-4627

11. SUPPLEMENTARY NOTES

Langley Technical Monitor: Michael J. Logan
Final Report - Task 21

12a. DISTRIBUTION / AVAILABILITY STATEMENT

Unclassified - Unlimited

Subject Category 05

12b. DISTRIBUTION CODE

13. ABSTRACT (*Maximum 200 words*)

A configuration design study was performed by McDonnell Douglas Aerospace (MDA) for the NASA Langley Research Center to determine the impact of agility-based requirements on the design of multi-role aircraft. Design guidelines and methodologies were developed which can guide the aircraft designer in the selection of aerodynamics, controls, avionics, propulsion, and materials technologies for a given level of both agility and observables requirements. A matrix of nine aircraft was generated to investigate the quantitative effects of agility-based requirements and observables requirements on vehicle design and sizing. This matrix of aircraft indicates the relatively large TOGW penalty associated with high levels of agility when applied to a vehicle with significant observables requirements. However, the matrix also suggests that optimal integration of certain advanced technologies, such as in tailless fighter design synthesis, might have significant advantages over designs incorporating more conventional technologies. Finally, the study identifies the types of technologies required to achieve high agility under different observables requirements and allows some assessment of the current risks associated with these technologies and how future research might be focused toward reducing such risks.

14. SUBJECT TERMS

Agility
Aircraft Design
Technology Impact

15. NUMBER OF PAGES

304

16. PRICE CODE

A14

17. SECURITY CLASSIFICATION OF REPORT	18. SECURITY CLASSIFICATION OF THIS PAGE	19. SECURITY CLASSIFICATION OF ABSTRACT	20. LIMITATION OF ABSTRACT
Unclassified	Unclassified		

NSN 7540-01-280-5500

Standard Form 298 (Rev. 2-89)
Prescribed by ANSI Std. Z39-18
298-102