N95- 13954

QUANTUM AMPLIFICATION AND QUANTUM OPTICAL TAPPING WITH SQUEEZED STATES AND CORRELATED QUANTUM STATES

Z. Y. Ou
Department of Physics, Indiana University-Purdue University at Indianapolis (IUPUI)
Indianapolis, IN 46202

S. F. Pereira and H. J. Kimble
Norman Bridge Laboratory of Physics 12-33, California Institute of Technology
Pasadena, CA 91125

Abstract

Quantum fluctuations in a nondegenerate optical parametric amplifier (NOPA) are investigated experimentally with a squeezed state coupled into the internal idler mode of the NOPA. Reductions of the inherent quantum noise of the amplifier are observed with a minimum noise level 0.7 dB below the usual noise level of the amplifier with its idler mode in a vacuum state. With two correlated quantum fields as the amplifier's inputs and proper adjustment of the gain of the amplifier, it is shown that the amplifier's intrinsic quantum noise can be completely suppressed so that noise-free amplification is achieved. It is also shown that the NOPA, when coupled to either a squeezed state or a nonclassically correlated state, can realize quantum tapping of optical information.

1 Introduction

It has been known since the date when optical amplification was first realized that fundamental principles of quantum mechanics play an important role in the noise performance of a linear amplifier [1, 2]. For example, it was found [3, 4] that even in an ideal case when all the classical noise is eliminated, "extra" quantum noise from an amplifier's internal modes will add to the amplifier's output thus preventing noise-free amplification and degrading the output signal-to-noise ratio (SNR) relative to that of the input. Such "extra" quantum noise would destroy any coherent quantum superpositions that are often encountered in the microscopic world, should one try to amplify the microscopic quantum superposition to a macroscopic scale so as to produce a paradox such as Schrödinger's Cat [5].

However, Caves pointed out in a systematic analysis [6] of quantum noise in a linear amplifier that noiseless amplification is possible with a phase-sensitive amplifier (for which the gain depends on the phase of the input signal). On the other hand, for a phase-insensitive amplifier, although extra noise cannot be avoided as stated above, it may be rearranged, according to Caves' analysis. More specifically, a phase-insensitive amplifier is described by a general quantum model [6, 7]:

$$\hat{a}^{out} = \sqrt{G}\,\hat{a}^{in} + \hat{F}, \tag{1}$$

PRECEDING PAGE BLANK NOT FILMED
PAGE 464 INTENTIONALLY BLANK

where $\hat{a}^{in,out}$ is the annihilation operator for the input and output signal, G is the power gain of the amplifier and $\hat{F}$ is an operator related to the internal modes of the amplifier and satisfies $[\hat{F}, \hat{F}^\dagger] = 1 - G$. The quantum fluctuations in $\hat{F}$ will give rise to the "extra noise" added to the output signal. From Eq.(1), one can derive Caves' uncertainty relation [6]

$$(A_1 A_2)^{1/2} \geq \frac{1}{4}\left|1 - G^{-1}\right| \quad , \tag{2}$$

where $A_i \equiv \langle(\Delta\hat{F}_i)^2\rangle/G$ is the input equivalent noise added to the quadrature-phase amplitudes $X_i (i = 1, 2)$, with $X_1 \equiv (\hat{a}+\hat{a}^\dagger)/2, X_2 \equiv (\hat{a}-\hat{a}^\dagger)/2i, \hat{F}_1 \equiv (\hat{F}+\hat{F}^\dagger)/2$, and $\hat{F}_2 \equiv (\hat{F}-\hat{F}^\dagger)/2i$. Thus the noise in amplification in one quadrature-phase amplitude where the signal is encoded can be suppressed while the extra noise demanded by Eq.(2) is mostly coupled into the unused conjugate quadrature, with their noise product satisfying Eq.(2). By following this line of reasoning, it was suggested [8, 9, 10, 11] that by coupling the amplifier's internal modes to a squeezed vacuum instead of the usual vacuum state, the suppression of added noise for one quadrature can be achieved as stated above.

In the analysis of Caves, it was assumed that the input field $\hat{a}^{in}$ is independent of the internal modes of the amplifier described by $\hat{F}$. On the other hand, the situation will be totally different if $\hat{a}^{in}$ and $\hat{F}$ are correlated. Notice that the quantities in Eq.(1) are amplitudes of the relevant fields. Thus interference between the amplitudes of $\hat{a}^{in}$ and $\hat{F}$ may give rise to cancellation of their quantum fluctuations and lead to noise reduction in the amplifier's output. Quantum noise subtraction has been realized with various kinds of correlated quantum fields [12, 13, 14].

The distribution of information in the modern age requires division of incoming information into identical pieces for sharing by many users. An optical tap is a kind of information divider by optical means, with which one can extract the needed information while at the same time leaving the information readable by other users down the line [15]. The challenge is of course to tap the information without degradation of the signal-to-noise ratio (SNR) for both tapped and transmitted information. An optical divider or tap is usually a four-port device with two inputs and two outputs (the law of quantum mechanics requires there to be an extra input). A typical divider is simply a beamsplitter: information comes in one input and is divided into two outputs. However, the uncorrelated quantum noise from the other unused port will add to the outputs and degrade their SNRs. On the other hand, it is known that quantum noise can be suppressed with a squeezed state. Shapiro thus suggested [15] to couple the unused port to a squeezed vacuum to reduce its quantum noise. Another technique is to use two correlated quantum fields as the two inputs. Quantum correlation between the two inputs will subtract out the quantum noise in the outputs. Such techniques can be used in any four-port system for information division.

In the following sections, we will mainly discuss quantum fluctuations in a nondegenerate optical parametric amplifier (NOPA) which has only one internal mode called "idler". In section 2, we first describe an experiment in which we couple a squeezed light field into the internal idler mode of the NOPA and demonstrate quantum noise reduction by the scheme of rearranging the quantum noise between two conjugate quadrature-phase amplitudes. In section 3, we will discuss quantum noise cancellation in amplification with a correlated quantum state where noise-free amplification can be achieved with moderate correlation. In section 4, we will consider the NOPA as a four-port system (2 inputs and 2 outputs) and show that it can be used as a quantum optical information tap when the inputs are coupled either to a squeezed state or to a correlated quantum state.

2 Quantum Noise Reduction in Optical Amplification with a Squeezed State

A nondegenerate optical parametric amplifier (NOPA) is an optical amplifier that utilizes nonlinear coupling to convert energy in a pump beam(s) to a signal beam. It can be realized in either three-wave mixing or four-wave mixing processes. Besides the pump beam(s) and the input-output signal beams, another beam called "idler" is coupled to the pump and signal beams at the same time. This idler beam labled as $\hat{b}^{in}$ corresponds to the so-called internal mode of the amplifier discussed earlier. In terms of the quantities in Eq.(1), $\hat{F} = \sqrt{G-1}\ \hat{b}^{in\dagger}$ and G is related to the pump beam. Fig.1 shows a NOPA with a coherent signal input and its idler mode coupled to a squeezed vacuum generated by a squeezer. Detailed descriptions of each device used in the diagram can be found in Ref.[14b]. In the linear operating regime (small input signal), the pump beam is undepleted and does not contribute any extra quantum noise to the output [16]. Thus Eq.(1) becomes

$$\hat{a}^{out} = \sqrt{G}\ \hat{a}^{in} + \sqrt{G-1}\ \hat{b}^{in\dagger}. \tag{3}$$

We can rewrite Eq.(3) with the quadrature-phase amplitude $\hat{X}_c(\theta) \equiv \hat{c}\ e^{-i\theta} + \hat{c}^\dagger e^{i\theta}$ $(c = a, b)$ as

$$\hat{X}_a^{out}(\theta) = \sqrt{G}\ \hat{X}_a^{in}(\theta) + \sqrt{G-1}\hat{X}_b^{in}(-\theta). \tag{4}$$

If the fields $\hat{a}$ and $\hat{b}$ are independent of each other, the output noise of the amplifier is then given by

$$N_a^{out}(\theta) = G\ N_a^{in}(\theta) + (G-1)N_b^{in}(-\theta), \tag{5}$$

where $N_i(\theta) \equiv \langle(\hat{X}_i - \langle\hat{X}_i\rangle)^2\rangle$ $(i = a, b)$.

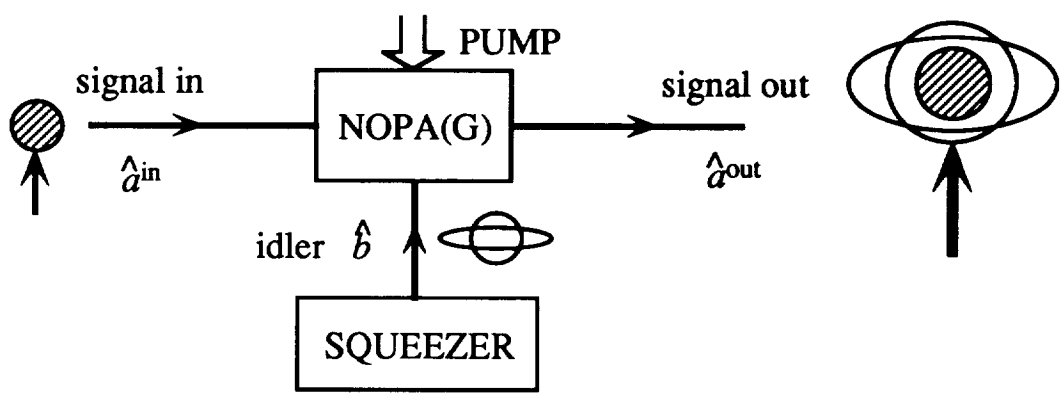

FIG. 1. Diagram for the experiment of quantum noise reduction with a NOPA. The shaded part of the noise circle for the amplified signal corresponds to amplified input signal noise and the rest of the noise comes from the extra noise contributed by the amplifier's internal modes

Usually, the idler mode $\hat{b}$ is coupled to empty vacuum and $N_b^{in}(-\theta) = 1$, resulting in extra noise $G - 1$ in the output. On the other hand, with the idler mode $\hat{b}$ coupled to a squeezed vacuum, for the squeezed quadrature of $\theta = \theta_-$, we have $N_{b-} \equiv N_b^{in}(-\theta_-) < 1$, thus the extra noise at the output due to the idler can be reduced. For the other quadrature, however, the extra noise will be enhanced. Therefore, as we change the phase and look at different quadratures, we will obtain a phase-sensitive noise level for the output with noise reduction at some phases and noise enhancement at other phases, as shown in Fig.2, where we plot the signal output noise level as a function of local oscillator phase. It is found that the minimum noise level in the phase-sensitive curve *ii* drops below the phase-insensitive curve *i*, which is the output noise level when the idler mode is coupled to the vacuum, thus demonstrating quantum noise reduction in the amplification process. The phase-insensitive curve *i* (Φ_G) also gives a measure of quantum noise gain as compared to the vacuum noise level Ψ_0 ($G_q \equiv \Phi_G/\Psi_0$) [14b]. The dashed trace *iv* corresponds to the output noise level expected for a lossless system with perfectly squeezed idler at the same operating gain of the amplifier. To better quantify the noise reduction, we tune the phase to $\theta = \theta_-$ and block and unblock the injected squeezed light field. When the squeezed light is blocked, it corresponds to a vacuum state coupled to the idler mode. In Fig.3, we plot the output noise level as we turn "ON" and "OFF" the squeezed light. By performing the same measurement at different gains of the amplifier, we can plot the amount of noise redution $\Delta_- \equiv \Phi(\theta_-)/\Phi_G$ against the quantum noise gain G_q as in Fig.4. The best noise reduction of -0.7 dB is observed at $G_q = 2.6$ (4.2 dB). The solid curve in Fig.4 is a theoretical prediction for our system with 0.3% internal round-trip loss for the NOPA and with 30% external loss (mainly propagation and detection losses), as determined by independent measurements [14b]. The amount of squeezing

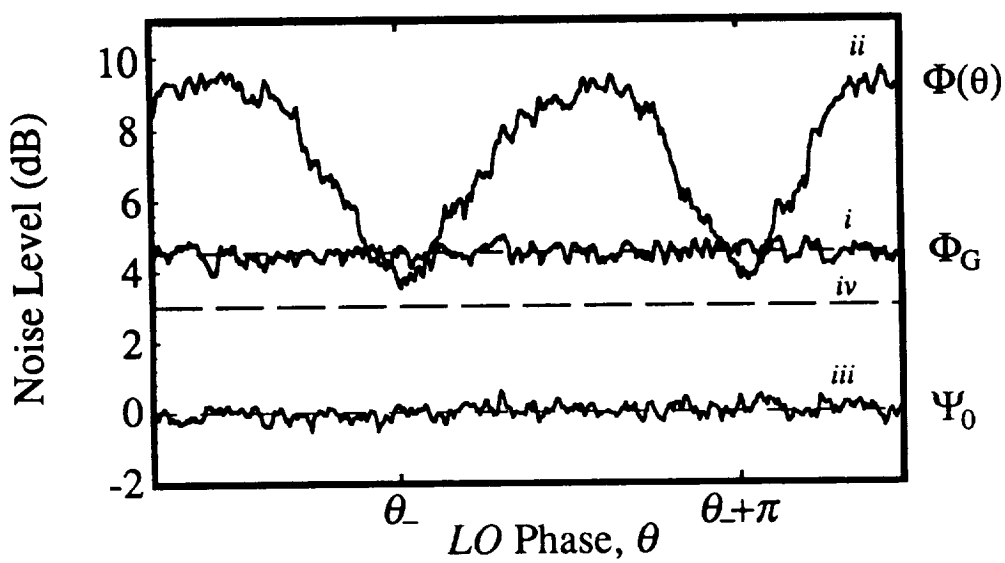

FIG. 2. Spectral density of photocurrent fluctuations for i_- generated by NOPA's signal output $\hat{a}^{out}$ as a function of the local oscillator phase θ. Trace i is the amplified noise level Φ_G when the idler mode is in a vacuum state, while trace ii corresponds to the case when the idler is in a squeezed vacuum state. Trace iii is the vacuum noise level Ψ_0 and the dashed trace iv corresponds to the output noise level expected for a lossless system with perfectly squeezed idler.

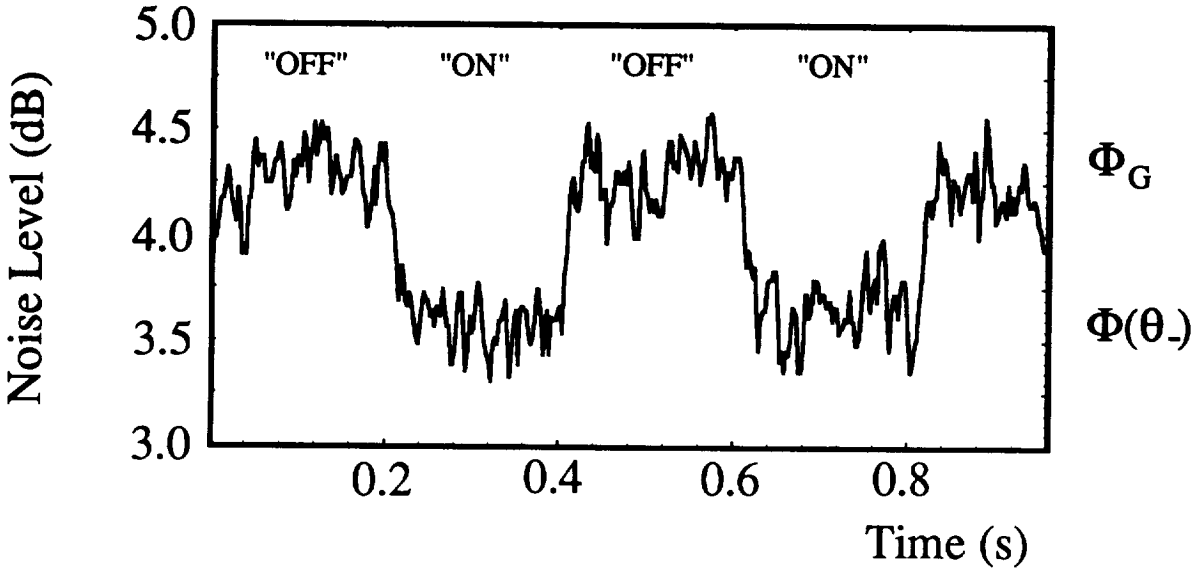

FIG. 3. Amplified noise level of the signal output for NOPA. "OFF" correponds to the output noise level Φ_G for a vacuum state coupling to the idler mode. "ON" gives the output noise level $\Phi(\theta_-)$ for a squeezed state input to the idler. The noise levels are referenced to the vacuum noise level Ψ_0.

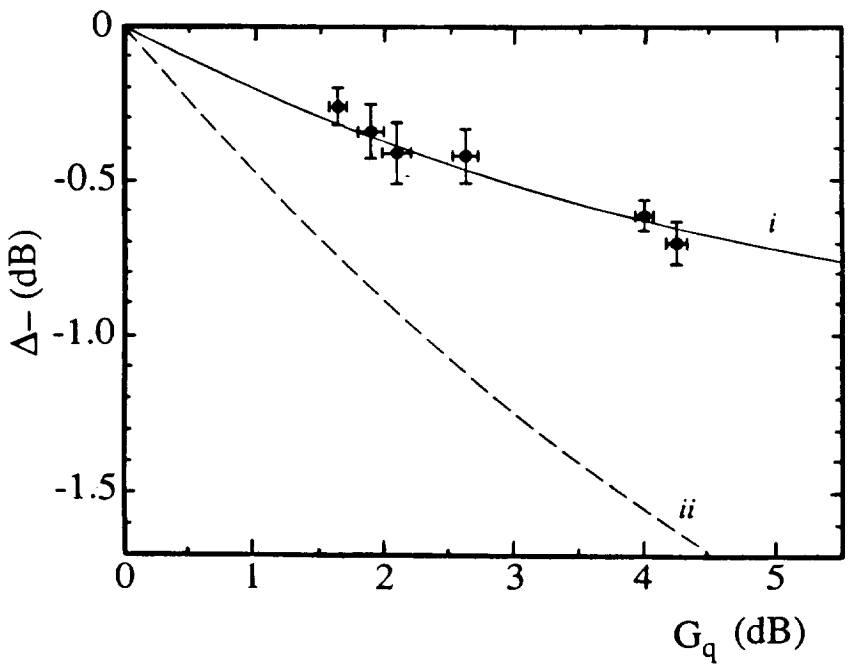

FIG. 4. Quantum noise reduction Δ_- for the amplified output signal as a function of the detected quantum noise gain G_q for a squeezed idler input of $N_- = 0.52$. The solid curve is the theoretical prediction for our system and the dashed curve ii is for a lossless system with perfect squeezing for the idler.

that is coupled into the idler mode is also directly measured to be $N_b^{in}(\theta_-) = 0.52$. Thus all the relevant parameters in the theory for our experiment are measured independently. It is seen that the experimental data fit the theoretical prediction quite well. The dashed trace *ii* corresponds to the maximum possible noise reduction with a coherent signal input in a lossless system with perfect squeezing coupled to the idler mode ($N_b^{in}(\theta_-) = 0$), in which no extra noise is added to the amplified output.

3 Cancellation of Quantum Fluctuations in Optical Amplification with Correlated Quantum Fields

In the discussion of last section, we assumed that the quantum fluctuations in the signal input and the amplifier's internal idler mode are uncorrelated. When their quantum fluctuations are correlated, however, we cannot write the output noise as in Eq.(5) because the correlation between $\hat{X}_a^{in}(\theta)$ and $\hat{X}_b^{in}(-\theta)$ may result in cancellation (or enhancement) of their fluctuations through destructive (or constructive) interference.

The quantity to describe the degree of correlation between fields $\hat{a}$ and $\hat{b}$ is the correlation function defined as

$$C_{ab} \equiv \frac{\langle \Delta\hat{X}_a \Delta\hat{X}_b \rangle}{\sqrt{\langle \Delta^2\hat{X}_a \rangle \langle \Delta^2\hat{X}_b \rangle}} \quad (|C_{ab}| < 1). \tag{6}$$

Assume that $\Delta\hat{X}_a$ and $\Delta\hat{X}_b$ are positively correlated, that is, $C_{ab} > 0$ and that the fluctuations of field $\hat{a}$ are smaller than or equal to that of field $\hat{b}$, that is, $N_a \equiv \langle \Delta^2\hat{X}_a \rangle \leq \langle \Delta^2\hat{X}_b \rangle$. We will encode the signal only into the field $\hat{a}$ ($\langle \hat{X}_a \rangle \equiv A \neq 0$ and $\langle \hat{X}_b \rangle = 0$) because it has less noise. The signal-to-noise ratio (SNR) for the field $\hat{a}$ is then $R_a = A^2/N_a$. On the other hand, because the two fields are correlated, we have for the noise in the difference of the two fields:

$$N_d \equiv \langle (\Delta\hat{X}_a - \lambda_m \Delta\hat{X}_b)^2 \rangle = \langle \Delta^2\hat{X}_a \rangle (1 - C_{ab}^2) < N_a,$$

where we have minimized N_d by choosing the optimized coefficient $\lambda_m = \langle \Delta\hat{X}_a \Delta\hat{X}_b \rangle / \langle \Delta^2\hat{X}_b \rangle$. $\lambda_m = C_{ab}$ when $\langle \Delta^2\hat{X}_a \rangle = \langle \Delta^2\hat{X}_b \rangle$. Thus the noise in the difference of two fields is smaller than the noise in the single field $\hat{a}$. So the optimized signal-to-noise ratio (SNR) is $R_d \equiv \langle \hat{X}_a - \lambda_m \hat{X}_b \rangle^2 / N_d = A^2/N_a(1 - C_{ab}^2)$ if both $\hat{a}$ and $\hat{b}$ fields are employed. Obviously, $R_d > R_a$.

Next let us consider the situation when the fields $\hat{a}$ and $\hat{b}$ are injected into the signal and idler ports of the amplifier, respectively. We adjust the phase of the pump beam so that Eq.(4) becomes

$$\hat{X}_a^{out} = \sqrt{G}\, \hat{X}_a^{in} - \sqrt{G-1}\hat{X}_b^{in}. \tag{7}$$

Thus the amplified signal becomes

$$\langle \hat{X}_a^{out} \rangle = \sqrt{G} \langle \hat{X}_a^{in} \rangle = A\sqrt{G}. \tag{8}$$

The noise of the amplified signal output is calculated as

$$N_a^{out} = \langle \Delta^2 \hat{X}_a^{out} \rangle = G \langle (\Delta\hat{X}_a^{in} - \sqrt{(G-1)/G}\Delta\hat{X}_b^{in})^2 \rangle, \tag{9}$$

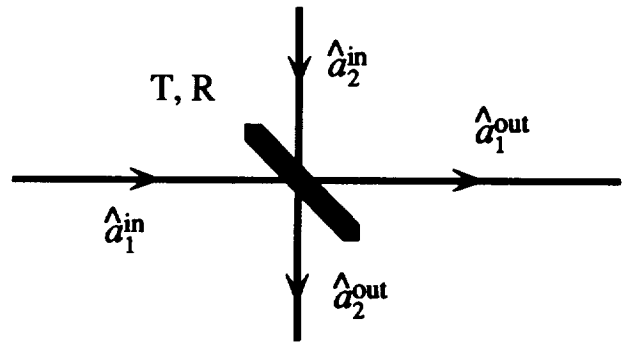

FIG. 5. Diagram for a beamsplitter.

which reaches minimum value of

$$N_{a_{min}}^{out} = G\langle(\Delta\hat{X}_a - \lambda_m\Delta\hat{X}_b)^2\rangle = G\langle\Delta^2\hat{X}_a\rangle(1 - C_{ab}^2) = GN_d, \tag{10}$$

when $\sqrt{(G-1)/G} = \lambda_m = C_{ab}$. Note that Eqs.(8) and (9) are for the signal beam alone; mixing of the field $\hat{a}$ with the field $\hat{b}$ as required for N_d has taken place within the amplifier itself. Combining Eqs.(8,10), we obtain for the output SNR

$$R_a^{out} = \langle\hat{X}_a^{out}\rangle^2/N_{a_{min}}^{out} = A^2G/N_dG = R_d. \tag{11}$$

Therefore the output SNR R_a^{out} is equal to the input SNR R_d (and $> R_a$) with the signal amplified by the gain G. No extra noise is added in the amplification process. However, noise-free amplication can only be achieved at some specific gain $G = 1/(1-\lambda_m^2)$ determined by the correlation function C_{ab} between the two fields $\hat{a}$ and $\hat{b}$. When the two fields are close to perfect correlation with $\lambda_m = C_{ab} \to 1$, the gain G can be arbitrarily large.

4 Quantum Optical Information Tapping with Squeezed States and Correlated Quantum Fields

The concept of quantum optical information tapping was first discussed by Shapiro [15] for a beamsplitter with squeezed state coupled to one of the input ports. Consider a beamsplitter shown in Fig.5, where the input port $\hat{a}_2$ is in a squeezed state with the degree of squeezing denoted by S. A coherent signal of size A is injected into the other port labled as $\hat{a}_1$ with input SNR $R_1^{in} = A^2$. It can be easily calculated [15] that for a beamsplitter with transmissivity T and reflectivity R, the output SNR at both output ports are given as

$$R_1^{out} = \frac{TA^2}{(T+RS)}, \quad R_2^{out} = \frac{RA^2}{(R+TS)}.$$

The efficiency of this information tapping scheme can be quantified [17] as the ratio of the output SNRs to the input SNRs:

$$\eta \equiv \frac{R_1^{out} + R_2^{out}}{R_1^{in}} = \frac{T}{T+RS} + \frac{R}{R+TS} = \frac{2TR(1-S)+S}{TR(1-S)^2+S}, \tag{12}$$

which has maximum value of $\frac{2}{1+S}$ when $T = R = 1/2$. It is seen that

$$2 > \eta > 1 \tag{13}$$

for squeezed state input at port 2 ($S < 1$). On the other hand, for classical state ($S \geq 1$), we always have $\eta < 1$ [18]. Thus Eq.(13) is the criterion for realization of a quantum tap for optical information.

Quantum information tapping can also be achieved for a beamsplitter with correlated quantum fields $\hat{a}, \hat{b}$ as the two inputs. For this case, let us assume the two fields have the same noise level, that is, $\langle \Delta^2 \hat{X}_a \rangle = \langle \Delta^2 \hat{X}_b \rangle$. For a beamsplitter, we have for the quadratures of the fields:

$$\hat{X}_1^{out} = \sqrt{T}\hat{X}_a^{in} - \sqrt{R}\hat{X}_b^{in}, \tag{14a}$$

$$\hat{X}_2^{out} = \sqrt{T}\hat{X}_b^{in} + \sqrt{R}\hat{X}_a^{in}. \tag{14b}$$

where we only write down the X-quadratures, in which information is encoded.

It is easy to show that $R_1^{out} = R_d^{in}$ when $R/T = \lambda_m^2 = C_{ab}^2$ as before in Section 3. For output port 2, we find

$$R_2^{out} = R_d^{in} \frac{R(1 - C_{ab}^2)}{1 + 2\sqrt{TR}C_{ab}}$$

Thus the information tapping efficiency

$$\eta = 1 + \frac{R(1 - C_{ab}^2)}{1 + 2\sqrt{TR}C_{ab}} = 1 + \frac{(1 - C_{ab}^2)C_{ab}^2}{1 + 3C_{ab}^2} > 1. \tag{15}$$

Therefore quantum optical information tapping is achieved with correlated fields. Notice here we choose R, T so that $R_1^{out} = R_d^{in}$. Of course, we could choose R, T to maximize η. However, η will never be close to the perfect value of 2 even for perfect correlation. This is because of the plus sign in Eq.(14b) required by unitarity for any beamsplitter; and it can not be changed to a minus sign no matter what you do with the relative phase of the two fields. In the following, we will see a different situation for the NOPA.

For the NOPA, there are also two inputs (signal and idler) and two corresponding outputs, as shown in Fig.6. With proper phase adjustment of the pump, the input-output relations for NOPA are given as

$$\hat{a}^{out} = \sqrt{G}\,\hat{a}^{in} - \sqrt{G-1}\,\hat{b}^{in\dagger},$$
$$\hat{b}^{out} = \sqrt{G}\,\hat{b}^{in} - \sqrt{G-1}\,\hat{a}^{in\dagger},$$

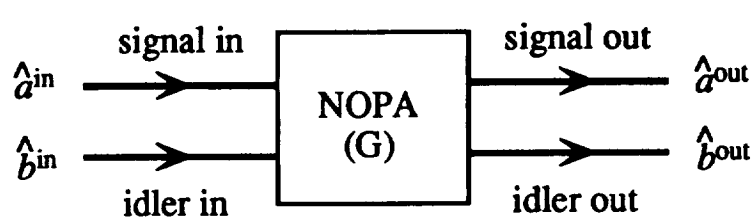

FIG. 6. Diagram of NOPA as a four-port device.

or in terms of the quadrature-phase amplitudes

$$\hat{X}_a^{out} = \sqrt{G}\,\hat{X}_a^{in} - \sqrt{G-1}\,\hat{X}_b^{in}, \tag{16a}$$

$$\hat{X}_b^{out} = \sqrt{G}\,\hat{X}_b^{in} - \sqrt{G-1}\,\hat{X}_a^{in}. \tag{16b}$$

First, let us assume that a coherent signal of size A is injected into the signal port for amplification and squeezed state of squeezing S is injected into the idler port. The input SNR is then $R^{in} = A^2$. From the input-output relations in Eqs.(16), we can calculate the output SNRs as

$$R_a^{out} = \frac{GA^2}{G+(G-1)S}, \quad R_b^{out} = \frac{(G-1)A^2}{GS+G-1}. \tag{17}$$

Hence the information tapping efficiency η has the form of

$$\eta = \frac{G}{G+(G-1)S} + \frac{(G-1)}{GS+G-1} = \frac{2G(G-1)(1+S)+S}{G(G-1)(1+S)^2+S} \simeq \frac{2}{1+S} \quad \text{for} \quad G^2 \gg S. \tag{18}$$

Thus quantum optical information tapping is possible ($\eta > 1$) as long as $S < 1$. When $G^2 \gg S$, η approaches $2/(1+S)$, which is the same as the result of Shapiro [15] for a beamsplitter. Of course, in this process, the signal is amplified.

As for the situation with correlated quantum fields as the inputs, for the parameters discussed in section 3, we know that $R_a^{out} = R_d$. From Eqs.(16), we can easily find out R_b^{out} for the idler output. For the parameters given in section 3, we have

$$\langle \hat{X}_b^{out} \rangle = -A\sqrt{G-1},$$

and

$$\langle \Delta^2 \hat{X}_b^{out} \rangle = (1-\lambda_m^2)[\langle \Delta^2 \hat{X}_a^{in} \rangle - \langle \Delta^2 \hat{X}_b^{in} \rangle] + GN_d = GN_d \quad \text{for} \quad \langle \Delta^2 \hat{X}_a^{in} \rangle = \langle \Delta^2 \hat{X}_b^{in} \rangle.$$

Therefore, $R_b^{out} = R_d(G-1)/G$ and

$$\eta = 1 + \frac{G-1}{G} = 1 + C_{ab}^2 \to 2 \quad \text{for} \quad C_{ab} \to 1. \tag{19}$$

where the second equality follows since G is chosen as in section 3, namely, $G = 1/(1-C_{ab}^2)$. Eq.(19) shows that we can always realize quantum optical information tapping in NOPA with correlated quantum fields.

In fact, for any linear four-port device with two inputs and two outputs, we can realize quantum optical information tapping with input of either a squeezed state or a correlated quantum state.

5 Acknowledgments

The work was supported by the Office of Naval Research and by the National Science Foundation.

References

[1] K. Shimoda, H. Takahasi, and C. H. Townes, J. Phys. Soc. Jpn. **12**, 686 (1957).

[2] R. Serber and C. Townes, in *Quantum Electronics*, edited by C. H. Townes (Columbia Univ. Press, New York, 1959), pp.233-255.

[3] H. Heffner, Proc. IRE **50**, 1604 (1962).

[4] H. A. Haus and J. A. Mullen, Phys. Rev. **128**, A2407 (1962).

[5] R.J. Glauber, in *Frontiers in Quantum Optics*, edited by E. R. Pike and S. Sarkar (IOP, Bristol, 1986).

[6] C. M. Caves,Phys. Rev. D**26**, 1817 (1982).

[7] M. Ley and R. Loudon, Optica Acta **33**, 371 (1984).

[8] B. Yurke and J. S. Denker, Phys. Rev. A**29**, 1419 (1984).

[9] M.-A. Dupertuis, S. M. Barnett, and S. Stenholm, J. Opt. Soc. Am. B**4**, 1102 (1987).

[10] D. T. Pegg and J. A. Vaccaro, Opt. Comm. **61**, 317 (1987).

[11] G. J. Milburn, M. L. Steyn-Ross, and D. F. Walls, Phys. Rev. A**35**, 4443 (1987).

[12] A. Heidmann, R. J. Horowicz, S. Reynaud, E. Giacobino, and C. Fabre, Phys. Rev. Lett. **59**, 2555 (1987).

[13] O. Aytür,and P. Kumar, Phys. Rev. Lett. **65**, 1551 (1990).

[14] (a) Z. Y. Ou, S. F. Pereira, K. C. Peng, and H. J. Kimble, Phys. Rev. Lett. **68**, 3663 (1992). (b) Z. Y. Ou, S. F. Pereira, and H. J. Kimble, Appl. Phys. B**55**, 265 (1992).

[15] J. H. Shapiro, Opt. Lett. **5**, 351 (1980).

[16] M. J. Collett and D. F. Walls, Phys. Rev. Lett. **61**, 2442 (1988).

[17] J. Ph. Poizat and P. Grangier, Phys. Rev. Lett. **70**, 271 (1993).

[18] J. F. Roch, G. Roger, P. Grangier, J. -M. Courty, and S. Reynaud, Appl. Phys. **B55**, 291 (1992).