NASA Technical Memorandum 107073
AIAA–95–2685

NASA-TM-107073
19960009101

A Unique, Optically Accessible Flame Tube Facility for Lean Combustor Studies

Yolanda R. Hicks
Lewis Research Center
Cleveland, Ohio

Randy J. Locke
NYMA Inc.
Brook Park, Ohio

Chowen C. Wey
Ohio Aerospace Institute
Cleveland, Ohio

Jean Bianco
NASA Lewis Research Center
Cleveland, Ohio

Prepared for the
31st Joint Propulsion Conference and Exhibit
cosponsored by AIAA, ASME, SAE, and ASEE
San Diego, California, July 10–12, 1995

National Aeronautics and
Space Administration

LIBRARY COPY
JAN 10 1996
LANGLEY RESEARCH CENTER
LIBRARY NASA
HAMPTON, VIRGINIA

NASA Technical Library
3 1176 01423 5825

A UNIQUE, OPTICALLY ACCESSIBLE FLAME TUBE FACILITY FOR LEAN COMBUSTOR STUDIES

Yolanda R. Hicks
NASA Lewis Research Center
Cleveland, Ohio

Randy J. Locke
NYMA, Inc.
Engineering Services Division
Brook Park, Ohio

Chowen C. Wey
Ohio Aerospace Institute
Cleveland, Ohio

Jean Bianco
NASA Lewis Research Center
Cleveland, Ohio

Abstract

A facility that allows interrogation of combusting flows by advanced diagnostic methods and instrumentation has been developed at the NASA Lewis Research Center. An optically accessible flame tube combustor is described which has high temperature, pressure, and air flow capabilities. The windows in the combustor measure 3.8 cm axially by 5.1 cm radially, providing 67% optical access to the 7.6 cm x 7.6 cm cross section flow chamber. Advanced gas analysis instrumentation is available through a Gas Chromatography/Mass Spectrometer system (GC/MS), which has on-line capability for heavy hydrocarbon measurement with resolution to the parts per billion level. The instrumentation allows one to study combusting flows and combustor subcomponents, such as fuel injectors and air swirlers. Planar Laser-Induced Fluorescence (PLIF) can measure unstable combustion species, which cannot be obtained with traditional gas sampling. This type of data is especially useful to combustion modelers. The optical access allows measurements to have high spatial and temporal resolution. GC/MS data and PLIF images of OH are presented from experiments using a Lean Direct Injection (LDI) combustor burning JP-5 fuel at inlet temperatures ranging from 810 K to 866 K, combustor pressures up to 1380 kPa, and equivalence ratios from 0.41 to 0.59.

Introduction

Under the High Speed Research (HSR) Program, NASA is charged with developing technologies that will lead to the production of gas turbine engines that are more friendly to the environment. This requires developing technologies that lead to engines that are more fuel efficient and that reduce emittants such as oxides of nitrogen (NO_x), which are believed to destroy stratospheric ozone. Greater cycle and fuel efficiency requires higher operating temperatures and pressures than are used in current engines. However, higher operating temperatures generally produce more NO_x, because NO_x formation has an exponential dependence on combustion temperature[1,2]. One strategy to overcome this apparent dichotomy is to use a combustor that burns overall fuel-lean, which reduces the combustion temperature, thereby minimizing NO_x. While the idea is simple, implementation is not. In a real engine, the liquid fuel is injected into a hot air stream. The fuel must vaporize and mix uniformly with the air. When mixing is not uniform, there are many opportunities for the local fuel/air ratio to vary. The consequences are uneven burning, lower combustion efficiency, higher NO_x formation, flame instability, and possible materials degradation to the combustor liner or turbine blades because of local high temperature areas.

The development of low emissions combustors for HSR applications includes the reduction of unburned hydrocarbons, smoke, and particulates as well as the reduction of NO_x. All such emissions are important pollutants to the atmospheric sciences community[3,4]. Atmospheric modelers are concerned about the levels of heavy hydrocarbons and their role in stratospheric ozone depletion. Soot is believed to act as a nucleation site for cloud formation, thereby possibly affecting local and global climatic activity. At lower altitudes, particularly around airports, emittants of hydrocarbons are unsightly and odorous, and smoke may contain carcinogens. Measurement of low level hydrocarbon species is important for these reasons. Standard gas bench analysis systems cannot measure minute levels—to the ppb range—of hydrocarbons; therefore more advanced gas analysis systems, such as the Gas

Chromatograph/Mass Spectrometer (GC/MS) are needed to measure hydrocarbons in the exhaust of realistic gas turbine combustors operating over a range of HSR conditions.

Traditional methods of analyzing engine performance use gas sampling to measure combustion efficiency and smoke. Standard gas analysis equipment measures CO, CO_2, H_2O, O_2, NO, NO_2, and unburned hydrocarbons (UHC). However, these instruments cannot directly probe the combustor to see the underlying processes that lead to good or bad efficiency. Also, significant kinetics information is lost because physical probes can measure only stable species. Combustion modelers are also interested in intermediate species, such as hydroxyl (OH), in the combustor. A detailed model includes thermochemistry, transport properties, elementary reactions, and systematic optimization[2,5]. Detailed combustion mechanisms are highly complex, with hundreds of species participating, and are omnivorous consumers of computer time and money. For this reason, modelers attempt to reduce the reaction mechanism to as few steps as possible while mimicking the observed chemistry. In order to do this, they require information about key reactions and the intermediates present during these reactions[6,7]. In particular, knowledge of the short chemical lifetimes of unstable intermediates will aid in refining mechanisms.

Laser-Induced Fluorescence is one tool that is used to help understand the kinetics of reactions. Its appeal is that it is a non-intrusive technique that can measure very dilute concentrations of some of the intermediate chemical species that occur during a reaction, and can be implemented in real time. This method can also be used to measure local combustion temperature, and has proven facile in obtaining 2-D images of concentration, temperature, and velocity in combusting flows[8-10]. Two-dimensional fluorescence methods are generally referred to as Planar Laser-Induced Fluorescence (PLIF).

The primary focus of our optical diagnostics is flowfield visualization. Flow visualizations are important from a design standpoint because they provide the designer with a picture of some property of the flowfield that shows relative spatial changes, generally at the expense of quantification. Since the data is seen two- or three-dimensionally, it can yield data that is easier to interpret than data obtained in a pointwise manner.

This paper describes a combustor operating on JP-5 fuel at realistic operating conditions, and how the use of advanced gas sampling and laser diagnostics in the combustor provide data to enhance design and modeling efforts for future gas turbine combustors.

Experimental Apparatus

Flame Tube Combustor Facility

The combustor facility, shown in figure 1, supplies non-vitiated air at flow rates of up to 10 pps. Four natural gas can-type burners provide combustor air inlet temperatures between 589 K and 866 K. Interchangeable spool pieces allow the combustor configuration to vary from a lean premixed prevaporized (LPP) combustor to a lean direct injection (LDI) combustor. The LPP configuration consists of a fuel injection section followed by a fuel vaporization and fuel/air mixing section. This in turn is followed by a flameholder, and finally the flame tube, where combustion takes place. The LDI configuration is comprised of the fuel injection section immediately followed by the flame tube. The fuel injection section includes the fuel nozzle(s) with air swirl for flame stabilization. There is no fuel vaporization section. The fuel injection process, together with heat from combustion, vaporizes the fuel. The LDI configuration is a more realistic system in a gas turbine combustor used for flight applications because it has greater combustion stability than does the LPP configuration.

Figure 2 is a schematic of the quartz-windowed lean flame tube combustor. The subcomponents that can be varied in this rig are the fuel injectors, either in number or in style of injection, the premixer zone length, and the flameholder. The combustor measures 74 cm in length and has a 7.62 cm x 7.62 cm (3 in. x 3 in.) cross section flowpath, with a flow area of 58.05 cm^2. Its housing is water-cooled. The liner is made using an aluminum oxide castable ceramic material, typically Greencast 94+. Four window assemblies, located circumferentially 90 degrees apart, are located such that the centers of the windows are 14.3 cm downstream of the combustor inlet. The combustor is outfitted with up to four 3.8 cm x 5.1 cm ultraviolet grade fused silica windows which allow optical access. This grade of quartz has a minimum light transmissivity of 80% over the spectral range from 180 nm to 3300 nm. Emissions gas sampling ports are located 50.8 cm downstream of the combustor inlet. The ports support probes used by the GC/MS and standard gas analysis systems. The standard gas analysis system consists of nondispersive infrared meters for carbon monoxide, carbon dioxide, and hydrocarbons, a chemiluminescent meter for nitrogen oxides, and an electrochemical meter for oxygen. The flame temperature is measured with a platinum/rhodium thermocouple located 58.4 cm (23 in) downstream of the combustor inlet. The flame tube was designed to be rotated 180 degrees with respect to the axis normal to the tube axis. That is, upon rotation, the centers of the windows will be located 59.7 cm downstream from the combustor inlet.

The window assemblies are designed to withstand flame temperatures up to 2033 K (3200 °F) and rig pressures up to 2068.1 kPa (300 psia). The maximum ignition thermal cycle allows for a ΔT of 889 K (1600 °F), from an inlet temperature of 867 K (1100 °F) to an ignition temperature of 1756 K (2700 °F). If either the temperature rise exceeds 889 K or the lightoff temperature is not maintained for at least one minute, then a fuel shutdown is triggered. Water cooling and nitrogen film cooling are used to ensure that the windows can survive this severe environment. Should either window cooling system fail to provide adequate cooling, a fuel shutdown is triggered.

Back side thermocouples are used to monitor the window temperature. Instrumented metal plugs can be used in place of the fused silica windows for preliminary testing of the various subcomponents. This testing is used to verify that the nitrogen and water cooling will be sufficient when the fused silica is installed. A possible window blowout is indicated by rapid rig pressure loss, and will cause a shutdown to the fuel and the natural gas heater.

The rig is warmed up slowly (~3.7 °C/min), to reach the desired inlet temperature. This rate is used to ensure steady-state temperatures in the combustor. Lightoff is achieved by adding fuel to the incoming hot air stream and igniting the mixture with a water-cooled hydrogen torch, located just downstream of the fuel injectors. If the torch fails to light, a fuel system shutdown is initiated. Lightoff cannot be reattempted until ten minutes have elapsed.

Gas Chromatography/Mass Spectrometry Facility

An aspect of combustion which is of great concern to atmospheric modelers is the question of unburned hydrocarbons, which are presently measured via flame ionization. The flame ionization detector measures only the total unburned carbon atoms and subsequently provides no detailed information as to the identification of the specific carbon compounds present. Atmospheric modelers are concerned about the size of the carbon-containing molecules rather than the number of carbon atoms present. Experiments were designed utilizing a Gas Chromatograph/Mass Spectrometer (GC/MS), which allows the determination of the identity of some carbon molecules in the flow field.

There are two components to the instrument: a Gas Chromatograph and a Mass Spectrometer detector. The GC separates the test sample by means of column material, carrier gas flow rate, and column temperature. The MS identifies and measures the concentration of each "separated" species. The MS has two modes of operation. The scan mode scans all ions in a specified mass/charge range. The selected ion monitoring (SIM) mode yields more signal because it looks only at a limited number of specified ions. The scan mode is required for identification purposes whereas the SIM mode is used to calculate concentrations.

Combustion gas samples are withdrawn through a three-hole water-cooled sampling probe. A high pressure nitrogen purge protects the probe from contamination whenever the probe is not used for sampling. The fifteen-foot sample line and its connecting lines, filters, and valves are all ultra-clean. They are all heated to avoid condensation.

Laser Diagnostics Facility

The laser diagnostics facility consists of pulsed and continuous wave lasers, triggering and timing electronics, optics, photodetectors, cameras and other detection equipment, traversing stages, and system calibration devices. Laser systems include: (1) A Nd:YAG pumped dye laser system with frequency doubling, mixing, or mixing after doubling. Its tunable wavelength range is 220 nm to 560 nm, and it has a pulse repetition rate of 10 Hz; (2) A XeCl Excimer pumped dye laser system, with a tunable wavelength range, after doubling, of 220 nm to 300 nm. Its pulse repetition rate is 100 Hz; (3) A 5 watt continuous wave Argon-Ion Laser, with major wavelengths of 488 nm and 514.5 nm. Two gatable intensified CCD cameras are used for PLIF imaging.

Laser Beam Transport System

Once the desired wavelengths are obtained with a particular laser system, the beam must be manipulated into the flame tube with the desired shape and at the desired location. Due to safety concerns, the laser systems must be operated remotely from the test cell. This necessitates a complex scheme utilizing a series of mirrors and traversing stages. Figure 3 illustrates the laser diagnostics facility beam transport system and the path the laser beam(s) must take. The beam travels upward from the table in the laser room, above and across the control room into the test cell, and down into the appropriate location in the test rig. With the aid of figure 3, the following text describes how that is achieved.

Beam Shaping

While still on the table, the laser beam is collimated to a predetermined size using a negative/positive set of ultraviolet grade fused silica spherical lenses. The negative/positive focal length combination is used to avoid forming a real focus of the high energy beam, which would result in a loss of beam power through ionization of molecules in the beam path. The system also requires less space to collimate the laser beam than does one utilizing two positive focal length lenses. If planar species, temperature, or flowfield maps are needed, the beam is formed into a sheet, typically 0.3 mm thick x 33 mm wide, with a cylindrical lens. This is done in the test cell, after the beam has been directed down toward the flame tube rig. Alternatively, all beam shaping may be performed in the test cell, if the divergence of the laser beam is small enough that energy is not lost through exceeding the effective aperture of the optics.

Beam Steering

Upon leaving the table the laser beam is positioned using mirrors with DC motorized actuators and a three-axis positioning system, all mounted from the ceiling. The mirror mounts have horizontal and vertical tilt control, with a resolution of 0.05 μm. The first mirror is positioned directly above the laser room, and transmits the beam from the table and into the test cell through a shuttered hole in the wall. Upon entering

the test cell, the beam projects over the inlet region, approximately 110 cm upstream of the window location. Therefore, a second mirror receives the beam and directs it downstream, parallel to the test rig axis, to the final mirror, which is positioned directly over the top window in the flame tube. The final mirror steers the beam through the sheet forming optics and into the flame tube.

A table installed on the ceiling of the test cell is used to position the second and third mirrors. The table consists of three motorized stages. Two of the stages control the axial positioning of the beam. They in turn are mounted on the third stage, which controls the lateral positioning of the beam. The first of the axial stages controls the axial position of the second mirror. The second stage moves the third mirror.

The beam path, from the laser table optics until the beam enters the test cell area, is enclosed. This enclosure can be purged with nitrogen in order to minimize absorption (loss) of laser energy at wavelengths that are strongly absorbed by diatomic oxygen.

Detection System

The laser sheet is imaged from 90° with an intensified CCD (ICCD) camera focused through a side window. As with the input beam, the position of the camera is remotely controlled. The camera is typically mounted on a three-axis system of translating stages situated next to the combustor.

Positioning

To reduce the complexity of positioning the laser beam and detector, all stages are controlled with a computer through a program written to coordinate their movement. The program was written using LabWindows/CVI, a software development tool produced by National Instruments. The program allows the user to select which laser beam and detector configuration are used in the test run. The user can specify the type and orientation of each stage mounted in the test cell and how the stages are connected to the motion controllers. Based on these selections, the program correctly controls the distance and direction the stages move. The user can position the laser beam in terms of rectangular coordinates using fractions of millimeters. Movement of the detectors is coordinated so they remain in focus with the beam. The program records the coordinates the user enters, as well as any test conditions the user wants to document, in a file specified by the user. The user can also define an origin, so the coordinates entered correspond to the position of the laser beam in the test region. The origin is also recorded, so that it can be reproduced for the next test run or in case a power failure occurs and the current position of the stages is not known. The user can also add stages to the set known by the program.

Results

GC/MS

Figure 4 shows the spectrogram of the C_2 - C_6 standard gas mixture (~15 ppm) which was run in the mass spectrometer scan mode. In this mode of operation, each species was identified as it eluded from the column. The species and retention times are recorded. As can be seen, the temperature schedule did not completely separate all the species from one another.

Figure 5 is the spectrogram of the same mixture, but with concentrations at about 50 ppb. This spectrogram was obtained with the mass spectrometer using the SIM mode of operation. In this mode, three or four ions were selected for each carbon group (C_6, etc.). By looking at limited ions, the sensitivity is greatly enhanced. These ions were selected to best represent the primary ions of each type of hydrocarbon—straight chain, branched chain, unsaturated, and aldehydes. The retention times are recorded and compared with the ones of ppm mixture to identify the species. The integrated areas per unit concentration are calculated to be used to estimate the concentration of the gas samples. Note that although all the species have approximately the same concentration, the area under the peaks is not the same.

Figure 6 shows the spectrogram of the exhaust from a 16 point LDI fuel injector with 45° air swirl. The equivalence ratio is 0.47. The largest peak has the retention time of water vapor, but contains additional ions. It is believed that these ions are comprised of NO_2 and other nitrogen compounds. Several ppb of propene (C_3H_6) and propane (C_3H_8) were observed. Some C_4 and C_5 compounds with concentrations of several ppb were also observed.

PLIF

Figure 7 shows a comparison among different equivalence ratios using PLIF of OH, and demonstrates the usefulness of this diagnostic method. The combustor used an LDI 9 point fuel injector with a combination of 60° and 45° (60°/45°) air swirlers. The inlet temperature was 866 K and the combustor pressure was 1379 kPa. The equivalence ratios are 0.53, 0.50, and 0.41, respectively. The images consist of an average of 10 laser pulses. Each image in the figure was normalized to the image which had the highest pixel value. For fuel-lean flames, hydroxyl production increases with equivalence ratio. As expected, more OH was produced for JP-5 burning in air at an equivalence ratio of = 0.53 than at = 0.41, and the images confirm this assumption. One can also see that the amount of hydroxyl formed is relatively uniform across the flowfield for this injector configuration. That is not the case with a different swirler configuration. Figure 8 shows a comparison of 60°/45° and 45° swirl with the 9 point fuel injector. Each image is self-

scaled, i.e., scaled acording to its own maximum and minimum pixel values. More OH is formed toward the walls of the combustor for the 45° swirl, with relatively low amounts formed at the centerline. Further examination of that configuration using a series of single laser pulses, shown in figure 9 with self-scaled images, reveals that "lobes" of high OH are formed asymmetrically. Sometimes, a single lobe appears at the top of the combustor, sometimes at the bottom, and other instances, it occurs at both the top and bottom of the flame tube. These data show that the nature of the combustion is not necessarily uniform, that on the microscale, the flow is random, and that in the 45° swirler configuration, combustion takes place primarily along the combustor walls, rather than in the center. This finding was subsequently substantiated by Computational Fluid Dynamics calculations. This information can only be obtained by optical means, and it enhances the ability to understand combustion processes in a realistic system, and therefore predict combustion phenomena and design combustors more easily.

Conclusions

A flame tube combustion and advanced diagnostics facility was built and its ability to measure combustion intermediates at High Speed Research cruise conditions was demonstrated. This is the only facility of its kind, capable of providing advanced diagnostics for design and optimization of gas turbine combustors for HSR and other high temperature, high pressure applications. The PLIF results of OH using different lean direct injection configurations has shown that the fluid mechanics within the combustor are highly turbulent, and that there are large fluctuations in hydroxyl and temperature on the microscale. This information is important for combustor design and kinetics modeling, and provides details that are impossible to determine with traditional physical probes. An on-line gas chromatograph/mass spectrometer system has detected C_5 hydrocarbons in the combustor exhaust at the parts per billion level.

Future Work

Sulfur emissions are also a concern to the atmospheric community. Increases in the concentration of sulfate aerosols lead to a large number of cloud condensation nuclei in the troposphere, which in turn may lead to a change in the Earth's radiative balance. In the stratosphere, the increased sulfate aerosols, along with increased water vapor, could affect heterogeneous chemistry. Therefore, we intend to develop methodologies, using the GC/MS, to obtain direct measurements of SO_x.

The presence of windows enables the implementation of many different optical diagnostic techniques. We intend to extend PLIF imaging to quantify nitric oxide. We also plan to employ a Phase Doppler Particle Analyzer to measure velocity and turbulence intensity, and when appropriate, fuel drop size.

References

1. Lee, C.-M., J. Bianco, J.M. Deur, and B. Ghorashi. "Nitric Oxide Formation in a Lean Premixed-Prevaporized Jet A/Air Flame Tube: An Experimental and Analytical Study". NASA TM-105722, November 1992.
2. Correa, S.M. "A Review of NOx Formation Under Gas-Turbine Combustion Conditions". Combust. Sci. and Tech., 87, 1992, pp. 329-362.
3. Johnston, H.S., E.D. Kinnison, and D.J. Wuebbles. "Nitrogen Oxides From High-Altitude Aircraft: An Update of Potential Effects on Ozone". Journal of Geophysical Research, 94, Number D13, 20 November 1989, pp. 16351-16363.
4. Prather, M.J., H.L.Wesoky, et al. The Atmospheric Effects of Stratospheric Aircraft: A First Program Report. NASA Reference Publication RP-1272, January 1992.
5. Guéret, C., M. Cathonnet, J.-C. Boettner, and F. Gaillard. "Experimental Study and Modeling of Kerosene Oxidation in A Jet-Stirred Flow Reactor". Twenty-Third Sym. (Int'l) on Combustion, The Combustion Institute, 1990, pp. 211-216.
6. Bernstein, J.S., et al. "Laser-Based Flame Species Profile Measurements: A Comparison with Flame Model Predictions". Combustion and Flame, 92, 1993, pp. 85-105.
7. Reisel, J.R. and N.M. Laurendeau. "Laser-Induced Fluorescence Measurements and Modeling of Nitric Oxide Formation in High-Pressure Flames". Combust. Sci. and Tech., 98, 1994, pp. 137-160.
8. Hanson, R.K. "Combustion Diagnostics: Planar Imaging Techniques". Twenty-First Sym.(Int'l) on Combustion, The Combustion Institute, 1986, pp. 1677-1691.
9. Seitzman, J.M., J.L. Palmer, et al. "Instantaneous Planar Thermometry of Shock-Heated Flows Using PLIF of OH". AIAA Paper No. 93-0802, 31st Aerospace Sciences Meeting and Exhibit, Reno, Nevada, January 1994.
10. Allen, M.G., S.J. Davis, and K. Donohue. "Species and Temperature Imaging in Liquid-Fueled Spray Flames". AIAA Paper No. 90-2440, presented at the 26th AIAA/ASME/SAE/ASEE Joint Propulsion Conference, July 1990.

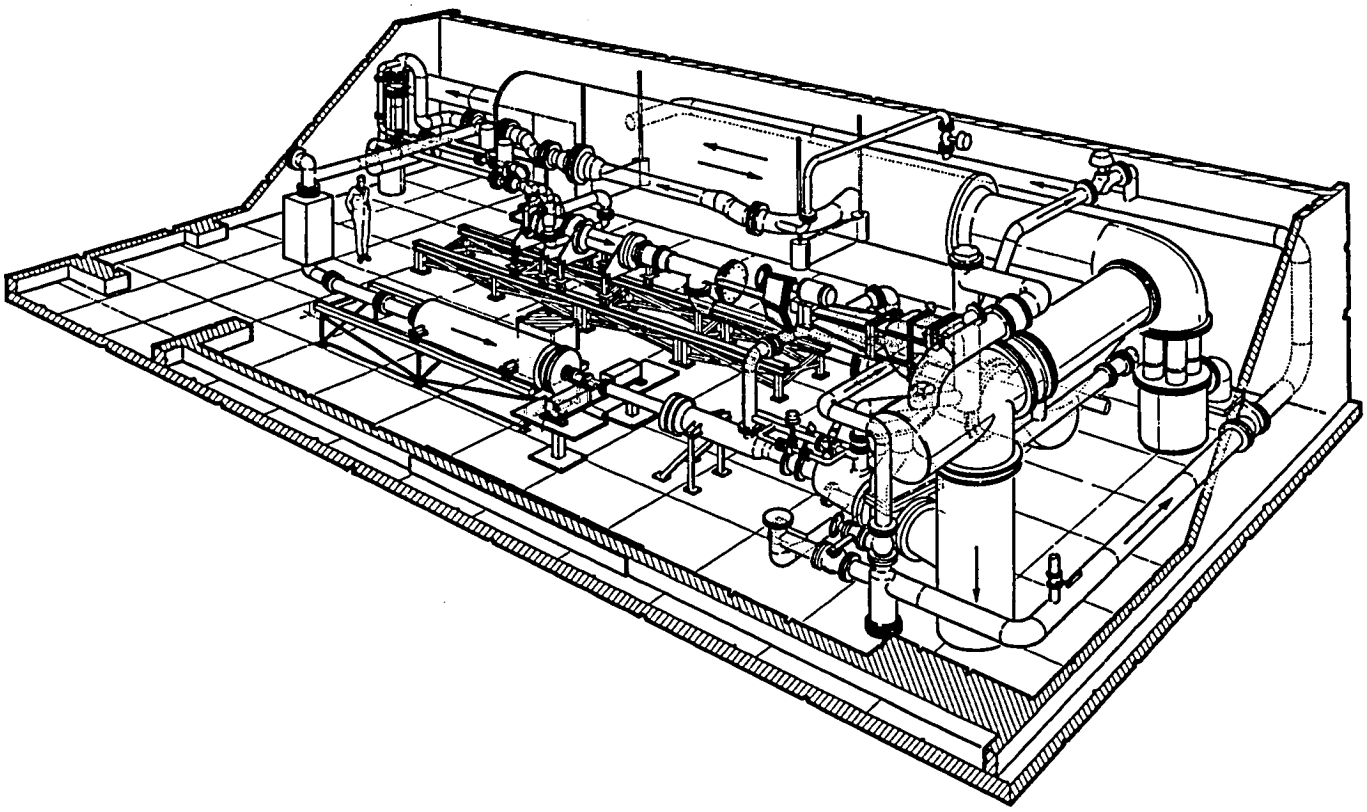

Figure 1.—Schematic of combustor test facility.

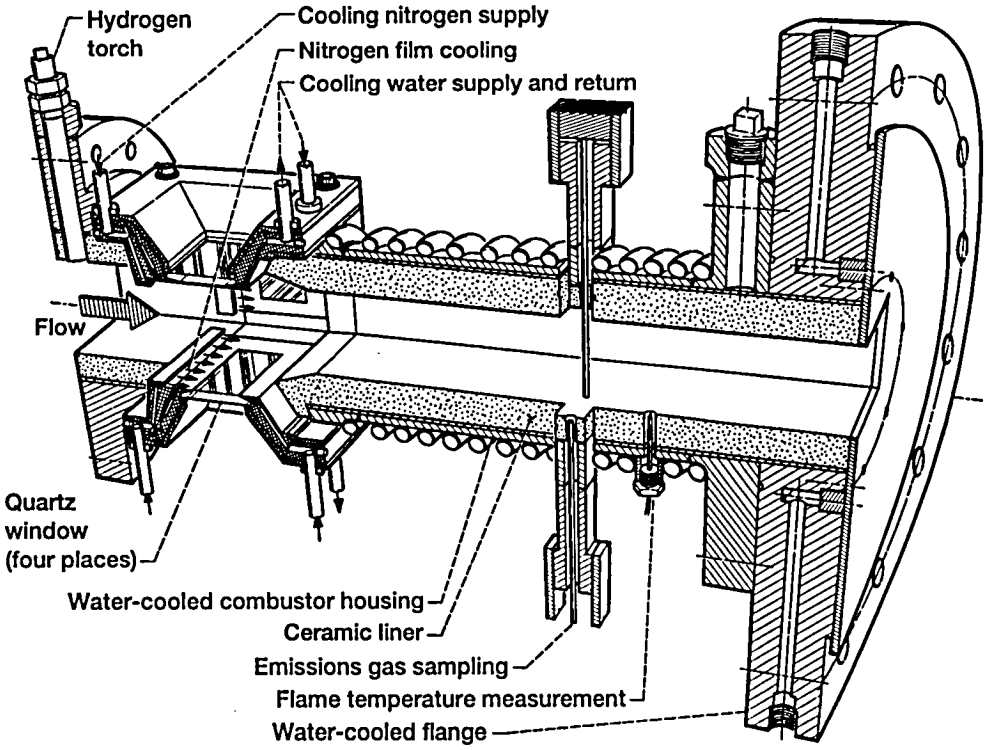

Figure 2.—Lean combustor/quartz window assembly.

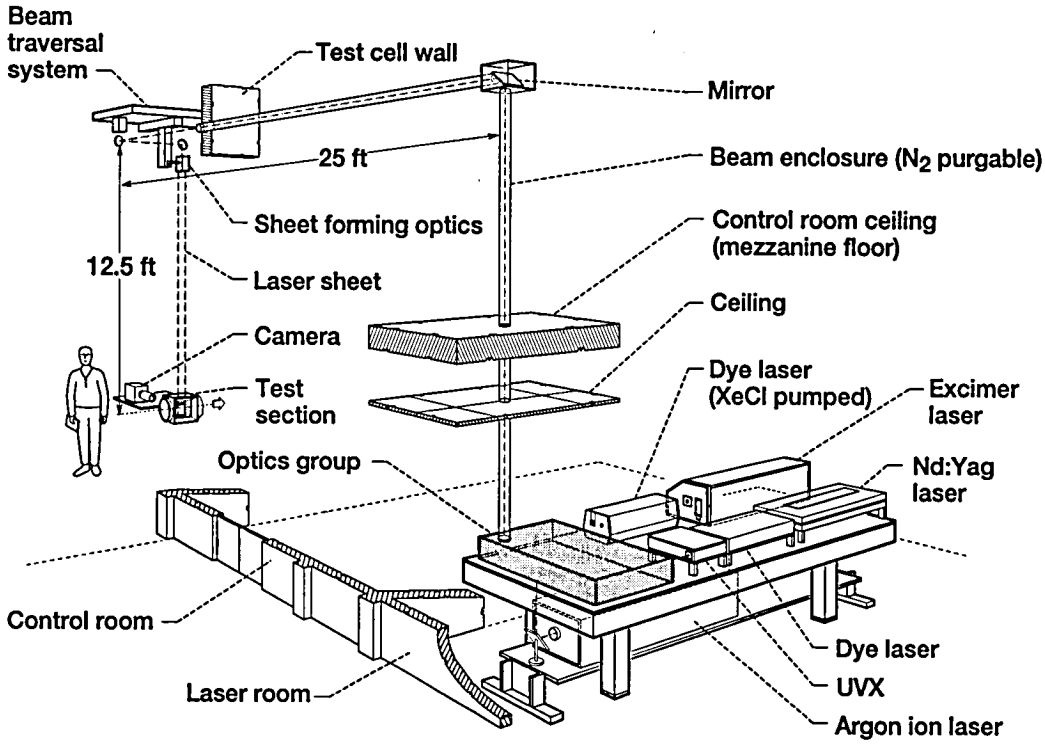

Figure 3.—Beam transport system.

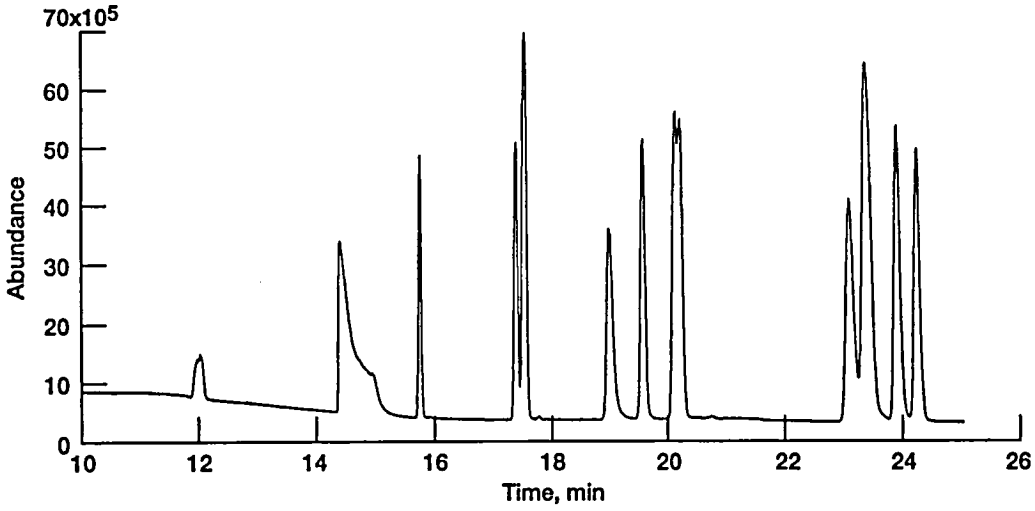

Figure 4.—C2-C6 (approximately 15 ppm) standard gas mixture.

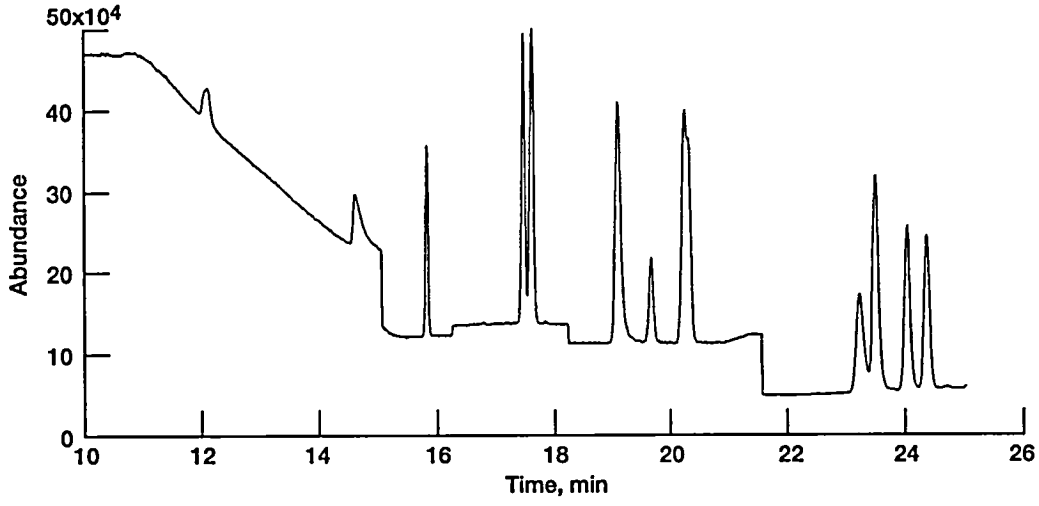

Figure 5.—C2-C6 (approximately 50 ppb) standard gas mixture.

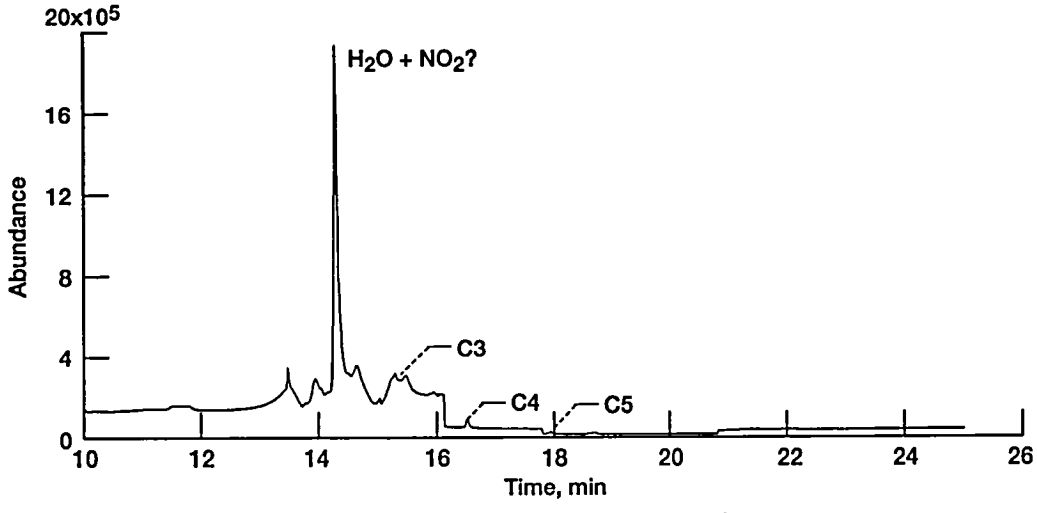

Figure 6.—Gas sample from LDI flame tube.

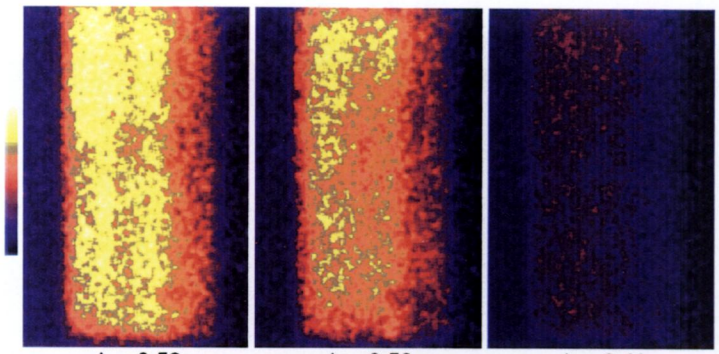

$\phi = 0.53$ $\phi = 0.50$ $\phi = 0.41$

Figure 7.—Comparison of OH PLIF images for different equivalence ratios with 9 pt LDI and 60°/45° swirl at P_{in} = 1370 kPa and T_{in} = 866 °K. Resonant excitation is $R_1(10)$.

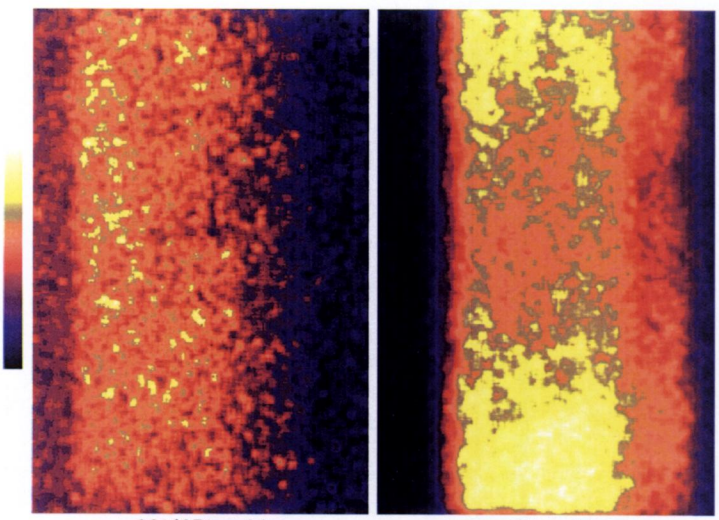

60°/45° swirl 45° swirl

Figure 8.—Comparison of OH PLIF images for different fuel injector configurations with 9 pt LDI at P_{in} = 1034 kPa, T_{in} = 866 °K, and ϕ = 0.41. Resonant excitation is $R_1(10)$.

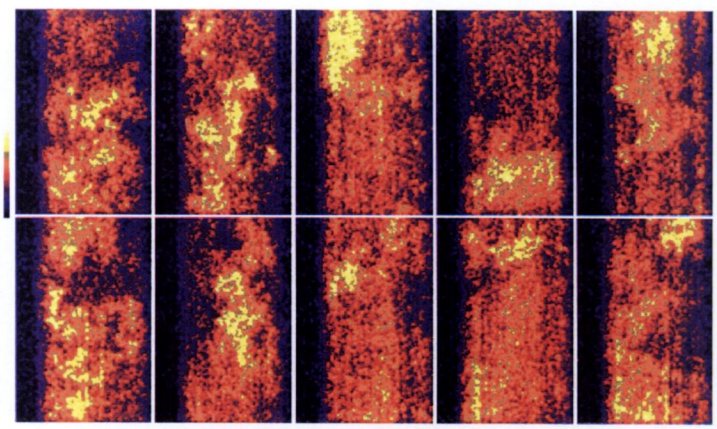

Figure 9.—Shot-to-shot variation in flame structure for 9 pt LDI with 45° swirl. P_{in} = 1034 kPa, T_{in} = 866 °K, and ϕ = 0.41. Resonant excitation is $R_1(10)$.

REPORT DOCUMENTATION PAGE

Form Approved
OMB No. 0704-0188

Public reporting burden for this collection of information is estimated to average 1 hour per response, including the time for reviewing instructions, searching existing data sources, gathering and maintaining the data needed, and completing and reviewing the collection of information. Send comments regarding this burden estimate or any other aspect of this collection of information, including suggestions for reducing this burden, to Washington Headquarters Services, Directorate for Information Operations and Reports, 1215 Jefferson Davis Highway, Suite 1204, Arlington, VA 22202-4302, and to the Office of Management and Budget, Paperwork Reduction Project (0704-0188), Washington, DC 20503.

1. AGENCY USE ONLY (*Leave blank*)

2. REPORT DATE
October 1995

3. REPORT TYPE AND DATES COVERED
Technical Memorandum

4. TITLE AND SUBTITLE
A Unique, Optically Accessible Flame Tube Facility for Lean Combustor Studies

5. FUNDING NUMBERS
WU-537-02-20

6. AUTHOR(S)
Yolanda R. Hicks, Randy J. Locke, Chowen C. Wey, and Jean Bianco

7. PERFORMING ORGANIZATION NAME(S) AND ADDRESS(ES)
National Aeronautics and Space Administration
Lewis Research Center
Cleveland, Ohio 44135-3191

8. PERFORMING ORGANIZATION REPORT NUMBER
E-9937

9. SPONSORING/MONITORING AGENCY NAME(S) AND ADDRESS(ES)
National Aeronautics and Space Administration
Washington, D.C. 20546-0001

10. SPONSORING/MONITORING AGENCY REPORT NUMBER
NASA TM-107073
AIAA-95-2685

11. SUPPLEMENTARY NOTES
Prepared for the 31st Joint Propulsion Conference and Exhibit cosponsored by AIAA, ASME, SAE, and ASEE, San Diego, California, July 10-12, 1995. Yolanda R. Hicks and Jean Bianco, NASA Lewis Research Center; Randy J. Locke, NYMA Inc., Brook Park, Ohio 44142 (work funded by NASA Contract NAS3-27186); Chowen C. Wey, Ohio Aerospace Institute, 22800 Cedar Point Road, Cleveland, Ohio 44142. Responsible person, Yolanda R. Hicks, organization code, (216) 433-3410.

12a. DISTRIBUTION/AVAILABILITY STATEMENT
Unclassified - Unlimited
Subject Categories 02, 34, and 35

This publication is available from the NASA Center for Aerospace Information, (301) 621-0390.

12b. DISTRIBUTION CODE

13. ABSTRACT ***(Maximum 200 words)***

A facility that allows interrogation of combusting flows by advanced diagnostic methods and instrumentation has been developed at the NASA Lewis Research Center. An optically accessible flame tube combustor is described which has high temperature, pressure, and air flow capabilities. The windows in the combustor measure 3.8 cm axially by 5.1 cm radially, providing 67% optical access to the 7.6 cm × 7.6 cm cross section flow chamber. Advanced gas analysis instrumentation is available through a Gas Chromatography/Mass Spectrometer system (GC/MS), which has on-line capability for heavy hydrocarbon measurement with resolution to the parts per billion level. The instrumentation allows one to study combusting flows and combustor subcomponents, such as fuel injectors and air swirlers. Planar Laser-Induced Fluorescence (PLIF) can measure unstable combustion species, which cannot be obtained with traditional gas sampling. This type of data is especially useful to combustion modelers. The optical access allows measurements to have high spatial and temporal resolution. GC/MS data and PLIF images of OH^- are presented from experiments using a Lean Direct Injection (LDI) combustor burning Jet-A fuel at inlet temperatures ranging from 810 K to 866 K, combustor pressures up to 1380 kPa, and equivalence ratios from 0.41 to 0.59.

14. SUBJECT TERMS
Optically accessible combustor; Modular combustor; Planar laser-induced fluorescence (PLIF); Gas chromatography/mass spectrometry (GC/MS)

15. NUMBER OF PAGES
11

16. PRICE CODE
A03

17. SECURITY CLASSIFICATION OF REPORT
Unclassified

18. SECURITY CLASSIFICATION OF THIS PAGE
Unclassified

19. SECURITY CLASSIFICATION OF ABSTRACT
Unclassified

20. LIMITATION OF ABSTRACT

National Aeronautics and
Space Administration
Lewis Research Center
21000 Brookpark Rd.
Cleveland, OH 44135-3191

Official Business
Penalty for Private Use $300

POSTMASTER: If Undeliverable — Do Not Return

NASA Technical Library
3 1176 01423 5825

DO NOT REMOVE SLIP FROM MATERIAL

Delete your name from this slip when returning material to the library.

NAME	DATE	MS
R. Hearing	11-96	493

NASA Langley (Rev. Dec. 1991) RIAD N-75