NASA-CR-199585

Part B
7N-91
64034
P. 392

ORIGINAL CONTAINS
COLOR ILLUSTRATIONS
12

(NASA-CR-199585) MARS UPPER ATMOSPHERE DYNAMICS, ENERGETICS, AND EVOLUTION MISSION (MUADEE) TECHNICAL AND MANAGEMENT VOLUME. PART B: DISCOVERY MISSION Final Report (Lockheed Missiles and Space Co.) 392 p

N96-70629

Unclas

Z9/91 0064034

Lockheed Missiles & Space Company, Inc.
SUNNYVALE, CALIFORNIA

# MUADEE

## Mars Upper Atmosphere Dynamics, Energetics, and Evolution

## Discovery Mission

Final Report: Technical and Management Volume
Part B

March 15, 1994

# Mars Upper Atmosphere Dynamics, Energetics, and Evolution Mission

# (MUADEE)

## FINAL REPORT
### TECHNICAL AND MANAGEMENT VOLUME

### PART B

**15 March 1994**

ORIGINAL PAGE
COLOR PHOTOGRAPH

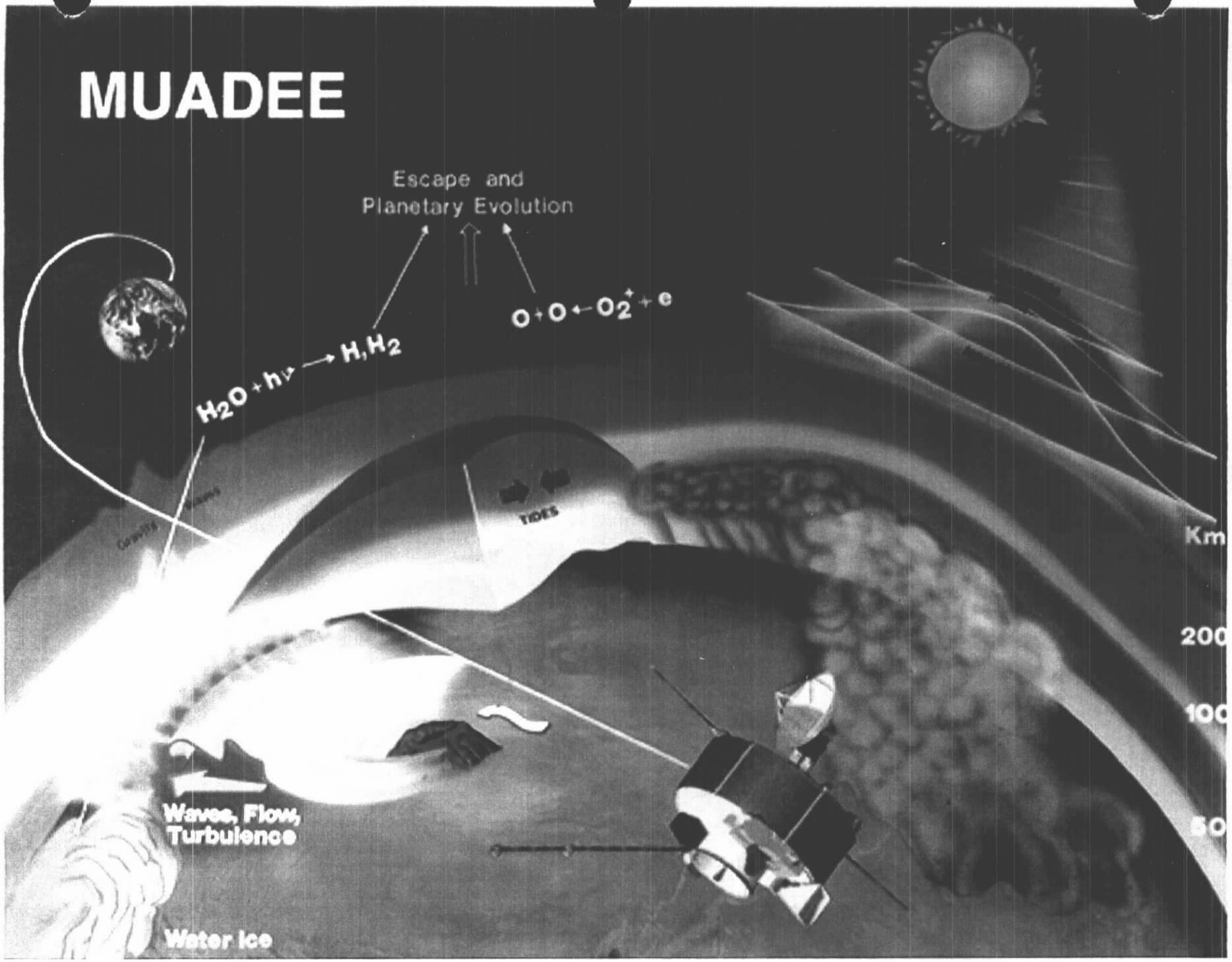
MUADEE
Escape and
Planetary Evolution
$H_2O + h\nu \rightarrow H, H_2$
$O + O \leftarrow O_2^+ + e$
TIDES
Km
200
100
50
Waves, Flow,
Turbulence
Water Ice

# TABLE OF CONTENTS


| SUBJECT | PAGE |
|---|---|
| **EXECUTIVE SUMMARY VOLUME** | |
| 1.0 Executive Summary | 1 |
| 1.1 Science Team | 4 |
| 1.2 Science Instruments | 16 |
| 1.3 Orbital Scenario | 19 |
| 1.4 Flight System Summary | 22 |
| 1.5 Ground Segment Summary | 25 |
| 1.6 Relationships With Other Missions | 28 |
| 1.7 Memorandum of Understanding | 31 |
| 1.8 Descope Options | 38 |
| 1.9 Advanced Technology | 41 |
| 1.10 Project Schedule | 45 |
| 1.11 Summary | 47 |
| **TECHNICAL/MANAGEMENT VOLUME: PART A** | |
| 2.0 System Design | 48 |
| 2.1 Science Overview | 49 |
| 2.2 System Overview | 53 |
| 2.3 Science Instruments | 58 |
| 2.4 Flight System Summary | 59 |
| 2.5 Integration and Test | 64 |
| 2.6 Ground Segment | 67 |
| 2.7 Mission Operations | 68 |
| 2.8 Launch Vehicle | 70 |
| 3.0 Science Context | 74 |

# TABLE OF CONTENTS (CONT)


| SUBJECT | PAGE |
|---|---|
| 4.0 Scientific Objectives | 76 |
| 4.1 Introduction | 77 |
| 4.2 Science Background | 77 |
| 4.3 Mission Scenario | 87 |
| 5.0 Science Measurements | 90 |
| 5.1 Measurements Overview | 91 |
| 5.1 Measurements Requirements | 91 |
| 6.0 Instrument Descriptions | 93 |
| 6.1 Integrated Instruments Concept | 94 |
| 6.2 Plasma Instrument Package | 97 |
| 6.3 Scan Imaging Package | 100 |
| 6.4 Neutral Atmosphere Package | 102 |
| 6.5 Instrument Operations | 104 |
| 7.0 Flight System Design | 105 |
| 7.1 Systems Engineering | 106 |
| 7.2 Orbit Operations Analysis | 136 |
| 7.3 Instrument Accommodation | 147 |
| 7.4 Trajectory Design | 158 |
| 7.5 Mechanical Design | 175 |
| 7.6 Mass Properties | 203 |
| 7.7 Structural Analysis | 207 |
| 7.8 Mechanisms | 214 |
| 7.9 Electrical Power | 231 |

# TABLE OF CONTENTS (CONT)


| SUBJECT | PAGE |
|---|---|
| TECHNICAL/MANAGEMENT VOLUME: PART B | |
| 7.0 Flight System Design (cont) | |
| 7.10 Communications | 245 |
| 7.11 Attitude Control | 261 |
| 7.12 Propulsion | 275 |
| 7.13 Command and Data Handling | 283 |
| 7.14 Flight Software | 300 |
| 7.15 Thermal Control | 312 |
| 8.0 Ground System and Mission Operations | 328 |
| 8.1 Ground System Overview | 329 |
| 8.2 Low-Cost MOS Feasibility | 332 |
| 8.3 Mission Test and Operations Center (MTOC) | 334 |
| 8.4 Science Data Center (SDC) | 337 |
| 8.5 JPL MOS Support Elements | 339 |
| 8.6 Mission Operations Scenarios | 341 |
| 9.0 Integration and Test | 345 |
| 10.0 Launch Vehicle | 352 |
| 10.1 Launch Vehicle Selection | 353 |
| 10.2 Delta II 7925 Overview | 364 |

# TABLE OF CONTENTS (CONT)


| SUBJECT | PAGE |
|---|---|
| 11.0 Program Management | 389 |
| 11.1 Consortium Description | 390 |
| 11.2 Management Approach | 392 |
| 11.3 Project Organization | 403 |
| 11.4 Role of the Principle Investigator | 407 |
| 11.5 Product Teams | 408 |
| 11.6 Phase A/B Activities | 416 |
| 11.7 Responses to Discovery Workshop Comments | 421 |
| 12.0 Advanced Technology | 422 |
| 13.0 Descope Options | 425 |
| 13.1 Mission Scenario | 426 |
| 13.2 Science Payload | 427 |
| 13.3 Spacecraft | 428 |
| 14.0 Miscellaneous | 429 |
| 14.1 Possible Additions | 430 |
| 14.1 MO Lessons Learned | 434 |
| 14.1 Contamination | 439 |
| 14.2 Radiation | 440 |
| 14.3 Planetary Protection | 441 |
| **COST VOLUME** | |
| 15.0 Project Cost | C-1 |

# TABLE OF CONTENTS (CONT)


| SUBJECT | PAGE |
|---|---|
| TECHNICAL/MANAGEMENT VOLUME: APPENDIX A | |
| Memorandum of Understanding | A-1 |
| Spacecraft Statement of Work | A-2 |
| Mission Operations Document | A-3 |
| Mission Timeline | A-4 |
| Instrument Description Documents | A-5 |
| Structural Design Criteria & Environments | A-6 |
| Flight Software Requirements Specification | A-7 |
| Spacecraft Radiation Environment | A-8 |
| Product Assurance Plan | A-9 |
| Attitude Control Simulation Model | A-10 |
| Spacecraft Structural Model | A-11 |
| Spacecraft Thermal Model | A-12 |
| Electrical Power Budget | A-13 |
| Propellant Budget | A-14 |
| Pointing Error Budget | A-15 |
| Trajectory Analysis Document | A-16 |
| Spacecraft Drawing Tree | A-17 |

# 7.0 FLIGHT SYSTEM DESIGN (CONT)

# COMMUNICATIONS

# SUBSYSTEM FUNCTIONS

The primary subsystem function is to provide a communications interface between the Deep Space Network (DSN) and the spacecraft.

This communications subsystem provides an antenna system, couplers, switches and a receiver to receive commands from the DSN.

This communications system also provides a transmitter, couplers, switches and antenna system to return science and telemetry data back to earth through the DSN.

The normal communications mode uses a high gain antenna to maximize the data rate for receiving commands and transmitting science and telemetry data.

The emergency communications uses antennas that provide near omni-directional coverage. These antennas will function for all spacecraft attitudes with no pointing required.

The receiver and transmitter form a transponder unit that can provide tracking of the spacecraft. Range and direction can be used for spacecraft navigation.

The received signal levels and transit time can also be used to study RF propagation over the path from earth to the spacecraft which is useful to provide measurements of pressure, temperature and atmospheric composition, etc. .

# SUBSYSTEM FUNCTIONS

- PRIMARY SUBSYSTEM FUNCTION
  - PROVIDES INTERFACE BETWEEN DEEP SPACE NETWORK (DSN) AND THE SPACECRAFT
  - RECEIVES COMMANDS FROM DSN AND TRANSMITS SCIENCE / TELEMETRY DATA BACK TO DSN
- COMMUNICATIONS CAN ALSO BE USED TO PROVIDE
  - RADIO TRACKING FOR SPACECRAFT NAVIGATION
  - RADIO SCIENCE (SUCH AS MEASUREMENT OF PRESSURE, TEMPERATURE AND ATMOSPHERE DENSITY)

# REQUIREMENTS

This table lists the requirements for the communications subsystem. Two sets of data are listed to compare both the baseline (X-band) and S-band approach.

In both cases the earth DSN antenna, spacecraft antenna diameter and the spacecraft science data collection rate is the same. With the X-band system the data rate is increased from 3.0 Kbps to 7.5 Kbps. Where the range

to the spacecraft is reduced due to decreased Mars to Earth distance the maximum data rate increases to 12 Kbps for the S-band approach where as the X-band baseline provides over 20 Kbps data return rate.

The conclusion is that the S-band system requires a much higher transmit power to achieve less data return capability.

# REQUIREMENTS

| PARAMETER | BASELINE SPECIFICATION | S-BAND APPROACH |
|---|---|---|
| Uplink / Downlink Frequency Band | X - Band | S - Band |
| DSN Station | 34 m | 34 m |
| Science Data Collection Rate | 4.9 kbps | 4.9 kbps |
| Minimum Data Transmission Rate | 7.5 kbps | 3.0 kbps |
| Increased Data Transmission Rate* | > 20.0 kbps | 12.0 kbps |
| High Gain Antenna | 1.2 m** | 1.2 m** |
| RF Amplifier | 5 watt (X-Band) | 25 watt (S-Band) |

* Supportable Data Rate Increases As Earth-Mars Distance Lessons
** Assumes a 60% Efficency. If 80% Is Used By Shaping The Reflector, Power or Antenna Size May Be Reduced

# BLOCK DIAGRAM

The communications subsystem is composed of 3 basic units. These are the transponder, amplifier and antennas. These units are interfaced using coaxial cable, diplexers, switches , and antenna coupler.

The high-gain antenna (HGA ) is steered toward earth with a gimbal assembly providing a +/- 180° aximuth and a 200° elevation capability.

Commands received by the subsystem are connected to the Command Detect Unit (CDU). These commands are then routed to the Control & Data Subsystem.

The Control & Data Subsystem provides telemetry and science data to the subsystem through the Telemetry Modulation unit (TMU). The output of this unit is connected to the transponder where the information modulates the transmitter RF carrier and then connected to the appropriate antenna for transmission.

To provide the highest reliability the system contains redundancy to insure a highly reliable subsystem.

The emergency antenna system is composed of two low-gain antennas (LGA) to provide near-omni coverage.

# BLOCK DIAGRAM

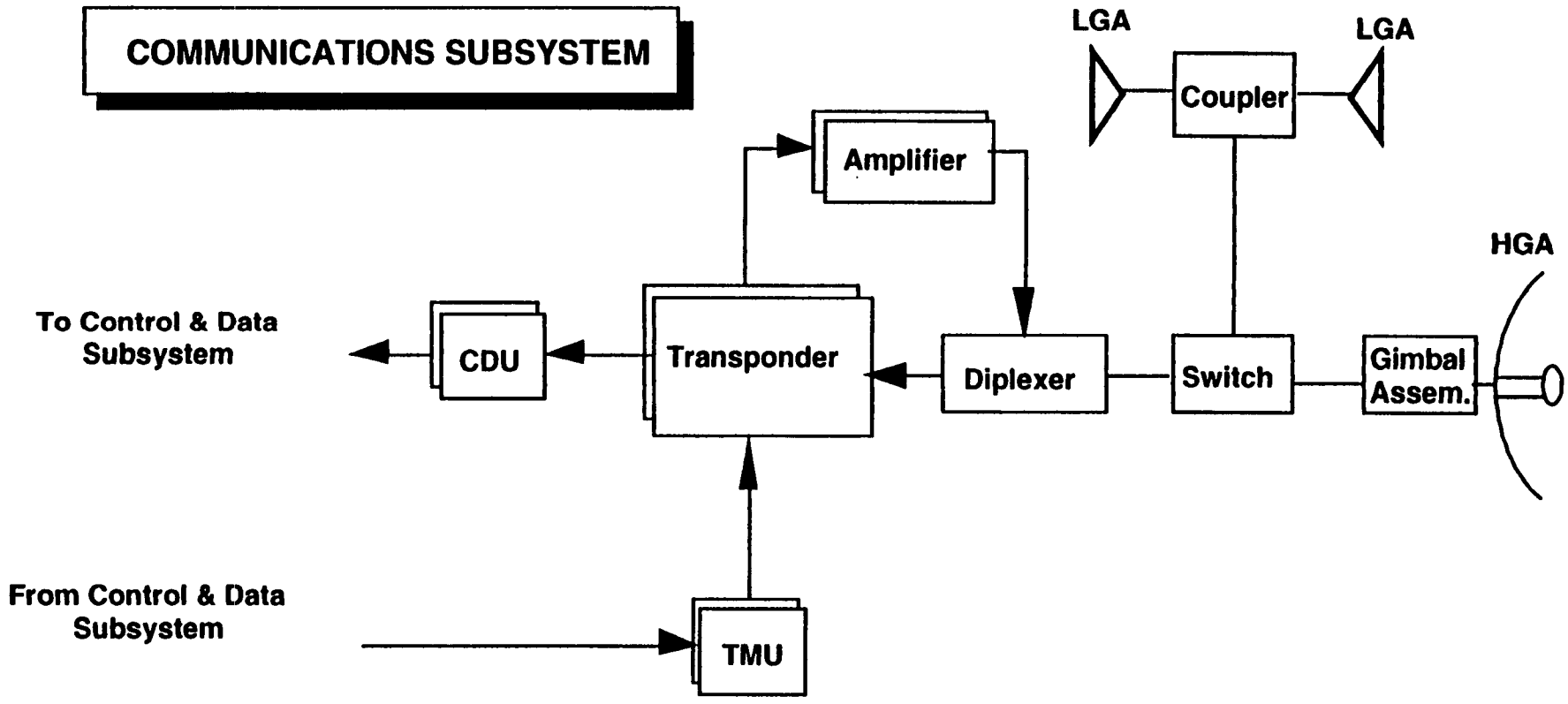


- 2 LGA's Are Used For Near Omni Coverage
- CDU = Command Detect Unit
- TMU = Telemetry Modulation Unit

= Redundancy

# POINTING KNOWLEDGE ERRORS

The contributing factors to the pointing error of the high-gain antenna (HGA) are listed. Basic pointing information is obtained from the star tracker and the sun sensor. The alignment uncertainty and digital resolution are the main error contributors.

Alignment uncertainty between the spacecraft mechanical principle axis and the mechanical antenna mounting induces pointing errors.

The antenna alignment between the antenna mount/gimbal and the antenna electrical boresight is an additional contributor.

For each of these contributors a pointing-error probability is assigned and a "3 sigma" value is determined. From this analysis the following error factors are determined. These factors are attitude determination, nutation, wobble, mechanical misalighment and electrical misalignment.

The spacecraft design is optimized to minimize the pointing error by determining the major contributors and the factors influencing them. From this analysis a realizable pointing error is calculated.

# POINTING KNOWLEDGE ERRORS

- The Following Items Contribute To The Uncertainity In The HGA Pointing Direction and Hence To The Antenna Pointing Error:

  (1) Star Tracker Alignment Uncertainity and Digital Resolution

  (2) Sun Sensor Alignment Uncertainity and Digital Resolution

  (3) Alignment Uncertainity Between The Mechanical Boresight and The Spacecraft Principal Axis

  (4) Alignment Uncertainity Between The Antenna Electrical and Mechanical Boresight

- For Each Contributor To Pointing Error, A Probability Distribution Associated With Each Is Assigened and a " 3 Sigma* " Value Is Determined:

  - Attitude Determination
  - Nutation
  - Wobble
  - Mechanical Misalignment
  - Electrical Misalignment

- From This, A Design, Adverse and Favorable Pointing Error Is Calculated

* "3 Sigma" Value Refers To The Value Which Yields a 99.73% Confidence Level For A Rayleigh Distribution

# POINTING CONTROL ERRORS

This chart lists the antenna pattern and antenna alignment factors relative to the earth position vector.

1) For a fixed antenna position the spacecraft is only pointed with peak gain for a limited mission time when the boresight of the antenna aligns with the earth receive station.

2) With the mechanically steered antenna the factors on the previous chart apply. In addition the antenna is steered continuously which causes a pointing error that is dependent on the update rate.

For the case where the spacecraft is spinning additional factors are identified. These fall into two areas. The first is the mechanical and electrical alignment between the antenna and the spacecraft spin axis. The second is the spin properties of the spacecraft which include wobble and nutation. The figure shows the relationship between these factors.

# POINTING CONTROL ERRORS

- A Change In Target (Earth) Position Over The Antenna Gain Pattern Occurs With Mission Time Because Of The Following Factors:

(1) For A Fixed Antenna Position, The Spacecraft To Earth Vector Is Aligned With Peak Gain For A Short Period Of Time
(2) In A Discrete Pointing System, Pointing Error Will Occur Because Of Non-Continous Pointing Updating

For Spinning Antennas (Scenario I):

(3) Misalignment Between The Mechanical Boresight and Spacecraft Spin Axis
(4) Misalignment Between The Antenna Electrical and Mechanical Boresight
(5) Wobble
(6) Nutation

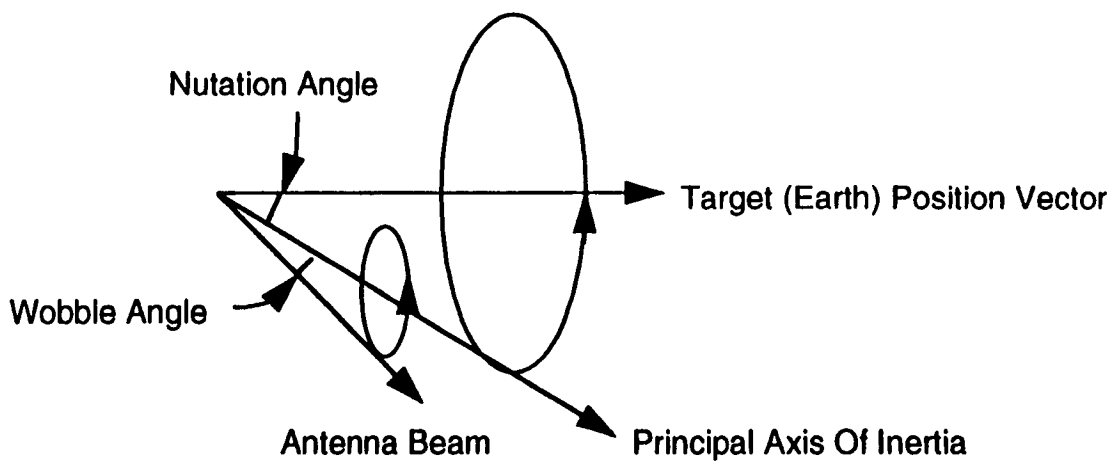

# POINTING LOSS

This chart provides analytical data calculated for a 1.2 meter parabolic reflector antenna. Although this is an ideal pattern it is very representative of patterns obtainable. The principle information is determined by the width of the main lobe as shown in the right figure.

As the beam is moved from perfect alignment with the earth station the gain falls by about 1 dB for a 0.5° misalignment . The total of the pointing errors including the steering update rate must fall with in a 1° dead band to achieve less than a 1 dB pointing loss. In the following chart the effect of antenna size on pointing loss is illustrated .

# POINTING LOSS

- If A 1.0° "Deadband" Is Chosen About The Peak Of The Antenna Radiation Beam As The Desired Design Value, Then Up To 1.0 dB Loss Will Result Due To Pointing Errors.

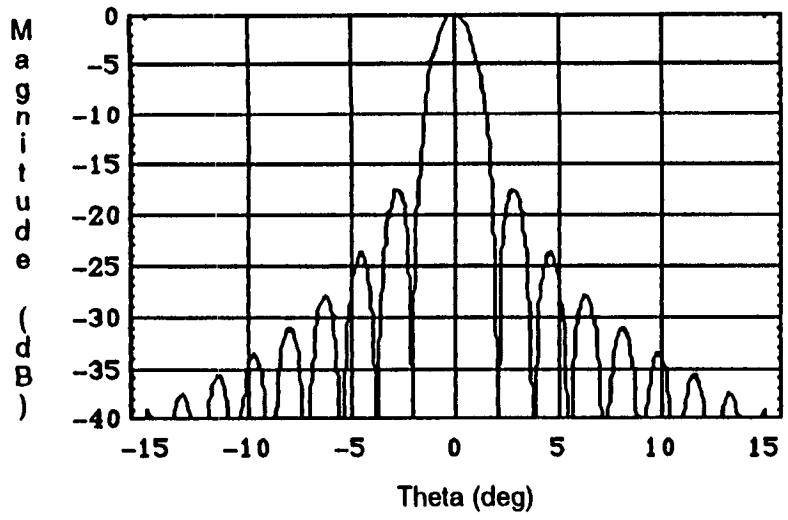


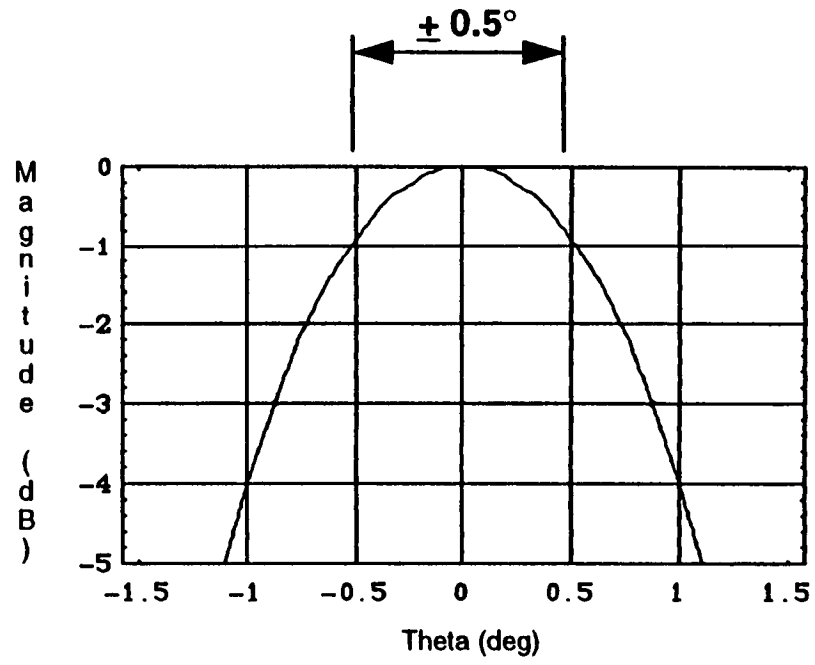


**1.2 m Diameter Parabolic Dish (Ideal Pattern)**

# COMM LINK POINTING SENSITIVITY

The larger the antenna size the higher the antenna gain but the pointing error subtracts from the gain.

This chart shows how the pointing loss increases as the antenna diameter increases. The baseline antenna of 1.2 meters has a pointing loss of about 1 dB with the pointing error of +/- 1°. If the pointing error is reduced to +/- 0.5° the loss drops to less than 0.5 dB.

To increase the data rate it is desirable to use the largest antenna size (that can be physically practical) for the antenna.

The next chart shows the effect on data rate. Currently a 1.6 meter antenna is being considered. To be effective the pointing loss becomes a driver in the performance of this antenna.

# COMM LINK POINTING SENSITIVITY

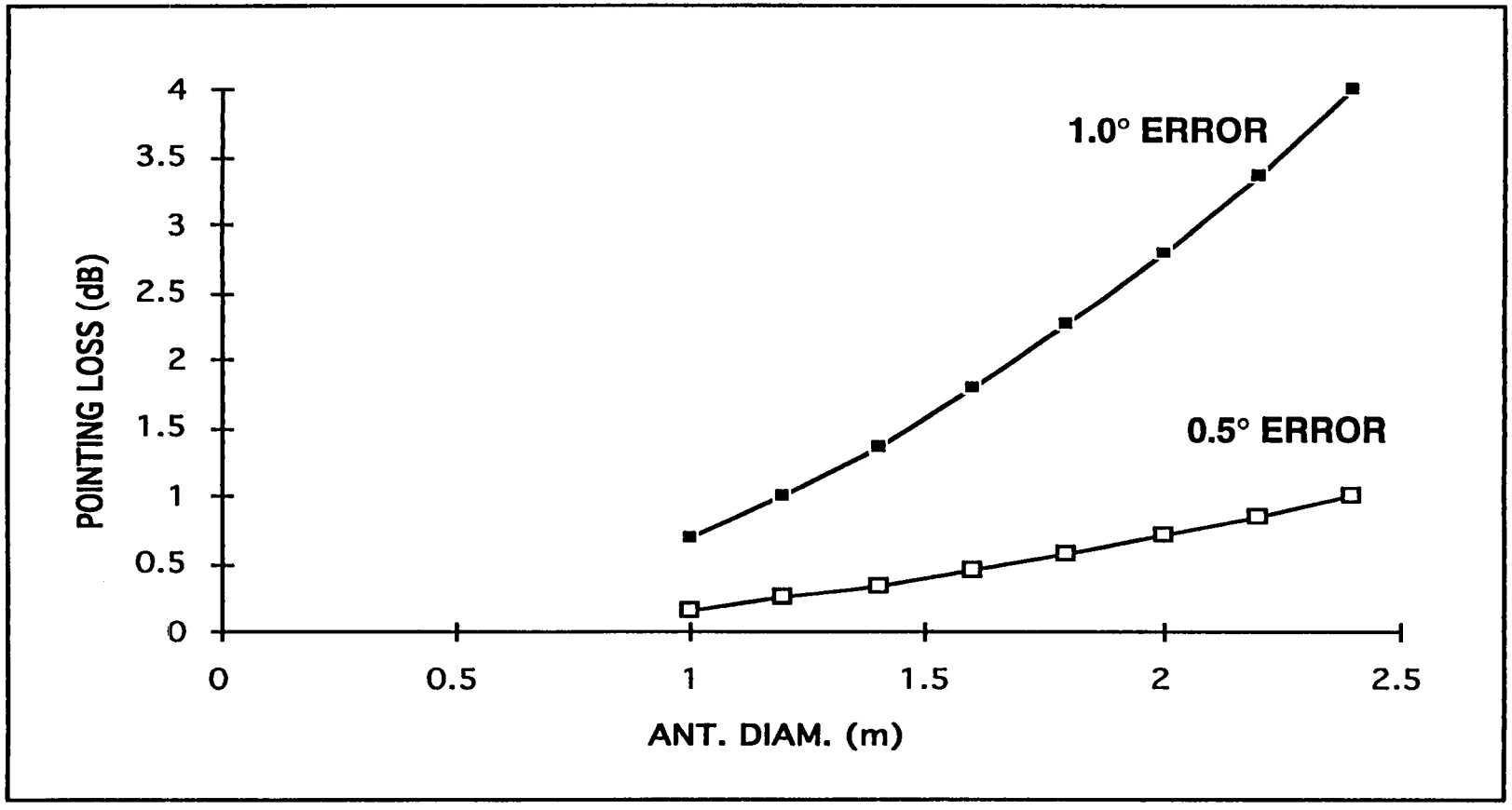

# DATA RATE VS ANTENNA SIZE

The maximum data rate for data returned from the spacecraft (telemetry and science data) can be increased by increasing the antenna size.

In this example using the 1.2 meter parabolic antenna the maximum data rate is almost a linear function of antenna size. The link budget shows that the maximum data rate can not exceed 10 KHz with a 2.4 meter antenna.

Currently the best approach is to not only increase the antenna size but reduce the pointing error as well. By decreasing the pointing error and increasing the antenna size to 1.6 meters a data rate of 10 Kbps can be achieved.

# DATA RATE VS ANTENNA SIZE

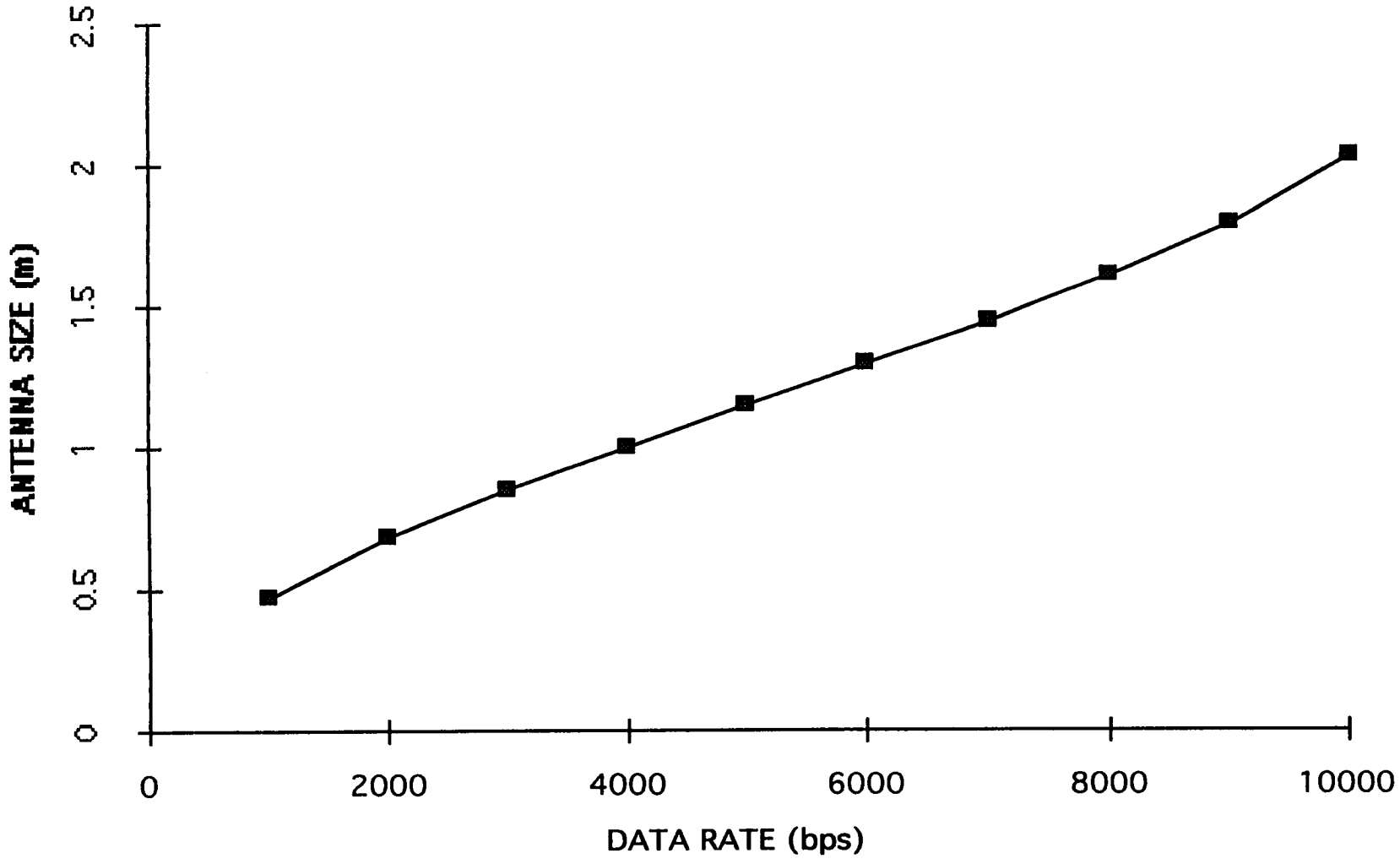

# LINK BUDGET

This is the link budget that the previous chart was based on. The main variable in this chart is the antenna size which is either 1.2 meters or 2.4 meters.

The pointing loss increase by 3 dB from 1.2 meters to 2.4 meters but the antenna gain increases by over 6 dB providing approximately a factor of two increase in data rate.

The data rate for the larger antenna is over 10 Kbps. This 2.4 meter antenna was not considered for the design as the size become impractical.

As mentioned earlier both the pointing error and antenna size require optimization to achieve the highest data rate.

To maximize the return data rate the system uses advanced forward error correction (FEC). A concatenated code is applied at the transmitter which is then encoded at the receiver. Through the use of the FEC technique about 10 dB improvement in link margin is achieved. A very low value of implementation loss is now possible through digital demodulation and FEC decoding.

# LINK BUDGET

| Downlink Parameters | Value | Unit | Value | Unit | Comments |
|---|---|---|---|---|---|
| | | | | | |
| **Spacecraft** | | | | | |
| Frequency | 8.42 | GHz | 8.42 | GHz | x-Band, S/C to Earth |
| Spacecraft Antenna Diam. | 1.20 | meter | 2.40 | meter | |
| Spacecraft Antenna Gain | 38.28 | dBi | 44.30 | dBi | 60% eff. |
| RF Amplifier | 5.00 | Watts | 5.00 | Watts | |
| Circuit loss | -1.20 | dB | -1.20 | dB | Waveguide, switch, diplexer |
| Pointing loss | -1.00 | dB | -4.00 | dB | 1.0° Deadband |
| **Spacecraft EIRP** | 43.07 | dBW | 46.09 | dBW | Including pointing loss |
| | | | | | |
| **Earth Station** | | | | | |
| Range | 400.00 | Mkm | 400.00 | Mkm | Max. earth-mars distance |
| Path loss | -282.98 | dB | -282.98 | dB | |
| Atmospheric attenuation | -0.10 | dB | -0.10 | dB | |
| Polarization loss | -0.10 | dB | -0.10 | dB | |
| DSN Pointing loss | -0.10 | dB | -0.10 | dB | 0.02 degrees |
| DSN Antenna gain | 68.20 | dB | 68.20 | dB | 34m DSN station @30° el |
| **Received Power** | -172.01 | dBW | -168.99 | dBW | |
| | | | | | |
| Carrier suppression | -11.70 | dB | -11.70 | dB | Squarewave subcarrier |
| Carrier Threshold | -209.00 | dBW | -209.00 | dBW | DSN Rx loop BW = 3 Hz |
| **Carrier link margin** | 25.29 | dB | 28.31 | dB | 10 dB Recommended |
| | | | | | |
| DSN System noise temperature | 15.70 | dB-K | 15.70 | dB-K | |
| Boltzman's constant | -228.60 | dBW/K-Hz | -228.60 | dBW/K-Hz | 1.38 e-23 W/K-Hz |
| Earth station G/T | 52.50 | dB-K | 52.50 | dB-K | |
| Carrier & subcarrier sync losses | -0.50 | dB | -0.50 | dB | |
| Data subcarrier suppression | -0.30 | dB | -0.30 | dB | Mod index = 1.3 |
| Data rate | 5357.18 | bits/sec | 10738.83 | bits/sec | |
| **Received Eb/No** | 2.80 | dB-Hz | 2.80 | dB-Hz | |
| | | | | | BPSK @ 10E-5 with |
| Required Eb/No | 9.80 | dB-Hz | 9.80 | dB-Hz | R=1/6, K=15, RS(255,223) |
| FEC Coding Gain | 10.50 | dB | 10.50 | dB | plus convolutional code |
| Implementation loss | 0.50 | dB | 0.50 | dB | |
| **Data subcarrier link margin** | 3.00 | dB | 3.00 | dB | 3 dB minimum required |

# 1.6 METER HIGH GAIN ANTENNA

The antenna planned as the baseline antenna was designed as a space-qualified antenna. This antenna is 1.2 meters in diameter. With a pointing error of +/- 0.5 degrees the pointing loss is 1.0 dB and the maximum data rate with a 3 dB margin is 5.4 Kbps.

Realizing that higher data rates are desired to return a maximum amount of telemetry and science data larger antennas were investigated as well as reviewing the pointing error budget.

Decreasing the pointing error only increases the data rate to 6 Kbps with the 1.2 meter antenna.

A commercial space qualified antenna is available from Composite Optics. This antenna is 1.6 meters in diameter. The combination of lower pointing error and slightly increased size increases the maximum data rate to 10 Kbps with a 3 dB margin.

This antenna meets the mechanical requirements of the spacecraft and provides a data rate of 10 Kbps.

Alternate approaches to achieving a higher data rate, such as using a higher power amplifier, would add additional weight and power.

# 1.6 METER HIGH GAIN ANTENNA

- 1.2 METER ANTENNA WAS BASELINE
  - MAXIMUM DATA RATE FOR 3 dB MARGIN IS 5.4 Kbps
  - BASED ON A POINTING ERROR OF +/- 5°
- REVIEW OF POINTING ERRORS INDICATES +/- 0.4° IS ACHIEVABLE
  - INCREASES DATA RATE TO 6 Kbps
  - ALLOWS USE OF LARGER ANTENNA
- 1.6 METER ANTENNA FROM COMPOSITE OPTICS
  - INCREASES MAXIMUM DATA RATE TO 9.8 Kbps
  - POINTING LOSS IS 0.8 dB

# 1.2 AND 1.6 METER LINK BUDGET COMPARISON

These link budgets are essentially the same as previously shown for the 1.2 and 2.4 meter antenna. With the decreased pointing error a small increase in antenna size is effective in increasing the maximum data rate to 10 Kbps.

These budgets are for the maximum path range of 400 million Kilometers.

The 34 meter DSN earth station antenna is used down to an elevation angle of 30 As in the previous link budget a concatenated error correction code is required to achieve a bit-error rate of $10^{-5}$ with a 3 dB margin.

# 1.2 AND 1.6 METER LINK BUDGET COMPARISON

| Downlink Parameters | Value | Unit | Value | Unit | Comments |
|---|---|---|---|---|---|
| **Spacecraft** | | | | | |
| Frequency | 8.42 | GHz | 8.42 | GHz | x-Band, S/C to Earth |
| Spacecraft Antenna Diam. | 1.20 | meter | 1.60 | meter | |
| Spacecraft Antenna Gain | 38.28 | dBi | 40.78 | dBi | 60% eff. |
| RF Amplifier | 5.00 | Watts | 5.00 | Watts | |
| Circuit loss | -1.20 | dB | -1.20 | dB | Waveguide, switch, diplexer |
| Pointing loss | -0.45 | dB | -0.80 | dB | 0.8° Deadband |
| **Spacecraft EIRP** | 43.62 | dBW | 45.77 | dBW | Including pointing loss |
| | | | | | |
| **Earth Station** | | | | | |
| Range | 400.00 | Mkm | 400.00 | Mkm | Max. earth-mars distance |
| Path loss | -282.98 | dB | -282.98 | dB | |
| Atmospheric attenuation | -0.10 | dB | -0.10 | dB | |
| Polarization loss | -0.10 | dB | -0.10 | dB | |
| DSN Pointing loss | -0.10 | dB | -0.10 | dB | 0.02 degrees |
| DSN Antenna gain | 68.20 | dB | 68.20 | dB | 34m DSN station @30° el |
| **Received Power** | -171.46 | dBW | -169.31 | dBW | |
| | | | | | |
| Carrier suppression | -11.70 | dB | -11.70 | dB | Squarewave subcarrier |
| Carrier Threshold | -209.00 | dBW | -209.00 | dBW | DSN Rx loop BW = 3 Hz |
| **Carrier link margin** | 25.84 | dB | 27.99 | dB | 10 dB Recommended |
| | | | | | |
| DSN System noise temperature | 15.70 | dB-K | 15.70 | dB-K | |
| Boltzman's constant | -228.60 | dBW/K-Hz | -228.60 | dBW/K-Hz | 1.38 e-23 W/K-Hz |
| Earth station G/T | 52.50 | dB-K | 52.50 | dB-K | |
| Carrier & subcarrier sync losses | -0.50 | dB | -0.50 | dB | |
| Data subcarrier suppression | -0.30 | dB | -0.30 | dB | Mod index = 1.3 |
| Data rate | 6080.85 | bits/sec | 9978.56 | bits/sec | |
| **Received Eb/No** | 2.80 | dB-Hz | 2.80 | dB-Hz | |
| | | | | | BPSK @ 10E-5 with |
| Required Eb/No | 9.80 | dB-Hz | 9.80 | dB-Hz | R=1/6, K=15, RS(255,223) |
| FEC Coding Gain | 10.50 | dB | 10.50 | dB | plus convolutional code |
| Implementation loss | 0.50 | dB | 0.50 | dB | |
| **Data subcarrier link margin** | 3.00 | dB | 3.00 | dB | 3 dB minimum required |
| | | | | | |

# LGA PLACEMENT

An omni-directional pattern from the low-gain antennas is very difficult to achieve. The HGA must be able to rotate in an area that limits the placement of the low-gain antennas. In addition the antennas must be mounted very close to the spacecraft because of the height limitations between the spacecraft and the inside of the shroud.

Working within these constraints two approaches to antenna placement are considered. In the first case two LGA antennas are used. They are mounted on opposite sides of the spacecraft. The pattern created by these two antennas forms a cartioid or a figure 8 pattern. Unfortunately as the separate patterns of the antennas are combined a overlap area is formed which includes a number of interference nulls where each separate antenna pattern is either canceled or reinforced depending on the phase of the RF field.

A second approach uses three antennas. This approach increases the number of main lobes but also has strong nulls in between the lobes. Although not shown in the figure the power is reduced in the main lobes by 1/3 where as the 2 LGA approach decreases the power by 1/2 in each lobe.

LMSC's has direct experience on the Hubble space telescope where two low gain antennas are used for S-band command and telemetry. In this case the interference between the two antennas was minimized by being mounted on opposite sides of the spacecraft. For the MUADEE spacecraft an analysis will be used to optimize the configuration.

# LGA PLACEMENT

- Due To Vehicle Blockage, HGA Rotational Requirements and Height Limitations (Imposed By Shrould), Full Omni-Directional Coverage Is Not Possible
- Placement of 2-3 LGA's Around The Spacecraft and Arrayed Together Will Allow Coverage To Approach Omni-Directional.
- Further Pattern Analysis Is Required To Determine Best Configuration

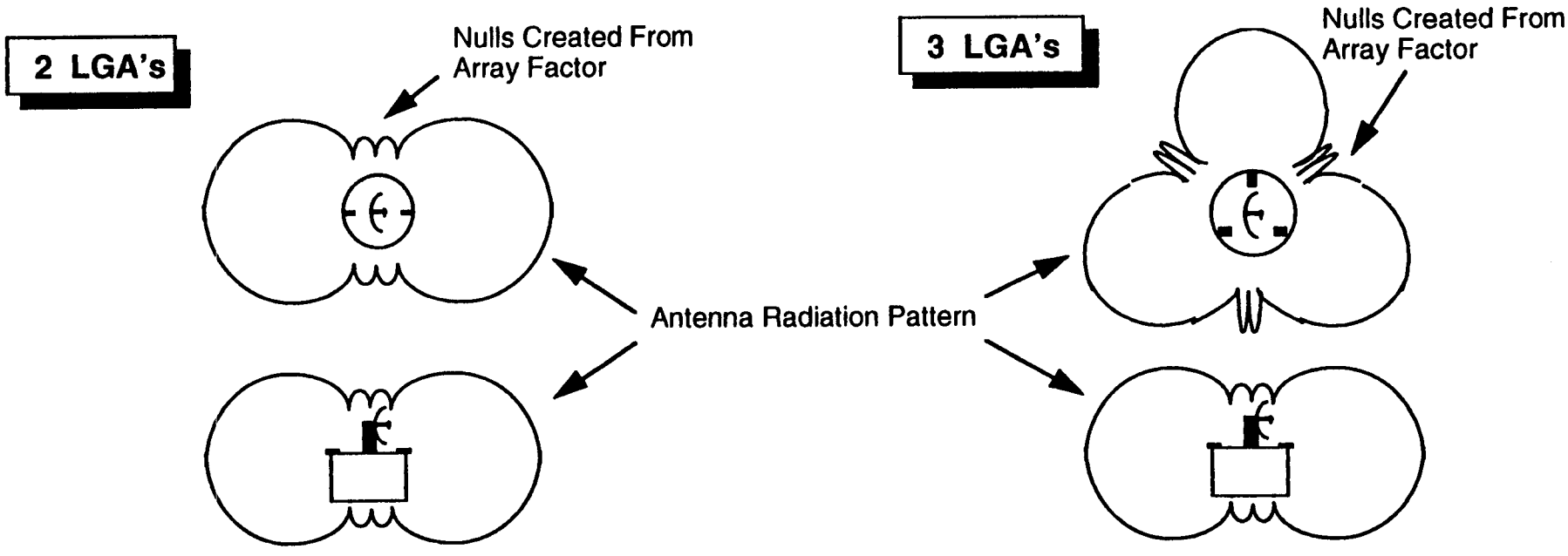

# EMERGENCY TLM RETURN LINK

To provide an emergency TLM return link with a data rate approaching 10 bps additional transmitter power will be required. The 10 Watt amplifiers required to close this link should be mounted near the low-gain antennas to minimize the losses.

These amplifiers are only used in the emergency mode where additional DC power of 50 to 100 Watts is available.

The DSN ground station will require the 70 meter antenna to close this link. The performance of the ground demodulator is critical to performance at these very-low data rates where phase jitter and time effects through the earths atmosphere are important.

Any ground antenna pointing losses and polarization losses must be minimized.

The added weight of the amplifier, switches & transmission line are estimated at 1.5 lbs. This link will support a data rate of 10 bps using the low-gain antennas which provide near omni-directional coverage. This link would be functional with very little effect from spacecraft orientation.

# EMERGENCY TLM RETURN LINK

- REQUIRES 10 WATT AMPLIFIER
- AMPLIFIER MOUNTED NEAR ANTENNA TO MINIMIZE LOSSES
- LINK WILL SUPPORT LOW DATA RATE <10 bps
- MUST USE DSN 70 METER ANT.
- PHASE JITTER, DEMODULATOR PERFORMANCE DETERMINE PERFORMANCE AT VERY LOW DATA RATES
- ANTENNA POLARIZATION LOSS MUST BE CONSIDERED AND MINIMIZED
- AMPLIFIER POWER DURING THIS MODE OF OPERATION WILL BE 50 TO 100 WATTS.
- ADDED WEIGHT OF AMPLIFIER, SWITCHES & TRANSMISSION LINE WILL BE APROXIMATELY 1.5 lb.

# EMERGENCY COMMAND LINK

The emergency command link uses the low-gain antennas to receive commands from the earth. These commands are transmitted from the DSN 70 meter antenna. The external isotropic radiated power from this antenna is 115.67 dBW. This is a very high power transmitted signal. The loss over the path to Mars is very high and only a very small signal is received at the spacecraft.

Using the low-gain antennas to achieve a near-omni-directional pattern which does not requirepointing of the antennas or the spacecraft. A data rate of 12 bps for commands is received.

This data is modulated on a subcarrier of the transmitter from the earth.

# EMERGENCY COMMAND LINK

- COMMAND LINK USING 70 METER ANTENNA WITH HIGH POWER TRANSMITTER - EIRP = 115.67 dBW
- 12 bps CMD DATA ON SUBCARRIER
- OMNI ANTENNA ON SPACECRAFT WILL PROVIDE ADEQUATE MARGIN

# HARDWARE SUMMARY
# (X-Band)

The communications subsystem is composed of the following hardware items. The key element is the transponder which provides for the receiving of commands and the transmitting of return TLM and science data. This unit also acts as a transponder to return timing pulses to the earth for ranging measurement. This unit has been used on the Mars observer and is well proven.

To achieve a very efficient 5 Watt power amplifier new technology is used to obtain very high power efficiency. The 29% efficiency has been obtained by transistors developed by the Sanders division of Lockheed.

The antenna diplexer unit that allows simultaneous transmit and receive through a common antenna has been used and qualified for the Galileo spacecraft.

The high gain antenna is composed of a gimbal assembly and parabolic reflector which are similar to antennas used on LMSC programs. This antenna will be optimized for maximum gain and minimum weight.

The low-gain antennas are modeled after the S-band antennas used on many programs including the Hubble space telescope.

Miscellaneous switches, transmission line components, command data unit and telemetry modulation unit complete the list of hardware.

# HARDWARE SUMMARY

| Hardware Element | Size (cm x cm x cm) | Unit Weight (kgs) | Power (watts) | Heritage |
|---|---|---|---|---|
| Transponder (2) | 30.7 x 18.0 x 6.8 | 4.9 | 15.8 | Mars Observer |
| RF Amplifier (2) | 4.0 x 2.3 x 1.0 | 1.0 | 17.0 | Qualify By LMSC |
| Diplexer | 31.2 x 35.3 | 0.7 | - | Galileo |
| Switch (1) | 3.0 x 4.1 x 1.6 | 0.1 | - | TDRSS |
| High Gain Antenna | 120.0 Diameter | 6.8 | - | Qualify By LMSC |
| Low Gain Antenna (2) | 17.8 x 5.0 x 5.0 | 0.5 | - | Qualify By LMSC |
| CDU (2) | 16.1 x 2.5 x 19.8 | In Transponder | - | Mars Observer |
| TMU (2) | 10.2 x 10.2 x 2.5 | 0.5 | 1.0 | Qualify By LMSC |
| Waveguide / Cables | Various Runs | 0.5 | - | HST / Mars Obs. |
| DC-DC Converter | 8.1 x 6.2 x 1.5 | 0.2 | 80.0 Eff. | ERS |
| TOTAL | | 22.1 | 42.3 | |

# ATTITUDE CONTROL SUBSYSTEM

DHU: 3/15/94
CHART 1

# ACS FUNCTIONS

The Attitude Control System (ACS) provides an attitude reference and attitude control capability throughout the MUADEE mission.

The most significant mission phases for the ACS functions are the trans-Earth-to-Mars cruise trajectory, the Mars orbit insertion, and the Mars orbit phases, including elliptical orbit, aerobraking, and circular orbit phases.

The ACS functions to determine and maintain an attitude reference for all mission phases. Attitude is determined relative to both stars and planet nadir and limb.

The ACS provides a stable control capability during the critical science data measurement operations. The ACS also provides attitude control maneuvers before and after each trajectory or orbit correction thrust burn (delta velocity), and maintains a stable attitude during the burn.

# ACS FUNCTIONS

- MAINTAIN ATTITUDE REFERENCE FOR ALL MISSION PHASES (TRANS-MARS TRAJECTORY, MARS INJECTION, MARS ORBIT)
- PROVIDE STABLE ATTITUDE CONTROL CAPABILITY DURING SCIENCE DATA-MEASUREMENT OPERATIONS
- PROVIDE CONTROLLED ATTITUDE MANEUVERS FOR DELTA V BURNS

# ACS REQUIREMENTS

The Attitude Control System (ACS) requirements are given in terms of specified and derived requirements. Specified requirements are those imposed by the payload instruments during data measurement operations. The specified requirements for the ACS are for pointing control, where the spacecraft body is pointed toward a reference direction.

Pointing control is subdivided into four categories: accuracy, knowledge, stability and jitter. Accuracy is the top-most level of the pointing error budget. Knowledge is the error in knowing where to point, based on sensor data. Stability and jitter are pointing excursions over specified time durations.

The pointing control is specified as follows: pointing accuracy must be less than 0.5 degrees, three-sigma, (statistical standard deviation of the data time series), each axis; pointing knowledge error must be less than 0.3 degrees, three-sigma; pointing stability must be less than 0.1 degrees excursion over any 10 second period; and pointing jitter must be less than 0.1 degrees excursion over 0.25 seconds.

# ACS REQUIREMENTS

## SPECIFIED REQUIREMENTS

- THREE-AXIS POINTING CONTROL DURING NORMAL (DATA MEASUREMENT) OPERATIONS:

| | |
|---|---|
| ACCURACY | 0.5 DEG, 3 SIGMA |
| KNOWLEDGE | 0.3 DEG, 3 SIGMA |
| STABILITY | 0.1 DEG OVER 10. SEC |
| JITTER | 0.1 DEG OVER 0.25 SEC |

# ACS DERIVED REQUIREMENTS

The Attitude Control System (ACS) derived requirements are those requirements derived from other system or subsystem design requirements. The derived requirements for the ACS include general system design goals as well as specific pointing control requirements for additional mission phases.

The general system requirements include designing for minimum cost, power, and weight. Minimizing cost is important for the system design concept to meet program goals. A minimum power design is necessary since solar power is reduced at Mars by the large distance from the sun. A low weight design is important to meet launch payload constraints. The ACS must also be designed to respond to commands uplinked from Earth.

An on-board method for estimating the MUADEE orbit ephemeris around Mars is required so that heating during aerobraking can be safely predicted before a maximum heating condition occurs. If after the periapsis pass heating is predicted to exceed safety limits for the next periapsis pass, then a small orbit adjustment thrust burn can be made at apoapsis. A similar concept was employed for the Magellan aerobraking at Venus.

The pointing control requirements for other mission phases are of equal or less accuracy than for the data measurement phase. For the cruise from Earth to Mars, pointing accuracy must be less than 5 degrees, three-sigma, each axis. For the midcourse trajectory correction and orbit insertion and adjustment thrust (delta velocity) burns, pointing accuracy must be less than 0.5 degrees, three-sigma. For the data playback during Mars orbit the pointing stability must be less than 0.5 degrees, three-sigma.

# ACS DERIVED REQUIREMENTS

- DESIGN FOR MINIMUM WEIGHT, POWER, COST
- DESIGN ACS TO RESPOND TO COMMANDS FROM EARTH
- ON-BOARD EPHEMERIS REQUIRED FOR HEATING PREDICTION
- POINTING REQUIREMENTS:

| MODE | REQUIREMENT |
|---|---|
| CRUISE | ± 5 DEG |
| TRAJECTORY CORRECTIONS | 0.5 DEG, 3 SIGMA |
| MARS ORBIT, DATA PLAYBACK | 0.5 DEG, 3 SIGMA |

# ACS DISTURBANCES

The Attitude Control System (ACS) disturbances include aerodynamic forces and torques, gravity gradient torques, and solar pressure torques. The aerodynamic troques are expected to dominate at the lower altitudes below 150 km.

This table shows the estimated magnitude of aerodynamic torque for the flight configuration with the symmetric vehicle axis aligned with the orbit plane perpendicular. In this configuration the momentum wheel spin vector is also aligned with the symmetric vehicle axis, and the gimballed antenna is on the left side of the spacecraft as one faces forward along the flight path. The asymmetry of the gimballed antenna relative to the rest of the spacecraft shell creates an aerodynamic torque when the atmospheric density is large.

The table inputs are atmospheric density versus altitude, spacecraft velocity versus altitude for the largest energy orbit (with apoapsis of 33100 km), and estimates of aerodynamic moment coefficients. The table outputs are dynamic pressure (Qbar) and three estimates of vehicle yaw torque due to aerodynamics. The firsttorque estimate (DHU) was based on approximate antenna drag area and offset center of pressure, with a drag coefficient of 2.2. The second torque estimate (JK) was based on more refined shape data for two altitudes, 100 and 200 km. The third estimate (combo) was calculated as a combination of the two between altitudes of 100 and 200 km.

The results show that the maximum available ACS control torque of 4.4 newton-meters is exceeded by the aerodynamic torques at altitudes below 130 km.

# ACS DISTURBANCES

## AERO TORQUE ESTIMATES

| ALT (KM) | DENSITY (KG/M**3) | VELOCITY (APO=33100 KM) (M/S) | QBAR (N/M**2) | TORQUE (DHU EST.) (N-M) | AERO MOM COEF | TORQUE (JK EST.) (N-M) | TORQUE (COMB EST) (N-M) |
|---|---|---|---|---|---|---|---|
| * 100 | 1.34E-06 | 4714.8 | 1.49E+01 | 61.27 | 0.351 | 39.86 | 39.86 |
| 110 | 6.10E-07 | 4707.5 | 6.76E+00 | 27.81 | | | 18.09 |
| 120 | 2.85E-07 | 4700.1 | 3.15E+00 | 12.95 | | | 8.43 |
| 130 | 1.37E-07 | 4692.8 | 1.51E+00 | 6.21 | | | 4.04 |
| 140 | 6.84E-08 | 4685.5 | 7.51E-01 | 3.09 | | | 2.01 |
| 150 | 8.85E-09 | 4678.3 | 9.68E-02 | 0.398 | | | 0.259 |
| 160 | 1.83E-09 | 4671.1 | 2.00E-02 | 0.082 | | | 0.053 |
| 170 | 7.51E-10 | 4663.9 | 8.17E-03 | 0.034 | | | 0.022 |
| 180 | 3.90E-10 | 4656.7 | 4.23E-03 | 0.017 | | | 0.011 |
| 190 | 2.26E-10 | 4649.6 | 2.44E-03 | 0.0101 | | | 0.007 |
| 200 | 1.40E-10 | 4642.5 | 1.51E-03 | 0.0062 | 0.398 | 0.0046 | 0.004 |

*** VEHICLE THRUSTER TORQUE EXCEEDED AT SHADED ALTITUDES**

DHU: 3/15/94
CHART 5

# ACS BLOCK DIAGRAM

The Attitude Control System (ACS) block diagram illustrates the sensor, control law, and actuator configurations for three flight modes: the trans-Earth-to-Mars cruise mode, the On-orbit Despun (three-axis stabilized mode), and the On-orbit Spin Mode.

During the eleven month cruise mode only the sun sensors and star scanners are used as ACS sensors. This is a minimum power use configuration. The vehicle has been spun up to 3 RPM for inertial attitude stabilization. The reaction control thrusters are used for attitude control whenever maneuvers are required.

In the On-orbit Despun (three-axis stabilized) mode the horizon sensors and gyros are used for attitude reference. Spacecraft angular momentum is transferred to the reaction wheel, which is used for stiffness to attitude disturbances and a simple way to adjust to the changing rotation rate during elliptical orbits. Reaction control thrusters are used for large disturbance control and maneuvers.

For the On-orbit spin mode the angular momentum of the reaction wheel is transferred to the vehicle. The star scanners are now used to provide attitude fixes.

# ACS BLOCK DIAGRAM

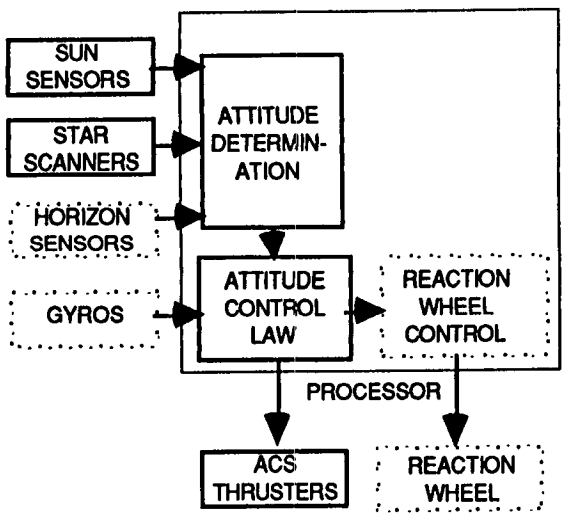


**CRUISE MODE**

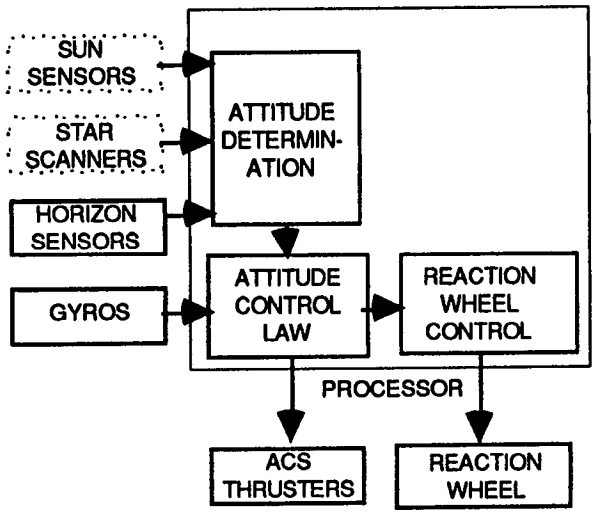


**ON-ORBIT DESPUN MODE**

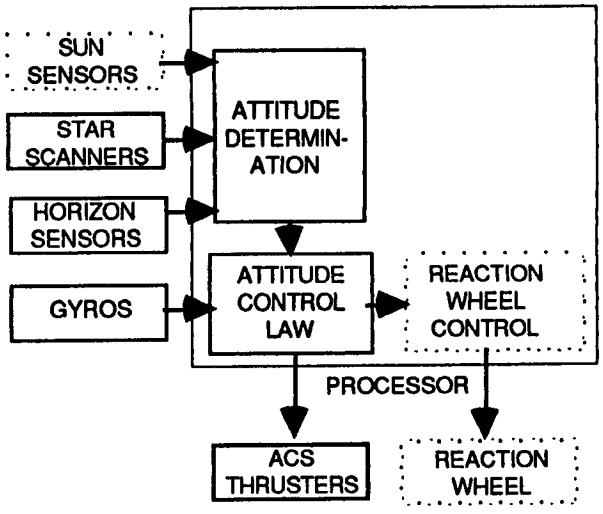


**ON-ORBIT SPIN MODE**

DHU: 3/15/94
CHART 6

# ACS DESIGN ASSUMPTIONS

The Attitude Control System (ACS) design is based on several assumptions. The design driver is the top-level pointing accuracy requirement of 0.5 degrees, three-sigma. This requirement flows down to the accuracy required for sensors and actuators, and to the complexity required for the control law.

The pointing accuracy requirement is assumed to apply in both on-orbit control modes, the despun mode and the spin mode. In the despun (three-axis stabilized) mode, the vehicle is to be pointed with forward vehicle axis at the forward limb and side axis along the orbit plane perpendicular. In the spin mode, the forward vehicle axis is rotating in the orbit plane and the vehicle side axis (the symmetric axis) is pointed along the orbit plane perpendicular.

Another design driver is controlling attitude without use of large amounts of reaction control fuel. Fuel is obviously in limited supply and must be conserved.

The despun (three-axis stabilized) vehicle requires reaction control thrust for attitude stabilization in two axes not controlled by the reaction wheel. The spinning vehicle can be stabilized with very little reaction control thrust. However, inertia cross-products produce undesirable spin nutation or wobble which must be damped.

Large aerodynamic torques are a potential design driver at low altitudes.

# ACS DESIGN ASSUMPTIONS

- DESIGN DRIVER IS POINTING ACCURACY REQUIREMENT (0.5 DEG)
- REQUIREMENT IS ASSUMED TO APPLY IN BOTH ON-ORBIT SITUATIONS:
  - DESPUN MODE:

    NADIR POINTING

    LIMB POINTING
  - SPIN MODE:

    LIMB SCAN
- CONTROLLING AND DAMPING ATTITUDE MOTIONS WITHOUT LARGE EXPENDITURES OF FUEL
- DESPUN VEHICLE REQUIRES REACTION CONTROL THRUST TO STABILIZE NUTATION
- SPINNING VEHICLE CAN BE STABILIZED WITH VERY LITTLE REACTION CONTROL
- YAW AERO TORQUE IS POTENTIAL DRIVER AT LOW ALTITUDES

DHU: 3/15/94
CHART 7

# ACS DESIGN DESCRIPTION

The Attitude Control System (ACS) design is based on sufficient attitude control to meet the requirement for each mission or flight mode.

In the Cruise mode, an attitude reference is determined from sun sensor and star scanner data. The vehicle spins at 3 RPM about its symmetric axis of maximum moment of inertia to maintain inertial attitude stabilization. Reaction control thrusters are used to damp large motion and for attitude control maneuvers.

For the On-orbit Despun mode the attitude reference is maintained by gyros and the horizon sensors. The horizon sensors are pointed toward the forward limb and two side limbs (between nadir and orbit plane perpendicular). The side angles vary with altitude over several degrees, so the horizon sensors must be mounted with stepper motors for adjustment with altitude. The three horizon sensors give information which can be translated into altitude, pitch angle and roll angle of the vehicle, but not yaw angle.

The yaw angle is provided by a separate source, the attitude reference of the gyros. The gyros also provide angular rate data.

The reaction wheel is spun at a high rate to provide stiffness to atitude disturbances and a simple way to adjust to the changing rotation rate during elliptical orbits. Reaction control thrusters are used for large disturbance control and maneuvers.

# ACS DESIGN DESCRIPTION

## CRUISE MODE

- ATTITUDE REFERENCE FROM STAR SCANNER DATA
- FIXED ATTITUDE MAINTAINED BY SPIN VECTOR
- ATTITUDE CONTROL BY THRUSTERS

## ON-ORBIT DESPUN MODE

- NADIR/LIMB REFERENCE MAINTAINED BY ONE FORWARD POINTING (IN ORBIT PLANE) HORIZON SENSOR AND TWO SIDE POINTING (BETWEEN NADIR AND ORBIT PLANE PERPENDICULAR) HORIZON SENSORS
- YAW ANGLE (ABOUT NADIR) OBTAINED FROM GYRO ATTITUDE REFERENCE
- ANGULAR RATES PROVIDED BY GYROS
- SPIN AXIS ATTITUDE DURING NORMAL OPERATIONS IS STABILIZED BY REACTION WHEEL, WITH NUTATION CORRECTED BY REACTION CONTROL JETS
- ROLL AXIS ATTITUDE CONTROL IS BY CHANGING SPIN OF REACTION WHEEL

DHU: 3/15/94
CHART 8

# ACS DESIGN DESCRIPTION (CONT'D.)

For the On-orbit Spin mode the attitude reference is maintained by the star scanners and two horizon crossing indicators. The horizon crossing indicators are mounted one on each side, with a wide field of view to scan the horizon twice per vehicle revolution. Computations from these four crossings, two per side, give vehicle altitude, pitch angle, and roll angle. Yaw angle is obtained from the star scanner data.

Angular rates are provided by the gyros, which must have high and low rate ranges.

Reaction control thrusters are used for large disturbance control and maneuvers. Small nutation rates are damped by a passive nutation damper.

# ACS DESIGN DESCRIPTION (CONT'D.)

## ON-ORBIT SPIN MODE

- NADIR REFERENCE MAINTAINED BY TWO HORIZON CROSSING INDICATORS, ONE ON EACH SIDE, WHICH SCAN AS THE VEHICLE IS ROTATED
- INERTIAL SPIN AXIS ATTITUDE DETERMINED FROM STAR SCANNER DATA
- ANGULAR RATES PROVIDED BY GYROS
- LARGE NUTATION CORRECTED BY REACTION CONTROL JETS, BUT SMALL NUTATION DAMPED BY PASSIVE NUTATION DAMPER

DHU: 3/15/94
CHART 9

# ACS ERROR BUDGET

The ACS pointing control error budget for the On-orbit Despun mode is shown in the table. The assumptions are for the worst design case, which includes the worst orbit with 2500 km apoapsis, the maximum aerodynamic disturbance torque at 130 km, yaw gyro drift up to 24 hours following an attitude fix, and use of horizon sensors for pitch and roll angle.

The table gives a lower level breakdown for the error budgets for pointing accuracy and pointing knowledge. Each component and subcomponent and their errors are shown. The errors from the subcomponents are RSS'd to component errors, and the component errors are RSS'd to the top level errors. These values are compared to the ACS requirement, and the margin or difference between the two is shown in the final column.

The results show that both the pointing knowledge requirement of 0.3 degrees, three-sigma and pointing accuracy requirement of 0.5 degrees, three-sigma are met. The pointing control error was obtained from a six degree-of-freedom orbit simulation of the MUADEE ACS design.

# ACS ERROR BUDGET

| TOP LEVEL | COMPONENTS | SUBCOMPONENTS | SUBCOMP ERROR (deg 3 sig) | COMPON ERROR (deg 3 sig) | TOP LEVEL ERROR (deg 3 sig) | REQT (deg 3 sig) | MARGIN (deg 3 sig) |
|---|---|---|---|---|---|---|---|
| | | | | | | | |
| Pointing Knowledge | | | | | 0.277 | 0.3 | 0.023 |
| | Gyro Reference | | | 0.240 | | | |
| | | drift bias | 0.24 | | | | |
| | | mechanical | 0.002 | | | | |
| | | thermal | 0.002 | | | | |
| | Star Scanner Ref | | | 0.108 | | | |
| | | meas process | 0.1 | | | | |
| | | mechanical | 0.01 | | | | |
| | | thermal | 0.04 | | | | |
| | Horizon Sensors | | | 0.087 | | | |
| | (Vertical Ref) | meas process | 0.07 | | | | |
| | | radiance | 0.05 | | | | |
| | | mechanical | 0.01 | | | | |
| | | | | | | | |
| | | | | | | | |
| Pointing Accuracy | | | | | 0.380 | 0.5 | 0.120 |
| | Ptg Knowledge | | | 0.277 | | | |
| | | | | | | | |
| | Ptg Control | | | 0.26 | | | |

**Assumptions:**

- **Worst case orbit (2500 apoapsis)**
- **Max torque control disturbance**
- **Star fix after update, then inertial gyro attitude reference up to 24 hours**
- **Horizon sensors for nadir/limb reference**
- **Worst attitude control disturbance is aero torque**

DHU: 3/15/94
CHART 10

# POINTING STABILITY OF SPINNING VEHICLE

Pointing stability of a spinning vehicle is well understood with Lockheed's extensive design experience. A large variety of spinning configurations have been designed and flown in earth orbit. Among the primary design concerns are the stability of the spinning vehicle and the size of the offset wobble angle.

From classical considerations a stable vehicle spin, that is, a spin that does not change, occurs only about the principal axis of largest moment of inertia of the spacecraft. The angular momentum is fixed in inertial space, and the mimimum kinetic energy for a given angular momentum occurs about the axis of maximum moment of inertia.

If the principal axis of moment of inertia is offset from the instrument axis, which happens when there is a cross-product of inertia, then the instrument axis experiences an offset and nutation or wobble. The offset angle is related to the inertia cross product and principal inertias by the formula given. The nutation angle is the result of the initial spin-up angular rates and disturbance torques.

Even when nutation is fully damped, the pointing stability rate of the instrument axes is equal to the offset angle times the nutation rate.

In order to keep the pointing stability rate less than 0.1 degrees over 1 second, it is required that the offset angle is kept less than 0.25 degrees, which is possible by careful dynamic balancing of the spacecraft in ground tests.

# POINTING STABILITY OF SPINNING VEHICLE

- STABLE VEHICLE SPIN OCCURS ABOUT PRINCIPAL AXIS OF LARGEST MOMENT OF INERTIA
  - ANGULAR MOMENTUM VECTOR, $H = I\,\omega$, IS INERTIALLY FIXED
  - MINIMUM KINETIC ENERGY, $T = I\,\omega^2/2$
- VEHICLE SYMMETRIC SPIN AXIS VECTOR WILL DEVIATE FROM ANGULAR MOMENTUM VECTOR BY OFFSET ANGLE AND NUTATION (WOBBLE) ANGLE
  - OFFSET ANGLE IS RELATED TO INERTIA CROSS PRODUCT:

    $\Theta_{OA} \sim I_{st}/(I_s - I_t)$ where s=spin, t=transverse
  - NUTATION ANGLE IS RESULT OF INITIAL SPIN-UP AND DISTRUBANCES
- WHEN NUTATION IS FULLY DAMPED, POINTING STABILITY RATE = $\Theta_{OA}$ * NUTATION RATE
- TO KEEP POINTING STABILITY RATE < 0.1 DEG/SEC REQUIRES $\Theta_{OA}$ < 0.25 DEG (TYPICALLY), WHICH IS POSSIBLE WITH CAREFUL BALANCING IN GROUND TEST

DHU: 3/15/94
CHART 11

# ACS HARDWARE SUMMARY

The hardware summary table includes all ACS hardware information for the current design selection. Included in the table are the equipment item, the vendor model, number of items needed per spacecraft, size, weight per item, weight per spacecraft, total electrical power in watts, heritage of the model, and special features of the item. These particular hardware items were selected for their low weight and power as well as performance features.

The horizon sensors and horizon crossing indicators must be modified for use around Mars since the atmosphere is different from that on Earth. Otherwise, the hardware is fully developed.

Total weight for the ACS hardware is 27.2 kg.

# ACS HARDWARE SUMMARY

| EQUIPMENT | VENDOR MODEL | NO. | SIZE (EA) (cm) | WT. (ea) (KG) | WT. TOT (KG) | TOTAL POWER (W) | HERITAGE | FEATURES |
|---|---|---|---|---|---|---|---|---|
| Star Scanners | Ball CS-201 | 2 | 50x45x35 | 2.95 | 5.9 | 1.9 | Pioneer-Venus Program | FOV: 24 deg elev Accuracy: 0.1 deg |
| Sun Sensors | Adocole 17126 | 2 | 10x6x10 elec & 7x3x3 | 0.36 | 0.72 | 0.2 | Hawkeye | Accuracy: 0.25 deg |
| Horizon Sensors | Barnes 13-477 | 3 | 7Dx11.4 | 0.28 | 0.84 | 0.9 | GPC, Mars Obs. | Accuracy: 0.1 deg |
| Horizon Crossing Indicators | Barnes 13-21B | 2 | 7.7x10.5x20 | 0.74 | 1.48 | 3 | | |
| Inertial Measuring Unit | Honeywell MIMU | 2 | 14Dx14 | 2 | 4 | 19 (1 at a time) | | Based on GG1320 |
| Reaction Wheel | Honeywell HR60 | 1 | 40.7 dia | 14.3 | 14.3 | 28 (280 peak) | | Mom: 81 N-m-s |
| Total Weight | | | | | 27.24 | | | |



DHU: 3/15/94
CHART 13

# REORIENTATION OF 3 RPM SPINNING BODY

A three degree-of-freedom simulation study was made to verify the fuel required for reorienting the spinning body. For this analysis the vehicle characteristics were as indicated with values given for mass, moment of inertia about spin axis and transverse axes, and thruster moments.

The time to reorient the vehicle spinning axis 180 degrees can be calculated from first principles. First, the applied torque results in a rate ofchange in angular momentum. When the applied torque is perpendicular to the angular momentum, then the magnitude of angular momentum remains constant but the direction is changed. The spin axis "reorient rate" is equal to the rate of change of angular momentum divided by the angular momentum. The time to reorient is simply the angle (180 degrees or pi radians) divided by the "reorient rate".

The fuel needed to effect the vehicle reorientation is a function of the thrust time history and the total time for reorientation. The fuel used by body-mounted thrusters varies sinusoidally with time using two thrusters to maintain an inertially directed moment.

For the case specified of a 3 RPM vehicle, the time to reorient 180 degrees was 271 seconds with a fuel usage of 0.71 lbs.

This calculation was verified by simulation.

# REORIENTATION OF 3 RPM SPINNING BODY

## VEHICLE CHARACTERISTICS

- Mass = 1000 kg
- Moment of inertia, spin axis = 600 kg-m**2
- Moment of inertia, transverse axis = 450 kg-m**2
- Thruster moments = 2 N force at moment arm of 1.09 m

## TIME TO REORIENT SPIN AXIS 180 DEG

- Applied torque is perpendicular to spin vector
  Applied inertial torque = T = 2 N * 1.09 m = 2.18 N-m
- Spin angular momentum = H = $I_s \omega_s$ = (600 N-m-s**2)*(3 RPM)*(2 $\pi$/60 r/s/RPM)
  = 188 N-m-s
- Spin axis reorient rate, $\alpha$ = T/H = 2.18/188 = 0.0116 r/s
- Time to reorient spin axis 180 deg = $\pi$/.0116 = 271.6 sec

## FUEL TO REORIENT SPIN AXIS 180 DEG

- Body Y or Z axis force = 2 N sin($\omega_s$ t)
- Average Y or Z axis force per cycle = 2*(2/$\pi$) = 1.27 N
- Fuel total impulse = 2 (axes) * (1.27 N) * 271.6 sec = 690 N-s
- Fuel weight = 690 / 4.44 / 220 = 0.71 lbs

# FUEL TO REORIENT
# 3 RPM SPINNING BODY

The reorient time and fuel usage was also calculated for a variety of other vehicle weights and inertias. The results of the calculations are shown in the table for vehicle masses of 400 to 1000 kg. The spin axis moment in inertia was assumed proportional to vehicle mass, while the control torque was assumed constant at 2.18 N-m. The vehicle spin axis "reorient rate" and spin angular momentum were intermediate results of the calculations.

The time to reorient the spinning vehicle 180 degrees varies between 271 seconds for a 1000 kg mass vehicle to 108 seconds for a 400 kg mass vehicle. The corresponding fuel usage varies between 0.71 and 0.28 pounds.

# FUEL TO REORIENT
# 3 RPM SPINNING BODY

| MASS | SPIN MOMENT OF INERTIA | APPLIED TORQUE | SPIN ANGULAR MOMENTUM | SPIN AXIS REORIENT RATE | 180 DEG REORIENT TIME | FUEL TOTAL IMPULSE | FUEL WEIGHT |
|---|---|---|---|---|---|---|---|
| kg | kg-m**2 | N-m | N-m-s | r/s | sec | N-s | lbs |
| | | | | | | | |
| | | | | | | | |
| 1000 | 600 | 2.18 | 188 | 1.16E-02 | 271.64 | 690 | 0.71 |
| 900 | 540 | 2.18 | 170 | 1.29E-02 | 244.48 | 621 | 0.64 |
| 800 | 480 | 2.18 | 151 | 1.45E-02 | 217.31 | 552 | 0.57 |
| 700 | 420 | 2.18 | 132 | 1.65E-02 | 190.15 | 483 | 0.49 |
| 600 | 360 | 2.18 | 113 | 1.93E-02 | 162.98 | 414 | 0.42 |
| 500 | 300 | 2.18 | 94 | 2.31E-02 | 135.82 | 345 | 0.35 |
| 400 | 240 | 2.18 | 75 | 2.89E-02 | 108.66 | 276 | 0.28 |



DHU: 3/15/94
CHART 15

# PROPULSION SUBSYSTEM



RWK: 3/15/94
CHART 1

# PROPULSION SUBSYSTEM FUNCTIONS

The facing page lists a summary of the functions performed by the propulsion subsystem. The list contains the operations that require propulsive forces throughout the planned MUADEE mission. The Mars orbit insertion maneuver, which accounts for approximately 90% of the required delta velocity, is the function that drive the propulsion subsystem design.

# PROPULSION SUBSYSTEM FUNCTIONS

PROVIDE PROPULSIVE FORCES FOR:

- ATTITUDE ACQUISITION AND TO CORRECT FOR LAUNCH VEHICLE DISPERSIONS
- MID-COURSE CORRECTIONS DURING TRANS MARTIAN TRAJECTORY
- MARTIAN ORBIT INSERTION (DESIGN DRIVER)
- MARTIAN ORBIT ADJUSTMENTS
- ATTITUDE CONTROL DURING $\Delta V$ BURNS
- PERIAPSIS CORRIDOR CONTROL
- SPIN RATE CONTROL DURING SPIN STABILIZED OPERATION
- SPACECRAFT "FLIP" MANEUVERS

RWK: 3/15/94
CHART 2

# PROPULSION SUBSYSTEM REQUIREMENTS

The facing page presents a summary of the requirements for the propulsion subsystem. The subsystem must be designed to withstand the acceleration, vibration, acoustic and shock environment that is defined by launch on a Delta II 7925.

The propulsion subsystem is required to change the vehicle velocity by 1.7 Km/sec over the mission life. This coupled with the vehicle mass sizes the propellant tanks. The delta-V requirement was derived from the initial Mars injection orbit, the number of orbit changes required and the final parking orbit.

The required life is three years with one year spent in cruise mode and two years spent in orbit around Mars.

# PROPULSION SUBSYSTEM REQUIREMENTS

- SUBSYSTEM LAUNCH ENVIRONMENT DEFINED BY DELTA II, 7925 LAUNCH VEHICLE
- TOTAL $\Delta V$ CAPABILITY REQUIRED FOR PROPULSION SUBSYSTEM = 1.7 Km/s
- MARS INJECTION ORBIT IS A ONE DAY, 250 X 33,100 Km ORBIT
- ORBIT INCLINATION IS 99.5°
- FINAL PARKING ORBIT IS A 250 X 1000 Km ORBIT
- SPACECRAFT LIFE IS 3 YEARS - 1 YEAR CRUISE AND 2 YEARS IN MARS ORBIT

RWK: 3/15/94
CHART 3

# PROPULSION SUBSYSTEM DERIVED REQUIREMENTS

A number of design and operational requirements were derived to define the propulsion subsystem. They are summarized on the facing page.

First, the spacecraft will be designed to operate in two modes, spin stabilized and 3-axis stabilized. All delta-V burns will be conducted in the spin stabilized mode and only attitude control will be performed in the 3-axis stabilized mode.

The propulsion subsystem will consist of two independent systems. A bi-propellant system for delta-V burns and a monopropellant system for reaction control.

Performance characteristics for the orbit adjust thruster and the reaction control thrusters were obtained from manufacturer data. These data along with the maximum vehicle dry mass (current vehicle mass plus contingencies) were used to size propellant storage capacity.

For sizing purposes, 8% of the total delta-V is assumed to be provided by the reaction control system. Both the orbit adjust system and the reaction control system are assumed to carry an 8% propellant load contingency to allow for inaccuracies in thruster performance and in delta-V estimates.

# PROPULSION SUBSYSTEM DERIVED REQUIREMENTS

- TWO SEPARATE MODES OF OPERATION
  - SPIN STABILIZED
  - 3-AXIS STABILIZED
- TWO SEPARATE SYSTEMS
  - BI-PROP FOR ORBIT ADJUST
  - MONOPROP FOR REACTION CONTROL
- ORBIT ADJUST THRUSTER (OAT)
  - 460 N NTO/ HYDRAZINE
  - Isp = 315 sec
  - O/F = 0.8
- REACTION CONTROL THRUSTER (RCT)
  - 2.2 N HYDRAZINE THRUSTER
  - Isp = 220 sec
- VEHICLE DRY MASS = 480 Kg (INCLUDES CONTINGENCIES)
- SUBSYSTEM SIZED TO CARRY 8% PROPELLANT CONTINGENCY BASED ON MAXIMUM VEHICLE MASS
- REACTION CONTROL THRUSTERS ASSUMED TO PROVIDE APPROX 8% OF TOTAL $\Delta V$

RWK: 3/15/94
CHART 4

# PROPULSION BLOCK DIAGRAM

The facing page presents a physical diagram of the propulsion subsystem. The subsystem consists of a bi-propellant orbit adjust portion and a monopropellant reaction control portion. The systems are independent and both use simple blowdown concept for propellant feed.

The orbit adjust portion of the subsystem consists of a single 460 N hydrazine/ NTO thruster that is fed by one fuel tank and two oxidizer tanks. The fuel tank, which has a propellant management device that uses vehicle spin to acquire propellant, is mounted in the center of the bus with its longitudinal axis aligned with the vehicle spin axis. The two oxidizer tanks are positioned symmetrically about the spin axis with the propellant outlet located on the outside. The reaction control portion of the subsystem is an independent hydrazine system that consists of (8) 2.2 N thruster fed by two spherical hydrazine tanks that are manifolded together. The tanks are located symmetrically about the spin axis and are designed to operate in both spin and 3-axis stabilized mode. The thrusters are oriented to provide the control required for both spin and 3-axis stabilized operation. This system design provides inherent redundancy as the two systems are autonomous .

# PROPULSION BLOCK DIAGRAM
# SPACECRAFT

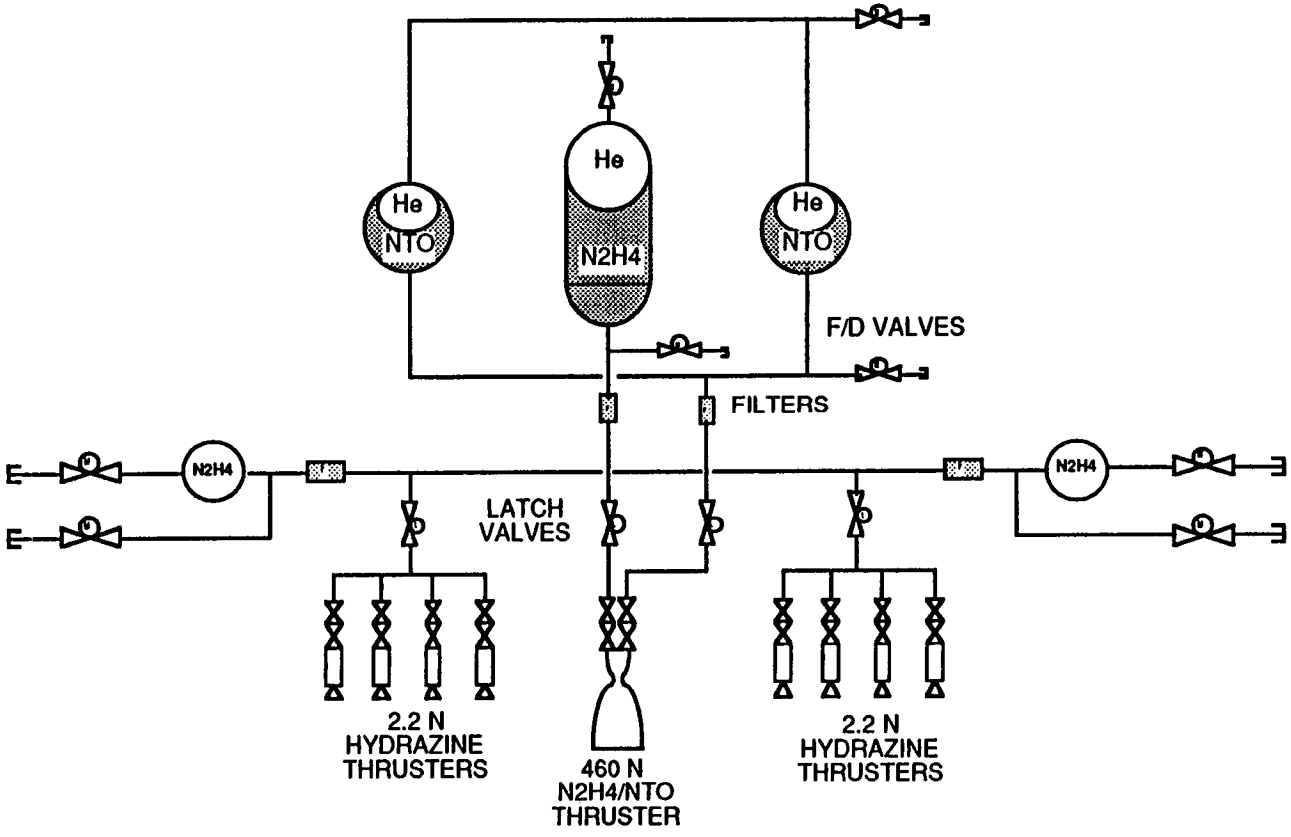


RWK: 3/15/94
CHART 5

# PROPULSION SUBSYSTEM DESIGN DESCRIPTION

The facing page presents a brief description of the MUADEE propulsion subsystem. Subsystem dry mass is equal to 50.3 Kg. The propellant masses and blowdownratios are the values for the maximum load. The propellant load that is necessary for the required 1.68 Km/s delta-V is 398 Kg. The maximum propellant load, 420 Kg, can provide a delta velocity of 1.98 Km/s for the maximum mass vehicle

# PROPULSION SUBSYSTEM DESIGN DESCRIPTION

- 2.6:1 BLOWDOWN, BI-PROP PROPULSION SYSTEM & 3.9:1 BLOWDOWN HYDRAZINE PROPULSION SYSTEM
- (1) 460 N NTO/HYDRAZINE THRUSTER FOR ORBIT ADJUST
- ORBIT ADJUST OPERATIONS CONDUCTED WITH SPACECRAFT IN SPIN MODE
- (8) 2.2 HYDRAZINE THRUSTERS FOR REACTION CONTROL OF SPACECRAFT
- 216 KG HYDRAZINE SUPPLIED FOR ORBIT ADJUST BY (1) CYLINDRICAL TITANIUM TANK LOCATED ALONG SPIN AXIS OF VEHICLE
- 173 KG NTO SUPPLIED BY (2) SPHERICAL TITANIUM TANKS LOCATED SYMMETRICALLY ABOUT THE SPIN AXIS
- 31 KG HYDRAZINE SUPPLIED FOR REACTION CONTROL BY (2) SPHERICAL TITANIUM TANKS LOCATED SYMMETRICALLY ABOUT THE SPIN AXIS
- TOTAL PROPELLANT LOAD = 420 KG
- TOTAL SYSTEM DRY MASS = 50.3 KG
- TOTAL DV CAPABILITY (FOR MAX VEHICLE MASS) = 1.98 Km/s

RWK: 3/15/94
CHART 6

# PROPULSION HARDWARE

The facing page presents a list of the component that have been selected for the propulsion subsystem. The list consists of the component name, the quantity required for the vehicle, the total mass, the power required to operate a single unit and the supplier of the selected hardware. All of the components selected are space flight qualified. Three of the components, the RCS thruster, the filters, and the fill & drain valves, are qualified for planetary missions.

# PROPULSION HARDWARE

| COMPONENT | QTY | TOTAL MASS (KG) | POWER (W) | VENDOR* |
|---|---|---|---|---|
| MAIN THRUSTER | 1 | 4.2 | 44 @ 35.5 VDC | ROYAL ORD |
| RCS THRUSTER** | 8 | 2.8 | 9 @ 28 VDC | ROCKET RSRCH |
| OXIDIZER TANK | 2 | 10.6 | | PSI |
| FUEL TANK | 1 | 20.6 | | LMSC |
| MONOPROP TANK | 2 | 3.6 | | LMSC |
| FILTER** | 4 | 1.8 | | VACCO |
| LATCH VALVE | 2 | 1.4 | 37 @ 21 VDC | MOOG |
| FILL/DRAIN VLV** | 8 | 0.8 | | PYRONETICS |
| PRESS TRANS | 5 | 1.5 | 0.7 @ 24 VDC | PAINE |
| LINES/BRACKETS | - | 2.4 | | LMSC |
| LATCH VALVE | 2 | 0.6 | 10 @ 20 VDC | MOOG |

- TOTAL HARDWARE MASS 50.3 KG

* ALL HARDWARE SPACE FLIGHT QUALIFIED

** DEEP SPACE QUALIFIED HARDWARE

RWK: 3/15/94
CHART 7

# CONCLUSIONS

The propulsion subsystem has been designed to meet MUADEE mission requirements with flight qualified hardware. Subsystem risk has been traded against cost and mass to produce a simple design. The subsystem has been sized to provide a 14% propellant margin for a propellant budget that contains an 8% contingency.

# CONCLUSIONS

- PROPULSION SUBSYSTEM IS A SIMPLE DESIGN CONSISTING OF SPACE QUALIFIED COMPONENTS THAT RESULTS IN A LOW COST, LOW RISK SUBSYSTEM
- SUBSYSTEM HAS BEEN SIZED WITH A 14% MARGIN OVER THE PROPELLANT LOAD REQUIRED FOR THE MAXIMUM VEHICLE MASS. SINCE THE PROPELLANT LOAD INCLUDES AN 8% CONTINGENCY, THE PROPULSION SUBSYSTEM HAS SIGNIFICANT DESIGN MARGIN.

RWK: 3/15/94
CHART 9

# COMMAND AND DATA HANDLING

JAH: 3/15/94
CHART 1

# SUBSYSTEM FUNCTIONS

The MUADEE C&DH hardware consists of a flight computer, Command And Telemetry Unit (CTU), Solid State Recorder (SSR), and an Ovenized Crystal Oscillator (OCXO). These elements function together as a subsystem to provide for the guidance, steering, and attitude control of the spacecraft under control of the flight software. The subsystem also provides the command processing and sequencing throughout the mission. Science and engineering data are acquired, routed, processed, and either stored in the SSR or downlinked to earth via the Deep Space Network. The OCXO provides the mission with a stable time reference and the C&DH distributes time synchronization signals to the instrument packages for precise coordination of data collection. In addition to the general spacecraft pointing and steering functions the C&DH also performs the computations required to point and slew the de-spun antenna for earth pointing. Spacecraft health and status is regularly evaluated for anomaly conditions and telemetry records are stored in the SSR until downlink. Predefined anomaly conditions will activate the system safemode software routines and the C&DH subsystem will put the spacecraft in the appropriate safe configuration.

# SUBSYSTEM FUNCTIONS

- PROCESSING FOR GUIDANCE, STEERING, AND ATTITUDE STABILIZATION OF THE SPACECRAFT.
- COMMAND PROCESSING AND SEQUENCING THROUGHOUT THE MISSION.
- ACQUISITION, PROCESSING, AND TEMPORARY STORAGE OF ALL ENGINEERING AND SCIENCE DATA.
- COMPUTATIONS FOR SLEWING AND POINTING CONTROL OF DE-SPUN ANTENNA.
- SAFEMODE COMPUTATIONS
- COMPUTATIONS FOR ON-BOARD SYSTEM STATUS



JAH: 3/15/94
CHART 2

# C&DH SYSTEM REQUIREMENTS

The MUADEE C&DH system functions as the brain and nervous system of the spacecraft. This critical role dictates that every element of the C&DH subsystem be of the highest reliability. The choice of the 1750A processor architecture for the MUADEE mission was made with this requirement in mind. Flight computer products are currently available that meet or surpass the MUADEE mission's requirements for environments, performance, and reliability. The environment experienced by the MUADEE spacecraft will be similar to that of the Mars Orbiter and this program's environmental estimates were used as a guide for C&DH component selection. Computational power (at least 2 MIPs) and memory requirements are derived and scaled from the Gravity Probe-B program's C&DH subsystem specifications.

The Solid State Recorder memory size is derived from the MUADEE mission requirement to accommodate 4 days of science data generated at a maximum of 5 Kbits/sec.

# C&DH SYSTEM REQUIREMENTS

- SCIENCE INSTRUMENT DATA GENERATION RATE - 5KBPS
- DATA STORAGE - ACCOMMODATE 4 DAYS OF SCIENCE DATA (LESS THAN 1.7 GBITS)
- COMPUTATIONAL POWER - AT LEAST 2 MIPS
- MICROPROCESSOR TYPE - 1750A



JAH: 3/15/94
CHART 4

# C&DH SYSTEM PERFORMANCE

The C&DH subsystem hardware baselined for the MUADEE mission is based on the architecture of the Gravity Probe-B program. The subsystem includes the Honeywell Space Computer (HSC), and the Gulton Command and Telemetry Unit, a SEAKR Clementine Solid State Recorder, and an ovenized crystal oscillator. The HSC is a redundant computer implemented as a single unit in slice format and intended for control applications in the natural space environment. The HSC consists of two identical single board computer slices and a dual power supply slice. The HSC architecture features a MIL-STD-1750A processor with built-in math functions to implement vehicle control laws to ensure control margin. The Gulton Command and Telemetry Unit (CTU) is the central hub for switching and routing data and commands. Under control of the flight computer, the CTU distributes timing synchronization signals, manages the transfer of data from the instrument packages to the solid state recorder, transfer data from the solid state recorder to the communications subsystem for downlink, scans sensors to collect and store spacecraft telemetry and distribute commands. The CTU can easily transfer data at 10 times the maximum science instrument data rate of 5 Kbits/sec. The solid state recorder is sized at 2 Gigabits. An ovenized crystal oscillator will provide a precision frequency reference for synchronizing spacecraft operations and maneuvers.

# C&DH SYSTEM PERFORMANCE

- SCIENCE INSTRUMENT DATA RATE CAPACITY - 50KBPS
- DATA STORAGE - 2 GBITS
- COMPUTATIONAL POWER - 2.2 MIPS
- MICROPROCESSOR TYPE - 1750A
- POWER CONSUMPTION - 30 WATTS



JAH: 3/15/94
CHART 6

# DESIGN TRADE DRIVERS

The C&DH trade-offs were conducted to select the optimum hardware architecture for the MUADEE spacecraft that fits within the program constraints. MUADEE's classification as a Discovery program means that much emphasis is placed on cost effective solutions. LMSC's experience of more than 25 years of building high reliability space quality hardware leads us to favor an architecture that requires minimum modifications to an existing design. This approach will minimize both hardware and software program costs. The power limitations of the spacecraft's body mounted solar array configuration require a low power C&DH subsystem design. MIL-STD-1750A based systems were preferred because of their heritage, high reliability, radiation tolerance, and immediate availability.

# DESIGN TRADE DRIVERS

- SELECT A C&DH ARCHITECTURE THAT REQUIRES MINIMUM MODIFICATIONS TO EXISTING HARDWARE
- LIMITED SOLAR ARRAY AREA REQUIRES A LOW POWER C&DH SYSTEM
- 1750A BASED SYSTEM PREFERRED BECAUSE OF HIGH RELIABILITY, RADIATION TOLERANCE, AND IMMEDIATE AVAILABILITY



JAH: 3/15/94
CHART 8

# C&DH TRADE OPTIONS

The MUADEE program's requirement of low cost, high reliability, and low power consumption led us to trade off the advantages and disadvantages of three MIL-STD-1750A based C&DH architectures. The first system is based on the Gravity Probe-B Command & Data Handling System and includes a Honeywell Space Computer (HSC), a Gulton Command and Telemetry Unit, a SEAKR Clementine based Solid State Recorder, and an oven controlled oscillator. The second system is based on the LMSC Smallsat Integrated Electronics Unit (IEU). The Smallsat IEU is based on the larger LMSC FSAT IEU being built with LMSC's internal funds. The third system option is based on the FTP-3200 Computer System by SCI Systems, Inc. This computer has been qualified and delivered for the Space Based Visible Experiment Spacecraft.

# C&DH TRADE OPTIONS

**1750A BASED SYSTEMS TRADED**

- HONEYWELL GULTON SYSTEM
  (DERIVED FROM GRAVITY PROBE-B)
- SMALLSAT INTEGRATED ELECTRONICS UNIT
  (LMSC SMALLSAT ID PROJECT)
- SCI FTP-3200 INTEGRATED ELECTRONICS UNIT
  (SPACE BASED VISIBLE EXPERIMENT HERITAGE)



JAH: 3/15/94
CHART 10

# SCI FTP-3200 SYSTEM

The SCI FTP-3200 computer is a very low power integrated approach to a Command and Data Handling System. An 80C86 version of this computer has been qualified and delivered to the Space Based Visible Experiment program for use on their SDIO spacecraft. The system considered for the MUADEE mission is based on a MIL-STD-1750A processor and most of the hardware has been qualified for space flight. The SCI implementation of the MIL-STD-1750A uses the high speed Performance Semiconductor PACE 1750 microprocessor and the PACE 1754 MMU. The PACE 1750 is manufactured using bulk CMOS and Silicon-on-Sapphire (SOS). The SOS process yields a radiation hardening of 1 MegaRad. The FTP-3200 features an expandable bus based architecture and very low susceptibility to single event upsets. The architecture includes fault tolerant features and supports redundant processors. The PACE 1750 delivers 2.2 MIPS and the MUADEE configuration would consume 11 watts.

# SCI FTP-3200 SYSTEM

**FEATURES**

- SINGLE BOX INTEGRATED ELECTRONICS UNIT (IEU)
- 80C86 VERSION OF IEU QUALIFIED FOR SPACE BASED VISIBLE EXPERIMENT SPACECRAFT (SDIO)
- RADIATION HARDENED 1750A PROCESSOR (1 MRAD)
- LOW SUSCEPTIBILITY TO SINGLE EVENT UPSETS
- EXPANDABLE BUS BASED ARCHITECTURE
- FULLY REDUNDANT PROCESSORS, I/O & POWER SUPPLY
- FAULT TOLERANT ARCHITECTURE
- 2.2 MIPS
- 11 WATTS NORMAL OPERATING POWER

JAH: 3/15/94
CHART 12

# C&DH BLOCK DIAGRAM
# SCI FTP-3200 BASED SYSTEM

The FTP-3200 based C&DH system features redundant processor and I/O cards communicating on a fault tolerant 32 bit backplane bus. The power supply in this system is also redundant. The card complement includes a 1750A processor running at 2.2 MIPS, 3 Serial Digital I/O cards for communication with the science instrument packages, Solid State Recorder, and the subsystems. The Timing and Control Module provides dual autonomous CPU and system clocks. The analog input card provides 64 pseudo differential channels of 12 bit analog input. The discrete I/O card provides sixty-four discrete input/output lines that can be used to control and/or monitor external devices. The Pulsed Output card provides 28 Volt pulsed outputs for up to 64 inductive loads.

C-2

# C&DH BLOCK DIAGRAM

## SCI FTP-3200 BASED SYSTEM

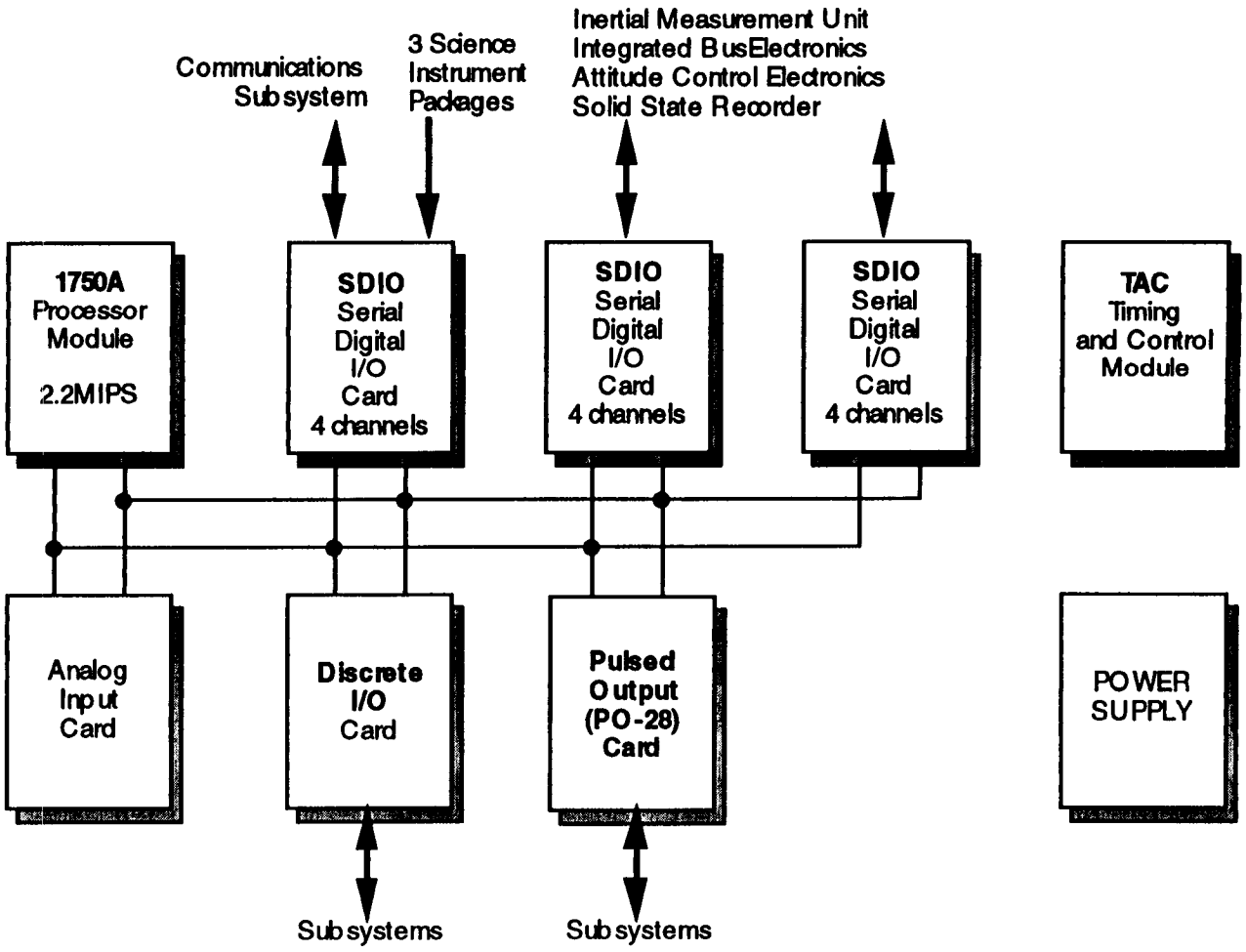


JAH: 3/15/94
CHART 14

# C&DH BLOCK DIAGRAM
# SMALLSAT IEU BASED SYSTEM

The Smallsat Integrated Electronics Unit (IEU) combines three functions into one box. It provides the function of input/output unit for interfacing equipment, telemetry processing unit for telemetry generation, and command processing for commanding. The IEU is being qualified for space flight through an LMSC ID program. The IEU is based on a MIL-STD-1750A processor developed for the Air Force in the Advanced Spaceborne Computer Module flight processor program. The processor is radiation hardened to tolerate a 1 MegaRad (Si) total radiation dose and is virtually immune to single bit upsets. The IEU is structured with a 32 bit fault tolerant backplane architecture based on the ASCM processor bus. The system supports redundant processors, I/O cards, and redundant power supplies. The Smallsat IEU performs at 2.5 MIPS and a MUADEE configuration consumes around 30 watts.

# SMALLSAT IEU BASED SYSTEM

**FEATURES**

- SINGLE BOX INTEGRATED ELECTRONICS UNIT (IEU)
- QUALIFICATION THROUGH LMSC ID PROGRAM
- RADIATION HARDENED 1750A PROCESSOR (1 MRAD)
- OTHER ELECTRONICS HAVE LOW SUSCEPTIBILITY TO SINGLE EVENT UPSETS
- EXPANDABLE BUS BASED ARCHITECTURE
- FULLY REDUNDANT PROCESSORS, I/O & POWER SUPPLY
- FAULT TOLERANT ARCHITECTURE
- 2.5 MIPS
- 30 WATTS NORMAL OPERATING POWER

JAH: 3/15/94
CHART 16

# C&DH BLOCK DIAGRAM
# SMALLSAT IEU BASED SYSTEM

The Smallsat based C&DH system features redundant processors and redundant I/O cards communicating on a fault tolerant 32 bit backplane bus. The power supply in this system is also redundant. The card complement includes a MIL-STD-1750A processor running at 2.5 MIPS, a 12 channel Serial Digital I/O card for communication with the science instrument packages, Solid State Recorder, and the subsystems. The Timing and Control Module provides dual autonomous CPU and system clocks. The analog mux card provides 256 channels of 12 bit analog input. A Command Controller Card interfaces with the Communications subsystem and a Power Control Relay Card. This approach features a Hardware Safemode card and a Mass memory card.

# C&DH BLOCK DIAGRAM

## SMALLSAT IEU BASED SYSTEM

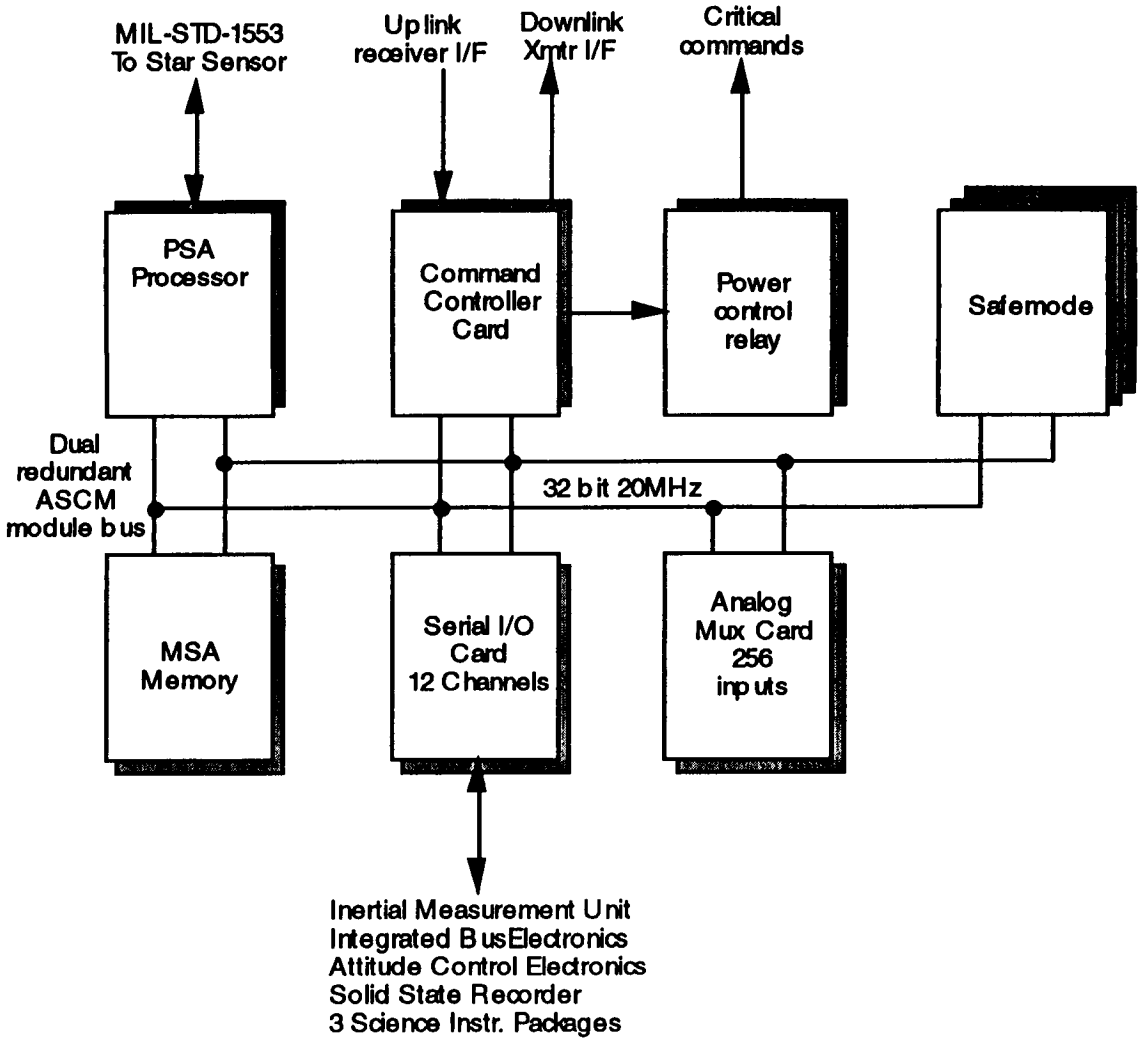


JAH: 3/15/94
CHART 18

# GRAVITY PROBE-B DERIVED HONEYWELL / GULTON SYSTEM

The C&DH subsystem hardware baselined for the MUADEE mission is based on the architecture of the Gravity Probe-B program. The subsystem elements providing processor and I/O functions include the Honeywell Space Computer (HSC), and the Gulton Command and Telemetry Unit.

The MUADEE flight computer is based on a standard "off-the-shelf product" - the high reliability radiation hardened Honeywell Space Computer (HSC). The heart of this unit, a MIL-STD-1750A compliant Generic VHSIC Spaceborne Computer (GVSC) processor chip set, was developed by Honeywell for the U.S. Air Force and has been space flight qualified for Lockheed's Milstar program. There is no higher reliability low risk computer available for MUADEE. The flight computer is a self contained and redundant (two string) unit. It is implemented as 3 slices, two identical single board computer slices, and a dual power supply slice. Each single board computer slice contains a 2.2 MIP MIL-STD-1750A GVSC radiation hardened microprocessor, a floating point processor with built-in transcendental functions, 1Mb of SRAM plus EDAC, 128K bytes of startup EEPROM, a watchdog timer, a MIL-STD-1553B interface, and a 1 Mbs serial interface. Each power supply (one for each string) consists of two converters. One converter supplies all the circuitry for a single board computer except the SRAM memory subsystem. This converter may be switched on and off externally for redundancy control. The other converter powers only the SRAM memory subsystem and is always on when spacecraft power is available. This design allows the SRAM memory to have non-volatile properties. The HSC design provides a 3 year reliability of 99.9% and a cost-effective, low-risk approach to the MUADEE flight computer.

The Command and Telemetry Unit (CTU) is the flight qualified, fault tolerant hub of the Command and Data Handling Subsystem. The CTU is the evolutionary product of 28 years of Gulton Data Systems' experience in the field of digital telemetry. The CTU's Command Unit receives serial commands from either the on-board computer or the transponder uplink and relays the commands to the appropriate hardware. The CTU's Telemetry Interface gathers data from the subsystems and sends it to the computer, solid state recorder, or to the transponders for downlink. Gulton's CTU design is immune to single event upsets, and contains no internal microprocessors. Both the command and telemetry systems are internally redundant with functional cross-straps.

# GRAVITY PROBE-B DERIVED HONEYWELL / GULTON SYSTEM

## FEATURES

- TWO BOXES, HONEYWELL COMPUTER PLUS GULTON COMMAND AND TELEMETRY UNIT
- QUALIFIED FOR GP-B PROGRAM
- RADIATION HARDENED 1750A PROCESSOR (1 MRAD)
- OTHER ELECTRONICS HAVE LOW SUSCEPTIBILITY TO SINGLE EVENT UPSETS
- EXPANDABLE I/O IN COMMAND & TELEMETRY UNIT
- FULLY REDUNDANT COMPUTER & POWER SUPPLY
- FULLY REDUNDANT COMMAND & TELEMETRY UNIT
- FAULT TOLERANT ARCHITECTURE
- 2.2 MIPS
- 30 WATTS NORMAL OPERATING POWER

JAH: 3/15/94
CHART 20

# GP-B DERIVED SYSTEM
# EQUIPMENT INTERCONNECT DIAGRAM

The MUADEE Equipment Interconnect Diagram shows a high level view of the C&DH subsystem's hardware interfaces with science instrument packages and the other subsystems' hardware. Although emphasis has been placed on using "standardized" interfaces such as MIL-STD-1553B and RS-422, other interfaces such as discretes for power switching will be necessary. There are three classes of interfaces with the C& DH: Science Instrument Package interfaces, Subsystem interfaces, and Umbilical interfaces. The science instrument interfaces are used to command the instrument packages, distribute clock synchronization signals, and receive science data. The subsystem interfaces are used to command and control the spacecraft and to collect engineering telemetry.

The umbilical interface is used to communicate with the spacecraft before launch and to receive shroud deployment signals and launch vehicle separation signals from the Delta II.

# GP-B DERIVED SYSTEM
# EQUIPMENT INTERCONNECT DIAGRAM

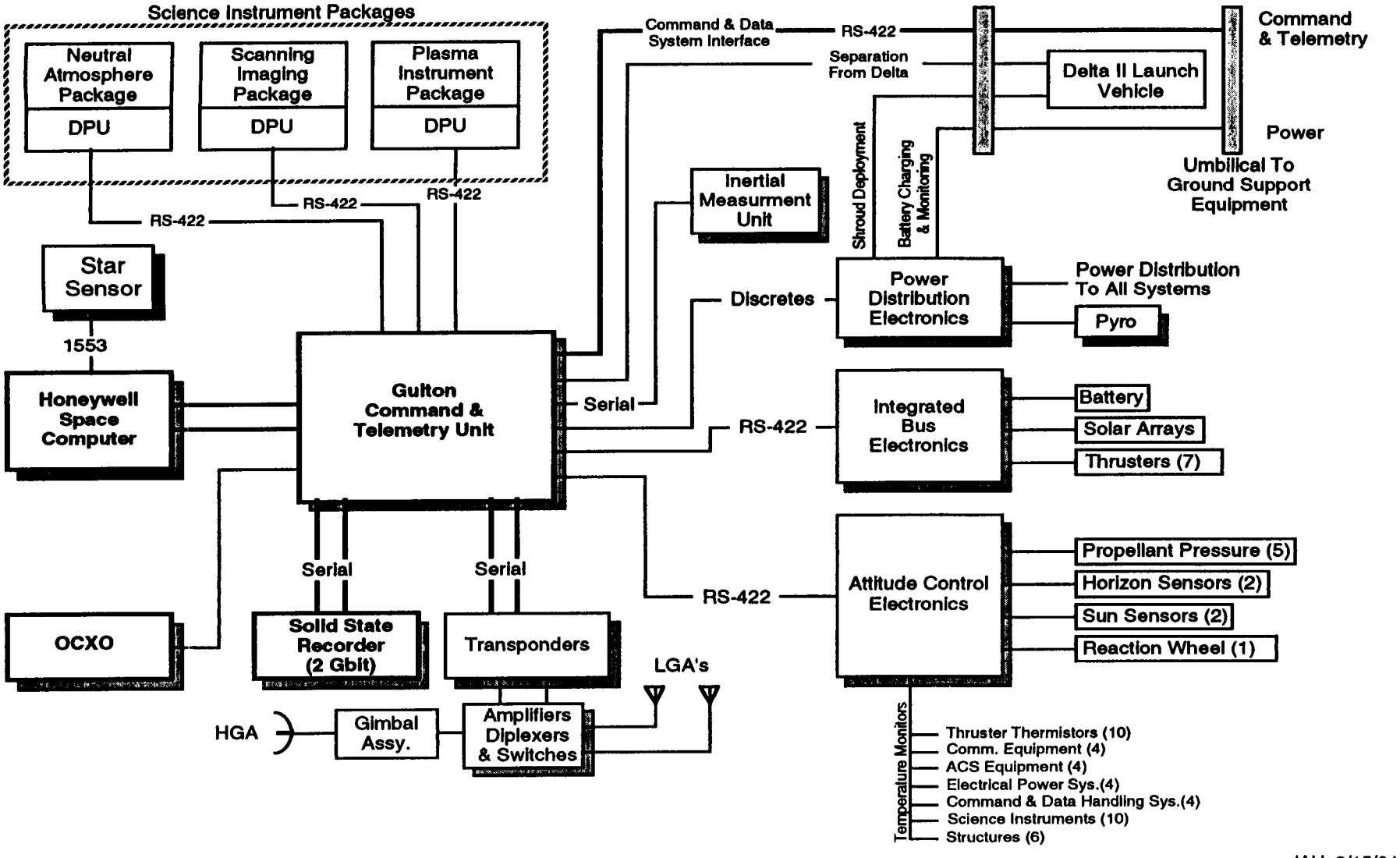


JAH: 3/15/94
CHART 22

# TRADE SUMMARY

The three C&DH architectures considered in the trade-off study were the Honeywell/Gulton system derived from the Gravity Probe-B Program, the Smallsat Integrated Electronics Unit, and the SCI Systems FTP-3200 Flight Computer. The systems were evaluated for various factors including maturity, weight, volume, power, memory, redundancy, processing power, and total program hardware and software costs. All three systems have adequate performance and I/O capacities for the MUADEE mission. The FTP-3200 has a superior power use requirements of about 1/3 of the other two options. Even though the Honeywell/ Gulton system has higher power requirements, it was baselined for MUADEE because it met the mission requirements and its commonality with the Gravity Probe-B program offered the MUADEE program significant cost advantages over the other two options.

# TRADE SUMMARY

| System * | Maturity | Mass (Kg) | Volume (cu. cm.) | Power (W) | CPU | MIPS | PROM/RAM BYTES | Redundancy |
|---|---|---|---|---|---|---|---|---|
| Honeywell/Gulton ( GP-B Derived ) | Qualified Flt Hardware | 17 | 28317 | 24 | 1750A | 2.2 | 128K/1M | Fully H/W Redundant |
| SMALLSAT IEU | Partially Qualified | 35 | 23073 | 30 | 1750A | 2.5 | 256K/1.2M | Fully H/W Redundant |
| SCI FTP-3200 IEU | Processor Not Qualified | 7 | 6784 | 10 | 1750A | 2.2 | 64K/640K | Fault Tolerant Redundant |

* C&DH SYSTEM DATA DOES NOT INCLUDE SOLID STATE RECORDER, OR OVENIZED OSCILLATOR.

JAH: 3/15/94
CHART 24

# C&DH DATA INTERFACES

The MUADEE C&DH hardware data interfaces include "standardized" interfaces such as MIL-STD-1553B and RS-422 and other interfaces such as discretes for power switching and other serial formats. The RS-422 interfaces are with the Attitude Control Electronics, the Integrated Bus Electronics, the Instrument Packages, and the Umbilical Data Port. The interfaces with the Delta II launch vehicle signalling shroud deployment and launch vehicle separation are triply redundant discretes. Interfaces with the communications subsystem and the IMU will be serial. Data rates throughout the spacecraft will be low with respect to the channel capacity of the C&DH subsystem hardware.

# C&DH DATA INTERFACES

| UNIT | INTERFACE TYPE | DATA RATE |
|---|---|---|
| TRANSPONDER | SERIAL | < 50K BPS |
| ATTITUDE CONTROL ELECTRONICS | RS-422 | 10K BPS |
| POWER DISTR. UNIT | DISCRETES | LOW, <1K BPS |
| INTEGRATED BUS ELECTRONICS | RS-422 | LOW, <1K BPS |
| STAR SENSOR | MIL-STD-1553B | 9600 BPS |
| IMU | SERIAL | 2400 BPS |
| DELTA II SEPARATION | DISCRETES | LOW |
| SHROUD DEPLOYMENT | DISCRETE | LOW |
| UMBILICAL DATA I/F | RS-422 | 9600 BPS |
| PLASMA INSTRUMENT PACKAGE | RS-422 | 1800 BPS |
| SCANNING INSTRUMENT PACKAGE | RS-422 | 1226 BPS |
| NEUTRAL ATMOSPHERE PACKAGE | RS-422 | 1440 BPS |

JAH: 3/15/94
CHART 26

# C&DH INPUT / OUTPUT CAPACITY

The MUADEE C&DH subsystem is designed to support the I/O channels identified in the architecture requirements with margin. The number of I/O channels was derived from the system interconnect block diagram and through interface discussions with the subsystem and science instrument package engineers. The I/O capacity on GP-B was used as a sanity check for our design.

# C&DH INPUT / OUTPUT CAPACITY

| INTERFACE TYPE | # OF CHANNELS | SUBSYSTEMS |
|---|---|---|
| RS-422 TRANSMIT | 6 | INSTRUMENT PACKAGES, UMBILICAL, ACE, IBE, |
| RS-422 RECEIVE | 6 | INSTRUMENT PACKAGES, UMBILICAL, ACE, IBE, |
| COMM. SERIAL XMIT & RECEIVE | 2 | COMMUNICATIONS XPONDERS |
| SSR SERIAL XMIT & RECEIVE | 2 | SOLID STATE RECORDER |
| SERIAL | 2 | INERTIAL MEAS. UNIT |
| MIL-STD-1553B | 1 | STAR SENSOR |
| BI-LEVEL TELEMETRY | 64 | MULTIPLE SYSTEMS |
| 0 - 5V ANALOG INPUT | 64 | MULTIPLE SYSTEMS |
| LOW LEVEL DISCRETE COMMANDS | 36 | MULTIPLE SYSTEMS |
| HIGH LEVEL DISCRETE COMMANDS | 128 | POWER DISTR. UNIT |

JAH: 3/15/94
CHART 28

# HARDWARE SUMMARY

The MUADEE C&DH hardware consists of a flight computer, Command And Telemetry Unit (CTU), Solid State Recorder (SSR), and an Ovenized Crystal Oscillator (OCXO). The subsystem components weigh a total of 24 Kg and consume around 31 watts of power in normal operating mode. All hardware has heritage from previous flight programs.

# HARDWARE SUMMARY

| C&DH Hardware Item | Mass (Kg) | Dimensions (cm) | Power (W) | Heritage |
|---|---|---|---|---|
| | | | | |
| Honeywell Space Computer | 4.5 | 19x20x30 | 6.6 | MIL STAR |
| Gulton Telemetry Unit | 7 | 20x11x41 | 13 | TDRSS |
| Gulton Command Unit | 5.2 | 20x11x30 | 4 | Space Hab |
| SEAKR SSR | 4.5 | 11x13x15 | 5 | DSPSE |
| OXCO | 3 | 25x10x8 | 2 | HST |
| | | | | |
| Totals | 24.2 | | 30.6 | |

JAH: 3/15/94
CHART 30

# CONCLUSIONS

The C&DH subsystem hardware baselined for the MUADEE mission is derived from the a Gravity Probe-B program hardware. This design uses high reliability components that tolerate single event upsets to maximize MUADEE science data return. The design is robust enough to tolerate single point failures and still return science data. This approach satisfies all mission requirements and is the most cost effective system for the MUADEE mission. The computational performance of the C&DH hardware meets all system requirements with margin. Our approach to C&DH subsystem development takes advantage of an in-place GP-B hardware and software development team.

# CONCLUSIONS

- THE BASELINE COMMAND AND DATA HANDLING SYSTEM FOR THE MUADEE MISSION IS DERIVED FROM THE GRAVITY PROBE - B SPACECRAFT DESIGN

  ADVANTAGES

  - THE MOST COST EFFECTIVE APPROACH SATISFYING ALL MISSION REQUIREMENTS.
  - TAKES ADVANTAGE OF AN IN-PLACE GP-B HARDWARE AND SOFTWARE DEVELOPMENT TEAM AND THE GP-B INTEGRATED TEST FACILITY.
  - COMPUTATIONAL PERFORMANCE MEETS ALL SYSTEM REQUIREMENTS WITH MARGIN.
  - RISKS MINIMIZED BY HAVING GP-B LEAD WITH THE DEVELOPMENT OF THEIR SYSTEM

JAH: 3/15/94
CHART 32

# SOFTWARE

# FLIGHT SOFTWARE MAJOR FUNCTIONS

The major functions of the flight software provide guidance navigation and control of the spacecraft, management of the data collection, command transmission, telemetry downlink, and command uplink, and maintain spacecraft and scientific instrument health and safety. The software also allows for use of CCSDS data recording and packetizing protocols to maximize use of downlink rate.

The attitude and control software performs guidance, navigation and control of the spacecraft via control law modules on-board which interface with the thrusters and reaction wheel to provide a stable platform for the scientific instruments. Commanding of the attitude and control system is performed through the use of stored program commands (SPC) uplinked from the ground. The flight software is designed to operate autonomously using SPCs loaded into computer memory and time tagged to execute at predetermined times or on given conditions. Attitude and orbit determination is performed on-board from data received from the sun sensors, horizon sensors, star scanners, accelerometer, and rate gyros. This data is telemetered to the ground and available for science instrument use.

The safemode system provides autonomous anomaly detection and protective modes until the ground analyzes anomaly and recovers from the event. It is designed to take the spacecraft gracefully to a degraded mode, performing hardware or software redundancy management when applicable, without disrupting science data collection. The system can be overridden by ground command and allows the ground to reset failure limits, timeouts and responses. Safemode responses are performed via SPC macros stored in the flight computer memory.

The command handler, which executes the SPCs in memory, routs the commands to the appropriate software module, hardware unit or scientific instrument. The command handler also allows for table driven changes to the software. This is accomplished by sending up new modules and changing the pointer from the old module to the new one for a smooth transition to the new code without interruption to ongoing processes.

# FLIGHT SOFTWARE MAJOR FUNCTIONS

- PROVIDE POINTING ACCURACY, KNOWLEDGE AND STABILITY FOR SCIENTIFIC INSTRUMENTS
- PROVIDE GUIDANCE, NAVIGATION AND CONTROL OF SPACECRAFT
  - -- ATTITUDE DETERMINATION
  - -- ON-BOARD ORBIT DETERMINATION
- PROVIDE AUTONOMOUS ANOMALY DETECTION AND PROTECTIVE MODES UNTIL RECOVERY VIA GROUND RE-CONFIGURATION
  - -- OVERRIDE FROM GROUND
  - -- USER SETTABLE LIMITS, TIMEOUTS, RESPONSES
- PROVIDE ABILITY TO STORE AND ISSUE SCIENTIFIC INSTRUMENT COMMANDS AND DATA
- PROVIDE TELEMETRY COMPATIBLE WITH GROUND SEGMENT
- PROVIDE ABILITY TO UPLINK SOFTWARE REVISIONS/CORRECTIONS
  - -- TABLE DRIVEN
  - -- NO INTERRUPTION TO ON-GOING PROCESSING

WGJ: 3/15/94
CHART 2

# KEY FLIGHT SOFTWARE REQUIREMENTS

The flight software interfaces with the communication, attitude control, electrical, and thermal subsystems, and the science instruments through the command and data handling (C&DH) system. The software communicates with these subsystems to send commands and receive data for storage and downlinking.

Through the attitude and control system, data is received from the sensors to provide stable attitude control and determination for all phases of the mission. It provides for stable attitude for science data collection for spin mode and despun mode. Updates to the control laws or switching to alternate control laws is performed by changing a pointer in the software that switches control to a new module without interrupting mission operations. Uplink parameters are received from the ground to update the on-board ephemerides which then propagate the orbital parameters until new updates are received from the ground. Attitude and orbital data is then sent to the ground for processing. A command generator provides smoothed command profiled specified maneuvers to the attitude control law. Maneuver command sizing and shaping are calculated on-board by the software. The flight software also provides angular momentum management for the attitude control system and autonomous high gain antenna pointing to the DSN using uplinked parameters and on-board ephemerides.

The flight software command and telemetry system interfaces with the ground segment through the transportable payload operations control center (TPOCC) software. TPOCC generates commands to be sent to and received by the flight software through the C&DH interface. TPOCC receives the CCSDS packetized telemetry and demultiplexes, logs, records and distributes telemetry to different display terminals for analysis. Command lists and telemetry formats are developed on a Sybase relational database. Sybase allows program personnel to track the data that define these elements and outputs the data compatible with TPOCC and generates the listings of commands and telemetry formats. Since the system is automated, minimal effort is required to generated new commands or new formats for specialized applications.

The safemode system ensures autonomous protection against failures of the electrical power system, attitude control system, command and data handling system, science instrument packages, or loss of communication. The safemode system is designed to minimize loss of science by isolating failed hardware or switching to redundant units. If unsafe conditions persist, the safing system progresses to the next level of safemode that provides safety. It is designed to maintain the spacecraft in a safe condition until the ground can assess the problem, reconfigure, and continue normal operations.

WGJ: 3/15/94

# KEY FLIGHT SOFTWARE REQUIREMENTS

- COMPATIBLE WITH THE MUADEE GROUND SEGMENT
- MEET SPACECRAFT-INSTRUMENT INTERFACE REQUIREMENTS
- TABLE DRIVEN SOFTWARE DESIGN
- PROVIDE DEFINITIVE ATTITUDE AND ORBIT PARAMETERS TO GROUND
- PROVIDE TELEMETRY FORMAT PER CCSDS
- PROVIDE STABLE ATTITUDE CONTROL AND DETERMINATION FOR ALL PHASES OF MISSION (CRUISE, CAPTURE, OPERATIONAL, AND SAFEMODE)
- PROVIDE STABLE ATTITUDE CONTROL FOR DESPUN MODE OR SPIN MODE
- PERFORM AUTONOMOUS HIGH GAIN ANTENNA POINTING TO DSN DURING ALL PHASES OF MISSION USING UPLINKED PARAMETERS
- PROVIDE SAFEMODE TO MAINTAIN SPACECRAFT HEALTH AND SAFETY AND PROTECT SCIENTIFIC INSTRUMENTS
- SAFEMODE COMMANDABLE FROM GROUND OR AUTONOMOUS UPON DETECTION OF PRE-DEFINED ANOMALOUS CONDITIONS
- ON BOARD AUTONOMOUS FUNCTIONS CAN BE OVERRIDDEN BY GROUND COMMANDS

WGJ: 3/15/94
CHART 3

# KEY FLIGHT SOFTWARE REQUIREMENTS (CONT'D)

To detect a failure, selected monitors in each subsystem are sampled and tested against predefined thresholds. If the monitors exceed the thresholds a predefined number of times, a predetermined action is taken to ensure science instrument protection and spacecraft health and safety. All counters and failure limits are changeable from the ground and failure responses are stored as macro command lists which can also be changed. In the event of a computer memory failure reduced spacecraft control transfers to the backup safemode program coded in non-volatile EEPROM. On-board storage of key events during each safemode failure are stored in a table in memory. When the opportunity exists to downlink the table, ground processing converts it into a time ordered event log for analysis.

The command handler provides the capability for realtime commands or multiple prestored, time tagged command sequences executing to perform the mission timeline, payload configuring, safemode responses, and special events. Logic decisions are implemented with special command constructs within the command list. Software changes are easily added and activated through the command handler mailbox system. The command handler routs the commands to the proper piece of hardware or to the software processing module. To protect against unauthorized commanding, the uplinked commands include a coded string that is checked by the software for validity before command execution.

# KEY FLIGHT SOFTWARE REQUIREMENTS (CONT'D)

- SUPPORT GROUND MANAGED DETECTION, ISOLATION, AND RECOVERY FROM FAILURE MODES
- FAILURE IN ONE SYSTEM SHALL NOT INDUCE FAILURES IN THE OTHER SUBSYSTEMS
- CAPABLE OF HANDLING UPLINK SOFTWARE REVISIONS/CORRECTIONS WITHOUT INTERRUPTING ON-GOING PROCESS
- VALIDATE AND DISTRIBUTE COMMANDS TO SUPPORT INSTRUMENT OPERATIONS
- STORED PROGRAM COMMAND CAPABILITY WITH ABSOLUTE AND DELTA TIME TAGGING
  - -- ALLOWS FOR MISSION TIMELINE SEQUENCING WITH MINIMAL GROUND UPLINKING
  - -- TRAJECTORY CONTROL FUNCTIONS PERFORMED VIA STORED PROGRAM COMMANDS
- PROVIDE EPS/THERMAL CONTROL AND DATA PROCESSING
- COMMAND GENERATOR TO PERFORM SHAPED MANEUVERS IF REQUIRED
- PROVIDE ANGULAR MOMENTUM MANAGEMENT

WGJ: 3/15/94
CHART 4

# CHARACTERISTICS OF BASELINE

To minimize cost and risk, the ground segment and flight software developed for GP-B is reused with modifications performed when required. Use of commercial off the shelf products for the ground segment, software development, and data analysis save development time and cost. Using heritage from existing programs and lessons learned help streamline the development cycle of the software.

Software development parallels a software prototyping effort of high risk modules and interfaces. This prototyping effort greatly reduces the risks because it demonstrates system performance and interfaces early in the program. Flexibility is built into the design to accommodate required changes. Early use of computer development unit hardware ensures a workable design and allows verification of computer memory and timing margins.

Lockheed Software Engineering Environment (LSEE), the Lockheed developed case tool, automates software and system development and test, including requirements and design analysis, requirements traceability, tracking and recording change requests and discrepancy reports, tracking and recording test status, tracing requirements to tests, and generating reports.

Use of an existing testbed for early software development through system test and flight operations reduces development cost and schedule. The integrated test facility (ITF) is used to develop and test flight and ground software. Procedures and telemetry displays developed for this testing migrate, when applicable, to box level testing. This facility then moves to the University of Michigan's MTOC for system testing and evolves into the ground station for mission operations. Engineers performing software development and test move into the system test group and then into mission operations. Using the same system for test and flight operations eliminates compatibility problems, maximizes database and procedure commonality, and minimizes cost.

WGJ: 3/15/94

# CHARACTERISTICS OF BASELINE

- MINIMIZE COST AND RISK:

  -- USING HERITAGE FROM EXISTING PROGRAMS
  - HST, GP-B, SMALL SAT

  -- USING FLIGHT AND GROUND SEGMENTS DEVELOPED FOR GP-B

  -- USING AVAILABLE COMMERCIAL OFF THE SHELF SOFTWARE
  - PVWAVE, RTWORKS, LSEE, SYBASE RELATIONAL DATA BASE

  -- USING EXISTING COMMON TESTBED FROM EARLY SOFTWARE DEVELOPMENT THROUGH FLIGHT TESTING
  - GROUND SYSTEM USED IN THE INTEGRATED TEST FACILITY FOR SOFTWARE DEVELOPMEN AND VERIFICATION AND BOX LEVEL TESTING MIGRATES TO THE U of M MTOC FOR SYSTEM TEST AND MISSION OPERATIONS

  -- SOFTWARE DEVELOPMENT PROCESS PARALLELS SOFTWARE PROTOTYPING EFFORT
  - PROTOTYPING TAKES PLACE ON EMULATED FLIGHT COMPUTER

- USES IN-HOUSE DEVELOPED CASE TOOLS (LSEE) FOR DEVELOPMENT, REQUIREMENT FLOWDOWN AND TRACEABILITY, AND VALIDATION TESTING

- RESIDES IN FLIGHT QUALIFIED RADIATION HARDENED 1750A PROCESSOR (16 BIT PROCESSOR)

WGJ: 3/15/94
CHART 5

# CHARACTERISTICS OF BASELINE (CONT'D)

The use of a flight qualified radiation hardened 1750A processor reduces risk and software developed on the same system for GP-B can be reused. Additionally the 2.2 Mip processor has built-in math functions and floating point arithmetic processing to further ensure memory margin. The critical operating system, bootstrap, and safemode software are located in EEPROM to ensure spacecraft control in the event of a flight computer anomaly. The computer margins for timing and memory were derived from prototype GP-B ADA software. The results were extrapolated to the candidate Honeywell computer capability to arrive at the estimates.

ADA is the baseline language. This provides maximum transportability and ease of development. ADA also lends itself to a product team environment, since its high level language and package structure is easy to write and maintain by all team members.

# CHARACTERISTICS OF BASELINE (CONT'D)

- SATISFIES MEMORY USAGE AND THROUGHPUT REQUIREMENTS
  - -- 2.2 MIPS HONEYWELL SPACE COMPUTER
  - -- TIMING: 29% THROUGHPUT @ 1HZ, 71% MARGIN
  - -- MEMORY: 13% EEPROM/PROM; 14% RAM
- FLOATING POINT ARITHMETIC PROCESSING
- TIME INTERRUPT SCHEDULE PROCESSING
- CAPITAL EQUIPMENT USED WHEREVER POSSIBLE
- WRITTEN IN ADA
- TABLE DRIVEN DESIGN

WGJ: 3/15/94
CHART 6

# FLIGHT CONTEXT DATA FLOW DIAGRAM

The flight software interfaces with all outside elements through the command and data handling (C&DH) system. Ground commands and data, including DSN tracking data, enter through the C&DH and are routed to the flight computer for execution. The computer downlinks spacecraft telemetry through the C&DH to the ground. Science data can bypass the flight computer and go directly to the C&DH for downlink. Ground commands to the hardware and science instruments are routed by the flight software to the appropriate units. Engineering data from the vehicle hardware and science instruments are sampled and downlinked through the telemetry. Additionally, engineering data is monitored in support of the safemode system to check the health and safety of the spacecraft and science instruments.

In the event of a safemode occurrence, command macros stored in memory send commands to the science instruments and vehicle hardware to maintain spacecraft and instrument health and safety.

The Delta 7925 interfaces with the C&DH to send signals indicating shroud deployment and another indicating Delta booster separation. After a second delay the C&DH sends a signal to the flight computer to initiate full autonomous control.

WGJ: 3/15/94

# FLIGHT CONTEXT DATA FLOW DIAGRAM

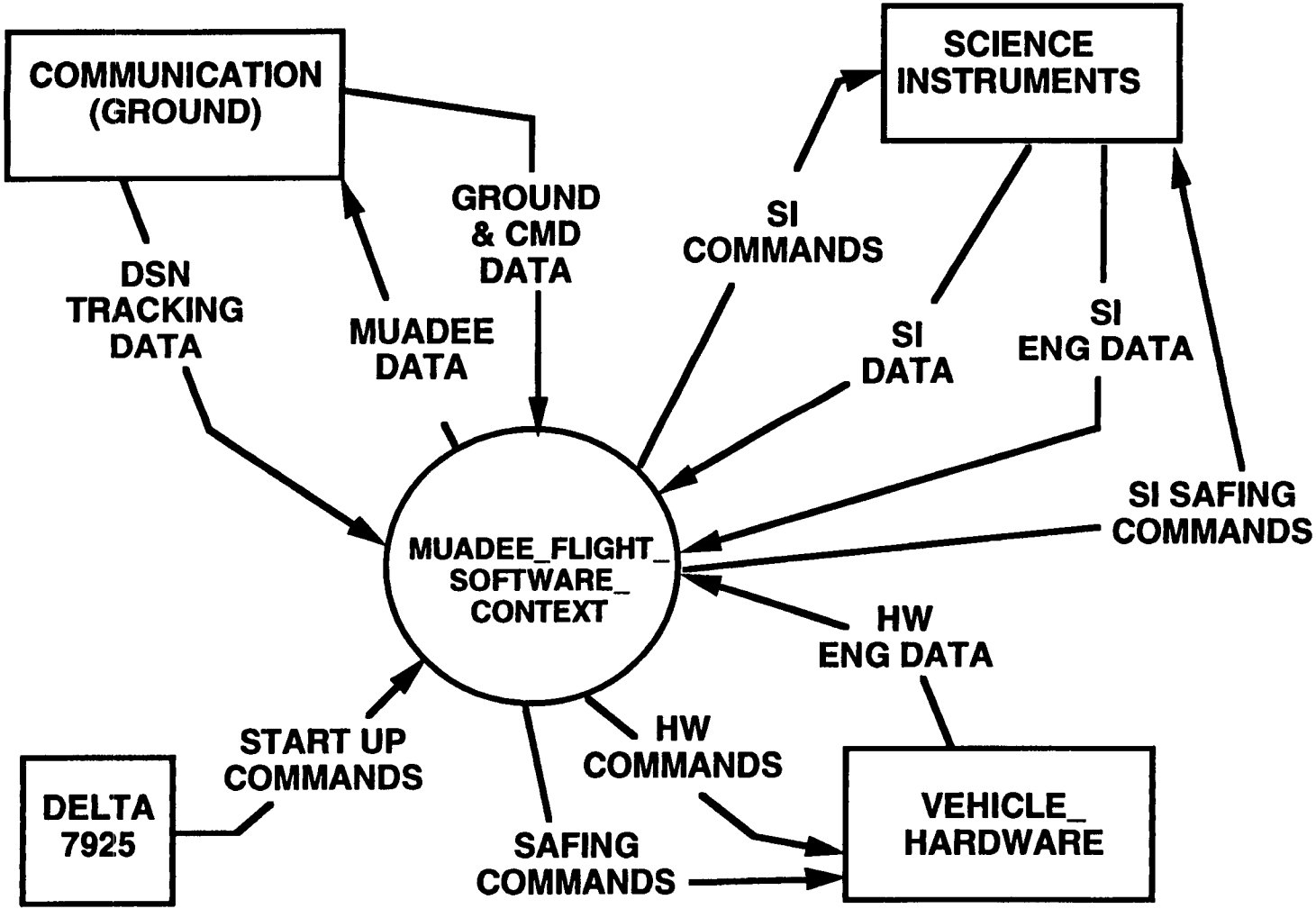


WGJ: 3/15/94
CHART 7

# FLIGHT SOFTWARE FUNCTION ALLOCATION

The flight software in the flight computer is partitioned into computer software configuration items (CSCIs).

The bootstrap and realtime operating system CSCIs are provided by the candidate computer and compiler vendors, respectively, to minimize development cost and risk.

The Startup CSCI performs software initialization and transition to the Mission Support CSCI. The Startup Software downlinks spacecraft and science telemetry and performs flight computer memory dumps.

The Mission Support CSCI performs the normal operation functions including attitude determination and spacecraft control, ephemeris processing, electical power and thermal control, and safemode processing.

The Command and Telemetry CSCI performs all the interface functions with the C&DH for I/O control, CCSDS telemetry processing, and uplink processing.

The Backup Safemode CSCI controls the spacecraft in a reduced operating mode in the event a safemode failure.

# FLIGHT SOFTWARE FUNCTION ALLOCATION

**MUADEE FLIGHT SOFTWARE**

| BOOTSTRAP CSCI | REALTIME OPERATING SYSTEM CSCI | STARTUP SOFTWARE CSCI | COMMAND & TELEMETRY SOFTWARE CSCI | MISSION SUPPORT SOFTWARE CSCI | BACKUP SAFEMODE CSCI |
|---|---|---|---|---|---|
| HARDWARE INITIALIZATION<br>START RTOS | EXTERNAL INTERFACES<br>OPERATING SYSTEM<br>FAULT MANAGEMENT<br>SCHEDULE TASKS | INITIALIZATION<br>BLOCK LOAD<br>MEMORY DUMP<br>MISSION SUPPORT SOFTWARE TRANSITION | UPLINK PROCESSING<br>TELEMETRY PROCESSING<br>COMMAND PROCESSING<br>I/O CONTROL<br>CCSDS<br>DATA COMPRESSION | COMMAND HANDLER<br>ATTITUDE CONTROL<br>DSN/EPHEMERIS<br>ORBIT CONTROL<br>PAYLOAD DATA PROCESSING<br>SAFEMODE<br>COMMUNICATIONS COMMAND/CONTROL<br>ELECTRICAL POWER COMMAND/CONTROL<br>THERMAL COMMAND/CONTROL<br>ON-ORBIT CALIBRATIONS<br>COMMAND GENERATOR<br>MISSION MODE | TELEMETRY/ COMMAND PROCESSING<br>EXECUTIVE/ I/O<br>COMMAND HANDLER (REDUCED)<br>ATTITUDE CONTROL (REDUCED)<br>SAFEMODE (REDUCED)<br>SUBSYSTEM COMMAND/ CONTROL |

WGJ: 3/15/94
CHART 8

# TEST AND GROUND SOFTWARE FUNCTION ALLOCATION

The test and ground software is partitioned into computer software configuration items (CSCIs).

TPOCC CSCI is the central ITF ground test system element. The software is obtained from GSFC and is used to process telemetry data and send uplinks. During mission operations it interfaces with the Mission Operations Support CSCI to generate command loads. The Mission Operations Support CSCI performs the mission planning, constraint checking, and memory dump analysis.

PVWave CSCI provides post test plotting and analysis. The RTWorks CSCI is a realtime expert system used as a system status monitor and logic model. It evaluates system status and recommends operator action. Sybase CSCI is a relational database used to maintain the TPOCC database. The database consists of telemetry monitors, formats, and uplink commands.

LSEE CSCI is an integrated set of software and system engineering tools used during spacecraft development. It automates software, system, and test development and requirements traceability.

U of M Ground Station and JPL Ground Station CSCIs provide the interface between the ITF, TPOCC, and their respective ground stations to allow them the capability to receive telemetry data and send commands.

# TEST AND GROUND SOFTWARE FUNCTION ALLOCATION

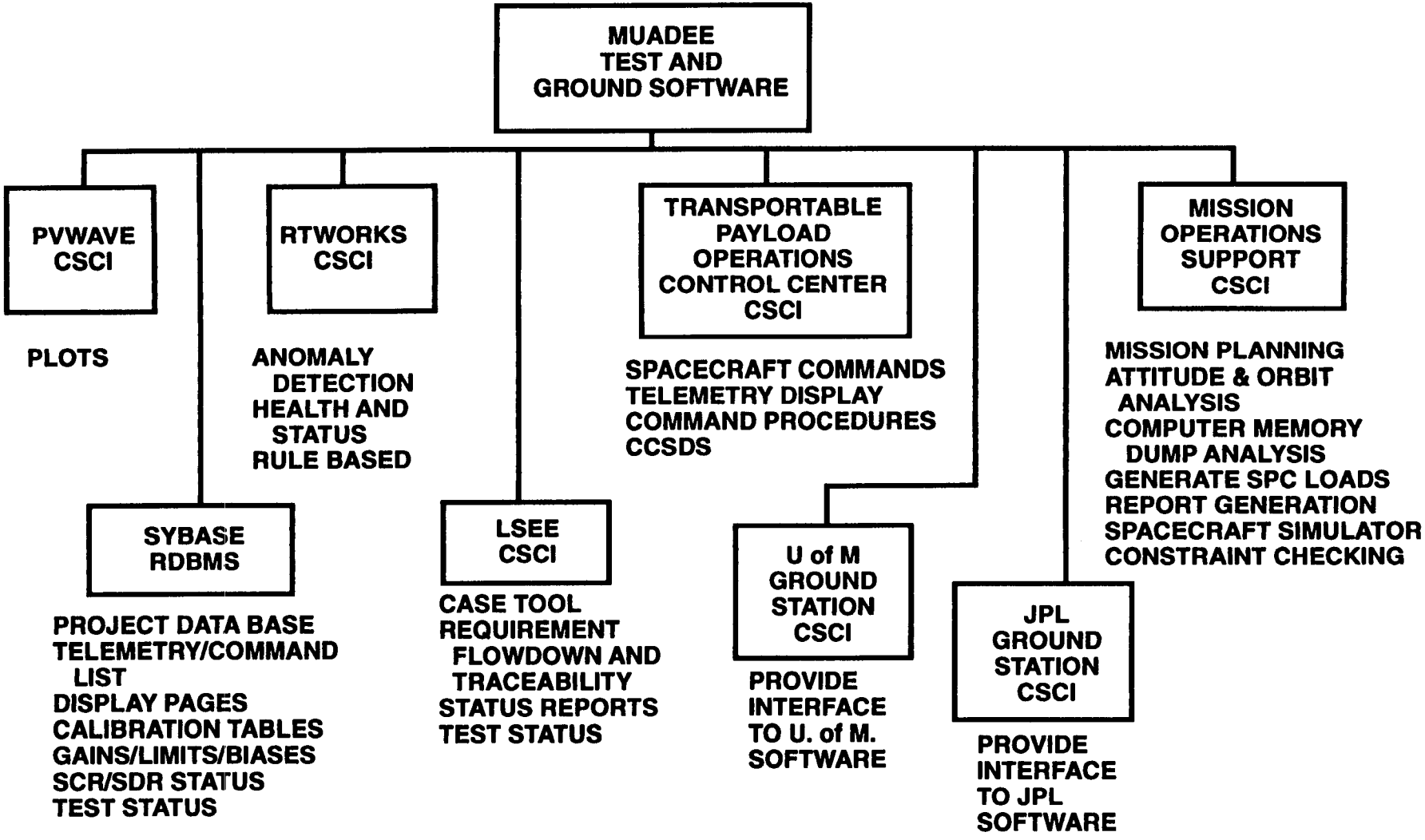


WGJ: 3/15/94
CHART 9

# SOFTWARE VALIDATION

The Integrated Test Facility (ITF) is used for flight software verification and validation testing using the command and data handling (C&DH) system and the vehicle and environment simulator. Test procedures are developed as well as command procedures for powering on and configuring the ITF hardware. These same procedures will be able to migrate for reuse in box level and system test phases. The engineers testing the flight software will become part of the system test team, using their expertise in operating the ITF. The ITF also supports ground station verification and personnel training by running mission scenario tests which simulate full timeline sequences.

Tests are run by executing a script defining a command sequence to test the portion of software in question. A logic model simulates the expected system response and flags any differences. During the test, realtime data is displayed by the TPOCC ground system for monitoring while the test is in progress. Post processing of the data for analysis is then performed to verify all requirements are met. Verification results populate the LSEE database for cross reference reports and statusing. If anomalies are found during testing, discrepancy reports are written and included in the LSEE database for tracking to ensure all items are closed out.

The communication link between U of M and JPL also allows these centers to run/monitor tests as required at an early phase prior to moving the ITF to Michigan.

Operational procedures are thoroughly tested during all phases of testing in the ITF. In that way, all procedures and command loads to perform mission operations are developed before launch so no critical realtime ground intervention is required.

During the operational phase of the program new flight software modules resulting from requirement changes are and new command sequences are tested in the ITF prior to uplink to the spacecraft.

# SOFTWARE VALIDATION

- USE INTEGRATED TEST FACILITY (ITF) TO PERFORM SOFTWARE VALIDATION
- ITF ALLOWS PROGRESSION FROM UNIT LEVEL TO SYSTEM LEVEL TESTING
- NASCOM LINK ALLOWS U. M. AND JPL TO RUN/MONITOR TESTS
  -- HST HERITAGE
- TEST PROCEDURES AND COMMAND SEQUENCES DEVELOPED DURING SOFTWARE TEST MIGRATE FOR REUSE IN SYSTEM TEST AND PERSONNEL TRAINING
- ITF SUPPORTS GROUND STATION VERIFICATION AND MISSION TIMELINE CHECKOUT
- AFTER LAUNCH SPACECRAFT COMMANDING SEQUENCE CAN BE VALIDATED IN THE ITF PRIOR TO UPLINK



WGJ: 3/15/94
CHART 10

# ITF CONFIGURATION

The ITF supports all phases of testing from unit level to system test. Users of the facility will progress from designing and developing software and hardware to the testing of the systems. They then support system test and, ultimately, these same engineers will become the operational analysts. This way operational training takes place during the early phases of the program. This alleviates the need to train a whole team of operators just prior to launch. The facility is built up at Lockheed for initial testing. Following box level testing the workstations and ground software will be moved to the U of M with minimal hardware left at Lockheed as a backup monitoring station. By system test, the U of M MTOC will be fully functional and take over the testing functions. The MTOC then becomes the ground station for mission operations.

The ITF starts out as a flight and ground software development facility. At this time the flight code is developed on a Sun work station and downloaded onto a Honeywell prototype development unit which is supplied by the vendor. Initial prototype development and interface testing is performed until the engineering model 1750A and C&DH system is delivered.

The switch networks allows the user to switch between these two units as well as the spacecraft integrated assembly area. Sending commands through the TPOCC front end processor to the desired system is controlled by this switch and also allows commanding/monitoring from U of M or JPL.

A different switch network allows the different processors to interface with the vehicle and environmental simulator for closed loop testing. Initialization database loads are uploaded to this simulator via an ethernet. The vehicle and environmental simulator simulates flight hardware, the electrical power system, sun and planet bodies, orbital dynamics, and attitude and control system. The simulator has the capability, via user initialized flags, to turn off certain hardware simulations so that the flight software can interface with the flight hardware while running a closed loop test. Another feature in this simulator allows the user to input failure modes into the simulated hardware to checkout the flight software safemode system.

The control center consists of different work stations for sending commands and receiving telemetry over the ethernet. The work stations can be used in any manner that the user wants. During testing they will mostly be used for telemetry display, including RTWorks realtime expert system. They can also be used for post processing the test data using PVWave and other analysis tools. The data can be ethernetted to the LSEE database for tracking, statusing, and archiving.

# SOFTWARE VALIDATION (CONT'D)
# ITF CONFIGURATION

- SUPPORTS ALL PHASES OF TESTING
- USER FRIENDLY, HANDS-ON INTERFACE
- IMPROVES PRODUCTIVITY
- NATURAL PROGRESSION FROM UNIT LEVEL TO SYSTEM LEVEL TESTING

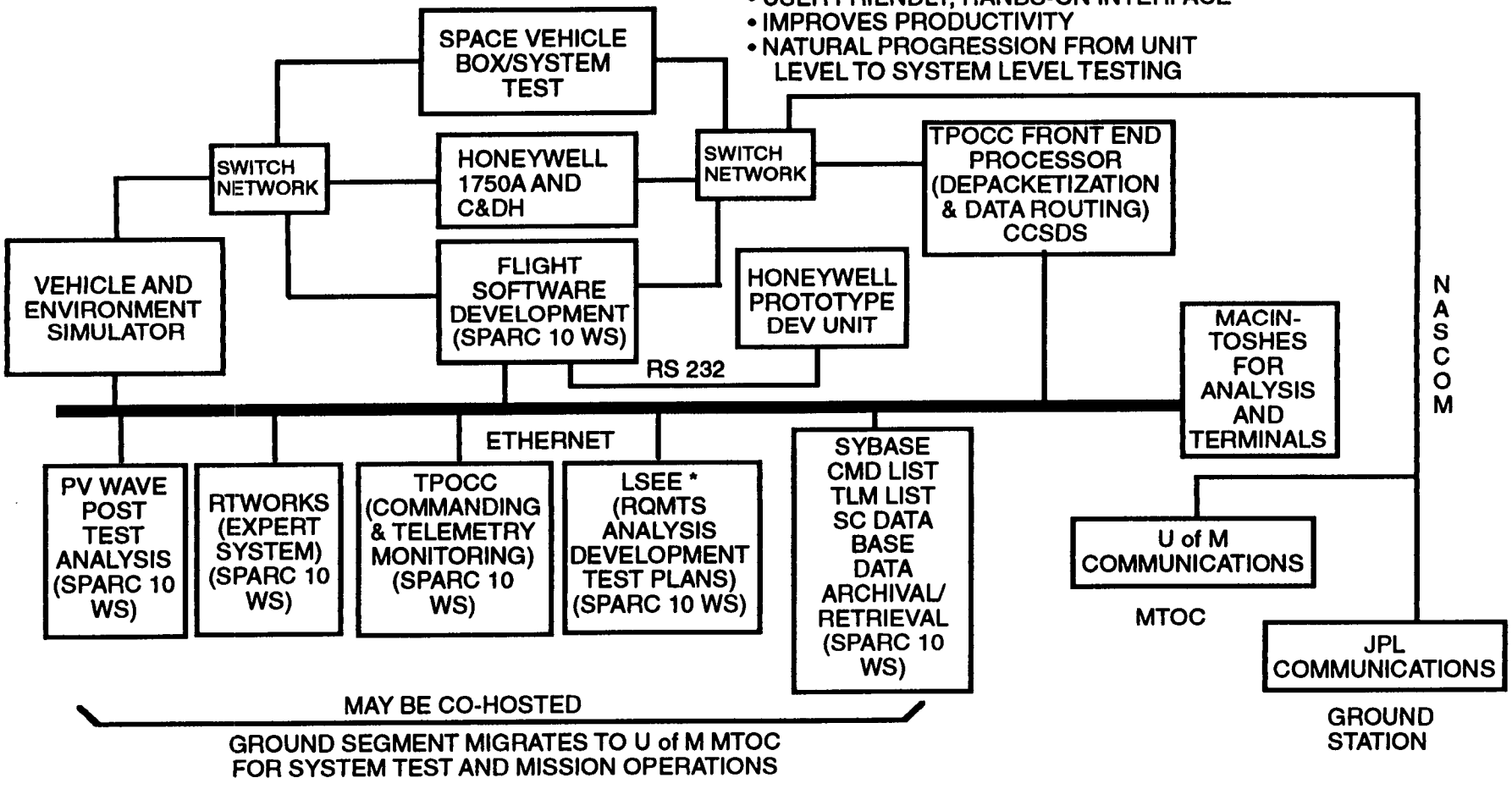


* SYSTEMS ENGINEERING REQUIREMENTS TRACEABILITY TOOL

WGJ: 3/15/94
CHART 11

# CONCLUSIONS

The reuse of the ground segment and flight software developed for GP-B, commercial off the shelf products for software development and data analysis, and TPOCC for command and telemetry processing reduces development cost, risk and schedule. Using heritage from existing programs and lessons learned help streamline the development cycle of the software.

Software development parallels a software prototyping effort of high risk modules and interfaces to reduce development risks. Early use of computer development unit hardware ensures a workable design and allows verification of computer margins.

Lockheed Software Engineering Environment (LSEE) automates software and system development and test, including requirements and design analysis, requirements traceability, tracking and recording change requests and discrepancy reports, tracking and recording test status, tracing requirements to tests, and generating reports.

Use of an existing testbed for early software development through system test and flight operations reduces development cost and schedule. The integrated test facility (ITF) is used to develop and test flight and ground software and migrates to the University of Michigan's MTOC for system testing and evolves into the ground station for mission operations. Using the same system for test and flight operations eliminates compatibility problems, maximizes database and procedure commonality, and minimizes cost.

The candidate flight qualified radiation hardened 1750A processor ensures ample margin for growth of the flight software.

The proven safemode design ensures autonomous science instrument protection and preservation of spacecraft health and safety for the duration of the mission.

# CONCLUSIONS

- LOW COST

  -- REUSE OF EXISTING FLIGHT SOFTWARE DESIGN FROM OTHER PROGRAMS
  - GP-B, HST

  -- INTEGRATED TEST FACILITY WITH EXISTING GROUND SEGMENT USED FROM SOFTWARE DEVELOPMENT THROUGH SYSTEM TEST TO MISSION OPERATIONS

  -- IDENTICAL GROUND SYSTEM USED AT U of M MTOC

  -- USE OF COMMERCIAL OFF THE SHELF SOFTWARE FOR DATA ANALYSIS AND CASE TOOLS

  -- USE OF LOCKHEED DEVELOPED CASE TOOL (LSEE)

- LOW RISK

  -- USE OF SPACE QUALIFIED FLIGHT COMPUTER MEETING SPECIFICATIONS FOR THROUGHPUT AND MEMORY MARGIN
  - 71% CPU AND 86% MEMORY GROWTH MARGIN

  -- SAFEMODE DESIGN TO AUTONOMOUSLY PROTECT SCIENCE INSTRUMENTS AND PRESERVE HEALTH AND SAFETY OF SPACECRAFT

  -- SOFTWARE PROTOTYPING REDUCES SOFTWARE DEVELOPMENT RISKS

  -- INTEGRATED TEST FACILITY USED TO VALIDATE NEW DESIGNS

WGJ: 3/15/94
CHART 12

# THERMAL CONTROL

# TCS BLOCK DIAGRAM

The Thermal Control Subsystem (TCS) block diagram shows the thermal functional interfaces between the TCS, other spacecraft subsystems and the Science Instruments (SIs). The primary functions related to other subsystems are to maintain and monitor temperatures. The primary functions related to the SIs are to satisfy thermal interface, thermal field-of-view, and thermal distortion requirements. The diagram shows the type of thermal control hardware used to provide the functional interfaces.

In addition to providing temperature control for spacecraft hardware, the TCS has key interfaces with 1) the Electrical Power Subsystem (EPS), which provides power for and ON/OFF commanding of heater circuits, 2) the Command and Data Handling Subsystem (C&DH), which monitors and conditions thermistor data, and 3) the Guidance, Navigation and Control Subsystem (GN&C), which generates thruster plumes that must be accomodated by the TCS.

# TCS BLOCK DIAGRAM

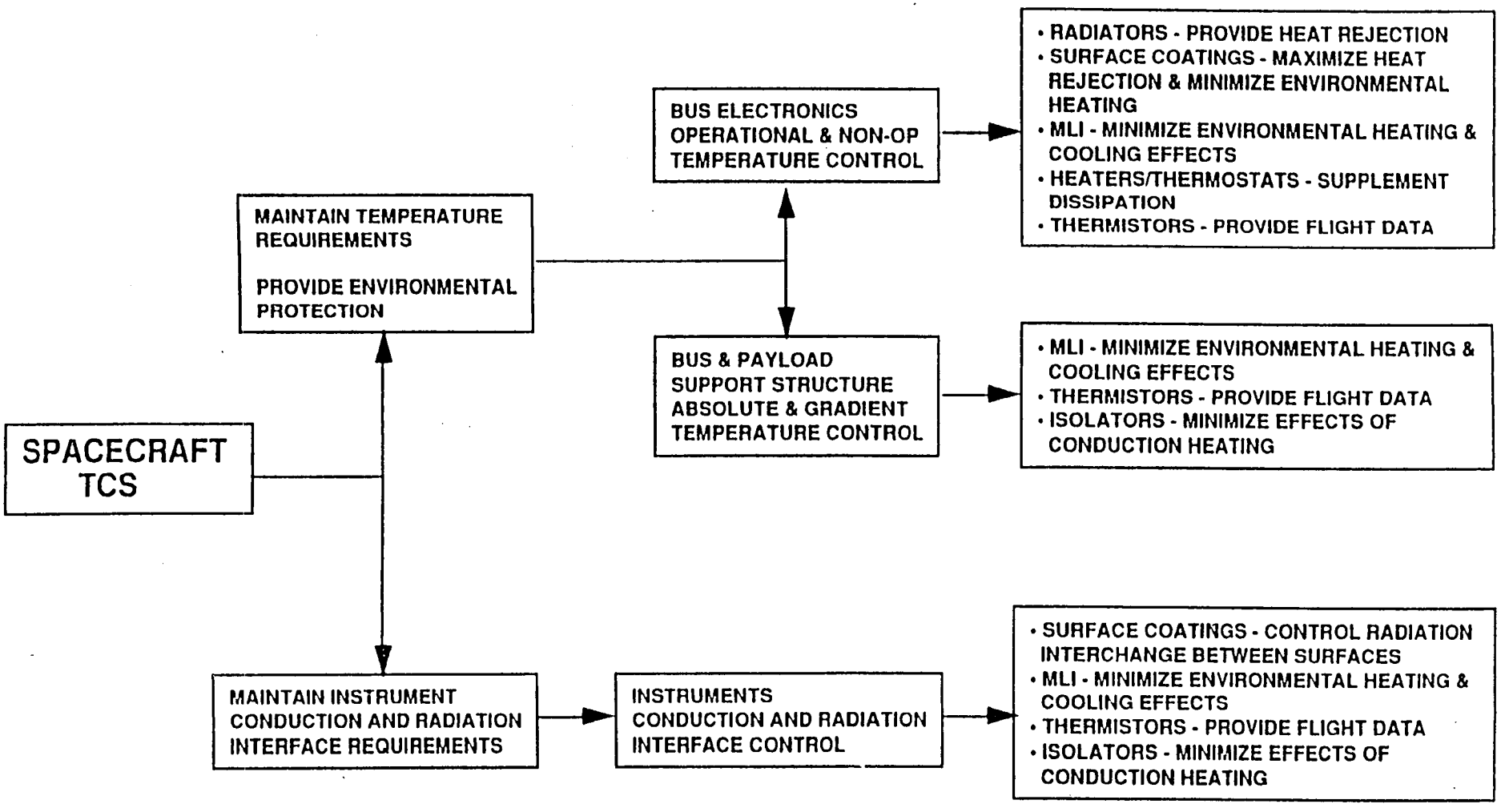


SJM: 3/15/94

# THERMAL CONTROL FUNCTIONS

The functions of the TCS are to maintain bus electronics and structure temperature requirements, maintain conduction and radiation interface requirements and temperature requirements for the SIs, and provide environmental protection for both the bus and the payload. The TCS will provide these functions for all mission environments and phases.

The TCS will ensure that the spacecraft design is thermally compatible with the SIs functional requirements for all mission phases. This includes different operating modes and power profiles.

The TCS design uses passive materials wherever possible to minimize heater power. These include coatings, paints and multi-layer insulation (MLI). Kapton foil heaters are used only when passive means cannot adequately maintain temperatures. All TCS materials have extensive flight heritage, minimizing development and operational risk. The emphasis on passive materials minimizes TCS weight and cost and maximizes TCS reliability.

# THERMAL CONTROL FUNCTIONS

- MAINTAIN BUS ELECTRONICS, STRUCTURE, AND PAYLOAD INTERFACES WITHIN SPECIFIED THERMAL LIMITS THROUGH ALL MISSION ENVIRONMENTS
- PROVIDE SPACECRAFT DESIGN COMPATIBLE WITH INDIVIDUAL INSTRUMENT THERMAL DESIGNS TO INSURE INSTRUMENT REQUIREMENTS ARE MET FOR ALL MISSION PHASES
- ACCOMODATE SYSTEM OPERATING MODES, CHANGING HEAT LOADS, AND POWER PROFILES
- PROVIDE THERMAL CONTROL USING PASSIVE FLIGHT PROVEN MATERIALS AND METHODS WHERE POSSIBLE WITH MINIMAL DEVELOPMENT RISK, OPERATIONAL RISK, WEIGHT AND COST



LT: 3/15/94
CHART 2

# REQUIREMENTS

The TCS requirements are driven by the mission environments and lifetime requirements. The TCS provides thermal control for all spacecraft subsystems and the SIs for the range of flight attitudes and equipment tasking scenarios for the duration of the mission.

SI thermal interface requirements include field-of-view, thermal distortion and interface heat transfer. The SI requirements dictate their location and means of attachment to the bus.

TCS reliability requirements include elimination of single point failures and satisfying the subsystem reliability allocation (TBD). Redundant heater circuits are used to satisfy this requirement.

It is a requirement that the TCS minimize heater power. Heaters are sized only 25% above the minimum power predicted. This provides control authority with the minimum current draw.

# REQUIREMENTS

| REQUIREMENT | SOURCE |
|---|---|
| SYSTEM LEVEL | |
| PERIGEE: 120 TO 250 KM | PREPOSAL DOCUMENTATION |
| APOGEE: 200 TO 33100 KM | " |
| LIFETIME: 1 YEAR CRUISE, 2 YEARS MARS ORBIT | " |
| NO SINGLE POINT FAILURE TO RESULT IN LOSS OF SPACECRAFT | " |
| PROVIDE THERMAL CONTROL FOR SPACECRAFT SUBSYSTEMS AND INSTRUMENT INTERFACES OVER ALL FLIGHT ATTITUDES AND INTERNAL HEAT DISSIPATIONS. TCS MUST ACCOMODATE THERMAL INTERFACE REQUIREMENTS INCLUDING FOV, DISTORTION AND HEAT TRANSFER | " |
| MEET SUBSYSTEM RELIABILITY ALLOCATION OF TBD OR GREATER | " |
| MINIMIZE HEATER POWER | DERIVED |

# TCS ANALYSIS ASSUMPTIONS

The TCS analysis performed to date uses the science orbit environment. The science orbit is a 200 km circular orbit about Mars with a beta angle range of ±90°. There is no direct solar flux on the -Z side of the spacecraft, which is spinning about the Z-axis.

The environmental heat loads on the external surfaces of the spacecraft consist of a solar flux of 141 to 209 Btu/hr/sq-ft, a planet albedo factor of 0.29 and planetshine of 39.5 Btu/hr/sq-ft. The solar flux is based on the Martian orbit apoapsis and periapsis and the albedo factor and planetshine are nominal values.

The goal of the TCS design is to maintain spacecraft and SI temperatures with minimal heater power. The solar cells covering the top and sides of the bus are prone to extremely wide temperature swings. Hence it is desirable to decouple the cells from the bus to maintain a more stable bus temperature.

Spacecraft heat rejection is through the -Z surfaces, which do not receive direct incident solar heating. This includes fixed radiator surfaces and a louver radiator for the battery.

Heater power has been minimized by making use of the spacecraft equipment dissipation to warm each other and the SIs. A high emittance coating on the spacecraft interior facilitates radiation heat transfer among the boxes within each equipment bay. SI platforms are conductively coupled to the equipment bays underneath them, eliminating the need for heaters on the SI platforms.

Heater power is needed to maintain the battery, propulsion tanks, communications equipment and EPS equipment within their temperature requirements.

# TCS ANALYSIS ASSUMPTIONS

| ASSUMPTION | JUSTIFICATION |
|---|---|
| MARS FLIGHT ENVIRONMENT | |
| NO DIRECT SOLAR FLUX ON -Z SIDE OF VEHICLE | FLIGHT SCENARIO |
| SOLAR FLUX: 141 TO 209 BTU/HR/SQ-FT | BASED ON MARTIAN ORBIT APOAPSIS AND PERIAPSIS |
| ALBEDO FACTOR: 0.29 | NOMINAL VALUE |
| PLANETSHINE: 39.5 BTU/HR/SQ-FT | NOMINAL VALUE |
| BETA ANGLE RANGE: ±90° | BASED ON ONE ORBIT PRECESSION EVERY 60 TO 70 DAYS |
| CIRCULAR ORBIT OF 200 KM ALTITUDE | NOMINAL ORBIT |
| VEHICLE RATE OF SPIN: 1°/SEC | TYPICAL PBUS RATE OF SPIN |
| VEHICLE DESIGN | |
| SOLAR ARRAY THERMALLY ISOLATED FROM BUS | MINIMIZE EFFECTS OF SOLAR ARRAY TEMP SWING ON BUS |
| S/C HEAT REJECTION THROUGH -Z SURFACES | NO SUN ON -Z SURFACES |
| SIs CONDUCTIVELY COUPLED TO EQUIPMENT BAYS | MINIMIZE HEATER POWER BY UTILIZING HEAT FROM EQUIPMENT BAYS |
| MLI EFFECTIVE EMITTANCE: 0.002 TO 0.02 | BASED ON TEST VALIDATION AND FLIGHT EXPERIENCE |
| HIGH EMITTANCE COATING ON S/C INTERIOR | MINIMIZE THERMAL GRADIENTS WHILE MAXIMIZING HEAT REJECTION |
| HEATERS ON BATTERY, PROP TANK AND EPS BAY | TIGHT TEMPERATURE TOLERANCES OR WIDE THERMAL EXTREMES |

SJM: 3/15/94

# TCS EXTERNAL DESIGN DETAILS

Thermal control of the external structure and equipment of the spacecraft is managed passively. All exposed surfaces are coated, painted or covered with MLI. The solar cells are located on top of the aluminized kapton MLI that cover the top and sides of the bus. The SI platforms and boxes, the -Z bus surface and the tank extension are covered with black glass fabric MLI to reduce solar trapping and optical glare.

Dedicated external radiators are provided for the high gain antenna gimbal and the C&DH and battery bays. The battery radiator is a louver design in order to maintain the tight battery temperature limits of 0 to 20°C.

The SI platforms do not require heater power, as the conduction coupling to warm internal spacecraft electronics is sufficient to maintain temperatures above the cold limits. MLI is used over the SI platforms to moderate the temperature rise from solar energy. Even though there no direct solar energy on the -Z face of the bus, sun does illuminate the sides of the SI boxes at high beta angles.

# TCS EXTERNAL DESIGN DETAILS

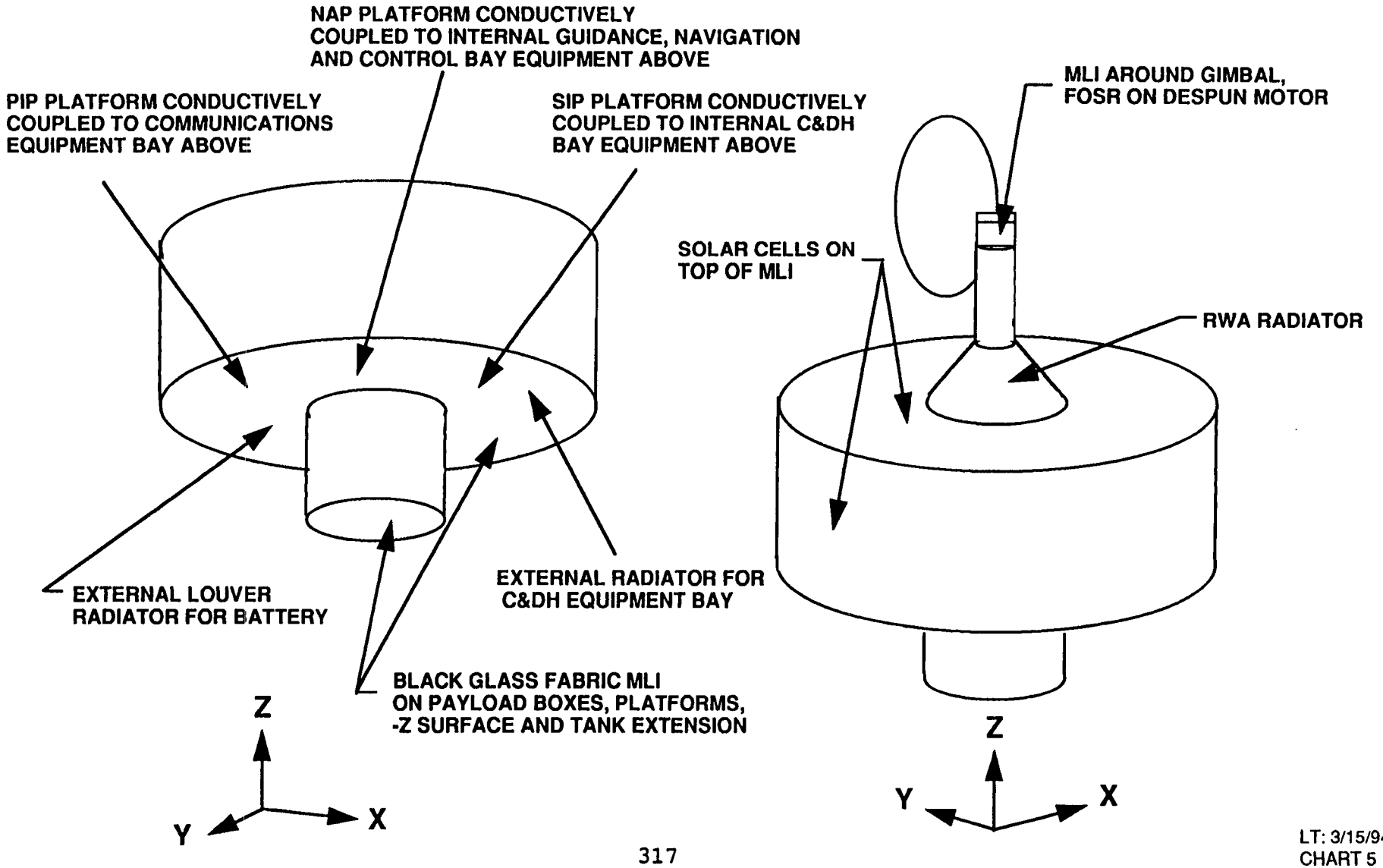




LT: 3/15/94
CHART 5

# TCS INTERNAL DESIGN DETAILS

The bus structure is decoupled from the solar cells with MLI in order to minimize temperature variations in the internal bus. The solar cells experience a wide temperature swing from -101 to +63°C due to their location on the top and sides of the bus and the sun beta angle range ±90°.

The interiors of the bus top and sides have a low emittance coating to reduce radiative heat transfer from the spacecraft body to the spacecraft electronics boxes and the propulsion tanks. The interior of the RWA superstructure has a high emittance coating to maximize heat rejection to its radiator.

The internal bus structural radial panels and the spacecraft boxes are coated with a high emittance material to reduce gradients within each equipment bay and maximize heat rejection to primary radiators. The boxes are mounted to the -Z deck, which does not receive direct solar loads and hence is the ideal location for radiators.

The propellant lines, tanks and valves are covered with MLI. Even so, heaters are still required for the tanks to maintain temperature requirements.

Heaters are also needed for the battery, the EPS equipment bay and the Communications equipment bay. All heaters used on the spacecraft are thermostatically controlled kapton foil heaters with redundant circuits.

# TCS INTERNAL DESIGN DETAILS

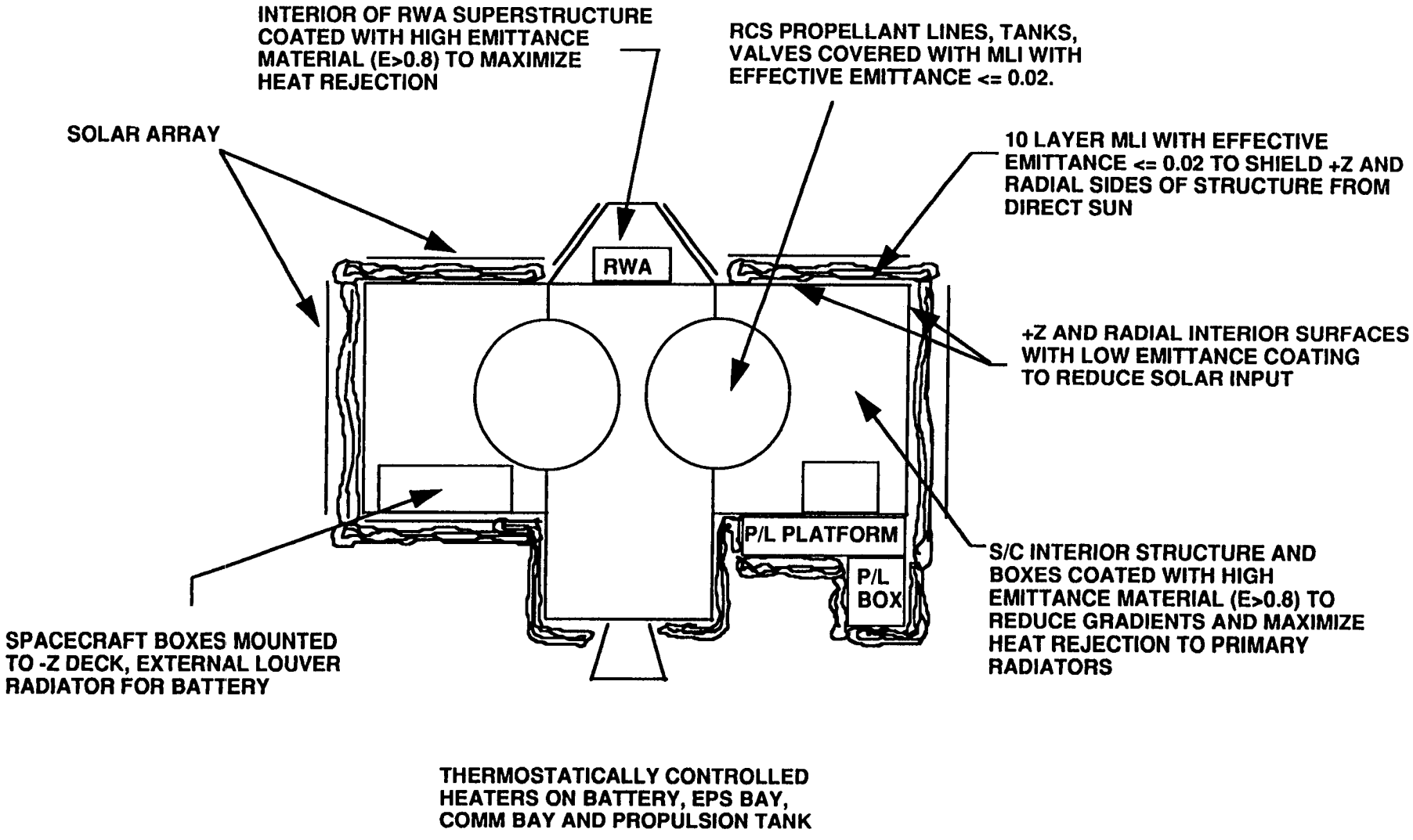


SJM: 3/15/94

# SPACECRAFT THERMO-OPTICAL PROPERTIES

Hot and cold case thermal predictions were derived using End-of-Life (EOL) and Beginning-of-Life (BOL) surface thermo-optical properties, respectively, which change due to environmental effects which cause surface property degradation. EOL thermo-optical values were estimated for a three year lifetime.

The surface thermo-optical properties which primarily affect thermal analyses are the solar absorptance, $\alpha$, and infrared emittance, $\varepsilon$.

The solar absorptance is the fraction of solar energy incident to a surface that is absorbed and converted to thermal energy. The infrared emittance is the ratio of the energy emitted by a surface within the infrared band to that which would be emitted by a blackbody at the same temperature.

Spacecraft and SI surface materials include Aluminized Kapton, Black Kapton, FOSR, Black MLI, Solar Cells and White Paint.

# SURFACE THERMO-OPTICAL PROPERTIES

| SURFACE FINISH | BOL α | BOL ε | EOL α | EOL ε |
|---|---|---|---|---|
| ALUMINIZED KAPTON | 0.12 | 0.04 | 0.16 | 0.04 |
| BLACK KAPTON | 0.8 | 0.8 | 0.8 | 0.8 |
| FOSR | 0.12 | 0.8 | 0.18 | 0.8 |
| BLACK MLI | 0.92 | 0.84 | 0.94 | 0.84 |
| SOLAR CELLS | 0.87 | 0.86 | 0.87 | 0.86 |
| WHITE PAINT | 0.5 | 0.87 | 0.22 | 0.87 |

# THERMAL MODEL DESCRIPTION

The spacecraft thermal math model (TMM)was developed using the SINDA thermal analyzer program. The TMM has 77 diffusion (real) nodes, 60 arithmetic nodes and one boundary node (space sink). The purpose of the TMM is to calculate temperatures.

A spacecraft geometric math model (GMM) was built using the TSS (Thermal Synthesizer System) software. The GMM has 104 active surface nodes and is used to calculate radiation interchange factors and orbital heating rates, which are TMM components.

The TMM includes nodes for the NiCd battery and its dedicated louver radiator. The battery is housed in a separate bus equipment bay. The louver opens to cool the battery when it is discharging. The louver closes when the battery is not dissipating heat. 3 watts of heater power are needed to maintain the battery above minimum survival limits with the louver closed and no battery dissipation.

The PIP platform is conductively coupled to the Communications bay and utilizes heat dissipated from the boxes in the bay to warm the PIP SIs.

The NAP platform is conductively coupled to the GN&C bay and utilizes heat dissipated from this equipment bay to warm the NAP SIs.

The SIP platform is conductively coupled to the C&DH bay and utilizes some of the heat dissipated from the C&DH boxes. The residual heat not needed to warm the SIP SIs is rejected to space via a fixed radiator for the C&DH equipment bay.

# THERMAL MODEL DESCRIPTION

- SINDA MODEL INCLUDES:

  77 DIFFUSION (REAL) NODES
  60 ARITHMETIC NODES
  1 BOUNDARY NODE

- SURFACE GEOMETRY MODEL INCLUDES:

  104 ACTIVE EXTERNAL SURFACE NODES

- THERMAL MODEL OVERVIEW:

  NiCd BATTERY IN ITS OWN BAY WITH DEDICATED LOUVER RADIATOR

  COMMUNICATIONS BAY CONDUCTS TO PIP PLATFORM

  GUIDANCE AND CONTROL BAY CONDUCTS TO NAP PLATFORM

  C&DH BAY CONDUCTS TO SIP PLATFORM
  C&DH BAY HAS DEDICATED RADIATOR

SJM: 3/15/94

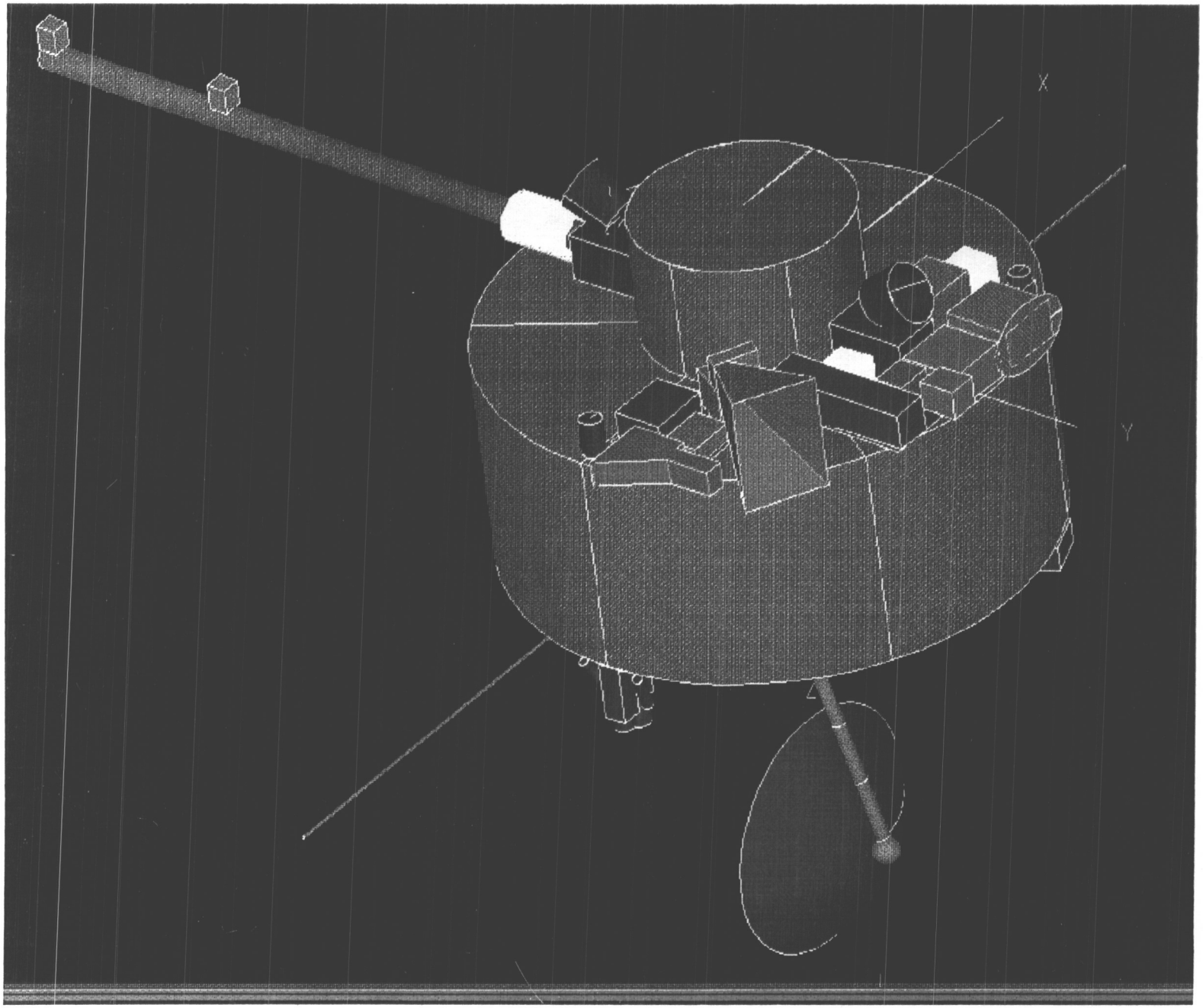


This is the MUADEE spacecraft model geometry as of 1FEB1994, view of +Z deck payload

ORIGINAL PAGE
COLOR PHOTOGRAPH

# SPACECRAFT THERMAL PREDICTIONS

The TCS design was developed with particular attention to operational and survival hardware temperature requirements. The TCS design meets these hardware requirements during both the hottest and coldest orbits.

Spacecraft and SI temperatures were predicted for both Beta-90 and Beta-0 200 km circular orbits. These Beta angles define the hottest and coldest orbit environments, respectively.

Three operational modes were evaluated for each orbit environment: data, playback and standby modes.

Power dissipation differences within each piece of hardware were incorporated in the thermal analysis of each mode.

The TCS design accomodates the thermal requirements of all hardware for all modes and each of the Beta angles. All hardware falls within the specified survival temperature limits. Temperatures quoted for the SIs are platform temperatures: all SI hardware is intimately coupled conductively to its platform and therefore operates at approximately the same temperature. Temperature predictions do not include analysis uncertainty margin.

Up to 12 Watts of heater power are required in the EPS bay to warm this equipment to the lower survival temperature limit during particular operational modes. A maximum of 8 Watts of heater power are required to warm the propulsion tank during certain operational modes.

In addition, 2 to 3 Watts each are required for heater power to warm the battery (during charging) and to warm the communications bay during particular operational modes. Heater power quotes do not include 25% margin.

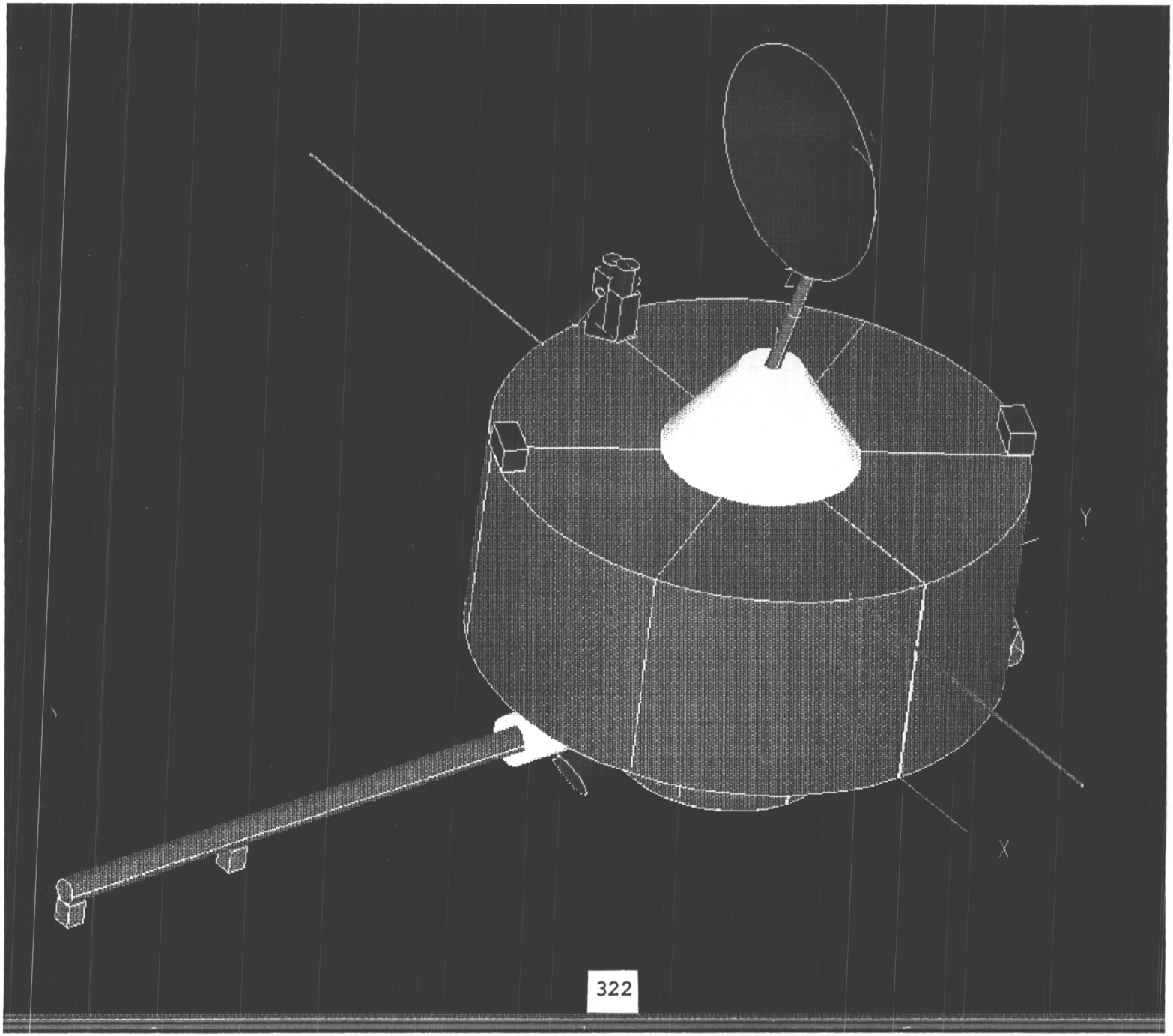


This is the MUADEE spacecraft model geometry as of 1FEB1994, view of +Z deck payload

ORIGINAL PAGE
COLOR PHOTOGRAPH

# SPACECRAFT THERMAL PREDICTIONS

## TEMPERATURES IN DEGREES CELSIUS

| HARDWARE | TEMPERATURE REQUIREMENTS | | B00 ORBIT | | | B90 ORBIT | | | COMMENTS |
|---|---|---|---|---|---|---|---|---|---|
| | SURVIVAL | OPERATIONAL | DATA | PLAYBACK | STANDBY | DATA | PLAYBACK | STANDBY | |
| PIP PLATFORM | -30/+60 | -20/+40 | +13 | +42 | -1 | -8 | +29 | -21 | COMM bay moved under PIP platform |
| NAP PLATFORM | -30/+60 | -20/+40 | +20 | +8 | +6 | +7 | -9 | -11 | |
| SIP PLATFORM | -30/+60 | -20/+40 | +29 | +20 | +20 | +26 | +16 | +16 | |
| +Z PLATFORM | -30/+60 | -20/+40 | -17 | -17 | -17 | +56 | +56 | +56 | |
| VMAG (on boom) | -30/+60 | -20/+40 | -20 | -24 | -24 | -20 | -24 | -24 | |
| GUIDANCE AND CONTROL BAY | -24/+62 | -24/+62 | +21 | +9 | +6 | +7 | -8 | -11 | |
| C&DH BAY | -24/+62 | -24/+62 | +29 | +20 | +20 | +26 | +16 | +16 | |
| COMMUNICATIONS BAY | -24/+62 | -24/+62 | +13 | +42 | 0 | -8 | +30 | -21 | |
| BATTERY BAY * | +0/+20 | +0/+20 | +8 | +8 | +8 | +15 | +15 | +15 | Louver added to BATT bay |
| EPS BAY | -24/+62 | -24/+62 | -23 | -16 | -18 | -23 | -23 | -23 | Up to 12W heater power reqd during B90 orbit |
| PROPULSION TANK | +5/+38 | +5/+38 | +10 | +9 | +9 | +29 | +18 | +18 | Up to 8W heater power reqd for prop tank |

NOTE: TEMPERATURE PREDICTIONS DO NOT INCLUDE ANALYSIS UNCERTAINTY MARGIN OR 25% HEATER POWER MARGIN

*ASSUMES A CONSTANT 25W BATTERY DISSIPATION DURING DISCHARGE AND NO DISSIPATION DURING CHARGE

SJM: 3/15/94

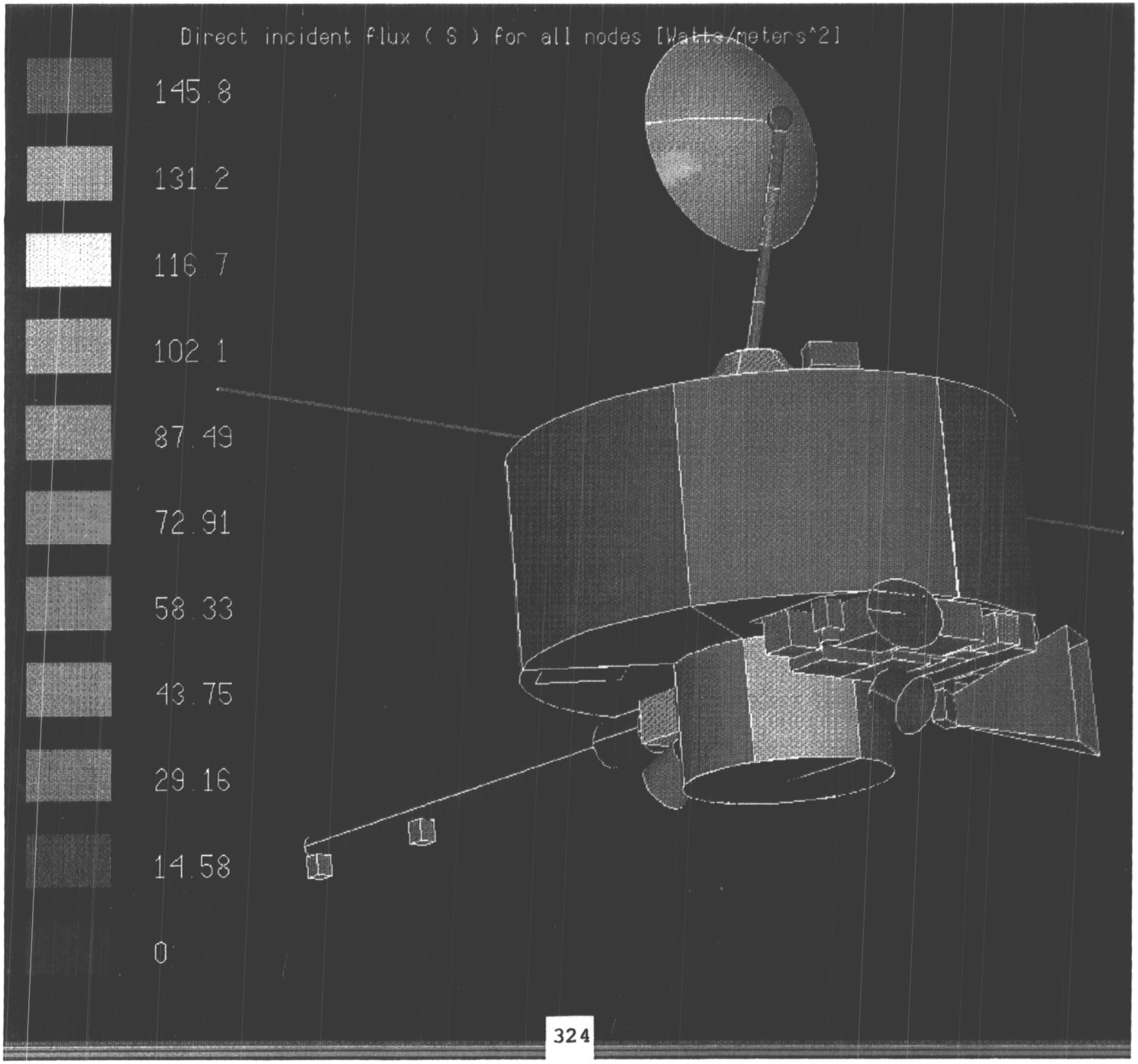


This is a mapping of the direct incident solar flux for B00 with a spinning MUADEE 2FEB94

ORIGINAL PAGE
COLOR PHOTOGRAPH

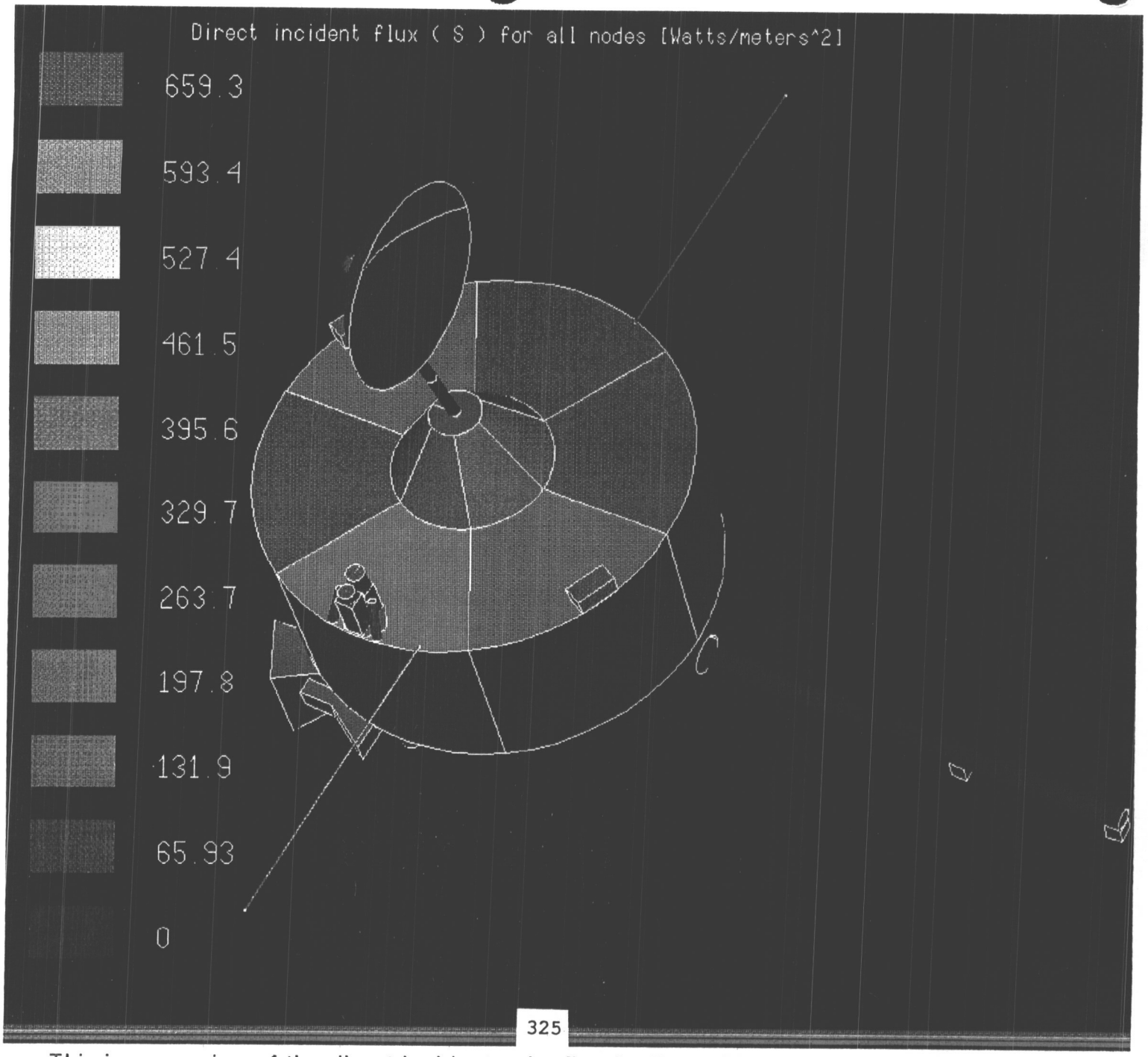




This is a mapping of the direct incident solar flux for B90 with a spinning MUADEE 2FEB94

ORIGINAL PAGE
COLOR PHOTOGRAPH

# HARDWARE SUMMARY

Thermal control hardware includes Multilayer Insulation (MLI) blankets, Silverized FEP Teflon (FOSR), paint, Kapton foil heaters, thermal isolators, thermostats and thermistors.

The MLI and thermal isolators are produced by Lockheed. The FOSR and paint products are supplied by 3M. Tayco manufactures the heaters while Texas Instruments produces the thermostats. Various suppliers produce thermistors.

Approximately 6.5 m2 of MLI weighing 5.8 kg are required. Approximately 0.03 m2 of FOSR weighing 0.01 kg are required. Approximately 6.4 m2 of paint weighing 0.7 kg are required. In addition, 45 heaters, 16 isolators, 90 thermostats (two per heater) and 50 thermistors are estimated to be required, totaling 2.1 kgs of mass.

Approximately 31 Watts of heater power are required (25 Watts plus 25% margin) during the worst case cold environment (standby mode during orbit eclipse). This includes heater power to warm the battery during charging, the propulsion tank, the Comm bay and the EPS bay.

# HARDWARE SUMMARY

| COMPONENT | SOURCE | AMOUNT | MASS (KG) | POWER (W) |
|---|---|---|---|---|
| MULTILAYER INSULATION | LOCKHEED | 6.5 SQM | 3.3 | 0 |
| SILVERIZED FEP TEFLON | 3M | 0.03 SQM | 0.01 | 0 |
| PAINTS | 3M | 6.4 SQM | 0.7 | 0 |
| KAPTON HEATERS | TAYCO | 45 | 0.8 | 31 (1) |
| THERMAL ISOLATORS | LOCKHEED | 16 | 0.7 | 0 |
| THERMOSTATS | TEXAS INST | 90 | 0.5 | 0 |
| THERMISTORS | VARIOUS | 50 | 0.1 | 0 |
| TOTAL | | --- | 6.1 | 31 |

(1) WORST CASE ORBIT SCENARIO (STANDBY MODE DURING ECLIPSE) WITH 25% MARGIN

# CONCLUSIONS

All spacecraft and payload component temperature requirements for the 200 km science orbit are met with the current TCS design.

The TCS utilizes existing flight proven passive designs to minimize heater power, development risk and operational risk. Thermostatically controlled heaters with redundant circuits are used where passive materials alone cannot maintain temperature limits.

The TCS design does not impact any individual SI requirements, such as instrument field-of-view or interface temperatures. All SIs are maintained within specifed temperature limits for all science mission modes.

Additional analysis is required to assess the effect of free molecular heating during the aerobraking maneuver and to predict temperatures for the elliptical orbital environments.

# CONCLUSIONS

- SPACECRAFT AND PAYLOAD COMPONENTS MEET TEMPERATURE LIMITS
- THERMAL CONTROL DESIGN UTILIZES EXISTING FLIGHT PROVEN PASSIVE DESIGNS SUPPLEMENTED WITH THERMOSTATICALLY CONTROLLED HEATERS
- BUS THERMAL DESIGNS ARE COMPATIBLE WITH INDIVIDUAL INSTRUMENT REQUIREMENTS
- FURTHER ANALYSIS IS REQUIRED TO ASSESS THE EFFECT OF FREE-MOLECULAR HEATING AND REMAINING ORBITAL ENVIRONMENTS



LT: 3/15/94
CHART 12

# FURTHER ANALYSIS

The current analysis does not address free-molecular heating (FMH) of the new spacecraft equipment configuration during the aerobraking maneuver. It is expected that peak spacecraft and SI temperatures will rise under an FMH environment.

Analysis needs to be performed to show that the current TCS is adequate for the highly elliptical orbital environment. The stated analysis results are for the 200 km circular science orbit.

The conduction coupling to the bus structure for the SI platforms needs to be optimized as SI requirements and operating characteristics are refined.

The battery louver radiator design should be updated as the battery design and operational modes mature. The current battery dissipation of 25W during discharge is an estimate.

The locations and heat dissipations of internal spacecraft boxes are subject to change, so the internal bus thermal analysis is to be updated as required.

# 8.0 GROUND SYSTEM AND MISSION OPERATIONS

# GROUND SEGMENT DESIGN APPROACH
## DESIGN APPROACH

The MUADEE ground segment consists of the Mission Test and Operations System and the Science Data System. It provides all of the services required to operate the spacecraft during integration and test, cruise and Mars orbit.

The goals of the Ground Segment design are reduced development costs, simplified operations and reliability. The ground segment is also to support the University's educational mission. Development costs are reduced by the use of available capabilities provided by the JPL AMMOS and TPOCC currently used by Lockheed.

Further development cost reductions are provided by the use of one mission operations center, to be located at the University of Michigan from the beginning of spacecraft integration and test. Using one system through all phases of the mission removes the need to migrate from an I&T system to an operations system that may not be fully compatible. It also saves the expense of porting command and telemetry definitions between systems.

Development of spacecraft engineering analysis tools will be simplified by using commercially available software, including windowing, graphics and data manipulation products. Here too, costs are reduced by developing one set of analysis tools for integration and test that will subsequently be used during flight operations.

The educational mission of the University is enhanced by student involvement in all phases of mission operations. Students will be used as mission controllers, data analysts and technicians.

# Ground Segment Design Approach

- Ground Segment Provides
  - Spacecraft Command & Monitoring
  - Science Data Processing
- Design Goal
  - Low Life Cycle Cost
  - Simplified Operations
  - Reliable
- Support the University's Educational Mission

# GROUND SEGMENT OVERVIEW
## FUNCTIONAL DESCRIPTION

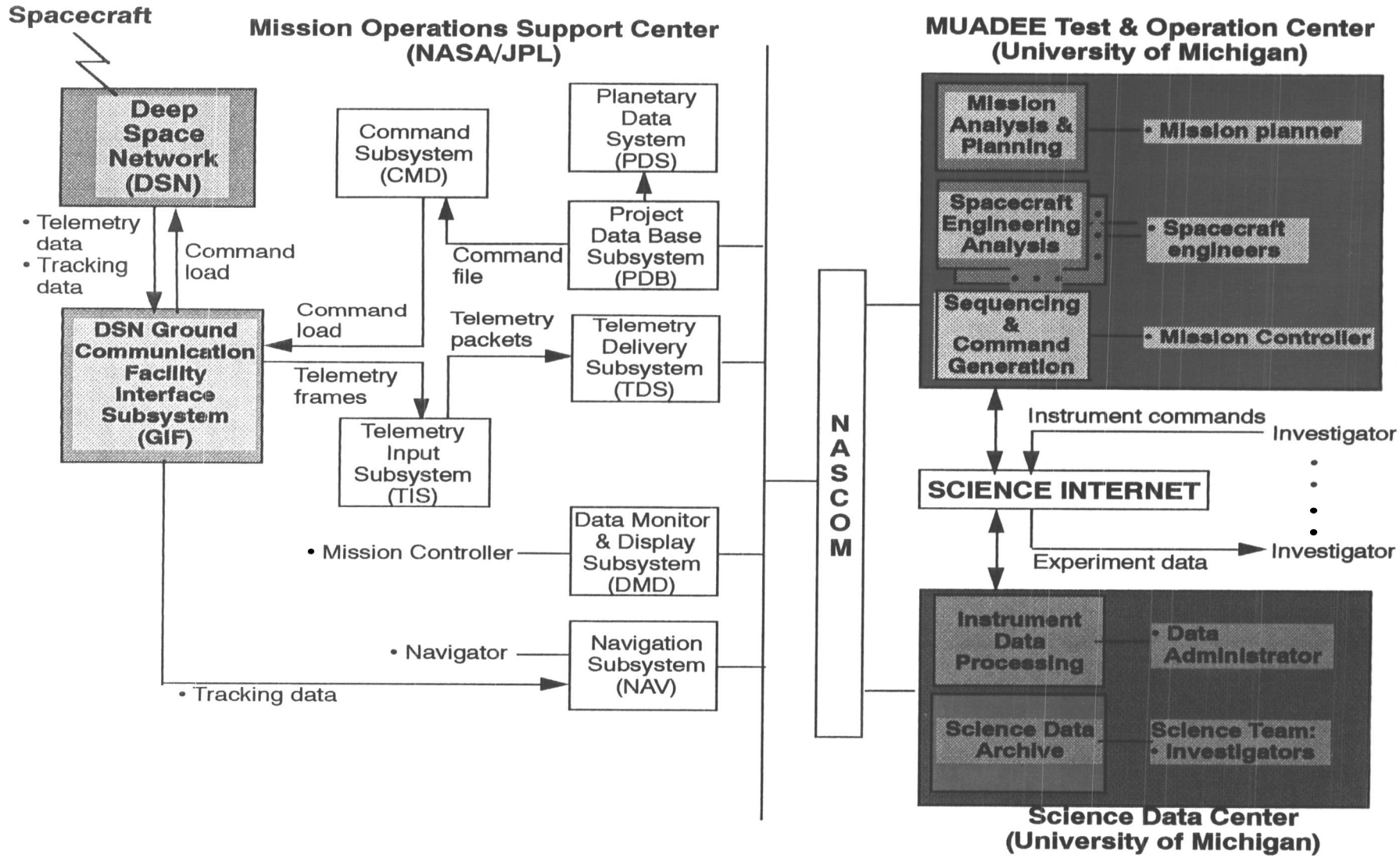


ORIGINAL PAGE
COLOR PHOTOGRAPH

Section: 8.2.1

TLB/DAG: 3/10/8
CHART 2

# GROUND SEGMENT OVERVIEW
## FUNCTIONAL DESCRIPTION

The functional breakdown of the MUADEE Ground Segment is shown in the facing figure. The DSN and Ground Communications are shown in blue on the far left. The supporting elements of JPL, telemetry, command, navigation, and project data base are shown in white near the center. The MTOC is in red at upper right and the Science Data Center (SDC) is in green at lower right.The three locations are interconnected by the NASA communication network (NASCOM) for real-time data and voice coordination.

The DSN is the RF link to the spacecraft and the MTOC is the control center. All other elements are there to support these two vital links in the chain. Telemetry from MUADEE is received by the Deep Space Station (DSS) a part of the DSN. From there it is sent to JPL, along with the tracking data (two-way radiometric). At JPL the two data streams are separated and sent to their respective subsystems for processing. The tracking data is processed at JPL to establish a trajectory of the vehicle. The processed tracking data is then sent to the MTOC for analysis, planning, and sequencing. The telemetry data is separated into the two basic streams, engineering and science, both of which are sent on to the MTOC. The engineering data is displayed both at JPL and at MTOC to allow controllers and engineers to analyze and evaluate the spacecraft performance and data trends. The science data is processed, analyzed, and evaluated only at the SDC.

Based on the engineering and instrument data analysis and the processed navigation data, command sets are generated in the MTOC and forwarded to JPL where they are forwarded to the DSS for transmission to the spacecraft. The results of the commands are returned in the telemetry and the process starts over again.

# GROUND SYSTEM OVERVIEW
## MOS CHARACTERISTICS

The two major characteristics of the Mission Operations System (MOS) are low cost and mimimum risk. Although cost was a prime consideration, risk was always a determining factor in the design. The use of a common set of hardware and software for software development, integration & test, and flight operations was definitely a cost saver. The problem was how this could be done without adding undue risk. It was solved by the time-phased approach to transitioning from the development effort at Lockheed to the MUADEE Test and Operations Center (MTOC) at the University of Michigan.

Another area of cost saving with minimal risk was in having some of the flight operations team members as members of the integration and test team. This reduces the cost for training and also gives these members better insight to the operational aspects of the spacecraft. By having these highly-trained individuals at the MTOC it allowed more participation by students without increasing risk. The risk is further reduced by the knowledge-based system developed as a flight controller aid and by using the spacecraft simulator to verify all commands before they are sent to the spacecraft.

A third cost savings is realized by colocating the Science Data Center and the MTOC, permitting the sharing of many support functions.

# GROUND SEGMENT OVERVIEW
# MOS CHARACTERISTICS

- LOW COST
  - SYSTEM TEST HARDWARE & SOFTWARE USED FOR TRAINING AND OPERATIONS
  - TRAINING COSTS REDUCED BY HAVING OPERATIONS PERSONNEL PARTICIPATE IN INTEGRATION AND TEST
  - UTILIZE THE STUDENT RESOURCES TO SUPPLEMENT OPERATIONS
- MINIMUM RISK
  - PRIMARY MISSION CONTROL AT U of M WITH BACK-UP AT JPL
  - SPACECRAFT CONTRACTOR ENGINEERS ACTIVELY INVOLVED IN OPERATIONS
  - NORMAL AND CONTINGENCY PLANS/PROCEDURES DEVELOPED AND TESTED PRIOR TO LAUNCH
  - ALL COMMAND SEQUENCES VERIFIED BY SPACECRAFT SIMULATOR PRIOR TO TRANSMISSION TO SPACECRAFT
  - KNOWLEDGE-BASED SYSTEM TO ASSIST FLIGHT CONTROLLERS

# LOW COST MOS FEASIBILITY

The MUADEE Ground Segment will be developed and operated for a lower cost than "traditional" ground segments. This lower cost is feasible because of the concurrent, integrated development approach, the highly operable flight system, and the innovative approach to mission operations.

The concurrent development approach makes maximum use of existing ground data system capabilities by designing the ground system around existing capabilities rather than abstract requirements. The ground system will make use of the JPL Multi-mission Ground Data System, the Deep Space Network (DSN) Data System, LMSC Integrated Test Facility developed for GP-B and the TPOCC command, control and telemetry display tools from GSFC.

The operations team will begin training during spacecraft testing. The test conductor's experience with the spacecraft will not be lost, since the test conductors will become the flight controllers. This transition will be supported by the gradual implementation of the MTOC at U of M during spacecraft box level testing and subsystem testing. Once system level testing begins, the MTOC will be located at U of M and supported by Lockheed engineers collocated with the U of M operations staff. System level testing will be controlled by the MTOC.

The incremental development approach to be used will take advantage of a rapid evolutionary development life cycle, rather than the traditional waterfall life cycle. The MUADEE basic MOS will be built using the JPL support elements in 3 months after Phase CD start. With the basic MOS implemented early, the flight and ground systems will also be integrated early in the development cycle. This early integration reduces integration costs by exposing problems soon enough to avoid expensive late fixes.

Finally, this approach minimizes cost by facilitating the use of common software throughout the mission, from integration and test to Mars orbit operations.

MUADEE's highly operable flight system also increases the feasibility of the MOS. The command and data handling system, based on a 1750A processor (2.2 MIPs and 1 Mbyte RAM) requires no resource management by the MOS and operations team because of the large margins. Similarly, telemetry storage space (2 Gbyte SSR) is sufficiently large that its use need not be managed in detail by the MOS. The asynchronous data driven telemetry collection requires no MOS scheduling of telemetry modes and no effort by the MOS for control of data collection, recording and playback processes.

The MUADEE mission operations approach also makes the low cost feasible. All ground operations are highly automated. The "scripted" uplink process includes all activities from sequence generation to command delivery at the spacecraft. The "scripted" downlink process includes all activities from RF data capture to packet reconstruction. The navigation task is simplified by the use of advanced automated tools.

MUADEE will make use of a single operations team with a mixture of talent, background and experience. The team will consist of student operators, trained mission controllers, spacecraft engineers, navigators and multi-mission controllers. The spacecraft engineers will be Lockheed personnel, the navigators and multi-mission controllers will be JPL staff. This staff will have gained experience during system test, the mission controllers having been test conductors and the spacecraft engineers having been subsystem test engineers.

Mission plans will be designed, verified and approved before launch. The command sequences required to fulfill the plan will be fully developed and tested before launch. These sequences will include Earth-Mars transfer trajectory, OTMs, TCMs, MOI, aerobraking phases, contingency and safe modes.

# LOW COST MOS FEASIBILITY

- Concurrent, Integrated Development Approach
  - Maximize use of existing ground system capabilities
  - Capability driven (not requirements driven) development approach
  - OPS team assembled and trained during system test
  - Development is incremental
- Highly Operable Flight System
  - Large computer and memory resource margins
  - Autonomous data collection
  - Autonomous thermal control, power system control and fault detection
  - Complies with JPL GDS capabilities and fully CCSDS compliant
- Innovative Mission Operations Approach
  - Highly automated ground operations
  - Single operations team, experienced from system testing
  - Advanced navigation
  - Fixed baseline mission plans

# INTEGRATED DEVELOPMENT ,TEST, & MISSION OPERATIONS FACILITY

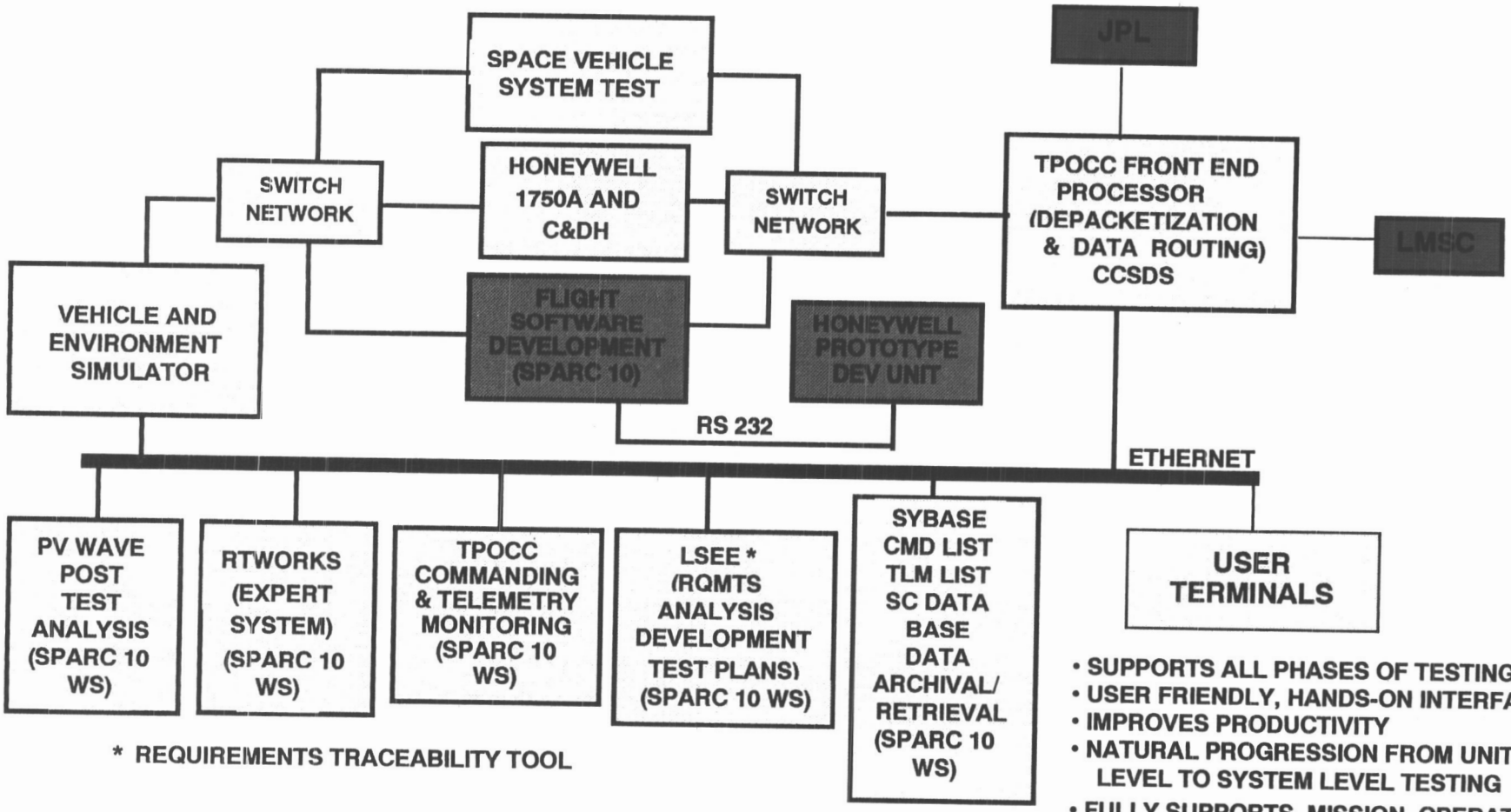


* REQUIREMENTS TRACEABILITY TOOL

- SUPPORTS ALL PHASES OF TESTING
- USER FRIENDLY, HANDS-ON INTERFACE
- IMPROVES PRODUCTIVITY
- NATURAL PROGRESSION FROM UNIT LEVEL TO SYSTEM LEVEL TESTING
- FULLY SUPPORTS MISSION OPERATIONS

LEGEND:

| | |
|---|---|
| BLUE | = DEVELOPMENT ONLY |
| RED | = TEST & OPERATIONS ONLY |
| YELLOW | = ALL PHASES |

# INTEGRATED DEVELOPMENT/TEST/ MISSION OPERATIONS FACILITY

The MUADEE Mission Test and Operations Center (MTOC) is a sub-set of the Integrated Test Facility (ITF) developed by Lockheed Missiles and Space Company (LMSC) for the MUADEE flight and ground software development effort. The facility consists of off-the-shelf hardware and software that are readily available and has been used repeatedly by LMSC for developing other software systems. One of the advantages of the concept is its flexibility. The initial software development effort can start with only the basic set, and grows into the full capability for testing modules, subsystems, or the system as the hardware and software become available. Since all of the elements are connected through the ethernet, the location of each element in not critical. This flexibility is what allows sharing of the facility and a transition to the MTOC at system testing.

# INTEGRATED TEST FACILITY (ITF) TO MTOC EVOLUTION

The evolution from the Integrated Test Facility (ITF) to the MUADEE Test and Operation Center (MTOC) takes place gradually. During box-level testing the activities at Lockheed are of limited use in the training of the flight operations controllers. A few key people will gain some knowledge from the tests and they will have the capability to access the testing from terminals (MACs) at the University. The prime emphasis is at the Lockheed ITF and others on-line will be in a monitor role only.

During subsystem-level testing there will be people at U of M who will be more actively involved in the testing. Additional capability will be added at MTOC to allow this participation. The primary emphasis is still to get the subsystems integrated and tested, and therefore the prime responsibility for this task remains at Lockheed.

For the system-level testing after the first few good functional tests with everything up and running, the MTOC participation will increase. Testing will actually be controlled from the MTOC with the ITF personnel acting in a monitor-only role. During these tests the flight operations personnel will be able to run their actual flight sequences to verify their accuracy and adequacy. These system level tests, (functional, environmental, compatibility, and end-to-end) will be valuable training for the flight operations team at the MTOC and at JPL.

# INTEGRATED TEST FACILITY (ITF) TO MTOC EVOLUTION

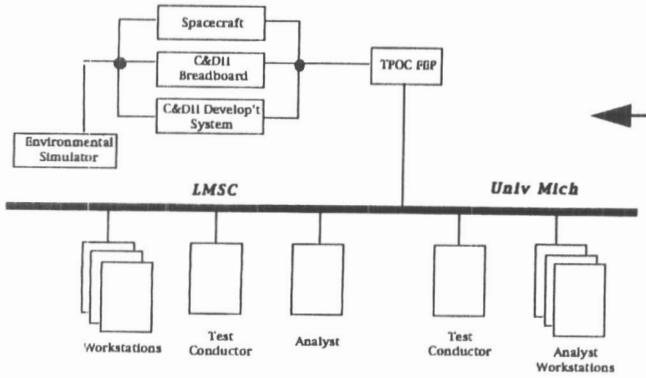


## Box Level Testing

- Test Conductor at LMSC
- Large Group of Testers at LMSC
- Subsytem Engineers at LMSC
- Full Capabilities at LMSC

## Subsystem Level Testing

- Test Conductor at LMSC
- Subsytem Engineers at LMSC/UM
- Partial Capabilities at LMSC & UM

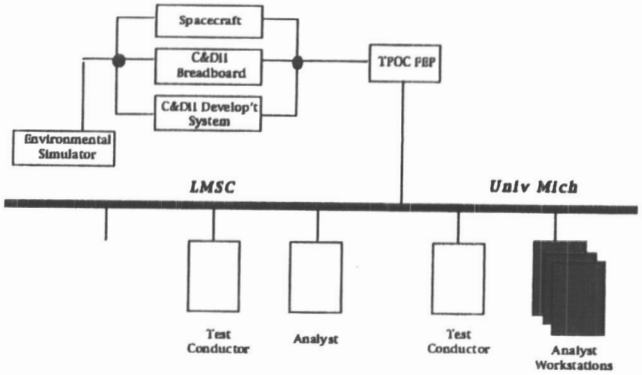


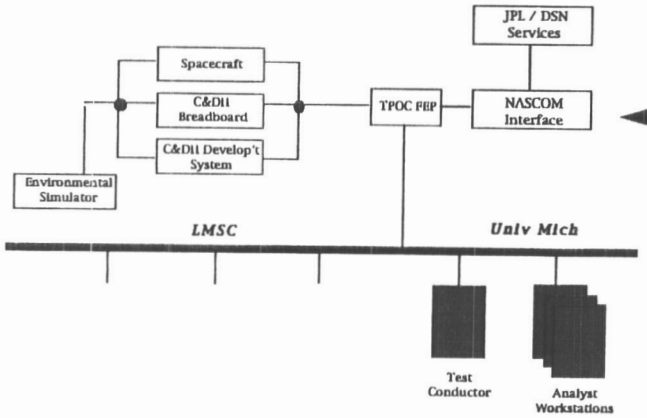


## System Testing & Flight Operations

- Full Capabilities at UM
- All commanding and engineering analysis at UM
- DSN/JPL Interface operating

ORIGINAL PAGE
COLOR PHOTOGRAPH

# TEST AND OPERATIONS CENTER (MTOC)

A simplified version of the MTOC is shown on the facing chart. The flight controllers, mission analysts, and data analysts utilize the terminals to access their software packages to perform their respective tasks. Since everything is on-line, it can be accessed by anyone on the net as long as the proper IDs and passwords are given. External access by way of Internet or other wide-area networks will be excluded for safety reasons.

In the event of a partial or complete failure of the MTOC, the MTOC supervisor on duty would notify JPL via voice or data net to assume control. The supervisor would then notify the MUADEE Flight Director and initiate action to assess whether or not it would be advisable to have JPL send a set of "safing" commands to the spacecraft. Since a capability exists at JPL to assume full engineering monitoring and control of the spacecraft and scientific instruments, the loss of the MTOC would not jeopardize the MUADEE mission.

# MUADEE TEST AND OPERATIONS CENTER (MTOC)

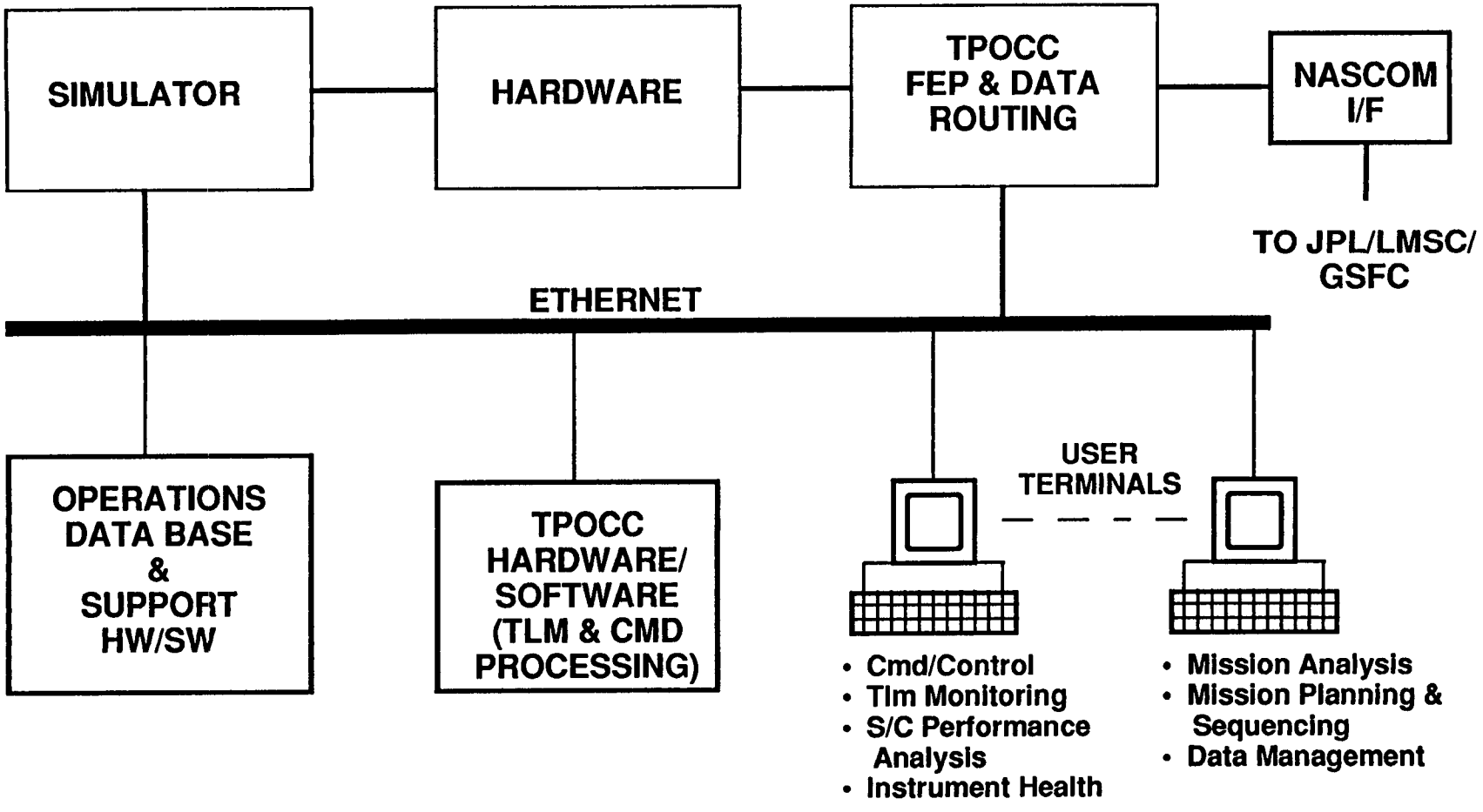


TLB/DAG: 8/16/
CHART 10

# SPACECRAFT ENGINEERING ANALYSIS

The engineering data analysis at the MTOC is an on-going event. When a track is in progress the near-real-time data is processed as received at the MTOC. The flight controllers are constantly aware of the status of all subsystems and instruments by means of the limit checking and display of engineering data. When an anomaly occurs an alarm is issued by the real-time processor for that data. This alarm, both visual and audible, alerts the controller. The controller follows the appropriate procedures, based on the nature of the anomaly, to further determine the possible cause and the potential cure. The knowledge-based "expert" system further supports and enhances the controller's findings. The result of these data is then reviewed by the supervisor and/or the Flight Director to determine if further testing is required. The appropriate subsystem engineer may want to do additional testing by sending commands to get more data. All new command sets are then verified by the simulator before being transmitted to the spacecraft. When it has been determined that there is a legitimate problem which must be rectified, the appropriate set of commands are generated and verified, then sent to the spacecraft. Normal operations are resumed when the new data indicates that the problem no longer exists.

During an anomaly, if the Flight Director determines it to be real and severe enough, an emergency is declared. This gives MUADEE priority for additional tracking, if needed and also alerts the appropriate personnel to support anomaly resolution. When the emergency has subsided the Flight Director lets JPL know and gives up any tracking time that is no longer needed.

Another aspect of normal engineering analysis is the long-term trend analysis for all of the critical engineering parameters. This task is made easy by the spacecraft engineering analysis software, however it still requires the engineer to review and look for trends which may indicate the need for corrective action.

# SPACECRAFT ENGINEERING ANALYSIS

- MTOC/TPOCC TELEMETRY DATA PROCESSING
  - S/C & INSTRUMENT STATUS AND HEALTH DATA
  - ENGINEERING UNITS CONVERSION
  - DISPLAY FORMATS
- REAL-TIME ANALYSIS
  - AUTOMATIC LIMIT CHECKING
    - HARD LIMITS
    - SOFT LIMITS
  - EXPERT SYSTEM ANALYSIS FOR AUTHENTICATION
  - ALARM GENERATION
- NEAR-REAL-TIME ANALYSIS AND ANOMALY RESOLUTION
  - DATA REVIEW BY SYSTEM/SUBSYSTEM ENGINEERS
  - ANOMALY ANALYSIS AND RECOVERY SEQUENCE PROPOSAL
  - SIMULATOR VERIFICATION OF SEQUENCE
  - PERFORM RECOVERY SEQUENCE
- LONG-TERM DATA TREND ANALYSIS

# SCIENCE DATA CENTER

The MUADEE science data center (SDC) is responsible for production data processing, the application of algorithms to convert from instrument measurements to scientifically meaningful quantities. Data is transferred from the JPL Mission Operations Support Center to the SDC routinely. Once the telemetry and ancillary data (spacecraft position and attitude) is ingested, standard data products will be produced.

Data from each instrument package will be routine processed through the three data levels. Level 1 is telemetry data converted to engineering units and calibrated. Level 2 is geophysical data at the highest resolution. Level 3 is data placed on a MUADEE defined common grid, permitting inter-comparisons between instruments.

All production data will be archived along with the telemetry, spacecraft position and attitude. The package teams will be able to access the data archive for analysis. This archive will also be used to create the Planetary Data System archive master.

The SDC will use processing software adapted from the that used in previous versions of the instruments on MUADEE. This will reduce the development effort. Archive and communications will be based on commercial products.

# SCIENCE DATA CENTER

- SDC Functions
  - Production data processing
  - Archive Level 0 through Level 3 data
  - Archive ancillary data
  - Production of PDS archive master
- Design Features
  - Processing software adapted from that of ancestral instruments
  - Collocated with the MTOC
  - Commercial software used for archive and communications functions

# SCIENCE DATA CENTER
## DATA FLOW

A simplified data flow is shown on the facing chart. Telemetry packets are transferred from the JPL TM delivery subsystem to the collocated MTOC and SDC. The packets directed to the MTOC are processed for engineering displays.

Upon reaching the SDC, the TM, level 0 data, and ancillary data are inputs to the production data processing. Each step of the processing produces a level of data that is archived. Level 1 data is the calibrated output of each sensor, converted to engineering units. Level 2 data is the previous level converted to scientifically meaningful quantities. For example, the Level 1 data of the Fabry-Perot Interferometer is a spectrum, brightness as a function of wavelength. Level 2 processing converts a series of spectra to a set of wind profiles, one for each limb scan. Level 2 data is the generated at the inherent time and space resolution of the instrument. Level 3 processing converts this high resolution data to a common MUADEE grid.

Analysis of the data is done at investigator sites distributed about the country. Each investigator can access the production data at the SDC and perform additional processing and visualization. Results of this processing can be returned to the SDC and archived as Higher Level Products if they are generally useful.

The SDC and MTOC are both located at U of M. This permits the sharing of support functions and resources. The workstations used to support the production data processing will be available as backups for the MTOC computers.

# SCIENCE DATA CENTER DATA FLOW

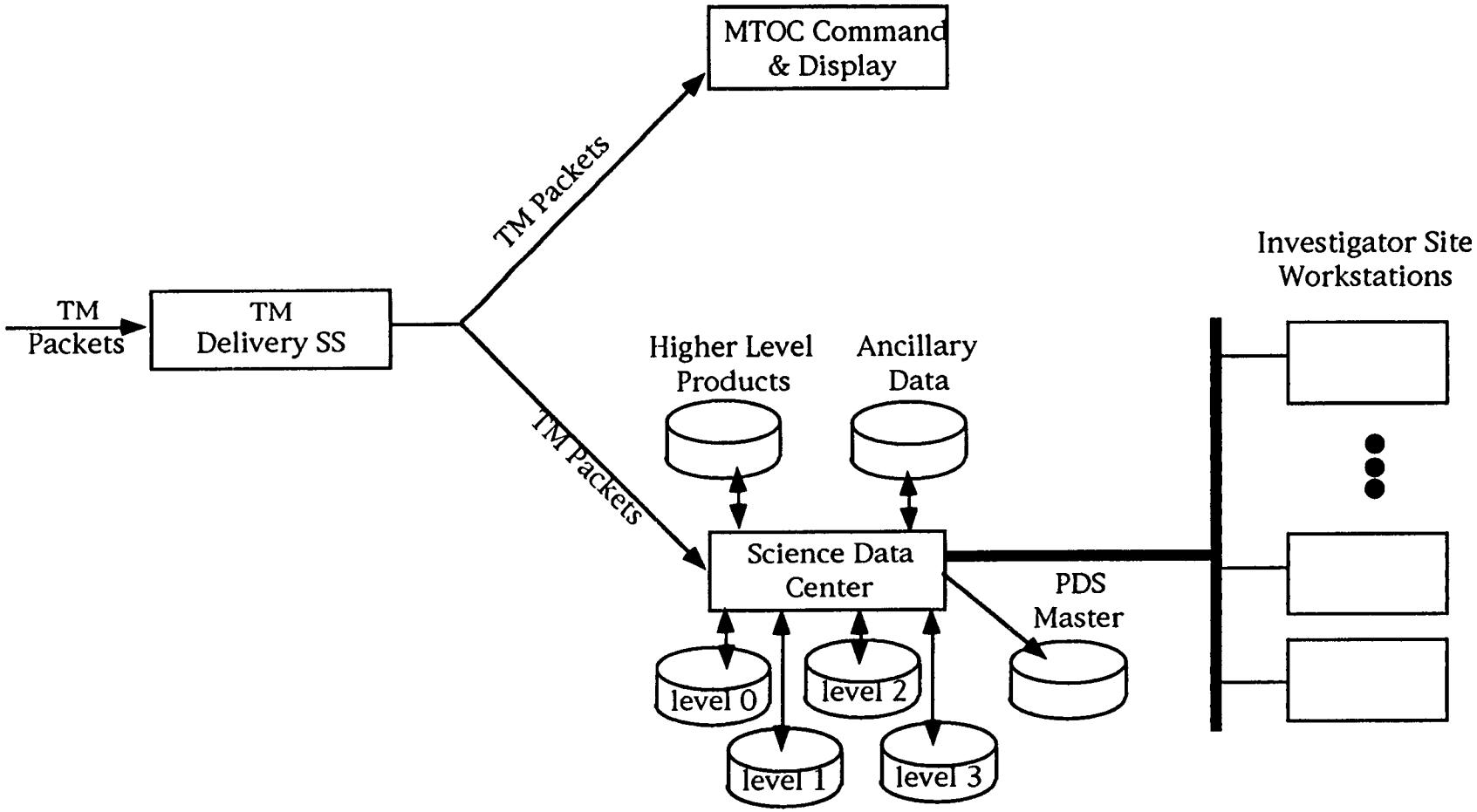

# JPL MOS SUPPORT ELEMENTS

JPL will provide Mission Operations Support in several areas listed on the facing chart. These support elements make use of existing JPL capabilities.

Tracking and Data Acquisition include data communications, radiometric tracking, telecommand, and telemetry services. Data communication is provided through DSN station support. Nominally, the 34M HEF stations will supply 2 kbps uplink (10 dB data margin) and 10 through 40 kbps downlink ( 10 kbps with 3dB data margin). Emergency support using the spacecraft omni antenna and the 70 M DSN stations will provide 12 bps uplink and 8 bps downlink (both at 3 dB data margin). Radiometric tracking service provides one- and two- way Doppler measurements for navigation and radio science. Telecommand services include both real-time commanding and store and forward service to the DSN stations for command load uplinks. Telemetry services at the DSN supports the processing of both real-time and non-real-time data streams by acquiring the data ( RF carrier lock, demodulation, symbol synchronization and convolutional decoding). It is here that frame synchronization, Reed-Solomon decoding and time tagging are also performed.

Another MOS support element provided by JPL will be command delivery. Here MUADEE command files are packaged into a command load suitable for radiation to the flight system. The command load is delivered using the telecommand interface protocol, ensuring errorless delivery to the flight system. Command verifications received from the MUADEE flight system will be monitored and command data retransmitted when necessary.

Telemetry processing reconstructs the science and engineering packets from the transfer frames and performs data accountability checks. The quality and completeness of the data is assessed. Data lost due to ground transmission or link problems will be recovered.

The project data base PDB provides a repository for mission data including sequence and command files, telemetry packets and ancillary data files. The PDB generates and distributes ancillary data, correlating the ephemeris file, geometry and history parameters with the science and engineering packets. The ancillary data is distributed to the MTOC and SDC.

Navigation support provided by JPL includes orbit determination, maneuver design and analysis and trajectory analysis. Tracking data will be processed to determine the spacecraft trajectory. The orbit accuracy will be predicted for MOI and other key mission events. Propulsive maneuvers will be designed, verified and evaluated. Also as part of the navigation support element, JPL will provided trajectory analysis, generating the spacecraft trajectory that satisfies mission requirements, based on the determined orbit and planned maneuvers. This design will be updated as needed in response to mission events and objectives.

# JPL MOS SUPPORT ELEMENTS

- Tracking and Data Acquisition
  - Data Communications Services
  - Radiometric Tracking Services
  - Telecommand Services
  - Telemetry Services
- Command Delivery
- Telemetry Processing
- Project Data Base
- Navigation
  - Orbit Determination
  - Maneuver Design and Analysis
  - Trajectory Analysis

# JPL MOS SUPPORT ELEMENTS (Cont'd)

The final JPL support element is mission control support. The ground system status from DSN to the MTOC will be monitored to ensure the coherent flow of the uplink and downlink data streams. The scheduling of DSN stations is an additional mission control support function. In conjunction with DSN operations personnel, the mission support element will generate the integrated sequence of events (SOE) required to support flight operations and the DSN keyword file used to specify the DSN station equipment configuration to support MUADEE tracking passes.

The mission control support element also is important in the reduction of risk for the MUADEE mission. This element will perform backup mission control operations as delegated by the MTOC. This may include monitoring real time data for alarms and transmission of predefined safing commands if required and authorized by the MTOC. Thus, if the MTOC is made unavailable by communications problems or by events such as power failure or fire, the MUADEE spacecraft's safety can be assured.

# JPL MOS SUPPORT ELEMENTS

- Mission Control Support
  - Ground Data System Monitoring
  - Flight Events Monitor and Control Service
  - MUADEE Mission Control Backup Service

# MISSION OPERATIONS SCENARIOS
## OPERATIONS TESTING

Operations tests consist of three major types: compatibility tests, end-to-end ground segment tests, and training tests. The compatibility tests are performed as soon as the two sides of the interface are ready. This should be as early as possible to avoid delays in the system development schedule due to incompatibilities. These tests are somewhat limited in their training benefits, but are very important to the system development.

End-to-end tests are compatibility tests at a higher level and are very important for system development as well as for operations training. These tests are started as soon as the system-level spacecraft testing effort has reached enough maturity to withstand outside "help". They continue periodically up to the final pre-ship test before the transition to the launch facility. The final end-to-end test is actual performed with the spacecraft at the launch site and ready for launch except for the final removal of the red-tag items. These end-to-end tests allow the MOS to exercise the launch and early flight sequences for training and make any necessary changes to the sequence.

Training tests start with the simulator and any available spacecraft test data. The sequences are evaluated to determine the validity of the data displays and analysis aids for the spacecraft and instrument analysts. By the time the system-level spacecraft tests come along the flight operations team will have their sequences and data displays fully checked out and ready. The end-to-end tests then become the final training for the total MOS team.

# MISSION OPERATIONS SCENARIOS
# OPERATIONS TESTING

- GOALS:
  - VERIFY COMPATIBILITIES BETWEEN ELEMENTS OF THE GROUND SEGMENT
  - VERIFY OPERATIONAL PROCEDURES
  - TRAIN THE FLIGHT OPERATIONS TEAM
  - VERIFY OPERATIONAL READINESS

C-3

- TYPE OF TESTS PERFORMED:
  - TRAINING TESTS (SIMULATED AND REAL DATA)
  - COMPATIBILITY TESTS
  - END-TO-END TESTS
  - OPERATIONAL READINESS TEST
  - ON-STAND TESTS (FINAL CHECKOUT BEFORE LAUNCH)

# MISSION OPERATIONS SCENARIOS
## LAUNCH OPERATIONS

Launch operations starts with the pre-ship review. After approval, the spacecraft is shipped to the launch site, unpacked, assembled on the test fixture, and the post-ship testing is performed to verify that no problems have been incurred during packing and shipping. After verification by performing functional tests, the pre-launch servicing is performed: loading of hazardous fuels, etc.

After the spacecraft is mated to the launch vehicle, a series of final checkouts occur including end-to-end testing which is heavily supported by all elements of the mission operations systems. The integration and test team at the launch site perform the encapsulation and final checkout before launch. After launch they support the flight operations team until initial checkout is complete. Some of the I & T personnel become flight operations personnel to continue that support.

# MISSION OPERATIONS SCENARIOS
## LAUNCH OPERATIONS

- LAUNCH SITE - INTEGRATION AND TEST TEAM:
  - PERFORM SPACECRAFT CHECKOUT
  - PRE-LAUNCH SERVICING
  - MATE SPACECRAFT TO LAUNCH VEHICLE
  - PERFORM FINAL SYSTEM END-TO-END CHECKOUT
  - ENCAPSULATION
  - SUPPORT MISSION OPERATIONS THROUGH SEPARATION FROM THE LAUNCH VEHICLE AND INITIAL CHECKOUT

# CRUISE OPERATIONS: DAY 0 TO 287

*Initial Checkout Through 1st TCM.* During the first 17 days after launch, when the spacecraft and the science instruments are being checked out and the first Trajectory Correction Maneuver (TCM) is made, there will be high levels of operational and orbit determination activities. These will require 24 hour, full mission operations staffing for the first 7 day for checkout and for an 8 hour shift on the day of the TCM, day 14. Tracking will be continuous from launch through 3 days after TCM or until day 17. Except for the 8 hour full operations shift on day 14, the spacecraft will be monitored 24 hours a day from day 8 through day 17 by a one or two staff monitoring team.

*2nd and 3rd TCM.* The 2nd and third TCM will occur on day 56 and 259, respectively, the latter occurring 30 days before MOI. A full operations team will carry out each TCM during an 8 hour shift. Tracking will be continuous from the start of that shift through the three days following the TCM. The spacecraft will also be monitored continuously during this 3 day period by a one or two staff monitoring team.

*Nominal Operation Cycle.* During most of the 290 day cruise period, the spacecraft will require little tracking and monitoring. Orbit determinations require only one 8 hour tracking pass per week, science instrument health checks are needed only once every 4 weeks, and magnetometer interplanetary calibration data are required for about 1 week out of four. These requirements are satisfied by a 4 week mission operations cycle during which there is an 8 hour tracking, downlink and spacecraft monitoring pass once per, one week of recorded magnetometry data collection and a science instrument health check during one of the 8 hour monitoring passes. This 4 week cycle, simplifies staff scheduling since it fits the normal work week.

# CRUISE OPERATIONS: DAY 0 TO 287

- INITIAL CHECKOUT THROUGH 1ST TCM
  - 24 HOUR, FULL OPERATIONS FOR 7 DAY CHECKOUT
  - 8 HOUR, FULL OPERATIONS FOR 1ST TCM ON DAY 14
  - 24 HOUR, PASSIVE MONITORING REMAINDER OF TIME THROUGH DAY 17
  - CONTINUOUS TRACKING THROUGH DAY 17

- 2ND AND 3RD TCM ON DAYS 56 AND 259, RESPECTIVELY
  - 8 HOUR, FULL OPERATIONS ON DAY OF TCM
  - 24 HOUR, PASSIVE MONITORING FOR NEXT 3 DAYS
  - CONTINUOUS TRACKING FOR NEXT 3 DAYS

- NOMINAL OPERATION CYCLE
  - 4 WEEK CYCLE USED ALL OTHER TIMES DURING CRUISE
  - WEEKLY 8 HOUR TRACKING AND MONITORING
  - SCIENCE INSTRUMENT HEALTH CHECK ONCE PER CYCLE
  - MAGNETOMETER CALIBRATION DATA COLLECTED 1 WEEK PER CYCLE

# MARS ORBIT OPERATIONS: DAYS 287 TO 1073

*MOI Through 1st Aerobraking.* MOI preparations will begin on day 287 or 3 days before MOI. After MUADEE has been inserted into its 1 day capture orbit, a series of apoapsis burns will lower the periapsis to the altitude where the desired aerobraking rate is achieved. This will require several days. Once this has been achieved, science data acquisition, which will begin immediately after MOI, will continue during each orbit. Because of the criticality of the MOI and aerobraking maneuvers, tracking and spacecraft control by full operations teams will be required 24 hours per day for the 153 day that are required for these two periods of the mission.

*Latitude Survey: Days 440 Through 920.* Once aerobraking has reduced the apoapsis altitude to 2500 km, the periapsis will be raised to 130 km and the latitude survey will begin. During this phase of the mission, science data will be taken during at least one orbit in four and there will be a daily 6 hour tracking and downlink pass when the spacecraft is monitored by a one to two member monitoring team. There will also be periodic spacecraft reorientation and orbit adjustment maneuvers, during which the spacecraft will be controlled by a full operation team over a one 8 hour shift. Also, solar conjunction will occur during this phase of the mission and so there will be a period of about 40 days when communications with the spacecraft will not be possible. The spacecraft will be put into a hibernation mode during this blackout period and there will be, of course, no mission operations conducted in this time frame.

*2nd Aerobraking: Days 921 Through 952.* After the Latitude Survey has been completed, MAUDEE's periapsis altitude will again be lowered for an aerobraking maneuver. The apoapsis will decay until it has reached 200 km. At that point, the orbit will be circularized at 200 km and the Diurnal Survey will begin. The 2nd aerobraking maneuver will last about 30 days. Again, because of the criticality of the maneuver and the need for continuous tracking, MUADEE will be tracked and controlled 24 hours per day by a full operations team. Science data will be taken during at least one orbit in four during this phase of the mission.

*Diurnal Survey: Days 953 Through 1072.* The Diurnal Survey will take 120 days, during which there will be a daily 6 hour tracking and downlink pass when the spacecraft is monitored by a one to two member monitoring team. There will also be periodic spacecraft reorientation and orbit adjustment maneuvers, during which the spacecraft will be controlled by a full operations team over one 8 hour shift and science will be acquired on at least one orbit in four.

*End Of Mission.* At the end of the Diurnal Survey, the spacecraft will be put into a stable 250 x 1000 km altitude, planetary quarantine orbit by propulsive maneuvers. Spacecraft tracking and control will end one day after this orbit is achieved, thus ending the nominal science mission envisioned for MAUDEE.

# MARS ORBIT OPERATIONS: DAYS 287 TO 1073

- MARS ORBIT INSERTION THROUGH 1ST AEROBRAKING
  - MOI PREPARATIONS BEGIN 3 DAYS (DAY 287) BEFORE MOI ON DAY 290
  - STEPWISE LOWERING OF PERIAPSIS FOR AEROBRAKING TAKES SEVERAL DAYS
  - 1ST AEROBRAKING ENDS ON DAY 440
  - 24 HOUR, FULL OPERATIONS DURING THIS ENTIRE 153 DAY PERIOD
  - CONTINUOUS TRACKING DURING THIS ENTIRE 153 DAY PERIOD

- LATITUDE SURVEY, DAYS 440 THROUGH 920
  - 8 HOUR, FULL OPERATIONS ON DAYS WHEN REORIENTATION AND ORBIT CORRECTION MANEUVERS ARE DONE
  - MONITORING DURING DAILY 6 HOUR DOWNLINK AND TRACKING PASS
  - NO OPERATIONS DURING REMAINDER OF EACH DAY
  - NO OPERATIONS DURING 40 DAY BLACKOUT AROUND SOLAR CONJUNCTION

- 2ND AEROBRAKING, DAYS 921 THROUGH 952
  - 24 HOUR, FULL OPERATIONS DURING THIS ENTIRE 30 DAY PERIOD
  - CONTINUOUS TRACKING DURING THIS ENTIRE 30 DAY PERIOD

- DIURNAL SURVEY, DAYS 953 THROUGH 1072
  - 8 HOUR, FULL OPERATIONS ON DAYS WHEN REORIENTATION AND ORBIT CORRECTION MANEUVERS ARE DONE
  - MONITORING DURING DAILY 6 HOUR DOWNLINK AND TRACKING PASS
  - NO OPERATIONS DURING REMAINDER OF EACH DAY

- END OF MISSION
  - MUADEE PUT INTO QUARANTINE ORBIT ON DAY 1072
  - 24 HOUR, FULL OPERATIONS
  - OPERATIONS END ON DAY 1073

# 9.0 INTEGRATION AND TEST

# PROJECT SCHEDULE

The total time span for all hardware and software development period is less than three years as directed by the discovery guidelines. The ability to perform to this type of schedule is based on Lockheeds' previous performance. Lockheed has performed spacecraft bus design, integration with multiple complex scientific instruments, and systems level test in less than 3 years and maintained cost performance requirements. Cost and schedule data are available for these projects and will be provided with the past performance portion of the proposal submission.

The first project milestone is the System Requirements Review. At this time all the system requirements are frozen and flown down to the individual subsystems. The Preliminary Design Review (PDR) is held six months after project start. The Critical Design Review (CDR) is then held 9 months after PDR. Based on the work already performed and contained in this document, the accelerated PDR/CDR schedule can be met without increasing project risk and will result in project cost savings.

After spacecraft bus assembly the Bus Test Readiness Review is held. The bus is functional tested and integrated with the scientific instruments. A Spacecraft Test Readiness Review is then held prior to system level testing. After system level functional and environmental testing is performed the Final Readiness Review is held prior to shipping the spacecraft to the launch facility. Spacecraft launch is scheduled for the 1998 Mars opportunity at the end of the year.

# PROJECT SCHEDULE

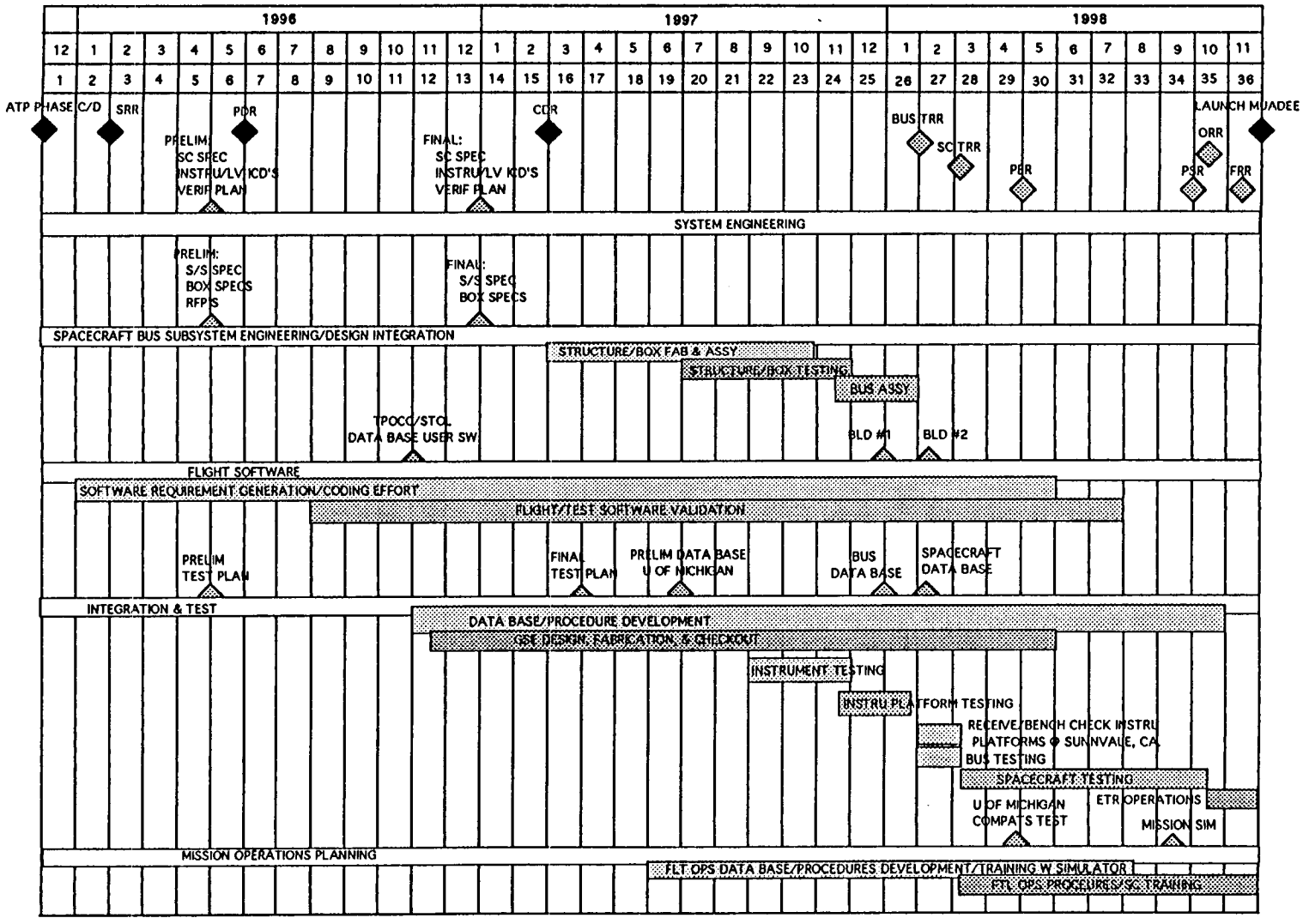

# INSTRUMENT INTEGRATION PLAN

The primary goals of the integration plan are to (1) eliminate redundant hardware and software design efforts and cost from all instruments, (2) deliver a fully integrated and tested set of three instrument packages to Lockheed Sunnyvale so that the MUADEE spacecraft/instrument integration requires much less time than traditional spacecraft/instrument integrations where individual instruments are integrated with the spacecraft.

The University of Michigan designs and supplies to all seven instrument design teams the following items: (1) prototype DPU built with commercial quality parts. The prototype DPU includes a CPU deck, power supply deck, and a simple Sense Head Electronic Deck with displays and switches used for testing the DPU, (2) A spacecraft simulator I/O card that is IBM PC compatible. This card contains four RS 422 serial ports and the discreet command interfaces required to simulate the spacecraft electrical interface, (3) DPU operating system, (4) a running Instrument Software example that controls the simple Sense Head Electronics deck that is supplied with the prototype DPU, (5) Spacecraft Simulator Software that runs on an IBM PC compatible computer. The Spacecraft Simulator software is capable of sending ommands to instruments and displaying the contents of telemetry packets, (6) All the software development tools required to develop instrument software for the DPU. The software development tools include a C compiler, assembler, linker, debugger and all batch files used to create the instrument software example, (7) A complete set of DPU hardware and software interface specifications to be used as a guide in designing the Sense Head Electronics Deck and instrument software. Each instrument design team designs and builts the sense head, sense head electronics deck, and instrument software for its instrument and then uses the items supplied by the University of Michigan to test and integrate with the prototype DPU.

After each instrument has been integrated and tested with the prototype DPU, it is integrated with the other instrument(s) in its instrument package by the designated university. The instrument package integration is done with flight hardware. The flight DPU's are supplied by the University of Michigan.

After each instrument package is integrated and tested, it is shipped to the University of Michigan to be electrically and mechanically (tbr) integrated with a higher fidelity spacecraft simulator. After instrument aliveness tests have been completed, the instruments will be commanded to perform typical mission scenerios. After this integration phase is completed, the instrument packages are disconnected and shipped to Lockheed Sunnyvale for integration to the spacecraft.

# INSTRUMENT INTEGRATION PLAN

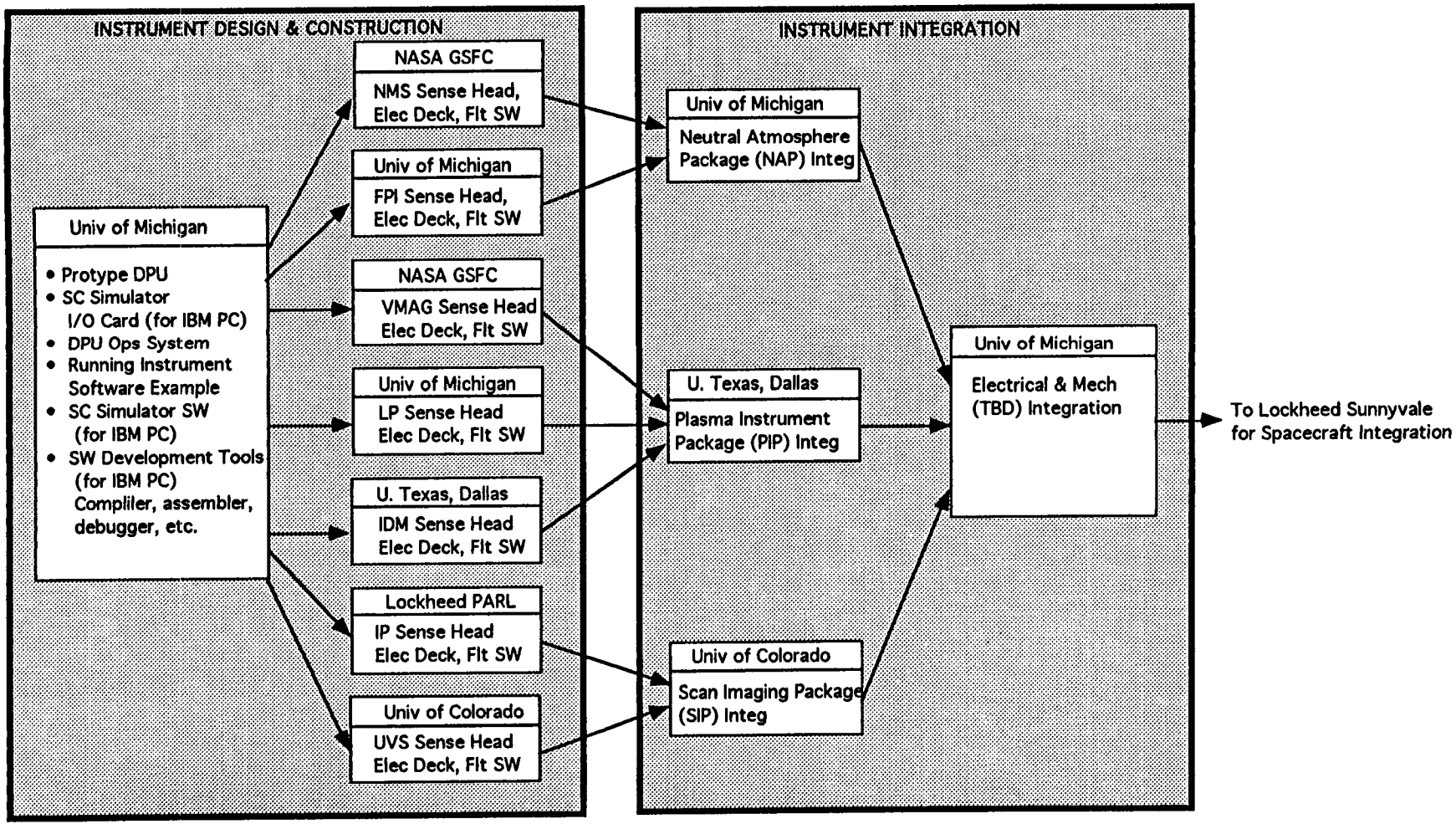


KS: 3/15/94
CHART 9

# MUADEE SPACECRAFT TEST PROGRAM

- AMBIENT FUNCTIONAL TESTS:
  - BUS FUNCTIONAL TEST
  - S/C BASELINE FUNCTIONAL TEST
  - S/C POST ACOUSTIC/PYRO SHOCK FUNCTIONAL
  - S/C PRESHIP FUNCTIONAL
  - S/C LAUNCH SITE CONFIDENCE TEST
- COMPATBILITY/MISSION SIMULATION TESTS:
  - UNIVERSITY OF MICHIGAN MISSION SIMULATION TEST
  - JPL RF CHARACTERIZATION TESTS
  - JPL COMPATIBILITY TEST
- ENVIRONMENTAL TESTS:
  - ACOUSTIC TEST
  - PYRO SHOCK/FIRST MOTION TEST
  - TV/TB TEST
- MISC:
  - EMC/EMI

KS: 3/15/94
CHART 10

# TEST OBJECTIVES - MUADEE TEST PROGRAM

| TEST | TEST OBJECTIVES |
|---|---|
| AMBIENT FUNCTIONAL TESTS: | |
| • BUS FUNCTIONAL | • VERIFY THE ABILITY OF THE BUS TO SUPPORT S/C LEVEL TESTS PRIOR TO INTEGRATION WITH INSTRUMENT PLATFORMS. |
| • S/C BASELINE FUNCTIONAL | • VERIFY PROPER OPERATION OF THE SPACECRAFT SUBSYSTEMS/INSTRUMENTS FOR ALL SPACECRAFT MODES.<br>• BASELINE DATA FOR SUBSEQUENT FUNCTIONAL TESTS. |
| • S/C POST ACOUSTIC/PYRO SHOCK FUNCTIONAL | • SAME AS S/C BASELINE FUNCTIONAL. |
| • S/C PRESHIP FUNCTIONAL | • SAME AS S/C BASELINE FUNCTIONAL. |
| • LAUNCH SITE CONFIDENCE TEST | • VERIFY SPACECRAFT HEALTH AFTER SHIPMENT TO WTR. |
| COMPATIBILITY/MISSION SIMULATION TESTS: | |
| • U OF MICHIGAN MISSION SIMULATION TEST | • VERIFY ABILITY OF U OF MICHIGAN OPS CONTROL CENTER TO EXECUTE TYPICAL SPACECRAFT MANEUVERS/INSTRUMENT OPERATIONAL SCENARIOS. |
| • JPL RF CHARACTERIZATION TESTS | • JPL REQUIREMENT FOR ALL DSN USERS |
| • JPL COMPATS TEST | • VERIFY ABILITY OF JPL TO GENERATE COMMANDS/PROCESS TELEMETRY FOR MID-COURSE CORRECTIONS DURING MARTIAN TRAJECTORY. |
| ENVIRONMENTAL TESTS: | |
| • ACOUSTIC TEST | • VERIFY PROPER S/C OPERATIONS AFTER SIMULATING DELTA ACOUSTIC LAUNCH ENVIRONMENT. |
| • PYRO SHOCK | • VERIFY VMAG BOOM FIRST MOTION/DEPLOYMENT |
| • TV/TB | • VERIFY S/C OPERATION IN SIMULATED MARTIAN ORBIT ENVIRONMENT.<br>• VERIFY THERMAL DESIGN FOR S/C. |
| MISC: | |
| • EMC | • VERIFY EMC COMPATIBILITY FOR ALL OPERATING MODES OF THE S/C. |

KS: 3/15/94
CHART 11

# INTEGRATION AND TEST SCHEDULE

This chart summarizes the test and verification schedule at the system level for the spacecraft. The spacecraft bus will be tested as a bus prior to being integrated with the scientific instruments. The bus functional test will be at ambient conditions. Functional verification of all bus subsystems will be demonstrated as well as instrument electrical interfaces.

The spacecraft ambient test program will consist of three functional tests, JPL compatibility and RF characterization tests, U of Michigan Mission Simulation test, and a launch site confidence test. The three functional tests consists of the Baseline Functional, Post Acoustic/Pyro Shock, and Pre Ship Functional.

The environmental test program will consist of a EMC/EMI , Acoustic, Pyro Shock/Deployment, and a Thermal Vacuum/Thermal Balance test.

# I&T TEST SCHEDULE

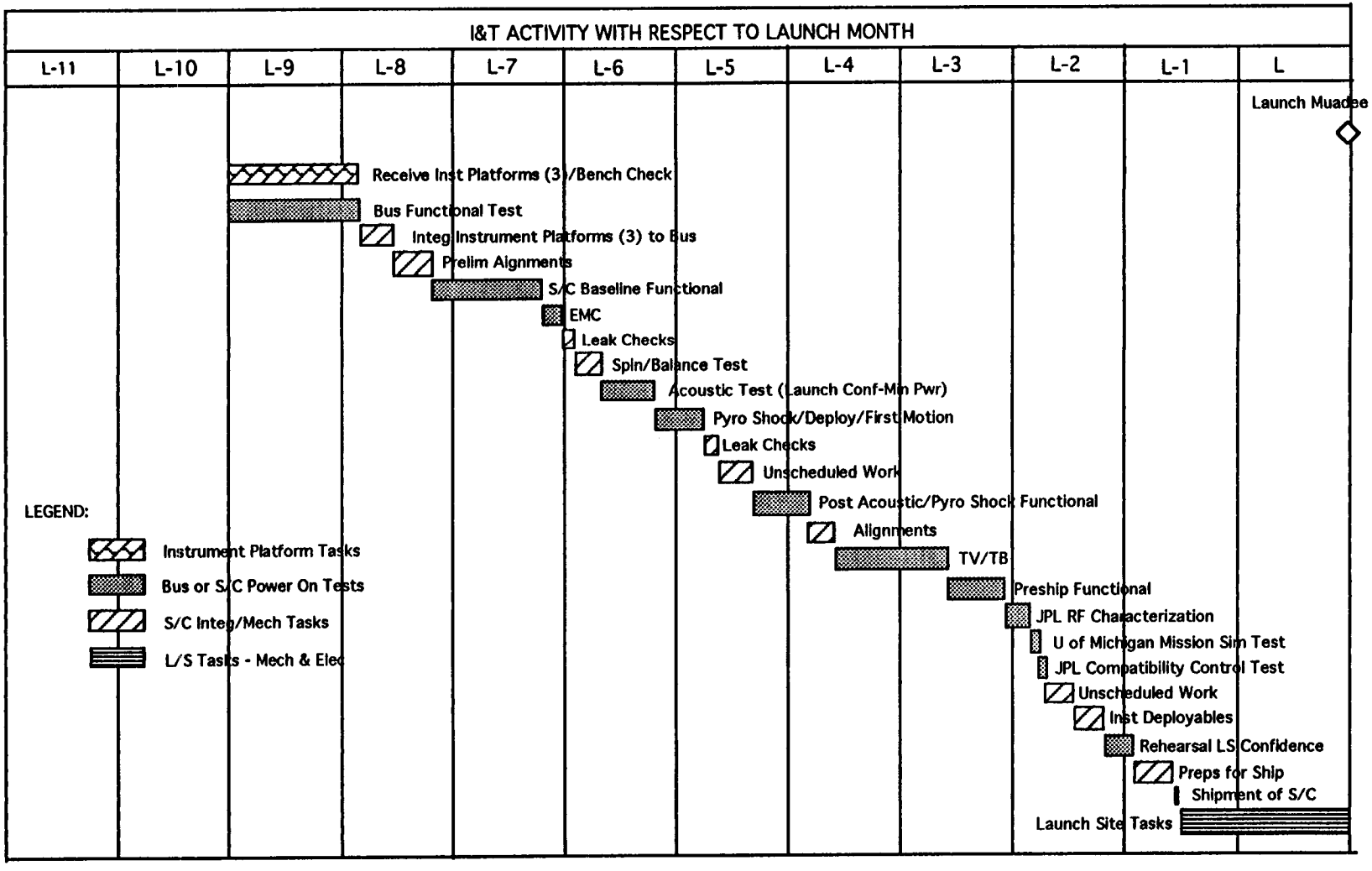


KS: 3/15/94
CHART 12

# SPACECRAFT TEST SYSTEM CONCEPTUAL BLOCK DIAGRAM

This chart shows the test system envisioned for the MUADEE program where spacecraft testing will be controlled from the University of Michigan. The test control/mission support equipment destined for the University of Michigan is initially developed and checked out in the Integrated Test Facility at Lockheed's Sunnyvale facility.

Electrical ground support equipment (EGSE) required for system test is broken up into (1) equipment required to be near/adjacent to the spacecraft and (2) equipment required to control a test. The SC Attitude Control Dynamic Simulator, Umbilical/Booster IF simulator, Solar Array Power Simulator, tape recorder, and RF test set fall under the first category. The Test Control (TC) work station, data analysis terminals/work stations, and TPOCC FEP fall into the latter category.

The attitude control dynamic simulator permits closed loop simulation of the ACS subsytem. In addition, elements of the simulator will permit checking out the sun sensor electronics and other ACS interfaces. The umbilical/booster IF simulator console permits powering the spacecraft as if at the launch pad and simulates the booster electrical interface. Test plug capability for trickle charging the batteries/propellant system monitoring (tbr) will also be supported by the umbilical support console. The S/A simulator console permits powering the spacecraft via the solar array interface (tbr) and checking the IBE trim relays if a test plug interface is provided. The RF test set will provide/demodulate X band forward/return link RF signals respectively. Floor space is provided for instrument EGSE, if required.

Spacecraft tests will be controled from the TC work station. The TPOCC FEP provides the forward link command packets to the CCSDF PDF and demultiplexes the packetized telemetry/science data from the spacecraft (PDF). The TC work station also controls the EGSE consoles via a ethernet link. EGSE telemetry will be demultiplexed by the TPOCC FEP. For the normal case where the test control equipment will be at University of Michigan, a commerical data line will be leased to support the ethernet link at a reduced bandwidth.

LMSC assumes that NASA will provide CCSDS PDF's for Lockheed, JPL, and the University of Michigan and NASCOM/ECOM nodes at the University of Michigan, JPL, and ETR. Due to the length of time for the spacecraft I&T program, LMSC will lease commerical data lines for the link between the University of Michigan to Sunnyvale, CA. JPL is included in the diagram to show how the JPL compatibility test will be supported.

# CONCEPTUAL BLOCK DIAGRAM
# SPACECRAFT TEST SYSTEM

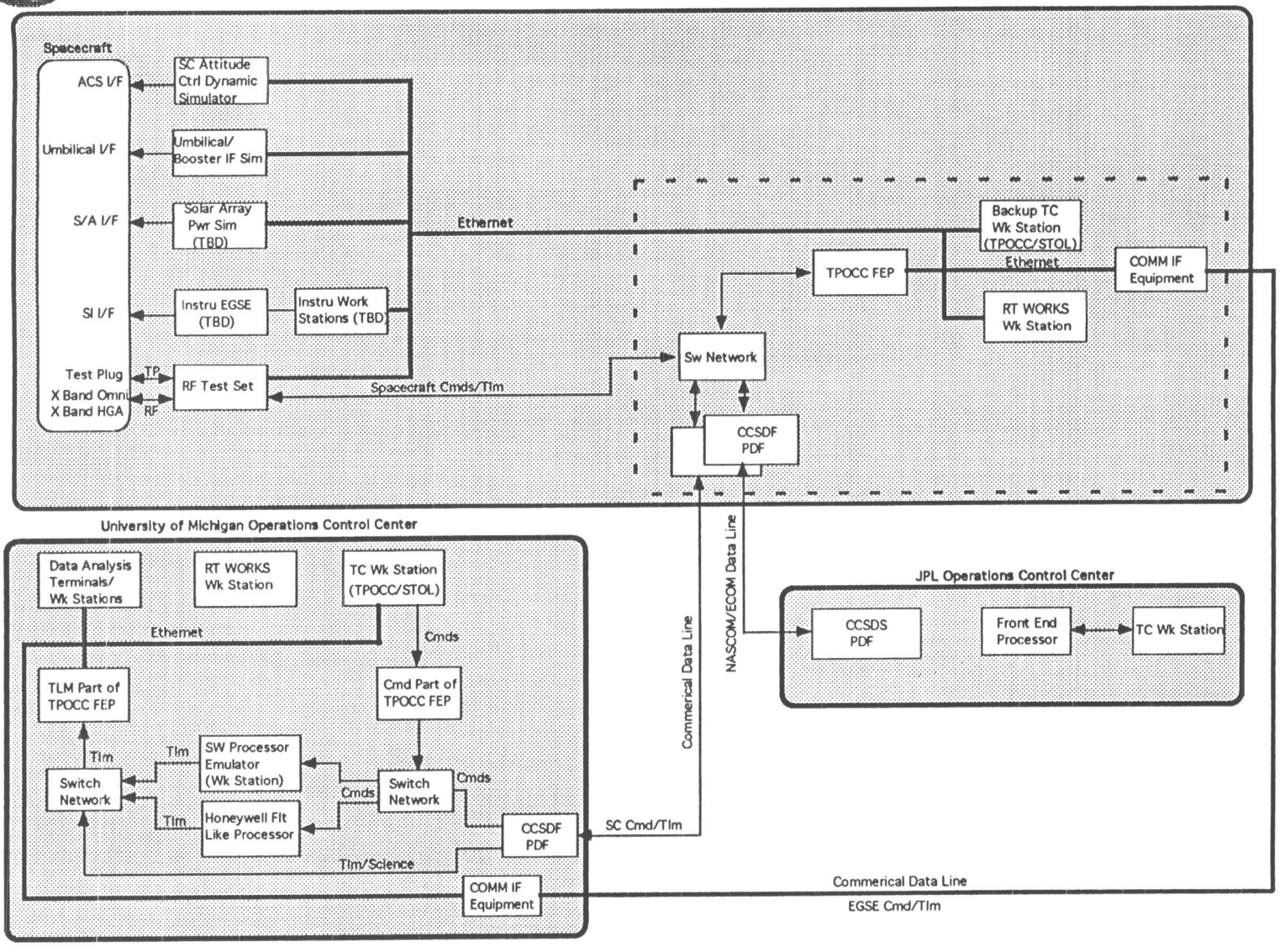


KS: 3/15/94
CHART 13

# 10.0 LAUNCH VEHICLE

# LAUNCH VEHICLE REQUIREMENTS

The C3 requirement comes from the trajectory desing analysis in section 7.3. The volume requirement is discussed in detail in section 7.4, Mechanical design.

# LAUNCH VEHICLE REQUIREMENTS

- INJECT MUADEE SPACECRAFT INTO AN INTERPLANETARY TRAJECTORY TO MARS
  - EARTH TO MARS TRAJECTORIES REQUIRE A $C_3$ OF 10 - 12 $KM^2/S^2$
  - MUADEE MASS AT LIFTOFF 897 KG
- AVAILABLE VOLUME IN PAYLOAD FAIRING MUST HOUSE MUADEE SPACECRAFT
- COST MUST BE MINIMIZED
- LAUNCH VEHICLE MUST HAVE PROVEN LAUNCH RECORD



RJL: 3/15/94
CHART 2

# LAUNCH VEHICLE TRADE SPACE

Launch vehicles that can deliever up to 3,500 kg at a $C_3$ of 12 $km^2/s^2$ were investigated. No foriegn launch vehicles were considered, although they could meet the requirements.

# LAUNCH VEHICLE TRADE SPACE

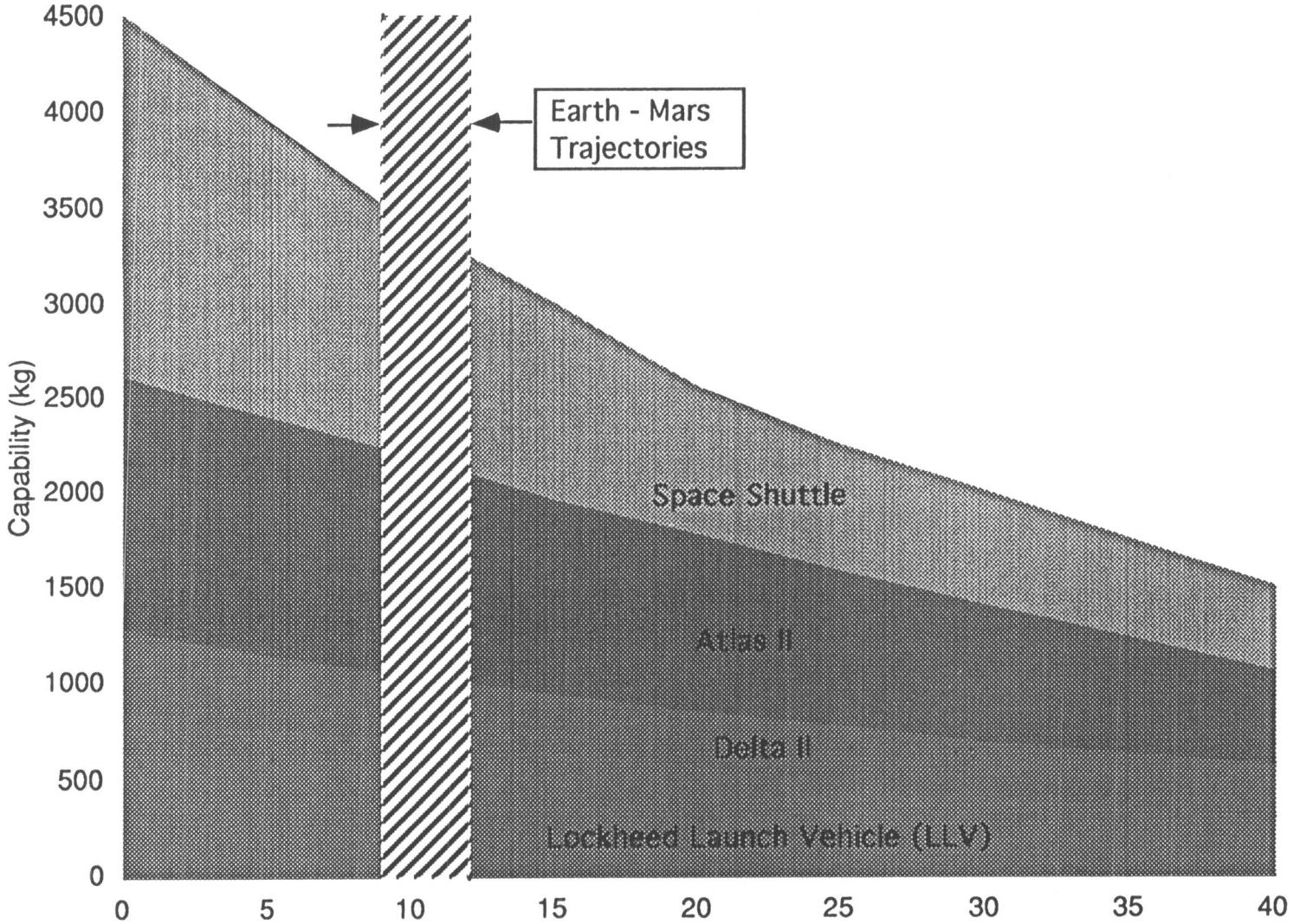


RJL: 3/15/94
CHART 3

# DELTA II 7925 PERFORMANCE CAPABILITY

This chart shows the performance capability for the Delta II 6925 and 7925. The data shown is for a 28.5° orbit. Typical Mars missions require a $C_3$ (square of the hyperbolic excess velocity) of 10 - 12 $km^2/s^2$. For a $C_3$ of 12 $km^2/s^2$ the payload capability is 1,025 kg.

# DELTA II 7925 PERFORMANCE CAPABILITY

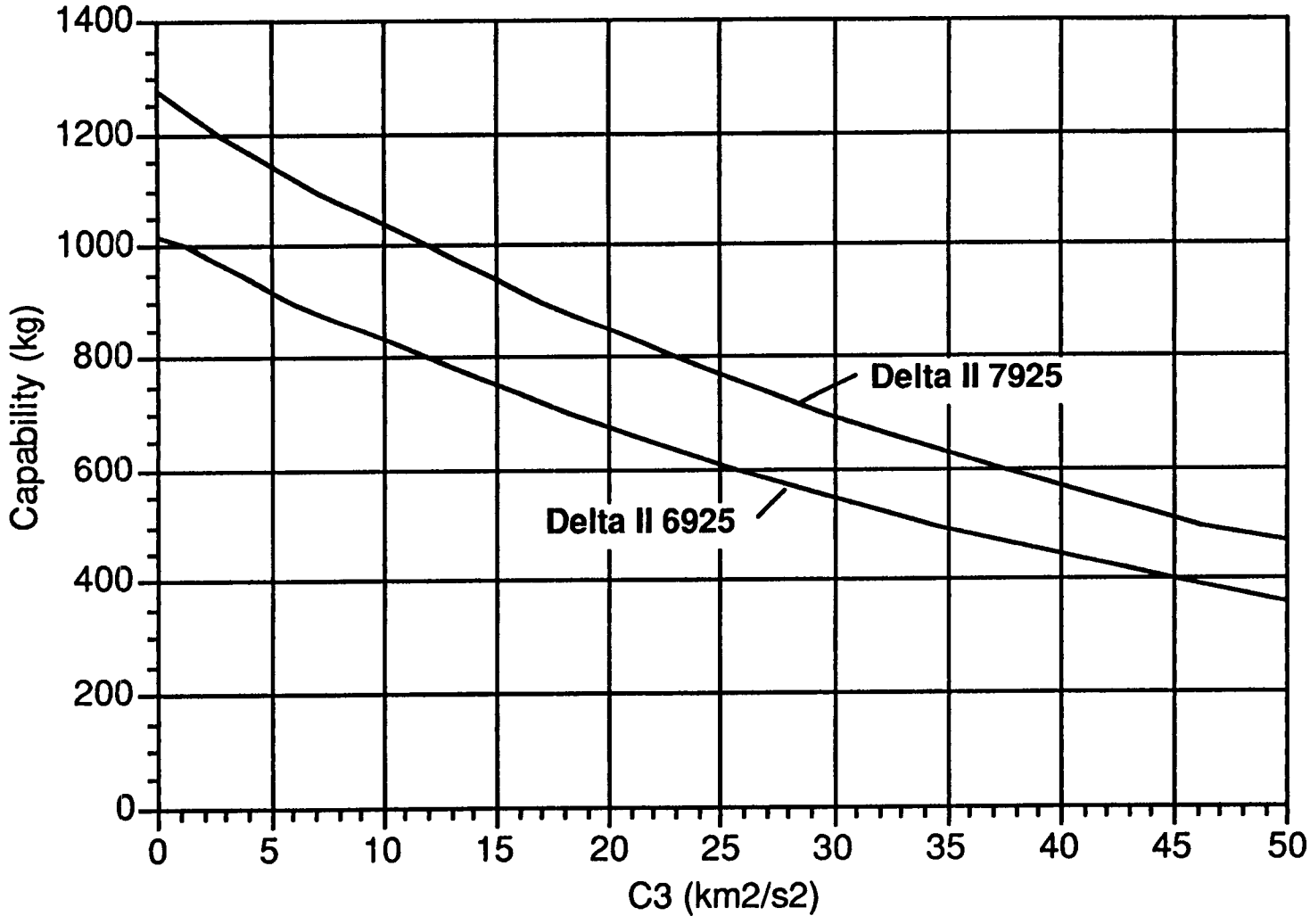


RJL: 3/15/94
CHART 4

# STOWED MUADEE SPACECRAFT
# (DELTA II 7925 10' SHROUD )

This chart shows that the Delta II 7925 with a 10' PLF (Shroud) can safely stow the MUADEE spacecraft.

# STOWED MUADEE SPACECRAFT
# (DELTA II 7925 10' SHROUD )

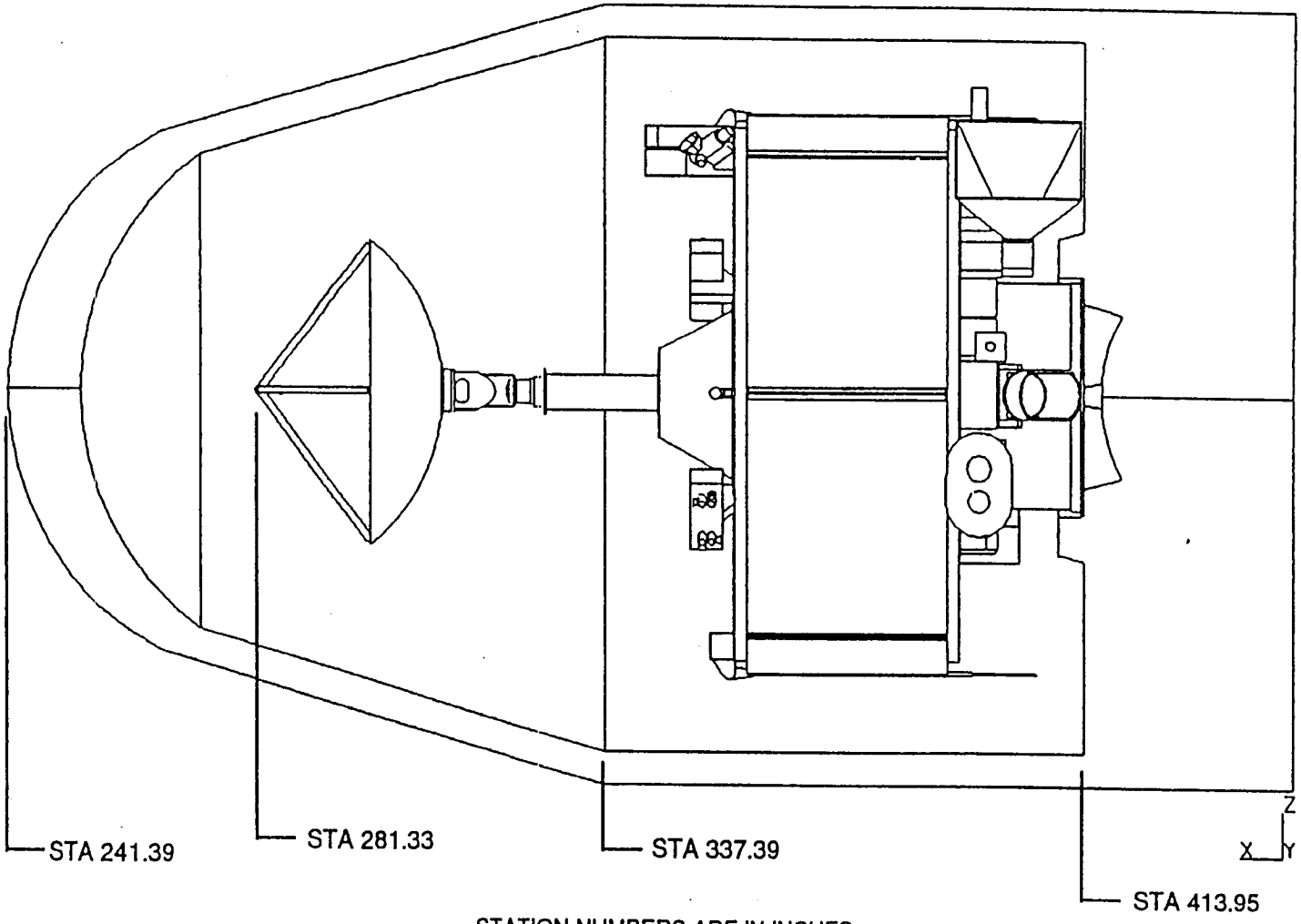


STATION NUMBERS ARE IN INCHES

RJL: 3/15/94
CHART 5

# LAUNCH VEHICLE TRADE SUMMARY

This chart shows a comparison of the launch vehicles considered in the areas of cost, performance capability and type of upper stage. The Delta II 7925 was the clear cost/performance leader.

# LAUNCH VEHICLE TRADE SUMMARY

| | ESTIMATED* PERF. (KG) | ESTIMATED COST ($M) | SPINNER | COMMENTS |
|---|---|---|---|---|
| ATLAS II | 1,500 | 70-80 | NO | |
| ATLAS I | 1,200 | 65-75 | NO | |
| DELTA 7925 | 1,025 | 45-50 | YES | USAF MLV, NASA MELV |
| LLV - 3 | 750 | 20-25 | YES | LLV - 1 FLIGHT NOV 19'94 |
| DELTA 7325 | 600 | 39-44 | YES | UNPROVEN CONFIGURATION |
| DELTA 7920 | 400 | 40-45 | NO | RESTARTABLE 2ND STAGE |
| TITAN IIG/PAD-D | 500 | 40-50(?) | YES | ETR UNAVAILABLE<br>UNPROVEN CONFIGURATION |

* PERFORMANCE FOR $C_3 = 12\ KM^2/S^2$

RJL: 3/15/94
CHART 6

# DELTA LAUNCH HISTORY
# 1960 TO JULY 1991

The success rate of the Delta launch vehicle family is 94.2% (194 out of 206) over the last 31 years. Over the last 14 years the success rate is 98.6% with 71 out of 72 launches being successful. Over the last 5 years the success rate is 100% with 28 out of 28 launches being successful. Over the 31 year lifetime of the Delta launch vehicle family continuous payload capability improvement has occurred .

# DELTA LAUNCH HISTORY
# 1960 TO JULY 1991

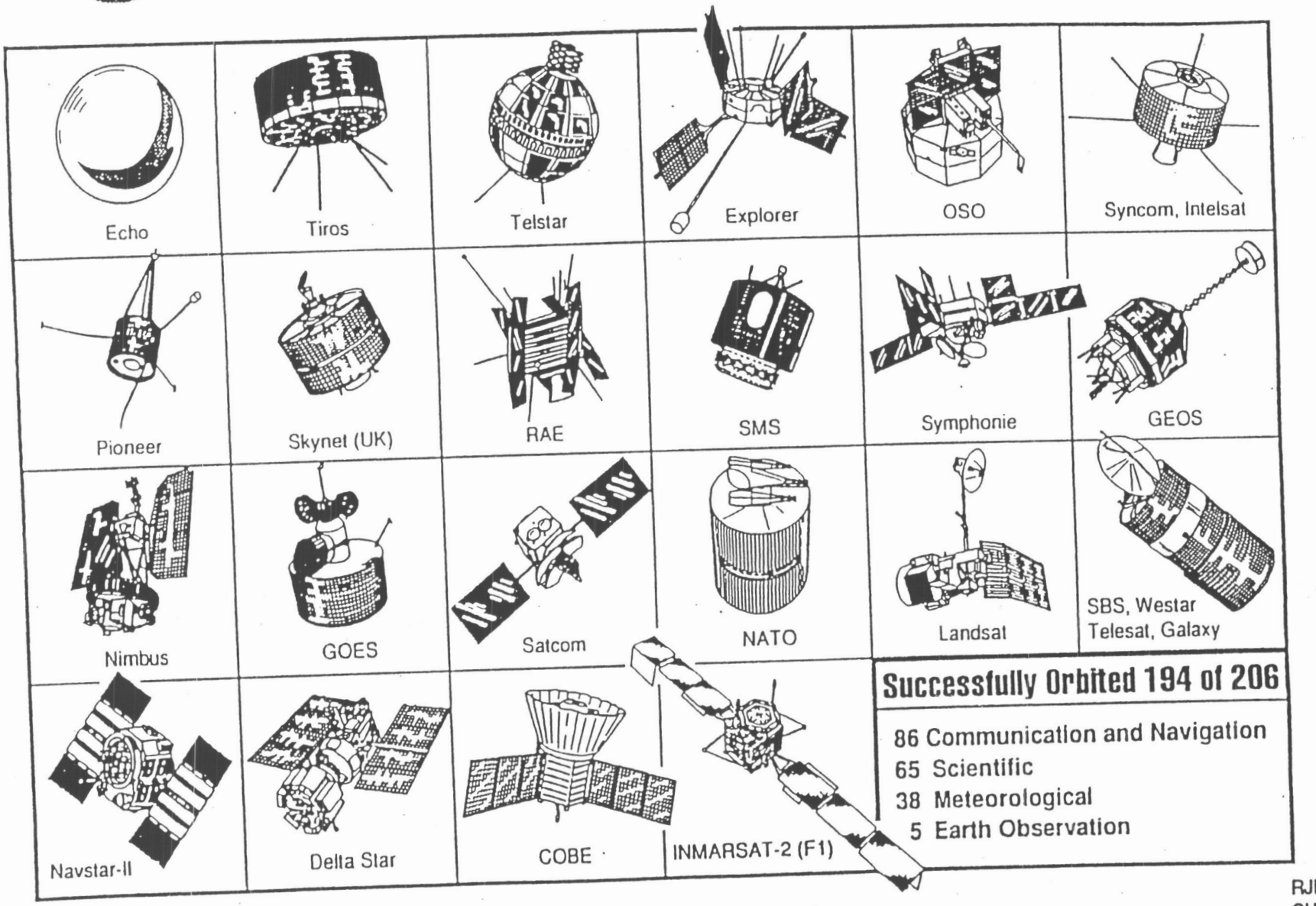


**Successfully Orbited 194 of 206**

- 86 Communication and Navigation
- 65 Scientific
- 38 Meteorological
- 5 Earth Observation

RJL: 3/15/94
CHART 7

# LAUNCH VEHICLE SELECTION

The Delta II 7925 was selected as the MUADEE launch vehicle due to its superior performance to cost ratio and high reliability.

# LAUNCH VEHICLE SELECTION

- DELTA II 7925 WITH 10' PAYLOAD FAINRING (PLF) SELECTED
  - PROVEN PERFORMANCE - USAF MLV
  - PERFORMANCE COMPATIBLE WITH MUADEE WEIGHT AND INTERPLANETARY TRAJECTORY DESIGN
  - MUADEE SPACECRAFT COMPATIBLE WITH PLF VOLUME
  - MODERATE COST
- ATLAS CLASS REJECTED
  - MORE PERFORMANCE THAN REQUIRED FOR MUADEE
  - HIGH COST
- LLV 3 REJECTED
  - INSUFFICIENT PERFORMANCE CAPABILITY
- DELTA II 7325 REJECTED
  - INSUFFICIENT PERFORMANCE CAPABILITY
- DELTA II 7920 REJECTED
  - INSUFFICIENT PERFORMANCE CAPABILITY
- TITAN II/PAM-D REJECTED
  - INSUFFICIENT PERFORMANCE CAPABILITY

RJL: 3/15/94
CHART 8

# DELTA II LAUNCH VEHICLE OVERVIEW

This chart shows an exploded view of the Delta II 7925. Note the Star 48 third stage.

# DELTA II LAUNCH VEHICLE OVERVIEW

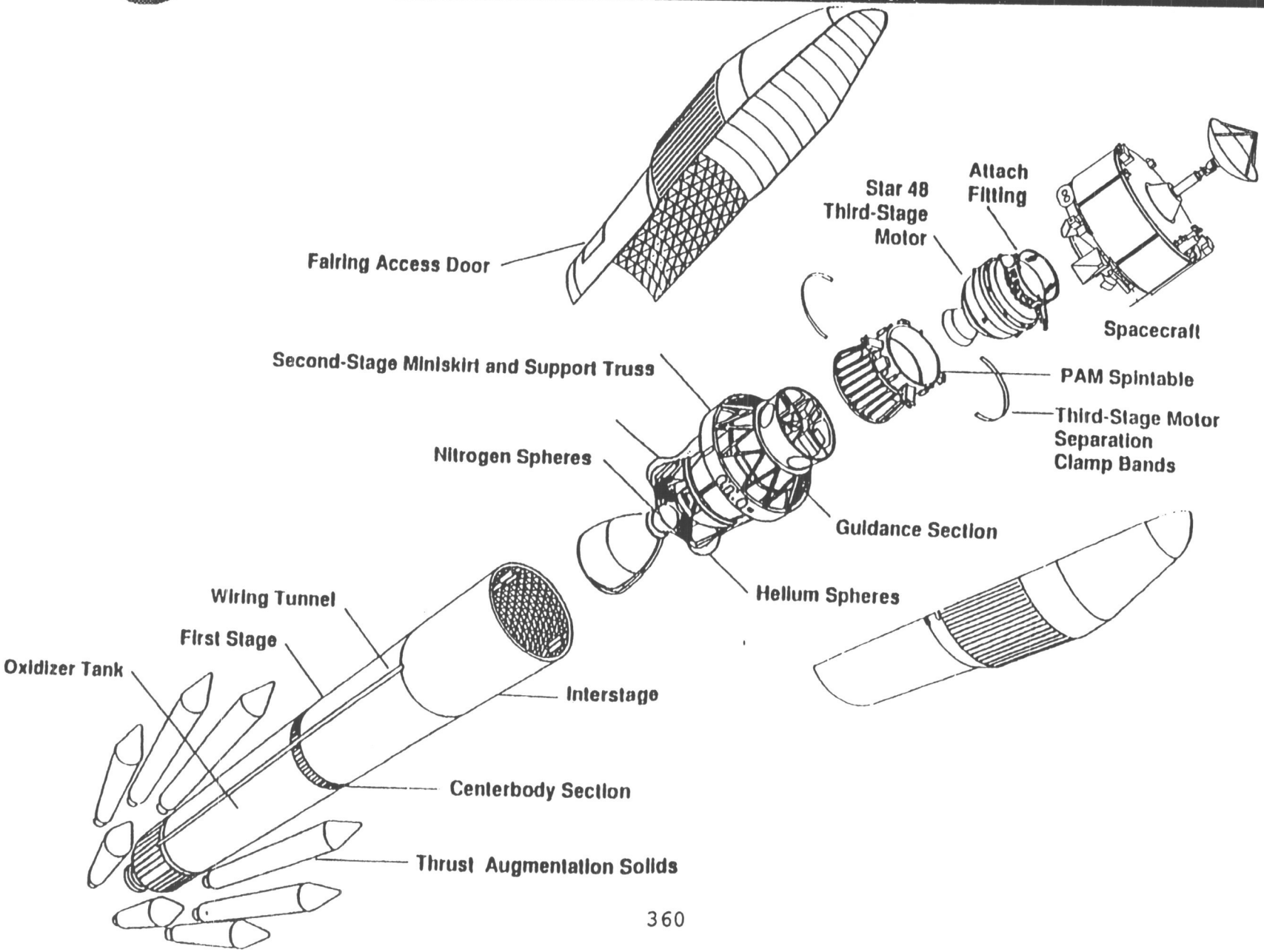

# DELTA/DELTA II LAUNCH VEHICLE CONFIGURATIONS

The Delta II 7925 launch vehicle has a core length of 126 ft and a diameter of 8 ft. The 7925 can use either the 9.5 ft or 10 ft fairing. Liftoff weight is 510,00 lb and the maximum dynamic pressure during flight is approximately 1,235 psi. The Booster propellants are 146,200 lb of Liquid oxygen (LOX) and 66,700 lb of RP-1. Nine Solid rocket motor strap-ons (GEMs) are used to augment the thrust of the booster. The GEMs are fired in a 6 + 3 sequence. The GEMs have 25,800 lb of QBJ-29 per motor. The second stage is a Aerojet ITIP engine that uses 4640 lb of Aerozine 50 and 8,759 lb of Nitrogen tetroxide to seperate approximately 10,000 lbf with an Isp of 320 seconds. The second stage has multiple restart capability. The third stage is a Star-48B and generates 15,000 lbf with an Isp of 290 seconds. The third stage is spin stabilized and is used for highly elliptical orbits, geo transfer orbits (GTO) and interplanetary missions.

# DELTA/DELTA II LAUNCH VEHICLE CONFIGURATIONS

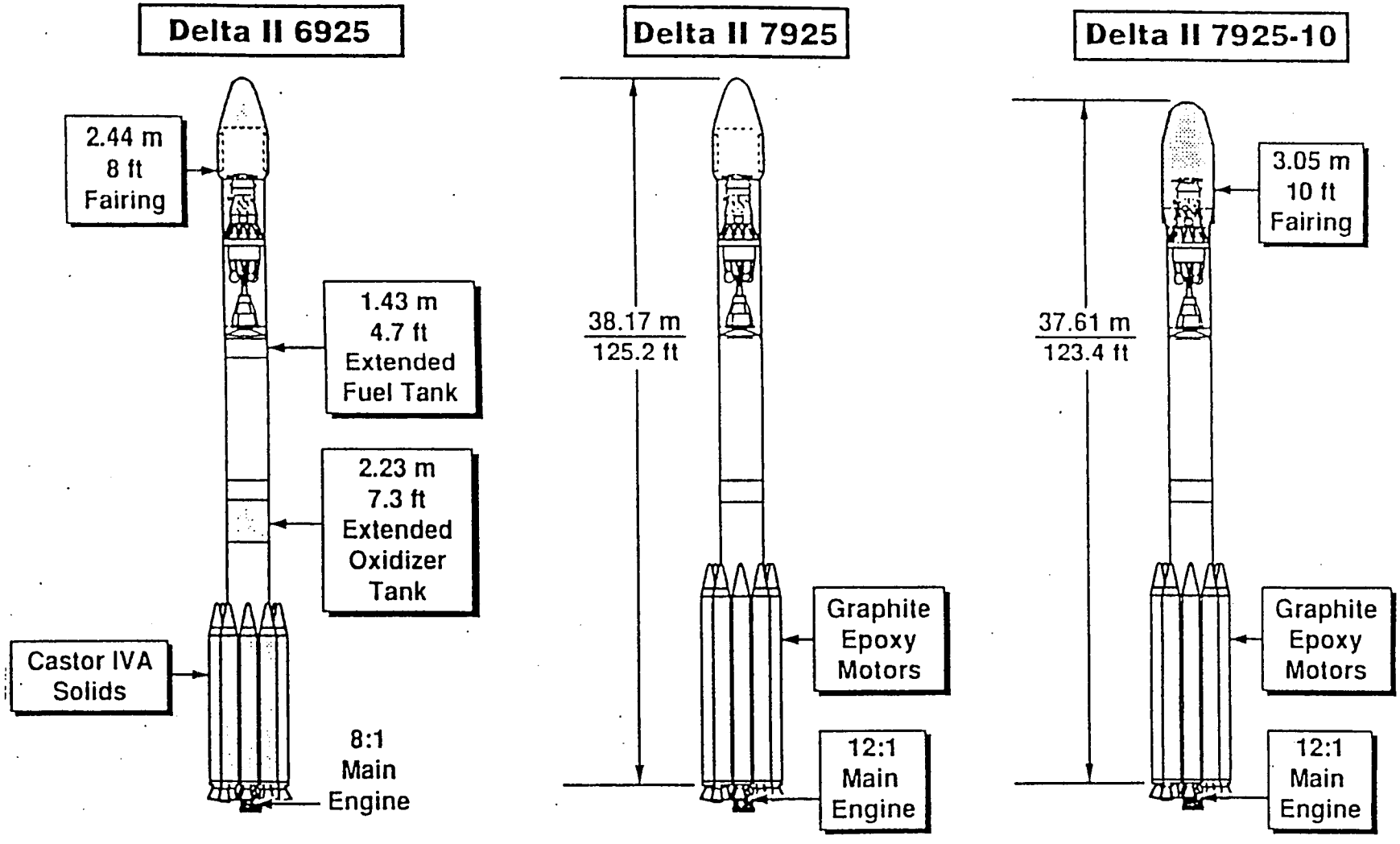


| | Delta II 6925 | Delta II 7925 | Delta II 7925-10 | |
|---|---|---|---|---|
| | 8780 (3983) | 11,110 (5039) | 10,840 (4917) | lb (kg) |
| | 3190 (1447) | 4010 (1819) | 3900 (1769) | |

RJL: 3/15/94
CHART 10

# TYPICAL DELTA II MISSION PROFILE

The spacecraft separation event is triggered by firing the separation bolts and 30 seconds later releasing the secondary latches . Typical tip-off rate is 0.25 degrees per second. The relative separation velocity supplied by the retro system is 1 ft/s. After separation additional evasive and depletion burns are performed to remove the stage from the vicinity of the spacecraft and the vehicle is safed. The sequence and burn geometry of the evasive and depletion burns are designed to minimize contamination potential with a baseline criteria of less than 10 A contamination.

# TYPICAL DELTA II MISSION PROFILE

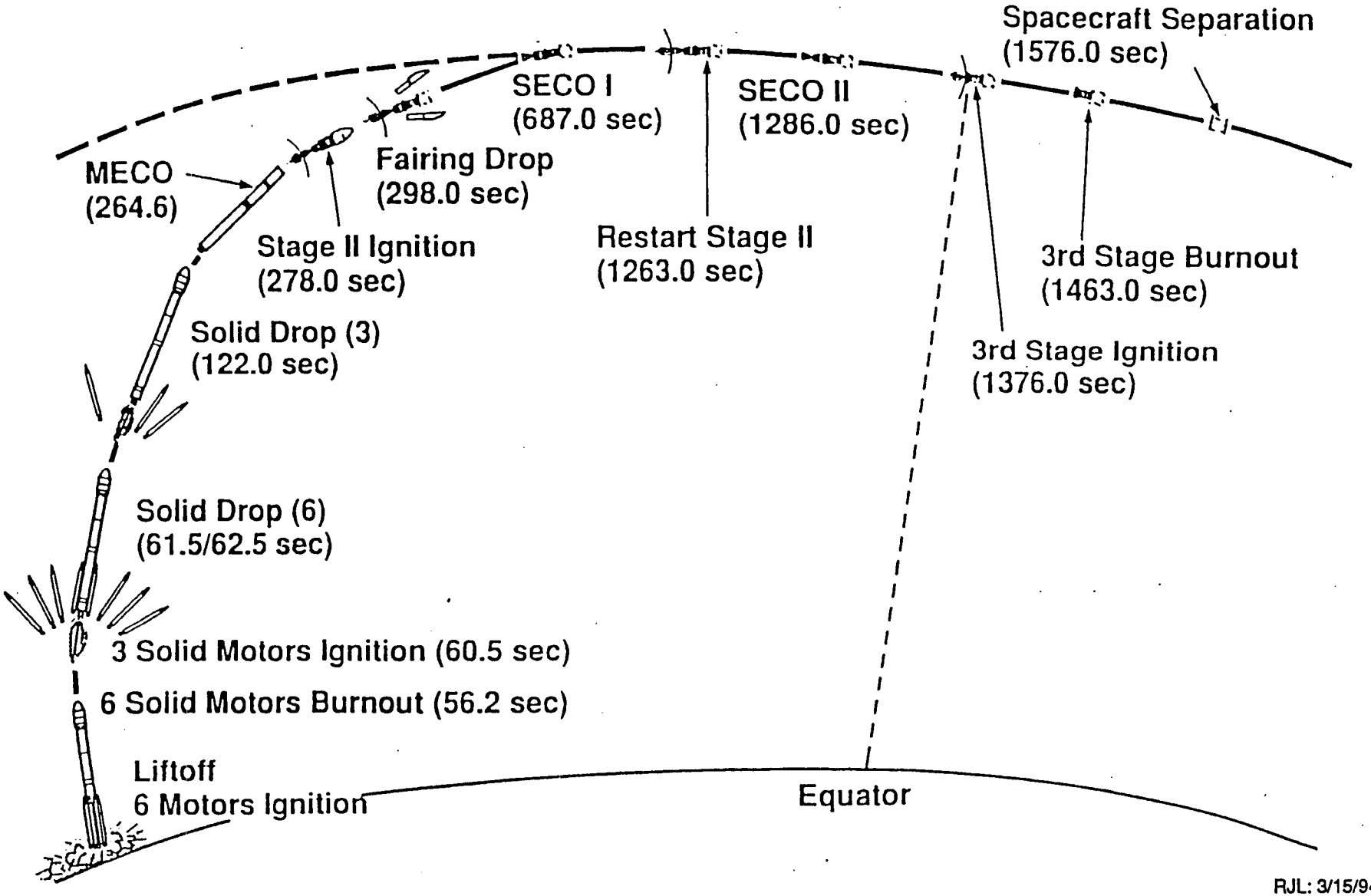


RJL: 3/15/94
CHART 11

# TYPICAL DELTA LAUNCH VEHICLE FLIGHT AZIMUTH RANGE RESTRICTIONS

For launch azimuth restrictions between 65 - 100 ° typical orbit inclinations are between 15 - 57 °. The inclination that the booster can achieve with maximum performance is equal to the pad latitude and is 28.5 °. The penalty for launching into orbits with an inclination less than the pad latitude is approximately 31.8 lb/deg. The penalty for launching into orbits with an inclination greater than the pad latitude is approximately 7.2 lb/deg.

# TYPICAL DELTA LAUNCH VEHICLE FLIGHT AZIMUTH RANGE RESTRICTIONS

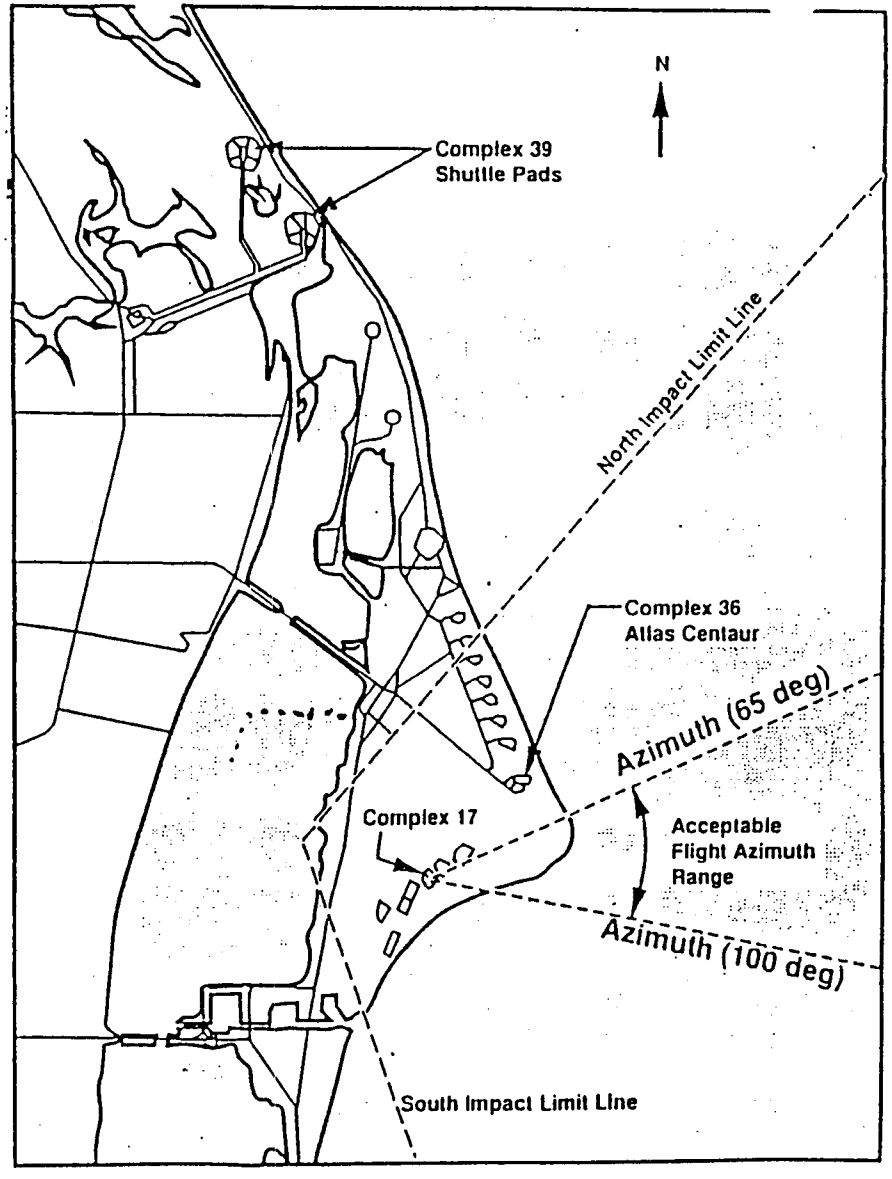


RJL: 3/15/94
CHART 12

# DELTA II 7925 LAUNCH VEHICLE

RJL: 3/15/94
CHART 1

# DELTA LAUNCH HISTORY
# 1960 TO JULY 1991

The success rate of the Delta launch vehicle family is 94.2% (194 out of 206) over the last 31 years. Over the last 14 years the success rate is 98.6% with 71 out of 72 launches being successful. Over the last 5 years the success rate is 100% with 28 out of 28 launches being successful. Over the 31 year lifetime of the Delta launch vehicle family continuous payload capability improvement has occurred .

# DELTA LAUNCH HISTORY
# 1960 TO JULY 1991

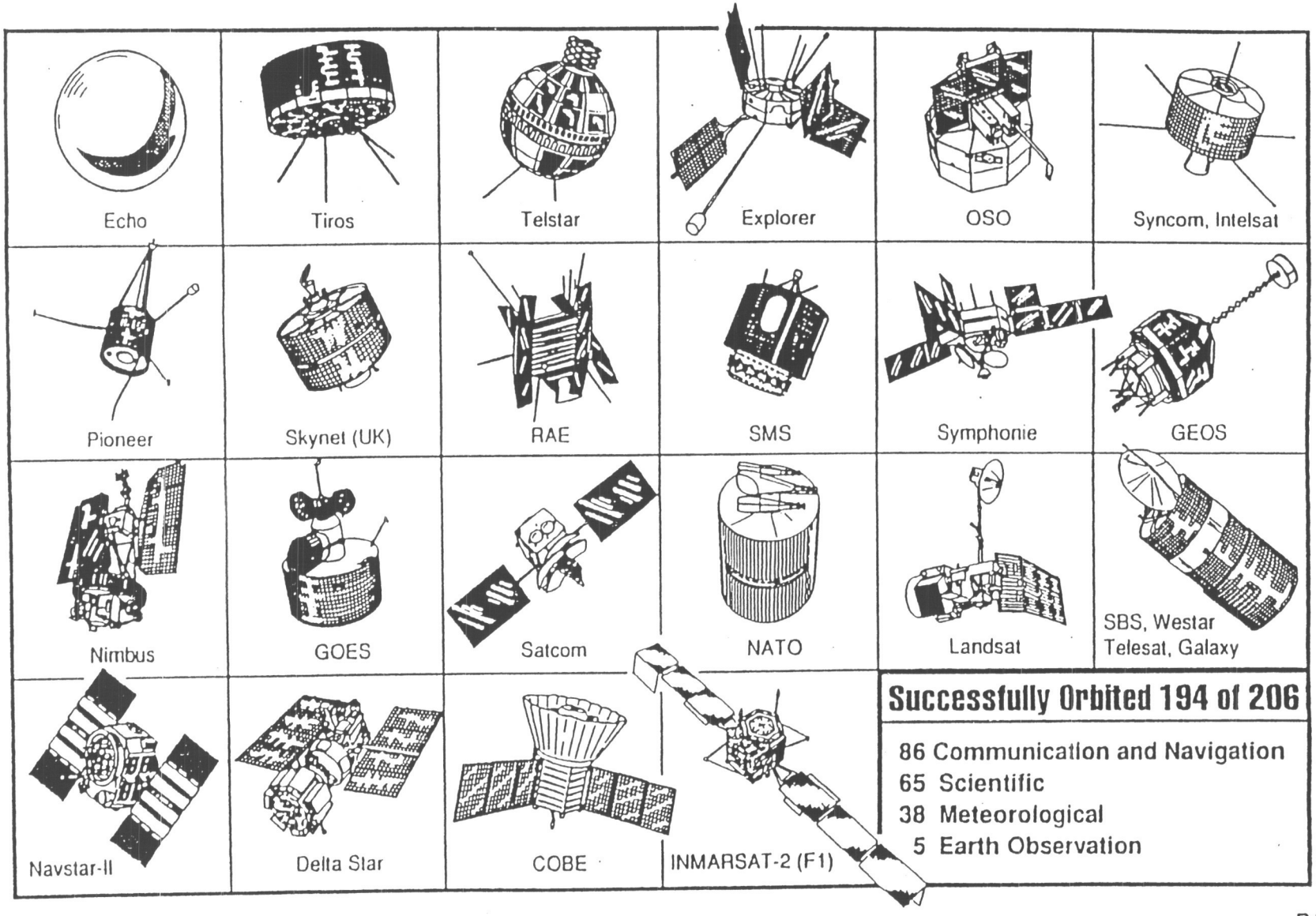


**Successfully Orbited 194 of 206**

86 Communication and Navigation
65 Scientific
38 Meteorological
5 Earth Observation

RJL: 3/15/94
CHART 2

# MEDIUM EXPENDABLE LAUNCH VEHICLE SERVICES (MELVS)

NASA and Delta have a medium expendable launch vehicle services (MELVS) contract that covers a period of performance from November 1990 to May 1998. The contract is for launch services including mission integration and allows NASA to exercise up to three launch services options each year. The contract includes provisions for launches from Vandenberg Air Force Base,WSMC (SLC-2W) or Cape Canaveral, ESMC (Complex 17), 9.5 ft or 10 ft fairings. This chart shows the agreements between Delta and government agencies that are covered by the MELVs contract.

# MEDIUM EXPENDABLE LAUNCH VEHICLE SERVICES (MELVS)

**NASA HQ/USAF HQ Government Umbrella Agreement**

**NASA HQ/MDC Agreement**

**NASA GSFC/MDC GSTDN Network Support**
Subagreement

- TM Data Acquisition
- Real Time Mission Monitoring
- AOS Predictions
- NASCOM Support
- Optional (Mission Peculiar)

**NASA KSC/MDC Spacecraft & Upper Stage Processing**
Subagreement

- Spacecraft Processing
- Upperstage Processing
- PRD/OR/RD Support (S/C)
- RFA Support (S/C)
- Cargo Handling Services
- AE Telemetry Station and Mission Directors Center

**USAF/MDC USAF Agreement**

**USAF ESMC/MDC Commercial Delta II Program Introduction**
PI&UDS

- Base Support
- Launch Support
- Co-shared Facilities
- Range Services
- Downrange Tracking
- Facilities/Coverage
- Base Services

**ESMC/WSMC MDSSC**
Joint Operating Procedure

- Operation of Commercial Delta on CCAFS/VAFB

**Other Agreements**
(Non-Government)

**MDSSC Upper Stage & Spacecraft Processing Facilities & Support**
Subcontract

- Upper Stage Processing
- Spacecraft Processing

Legend:
In process
Signed

RJL: 3/15/94
CHART 3

# DELTA/DELTA II LAUNCH VEHICLE CONFIGURATIONS

The Delta II 7925 launch vehicle has a core length of 126 ft and a diameter of 8 ft. The 7925 can use either the 9.5 ft or 10 ft fairing. Liftoff weight is 510,00 lb and the maximum dynamic pressure during flight is approximately 1,235 psi. The Booster propellants are 146,200 lb of Liquid oxygen (LOX)and 66,700 lb of RP-1. Nine Solid rocket motor strap-ons (GEMs) are used to augment the thrust of the booster. The GEMs are fired in a 6 + 3 sequence. The GEMs have 25,800 lb of QBJ-29 per motor. The second stage is a Aerojet ITIP engine that uses 4640 lb of Aerozine 50 and 8,759 lb of Nitrogen tetroxide to generate approximately 10,000 lbf with an Isp of 320 seconds. The second stage has multiple restart capability. The third stage is a Star-48B and generates 15,000 lbf with an Isp of 290 seconds. The third stage is spin stabilized and is used for highly elliptical orbits, geo transfer orbits (GTO) and interplanetary missions.

# DELTA/DELTA II LAUNCH VEHICLE CONFIGURATIONS

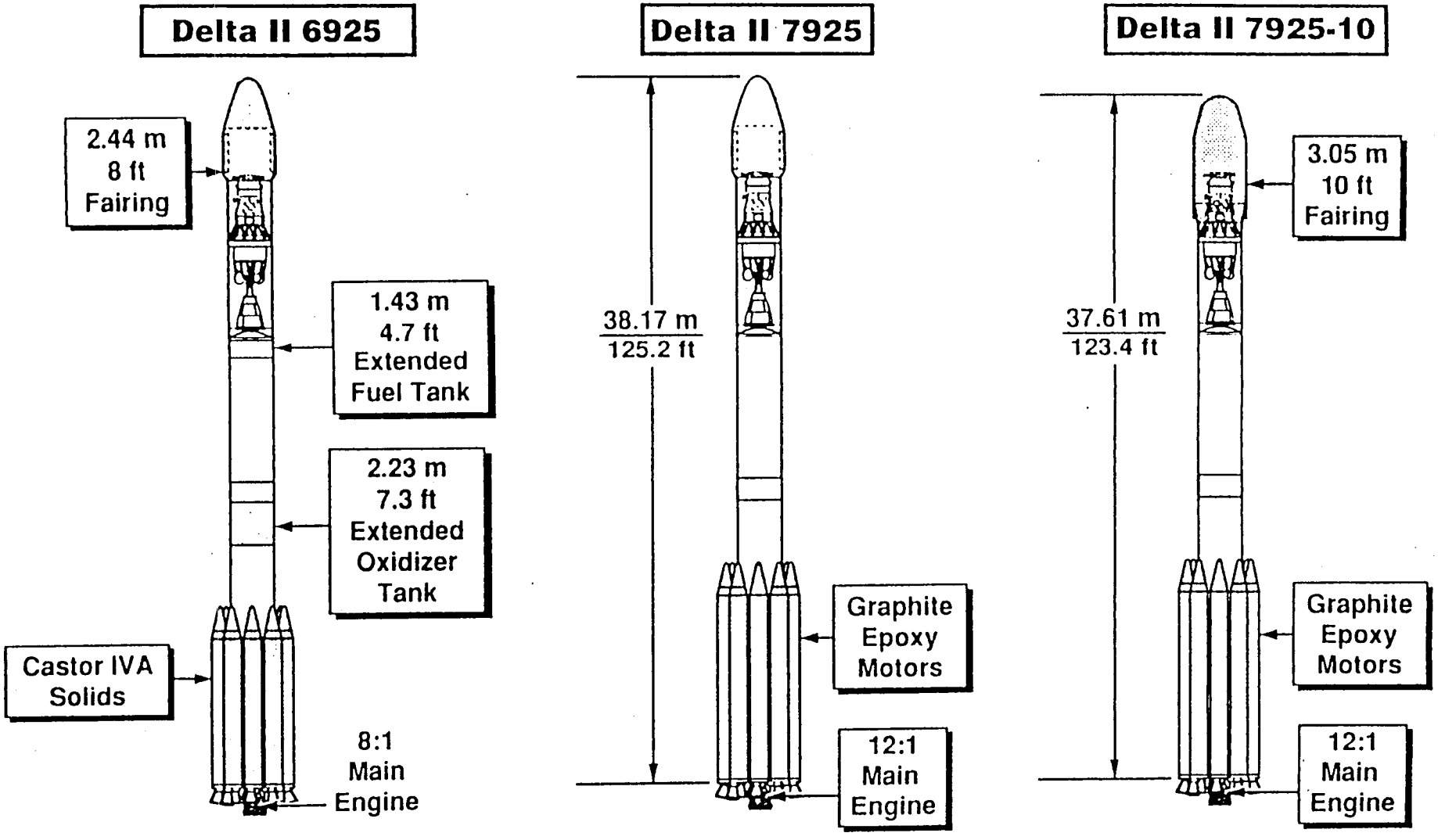


| | Delta II 6925 | Delta II 7925 | Delta II 7925-10 |
|---|---|---|---|
| lb (kg) | 8780 (3983) | 11,110 (5039) | 10,840 (4917) |
| lb (kg) | 3190 (1447) | 4010 (1819) | 3900 (1769) |

RJL: 3/15/94
CHART 4

# DELTA II 7925 PERFORMANCE CAPABILITY

This chart shows the performance capability for the Delta II 6925 and 7925. The data shown is for a 28.5° orbit. Typical Mars missions require a $C_3$ (square of the hyperbolic excess velocity) of 10 - 12 $km^2/s^2$. For a $C_3$ of 12 $km^2/s^2$ the payload capability is 1,025 kg.

# DELTA II 7925 PERFORMANCE CAPABILITY

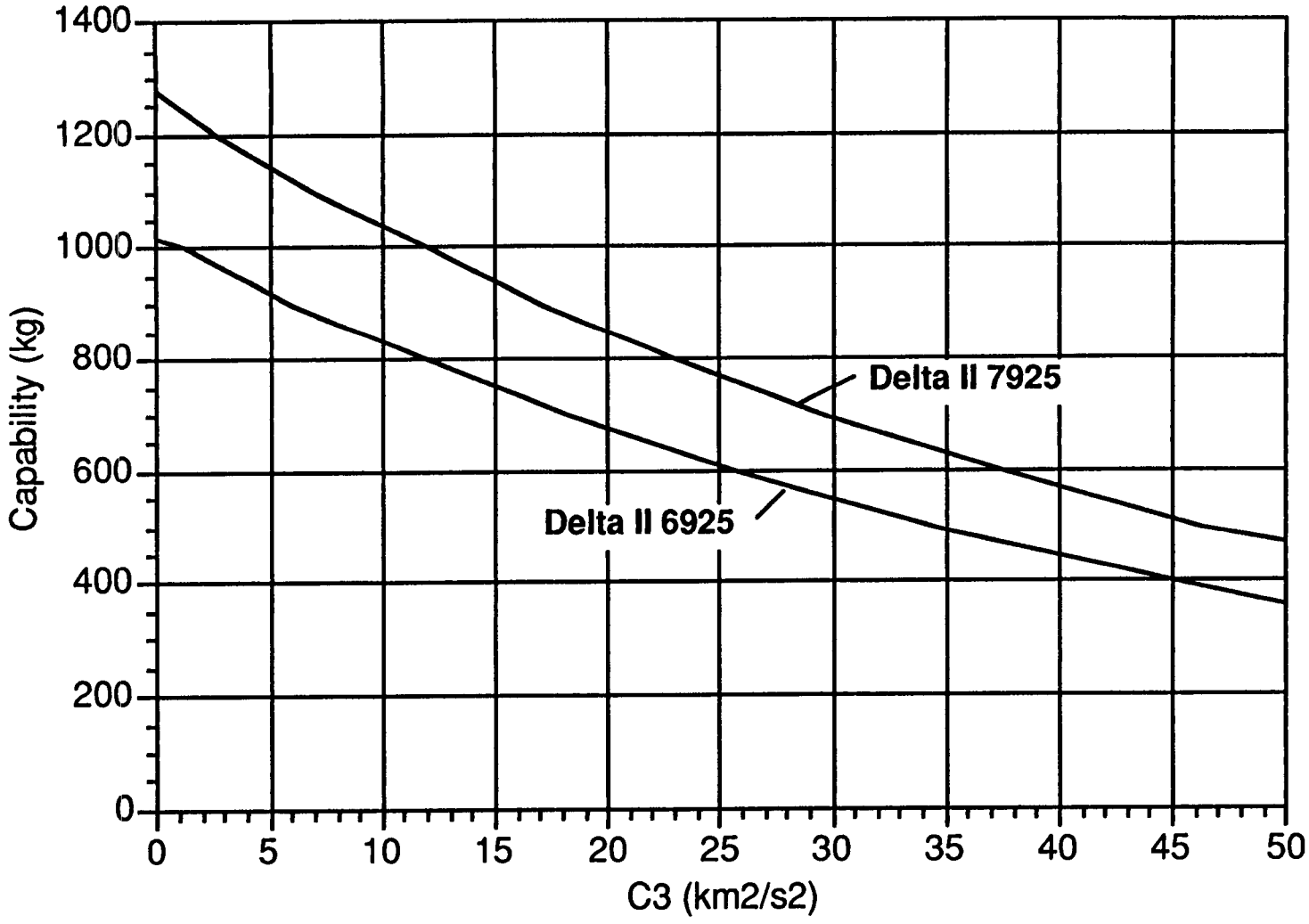


RJL: 3/15/94
CHART 5

# TYPICAL DELTA II MISSION PROFILE

The spacecraft separation event is triggered by firing the separation bolts and 30 seconds later releasing the secondary latches . Typical tip-off rate is 0.25 degrees per second. The relative separation velocity supplied by the retro system is 1 ft/s. After separation additional evasive and depletion burns are performed to remove the stage from the vicinity of the spacecraft and the vehicle is safed. The sequence and burn geometry of the evasive and depletion burns are designed to minimize contamination potential with a baseline criteria of less than 10 A contamination.

# TYPICAL DELTA II MISSION PROFILE

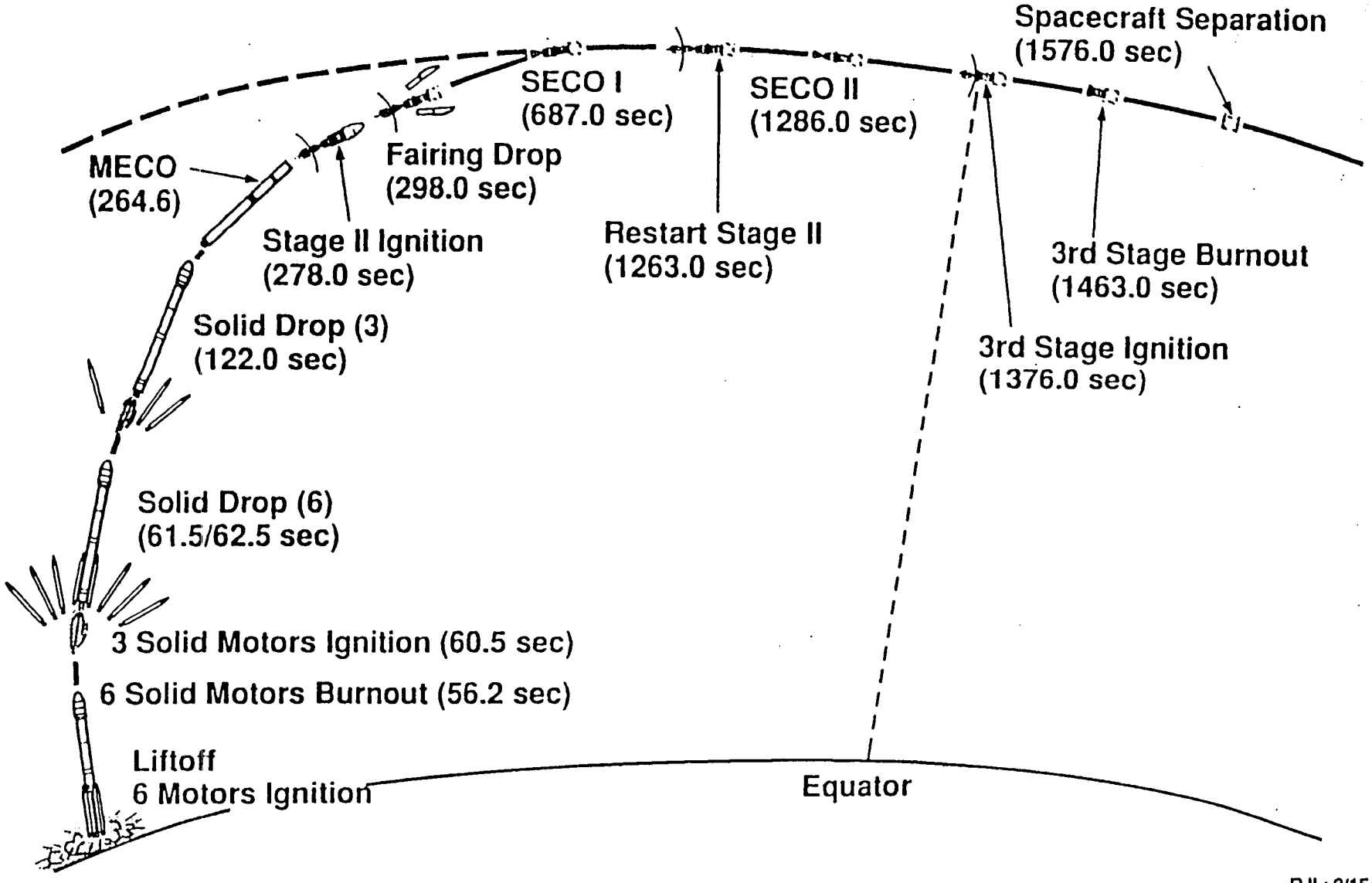


RJL: 3/15/94
CHART 6

# MISSION ORBIT ACCURACY

The mission orbit accuracy is a function of the spin rate of the upper stage. The faster the spin rate the better the accuracy.

# MISSION ORBIT ACCURACY

THREE-STAGE ORBIT ACCURACY

- DOMINATED BY UNGUIDED THIRD-STAGE
- ACCURACY A FUNCTION OF ORBIT ALTITUDE AND INCLINATION
- SPACECRAFT REQUIRED SPIN-RATE AND MASS PROPERTIES ALSO AFFECT ACCURACY
  - HIGH SPIN, HIGH ROLL INERTIA RESULTS IN REDUCED VELOCITY POINTING ERROR
  - LOW SPIN, LOW ROLL INERTIA RESULTS IN HIGH VELOCITY POINTING ERROR
  - TYPICAL RANGE 1.0 TO 2.5 DEG

RJL: 3/15/94
CHART 7

# TYPICAL DELTA LAUNCH VEHICLE FLIGHT AZIMUTH RANGE RESTRICTIONS

For launch azimuth restrictions between 65 - 100 ° typical orbit inclinations are between 15 - 57 °. The inclination that the booster can achieve with maximum performance is equal to the pad latitude and is 28.5 °. The penalty for launching into orbits with an inclination less than the pad latitude is approximately 31.8 lb/deg. The penalty for launching into orbits with an inclination greater than the pad latitude is approximately 7.2 lb/deg.

# TYPICAL DELTA LAUNCH VEHICLE FLIGHT AZIMUTH RANGE RESTRICTIONS

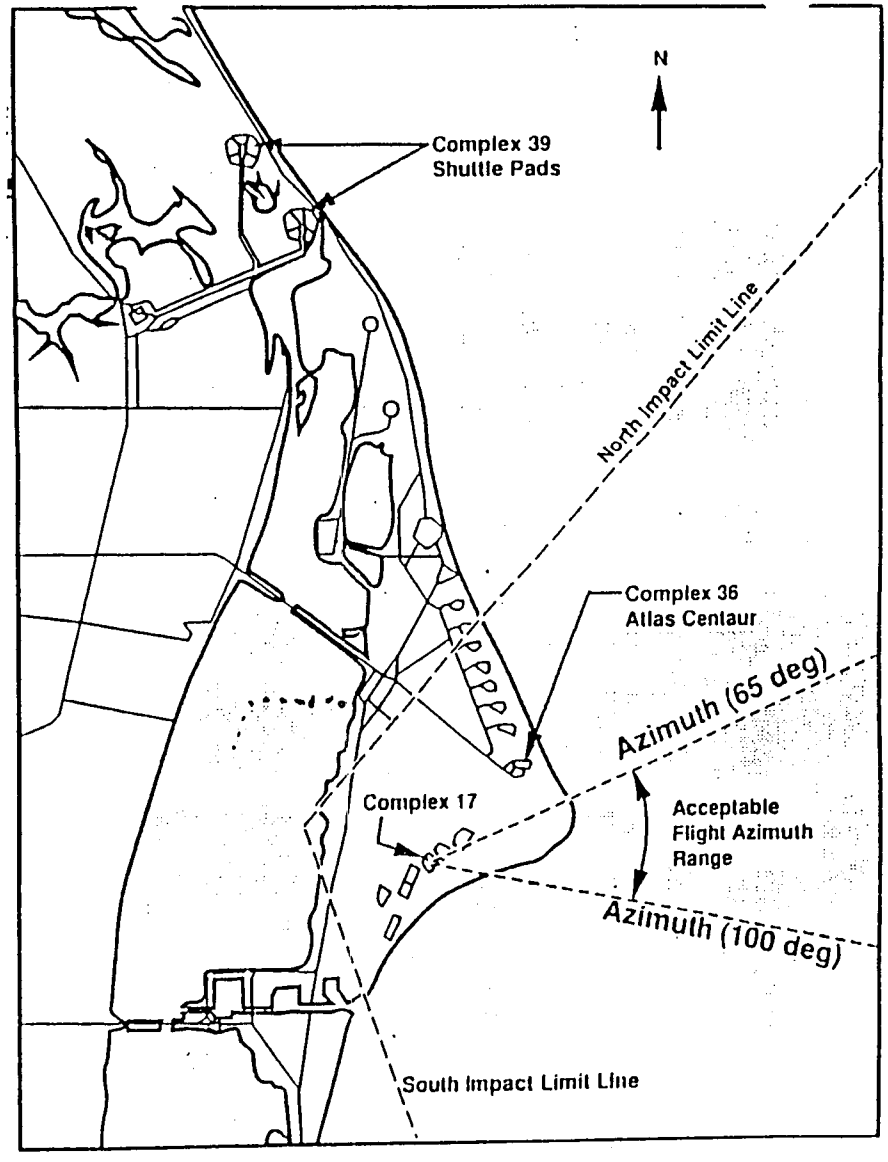


RJL: 3/15/94
CHART 8

# MISSION INTEGRATION DOCUMENTATION

This chart shows the interaction between the spacecraft contractor and the Delta launch vehicle. Technical interchange meetings (TIMs) are used to transfer information between the spacecraft contractor and the Delta launch vehicle. This process is defined on the next chart which shows a typical integration planning schedule.

# MISSION INTEGRATION DOCUMENTATION

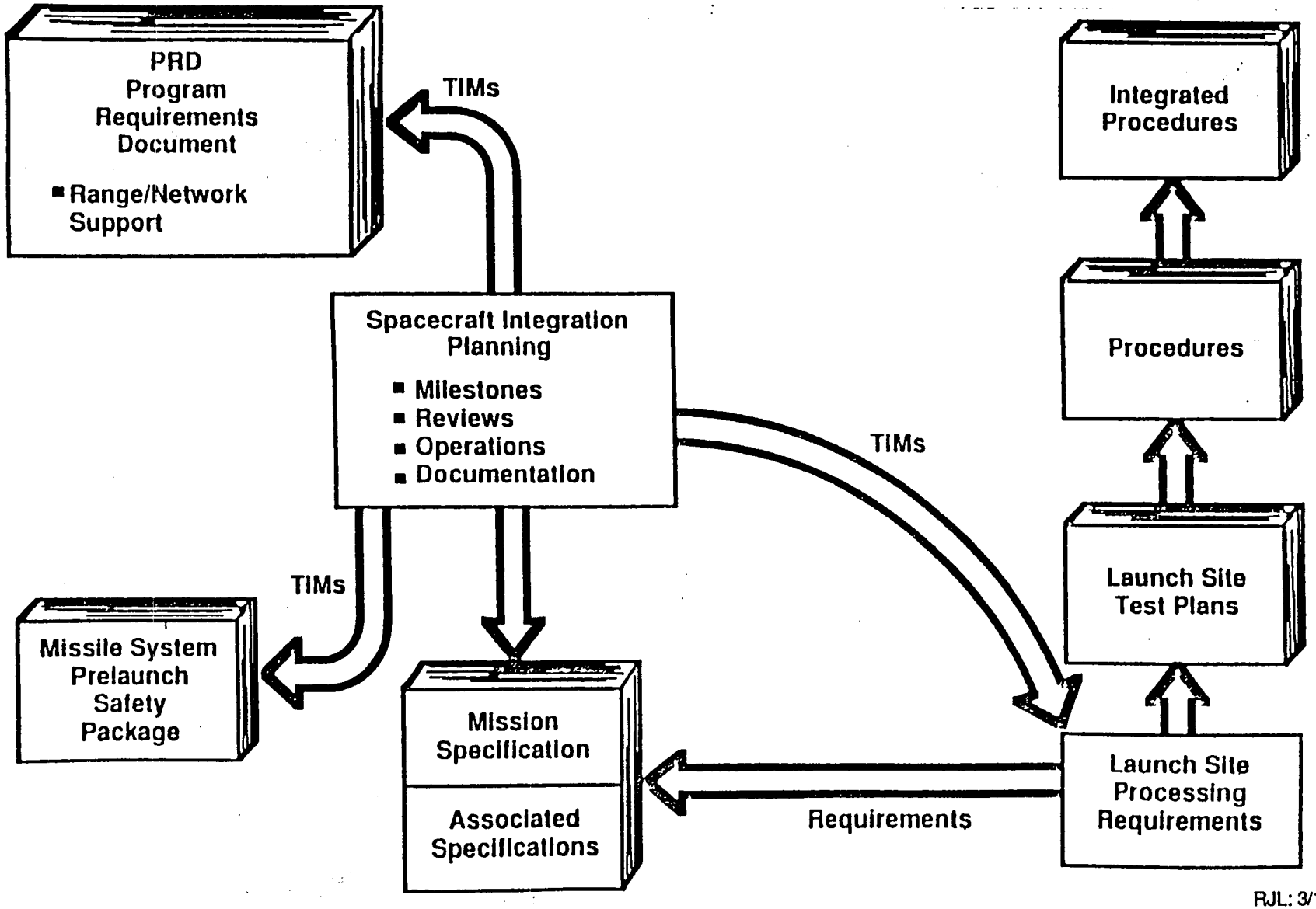


RJL: 3/15/94
CHART 9

# TYPICAL INTEGRATION PLANNING SCHEDULE

This chart shows the responsible agency and the milestones required from L-104 weeks to launch. Note the extensive documentation required from the spacecraft contractor.

# TYPICAL INTEGRATION PLANNING SCHEDULE

| Agency | Milestones | Weeks (100 90 80 70 60 50 40 30 20 10 0) |
|---|---|---|
| Spacecraft | Spacecraft Questionnaire | L-104 |
| Spacecraft | Spacecraft Mathematical Models | L-90 |
| Spacecraft | Spacecraft Environment Test Document | L-84 |
| Delta | Mission Specification-Initial (Interface Control Document) | L-84 |
| Spacecraft | Spacecraft Drawings | L-78 |
| Spacecraft | Spacecraft Blockhouse Wiring Requirements | L-60 |
| Spacecraft | Spacecraft Missile System Prelaunch Safety Package (MSPSP) (Safety Documentation) | L-58 |
| Spacecraft | Radio Frequency Application (RFA) | L-58 |
| Spacecraft | Preliminary Mission Analysis (PMA) Requirements | L-54 |
| Spacecraft | Spacecraft Payload Requirements Document (PRD) Input | L-52 |
| Spacecraft | Mission Specification Comments | L-78 |
| Delta | Launch Vehicle MSPSP | L-54 |
| Spacecraft | Fairing Requirements | L-60 |
| Delta | Coupled Dynamic Loads Analysis | L-68 |
| Delta | Spacecraft Blockhouse Wiring Diagram | L-50 / Final L-24 |
| Spacecraft | Spacecraft Blockhouse Wiring Review | L-40 |
| Spacecraft | Launch Vehicle Insignia | L-39 |
| Delta | Preliminary Mission Analysis (Prelim Trajectory) | L-44 |
| Spacecraft | Launch Window (Initial/Final) | L-38 / Final L-4 |

Launch

RJL: 3/15/94
CHART 10

# DELTA II OPERATIONAL FLOW

This chart shows the flow of Delta launch vehicle hardware from manufacture to assembly and launch at ESMC Florida.

# DELTA II OPERATIONAL FLOW

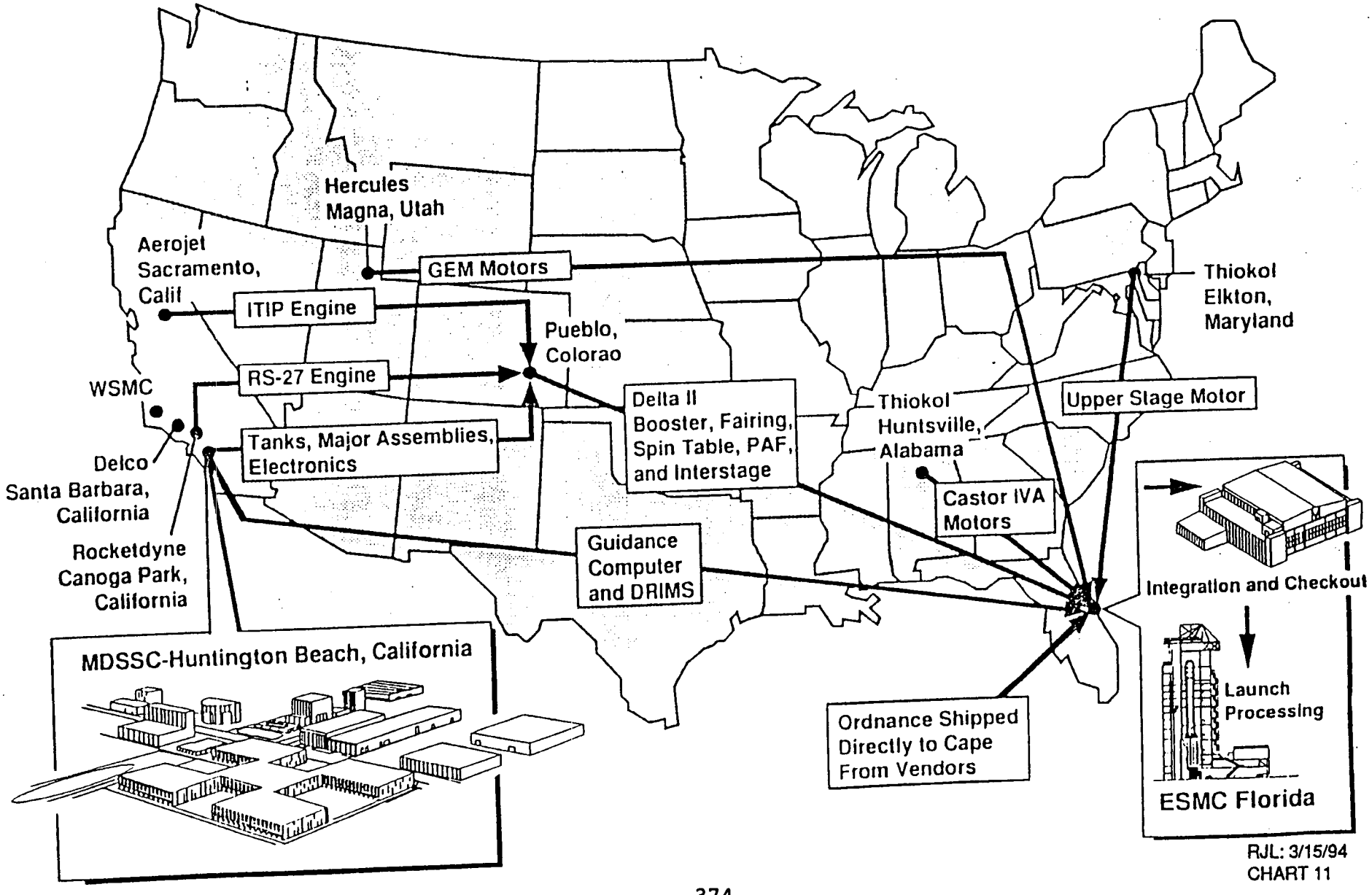


RJL: 3/15/94
CHART 11

# STANDARD PAYLOAD ATTACH FITTINGS

The 6303 PAF features a one-piece ring providing uniform load distribution. The primary separation system is a clampband assembly consisting of a 4 segment clamp that separates in 2 places. The 6303 can handle a 7,700 lb preload. Separation switch pads can be provided across the interface plane. The 6019 and 6915 PAF feature four discrete mate points to the spacecraft. Four explosively actuated separation nut assemblies are used. The 6915 also utilizes a secondary latch system that allows stabilization of the spacecraft on the attach fitting. The 6915 PAF has typical tip-off rates of 0.25 degrees per second or less.

# STANDARD PAYLOAD ATTACH FITTINGS

6019

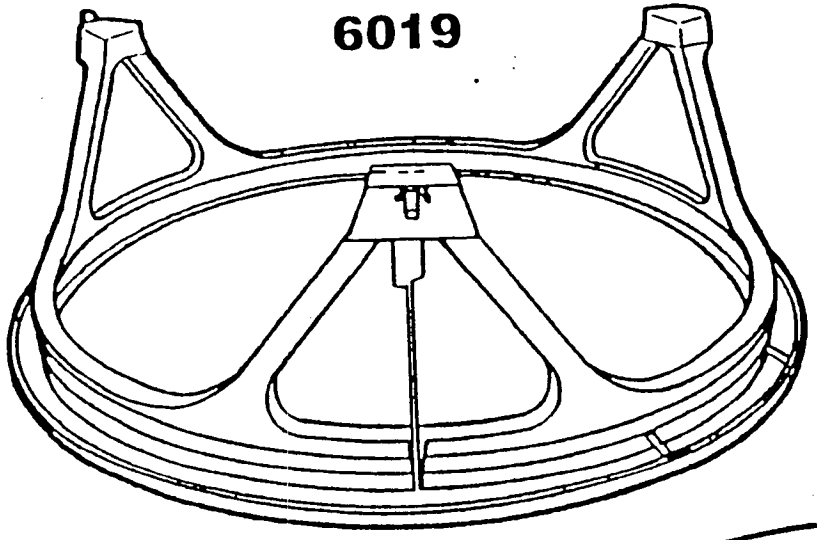

6915

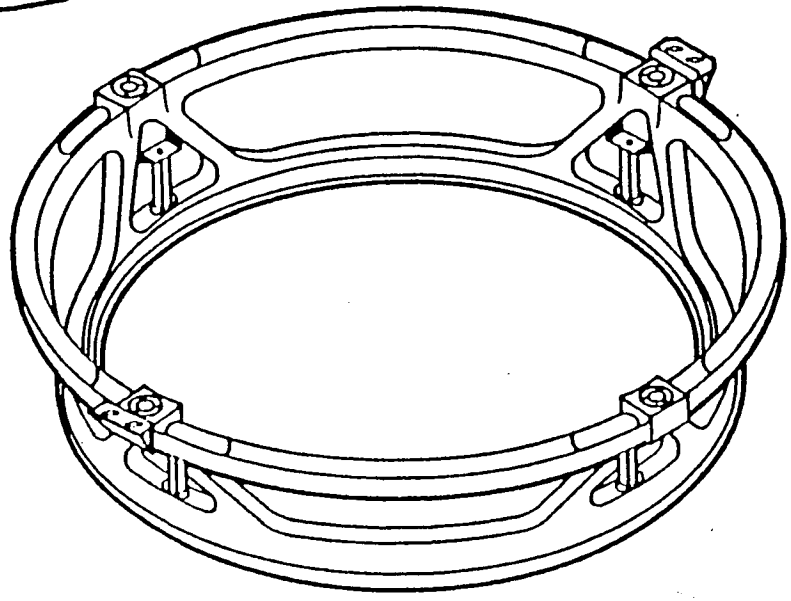

6306

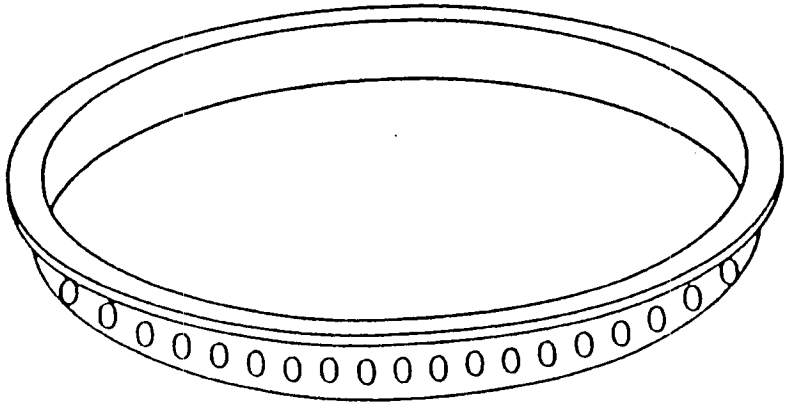

RJL: 3/15/94
CHART 12

# SPACECRAFT ENVELOPE BELOW SEPARATION PLANE

Projections of spacecraft appendages below the spacecraft separation plane may be permitted, but must be coordinated with the Delta program office.

# SPACECRAFT ENVELOPE BELOW SEPARATION PLANE

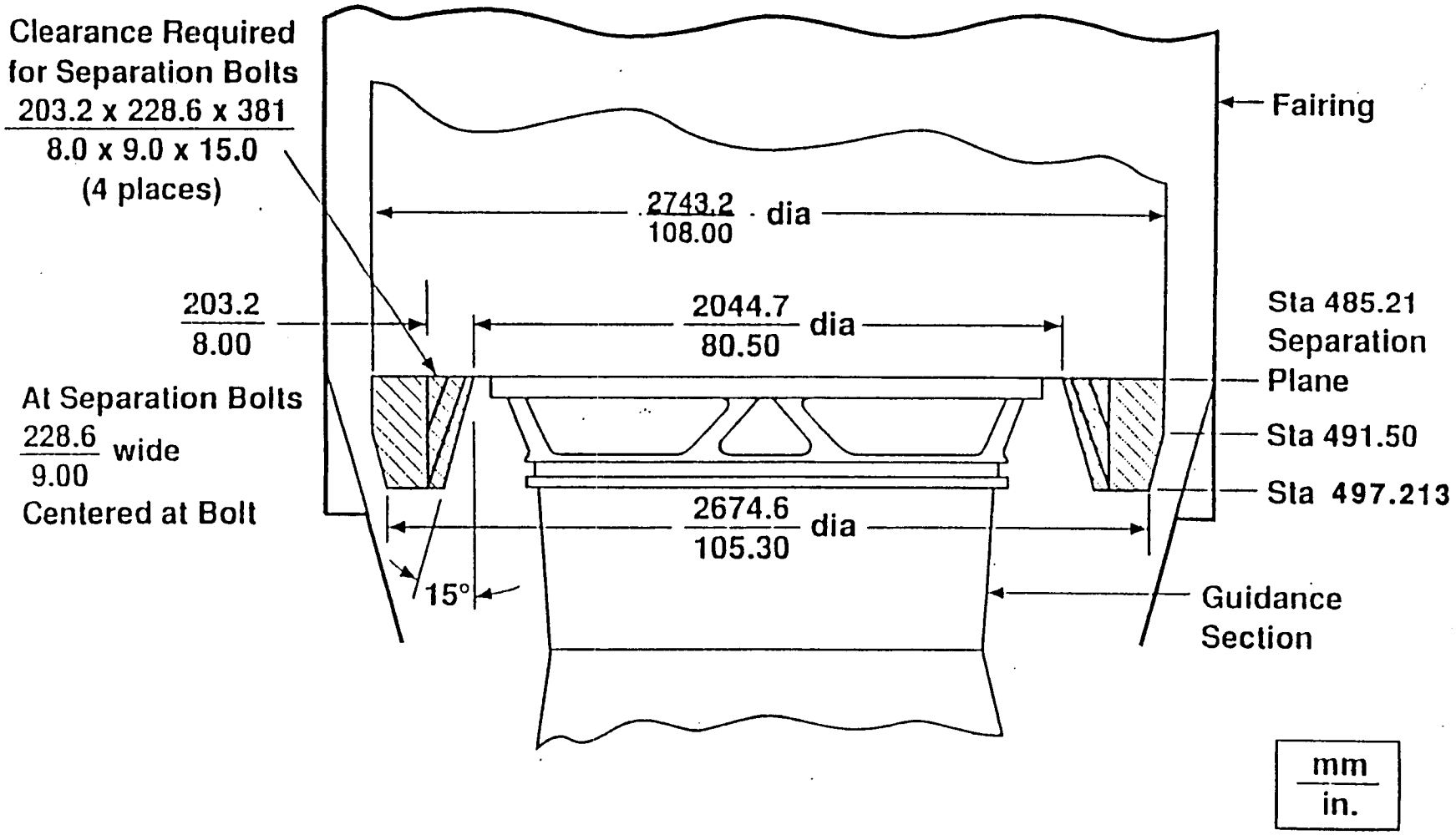




RJL: 3/15/94
CHART 13

# SPACECRAFT ENVIRONMENT AND LOADS

The next several charts will highlight important requirements relating to spacecraft environment and loads.

# SPACECRAFT ENVIRONMENT AND LOADS

- DYNAMIC ENVIRONMENTS
  - ACOUSTICS
  - SINUSOIDAL VIBRATION
  - SHOCK
- STRUCTURAL LOADS
- COUPLED DYNAMIC RESPONSE ANALYSIS
- THERMAL ENVIRONMENTS

RJL: 3/15/94
CHART 14

# ACOUSTIC ENVIRONMENT

Maximum acoustics environment occurs during liftoff and transonic flight. The acoustic environment is defined in the following plot and table for the 10 ft fairing. Results for the 9.5 ft fairing are nearly identical.

# ACOUSTIC ENVIRONMENT

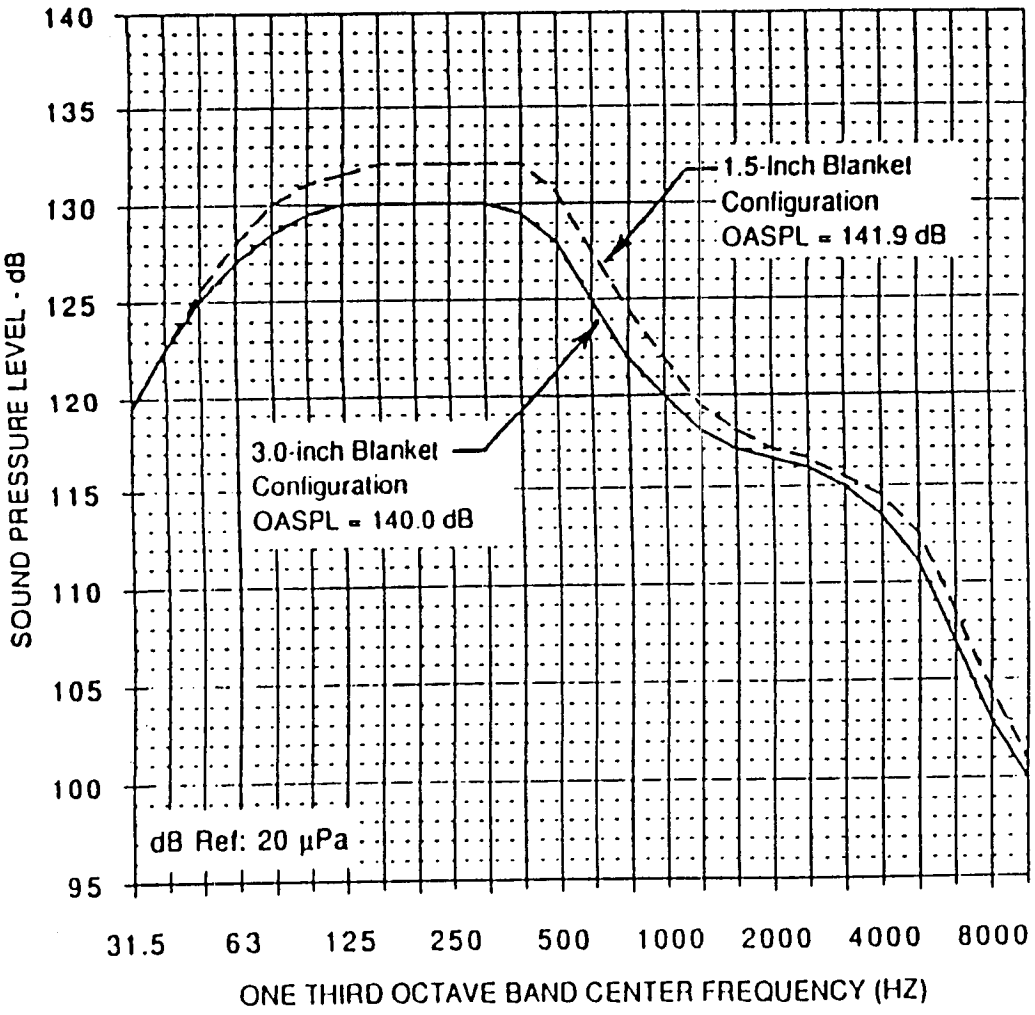


| One-Third Octave Center Frequency (Hz) | 1.5-In. Blanket Configuration (dB) | 3.0-In. Blanket Configuration (dB) |
|---|---|---|
| 31.5 | 119.5 | 119.5 |
| 40 | 122.5 | 122.5 |
| 50 | 125.5 | 125.0 |
| 63 | 128.0 | 127.0 |
| 80 | 130.0 | 128.5 |
| 100 | 131.0 | 129.5 |
| 125 | 131.5 | 130.0 |
| 160 | 132.0 | 130.0 |
| 200 | 132.0 | 130.0 |
| 250 | 132.0 | 130.0 |
| 315 | 132.0 | 130.0 |
| 400 | 132.0 | 129.5 |
| 500 | 130.5 | 128.0 |
| 630 | 127.5 | 125.0 |
| 800 | 124.5 | 122.0 |
| 1000 | 122.0 | 120.0 |
| 1250 | 119.5 | 118.0 |
| 1600 | 118.0 | 117.0 |
| 2000 | 117.0 | 116.5 |
| 2500 | 116.5 | 116.0 |
| 3150 | 115.5 | 115.0 |
| 4000 | 114.5 | 113.5 |
| 5000 | 112.5 | 111.0 |
| 6300 | 108.5 | 107.0 |
| 8000 | 104.5 | 103.0 |
| 10000 | 101.0 | 100.0 |
| OASPL | 141.9 | 140.0 |
| Duration | 5 Seconds | 5 Seconds |

RJL: 3/15/94
CHART 15

# SINUSOIDAL VIBRATION ENVIRONMENT

Sinusoidal oscillations and transients occur during launch and ascent at liftoff, engine ignition and shutdown.

# SINUSOIDAL VIBRATION ENVIRONMENT

| SINUSOIDAL VIBRATION | | |
|---|---|---|
| FREQUENCY (Hz) | | LEVEL (Go-p) |
| • THRUST AXIS | 5-6.2<br>6.2-100 | 0.5 - INCH D.A.<br>1.0 |
| • LATERAL AXIS | 5-100 | 0.7 |
| | | D.A. = DOUBLE AMPLITUDE |

NOTE: ACCELERATIONS APPLY AT THE BASE OF THE PAYLOAD ATTACH FITTING DURING TESTING. RESPONSES AT FUNDAMENTAL FREQUENCIES SHOULD BE LIMITED BASED ON VEHICLE COUPLED LOADS ANALYSIS.

RJL: 3/15/94
CHART 16

# SHOCK ENVIRONMENT

Maximum shock environment occurs during spacecraft separation. The following charts give peak acceleration response -G vs frequency for the maximum flight levels of the 6306 and 6029/6915 payload attach fittings. A description of the payload attach fittings is given on chart 12.

# SHOCK ENVIRONMENT

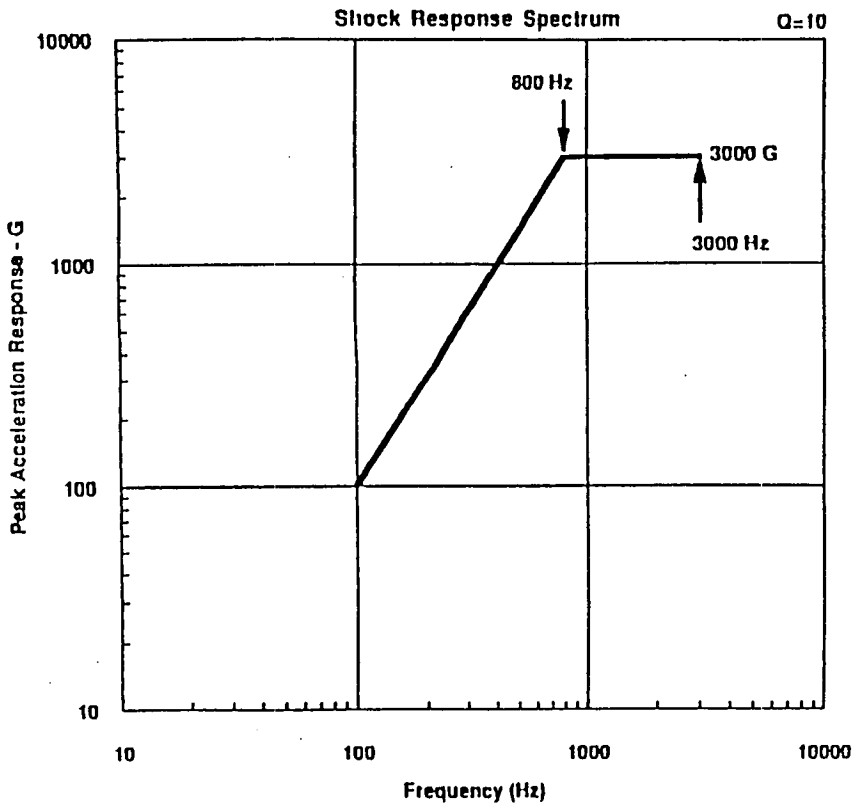


6306 PAF

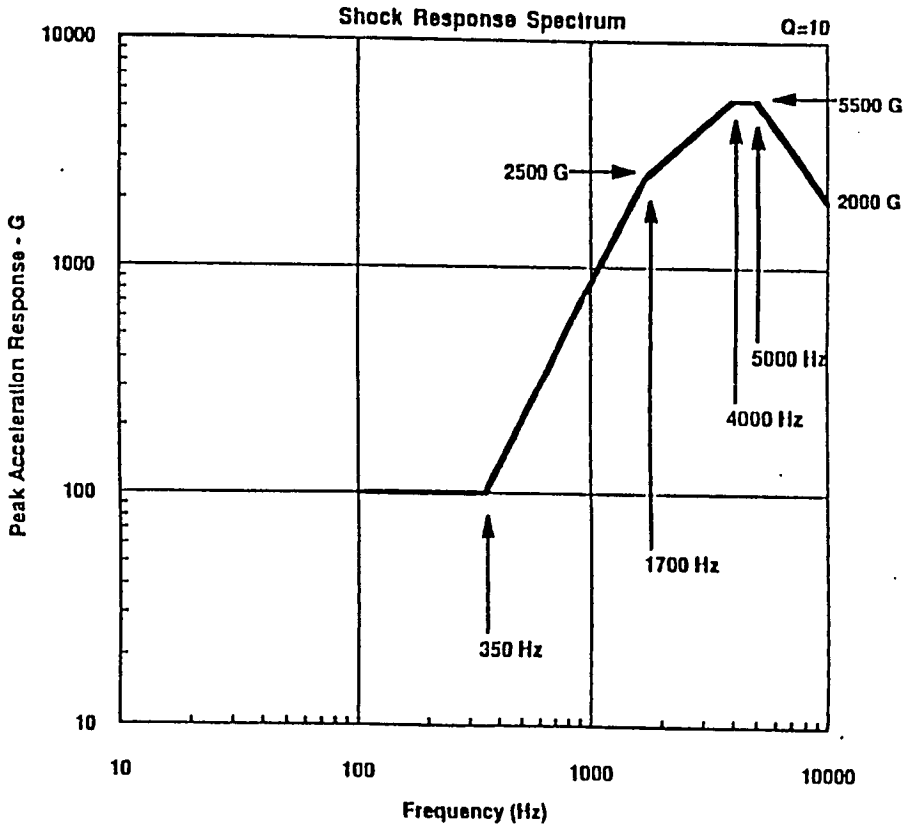


6019/6915 PAF

RJL: 3/15/94
CHART 17

# STRUCTURAL LOADS

Preliminary load factors are based on previous analysis and experience. Final detailed loads are defined based on coupled spacecraft/launch vehicle dynamic analysis performed by MDSSC. For the final loads analysis, a final dynamic model of the spacecraft is required to be provided by the spacecraft contractor. The spacecraft design recommendations are based on the preliminary load factors.

# STRUCTURAL LOADS

## SPACECRAFT DESIGN RECOMMENDATIONS

- FOR SPACECRAFT HARD-MOUNTED AT SEPARATION PLANE
  - AXIAL FREQUENCIES GREATER THAN 35 Hz
  - LATERAL FREQUENCIES GREATER THAN 12 Hz

| | LIMIT LOAD FACTORS (G) | |
|---|---|---|
| | LIFTOFF, MAX AERO | MECO |
| • LATERAL AXES | 2.0<br>2.5 (NOTE 3) | - |
| • THRUST AXIS<br>+ COMPRESSION<br>- TENSION | +2.8/-0.2 | +7.1 |

NOTES:

1. LOADS ARE APPLICABLE AT SPACECRAFT CENTER OF GRAVITY
2. LIMIT LOAD FACTORS SHOULD BE MULTIPLIED BY A 1.25 FACTOR TO OBTAIN ULTIMATE LOADS
3. LATERAL LOAD FACTOR TO PROVIDE CORRECT BENDING MOMENT AT SPACECRAFT SEPARATION PLANE

RJL: 3/15/94
CHART 18

# DELTA II/MUADEE COUPLED DYNAMIC RESPONSE ANALYSIS

The coupled dynamic response analysis task is presented on the following chart. This task will occur at L-68 weeks as shown on chart 10.

# DELTA II/MUADEE COUPLED DYNAMIC RESPONSE ANALYSIS

- PURPOSE
  - DETERMINES MAXIMUM EXPECTED SPACECRAFT DYNAMIC RESPONSES OCCURRING DURING FLIGHT
- CUSTOMERS
  - INTERNAL - MDSSC DELTA STRUCTURES DEPARTMENT
  - EXTERNAL - NASA/SPACECRAFT CUSTOMER
- ANALYSIS INPUT
  - REQUIRES SPACECRAFT DYNAMIC MODEL AND ASSOCIATED LTM,ATM,DTM FOR RESPONSE RECOVERY
- KEY EVENT SUMMARY
  - LIFTOFF
    - -- MAXIMUM LATERAL DYNAMIC SPACECRAFT RESPONSES OCCUR
  - TRANSONIC (BUFFET + GUST)
    - -- TRANSONIC BUFFETING ALONG WITH AERODYNAMIC GUST PRODUCE RELATIVE DYNAMIC DEFLECTIONS BETWEEN SPACECRAFT AND VEHICLE FAIRING
  - MAXIMUM ALPH-Q (GUST + BUFFET)
    - -- AERODYNAMIC GUST IN CONJUNCTION WITH BUFFET PRODUCE RELATIVE DYNAMIC DEFLECTIONS BETWEEN SPACECRAFT AND VEHICLE FAIRING
- ANALYSIS OUTPUT
  - COMPLETION DATE APPROXIMATELY 4 MONTHS AFTER RECEIPT OF SPACECRAFT MODEL
  - MAXIMUM/MINIMUM SUMMARIES FOR REQUESTED SPACECRAFT RESPONSES, I INCLUDING SPACECRAFT GENERALIZED COORDINATE ACCELERATIONS AND DISPLACEMENTS (ALL EVENTS)
  - SPACECRAFT GENERALIZED COORDINATE ACCELERATION AND DISPLACEMENT TIME HISTORIES

RJL: 3/15/94
CHART 19

# PRELAUNCH THERMAL ENVIRONMENT

The 10 foot cylinder section is located between the cone and the aero-skirt on the PLF. For a graphical description see chart 21.

# PRELAUNCH THERMAL ENVIRONMENT

- CONVECTIVE ENVIRONMENT TO SPACECRAFT PROVIDED BY AIR CONDITIONING WITHIN PAYLOAD FAIRING (PLF)
  - 1,500 SCFM
  - 65 ± 5 °F with 50% maximum relative humidity
- RADIATIVE ENVIRONMENT TO SPACECRAFT DOMINATED BY ACOUSTIC BLANKETS IN PLF 10 FOOT CYLINDER SECTION
  - BLANKET INNER SURFACE TRACKS AIR TEMPERATURE
  - BLANKET INNER SURFACE EMITTANCE IS 0.86
- REMAINDER OF 10 FOOT CYLINDER SECTION RADIATIVE ENVIRONMENT CONSISTS OF FRAMES, SEPARATION RAILS, UNBLANKETED DOORS AND BLANKET CUTOUT AREAS. THERE ARE NO ACOUSTIC BLANKETS IN PLF BOATTAIL AND 8 FOOT CYLINDER SECTIONS.
  - MAXIMUM LIFTOFF TEMPERATURES FOR A 3-SIGMA HOT AUGUST DAY ARE:

| ITEM | TEMP | EMISSIVITY |
|---|---|---|
| SKIN | 140 F | 0.10<br>0.25 IN 8 FT. CYL. |
| FRAMES | 140 F | 0.12 |
| SEPARATION RAILS | 120 F | 0.12 |

RJL: 3/15/94
CHART 20

# DELTA II FAIRING INSULATION

Note that the data on this chart is for a 10 ft PLF, however the data is directly applicable to the 9.5 ft fairing. The previous chart on the prelaunch thermal environment referred to the 10 foot cylinder section and the boat tail, both of which are shown on this chart.

# DELTA II FAIRING INSULATION

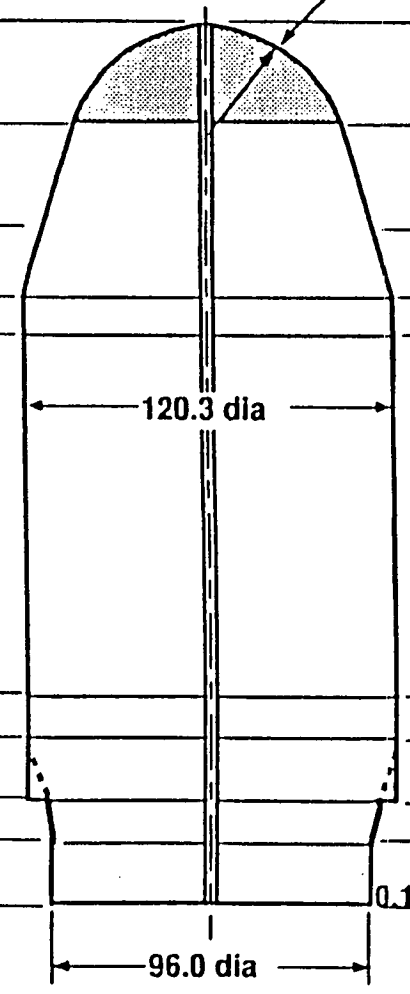


| PLF STATION NUMBER | LOCATION | SKIN GUAGE (In.) | ACOUSTIC BLANKET THICKNESS (In.) | ACOUSTIC BLANKET COVERAGE * | SPARESYL INSULATION THICKNESS (In.) SKIN | SPARESYL INSULATION THICKNESS (In.) RAIL |
|---|---|---|---|---|---|---|
| 241.39 | | | | | | |
| | Nosecap | 0.10 | 1.5 | 85% | 0.150 | 0.580 |
| 274.83 | | | | | | |
| | Cone | 0.08 (AL)<br>0.15 (FG) | 1.5 | 96% | 0.060 (AL)<br>0.020 (FG) | 0.300 |
| 313.39 | | | | | | |
| | | 0.09 (AL)<br>0.15 (FG) | 1.5 | 96% | 0.040 (AL)<br>None (FG) | 0.320 |
| 337.39 | | | | | | |
| 349.39 | | 0.032 | 3.0 | 77% | None | 0.100 |
| | Cylinder | 0.025 | 3.0 | 77% | None | 0.100 |
| 469.39 | | | | | | |
| 481.39 | | 0.063 | 3.0 | 77% | None | 0.100 |
| | Aero-Skirt | 0.025 (Skirt)<br>0.168 (Boattail) | None | --- | None | None |
| 505.48 | | | | | | |
| | Boattail | 0.185 | None | --- | None | 0.060 |
| 526.68 | | | | | | |
| | Aft Cylinder | 0.079 (Skin)<br>0.109 (w/ Scotchdamp) | None | --- | None | None |
| 553.39 | | | | | | |

RJL: 3/15/94
CHART 21

* Approximates based on EUVE mission configuration

# PAYLOAD FAIRING

Acoustic blankets are installed to meet nominal payload requirements. Access doors can be provided for spacecraft servicing. The standard design is 24 x 24 inches, however other sizes are available. The doors must be located a minimum of 5 inches from separation rails and cannot be located across module joints. The fairing envelope accounts for spacecraft dynamic deflections. The spacecraft must nominally remain in the static envelope defined on this chart.

# PAYLOAD FAIRING

## DELTA 10-FT FAIRING PAYLOAD ENVELOPE (NOSE BLANKETS)

3-in.-thick Acoustic Blankets Sta 337.39 to 481.39 and 1-1/2 in.thick Acoustic Blankets in Nose Cone

**MDSSC requires definition of spacecraft features within 50.8/2.0 of payload envelope

Fairing Envelope

Usable Payload** Static Envelope

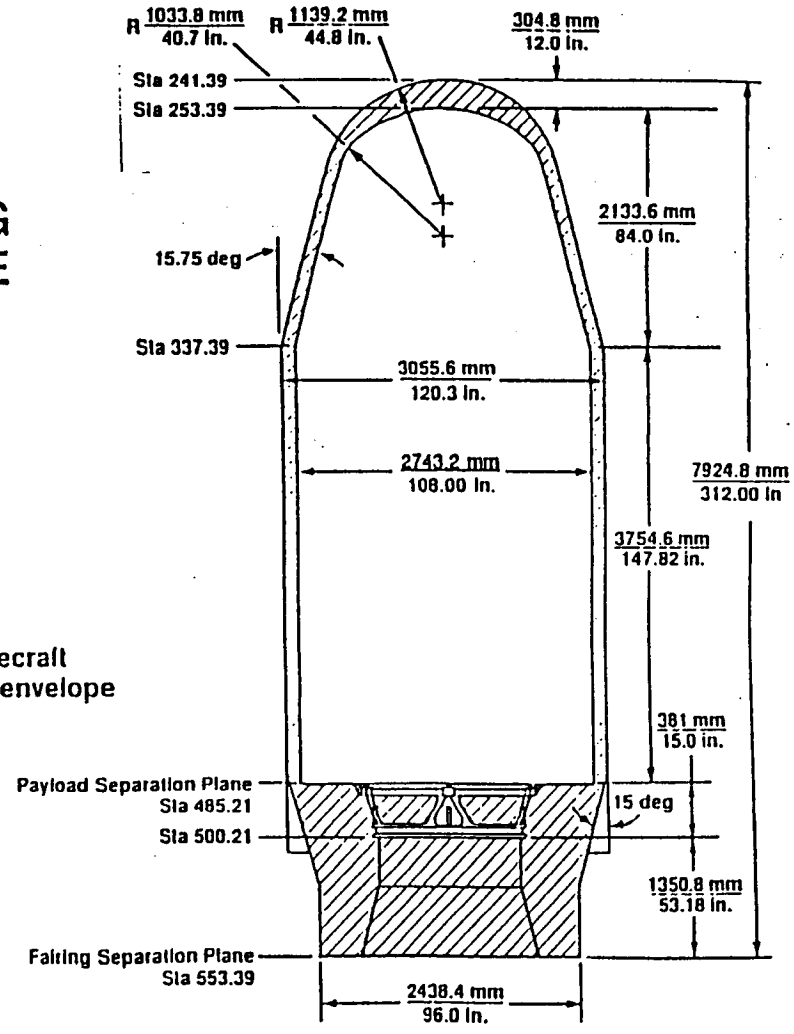


RJL: 3/15/94
CHART 22

# ASCENT THERMAL ENVIRONMENT

Figure A on this chart shows the PLF skin temperatures vs time for launch for the cylinder and cone areas of the PLF. Figure B shows the PLF acoustic blanket temperature as a function of time from lift-off. Figure E shows the free molecular heating (FMH) as a function of time from PLF separation.

# ASCENT THERMAL ENVIRONMENT

- Figure A: 10 Foot Payload Fairing Skin Temperatures*

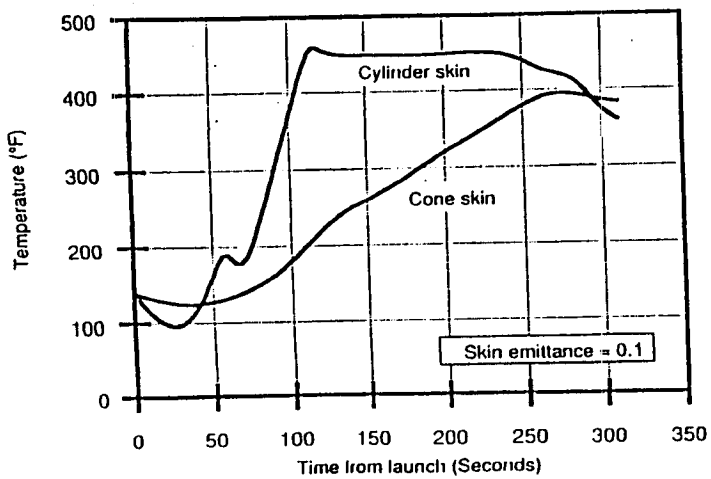


* Based on Delta 6920/EUVE DTO depressed trajectory.

- Figure B: 10 Foot Payload Fairing Acoustic Blanket Temperature*

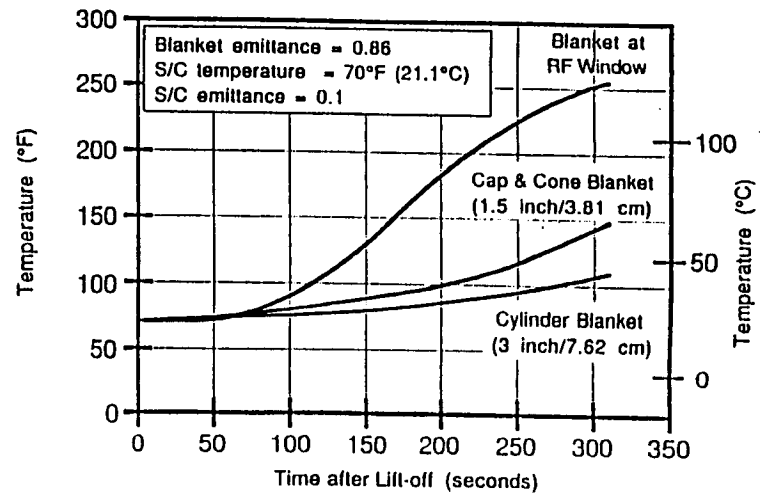


* Based on Delta 6920/EUVE DTO depressed trajectory.

- Ascent Thermal Environment (cont'd.)
  - Free molecular heating (FMH) at payload fairing jettison is less than 0.1 Btu/ft2-sec (1135 w/m2).
  - Figure E: Typical Free Molecular Heating Rate History

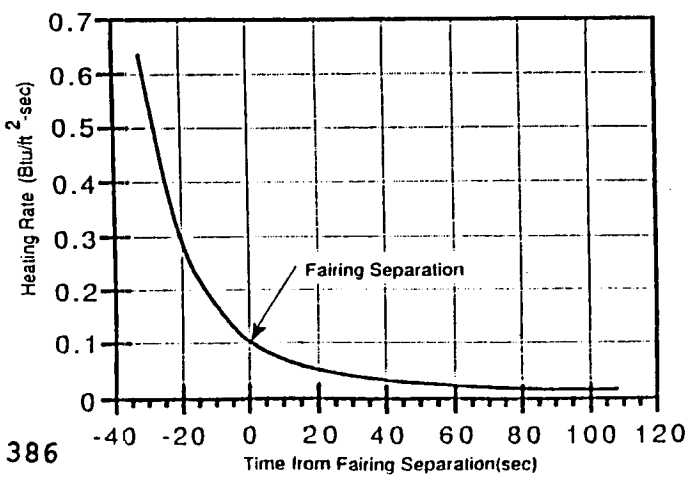


RJL: 3/15/94
CHART 23

# ON-ORBIT THERMAL ENVIRONMENT

The data on this chart is typical for most Delta II missions. However, a mission unique analysis will need to be conducted for MUADEE.

# ON-ORBIT THERMAL ENVIRONMENT

- DURING POWERED FLIGHT THROUGH SECO 1, VEHICLE IS ORIENTED WITH QUAD II TOWARD EARTH
- SUN EXPOSURE IS DICTATED BY LAUNCH WINDOW, SPACECRAFT CONSTRAINTS AND MANEUVERS
- SLOW ROLL MAY BE PROVIDED DURING STAGE 2 COAST PERIOD
- DELTA STAGE 2 TO SPACECRAFT THERMAL INTERFACE - TYPICAL
  - PAYLOAD ATTACH FITTING (PAF) CONDUCTIVE COUPLING TO SPACECRAFT
    - -- TOTAL INTERFACE AREA OF 57.5 SQUARE INCHES
    - -- HEAT TRANSFER COEFFICIENT OF 200 BTU/FT$^2$-Hr-°F
  - PAF THERMAL MASS OF 37 BTU/°F
  - TEMPERATURE RANGE OF 20°F TO 80°F (-6.6°C TO 26.6°C) BASED ON WORST CASE ATTITUDES FOR 1 HOUR EXPOSURE TIME
  - RF SHIELD RADIATIVE ENVIRONMENT TO SPACECRAFT
    - -- MAXIMUM TEMPERATURE OF 100°F (38°C) BASED ON HOT CASE ATTITUDES FOR 1.85 HOUR EXPOSURE TIME



RJL: 3/15/94
CHART 24

# ELECTRICAL INTERFACE

The prelaunch baseline configuration. routes up to 174 wires through the JU2 umbilical. Launch with spacecraft telemetry transmitting may be permitted. The fairing has an attenuation of 3.5dB. The spacecraft to blockhouse wiring requires spacecraft supplied information consisting of the number of required wires, pin assignments, purpose and nomenclature, shielding requirements, voltage of the spacecraft battery and polarity of battery ground, as well as the physical location of the spacecraft umbilical. The cable from the blockhouse to the spacecraft console is supplied by the spacecraft contractor.

# ELECTRICAL INTERFACE

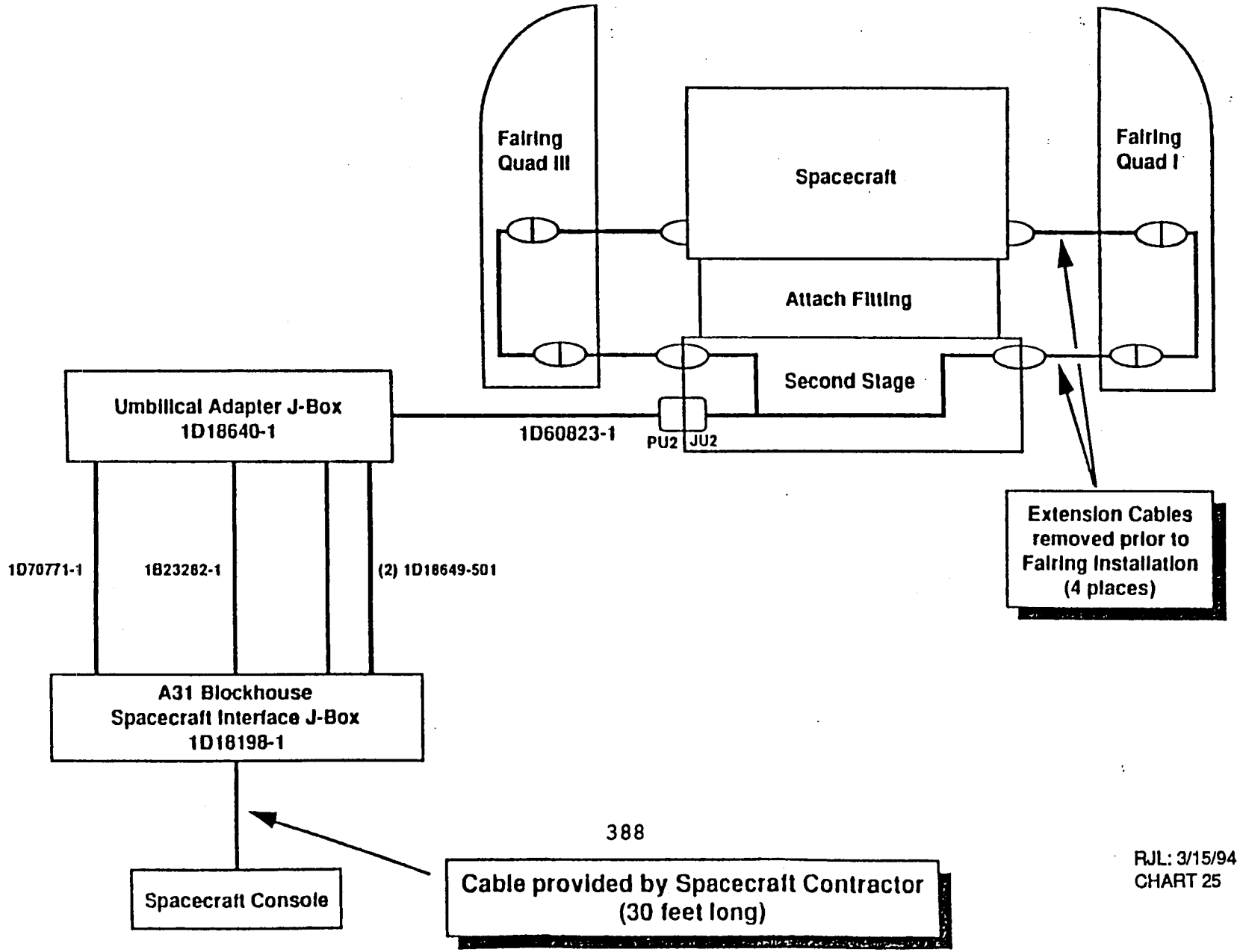




RJL: 3/15/94
CHART 25

# 11.0 PROGRAM MANAGEMENT

# MANAGEMENT APPROACH - CONSORTIUM

The Discovery Management Workshop, Recommended Policy and Implementation Guidelines for the NASA Discovery Program formed the basis for the MUADEE management approach. The guidelines recommend one of three approaches: 1) Principal Investigator as *Project Manager;* 2) Teaming with a NASA center, which will serve as the project management organization; or 3) Forming a "consortium" involving FFRDC, university, industry, and NASA partners. Based on the strengths and experience of the team, the consortium approach has been chosen for MUADEE.

The consortium approach requires the creation of a management plan to assure the successful accomplishment of the cost, schedule, and scientific requirements of the mission. The MUADEE team drew upon the Discovery definition documents, along with team experience and external management studies (considering over 60 major management issues), to identify the major challenges to be addressed in the management plan. The plan fully addresses all of the key challenges and specifies the roles, relationships, responsibilities, and clear lines of accountability to NASA of the PI, and each of the MUADEE team members.

# MUADEE Management Approach - Consortium

- Consortium is most appropriate for expertise of PI, PI institution, S/C industrial partner, and team members
- Management challenges were identified from major Discovery definition documents, management studies, and team experience
- MUADEE plan addresses all issues

Section 11.1.1
CJE Programmatics. 2

# MUADEE Consortium Partners

## A "Badgeless" Consortium

- University of Colorado (CU)
- University of Texas at Dallas (UTD)
- University of Arizona (UA)
- UCLA
- State University of New York, Stony Brook (SUNY)
- John Hopkins University - Applied Physics Laboratory (APL)
- Goddard Space Flight Center (GSFC)

Lockheed

JPL
Jet Propulsion Laboratory

Section 11.1.3
CJE Programmatics. 1

ORIGINAL PAGE
COLOR PHOTOGRAPH

# CONSORTIUM PARTNERS

The University of Michigan, the Lockheed Missiles and Space Company, and the Jet Propulsion laboratory are the primary partners in the MUADEE consortium. Their areas of project responsibility are generally described as follows: The University of Michigan is responsible for MUADEE mission development, management, and science; Lockheed is responsible for the spacecraft, and integration and test; and JPL is responsible for tracking, DSN communications, and mission operations support. JPL will also provide project management expertise in support of the University of Michigan. The remainder of the MUADEE partners are responsible for instrument development and science functions. (Responsibilities are described in detail in later in this section.)

# KEY MANAGEMENT CHALLENGES

Seven key management challenges were identified for MUADEE involving: 1) Project Management; 2) Effective decision making; 3) Accurate assessment of project status and early correction of problems; 4) Effective communication of project status to the Discovery Program Office; 5) Establishment of clear lines of responsibility, authority, and accountability; 6) Ensuring the execution of de-scope plans when cost or schedule are in jeopardy; and 7) Implementation of a low-cost, acceptable-risk Quality Assurance approach.

# Key MUADEE Management Challenges

- Provide strong project management appropriate for the size and breadth of MUADEE
- Ensure effective decision making among geographically separated teams
- Ensure accurate assessment of project status and early correction of problems
- Ensure effective communication of project status to the Discovery Program Office
- Ensure clear lines of responsibility, authority, and accountability throughout the MUADEE team
- Ensure execution of de-scope plans when mission cost or schedule are in jeopardy
- Implement a Quality Assurance approach which can deliver a successful, low-cost mission

# MUADEE Response: Provide Strong Project Management

- Designate an experienced project manager from within NASA (JPL) to lead Phases A, B, and C/D
  - MOU established with JPL
  - Selection and appointment to be made during Phase A
  - Necessary qualities of Project Manager will include successful experience with university and industry "cultures"
  - Project Manager will be co-located at Michigan
- Allocate project resources to establish an effective project management office at UM starting in Phase B.
  - Electronic communications will be used to render the physical location of the management office transparent to the MUADEE team

Section 11.2.3
CJE Programmatics. 5

# RESPONSE: ENSURE EFFECTIVE DECISION MAKING - CONCEPTS

Both university and industrial cultures have recognized strengths and weaknesses in the execution of space missions. For example, universities are generally respected for exploring technology and mission alternatives and developing new and exciting solutions to problems. However, universities are often reluctant to stop the exploration process and commit to the specifications needed to execute the project within cost and schedule constraints. Industrial organizations are generally considered to provide the discipline, planning, and performance predictability needed to execute large development projects. However, industry is often criticized for driving too quickly to specifications, failing to seek alternatives which could improve the mission and reduce cost, for the sake of predictable, measurable performance.

The MUADEE goal is to successfully merge these cultures, promoting the search for better, faster, cheaper approaches ***and*** exercising the discipline required to assure the success of MUADEE within cost and schedule constraints.

A "collegiate" approach, encouraging open discussion of broad issues across the entire team, will be used during Phases A and B. The team leadership skills of the PI and Project Manager will be used to maintain the team's focus on critical issues. The PI and Project Manager will exercise the authority (when needed) to ensure that this process leads to complete and frozen (capped) requirements, and a fully defined Project Plan necessary for the successful execution of Phase C/D. During Phase C/D, decision making authority will be placed at the working level so that decisions are made by the teams most familiar with the problems and trade-offs. Electronic communication (video-conferencing, EMAIL, etc.) will be used to support frequent communications and team decision making across all MUADEE partners.

# MUADEE Response: Ensure Effective Decision Making - Concepts

- Merge university "collegiate" and industry "specification" approaches
  - Largely collegiate during Phases A & B
  - Requirements complete & frozen (capped) during Phase C/D
- Incorporate TQM concepts; push decision making authority to working levels
- Utilize technology to maintain strong communications among team members (Video-conferencing, EMAIL, etc.)
  - Video-conference facilities exist at Michigan and team sites

# RESPONSE: ENSURE EFFECTIVE DECISION MAKING - PROCESS

For MUADEE, involving geographically distant teams, it is imperative to maintain frequent communication and timely resolution of technical issues during Phase C/D. Frequent, short, decision-focused electronic meetings will be used to address this challenge. To assure that meetings are effective for decision-making, attendance will be restricted to a single individual representing each team. These individuals will be required to have the knowledge to assess the impact of proposed changes on their team's efforts and the authority to implement those changes within their teams. The attendees will be required to resolve all technical issues (consulting with their home team members if necessary) by the end of each meeting.

To ensure that the project cannot be delayed by the failure of a group to come to consensus, the Project Manager has the authority to resolve all Phase C/D disputes. If the team decision-making approach should fail, the Project Manager may unilaterally resolve requirements issues at Level II and below. Level I requirements (primary MUADEE requirements) will ***only*** be altered to maintain cost and schedule. All major technical issues are resolved through close collaboration between the PI and the Project Manager.

# MUADEE Response: Ensure Effective Decision Making - Process

- Frequent (electronic) meetings to resolve technical issues
  - Attendance restricted to one representative per team
  - Attendees have knowledge to assess and authority to implement changes
  - All technical issues resolved by meeting end
- Project Manager has authority over all unresolved C/D disputes
  - The Project Manager has primary authority over requirements at Level II and below
  - Requirements changes at Level I must be approved by PI
  - Level I requirements are changed ONLY to maintain cost & schedule
  - Major technical issues are resolved through close collaboration of the PI and Project Manager

Section 11.2.7
CJE Programmatics. 7

# RESPONSE: ENSURE EFFECTIVE DECISION MAKING - EXECUTIVE COMMITTEE

An Executive Committee, comprising high-level managers from each of the major MUADEE team organizations, will be formed to: 1) provide guidance to the PI; 2) function as project sponsors within their respective institutions; and 3) provide oversight (recommending cancellation if MUADEE can no longer satisfy its minimum performance, cost, and schedule requirements).

The Executive Committee will be chaired by the PI and will meet once per month and as necessary to support the project. They will review key MUADEE issues and developments and will provide advice, helping the PI maintain balance between science, constrained cost, and constrained schedule.

Within their respective organizations, the Executive Committee members will provide project sponsorship, helping to resolve resource and schedule conflicts between MUADEE and other competing activities to assure MUADEE success.

Semi-annually, each committee member will be required to sign a "Recommendation to Continue" memo to the PI. Signing this document will represent that the committee member believes MUADEE is "on-track" (the proper decisions are being made, the necessary de-scope options have been exercised, etc.) to deliver the minimum science requirement within the cost and schedule constraints. Failure to sign this document constitutes a recommendation to the PI for cancellation.

# MUADEE Response: Ensure Effective Decision Making - Executive Committee

- MUADEE Executive Committee provides guidance to PI to maintain proper balance between science, constrained cost and constrained schedule
  - Chaired by PI, confers once per month and as necessary to support project
- Committee members are high-level managers within the major MUADEE team organizations
  - All members have vested interest in success of MUADEE
  - Members function as institutional project sponsors and problem solvers
- Committee performs oversight function
  - Semi-annual certification of cost-to-complete
  - Failure to certify constitutes recommendation to terminate

Section 11.2.9
CJE Programmatics. 8

# RESPONSE: ACCURATELY ASSESS PROJECT STATUS

As part of the Project Management Office, a Project Management Information System (PMIS) will be established at the University of Michigan. The PMIS system will be used to collect and summarize cost and performance data across the entire MUADEE team. The system will be electronically accessible by all of the team members as an aid to assess and improve team performance. Detailed cost and milestone schedules will be prepared for phase C/D activities and will be used as a basis for assessing project and team performance. Because MUADEE is a cost driven project, cost-to-complete, rather than variance from cost or milestone plan, will be the primary project management performance measurement.

# MUADEE Response: Accurately Assess Project Status

- Project Management Information System
  - will be established to collect and report cost and status data across the entire MUADEE team
  - Information will be electronically accessible to PI, PM, and all team members
  - allows self assessment of team member performance and implementation of corrections
- Detailed cost and milestone plans used as basis for Phase C/D performance assessment
- Emphasis on Cost-to-Complete rather than variance from plan

# RESPONSE: ACCURATELY ASSESS PROJECT STATUS; ROLE OF PROJECT MANAGER

The MUADEE Project Manager will play an active role in assessing project status. Rather than relying solely on management reports, the Project Manager will frequently visit team member facilities to develop a "hands-on" feel for the work being performed. The Project Manager will rely on his/her own technical judgment to make first-hand status evaluations and will actively assist team members in resolving problems.

# MUADEE Response: Accurately Assess Project Status; Role of Project Manager

- Project Manager will visit team member facilities frequently
- Project Manager will have technical background and experience necessary to evaluate work in all phases of project
- Project Manager will personally assess status and help resolve problems

# RESPONSE: EFFECTIVELY COMMUNICATE PROJECT STATUS AND ISSUES TO PROGRAM OFFICE

Because NASA will delegate primary responsibility for the management of the MUADEE mission to the PI, it is imperative to maintain trust and good communications between the MUADEE project and the Discovery Program Office. The Project Manager, as a NASA (JPL) employee, can be trusted to accurately reflect the project's status because of his/her dual allegiance to NASA and the MUADEE project. Concise, digestible project status summaries will be submitted to the Discovery Program Office to allow the Program Manager to quickly assess project status. An external, non-advocate review board (composed of experienced project managers) will be established to advise both the Program Office and the Project Manager on project status and corrective measures. To foster open communications between the MUADEE project and the Discovery Program Office, MUADEE will be open to the involvement of the Program Manager in regular technical meetings.

# MUADEE Response: Effectively communicate project status and issues to Program Office

- The Project Manager, as NASA (JPL) employee, can be trusted to accurately reflect project success
  - Dual allegiance to NASA and MUADEE
- Project Manager will produce concise, digestible project status summaries
- Establish an external, non-advocate review board
  - Board, composed of experienced project managers, will advise both Project Manager and Program Office on project status and corrective measures
- MUADEE will be open to the involvement of the Discovery Program Manager in regular technical meetings
- Semiannual certification of cost-to-complete

Section 11.2.15
CJE Programmatics. 11

# RESPONSE: ENSURE CLEAR LINES OF RESPONSIBILITY, AUTHORITY, AND ACCOUNTABILITY

Responsibility, authority, and accountability for all major aspects of the MUADEE project have been clearly defined. The Principal Investigator has total responsibility, authority, and accountability for the success of the MUADEE mission. The Project Manager is explicitly charged by the PI to deliver the mission on-time and within cost. Primary responsibilities for MUADEE team members are identified on the accompanying project organization charts and will be formalized in contracts and MOUs between the University of Michigan and the MUADEE team members. Throughout the entire project organization, authority, responsibility, and accountability will be delegated to the appropriate levels to ensure that technical decisions are made quickly and effectively.

# MUADEE Response: Ensure clear lines of responsibility, authority, and accountability

- The Principal Investigator has total responsibility, authority, and accountability for the success of the MUADEE mission
- The PM is explicitly charged by the PI to deliver the mission on-time and within cost
- Delegation of responsibility is accompanied by authority and accountability throughout the team
  - ensures that technical decisions are made at the most effective levels
  - ensures that technical discussions come to closure
- Contracts with specific deliverables from Michigan to all team members

Section 11.2.17
CJE Programmatics. 12

# RESPONSE: DETAILED DE-SCOPE PLANS TO MAINTAIN COST AND SCHEDULE

To reduce risk, MUADEE has developed detailed, science de-scope plans which will be executed to correct projected cost or schedule overruns. These de-scope plans address potential difficulties in instrument and spacecraft developments and in the mission scenario. The PI and the Project Manager will work together closely to identify and implement de-scopes and trade-offs. The MUADEE Executive Committee will be available to help resolve difficult trade-off and de-scope issues.

# MUADEE Response: Detailed de-scope plans to maintain cost and schedule

- Detailed, science de-scope plans developed to correct cost and schedule in all project risk areas:
  - Spacecraft development
  - Instrument development
  - Mission scenario
- PI and Project Manager work together closely to make appropriate trade-offs
- Executive Committee helps resolve difficult trade-offs

# RESPONSE: QUALITY ASSURANCE APPROACH

MUADEE quality assurance will emphasize system testing over the conventional, specification-driven approach. Testability will be designed into sub-systems at all hardware levels and test beds will be used to find and correct integrated performance problems early in the development process. Special care will be given to the selection of parts and technologies for MUADEE to assure their propriety for an interplanetary mission. Personnel assignments within MUADEE's project phases will follow a "core team" approach, the systems engineers in Phases A and B will become the team leaders in Phase C/D. The design engineers in Phase C/D will become the operations managers for the MO and DA phase.

# MUADEE Response: Quality Assurance Approach

- Emphasize system testing over conventional MIL-Spec approach
- Emphasize design "testability" at all levels
- Maintain development schedules to ensure integration and testing can be performed at all levels, not just the top level
- Utilize core-team approach throughout entire mission
  - Designers become operators
- Assure parts selection and technology choices are appropriate for an interplanetary mission

Section 11.2.21
CJE Programmatics. 14

# PHASE A AND B ORGANIZATION

The MUADEE Phase A and B organization is led by the PI, who reports to the Discovery Program Office, directly leads the Science Team, chairs the Executive Committee, and indirectly leads the project through the Project Manager. The Project Manager is co-located at the University of Michigan and is responsible for three major areas: 1) Instruments; 2) Flight Systems; and 3) Ground Segment. Each of these areas are managed by experienced team members located at their home institutions.

# Phase A and B Organization

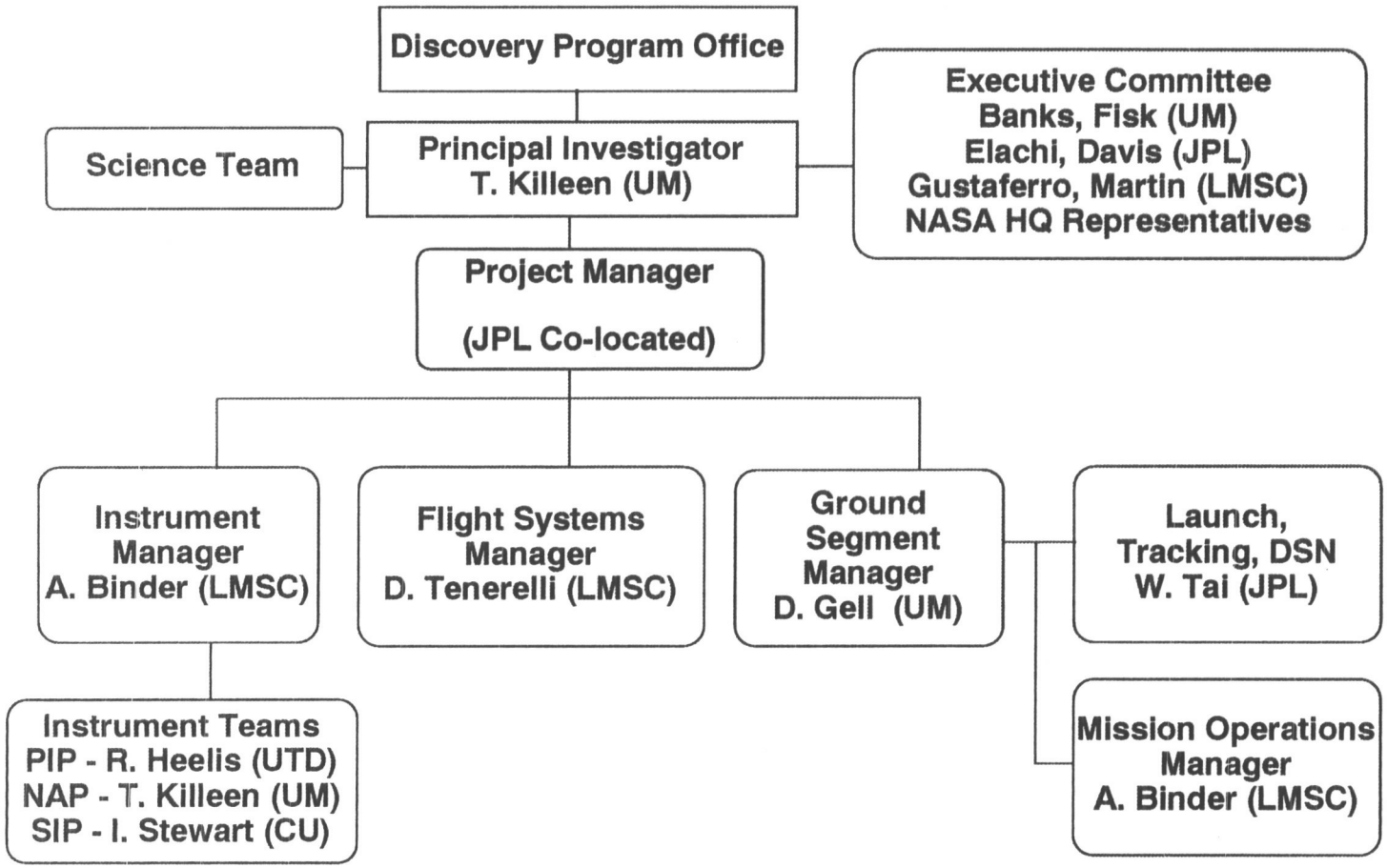


ORIGINAL PAGE
COLOR PHOTOGRAPH

Section 11.3.1
CJE Programmatics. 2

# PHASE C/D ORGANIZATION

During Phase C/D, the MUADEE project organization changes to include a Non-Advocate Review Board advising both the PI and Discovery Program Office. To assure efficient project management, the Spacecraft Bus, Instrument, Mission Operations, and Integration & Test Managers are co-located at the University of Michigan (the Ground Segment Manager is already based at Michigan). Instrument and spacecraft development, integration, and testing are performed at team member sites under the direction of local managers. Integration and Test is included as part of the Ground Segment to assure that knowledge and equipment developed by the I&T team are available during Mission Operations.

# Phase C/D Organization

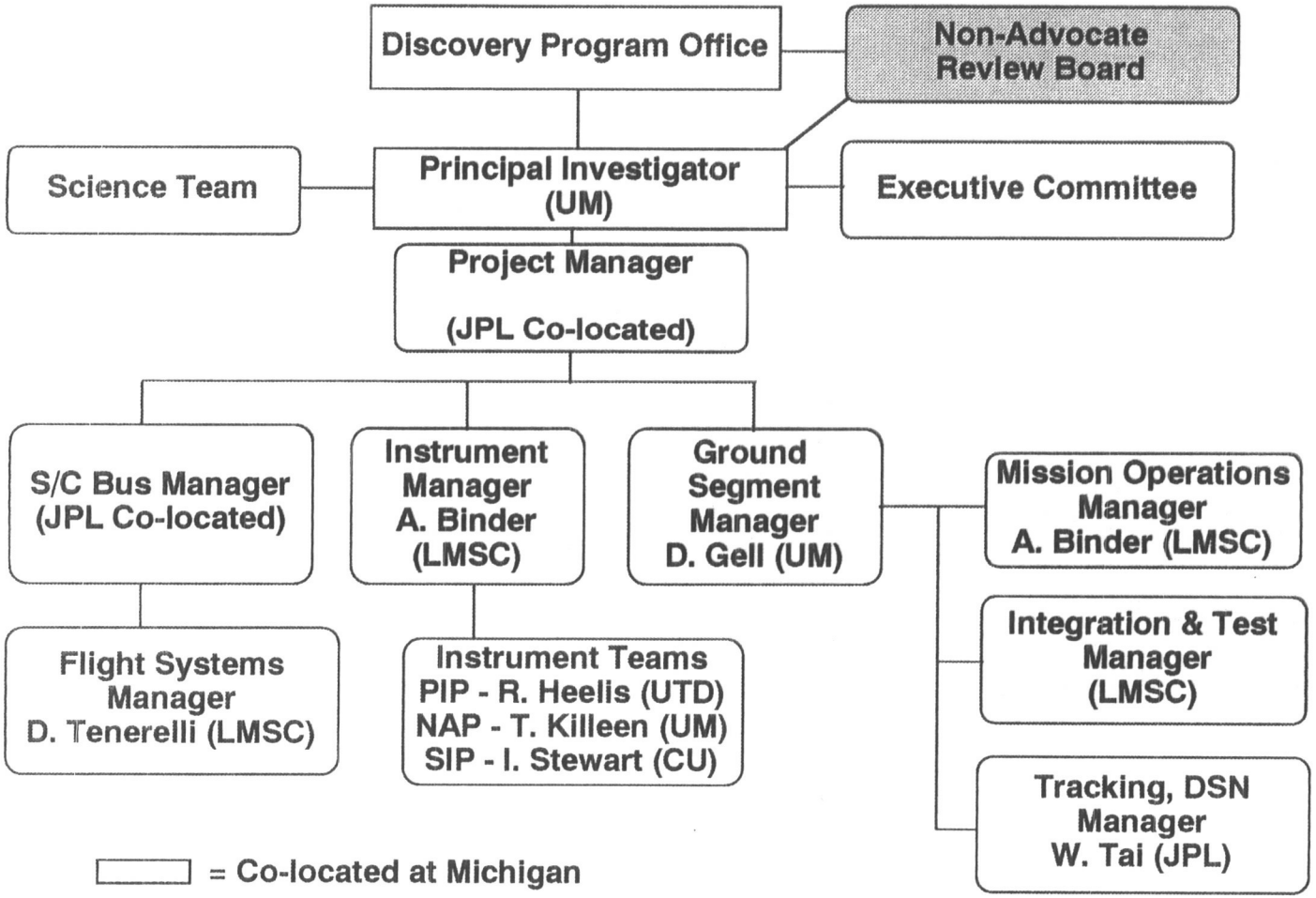


TLK Exec. 23

ORIGINAL PAGE
COLOR PHOTOGRAPH

# MISSION OPERATIONS AND SCIENCE PHASE ORGANIZATION

During the Mission Operations and Science Phase, the Ground Segment manager assumes the role of Project Manager. This manager is the best qualified member of the MUADEE team to lead this effort. Because the Mission Planning and the I&T activities were managed as part of the Ground Segment in Phase C/D, the Ground Segment Manager and team have developed a thorough understanding of all of the MUADEE sub-systems and mission parameters. Members of the development team continue in technical support roles during this phase and the entire team continues to be available to help resolve problems.

# Mission Operations and Science Phase Organization

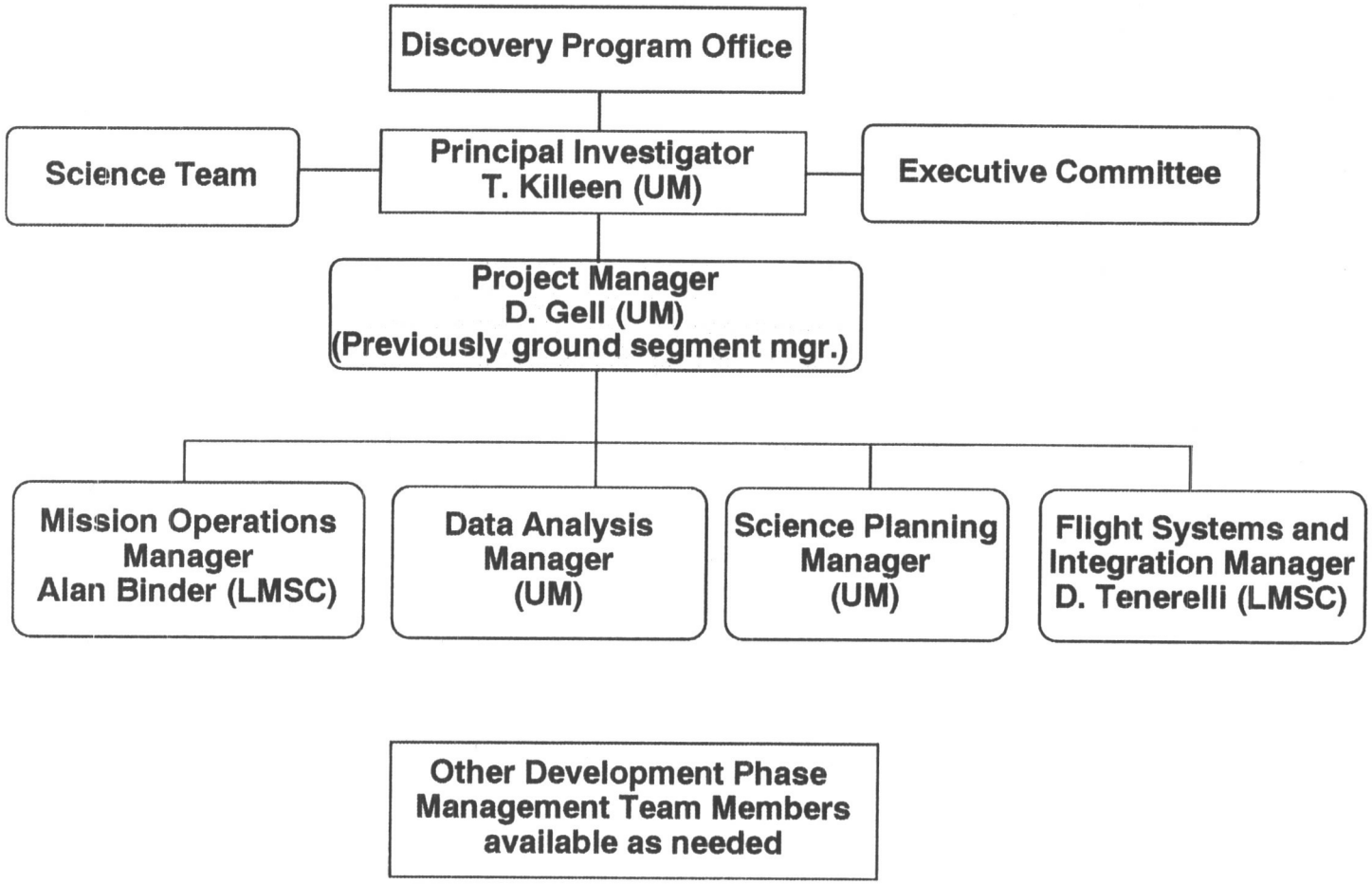


Section 11.3.5
CJE Programmatics. 4

ORIGINAL PAGE
COLOR PHOTOGRAPH

# FUNDING STRUCTURE

Funding for MUADEE will flow from the Discovery Program Office through the University of Michigan to each of the team institutions. NASA will directly contract for the launch vehicle and launch services independent of the MUADEE project.

# MUADEE Funding Structure

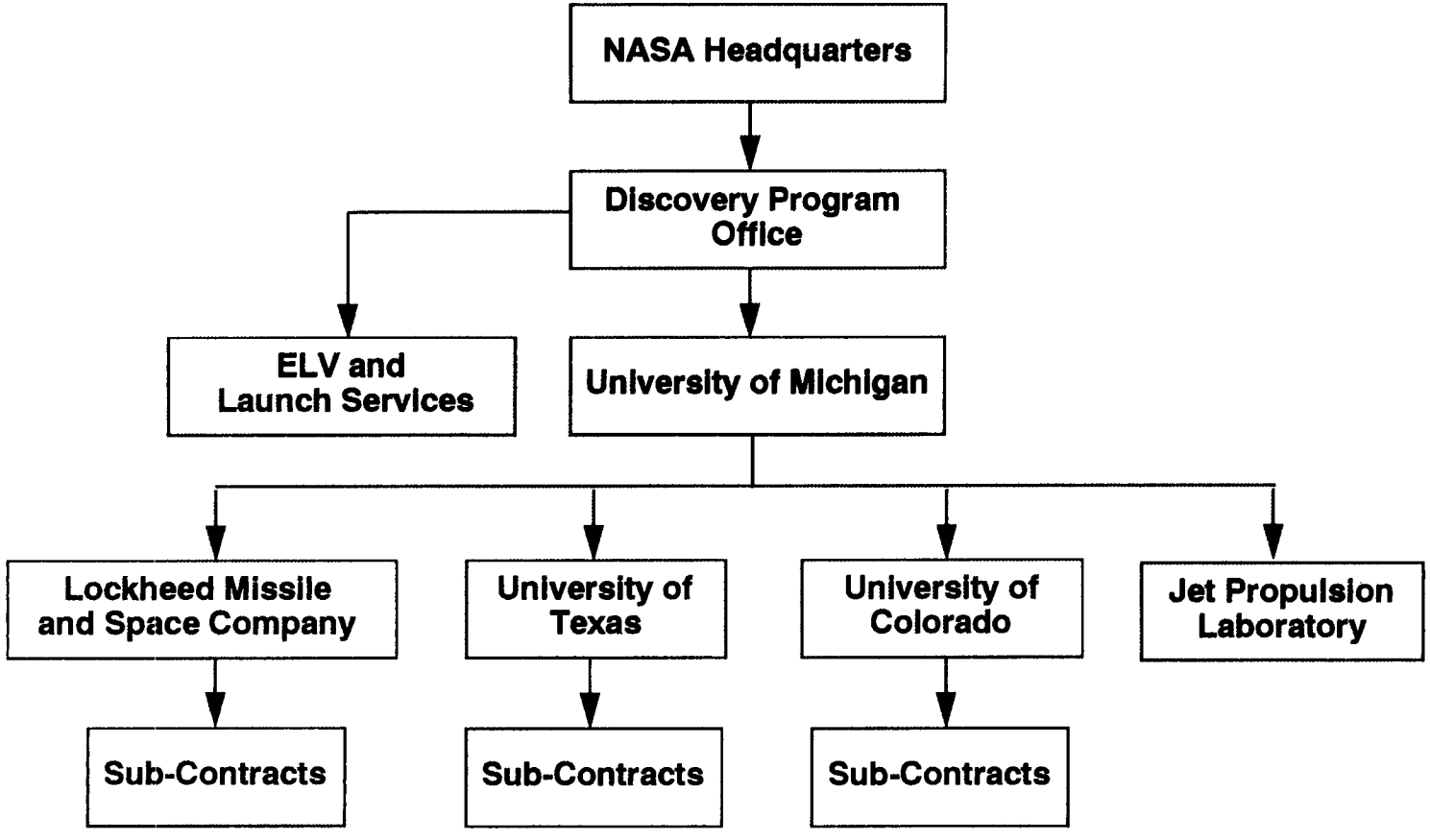


Section 11.3.7
CJE Programmatics. 5

ORIGINAL PAGE
COLOR PHOTOGRAPH

# MANAGEMENT ROLE OF THE MUADEE PI

The MUADEE Principal Investigator performs four key functions: 1) He is fully accountable to the Discovery Program Office for mission success and recommends termination if mission objectives cannot be met; 2) he chairs the Science Team, guiding, directing, and preserving the scientific integrity of the mission; 3) he delegates responsibility, authority, and accountability for mission management to the Project Manager and works closely with the manager on all key technical issues; 4) he approves all key project personnel changes and approves all science-related trade-offs and plan changes.

# Management role of the MUADEE PI

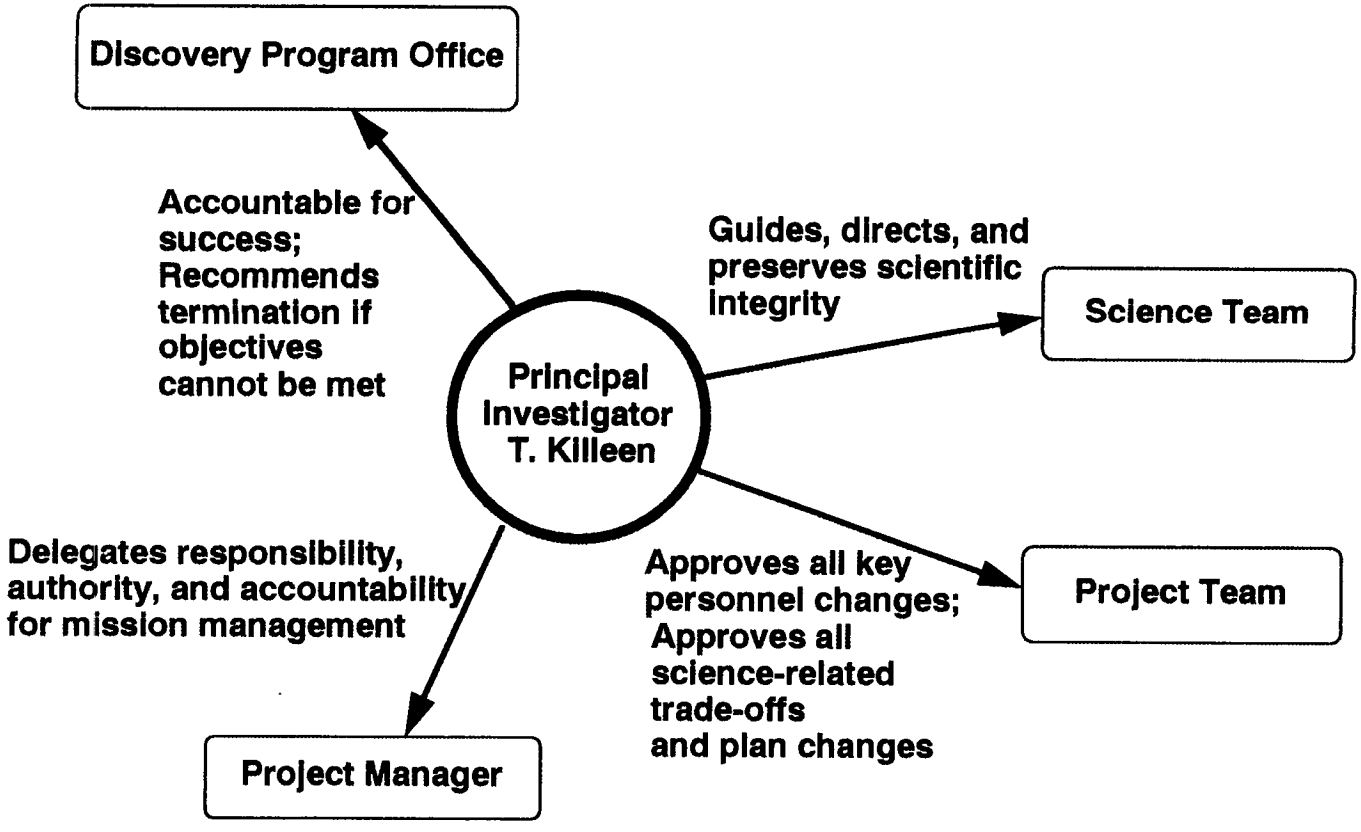


ORIGINAL PAGE
COLOR PHOTOGRAPH

Section 11.4.1
CJE Programmatics. 6

# PRODUCT TEAM IMPLEMENTATION

The Product Team management approach is used for all hardware and software elements. Each Product Team has a team leader who is empowered with responsibility for the design, development, manufacturing, and test of that product. Each team develops a charter that is approved by the Project Manager and clearly defines lines of authority. The team identifies the metrics that the product and the product team will perform to. The Product Team Leader is responsible for performing design trades and establishing the baseline design. The product is then placed under configuration control. After this time, any changes must be approved by the Change Control Board (CCB).

The team holds weekly status meetings at which cost, schedule, and technical issues are reviewed. The cost and schedule to complete the product are also reviewed. All cost, schedule, and technical documentation and data are electronically maintained using are commercial software tools and are available to all team members.

# PRODUCT TEAM IMPLEMENTATION

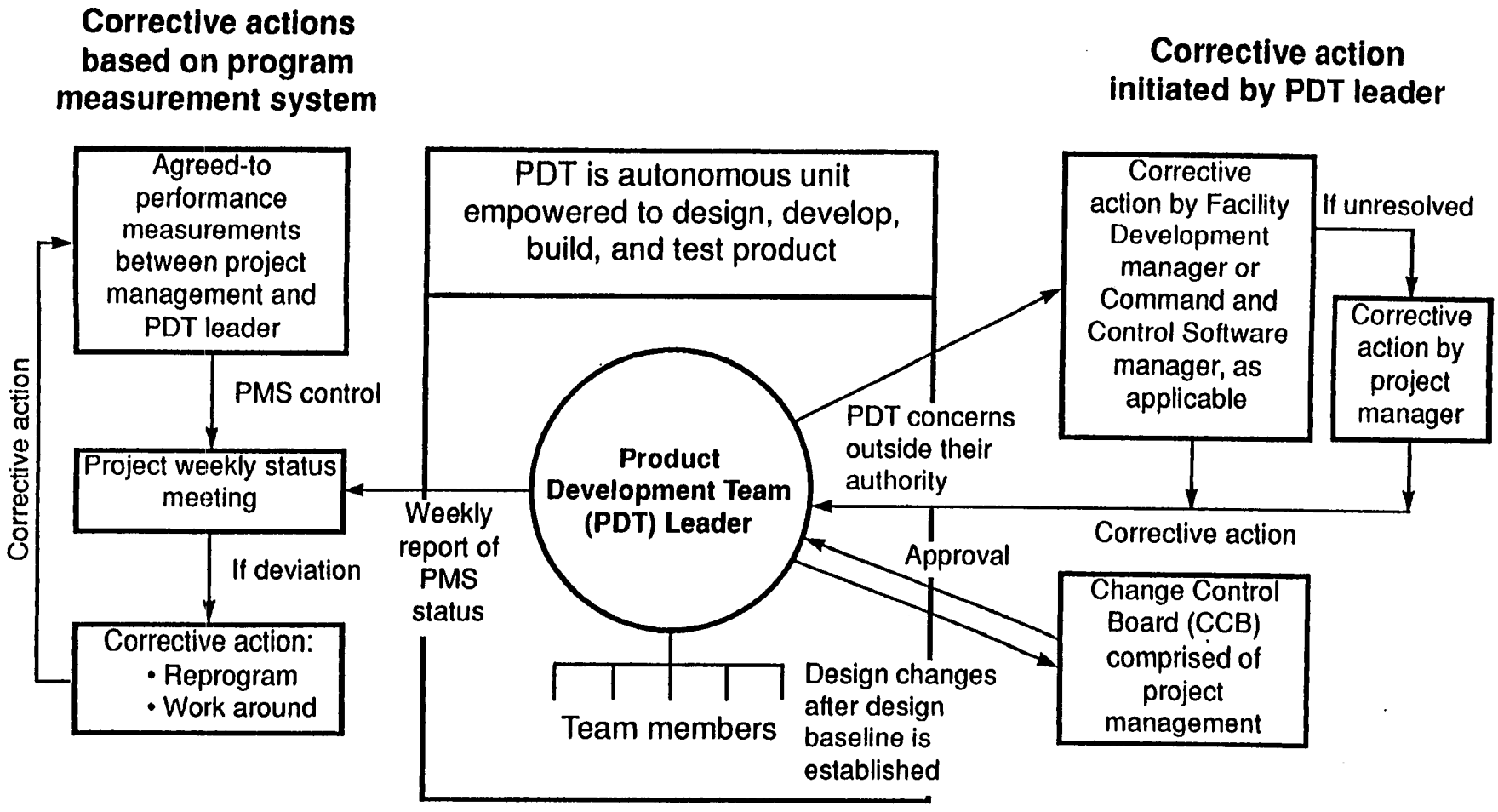

# KEY FEATURES OF PRODUCT APPROACH

An improvement inherent in the Product Team approach is early product definition. By having team members from all disciplines participate in early product definition, changes can be implemented with minimal cost and schedule impacts. This approach reduces overall product costs but does require higher initial funding levels than traditional methods of business.

The project is organized around products rather than functions. A hierarchy of products is established based on the Program Hardware Software List (PHSL) which identifies all the products required to produce the final product. Responsibility is delegated to individual Product Team Leaders (PTL). Each PTL reports to a single customer, internal or external, depending on the product level and whether the product includes subcontractors.

A key focus of the Product Team approach is to establish ownership and commitment of team members to specific products. This is accomplished by holding teams accountable for product metrics which include cost, schedule, and technical performance.

# KEY FEATURES OF PRODUCT APPROACH

- EARLY CONSIDERATION OF ALL PRODUCT AND PROCESS ASPECTS WITH EMPHASIS ON:
  - POOLING OF KNOWLEDGE
  - BETTER DESIGNS (E.G., DESIGN ISSUES SURFACED EARLY, LESS PARTS, MODULARIZATION, WIDER TOLERANCES, ETC.)
  - PRODUCT/PROCESS CYCLE-TIME REDUCTION
  - ENTIRE PRODUCT LIFE CYCLE AND REDUCING ITS COST
- FUNDING PROFILE PERMITS EARLY INVOLVEMENT OF KEY DISCIPLINES
- PROGRAM ORGANIZES AROUND THE PRODUCTS THEY DEVELOP
- PROGRAM CONSISTS OF HIERARCHY OF PRODUCT TEAMS
- DELEGATION OF RESPONSIBILITY AND AUTHORITY TO TEAMS
- TEAM HAS "OWNERSHIP" OF, AND IS COMMITTED TO, ITS PRODUCT
- TEAM HELD ACCOUNTABLE FOR PRODUCT COST, SCHEDULE, AND TECHNICAL PERFORMANCE AS WELL AS ADMINISTRATIVE REQUIREMENTS
- VERTICAL AND HORIZONTAL TEAM COOPERATION AND INTEGRATION

# PRODUCT TEAM EMPOWERMENT

All Product Teams are under the cognizance of the program office but are located wherever individual products may most effectively produced. Each team has a single customer. For lower level products, the Product Team Leader reports to his or her customer which would be the product directly above. At the highest level, PTLs report directly to the Project Manager. Each PTL is appointed by project management. The Project Team members then report to the PTL for budget, schedule, technical, and quality performance.

# PRODUCT TEAM EMPOWERMENT

- ALL PRODUCT TEAMS UNDER PROGRAM OFFICE COGNIZANCE; BUT MAY BE LOCATED WHEREVER THE PRODUCT CAN BE MOST EFFECTIVELY PRODUCED
- EACH TEAM IS FULLY EMPOWERED BY A HIGHER LEVEL PRODUCT TEAM TO PRODUCE ITS PRODUCT AND IS HELD ACCOUNTABLE FOR ITS PERFORMANCE
- PRODUCT WORK PACKAGE (BASED ON PROGRAM HARDWARE SOFTWARE LIST, PHSL) DEFINES SPECIFIC AREAS OF PRODUCT TEAM RESPONSIBILITY
- THE PRODUCT TEAM LEADER FOR A PRODUCT TEAM IN THE PROGRAM AREA IS APPOINTED BY PROGRAM MANAGEMENT
- TEAM MEMBERS ARE DIRECTLY RESPONSIBLE AND ACCOUNTABLE TO THE PRODUCT TEAM LEADER FOR THEIR RESPECTIVE BUDGET, SCHEDULE, TECHNICAL, AND QUALITY PERFORMANCE

# PRODUCT TEAM RESPONSIBILITIES

During the initial stages of the product definition, individual Product Teams are responsible for clearly defining product requirements. Overall team responsibilities include product design, development, procurement, fabrication, assembly, test, and delivery. Also included are processes required to produce the product and associated documentation.

The Product Team establishes metrics that include cost, schedule, performance, and quality requirements. During all product stages, the Project Team is responsible for Integrated Product Development to ensure fit and compatibility with other products.

# PRODUCT TEAM RESPONSIBILITIES

- ENSURE ESTABLISHMENT OF PRODUCT REQUIREMENTS
- DESIGN, DEVELOP, PROCURE, FABRICATE, ASSEMBLE, TEST AND DELIVER ASSIGNED PRODUCTS, ASSOCIATED DOCUMENTATION , THEIR PRODUCTION PROCESSES, AND ALL OTHER PRODUCT WORK PACKAGE REQUIREMENTS
- MEET PRODUCT COST, SCHEDULE, PERFORMANCE, AND QUALITY REQUIREMENTS
- IMPLEMENT INTEGRATED PRODUCT DEVELOPMENT (IPD)
- PERFORM DOWNWARD DESIGN INTEGRATION BETWEEN SUBSYSTEMS, ASSEMBLIES, OR BOXES ASSIGNED TO THE PRODUCT TEAM (ASSISTED BY THE PROGRAM SYSTEM ENGINEERING/INTEGRATION GROUP)
- WORK WITH OTHER PRODUCT TEAMS AND THE PROGRAM SYSTEM ENGINEERING / INTEGRATION GROUP TO ENSURE UPWARD FIT / COMPATIBILITY OF TEAM'S PRODUCT WITH INTERFACING HARDWARE / SOFTWARE

# PRODUCT TEAM LEADER RESPONSIBILITIES

The Product Team Leader (PTL) is responsible for meeting the commitments and terms of the product work package (PWP) prepared by the Product Team. The PTL implements Integrated Product Development (IPD) to ensure compatibility between their team's product and other subsystems and products. The PTL negotiates requirements, budget and schedule as well as changes to these items with both the team customer and internal team members. Team members are accountable to the PTL for the pre-agreed on performance metrics in the PWP. The PTL has the authority to approve design, tooling, and manufacturing processes that do not impact already agreed on requirements.

# PRODUCT TEAM
# LEADER RESPONSIBILITIES

- ENSURE THE PRODUCT TEAM MEETS ALL THE COMMITMENTS / TERMS OF THE PRODUCT WORK PACKAGE (PWP) AND FOLLOWS ALL PROGRAM DIRECTIVES
- PLAN, ORGANIZE, STAFF, LEAD AND FACILITATE ALL ACTIVITIES OF THE PRODUCT TEAM, IMPLEMENTING INTEGRATED PRODUCT DEVELOPMENT AND PERFORMING DESIGN INTEGRATION BETWEEN SUBSYSTEMS, ASSEMBLIES, AND BOXES ASSIGNED BY THE PRODUCT TEAM
- NEGOTIATE REQUIREMENTS, BUDGET AND SCHEDULE (AND ANY CHANGES) WITH THE CUSTOMER (I.E., WHOEVER ISSUES THE PWP TO THE TEAM)
- NEGOTIATE BUDGET, SCHEDULE, TECHNICAL, AND OTHER COMMITMENTS WITH TEAM MEMBERS (E.G., FUNCTIONAL LEADERS / DISCIPLINES, SUB-PRODUCT TEAM LEADERS, SUBCONTRACTORS, SUPPLIERS, ETC.)
- HOLD MEMBERS OF THE PRODUCT TEAM ACCOUNTABLE TO THEIR COMMITMENTS AND PROVIDE PRODUCT TEAM PRODUCT, SCHEDULE, AND COST STATUS AS REQUIRED BY THE PROGRAM OFFICE AND THE PRODUCT WORK PACKAGE
- ENSURE TEAM FOLLOWS THE PROGRAM SOFTWARE DEVELOPMENT PLAN
- APPROVE DESIGN, TOOLING, MANUFACTURING PROCESS CHANGES THAT DO NOT IMPACT NEGOTIATED SCHEDULES, COST AND PRODUCT SPECIFICATION

# PRODUCT TEAM
# COST/SCHEDULE CONTROL

Each Product Team is responsiblefor its own cost and schedule control and establishes a management reserve. The team has a material controller to ensure timely receipt of materials to minimize schedule risk. By establishing a computer network between Product Teams and the program, cost, schedule, and technical data are maintained current and available to all Product Teams and program personnel.

# PRODUCT TEAM
# COST/SCHEDULE CONTROL

- PRODUCT TEAM LEADER / CONTROLS GROUP HAVE CONTROL OVER PRODUCT TEAM MATERIEL, TRAVEL, AND OVERTIME; AND MONITOR DIRECT LABOR RATES
- PRODUCT TEAM LEADER / CONTROLS GROUP ESTABLISHES A MANAGEMENT RESERVE, NORMALLY 10%
- MATERIAL CONTROLLER ENSURES TIMELY RECEIPT OF MATERIALS (LATE ARRIVAL CAN CAUSE LARGE COST AND SCHEDULE VARIANCES)
- TIGHT FUNCTIONAL LEADER, SUB-PRODUCT TEAM LEADER, AND SUBCONTRACTOR CONTROL ESSENTIAL
- REQUESTS FOR CHANGE MUST BE ADDRESSED QUICKLY, THOROUGHLY , AND FORMALLY
- DIRECT COMPUTER DATALINK BETWEEN PROGRAM AND PRODUCT TEAM ENCOURAGED

# PRODUCT TEAM COST MANAGEMENT

A key factor in risk mitigation is cost understanding. Each Product Team has ownership of and is responsible for developing product plans, schedules, and product. A detailed budget is prepared and integrated with the product schedule. These items are then approved by the Project Manager.

The Product Team Leader is responsible for managing individual tasks, maintaining the product Program Hardware Software List (PHSL), and performing corrective action within the lines of authority outlined in the team charter.

The Product Team approach minimizes project risk by providing timely and accurate visibility into the product schedule and cost. This data is updated and maintained on a weekly basis and includes both cost to date and cost to completion.

The modularized tasks inherent in the Product Team approach provide funding flexibility. As part of the initial team planning, schedules and budgets are prepared to include flexibility to overall project funding.

# PRODUCT TEAM COST MANAGEMENT

- COST UNDERSTANDING
- DETAILED BUDGET
- CLEAR ACCOUNTABILITY/RESPONSIBILITY/AUTHORITY/OWNERSHIP
- COST ACCOUNT MANAGER / PRODUCT DEVELOPMENT TEAM LEADER
  - SCHEDULE (MILESTONES)
  - TASKS
  - BUDGET
  - PHSL
  - CORRECTIVE ACTION
- TIMELY AND EFFECTIVE VISIBILITY INTO ACTUAL COST
  - WBS, COST ACCOUNT STRUCTURE, TIME CARDS
  - FRIDAY/MONDAY ACTUALS (NAME, HOURS, MATERIAL)
- FUNDING FLEXIBILITY THROUGH PRE-PLANNED OPTIMAL SCHEDULES, MODULARIZED TASKS, MANAGEMENT RESERVE

# WEEKLY PRODUCT TEAM CONTROL MEETINGS

Weekly control meetings are held to status cost, accomplishments, and concerns and to identify cost to product completion. During these meetings action items are assigned and tracked. Cost data is reviewed with product schedules to track spending. Product schedules include sufficient detail to track milestones and reveal technical problems early on. The Product Team Leader provides evaluation of team performance at each meeting.

# WEEKLY PRODUCT TEAM CONTROL MEETINGS

- REPORT HEADCOUNT / MILESTONE, ACCOMPLISHMENTS AND CONCERNS
- ACTION ITEMS ASSIGNED AND TRACKED
- ONLY CURRENT AND ACCURATE COST / SCHEDULE DATA USED
- COST AND SCHEDULE DATA ALWAYS REVIEWED TOGETHER
- MISSED DETAIL MILESTONES CAN REVEAL TECHNICAL PROBLEMS EARLY
- PROBLEMS IDENTIFIED, CONFINED, AND CONTROLLED WHILE STILL SMALL
- PRODUCT TEAM CONTROLS GROUP SERVES AS DAILY "EYES" OF TEAM
- PRODUCT TEAM LEADER MUST COMMENT ON EACH TEAM MEMBERS PERFORMANCE (POSITIVELY OR NEGATIVELY)
- IF IT HAS SUBCONTRACTS, SUBCONTRACT REVIEWS MAY BE HELD SEPARATELY, BIWEEKLY, WITH SUBCONTRACT MANAGEMENT TEAM

# PHASE A AND B ACTIVITIES; RISK REDUCTION

MUADEE Phase A & B activities will focus on cost and schedule risk reduction (technical risk has already been minimized through careful mission planning and technology selection). The principal areas to be addressed will be: 1) specifications; 2) sub-system development level; and 3) schedule. All areas of MUADEE development, including instruments and spacecraft, will be addressed. Specific Phase A and B risk reduction efforts are described in this section.

# Phase A & B Activities; Risk Reduction

- SPECIFICATIONS
  Complete & Confirm each detail level of specifications before they are needed so that they do not become schedule drivers.
  - Level 1 Specifications are completed now.
  - Level 2 Specifications will be completed before end of Phase A/B

- SUBSYSTEM LEVEL-OF-DEVELOPMENT
  Review each Subsystem & identify the least-developed elements in each. Assign efforts to improve uniformity.

- SCHEDULE
  Prepare program-length schedule. Identify critical paths and schedule drivers. Allocate resources to tasks that have to be done early.

# PHASE A/B ELECTRICAL POWER RISK REDUCTION

During Phase A/B, specific spacecraft design, analysis, and development tasks can be performed to reduce the development phase cost and risk. These areas of risk and cost reduction include the electrical power system, communications high gain antenna pointing control system, and the data and attitude control systems.

In the area of electrical power the existing electrical power simulation and mission planning software tools would be used to perform more detailed electrical power usage andenergy balance analyses. Results from this work would be used to update the electrical power design and further develop the mission operations timeline.

# PHASE A/B ELECTRICAL POWER SUBSYSTEM RISK REDUCTION

- RISK AREA-SOLAR ARRAY SIZING/CONFIGURATION
- DEGREE OF RISK-MEDIUM
- RISK MITIGATION PLAN-PERFORM DETAILED ELECTRICAL POWER USAGE AND ENERGY BALANCE ANALYSES USING REFINED MISSION TIMELINES/SCENARIOS AND UPDATED COMPONENT/INSTRUMENT POWER USAGE ESTIMATES. REEVALUATE POWER USAGE REQUIREMENTS. DEVELOP DESIGN CHANGES AS NECESSARY.
- SCHEDULE-COMPLETE TASK BY MID POINT OF PROJECT DEFINITION PHASE

# PHASE A/B HGA POINTING CONTROL RISK REDUCTION

The high gain antenna is used in conjunction with the X-band transmitter to provide science data return and spacecraft health and status monitoring. Because of the large distance between Earth and Mars, accurate pointing of the antenna translates into a significant increase in the amount of data that can be transmitted.

For this task, detailed analyses and design of the antenna pointing control system would be performed. An engineering unit of the control system would be developed and used to verify pointing requirements. This system would then be incorporated into the spacecraft simulator being developed based on the Gravity Probe B Hardware Software Laboratory.

# PHASE A/B HIGH GAIN ANTENNA POINTING CONTROL RISK REDUCTION

- RISK AREA-HIGH GAIN ANTENNA POINTING CONTROL
- DEGREE OF RISK-MEDIUM
- RISK MITIGATION PLAN-PERFORM DETAILED ANALYSES OF HIGH GAIN ANTENNA POINTING REQUIREMENTS INCLUDING GIMBAL ANGLE, SLEW RATE, FEEDBACK LOOPS, START AND STOP DYNAMICS; DEVELOP DETAILED DESIGN CONCEPT FOR SERVO MECHANISM AND CONTROL LOOP; DEVELOP A WORKING BREADBOARD AND PERFORM DESIGN VERIFICATION TESTING TO DEMONSTRATE SATISFACTORY PERFORMANCE AND CHARACTERIZE THE DESIGN; DEVELOP AND DEMONSTRATE SOFTWARE ALGORITHM FOR HGA POINTING CONTROL SYSTEM.
- SCHEDULE-COMPLETE TASK BY MID POINT OF PROJECT DEFINITION PHASE

# PHASE A/B C&DH AND ACS RISK REDUCTION

During the Phase A/B effort a flight system testbed would be developed including scientific instrument interfaces, flight computer with development software, development units for the data interface units, data bus, electrical power control unit, attitude control sensors, reaction wheel and propulsion system simulator.

This testbed would be used to develop and demonstrate mission specific software including attitude control algorithms, power switching and scientific instrument control. The system timing and operation margins would be verified along with the safemode design concept.

# PHASE A/B C&DH AND ATTITUDE CONTROL SUBSYSTEMS RISK REDUCTION

- RISK AREA-PERFORMANCE OF COMMAND AND DATA HANDLING AND ATTITUDE CONTROL SUBSYSTEMS INCLUDING DEVELOPMENT FLIGHT TYPE SOFTWARE

- DEGREE OF RISK-MEDIUM

- RISK MITIGATION PLAN-DEVELOP A FLIGHT SYSTEM TESTBED OF THE MUADEE SPACECRAFT BUS INCLUDING INSTRUMENT INTERFACES; HARDWARE WILL INCLUDE DEVELOPMENT UNITS (OR MATRIX X SIMULATION), A FLIGHT COMPUTER WITH DEVELOPMENT FLIGHT TYPE SOFTWARE; DATA INTERFACE UNITS, DATA BUS, ELECTRICAL POWER CONTROL UNIT, ATTITUDE CONTROL SYSTEM SENSORS, GYROS, REACTION WHEEL AND PROPULSION INTERFACE SIMULATION AND INSTRUMENT MICROPROCESSOR AND INSTRUMENT ELECTRICAL INTERFACE SIMULATION. PERFORM DESIGN VERIFICATION TESTS TO CHARACTERIZE THE DESIGN AND DEMONSTRATE ADEQUACY. VERIFY ATTITUDE CONTROL MODES OF OPERATION AND RESPONSIVENESS. VERIFY DEVELOPMENT FLIGHT SOFTWARE DESIGN. DETERMINE SYSTEM TIMING AND OPERATIONAL MARGINS. VERIFY SAFEMODE DESIGN CONCEPT. VERIFY FUNCTIONAL INTERFACES.

- SCHEDULE-COMPLETE INITIAL SYSTEM DEVELOPMENT TESTING BY END OF PROJECT DEFINITION PHASE. FLIGHT SYSTEM TESTBED WILL BE UPGRADED AND MAINTAINED THROUGHOUT PROGRAM TO SUPPORT PERFORMANCE VERIFICATION, FLIGHT SOFTWARE VALIDATION, AND TO SUPPORT TEST AND OPERATIONS INTERFACE VALIDATION AND COMMAND SEQUENCE VERIFICATION.

# "Phase A-B" Risk Reduction

- BEGIN INSTRUMENT CHANNEL DESIGN EARLY TO SUPPORT LONG-LEAD & EARLY-NEED ITEMS:
  - Supports Spacecraft & Integrated Instrument systems design activity.
  - Reduces resource contingency holdback requirements.
  - Identifies long-lead procurement items & allows preparation for a timely procurement start.
- DESIGN THE DIGITAL PROCESSING UNIT (DPU) ELEMENT OF THE INTEGRATED INSTRUMENTS:
  - Supports early start of software development.
  - Supports early fabrication of engineering units to support individual Channel component-level testing.
- DESIGN THE POWER SUPPLY (PS) ELEMENT OF THE INTEGRATED INSTRUMENTS:
  - Supports Spacecraft & Integrated Instrument systems design activity.
- BEGIN DESIGN OF COMMON ELEMENTS OF THE DPU SOFTWARE:
  - Supports design of Channel-Specific elements of Software.
  - Supports early fabrication of engineering units to support individual Channel component-level testing.
- BEGIN INSTRUMENT CHANNEL TESTBED DESIGN AND FABRICATION:
  - Ensure requisite test facilities are in place as needed.

# Responses to Discovery Workshop Comments - 1

- "Mission scenario not firm" (retained options for spinner or 3 axis stabilization)
  - Adopted a simple spinner design, with momentum wheel to permit despun operation similar to AE and DE. (dropped 3-axis stabilization)
- "Mission sounds adaptive"
  - Some aspects of operation are adaptive, since we must adapt to atmospheric uncertainties in aerobraking. Experience with aerobraking in AE and PVO shows this approach to be quite feasible.
- "Consortium not defined, roles of members not addressed."
  - Consortium and their roles now fully defined in the Final Report.
  - Industrial partner (Lockheed) would provide spacecraft.
  - NASA Center (JPL) will provide launch vehicle and data acquisition.
  - Co-Is named to provide instruments and theoretical modelling.
- "No Management Plan, no schedule, all are TBD."
  - Completed and detailed in final report.

# Responses to Discovery Workshop Comments - 2

- "Relatively large number of instruments."
  - Nature of mission requires relatively large number of simple instruments (cf. 16 instruments on AE, 12 instruments on PVO)
  - Reduced scope of mission and number of instrument to 7 on MUADEE.
  - Reconfigured these 7 simple instruments into 3 Instrument Packages to reduce instrument costs and complexity of interfaces with spacecraft. (One Co-I responsible for each instrument package).
- "Question U. of Michigan experience with mission operations."
  - Use of experience from University of Colorado (SME) and JPL
- "Question GSFC management willingness to cooperate vis a vis SMEX s/c and designs."
  - Use of Lockheed P-bus spacecraft removes need for SMEX cooperation from Goddard.
- "Very large science team."
  - Much smaller science team (4 Co-Is) with definite responsibilities for instrument package development and modeling. Larger number of interested scientists will participate through planning workshops and data analysis activities funded separately.

# 12.0 ADVANCED TECHNOLOGY

# SPACECRAFT BUS ADVANCED TECHNOLOGY PLAN

The MUADEE spacecraft will be designed, integrated, tested, and operated using advanced engineering practices, an advanced system architecture, and where consistent with discovery guidelines, advanced H/W and S/W technology. The MUADEE approach to application of advanced technology includes not only consideration of hardware and software, but taking a new approach to the processes required to manufacture, test, and operate spacecraft.

To produce and operate a scientific spacecraft within the Discovery guidelines, the MUADEE consortium has taken a unique approach. The ground and flight segment architectures have been developed in parallel to produce a system with true minimum life cycle cost. Both the flight and ground software are created in the hardware software lab or spacecraft simulation environment. This spacecraft simulator is used to initiate development of a common set of software that is used for system test, spacecraft operation, and ground system functions.

During the design and development stages, different institutions will be performing design and analysis of different spacecraft elements. A virtual spacecraft environment has already been established using the latest available concurrent engineering design and analysis tools. Through the use of standardized data formats an electronic communication network has already been established that provides the ability to perform engineering tasks independent personnel location. This electronically co-located engineering team utilizes video conferencing, teleconferencing, electronic mail, and electronic file and data transfer.

The scientific instrument are being developed by several Universities and institutions. The instrument packages are assembled and tested at the University of Michigan. As described in the ground segment section of this report, a common set of ground support equipment (GSE) and software are migrated to the University of Michigan where final spacecraft test is remotely performed by the mission operations / systems test personnel.

In the area of spacecraft hardware technology several candidates are being traded at the system and sub-system levels. These technologies include use of low weight and high strength composites, miniature low power star trackers for attitude control, high processing power RISC processors, 3-D solid state memory devices, high efficiency silicon solar cells, and high power density and low weight lithium polymer batteries.

The process improvements and technologies described have payoffs both to other aerospace applications and to commercial industry. Technology demonstrated on the MUADEE spacecraft will provide direct payoffs in spacecraft performance to a wide range of scientific disciplines . Both the technology and processes demonstrated in the design, test, and operation of the MUADEE spacecraft have several potential payoffs to commercial industry including process benefits to industry in the areas of test beds and control system simulations, composite materials technology, electrical power generation and storage technology and others.

# SPACECRAFT BUS
# ADVANCED TECHNOLOGY PLAN

- SPACECRAFT ADVANCED TECHNOLOGY IMPLEMENTATION PLAN

  - ESTABLISH VIRTUAL SPACECRAFT DEVELOPMENT ENVIRONMENT
    - INTEGRATION PRODUCT TEAMS
    - CONCURRENT ENGINEERING
    - STANDARIZED DATA FORMATS
    - AUTOMATION TOOLS
    - SPACECRAFT TESTBED

  - LEVERAGE ONGOING ADAVANCED TECHNOLOGY
    - COMPOSITE STRUCTURES, HIGH STREGTH AND THERMAL CONDUCTIVITY WITH LOW MASS
    - MINIATURE LOW POWER/COST STAR TRACKER
    - RISC PROCESSORS, 1773 DATA BUS, 3-D SS MEMORY
    - HIGH EFFICIENCY SILICONE CELLS
    - LITHIUM POLYMER BATTERIES

- SPACECRAFT TECHNOLOGY TRANSFER PLAN

  - DEVELOP TECHNOLOGY IMPLEMENTATION PLAN BASED ON BENEFIT TO FUTURE MISSIONS AND COMMERCIAL PAYOFF
    - ASTROPHYSICS
    - EARTH SCIENCE
    - COMMERCIAL REMOTE SENSING
    - COMMUNICATIONS
    - SPACE PHYSICS
    - PLANETARY MISSIONS
    - COMMERIAL INDUSTRY

# PAYLOAD ADVANCED TECHNOLOGY

Several advanced technologies can be implemented on the MUADEE scientific instruments and associated electronics. A few of those items are summarized below.

The Fabry-Perot Interferometer CCD detector is being included as an advanced technology. The University of Michigan is working with industry to develop a high sensitivity, shaped CCD detector to enhance the science return from this instrument. This technology has application to a wide range of instrument detectors for other aerospace applications. This technology also has commercial applications, specifically in the medical field.

Advanced technology applications for the support electronics required for scientific instruments is also being studied. Common electronics for instrument data processing and instrument power supplies are being designed for the three MUADEE instrument packages. Common software will be used to operate the electronics and instruments where possible.

# PAYLOAD ADVANCED TECHNOLOGY

- FABRY-PEROT INTERFEROMETER CHANNEL (FPI)
  - High-Sensitivity CCD Detector.
- SOLAR EXTREME ULTRAVIOLET CHANNEL (SEUV)
  - New sensor design used in conjunction with proven mature Langmuir Probe (LP) electronics.
- PACKAGING
  - ERIM Multichip Modules.
  - Integrated Instrument Electronics approach.

# 13.0 DESCOPE OPTIONS

# MISSION SCENARIO DESCOPES

If further mission definition during Phases C and D indicates that the Mission Scenario, if implemented, would drive costs beyond present expectations, the Global Survey (circular orbit phase) would be eliminated. This phase requires greater operational support than does the elliptical phase because the MUADEE spin axis must be torqued more frequently to keep it perpendicular to the orbit plane.

If additional cost reductions are required, the Latitudinal Survey (elliptical orbit phase) can be shortened by reducing the number of pole-to-pole periapsis sweeps. Each sweep requires 2.3 months, so a reduction from 7 sweeps to 5 sweeps would reduce the Latitudinal Survey phase from 16 months to less than 11 months.

# Mission Scenario Descopes (Order of Action)

- Remove circular orbit phase (5 months)
- Remove latitude sweeps of elliptical phase one at a time (2 sweeps deleted reduces mission duration to 1.5 years)
- Return to Pioneer-Venus-like spinner (remove momentum wheel)

TLK Exec. 36

# INSTRUMENT DESCOPES

A number of instrument deletions and simplifications are available if mission scenario descopes are not adequate to contain cost-to-complete caps. The first option will be to remove the magnetometer from the Plasma Instrument Package. This will de-emphasize the solar wind interactions and Joule heating aspects of the MUADEE science goals.

The second option will be to delete the Imaging Photometer from the Scanning Imaging Package. This will de-emphasize MUADEE's study of the role of gravity wave propagation from the underlying atmosphere on the energetics and dynamics.

The third option will be to delete the Langmuir Probe sensors from the LP/EUV instrument in the Plasma Science Package. This will de-emphasize the role of electron-ion and electron-neutral heating in the thermospheric energy balance. However, the EUV capability of the instrument will be retained, since the EUV is the main heat source in the energy budget of both the thermosphere and ionosphere and it should be measured simultaneously with the atmospheric parameters.

The final instrument descope option that will be implemented will be to remove one of the two Fabry-Perot etalons, thus reducing the ability to obtain neutral gas wind directions.

This nested set of instrument descopes has been agreed to by all participants and is available for implementation as needed during the development phase. Instrument descopes will be activated by the Principal Investigator on the recommendation of the Project Manager.

# Instrument Descopes (Order of Action)

- Remove Magnetometer channel
- Remove Imaging Photometer channel
- Remove LP capability from LP/EUV sensor
- Descope FPI channel to single etalon implementation

TLK Exec. 37

# SPACECRAFT DESCOPES

The first spacecraft descope option will be to reduce the data rate capability; including the communications subsystems and the onboard memory. This will reduce the electrical power requirements and the size of the body-mounted solar array and the external structure that supports it.

If further reduction in mission costs are required, the momentum wheel can be omitted from the spacecraft design, thus returning the mission to a pure spinner. This would be similar to the Pioneer Venus Orbiter design, except that the spin axis would be maintained perpendicular to the orbit plane to permit cartwheel-like scanning of the limbs for the remote instruments and full ram angle sweeps for the in situ measurements.

# Spacecraft Descopes (Order of Action)

- Reduce science data throughput, down size comminication subsystem and electrical power subsystem requirements
- Return to Pioneer-Venus-like spinner, remove momentum wheel

# 14.0 MISCELLANEOUS

# POSSIBLE ADDITIONS

# MUADEE CAMERA

*Partial Mars Observer Recovery.* If NASA finds that it is desirable, MUADEE can contribute to the Mars Observer recovery program by adding a high resolution camera to the payload. This can be done without seriously impacting the cost and complexity of the spacecraft and the mission, since the camera's mass, power requirements and data rates are all about 5% or less than those of the integrated MUADEE aeronomy instrument package.

*Camera High Resolution Capabilities.* The camera being proposed has a resolution of 5 m/pixel from MUADEE's orbit. This resolution is sufficient to allow the detection of paleobeaches, paleolakes, "stream" networks and their deposits. The morphology of dunes, young volcanoes and lava flows can also be studied at this resolution, as can time varying wind deposits. This resolution would also allow positive identification of the Viking lander sites and the identification of potential landing sites for future landing missions.

*Camera Parameters and Data Acquisition.* The proposed camera has a mass of only 2.9 kg, an average ON power of only 0.2 w and a data rate of just 271 bps. As such, the camera could be added to MUADEE without impacting the spacecraft's mass, power and data downlink budgets in any significant way. This is also the case since it is planned that only a few images per month would be taken of selected targets during the nominal MUADEE science mission when the downlink data rate is low. Most of the imaging program would be conducted during the 2001 opposition period when the downlink data rates are high and after the end on the nominal MUADEE mission.

# MUADEE CAMERA

- PARTIAL MARS OBSERVER RECOVERY
  - LOW COST
  - MINIMAL IMPACT ON SPACECRAFT / MISSION
- HIGH RESOLUTION (5 M/PIXEL ) IMAGERY OF SELECTED TARGETS
  - PALEOBEACHES
  - PALEOLAKES
  - "STREAM" NETWORKS AND DEPOSITS
  - DUNE MORPHOLOGY
  - YOUNG VOLCANOES AND LAVA FLOWS
  - TIME VARYING WIND DEPOSITS
  - VIKING LANDERS
  - FUTURE LANDING SITES
- CAMERA PARAMETERS
  - 2.9 KG
  - 0.2 WATTS AVERAGE ON
  - 271 BPS
- DATA ACQUISITION DURING MISSION
  - FEW IMAGES/MONTH WHEN DATA RATES ARE <40KBPS
  - SEVERAL IMAGES/WEEK DURING 2001 OPPOSITION
- IMAGE EXPERIMENT CONDUCTED MAINLY AFTER END OF MISSION

# ATMOSPHERIC SOUNDER

*Partial Mars Observer Recovery.* If NASA finds that it is desirable, MUADEE can contribute to the Mars Observer recovery program by adding an atmospheric sounder to the payload. This can be done at minimum to modest impacts to the cost and complexity of the spacecraft and the mission. The sounder's mass and power requirements are about 30% of those of the integrated MUADEE aeronomy instrument package, while the sounder's data rate is only about 2% of that of the MUADEE instruments.

*Atmospheric Sounder Capabilities.* The atmospheric sounder would produce profiles of the temperature and water vapor content of the lower Martian atmosphere. The resulting global, near-synoptic data sets would provide inputs to atmospheric circulation and structure models. They would increase our understanding of the thermal and dynamic effects of atmospheric dust and the seasonal behavior of atmospheric water vapor. These data would also detect wave phenomena which should be related to the dynamics of the upper atmosphere as defined by the MUADEE aeronomy instruments.

*Atmospheric Sounder Parameters and Data Acquisition.* The proposed sounder has a mass of 15 kg, an average ON power of only 10 w and a data rate of only 100 bps. As such, the sounder could be added to MUADEE with only modest impacts to the spacecraft's mass and power budgets and an insignificant impact on the data downlink budget. The sounder would acquire data continuously and do nadir-profiling when appropriate.

# ATMOSPHERIC SOUNDER

- PARTIAL MARS OBSERVER RECOVERY
  - MICROWAVE SPECTROMETER
  - MINIMAL IMPACT ON SPACECRAFT/MISSION
- PROFILES OF ATMOSPHERIC TEMPERATURE AND WATER VAPOR
  - GLOBAL, NEAR-SYNOPTIC MEASUREMENTS
  - INPUT INTO ATMOSPHERIC CIRCULATION AND STRUCTURE
  - UNDERSTAND THERMAL AND DYNAMIC EFFECTS OF DUST
  - UNDERSTAND SEASONAL BEHAVIOR OF ATMOSPHERIC WATER
  - OBSERVE WAVE PHENOMENA RELATED TO UPPER ATMOSPHERE DYNAMICS
- INSTRUMENT PARAMETERS
  - 15 KG
  - 10 WATTS AVERAGE ON
  - 100 BPS
- DATA ACQUISITION DURING MISSION
  - CONTINUOUS OBSERVATIONS
  - NADIR-PROFILING WHEN APPROPRIATE

# COMMUNICATIONS ORBITER

The communications orbiter spacecraft requirements are similar to the existing MUADEE requirements. The communications mission could be performed using the existing MUADEE spacecraft with some minor modifications. There would be some increase to the communications subsystem to increase the data transfer back to Earth. To support the increase in communications subsystem performance, the electrical power subsystem capability would need to be increased also.

The MUADEE orbit has been selected to provide latitude and diurnal survey capabilities by varying the orbit altitude. A ground site visibility study would have to be performed to determine the capability of this orbit to relay data from the Mars surface to Earth.

The overall impact to the spacecraft design would be minor. To support the increased communications capability an additional 40 kg and 60 watts of power are estimated based on the existing spacecraft design.

# COMMUNICATIONS ORBITER

- COMPATIBILITY WITH MUADEE SPACECRAFT
  - BOTH MISSIONS COMPATIBLE WITH EXISTING MUADEE PROPULSION, ATTITUDE CONTROL AND HIGH GAIN ANTENNA DESIGNS
  - INCREASE IN MASS FOR THE COMMUNICATIONS AND ELECTRICAL POWER SUBSYTEMS
  - INCREASE IN POWER FOR ADDED COMMUNICATIONS CAPABILITY

- IMPLEMENTATION IN MUADEE ORBIT
  - MUADEE ORBIT: 98° INCLINATION, VARYING ALTITUDE
  - GROUND SITE VISIBILITY STUDY REQUIRED

- MUADEE SPACECRAFT IMPACT
  - 40 KG MASS INCREASE
  - 60 WATT POWER INCREASE

# MARS OBSERVER LESSONS LEARNED

# GENERAL OBSERVATIONS AND CONCERNS

Documentation from the Mars Observer failure review boards is being reviewed to apply lessons learned to the MUADEE mission wherever possible. The information contained in this overview was taken from the Mars Observer Failure Report.

Comments from the board include recommendations for project management, systems engineering, configuration control, spacecraft design and test, and spacecraft operation. The MUADEE team memebers, the University of Michigan, Lockheed, and JPL are working together to review these comments and recommendations and apply them directly to the MUADEE mission.

# GENERAL OBSERVATIONS AND CONCERNS

- TELEMETRY SHOULD HAVE BEEN LEFT ON DURING CRITICAL EVENTS
- INADEQUATE TOP LEVEL SYSTEMS ENGINEERING
- OUTDATED CONTRACT PHILOSOPHY
- SOFTWARE DEVELOPMENT DID NOT FOLLOW SOUND PRACTICES
- TOO MUCH RELIANCE ON HERITAGE FOR SPACECRAFT HARDWARE, SOFTWARE AND PROCEDURES
- INAPPROPRIATE TRADE-OFFS BETWEEN REDUNDANCY AND WEIGHT
- SPACECRAFT AUTONOMY OVERLY RELIED ON
- INADEQUATE TESTING OF SOME SPACECRAFT SYSTEMS
- NO RISK MANAGEMENT PLAN FOR SYSTEM WIDE TRADE-OFFS
- TOO MUCH RELIANCE ON PRE-LOADED SOFTWARE SCRIPTS

# SYSTEM SPECIFIC OBSERVATIONS AND CONCERNS

Subsystem engineers directly responsible for the MUADEE spacecraft, ground system, and operations design have been provided the failure review documentation to apply lessons learned to their specific subsystems. System and subsystem level requirements are being verified for appropriateness to this Mars mission. Qualification requirements are being checked at the component level to ensure compatibility with the MUADEE mission specific environment.

# SYSTEM SPECIFIC OBSERVATIONS AND CONCERNS

- ELECTRICAL POWER SYSTEM
  - SEVERAL SINGLE POINT FAILURE MODES
  - USE OF COPPER-CLAD ALUMINUM WIRE TO SAVE WEIGHT
  - INADEQUATE QUALITY CONTROL INSPECTION

- ATTITUDE CONTROL SYSTEM
  - LOSS OF INERTIAL REFERENCE ON SEVERAL OCCASIONS

- COMMAND AND DATA HANDLING
  - REDUNDANT CRYSTAL OSCILLATORS WERE NOT EMPLOYED IN TRULY REDUNDANT MANNER
  - NO HEALTH MONITORING OF REDUNDANT CRYSTAL OSCILLATOR
  - INADEQUATE TESTING OF C&DH SYSTEM
  - MULTIPLE POTENTIAL SINGLE POINT FAILURE IN C&DH SYSTEM
  - LACK OF VERIFICATION TEST LABORATORY FOR SPACECRAFT
  - INAPPROPRIATE COMMAND SEQUENCE

# SYSTEM SPECIFIC OBSERVATIONS AND CONCERNS (CONT)

- TELECOMMUNICATIONS SYSTEM
  - TRANSMITTERS WERE SHUT OFF AS PART OF COMMAND SEQUENCE

- MECHANICAL SYSTEM
  - UNJUSTIFIED RELIANCE ON EARTH ORBIT QUALIFIED CHECK VALVES
  - INAPPROPRIATE REMOVAL OF REDUNDANT PROPULSION SYSTEM
  - LACK OF PROPULSION SYSTEM TELEMETRY

- SOFTWARE
  - SOFTWARE DID NOT ALWAYS FULFILL SYSTEM REQUIREMENTS
  - SOFTWARE DEVELOPMENT PLAN WAS NOT FOLLOWED
  - NO INDEPENDENT VERIFICATION AND VALIDATION PROCESS
  - SOFTWARE DEVELOPMENT WAS UNDERSTAFFED
  - LACK OF ADEQUATE SOFTWARE CONFIGURATION CONTROL
  - REDUNDANCY MANAGEMENT SOFTWARE WAS NOT UNDERSTOOD
  - OVER RELIANCE ON EARTH ORBIT SOFTWARE

# CONTAMINATION, RADIATION, AND PLANETARY PROTECTION

# CONTAMINATION CONTROL POLICY

This chart defines the Lockheed approach for implementing a contamination program for the University of Michigan MUADEE spacecraft program. The approach is similar to the one developed for the Gravity Probe B program for Stanford University.

Implementation of the program is divided into three basic elements.

The first element is to involve contamination engineering personnel early in the spacecraft bus design cycle. By including contamination personnel on the integrated product teams, potential contamination issues can be addressed early to either eliminate/ minimize contamination concerns by proper design/selection of spacecraft materials.

The second phase of the contamination program is to set up up cleaning/ inspection points at appropriate points in the bus and/or spacecraft buildup/test process.

The third phase of the program is to ensure the cleanliness of the spacecraft/ high bay area once bus/spacecraft testing starts. Spacecraft/facility cleanliness will be verified on a scheduled basis per MUADEE program requirements.

# CONTAMINATION CONTROL POLICY

- LOCKHEED's APPROACH TO CONTRAMINATION CONTROL:
  - BASED ON EXISTING SPACECRAFT PROGRAM (GPB)
- BASIC ELEMENTS OF APPROACH:
  - CONCURRENT ENGINEERING TO ELIMINATE/MINIMIZE SOURCES/EFFECTS OF SPACECRAFT BUS COMPONENTS WITH RESPECT TO CONTAMINATION WHENEVER POSSIBLE.
    - -- CONTAMINATION ENGINEER IS MEMBER OF INTEGRATED PRODUCT TEAMS
    - -- APPROVAL OF CONTAMINATION ENGINEER REQUIRED BEFORE SPECIFICATION/ DRAWING IS RELEASED.
  - INCORPORATE CLEANING/INSPECTION POINTS AT APPROPRIATE POINTS IN THE BUS HARDWARE BUILDUP PROCESS.
    - -- COMPONENT
    - -- SUBSYSTEM
    - -- SYSTEM
  - MAINTENANCE OF CLEANLINESS LEVELS (100K) BY USE OF APPROPIATE PROTECTIVE MEASURES FROM SPACECRAFT INTEGRATION AND TEST ACTIVITIES THROUGH LAUNCH.
    - -- VERIFY CLEANLINESS OF HIGH BAY FACILITIES ON A SCHEDULED BASIS PER PROGRAM REQUIREMENTS.



KS: 3/15/94
CHART 15

# RADIATION ENVIRONMENT

The spacecraft radiation environment identified for the MUADEE mission was based on the Mars Global Surveyor (MGS) radiation requirements. A preliminary MUADEE Spacecraft Radiation Environmental Specification has been assembled and is included in the attachments to this report. The document addresses the specific areas of electron and proton environment, total proton dose environment, and single event effects.

# SPACECRAFT RADIATION ENVIRONMENT

- THE MUADEE RADIATION ENVIRONMENT IS DERIVED FROM THE MARS GEOSCIENCE SURVEYOR ENVIRONMENTAL ESTIMATES
- A DESCRIPTION OF THE EXPECTED MAUDEE RADIATION ENVIRONMENT MAY BE FOUND IN THE DOCUMENT ENTITLED "SPACECRAFT RADIATION ENVIRONMENTAL ESTIMATES"
- ENVIRONMENTAL ESTIMATES DOCUMENT ADDRESSES:
  - ELECTRON AND PROTON ENVIRONMENT
  - TOTAL PROTON DOSE ENVIRONMENT
  - SINGLE EVENT EFFECTS



JAH: 3/15/94
CHART 35

# PLANETARY PROTECTION REQUIREMENTS

The NASA planetary protection program has defined requirements for different classes of planetary missions. Orbiter missions with no intentions to enter the atmosphere or land on Mars are considered Class III missions. Class III missions have a dwell time requirement. This requirement states that the spacecraft may not spend more than 35 cumulative days below an altitude of 325 km.

Since MUADEE will spend much of its time below an altitude of 325 km an additional requirement is defined so that the dwell time constraint no longer applies. The additional requirement is that a detailed surface cleaning of all exposed surfaces, with a subsequent bioassay and protection from recontamination after the assay is performed.

# PLANETARY PROTECTION REQUIREMENTS

- PROBABILITY OF ACCIDENTAL IMPACT OF THE LAUNCH VEHICLE UPPER STAGE ON MARS SHALL BE $<10^{-5}$
- PROBABILITY OF ACCIDENTAL IMPACT OF SPACECRAFT (OR ANY PART OF IT) ON MARS BEFORE JANUARY 1, 2009 SHALL BE $<10^{-4}$
- PROBABILITY OF ACCIDENTAL IMPACT OF SPACECRAFT ON MARS OVER THE PERIOD FROM JANUARY 1, 2009 TO JANUARY 2039 SHALL BE <0.05
- SPACECRAFT (INCLUDING ORBITERS) WITHOUT BIOLOGICAL EXPERIMENTS SHOULD BE SUBJECT TO AT LEAST VIKING LEVEL PRE-STERILIZATION PROCEDURES - SUCH AS CLEAN-ROOM ASSEMBLY, AND CLEANING OF ALL COMPONENTS - FOR BIOLOAD REDUCTION, BUT SUCH SPACECRAFT NEED NOT BE STERILIZED
- CLASS 100K CLEAN-ROOM ASSEMBLY
- DETAILED SURFACE CLEANING OF ALL EXPOSED SURFACES WITH SUBSEQUENT BIOASSAYS AND PROTECTION FROM RECONTAMINATION AFTER ASSAY



RJL: 3/15/94
CHART 1

# AIMPOINT TARGETING

The computation of impact probability, at any time, is a function of the targeted aimpoint at that time, the distance of that aimpoint to the impact circle of the planet, the size, shape and orientation of the likely B-plane dispersions due to navigation uncertainties at that time, and mission specific assumptions about the probable success of future trajectory correction maneuvers .

The B-plane is a plane passed through the center of the target planet, normal to the spacecrafts incoming $V_\infty$ vector. The incoming asymptote penetrates the B-plane at the aimpoint. The magnitude of the B vector is equal to b (semi-minor axis) of the hyperbola.

# AIMPOINT TARGETING

- TO MINIMIZE THE PROBABILITY OF ACCIDENTAL IMPACT OF THE LAUNCH VEHICLE UPPER STAGE ON MARS THE INITIAL TARGET AIMPOINT FOR THE MARS ARRIVAL HYPERBOLIC TRAJECTORY IS BIASED BY 5 MARS RADII (16,985 KM)
- 14 DAYS AFTER INJECTION INTO THE TRANSFER ORBIT BY THE UPPER STAGE THE SPACECRAFT WILL CORRECT FOR INSERTION ERRORS AND REDUCE THE BIAS ON THE TARGETED AIMPOINT SO AS TO MISS MARS BY 2 RADII (6,794 KM)
- TRAJECTORY CORRECTION MANEUVER #1 WILL REMOVE THE REMAINING BIAS AND TARGET THE SPACECRAFT TO THE AIMPOINT
- TCM #2 (IF REQUIRED) WILL CORRECT FOR ANY REMAINING TRAJECTORY ERRORS
- AIMPOINT IS DETERMINED THROUGH THE USE OF THE "B-PLANE"

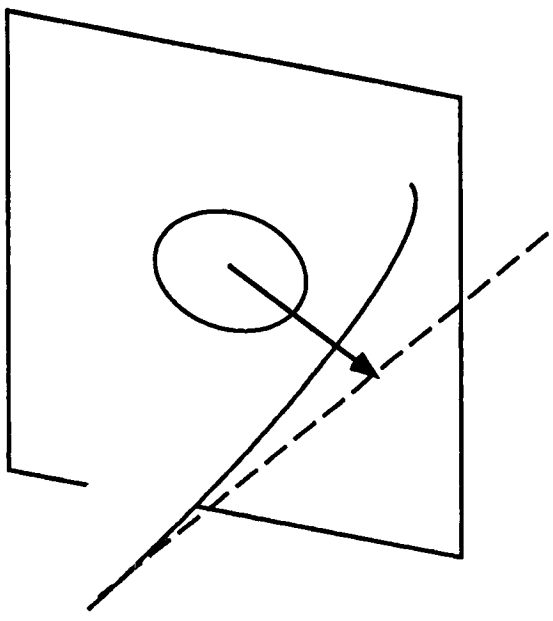

| CASE | HP (KM) | R (KM) | B (KM) |
|---|---|---|---|
| IMPACT | 0 | 3,3976,107 | |
| ATMOSPHERE | 175 | 3,5726,312 | |
| CAPTURE ORBIT | 250 | 3,6476,349 | |
| L.V. U.S. MISS | 16,985 | 20,382 | 23,873 |

$$B = R*SQRT(1+2MU/RV\infty 2)$$



RJL: 3/15/94
CHART 2

# ORBITAL LIFETIMES

The planetary protection philosophy in the MUADEE trajectory design is to satisfy protection requirements if the propulsion system fails. The hyperbolic approach trajectory to Mars is targeted at an altitude of 250 km which ensures that drag is nearly zero. Without the MOI burn the spacecraft will flyby Mars.

Once in the capture orbit the decay rate is small allowing the spacecraft to remain in orbit until after 2039. Aerobraking is initiated with a gentle stepwise walk to the desired maximum density altitude. If any propulsion problems are encountered early the spacecraft periapsis altitude can be raised to lower the orbital decay.

The latitudinal and diurnal survey orbits have small orbital decay rates that will nominally be controlled by the propulsion system. The quarantine orbit has a orbital lifetime of greater than 40 years which satisfies the requirements. F10.7 is the mean solar flux. Solar flux influences density variation in the Mars atmosphere.

# ORBITAL LIFETIMES

- SPACECRAFT ON INCOMING HYPERBOLIC TRAJECTORY WILL FLYBY MARS UNLESS A PROPULSIVE MANEUVER IS PERFORMED
- INITIAL CAPTURE ORBIT'S ORBITAL DECAY RATE IS SMALL
- PROPULSIVE MANEUVER MUST BE PERFORMED TO INITIATE AEROBRAKING
- AEROBRAKING IS STEPWISE
- LATITUDINAL AND DIURNAL SURVEY ORBITS HAVE SMALL ORBITAL DECAY RATES
- QUARANTINE ORBIT HAS A LONG ORBITAL LIFETIME
  - GREATER THAN 40 YEARS FOR MEAN F10.7 VALUES



RJL: 3/15/94
CHART 3

# RESPONSE: PROVIDE STRONG PROJECT MANAGEMENT

Following a review of the strengths and capabilities of its partners, the MUADEE team concluded that the project management experience needed to assure success in phases A, B, and C/D of the mission could best be provided by an experienced JPL project manager. A Memorandum of Understanding has been established between the University of Michigan and JPL to supply this individual, co-located at the University of Michigan. The Project Manager selection will be made not only on the basis of past mission successes, but also on the ability to successfully merge industry and university cultures into an effective, cohesive team. The Project Manager selection and appointment will be made at the beginning of the Phase A study to assure a consistent management approach throughout the most cost and schedule sensitive phases of the project.

During the Mission Operations and Data Analysis Phases, the project management duties will be assigned to the Ground Segment Manager at the University of Michigan. This individual has extensive experience in MO & DA management and is the best qualified individual to manage this portion of the MUADEE mission.

A Project Management Office will be established at the University of Michigan to be the central repository for primary project documentation and management information. These data will be maintained in an electronically accessible form for easy access by team members, primarily through the Internet.