NASA Contractor Report 194428
D658–10343–1

A User's Manual for Developing Cost Estimating Relationships

Volume 1

A.F. Peffley, J.F. Hagen, and R.R. Bock
Boeing Defense and Space Group
Seattle, Washington

August 1996

Prepared for
Lewis Research Center
Under Contract F33615–86–C–3004

National Aeronautics and
Space Administration

This Document is:

Controlled by: BD&SG Organization 9-1053

ALL REVISIONS TO THIS DOCUMENT SHALL BE APPROVED BY THE ABOVE ORGANIZATION PRIOR TO RELEASE

Prepared Under: Contract No. F33615-86-C-3004, P00009

Boeing Document No.: D658-10343-1

Submitted to: U.S. Air Force Wright-Patterson Laboratories, Dayton, Ohio, and

NASA Lewis Research Center's RAMO Project Office, Cleveland, Ohio

Title: **"A User's Manual for Developing Cost Estimating Relationships"**
Volume 1

Issue No.: To: Date:

THE INFORMATION CONTAINED WITHIN VOLUME 1 OF THIS FINAL REPORT IS NOT PROPRIETARY; PUBLIC DISTRIBUTION IS BY AUTHORITY OF NASA.

NOTICE:
THE INFORMATION CONTAINED IN VOLUME 2, APPENDICIES A THROUGH C, IS PROPRIETARY TO THE BOEING COMPANY AND ITS INTELLECTUAL PROPERTY DATA SUPPLIERS AND SHALL NOT BE REPRODUCED OR DISCLOSED IN WHOLE OR IN PART OR USED FOR ANY DESIGN, ANALYSIS, EVALUATION, OR MANUFACTURE EXCEPT WHEN SUCH USER POSSESSES DIRECT, WRITTEN CONSENT FROM THE BOEING COMPANY AND/OR ITS INTELLECTUAL PROPERTY DATA SUPPLIERS.

Any additional limitations imposed on this document will be found on a separate limitations page

	SIGNATURE	ORG.	DATE
Prepared by:	A. F. Peffley	9-1053	
Checked by:			
Supervised by:			
Approved by:			

Abstract

A collection of cost estimating relationships (CER's) and their proprietary database sources. The cost estimating relationships can be used in the aerospace systems cost analysis of: (1) advanced jet engine propulsion systems used on future aircraft preliminary designs; and (2) microgravity technology systems used for research of materials processes in a low earth orbit space environment. The primary focus of the cost estimating relationships for turbine jet engines is at the total development and theoretical first unit production cost levels of a new engine. The primary focus of the microgravity technology system cost estimating relationships is to forecast development and theoretical first unit production costs for microgravity carrier systems and microgravity experiment projects using subsystem level equations, which then add up to a total microgravity development cost estimate. The output of the equations is in constant-year, 1993 U.S. dollars. Estimating techniques, jet engine operation and support parameters, and project work breakdown structure development for estimating life cycle costs are also addressed.

Key Words

Aeropropulsion

Core Jet Engine

Cost Analysis

Cost Estimating Relationship

Design Characteristics

Development

Engineering Design & Development

Microgravity Carrier

Microgravity Experiment

Option Task

Parameter

Theoretical First Unit (TFU)

Work Breakdown Structure

Forward
and
Acknowledgements

The authors of this report realize the ultimate sensitivity of the systems performance, cost, and price information, especially in a highly competitive and (unfortunately) rapidly shrinking aerospace equipment sales market. Most aerospace organizations who contributed to this document did so on their own time and money. We especially thank the many managers, professional engineers, and secretarial support individuals at UTC Pratt & Whitney, Spacehab Inc., McDonnell Douglas, the many NASA centers, USAF Wright-Patterson Propulsion Laboratories, and General Electric Aircraft Engines for their patience and guidance throughout this project. Sometimes the questions and answers were easy, and sometimes they were harder to communicate to the "apprentice" Boeing investigators.

The principle investigator and co-author of this special project wish to thank the following individuals and their respective aerospace community co-workers for significant help in formulating and finalizing this study report. While the project was in its final weeks and hours, these people gave a caring and knowledgeable response to the many questions and information solicitations that were asked of them by the Boeing interviewer.

Contributor's Name	Contributor's Organization
Jet Engines Technology & Cost Data:	
Mr. Bob Boutwell;	United Technologies, Pratt & Whitney
Mr. Jim Hughes;	
Mr. Edward Reed;	
Mr. Jim Younghans.	
Mr. Michael Bailey;	GE Aircraft Engines
Ms. Beth Redwine;	
Mr. Mick Thackery;	
Mr. Dwight Weber.	
Mr. Granville Frazier	Boeing Commercial Airplane Group
Ms. Maureen Burns	NASA Lewis Research Center
Mr. Ray Borkowski	U.S. Naval Air Headquarters
Microgravity Technology & Cost Data:	
Mr. Steve Creech	NASA Marshall Space Flight Center
Ms. Madeline Ellis	McDonnell Douglas Aerospace, LB
Mr. David Greves	ESTEC-European Space Agency
Mr. Bob McAnnally	NASA MSFC Spacelab Office
Mr. John Mikitish	Applied Research, Inc., Huntsville
Mr. Alvin Reeser, CEO	Spacehab, Inc. Headquarters
Mr. J. Simmons	McDonnell Douglas Spacehab Office

User's Manual for Cost Estimating Relationships

Table Of Contents

Section Number	Section Title	Page
Volume 1 Contents:		
1.0	Introduction & Project Overview	1
1.1	Project Objectives & Schedule	3
1.2	Project Data Control & Access Restrictions	6
1.3	Project Overview - Methods & Sources	6
2.0	Product Development (Rules, Surveys & Formats)	16
2.1	Ground Rules & Assumptions	16
2.2	Industry Survey Summary	20
2.2.1	System Categories Design Definition Process	20
2.2.2	Key Technical Parameters	21
2.2.3	Terminology & Acronyms	22
2.3	Database & CER Development Application Software Formats Overview	23
3.0	Jet Engine Estimating Module	27
3.1	Jet Engine Work Breakdown List	28
3.2	Jet Engine Family Design Descriptions	31
3.3	Jet Engine Development & Production CER's	42
3.4	System Level Cost Factors (Support Costs)	44
3.5	Example of Jet Engine CER's Application	45
4.0	Ramjet Engine & Nacelle Estimating Module	48
4.1	Ramjet System Work Breakdown List	48
4.2	Ramjet CER Development Comments	48
5.0	Jet Engine O&M Cost Estimating Module	55
5.1	O&M Cost Research Objectives & Data Sources	55

Volume 1 Contents (cont.):

Section Number	Section Title	Page
5.2	Listing of Jet Engines Researched using Boeing Libraries	57
5.3	Airplane Jet Engine O&M Non-cost and Cost Data	59
5.4	Other O&M Support Cost Estimating Considerations	71
6.0	Microgravity Technology (MT) Estimating Module	72
6.1	Microgravity Technology Cost Breakdown List	72
6.2	MT System Design Descriptions	74
6.3	MT Development & Production CER's	79
6.4	System Level Cost Factors (Support Costs)	89
7.0	Operating Environment Influences on the Cost Evaluation	91
7.1	Use of NASA Technology Maturity Levels	92
7.2	The Importance of Design & Service Life	94
7.3	Special Operating Environments	95
8.0	Observations & Recommendations	97

Listing of Key Acronyms & Abbreviations 99

Listing of References 100

User's Manual for Cost Estimating Relationships

List of Figures

Figure Number	Figure Title	Page
1.1-1	The study plan schedule is five months long and composed of three phases.	5
1.3	The study logic flow was established in Phase I of the project plan.	8
2.3	Example of an appendix b cost data description sheet.	26
3.1	Generic work breakdown structure for jet engine derivatives.	30
3.2-1	A simplified, schematic drawing of a turbojet engine.	33
3.2-2	The J-58 engine was developed for the supersonic SR-71 airplane.	33
3.2-3	The SR-71 nacelle and core engine operation enables the Blackbird to attain Mach 3 flight speeds.	34
3.2-4	Trimetric and cross section views of GE F404 turbofan engine.	36
3.2-5	A schematic of a turbofan engine from Hill and Peterson's book.	38
3.2-6	"Energy Efficient Engine" prototypes, like the one shown in this GE drawing, were built for NASA in the early 1980's.	38
3.2-7	Diagram and trimetric views of the GE unducted engine.	41
4.1	Generic work breakdown structure for liquid-fueled ramjet engines.	49
4.2-1	Simplified schematic & drawing of a typical ramjet engine.	50
4.2-2	Materials complexity multipliers for estimating ramjet structures and mechanical components.	54
6.1	A generic WBS listing was developed for microgravity projects.	73
6.2-1	Spacelab major elements are the work modules, pallets & igloo.	75

List of Figures (cont.)

Figure Number	Figure Title	Page
6.2-2	Spacehab major assemblies are compact and efficient.	75
6.2-3	A Crystal Vapor Transport Experiment (CVTE) technical drawing.	77
6.2-4	A Tank Pressure Control Experiment (TPCE) isometric drawing.	77
6.2-5	A photograph of the CVTE on the mid-deck of the Orbiter.	78
7.1	An example of a NASA technology maturity scale.	93

Aeropropulsion & Microgravity Technology Systems Special Study Project

User's Manual for Cost Estimating Relationships

1.0 INTRODUCTION & PROJECT OVERVIEW

This Cost Estimating Relationship (CER) development project was initiated by the National Aeronautics and Space Administration's (NASA) Lewis Research Center (LeRC) in Cleveland, Ohio. NASA sponsored the project to support on-going cost analysis activities at LeRC. The primary study focus areas are to collect pertinent cost estimating research data and to assist in the development of cost estimating relationships. Hopefully, useful planning estimate level CER's will be developed by NASA and Boeing analysts from this project data for future *air-breathing aircraft propulsion systems* and *microgravity space systems*.

The U.S. Government initiated the special project as an "option task" of the United States Air Force/NASA/Boeing Hypervelocity Technology (HVT) study. The HVT study contract has been jointly funded by the two U.S. Government sponsor agencies since 1986. The U.S. Government contract number for this contract option task effort is F33615-86-C-3004 (see the page header for the work change order level.). The basic contract is managed by the United States Air Force's Wright-Patterson Flight Dynamics Laboratory in Dayton, Ohio.

The option task manager at Lewis Research Center (LeRC) for this special study effort is Dr. J. Christian (Chris) Beins. Dr. Beins is a member the Cost Analysis Group at LeRC. The contract option task activity is independently funded by the Research Analysis and Management Office (RAMO) at LeRC and managed through the basic HVT study contract by Dr. Beins' organization.

The NASA LeRC study manager and Boeing study principle investigator planned the option task work in three study phases. As part of the agreed upon task statement of work, Boeing developed a detailed project plan consisting of three project phases during phase I of the special study effort. This "user's" manual is the "final report" for the option task at the end of phase III.

This user's manual contains system design description information and cost estimating relationships from the phase II and III study activities. The

Boeing-developed CER's and cost estimating information gathered and developed during phase II of the study task are grouped into *development*, *Theoretical First Unit production* (or "TFU"), and *operation and maintenance* categories.

The categories above represent the traditional cost groupings of a program's hardware life cycle (official U.S. Government budgeting terms for project life cycle phases are: Research, Development, Test and Evaluation (RDT&E); Production; Operation and Support; and Disposal.)

Disposal phase costs in the product life cycle for fielded systems are not addressed in this document (in the future, system disposal cost data may be available as the WBS accounting systems are expanded to include disposal phase cost records for Government aircraft and space system programs.) It is not evident, from the public literature sources researched by the Boeing team, that the commercial airlines industry tracks (or has tracked in the past) disposal costs, unless it has been for income tax reporting.

The U.S. Department of Defense (DoD) is now focusing more on disposal costs of aerospace hardware due to recent concerns over environmental issues and the cost of disposing of hazardous waste leftover from system field operations activities. We, as cost analysts in the aerospace industry and government ownership agencies, may be tasked to estimate system disposal costs in the near future.

1.1 Project Objectives & Schedule

The cost estimating relationship development project plan, drawn up by the study team in phase I, is summarized in this section of the document. As previously mentioned, the primary objective of this project is to collect cost and technical data on air breathing propulsion and microgravity space systems for the development of cost estimating relationships. The cost estimating relationships will be used to estimate and evaluate advanced aerospace program concepts. The secondary objective is to develop a cost modeling methodology for estimating jet engine derivatives (including "unducted fan" designs), aircraft liquid-fueled ramjet systems, and microgravity experiment projects of the future.

To establish an orderly way to address these project objectives, the Boeing principle investigator developed a project plan draft for the study in the month of May, 1993. The NASA LeRC Resources Analysis and Management Office (RAMO) approved the plan on June 14, 1993. The project scope during phase I was negotiated prior to May, 1993, and finalized on June 14th (the actual details of the plan were solidified after the approval to enter phase II was given.) The final revision (Revision A) to the plan was transmitted to LeRC during the week of July 27, 1993. (See appendix D for a complete copy of the signed project plan agreement between Boeing and the RAMO program office.)

The selected application software packages which were approved by NASA for project documentation and database/CER development are Microsoft Word©, Version 4.0 and Microsoft Excel©, Version 3.0, respectively. Due to time limitations and the magnitude of the research tasks, the current contract statement of work does not require a "menu-driven" cost model as an output of the study. Instead, this "user's manual" and the electronic data transfer of information files (both database and CER or cost factor graphs/tables) are meant to become part of the foundation for future NASA parametric cost models.

The Special Study Schedule & Specific Areas of Interest

After several meetings, the NASA and Boeing team members bilaterally agreed to accomplish the CER development study effort for the contract option task in the mid-year time frame of April through September, 1993. An example of the Option Task Phase I study plan schedule (extracted from a monthly

project status report) is depicted in figure 1.1-1. The study plan schedule has been updated several times by the Boeing team to account for "fine tuning" changes in project depth and content.

Within the hardware development and research charter of the Lewis Research Center, the NASA-specified areas of interest for propulsion systems CER development are *turbojet engines*, *turbofan jet engines*, *unducted fan jet engine derivatives*, and *liquid-fueled ramjets*.

Microgravity material science areas of interest to Dr. Beins' group include *small microgravity experiment projects* (like the NASA "In-Step" projects) and *large microgravity systems "carrier" projects* (like Skylab, Spacelab, or Spacehab.)

Dr. Beins told the Boeing principle investigator that the primary emphasis of the special study would be on developing CER database information for evaluating advanced technology aerospace propulsion engine systems. The aircraft propulsion engines selected for cost research normally use the earth's atmosphere for the oxidizer (these types of aircraft engines are normally referred to as "air-breathers" in the aerospace engineering community.) Dr. Beins requested that microgravity technology experiment evaluation data and carrier system CER's development are to be of secondary importance to the Boeing researchers during the special study.

Option Task Tier II Schedule Plan

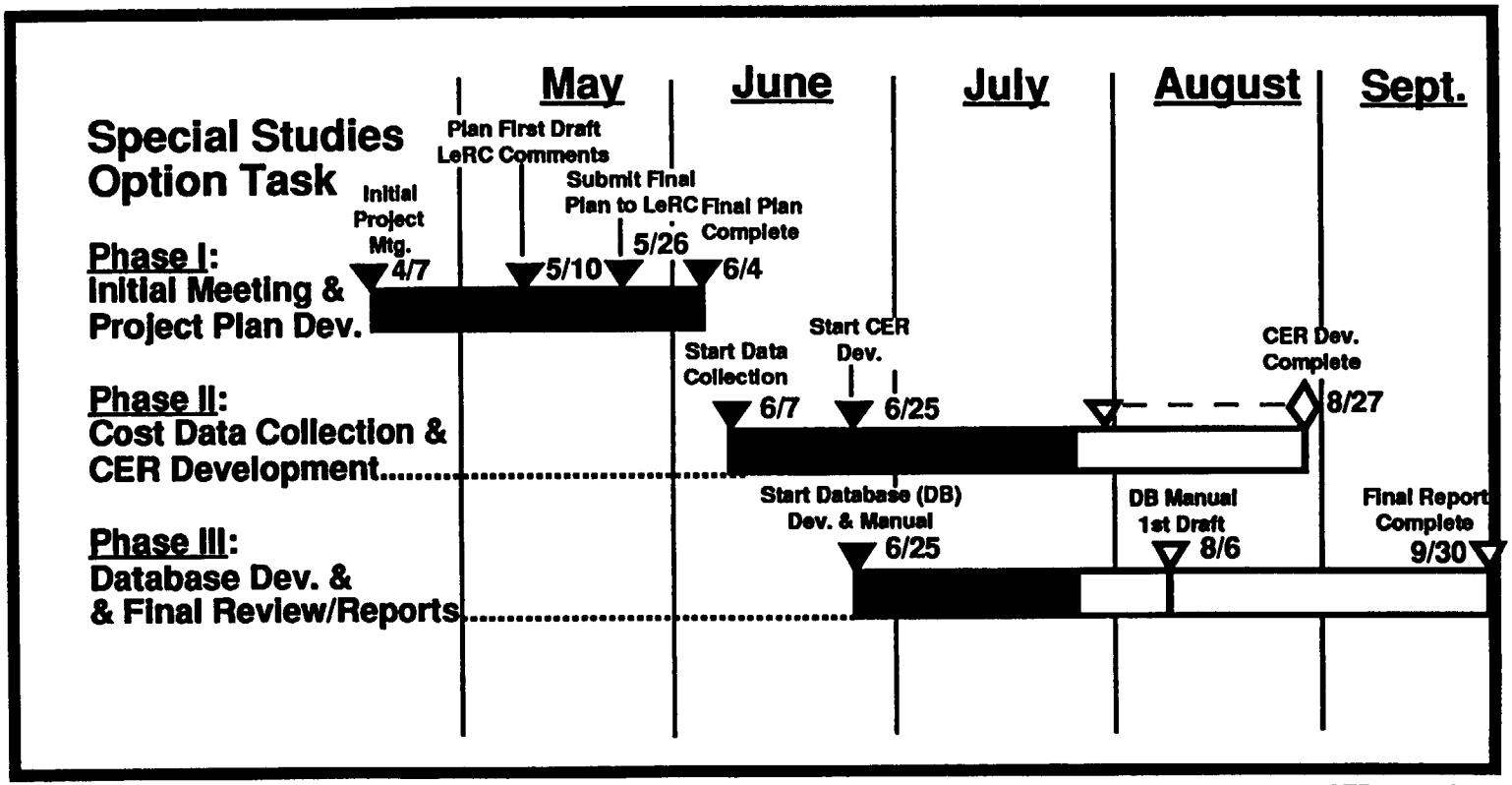

Reviewed by: AFP 9-1205

Status date: 27 July 1993

Figure 1.1-1: The study plan schedule is five months long and composed of three phases.

1.2 Project Data Control & Access Restrictions

Parametric cost estimating databases used for the development of the CER's in this study contain contractor or information *supplier proprietary data*. The proprietary database information has been documented by Boeing into three "limited distribution" appendices (A through C) to this manual. The Boeing Company has established intellectual Proprietary Information Agreements (PIA's) with the individual proprietary data suppliers, and/or obtained oral permission from study data sources to collect and use their "limited distribution" cost or technical data during this study project.

Proprietary data are protected by these legal, "intellectual property" rights agreements. Data supplied in confidence to Boeing for use on this option task project, but not covered by a specific PIA, are covered by the appropriate Boeing business ethics policies and directives. The joint project plan in appendix D also has a special section on "ethics" and proprietary data handling.

Appendices containing proprietary data are designated by the U.S. Government and Boeing study program offices as "Limited Distribution" data. The proprietary data in appendices A and B of this document are not available to others outside of the Government's sponsoring agency and the study document originator (whose legal access and use is covered under the aforementioned, individual PIA's and company ethics standards.) The appendix A through C proprietary data is protected in accordance with appropriate regulations, guidelines, and procedures related to proprietary information handling and storage. The procedures are in place for review and compliance audits at the NASA LeRC program office (RAMO), Cleveland, Ohio, and The Boeing Company, Seattle, Washington.

1.3 Project Overview - Methods & Sources

A logic flow diagram of the project is presented to the reader in figure 1.3. After the project plan was agreed upon, a *Request for Information* (RFI) process was initiated by the principle investigator of the option task. The Boeing Materiel Management department in Boeing Defense and Space Group's (BD&SG) Research and Engineering Division worked with the study principle investigator and technical support people towards the development

and release of RFI packages. The RFI's were sent by Boeing personnel to selected United States aerospace industry propulsion engine and microgravity system hardware manufacturers. Mr. Bill Dobiash and Mr. Skip Hudak are the two BD&SG buyers who supported this contract effort. Mr. Dobiash and Hudak provided vendor interface management services and accomplished the timely release of five major RFI/PIA packages to supplier data sources outside Boeing.

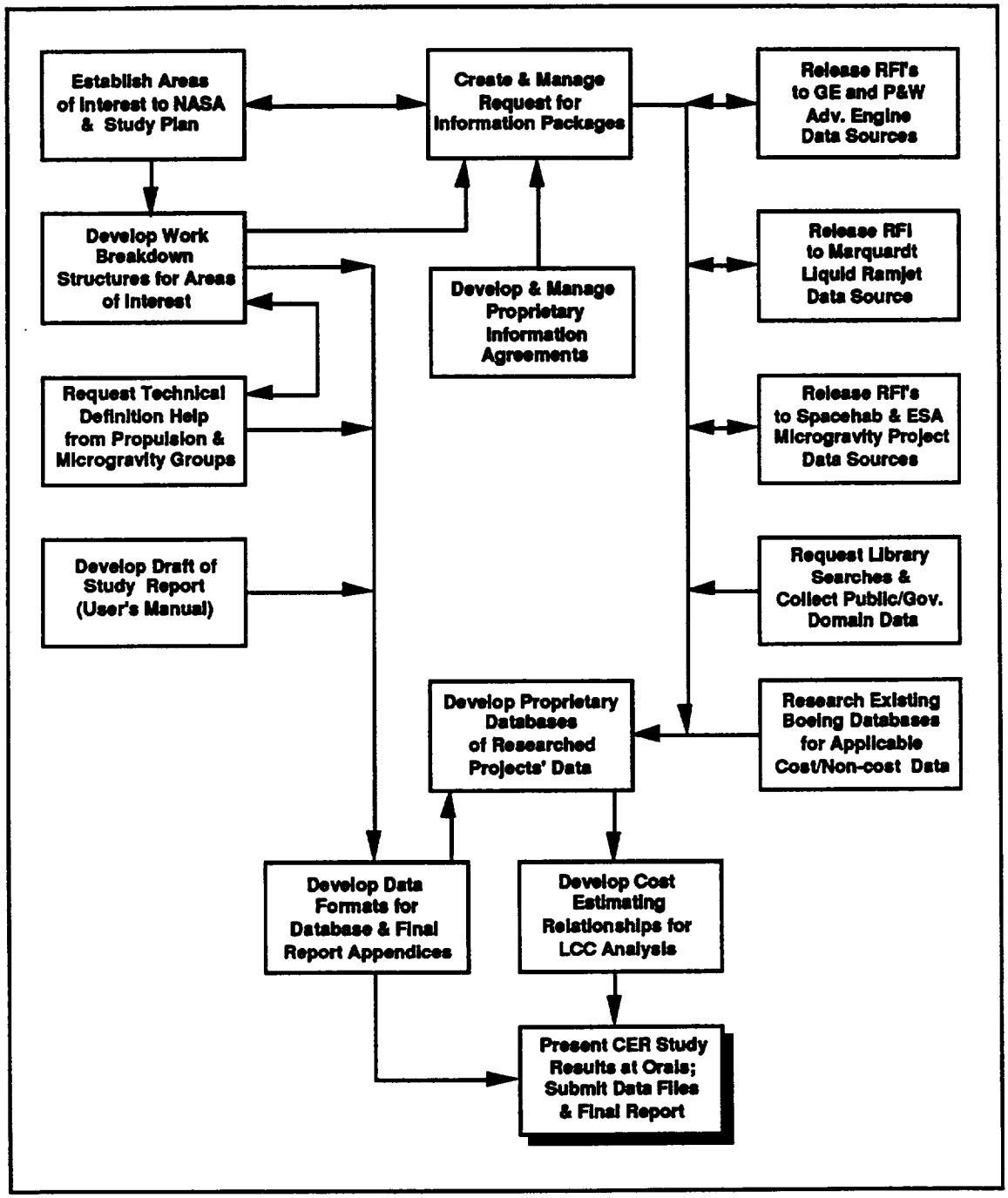

Figure 1.3: The study logic flow was established in phase I of the project plan.

In addition to the formal RFI process, telephone data request queries to government agencies and U.S. industry data sources were accomplished for Skylab, Spacelab (European Space Agency/ERNO and NASA MSFC,) and an assortment of microgravity project data points. The listings of microgravity

space system projects include two recent Boeing/NASA "In-Step" projects. These Boeing microgravity experiment projects were flown on the Space Shuttle in 1992 and 1993. Other companies, like Applied Research Inc. (ARI) of Huntsville, are also researching "In-Step" project costs and technical data for NASA LeRC. The Boeing-developed data and ARI information will be added to other microgravity and aircraft engine projects database information. The "other information" will be received from several additional contractor sources (like ARI) who have been contracted for similar CER development studies work by LeRC's RAMO.

Prior Government-Sponsored Studies Reviews & Supplier Help

Several Government-sponsored studies have been conducted over the last 10 years on turbine and ramjet engine propulsion systems. The most notable of these cost estimating relationship development projects are: (1) the Rand Corporation's (Santa Monica) document entitled "Development and Production Cost Estimating Relationships for Aircraft Turbine Engines" (report N-1882-F, dated October, 1982); and (2) Science Applications International Corporation's document entitled "Ramjet Life Cycle Cost Model (RJ-LCCM) Estimating Methodology" ("Volume III - Software User's Manual," dated March, 1990.) These two study documents, along with interview information from numerous other aerospace propulsion community sources, were used by Boeing cost analysts to select and screen CER development techniques, evaluate work breakdown structures, and identify potential cost drivers.

Cost analysts at General Electric (GE) Aircraft Engines and United Technology Corporation's Pratt & Whitney Government Engine & Space Propulsion Division assisted the Boeing team in deriving hardware breakdowns, estimating techniques, and identifying key cost drivers for each phase of a new or derivative jet engine system's life cycle. GE and Pratt & Whitney parametric cost analysts also provided insight into selection of the statistical methods application and testing techniques used to create and validate the turbine engine CER's contained in this final report.

Statistical Tools Application & Methodology

Regression calculations were accomplished using a Boeing-developed model which performs linear regression on the logarithmic values of the inputs. The linear regression model is programmed in an Excel software spreadsheet. The project planning, data research, industry requests for information, database formulation, CER's development, regression model operations, statistical test modeling, and final report methodologies and effort were funded under the study contract. The least squares regression formula used in the Boeing spreadsheet model is:

Least-Squares Regression Formula Used: $Y = mX^b$

Where: **Y=predicted cost; X=technical parameter(s) and b=slope of the curve**

Statistical testing methods chosen for CER validation provide the user with the following information:

(1) the regression *correlation coefficient* (measure of the strength of association between the dependent and independent variables);
(2) the *standard deviations* (measure of dispersion from the calculated data population mean);
(3) the *coefficient of variation for x and y* (an expression of dispersion expressed as a percentage of the mean average in relation to the standard deviations of the x and y values in a log/log relationship); and
(4) a *predicted vs. actual cost residuals analysis* (a comparison of the dependent variable outputs in the CER's to the actual project costs, within a selected *preliminary planning* estimate accuracy range of ±15%. This step was not accomplished for this report.)

WBS Descriptions and Test facilities Information

Technical work breakdown structure (WBS) description ideas were solicited from USAF and NASA sources. For example, Boeing asked the

USAF Propulsion Lab personnel at Wright-Patterson Air Force Base in Ohio to help evaluate the proposed "generic" work breakdown structure (WBS) for liquid-fueled ramjet systems. Some useful comments were received.

WBS listings are included in each section of this volume. The generic listings were developed with the help of engineering experts in the U.S. aerospace community (government and industry.) The listings also meet the customer's requirements for cost estimating preliminary designs and performing the associated cost trade studies or system evaluations. Besides providing a data collection framework, the generic WBS listings are meant to be a data collection "foundation" for estimating new systems. The listings can be expanded or contracted by the user for a new system description, as long as all changes are well documented.

The added reasoning behind establishing these "generic" WBS listings is that they can also be used as a "tool" to interview designers. During the interview, the analyst can use the list as a check sheet to obtain descriptions of *material* and *integration differences* from the prior or existing operational hardware systems in the cost modeling database. The annotated differences will then be used to select material and integration complexity factors which can be added within the estimating relationship formulas.

Information concerning government test facilities and services costs for system ground testing new system designs is also of interest to NASA LeRC. Technical and cost data for engine testing and microgravity projects were also solicited from many of NASA's key project information centers - LeRC, Ames/Dryden Flight Center, Marshall Space Flight Center (MSFC), Johnson Space Center (JSC), Goddard Space Flight Center (GSFC), and NASA Headquarters.

The cooperation and response to the requests for assistance from the government's propulsion and the microgravity science communities was very helpful in identifying program data sources and historical program definitions.

Library Research, Interviews, and RFI Processes

After the specific product areas and candidate project titles were selected, the Boeing research team used the Boeing Technical Library database research services and BD&SG Marketing database search services. Research analysts and librarians accomplished information searches in parallel

with technical interchange conferences (via the telephone) and internal interviews with BD&SG Engineering and Finance personnel.

As was previously mentioned, Requests for Information (RFI's) and Proprietary Information Agreements (PIA's) were sent to the appropriate information sources (engine and microgravity equipment suppliers.) The five major data suppliers who received formal RFI/PIA packages are: General Electric Aircraft Engines, Ohio; UTC Pratt & Whitney Commercial Engines, Connecticut; UTC Pratt & Whitney Government & Space Propulsion Systems, Florida; the Marquardt Corporation; and Spacehab Inc. GE Aircraft Engines decided not to respond to the RFI, therefore almost all of the technical and cost data for GE aircraft engines was collected from public information and technical library sources.

Cost information was received by the principle investigator from the McDonnell Douglas Corporation (for Skylab hardware) and the European Space Agency (Spacelab hardware contracts data.) Applied Research Inc.'s Huntsville office and the NASA Marshall Space Flight Center's Spacelab Program Office also provided a great deal of pertinent Spacelab technical definition data.

Jet Engine Family Research & Analysis

Requests for Information (RFI's) to aircraft engine equipment suppliers included requests for the identification of key subsystem cost analysis factors such as material sensitivities to platform speed (Mach number), operating environment design parameters (temperatures, pressures, etc.), and number of engines per platform. Engine suppliers were also asked to identify key technical design description parameters for core engines by subsystem such as inlet diameter dimension, number of drive shaft sumps, number of turbine or compressor stages, etc. Some BD&SG Wichita Airplanes Division data was collected on engine nacelle costs (from the KC-135 Re-engining Program.)

Boeing also has a "Experience Analysis Center" library operated and maintained by the Boeing Defense and Space Group's Logistics Engineering organization. The Experience Analysis Center's library was used (in conjunction with the Boeing Technical Library, Boeing Propulsion Engineering technical advisors, and engine supplier sources) to collect jet engine systems' failure and maintenance labor hours data on existing military aircraft. Copies of Air Force Regulation 173-13 and U.S. Navy's "VAMOSC" operation and support cost analysis documents were also used to expand on or to confirm the "reasonableness" of the Experience Analysis Center's historical detail databases received from aircraft user organizations.

The information collected for jet engine operation and maintenance estimating is summarized in section 5.0 of this document. The mission environment, platform speed (Mach number,) individual engine fuel consumption rating, and number of engines (and optional engine types) on the "host" aircraft platform are critical cost drivers in estimating the operation and maintenance costs of an individual engine candidate. Section 5.0 contains a section on *special considerations* when estimating propulsion system O&S costs for new or modified aircraft platforms.

Microgravity Technology Systems Research & Analysis

Some technical description data requests were filled by NASA Marshall Space Flight Center (the program office for Spacelab in the United States is at MSFC.) Data on system weights, dimensions, equipment lists, program WBS, and materials was collected (sometimes called "non-cost" data.)

Existing Boeing and prior NASA JSC Space Station LCC Model database information on space orbiting hardware projects accomplished for the U.S. Government was reviewed for inclusion into the parametric cost database. Whenever U.S. contractor-built systems were "payloads" on the Space Shuttle or some other existing expendable launch booster (like Saturn, Delta, or Atlas) and operated in the microgravity space environment, they were considered for inclusion into the microgravity space systems database (data for this exercise is only evaluated at the major subsystem or task level.)

The subsystems for microgravity space systems can vary significantly from project to project. Also, the *size of the system* and whether it is *man-tended* or not man-tended are important for developing useful CER's. The microgravity space system data were collected and categorized into two groups - ***large microgravity carrier systems*** (such as Skylab, Spacelab, and Spacehab) and ***small microgravity system experiments*** like the Tank Pressure Control Experiment (TPCE) or the Crystal Vapor Transport Experiment (CVTE). The two types of microgravity systems are quite often interrelated. For example, the European Space Agency's Spacelab spaceflight hardware is a carrier system that can be used to airborne support platform within the Space Shuttle's payload bay to host many smaller microgravity experiments like the Boeing TPCE or CVTE packages.

Almost all of the smaller microgravity hardware system projects involve the fabrication of only one or two operational flight systems. They might rarely ever stimulate follow-on production programs (i.e. - there is no typical "production phase" in the systems' life cycle history.) All microgravity system project accounting records selected for this study contained an *average* of the *manufacturing unit costs* in the development program. The average unit manufacturing costs are documented as the "theoretical first unit," or "TFU" cost for the microgravity systems (since the manufacturing volume is so low and subsystems are interchangeable between the flight experiment units.)

The cost and non-cost population data sample sizes for some *large microgravity carrier* hardware subsystem elements is rather small. Most CER's which have been developed have only four to six data points. Special considerations for adjustment factors pertaining to the use of commercial "space" specifications and commercial hardware applications is addressed in section 6.0. The commercial microgravity carrier considerations are derived from inputs received in the Spacehab, Inc. RFI response.

Auxiliary and airborne support equipment (ASE) hardware items for the microgravity carriers have been researched, and some cost data was collected for those items by the Boeing team members. McDonnell Douglas cost analysts provided Boeing with supplier cost and hardware description data on access tunnel assembly for the Skylab program. The Boeing Finance Estimating department provided additional CER equations from our proprietary database for some subsystem areas (like unpressurized pallet structures, deployment mechanisms, etc.) where no significant technical descriptions AND cost data were available.

Subsystem contract costs for Spacelab were collected from public information sources through the library research activities and reviewed by the European Space Research & Technology Center (ESTEC) Chief Cost Analyst, Mr. David Greves. Technical and program schedule descriptions for flight or ground support equipment of the selected microgravity *carrier* system projects were collected from the Space Station LCC Model document and/or the respective cost analysis or program offices at the hardware suppliers, NASA, ESTEC-ESA, and McDonnell Douglas Aerospace (for Spacehab, Inc.)

2.0 PRODUCT DEVELOPMENT (Rules, Surveys & Formats)

The ground rules and assumptions presented in this section are grouped into two subsections. The "NASA Study Ground Rules" ground rules were supplied by Dr. Beins, the LeRC project manager. The "Boeing Defense & Space Study Ground Rules" were established by the Boeing team to clarify certain areas of methodology or technique not covered by the NASA-supplied set.

A survey of industry sources and suppliers was conducted by the principle investigator and the co-author during Phase II of the project. The results of the survey are summarized in this section of the user's manual.

A brief description of the database files formats and methods of developing cost estimating relationships is located at the end of this section.

2.1 Ground Rules & Assumptions

The Government-supplied ground rules for this CER development project are as follows:

NASA Study Ground Rules

1. "Emphasis [is] on aeronautics, with practical or commercial applications."
2. The Option Task focus and product research areas are:
   (a) "Advanced Propulsion (turbojet, ramjet, unducted fan ... [and turbofan engines]."
   (b) "Advanced Propulsion System Components (inlet, fan, compressor, combustor, turbine, nozzle, and engine support systems)":
   - effects of new concepts/engine cycles
   - effects of new materials

- effects of total quality management (TQM) and Continuous Process Improvement (CPI) along with experience and inheritance on life cycle costs.

(c) "Second emphasis on microgravity technology [projects]."

3. Base year of dollars, for "normalizing" to constant-year cost data, is the year 1993.
4. NASA Headquarters Office Code B inflation rate tables, dated April 13, 1993, will be used to escalate/deescalate historical cost data to base year 1993 dollars; "raw" cost data inputs will be documented before conversion to 1993 dollars whenever possible.
5. Electronic transfer files for use in personal computers will be developed as text in Microsoft Word © (version 4.0 or lower) and as database tables and graphs in Excel © (version 2.2 or higher) application software formats. The final report submittal files will be in a format which can be read and revised or reorganized using an IBM-compatible personal computer work station.
6. Proprietary information shall be identified and controlled within the project's legal responsibilities and capabilities; the project plan will address data security and handling.
7. Materials application impacts and new ways of doing business (i.e - management process changes) will be considered in the CER development tasks.

The Boeing ground rules and assumptions are:

Boeing Defense & Space Study Ground Rules

1. All formal requests for information will contain a Proprietary Information Agreement (PIA) drafted by the Intellectual Property Attorney's Office at Boeing Defense & Space Group. PIA's will be signed by both parties before proprietary data is deposited into project databases, unless the same data is available from public data sources or the U.S. Government.
2. Cost data are historical program expenses and profits information which may include labor hours and materials cost records.

3. Non-cost data are technical descriptions and product performance characteristics which can be quantified or "ranked" according to a recognizable and quantifiable datum *reference point*.
4. The aircraft or platforms, which existing or past propulsion system engines are used on, will be identified in the two dimensional matrix databases.
5. Database files containing proprietary data will be protected, segregated and controlled from unauthorized distribution to organizations or companies outside of the provisions of the PIA's or the sponsoring Government study program offices.; all such protected project databases will not be distributed or available for public distribution, unless previously available in the public domain, or their release is authorized in writing from the cost or non-cost data source(s).
6. The data will be researched and collected using generic work breakdown structures as much as possible; data which is really unique to a project will not be "force-fitted" into the generic WBS (the generic WBS format will have some expected modifications to preserve the clarity of the database information.)
7. The purpose of the cost estimating relationships (CER's) development will be to estimate new preliminary design programs using parametric modeling techniques and methodology; the database and CER's are organized at the hardware program major task and subsystems level; the CER's are not designed to be used for detailed estimating projects.
8. The final report "user's manual," **excluding the proprietary appendices,** will be prepared so that it can be distributed to all United States Government Agencies and NASA-approved U.S. aerospace industry contractors or engine and microgravity technology data suppliers.
9. The life cycle is defined as development, production, and operation and support; product disposal is not addressed.
10. "Sunken" costs which cannot be broken out in the generic WBS formats will be collected and stored on cost data sheets in appendix b (a limited distribution section) of the final report.
11. Historical programs cost data includes commercial pricing information and Government programs data; CER's based on listed unit "price" will be segregated from unit cost CER's and identified as containing average profit cost elements within the CER data points.

12. The "mid-year" of historical cost data, in a then-year dollars distribution, is defined as: *A year which is selected closest to the maximum year of expenditures in the historical program's documented development costs*; the *mid-year* will be used as a reference to *escalate* historical costs to constant-year, 1993 dollars (using the NASA-supplied inflation index tables dated 4/93.)

2.2 Industry Survey Summary

The industry surveys were limited by the time and budget allotted for this special study. Time was the greatest limiting factor.

2.2.1 System Categories Design Definition Process

The work breakdown structures and product definitions were developed and depicted using information from both project and preliminary design engineering personnel at the design, industrial engineering, and system integration organizational levels. Boeing and supplier propulsion engineering and space systems engineering personnel were contacted by the principle investigator on a regular basis concerning design descriptions and product characteristics.

For example, the core jet engine dimensions, thrust, weight, subassembly quantities, and build quantity characteristics for turbofan jet engines were thoroughly reviewed for reasonableness and accuracy with Boeing, GE, and Pratt & Whitney propulsion engineers and engine marketing personnel. The cost analysts at GE and Pratt & Whitney were also interviewed by the principle investigator. The cost analysts helped to conceptualize the relationships of design characteristics which relate the best to predicting new or derivative engine costs. Boeing analysts used summary level data to formulate the initial CER's in this document. First order design descriptions were preferred over detailed design data such as fan blade counts or bearing sizes. The databases of information in the appendices will be used in the future to establish new CER's as the design descriptions are further studied by the customer and Boeing analysts.

Personal telephone interviews and technical product discussions with design engineers and managers were supplemented with library searches and research analysis investigations. Technical books on turbine engines provided the analysts with additional information for inlet temperatures, platform Mach numbers and engine composite materials application (abbreviated as "**CMA**" in the two jet engine databases.) The percentage of advanced composite materials is a significant complexity and cost driver, according to most of the propulsion suppliers' cost analysts interviewed during this brief study project. More work might be accomplished in researching the cost impacts of new

materials related to advanced engine designs. Composites material application research and cost evaluation was out of the scope of the current study funds and time allotments.

2.2.2 Key Technical Parameters

The initial key technical parameters were selected by the principal investigator at the end of the phase II three month study period. The principle investigator selected the parameters based on past estimating experience at Boeing and the Air Force. Data supplier comments and suggestions were also used to select the initial key parameters.

Pratt & Whitney and GE Aircraft Engine cost analysts use technical parameters at a lower level for deign trade studies and cost effectiveness evaluations. The Boeing parametric cost analysts on the Space Station Freedom Program modules project use hardware descriptions several levels below the system evaluation levels presented in this report. The technical parameters list can be expanded in the future to include subsystem design cost trades capability by expanding the WBS and database depths.

Core Jet Engine Key Technical Parameters

The key technical parameter for system level estimating selected was maximum operating thrust in pounds at sea level. Information for this engine parameter was not always easy to obtain from public sources because some jet engines are reported as tested or evaluated for thrust ratings at different altitudes other than sea level. Also, we discovered that some jet engine thrust levels are documented at *cruise* flight phase levels, not maximum thrust (many commercial engines are rated at the cruise thrust, not maximum thrust.)

Secondary technical parameters that are commonly reported in technical design literature for jet engines are the thrust to weight ratio (thrust divided by weight), turbine inlet temperature (an indication of technology improvement), hours of ground test, and initial fan/low compressor inlet diameter (or area). Weight, by itself, does not appear to be used as a design evaluation input parameter by any engine manufacturers to estimate cost.

Microgravity Technology Programs Technical Parameters

The microgravity carrier programs group CER's were developed in a more traditional in estimating manner. Boeing analysts selected mass properties estimate *weight* (in pounds mass) as the traditional key technical input parameter. Intuitively, weight cannot be the only technical parameter of importance to estimating a carrier's probable development or theoretical first unit cost for flight hardware. *Volume* as a technical parameter will also be an important design and cost estimating factor for systems evaluation; there just was not enough time to gather volume data during this preliminary study.

The key parameter selected for microgravity experiments was *weight* (pounds mass.) Other technical parameters not evaluated were *density* (volume times weight) and *power consumed in watts*. Both of these secondary technical parameters might be used for microgravity experiment projects involving furnace or refrigeration equipment as the primary flight hardware item. Some literature researched suggested that *power output in watts* for power distribution and conditioning components estimating was a better technical input parameter choice than weight or density. Boeing has used *square footage* for years as the key technical input parameter for cost estimating refractive tile, multi-layer fabric insulation ("MLI" blankets,) refractive panels, or advanced blanket thermal protection systems of space platforms.

2.2.3 Terminology and Acronyms

A complete list of acronyms used in this final report is located immediately after section 8.0. The terminology used in this document is unique to the two aerospace product areas that Dr. Beins asked the Boeing team to perform cost research and develop cost estimating relationships for use at the NASA Lewis Research Center. The terms "data" and "information" in the body of the report text are interchangeable. "Cost data" are cost accounting numbers in dollars or hours. "Non-cost" data are technical or program description data.

The term "theoretical first unit" is an *approximated* first production unit cost estimate derived from some specified unit price or cost based on a 90 percent cost improvement curve, unless otherwise stated. Boeing analysts used the *Improved Wright* "learning" curve formulas for all unit and cumulative curve computations involving cost improvement curve applications.

2.3 Database & CER Development Application - Software Formats Overview

Excel spreadsheet files were selected as the medium to store the cost and non-cost data collected during Phase II of the special Option Task performance time period. The work breakdown structure (WBS) listings for the jet engine propulsion and microgravity systems are tailored to the product line definitions. Microgravity hardware programs were broken down according to each information source's respective accounting system (such as ESA, NASA, or international aerospace contractors/suppliers). Whenever possible, the historical cost and non-cost data was organized into a matrix which contained standardized WBS item titles and definitions for that aerospace product line (especially data that is related to the cost of microgravity programs.)

Jet Engine Database Files Format (Volume 2, Appendix A)

Jet engine technical parameters data are located in the first 15 columns (A through O) of the database spreadsheet files. This standard file format is identical in proprietary data file in the database for each jet engine company. *Engine model number is the key sorting field identifier*. Secondary sorting fields are: aircraft (A/C) platform, afterburner (A/B) application ("yes" or "no" data), Mach number (estimated at the maximum flight capability of the A/C platform), thrust (T) at sea level (S.L.), and core engine weight (W) in pounds (lbs.), mass. The thrust to weight (T to W) column can also be used as a secondary sorting field without a lot of modification to the spread sheet.

Jet engine production quantity (number of *production* engines built before January 1, 1993) data is located in column P of the database range. Cost and schedule information, including development and unit production historical actual and price list data, is located in the next 9 columns of the spreadsheet file (columns Q through Y of the spreadsheet).

The last two columns of the database range are wider columns which contain "Data Sources" and "Remarks and Data Clarification Notes" information for the user (cost analyst.) The database files' matrixed information cells are not entirely filled out. Data voids exist when time ran out and where information sources were not found to fill them. In some cases, noted in the model number field, estimates were used for new engines where the data is classified,

competitive sensitive, or unavailable until engineering & manufacturing development effort is completed some time in the mid-1990's (like the 777 and F-22 aircraft engine programs.)

Ramjet Engines Database Files

Ramjet engine database files are not available at this time. This special task study was limited to the generation of cost estimating relationships data for *air breathing, liquid-fueled ramjet systems* (solid propellant-fueled ramjet systems cost estimating were not to be addressed, per NASA program office direction.) System level cost and non-cost data points, similar to those in the jet engine database files, will be gathered from actual ramjet engine systems when they are fielded and available.

SR-71 data was requested from Lockheed at Burbank, but we were told by the current "Skunk Works" project management that the development program cost data was not reported at the propulsion nacelle subsystem level. Therefore SR-71 development cost information for the nacelle and engines, as an integrated assembly, is not available as a ramjet propulsion analogy estimates cost data point (the Boeing researcher was also told that many of the people who could interpret any stored detail cost data to the SR-71 propulsion subsystems work order levels are retired.)

Microgravity System Database Files Format (Volume 2, Appendix B)

The microgravity carrier database files are Excel "flat files" of program costs and non-cost data for two recent microgravity carrier projects - Spacelab and Spacehab. These flat files of information are spreadsheets with no database ranges defined. The recorded cost and non-cost information is broken down by major system tasks and subassemblies or subsystems.

These files do not have sorting capability, but could be re-organized by NASA Lewis Research Center cost analysts to be imported and grouped on a new Excel integration spreadsheet with a defined database range. For reasons of proprietary data separation and security protection, Boeing analysts did not combine any proprietary data (jet engine or microgravity projects) into integrated database files containing mixed data source information.

Appendix B, located in Volume 2 of this report, contains some "Cost Estimating Relationships Database Record" (data description sheet) forms for microgravity system elements or subsystems. Cost and non-cost descriptive data on these forms come from a variety of actual hardware suppliers and estimating input sources. The forms are organized by subsystem equipment type (storage tanks, computer processor units, etc.) Pertinent Space Station Life Cycle Cost Model (1980) database tables from a previous JSC/PRC project report are reproduced in appendix B via verbal copy right permission from the NASA Central Cost Analysis Database Project office at NASA's Marshall Space Flight Center (MSFC) in Huntsville, Alabama.

An example of the format for the "Cost Estimating Relationships Database Record" (data description sheet) is provided to the reader in figure 2.3-1 (please turn to the next page for viewing the example.) These pages are generally marked "Proprietary Information" when filled in, but some of the sheets of a similar format in appendix B do contain data from public domain sources. All of the appendix B database record sheets are clearly marked as to whether they contain proprietary or public domain data (public domain data includes supplier list prices and catalog technical description handout materials.)

The Volume 2 appendix A through C contents, and all of the associated appendix A and B electronic database file storage disks, are contained within a "limited distribution" section of this report; Volume 2 is not available for general public distribution.

Cost Estimating Relationships Database Record
(Data Description Sheet)

Item Title: _____ **Date:** _____

Project: _____ **Made, Bought, or GFE?** _____

Description of Item: _____

_____

_____

_____

Similar Historic Items: _____

_____

Dry Weight (pounds) _____ **Platform Flown On:** _____

Volume (ft^3) _____ **Primary Mission:** _____

Machining & Alignment Levels: Dev. Test: _____ Production _____

Integ./Test Spec. Levels: Electronics: _____ Structural _____

Component Descriptors:

Mechanical/Structural Materials: _____

Dry Weight (lbs.): _____ Surface Area: _____

Manuf. Drivers: _____ Percent New Design: _____ (OTS)

Tech. Maturity: _____ Design Repeat? _____

CD&H Electronics

Density (lbs./ft^3): _____ Technology Year: _____

Type of Circuits (Digital/Neural/Analog): _____ Card Counts: _____

Scale (LSI/VSLI/Wafer): _____

Power Supplies & Control

Density (lbs./ft): _____ Power Requirement: _____ (Watts)

Card Counts: _____ Percent New Design: _____ (OTS)

Tech. Maturity: _____ Design Repeat? _____

Thru-Put Dollars (93$): EMD _____ Prod. TFU _____

Manuf. Curves Selection: EMD _____ Production _____

Schedule/Task Complexity:

	Development (EMD)	Production
Start Date	_____	_____
1st Unit Avail./Delivered	_____	_____
Complete Date	_____	_____
Number of Ground Test Hrs.	_____	
Number of Flight Test Hrs.	_____	
Develop Test Units Qty.	_____	
Flight Units Qty.	_____	_____
Qualification Units Qty.	_____	

Figure 2.3: Example of an appendix b cost data description sheet.

3.0 JET ENGINE ESTIMATING MODULE

Turbojet and turbofan engines have been produced for decades in the aerospace industry. Turbojet technology was proven in ground test facilities and on prototype airplanes during the late 1930's and early 1940's. Turbojet and ducted turbofan engine technologies have reached a high level of maturity for hydrocarbon-fueled engines, at both subsonic and supersonic levels of aircraft performance over the last three decades. The cost estimating of these engines has become more explicit and detailed.

This cost estimating relationship (CER) development project addresses the assembly levels of an engine design description in order to create a development and a first unit (theoretical number one) production cost estimate. The primary intents of this portion of the project are: (1) to develop *top level* engine performance parameters for CER's used in advanced programs' system analysis; (2) to identify important design parameters which "drive" or heavily influence operation and support costs; and (3) to create credible CER's for future jet engines estimating and advanced transportation systems cost trade studies.

The purposes of section 3 are to provide a description framework for the cost analyst to work with and to present the engine system cost estimating relationships (CER's) developed during the study. Boeing and LeRC selected CER's which relate predicted jet engine acquisition costs to preliminary design descriptions of a new jet engine and its major subassemblies.

The selected "baseline design description" system for beta testing the turbofan CER's is the *Energy Efficient Engine* (E^3) Project. This propulsion research project was conducted over a decade ago for NASA by the General Electric and Pratt & Whitney aircraft engine companies. The E^3 design description baseline was a joint development engine project for these two large propulsion system suppliers.

Because the E^3 development program's technical data was openly shared, each of these engine suppliers can discuss the E^3 program design

details and release the technology program's final report data. Therefore, the E^3 turbofan system can also be used for cost modeling validation without disclosing proprietary design data on their standard commercial or military jet engine products. Each engine supplier was informed of the "baseline" selection and agreed that the E^3 program description provides a common reference for testing the reasonableness of new turbofan engine CER's generated during this study.

3.1 Jet Engine Work Breakdown List

General Electric preliminary design engineers initially provided a generic listing of major subsystems for a "typical" turbojet or turbofan engine. Boeing expanded the initial listing to include more subsystem definition (this expansion was accomplished primarily to function as a "description list," in place of a more formal WBS hardware description matrix.) Some optional subassemblies (which may not be used for all design candidates in a preliminary system design analysis or cost trades exercise) were added to the listing. Boeing analysts expanded the list to provide the user of these CER's with a "flexible" framework for inputs and rationale when cost estimating future turbofan, turbojet, and unducted fan aircraft engine systems.

The expanded work breakdown structure (WBS) listing is most effectively used by the analyst as a tool to organize the engine *design definition inputs* and an engine *specifications description*. Explicit engine subassembly descriptions are required to select the correct complexity and materials factors for use in the CER's.

Generic work breakdown structures are also a useful design description interview tool for the cost analyst. The design description interview will be more complete and concise if the parties involved have an outline to follow in the form of a flexible engine WBS listing. Users may need to revise (expand) the listing for some hybrid cycle engine concepts ("hybrid" cycle design issues will be addressed later in the user's manual.)

A generic WBS listing for turbojet, turbofan, and unducted fan engines is presented in figure 3.1-1. The engine system WBS listing may not be all-inclusive for every jet engine design option, but it does address most of the major components for aircraft engines designed and manufactured in the 1970-92 time period. Items which do not pertain to the power plant concept being

evaluated can be ignored, or annotated as "not applicable" to the engine cost analysis.

The turbofan CER materials selection table and integration complexity table are organized in format using the same WBS categories. Items which typically pertain to each type of jet aircraft engine's characteristics and definition are noted by an "x" placed in columns to the right of each WBS line item's title.

The generic engine project WBS was developed to relate directly to the technology maturity levels of engines in the CER database. If dynamic changes are required to re-organize the WBS items, or the system design and manufacturing process descriptions are radically different from the database engine programs, potential users may decide not to use the provided CER's.

For example, a cost analysis may require different CER's because the database information does not relate well to a new, advanced metal ceramic materials combustor concept being evaluated for use on a Mach 12 to 14 rated engine platform. In this case, the Mach 12-14 vehicle propulsion system cost estimating requirements and engine design description may relate better to the ramjet estimating technique and CER's described in section 4.

Jet Engine Family Work Breakdown Structure Listing
(A hardware and task-oriented listing.)

		Turbojet	Turbofan	Unducted
1.0	Turbojet, Turbofan, or Unducted Fan Propulsion System	(Summary Item)		
1.1	Jet Engine System Hardware & Software	(Summary Item)		
1.1.1	System/Subsystems Anal. & Sim.	X	X	X
1.1.2	Engine System Inlet	X	X	(in 1.1.4)
1.1.3	Engine Fan System	N/A	X	X
1.1.4	Engine Compressor Section	X	X	X
1.1.5	Engine Combustion Chamber	X	X	X
1.1.6	Engine Turbine Section	X	X	X
1.1.7	Sumps, Bearing Sumps, & Drives	X	X	X
1.1.8	Exhaust Nozzle Section	X	X	X
1.1.9	Controls and Accessories & Misc. Hardware	X	X	X
1.1.10	Augmentor (afterburner)	(Option)	(Option)	N/A
1.1.11	Engine Control Software	X	X	X
1.1.12	Engine System Integration	X	X	X
1.2	Engine System Test & Certification	X	X	X
1.3	Engine Facilitization	X	X	X
1.4	Engine Ground Support Equipment	X	X	X
1.5	Engine Spares & Repair Parts	X	X	X
1.6	System Engineering & Management	X	X	X
1.7	Other Procurement Costs (prod. only)	X	X	X

Figure 3.1: Generic work breakdown structure for jet engine derivatives.

3.2 Jet Engine Family Design Descriptions

Jet engine design description data was requested from General Electric and Pratt & Whitney sources. The description data is provided to the cost analyst, along with the generic WBS listing, as a reference for evaluation and cost estimating of new derivative systems in this air-breathing engine family.

Jet *engine operating environment* is a key input for cost estimating. The host aircraft system's expected *Mach number* and *range* requirements are both critical jet engine design parameters. The *operating Mach number* of the aircraft system (platform characteristics) that the turbojet engine is to be used on helps define the engine dimensions, operating temperature ranges and pressure levels, materials technology application areas, and integration complexity levels for the core engine cost estimates. Platform range helps define the type of jet engine most appropriate for the mission and fuel usage (flow) requirements.

Up to four sumps can be included in the concept design for a "typical" jet aircraft engine. The main bearing sumps are usually designated by a letter. For example, the letters "A" through "D" are used to identify the sumps in a turbojet engine. The front sump is the "A" sump. Engines with one shaft have a minimum of two sumps (an A and B sump,) one at the front and one aft of the drive shaft. At the other end of the complexity scale, the Rolls Royce RB 211 turbofan engine has three shafts with four sumps. Three shafts are the greatest known number of shafts incorporated on current U.S. or European subsonic commercial transport jet engines. Sometimes engine drive shafts can have a mid-shaft sump, if a mid-shaft bearing assembly is desired in the design. The engine shafts are usually concentric (nested inside one another and sharing a common center line through the engine.)

Some other drive units and auxiliary shafts may be required in the jet engine design; these other shafts and drive units will be accounted for in the "Controls and Accessories & Miscellaneous Hardware" item (WBS item 1.1.9.) The auxiliary equipment in WBS 1.1.9 may also include operational sensors, environmental control heaters and blankets, active gas (nitrogen) cooling plumbing, gas generators, and other devices.

Explicit design engineering descriptions of the major sections of a core jet engine such as the inlet, compressor, combustor (sometimes called the burner section), turbines, and nozzles can be found in Philip Hill's and Carl

Peterson's technical reference book entitled "Mechanics and Thermodynamics of Propulsion", second edition, 1992; published by Addison-Wesley Publishing Company (ISBN 0-201-14659-2.) The text book is well organized and a great reference source for both the designer and the cost analyst. It has many operating characteristic, design performance range, and hardware subsystem level descriptions for aerospace propulsion systems included within its cover.

3.2.1 Reference Turbojet Engine Design Description

A schematic of a turbojet engine is presented in figure 3.2-1. The UTC Pratt & Whitney J58 turbojet "core" engine, shown in figure 3.2-2, has been selected for a graphical representation of a high performance turbojet engine. The Pratt & Whitney J58 engine, with augmentor (afterburner), produces 34,500 pounds of thrust at sea level. It has been used for many years on the Lockheed SR-71 Mach 3, high altitude airplane. NASA is still flying SR-71 airplanes for high speed research and development flight test projects at the Ames-Dryden Flight Test Center in the California desert (next to the USAF Edwards Air Force Base test facilities.)

The core J58 engines in the SR-71 airplane are supplemented for high speed supersonic flight by uniquely-designed Lockheed aircraft nacelles. The SR-71 nacelles are fabricated in a ducted ramjet design configuration. The SR-71 nacelles have a cone-shaped diffuser and special propulsion inlet controls in the airframe wing structures. The nacelle inlet digital controls are integrated with the core engine management system controls (all of the original analog controls were upgraded to a digital control system before the USAF decommissioned the SR-71 program.). The major Lockheed nacelle control parts of the propulsion system and the core J58 engine are depicted in figure 3.2-3.

Figure 3.2-4 contains isometric and cutaway views of GE Aircraft Engine's F404 turbofan engine. Derivatives of the first GE F404 engines are used today on F-18 fighter, A-6 attack, and F-117A stealth attack military aircraft. The GE F404 series' published engine thrust levels (at sea level) range from 10,800 to 18,100 pounds! The wide range of maximum thrust levels for the F404 engine series implies that using engine thrust at sea level as the only independent variable in a CER to estimate engine costs (the dependent

In flowing through the machine, the air undergoes the following processes:

ⓐ-① From far upstream, where the velocity of the air relative to the engine is the flight velocity, the air is brought to the intake, usually with some acceleration or deceleration.

①-② The air velocity is decreased as the air is carried to the compressor inlet through the inlet diffuser and ducting system.

②-③ The air is compressed in a dynamic compressor.

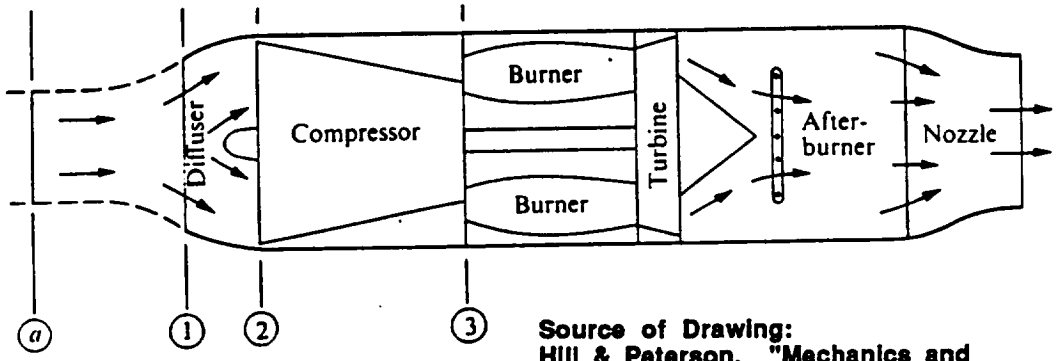

Source of Drawing:
Hill & Peterson, "Mechanics and Thermodynamics of Propulsion," page 164, used with publisher's permission.

Figure 3.2-1: A simplified, schematic drawing of a turbojet engine.

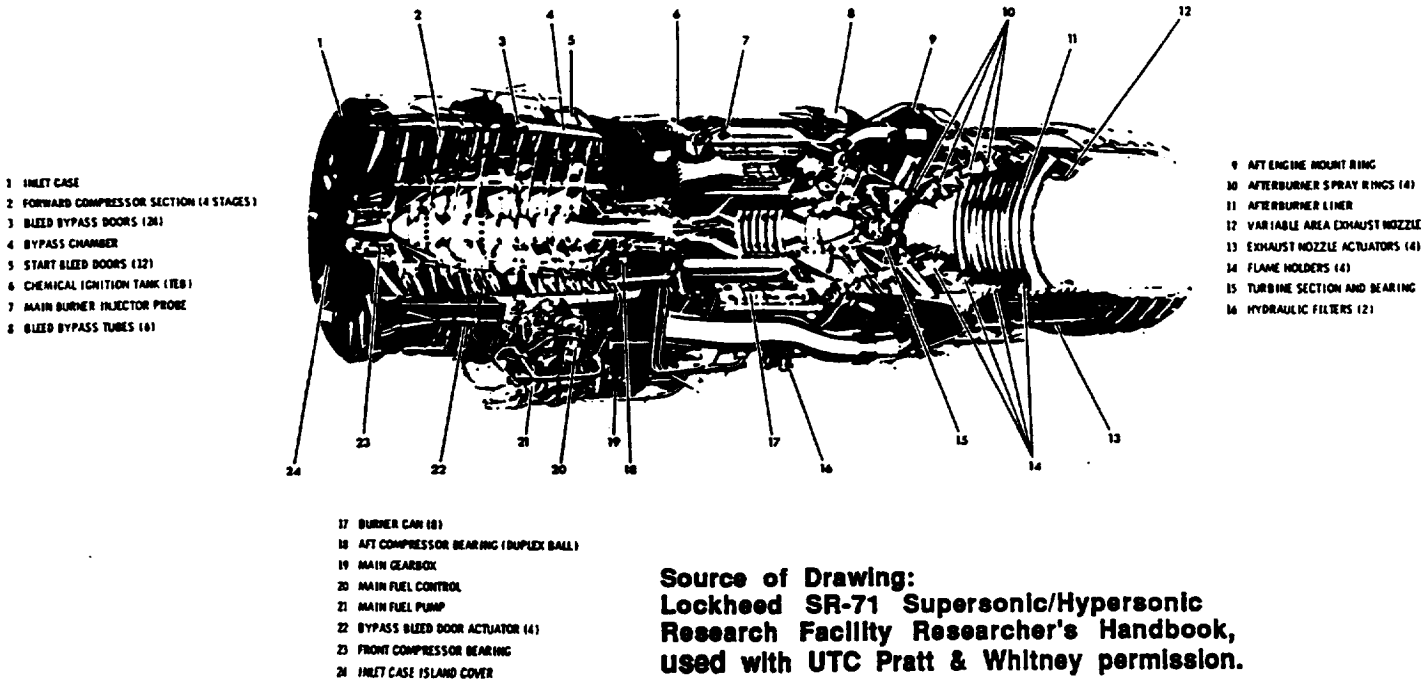

Source of Drawing:
Lockheed SR-71 Supersonic/Hypersonic Research Facility Researcher's Handbook, used with UTC Pratt & Whitney permission.

Figure 3.2-2: The J58 engine was developed for the supersonic SR -71 airplane.

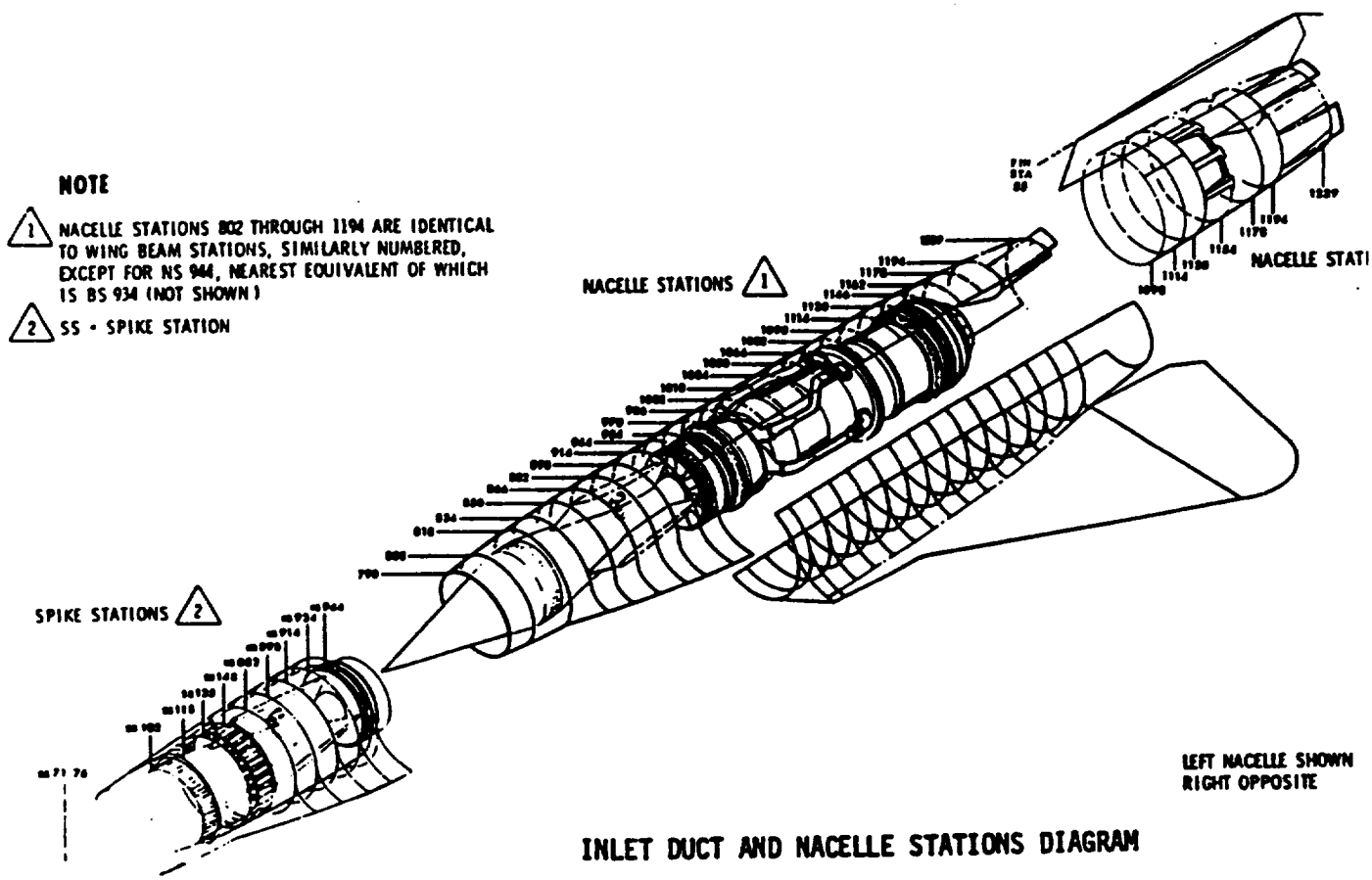

INLET DUCT AND NACELLE STATIONS DIAGRAM

Source of Drawing:
"Preflight, Postflight, and Thruflight Inspection Work Cards Manual" - AFLC

Figure 3.2-3: The SR-71 nacelle and core engine operation enables the Blackbird to attain Mach 3 flight speeds.

variable) may not always produce accurate estimates. This implied inaccuracy might be especially true in the case where we must evaluate a derivative of an existing (matured technology) core jet engine design (such as the F404.)

Turbojet engine nacelles can have different *inlet air bypass* requirements and bypass hardware in the *airframe* , but *the core engine assembly has no bypass capabilities, by definition* (the special integrated aircraft nacelle hardware of the SR-71 is a good example.) In an integrated turbojet engine and variable inlet nacelle design, nacelle inlet bypass air is normally used for cooling the engine or adding oxidizer to the augmentor section.

Turbojet engines normally have one less shaft than turbofan engines because they do not include the engine fan system as part of the rotating machinery. The number of primary drive shafts is another key jet engine design description item.

Because of their high performance capabilities, turbojet engines are normally used on military fighters or bombers and supersonic civil aircraft (aircraft that can fly at speeds above Mach 0.85.) Many of these applications, like the SR-71, *must* incorporate an afterburner function in order to produce enough power for all phases of flight. These high performance engines usually have high fuel consumption rates and their host aircraft platforms require aerial refueling to operate over extended distances.

Some new engine concepts may incorporate a *variable cycle* design. The variable cycle turbofan/turbojet concept stages from a turbofan operation to a turbojet operation during the flight. This variable cycle operation theoretically saves fuel on takeoff and subsonic cruise periods (below Mach 1,) while still achieving high supersonic speeds during the middle of the flight profile at Mach 2 to Mach 3. "Hybrid" turbofan/turbojet designs will be reviewed after the following turbofan design description section.

3.2.2 Reference Turbofan Engine Design Description

A turbofan engine is a turbojet engine with a modified inlet and a large fan blade assembly integrated into the front end of the rotating machinery. A turbofan engine schematic is depicted in figure 3.2-5.

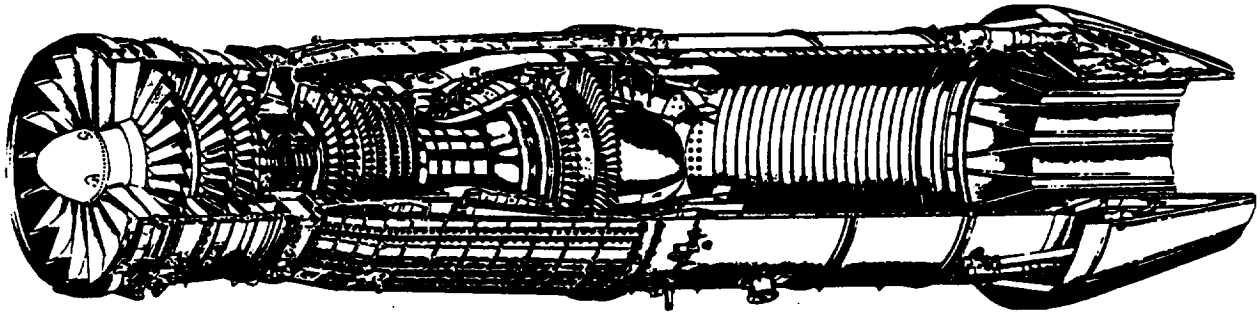

368986C

Trimetric View of a GE F404 Engine

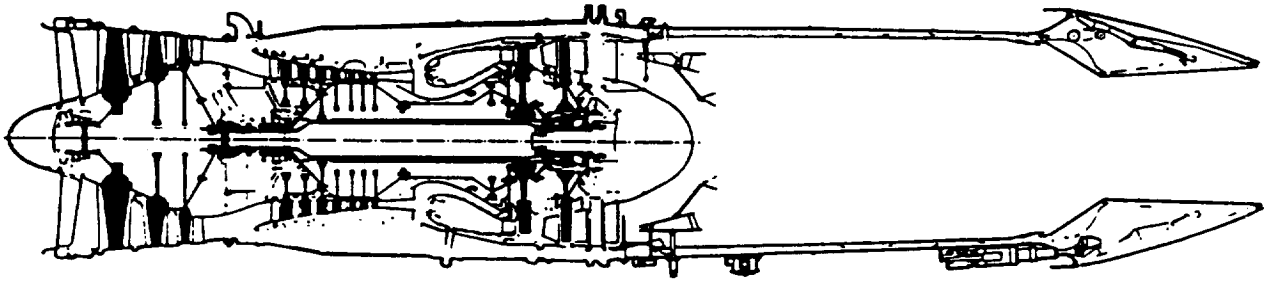

Cross Section View of F404 Engine

Source of Drawings:
General Electric Aircraft Engines,
used with GE Public Relations permission.

Figure 3.2-4: Trimetric and cross section views of GE F404 turbofan engine.

In a typical turbofan design, at all Mach numbers, *intake bypass air* routed around the core engine can be used as a subsequent engine stage oxidizer, for engine cooling, or as a method to change operating pressure and temperatures at various engine internal operating points. Some of the engine bypass air may be dumped outside the engine through doors or vents. Bypass methods and design descriptions will influence the cost of the engine and it's associated development costs. The *core engine bypass function* in turbofan systems can be cost-accounted in the engine inlet or compressor sections, but it can also be spread across all of the section level WBS items (it just depends on how the turbofan engine air bypass function is described.)

Turbofan engines normally operate in flight environments up to Mach 0.85. The turbofan design has evolved into the most popular jet engine design in the world for long range, subsonic transport aircraft due to its lower fuel consumption and efficient performance characteristics. Turbofan jet engines are usually categorized as low bypass or high bypass ratio engines (relating to their respective inlet diameter, flow specifications, and internal geometry characteristics.)

The fan section of a turbofan engine causes the most noise pollution to the environment. Efforts are under way to quiet fans on future turbofan designs (*noise abatement* subsystems are a cost and technology investment item to consider in new designs.) The noise abatement hardware will normally be part of the nacelle costs, but some costs could be estimated for passive acoustic abatement materials (acoustic blankets or sheets, integral core cell materials, etc.) in the core engine's inlet, fan, or nozzle sections. Some new design concepts to reduce engine operating noise include the integration of an added *active noise reduction system* (directing sound against sound to negate the noise energy source in an enclosed area of the engine.) No specific cost data on active noise reduction systems was obtained in this study, but the subject may be of future interest to preliminary designers and cost analysts.

A trimetric view of the Energy Efficient Engine (E^3) turbofan concept design provided to NASA by General Electric Aircraft Engines is presented in figure 3.2-6. The cutaway view reveals the cavities and structural components of the nacelle walls which surround the core engine's rotating machinery. The E^3 engine design has not been fully developed for commercial or military use. The maximum thrust range at sea level of the E^3 engine was specified by NASA to be rated 39,000 pounds of thrust at sea level.

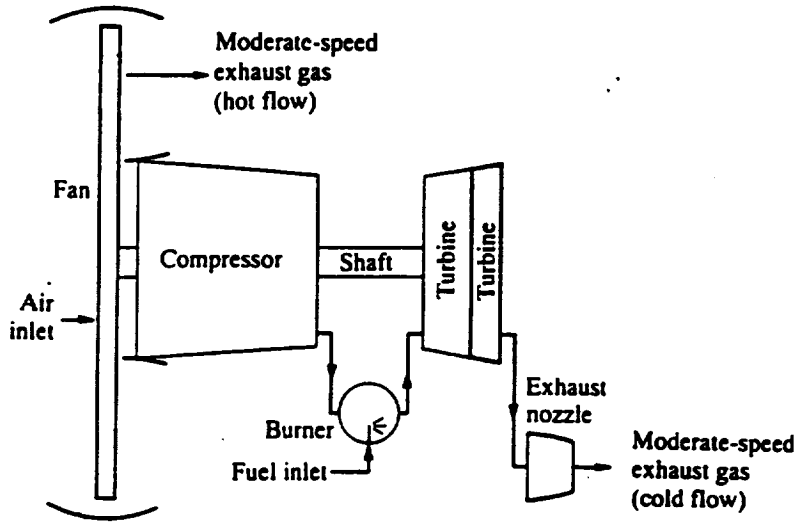

Source of Drawing:
Hill & Peterson, "Mechanics and Thermodynamics of Propulsion," page 142, used with publisher's permission.

Figure 3.2-5: A schematic of a turbofan engine from Hill and Peterson's book.

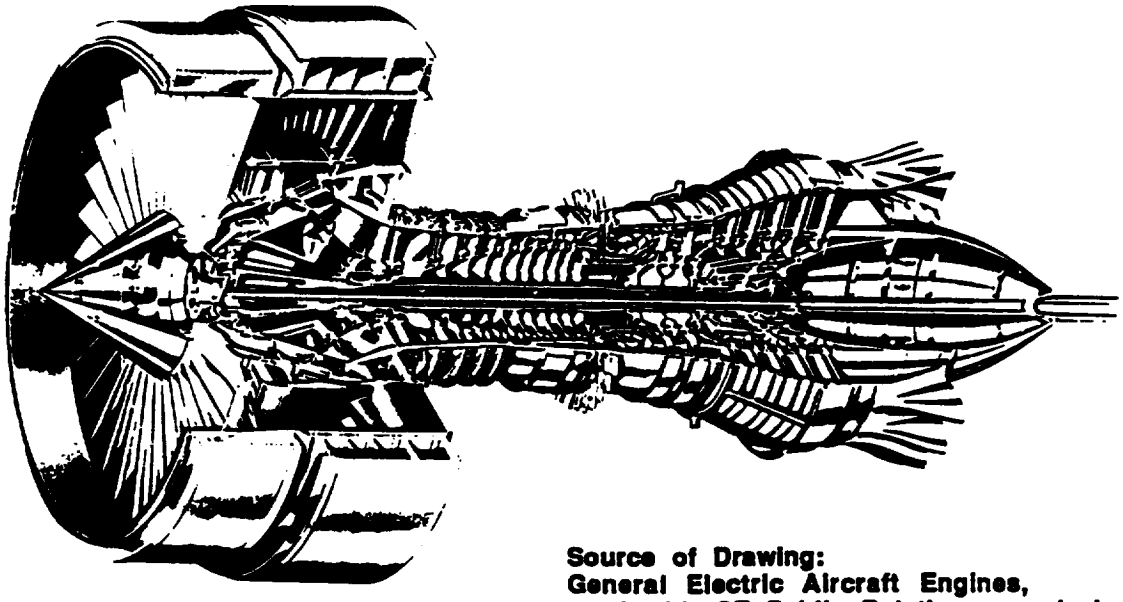

Source of Drawing:
General Electric Aircraft Engines, used with GE Public Relations permission.

Figure 3.2-6: "Energy Efficient Engine" prototypes, like the one shown in this GE drawing, were built for NASA in the early 1980's.

The new GE-90 engine being tested for the new Boeing 777 commercial airplane is designed for the 72,000 to 100,000 pounds of thrust range. To achieve this level, at a reasonable fuel consumption rate, the GE turbofan engine's fan size was increased to a diameter of 123 inches (just over 10 ft.) When the new nacelle is added to this large core engine, the overall diameter is over 12 feet. This overall GE-90 diameter would be too large for some existing launcher platform candidates (747, C-5, etc.) The larger diameter engine could not be used in a subsonic two stage to orbit (TSTO) space transportation system without a complete rework of the landing gear (a potentially "costly" item for any new TSTO air-launch space transportation system.)

A Few Test Facility Cost Data References

Significant money is invested in test facilities for developing larger engines. GE Aircraft Engines invested approximately $69 million dollars in three new engine test sites at its Peebles, Ohio, test facilities to ground test the GE-90 engines (ref.: S. Kandero, "GE90 Program Moves into High Gear," Aviation Week & Space Technology, April 19, 1993, page 42.) GE also has increased its fabrication and test facilities in Durham, North Carolina, to produce the new GE-90 turbofans (ref.: Ibid, page 42) for an undisclosed facilities expansion cost. These costs will be amortized back into the production unit costs over the production lot sales time period.

NASA LERC's engine altitude ground test facilities are also extensive and would be costly to replace or extensively modify. While the Propulsion Systems Lab contains 2 engine test cells and cost approximately $20M to build in the 1970's, "...its' estimated replacement cost in today's dollars [1993] is approximately $110M...", (according to Maureen Burns, the engine altitude test facilities manager at LeRC.)

3.2.3 Reference Unducted Fan Engine Design Description

A drawing of an unducted fan (UDF) engine (sometimes called a "prop-fan" engine) is presented in figure 3.2-7. The "fan" blades are located near the aft of the engine. The engine is gearless and the *propulsor* blades counter-rotate during operation. The front end of the engine is basically a "gas

generator" for the engine's propulsion blades. NASA Lewis Research Center funded General Electric (GE) Aircraft Engines to flight test an unducted fan demonstration unit on a used Boeing 727 airplane. "The unducted fan engine used about 50 percent less fuel than the JT8D turbofan engine it replaced on the 727" (ref.: NASA Lewis Unducted Fan Program summary sheet; NASA Headquarters Program Office, OAST.)

The GE UDF "propulsor assembly" section is basically a set of exposed, counter rotating *turbine blade extensions* installed where the augmentor (afterburner) is normally located on a *turbojet* engine. The term "prop-fan" is somewhat of a misnomer, as the exposed blades are really widely spaced, fan-type blades. The propulsor assembly fan blades on the GE prototype were made from reinforced composite materials. The reinforcements made the UDF prototype engine's propulsor blades very light weight and strong.

The UDF demonstration engine did not require the airframe manufacturers to design or fabricate an engine nacelle. *The nacelle is part of the core engine* ; the airframe manufacturer must provide an engine mount and the engine control and electrical interfaces.

The GE prototype was a modified GE 404 series engine, with the augmentor removed from it. The engine has a *direct drive frame* attached to each *turbine section spool* for connection to the exposed fan blades. The prototype UDF engine configuration had a ultra high bypass ratio (35-40) compared to the more conventional turbofan engines (5-8), and the demonstrator models had very good propulsive efficiency (about a 25% improvement over a modern turbofan engine.) The GE UDF prototype engine was flown a total of over 600 hours (118 flights) on a used Boeing 727 airplane (for initial flight testing) and a company-sponsored, McDonnell Douglas MD-80 airplane (this plane was flown to the Paris Air Show.) The GE operational design was designated the GE36 program.

Pratt & Whitney also worked on a similar engine for the UDF engine research and development program. All UDF development work was halted by GE and Pratt & Whitney after the two flight demonstration programs of prototype engines in early 1980's when no strong commercial airlines interest was expressed. The design and cost information for this type of engine is limited to the GE and Pratt & Whitney demonstration program history.

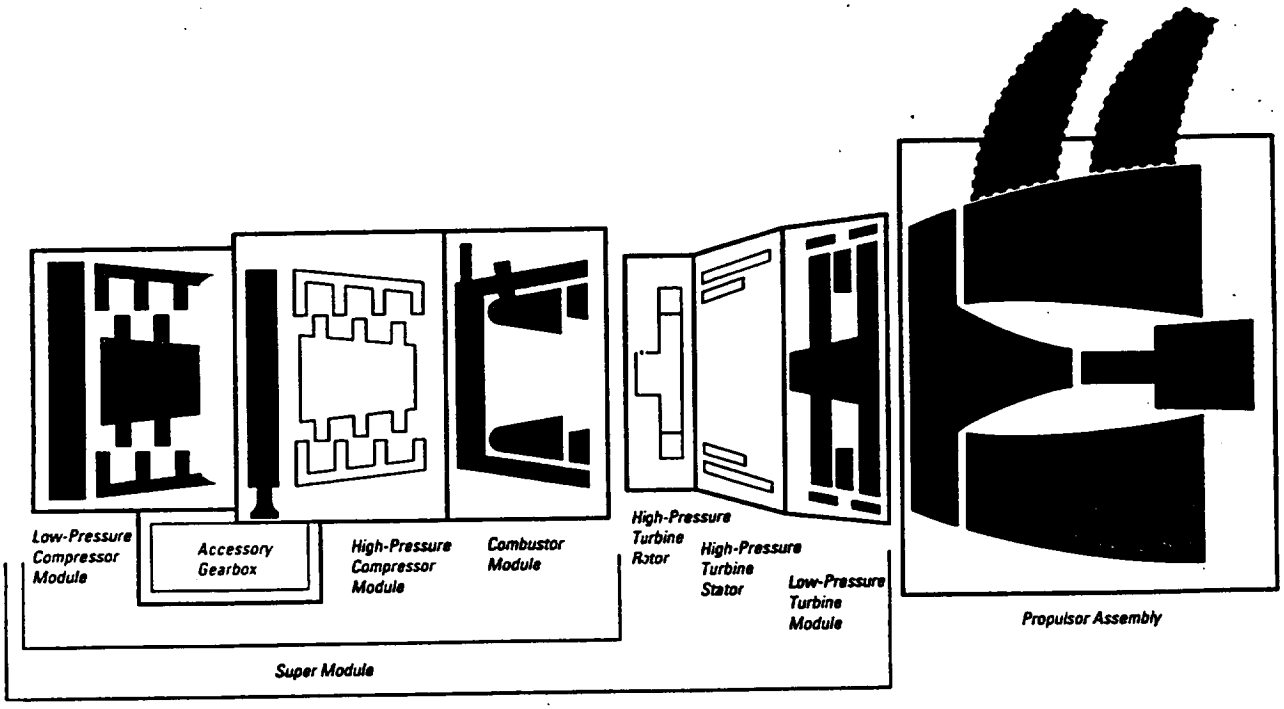

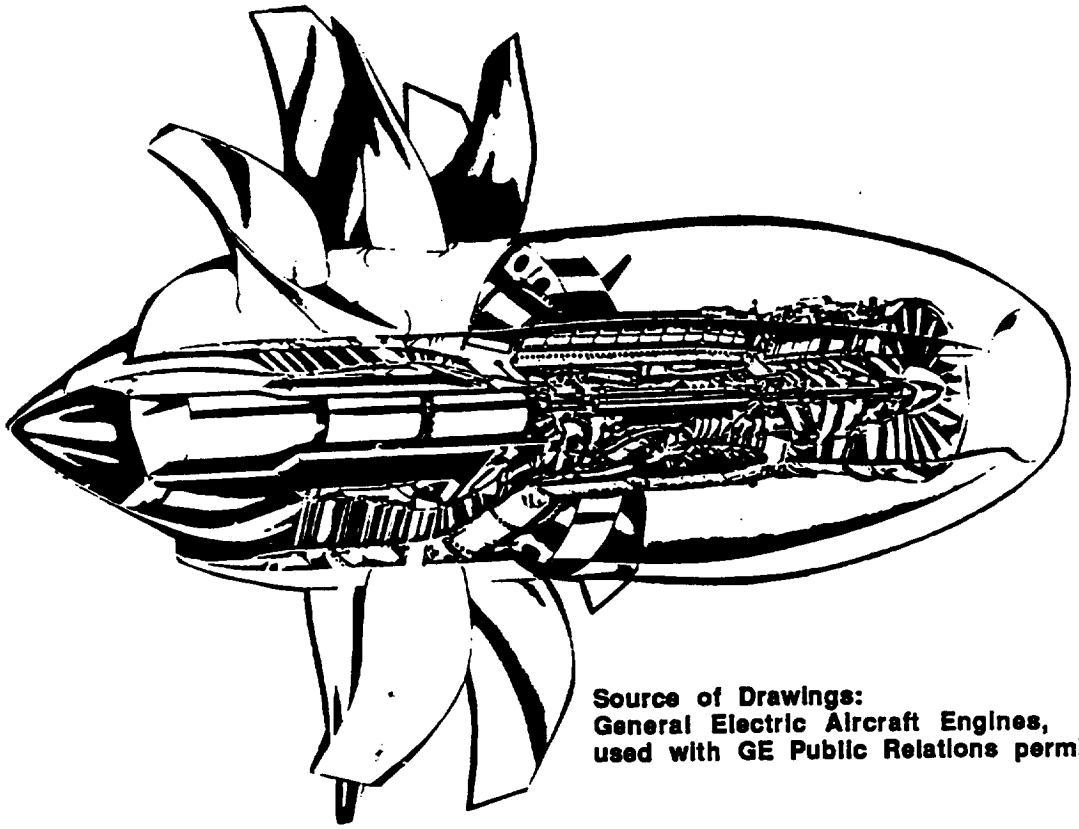

Source of Drawings:
General Electric Aircraft Engines,
used with GE Public Relations permission.

Figure 3.2-7: Diagram and trimetric views of the GE unducted fan engine.

3.3 Hardware Development & Production CER's

Requests for information were sent by Boeing to General Electric Aircraft Engines and United Technology Corporation's Pratt & Whitney engine divisions (Connecticut and Florida) for development cost and production unit cost information. The proprietary information is stored in separate files in a cost estimating database. The cost estimating database includes cost and non-cost (program description and design and performance characteristics.)

The jet engine cost information from the engine manufacturing sources has been normalized (escalated) to 1993 dollars using supplier source data and April 12, 1993, NASA Headquarters inflation indices. The jet engine program "non-cost" characteristics were collected and tested in trial cost estimating relationship (CER) equations with the normalized historical programs cost data in order to obtain the best statistical curve fit for predicting new engine costs (using the least-squares method of obtaining a cost prediction curve from the historical data set). The least-squares regression calculations and statistical testing for the jet engine development and theoretical first unit cost CER's are accomplished using Microsoft Excel© application software. Some statistical test metrics are calculated using spreadsheet macros and some are calculated using a formula within a cell.

The least-squares relationships are only valid over the range of possible independent variable inputs (X values) of the original engine or microgravity hardware programs data. Extrapolations for X values outside of the CERs' inputs range is not valid. This means that we cannot use the CER's to make cost predictions based upon the values of X (technical design parameters) that are outside the range of the data from which the CER equation is derived. For example, the curve may change its shape beyond the limits of the CER equation's X values ("best fit" prediction curves can be linear, parabolic, or some other curve form, depending on the *function* equation form selected.)

The mathematic function and equation form selected for this CER development study will always be the Linear Regression method, $\mathbf{Y = mX^b}$, unless stated otherwise in the CER's introductory text section.

3.3.1 Preliminary Turbofan Engines Cost Estimating Relationships

The following preliminary cost estimating relationships were created by Boeing from the database for new engine development and the theoretical first unit. The development CER includes engineering and manufacturing test hardware (quantities vary) for a NEW engine program. CER equations can also be developed from the database using different technical parameters or combinations of parameters. Derivative engine analysis was not accomplished within the study (but could be added to the equations set with a little more data from GE Aircraft Engines and UTC Pratt & Whitney sources.) Derivative "design heritage" logic trees are required to sort out the database information for use in jet engine derivative CER models. Engine CER's include the supplier fee/profit (engine supplier data at "contractor cost" was not offered to Boeing.)

The derived Design, Development, Test & Evaluation ("DDT&E;" DDT&E is now called Engineering and Manufacturing Development "EMD" by the U.S. Government) CER for the core turbofan jet engine is,

New Core Turbofan Engine DDT&E CER (less nacelle/body integration):

Core Turbofan Dev. ('93$ millions) = 7.4871 * X ^ 0.511

where:	**X = Thrust in pounds at Sea Level (SL);**
and valid input range is:	**16,000 - 90,000 lbs. thrust ± 10%;**
correlation of coefficient value (R^2) is:	**.602**

The CER above excludes the estimated cost of *component technology development projects performed before the EMD phase* and *combined engine/aircraft platform certification testing effort after the core engine EMD phase* (costs incurred after the engine and nacelle hardware are integrated together at the airframe manufacturer's facilities or a Government integration site.)

A gross approximation value of around $ 350 million dollars ('93 $) may be used for a combined, military engine/aircraft certification effort beyond the core engine EMD phase. (It would be much better to add a contractor planning

estimate to the EMD estimate for engine/aircraft certification if the personnel are available to assist the systems cost analyst.)

New Core Turbofan Engine TFU CER (less nacelle/body integration):

Core Turbofan TFU ('93$, whole) = 223405.1 * X ^ 0.369

where:	**X = Thrust in pounds at Sea Level (SL);**
and valid input range is:	**16,000 - 90,000 lbs. thrust ± 10%;**
correlation of coefficient value (R^2) is:	**.345**

Even though the correlation of coefficient is a lower number (1.0 is a perfect curve fit) when compared to the prior turbofan EMD CER, the data set for the turbofan engine theoretical first unit (TFU) production phase CER is based on a reasonable slope. The x,y population for the TFU CER also contains eight (8) more data points than the EMD CER over the same thrust (X value) input range.

Given mixed data for production quantities of different engine models, the recommended *composite* cost improvement curve of choice from both jet engine supplier data sources was a 90 percent cost improvement curve. Curves with "dog leg" transitions have been experienced from 85% for the first 250 units and then flattening to 92-94% for the units beyond 250. The 250th unit is a universal or "traditional estimating reference point" for the jet engine industry's cost analysts. As is noted above the equation, engine nacelle and propulsion integration costs at the airframe manufacturer's site are not included in the turbofan TFU CER.

3.4 System Level Cost Factors (Support Costs)

Support cost factors for the jet engines family are those program costs below the hardware estimates line. Commonly called just "below the line costs," these work breakdown structure items are typically labor resources costs of a program associated with system engineering and management, system test, facilities setup, liaison engineering, outplant effort, etc.

Also included in this category are the estimated costs for integration (prime) contractor flight test support during the Development Test and Evaluation (DT&E) testing subphase. The Operational Test and Evaluation (OT&E) testing subphase of the flight test program (when the customer is the operator and test conductor just before first delivery) is normally included in the platform's operation and maintenance program phase estimates. "OT&E" is a U.S. Department of Defense term. Commercial airplane people use the term "Customer Flight Test and Training" to describe similar OT&E [certification] activities when a new commercial customer picks up their first delivery aircraft with new engines attached to it.

The first order estimate (system level) CER's presented include the program support level costs. Detailed project cost breakouts for turbofan engines were not offered by the engine suppliers to Boeing at this time due to time limitations, extensive research and interpretation issues, and the "competition sensitive" nature of the detailed engine project cost data from their own internal cost models.

3.5 Example of Jet Engine CER's Application

A second test of "reasonableness" for a cost modeling relationship is to use some existing data from a project for validation of the equation(s). The study Boeing analyst surveyed the propulsion engineering community in June of 1993 for some suggestions as to which project to choose for the initial validity test. Many projects were ruled out because of their proprietary status with the suppliers. The selected program to test the CER's was the Energy Efficient Engine Program (abbreviated as the "E^3" Program by the participants.)

The E^3 Program has several pluses and minuses as a beta test data source. The pluses are: (1) the program was managed by NASA Lewis Research Center (this study's customer); (2) there was an open technology transfer agreement between GE Aircraft Engines and UTC Pratt & Whitney divisions with shared development and test results; (3) actual prototype hardware was produced by both suppliers which led to a new generation of quieter, more fuel efficient commercial jet engines; (4) there are good summary reports from which to gather test inputs data. The minuses are: (1) there was no production hardware built identical to the prototypes (the final report provides estimates of the projected "hybrid" GE-P&W production model

design; and (2) the development program stopped short of actually qualifying and certifying the prototype models so actual project development costs are incomplete.

Considering these pluses and minuses, it was decided between the supplier and Boeing cost analysts that the E^3 Program data was still reasonable for an initial beta test of the CER's. The principle investigator is confident that GE Aircraft Engines and UTC Pratt & Whitney cost analysts will provide additional feed back after they have an opportunity to test the two jet engine cost equations themselves.

E^3 Program Engine Thrust Input and Other Characteristics

The E^3 Program weight statement summary (in pounds, mass or "lbm") received from Mr. Mike Bailey at GE Aircraft Engines is as follows:

FPS Engine Hardware Item		Estimated Weight - lbm
Basic "Core" Engine:		
Fan & Booster Module		2,431 lbs.
Low Pressure Turbine (LPT) Module		1,846
Core Module		2,206
Compressor Rotor & Stator	990	
Combustor, Casing & Diffuser	303	
High Pressure Turbine Rotor & Stator	913	
"Miscellaneous"		1,173
"Configurations"	272	
Lube Hardware	53	
Control & Accessories	143	
Sumps, Drives & Seals	705	
Subtotal, **Basic Core Engine -**		**7,656 lbs.**
Engine Installation (not used in CER's):		
Engine Installation Hardware		2,188
Inlet	358	
Reverser	835	
Cowl, Pylon, and Exhaust	400	
Engine Buildup Parts	595	
Total, Installed Engine Weight (est.) -		9,844 lbs.

At the rated 39,000 lb. thrust (t., at sea level), the E^3 *core engine* thrust-to-weight ratio would be approximately 5.09 (39,000÷7656=5.09404.) The NASA goal was to encourage the manufacturers to develop a new engine family which was more powerful and fuel efficient than the GE CF6-50C used on the large body transports like the Boeing 747, McDonnell Douglas DC-10, etc. By contrast, the reported GE CF6-50E thrust-to-weight ratio in public data sources is 6.0-6.2, and the reported UTC P&W JTD-9-7R4G2 thrust-to-weight ratio is 6.0 (eventually used on the 747-300 model.) Both engines have thrust ratings above 50,000 lb. t. and improvements adapted from the E^3 Program.

Results of the Initial Jet Engine CER's Beta Testing

Using the engine's 39,000 lb. thrust value described above, the two CER's presented in section 3.3 were exercised with the E^3 Program input. A table of the initial beta test results is summarized below.

E^3 Program Cost Item	(escl. '80 to '93$) Reported Value	Jet Engine CER output	Original to CER Output Variance (%)
Design, Dev., Test & Eval. (GE est. to full qualification)	$ 1,746.0M	$ 1,660.9	+ 5.12%
Production 250th Unit (NASA reported estimate)	$ 5.125M	$ 4.772M	+ 7.41%

Now, before we congratulate ourselves for coming within less than 10% of the normalized, base year dollars estimates (established in 1980) we must consider that commercial engines that followed the E^3 Program were **derivative** turbofan engines with more thrust to provide larger loads capacity and distance for the airline customers (many of those "derivative" higher thrust engines were placed on 747 airplanes due longer route requirements.) We have no CER adjustment factor(s) for derivative engines DDT&E at this time.

As a second check of the TFU CER we calculated the sales price for the 250th unit of a model PW 2037 that has a public domain unit value of $ 5.3M (in 1993 dollars) for a thrust level of 38,250 lb. t., with about 685 units built before 1993. The 250th unit (90% curve) is about $ 5.25M, or 10% higher than the CER. The DDT&E CER will need to be further evolved to handle derivatives.

4.0 RAMJET ENGINE & NACELLE ESTIMATING MODULE

Liquid fuel ramjet engines for advanced airplane designs were studied in the context of establishing a suggested work breakdown structure for cost estimating ramjet hardware. Supplier data was not received for ramjet components or engine assemblies. Therefore, this section will only address the estimating structure devised by our propulsion engineering staff at Boeing.

4.1 Ramjet System Work Breakdown List

Boeing engineers and their peers in Government were asked by the principle investigator to help him create a generic work breakdown structure (WBS) for cost analyses and evaluations of new ramjet designs. Figure 4.1 contains the final ramjet WBS listing. The listing contains both core ramjet engine components and their associated nacelle components, since all traditional liquid fuel ramjet engines use body or wing nacelles. The nacelle components to control the air flow, mixing, and bypass functions of operation to produce different power levels within the engine's operating range.

4.2 Ramjet CER Development Comments

Two ramjet engine drawings are presented in figure 4.2-1. Supersonic liquid ramjet inlet and exhaust nozzle designs may vary dramatically (fixed or variable diffuser geometry inlets, fixed or adjustable position cone diffuser inlets, mixed ramjet/turbofan jet configurations with shared inlet and exhaust sections, etc.) The basic injection systems, flame holder, combustion chamber, and associated core engine fuel feed control and distribution parts (control valves, etc.) will most likely be similar for most supersonic ramjet preliminary designs. Cost modeling of special louvers and orifices in the combustion chamber area is normally not accomplished at the parametric

Liquid Fuel Ramjet Work Breakdown Structure

Boeing Defense & Space Group - Seattle, WA

WBS Number	WBS Title	Fabrication Material Selection Options	Key Design Parameters
1.0	Liquid Ramjet Propulsion System	N/A	Thrust in lbs. @ sea level
1.1	Liquid Ramjet System Hardware & Software	N/A	
1.1.1	System/Subsystem Analysis & Simulations	N/A	
1.1.2	Ramjet Inlet Section		
1.1.2.1	Inlet Flow & Geometry Analysis	N/A	
1.1.2.2	Inlet Fixed Structure (diverter, splitter, cowling, etc.)		
1.1.2.3	Inlet Movable Structure (cone, diffuser ramps, etc.)		
1.1.2.4	Inlet Doors and Auxiliary Equip.		
1.1.2.5	Boundry Layer Bleed Exhaust Nozzles		
1.1.2.6	Inlet Geometry Control Mechanisms (actuators, etc.)		
1.1.2.7	Inlet Thermal Control Systems (active & passive)		
1.1.2.8	Inlet Controller (digital, analog, or both)		
1.1.2.9	Inlet Integration & Checkout		
1.1.3	Ramjet Combustor Section		
1.1.3.1	Combustor Flow & Design Analysis	N/A	
1.1.3.2	Combustor Structure (cowl, sidewalls, liner, etc.)		
1.1.3.3	Fuel Manifolds & Lines		
1.1.3.4	Fuel Control & Regulation (valves, etc.)		
1.1.3.5	Fuel Injector(s)/Spray Bar(s)		
1.1.3.6	Fuel Ignitor(s)		
1.1.3.7	Flame Holder(s)/Perforated Liner		
1.1.3.8	Flame Stabilizer (optional)		
1.1.3.9	Preburner (optional)		
1.1.3.10	Combustor Integration & Checkout		
1.1.4	Ramjet Nozzle Section		
1.1.4.1	Nozzle Flow & Geometry Analysis	N/A	
1.1.4.2	Nozzle Structure (cowl, sidewalls, liner, etc.)		
1.1.4.3	Exhaust Movable Structure (petals, ramps, etc.)		
1.1.4.4	Bypass Doors & Mechanisms		
1.1.4.5	Geometry Control Mechanisms (actuators, etc.)		
1.1.4.6	Nozzle Thermal Control Systems (active & passive)		
1.1.4.7	Nozzle Controller (may be same unit as Inlet)		
1.1.4.8	Nozzle Integ. & Checkout (may be part of 1.1.3.9)		
1.1.5	Ramjet Control Software Dev. and V&V	N/A	
1.1.6	Ramjet System Integration		
1.2	Liquid Ramjet System Test & Certification	N/A	
1.3	Liquid Ramjet Facilitization	N/A	
1.3.1	Manufacturing Facilities	N/A	
1.3.2	Mfg. Tooling & Special Test Equip.		
1.3.3	Special Test Facilities	N/A	
1.4	Liquid Ramjet Ground Support Equip.		
1.5	Liquid Ramjet Spares & Repair Parts		
1.6	System Engineering & Management	N/A	
1.7	Other Procurement Costs (prod. only)	N/A	

Figure 4.1: Generic work breakdown structure for liquid-fueled ramjet engines.

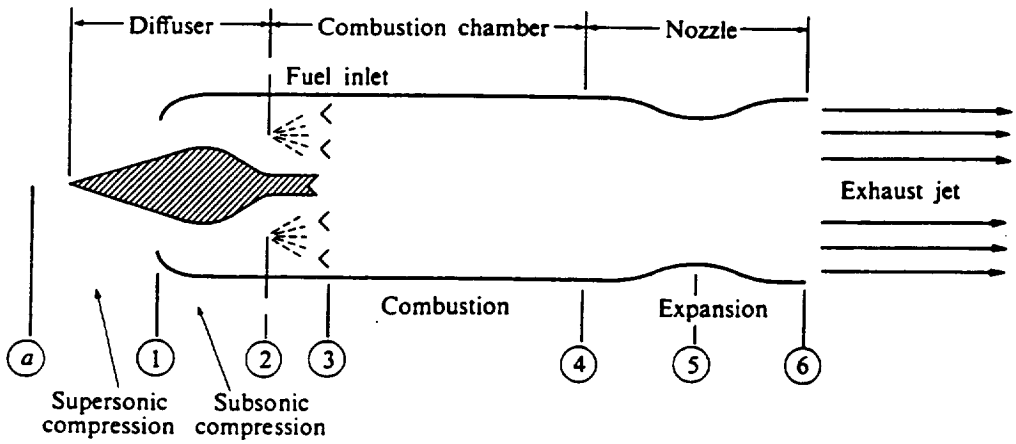

Schematic diagram of a ramjet engine.

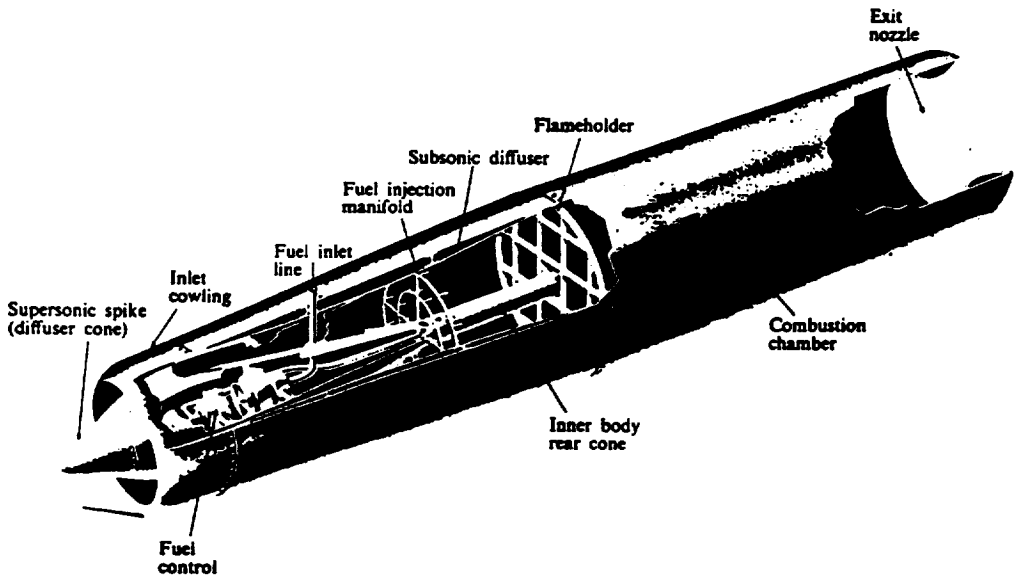

Source of Drawings:
Hill & Peterson, "Mechanics and Thermodynamics of Propulsion," pgs. 156 & 158, used with publisher's & Marquardt Corp.'s permission.

Figure 4.2-1: Simplified schematic & drawing of a liquid-fueled ramjet engine.

costing level for evaluators outside the ramjet engine supplier's propulsion design and cost analysis groups.

Many liquid ramjet engine components are and will be normally made out of high temperature materials. This is due to the strong frictional force effects on the internal operating surfaces and the high engine system operating temperatures at the higher Mach numbers during aircraft flight. Typical materials used in ramjet structures are high temperature titanium alloys, nickel-based hot structure alloys (Inconel, Rene 41, etc.), columbium, coated carbon-carbon composites, and ceramic composites.

All of these hot structure materials are very expensive to buy, and more difficult than aluminum or mild steel to fabricate parts from. Fabrication tooling is very expensive for manufacture of engine parts using these materials, and the process time for parts fabrication is usually longer. The majority of hardware parts in the WBS listing will be estimated using material factors shown in figure 4.2-2. Many times these structural complexity factors can be used with military jet airplane LOAD BEARING STRUCTURE cost estimating relationships (CER's) to obtain reasonable ramjet structural and mechanical systems cost estimates.

Ramjet Control Actuators and Associated Cost Estimates

Actuation of movable flow control ramps within the nacelle is a difficult area to estimate. Special consideration must be given to installing the actuators, whether they are hydraulic or electro-mechanical. A good rule of thumb for estimating large electro-mechanical actuators might be about $800,000 to $1,500,000 ('94$) for non-recurring derivatives development, tooling, testing and certification of *an existing, thrust vector control type actuator preliminary design* applied to a ramjet engine nacelle ramp movement application.

When analyzing electro-mechanical actuator production costs, a value of approximately $250,000 to $350,000 production unit cost ('94$) for the average electrical actuator in the preliminary design will characterize actuators in the 60-120 pounds mass category. Use about 180,000 to 250,000 unit costs for actuators in the 30-80 pounds mass size (with development derivatives costs considered basically insensitive to delivery quantities less than 100 units per lot.) *Electro-hydrostatic* actuators are a electrical motor shaft/screw hybrid

design with a self-contained hydraulic final stage moving the final actuation shaft; they are basically the same development and unit costs as the electric only actuators.

Wiring, hydraulic lines and their support structures are required to operate any type of actuator - beware of low mass properties estimates which grossly underestimate the part counts and magnitude if these weight inputs (remember, if it's hot enough for "hot structures" inside the inlet, the wires or hydraulic line passages may have cooling problems also!)

Active and passive cooling will be required for all exposed actuators in supersonic ramjet inlet areas at high Mach operating environment, and especially in the exhaust nozzle area at any level of operating environment (ramjets which are designed to employ partially supersonic diffusion through a system of induced supersonic shocks won't "idle" on a taxiway, or operate efficiently at speeds below Mach 1.) In some extreme cases the cooling system(s) and power feed lines may weigh more than the control actuators and mounts combined! Be suspicious of weight and design description inputs which do not have cooling system elements in their content. Active cooling system weight and cost penalties may require going to hydraulic designs which require less active cooling - it's always a good cost/design trade study.

Ramjet Turbopumps and Other Items

The turbopumps for ramjet engines are not usually located near the core engine (they may be located in or next to the body and wing tanks.) Cryogen-fueled liquid ramjet turbopumps are very similar in design and cost to cryogenic rocket engines equipment. It is recommended that the rocket engine suppliers (Aerojet, Marquardt, UTC Pratt & Whitney, or Rockwell Rocketdyne) be contacted for the latest turbopump cost estimates for cryogenic turbopumps (you must know the approximate flow capacity, preliminary equipment volume/packaging constraints, and ramjet operation phasing requirements to receive a preliminary planning pump estimate.) "Other" items include sound proofing materials (batting, absorbant panels, double walls, etc.), bypass air passage controls, engine controllers (digital or analog), and special seals and lubricants which might be forgotten or "implied' in the preliminary design description inputs.

Boeing develops parametric cost estimates for preliminary ramjet engine design evaluations *by major component* using technical design description inputs for military airplane structures, mechanical, thermal protection, wiring, and plumbing CER's along with "through-put" or direct cost estimate inputs (via *direct analogy* or *vendor planning quote* cost estimate inputs for actuators, control avionics, etc.) Until some more significant information is released into the unclassified military aircraft databases and literature, we don't know any other way to estimate these advanced supersonic or hypersonic ramjet designs at a higher systems cost analysis level.

MATERIAL	MANUFACTURING FACTOR		DESIGN FACTOR
	Secondary Struc.	Load Bearing & Mech	
Aluminum Alloy	1.0	1.0.	1.0
Magnesium Alloy	1.0	1.0	1.0
Zinc Alloy	1.2	1.1	1.0
Plastic (w/fiberglass)	3.2	1.7	1.0
Steel 150000 PSI	1.6	1.0	1.0
200000 PSI Hardness	2.1	1.35	1.07
250000 PSI Increasing	3.4	1.8	1.07
Copper Alloy	1.8	1.3	1.0
Titanium/Titanium Alloy (MMC)	2.4	1.25/1.75	1.02/1.07
Stainless Steel	4.0	1.0	1.0
Nickel Alloy	4.9	2.2	1.0
Inconel X	6.6	2.8	1.02
M-252/Haynes	7.9	3.2	1.02
Composites - Graphite Epoxy	N/A	1.14	1.27
Composites - Graphite Polyimide	N/A	1.50	1.25
Advanced Carbon/Carbon	N/A	1.85-2.80(3-D)	1.25-1.36
Zirconium Ceramics	N/A	1.87	1.50
Columbium	N/A	1.85	1.07

Figure 4.2-2: Materials complexity multipliers for estimating ramjet structures and mechanical components.

5.0 JET ENGINE O&M COST ESTIMATING MODULE

5.1 O&M Cost Research Objectives and Data Sources

Objectives

The cost estimating relationship development objectives of this subtask are to: (1) search for engine operations and maintenance data on a select list of large military and commercial jet engines; (2) collect engine operations, failure and repair performance data, along with the associated average hours for operations and maintenance (O&M) activities; and (3) summarize the engines' technical and cost O&M data into a database for developing cost estimating relationships (CER's), ratio relationships, and estimating factors. The resulting aircraft engine CER's, ratio relationships, and estimating factors for system O&M will be used, along with Acquisition phase CER's, to predict an engine's total life cycle cost.

List of Initial References and Research Data Sources

1. Aviation Week & Space Technology (AW&ST); March 16. 1992
   Listing of U. S. Military Aircraft and U. S. Gas Turbine Engines and applications.

2. JANE'S - "All the World's Aircraft":
   Description of engines and aircraft, with some indication of model of engine versus model of aircraft.

3. Boeing Defense and Space Group, Experience Analysis Center;
   Maintenance data for selected military (US Air Force and Navy) aircraft systems.

4. AFR 173-13, "US Air Force Cost and Planning Factors": 31 Oct. 1989;
   Table A13-1, "Appropriation/MAJCOM Fuel Consumption Factors," Standard Stock Fund Fuel Prices and Composite Fuel Prices (Budget Year 90 and 91.)

5. "U.S. Naval Air FY 1991 VAMOSC (Visibility and Management of Operating and Support Costs) Report":
Source for actual costs of depot repair services and other Operation and Support functions required for the maintenance of U.S. Navy aircraft and associated propulsion system engines.

5.2 Listing of Jet Engines Researched using Boeing Libraries

Based on maintenance data available, the following jet engines were researched:

Engine Type	Aircraft	Thrust (lbs. at S.L.)	Fuel Consumption (lb / h /lb st)	Engines/ Aircraft
CF6-50E2	E-4B	52,500	0.371	4
F101-GE-102	B-1B	30,000	Not Indicated	4
F110-GE-100,	F-16C/D	28,000	Not Indicated	1
-129	F-15E	29,000	Not Indicated	2
TF39-GE-1C	C-5A/B	43,000	0.315	4
F404-GE-400	F-18C/D	16,000	1.85	2
F404-GE-402	F-18A/B	17,700	Not Indicated	2
TF34-GE-100	A-10A	9,065	0.37	2
TF-GE-400A	S-3A	9,275	0.363	2
J79-GE-15	RF-4C	17,000	1.94	2
TF30-P-3/P-103	EF-111A	18,500	2.50	2
TF30-P-100/P-111	F-111F	25,100	2.45	2
TF30-P-414, 414A	F-14A	20,900	2.78	2
TF33-P-3	B-52H	17,000	0.52	8
TF33-PW-100A	E-3ABC	21,000	0.56	4
TF33-PW-102, -102A	KC-135E	18,000	0.54	4
F100-PW-100	F-15A/B	23,830	2.17	2
F100-PW-200	F-16A/B	23,830	2.17	1
F100-PW-220	F-15C/D	23,830	2.17	2
F100-PW-229	F-15E	29,100	2.05	2

The Boeing operations analyst used the Boeing Experience Analysis Center's databases to identify military aircraft data at the platform level. The O&M samples found at the Experience Analysis Center are based on airplanes instead of engines. A model or series of airplane may have more than one engine option. Thus, the data for the engine system may include more than one engine model type; the F-16 airplane operations and maintenance data is a good example.

Compounding the difficulty of extracting engine O&M data is conflicting information as to just what engines are used with what model of airplane. Example: AV&ST indicates in the U. S. Military Aircraft section that the F-15 series of aircraft have only P&W engines. The U. S. Gas Turbine Engines section indicates that the F110-GE-100 engine was applicable to the F-15. JANE'S can help clarify the situation by pointing out "limited" applications - unique one of a kind applications, foreign sales only applications, models

which never got into production, etc. With the multiple designations applicable to the same hardware (some have changed with time), it can get confusing.

Raw data copied from the Boeing Experience Analysis Center's database includes the tabular information shown in the tables provided here. We arranged the data by aircraft type, with some notations as to the number and type of engine(s) applicable (the number of engines on an airplane platform is indicated just before the engine model number noted within the parentheses.)

The *mean time between failure* (MTBF) for the engine system was calculated by dividing the "sample size" (flight hours) by the reported number of "engine system failures."

The *mean time to repair* (MTTR) was calculated by dividing the "engine system maintenance clock hours" by the number of reported "engine system failures."

The engine system "maintenance manhour per flight hour" data did not include any inspection or servicing manhours. The raw data did indicate general support (ground handling, inspections, servicing, etc.) effort in "manhours / 1,000 flight hours." We ratioed this general support effort to the main propulsion engine system at the same ratio as "engine system maintenance manhours" was to the "total system maintenance effort." The resulting "manhours / 1,000 flight hours" was divided by 1,000, added to the engine system "maintenance manhour / flight hour" number, and then divided by the number of engines on the airplane to arrive at a "*maintenance manhour per engine flight hour*".

5.3 Airplane Jet Engine O&M Non-cost and Cost Data

The following summary tables by aircraft and engine type were collected by the Boeing operations analyst for the purpose of estimating jet engine operation and support costs. The data is presented in a standardized, tabular format with suggestions and comments or references included after each table in a short paragraph. Jim Hagen, a Boeing Senior Systems and Operations Analysis Engineer, collected and summarized the data presented in this section.

E-4B (4 - CF6-50E engines)

Sample Size (Flight Hours)	4,419
Engine System Failures	598
Engine System Maintenance Clockhours	6,795
Engine System Maintenance Manhour / Flight Hour	3.55
General Support Manhours / 1000 Flight Hours	18,606
Engine System Maintenance Manhour / 1000 Flight Hours	3,553
All Systems Maintenance Manhours / 1000 Flight Hours	28,828

The E4-B is a modified Boeing 747 airplane used by the military high command to provide an airborne strategic and tactical command post for the President of the United States (as Commander in Chief of the U.S. Armed Forces), the Joint Chiefs of Staff (if required that they relocate), theater level military commanders, and supporting DoD civil employees. We suggest that the data pertinent to the Boeing 747 E-4B Command Post aircraft engine system appears to be equally applicable to the CF6-50E engine.

B-1B (4 - F101-GE-102 engines)

Sample Size (Flight Hours)	27,303
Engine System Failures	2,993
Engine System Maintenance Clockhours	50,978
Engine System Maintenance Manhour / Flight Hour	4.89
General Support Manhours / 1000 Flight Hours	8,092
Engine System Maintenance Manhour / 1000 Flight Hours	4,892
All Systems Maintenance Manhours / 1000 Flight Hours	28,407

The data pertinent to the Rockwell B-1B supersonic strategic bomber aircraft engine system appears to be equally applicable to the F101-GE-102 engine.

F-16A/B (Single F110-GE-100, -129, F100-PW-200, -220, or -229 engine)

Sample Size (Flight Hours)	251,268
Engine System Failures	4,506
Engine System Maintenance Clockhours	73,861
Engine System Maintenance Manhour / Flight Hour	0.80
General Support Manhours / 1000 Flight Hours	3602
Engine System Maintenance Manhour / 1000 Flight Hours	802
All Systems Maintenance Manhours / 1000 Flight Hours	4644

The data pertinent to the USAF General Dynamics F-16A/B tactical fighter airplane includes data for a number of engine model types. The resulting mixed engine model history of manhours per flight hour (MH/FH), mean time between failure (MTBF), and mean time to repair (MTTR) data correlate quite well with that from samples containing a single jet engine model type.

F-15A/B (2 - F100-PW-100 engines)

Sample Size (Flight Hours)	156,382
Engine System Failures	5,796
Engine System Maintenance Clockhours	192,941
Engine System Maintenance Manhour / Flight Hour	3.18
General Support Manhours / 1000 Flight Hours	14,647
Engine System Maintenance Manhour / 1000 Flight Hours	3,184
All Systems Maintenance Manhours / 1000 Flight Hours	27,756

The data pertinent to the USAF McDonnell Douglas F-15A/B tactical strike fighter version aircraft engine system appears to be equally applicable to the F100-PW-100 engine.

F-15C/D (2 - F100-PW-220 engines)

Sample Size (Flight Hours)	220,483
Engine System Failures	8,011
Engine System Maintenance Clockhours	72,938
Engine System Maintenance Manhour / Flight Hour	0.89
General Support Manhours / 1000 Flight Hours	7,246
Engine System Maintenance Manhour / 1000 Flight Hours	888
All Systems Maintenance Manhours / 1000 Flight Hours	8,056

The data pertinent to the F-15C/D strike fighter version aircraft engine system appears to be equally applicable to the F100-PW-220. JANE'S indicates that the F100-PW-220 is the engine in the F-15C/D.

F-15E (2 - F100-PW-220, or -229 engines)

Sample Size (Flight Hours)	67,469
Engine System Failures	2,158
Engine System Maintenance Clockhours	13,389
Engine System Maintenance Manhour / Flight Hour	0.44
General Support Manhours / 1000 Flight Hours	9432
Engine System Maintenance Manhour / 1000 Flight Hours	443
All Systems Maintenance Manhours / 1000 Flight Hours	7046

The engine data relative to the F-15E strike fighter version aircraft engine system includes data pertinent to two engines, F100-PW-220 and -229. JANE'S indicates that originally the -220 was the engine used, but that with aircraft 135 onwards, August 1991, the -229 engine was the replacement.

F-14A (2 - TF30-P-414, -414A engines)

Sample Size (Flight Hours)	162,875
Engine System Failures	12,479
Engine System Maintenance Clockhours	143,342
Engine System Maintenance Manhour / Flight Hour	2.45
General Support Manhours / 1000 Flight Hours	32,382
Engine System Maintenance Manhour / 1000 Flight Hours	2,446
All Systems Maintenance Manhours / 1000 Flight Hours	28,052

The Boeing analyst found two engine model designations for the U.S. Navy's Grumman F-14A Tomcat fleet air defense (Naval Air mission) and air support fighter (Marines & Naval Air missions.) AW&ST indicates in the "U. S. Military Aircraft" section that the F-14A aircraft have TF30-P-414 engines. The "U. S. Gas Turbine Engines" section indicates that both the TF30-P-414 and -414A engines are applicable to the F-14A. We assume the both engines are very similar in their operations and maintenance characteristics.

F-14D (2 - F110-GE-400 engines)

Sample Size (Flight Hours)	4,243
Engine System Failures	236
Engine System Maintenance Clockhours	1,407
Engine System Maintenance Manhour / Flight Hour	0.84
General Support Manhours / 1000 Flight Hours	10,132
Engine System Maintenance Manhour / 1000 Flight Hours	837
All Systems Maintenance Manhours / 1000 Flight Hours	14,816

The newer F-14D fleet air defense fighter version sample is a very small sample. The data pertinent to the F-14D aircraft engine system appears to be equally applicable to the F110-GE-400 engine.

C-5A/B (4 - TF39-GE-1C engines)

Sample Size (Flight Hours)	209,560
Engine System Failures	20,374
Engine System Maintenance Clockhours	435,803
Engine System Maintenance Manhour / Flight Hour	4.34
General Support Manhours / 1000 Flight Hours	7,850
Engine System Maintenance Manhour / 1000 Flight Hours	4,343
All Systems Maintenance Manhours / 1000 Flight Hours	16,366

The data pertinent to the USAF Lockheed C-5A/B large military airlift transport aircraft engine system appears to be equally applicable to the TF39-GE-1C engine. This engine was designed and built especially for the C-5 program.

F/A-18A/B (2 - F404-GE-402 engines)

Sample Size (Flight Hours)	45,150
Engine System Failures	2,337
Engine System Maintenance Clockhours	40,204
Engine System Maintenance Manhour / Flight Hour	2.40
General Support Manhours / 1000 Flight Hours	24,208
Engine System Maintenance Manhour / 1000 Flight Hours	2,401
All Systems Maintenance Manhours / 1000 Flight Hours	19,559

The data pertinent to the U.S. Navy's McDonnell Douglas F/A-18A/B strike support fighter/attack aircraft engine system appears to be equally applicable to the F404-GE-402 engine. The F/A-18 is operationally unique platform because it is operationally classified by the U.S. Navy as both a fighter and an attack airplane. The U.S. Marines' primary mission for the F/A-18 is normally in only the attack mission mode, but the Naval Air uses the airplane in fleet air defense fighter, attack escort fighter, and light bombing attack mission modes.

F/A-18C/D (2 - F404-GE-400 engines)

Sample Size (Flight Hours)	48,336
Engine System Failures	676
Engine System Maintenance Clockhours	7,247
Engine System Maintenance Manhour / Flight Hour	0.37
General Support Manhours / 1000 Flight Hours	9,540
Engine System Maintenance Manhour / 1000 Flight Hours	372
All Systems Maintenance Manhours / 1000 Flight Hours	8,599

The data pertinent to the Navy/Marine F/A-18C/D fighter/attack version aircraft engine system appears to be equally applicable to the F404-GE-400 engine.

A-10 (2 - TF34-GE-100 engines)

Sample Size (Flight Hours)	296,626
Engine System Failures	6,264
Engine System Maintenance Clockhours	132,355
Engine System Maintenance Manhour / Flight Hour	1.24
General Support Manhours / 1000 Flight Hours	3,478
Engine System Maintenance Manhour / 1000 Flight Hours	1,241
All Systems Maintenance Manhours / 1000 Flight Hours	4,994

The data pertinent to the USAF Republic A-10 ground support attack and forward observer aircraft engine system appears to be equally applicable to the TF34-GE-100 engine. Subsonic, ground attack support missions are conducted normally at very low altitudes, and sometimes at very low air speeds.

S-3A (2 - TF34-GE-400A engines)

Sample Size (Flight Hours)	25,039
Engine System Failures	2,260
Engine System Maintenance Clockhours	32,503
Engine System Maintenance Manhour / Flight Hour	2.81
General Support Manhours / 1000 Flight Hours	22,256
Engine System Maintenance Manhour / 1000 Flight Hours	2,807
All Systems Maintenance Manhours / 1000 Flight Hours	24,468

The data pertinent to the U.S. Naval Air's Lockheed S-3A antisubmarine warfare surveillance and attack aircraft engine system appears to be equally applicable to the TF34-GE-400A engine.

RF-4C (2 - J79-GE-10B and-15 engines)

Sample Size (Flight Hours)	57,712
Engine System Failures	1,202
Engine System Maintenance Clockhours	16,463
Engine System Maintenance Manhour / Flight Hour	0.77
General Support Manhours / 1000 Flight Hours	12,628
Engine System Maintenance Manhour / 1000 Flight Hours	767
All Systems Maintenance Manhours / 1000 Flight Hours	9,340

The data pertinent to the USAF Reserves' McDonnell Douglas RF-4C forward reconnaissance fighter aircraft engine system probably includes data applicable to both the J79-GE-10B and -15 engines.

EF-111A (2 - TF30-P-3/P-103 engines)

Sample Size (Flight Hours)	14,936
Engine System Failures	818
Engine System Maintenance Clockhours	8,569
Engine System Maintenance Manhour / Flight Hour	1.65
General Support Manhours / 1000 Flight Hours	15,191
Engine System Maintenance Manhour / 1000 Flight Hours	1,652
All Systems Maintenance Manhours / 1000 Flight Hours	14,591

There are two engine designations for the USAF General Dynamics EF-111A Raven reconnaissance and active jamming aircraft. AW&ST indicates in the "U. S. Military Aircraft" section that the EF-111A aircraft have TF30-P-109 engines. The "U. S. Gas Turbine Engines" section does not include such a designation and indicates that the TF30-P-3/P-103 engine is applicable to the EF-111A. JANE'S indicates that the EF-111A has TF30-P-3 engines. The EF-111A airplane is a derivative of the F-111 strategic attack light bomber/fighter and was developed around 1960 from the TFX technology program. The plane is designed to perform it's missions at low altitude, with air speeds in excess of Mach 2.

F-111F (2 - TF30-P-100/P-111 engines)

Sample Size (Flight Hours)	46,364
Engine System Failures	3,053
Engine System Maintenance Clockhours	58,688
Engine System Maintenance Manhour / Flight Hour	3.97
General Support Manhours / 1000 Flight Hours	6,219
Engine System Maintenance Manhour / 1000 Flight Hours	3,973
All Systems Maintenance Manhours / 1000 Flight Hours	17,357

Boeing found two engine designations in the public domain data for the newest version of the USAF F-111F strategic light bomber aircraft. AW&ST indicates in the "U. S. Military Aircraft" section that the F-111F aircraft have TF30-P-100 engines. The "U. S. Gas Turbine Engines" section does not include such a designation and indicates that the TF30-P-100/P-111 engine is applicable to the F-111F. JANE'S indicates that the F-111F has TF30-P-100 engines.

B-52H (8 - TF33-P-3 engines)

Sample Size (Flight Hours)	66,400
Engine System Failures	6,733
Engine System Maintenance Clockhours	73,506
Engine System Maintenance Manhour / Flight Hour	3.63
General Support Manhours / 1000 Flight Hours	12,451
Engine System Maintenance Manhour / 1000 Flight Hours	3,628
All Systems Maintenance Manhours / 1000 Flight Hours	21,454

The data pertinent to the USAF Boeing B-52H subsonic strategic bomber aircraft engine system appears to be equally applicable to the TF33-P-3 engine.

E-3A/B/C (4 - TF33-PW-100A engines)

Sample Size (Flight Hours)	171,905
Engine System Failures	4,687
Engine System Maintenance Clockhours	47,169
Engine System Maintenance Manhour / Flight Hour	0.57
General Support Manhours / 1000 Flight Hours	6,362
Engine System Maintenance Manhour / 1000 Flight Hours	570
All Systems Maintenance Manhours / 1000 Flight Hours	9,625

The data pertinent to the U.S.A.F. Boeing 720/KC135 E-3A/B/C AWACS (Advanced Warning and Control System) surveillance aircraft engine system appears to be equally applicable to the TF33-PW-100A engine.

KC-135E (4 - TF33-PW-102, -102A engines)

Sample Size (Flight Hours)	106,205
Engine System Failures	8,180
Engine System Maintenance Clockhours	167,012
Engine System Maintenance Manhour / Flight Hour	2.85
General Support Manhours / 1000 Flight Hours	10,537
Engine System Maintenance Manhour / 1000 Flight Hours	2,850
All Systems Maintenance Manhours / 1000 Flight Hours	14,042

There are many different engine model types on the various configurations of the Boeing KC-135 derivative aircraft. AW&ST indicates in the "U. S. Military Aircraft" section that the KC-135A tanker aircraft have J57-P-59W engines. That correlates with JANE'S. The "E" configuration apparently has different engines and is a "re-engined A" model. The "U. S. Gas Turbine Engines" section indicates that the TF33-PW-102, -102A engine is applicable to the "E" model. JANE'S indicates that the "E" model has JT3D-3B engines. The Boeing Experience Center database indicates another engine, the F108-CF-100, as being on at least a portion of the KC-135E and R fleets (a very small portion of the KC-135E fleet.)

A-6E (2 - J52-P-8A, B engines)

Sample Size (Flight Hours)	106,826
Engine System Failures	11,934
Engine System Maintenance Clockhours	112,332
Engine System Maintenance Manhour / Flight Hour	2.02
General Support Manhours / 1000 Flight Hours	30,321
Engine System Maintenance Manhour / 1000 Flight Hours	220
All Systems Maintenance Manhours / 1000 Flight Hours	28,279

The data pertinent to the U.S. Navy's Grumman A-6E attack aircraft engine system includes data applicable to the J52 and F404-GE-400 engines, as per the data base. AW&ST indicates in the "U. S. Military Aircraft" section that the A-6E aircraft have J52-P-8B engines. The "U. S. Gas Turbine Engines" section indicates that the J52-P-8A, B engines are applicable to the A-6. It does not list a F404-GE-400 engine. JANE'S indicates that the A-6E has J52-P-408 engines. The AW&ST U. S. Gas Turbine Engines section does not list a J52-P-408 engine. JANE'S indicates that the J52-P-8A was the engine in the A-6A/B/C and that the A/B/C models have either been retired or upgraded to the "E" model.

Fuel Consumption Information

The AW&ST "U. S. Gas Turbine Engines" section indicates a "Specific fuel consumption at max. power" and a "Max. power at S.L. [sea level]" for most engines. JANE'S indicates similar data and puts the units of "lb / h / lb st" (pounds per hour per pound "st") on the fuel consumption number. The translation of those units as follows: "lb / h / lb st" means lb.-mass/hour of fuel consumed per lb.-foot of thrust at EITHER STandard day or STatic conditions. (Even the experts can be confused.) In any case, we believe that this number has meaning only as a "figure of merit" for an engine, and it may not be of too much value for cost estimating. No one operates a jet engine at "maximum power" for very long. They usually are operated at some lesser power setting.

U.S. Air Force airplane operations data from Air Force Regulation (AFR) 173-13 confirms this fact. AFR 173-13 lists the fuel consumption in gallons per flight hour (Gals./FH) for a fleet (squadrons) of airplanes. The amount, and subsequent cost, of fuel consumed using the latter data is much less. Using

the B-52H aircraft (which has eight TF33-P-3 engines) as an example gives the following comparison of fuel consumption calculations:

(eng. thrust) (flow factor) (eng. qty.)

17,000 x 0.52 x 8 = 70,720 lbs. of fuel/flight hour (at max. power)

70,720 lbs./flt. hr.÷ 6.55 lb./gal. = 10.797 gal. fuel/FH at *max. power*

This compares to 3.500 gals./FH from AFR 173-13

Obviously the Air Force does not operate the B52-H engines at maximum power for very much of the flight. Another aspect of AFR 173-13 is that it treats only Air Force airplanes. U.S. Naval Air data is no longer summarized at an "equivalent" AR 173-13 level, therefore we did not have the resources to evaluate the Navy planes at the next level down in detail.

Cost Estimating Relationships Development Comments

What might the engine O&M cost be "parametrically cost modeled" to? An obvious option is "thrust". However, at first review of our preliminary regression modeling, we don't see a lot of correlation between "thrust" levels and "operations cost" in the data that Jim Hagen collected. We had F100-PW engines of three (3) variations with identical thrust ratings, 23,830 lbs. at S.L., and an average cost in *maintenance manhours per flight hour* that varies from 0.84 to 4.34. It appears to us that *how the engine is integrated with the airplane* is also a factor.

Would one want to parametricize cost to weight? We don't know. We haven't included weight in the operation and support spreadsheets database, but the AW&ST data and the supplier public domain data we collected from various sources (confirmed and corrected by G.E. and Pratt & Whitney) do include the dry weight of the core engine. Again, we surmise that the maintenance of an engine hanging under the wing (like a B-52 or 747) must be less costly than maintaining the same engine stuck in the bowels of the airplane, like a F-16 or A-6.

When Boeing created a space launch system Ground and Operations Cost Model (GOCM) several years ago (during the early days of the Advanced Launch System program,) we modeled a space vehicle's ground launch operations costs to launch vehicle physical characteristics such as overall

vehicle *length* , *diameter*, *wingspan*, *weight*, *type of fuel*, and whether it was *manned or unmanned*. We are not sure how to handle engine core and/or nacelle O&M estimating until we research the military and commercial maintenance and repair processes in more depth.

Parametric modeling of operation and support costs for any aerospace system, in our experience, has not been an easy undertaking. We suspect that unique independent variable inputs for most operation and support CER's will be required at the major repair task level for each aircraft platform type or category (cargo, fighter, reconnaissance - low speed, reconnaissance - high altitude, passenger airplane - long range, etc.). Even then, some of the depot level engine maintenance labor CER inputs for periodic overhaul and refurbishment tasks may need to be *multiple* input variables (number of engines times engine mean time between failure, etc.) We also believe that separate CER's should be developed for line and depot engine O&M costs. Separate CER's would also be developed for *scheduled annual*, *periodic* and *unscheduled* line maintenance at the aircraft platform's operational site(s).

5.4 Other O&M Cost Estimating Considerations

The prior text addressed this subject to some degree. There are some specific areas which could be cost drivers for engine O&M costs.

Fleet Size and Operating Location Considerations

How big a fleet and how it is deployed will certainly affect the aircraft engines' O&M cost. Not only will it affect the validity of the statistical data, but it will affect how one maintains the engines from a depot standpoint. Shipping costs must be different for an engine system in a carrier based fighter aircraft compared to one in an aircraft system based stateside on a land base. The environment impacts of operating in a moist, salt air environment must have an impact on engine maintenance activities.

Consideration of Platform Utilization Rate

The utilization rate will certainly affect any "per engine" costs. If one does not have some minimum utilization, one will probably have horrendous "per engine" costs. A comparison of commercial aircraft system "per engine" costs to some military system costs might support this thesis.

Operator's Maintenance Philosophy

The operator's maintenance philosophy could well have an impact. We suspicion an F-16 operator has a different engine maintenance philosophy than a B-52 operator. If the F-16 engine fails, the flight operator loses an engine, an airplane, and maybe himself. If the B-52 engine fails, the flight operators lose an engine, but probably can save the airplane, save themselves, and possibly even save the mission. We are confident the 0.72 MH/FH for the B-52 versus 4.34 MH/FH for the A-16A/B have some "operator engine maintenance philosophy" involved.

6.0 MICROGRAVITY TECHNOLOGY (MT) ESTIMATING MODULE

The microgravity technology section is divided into two categories of cost estimating - microgravity *carrier systems* and microgravity *experiment projects*. These two microgravity materials technology areas can be significantly different to estimate and evaluate. Both systems, however, must operate in a low Earth orbit (LEO) space environment, with manned intervention in the space operation processes the rule rather than the exception. Manned space interface requirements impact both the project design characteristics and cost estimates.

6.1 Microgravity Technology Cost Breakdown Lists

Just as the engine evaluations require some way of organizing cost data, the Boeing team created a generic work breakdown structure (WBS) for estimating microgravity technology program costs. The generic listing will not fit all microgravity projects. Cost analysts can tailor the generic listing, when appropriate, to capture unique cost data from different projects. The generic WBS listing fit the microgravity carrier programs the best. The microgravity experiment projects will not usually fit the generic listing because they normally are designed at the component level and then summarized to the subsystem level (such as a furnace or fluid feed transfer experiment.)

The generic microgravity technology programs WBS listing presented in figure 6.1 was created from discussions with NASA, ESA, and Spacehab sources and the principle investigator. Microgravity systems professionals helped to structure a modeling approach for a "generic" program tasks listing order and common WBS list items terminology.

Exceptions to the listing were encountered in the Spacelab program. Spacelab had two types of pressurized modules developed for the flight hardware along with an optional unpressurized pallet. The structures section was expanded to accommodate individual manufacturing unit cost values.

Microgravity Technology Systems Work Breakdown Structure

Boeing Defense & Space Group - Seattle, WA

WBS Number	WBS Title	Primary Cost Drivers	Tech. Input Parameter	Key System Design Descriminators
1.0	Total Microgravity Technology Program	Man-tended/Unmanned?	N/A	Type (materials, life science, etc.)
1.1	Microgravity System Hardware & Software	Interface Spec.'s	N/A	
1.1.1	System/Subsystem PI & Engr. Dev. Labor	Length of Development	(See below)	
1.1.2	Engineering Development Unit Hardware	Reliability Spec.'s	Weight/Qty.	
1.1.3	Microgravity System Flight Hardware	Integration Spec.'s	Hdw. Qty.	
1.1.3.1	Structures & Mechanisms	Environ. Spec.'s	Weight	
1.1.3.2	Fluids System	Flow Reqmt.'s & Environ.	Weight	
1.1.3.3	Furnace Hardware	Temperature Range	Vol./Temp.	
1.1.3.4	Refrigeration Hardware	Length of Operation	Temp./Weight	
1.1.3.5	Health Monitoring & Instrumentaion	Environ. Spec.'s	Qty/Thru-put	
1.1.3.6	Thermal Control Systems (active/passive)	Environ. Ctrl. Spec.'s	Sq. Ft./Wght.	
1.1.3.7	Electrical Power Source	Peak Power vs. Time	Watts/Time	
1.1.3.8	Electrical Power Distribution & Control	Number of Connects	Weight	
1.1.3.9	Command & Data Handling Avionics	Interface Spec.'s & SEU	Density	
1.1.3.10	Electro-optical Systems & Diagnostics	Observation Reqmt.'s	Thru-put	
1.1.3.11	Life Support System	Man-tended/Unmanned?	Weight	
1.1.4	Customer or Government-furnished Equipment	Interface Reqmt.'s	Thru-put	
1.1.5	Control & Test Software	Length of Development	N/A	
1.1.5.1	Com. & Data Handling Software Dev. & Verif.	Avionics Dsgn. & I/F Spec.'s	SLOC	
1.1.5.2	Test Software & Simulation Tools	Type/Qty. of Code	SLOC+Hdw. $	
1.1.6	Integration & Check Out (I&CO)	Assy. Qty. & Test Spec.'s	(Factored)	
1.2	System Test Operations	System Level Test Spec.'s	(Factored)	
1.3	Facilitization (N/R production tooling, etc.)	Integration Spec.'s	(Factored)	
1.4	System Ground Support Equip.	Qty. & ATE Spec.'s	Qty/Thru-put	
1.5	System Engineering & Management	Length of Development	N/A	
1.5.1	System Engineering & Integration	Interface Reqmt.'s	(Factored)	
1.5.2	System Reliability & Quality Assurance	R&M/Interface Spec.'s	(Factored)	
1.5.3	Program Management, Reviews, & Data	Length of Dev./No. Reviews	(Factored)	
1.6	Mission Operations	Man-tended/Unmanned?	N/A	
1.6.1	Mission Planning, Integration & Reviews	Length of Dev./No. Reviews	(Factored)	
1.6.2	Mission Training	Human Interface Spec.'s	Skill type/Qty.	
1.6.3	Launch Preparation Operations	Hdw. Qty. & Test Spec.'s	Skill type/Qty.	
1.6.4	Mission Flight Operations	Location/Mission Length	Time Est.	
1.6.5	Launch Platform Service Charges	Total Mass; Shuttle or ELV?	Vol. & Weight	
1.6.6	Sustaining Engineering Tech. Support	Mission Length; Standown?	(Factored)	

Figure 6.1 A generic WBS listing was developed for microgravity projects.

6.2 MT System Design Descriptions

The three microgravity carrier systems which form the primary database subsystem "foundation are Skylab (an Apollo Program project and the first U.S. space station orbiting vehicle of the 1970's), Spacelab (a joint European Space Agency and NASA project, with ESA being the hardware developer and integrator before the launch processing cycle at the NASA Space Shuttle processing facilities), and Spacehab (a commercial carrier which is subcontracted to McDonnell Douglas Aerospace by Spacehab, Inc.)

In order to obtain a few more data points than just three projects, Boeing analysts included other data sources like the Gemini capsule, Coldsat studies, and the MDAC 1975 MOSC Study cost and non-cost data were added to the actual projects data set to establish preliminary CER's. The study data was selected for it's credibility with NASA microgravity and manned space systems offices acceptance in past cost estimating activities.

The Boeing Coldsat study data was evaluated and compared with General Dynamics, Martin Marietta, and NASA independent Coldsat flight hardware estimates at the subsystems level during the final review for the NASA MSFC and LeRC program offices. The Boeing cost and non-cost data was very representative of the cost modeling results from other contractors' databases and cost models. The Boeing hardware cost data also compared favorably to independent estimates from external space hardware supplier sources for components and purchased equipment.

The McDonnell Douglas (MDAC) 1975 Manned Orbiting Space Capsule (MOSC) study data was also used by PRC in the Space Station Life Cycle Cost Model database developed for NASA JSC. The MDAC MOSC study was an independent evaluation of an early space station design.

All of these projects and studies had three preliminary or actual system requirements in common - they all were associated with manned spacecraft qualification, they all operated or were "designed to operate" in low Earth orbit, and all systems included a life support subsystem (LSS) designed for **open cycle** LSS equipment. We prefer not to develop estimates with study data, but in the case of microgravity carrier systems we felt that the selected study "trend data" represented reasonable space hardware costs; cost estimates that were generated from credible (and proprietary) industry cost modeling systems and real space hardware experience databases.

Figures 6.2-1 and 6.2-2 illustrate the Spacelab and Spacehab systems designs, respectively. Both systems ride in the Shuttle Orbiter payload bay.

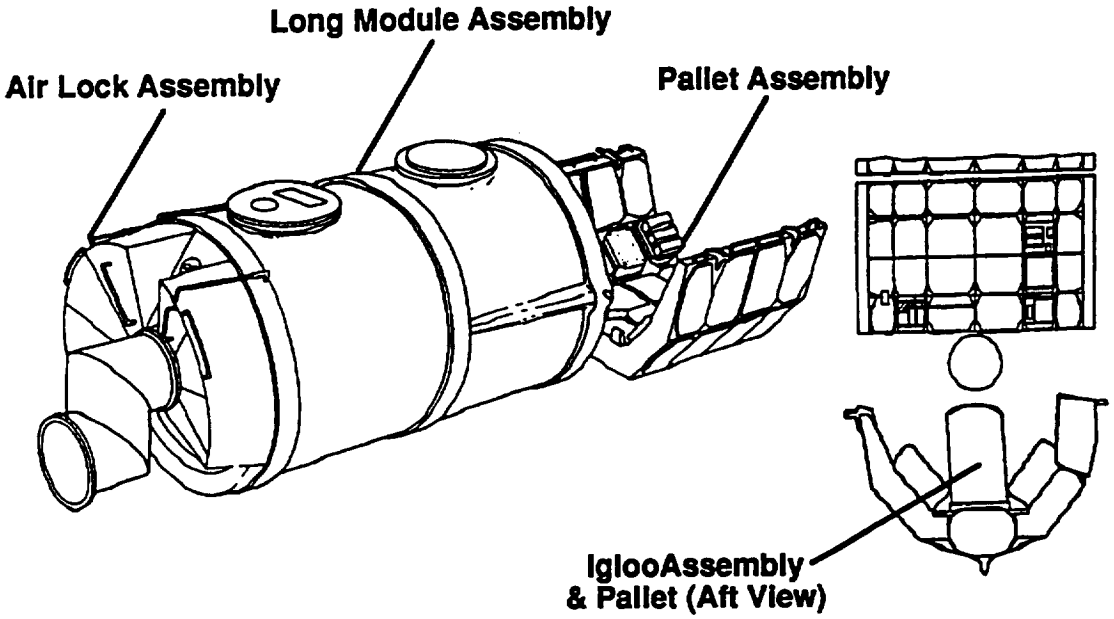

Source of Drawings:
NASA Spacelab Payload Accommodation Handbook, Main Volume, with permission.

Figure 6.2-1: Spacelab major elements are the work modules, pallets & igloo.

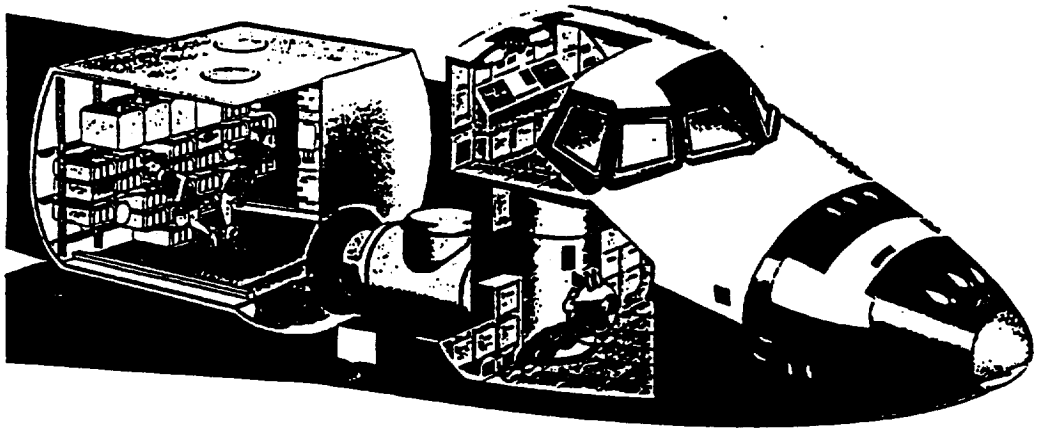

The Mid-deck Augmentation Module installed in the Shuttle Cargo Bay

Source of Drawing:
Spacehab, Inc. & McDonnell Douglas A.C., used with permission.

Figure 6.2-2: Spacehab major assemblies are compact and efficient.

Microgravity Experiment Systems

Boeing research analysts selected the Crystal Vapor Transport Experiment (CVTE) and the Tank Pressure Control Experiment (TPCE) as representative of microgravity experiment projects for addition to the NASA LeRC cost analysis database. Because these systems did not correlate well with each other from a systems definition stand point, there are no specific set of CER's for inclusion in this summary volume of the final report documents set. Some preliminary CER's are presented in this general distribution volume for selected subsystems associated with microgravity experiment estimating. (Boeing proprietary data on the CVTE and TPCE projects is not available for open community distribution.)

An drawing of the CVTE furnace system is shown in figure 6.2-3. An actual photograph of the CVTE system (the phone booth size structure on the bulkhead behind the mission specialist) is shown in figure 6.2-4 along with one of the Space Shuttle astronauts who tended the experiment during a recent Space Shuttle flight. An illustration of the Boeing TPCE hardware is presented in figure 6.2-5.

Both systems are "one-of-a-kind" designs, with only two flight hardware sets fabricated for separate Shuttle missions. The microgravity materials and fluid transfer technology experiment hardware is hand crafted mostly from simple materials (standard metal alloys, glass, rubber, and plastics), and then rigorously tested on the ground to meet manned space qualification standards set for "experiment status" hardware aboard the Shuttle Orbiter. Boeing project costs include budget for training the astronaut crews for experiment mission operations. Emergency shutdown and/or restart, if the experiment does not operate properly in space, is also covered in the mission training sessions.

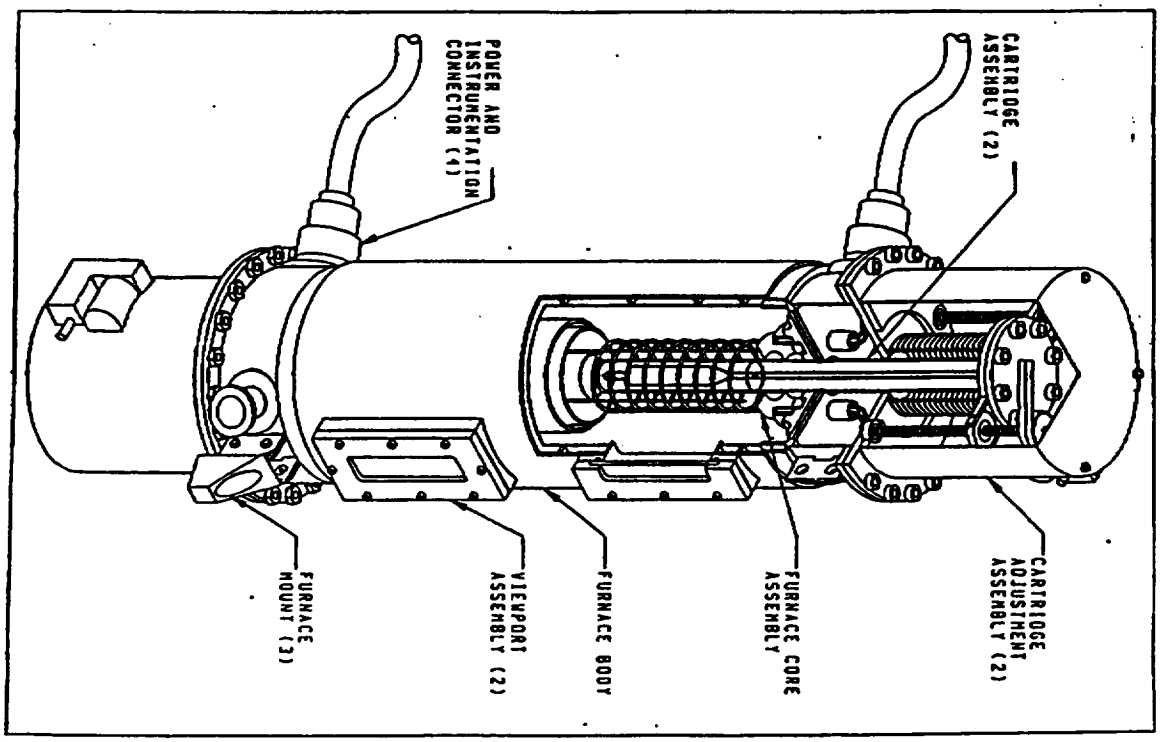

Source of Drawing:
Boeing Defense & Space Group, Huntsville.

Figure 6.2-3: A Crystal Vapor Transport Experiment (CVTE) technical drawing.

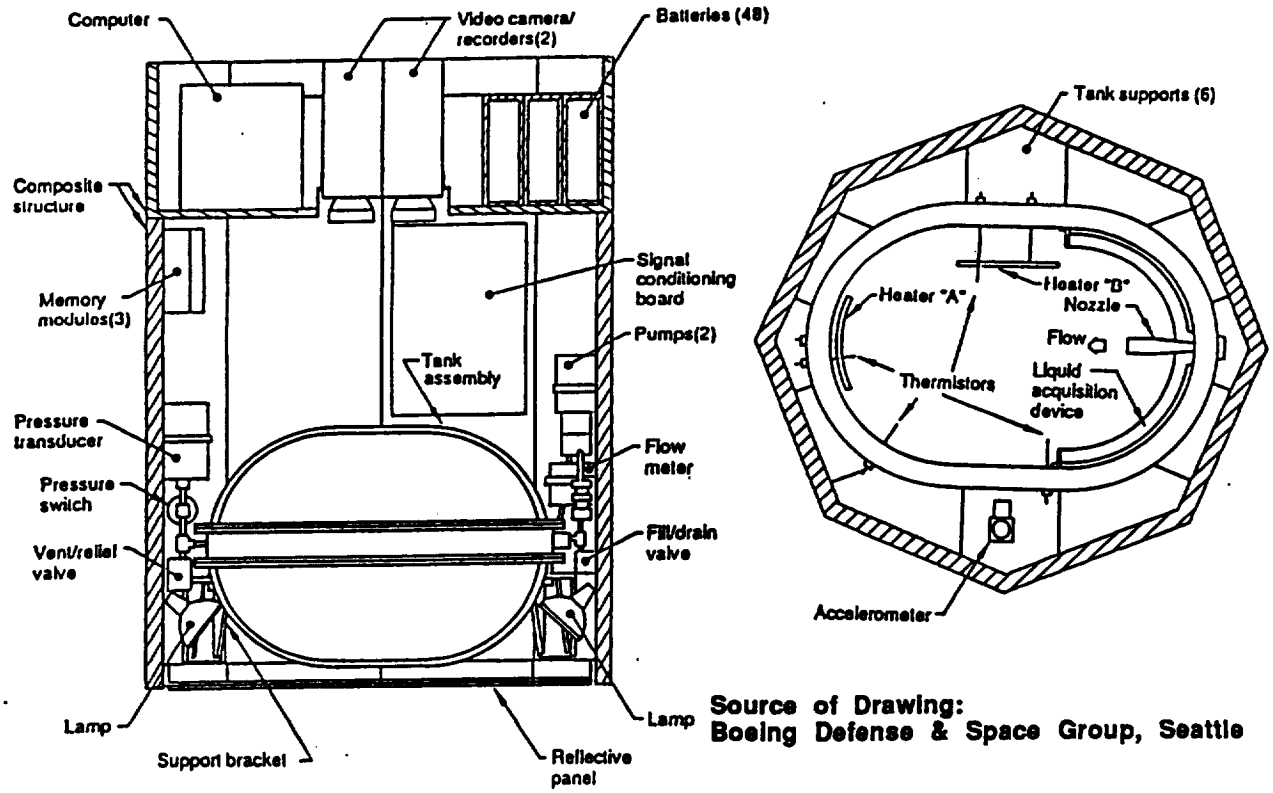

Source of Drawing:
Boeing Defense & Space Group, Seattle

Figure 6.2-4: A Tank Pressure Control Experiment (TPCE) isometric drawing.

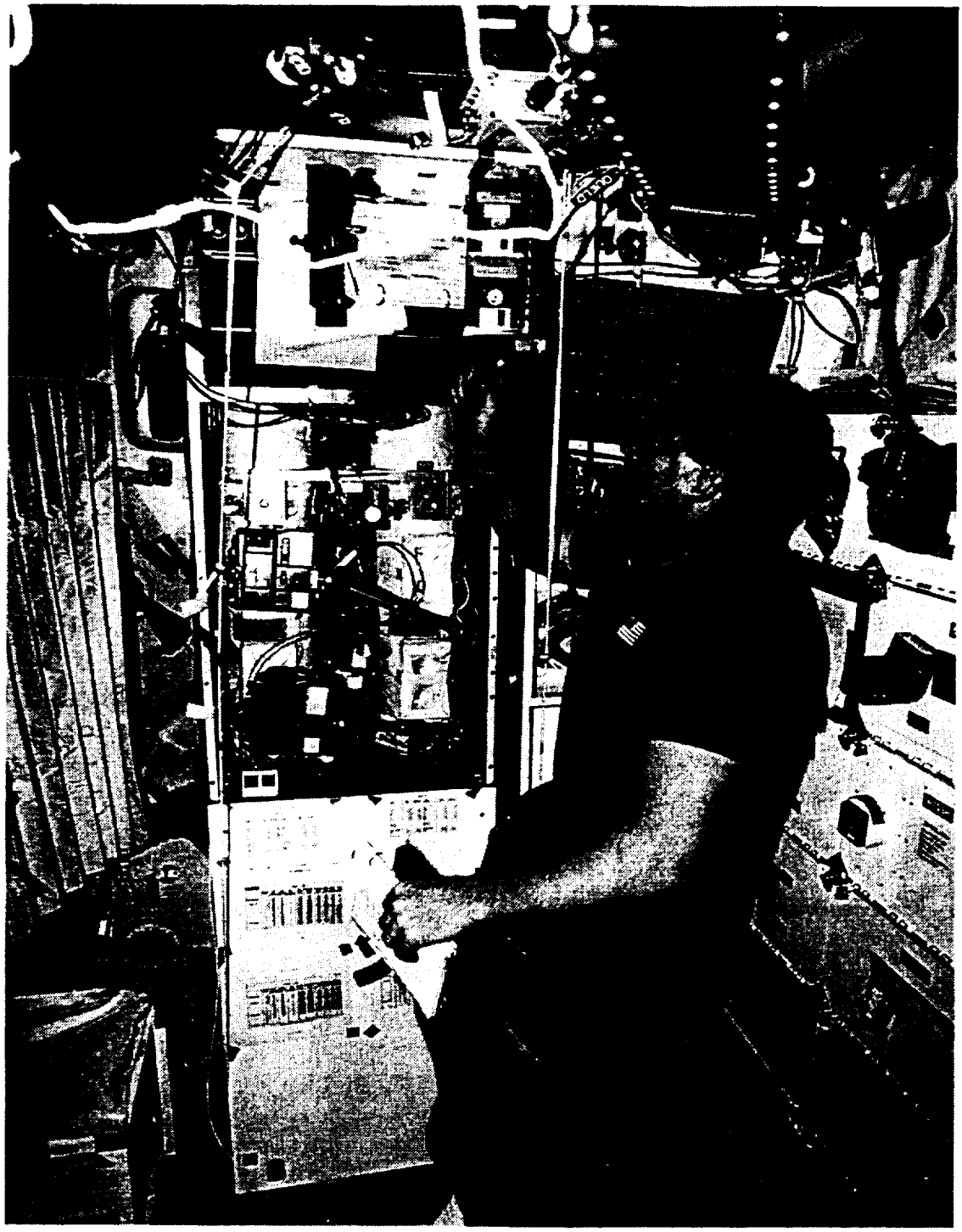

Source of Photograph: NASA and the Boeing Defense & Space Group, Seattle; from Public Relations press release files.

Figure 6.2-5: A photograph of the CVTE on the mid-deck of the Orbiter.

6.3 MT Development & Production CER's

As previously described, the Boeing principle investigator on this study collected technical (non-cost) and cost data from several NASA centers, the European Space Agency, and aerospace industry supplier sources. A *very small sample size* of microgravity carrier program data points was employed by the analyst to develop the preliminary cost estimating relationships contained in this section of the document.

The data sets used in developing the preliminary microgravity carrier CER's are "common" from the standpoint that they all relate to a pressurized carrier system that could be a Space Shuttle Orbiter payload or a "free flyer" (for our definition, a free flyer is a self-propelled and self-powered "satellite," microgravity work platform deployed by the Space Shuttle launch system.) All programs include in the database for the microgravity CER's had or will have manned intervention in their deployment, operation, and return or decommissioning. Each system selected has been designed and/or operated for low Earth orbit missions.

In some subsystems, it was a temptation for the analyst to use Apollo Lunar Module data as a previous Space Station Life Cycle Cost (LCC) Model development group had done (ref.: Space Station LCC Model developed by PRC for NASA JSC, final report dated 25 February 1980.) While the Lunar missions data provides a few more data points, we decided that the Lunar Module mission *landing and ascent requirements and specifications* would have an inappropriate influence on the resulting CER's (sounds logical, but may not be entirely true...) Also, the Apollo LM hardware was not built for reuse. Gemini hardware was retained because it was used for LEO testing and was a platform for early microgravity experiments and space walks. The idea here was that Gemini hardware represents the lower end of the pressurized carrier (capsule) volume and weight scale, as well as representing a LEO test platform.

Data sets for CER's which include validated "cost estimates" or verifiable "vendor planning quotes data" will be explained next to the cost equation which contains the data. We tried to use only actual program cost data, whenever available. However, in the case of *fluid transfer experiment hardware* we felt much of the available historical cost and technical information on tanks and plumbing was technologically outdated, out of scale in size, or made of

inappropriate materials for future microgravity platform designs (which are mostly "one-of-a-kind" projects.)

Microgravity Carrier Pressurized Structure - DDT&E CER

Press. Structure Dev. ('93$ millions) = 0.0651 * X ^ 0.81

where: **X = Dry Weight in pounds-mass (lbm);**
and valid input range is: **1,500 - 22,500 lbs. ± 10%;**
correlation of coefficient value **(R^2)** is: **.640**

This CER includes Gemini Capsule, Spacehab pressurized structures and thermal protection system, Spacelab Long & Short Pressure Modules (PM's), Skylab Airlock structures and environmental control provisioning, and Skylab Orbiting Work Station (OWS) dry weights and cost data. The Spacelab data can be categorized as "estimated actuals." The DDT&E CER's include test hardware articles (which vary in quantity by system.) The number of test articles was not immediately available for all of the project data points, but should be researched at a future date. Evaluation of off-the shelf (OTS) items in the hardware WBS items is not addressed by Boeing at this time.

The Spacehab program data highly influences the DDT&E equation and lowers the correlation of coefficient value (from about .9 to .64.) Since the Spacehab system is a commercial space program with a lot of heritage (utilizing extensive senior management experience and employing proven design/process simplifications, with little government oversight) it definitely "influences" the CER data set in an interesting way. It falls well below an average dollars per pound line of the other subsystem data sets, showing significant development cost savings.

By design, Spacehab structures are a more simple system to integrate than Skylab (for example, Spacehab excludes living quarters services for people,) so some "apples and oranges" association complaints could be raised by fellow critics and reviewers in the cost analysis community. (The source data is proprietary, so for now we'll leave any re-calculating of the pressurized structures CER up to Dr. Beins and his NASA LeRC Cost Analysis associates.) If we only had more time to *analyze* the data... (Does this "situation" sound familiar to the reader?)

Microgravity Carrier Pressurized Structure - TFU CER

Press. Structure TFU ('93$, whole) = 497715.1 * X ^ 0.488

where:	**X = Weight in pounds-mass (lbm);**
and valid input range is:	**1,500 - 22,500 lbs. ± 10%;**
correlation of coefficient value (R^2) is:	**.77**

The theoretical first unit (TFU) estimate for the pressurized structures shows a little better correlation. The equation's correlation (R^2) statistic improvement over the DDT&E CER is probably due to the fact that Spacehab Inc. subcontracted the manufacturing effort of the flight and ground support hardware to an experienced aerospace contractor, McDonnell Douglas Aerospace Co. McDonnell Douglas team members appear to have used aluminum fabrication process specifications which have been validated and established by prior space platform products.

Spacelab TFU estimated actuals, less the approximated Class 1 (ESA-paid requirements and schedule contract changes) were used to develop this equation. In this CER, the Spacelab data fell below the line and the other data points were closer to the line. The CER is developed using the same five program data sets - Gemini Capsule, Spacehab, Spacelab PM's, Skylab Airlock, and Skylab OWS.

Space station habitat and lab structures cost data was not received in time to add to the DDT&E and TFU data sets presented above. The Space Station Freedom Materials Laboratory Module and Habitation Module each have a unique hardware cost accounting work order and a "common" development cost account. Quick inclusion of the data, without proper research into its use and allocations, seemed inappropriate - especially considering the current national and international importance of any new space station system information. This data may be added by Boeing & NASA to the database in the near future, if desired.

Microgravity Carrier Power Distribution & Control - DDT&E CER

Power Distr. & Ctrl. Dev. ('93$ millions) = 11.1083 * X ^ 0.184

where: **X = Dry Weight in pounds-mass (lbm);**
and valid input range is: **100 - 3,600 lbs. ± 10%;**
correlation of coefficient value (R^2) is: **.93**

Our first choice was not to choose weight, but power output supplied as the independent, non-cost variable. Time would not allow us to research this item in more depth. The CER is based on only four data points. The data sources are Spacelab, Skylab, and *two Coldsat estimates* with highly reliable component descriptions and component development cost estimate sources. The Spacehab data is not separable form McDonnell Douglas or Spacehab Inc. records.

This CER does not contain any prime electrical power source hardware (batteries, fuel cells, solar arrays, etc. are excluded.) The CER contains only wiring, elementary distribution boxes, and simple power conditioning (like a voltage transformer) hardware elements. Signal conditioning for power control or exotic power switching devices are excluded.

Microgravity Carrier Power Distribution & Control - TFU CER

Power Distr. & Ctrl. TFU ('93$, whole) = 85831.7 * X ^ 0.668

where: **X = Dry Weight in pounds-mass (lbm);**
and valid input range is: **100 - 3,600 lbs. ± 10%;**
correlation of coefficient value (R^2) is: **.95**

The same four microgravity program actual and estimated data sets were used to create this preliminary theoretical first unit (TFU) cost estimating relationship. The CER could be compared to other existing upper stage and unmanned satellite CER's for "reasonableness" if more actual cost data is not obtained by NASA. (This microgravity carrier CER area definitely could use some more cost research work to improve the sample size.)

Microgravity Carrier ECLS/Atmospheric Mgmt. - DDT&E CER

ECLS/Atmos. Mgmt. Dev. ('93$ millions) = 0.9462 * X ^ 0.467

where: **X = Dry Weight in pounds-mass (lbm);**
and valid input range is: **730 - 26,000 lbs. ± 10%;**
correlation of coefficient value **(R^2)** is: **.48**

While the correlation of coefficient on this CER is not very good (1.00 is indication of a perfect "fit",) the slope value of .467 is quite reasonable. The Standard Error of Estimate (SEE) statistic is .409. The "outlier" in the data set is the Spacelab data point. Part of the Spacelab data fit problem may be that this point includes significant contract change costs billed to ESA by ERNO and Dornier of Germany.

More detailed Spacelab cost data, which would help to extract the Class I changes for "normalization," was not available at the time we developed these two CER's for Environment Control and Life Support (ECLS)/Atmospheric Management (Open System.) Closed system cost data from prior sources was not used - the CER applies only to open loop ECLS systems. Project data sources for these CER's include Spacehab, Spacelab, combined Skylab OWS/Airlock systems, and the 1975 McDonnell Douglas MOSC Study estimates collected by NASA and reported in the Space Station LCC Model document of 1980.

Microgravity Carrier ECLS/Atmospheric Mgmt. - TFU CER

(this CER is a preliminary attempt at establishing an estimating relationship.)

ECLS/Atmos. Mgmt. TFU ('93$, whole) = 11341312 * X ^ 0.121

where: **X = Dry Weight in pounds-mass (lbm);**
and valid input range is: **730 - 26,000 lbs. ± 10%;**
correlation of coefficient value **(R^2)** is: **.18**

This CER is generated from a real "shot gun" pattern of four data points. Correlation is very poor (almost non-existent) at .18! Skylab pounds per square inch (psi) atmosphere rating was 5 psi versus 14 psi for Spacelab and

Spacehab. Spacelab was built under different specification level requirements than Spacehab. No real details of the MDAC MOSC study are known by the Boeing analyst. A parts list estimate (by using a "components analogy" method) may be more credible for this subsystem area of cost estimating microgravity carrier flight hardware.

Microgravity Carrier Wrapped Composite Tank - DDT&E CER

Non-cryo. Composite Tank Dev. ('93$, whole) = 1593.64 * X ^ 1.482

where: **X = Dry Weight in pounds-mass (lbm);**
and valid input range is: **15 - 215 lbs. (18 - 51 in. diam.) ± 10%;**
correlation of coefficient value (R^2) is: **.87**

Being inconsistent with prior subsystem level CER's, a development cost estimate CER in dollars in millions is too large for a cost unit output value in this subassembly level CER (where tank development is in the thousands of dollars.) The CER is developed for fluid management demonstration or non-cryogenic fluids storage tanks from verifiable *tank supplier planning quotes* obtained by Boeing in 1990-91 time periods.

The "odd" slope value, of over 1.4, is caused by differing tank test requirements and design maturity levels. The curve fit appears good at .87, and the standard error of estimate (SEE) is .265. There may be two families of tank types in the source data set. This CER has promise with a little more work.

Microgravity Carrier Wrapped Composite Tank - TFU CER

Non-cryo. Composite Tank TFU ('93$, whole) = 1922.14 * X ^ 1.1

where: **X = Dry Weight in pounds-mass (lbm);**
and valid input range is: **15 - 215 lbs. (18 - 51 in. diam.) ± 10%;**
correlation of coefficient value (R^2) is: **.81**

Again, the slope is not the desired "norm" for space or airplane hardware CER's, but the correlation of coefficient is reasonable at a .81 fit value. The

standard error of estimate (SEE) is .209, indicating a fairly tight dispersion pattern in the data set points (tight is good.) A spherical nitrogen tank is an outlier in the data set, or the R^2 value would have been higher. The nitrogen tank was not an outlier in the DDT&E data set, so it was left in the TFU data set.

All tank cost quotes in the DDT&E and TFU data sets are presented at cost, including integration contractor material burdens and scrap factors. Prime (integration) contractor fee is excluded. Tank supplier profits are included.

"Other" Microgravity Carrier Hardware Level CER's

A single DDT&E CER for all "Other Microgravity Carrier Mechanical Subsystems" was selected by the Boeing Finance and Engineering cost analysis team. The CER is developed from the non-deliverable, Boeing proprietary cost analysis database. The CER is developed from over 60 space program data points in our data base, as of October 1, 1993.

Microgravity Carrier "Other" Mechanical Structures - DDT&E CER

Other Mechanical Equip. Dev. ('93$, whole) = 380235 * X ^ .479

where: **X = Dry Weight in pounds-mass (lbm);**
and valid input range is: **1 - 10,000 lbs. ± 10%;**
(This CER was developed by a paradigm method similar to the PRICE model.)

Other Theoretical First Unit CER's

Several other CER's were collected for "other" mechanical subsystems' theoretical first unit (TFU) cost estimating. The database for these CER's is not deliverable to the Government through this contract, per the project plan agreement. The CER's are based on larger sample sizes of space system hardware cost and non-cost than the previous microgravity carrier relationships.

All of the following CER's are normalized to the low quantity fabrication lot quantities (2-5 units) typical in a microgravity technology program. Production unit estimates, for a full production program processes environment, would be significantly lower.

Space System Metal Storage Tank - TFU CER

Metal Pressure Tank TFU ('93$, whole) = 11761.4 * X ^ 0.543

where: **X = Dry Weight in pounds-mass (lbm);**
and valid input range is: **10 - 1,100 lbs. ± 10%;**
correlation of coefficient value (R^2) is: **.26**

This equation is based on 24 data points and has a reasonable slope. The data base excludes exotic or light weight metal, high pressure tanks. The majority of these tanks were built for bipropellant or cryogenic applications. They all have a high design maturity (heritage) level.

Space System Mechanisms - TFU CER

Platform Mechanisms TFU ('93$, whole) = 15000 * X ^ 0.943

where: **X = Dry Weight in pounds-mass (lbm);**
and valid input range is: **1 - 100 lbs. ± 10%;**
(This CER was developed by a paradigm method similar to the PRICE model.)

This CER is based on a variety of space platforms data from proprietary projects.

Space System Truss Structures - TFU CER

Truss Structures TFU ('93$, whole) = 8778 * X ^ 0.943

where; **X = Dry Weight in pounds-mass (lbm);**
and valid input range is: **75 - 1,200 lbs. ± 10%;**
(This CER was developed by a paradigm method similar to the PRICE model.)

This CER is for high load bearing, primary structures and platform frames on free flyers in LEO.

High G/Strength Airborne Racks & Cabinets - TFU CER

Racks & Cabinets TFU ('93$, whole) = 4401 * X ^ 0.943

where; **X = Dry Weight in pounds-mass (lbm);**
and valid input range is: **40 - 200 lbs. ± 10%;**
(This CER was developed by a paradigm method similar to the PRICE model.)

This CER is applicable to "secondary" equipment rack structures within the microgravity carrier (and host launch vehicle payload bay environment.) This CER is for aerospace equipment racks and cabinets which must meet *high G load and vibration/noise ratings* for military or civil space systems launch and recovery requirements.

Carrier Subsystem Integration ("Minor" Assembly) Factor Ranges

Each microgravity carrier subsystem level estimate is collected within a project work breakdown structure framework to calculate total program costs. The CER's for subsystems include component level assembly, integration and test. However, the subassembly level integration, test and checkout is not included in the hardware subsystem CER equations. Subsystem integration and test (I&T) contains non-recurring technical engineering staff support (such as subsystem specification development and purchase orders design engineering support, subsystem test planning, subsystem verification to the

subsystem level specifications by analysis (tech. staff), integration drawings development and verification, assembly tooling setup and tryout.) On the manufacturing operations support side, subsystem integration and checkout (I&C/O) includes process specifications development, subassembly integration touch labor, acceptance and environmental (if required by lot) tests conduct labor, long lead parts procurement management, and manufacturing tool and production planning functions. Suggested factors are as follows:

SubsystemType	Factor Title	Factor Range	Factor Base
Mechanical & Propulsion	Engr. Dev. I&T	**16% to 18%**	Engr. Dev. Dollars
	Manuf. I&C/O	**12% to 16%**	Dev. Hardware Fabrication Dollars
Electronics & Electrical	Engr. Dev. I&T	**14% to 20%**	Engr. Dev. Dollars
	Manuf. I&C/O	**10% to 14%**	Dev. Hardware Fabrication Dollars
Electro-Optical & Mechanisms	Engr. Dev. I&T	**18% to 22%**	Engr. Dev. Dollars
	Manuf. I&C/O	**12% to 28%**	Dev. Hardware Fabrication Dollars

Obviously some decision must be made as to which value in the factor range the cost analyst must choose which best represents the complexity of integration and test or checkout in that category. The highest factors of a range depict complex integration processes with more extreme acceptance and alignment test requirements (bore alignments, redundant test cycling, etc.) All percentage factors exclude Quality Assurance inspections and system level assembly or ground test tasks.

Carrier System Integration ("Major" Assembly) Factor Range

A common factor used for space systems is **15 to 18 percent** of the subtotal containing hardware subassemblies fabrication and minor assemblies cost estimates. These numbers still seem to be a good factors for man-rated space platforms and payloads. This traditional factor selection is not so strange

when you think of integration specifications and compliance requirements pertaining to the interactions between the microgravity carrier system and the host launch system. Usually, the host launch system (like the Space Shuttle Orbiter) establishes the technical depth, verification, and time requirements which manufacturing must match in the final I&C/O process.

Number and type of system integration test cycles is a primary driver of the system level hardware integration factor for manufacturing. If the microgravity carrier has no ordnance devices or explosive/corrosive components, the 15-18% factor could be reduced to level of around 10% (if the carrier is mostly benign structural components, and not too complex to assemble.) Space system hardware integration labor seldom falls below 10% because the lot quantity and process sample size are extremely small (normally one to four units are assembled and tested in series for a development phase manufacturing lot.)

6.4 System Level Cost Factors (Support Costs)

Cost analysts in the aerospace products community sometimes refer to the system level support cost estimates as "below-the-line costs." These hardware project support labor costs are not normally included above the hardware cost estimates subtotal "line," such as hardware estimates generated by design description parameters like weight or other performance characteristics. The support cost element estimates usually consist of labor, tooling, or ground support equipment program tasks which are estimated by ratios (labor to labor dollars or hours) or estimating factors with specified bases.

Based on the principle investigator's preliminary evaluation of several space systems parametric cost models, the following list of estimating factors is suggested to generate microgravity carrier support cost element estimates:

Support Cost Element	Factor(s)	Factor Base
System Test Operations Labor	12 to 25%	Engr. Design + Mfg. Hardware Development. & I&C/O Dollars
Facilitization (Tooling & N/R)	11 to 15%	Mfg. Hardware Development & I&C/O Dollars

Support Cost Element	Factor(s)	Factor Base
Ground Support Equipment	**14 to 20%**	Engr. Design + Mfg. Hardware Development. & I&C/O Dollars
System Engineering & Mgmt.	**20 to 34%**	Engr. Design + Mfg. Hardware Development. & I&C/O Dollars
Mission Operations*	(Not Applicable - unique to each project.)	

Note *: Mission operations is dependent upon, but not limited to: (1) the number of mission support centers involved; (2) microgravity experiments data collection requirements and volume; and (3) how the microgravity experiment payload(s) mission center(s) relates to the *host launch vehicle's mission operations infrastructure*. We believe that this system support cost element should be estimated using program cost analogy or discrete task evaluation techniques and not a single factor or CER. This belief comes from many years of looking for the "perfect set" of mission operations CER's that will fit any hardware design or integration situation.

7.0 OPERATING ENVIRONMENT INFLUENCES ON THE COST EVALUATION

Boeing cost analysts always require inputs on the system operating environment to evaluate system life cycle costs. The operating environment inputs "scale" the cost estimates and help establish whether the parametric database selected for developing the cost estimating relationships in a parametric cost modeling system are applicable to the design being evaluated.

The design maturity environment description directly influences the evaluations of the expected operating environment processes and their estimated costs. In order to analyze the total system life cycle costs in a rigorous manner, the cost analyst must also consider the *reverse impacts* of the mission operating environment on the design and development costs (make function drive design to seek the most cost effective solutions to a mission need requirement.)

Therefore, the cost evaluation which is the most realistic and accurate is the evaluation that allows for several estimate iterations driven by *both* expected *system operating environments* and *design environments*. Including environment influences in the cost analysis process is sometimes referred by our community as "system cost drivers analysis" or "requirements sensitivity analysis," as it relates to the estimates of the system life cycle cost. For our definition in this document, cost drivers are *program and operational hardware requirements or characteristics which drive costs up or down* (not "high expense" items in the estimate.)

The environment definitions require the analyst to choose complexity factors and platform operation levels. The cost model input choices must best emulate the expected system specifications and requirements (at a top level.) Environment influences on cost include a range of expected operating conditions like maximum altitude, maximum/minimum host platform speed, thermal, vibration, shock, humidity, weather, atmospheric reentry, vacuum, acceleration (gravities or "G's",) mission cycles, and induced energies (from

the host vehicle); conditions that the system(s) being evaluated will encounter when used.

Platform Level Definition Statements

For our CER's presented in this report, the platform levels are implicit in the databases - airplane jet engines are propulsive turbo-machinery systems which must operate in an Earth atmospheric and ground operations environments (sun, rain, snow, winds, humidity, dust, salt air, etc.) *Microgravity* technology systems must operate in the harsh, very low gravity environment of space (which includes unique low gravity influences, vacuum effects, space radiation, and the exposure to extreme temperature cycles in most low Earth orbit mission phases.)

The jet engine CER's are composed of parametric data from both high performance military and commercial airplane platform levels. Demonstration test engines, in a technology program environment, are not included in the jet engine CER data sources (operational engine development programs only.) Jet engine development programs defined by the data sources specifically as "derivatives" were also excluded from the Design, Development, Test, and Evaluation (DDT&E) CER program data points set (however, all engines have some components heritage.)

7.1 Use of NASA Technology Maturity Levels

The National Aeronautics and Space Administration (NASA) and the U.S. Department of Defense have emphasized the importance of evaluating technical maturity of system designs and concepts when a cost estimate is produced. The NASA technology maturity listing in figure 7.1 may be used with microgravity technology systems cost evaluations. We don't know specifically of a similar table available from the Department of Defense, but we are sure they must have something similar to the figure 7.1 listing in some DoD agencies.

The use of the NASA technology maturity listing is normally associated with the system development estimates. The technology maturity factors to the left of the NASA scale may be used as multipliers applied against the DDT&E CER outputs for each microgravity subsystem estimate. More elaborate

Level	Level Description	
1	Basic Principles Observed and Reported	Technology Development
2	Conceptual Design Formulated	
3	Conceptual Design Tested Analytically or Experimentally	
4	Critical Function/Characteristic Demonstration	Advanced Development
5	Component Brassboard Tested in Relevant Environment	
6	Prototype/Engineering Model Tested in Relevant Environment	
7	Engineering Model Tested	
8	"Flight-Qualified" System	Flight Systems
9	"Flight-Proven" System	

Figure 7.1: An example of a NASA technology maturity scale.

methods of calculating technology maturity impacts in the parametric cost estimating relationships than the initial "scaling" factors presented are beyond the budget and time scopes of this project.

7.2 The Importance of Design & Service Life

Design life is an expression of the the number of uses before a system is to be decommissioned and replaced. The design life for all jet engines is expressed as a *number platform mission cycles*. The engine design life cycles limit usually numbers in the **thousands** for jet propulsion systems. The database for the air-breathing propulsion systems includes platforms with fully operational jet engine design life times of around 4,000 to 8,000 mission flight cycles (where start, warm-up, taxi, takeoff, accelerate, cruise, decelerate, land, taxi, and stop is all in one mission flight cycle.)

The microgravity technology program CER's are based on data points from projects whose design life is measured in **hundreds** of space mission flight cycles due to the extreme ascent, on-orbit, and decent environmental conditions experienced on each space flight. The Shuttle Orbiter's structural design life was specified at 250 flights. Some of the microgravity experiments are expected to last no more than one or two flights as a design life, but they must meet extra requirements because they are riding in a manned, $ 2 billion host orbiter vehicle. Typical microgravity carrier design life expectancies range from **100** to **250** missions.

Engines with the same design life ranges are usually categorized together. Microgravity carriers have such a small data base of information to draw from that differences in design lives is not a significant discriminator yet, but design life assumptions should impact the application of the cost data as the number of systems becomes larger in the distant future.

System Service Life and Overhaul Estimating

Service life relates to time or cycles before major overhaul of the flight hardware. Service life is always set at a value well below design life. The service life period ends with a major refurbishment of the flight hardware. This ques the cost analyst to add system maintenance "pipeline" (i.e. - you must have extra engines for engines sent to repair,) and lifetime replacement

systems into the production phase estimates (if the missions and fleet availability requirements specify hardware usage beyond its' expected design life.)

Military airplane logistics management repair rules have been established in the recent past. If the engine or airplane part to be refurbished will require more than 25-30% of its current unit replacement cost to repair, the hardware assembly is retired from service and may be used for emergency spare parts (if it is saved, and also practical to do so.) This retirement cost threshold rule only applies to fully operational systems in the fleet, not prototypes or demonstration systems.

To calculate and add the flight hardware refurbishment and replacement processes cost to the engine operation and support (O&S) phase estimates, the cost analyst must know expected failure rates for the engine design being evaluated (by picking a similar engine type from the database.) Then, he or she must establish some refurbishment assumptions with the reliability or logistics analyst and the propulsion engineer before adding equivalent engine quantities to the production or O&S estimate inputs.

We like to define a "typical" (top level) *maintenance flow chart* (one page) for a system along with the service life cost estimating assumptions. The flow diagram either reinforces the ground rules set for the refurbishment and replacement processes, or lack of skills to develop it tells us that we have incomplete information to do a credible O&S estimate. A little time spent with lists and flows adds realism and review backup support to the parametric life cycle cost estimates. (Flow and design reference mission parameters information is to O&S estimating what mass properties and performance descriptions are to hardware development and production estimating.)

7.3 Special Operating Environments

The CER's and methods presented in this document exclude the considerations and system cost impacts caused from nuclear, planetary, or geosynchronous orbit operating environments or mission requirements. The database for microgravity carriers excludes all lunar landing structural hardware from the Apollo program and all geosynchronous satellite platforms data because of their operating environment and design life differences from low Earth orbit operating systems.

All jet engines applicable to the jet engine CER's use commercial kerosine-based jet fuel, Jet-A, JP-4, or the new JP-8 fuel (JP-8 will soon replace JP-4 fuel in the military.) The costs for the J-58, which burns JP-7, are not included in the database at this time.

JP-7 fuel destroys seals and rubber fittings at a *much* faster rate than conventional jet engine fuels (it is more corrosive and maintenance intensive on fuel pumping equipment and tanks in both the SR-71 airplane and their special aerial refueling tankers, according to reliable Air Force and NASA sources.) Alternate fuels usage, which requires special engine fuel feed equipment modifications, is not addressed.

Use of engines or engine control systems on an aircraft in a nuclear effects environment is not addressed. Cost estimates for classified or special access requirements program environments are also not addressed in this document. The variable cycle engine operation and costing was not available for inclusion into the database, but should be added later as cost information is available from the High Speed Civil Transport program.

Supersonic military airplane jet engines are included in the appendix A database. We would like to expand the database to include *hypersonic* ramjet and scramjet data. Hypersonic aircraft engines operation requires the use of special high temperature inlet and exhaust nozzle section materials such as Rene 41, advanced carbon/carbon, advanced protective coatings, and new ceramic composites. Most of these materials are identified in section 4.2 of this text. Parametric estimate multiplication factors, from recent industry surveys and our experience, are provided for these high temperature materials in figure 4.2-2. The specification of these materials in the design and manufacturing process descriptions is a significant, second level cost driver to the system hardware estimates. Extreme operating temperature requirements inside the engine nacelles for the predicted hypersonic operating environment (above Mach 4.0) are the first level system operation requirements cost drivers.

8.0 OBSERVATIONS & RECOMMENDATIONS

We have observed that collecting the technical data on existing jet engine programs is both challenging and enlightening as employees of an airframe integration company. We learned a lot more about how a jet engine is described and characterized. Our research efforts also revealed that there are task and cost differences between an engine core certification and a combined aircraft and engine certification. We talked to many knowledgeable people from cost analysis departments within the two major U.S. engine manufacturers, the Air Force's Wright-Patterson Propulsion Labs, the Navy, and NASA.

Collecting microgravity carrier program data was a little more difficult. There are very few microgravity programs of any size to research. Mr. Alvin Reeser at Spacehab, Inc. and Mr. David Greves at ESA's ESTEC organization were very friendly, understanding and helpful. Without the added assistance of Joe Hamaker at Marshall Space Flight Center, Kelly Cyr at Johnson Space Flight Center, and many more NASA and Boeing people (a list too numerous to mention - see the acknowledgements page up in the front of the document,) this report would have never been completed. Thank you all!

The magnitude of the task of developing, releasing, clarifying, negotiating, and establishing Proprietary Information Agreements (PIA's) was underestimated by me for both the actual time and effort required. In the future, we recommend that anyone who attempts this proprietary agreements process should allow themselves at least *three to four months* for the PIA process to complete its cycle. (Cost data is sensitive to all people, especially those in highly competitive markets with current customer negotiations in process.)

The current U.S. economic down-turn also directly impacted the study. Departments who might normally assist more rapidly in the data gathering and cost research work have been diminished to less than half their size a year ago. The advanced programs' cost analysis office staffs in these organizations (both industry and government) have shrunk drastically due to overhead budget cuts, retirements, reassignments and layoffs - but they still tried hard to help. The

subsystem hardware manufacturers want to help the system integrators and Government analysts produce better system estimates up front, so they have fewer ridiculous cost targets to meet when the real program bid comes along. We want to produce better cost estimates, but we do not want to circumvent their capability to give us a better parametric estimate if we need to do some subsystem and component design trades (instead of system level cost trades.)

The Boeing cost analysis staff has appreciated this opportunity to expand our knowledge in product definition and cost estimating. We have also benefited by expanding our parametrician working network from the Boeing local cost estimating sphere to more of our industry and Government peers (who are struggling with similar parametric estimating tasks.) We welcome any comments and constructive criticisms you, the reader might have as a result of your review and/or use of this cost estimating document. Please send any comments or suggestions concerning this study to the either of the following NASA/industry study team members:

Dr. J. Christian (Chris) Beins
Option Task Project Manager
NASA Lewis Research Center
Mail Stop 500-320
21000 Brookpark Road
Cleveland, Ohio 44135

Mr. Alan (Al) F. Peffley
Study Principle Investigator
Boeing Defense & Space Group
P.O. Box 3999 Mail Stop 85-80
Seattle, Washington 98124-2499

Listing of Acroymns and Abbreviations

A/B	Afterburner (or augmentor)
A/C	Aircraft
AFR	Air Force Regulation
ARI	Applied Research, Incorporated
ASE	Airborne Support Equipment
AWACS	Airborne Warning & Control System
AW&ST	Aviation Week & Space Technology (a magazine)
BD&SG	Boeing Defense & Space Group
CER	Cost Estimating Relationship
Clockhour	Wall clock hour (labor headcount is not specified; flow time only.)
CMA	Composite Materials Application
CVTE	Crystal Vapor Transport Experiment
DB	Database
DDT&E	Design, Development, Test & Evaluation (a program phase)
DoD	Department of Defense, U.S.
E^3	Energy Efficient Engine (program)
ECLS	Environment Control & Life Support
EMD	Engineering & Manufacturing Development (phase)
ESA	European Space Agency
Est.	Estimated
ESTEC	European Space Research & Technology Center
FIMG	Wright-Patterson Flight Dynamics Lab
GE	General Electric
GFE	Government-Furnished Equipment
GOCM	Ground Operations Cost Model
GSFC	Goddard Space Flight Center, NASA
HVT	HyperVelocity Technology
I&C/O	Integration & Check Out (also "I&CO")
I/F	Interface
I&T	Integration & Test (developmental)
JSC	Johnson Space Center, NASA
lbm	Pounds, in mass units
LCC	Life Cycle Cost
LEO	Low Earth Orbit
LeRC	Lewis Research Center, NASA
LPT	Low Pressure Turbine
LSI	Large Scale Integration (electronics)
LSS	Life Support System
Mach	Speed of sound metric (1,088 feet per second)
MADC	McDonnell Douglas Aerospace Corporation
Manhour	One person labor hour
MH/FH	Manhours per flight hour
MLI	Multi-Layered Insulation
MOSC	Manned Orbiting Space Capsule (MADC study)
MSFC	Marshall Space Flight Center, NASA
MT	Microgravity Technology
MTBF	Mean Time Between Failure
MTTR	Mean Time To Repair
N/A	Not Applicable
NASA	National Aeronautical & Space Administration
N/R	Non-Recurring (costs)
O&M	Operations & Maintenance
OT&E	Operational Test & Evaluation
OTS	Off-The-Shelf (factor)
OWS	Orbiting Work Station (Skylab)
PIA	Proprietary Information Agreement
RAMO	Resources Analysis & Management Office, LeRC
RDT&E	Research, Development, Test & Evaluation (phase)
RFI	Request For Information
SEE	Standard Error of Estimate
SEU	Single Event Upset (failure)
SL	Sea Level (a standard)
SLOC	Software Lines Of Code
ST	STandard or STatic (condition)
TFU	Theoretical First Unit (production unit hardware)
TPCE	Tank Pressure Control Experiment
UTC	United Technologies Corp.
UDF	UnDucted Fan (engine)
VAMOSC	Visibility & Management of Operating & Support Costs
VLSI	Very Large Scale Integration
WBS	Work Breakdown Structure

Listing of References

Brondolo, Dino. (1991). Spacehab. A Commercial Approach to Space. Torino, Italy: Twenty-Eighth Space Congress Proceedings; Canaveral Council of Technical Societies.

Euroconsult. (1993). World Space Industry Survey - 1993 Edition. France: Euroconsult, Ltd.

Forecast International. (1993). Gas Turbine Forecast. Book 1 and Space Systems Forecast. Newton, CT: Forecast International/DMS Inc.

Friedman, P., et. al. (1991). Commercial Jet Quarterly - Industry Report. New York: Morgan Stanley & Co., Inc.; Investext(TM) Report 1148256. Page 12 of 38.

General Electric Company. (1990). Eight Decades of Progress. A Heritage of Aircraft Turbine Technology. Cincinnati: The Hennegan Company.

General Electric Company. (1991). General Electric - Company Report. New York: Smith Barney, Harris Upham & Co.; Investext(TM) Report 1152471. Page 4 of 15.

GE Group Media Relations. (1993). GE Aircraft Engines, figure photographs & drawings. Cincinnati: GEAE; Mssr.'s Dwight Weber & James Stump.

Hill, Philip & Peterson, Carl. (1992). Mechanics and Thermodynamics of Propulsion. Reading, Mass.: Addison-Wesley Publishing Co. Pages 3-466.

"International Gas Turbine Engines Specifications." (1992, March 16). **Aviation Week & Space Technology**. Pages 109-111.

Lewis, Richard S. (1984). The Voyages of Columbia. New York: Columbia University Press. Pages 48, 52-53.

Lockheed Advanced Development Company. (Publication date not specified.) Lockheed SR-71 Researcher's Handbook. Volume II Technical Description. Sunland, CA: LADC & NASA Dryden.

"P&W F119: Vectored Thrust for the F-22." (1991, November 18). **Aviation Week & Space Technology**. Pages 34-35, 38.

Shapland, David & Rycroft, Michael. (1984). Spacelab Research in Earth Orbit. Ipswich Great Britain: Cambridge University Press.

Sweetman, Bill. (1991). YF-22 and YF-23 Advanced Tactical Fighters. Osecola, WI: Motorbooks International Publishers and Wholesalers, Inc. Pages 56-64.

Thomas, J.W., et. al. (1985). Spacelab Payload Accomodation Handbook - SLP/2104. Main Volume & Appendix B. Huntsville: NASA MSFC Spacelab Program Office.

Turney, John R., et. al. (1978). Space Station Cost Model; Contract NAS8-31645; PRC D-2115 (A limited distribution document.) Huntsville: PRC Systems Services Company.

York, James L., et. al. (1990, March). Ramjet Life Cycle Cost Model. Vol. III - Software User's Manual. Wright Research & Development Center technical report WDRC-TR-89-2113. Virginia: Science Applications International Corp. Pages 3-3 thru 3-6, 4-1 thru 4-3, 5-1 thru 5-3.

ACTIVE SHEET RECORD

SHEET NO.	REV LTR	SHEET NO.	REV LTR	SHEET NO.	REV LTR	SHEET NO.	REV LTR	SHEET NO.	REV LTR	SHEET NO.	REV LTR
1		40		79							
2		41		80							
3		42		81							
4		43		82							
5		44		83							
6		45		84							
7		46		85							
8		47		86							
9		48		87							
10		49		88							
11		50		89							
12		51		90							
13		52		91							
14		53		92							
15		54		93							
16		55		94							
17		56		95							
18		57		96							
19		58		97							
20		59		98							
21		60		99							
22		61		100							
23		62		101							
24		63		102							
25		64		i							
26		65		ii							
27		66		iii							
28		67		iv							
29		68		v							
30		69		vi							
31		70		viii							
32		71									
33		72									
34		73									
35		74									
36		75									
37		76									
38		77									
39		78									

REVISIONS			
LTR	DESCRIPTION	DATE	APPROVAL
New	This is the original release of the document.	11-15-93	

REPORT DOCUMENTATION PAGE

Form Approved
OMB No. 0704-0188

Public reporting burden for this collection of information is estimated to average 1 hour per response, including the time for reviewing instructions, searching existing data sources, gathering and maintaining the data needed, and completing and reviewing the collection of information. Send comments regarding this burden estimate or any other aspect of this collection of information, including suggestions for reducing this burden, to Washington Headquarters Services, Directorate for Information Operations and Reports, 1215 Jefferson Davis Highway, Suite 1204, Arlington, VA 22202-4302, and to the Office of Management and Budget, Paperwork Reduction Project (0704-0188), Washington, DC 20503.

1. AGENCY USE ONLY (*Leave blank*)

2. REPORT DATE
August 1996

3. REPORT TYPE AND DATES COVERED
Final Contractor Report

4. TITLE AND SUBTITLE
A User's Manual for Developing Cost Estimating Relationships
Volume 1

5. FUNDING NUMBERS
WU–None
F33615–86–C–3004

6. AUTHOR(S)
A.F. Peffley, J.F. Hagen, and R.R. Bock

7. PERFORMING ORGANIZATION NAME(S) AND ADDRESS(ES)
Boeing Defense and Space Group
P.O. Box 3999
Seattle, Washington 98124–2499

8. PERFORMING ORGANIZATION REPORT NUMBER
E–8222

9. SPONSORING/MONITORING AGENCY NAME(S) AND ADDRESS(ES)
National Aeronautics and Space Administration
Lewis Research Center
Cleveland, Ohio 44135–3191

10. SPONSORING/MONITORING AGENCY REPORT NUMBER
NASA CR–194428
D658–10343–1

11. SUPPLEMENTARY NOTES
Project Manager, J.C. Beins, Resource Analysis and Management Office, NASA Lewis Research Center, organization code 0211, (216) 433–2371.

12a. DISTRIBUTION/AVAILABILITY STATEMENT
Unclassified - Unlimited
Subject Category 66

This publication is available from the NASA Center for AeroSpace Information, (301) 621–0390.

12b. DISTRIBUTION CODE

13. ABSTRACT ***(Maximum 200 words)***

A collection of cost estimating relationships (CER's) and their proprietary database sources. The cost estimating relationships can be used in the aerospace systems cost analysis of : (1) advanced jet engine propulsion systems used on future aircraft preliminary designs; and (2) microgravity technology systems used for research of materials processes in a low earth orbit space environment. The primary focus of the cost estimating relationships for turbine jet engines is at the total development and theoretical first unit production cost levels of a new engine. The primary focus of the microgravity technology system cost estimating relationships is to forecast development and theoretical first unit production costs for microgravity carrier systems and microgravity experiment projects using subsystem level equations, which then add up to a total microgravity development cost estimate. The output of the equations is in constant-year, 1993 U.S. dollars. Estimating techniques, jet engine operation and support parameters, and project work breakdown structure development for estimating life cycle costs are also addressed.

14. SUBJECT TERMS
Cost estimating relationships; Cost analysis; Jet propulsion engines; Ramjets; Space microgravity technology systems

15. NUMBER OF PAGES
112

16. PRICE CODE
A06

17. SECURITY CLASSIFICATION OF REPORT
Unclassified

18. SECURITY CLASSIFICATION OF THIS PAGE
Unclassified

19. SECURITY CLASSIFICATION OF ABSTRACT
Unclassified

20. LIMITATION OF ABSTRACT