NASA-CR-202361

H-26693D

OTA Optical Design & Error Budget

Prepared by:
James B. Hadaway
UAH, Center for Applied Optics

Collaborators:
Mark Wilson, GSFC
Bob Woodruff, Ball
Martin Smithers, MSFC
Sandy Montgomery, MSFC
David Redding, JPL

Goal of OTA Optical Design Effort

Establish feasibility of space-based 8 m telescope operating in the near-infrared.

- Need high resolution over a large field.
- Want to utilize advanced design concepts.
- Want design consistent with materials, packaging, deployment, thermal, cost requirements, etc.
- Need a baseline design for further evaluation. NOT A FINAL DESIGN - need to catalog alternative designs, even high-risk concepts, in an effort to achieve desired performance at less cost, size, weight, etc.

Current OTA Optical Specifications

- Aperture Diameter: 8 m
- Primary F/#: 1.25
- OTA F/#: 24
- Field-of-View: 4 arcmin x 10 arcmin
- Spectral Range: optimized for 1-5 μm (usable from 0.5-20 μm)
- Resolution: diff-limited @ 2 μm (0.06 arc sec) over 4 arcmin x 4 arcmin field.

Implications of Specifications

- Classical 2-mirror designs have limited FOV's due to astigmatism & field curvature. Implies 3 & 4 mirror configurations to control field aberrations.
- Size of primary and limited launch package size implies a deployable system. Assuming primary will not deploy to & stay within required figure accuracy, active control will be required. 4-mirror designs allow for primary re-imaging for fine correction on smaller optic.
- Astronomical mission implies minimal obscuration and good baffling characteristics.

Optical Design Evolution

- Initially looked at Korsch-type 4-mirror design with fairly large tertiary & quaternary staggered about primary. Not ideal from manufacturing & packaging stand-point.
- Next looked at Korsch 3-mirror, 4-reflection design for better packaging. Still large tertiary (co-located with secondary). Excellent resolution, but no primary re-imaging.
- Gravitated toward 4-mirror design with much smaller tertiary & quaternary located behind primary.
- All designs are variations on the 4-mirror theme. Best way to attain high resolution over large field and provide primary re-imaging.

Early 4-Mirror, 4-Reflection Design

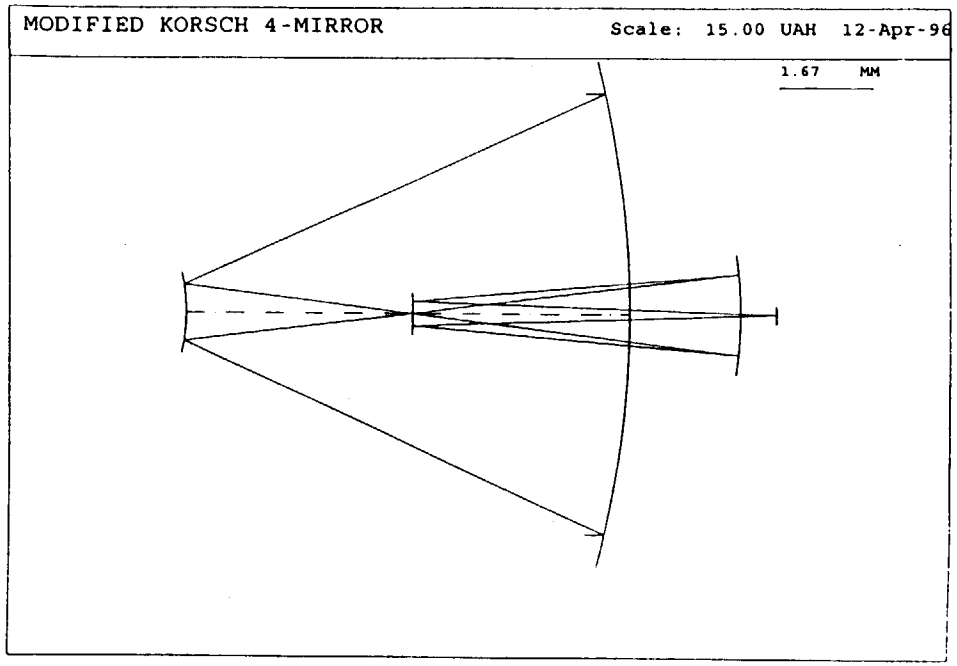

- F/15 system.
- Parabolic primary (F/1), hyperbolic secondary, aconic tertiary, & aconic quaternary.
- 10.6 m total length.
- $\leq$0.03 arcsec geom. resolution over 10 arcmin field on curved image surface (rad = -2.1 m).
- Image of primary at quaternary & internal field stop.

3-Mirror, 4-Reflection Design

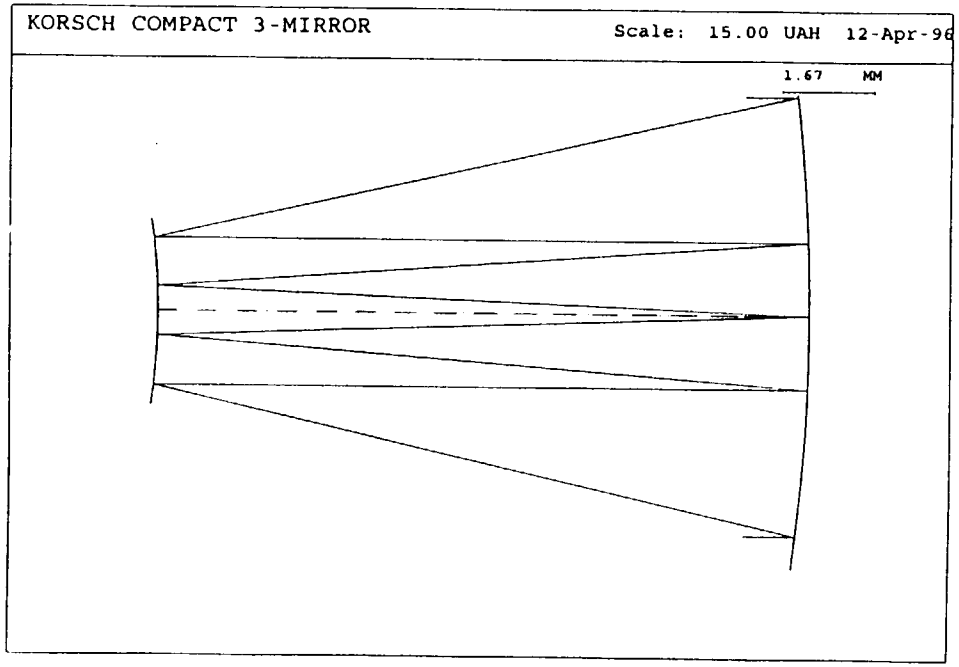

- F/13 system.
- Nearly parabolic primary (F/2.2), conic secondary & tertiary.
- 11.7 m total length.
- $\leq$0.002 arcsec geom. resolution over 10 arcmin field on curved image surface (rad = -7.0 m).
- Easier package, but no primary imaging & no internal field stop.
- Sec. & tert. mirrors much larger than previous design.

Final OTA Optical Design Description

- Started with 3-mirror anastigmat & added flat quaternary at image of primary.
- 4-mirror, centered design achieves diff.-limited resolution (@ 2 μm) over full 4 am x 10 am FOV on flat image plane. 3rd & 4th mirrors are small and located behind primary for easier packaging. Also allows for stray-light control at intermediate images.
- Smaller quaternary used for fine figure correction.
- Low obscuration design through use of fast primary and off-axis field.
- Achieved total volume of 8 m diameter X 11 m long (9 m between primary & secondary).

OTA Optical Layout I

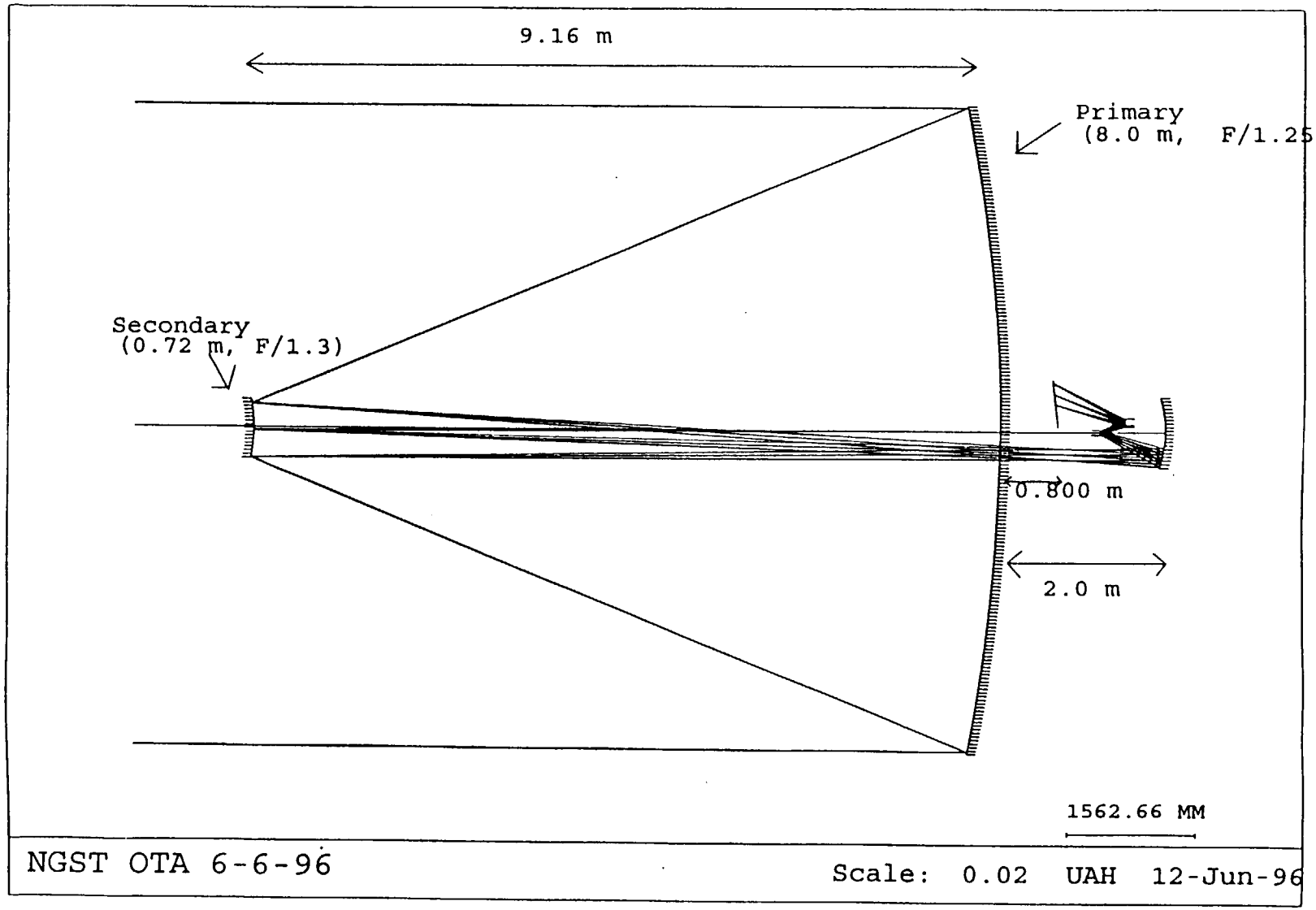

OTA Optical Layout II

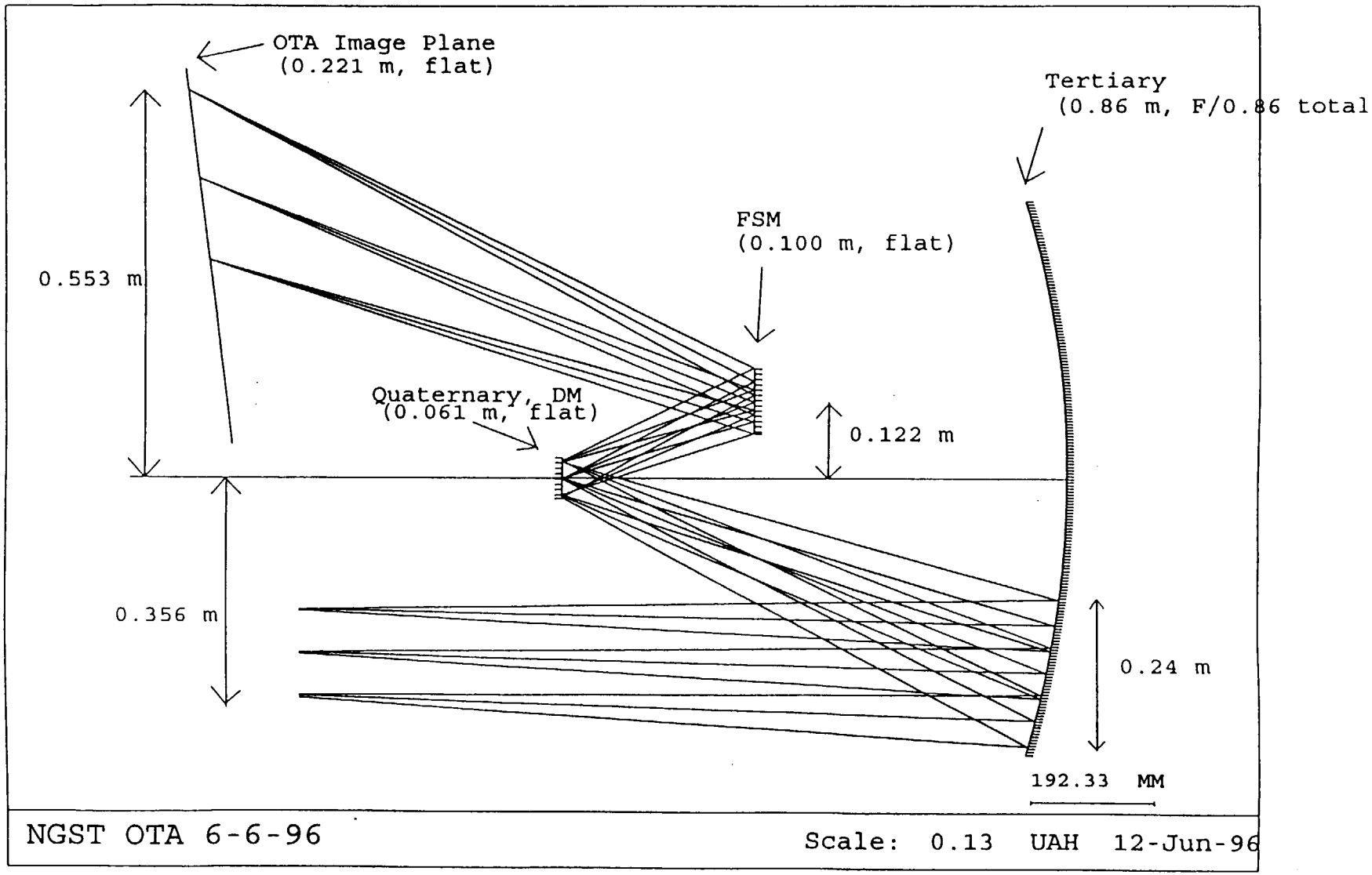

OTA Component Descriptions

- Primary:
  8 m, F/1.25. Rad = 20.00 m, CC = -0.9981
  with central hole of 0.70 m min diameter.
- Secondary:
  0.72 m, F/1.26. Rad = 1.83 m, CC = -1.3726.

  * Primary & secondary form an F/15
  image 0.800 m behind the primary vertex.

OTA Component Descriptions

- Tertiary:
  0.86 m, F/0.86. Rad = 1.48 m, CC = -0.8478. Only 0.24 m used with aperture centered 0.31 m below the optical axis. Re-images primary & produces F/24 image for SIM.
- Quaternary:
  0.061 m, flat. Deformable mirror located at primary image for fine figure correction. Will require 3 mm actuator spacing to get 349 actuators. *Have alternate design w/ 0.100 m quarternary - allows for 5 mm actuator spacing.

OTA Wavefront Error Assessment

All errors are in nm
& are RSS'ed.

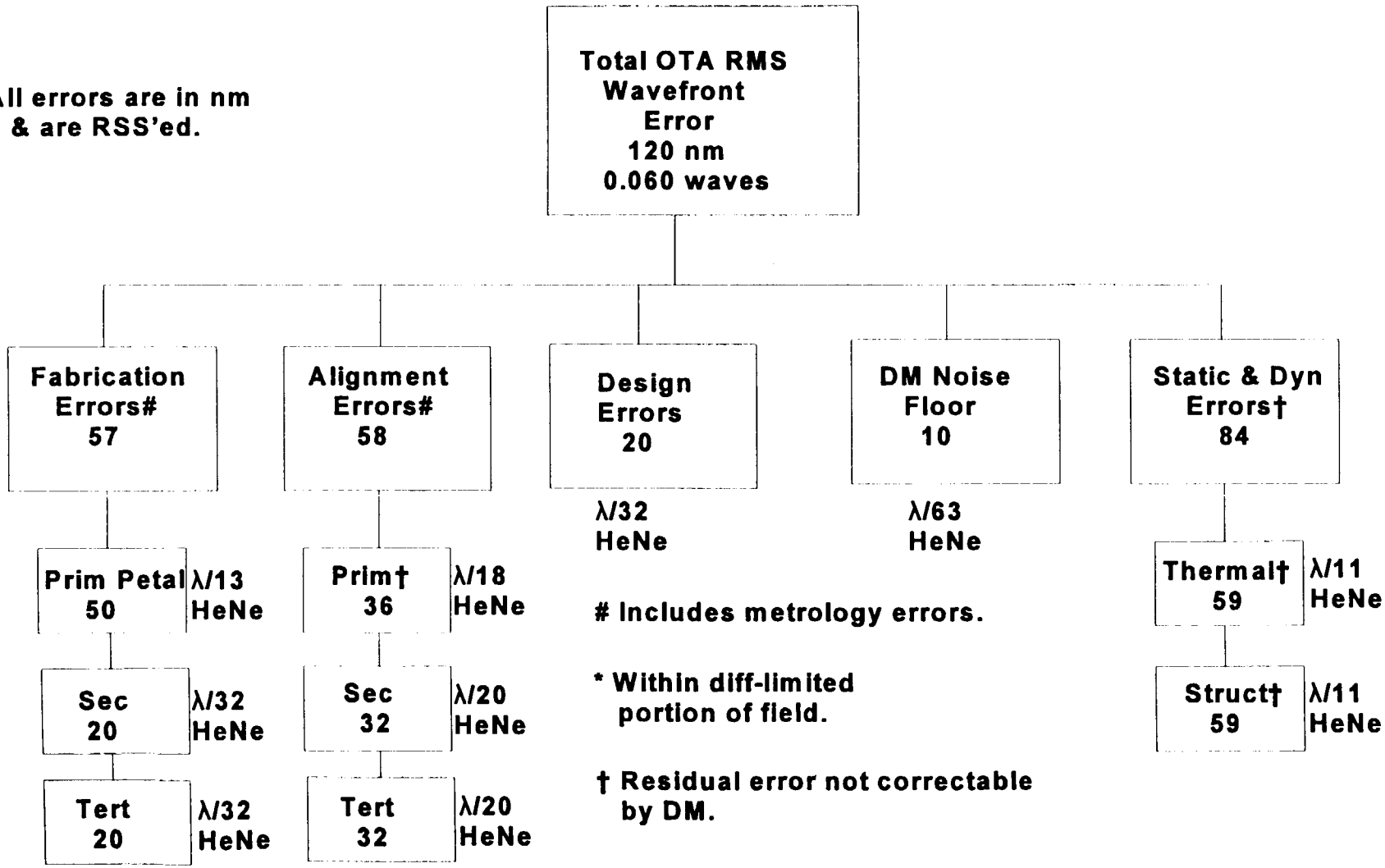

Includes metrology errors.

* Within diff-limited portion of field.

† Residual error not correctable by DM.

OTA Intrinsic Design Error

- The optical design of the OTA achieves 20 nm rms WFE over the entire field. Thus, theoretically at least, diffraction-limited performance is achieved into the visible spectrum.
- Other designs, some with better and some with worse performance, are possible. But, this design was chosen as a good balance of performance and packaging. The low intrinsic WFE leaves plenty of room for other system errors in the budget.

OTA Fabrication Tolerances

- Primary petal fabrication error breakdown in P-V surface figure error:
  - Polishing error: 126 nm ($\lambda/5$ @ HeNe)
  - Metrology mount error: 63 nm ($\lambda/10$ @ HeNe)
  - Metrology error: 63 nm ($\lambda/10$ @ HeNe)
- Secondary/Tertiary fabrication error breakdown in P-V surface figure error:
  - Polishing error: 50 nm ($\lambda/12$ @ HeNe)
  - Metrology mount error: 25 nm ($\lambda/25$ @ HeNe)
  - Metrology error: 25 nm ($\lambda/25$ @ HeNe)
- Tolerances within current state-of-the-art.
- Petal-to-petal uniformity critical -> replication.

OTA Primary Petal Tolerances

Primary petal alignment/phasing errors (6-DOF) of up to mm size can be corrected by combination of petal 3-DOF adjustments & DM. Error of 36 nm shown in budget is residual after corrections. Without corrections, petals would require sub-micron linear position tolerances and sub-arc sec angular tolerances.

OTA Secondary Tolerances
(with no deformable mirror compensation)

- Decenter: ±10 μm
- Despace: ±2 μm
- Tilt: ±0.1 arc min

Above tolerances (from Code V) allow for an increase in RMS WFE of 32 nm, in accordance with current error budget. Tolerances can be met with planned secondary adjustments.

OTA Tertiary Tolerances
(with no deformable mirror compensation)

- Decenter: ±50 μm
- Despace: ±200 μm
- Tilt: ±1.0 arc min

Above tolerances (from Code V) allow for an increase in RMS WFE of 32 nm, in accordance with current error budget. These tolerances may allow for tertiary to be fixed to structure.

OTA Quaternary Tolerances

- Decenter: ±1 mm
- Despace: ±0.5 mm
- Tilt: ±30 arc min

Above tolerances required to keep quaternary at image of primary. Will probably not require mirror positional adjustments. Absolute position not as critical as temporal stability - position must be stable to within tens of microns during observations.

Conclusions

- Have developed baseline 4-mirror OTA design that balances performance with size and packaging. Have investigated/cataloged alternative designs.
- Have established feasibility of WFE budget (based on experience, current state-of-the-art, modeling, and analysis).
- Issues of structurally and thermally-induced WFE's and the level of correction by the DM will be addressed below.