DOE/NASA/0032–34
NASA CR–190780
MTI Report 91TR15

IN-85
021349
170P.

Automotive Stirling Engine Development Project

William D. Ernst
Mechanical Technology Incorporated
Latham, New York

and

Richard K. Shaltens
Lewis Research Center
Cleveland, Ohio

February 1997

Prepared for
NATIONAL AERONAUTICS AND SPACE ADMINISTRATION
Lewis Research Center
Under Contract DEN3–32

for
U.S. DEPARTMENT OF ENERGY
Conservation and Renewable Energy
Office of Vehicle and Engine R&D

DOE/NASA/0032–34
NASA CR–190780
MTI Report 91TR15

Automotive Stirling Engine Development Project

William D. Ernst
Mechanical Technology Incorporated
Latham, New York

Richard K. Shaltens
Lewis Research Center
Cleveland, Ohio

February 1997

Prepared for
National Aeronautics and Space Administration
Lewis Research Center
Cleveland, Ohio 44135
Under Contract DEN3–32

for
U.S. DEPARTMENT OF ENERGY
Conservation and Renewable Energy
Office of Vehicle and Engine R&D
Washington, DC 20545
Under Interagency Agreement DE–AI01–85CE50112

SUMMARY

The objectives of the Automotive Stirling Engine (ASE) Development project were to transfer European Stirling engine technology to the United States and develop an ASE that would demonstrate a 30% improvement in combined metro-highway fuel economy over a comparable spark ignition (SI) engine in the same production vehicle. In addition, the ASE should demonstrate the potential for reduced emissions levels while maintaining the performance characteristics of SI engines.

Mechanical Technology Incorporated (MTI) developed the ASE in an evolutionary manner, starting with the test and evaluation of an existing stationary Stirling engine and proceeding through two experimental engine designs: the Mod I and the Mod II. Engine technology development resulted in elimination of strategic materials, increased power density, higher temperature and efficiency operation, reduced system complexity, long-life seals, and low-cost manufacturing designs.

Mod II engine dynamometer tests demonstrated that the engine system configuration had accomplished its performance goals for power (60 kW) and efficiency (38.5%) to within a few percent. Tests with the Mod II installed in a delivery van demonstrated a combined fuel economy improvement consistent with engine performance goals and the potential for low emissions levels. A modified version of the Mod II was identified as a manufacturable ASE design for commercial production.

In conjunction with engine technology development, technology transfer proceeded through two ancillary efforts: the Industry Test and Evaluation Program (ITEP) and the NASA Technology Utilization (TU) project. The ITEP served to introduce Stirling technology to industry, and the TU project provided vehicle field demonstrations for third-party evaluation in everyday use and accomplished more than 3100 hr and 8,000 miles of field operation. To extend technology transfer beyond the ASE project, a Space Act Agreement between MTI and NASA-Lewis Research Center allowed utilization of project resources for additional development work and emissions testing as part of an industry-funded Stirling Natural Gas Engine program.

TABLE OF CONTENTS

SECTION	PAGE
SUMMARY	iii
LIST OF FIGURES	vii
LIST OF TABLES	ix
1.0 INTRODUCTION AND BACKGROUND	1-1
1.1 ASE Project Summary	1-1
1.2 Report Content	1-12
2.0 MOD I ENGINE SUMMARY	2-1
2.1 Mod I Engine Operation and Performance	2-4
2.2 Industry Test and Evaluation Program	2-5
2.3 Endurance Testing	2-7
3.0 MOD II ENGINE DEVELOPMENT	3-1
3.1 Original Design Description	3-1
3.1.1 External Heat System	3-2
3.1.2 Hot Engine System	3-7
3.1.3 Cold Engine/Drive System	3-13
3.1.4 Control Systems and Auxiliaries	3-28
3.2 Hardware Development	3-41
3.2.1 Design Changes from the Original Hardware Design	3-41
3.2.2 Test and Development Efforts	3-46
3.2.3 Engine Test History Summary	3-52
3.3 Fuel Economy	3-55
3.3.1 Initial Mod II/Vehicle Design	3-59
3.3.2 Mod II Fuel Economy	3-61
3.3.3 Engine and System Hardware Effects on Fuel Economy	3-65
3.3.4 Vehicle Effects on Fuel Economy	3-66
3.4 Deere & Co. Manufacturing Cost Study	3-67
4.0 TECHNOLOGY TRANSFER	4-1
4.1 NASA TU Project	4-1
4.1.1 Phase I	4-3
4.1.2 Phase II	4-8
4.1.3 Phase III	4-12
4.2 Stirling Natural Gas Engine Program	4-15
5.0 TECHNOLOGY STATUS AND DEVELOPMENT NEEDS	5-1
5.1 Performance Improvement	5-1
5.2 Emissions Reduction	5-5
5.3 Manufacturing Cost Reduction	5-6
5.4 Reliability/Operational Improvements	5-7

TABLE OF CONTENTS (continued)

SECTION PAGE

5.5 Adaptation to Nonautomotive Applications 5-8
5.6 Other Technology Needs 5-9
5.7 Summary. 5-9

6.0 CONCLUSIONS 6-1

7.0 REFERENCES 7-1

APPENDIX A: BIBLIOGRAPHY OF RELEVANT ASE PROJECT PUBLICATIONS A-1

APPENDIX B: ASE PROJECT DOCUMENTATION CATEGORIZED BY ENGINE NUMBER B-1

LIST OF FIGURES

NUMBER		PAGE
1-1	ASE Project Summary Schedule	1-4
1-2	Engine Technology Progression	1-5
1-3	Engine Performance-Improvement Trends	1-7
1-4	Summary of Emission Testing with Mod II-Powered LLV	1-10
1-5	Mod II Net Shaft Power	1-11
1-6	Mod II Net Shaft Efficiency	1-11
2-1	Comparison of Mod I and Upgraded Mod I Engines	2-2
2-2	Upgraded Mod I Engine Performance	2-5
2-3	ITEP Schedule	2-6
2-4	Accelerated Duty Cycle	2-8
2-5	Federal Urban Driving Cycle	2-8
3-1	Mod II BSE Cross Section	3-1
3-2	External Heat System	3-2
3-3	CGR Combustor Assembly	3-4
3-4	Fuel Nozzle and Ignitor	3-6
3-5	Typical Annular Heater Head	3-8
3-6	Typical Annular Hot Engine System	3-9
3-7	Heater Head Tube	3-10
3-8	Fins on Rear Row Tubes	3-10
3-9	Heater Head Assemblies	3-11
3-10	Hot Engine System	3-12
3-11	Regenerator Assembly	3-12
3-12	Cold Engine/Drive System	3-13
3-13	Pistons Protruding Through Coolers	3-15
3-14	Water Passages	3-15
3-15	Cooler Assembly	3-17
3-16	Seal Housing Assembly	3-18
3-17	Piston and Connecting Rod Assembly	3-19
3-18	Crankshaft Assembly	3-21
3-19	Crankpin Offset	3-22
3-20	Lubrication System	3-25
3-21	Cooling System	3-26
3-22	Balance System Schematic	3-28
3-23	Engine Control Systems	3-29
3-24	Combustion Control System	3-31
3-25	Heater Head Temperature Control	3-33
3-26	Air-to-Fuel Ratio Control	3-34
3-27	Combustion Air Supply	3-35
3-28	Alternator Design Requirements	3-36
3-29	Mean Pressure Control System	3-37
3-30	Mean Pressure Control System Schematic	3-39
3-31	Comparison of CGR and EGR Combustors	3-41
3-32	Mod II EGR Combustor	3-42

LIST OF FIGURES (continued)

NUMBER		PAGE
3-33	Conical Nozzle and Igniter in Mod II CGR Combustor	3-43
3-34	Comparison of Heater Head Designs	3-43
3-35	Comparison of Configuration 4 and Configuration 1 Heater Head Hardware	3-44
3-36	Configuration 4S Heater Head	3-45
3-37	Comparison of Configuration 1 and Configuration 4S Heater Heads and Regenerator Designs	3-45
3-38	Mod II NO_x Emissions	3-47
3-39	Mod II CO Emissions	3-47
3-40	Mod II HC Emissions	3-48
3-41	Mod II Smoke Number	3-48
3-42	Mod II Power – EGR vs. CGR	3-49
3-43	Mod II Efficiency – EGR vs. CGR	3-49
3-44	Mod II Power for Swaged vs. Unswaged Tubes	3-50
3-45	Mod II Power – Configuration 4S vs. Configuration 1	3-51
3-46	Mod II Efficiency – Configuration 4S vs. Configuration 1	3-51
3-47	Mod II Power – Sealed Regenerator Test	3-53
3-48	Mod II Efficiency – Sealed Regenerator Test	3-53
3-49	Comparison of Mod II Analog/Cast Blocks	3-54
3-50	Mod II Power and Efficiency	3-56
3-51	Effect of Axle Ratio and Engine Size on Fuel Economy, Acceleration Performance, and Gradability	3-60
3-52	Mod II Engine/Vehicle Performance	3-62
3-53	SI Engine/Vehicle Performance	3-63
4-1	DOE/NASA TU Office Engine Demonstration Project	4-1
4-2	TU Project Vehicles	4-2
4-3	Phase I Initial Engine Characterization	4-4
4-4	Tachograph Plot for Phase I NASA TU Van	4-5
4-5	Phase I Van Operational History	4-6
4-6	Phase II Truck Operational History	4-9
4-7	Temperature Effects on Carbon Monoxide Production	4-12
4-8	Summary of Emission Testing with Phase II and Phase III Vehicles	4-15
5-1	Piston Ring Systems	5-3
5-2	Mod I No. 3 Piston Ring Performance Tests	5-4

LIST OF TABLES

NUMBER		PAGE
1-1	Final ASE Project Objectives: Excerpt from Contract DEN3-32	1-3
1-2	Comparison of Mod I and Mod II Engines	1-5
1-3	Fuel Economy Improvement (EPA Driving Cycle): Mod II vs. SI Engine in LLV (Unleaded Gasoline)	1-8
1-4	Road Test Performance: Mod II vs. SI Engine in LLV	1-9
1-5	Fuel Economy and Emission Levels for Mod II-Powered LLV Light-Duty Truck	1-10
2-1	Accumulated Mod I Engine Test Hours	2-3
2-2	Accumulated Mod I Vehicle Test Mileage	2-3
2-3	Evaluation of Mod I by GMRL	2-6
3-1	External Heat System Specifications	3-3
3-2	Bearing Configuration	3-23
3-3	Bearing Operating Life for Combined EPA Driving Cycle	3-24
3-4	Mod II Engine Test History	3-55
3-5	History of Mod II Predicted vs. Measured Performance	3-57
3-6	Detailed Performance Projection Comparison of SES Design Review to Final Build Configuration 4S	3-57
3-7	EPA Fuel Economy Results for SI Engine vs. Mod II Engine in the USPS LLV	3-58
3-8	Over-the-Road Test Results for SI Engine vs. Mod II on Gasoline and Diesel Fuel	3-58
3-9	Comparison of Urban vs. Highway Cycles	3-59
3-10	Predicted Mod II Stirling Performance vs. SI Engine in 1985 Chevrolet Celebrity	3-60
3-11	Comparison of USPS LLV and Celebrity	3-61
3-12	Average Operating Point Efficiency	3-64
3-13	Comparison of Fuel Economy Tests and Prediction Data	3-64
3-14	Engine Performance Increase Expected with Completion of Hardware Development	3-66
3-15	Park-and-Loop Fuel Consumption	3-67
3-16	Summary of Phase I Reduction of Manufacturing Cost by VA/VE Process	3-69
3-17	Summary of Phase II Reduction of Manufacturing Cost by VA/VE Process	3-69
3-18	Summary of Estimated Manufacturing Costs for Mod II	3-70
3-19	Projected Capital Investment for Mod II Manufacturing Facility	3-70
4-1	Vehicle Operation Time as Recorded by Tachograph	4-7
4-2	Phase II Truck Missions	4-10
4-3	Test Parameters	4-10
4-4	Summary of Transient Emission Test Results for Phase II Truck	4-11
4-5	Mod II LLV Fuel Economy and Emission Levels	4-13
4-6	Comparison of Emissions/Fuel Economy for Mod II-Powered USPS LLV	4-14
4-7	USPS LLV Fuel Economy Improvement: Mod II vs. SI Engine	4-14
4-8	Over-the-Road USPS LLV Fuel Economy Improvement: Mod II vs. SI Engine	4-14
5-1	Typical Mod II Top Tank Radiator Temperature Impact	5-5

1.0 INTRODUCTION AND BACKGROUND

The NASA/MTI Automotive Stirling Engine (ASE) Development project involved 11 years of effort to develop the Stirling engine for automotive applications. This final report summarizes the work performed from 1985 to 1989, with a focus on the development and evaluation of the Mod II engine. Other portions of the project are covered in detail in the more than 300 reports written throughout the project. In this final report, early project activities relevant to the Mod II are introduced as necessary to put its development in perspective. To place the entire effort in perspective, a summary of the ASE project is presented below.

1.1 ASE Project Summary

As established in 1978, Title III of Public Law 95-238, the Automotive Propulsion Research and Development Act directed the Secretary of Energy to create new projects and to accelerate existing ones* within the Department of Energy (DOE) to ensure the development of advanced automotive propulsion systems. As stated in that act, congressional findings indicated that existing automotive engines failed to meet the nation's long-term goals for energy conservation and environmental protection. Additional congressional findings established that advanced, alternative automotive engines could, given sufficient research and development, meet these goals and offer potential for mass production at a reasonable cost.

To this end, Congress authorized an expanded research and development effort to advance automotive engine technologies such as the Stirling cycle. The intent was to complement and stimulate corresponding efforts in the private sector and, in turn, encourage automotive manufacturers to seriously consider incorporating such technology into their products. The DOE ASE program evolved from this legislation.

The NASA-Lewis Research Center (NASA-LeRC) was selected by DOE as the ASE project manager. Consistent with Public Law 95-238 and specific guidelines provided by DOE's Office of Transportation Systems, the goals of the project were to develop and verify the technology base necessary to meet the following propulsion system objectives and to provide confidence in that technology base by verifying it in appropriate testbed engines:

- At least a 30% improvement in fuel economy (mpg) in a production vehicle of the same class and performance powered by conventional spark ignition (SI) engines (based on equal heating value content of the fuel used).

*In October 1977, DOE awarded a Stirling engine development contract to the Ford Motor Company. In October 1978, due to higher priority of other engine projects and limited resources in funds and engineering manpower, Ford decided to limit its efforts to a government-supported project in ceramic materials development and, therefore, exercised its contractual option to stop working on Stirling engine development.

- Emission levels that meet or exceed the most stringent Federal research standards: 0.41, 3.4, 0.4, and 0.2 g/mi of hydrocarbons (HC), carbon monoxide (CO), oxides of nitrogen (NO_x), and particulates, respectively.
- The ability to use a broad range of liquid fuels derived from crude as well as synthetic fuels from coal, oil shale, and other sources.
- Suitability for cost-competitive mass production.

In March 1978, Contract DEN3-32, entitled "The Automotive Stirling Engine Development Program"*, was awarded to MTI by NASA-LeRC. The project team consisted of MTI (Latham, New York) as prime contractor, contributing their project management, development, and technology transfer expertise; United Stirling AB (USAB) (Malmo, Sweden) as a major subcontractor for Stirling engine development; and AM General (AMG) (Detroit, Michigan) as a major subcontractor for engine and vehicle integration. Funding was provided by DOE and administration by NASA-LeRC.

The high efficiency, multifuel capability, low emissions, and low noise potential of the Stirling engine made it a prime candidate for an alternative automotive propulsion system. With this potential in mind, the ASE project set out to meet a substantial challenge – the successful integration of a Stirling engine into an automobile with acceptable drivability. As stated in contract DEN3-32, the scope of the ASE project was as follows:

> "The Contractor shall ... develop and verify Stirling engine component and system technology for automotive propulsion. The program goals are: 1) to demonstrate Final Program Objectives and, 2) to transfer Stirling engine technology to the United States."

The final project objectives resulting from the scope of Contract DEN3-32 are excerpted in Table 1-1. To accomplish these objectives, MTI developed the Stirling engine system in an evolutionary manner. The project began with the test and evaluation of existing USAB P-40 stationary Stirling engines and proceeded through two experimental engine designs – the Mod I and Mod II. Figure 1-1 summarizes the ASE project schedule.

The P-40 engine was a stationary Stirling engine adapted for vehicle installation to assess control issues and its overall viability as an automotive power plant. This engine was representative of the Swedish state of the art when this technology was licensed from USAB by MTI at the start of the ASE project. The USAB technology was based on previously licensed technology from N.V. Phillips Company of the Netherlands. Although the P-40 engine functioned well in an AMC Spirit coupe, the weight, fuel economy, and acceleration rates were not as good as those of the baseline SI-powered vehicle. Basic problem areas with the P-40 engine were identified and used as a guideline for the design of the Mod I.

---

*Throughout its history, the NASA/MTI ASE project was popularly known as the ASE program, even though its official designation was as a DOE/NASA project as part of the DOE ASE program.

Table 1-1. Final ASE Project Objectives: Excerpt from Contract DEN3-32

"The final Program Objectives shall be to develop and verify automotive Stirling engine component and system technology which:

1. Using EPA test procedures, demonstrate at least a 30% improvement in combined metro-highway fuel economy over that of a comparable production vehicle. The comparison production vehicle shall be powered by a conventional spark-ignition engine. Both the Automotive Stirling and spark-ignition engine systems shall be installed in the same vehicle* and shall give substantially the same overall vehicle driveability and performance. The improved fuel economy shall be based on unleaded gasoline of the same energy content (Btu/gal).
2. Show the potential of gaseous emissions and particulate levels less than the following: NO_x = 0.4, HC = .41, CO = 3.4 gm/mile and a total particulate level of 0.2 gm/mile after 50,000 miles.

   The potential need not be shown by actual 50,000 mile tests, but can be shown by Contractor projections based on available engine, vehicle, and component test data.

In addition, the following system design objectives shall be considered:

1. Ability to use a broad range of liquid fuels. This objective may be investigated initially in the combustor development effort and later in engine and vehicle testing. Diesel fuel, gasohol, kerosene, and No. 2 heating oil shall be used as a representative range of alternate fuels. Engine tests with the alternate fuels shall not be initiated for the ASE Mod I and ASE Mod II engines until satisfactory operation and performance and emissions have been achieved on the baseline fuel -- unleaded gasoline. Testing shall then be conducted with the selected alternative fuels to determine the extent of any detrimental effects on engine operation, performance, emissions, or fuel economy and to determine the degree of modifications or adjustments to the engine that might be required in switching from one fuel to another.
2. Reliability and life of a comparable automotive engine.
3. A competitive initial cost and competitive life-cycle cost with a comparable automotive engine.
4. Acceleration suitable for safety and consumer considerations.
5. Noise and safety characteristics that meet the 1984 Federal Standards."

*It is intended that the same vehicle be used for the comparison. However, a difference in vehicle inertia weight is acceptable if the difference results from the substitution of the Automotive Stirling Engine System for the spark ignition engine system. The transmission, torque converter, and drivetrain may also differ in order to take advantage of Stirling engine characteristics.

91TR15

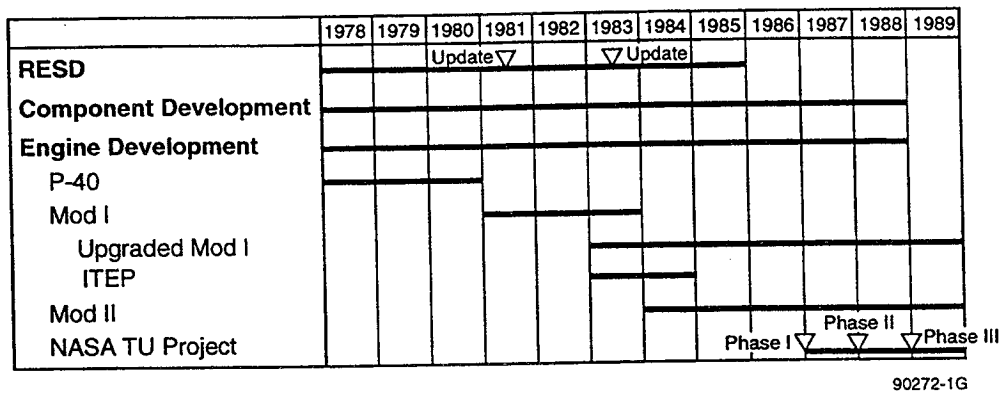

Figure 1-1. ASE Project Summary Schedule

In the Mod I engine, sizing of the cycle components, particularly the regenerator, was altered from P-40 experience to move the region of the maximum efficiency toward the average operating point of the vehicle as determined by the EPA urban driving cycle. The partial low-power optimization in the Mod I represented a new analytical technology. The basic square-four engine concept was retained for the Mod I design, and engine power output was increased from 40 to 53 kW. Improved part power efficiency was also achieved with no sacrifice in high-speed power output. A Mod I-powered AMC Lerma vehicle installation demonstrated improved fuel economy but substandard acceleration relative to an SI-powered vehicle.

The Mod I engine was then upgraded. Additional part power optimization was pursued to further enhance driving cycle fuel economy. In addition, strategic materials were eliminated from the engine design, and engine size was reduced by decreasing the preheater diameter and associated external heat system hardware. The power-to-weight ratio was increased significantly to improve vehicle acceleration capability by increasing the heater head operating temperature from 720 to 820°C.

Throughout the ASE project, a technology assessment task, the Reference Engine System Design (RESD), was used to identify state-of-the-art technology to guide engine and component designs. The RESD was updated in 1981 and 1983 to identify the embodiment of those technologies in an overall engine design. Prior to 1983, the engine design concepts were based primarily on the square four, dual crankshaft, canister regenerator designs employed in the P-40. The 1983 RESD update identified a V-4, single crankshaft, annular regenerator design to provide acceptable manufacturing costs and reduce engine specific weight. This concept guided the design of the final experimental design – the Mod II engine. The Mod II configuration differed from previous engines, employing a single crankshaft, V-drive unit. The regenerator and coolers design was also changed to an annular configuration. Figure 1-2 and Table 1-2 compare the Mod I and Mod II engines.

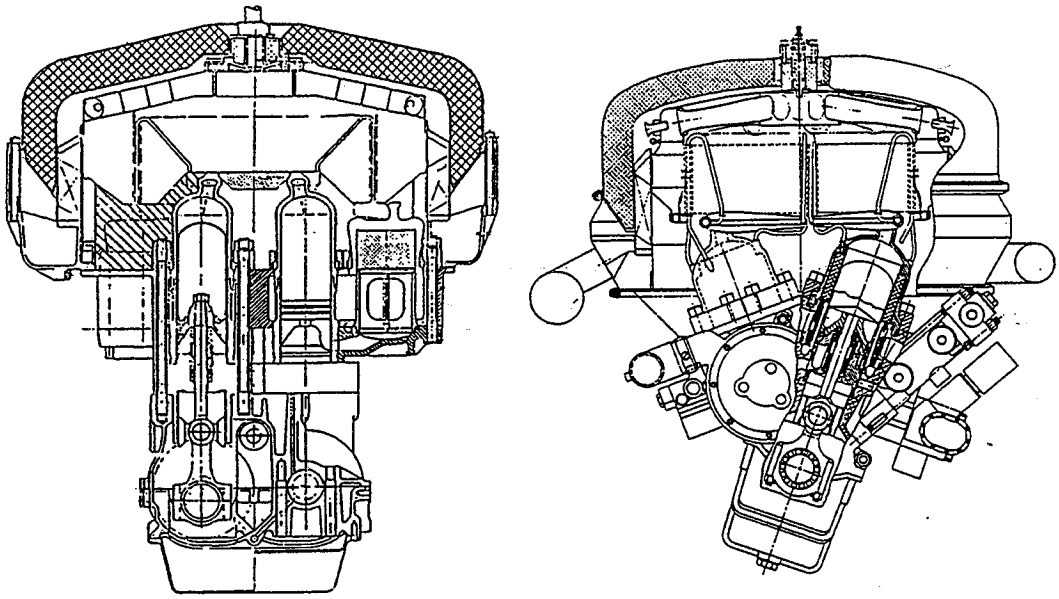

Mod I

72 hp/688 lb (54 kW/312 kg)
23.2 in. (590 mm) Height
26.4 in. (670 mm) Diameter

Mod II

80 hp/447 lb (60 kW/203 kg)
21.2 in. (540 mm) Height
22.0 in. (560 mm) Diameter

91552-1

Figure 1-2. Engine Technology Progression

Table 1-2. Comparison of Mod I and Mod II Engines

Parameter	Mod I	Mod II
Heater Head Type	Canister	Annular
Part Power Optimized	Partial	Yes
Strategic Materials	Yes	No
Crankshaft Type	Dual	Single
Block Type	Multipiece	Single Piece
Manufacturing Cost	Expensive	Competitive

91TR15

One of the major driving forces in selecting the V-4 concept for the Mod II was manufacturing cost, weight, and packagability under the hood of a car. Previous designs like the Mod I had higher manufacturing costs than those for comparable SI engines. The Mod II design eliminated several costly items such as dual crankshafts, geared output shaft/drive unit, multipiece engine block assembly, and associated separate machining processes. The design also reduced the number of heater head castings from eight to four.

Performance characteristics of the upgraded Mod I were retained for the Mod II design, resulting in a package that addressed all aspects of the ASE project goals. Detailed descriptions of the Mod II design and performance predictions are presented in the proceedings of the DOE Contractors Coordination Meetings (Grandin, et al. 1985 and Ernst 1988) and in a summary design report (Nightingale 1986).

Advances in engine performance parameters achieved during the course of the ASE project are summarized in Figure 1-3 for the four major engine/vehicle combinations. These results are also compared to the 1984 U.S. average vehicle performance. As noted previously, the P-40 achieved initial performance parameters that were unacceptable compared to SI engines, with acceleration time double that considered acceptable by the automotive industry. Fuel economy for the P-40 was approximately 20% worse than that of SI-powered vehicles, and specific weight was nearly triple that of a typical SI engine. However, improvements were achieved with each successive installation. The upgraded Mod I vehicle tests showed dramatic improvements by 1985. The engine specific weight and acceleration time had been cut approximately in half. In addition, EPA fuel economy had risen to 15% better than comparable SI-powered vehicles. Further, the Mod II Chevrolet Celebrity performance predictions indicated that the project goal of 30% improvement in fuel economy would be met.

During the later part of the ASE project, efforts began to focus on eventual commercialization of the engine technology. These efforts included a value analysis/value engineering (VA/VE) study performed by Deere & Co. and a NASA TU project. In 1986 and 1987, Deere & Co. and MTI performed a VA/VE study that indicated modifications applied to the Mod II engine would result in a manufacturing cost approaching that of a comparable diesel engine. Then, in 1987, the NASA TU project began, and the Mod II demonstration vehicle was changed from the Celebrity to a United States Postal Service (USPS) delivery van, designated the long-life vehicle (LLV). The USPS LLV is a rear-wheel-drive light-duty truck with a road load that is two and one-half times that of the design value of the front-wheel-drive, light-duty passenger-vehicle Celebrity. For this reason, tests to verify "automotive" vehicle performance projections could not be performed. This light-duty truck also has substantially higher allowable Federal emission standards than the light-duty passenger vehicle, that is, NO_x level of 2.3 g/mi instead of 0.4 g/mi, CO of 10 g/mi instead of 3.4 g/mi, and HC of 0.89 g/mi instead of 0.41 g/mi.

The change of demonstration vehicle was the result of integrating the objectives of the NASA TU project with the ASE project. The TU project was a phased, three-vehicle effort planned to provide third-party evaluation of the vehicles in a variety of applications. The U.S. Air Force provided an evaluation of vehicle operation that accomplished more than 3100 hr and 38,000 miles. Its overall objective was to help commercialize ASE technology by applying Deere & Co. manufacturing expertise to the Mod II design and verifying the LLV as a suitable market application. The TU project also provided the

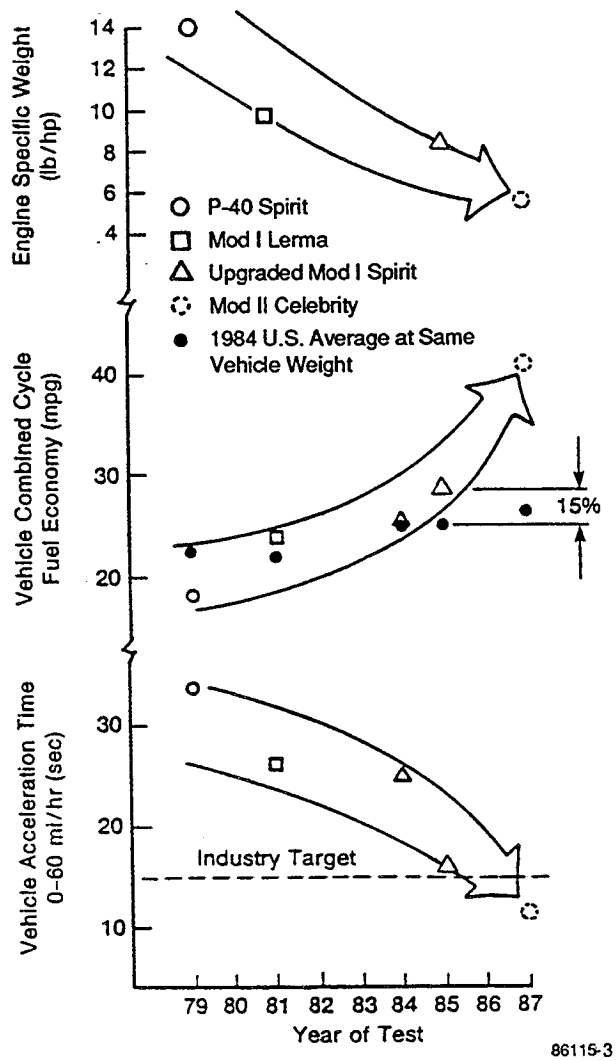

Figure 1-3. Engine Performance-Improvement Trends

opportunity for a vehicle field demonstration to evaluate the engine's operational characteristics in everyday use and bridge the gap from technology development to commercialization. TU project participants included DOE, the U.S. Air Force, Deere & Co., and the USPS. To best utilize ASE project funds, one vehicle was used to conduct both the ASE goal demonstration and the field trial. This change resulted in a decrease in the fuel economy improvement expected with the Mod II due to the different average operating point and higher road load of the LLV compared to that of the Celebrity. The reduction in fuel economy also served to increase the vehicle emission levels. Engine component reoptimization would have recovered fuel economy improvement in the LLV installation had it been performed.

When MTI codes, verified by earlier Stirling vehicle testing, were exercised to predict the performance of the Mod II-powered LLV light-duty truck in the EPA fuel economy tests, the predicted value of performance improvement of the Mod II over the SI-powered vehicle was 10%, as shown in Table 1-3. When actual test data were obtained on the EPA driving cycle, the performance improvement was also 10%, identical to the vehicle prediction. This result demonstrates the capability to design a Stirling engine system and successfully predict its fuel economy performance in a given vehicle. It also strongly suggests that the Mod II engine would have attained the predicted 30% fuel economy improvement goal if it had been tested in the Celebrity light-duty vehicle for which it was designed.

In addition to being tested on the EPA driving cycle, the Mod II-powered LLV was evaluated against an SI-powered LLV in a head-to-head, over-the-road driving evaluation (see Table 1-4). In this testing, the Mod II-powered LLV showed even greater improvement than in the EPA-certified test. Using gasoline, there was a 13% improvement in combined mileage. Operating with diesel fuel, the engine showed a 30% improvement in combined mileage. The joint engine/vehicle testing results demonstrated the excellent performance of the engine and the ability to predict engine and vehicle performance.

Table 1-3. Fuel Economy Improvement (EPA Driving Cycle): Mod II vs. SI Engine in LLV (Unleaded Gasoline)

Engine	Urban (mpg)	Highway (mpg)	Combined (mpg)	Improvement (%)
SI	19.0	22.7	20.5	–
Mod II Prediction	18.7	30.3	22.6	+10
Mod II Actual	19.6	27.6	22.5	+10

91TR15

Table 1-4. Road Test Performance: Mod II vs. SI Engine in LLV

Engine	Urban (mpg)	Highway (mpg)	Combined (mpg)	Improvement (%)
SI	17.0	24.4	19.7	–
Mod II - Unleaded Gasoline	19.8	26.5	22.3	+13
Mod II - Diesel	22.3	31.2	25.6	+30

91TR15

The emissions results were equally good as shown in Table 1-5, which summarizes Mod II-powered LLV fuel economy and emission levels for the same test sequence. Although emissions received less attention than vehicle performance issues in the ASE project, very impressive results were obtained, compared to both light-duty truck and light-duty passenger vehicles emission levels. As shown in Figure 1-4, the emissions levels for the Mod II-powered LLV were substantially below the federal requirements for 1985 even though no optimization of the engine or control system was performed. These results strongly suggest that the Mod II would have provided impressive emission results relative to the emission goals if it had been tested in the Celebrity light-duty passenger vehicle for which it was designed. The USPS evaluation of the Mod II-powered LLV concluded the ASE project in the first quarter of 1989.

After 10 years of engine development and testing activity, several conclusions can be drawn from the work performed during the ASE project. These are summarized briefly below.

- In fulfillment of the broad DOE ASE program goals, the following were accomplished as part of the NASA/MTI project:
  - Based on test data obtained on a Stirling-engine-powered truck, fuel economy performance projections for a Stirling-engine-powered passenger vehicle indicate that the project goals of a 30% improvement can be achieved while simultaneously reducing emission levels substantially below 1985 Federal Standards.
  - EPA emission tests on this same truck also demonstrated the ability of the Stirling engine to operate on a broad range of liquid fuels.
  - Suitability for cost-competitive mass production was demonstrated by Deere & Co. VA/VE accomplishments.
- Within a narrow margin, the Mod II engine successfully met engine performance and efficiency goals. In 1984, the design goals of 60-kW maximum power at 4000 rpm and 38.5% maximum efficiency at 1200 rpm were established. When the engine had completed its system performance tests, the results were within a few percentage points of the goal values. These results indicated the capability to successfully build a Stirling engine to meet a specific set of requirements. Figures 1-5 and 1-6 indicate the agreement between predicted (1985) and actual measured (1987) performance for various mean working pressure levels. These results confirm that Stirling engines perform as predicted.

Table 1-5. Fuel Economy and Emission Levels for Mod II-Powered LLV Light-Duty Truck

Urban				Highway				Combined
mpg	HC	CO	NO_x	mpg	HC	CO	NO_x	mpg
19.6	0.41	2.16	0.82	27.6	0.01	0.60	0.59	22.5

91TR15

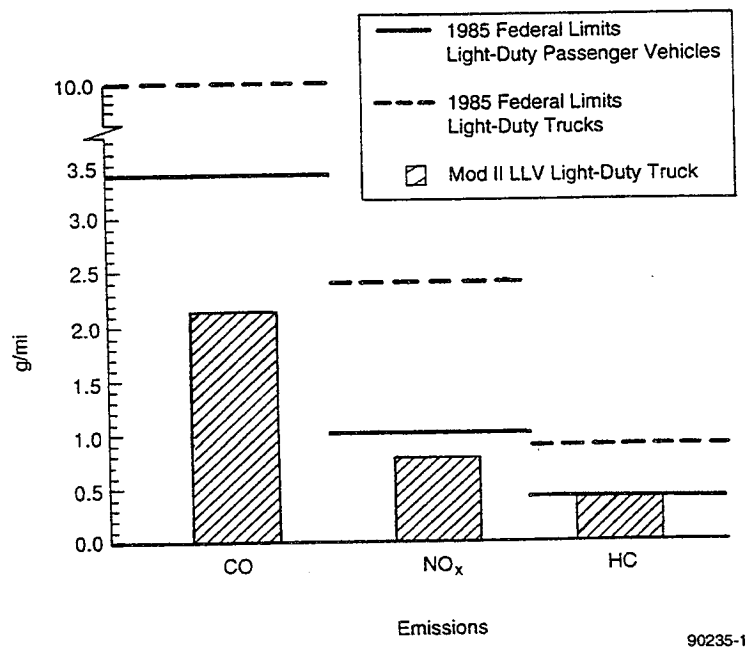

Figure 1-4. Summary of Emission Testing with Mod II-Powered LLV

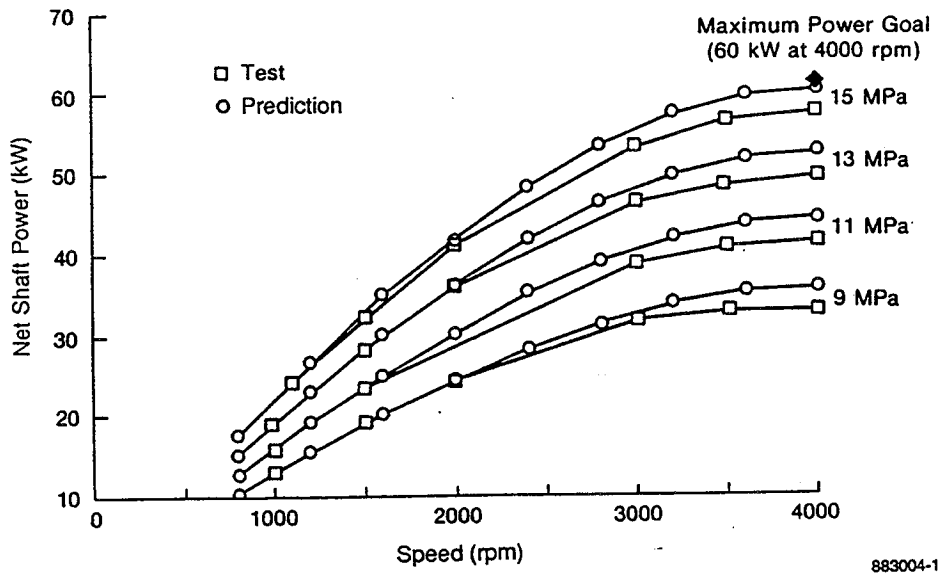

Figure 1-5. Mod II Net Shaft Power

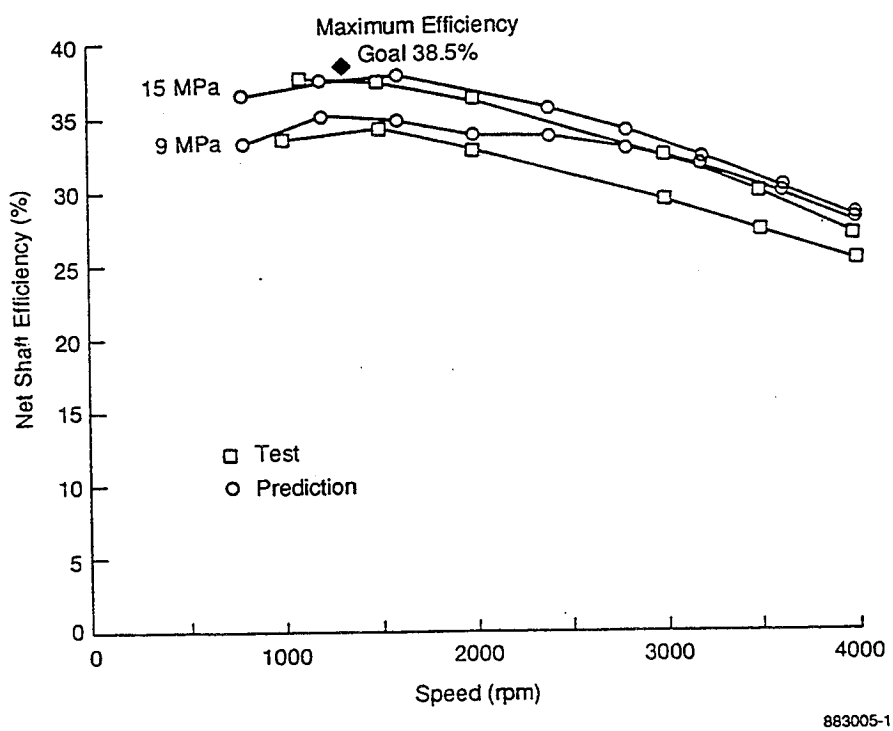

Figure 1-6. Mod II Net Shaft Efficiency

- With a focus on eventual engine commercialization, the ASE project successfully integrated "end user" input from automotive and engine product manufacturers. In 1983 and 1984, under joint DOE/NASA-LeRC funding, GM Research Laboratory (GMRL) and Deere & Co. performed an Industry Test and Evaluation Program (ITEP). During the ITEP, GMRL evaluated a Mod I-powered vehicle on a chassis dynamometer, while Deere & Co. tested a Mod I engine system on a laboratory dynamometer. In addition to the ITEP, Deere & Co. completed the VA/VE study of the Mod II design that was instrumental in reducing its projected manufacturing cost and adapting it to mass production. Together with the field demonstration experience gained from the NASA TU project, the ITEP and the Deere & Co. VA/VE study provided real-world input in support of engine commercialization.
- In accomplishing the objective of transferring European Stirling engine technology to the United States, the ASE project succeeded in establishing an extensive U.S. technology and vendor base capable of designing, developing, and commercializing Stirling engines. As a further indication of successful technology transfer, MTI, along with a gas industry consortium (GRI, NYGAS, and others) and Hercules Engines, Inc. of Canton, Ohio, is developing a commercial Stirling engine based on ASE technology developed in the Stirling Natural Gas Engine Program.
- Significant technological improvements were made throughout the ASE project by successful component development. Typically, if RESD performance or manufacturability was significantly improved by incorporation of a component change, development of the engine component was initiated. After the change was verified by component hardware tests, it was then incorporated in the engine design. Component development included tasks in three different heat exchangers, combustion materials, seals, drive system, controls, and auxiliaries. Significant technological improvements were made by incorporating new heater head materials such as XF818 or CG27, fin brazing techniques, combustor nozzles, seals, blowers, and digital control systems.

1.2 Report Content

Section 2.0 summarizes Mod I activities and the results of the ITEP. Section 3.0 details the original Mod II design, later hardware development activity, and the vehicle fuel economy evaluation. Section 4.0 covers technology transfer including the NASA TU project and the Stirling Natural Gas Engine program. Section 5.0 addresses Mod II technology status and development needs, and Section 6.0 presents the report conclusions. Report references are listed in Section 7.0. Appendix A contains a bibliography of relevant publications generated within the ASE project, and Appendix B presents the ASE project documentation categorized by engine number.

2.0 MOD I ENGINE SUMMARY

The Mod I engine was the first experimental engine to be designed within the ASE project. As such, it proved to be the workhorse of the project and accomplished over 19,000 hr of test time. There were actually two versions of the Mod I engine: the Mod I and the upgraded Mod I, which are compared in Figure 2-1. In late 1981, project funds were deferred, and the planned start-up of the Mod II design had to be delayed. In its place, design improvements were made to upgrade the existing Mod I. Because the Mod I was the only active experimental engine, it was continuously used and modified to evaluate and develop new technologies. Much of the technology improvement incorporated in the Mod II was first verified during Mod I testing.

The Mod I engine was designed and originally built in a building-block form, where each one of the major components could be modified independent of the other components. For example, modifications could be made to the cold connecting ducts located between the water jacket and seal housing without modifying either of the other components. A total of nine Mod I engines were built within the project, including two specifically designated for the ITEP. Table 2-1 summarizes the uses and the hours accumulated on those engines, and Table 2-2 lists the accumulated Mod I vehicle test mileage. Although the total number of engines appears to be eleven, several of the Mod I engines were simply disassembled and rebuilt to become upgraded Mod I engines.

Engine hours were accumulated in a wide variety of uses, including test cell performance development, endurance testing, hardware development, vehicular development, and in ITEP and the NASA TU project. Engine tests were performed both in a BSE configuration (without controls or auxiliaries) and in an SES configuration (stand-alone, complete package ready for vehicle installation). Initially, engines were built at USAB in Sweden using Swedish vendors while manufacturing technology was being transferred and a vendor base was being established in the United States. A summary of the major uses of the project engines is given below. See Appendix B for a listing of the ASE project documentation categorized by engine number.

Engine No. 1 was configured as an SES and installed in an AMC Spirit for transient testing and evaluation of a commercial K-Jetronic air/fuel control system. This engine was later upgraded as engine No. 6 to be used for system endurance testing.

Engine No. 2 was utilized for Mod I BSE engine performance development and was later torn down and its parts used in upgraded Mod I engines.

Engine No. 3 was used for external heat system evaluation and endurance testing. Tests were made of fuel nozzles, swirlers, and various EGR and CGR combustor systems.

Engine No. 4 was the very first Mod I engine to be built in the United States using U.S. vendors. After characterization tests, this engine was torn down and reconfigured to become upgraded Mod I **Engine No. 5**. This engine was used to evaluate heater head tube temperature distributions. Later in the project, this engine was installed in the NASA TU project Phase I van and operated successfully for over a year at the Langley AFB.

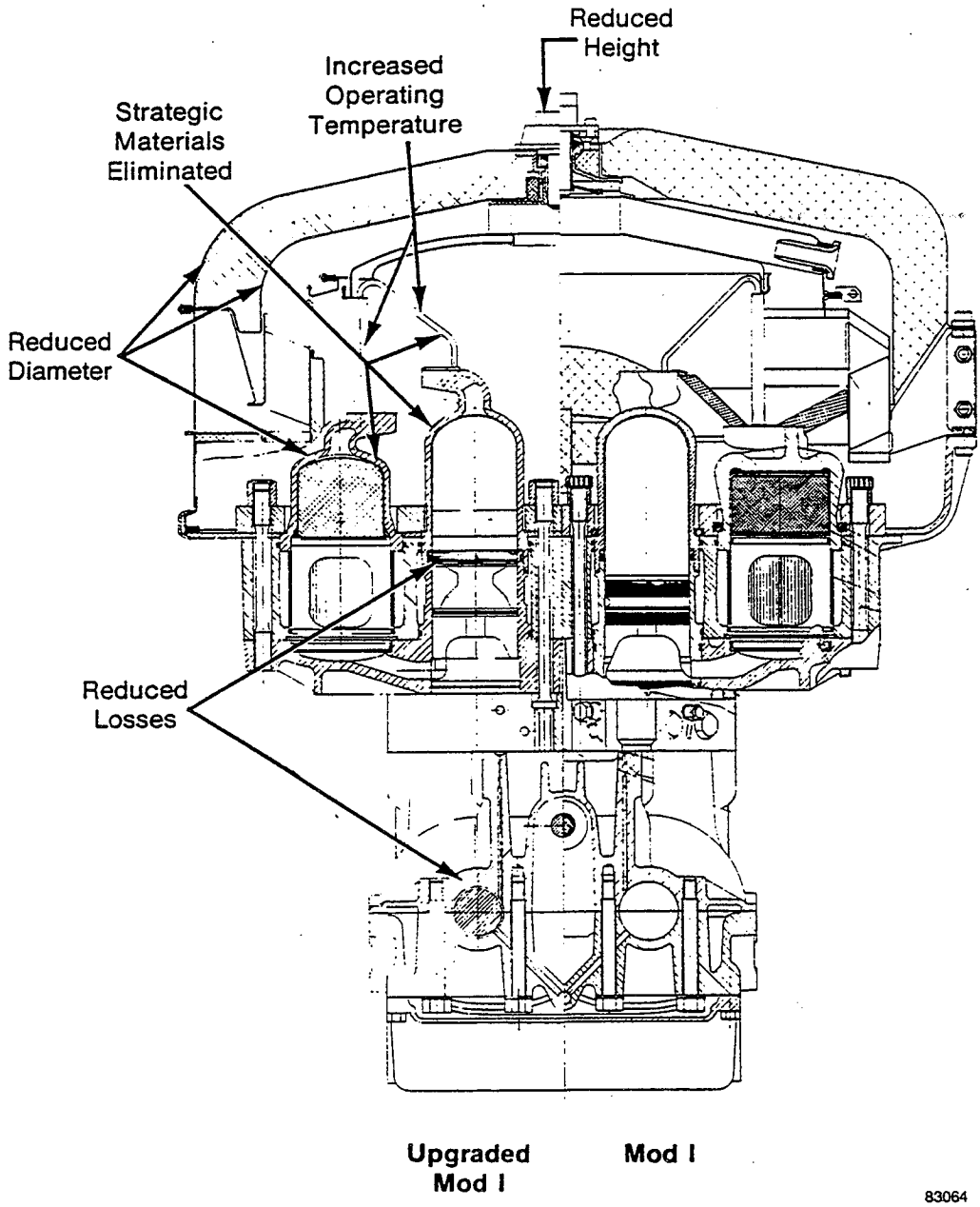

Figure 2-1. Comparison of Mod I and Upgraded Mod I Engines

Table 2-1. Accumulated Mod I Engine Test Hours

	Engine No.	Test Hours	Uses
Mod I	1	1,013	AMC LERMA (later upgraded as No. 6)
	2	660	Performance development
	3	2,376	Endurance tests
	4	238	First USA build (later upgraded as No. 5)
	7	4,480	Seal life
	11	115	Performance tests
		8,882	
Upgraded Mod I	5	3,066	Heater head performance, NASA TU van
	6	4,060	820°C endurance test
	8	1,455	ITEP-GMRL, AMC Spirit
	9	1,597	ITEP-Deere, NASA TU D-150 pickup
	10	202	Performance tests
		10,480	
Total Test Hours		19,362	

91TR15

Table 2-2. Accumulated Mod I Vehicle Test Mileage

Engine	Vehicle	Test Mileage
Mod I, No. 1	AMC Lerma	5,000
Upgraded Mod I, No. 8	AMC Spirit	15,000
Upgraded Mod I, No. 5	NASA TU Van	5,000
Upgraded Mod I, No. 9	NASA TU D-150 Pickup	22,100
Total		47,100

91TR15

Engine No. 6 was built as an upgraded engine and tested in its BSE configuration to evaluate engine performance. The heater heads on this engine were first used for an endurance test with 820°C heater head temperature.

Engine No. 7 was configured as a Mod I engine and operated in a BSE configuration. Its primary purpose was to accumulate engine test hours for evaluation of main seal life. The testing occurred to a prescribed accelerated duty cycle during 24 hr/day operation, 7 days a week. This engine not only provided seal data, but also information on other BSE components.

Engine No. 8 was built in an upgraded configuration as part of the ITEP. This engine was installed in the AMC Spirit and provided to GMRL for in-vehicle test and evaluation.

Engine No. 9 was also built as an upgraded Mod I engine as part of the ITEP. This engine was provided to Deere & Co. for engine dynamometer testing. Upon completion of that testing, this engine was installed later in the NASA TU project D-150 pickup truck.

Upgraded Mod I **Engine No. 10** was utilized for performance testing, as was Mod I **Engine No. 11**.

2.1 Mod I Engine Operation and Performance

The Mod I engine is a double-acting, four-cylinder design based on the Seimen's concept for Stirling engines. The engine is designed to have hydrogen as its working fluid and gasoline as its primary fuel. The engine's power output was designed to be in the 50- to 65-kW range at 4000 rpm with 15-MPa working gas pressure. The design maximum efficiency is between 35 and 40% at mean pressure of 15 MPa and 1500 to 2000 rpm. The original Mod I is shown in cross section on the right side of Figure 2-1, and the upgraded Mod I is shown in cross section on the left side. The Mod I was designed for operation at 720°C heater tube temperature, while the upgraded Mod I was designed to operate at 820°C heater tube temperature. In addition, the upgraded Mod I included advantageous features that are not present in the Mod I, including the elimination of cobalt-based alloys, part power optimization, reduced losses, reduced specific weight, and smaller package size.

Figure 2-2 shows the performance history of various engines in the ASE project. Initial data measured on engine No. 5 in an SES configuration showed a maximum power level of 49 kW and a peak efficiency of 30.5% at 15 MPa. After improvements, measured data from both ITEP engines No. 8 and No. 9 showed a maximum power level of 53 to 55 kW and a peak efficiency of 35.5%. Engine No. 9, which was utilized in the Deere & Co. test program, was tested both at 720°C and 820°C. Data taken at 820°C showed a maximum power level of 64 kW and peak efficiency of 36.5%. The increase in power was as predicted based on the 100°C temperature rise associated with the change in heater head tube set temperature from the Mod I to the upgraded Mod I engine. The 820°C heater tube temperature technology was an essential step in proceeding to Mod II engine development, since it was specifically designed for operation at 820°C.

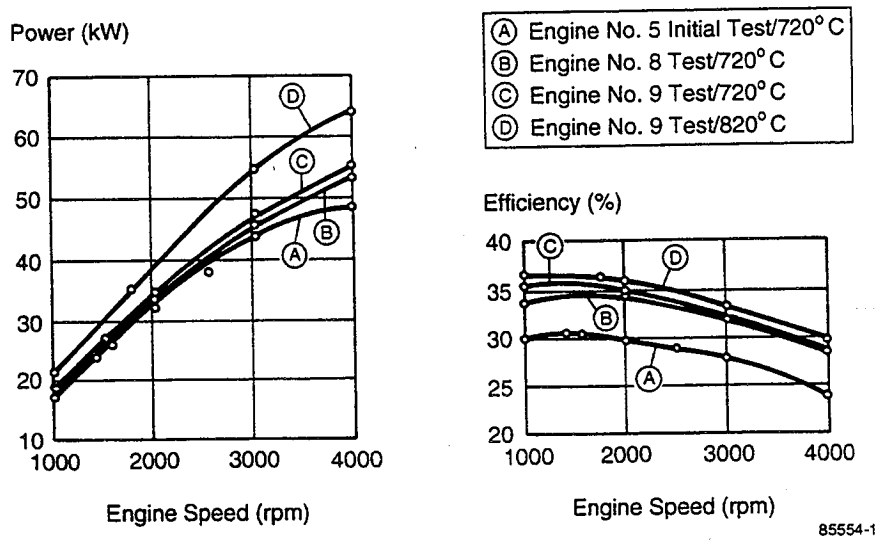

Figure 2-2. Upgraded Mod I Engine Performance (Full SES)

2.2 Industry Test and Evaluation Program

In 1982, NASA-LeRC, in conjunction with DOE, initiated the ITEP to obtain an independent evaluation of the Mod I by automobile and engine manufacturers (see Figure 2-3 for the ITEP schedule). This program was aimed at loaning ASE project hardware to industry in return for their evaluation of those engines. Both GMRL and Deere & Co. agreed to participate in the ITEP. Tests were performed at no cost to the government by these companies in 1984.

Upgraded Mod I engine No. 8 was installed in a 1981 Spirit vehicle and provided to GMRL in Warren, Michigan. Testing at GMRL was accomplished with only a few minor test problems. The engine exhibited excellent durability and data repeatability. The test results are detailed in Haverdink, et al. (1984) and summarized in Table 2-3 for emissions, mileage, and acceleration. The Stirling engine and vehicle had not been optimized as an integrated system at the time of the tests, and the Spirit/ASE 0- to 60-mph acceleration time of 23.5 sec at 3250-lb test weight was higher than other equivalent test weight vehicles. The GMRL tests indicated that, based on acceleration times, the ASE-powered Spirit should be compared with the Chevette, which was in a lower test weight class. The lack of an optimized system adversely affected emissions and vehicle mileages as well. Even so, overall emissions and especially the NO_x level in both test weight classes were below the Federal standards. These tests identified several deficiencies that were corrected later in the program. The primary fuel economy difficulty was that idle fuel flow was excessively high and that the vehicle and engine systems needed to be matched and optimized. Further development at MTI reduced the idle fuel consumption to approximately half of what it was in the GMRL tests using the MTI DAFC developed for the Mod II engine.

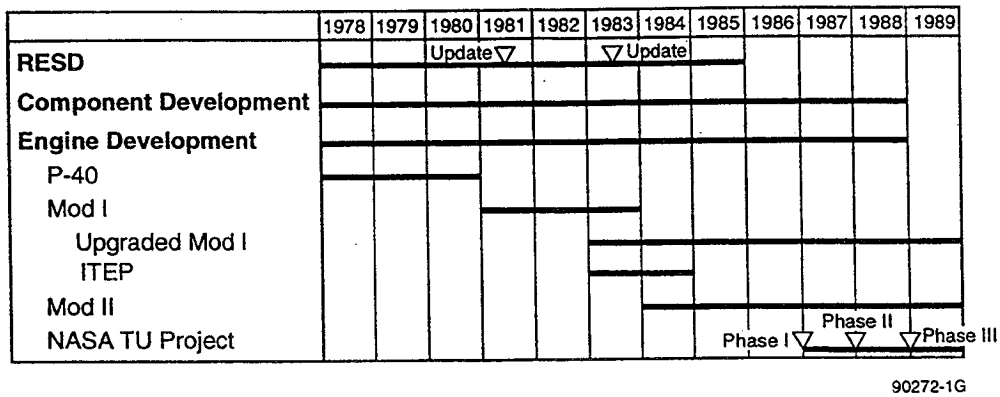

Figure 2-3. ITEP Schedule

Table 2-3. Evaluation of Mod I by GMRL (1984)

Vehicle	Test Weight Class	Emissions (g/mi)[1]			Mileage (mpg)			Acceleration (sec)	
		HC	CO	NO_x	Urban	Highway	Combined	0 to 60	50 to 70
Chevette/IC	2500	0.30	0.99	0.82	28.4	40.4	32.8	18.0	13.5
Spirit/ASE[2]	2500[3]	0.22	1.92	0.49	22.3	40.7	28.0	18.8	19.3
Spirit/ASE[2]	3250[3]	0.26	1.87	0.59	20.5	34.7	25.1	23.5	21.0

[1]Current Federal emissions standards:

HC = 0.41
CO = 3.40
NO_x = 1.00

[2]Stirling engine and vehicle system not optimized.

[3]Tested on a chassis dynamometer that simulated various test weight classes (TWCs).

91TR15

Test cell evaluation of Mod I engine No. 9 was provided by the John Deere Product Engineering Center (PEC) in Waterloo, Iowa. Data obtained included power, brake specific fuel consumption (BSFC), multifuel operation, noise level, and transient response. Direct comparisons were made with commercial off-highway 3.6- and 3.9-liter engines. Only minor mechanical failures occurred during the testing, and none of these were related to the BSE. Unfortunately, the performance test data obtained at PEC for power and BSFC were lower than that recorded at MTI during acceptance tests for the same engine and were not representative of typical engine performance. Subsequent replacement of damaged piston rings and cleaning of the preheater brought the engine back to its original performance level and verified the degraded conditions of the engine when tested at PEC. Tests did verify multifuel (gasoline, No. 2 diesel, and JP4) operation, although results indicated that control system changes were required with diesel to prevent sooting the preheater. Stirling noise level was 6 dB lower than the 3.6-liter diesel at equivalent loads and speeds. Transient torque response was slower than a naturally aspirated diesel but faster than that of a turbocharged intercooled diesel.

2.3 Endurance Testing

Both Mod I engines No. 3 and No. 7 were used for endurance tests of piston rod seals (see Section 3.1.3.3), piston rings (see Section 3.1.3.4), and mechanical components (Lundholm 1986). Over 6500 hr of testing was accomplished on these two engines while evaluating component endurance. The principal seal testing was performed using an accelerated duty cycle for piston rod and main seal testing. This duty cycle is shown in Figure 2-4 and was designed so that 1 hr of cell tests was equivalent to 2 hr of vehicle operation. This was accomplished by operating the test cell engine at an average speed and pressure that was twice that experienced in a vehicle undergoing over-the-road operation as represented by a Federal EPA driving cycle (Figure 2-5). During these tests, many seals were able to achieve over 2500 hr of cell testing before a defined level of oil leakage occurred. This level was selected on the basis of the expectation of a deterioration of engine performance. In fact, many engines operated at far higher levels without engine degradation. Similar Stirling engine piston rod seal designs outside of the ASE project have been tested up to 5000 hr in continuous duty without impacting engine performance. These results allayed fears that seals could not operate over the life of an automotive engine. Engine No. 3 performed endurance testing of heater heads and other hot components and achieved over 3500 hr on many components while identifying areas for further development (see Section 5.0).

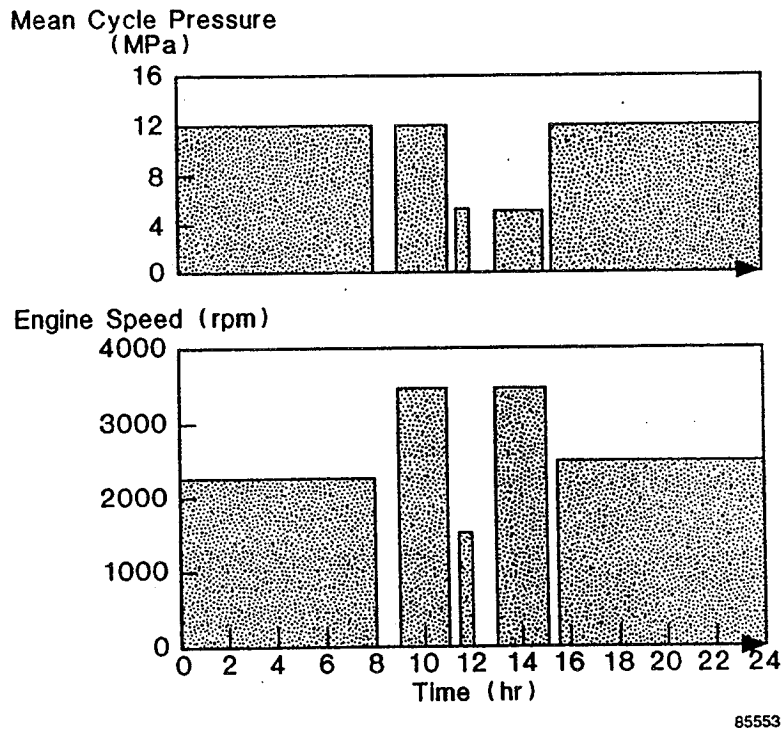

Figure 2-4. Accelerated Duty Cycle (Main Seal Life Testing)

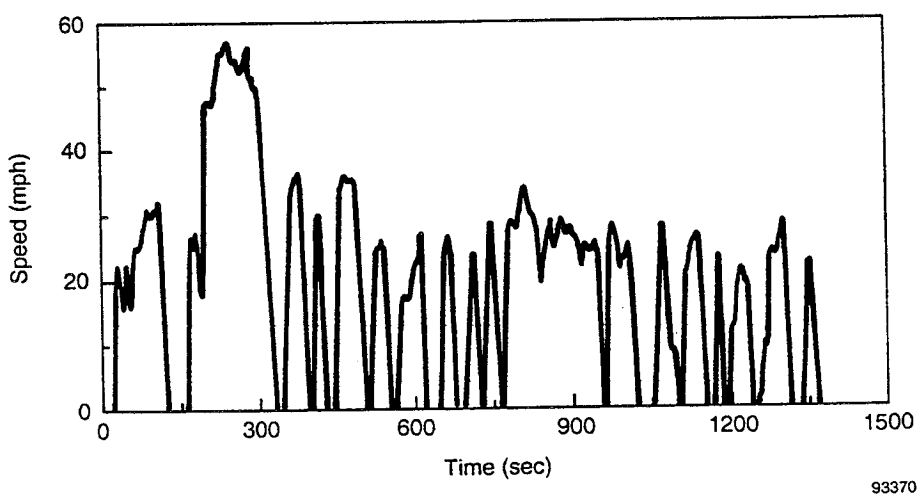

Figure 2-5. Federal Urban Driving Cycle

3.0 MOD II ENGINE DEVELOPMENT

The Mod II BSE and SES design was initiated in June 1983 following review and approval by NASA of the V4, annular-regenerator engine design concept developed in the RESD task. Other features incorporated in the Mod II from the RESD were: 820°C heater tube operating temperature, CGR combustor, rolling element bearings, multi-volume compressor, electrically operated air supply, and power systems. The BSE design review was completed in April 1984 and the SES in August 1984 and approved by NASA shortly thereafter. The initial test run of the Mod II was made on schedule in January 1986, and its final SES characterization occurred in October 1988. A summary of the Mod II design is presented in this section. Development of the engine and system components is also reviewed and results of tests are presented. Differences between the original Mod II design and final Mod II hardware configuration are reviewed.

3.1 Original Design Description

The Mod II Stirling engine utilizes a four-cylinder, V-block design with a single crankshaft and an annular heater head. The Mod II SES is designed to achieve a maximum power of 62.3 kW (83.5 hp) and has a maximum speed of 4000 rpm at a heater tube temperature of 820°C and a mean pressure of 15 MPa at 50°C cooling water inlet temperature. The BSE consists of three systems: external heat system, hot engine system, and cold engine/drive system (see Figure 3-1). The BSE, when combined with the controls and auxiliary systems, constitutes the SES. In the Mod II, the external heat

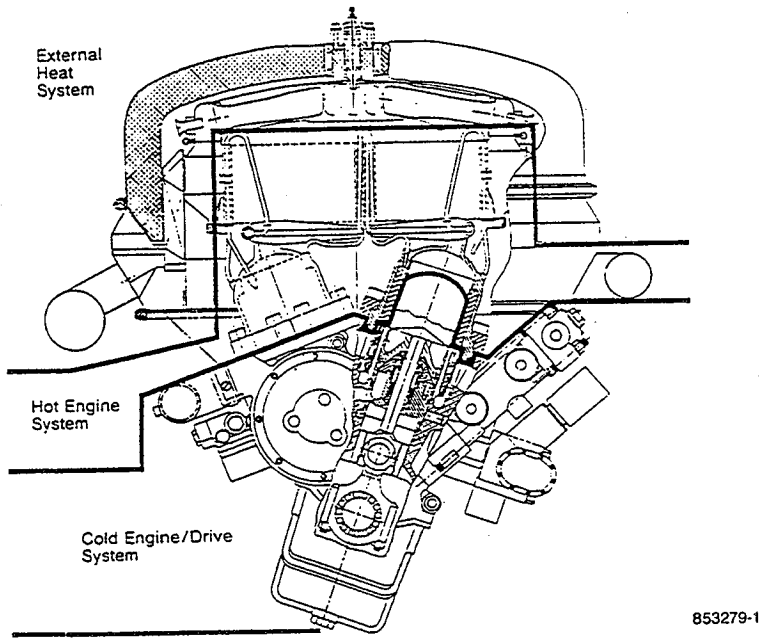

Figure 3-1. Mod II BSE Cross Section

system converts energy in the fuel to heat flux through the heater tube walls. Next, the hot engine system, which contains the hot working gas in a closed volume, transforms this heat flux to a pressure wave that acts on the pistons, producing motion. The cold engine/drive system transfers piston motion to the connecting rods, and the reciprocating rod motion is converted to rotary motion through a crankshaft. The controls and auxiliaries provide the fuel and air supply and power control necessary for automotive operation.

3.1.1 External Heat System

The external heat system converts the energy in the fuel to heat flux into the closed working cycle. As shown in Figure 3-2, it consists of a preheater, inlet air and exhaust gas manifolds, insulation cover, combustor assembly, fuel nozzle, and flamestone. To maximize fuel economy, this system requires high efficiency combined with a low hot mass to reduce urban driving cycle cold-start penalty.

The air needed for combustion is delivered to the engine combustion chamber from the combustion air blower through two opposing inlet tubes. The inlet air flows through the preheater, where its temperature is increased by heat transferred from the combustion exhaust gas, into a plenum between the insulation cover and the combustor. From there it flows at high speed through ejectors into the combustor mixing tubes, carrying with it part of the combustion gas. In effect, this combustion gas recirculation utilizes air flowing through multiple ejectors to entrain exhaust gas flow, which then flows via a mixing section into the combustion zone. By recirculating exhaust gases through the combustor, flame temperature can be reduced, which, in turn, reduces the amount of NO_x emissions produced in the combustor.

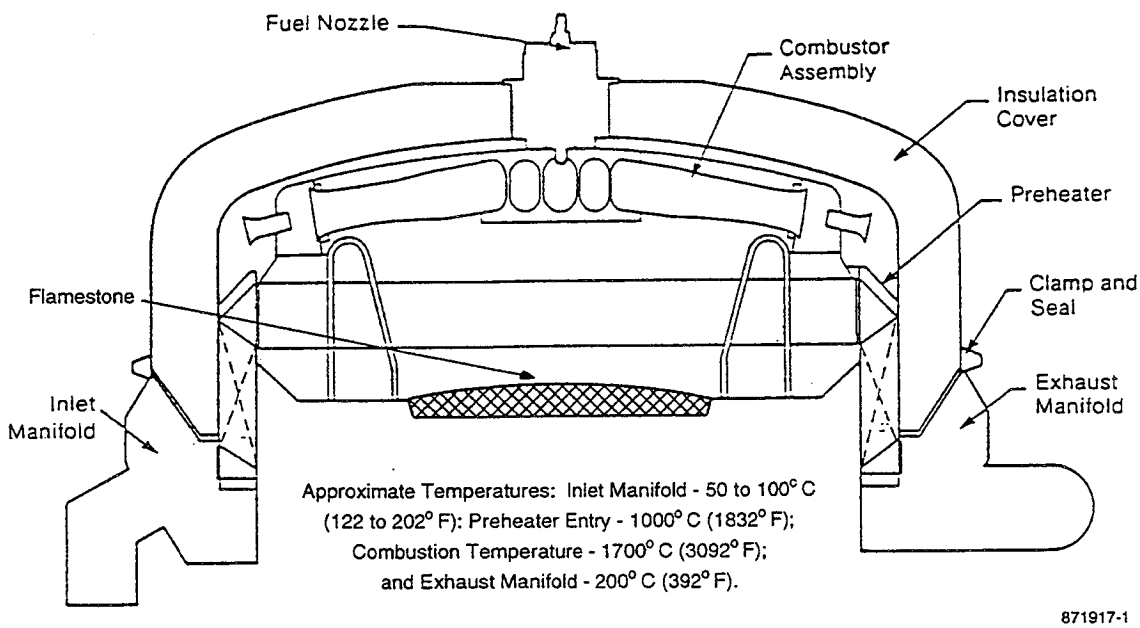

Figure 3-2. External Heat System

The air/combustion gas mixture then enters the swirler region of the combustor, where air-atomized fuel is injected through the fuel nozzle and ignited. The burning fuel releases heat in the combustor, increasing the gas temperature to a maximum level. This causes the combustion gas to accelerate toward the heater head tubes.

At the heater head, the combustion gas passes through gaps between tubes and fins, transferring heat from the combustion gas to the Stirling cycle through the thin walls of the heater head tubes. After passing the heater, part of the gas mass is recirculated through the combustor mixing tubes, but the majority is forced through the preheater into the exhaust manifold. The exhaust gas temperature is reduced in the preheater as heat is transferred through its walls to the inlet air. The exhaust gas leaves the engine through two opposed outlet tubes that extend into tail pipes. Because the continuous combustion system of a Stirling engine produces such low emissions and is so quiet and clean, the tail pipes do not require any catalytic converter or muffler. The general specifications and conditions for the external heat system are shown in Table 3-1.

Table 3-1. External Heat System Specifications

Parameter	Value
Fuel Massflow, g/sec (lb/min)	0.15 to 5.2 (0.02 to 0.69)
Excess Air Factor	1.15 to 1.25
Airflow, g/sec (lb/min)	2.9 to 86.5 (0.38 to 11.44)
Atomizing Airflow to Fuel Nozzle, g/sec (lb/min)	0.36 to 0.8 (0.05 to 0.11)

91TR15

3.1.1.1 Preheater and Inlet Air/Exhaust Gas Manifolds

The preheater matrix is a welded-plate, counterflow heat exchanger with straight-through airflow channels. Exhaust flow enters and exits through crossheaders at right angles to a corrugated part in which true counterflow exists. The plate-to-plate gaps are kept constant in the header sections by small dimples stamped in each plate. These bear against flat areas of the adjacent plates to maintain the required spacing. In the counterflow section, plate spacing is established and maintained by the height of the corrugations stamped into the plates. These also introduce turbulence in the airflow to enhance heat transfer. The 0.1-mm (3.9-mil) thick plates are made of 253 MA alloy. This stainless steel alloy has constituents to improve high-temperature oxidation resistance.

The preheater matrix is welded between inner and outer circumferential walls and then welded gas tight to the manifold section. The manifold section has a partition that separates an upper exhaust chamber from the lower inlet chamber. Two air inlet tubes and two exhaust outlet tubes connect to the manifolds. These are equally spaced 90° apart, and both inlets and outlets are 180° opposed. The manifolds are designed to maintain a circumferentially even flow distribution through the matrix for both air and exhaust.

3.1.1.2 Ceramic Preheater

Because the metallic preheater described above has a relatively high manufacturing cost (due to the number of welds required to join the 1000 matrix plates), an alternative ceramic preheater has been designed. This ceramic is a mixed oxide, a proprietary material of Coors Porcelain Company. Although it has a significantly lower manufacturing cost, this preheater has not yet been developed to the point where it is reliable. Further development of the ceramic preheater is required to achieve a design and manufacturing process that can consistently deliver a leak-free product. As a heat exchanger, the ceramic preheater performs identically to the metallic preheater so that there is no loss in performance.

3.1.1.3 Insulation Cover

The insulation cover is made with Triton Kaowool® insulation between an outer aluminum casing and a thin, inner stainless steel casing. The cover attaches to the preheater matrix and manifold assemblies with a clamp and seal arrangement.

At its center, the cover is attached and sealed to the combustor and fuel nozzle with a metal bellows, which accommodates the differences in axial thermal growth between the combustor and preheater. The CGR system requires a moderately high inlet pressure, and this gives an upward pressure load on the cover that tends to lift the insulation cover and press the combustor cover downward. To add stiffness, the cover has a number of radial corrugations in the outer casing.

3.1.1.4 Combustor Assembly

Due to the hot environment, stainless steel was selected for all combustor parts. The optimal CGR configuration consists of 12 discrete ejector nozzles in line with 12 radial mixing tubes, as shown in Figure 3-3, for a CGR design. These tubes converge near the center of the combustor to form a swirl chamber into which the fuel is sprayed. The mixing tubes are radially fixed at their outer ends and allowed to grow inward through holes in the swirl chamber skirt.

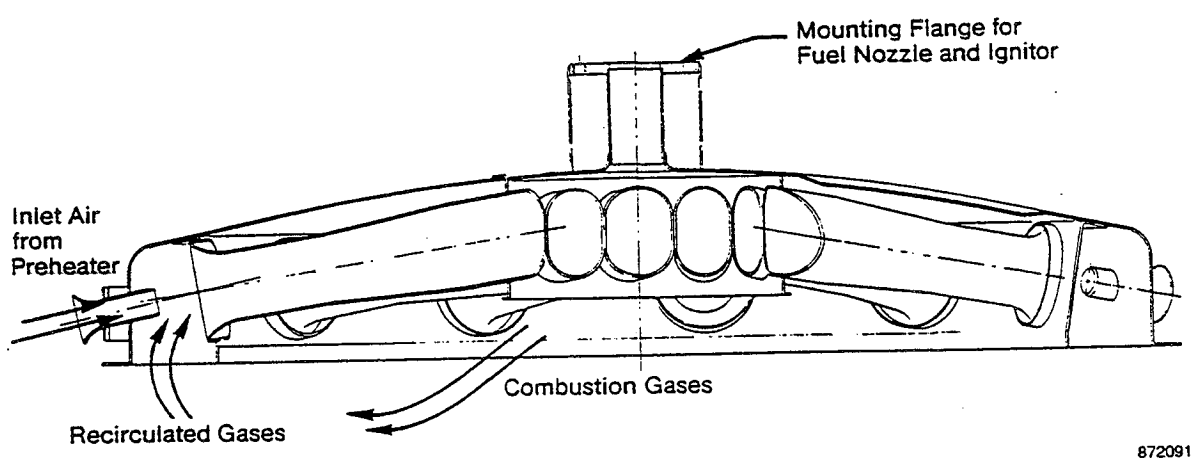

Figure 3-3. CGR Combustor Assembly

The combustor liner is designed with a spherically shaped shell made from specially textured metal. Radial ribs are formed in the basic shape to give structural support while easing circumferential strains. All these features are designed to prevent buckling of the thin sheet under the severe thermal gradients imposed in service. The mixing-tube locating ring is welded to the liner on its outward edge, to shield the welds from the combustion zone heat.

The outer edge of the combustor liner is clamped to the top flange of the preheater, separating the incoming preheated air at the ejector entries from the exiting combustion gases. Because the heater head grows up thermally more than the preheater, the secondary seal between the mixing-tube ring and the heater tubes is made axially loose, acquiring full seal only at operating temperature. This design preserves alignment between ejector nozzles and mixing tubes without requiring deformation of the combustor liner, as in earlier designs.

The combustor neck extends vertically through the center hole in the insulation cover. The fuel nozzle is bolted to the top face of the neck, clamping one end of the bellows unit, with the other end welded to the inner cover casing. The bellows provides a flexible seal connection that accommodates the relative vertical motion between the combustor top liner and the bottom of the insulation cover. This relative motion is caused by differential thermal growth and also by air pressure acting upward on the insulation cover and downward on the combustor liner. These effects vary with the engine power delivery, due to changes in metal temperatures and air pressure.

3.1.1.5 Fuel Nozzle

The fuel nozzle, shown in Figure 3-4, is an air-atomizing nozzle with 12 orifices that provide a spray angle of 75°. Atomizing air is supplied internally within the nozzle at a maximum flow rate of 0.8 g/sec (0.11 lb/min) and a maximum fuel pressure of 350 kPa (51 psi).

The ignitor is installed in the center of the fuel nozzle. The fuel nozzle itself is mounted in the center of the combustor upper wall, sealed to the insulation cover via the bellows seal.

3.1.1.6 Flamestone

The flamestone defines the lower wall of the combustor and is located in the center of the ring of heater head tubes to prevent leakage of combustion gases bypassing the heater (see Figure 3-2). Together with the insulation on top of the engine block, it acts as a heat barrier to minimize heat conduction to the cold components.

The flamestone is constructed of a stainless steel frame and post (attached to the engine block) supporting a composite ceramic shield of Triton Kaowool® rigidized insulating fibers covered with Nextel™ fabric to prevent erosion. The convex surface of the flamestone sits just above the heater head tube-to-manifold brazed joints, shielding them from direct combustion gas flow to ease thermal stress during the engine start-up transient.

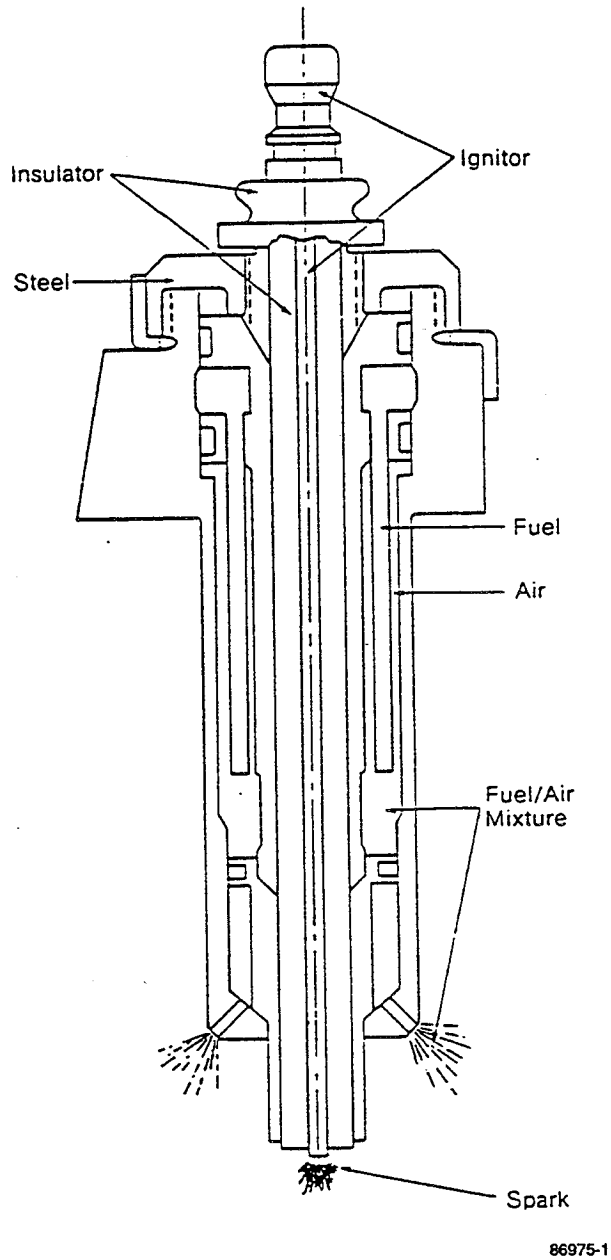

Figure 3-4. Fuel Nozzle and Ignitor

3.1.2 Hot Engine System

The hot engine system consists of two heat exchangers that are directly involved in the operation of the Stirling cycle: the heater head and the regenerator. Both contain hydrogen and impart heat to the hydrogen that, in turn, provides the force to drive the pistons and thus powers the engine crankshaft.

The heater head transfers the heat contained in the hot combustion gas provided by the external heat system to the hydrogen. The heater head is constructed of many fine tubes. Hot combustion gas passes over the external surfaces of these tubes while the hydrogen passes through the internal surfaces of the tubes. It is the metal temperature of the tubes that sets the metallurgical limit of the heater head design.

A matrix of fine wire mesh, the regenerator is also a heat exchanger by virtue of its construction. As the hydrogen flows from the hot heater head to the cold cooler, it passes through the regenerator where a transfer of heat occurs. This transfer is accomplished by the wire mesh absorbing the energy. When the pistons push the hydrogen in the opposite direction, from the cooler to the heater head, it passes through the regenerator and absorbs heat from the wire mesh. It is this transfer-absorption phenomenon that enables the Stirling cycle to operate efficiently. After passing through the regenerator on its way to the heater head, the hydrogen is already hot and therefore requires less heat to raise it to operating temperature. Additional heat to raise the hydrogen to operating temperature comes from heat transferred through the heater head tubes from combustion gas, as explained above. From this point, the Stirling cycle repeats itself. The hydrogen is heated and expanded, which provides the force to drive the piston.

3.1.2.1 Heater Head

A heater head has three functions. First, it delivers the hydrogen to the top of the piston to convert high pressure forces into work through the downward motion of the piston. Second, it passes the hydrogen through a finite length of tube so that heat can be transferred to it from the combustion gas. This is normally accomplished by passing hydrogen through many separate tubes, whose external surface is heated by the combustion gas. The internal surface of the tubes is cooled by the hydrogen, which picks up heat from the tube wall and carries this energy to do the work of the Stirling cycle. Third, the heater head delivers the hydrogen to the top of the regenerator through which it must flow on its way to the cooler.

There are many variations in heater head configurations to address these functions. A typical manifold heater head is presented in Figure 3-5. The Mod II hot engine system is an annular configuration.

As shown in Figure 3-6, the regenerator and cooler are concentric with the piston and separated from it by a partition wall that also separates the regenerator from the expansion space above the piston. The hydrogen travels from the expansion space to the volume above the regenerator through the heater head.

As hydrogen flows out of the expansion space, it is collected in a manifold (see Figure 3-5.) Thus, the first function of the heater head is met. An array of tubes is placed in the front manifold through which hydrogen will pass and pick up heat from the combustion gas. The tubes extend upward and then back downward to bring the hydrogen to the manifold above the regenerator (see Figure 3-7).

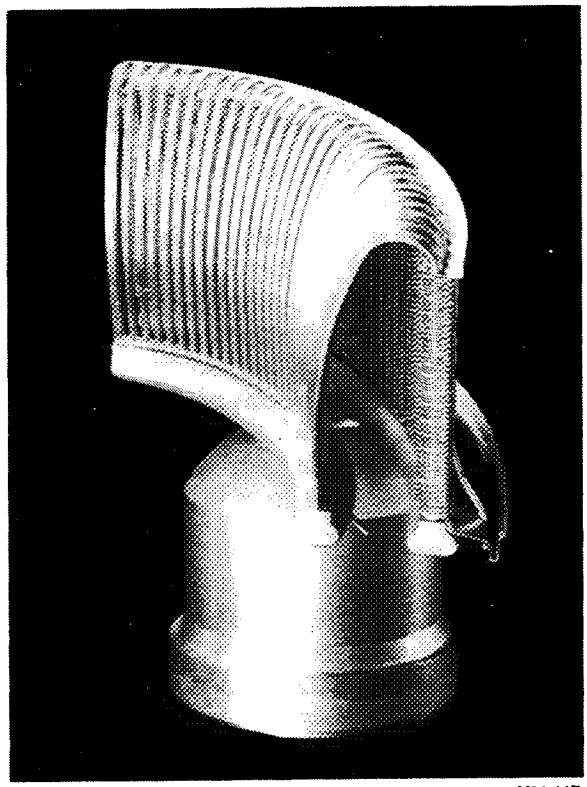

V91-117

Figure 3-5. Typical Annular Heater Head

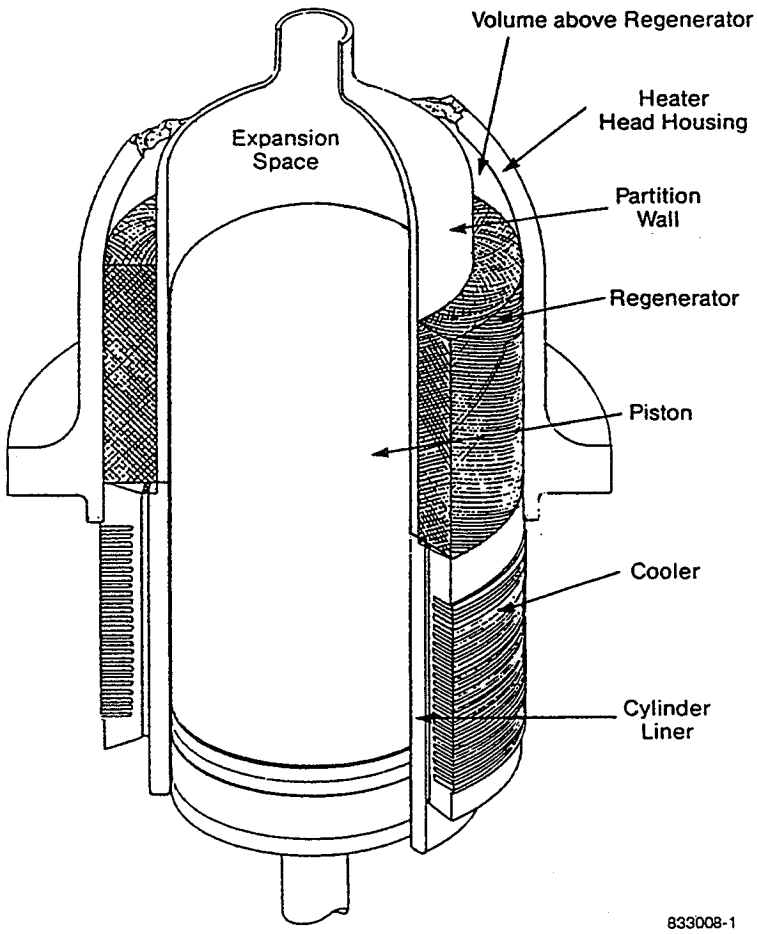

Figure 3-6. Typical Annular Hot Engine System

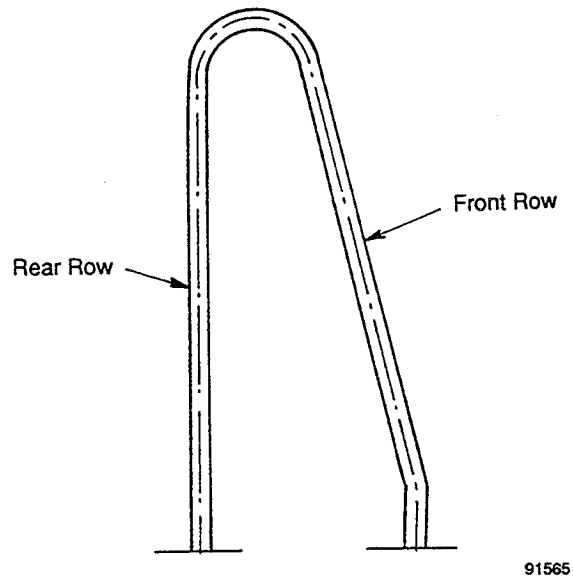

Figure 3-7. Heater Head Tube

When combustion gas passes over the external surfaces of the front-row tubes, the temperature of the gas will decrease, since a portion of its energy has been transferred to the hydrogen inside the tube. In order to enhance the heat transfer through the rear-row tubes, fins are placed on the external surface of the tubes, as shown in Figure 3-8, to increase the surface area for heat transfer and to reduce the flow area of the combustion side. The raised areas that provide fin-to-fin spacing are located to encourage combustion gas flow close by the tubes (rather than through the fin tips). At the rear row, the fin section helps to maintain the tube spacing. Thus, the second function of the heater head is served, since over a finite length of heat exchange surface (the tubes), energy from the combustion gas is transferred to the hydrogen inside the tubes.

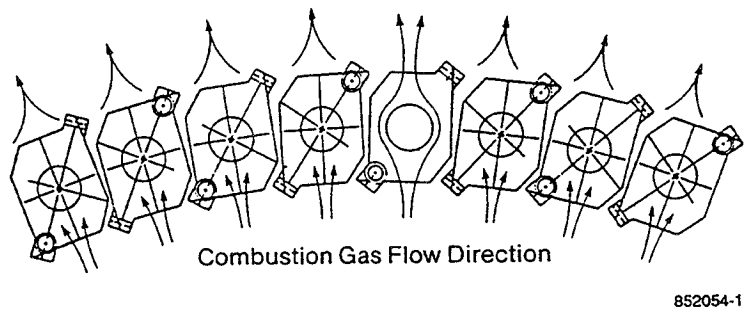

Figure 3-8. Fins on Rear Row Tubes

The only remaining function is for the hydrogen to be delivered to the top of the regenerator. In the configuration shown in Figure 3-5, this is accomplished by another manifold into which the tubes are brazed.

Since the Mod II has four cylinders, it has four heater head assemblies that are mounted on the top of the engine block. Because of the V-drive configuration, each assembly is at an angle to the other. The front and rear row tubes of each heater head assembly combine to form a circle, as shown in Figure 3-9. The resulting configuration is symmetric to the combustion volume and preheater of the external heat system. This helps achieve an even flow through the heater head tubes and preheater and results in no abnormal variations in temperatures from one area of the engine to another.

The heater tubes attach horizontally on the inner face of the manifold. On the regenerator side, bosses are provided on the top face of the housing where the tubes attach.

3.1.2.2 Regenerator Assembly

The regenerator assembly consists of the regenerator matrix and partition wall. Individual wire-mesh screens are stacked, pressed, and vacuum sintered into a single annular biscuit. This ring is turned on its inner diameter and slipped over the thin metallic partition wall. The partition wall separates the cylinder/expansion space from the regenerator flow channel, and its cylindrical shell is flanged outward at the cooler end to act as a spacer between the regenerator and cooler (see Figure 3-10). This assembly is vacuum brazed and then final machined to ensure inside-to-outside concentricity. A photograph of the assembly is shown in Figure 3-11.

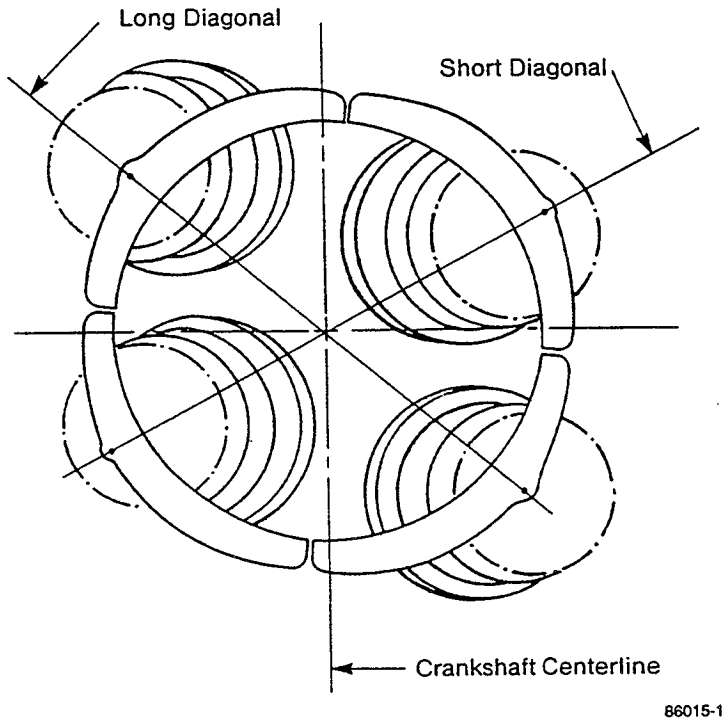

Figure 3-9. Heater Head Assemblies

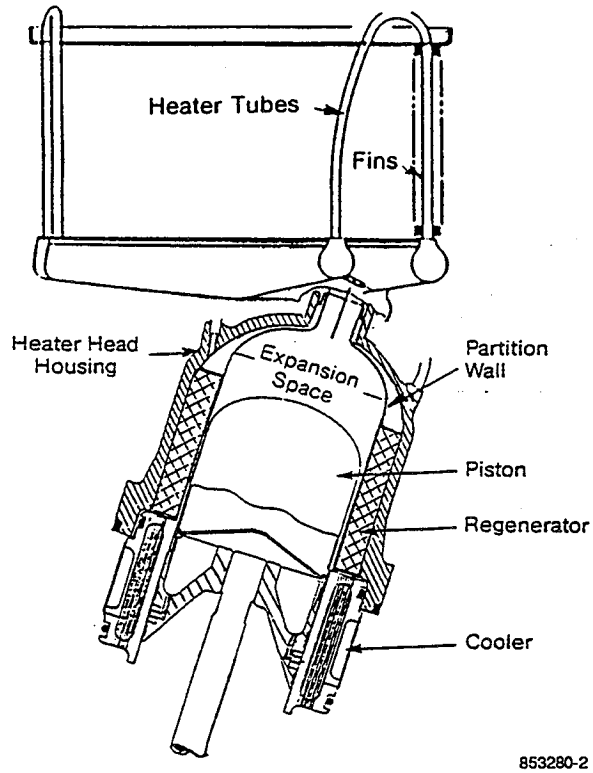

Figure 3-10. Hot Engine System

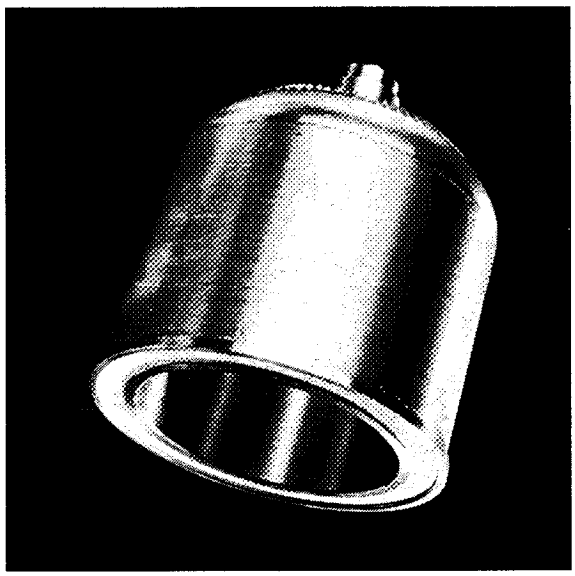

Figure 3-11. Regenerator Assembly

Stainless steel is used as the matrix material, since it has a thermal expansion about 20% higher than the housing material and excellent heat capacity. Use of this material results in a tight fit between the top of the partition wall and the housing at high temperatures. A good seal at this point is required to prevent hydrogen from bypassing the heater from cylinder space to regenerator or the reverse. Inconel 718, the partition wall material, has a thermal expansion slightly above the housing material and a high yield strength. To ensure that no gap occurs between the matrix and partition wall, the Inconel 718 wall is nickel plated and brazed to the matrix.

The regenerator is pressed directly into the heater head housing with no outer shell. With the difference in thermal expansion between the housing and the stainless steel regenerator, there is no need for a tight fit between the housing and matrix to stop hydrogen from bypassing the regenerator from the hot to cold side or reverse. The upper end of the partition wall is a separate machined ring that is brazed to the shell and provides the seal between the wall and housing.

3.1.3 Cold Engine/Drive System

The cold engine/drive system transfers piston motion to connecting rods and then converts the reciprocating rod motion to rotary motion. As shown in Figure 3-12, the system consists of the engine block, gas cooler/cylinder liners, seal housing assemblies, piston and connecting rod assemblies, crankshaft, bearings, and lubrication and cooling

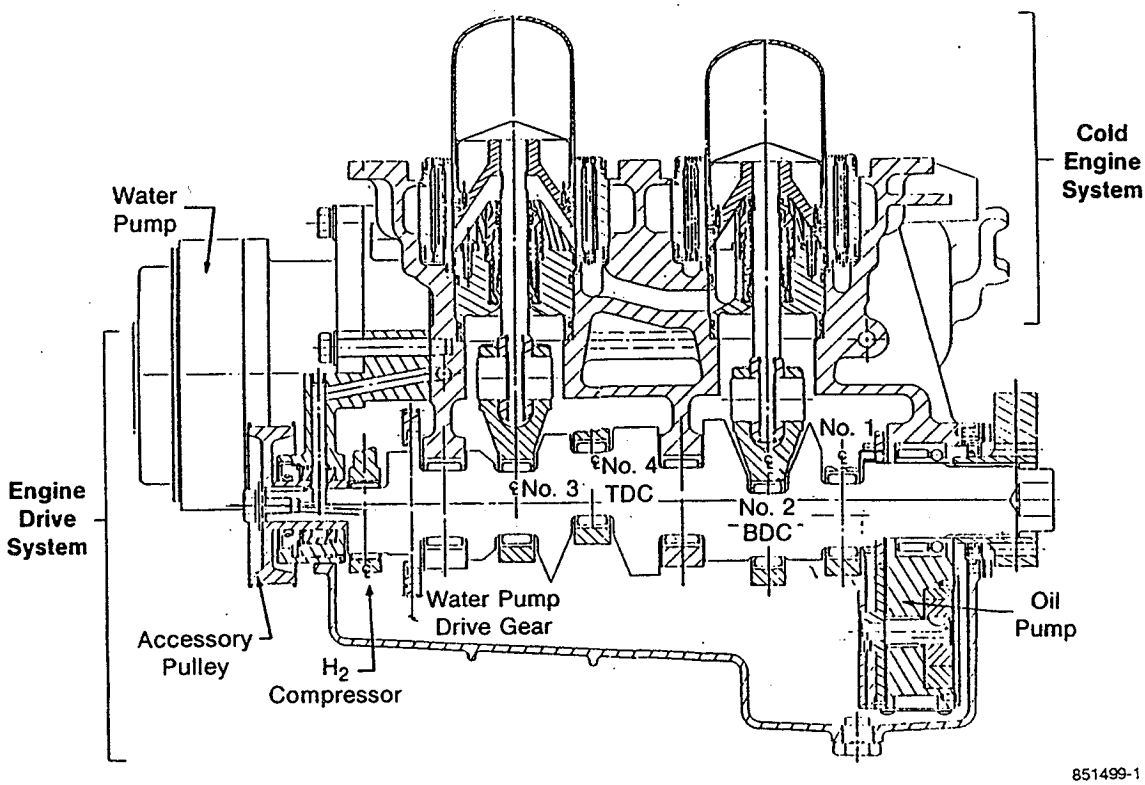

Figure 3-12. Cold Engine/Drive System

systems. Note that the gas cooler is the third and final heat exchanger in the closed Stirling cycle. The hydrogen transfers its heat into the cooler through an array of tubes that are cooled on their outside surface by water. This water is provided by the vehicle cooling system and cycles through the radiator.

The cold connecting duct, which is cast in the engine block, affects Stirling cycle performance. Dead volume and pumping losses are intensified in this cold region because of the increased hydrogen density. Minimizing both requires minimizing cylinder-to-cylinder spacing to provide short ducts of adequate flow area. Adequate provision for cooling water flow must also be made. To achieve maximum engine performance, all cylinders should run as close as possible to the same low temperature; therefore, coolant flow balance is very important. Minimum cooling water pumping power is obtained by arranging the coolers in parallel flow, but because the total pressure drop is much lower in that pattern, balancing becomes more difficult. Attention must be paid to the symmetry of water passages and concentration of pressure drop at the coolers in order to ensure the best performance. These demands shape the engine block design since the space claims of cold ducts and water passages are the dominant features.

3.1.3.1 Engine Block

The basis for engine construction is the unified cast-iron engine block. This single structural element establishes the basic geometry of the engine and incorporates a water jacket, cold duct plates, crosshead liners, and a crankcase. It also provides alignment to critical components and an attachment base for the assembly of all other parts. Control lines are directly embodied in the casting, greatly reducing external plumbing complexity.

The cast block is a four-cylinder unit with the cylinders arranged two each on two banks separated by an angle of 40° (around the crankshaft axis). Figure 3-13 shows a block assembly with pistons. This equal-angle V is in contrast to earlier double-acting V Stirling engines, which used four nonparallel cylinder axes to approximate a square array at the heater manifold plane. The two-bank, single-crank design provides cylinder axes that intersect the crank axis located in the plane at of the bottom face (machined) of the block. The bottom face is parallel to the top face (machined deck) of one bank, and both banks have a full deck perpendicular to the cylinder axes and bores. Each bore accepts a crosshead, seal housing, intercycle seal, lower cooler seal, cooler guide diameter, and water seal at the heater flange (in order, from bottom to top). These various machined surfaces are arranged to have ascending diameters. This allows finish machining of the bores from the deck (top) sides with one form tool plunge cut each.

The single-tool finishing cut provides excellent concentricity control even in high-volume, transfer-line production. After machining the cylinder bores, the main bearing caps are bolted into position, and the final bearing mounting diameters are line bored. The two water passages are through cored and divided into four independent passages by small flow blockers located directly on the annular coolers (see Figure 3-14). The cylinders are not cooled in series. Instead, a portion of the cooling water bypasses one cooler so that the subsequent cooler is not affected by a higher cooling water temperature. Headers for the two cooling water inlets and two outlets are thin-wall, tubular steel weldments.

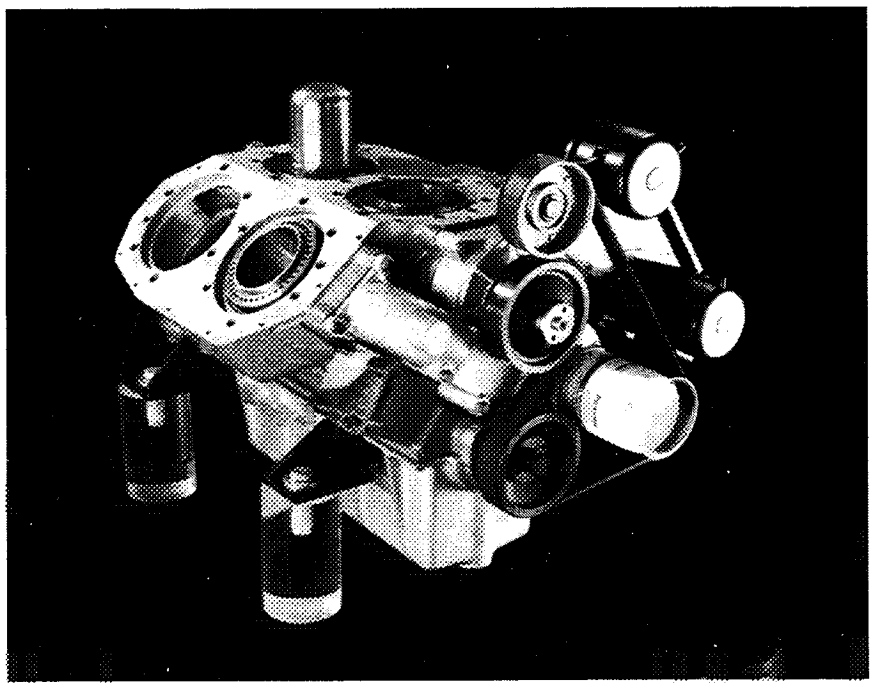

V91-116

Figure 3-13. Pistons Protruding Through Coolers

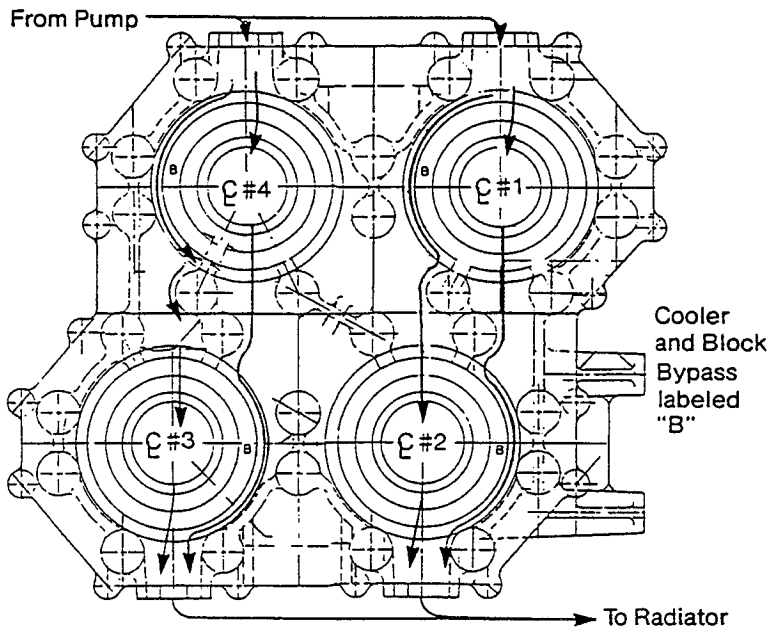

851512

Figure 3-14. Water Passages

The parts of the cold ducts called the cold rings manifold the hydrogen at the bottom of the annular coolers, allowing the hydrogen to flow through the cold pipes to the compression spaces of the adjacent cylinder. Small machined pads are located on each side of the casting to mount valve blocks, each serving two cylinders. An internal passageway is formed in the block casting to allow necessary interconnections between the pad-mounted blocks to remain totally within the engine block. This passage is formed by a sand core during the casting process. The sand core also improves control of metal cooling, porosity, and wall thickness around the cold ducts during the casting process, which ensures integrity of the pressure-containing walls of the cold ducts.

The engine block is sand cast in ductile or nodular iron alloy, with an ultimate strength of 544 MPa (80 ksi), yield strength of 374 MPa (55 ksi), and elongation of 6%. Ductile iron was chosen over ordinary (gray) cast iron because greater ductility is crucial to the safety and fatigue life of a vessel containing high cyclic pressure. Also, the spheroidal graphite structure of ductile iron eliminates the hydrogen permeation passages permitted by the lamellar carbon structure of gray iron.

Since accurate stress analysis of this complex shape would have required expensive three-dimensional numerical modeling, a very conservative approach was taken for approximate stress analyses in the pressurized regions. For instance, the cold duct rings are essentially cut toroids, but have been modeled as simple cylinders of their outermost diameter. Here, and everywhere else in the pressurized zone, the wall thickness is cast to 10-mm (0.394-in.) nominal. This wall thickness gives a safety factor against yield of 3.0. The maximum fatigue stress from 15 ±5 MPa (2205 ±735 psia) pressure (96 ±32 MPa (14.1 ±4.7 ksi) stress) gives a safety factor of 3.0, figured on a conservative straight line of the Goodman and Haigh diagram with an endurance limit 0.4 times ultimate strength.

The crankcase ahead of the main bearing is separately cast. Since there are no gas-pressurized zones in this front piece, it can be cast in lightweight alloy. This front cover incorporates the water pump and balance weight mounting, the compressor drive box, and the oil supply lines and bushing into an aluminum casting.

The oil pump is mounted on the rear main bearing cap. The pump and its balance weight are gear driven from the crankshaft and sit directly in the oil sump, so that no additional housing is required.

3.1.3.2 Gas Cooler/Cylinder Liner

The cylinder liner on which the piston rings slide contains the cycle pressure. The wear surface must be hard; thick and strong enough to contain the pressure and thin and conductive enough to allow its water-cooled exterior to carry away the heat of ring friction. In this annular design, shown in Figure 3-15, end plates drilled for tubes are integral with the liner, making it a kind of spool. Tubes are brazed into the end plates, and at the same time, segments are brazed to the outer diameter to leave in-and-out coolant flow windows to the tubed area.

The holes in the end plates are drilled in three concentric rings to give a constant tube center-to-center spacing. Six holes are omitted at the windows (180° apart), with the pattern of omissions providing inlet and outlet plenums for the circumferential coolant flow.

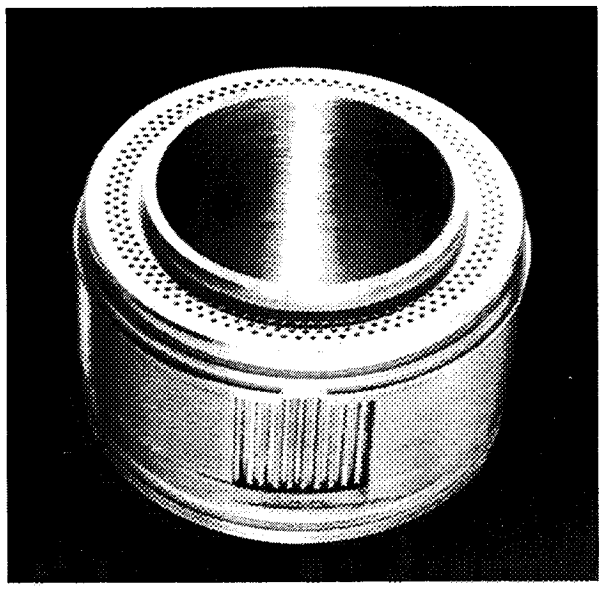

V91-118

Figure 3-15. Cooler Assembly

The cylinder bore diameter and the largest outer diameter (which guides the cooler in the block) must be cut in the same machining setup. This ensures minimal eccentricity and angular misalignment at final assembly between the finished cylinder and the crosshead bore in the block. Since the cooler pilots the heater head housing and partition wall/cylinder liner, good alignment is essential to prevent piston dome rubbing. After finish machining, the cylinder bore is exposed to plasma (ion) nitriding to harden the surface to Rockwell C66-70. A final honing of the hardened bore completes the processing.

The assembled gas cooler/cylinder liner is then fitted to the machined bore of the block. This fitting can also be done after the seal housing assembly is in place, allowing either component to be removed for service without disturbing the other.

3.1.3.3 Seal Housing Assembly

The seal housing assembly consists of a pumping Leningrader sliding seal, loading spring, cap seal, supply bushing, seal seat, and other small parts (such as O-rings) in a housing-and-cap container, as shown in Figure 3-16. The pumping Leningrader seal acts to seal hydrogen up to a pressure of 10 MPa (1450 psi) against an ambient-pressure crankcase with lubricating oil. The seal seat extends upward to form a guide for a spring follower to ensure that spring load is concentric and uniformly applied around the circumference of the main seal. The seal housing itself incorporates passages for adding and/or removing hydrogen from the closed Stirling cycle. Two O-ring seals, one to the cooler and one to the block, provide intercycle sealing between the compression space and surrounding cold ring. Two backup rings are included to withstand the reversing pressures.

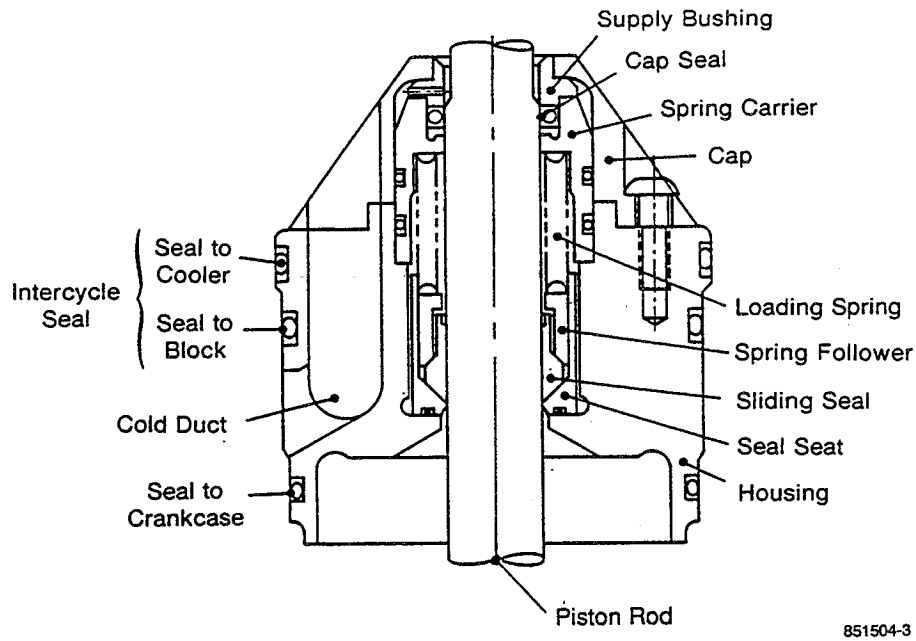

Figure 3-16. Seal Housing Assembly

Isolation of supply and P_{min} lines as they cross the joint (slip fit) between the seal housing and block is provided by expanding elastomer-over-steel tubing. This fitting is specially designed to press outward on its containing bore without producing any end loads that would tend to drive the seal housing off-center in the cylinder bore.

A major function of the seal housing is to provide oil jets that keep the main seal lubricated and cool. A single main oil gallery is drilled through the center of the block, intersecting the seal housing bore of each of the four cylinders at its lower extreme, just above the crosshead bore. An oil hole is drilled 90° in each direction from the intersection of the main gallery, and an oil jet tube is inserted, aimed at the base of the main seal. This location, because it falls between the crosshead faces, ensures no occlusion of the oil jets by the crosshead near top dead center with consequent temporary starvation of the seal. The actual sealing elements on the rod are compounds of Rulon® (a filled polytetrafluoroethylene material).

3.1.3.4 Piston and Connecting Rod Assembly

The lightweight piston design integrates the piston base, piston dome, and piston rod into a single, shrink-fit welded component that is assembled to the connecting rod and crosshead unit, as shown in Figure 3-17. The crosshead is a separate part, acting in concert with the wrist pin to form a joint between the connecting rod and piston rod.

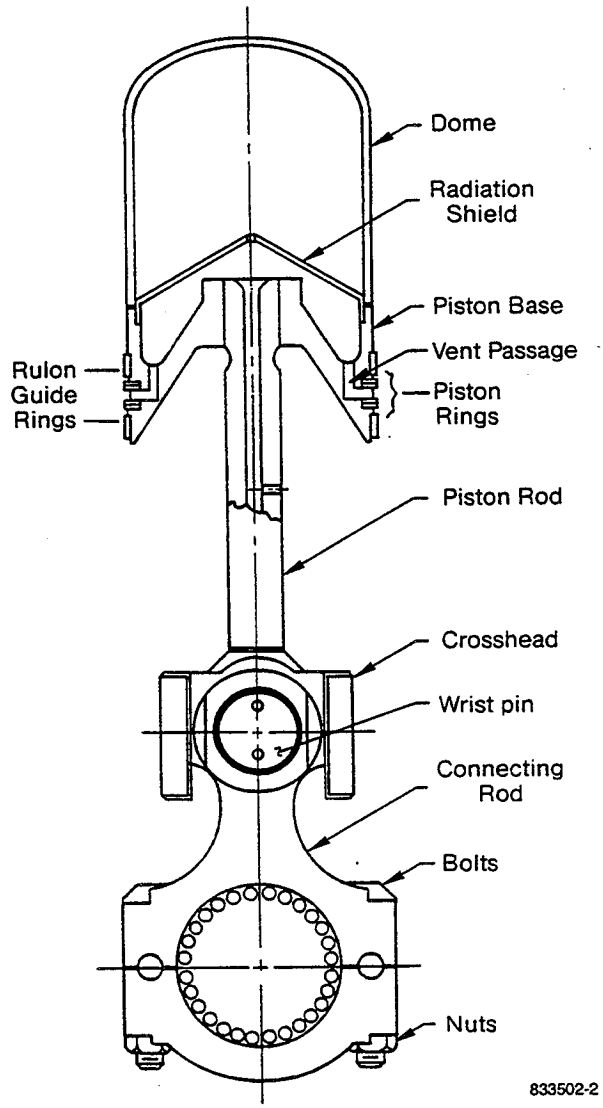

Figure 3-17. Piston and Connecting Rod Assembly

The piston configuration includes two sets of rings per piston. The sets are adequately separated to allow any hydrogen leakage to vent through the piston rod and relieve any pressure buildup between the rings. Venting the gap between the rings minimizes leakage of the hydrogen past the rings. Each set is composed of two rings; one ring is solid and the other is split. This configuration is termed a split-solid piston ring. The solid ring minimizes hydrogen leakage between it and the cylinder wall during engine operation. The split ring ensures cylinder wall contact during a cold start when a solid ring would not normally seal against the cylinder wall.

The piston base is machined from steel and acts as both the dome base and piston body. The piston dome is formed into a hollow, thin-walled cylinder with a curved top and open bottom. A radiation shield is placed above the base, the dome is slipped on around it, and the whole assembly is electron-beam welded. Because the dome is permanently fused to the base, better angular control of the dome is obtained. This ensures that a uniform dome wall of the proper thickness is maintained after final machining of the assembly and ensures adequate dome-to-cylinder running clearance. Two guide rings and two sets of piston rings are mounted in grooves machined in the piston base. The piston dome, base, and guide rings are all final machined after assembly to maximize dimensional control.

The piston rod is machined from Nitralloy 135-M steel. After nitride hardening, the surface that contacts the main seal is highly polished. Exceptional hardness and surface finish are essential to prolong seal life. The rod has a drilled vent hole through the top and out the side to maintain minimum cycle pressure between the piston rings. The piston rod is separate from the crosshead. Since the piston is attached to the rod prior to final engine assembly, the piston must be installed through the top of the cylinder. The rod is carefully pushed through the pumping Leningrader seal and then threaded into the crosshead.

The piston rod is attached to the piston base by means of a shrink fit. The shrink fit is easy to assemble, allows good control of the dome height, and prevents damage to the mating surfaces during assembly. The joint at the top of the assembly (inside the piston dome) is welded to form a gas-tight seal.

The connecting rods are a split-fork type using rolling-element bearings in the lower end and journal bearings in the top end. The power-piston connecting rods are fractured on the centerline of the large bore for assembly onto the crankshaft and are held together with bolts. The hydrogen compressor connecting rod is one piece and slips over the end of the crankshaft. The inner surfaces of the bores serve as the outer races for the roller bearings.

The crosshead supports lateral forces exerted by the connecting rod and allows only vertical motion of the piston rod as the rod passes through the main seal. The lateral motion of the rod at the seal location must be minimized. The crosshead reciprocates in a guide bore machined in the engine block. To ensure good wear, the cylindrical or bearing surfaces of the crosshead are hardened and ground to a smooth finish. Since the rod and piston are assembled first, the crosshead must be a separate part to allow the rod to be inserted through the pumping Leningrader seal. A threaded assembly is used between the piston rod and the crosshead. Centerline eccentricity between the two is controlled with a diametral fit between the piston rod shank and the pilot bore in the crosshead. The angular alignment between the rod and crosshead axes is established by accurately machined shoulders on the rod and the top of the crosshead.

The wrist pin is machined from low-alloy steel. A radial hole is bored through the center to accommodate the shank of the piston rod as it is threaded into the crosshead. The wrist pin acts as the journal in the upper end bearing of the connecting rod and has a hardened, polished surface. This bearing is lubricated with excess oil initially sprayed at the piston rod to lubricate and cool the pumping Leningrader seal.

The crosshead is fitted between the yoke arms of the connecting rod and is held in place with the wrist pin. The wrist pin is pressed into the crosshead to prevent the pin from slipping. A minimal amount of interference between the two parts is used to keep the stresses due to the fit at a minimum. This avoids deformation of the crosshead bearing surfaces and damage to the wrist pin surfaces.

3.1.3.5 Crankshaft

One crankshaft carries the crankpins for all four pistons and the hydrogen compressor crankpin on three main bearings, as shown in Figure 3-18. Two power-piston crankpins are supported between each main bearing, while the compressor is overhung. The extremely low stroke of the Mod II (30 mm (1.18 in.)) compared to SI engines of similar power and speed (60 to 100 mm (2.36 to 3.94 in.) allows greater overlap between adjacent journal sections and provides an extremely stiff crankshaft, especially in torsion (see Figure 3-19). Simultaneously, the reciprocating elements are joined by a short, forked connecting rod in order to minimize the overall height of the engine. The result is a very compact crankcase, with a shaft that is stiff enough to allow balancing forces and torques to be carried through it. That stiffness allows the use of a unit balance. The imbalance forces from the pistons, connecting rods, and compressor are totaled, and two-plane balancing is applied using rotating eccentric masses at the extreme ends of the shaft (outboard of the main bearings and the crankcase proper). In fact, some balancing is done with the central portion of the crankshaft where space is available, but most is done by the end weights. Another advantage of the unit balance technique is that it provides a minimum mass solution to the balance requirement by taking advantage of inherent cancellations between imbalance forces.

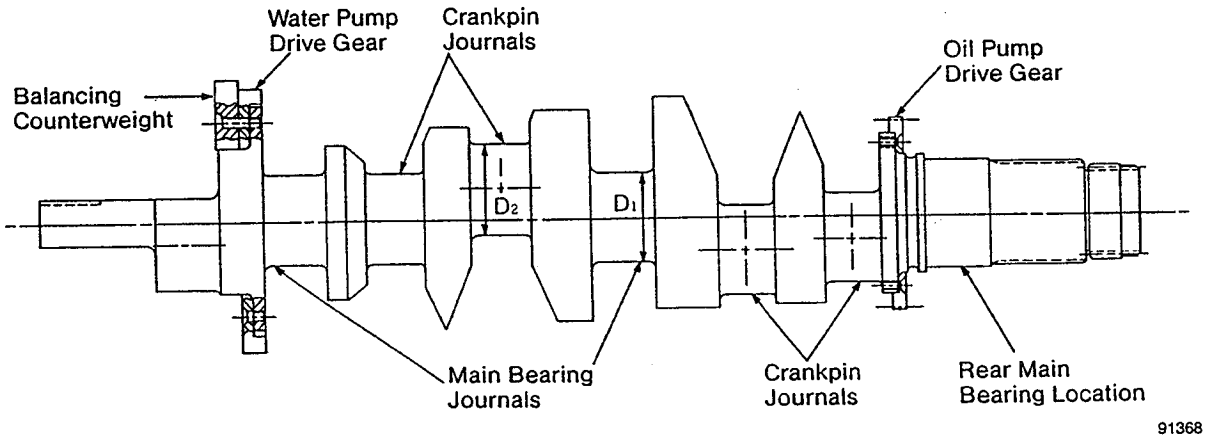

Figure 3-18. Crankshaft Assembly

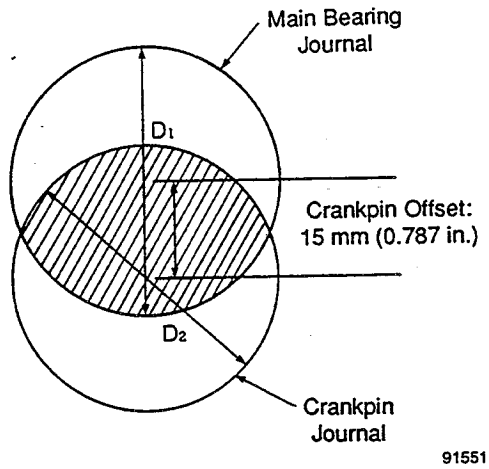

Figure 3-19. Crankpin Offset

Because the Mod II drive incorporates roller bearings for all mains and crankpins, the journals on the crankshaft are hardened and ground to provide inner races. Roller bearings put special requirements on material hardness, purity, and surface finish of the crankshaft. The crankshaft is machined from a forging of low-alloy steel, which is case carburized on all journals, keyways, and the splined output end. The shaft configuration allows assembly of a nonfractured roller/ball thrust bearing unit at the rear main bearing and a nonfractured race bearing on the compressor crankpin. After finish machining and hardening, the journals are precision ground to roller race surface quality.

To provide oil to the crankpin bearings, the pressure-fed oil from the pump and filter is passed via a floating bushing at the extreme end of the crankshaft (outboard of the compressor) into internal drillings. These drillings then feed oil to the five eccentrics via restricted outlet drillings. Main bearings are fed directly from the main oil gallery in the block by drillings and orifices to their outer races.

To drive the oil pump and the water pump at engine speed (but in opposite rotation as required by the balance scheme), gears are provided on the crankshaft assembly. The shaft itself includes hubs to which separately formed gears are attached. This simplifies manufacture of the crankshaft by eliminating the process of cutting gears on the crankshaft.

3.1.3.6 Bearings

The Mod II incorporates rolling-element bearing technology. The crankshaft rotates in three main bearings. The front and center main bearings are split-cage roller bearings that run directly on case-hardened journal surfaces of the crankshaft. Fractured half-shell outer bearing races are retained in the crankcase and bearing cap bore in the same manner that conventional journal bearing shells are retained. The main bearing

configuration is shown in Table 3-2. The rear main bearing is a combination roller and ball bearing assembly that can be fitted onto the crankshaft without being split. The ball bearing portion of this bearing provides positive axial location of the crankshaft with respect to the crankcase and supports the axial load imposed through the throw out bearing when the clutch is disengaged. The roller bearing portion sustains the radial loads in the same manner as the front and center main bearings.

Table 3-2. Bearing Configuration

Parameter	Value
Journal Diameter	38.40 mm (1.51 in.)
Bearing Outer Diameter	53.00 mm (2.09 in.)
Mean Diameter	45.70 mm (1.80 in.)
Roller Diameter	7.30 mm (0.29 in.)
Number of Rollers	14
Roller Length	24.80 mm (0.98 in.)
Cage Space Between Rollers	2.95 mm (0.12 in.)
Dynamic Capacity	45,060 N (10,129 lb)
Maximum Misalignment	4.3 min of arc

91TR15

The rear main bearing is held in place on the shaft, together with the splined output drive hub, by a single nut that clamps both parts axially against a shoulder on the shaft. The rear shaft oil seal provides a sealing lip that rides on a smooth-finished sleeve extension of the drive hub. The seal is held in the crankcase by a small retaining flange. The gears are fitted and screwed to the hubs fore and aft. The attachment screw patterns are intentionally asymmetrical to ensure that each gear, which carries a timing mark, can be fitted only one way. This also ensures that, when the matching marks on the counterrotating pump gears are aligned, the counterrotating weights they carry will be properly phased to give the intended balancing. The other two main bearings, in halves, are assembled to the crankshaft as it is laid into the block and are retained by attaching the main bearing caps. The front cover, with the compressor connecting rod, the oil supply bushing (porous bronze), and front seal already installed in it, will be slipped on over the end of the in-place crankshaft, engaging mounting and locating studs on the block.

The connecting rod crankpin bearings are split-cage roller bearings, wherein the crankshaft journals act as inner races and the connecting rod bores act as outer races. Both surfaces are case hardened and ground to virtually the same hardness and surface finish found on individual bearing races. The crankpin bearing for the hydrogen compressor connecting rod can be assembled onto the crankshaft without being split, so a standard roller bearing with full cage is used at this location. Conventional fluid-film bearings based on squeeze-film lubrication are used for wrist pin bearings on all connecting rods.

Sizing and selection of the main and crankpin roller bearings were determined by the operating duty cycles and life objectives set for the engine. Two concurrent objectives were established: 100 hr of continuous operation at maximum power conditions, and 3500 hr of operation at conditions equivalent to those of the EPA combined driving cycle. The bearing design configuration was defined to meet these operating life objectives under the loads imposed on the bearings by the pressure forces acting on the pistons and transmitted through the connecting rods. The results of the operating life analysis for EPA driving cycle conditions are shown on Table 3-3.

3.1.3.7 Lubrication System

The oil pump is a Gerotor-element pump driven from the crankshaft by a gear set, which synchronizes the pump in reverse rotation and also provides a balance function. The complete lubrication system is shown in Figure 3-20. The pump is mounted in an extended rear main bearing cap, which hangs from the block into the oil sump. The pump elements are completely self-priming, since they are partially submerged in the reservoir. The expense of a separate oil pickup tube is avoided by fitting the filter screen to the lower face of the housing/bearing cap and drilling from there to the pump suction chamber. A relief valve limits oil discharge pressure to 350 kPa (3.5 bar). This limit is especially important with roller bearings that churn and heat up if excessive oil is provided. The pump outlet is drilled up into the block to a convenient mounting for the oil filter on the front or radiator side of the block, just over the starter in the Celebrity. Because of the sensitivity of roller bearings to particles, the filter is a 10-micron unit. From there, oil flows through drillings to the central oil gallery, which runs axially

Table 3-3. Bearing Operating Life for Combined EPA Driving Cycle

Bearing	M2	M3	M4	Hydrogen Compressor	Crankpin
Bearing L10 Life					
Dynamic Capacity, N (lb)	45,060 (10,129)	45,060 (10,129)	45,700 (10,273)	20,000 (4,496)	45,060 (10,129)
Equivalent Load, N (lb)	4,576 (1,029)	3,674 (826)	4,893 (1,100)	538 (121)	6,030 (1,356)
Equivalent Speed, rpm	1,151	1,151	1,151	1,151	1,151
Life, hr	29,628	61,611	24,852	2.48×10^6	11,817
Equivalent Life Factor	1.37	1.37	1.47	1.37	1.37
Adjusted Life, hr	40,457	84,129	36,614	3.38×10^6	16,136
Bearing System Life					
Reliability, 3,500 hr	0.9940	0.9974	0.9933	1.0000	0.9825

91TR15

Note: System Reliability for 3,500 hr = 0.9177
Corresponding System L_{10} Life = 4,169 hr

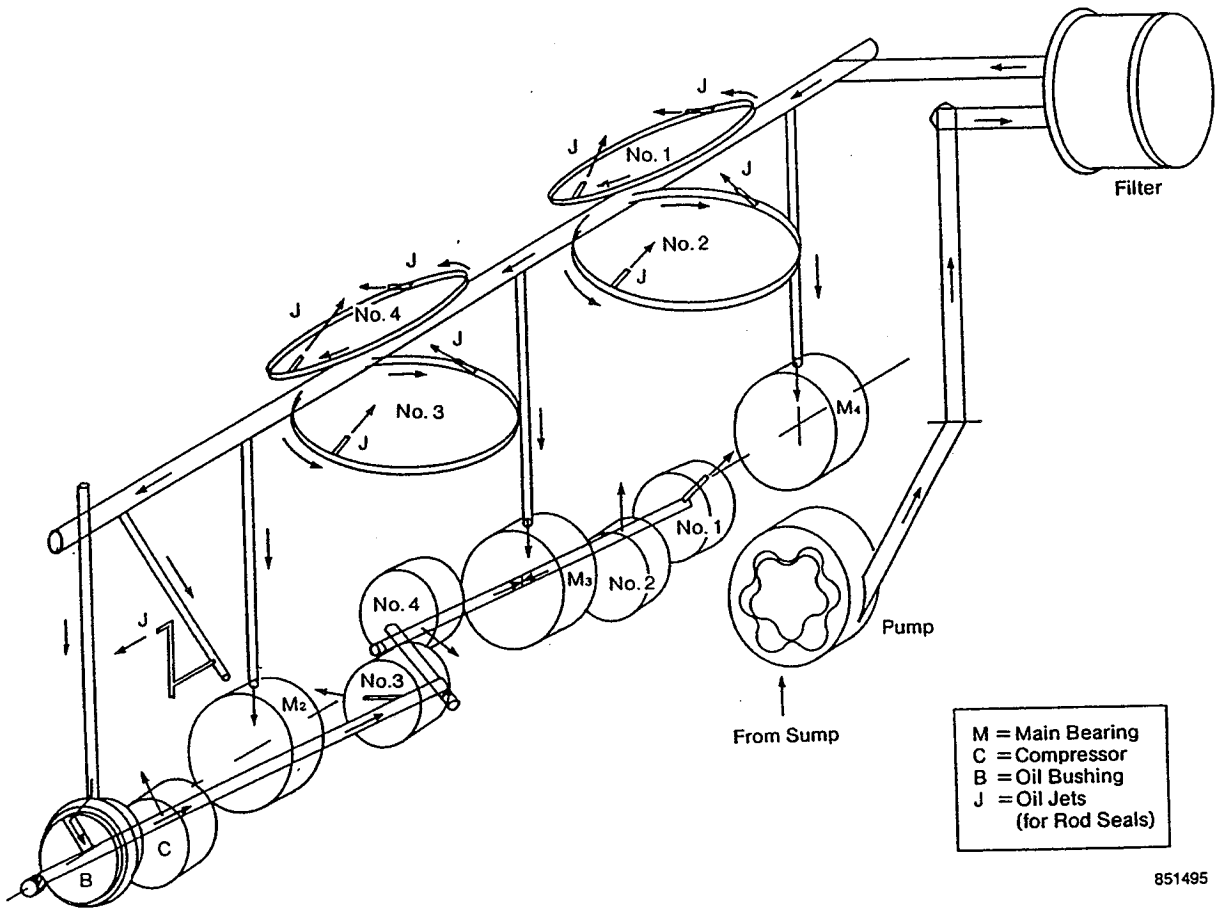

Figure 3-20. Lubrication System

through the center of the V, intersecting the seal housing bores of all the cylinders to supply the piston-rod-seal oil jets. An additional oil jet taps off of the supply manifold around each seal housing to spray oil onto the crosshead sliding faces. Small wells are provided in the crossheads to trap runoff oil from these jets and to lubricate the crosshead faces and the wrist pin joints. In addition, there are three drillings from the main gallery to the main bearings.

Where the gallery emerges from the other end of the block, it matches a drilling in the front cover. From there, oil is supplied by auxiliary drillings to the compressor-rod-seal oil jet and the crankshaft oil supply bushing. At that bushing, oil is pumped into the rotating crankshaft, which is internally drilled and provides orifices for oil outlet at each of the five crankpin bearing races.

3.1.3.8 Cooling System

The majority of the cooling system (see Figure 3-21) is consistent with automotive practice, but the higher heat rejection and higher pressure required by the restriction of tubular coolers in the coolant flow path requires a special pump. The water pump is constructed from standard-size Gerotor elements in a specially designed aluminum cast housing. The central element is stainless steel, and the outer rotor is plastic to give lubricity against the stainless steel and aluminum parts in the water environment. The aluminum parts subject to sliding are hard anodized to prevent corrosion and galling.

The water seals are conventional carbon face seals that isolate the pump from a drive chamber. The drive chamber houses a crankshaft-driven gear and its associated balance weight. Mounted on the outer face of the pump housing, an electric motor drives the pump as an aftercooling pump, precluding the need for a separate pump for that purpose. In order for the motor to turn only the pump, the drive gear is connected to the pump shaft through an overrunning clutch. The motor is a pancake-type dc unit; the motor rotor mounts directly on the pump shaft and free wheels during engine operation. It provides an aftercooling flow of 0.4 kg/sec (0.9 lb/sec) by turning the pump at 400 rpm.

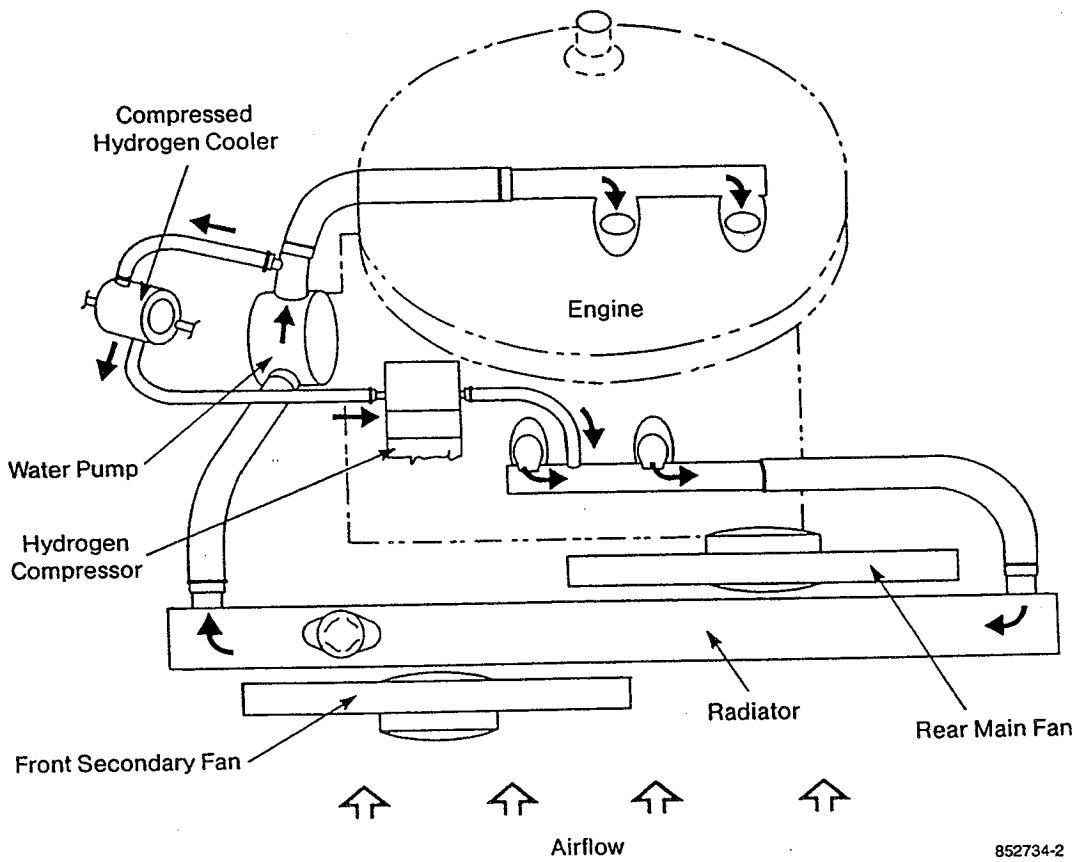

Figure 3-21. Cooling System

The remainder of the cooling loop is as follows. At the pump discharge, water is manifolded through the coolers and around the cylinders. From there, it is gathered up again and passes through the radiator. The hydrogen compressor is cooled by a small parallel pass, connected by a standard small-diameter heater-supply hose. The entire loop is intentionally kept nonpressurized by a vented overflow tank and nonspring radiator cap in order to preclude the cavitation that might otherwise occur from the suction of the positive-displacement pump.

3.1.3.9 Engine Balance

All reciprocating-piston engines, including the Mod II, develop internal shaking forces and rocking moments from piston motion. These must be counteracted by a balancing system to provide smooth, low-vibration operation. The magnitudes of these forces and moments are proportional to engine speed (squared), with a primary portion causing vibration at engine speed and a secondary, lesser portion causing vibration at twice that frequency. Application of rotating eccentric balancing masses (as commonly done on the crankshaft) provides rotating balancing forces that can only partially compensate for the reciprocating imbalance unless (at least) two sets of balance masses are used, rotating at equal speeds, but in opposite directions. This twin-shaft system can produce a near-perfect cancellation of reciprocating imbalance, but at a penalty in size and complexity. However, an earlier generation ASE, having a U-drive with two crankshafts and a separate counterrotating output shaft, incorporated a full primary balance by this technique without additional complexity.

In recent automotive production engines, a pair of shafts as described above has been employed at twice engine speed to eliminate the secondary imbalance which is significant in such higher-speed, longer-stroke engines.

In an ASE, the speeds are relatively low and the stroke quite short, greatly reducing the size of the secondary imbalance. However, the Stirling has considerably more massive pistons than do conventional automotive engines, making the primary imbalances larger. For this reason, the usual partial balancing of primary imbalances with one set of rotary masses on a single crankshaft will not suffice for the Mod II.

A system has been devised to provide near-perfect primary balance without returning to the multishaft complexity of earlier ASEs. This system, shown in Figure 3-22, uses the inherent requirement for oil and water pumps, driven by the crankshaft, to provide counterrotating masses without additional balancer shafts.

The water and oil pumps each carry an eccentric rotating mass. Both pumps are gear driven at reverse engine speed. They are located on opposite sides of the crankshaft, one near each end, so as to approximate the effect of an ideal balance shaft (concentric to the crankshaft) with a virtual shaft axis running pump-to-pump, nearly through the center point of the crankshaft.

A further simplification of the balance system results from the high torsional and bending stiffness of the low-stroke crankshaft. This stiffness allows imbalance forces and moments to be transmitted along the crankshaft and resolved with a single balance mass pair, rather than individual balance masses at each cylinder. The masses of this pair are located near the ends of the crankshaft for most effect (least weight). The absence from the central crankshaft of large-radius rotating masses, together with the short piston stroke, allows for a very compact crankcase — a significant contribution to the overall reduction in size and weight of the Mod II.

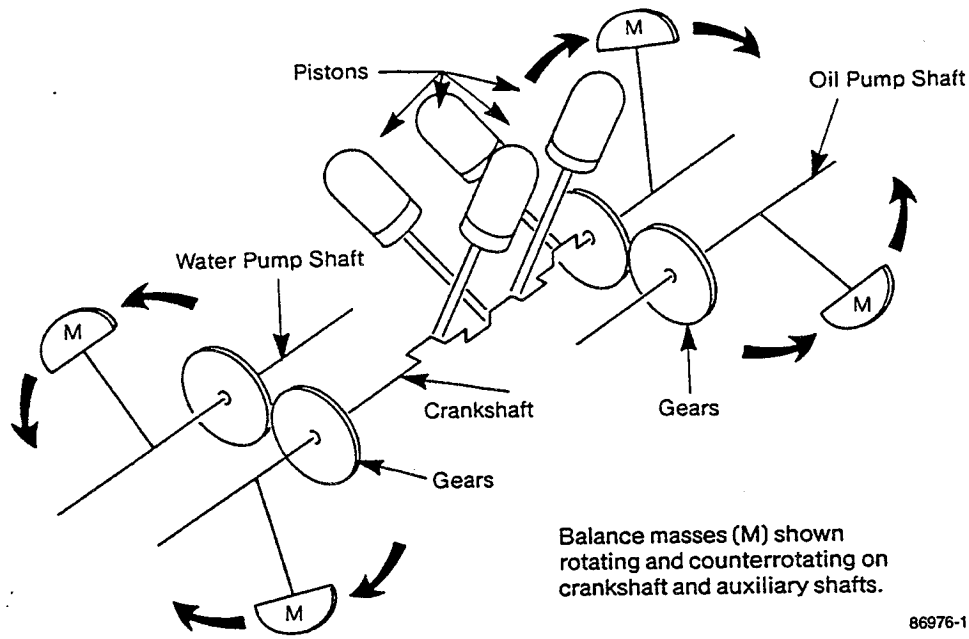

Figure 3-22. Balance System Schematic

3.1.4 Control Systems and Auxiliaries

The control systems and auxiliaries are not part of the basic engine, but contribute significantly to the total cost of the engine system and dominate its reliability. Furthermore, analyses of the Mod II system have highlighted the importance of these components to the transient response of the engine and their impact on fuel economy. The controls and auxiliaries of the Mod II incorporate the most recent advances in this technology. The advanced design of these components has, to a large extent, enabled the Mod II to achieve projected fuel economy superior to that of the SI engine.

The engine control systems consist of the digital engine control system, the combustion control system, and the mean pressure control system. Auxiliaries include the combustion air blower, alternator, fuel atomizing air compressor, fuel pump, and starter.

The logic followed in controlling engine power can best be understood by the example shown in Figure 3-23. When the accelerator pedal is depressed to call for more power, the digital engine control senses this change and commands an increase in hydrogen pressure within the closed Stirling cycle. The mean pressure control system then admits pressurized hydrogen into the engine. The resulting stronger pressure wave produces higher engine torque and an acceleration to a higher crankshaft speed. Speed and pressure sensors inform the digital engine control of these increases. Since more heat is being extracted from the engine, the heater head temperature drops. The digital engine control then increases the combustion air blower speed and thus airflow to return heater head tube temperature to its set point. An airflow meter continuously informs the digital engine control of the new airflow rate. The digital air/fuel control converts the airflow rate into a desired fuel flow to be proportioned into the combustor.

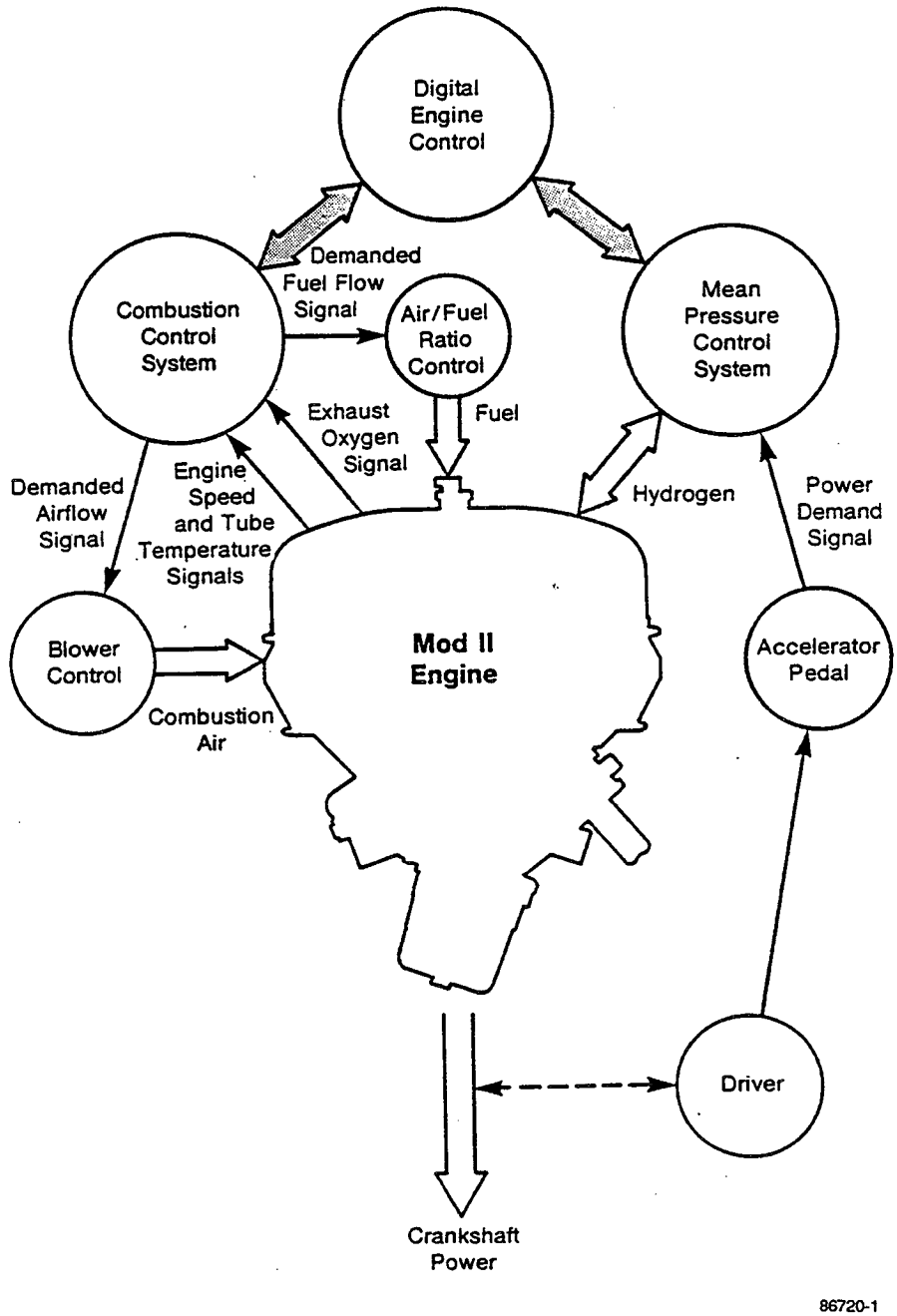

Figure 3-23. Engine Control Systems

A reduction in engine power starts with a transfer of hydrogen from the engine cycle to the hydrogen storage tanks. To reach idle condition, an engine-driven hydrogen compressor is required to pump from the low engine pressure to the higher tank pressure. During this pump-down period, engine power in excess of that desired is dissipated by short-circuiting hydrogen flow from the maximum pressure point to the minimum pressure point of the Stirling cycle.

3.1.4.1 Digital Engine Control System

The digital engine control contains the logic required to operate the engine. It controls all engine components so that steady-state and transient operation is comparable to that of an SI engine. These control functions include communications, data storage and manipulation, as well as various check and guard procedures.

Sensors measure engine data and feed it to the digital engine control, which determines and implements the appropriate response. The digital engine control communicates with the driver via dashboard indicator lights. For example, a "recommended drive" light flashes during the start-up sequence and goes out when the engine reaches a drive-away condition.

The digital engine control components are located in the engine compartment and under the dashboard. All inputs originate in the engine compartment and are wired directly to the digital engine control through the fire wall. All outputs originate in the digital engine control and are wired to their respective final control elements in the engine compartment and on the dashboard. The key switch on the steering column turns the digital engine control system on and off and starts and stops the engine.

3.1.4.2 Combustion Control System

External combustion gives a Stirling engine combustion control dynamics that are different from those of an SI engine. For example, the air and fuel flow rates of an SI engine are manipulated to directly control torque output. However, in a Stirling engine, the hydrogen mean pressure is used for that function, while air and fuel flows are varied to maintain heater head tube temperature at the set point. As engine speed or pressure are varied, the hydrogen inside the tubes will absorb more or less heat and the tube metal temperature will tend to rise or fall. To maintain the tube metal temperature constant, the air and fuel flows are varied to provide more or less energy for combustion.

The combustion control system, shown in Figure 3-24, consists of two major subsystems: heater head temperature control and air-to-fuel ratio control. Separate logic modules of the digital engine control govern these subsystems; each logic module has sensors and actuators associated with it.

The combustion control system operates as follows. Air is inducted into the system through a filter and airflow meter by a blower. From the blower, air passes through two ducts to the inlet air manifold of the external heat system. (A separate compressor provides higher pressure air for fuel atomization, which enters the engine through the fuel nozzle.) The air-to-fuel ratio control converts the airflow meter signal to an appropriate fuel flow demand signal. An automotive in-tank fuel pump delivers pressurized fuel to a fuel flow modulator that meters flow to the fuel nozzle, where it is sprayed into the combustor with atomizing air.

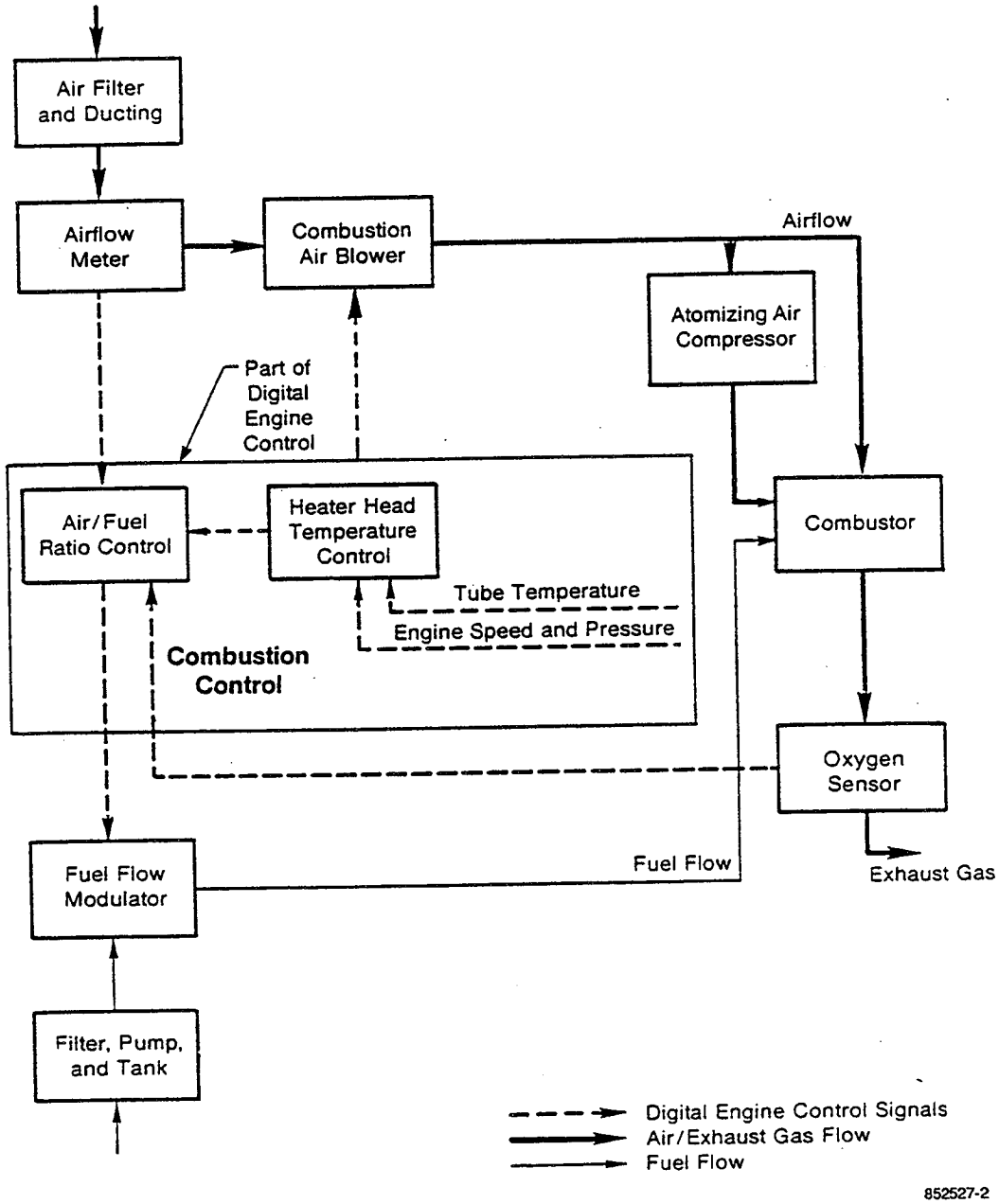

Figure 3-24. Combustion Control System

Heater Head Temperature Control. The heater head temperature control, shown in Figure 3-25, maintains the average heater head tube metal temperature at the set temperature of 820°C (1508°F). This temperature is controlled to within ±10°C (±18°F) for the most severe vehicle transients. Thermocouples, located in protective sleeves on the heater head tubes, are the fundamental sensors of this control. Although other sensors implement anticipatory routines, the tube temperature thermocouples have priority in all temperature control logic.

The term PID refers to the proportional (P), integral (I), and derivative (D) modes of using the error signal ΔT, where $\Delta T = T_{tube} - T_{set}$. Each mode has its own respective gain, and all are summed together to determine a desired air blower speed. The anticipatory control, an automotive-use adjunct to the PID, is used to improve vehicle acceleration and fuel economy by preventing overshoots or undershoots in heater head temperature. The anticipatory signal input of engine speed and pressure tells the control of an impending change in power demand, before this change causes an actual change of tube temperature.

Air-to-Fuel Ratio Control. The air-to-fuel ratio control incorporates a fuel flow modulator, an airflow meter, and an oxygen sensor in the exhaust gas flow, as shown in Figure 3-26. It maintains the air-to-fuel ratio within ±5% of its set point during both steady-state and transient operation over the range of fuel flow from 0.15 to 5.2 g/sec (1.2 to 41.4 lb/hr). The actual air-to-fuel ratio in the combustor is determined through measurement of excess oxygen in the exhaust, which allows correction of long-term drift of the control system.

The basic air-to-fuel ratio control is essentially an open-loop routine, which proportions fuel flow using only the "P" mode of the PID control according to the measured airflow and the corresponding ratio. The ratio is not constant over all flow rates but is varied according to a map of air/fuel ratio versus fuel flow, determined by development testing to provide the best possible emissions and efficiency over the entire engine operating range.

Fuel flow rate is used by the control to maintain the air-to-fuel ratio at its set point. The fuel flow modulator consists of a pair of stock fuel injector valves and a pressure regulator. The valves are pulse-width modulated to serve as the fuel metering means. The differential pressure regulator, set a 100 kPa (15 psi), maintains a constant pressure drop across the valves to standardize the flow through the open orifice of the fuel nozzle. This keeps the pulse width-to-flow rate characterization constant. The airflow meter is a stock automotive hot-wire sensor that emits a signal proportional to the mass of air flowing through it.

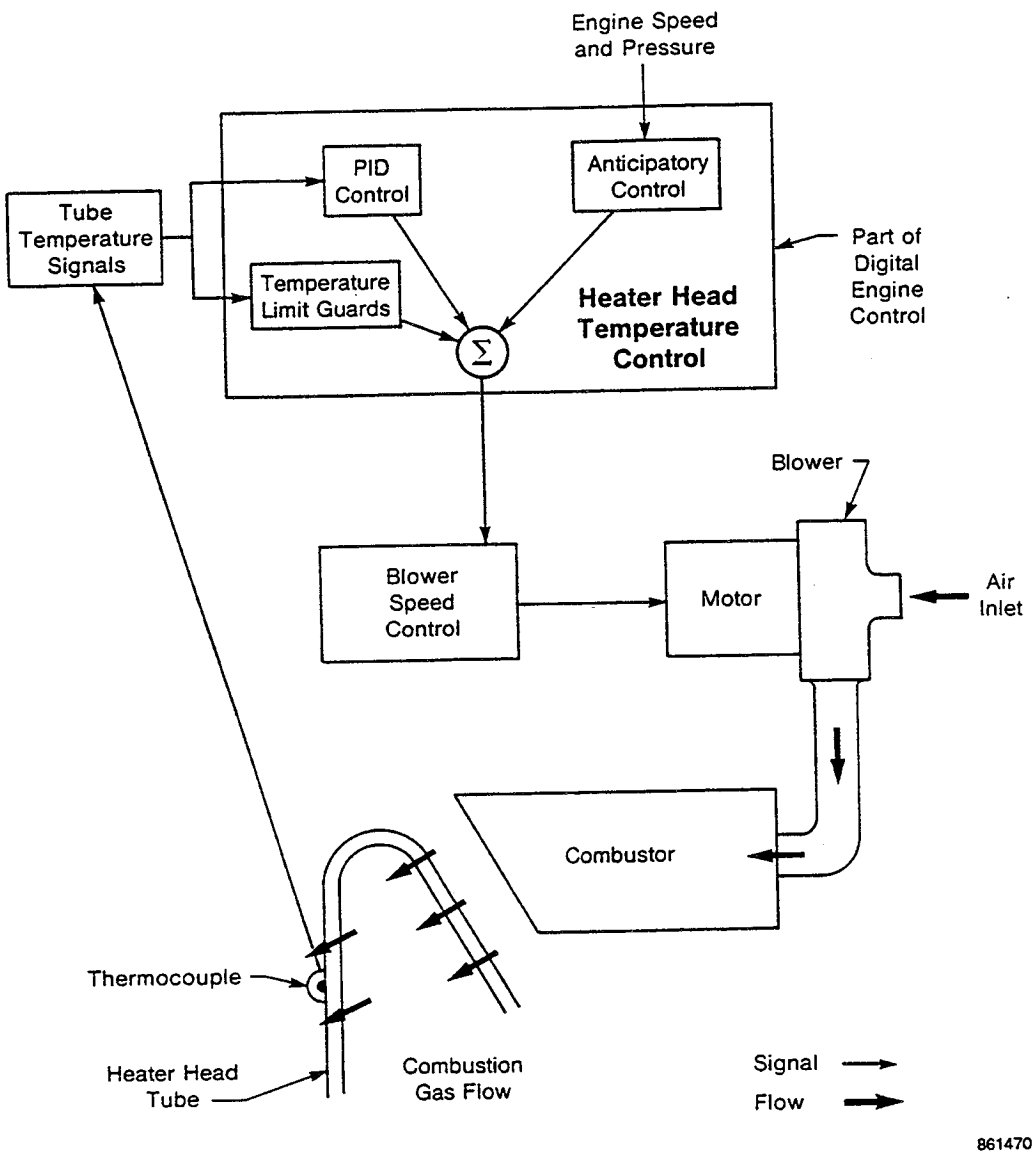

Figure 3-25. Heater Head Temperature Control

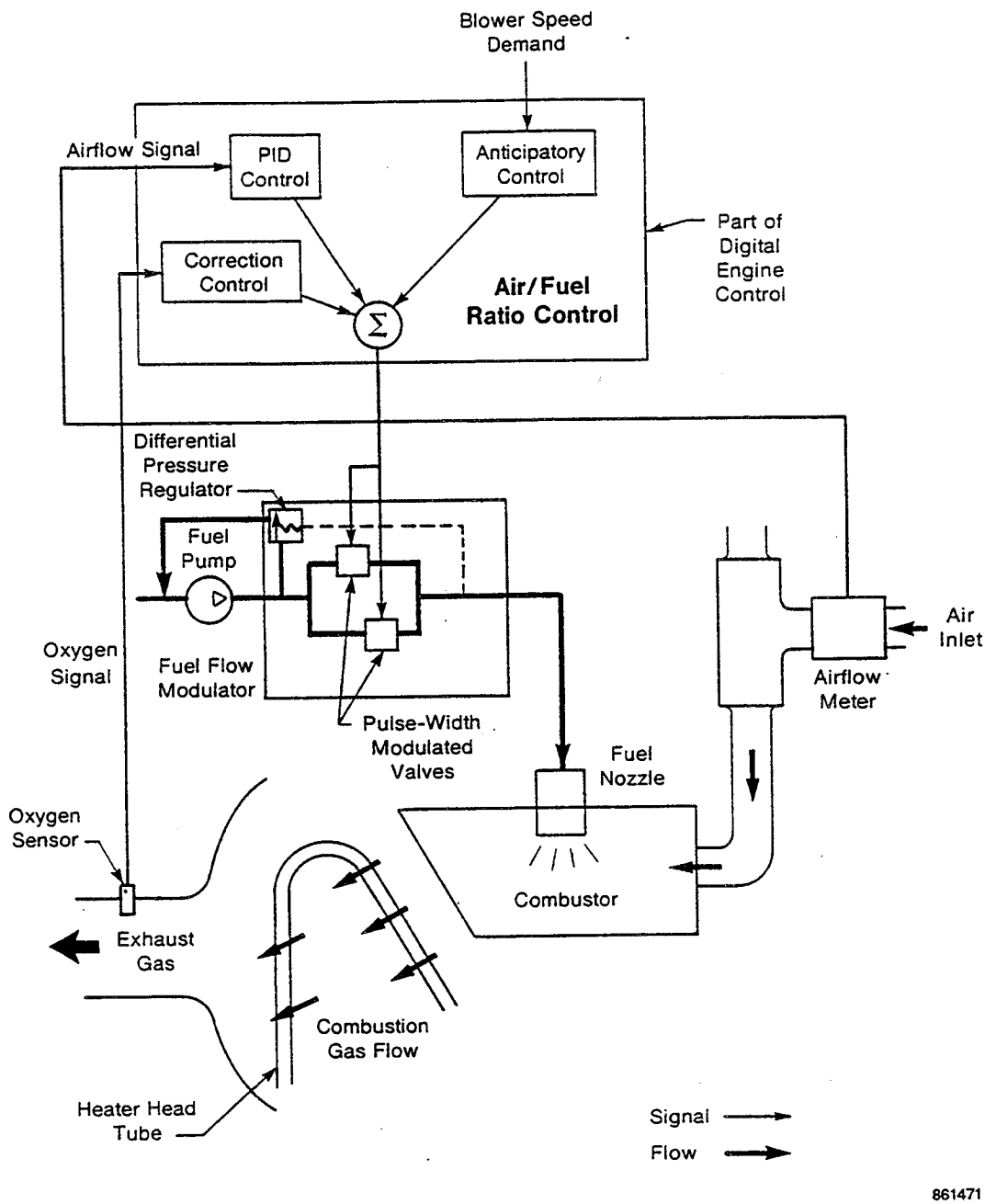

Figure 3-26. Air-to-Fuel Ratio Control

3.1.4.3 Combustion Air Supply and Regulation

Combustion air is supplied and regulated through a fuel atomizing air supply and a combustion air supply.

Fuel Atomizing Air Supply. This auxiliary provides atomizing airflow to the fuel nozzle to break fuel droplets into a fine mist that allows rapid ignition and clean combustion. It uses a constant-speed motor, driving a positive-displacement (rotary vane) compressor with a resulting near-constant flow over all engine speeds and transients.

Combustion Air Supply. The combustion air supply system, shown in Figure 3-27, provides air to burn fuel in the external heat system. Supply hardware consists of a three-phase permanent magnet alternator, permanent magnet brushless dc motor, and a high-efficiency combustion air blower.

The alternator serves two functions: it supplies electrical power to both the blower motor as part of the blower electrical power-transmission system, and the battery for battery charging. It has two sets of windings: one for the battery or 12-V loads (1 kW (1.3 hp) maximum) and one for the blower motor load with 48- to 240-V dc bus supply (4 kW (5.4 hp) maximum). The alternator design requirements are given in Figure 3-28.

There is a 1:5 speed ratio between the engine and the alternator. The housing of the alternator is cooled by forced air drawn over external cooling fins.

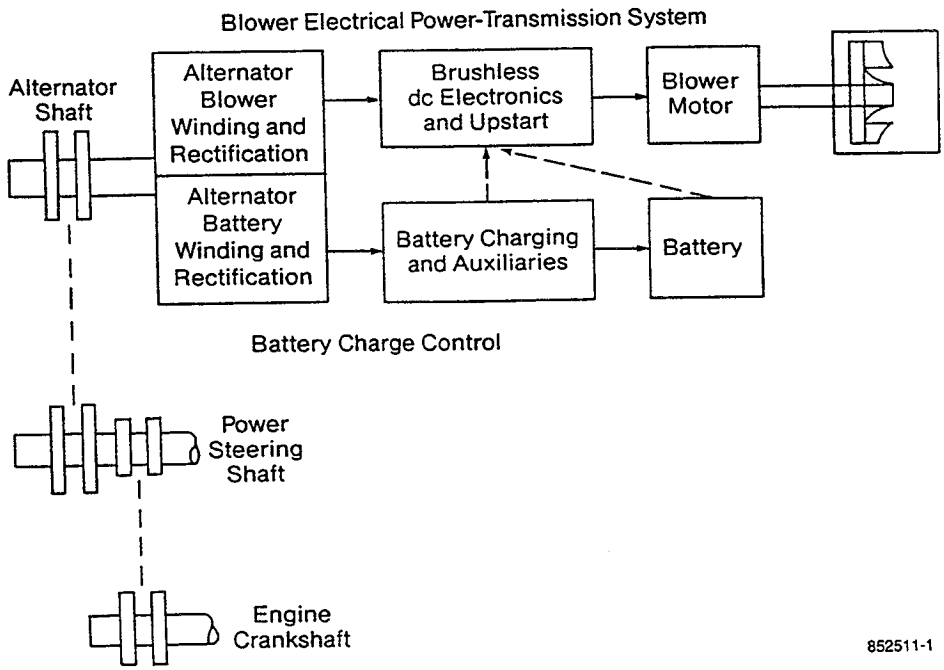

Figure 3-27. Combustion Air Supply

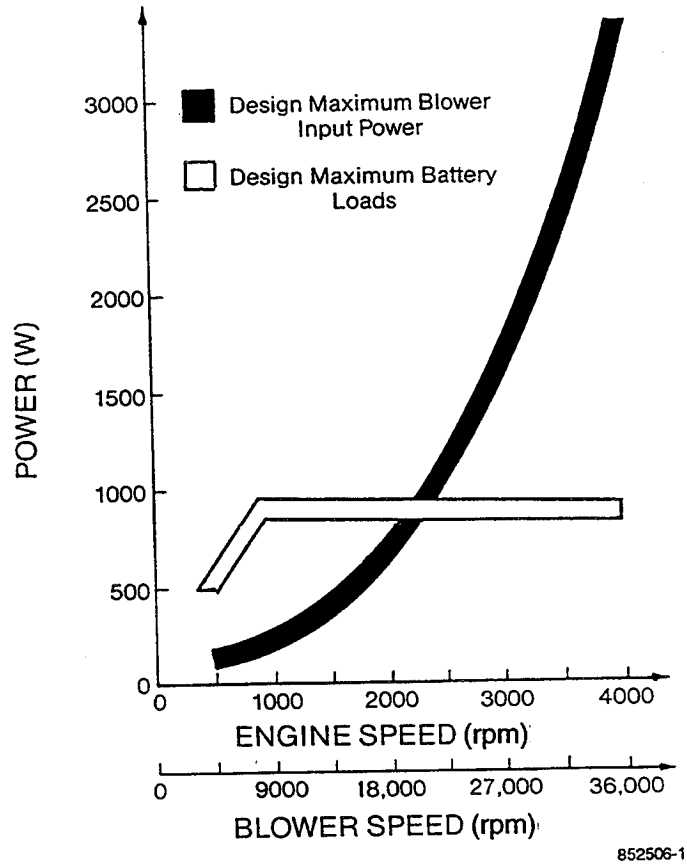

Figure 3-28. Alternator Design Requirements

The blower motor serves two functions: it drives the combustion air blower during normal, continuous engine operation, and it upstarts the blower during engine start. Similarly to the alternator, the blower motor has two sets of windings: one for continuous operation (meeting the duty needs of the engine with varying voltage from 48 to 240 V dc), and another designed to upstart the blower to 20,000 rpm during starts from the 12-V battery supply. Power requirements are established by the pressure drop over the external heat system.

The combustion air blower is a high-efficiency, backward-curved, centrifugal impeller blower. The airflow is split by two volutes that exit into diffusers 180° apart to allow ducting to the two inlet ducts on opposite sides of the inlet air manifold for the external heat system.

The pressure drop through the external heat system was used to size the combustion air blower. The blower design point is:

Maximum design speed = 43,000 rpm
Maximum design pressure = 2950-mm water (116-in. water)
Maximum airflow = 100 g/sec (0.22 lb/sec).

The result is a specific speed of 0.70 with a design efficiency of 80%.

Battery Voltage Regulator and Blower Motor Control. The power conversion electronics convert the three-phase variable frequency and amplitude outputs of the alternator for battery charging and the blower motor drive. This is done using two separate systems.

The alternator presents a variable dc voltage to the input of a pulse-width-modulated voltage regulator circuit. The voltage regulator is configured as a standard stepdown switching regulator with an external shutdown input from the digital engine control to permit shedding of the battery charge and auxiliary load (approximately 1.5 kW (2 hp) mechanical) during hard acceleration. The regulator also includes a normal automotive battery temperature compensator and current limiting.

The blower motor control converts the alternator output to a variable dc level by a three-phase bridge rectifier and feeds it to the blower motor. For upstart, the battery simply replaces the dc voltage supplied by the alternator.

3.1.4.4 Mean Pressure Control System

To provide drivability similar to an SI engine, the Mod II uses a combination power control system consisting of mean pressure control supplemented with short-circuiting (bypass) capability, as shown in Figure 3-29. Increasing or decreasing the mean pressure within the engine to increase or decrease engine torque output provides

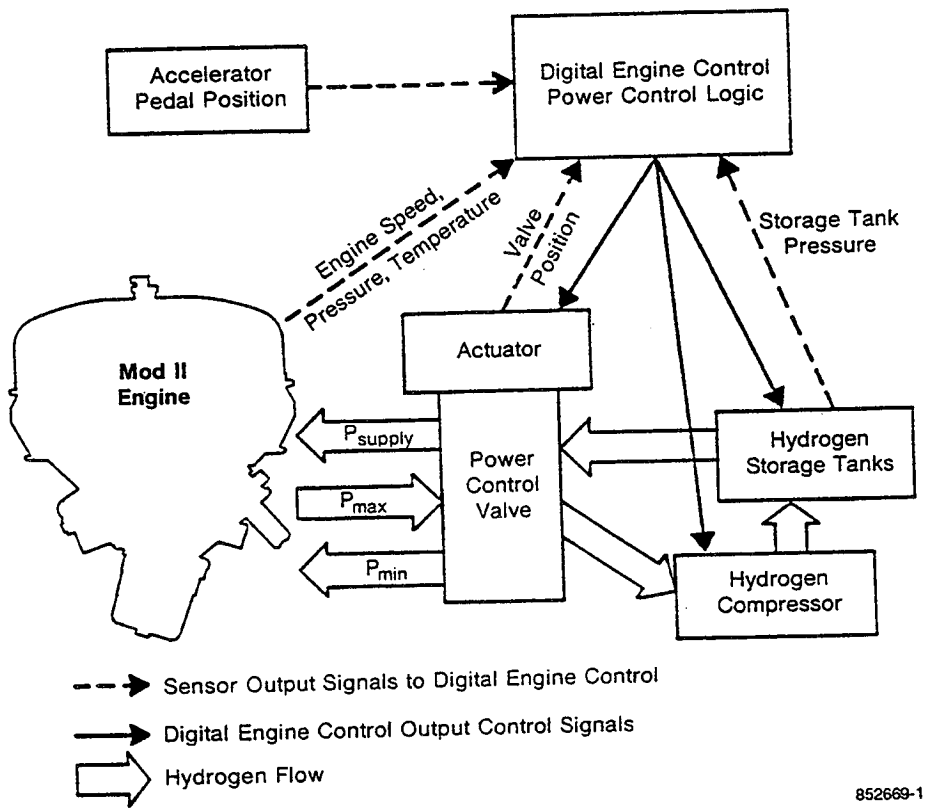

Figure 3-29. Mean Pressure Control System

good part-load efficiency, low idle fuel consumption, and improved engine durability due to lower average engine operating pressures. However, mean pressure control is inherently slower in response time than necessary for an automotive application. Short-circuiting control, where the maximum (P_{max}) and minimum (P_{min}) cycle pressures within the engine are directly connected or "short-circuited," provides quick response time and compensates for the slow-acting mean pressure control system during quick transients. When engine power is greater than required and hydrogen is being pumped out of the engine, short circuiting dissipates any momentary excess power and provides engine braking as required to control engine speed. Since use of short-circuiting control results in decreased efficiency, the system is optimized so that short circuiting is used as little as possible.

Mean Pressure Control System Operation. As shown in Figure 3-30, the power control valve (1)* is a sliding spool valve that regulates hydrogen flow in and out of the engine. This valve is mechanically positioned to perform four separate operating functions: supply, neutral, dump, and dump plus short circuit. (Note that these valve functions are synonymous with the valve positions.) For all operating functions except neutral, the hydrogen flow can be proportioned anywhere between 0 and 100%. An electrically driven actuator (2) moves the power control valve to provide the four operating functions based on input from the digital engine control.

In the supply position, the power control valve supplies hydrogen from the hydrogen storage tanks (3,4) to the engine via the P_{supply} line, thus increasing engine torque. Through a mechanical timing system, hydrogen is always added to the engine at the point when pressure within the cycle is at a minimum. This preserves the engine's peak torque capability and allows smooth transition to the higher pressure. When the power control valve is in the neutral position, there is no hydrogen flow to or from the engine, and the engine is in steady-state, constant torque operation. In the dump position, hydrogen is pumped by a hydrogen compressor (5) from the engine back into the storage tanks, thus decreasing engine torque.

When the compressor cannot pump fast enough to decrease engine torque by the desired amount, the power control valve moves to the dump plus short-circuit position. While the compressor continues to pump, the excess engine torque is dissipated through bypassing maximum cycle pressure to minimum cycle pressure. As the engine pressure approaches the desired lower value, the power control valve moves back through the dump position to the neutral position.

In the event of a total electrical power loss or if power to either the digital engine control or the actuator is interrupted or short circuited, failsafe operation occurs and the power control valve is moved to the appropriate position.

The various subcomponents of the mean pressure control system are grouped into four separate blocks with specific functions: compressor short-circuit block, tank shutoff and select block, P_{max} block, and check valve blocks.

---

* Numbers in parentheses refer to the legend in Figure 3-30.

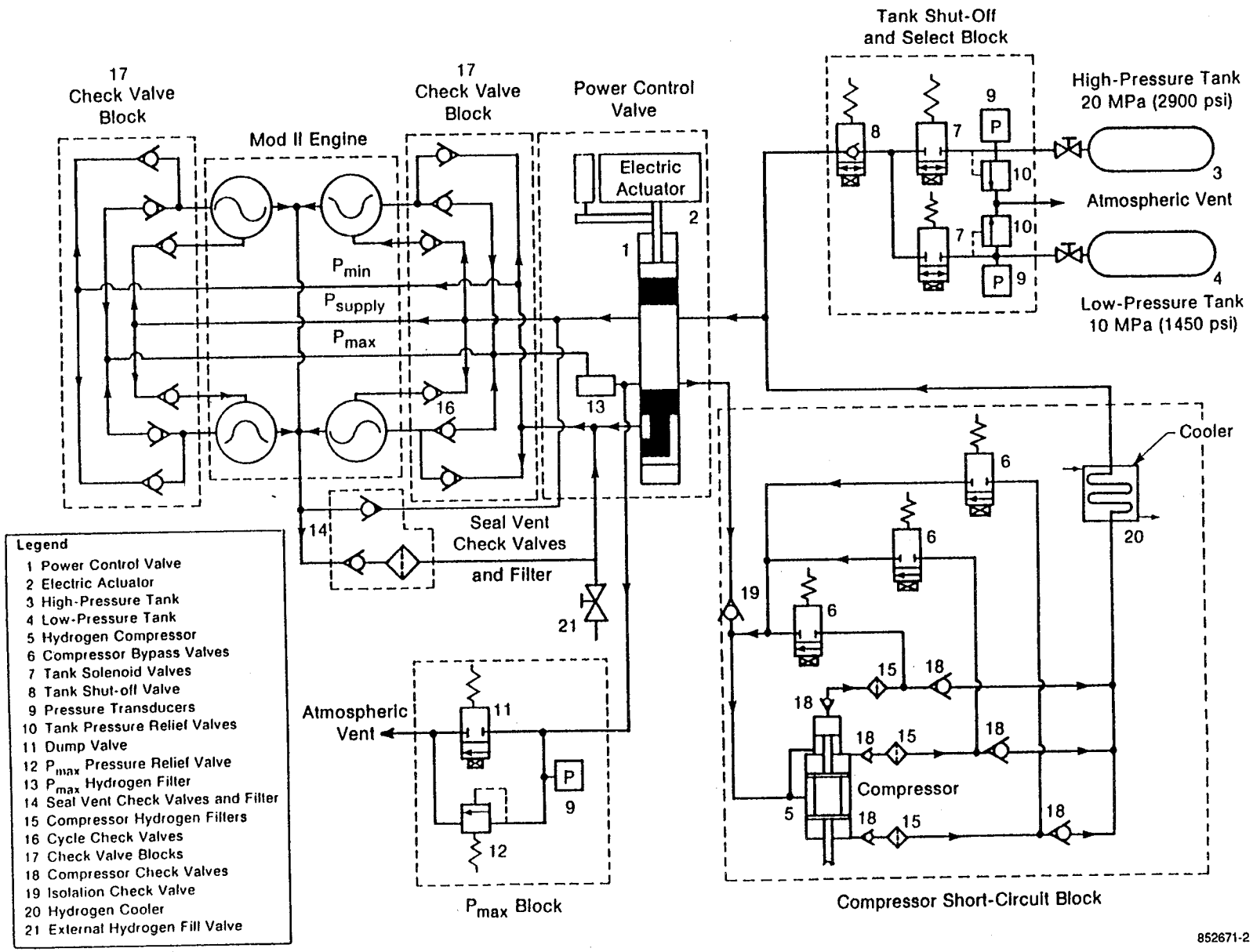

Figure 3-30. Mean Pressure Control System Schematic

The hydrogen compressor is a single-stage, multiple-volume type with three pumping volumes. Since the compressor is driven at engine speed, each of the volumes is controlled by its own electrically operated compressor bypass valve (6). When pumping is not desired, the valves are opened, bypassing the compressor output back to the input port. When pumping is desired, the valves are closed, causing the compressor volumes to pump hydrogen from the engine to the storage tanks. The valves can be opened or closed in any combination, thus tailoring the compressor pumpdown rate to other engine parameters.

Hydrogen storage consists of two 4-liter (1.1-gal) storage tanks and a tank shutoff and select block. One tank is maintained at a high pressure of 20 MPa (2900 psi), the other at 10 MPa (1450 psi). System logic directs that the engine will first be supplied from the low-pressure tank. At some intermediate pressure, the supply is switched to the high-pressure tank. Conversely, pumpdown occurs first to the high-pressure tank, then is switched to the low-pressure tank as engine pressure falls. By keeping the tank pressure "close" to engine pressure, the required compressor pressure ratio is kept below three to one, thus avoiding the need for a two-stage compressor.

The tank shutoff and select block contains two solenoid valves (7) to control which tank is in use; a third solenoid valve (8) to allow tight shutoff of the hydrogen supply system; two pressure transducers (9) to provide pressure data to the digital engine control; and two pressure relief valves (10) to protect the storage tanks from overpressure.

The P_{max} block houses a pressure transducer (9) to provide pressure information to the digital engine control; a dump valve (11) to vent hydrogen from the engine to atmosphere; and a pressure relief valve (12) to protect the engine from overpressure. If necessary, the dump valve is operated from either a dashboard-mounted switch or by the digital engine control logic.

Five hydrogen filters (13, 14, 15) remove any dirt or contamination from the mean pressure control system. Because the system contains only dry hydrogen, the various seals and piston rings are susceptible to foreign material damage and filtration is important. The seal vent filter (14) is also designed to remove oil vapor and droplets from the system.

A total of 21 check valves control the hydrogen flow within the system. Twelve of these (three per cycle) (16) are mounted in two check valve blocks (17). These control the supply of hydrogen into the cylinders and the short-circuiting flow. Six more check valves (18) control the flow within the hydrogen compressor, and one (19) isolates the compressor from the power control valve. The seal vent check valves (14) return any hydrogen that has entered the seal housing cavities to the system.

A cooler (20) is mounted downstream of the hydrogen compressor. This device uses engine cooling water to cool the compressed hydrogen before returning it to the storage tanks.

An external hydrogen fill valve (21) allows recharging of the system with hydrogen to compensate for the small amount of leakage that may occur over extended periods. The vehicle system specification calls for hydrogen recharge every six months. The hydrogen plumbing is all rigid tubing with the exception of a single flexible line from the hydrogen compressor cooler to the tank shutoff and select block.

3.2 Hardware Development

3.2.1 Design Changes from the Original Hardware Design

In the course of developing the Mod II engine, some components and subsystems did not reach full maturity prior to completion of the ASE project. However, fallback hardware had been established and was substituted for the original technology. The following subsections summarize major deviations from the initial Mod II design.

3.2.1.1 Combustor

The Mod II design used a CGR configuration for emissions control. During the development process, several problems were encountered with the CGR combustor, primarily associated with lack of durability. Although emissions levels were acceptable with new CGR hardware, NO_x emissions were noted to degrade after a very short time period. In addition, heater head temperature spread was noted to be worse with CGR than with non-CGR designs. The CGR system also produced excessive soot. The non-CGR design, the EGR concept, introduces exhaust gas into the combustion air stream externally by accessing either the exhaust piping system or the preheater exhaust plenum and ducting exhaust to the combustion air blower inlet. A comparison of the CGR and EGR combustion systems is shown in Figure 3-31; the actual EGR hardware is shown in Figure 3-32. The EGR combustor is a much simpler design and does not depend on tight control of ejector positioning to achieve uniform flow distribution in the combustion zone. With a 30% recirculation level, the EGR system was capable of achieving NO_x emissions goals. Also, no emissions degradation was noted with the EGR system after 500 hr of hardware run time was accumulated.

In addition to better temperature spread and emissions control, less atomizing air is required for the EGR combustor and less blower power is required at higher airflows or engine power levels. The result is an improvement in engine performance with the EGR system.

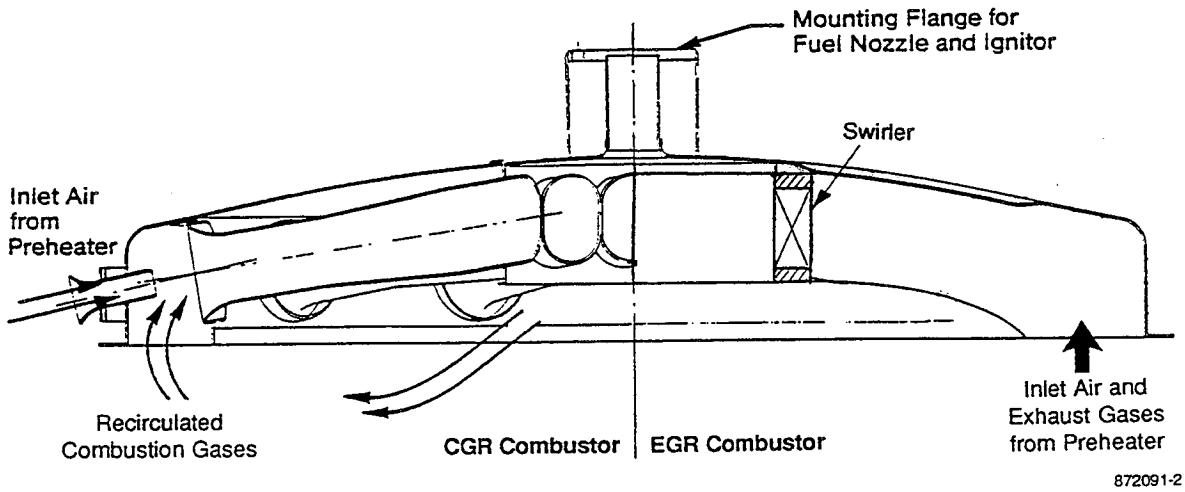

Figure 3-31. Comparison of CGR and EGR Combustors

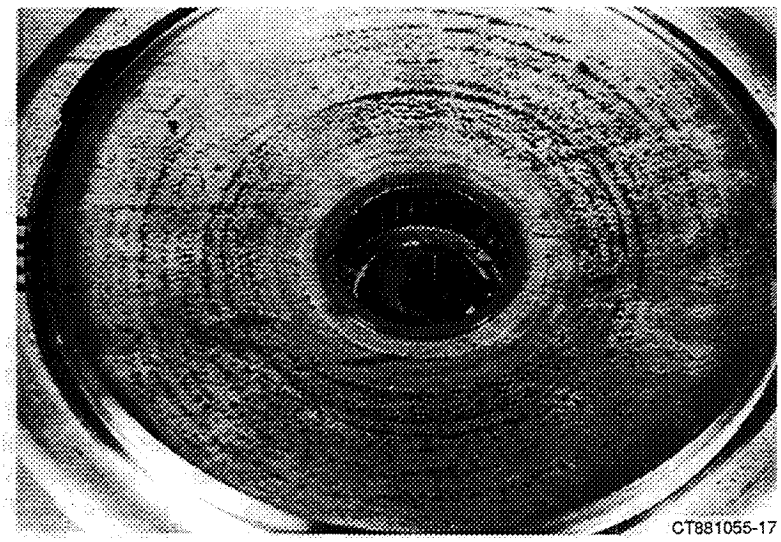

Figure 3-32. Mod II EGR Combustor

Until such time as a durable, lower loss CGR system is designed, the EGR combustor system appears to be the system of choice for the Mod II. The EGR system was installed in the Mod II USPS vehicle for the duration of its evaluation with no degradation observed.

3.2.1.2 Fuel Nozzle

A drastically different nozzle and ignitor design has evolved for the Mod II. The principle of air atomization was retained, but the fuel spray hole count was reduced from 12 to 1. The larger single orifice relieved the tendency of the 12-hole nozzle to plug. With the single hole located in the center of the nozzle to provide a symmetrical fuel spray, the ignitor had to be relocated to a position on the side of the nozzle body, as shown in Figure 3-33.

3.2.1.3 Heater Head

The annular heater head concept was retained for the Mod II, but different heater tube-to-housing attachments were used. The attachment means described in the original design were not used in actual hardware. Figures 3-34 and 3-35 show the two different arrangements that were used: Configuration 1 (manifold) and Configuration 4 (no manifold). The Configuration 1 design utilized 2 manifolds, one each for the front and rear row tubes, whereas Configuration 4 had no manifolds and routed both tube ends directly into the heater housing. The Configuration 4 heater heads were made in two versions: 4L (long tube length) and 4S (short tube length). Analytical projections indicated that superior performance was expected with the Configuration 4S heads. Actual test results in the engine dynamometer cell indicated that Configuration 4S did in fact produce superior performance, and it was anticipated that vehicle performance (acceleration rates) would be improved. However, tests on a vehicle dynamometer revealed essentially no change in performance. The reason for this apparent anomaly was not understood, and project funding limitations prevented further testing to investigate the problem.

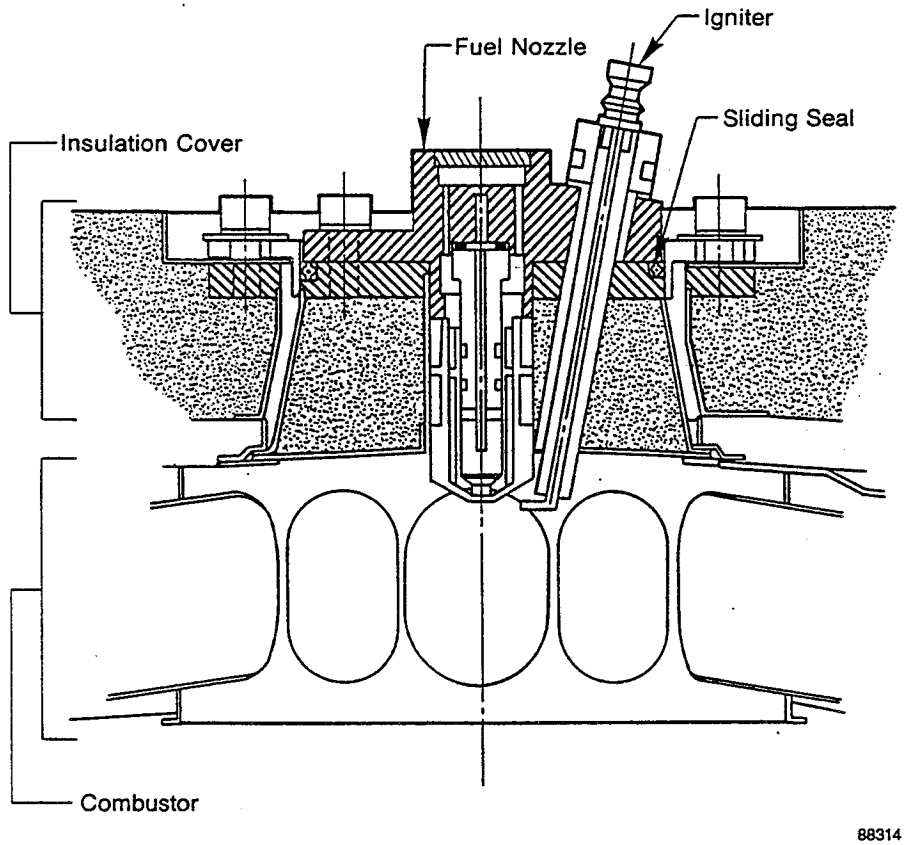

Figure 3-33. Conical Nozzle and Igniter in Mod II CGR Combustor

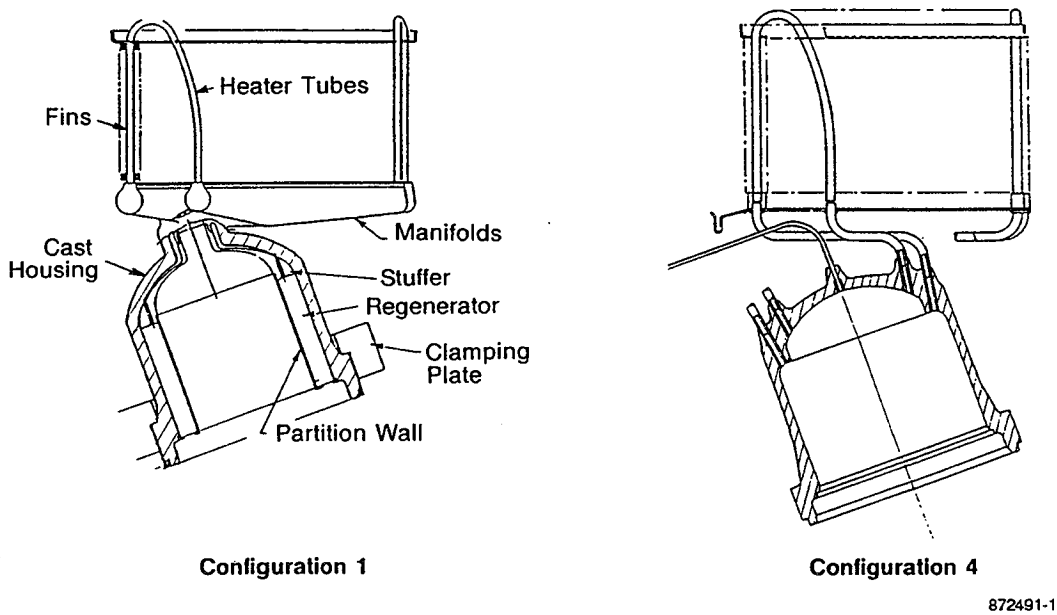

Figure 3-34. Comparison of Heater Head Designs

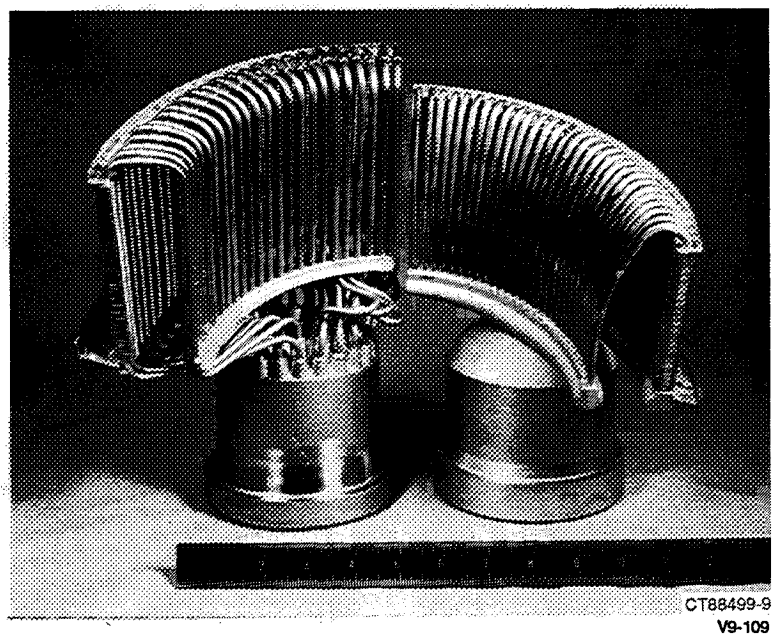

Figure 3-35. Comparison of Configuration 4 and Configuration 1 Heater Head Hardware

3.2.1.4 Regenerator

Test results and visual examination of hardware after being tested in an engine indicated the possibility of bypass leakage at the outer diameter (OD) of the regenerator. Figures 3-36 and 3-37 show Configuration 1 and 4 regenerator designs. Tests of a regenerator sealed at the OD using a metal paint showed an increase in efficiency throughout the operating range, and especially at lower engine power output. A design was prepared to incorporate a shell on the regenerator OD, and a set of four was manufactured and installed in the USPS LLV. Although definitive back-to-back tests were not conducted, it was not obvious that an improvement was made.

3.2.1.5 Atomizing Air Supply

A piston-type positive-displacement compressor replaced the rotary-vane type originally selected for the Mod II design in order to attain adequate pressure and capacity levels.

3.2.1.6 Combustion Air Supply

The original design incorporated a dual-purpose alternator, which supplied 12-V power for vehicle loads and battery charging, and high voltage (48 to 240 V) for driving the combustion air blower. The 12-V portion of the alternator development was not completed due to the time constraint of the USPS LLV installation. A separate commercial alternator was used instead.

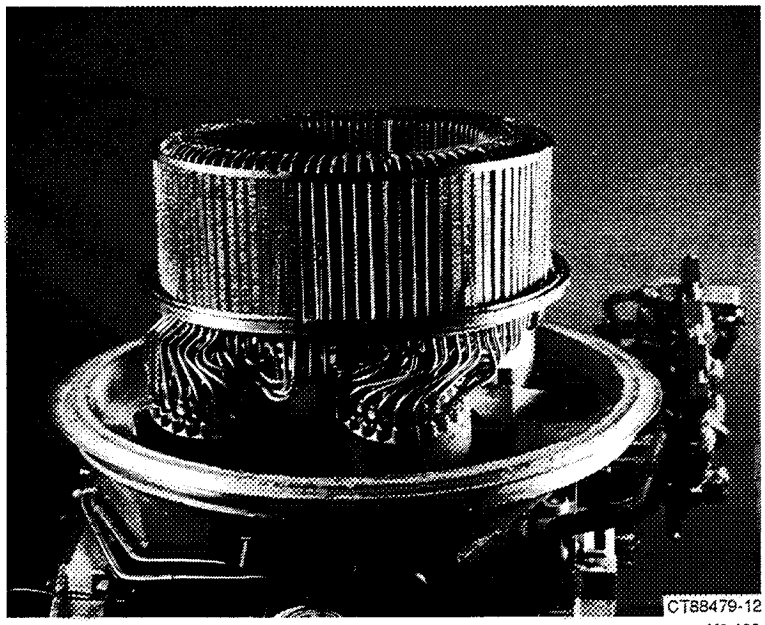

Figure 3-36. Configuration 4S Heater Head

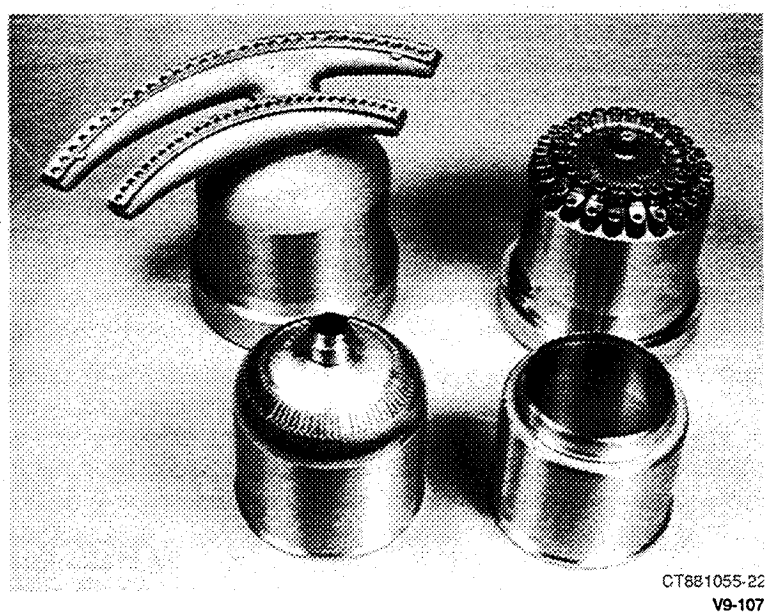

Figure 3-37. Comparison of Configuration 1 and Configuration 4S Heater Heads and Regenerator Designs

3.2.1.7 Mean Pressure Control System

The original Mod II working gas system incorporated a two-tank hydrogen storage system, with tanks held at different pressure levels to minimize hydrogen compressor work and eliminate the need for a two-stage compressor. Repeated failures of solenoid-activated tank shutoff valves forced a return to the single storage tank system. In addition to the valve failures, the two-tank valving system was considered to be objectionably noisy. The single-tank system decreased fuel economy due to the increase in compressor work. Additional development would be required to correct the tank valve problems.

3.2.2 Test and Development Efforts

Mod II engine development was limited due to the reduced funding level and limited time at the end of the project. Development of component-level technologies was limited to October, November, and December of 1988, when Mod II engine No. 3 was in the engine dynamometer test cell at MTI. Test data were obtained in this period for the EGR combustor, the Configuration 4S heater head, and sealed regenerators.

3.2.2.1 EGR Combustor Development

Tests were performed on the EGR combustor with the Mod II in its full system configuration, utilizing the configuration 4S heater heads and a set temperature of 820°C. Data were obtained at EGR levels of 0, 20, 30, and 50%, with the three-hole conical nozzle and a constant 1 g/sec atomizing air flow. This general configuration had been selected for the final vehicular testing, and the test cell results were to be used to verify the selection process. Emissions index results for NO_x, CO, and HC at various EGR levels are shown in Figures 3-38 through 3-40.

As shown in Figure 3-38, the NO_x emissions index at 30% EGR for the Mod II is approximately 4.5, while that for the Mod I is approximately 3.0. This result indicates the strong effect of heater head temperature on NO_x, since the Mod II heater head temperature is 820°C versus the 720°C of the Mod I. In general, if the EGR level is maintained in the 30 to 50% range, it is expected that the NO_x emissions index will be at an acceptable level (i.e., below 1 g/mi).

As shown in Figures 3-39 and 3-40, the CO and HC emissions indices are substantially below the goal levels of 23 and 2.75, respectively. These levels are consistent with earlier Mod I data, which indicated the insensitivity of CO and HC to heater head temperature. Figure 3-41 shows the smoke numbers for the tests described in Figures 3-38 through 3-40. In all cases, the smoke numbers are consistently low and show no sensitivity to fuel flow or EGR level. A smoke number level less than 10 units is considered adequate.

The maximum power level observed with the Mod II was attained while using the EGR combustor, which had lower airflow requirements and thus lower auxiliary blower power, as shown in Figure 3-42. Unfortunately, at the time the engine efficiency data with the EGR combustor were obtained, the preheater efficiency had degraded by about 2 points as verified by other tests. This lowered the overall system efficiency with EGR by a proportionate amount to the values shown in Figure 3-43. Note that the CGR efficiency data shown in Figure 3-43 was taken before the preheater performance was degraded. By observing the efficiency difference between EGR and CGR operation shown in Figure 3-43 and comparing this to Figure 3-42, the system efficiency with the EGR combustor would have been higher than with the CGR combustor if the preheater had not been degraded. Thus, the higher expected value or power and efficiency of the EGR combustor was verified.

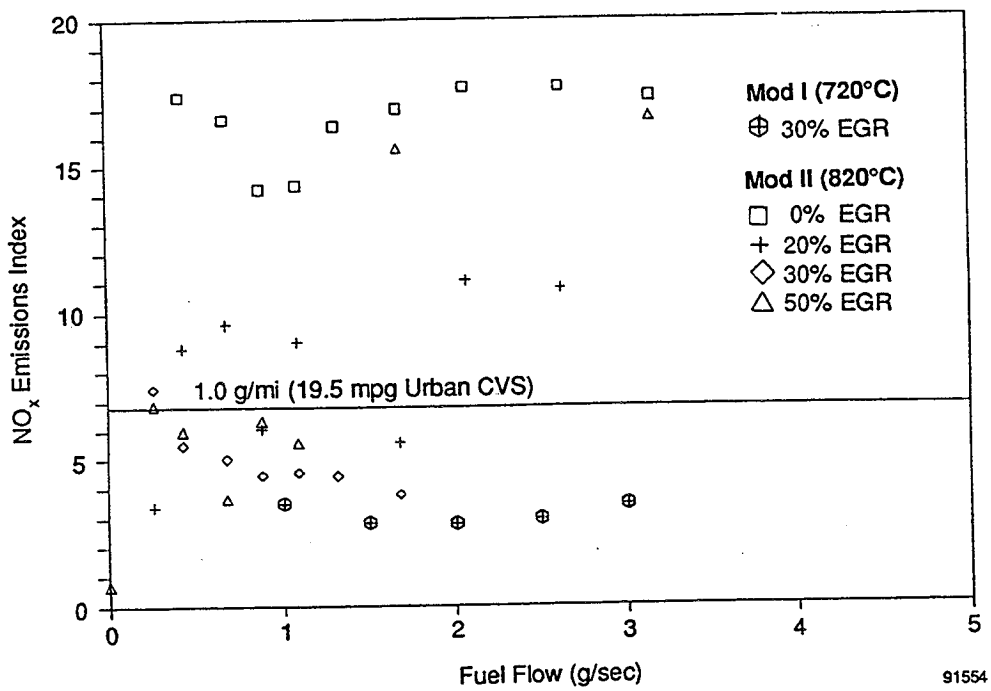

Figure 3-38. Mod II NO_x Emissions

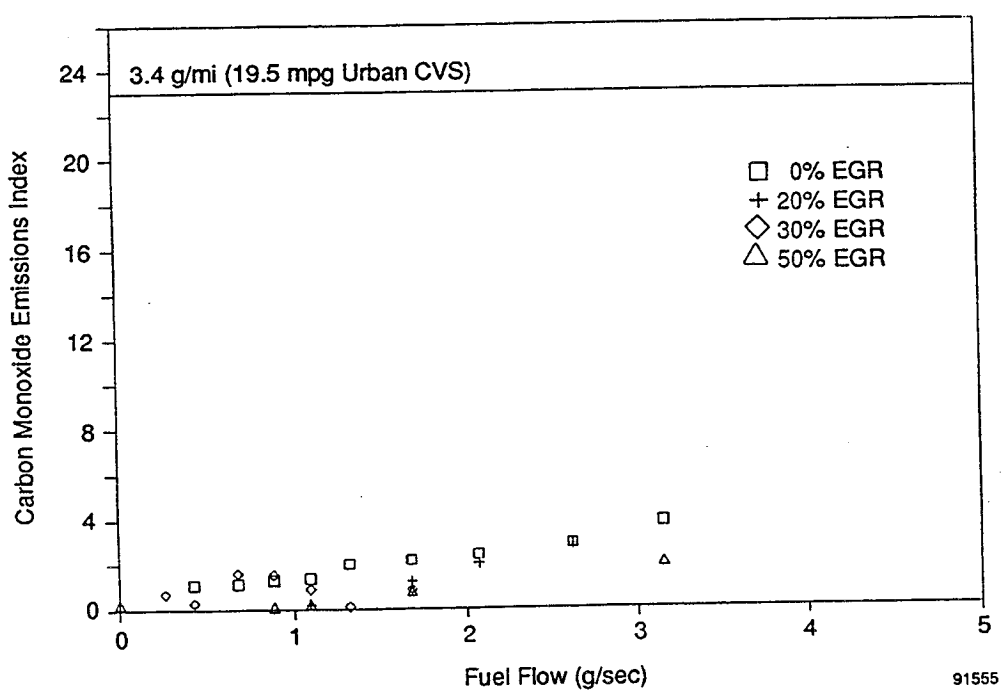

Figure 3-39. Mod II CO Emissions

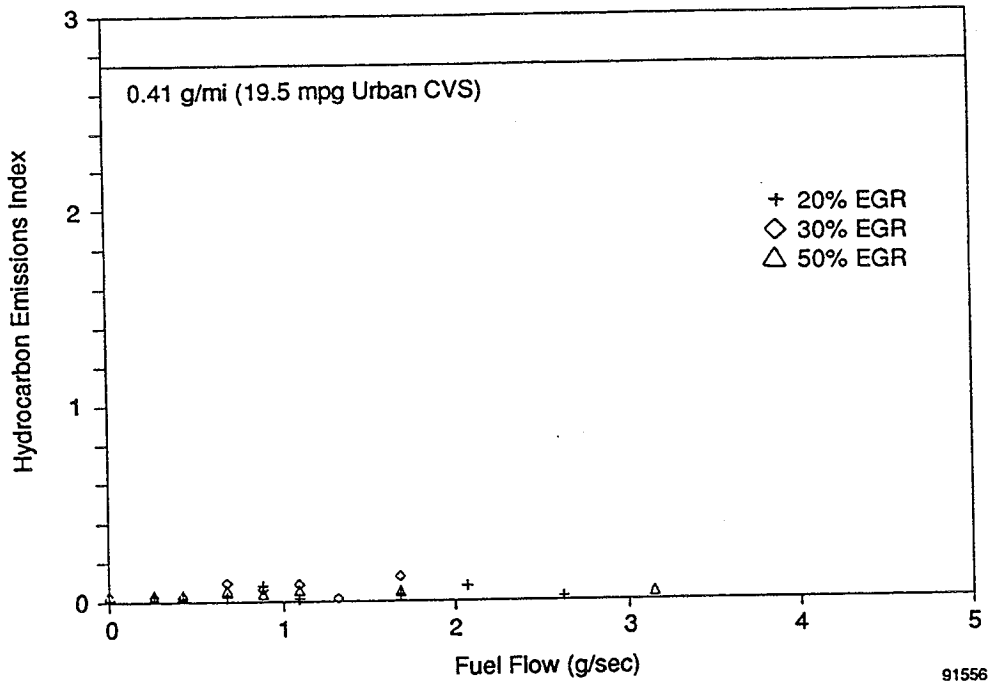

Figure 3-40. Mod II HC Emissions

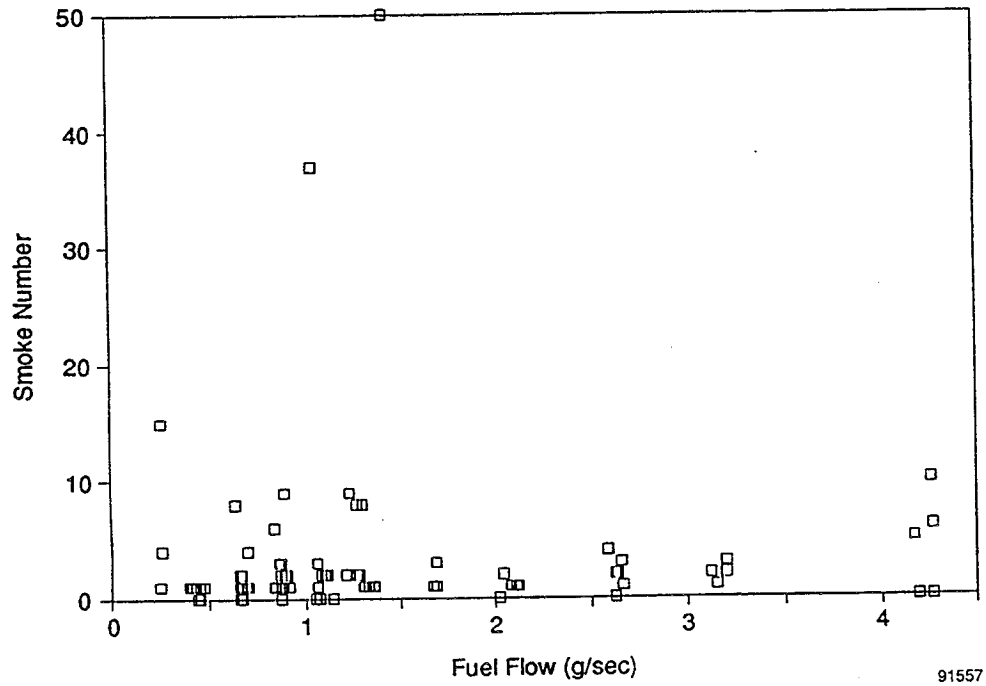

Figure 3-41. Mod II Smoke Number

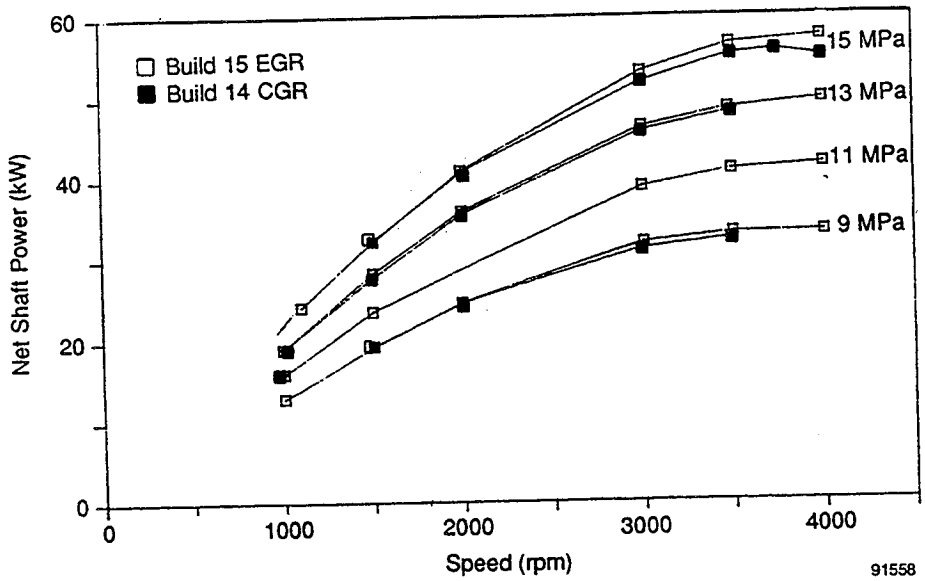

Figure 3-42. Mod II Power— EGR vs. CGR

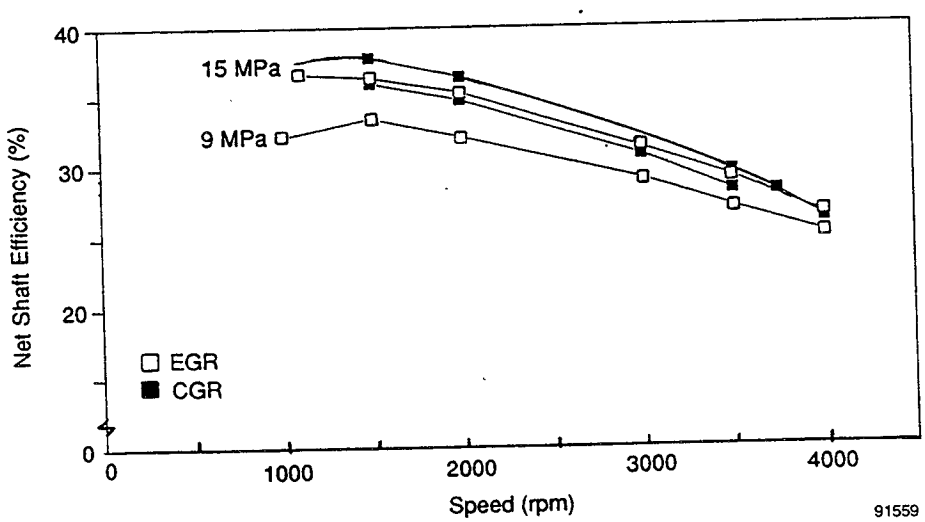

Figure 3-43. Mod II Efficiency— EGR vs. CGR

3.2.2.2 Heater Head Development

The heater head design for the Mod II engine proceeded through three hardware evaluations:

- Configuration 1, with two manifolds and hairpin tubes
- Configuration 4L, with no manifolds and long tubes
- Configuration 4S, with no manifolds and short tubes.

Configuration 4S had two variations: one with and one without swaging of the tube ends as they entered the heater head casting.

Figure 3-44 demonstrates the substantial effect on engine power of swaging the heater tubes. The swaging had been added to the tubes at each end in order to reduce the thermal stress on the casting during cold starts of the engine, but had the undesirable effect of producing a substantial increase in pumping power. By removing the swaging and enlarging the bore in the casting, the same thermal stress reduction was achieved, but without a reduction in engine power. Efficiency levels were also reduced by 2 to 3 percentage points due to swaging.

The performance differences between configuration 1 and configuration 4S heater head designs are shown in Figures 3-45 and 3-46 and demonstrate why configuration 4S was chosen for the final engine characterization. At the maximum power point (15 MPa, 4000 rpm), the shaft power with configuration 4S is over 5 kW higher than with configuration 1, while the maximum efficiency is approximately 3 percentage points higher at 15 MPa and occurs at lower rpm. The increase in power and efficiency realized with configuration 4S is due to the elimination of the hot dead volume associated with the manifolds of configuration 1.

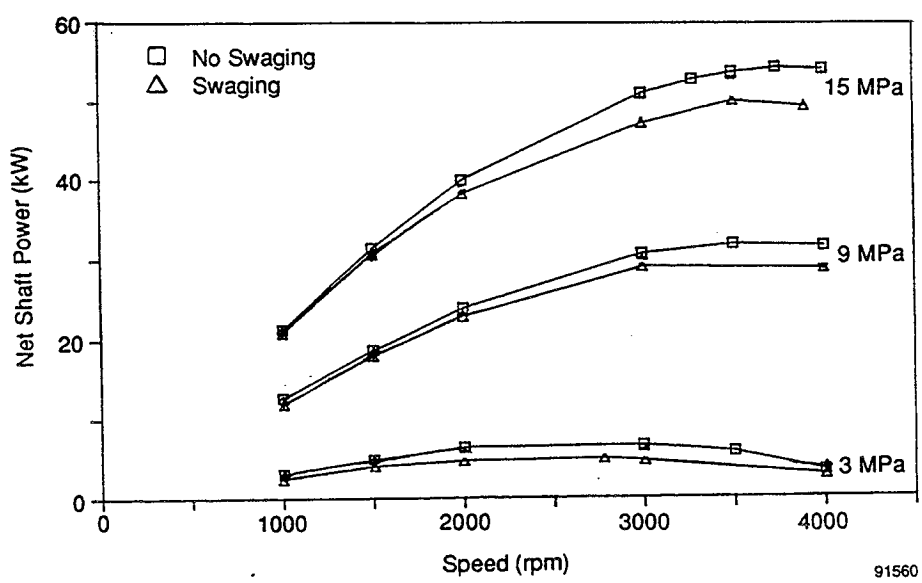

Figure 3-44. Mod II Power for Swaged vs. Unswaged Tubes

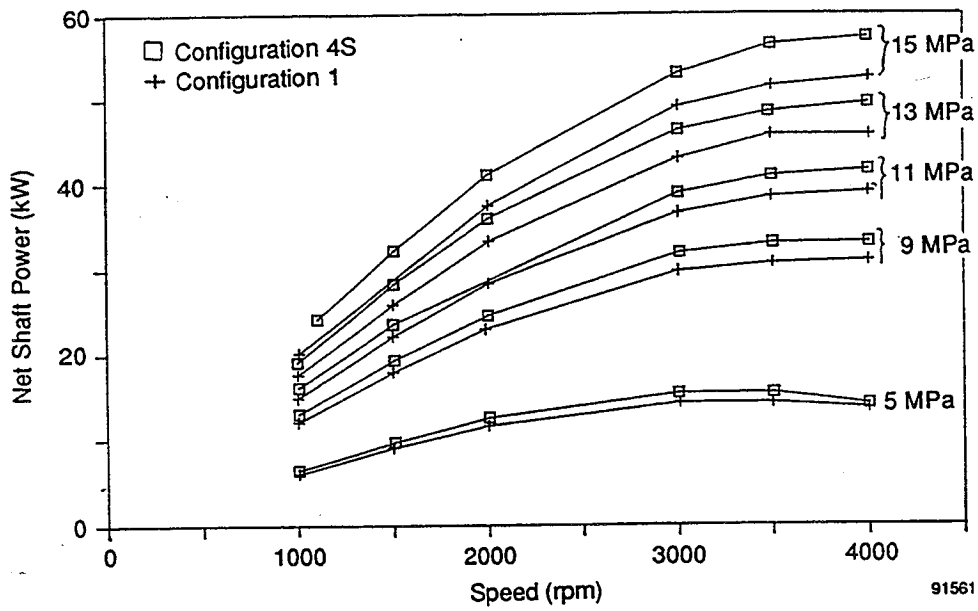

Figure 3-45. Mod II Power — Configuration 4S vs. Configuration 1

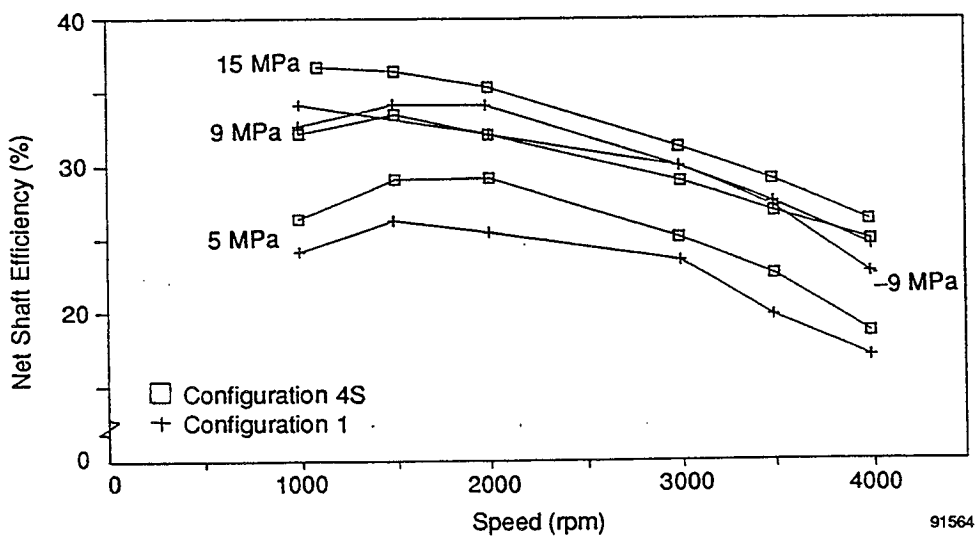

Figure 3-46. Mod II Efficiency — Configuration 4S vs. Configuration 1

3.2.2.3 Sealed Regenerator Development

One of the concerns in moving to an annular regenerator design was that there would be flow bypassing the regenerator matrix at the outer radius of the regenerator where it is adjacent to the heater head casting. This concern arose because of the difficulty in getting a tight fit in this region without crushing the porous matrix itself.

In order to quantify the effects of the leakage, it was decided to obtain a set of engine shaft power and efficiency data in back-to-back tests with sealed and unsealed regenerators. The sealed regenerator was manufactured by taking an unsealed regenerator and coating its outer radius with a Cotronics powdered stainless-steel coating. The Cotronics material was applied as a slurry at the matrix periphery and was allowed to harden in an oven.

When tested on the engine, the sealed regenerator had the unexpected results of slightly lower shaft power (0.2 kW lower) and slightly higher efficiency (1% higher), as shown in Figures 3-47 and 3-48, respectively. Flow tests indicated that the sealed regenerator had a 25 to 65% higher pressure drop, which could have been due to either reduced leakage past the regenerator matrix or reduced flow area caused by braze material working into the matrix. The sealed regenerators were utilized in the engine installed in the LLV, but no effect was observed on vehicle performance. Subsequent engine tests were performed with unsealed regenerators, and the reasons for the unexpected engine performance were never uncovered.

3.2.3 Engine Test History Summary

Three Mod II engines were built and tested, plus a fourth unit run only as a drive unit. The initial Mod II (designated V4-125-1) was built using a block machined from an alloy steel ingot and is known as the "analog" block engine. This approach was used to acquire Mod II experience independent of the development effort required to obtain a successful cast block. This engine was used for evaluation in the test cell. A second analog block (V4-125-2) was assembled for motoring rig tests but was not tested due to limited funding. After sound cast blocks were acquired, the alloy steel block engines were disassembled and their parts stored or used in other engines. Figure 3-49 depicts the analog and cast blocks.

The second complete engine (V4-125-3) was assembled using a cast-iron block and used again for development testing. It was configured as a vehicle system, and a full set of characterization tests was performed. On its final build, this engine was assembled for evaluation in a generator set application. Discovery of a potential piston rod cracking problem resulted in its partial disassembly for piston rod rework, and the engine was not completely reassembled. The third and final Mod II engine (V4-125-4) was assembled using a cast block. This engine was run for only approximately 20 hr in the engine dynamometer cell and was then installed in the USPS LLV for evaluation. Engine V4-125-4 was removed from the LLV prior to returning the LLV to the USPS. A summary of the engine test history is contained in Table 3-4.

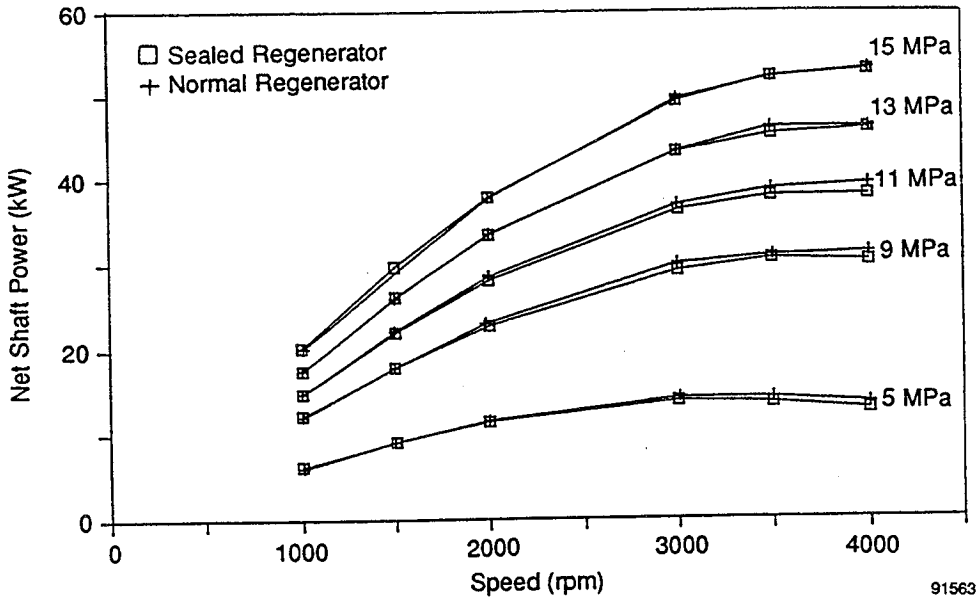

Figure 3-47. Mod II Power – Sealed Regenerator Test

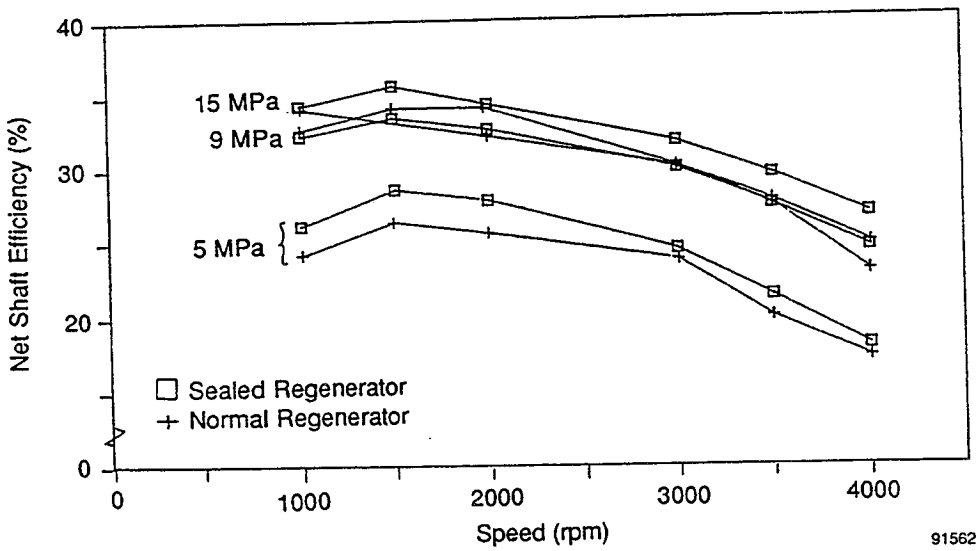

Figure 3-48. Mod II Efficiency – Sealed Regenerator Test

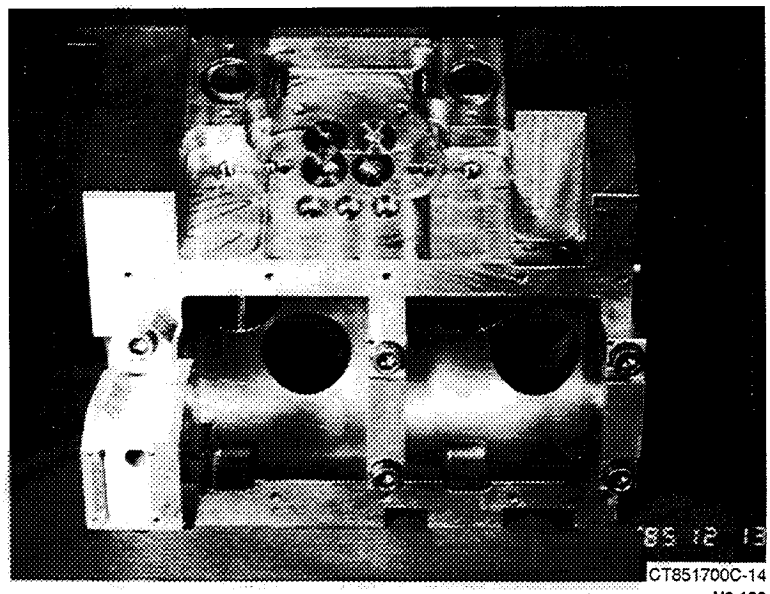

CT851700C-14
V9-106

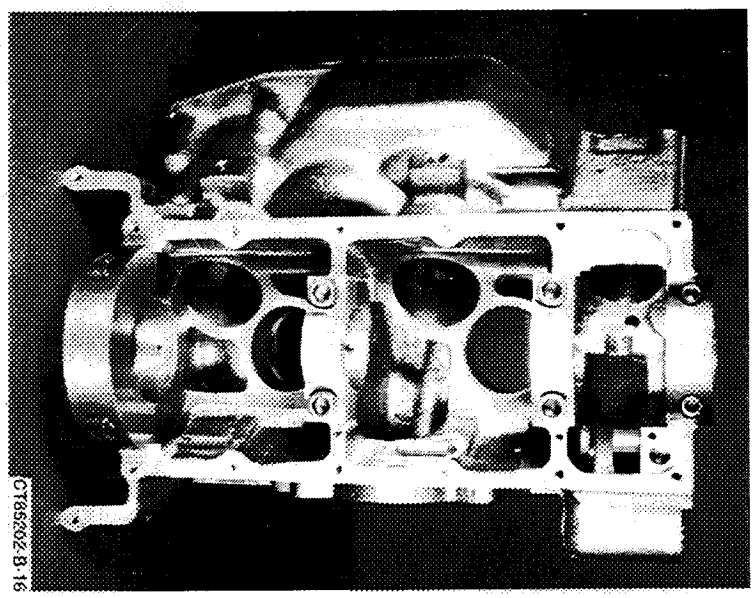

V9-103

Figure 3-49. Comparison of Mod II Analog/Cast Blocks

Table 3-4. Mod II Engine Test History

Engine No.	Test Cell Operation (hr)	Vehicle Operation (hr)	Total Operation (hr)	No. of Builds
1	666.5	0	666.5	30
3	546.4	0	546.4	17
4	19.6	498.0	517.6	7
Total	1232.5	498.0	1730.5	54

91TR15

The final engine performance curves were obtained on build 15 of engine No. 3. The predicted and measured power is shown in Figure 3-50. The measured output power level is a very smooth function of rpm and only slightly lower than the predictions. The measured efficiency output has slightly less uniformity than the measured power, but the data are in even better agreement with the predicted values. The measured maximum efficiency point can be seen to occur at a slightly lower rpm than the prediction.

A comparison of predicted and measured performance since the beginning of the Mod II effort is shown in Table 3-5. Detailed data on which this summary is based are shown in Table 3-6. Engine emissions performance is described in Section 4.0.

3.3 Fuel Economy

The Mod II engine design specification was chosen to meet the ASE project goals. It was focused specifically on providing optimized fuel economy in a Chevrolet Celebrity vehicle as measured in the EPA combined urban-highway driving cycle. Several changes occurred within the project that resulted in the final engine/vehicle/duty cycle combination being far from optimized. First, the vehicle was changed from the Celebrity to a USPS LLV, which is a heavier, less aerodynamic design that produced a significantly higher road load. Second, the actual engine/system hardware, as installed in the USPS LLV, was also different from that specified in the Mod II design, as a result of problems that occurred during the development process. Finally, the vehicle duty cycle for mail delivery is completely different than the EPA driving cycle, and therefore changes the average operating point of the engine dramatically. Improvements in fuel economy for the final Mod II engine system could be realized via reoptimization of the system to better fit the USPS application, but project funding limitations prevented further work of this nature.

Mod II-powered USPS LLV fuel economy assessments relative to the baseline SI engine were accomplished in two ways: by certified EPA facility vehicle dynamometer testing, and by actual over-the-road tests. The EPA tests reflect the typical urban and highway driving profiles of the U.S. passenger fleet. Tests were also conducted to determine the USPS LLV fuel economy operating in two different mail service delivery modes.

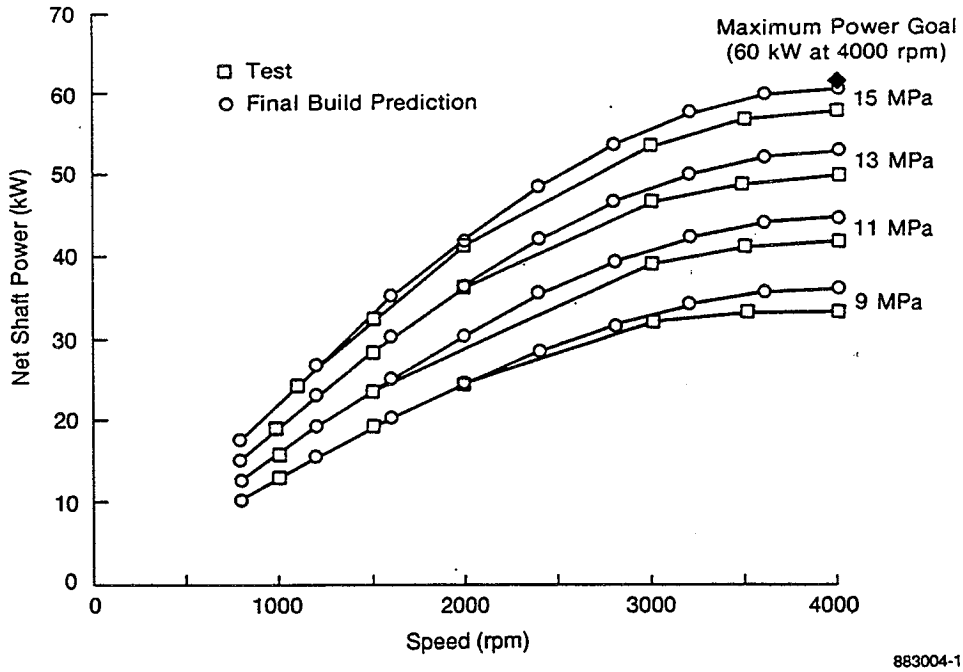

a) Mod II Power

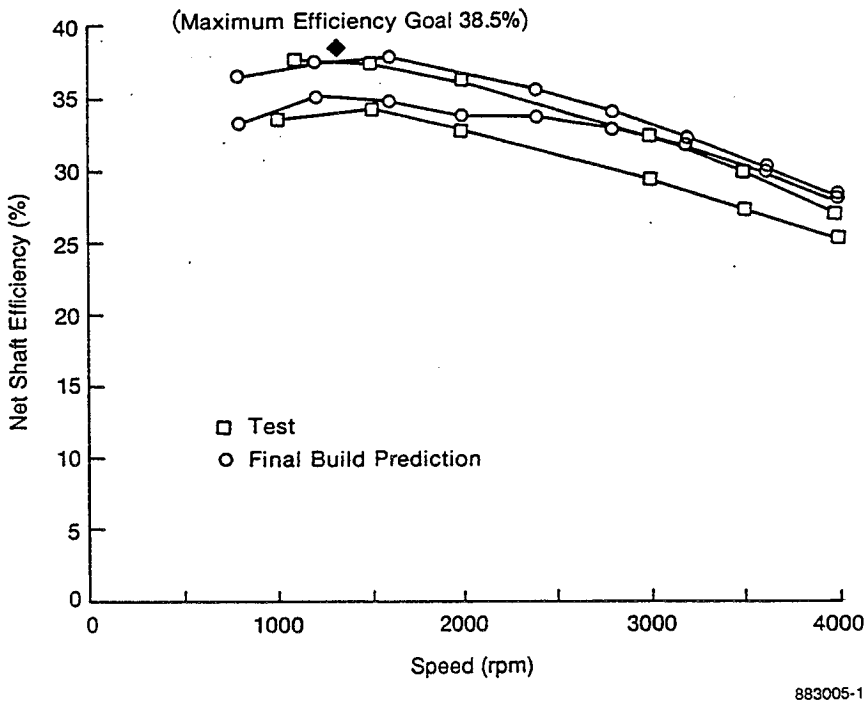

b) Mod II Efficiency

Figure 3-50. Mod II Power and Efficiency

Table 3-5. History of Mod II Predicted vs. Measured Performance

Parameter	Predictions			Actual	Goal
	1985	1987	1988	1988	
Full Load Power (kW) (p = 15 MPa, n = 4000 rpm)	62.4	58.6	60.4	57.9	60
Maximum Efficiency (%) (p = 15 MPa, n = 1200 rpm)	38.5	39.2	37.5	37.9	38.5

91TR15

Table 3-6. Detailed Performance Projection Comparison of SES Design Review to Final Build Configuration 4S

	Parameter	1985 SES Review	1987 Final Build Configuration 4S
Full-Load Point (p = 15 MPa, n = 4000 rpm)	Indicated Power (kW)	78.6	75.8
	Indicated Efficiency (%)	40.0	41.8
	Friction (kW)	9.9	7.5
	Auxiliaries (kW)	6.4	9.7
	Net Power (kW)	62.4	58.6
	EHS* Efficiency (%)	88.9	89.5
	Net Efficiency (%)	28.2	28.9
Part-Load Point (p = 12 kW, n = 2000 rpm)	Indicated Power (kW)	15.7	16.0
	Indicated Efficiency (%)	48.0	48.6
	Friction (kW)	2.0	1.6
	Auxiliaries (kW)	1.6	2.4
	Net Power (kW)	12.0	12.0
	EHS Efficiency (%)	90.4	88.8
	Net Efficiency (%)	33.2	32.4
Maximum Efficiency Point (p = 15 MPa, n = 1200 rpm)	Indicated Power (kW)	30.4	30.8
	Indicated Efficiency (%)	48.2	50.5
	Friction (kW)	2.5	2.4
	Auxiliaries (kW)	1.3	2.0
	Net Power (kW)	26.7	26.4
	EHS Efficiency (%)	91.0	90.6
	Net Efficiency (%)	38.5	39.2
Low-Load Point (p = 5 MPa, n = 1000 rpm)	Indicated Power (kW)	9.1	8.9
	Indicated Efficiency (%)	46.6	46.1
	Friction (kW)	0.9	0.8
	Auxiliaries (kW)	1.0	1.7
	Net Power (kW)	7.1	6.4
	EHS Efficiency (%)	88.8	85.7
	Net Efficiency (%)	32.3	28.4

91TR15

*EHS = External Heat System

Fuel economy data for the Mod II-powered USPS LLV were obtained at an EPA-certified facility (DMACS Engineering Laboratory in Thelford, Pennsylvania) and compared to the fuel economy for the SI-powered LLV obtained at the same facility. Table 3-7 shows the results of this testing, which indicated a 10% mileage improvement for the Mod II engine. It is important to note that the fuel economy improvement is exactly as predicted, as discussed in Section 3.3.2.

Table 3-7. EPA Fuel Economy Results for SI Engine vs. Mod II Engine in the USPS LLV (with Gasoline)

Fuel Economy	SI	Mod II
Urban (mpg)	19.0	19.6
Highway (mpg)	22.7	27.6
Combined (mpg)	20.5	22.5
Improvement (%)	—	+9.8

91TR15

Over-the-road tests were conducted to verify the above results. Two vehicles were driven simultaneously over the same urban and highway routes in the Albany, New York, area for a period of more than a week to establish the data base (see Table 3-8). The Mod II vehicle was run using both unleaded gasoline and diesel fuel. The fuel economy improvement for the Mod II over the SI engine was 13%.

Results are consistent with expectations in that the somewhat greater improvement (13% versus 10%) shown in the over-the-road tests relative to the EPA tests reflects the decrease in significance of the cold-start penalty in the over-the-road tests due to the longer duration of the testing itself. Diesel fuel economy relative to gasoline reflects (approximately) the difference in heating value per gallon between the two fuels.

Table 3-8. Over-the-Road Test Results for SI Engine vs. Mod II on Gasoline and Diesel Fuel

Fuel Ecomomy	Spark Ignition	Mod II	
	Gasoline	Gasoline	Diesel
Urban (mpg)	17.0	19.8	22.3
Highway (mpg)	24.4	26.5	31.2
Combined (mpg)	19.7	22.3	25.6
Improvement (%)	—	13	30

91TR15

Tests were conducted to evaluate fuel economy for the USPS "curbline" and "park-and-loop" delivery cycles. Curbline duty cycle required multiple, closely spaced starts and stops while the park-and-loop duty cycle required long time intervals betwen short drives. Those cycles are dramatically different from the urban and highway cycles, as indicated in Table 3-9.

Table 3-9. Comparison of Urban vs. Highway Cycles

Cycle Type	Average Speed (mph)
EPA Urban	21.1
EPA Highway	48.2
Curbside	7.6
Park and Loop	4.5

91TR15

In both USPS delivery cycles, Mod II fuel economy was not as good as the SI baseline engine. Operation of the engine/vehicle in the delivery cycles had not been considered in the original engine and system design, since the demonstration vehicle had been the Celebrity. It is anticipated that engine and system reconfiguration and optimization would eliminate the fuel economy penalty in these operational modes.

At a cursory level, the above results would appear to suggest that ASE project goals were not attained. However, as documented in the following subsections, the results obtained are consistent with an engine design that achieved its performance objectives as an engine but was evaluated in a vehicle that was very different than that for which it was designed. In fact, the Mod II engine performance in the USPS LLV was exactly as predicted. (In sports vernacular, this is akin to taking an athlete that had been trained to be a distance runner and evaluating him as a shot putter.) The history of events that occurred during the project explain the results obtained and indicate a path to improve those results to achieve the full potential of the Stirling engine.

3.3.1 Initial Mod II/Vehicle Design

The initial design of the Mod II was focused, as mentioned previously, on installation in the 1985 Chevrolet Celebrity vehicle. Drive train and system components were optimized specifically for maximized fuel economy over the combined EPA urban and highway combined driving cycles. Initial matching of engine power output and final drive ratio was performed to provide acceptable acceleration characteristics while providing maximum fuel economy (see Figure 3-51). The higher the engine power and the higher (numerically) the final drive ratio, the faster the acceleration times and the lower the fuel economy. Conversely, lower power output and lower numerical final drive ratios provided slower acceleration and better fuel economy. This relationship is essentially similar to that which occurs with an SI engine installation. The combination of 60-kW power output and 2.66 final drive ratio was selected to give acceleration comparable to the SI Celebrity while providing the best fuel economy. Predicted values for the Mod II Celebrity compared to the SI version are given in Table 3-10. A margin of ≈15% in acceleration time was retained to ensure adequate performance level for the Mod II vehicle.

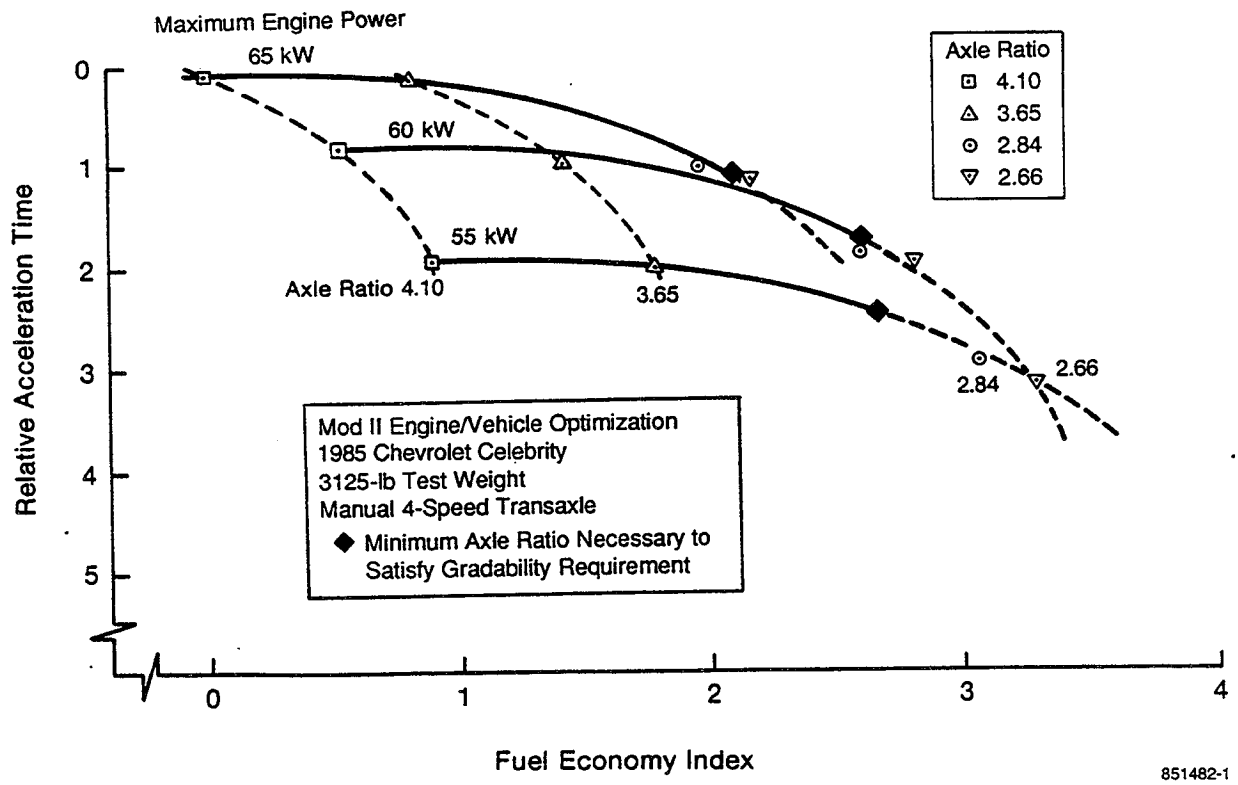

Figure 3-51. Effect of Axle Ratio and Engine Size on Fuel Economy, Acceleration Performance, and Gradability

Table 3-10. Predicted Mod II Stirling Performance vs. SI Engine in 1985 Chevrolet Celebrity

Engine	Acceleration Time 0 to 60 mph (sec)	Combined Fuel Economy (mpg)	Fuel Economy Improvement (%)
SI	15.0	31.0	—
Mod II Stirling	12.4	40.9	+32

91TR15

3.3.2 Mod II Fuel Economy

Some time after the Mod II Celebrity package was optimized, a vehicle change was introduced in the project. As part of the three-phase NASA TU vehicle evaluation project, a USPS LLV was to be configured with a Mod II engine for field evaluation. In order to conserve resources, it was decided to use the LLV for both the TU demonstration and also for the demonstration of the ASE project goals. The LLV characteristics were considerably different than the Celebrity, as noted in Table 3-11.

Table 3-11. Comparison of USPS LLV and Celebrity

Vehicle	Weight (lb)	Road Load (hp)
Celebrity	3125	7.26
USPS LLV	3375	17.9

91TR15

The considerably higher weight and road load of the LLV resulted in an increase in the average operating point of the vehicle power plant. The impact of this change in engine operating characteristics is shown in Figures 3-52 and 3-53 for both the Stirling and SI engine for the urban driving cycle. These plots show the Stirling and SI engine iso-efficiency lines as a function of rpm and shaft power with the average operating point for both the Celebrity and LLV superimposed. Table 3-12 summarizes the average operating point efficiency results from Figures 3-52 and 3-53.

The improvement in efficiency is indicative of the relative fuel economy expected with the two engine types in the same vehicle. As shown in Table 3-10, a 32% improvement in combined cycle fuel economy from an SI to Mod II Stirling-powered vehicle was predicted using the MTI vehicle simulation code. This compares favorably with the 39% improvement expected by simply comparing average operating point efficiency levels. In the case of the LLV, the average operating point improvement expected with the Mod II relative to the SI is considerably less, approximately 12%.

As a further verification that the Mod II engine accomplished its performance goals, the MTI vehicle simulation code was used to predict the performance of the Mod II LLV in the EPA driving cycle. These results are compared to actual tests of the SI LLV and the Mod II LLV in Table 3-13. Test and predicted results for combined fuel economy are in excellent agreement and indicate the predictability of Stirling engine performance.

A reoptimization of the Mod II design could be performed to relocate the engine map iso-efficiency lines (shown in Figure 3-52) to regions of higher efficiency at the average operating point. This would include relief of constraints associated with the Mod II Celebrity installation, primarily related to engine height. The Mod II design and hardware procurement, based on the Celebrity installation, was already complete at the time the LLV fuel economy levels were determined, and therefore reoptimization of the Mod II design for the LLV could not be undertaken.

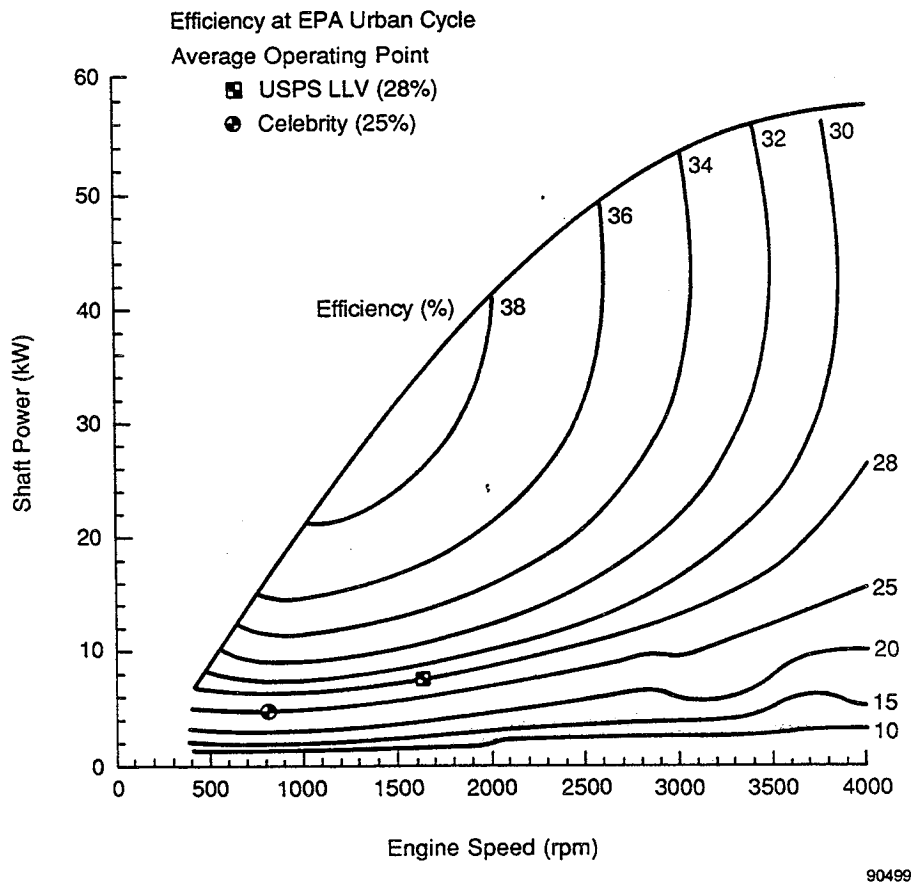

Figure 3-52. Mod II Engine/Vehicle Performance

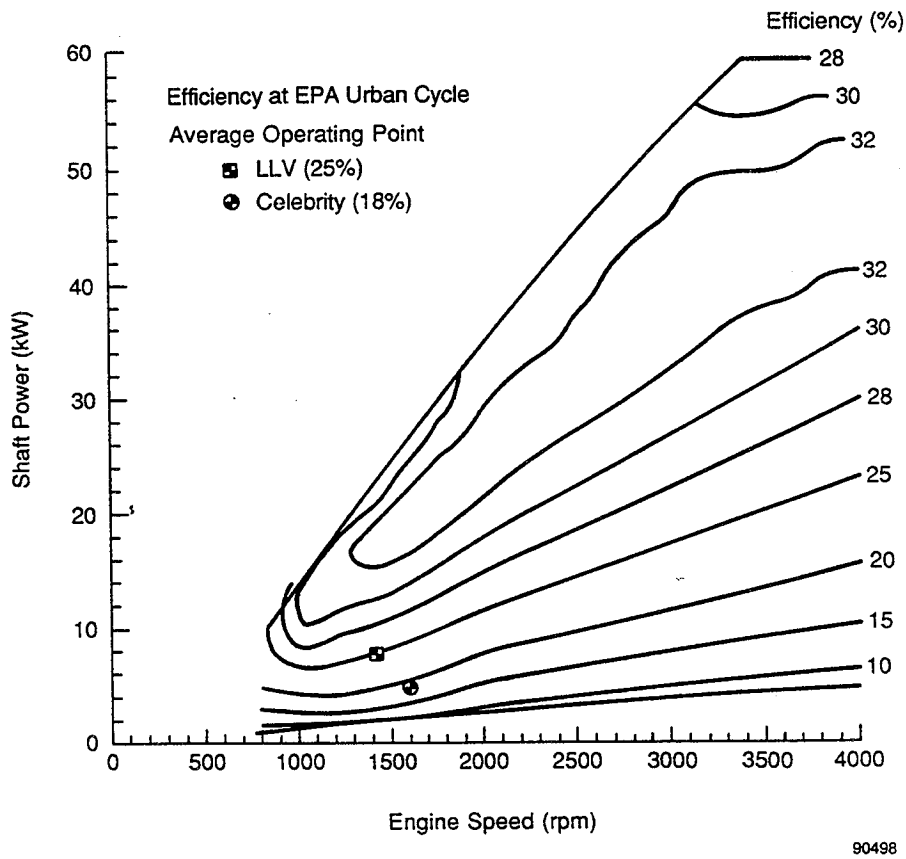

Figure 3-53. SI Engine/Vehicle Performance

Table 3-12. Average Operating Point Efficiency (%)

Vehicle	SI Engine	Mod II Engine	Mod II Improvement
Celebrity	18	25	+39%
USPS LLV	25	28	+12%

91TR15

Table 3-13. Comparison of Fuel Economy Tests and Prediction Data

Fuel Economy	SI LLV	Mod II LLV	
	Tests*	Tests*	Prediction
Urban (mpg)	19.0	19.6	18.7
Highway (mpg)	22.7	27.6	30.3
Combined (mpg)	20.5	22.5	22.6
Improvement (%)	—	9.8	10.2

*Conducted at DMACS facility, Thelford, PA

91TR15

3.3.3 Engine and System Hardware Effects on Fuel Economy

During development of the Mod II engine and systems, several developmental deficiencies occurred which required that the hardware actually tested be different from that contained in the Mod II design. These effects and their impact on performance are discussed below.

3.3.3.1 Heater Head Tube Diameter

Heater head tube design optimization called for an inner diameter (ID) of 3.0 mm (0.118 in.). This was compromised to a nominal ID of 2.8 mm (0.110 in.) due to constraints imposed by OD tolerances required for the heater head brazing assembly fit. Increasing the ID to the design specification value would result in a 1% improvement in efficiency and a 1.4 kW improvement in maximum power output.

3.3.3.2 Regenerator Design

Engine dynamometer testing and analysis indicated the possibility of bypass leakage associated with the regenerator OD. It was estimated that correction of the leakage problem would primarily affect only efficiency levels, resulting in an improvement of 1.5%. A first attempt at eliminating leakage by enclosing the regenerator in a shell (brazed) was accomplished, but back-to-back tests were not conducted to evaluate the success or failure of the modification. Unfortunately, due to schedule constraints, the regenerators were installed in the LLV engine simultaneously with several other changes, and no significant change in fuel economy could be recognized.

3.3.3.3 Hydrogen Supply System

Problems were encountered in the basic Mod II engine hardware that comprised part of the hydrogen supply system. When functioning properly, the supply system would admit hydrogen into the engine on demand only when cycle pressure was at or near the maximum level. Component leakage was encountered that allowed hydrogen to be admitted continually throughout the cycle. This had the effect of slowing engine response during acceleration and increasing fuel consumption by requiring additional work to raise the pressure of the hydrogen admitted at levels below the maximum. The magnitude of this penalty has not been quantified.

3.3.3.4 Hydrogen Storage System

The original Mod II design called for a two-tank hydrogen storage system, with two different tank pressures to allow rapid engine pumpdown with minimum hydrogen compressor power requirements. Due to repeated failure of the tank valving system and objectionable noise associated with the valve operation, the two-tank system was removed from the vehicle. It is estimated that removal of the two-tank system penalized fuel consumption by 0.2 mpg, which is equivalent to a 1% reduction in efficiency. Restoration of the system by further development efforts would eliminate this penalty.

A summary of the penalties incurred by incomplete hardware development is shown in Table 3-14. It is expected that these penalties could be eliminated by further development.

Table 3-14. Engine Performance Increase Expected with Completion of Hardware Development

Parameter	Efficiency (%)	Power (kW)
Heater Tube Diameter	1	1.4
Regenerator Design	1.5	0
Hydrogen Supply System	–	–
Hydrogen Storage System	1	–
Total	3.5	1.4

91TR15

3.3.4 Vehicle Effects on Fuel Economy

As noted previously, Mod II fuel economy in the USPS duty-cycle delivery modes was not as good as that obtained with the SI-powered vehicle. Several factors contributed to this deficit that could be corrected using the approaches described below.

3.3.4.1 Engine Operating Cycle

The transient cycle to which the engine is subjected in the delivery cycles is considerably different than that of the EPA cycles, particularly in the number of returns to idle conditions and the amount of time spent at idle. The two-tank hydrogen storage system is particularly effective in reducing fuel usage during return to idle, and incorporation of a developed system would improve fuel consumption. (Delivery cycle tests were conducted with a single-tank system.) In addition, a full system reoptimization, utilizing the delivery cycles coupled to the vehicle simulation code, would improve engine efficiency at the delivery cycle operating conditions.

3.3.4.2 Engine/Accessory Drive

In operation with the existing engine hardware, it was discovered that the batteries would lose charge during the delivery due to the low average engine speed. As a quick fix to correct this problem, idle engine speed was raised. A better solution to the problem would be to change accessory drive pulley ratios to obtain a higher alternator speed at a given engine speed. The Mod II accessory drive had been designed to maintain battery charge level over the EPA urban driving cycle, which has an average engine speed several times higher than the park-and-loop duty cycle of the LLV, as shown in Table 3-9. The original Mod II Celebrity design point for idle of 3.6 MPa at 450 rpm was changed to 4.5 MPa at 550 rpm for the USPS LLV, which increased idle fuel consumption by 65% over that for the Celebrity.

3.3.4.3 Cabin Heater

In the park-and-loop delivery cycle, the use of the driver compartment heater system, which is gasoline fired, also had a significant effect on fuel economy as shown in Table 3-15. Use of a waste heat recovery heater, utilizing coolant media and/or exhaust gas heat, would eliminate a 16% penalty in fuel economy.

3.3.4.4 Engine Cooling

The USPS required that no sheet metal changes be made in the LLV. This prevented the full cooling operation of the radiator for which the Mod II had been designed. In effect, it increased the engine cooling water temperature by 20 to 30°C, reducing engine efficiency by two to three points and power by 1 to 2 kW.

3.3.4.5 USPS Fuel Economy

Although an overall system reoptimization for the USPS would dramatically increase USPS fuel economy, the incorporation of the component changes would produce a marked improvement as well. It is estimated that implementation of the hardware changes of Table 3-14, the idle fuel consumption reduction, and the cooling system alteration would increase fuel economy in the curbside duty cycle by about 20%.

3.4 Deere & Co. Manufacturing Cost Study

The original intent of the ASE project was to develop an engine for use in passenger vehicles. As the project progressed, it became clear that the many obstacles to accomplishing this task would prevent the introduction of a new engine design in such a large competitive market and that a possible entry point was through light-duty trucks or specialty vehicles. However, the production volumes in these markets were in the 5,000 to 25,000 engines/year range rather than 100,000 to 300,000 range of the

Table 3-15. Park-and-Loop Fuel Consumption

Parameter	Value
Time Driven (hr)	2
Distance Driven (mi)	9
Total Fuel Used (gal)	1.8
Fuel Economy with Cabin Heater (mpg)	5
Heater Fuel Used (gal)	0.25
Engine Fuel Used (gal)	1.55
Fuel Economy without Cabin Heater (mpg)	5.8
Improvement in Fuel Economy without Cabin Heater (%)	16

91TR15

passenger vehicle. Commercialization at this volume level considerably expanded the list of potential manufacturers beyond the major automotive companies to the specialty engine producers.

Deere & Co. through its Government Products Division agreed to review the Mod II engine design, modify its design for low-cost manufacture at a production rate of 15,000 engines per year, and develop manufacturing/purchased parts costs (Meacher, 1989). This effort was accomplished through a VA/VE approach where Deere & Co. teams (including MTI engineering personnel) were established for each part according to the manufacturing process required. A total of 37 Deere & Co. specialists participated from 5 different operating units including the John Deere Engine Works, the Harvester Works, the Component Works, the John Deere Foundry, and the Deere & Co. Technical Center. The Government Products Division of Deere & Company provided overall coordination and management.

The study was divided into five phases:

- Phase I: VA/VE of BSE component parts
- Phase II: VA/VE of external heat system and control and auxiliary component parts
- Phase III: Development of manufacturing costs, process routings, and capital equipment costs for all manufactured parts
- Phase IV: Development of costs for all purchased engine components and materials
- Phase V: Development of process routings, costs, and capital investment for assembly, painting, and acceptance testing of the engine.

Phases I, II, and III were completed, while Phases IV and V were at the halfway point when the study was interrupted. However, enough work was performed on the last two phases that reasonable estimates could be made.

The first two phases involved detailed reviews of more than 300 Mod II engine design drawings. These drawings had been generated on the basis of the manufacture of two to ten development engines using custom machine shop techniques. Therefore, one of the first steps in the review was to establish the production processes consistent with low-cost modest volume manufacture: casting, forging, stamping, CNC machining, transfer lines, etc. A total of 776 specific ideas for design changes were developed and evaluated of which 164 were adopted in the Phase I and II VA/VE process. The estimated cost of manufacture for the parts list examined in Phase I was reduced by 32% and in Phase II by 50%, as shown in Tables 3-16 and 3-17. The cost results for an individual component were used to select between components rather than provide a direct engine cost.

Later in the Phase III effort, additional simplifications and cost reductions were uncovered to develop the estimated manufacturing costs. The final cost results by major assembled element are summarized in Table 3-18 and result in a total engine manufacturing cost of $442,559 at 15,000 engines per year. The capital investment required for a 15,000-engine/yr manufacturing facility was established at $36.6 million, broken down as shown in Table 3-19.

Table 3-16. Summary of Phase I Reduction of Manufacturing Cost by VA/VE Process

Component	Estimated Cost		Savings	
	Present Design	Proposed Design	Dollars	Percent
Engine block casting	195.96	179.46	16.50	8.4
Crankshaft assembly	138.23	79.17	59.06	42.7
Connecting rods (4)	127.00	111.88	15.12	11.9
Wrist pins (4)	18.07	2.50	15.57	86.2
Piston rods and crossheads (4)	136.72	50.32	86.40	63.2
Piston and radiation shields (4)	126.84	109.88	16.95	13.4
Main seal housing assembly (4)	121.92	59.92	62.00	50.9
Lube oil pump	53.77	20.26	33.51	62.3
Heater head attachment to block	52.71	3.03	49.68	94.3
Water pump (Gerotor type)	172.83	128.95	43.88	25.4
Coolers (4)	469.28	339.32	129.96	27.7
Clamping plate, transfer tube (2)	44.02	41.38	2.64	6.0
Insulation cover (partial)	17.05	15.04	2.01	11.8
Clamp, insulation cover	18.84	10.50	8.34	44.3
Total Per Engine	$1693.24	$1151.61	$541.63	32.0

91TR15

Table 3-17. Summary of Phase II Reduction of Manufacturing Cost by VA/VE Process

Component	Estimated Cost		Savings	
	Present Design	Proposed Design	Dollars	Percent
Engine block and transition piece	233.58	192.25	41.33	17.7
Oil sump	24.76	7.72	17.04	68.8
Front cover for engine block	28.85	21.63	7.22	25.0
Heater head housing (4)	49.87	18.63	31.24	62.6
Heater head tubing assembly (4)	528.48	295.52	232.96	44.1
Combustor	202.79	86.04	116.75	57.6
Fuel nozzle	49.74	17.46	32.28	64.9
Preheater	770.32	178.53	591.79	76.8
Flamestone	26.36	18.85	7.51	28.5
Combustion air blower	63.45	47.49	15.96	25.2
Working gas compressor system	375.83	147.16	228.67	60.8
Power control valve	442.80	363.06	79.74	18.0
Total Per Engine	$2796.83	$1394.34	$1402.49	50.1

91TR15

Table 3-18. Summary of Estimated Manufacturing Costs for Mod II[1]

Component	Cost	Percent of Total
Cold engine and drive system: +1.09, +6.02	724.68	16.4
Heater heads (4)	1132.79	25.6
Regenerators (4) foil type	416.72	9.4
Coolers (4)	99.03	2.2
External heat system	393.24	8.9
Power (working gas) control system	1135.56	25.7
Controls and auxiliaries (water pump, blower, alternator, starter, fuel control, etc.)[2]	523.57	11.8
Total Engine Cost[3]	$4425.59	100.0

1. Amortization of capital equipment costs is not included.
2. Cost of electronic engine control system is not included.
3. Cost estimated for a production rate of 15,000 engines per year. Cost-reduction benefits of all VA/VE work in Phases I, II, and III are included in the above cost estimates.

91TR15

Table 3-19. Projected Capital Investment for Mod II Manufacturing Facility

Machine tools	$21,945,000
Tools	3,348,800
Gages	446,310
Heat treating equipment	2,300,000
Maintenance equipment	245,000
Tool room	1,849,000
Miscellaneous	581,895
Machine installation	400,000
Building and land	5,000,000
Supplier's tooling	482,660
Total:	$36,598,665

91TR15

4.0 TECHNOLOGY TRANSFER

4.1 NASA TU Project

Two significant technology transfer efforts occurred as a result of the ASE project – the NASA TU Project, which focused on vehicular applications, and the Stirling Natural Gas Engine program, which was aimed at stationary and specialty vehicle markets. The former has culminated, but the latter continues toward commercialization. Both these efforts served to broaden support for Stirling technology and identify remaining technology needs.

The objective of the NASA TU office is to transfer technology developed by NASA to other government and industry organizations. NASA determined that Stirling engine technology was ready for technology transfer and partial funding was supplied to perform field evaluation tests. The balance of the funding support was provided by the DOE-funded ASE project.

In order to achieve evaluation of Stirling technology by an independent operator, to involve potential end users, and to acquire participation of an engine manufacturer, a field evaluation project was formulated using a phased approach to introduce Stirling vehicles into everyday usage. The prime objectives of the project were to obtain early operation and performance data while gaining initial experience in operating the Stirling engine in a typical user environment; to evaluate the Stirling engine in terms of establishing Stirling integrity, reliability, and durability; and to accelerate the development of Stirling engines and enable the earliest possible use of the Mod II engine.

The NASA TU project , structured as three phases, began in January 1986 and continued through December 1989, as shown in Figure 4-1. The vehicles used in the project are depicted in Figure 4-2. Prior to initiation of the TU project, Stirling-powered

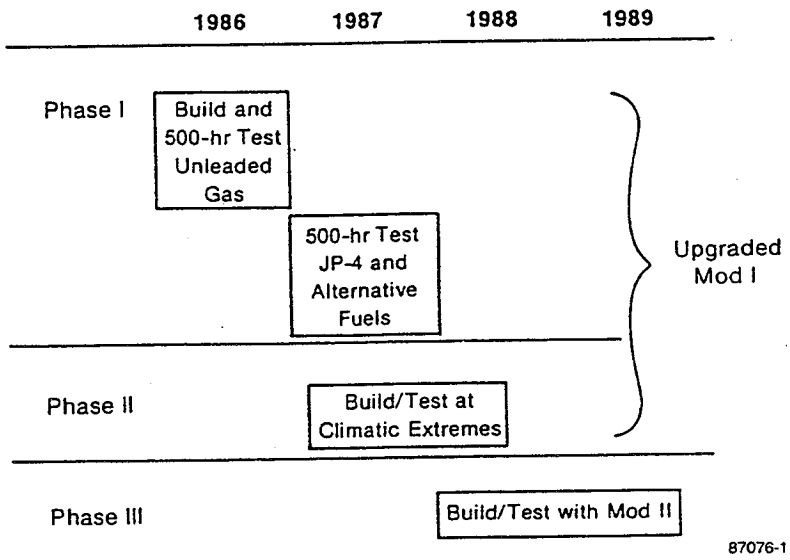

Figure 4-1. DOE/NASA TU Office Engine Demonstration Project

SPECIALTY VEHICLE PROGRESS

Phase I
1986

Technology Utilization:
U.S. Air Force Van
8000-lb GVW

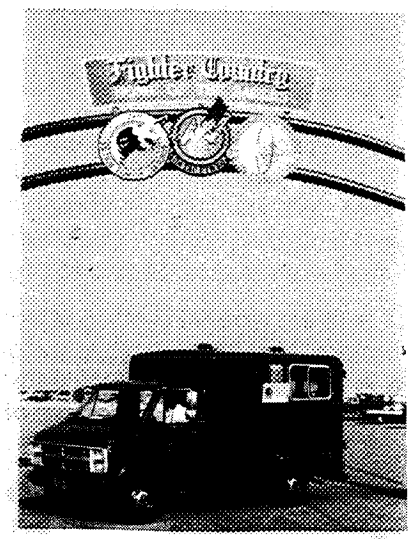

Phase II
1987

Technology Utilization:
U.S. Air Force Truck
4950-GVW

Phase III
1988

U.S. Postal Service Van
4450-lb GVW

V92-200

Figure 4-2. TU Project Vehicles

vehicles had not been operated routinely by non-Stirling personnel. Therefore, it was important to begin the evaluation in an atmosphere which would meet the following requirements:

- Place minimal demands on the relatively untried system
- Operate in a moderate climate to eliminate complicating the evaluation with climatic-oriented difficulties
- Restrict operation of the vehicle to a controlled geographical area to enable quick response by MTI support personnel in the event of problems.

Because of their interest in testing vehicles that had multifuel capability, the USAF agreed to become the primary means for evaluating the vehicles in the first two phases of the NASA TU project. The Mobile Equipment Evaluation Program (MEEP) was designated by the Air Force to be responsible for all testing.

4.1.1 Phase I

Phase I of the project addressed the above requirements in the vehicle/mission/site selection. The Phase I vehicle was an 8600-lb gross vehicle weight (GVW) delivery van, originally equipped with a 150-hp diesel engine. A common use for this type of vehicle is in aircraft flightline support on USAF military bases. In this mission, vehicle speed is limited to base speed limits, which ranged from 15 to 30 mph. Also, base terrain is essentially flat, so very few hill-climbing power requirements were demanded. Both of these factors contribute to minimizing the heavy load demands on the engine and systems.

Using the vehicle for flightline support resulted in confining the geographical range of the vehicle to the selected air base, allowing quick response by MTI support personnel to any problems encountered. To achieve moderate ambient operating conditions, Langley AFB, Virginia, was designated as the evaluation site.

An upgraded Mod I engine was selected for vehicle installation and engine/system checkout was accomplished in the MTI engine dynamometer test cell prior to vehicle installation. Evaluation plans called for operation by the USAF on both unleaded gasoline and JP-4 aircraft fuel. Therefore, the dynamometer cell checkout included operation on both fuels. Power and efficiency levels were essentially unaffected by fuel type, as shown in Figure 4-3.

Installation of the engine in the vehicle was accomplished with minimal modification. The only vehicle structural modification was a lowering of the front crossmember to permit engine and transmission alignment. Other modifications included:

1. A Chrysler three-speed automatic transmission was installed. The original GM transmission was vacuum modulated, and since the Stirling engine does not develop intake manifold vacuum, the Chrysler automatic transmission, which does not require vacuum input, was substituted.
2. A hydrogen storage system was added. This is an integral part of the engine control system.

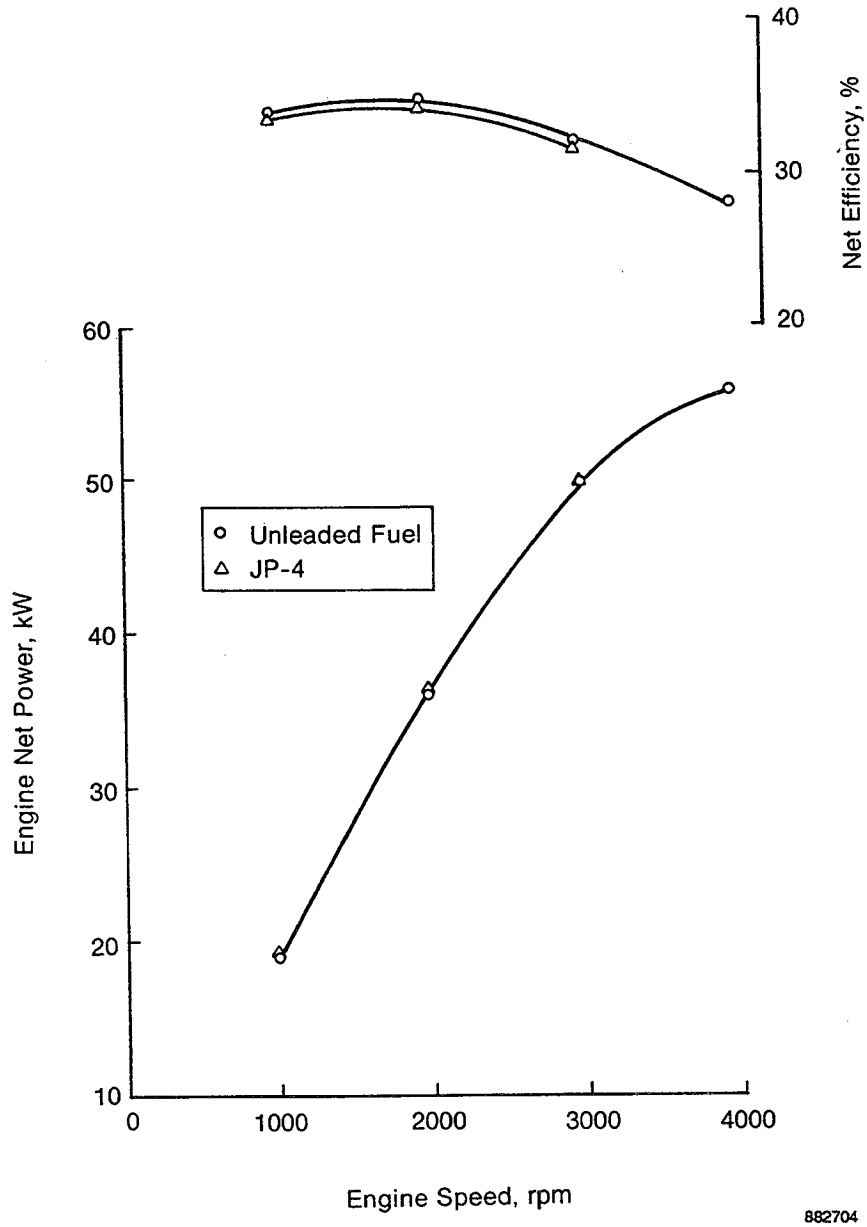

Figure 4-3. Phase I Initial Engine Characterization

3. A larger radiator was installed. Since the Stirling engine is a heat engine, the engine power output and efficiency are affected by the cycle heat rejection temperature. The larger radiator would maintain a lower coolant temperature.
4. A gasoline-fired cabin heater was added. The vehicle radiator alone was not effective for providing hot water for heating, and it was not deemed worthwhile to make any substantial deviations from the existing system. A second fuel tank was installed to provide fuel for the heater.
5. Stirling-specific controls and instrumentation were installed.
6. The stock muffler and catalytic converter were removed. The Stirling engine does not require either component for quiet, low-emissions operation.

The vehicle entered service in August 1986 and remained in service at Langley AFB until June 1987. The vehicle was available for use 24 hr/day, and actual usage ranged anywhere from a few minutes to full 24 hr/day use. A typical duty cycle is shown in Figure 4-4. The duty cycle is highly cyclical, with considerable idle time and many vehicle starts and stops, as indicated by the outer spikey trace of vehicle speed. The operational history in Phase I is shown in Figure 4-5. Approximately 500 hr of operation were obtained for both unleaded gasoline and JP-4 fuel, with an additional 165 hr of operation on diesel fuel.

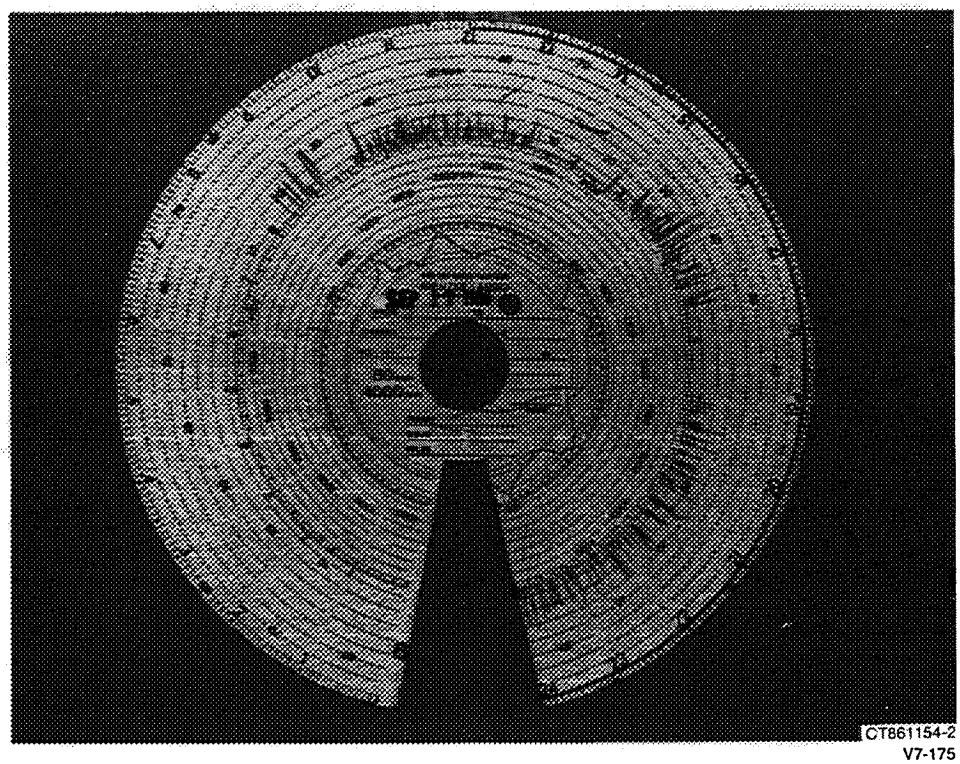

Figure 4-4. Tachograph Plot for Phase I NASA TU Van

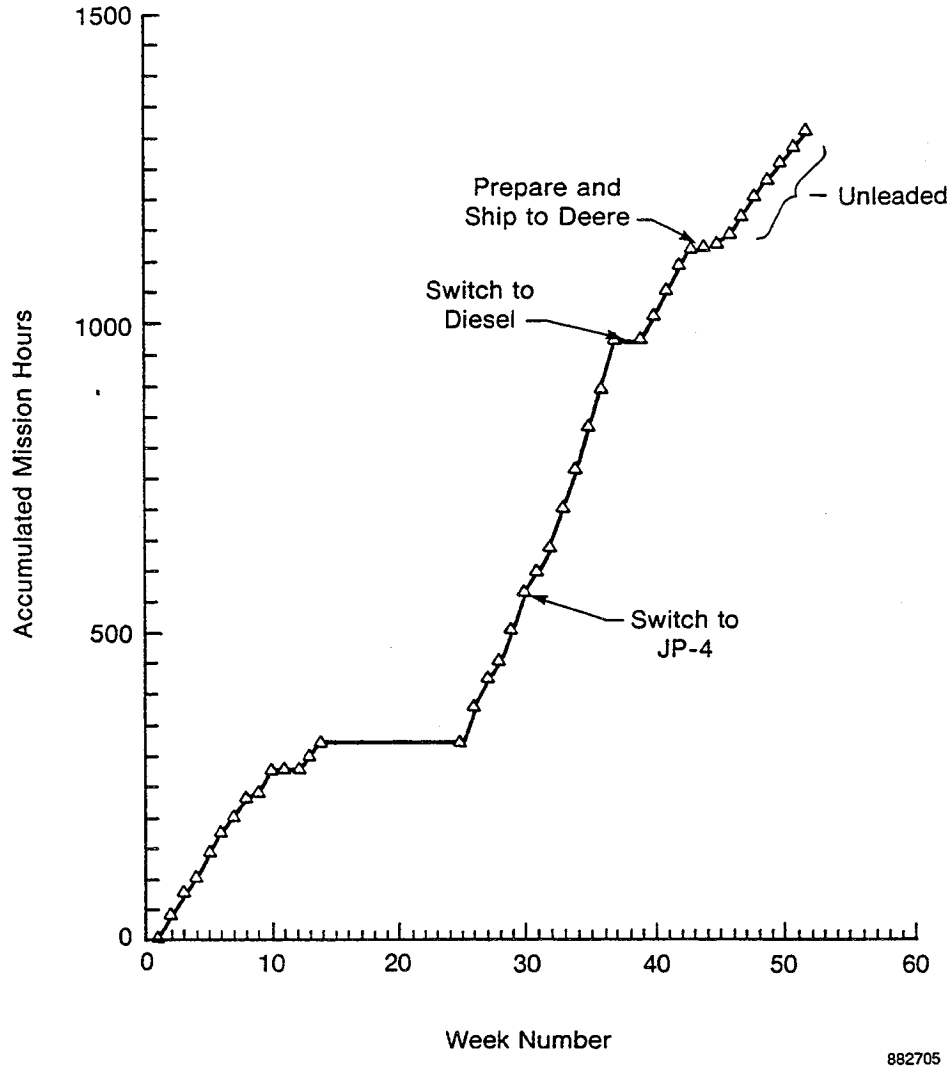

Figure 4-5. Phase I Van Operational History

The NASA TU van accomplished a limited amount of operation on diesel fuel to enhance demonstration of multifuel capability. A system modification was added to allow engine start and warm-up on gasoline, with automatic switchover to diesel fuel when normal engine heater head operating temperature was reached. Lack of an adequate ignitor and extremely limited start sequence experience with diesel dictated that this approach be used.

Operation on the three different fuels was deemed acceptable by the USAF and no noticeable differences in performance were noted. Table 4-1 contains excerpts of vehicle usage patterns for typical Phase I and II vehicle operation, indicating the extensive start/stop duty cycle. Vehicle availability in the early part of the evaluation was negatively impacted by unanticipated control system problems. As these problems were resolved, availability rates of approximately 85% were achieved. This level of availability was considered good by the USAF for a technology at this early stage of development.

Following evaluation of the vehicle by the USAF, the vehicle was shipped to Deere & Co. for evaluation in a facility mail delivery service in the Moline, Illinois area. Deere & Co: accumulated 175 hr of operation. This operation exposed the vehicle to ambient temperatures consistently above 90°F and very high relative humidity during the months of July and August 1987, providing an unanticipated evaluation under this type of extreme ambient.

Table 4-1. Vehicle Operation Time as Recorded by Tachograph (h:min)

Vehicle	Location	Total Daily Operation	No. of Starts/Stops		Engine Speed (rpm)		Vehicle Speed, mph (km/h)			Idle Time (In and Out of Gear)
			Engine	Vehicle	<2000	>2000	<20 (32)	>20 (32)		
Phase I Van	Langley AFB	17:10 23:24 12:07	12 8 4	99 132 68	17:08 23:22 12:02	0:02 0:02 0:05	6:12 9:28 4:32	0:42 1:29 0:28		10:16 12:27 7:07
							<15 (24)	15-30 (24-48)	>30 (48)	
	Deere	5:42 7:22 7:07	5 18 20	107 143 159	4:02 5:30 5:05	1:40 1:52 2:02	0:50 1:16 1:24	0:36 0:38 0:53	1:38 2:18 2:04	2:28 2:50 2:10
							<20 (32)	20-40 (32-65)	>40 (65)	
Phase II Pickup	Langley AFB	11:06 12:28	26 28	189 237	9:58 10:59	1:08 1:29	3:02 3:31	1:50 2:43	0:04 0:00	6:10 6:13
	Eglin AFB	6:40 5:12	5 4	78 59	4:59 3:00	1:41 2:12	0:53 0:54	1:01 1:10	0:52 1:22	3:53 1:45

91TR15

A vapor lock problem with the fuel pump (commercial automotive item) was the only weather-related problem encountered. The problem was eliminated by adding a fuel-to-air heat exchanger to the fuel supply system. At completion of the Deere evaluation, the upgraded Mod I engine was removed from the vehicle and inspected. A report was issued by Deere & Co. Quality Assurance (QA) personnel, who also participated in the inspection. The following is a quote from the Deere inspection report (Bishop, et al. 1988).

> *"The general consensus was that the engine inspection results looked acceptable for an engine in the development stages. Most of the problems were related to the mechanical design and auxiliaries rather than the basic Stirling cycle."*

4.1.2 Phase II

For Phase II of the NASA TU project, the scope of the evaluation was broadened considerably. A lighter vehicle (Dodge D150 pick-up, 4950-lb GVW) was selected to achieve a more normal vehicle power-to-weight ratio, which would permit operation in a variety of applications. Operation at four different USAF military bases for three months each was planned to provide exposure to a wide variety of climatic conditions. In addition, tests were conducted in the Eglin AFB environmental chamber to evaluate start-and-run operation over a wide range of operating temperatures. Like the Phase I project, the Phase II truck was also subjected to extensive start-and-stop operation, as shown in Table 4-1. An upgraded Mod I engine rated at approximately 78 hp was substituted for the original 95-hp SI engine after the engine was characterized at the NASA-LeRC engine dyno test facility. Following functional checkout at MTI, the vehicle was delivered to the USAF at Langley AFB, Virginia, for the evaluation. Figure 4-6 provides a summary of Phase II vehicle operation history. A list of the bases and missions, and accumulated hours and miles, is contained in Table 4-2.

Operation at Langley was primarily conducted on the flightline or on base to provide initial shakedown and to build confidence in vehicle capability. A limited amount of highway driving in the Langley area indicated that the vehicle was acceptable for operation in normal traffic situations. The vehicle was driven to Eglin AFB, Florida, at the completion of the Langley evaluation. At Eglin, the Housing QA Inspector drove the vehicle to inspect housing in and around Eglin AFB, which involved driving on the highway and city streets on a daily basis. Operation of the vehicle was accomplished with very few problems.

The vehicle was removed from service for a one-week period for evaluation in the environmental chamber at Eglin. During the testing, the engine was started and allowed to reach stabilized idle conditions at each test temperature ranging from 10 to 120°F. Test parameters recorded during each test are shown in Table 4-3. Successful starts were obtained at each test temperature without any special starting aids over the entire test range. Starts were, of course, slower at lower temperatures. No oil pressure or working gas leakage problems were observed in the tests.

Following the Eglin evaluation, the vehicle was driven to Randolph AFB in San Antonio, Texas, where it was placed in a base taxi role. Similar to previous experience, vehicle operation was relatively uneventful. While located at Randolph, the vehicle was driven to Washington, D.C., in support of Congressional testimony activity.

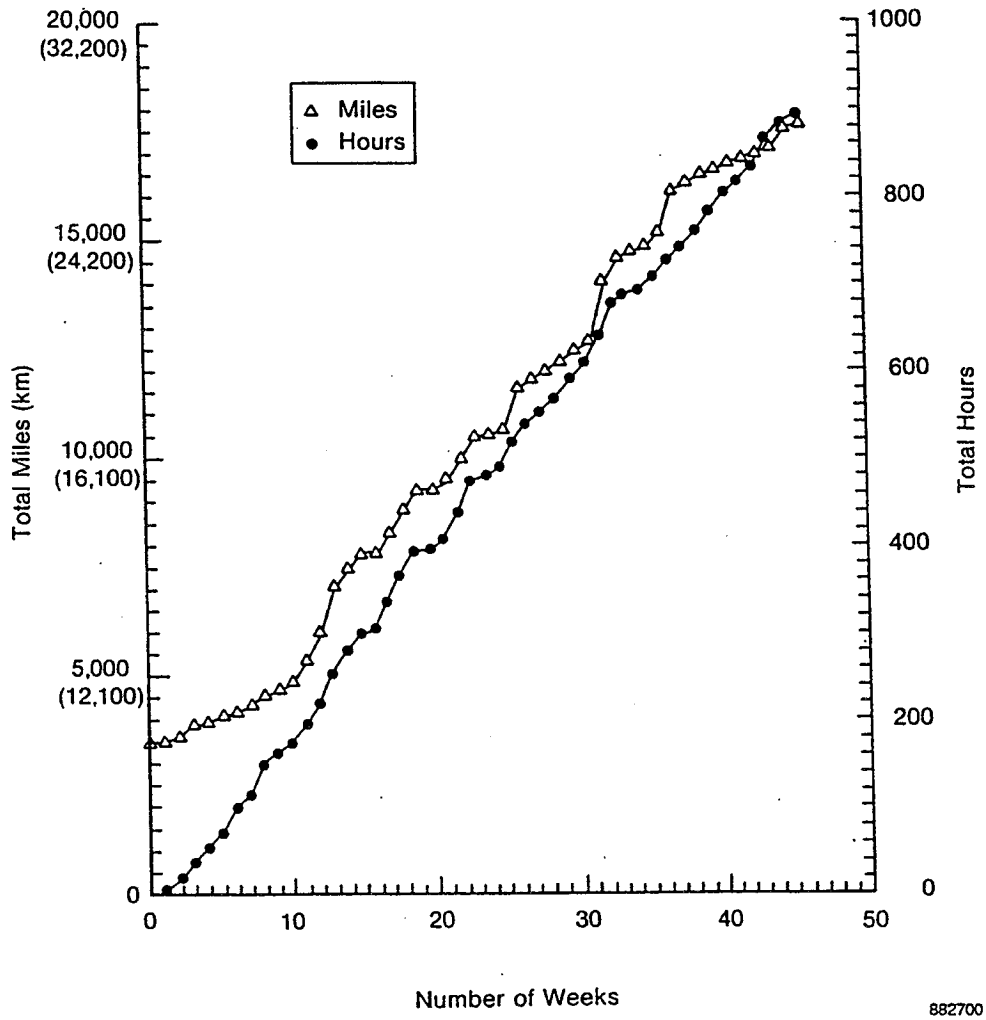

Figure 4-6. Phase II Truck Operational History

Table 4-2. Phase II Truck Missions

Base	Mission	Hours	Miles
Langley, VA	Flight Line	215	3,213
Eglin, FL	Base Housing QA Inspector	282	4,667
Randolph, TX	Base Taxi	222	4,537
Offutt, NE	Base Supply	164	1,905
Total		883	14,322

91TR15

Table 4-3. Test Parameters

	Cold Ambient				Hot Ambient			
	40°F (4°C)	30°F (-1°C)	20°F (-7°C)	10°F (-12°C)	90°F (32°C)	100°F (38°C)	110°F (43°C)	120°F (49°C)
Time (in Seconds) from Key on to:								
Ignition	8	10.5	16	13	9	9	18	13
First Engine Crank	39	42	46	44	38	37	47	40
Engine at Idle Speed	49	83[1]	160[2]	288[3]	40	39	49	42
Battery Volts at:								
Start	13.5	13.0	13.8	13.8	13.8	13.8	13.8	13.8
During Crank	11	11	11	10.0	10.8	10.8	10.8	10.8
After Crank	12	12	11.5	11.5	11.5	11.5	11.5	11.5
P_{max} at Engine Crank (MPa)	6.2	6.2	7.2	7.2	6.4	7.0	7.0	7.0

[1]Includes one stall when blower came off upstart motor
[2]Includes three guards for 20-sec crank time
[3]Includes five guards for air throttle position

91TR15

Upon its return to Randolf, arrangements were made to obtain fuel economy and emission data at Southwest Research Institute (SwRI). Before testing at SwRI, several hardware changes were made, including a preheater that had been modified for an EGR valve and a new combustor. In addition, the air-to-fuel ratio was adjusted to 1.30 and the EGR valve was adjusted to give a 26% EGR level. The EGR level is defined as the volume of exhaust gas divided by the volume of fresh air. Vehicle dynamometer tests included cold-start urban, hot-start urban, and highway cycles with gasoline and JP-4. A steady-state test matrix was completed at in-gear idle, 20, 40, and 50 mph (32, 64, and 81 km/hr); -3, 0, +3% grades; as well as with and without EGR. Attempts to conduct steady-state tests at 60 mph (97 km/hr) were aborted when coolant temperature exceeded 230°F (110°C), even though over-the-road coolant temperatures are typically 185°F (85°C). The results of this testing are contained in the final report issued by SwRI (Hare 1988). A summary and comparison with the SI engine is presented in Table 4-4.

The vehicle was driven from Randolph to Offutt AFB, Nebraska, for its final USAF evaluation. Again at Offutt, operation was relatively uneventful.

Following the USAF evaluation, the vehicle was driven to Deere & Co. in Moline, Illinois; the Oshkosh Experimental Aircraft Show in Oshkosh, Wisconsin; Wright-Patterson AFB, Dayton, Ohio; NASA-LeRC in Cleveland, Ohio; and MTI in Albany, New York.

Table 4-4. Summary of Transient Emission Test Results for Phase II Truck

Engine	Type of Fuel Used	EGR[2] Status	Test Type	Emissions, g/mi				Fuel Economy, mpg (ℓ/km)
				HC	CO	NO_x	Particulate	
Stirling	Unleaded Gasoline	Off	FTP[3]	0.21	2.72	2.11	0.023	17.68 (0.133)
			FET[4]	0.000	0.67	1.68	0.004	27.6 (0.089)
		On	FTP	0.33	3.18	1.14	0.017	16.84 (0.140)
			FET	0.00	0.22	0.93	0.003	26.4 (0.085)
Stirling	JP-4	Off	FTP	0.08	3.05	2.34	0.050	16.86 (0.140)
			FET	0.00	1.04	1.92	0.005	25.1(0.093)
Factory Stock[1]	Unleaded Gasoline		FTP	0.31	2.30	1.36		16.8 (0.140)
			FET					21.8 (0.108)

[1]Slant six, 95 hp (70.8 kW), 3.7 liters

[2]Exhaust Gas Recirculation

[3]Federal Test Procedure; a Repeated 23-min, 7.5-mi (12.1-km), City Cycle

[4]Fuel Economy Test; a 13-min, 10.3-mi (16.3-km), Highway Cycle

91TR15

The emissions results of the Phase II truck at SwRI elicited interest by alternate fuel users, and a repeat test was performed at SwRI with gasoline having an 11% methyl tertiary-butyl ether (MTBE) additive. Then, in response to the CO emissions level problem long Colorado's front range in the winter, the Phase II truck was tested at the Colorado Department of Health in Denver, Colorado, and compared to the adaptive learning emissions control vehicles (ALVs). These were the best vehicles tested in Colorado in a recent evaluation (Most 1988). As shown in Figure 4-7, the results indicate that the Stirling CO emissions levels are half the value of those measured for the ALVs at warm ambient temperatures (70°F) and only one third as great at low ambient temperatures (35°F), apparently indicating that as temperatures are lowered the Stirling advantage increases. It has been noted that the CO emissions measured in this test of the Phase II truck are the lowest seen by the Colorado Department of Health (Gallagher 1989). At the close of the ASE project, the vehicle had accumulated a total of 1,208 hr and 22,246 mi and was still in operating condition.

4.1.3 Phase III

The Phase III USPS LLV demonstration began with delivery of the LLV to MTI and the preparation of the engine and vehicle. The intent of the Phase III vehicle evaluation was to assess the Mod II engine and system operation. Initially, the vehicle was to be evaluated by the USAF to provide a comparison to previous vehicles by the same operating agency. However, funding limitations resulted in elimination of the evaluation in deference to a three-month USPS field trial.

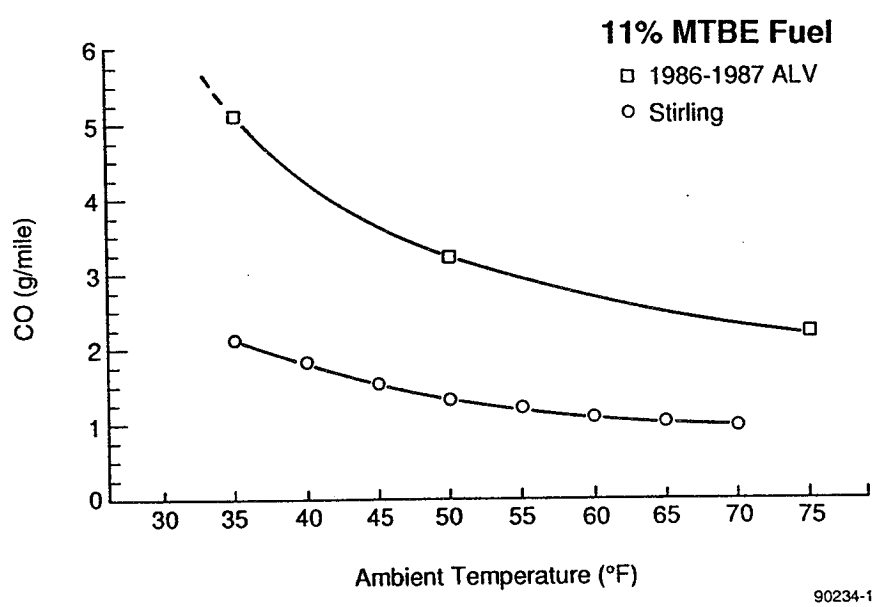

Figure 4-7. Temperature Effects on Carbon Monoxide Production

Vehicle dynamometer testing was performed with the USPS LLV at DMACS Engineering Laboratories to simultaneously measure fuel economy and emissions. These tests were performed with various torque converters, rear axle ratios, idle speeds, air-fuel ratios, engine heater heads, and control systems. As shown in Table 4-5, the best overall results were obtained in Tests 886 and 887 when Configuration 1 heater heads were being used. It had been expected that the highest mileage would have occurred with the Configuration 4 heater heads, but it was discovered later that there was leakage past the regenerator. This suggests that significant additional performance improvement could have been achieved if the Configuration 4 heater heads had performed as well as in the test cell.

A limited amount of vehicle dynamometer testing was also performed with the USPS vehicle using diesel fuel and unleaded gasoline. Table 4-5 depicts these limited results, completed for the federal highway driving cycle and a hot-505 portion of the urban driving cycle (a full urban cycle was not performed). Fuel economy improvements are close to changes anticipated due to diesel fuel volumetric energy content. Emissions are similar except for somewhat higher CO emissions levels. The somewhat higher CO level is most probably a result of a richer fuel mix with diesel fuel, which could easily be corrected by a software change to the DAFC system. These results, although preliminary and incomplete, indicate that the Stirling engine has the capability to burn diesel fuel with emissions levels no different than that of unleaded gasoline.

The indicated fuel capabilities and emissions tests were obtained with a minimum of development and optimization. Given the success achieved, it seems likely that combustion process development, air-to-fuel ratio control refinement, catalyst development, and other techniques could provide emissions levels greatly improved over those available with other engines. A comparison of the Mod II-powered LLV to an SI-powered LLV is shown in Table 4-6 for tests at an EPA certified facility, and in Table 4-7 for over-the-road tests. While the performance improvement was not dramatic, it was as expected.

A summary of emission testing conducted with both Phase II and Phase III vehicles is shown in Figure 4-8. Note that except for one test run (MTBE), the emissions measured are well below the federal limits both for light-duty passenger vehicles and trucks. Since the ASE project focused on fuel economy improvements, these results represent only a beginning in the development of Stirling's low-emissions capability. All of the emissions results depicted were obtained without use of a catalyst.

Table 4-5. Mod II LLV Fuel Economy and Emission Levels

Urban				Highway				Combined
mpg	HC	CO	NO_x	mpg	HC	CO	NO_x	mpg
19.6	0.41	2.16	0.82	27.6	0.01	0.60	0.59	22.5

91TR15

Table 4-6. Comparison of Emissions/Fuel Economy for Mod II-Powered USPS LLV

Test	Unleaded Gasoline	Diesel
Highway		
Fuel Economy (mpg)	24.6	27.1
Emissions (g/mi)		
CO	0.2	0.5
HC	0	0
NO_x	0.6	0.7
Hot 505		
Fuel Economy (mpg)	19.5	21.3
Emissions (g/mi)		
CO	2.0	3.0
HC	0.1	0.1
NO_x	0.7	0.7

91TR15

Table 4-7. USPS LLV Fuel Economy Improvement: Mod II vs. SI Engine

Engine	Urban (mpg)	Highway (mpg)	Combined (mpg)	Improvement (%)
SI	19.0	22.7	20.5	–
Mod II Prediction	18.7	30.3	22.6	+10
Mod II Actual	19.6	27.6	22.5	+10

91TR15

Table 4-8. Over-the-Road USPS LLV Fuel Economy Improvements: Mod II vs. SI Engine

Engine	Urban (mpg)	Highway (mpg)	Combined (mpg)	Improvement (%)
SI	17.0	24.4	19.7	–
Mod II: Unleaded Gasoline	19.8	26.5	22.3	+13
Mod II: Diesel	22.3	31.2	25.6	+30

91TR15

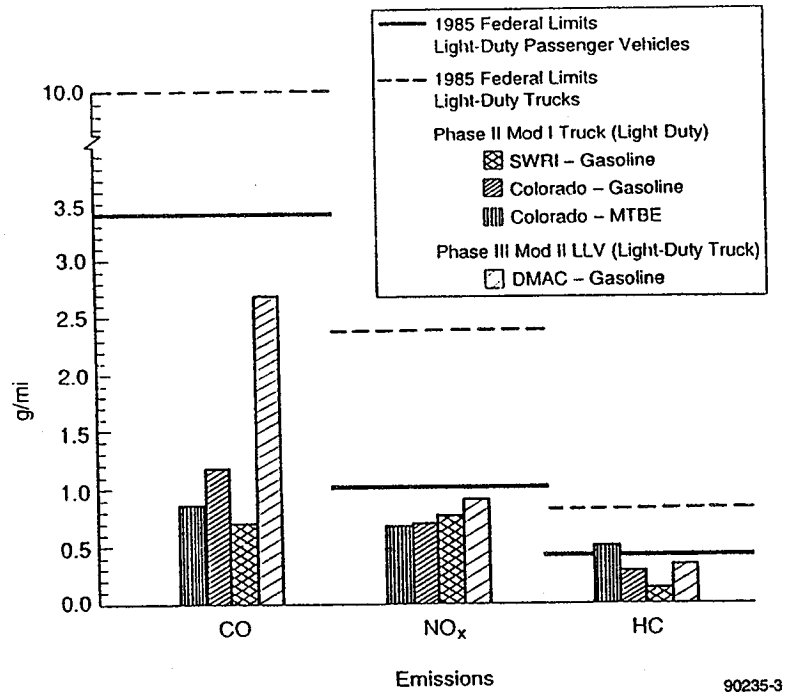

Figure 4-8. Summary of Emission Testing with Phase II and Phase III Vehicles

The capability to utilize a variety of liquid fuels began to be explored in the latter part of the ASE project, primarily in the NASA TU vehicle project. The Phase I vehicle, as mentioned previously, operated on unleaded gasoline, JP-4, and diesel fuel. The Phase II vehicle operated on unleaded gasoline, JP-4, and an 11% MTBE/gasoline mixture. Emissions testing was conducted for all three fuels at SwRI (Hare 1988a) and (Hare 1988b). Measurements indicated very similar emissions levels for all three fuels for the regulated emissions: HC, CO, and NO_x.

4.2 Stirling Natural Gas Engine Program

The transfer of Stirling engine technology to the United States and its commercialization was one of the key goals of the ASE project. Late in the project, it was realized that this process may occur earlier in nonpassenger vehicles, such as small vans or trucks, or stationary applications. The natural gas industry, motivated by the results of the ASE project, became interested in the potential of the ASE to meet ever more stringent exhaust emissions levels for vehicular and stationary applications. In October 1989, MTI approached members of the gas industry with a plan for a demonstration program that would convert a liquid-fueled kinematic Stirling engine to natural gas operation. The converted engine would then be tested to determine the optimum engine efficiency and performance while maintaining the lowest possible emissions. Based on its success, this program would become the precursor of a major demonstration program for a natural-gas-fired Stirling engine that could lead to commercial production for multiple applications.

In November 1989, with MTI as the prime contractor, a demonstration program was initiated to conduct a limited series of emissions tests. Interest in the program increased, and the effort was broadened to include more extensive emissions tests and the selection of a configuration for a commercial natural gas engine. This configuration would be based on the Mod II engine developed in the latter years of the ASE project. The commercial version of this engine has been designated the Mod III. Although the Mod III will have the same design features as the Mod II, it will have a higher power rating and incorporate simplified components to reduce costs. The expanded demonstration program began in February 1990 with multiple sponsors, including Brooklyn Union Gas, Consolidated Natural Gas, NYGAS, NYSERDA, Niagara Mohawk, and Southern California Gas.

Early in this effort, MTI recognized that the design and manufacturing engineering of the Mod III required the participation of an engine manufacturer. Hercules Engines, Inc. (HEI) was selected to provide manufacturing expertise, and a memorandum of understanding was executed between MTI and HEI to team on a program to develop the Mod III as a commercial product. Under this agreement, HEI would manufacture the engine and MTI would provide the Stirling technology. As a result of this connection, HEI was issued a subcontract to participate in the demonstration program to establish the requirements specification and configuration for the Mod III.

HEI is a manufacturer of four- and six-cylinder diesel engines in the 130- to 190-hp size range using piston sizes close to those selected for the Mod III. They are currently involved in a GRI program to develop a natural gas engine from an HEI diesel engine. Since their volume manufacturing capability is in the 5,000 to 20,000 range, they are an ideal partner for initial manufacture of the commercial Mod III. HEI is also familiar with niche marketing and the development and manufacture of low cost, low volume engine designs.

The development work conducted to date includes the completion of Phases I and II of the demonstration program. Phase I addressed the development, test, and engine integration of a natural gas combustion system. Specifically, three fuel nozzles were designed and tested in a free-burning rig, a modified combustion system was integrated with a Stirling engine-generator set, and emissions tests were completed. The results of the engine performance and emissions tests were completed. The results of the engine performance and emissions optimization testing confirm the Stirling engine's potential for natural gas applications. NO_x emissions levels at 6 ppmv are considerably better than the best conventional IC engines. These tests also indicate that the external combustion system of the Stirling engine offers considerable flexibility to operate over a range of air-to-fuel ratios, maintaining high thermal efficiency with correspondingly low emissions levels for all constituents of concern.

Phase II efforts focused on completion of an application survey and the Mod III configuration. The results of the application survey have been used to define an engine specification and establish market potential for this technology. Based on this engine specification, the configuration of a commercial Mod III was completed.

Stirlling natural gas engine program highlights include:

- Development of a natural gas fuel nozzle that provides reliable lights and stable operation over a wide range of EGR levels and lambda ratios.

- Final natural gas engine test results include optimized emissions levels (corrected to 15% O_2) for NO_x of 6 ppmv, CO of 45 ppmv, and unburned hydrocarbons (UHCs) of 0.1 ppmv, which are all extremely low. For stationary applications, the exhaust emissions are 1/9 of the NO_x, 1/50 of the CO, and 1/3000 of the UHC compliance levels imposed by California Emissions Rule 1110.2 for the South Coast Air Quality Management District (SCAQMD) that will be fully implemented by 1995. Tail pipe emissions projections for passenger car applications are 2/3 of the NO_x levels, 1/500 of the CO levels, and 1/300 of the UHC levels of the 1990 California Vehicle Emissions Standards.
- Application survey results of original equipment manufacturers (OEMs) and end users indicate a minimum market potential of 9125 engines per year in the year 2000, using very conservative estimates, should the engine be proven reliable and is offered for sale at competitive prices. Projected application areas included stationary and total energy generator sets, compressors, HVAC chillers, and mobile (hybrid bus, school bus, delivery and construction vehicle) applications.
- The Mod III specifications and configuration will provide a long-life engine of ultra low emissions with high thermal efficiency over the expected operating range with low maintenance. Engine maximum power level was selected at approximately 155 hp at 2800 rpm.
- Results of the application evaluation also indicated that revenue return from gas sales in the year 2000 will be between $332 and $828 million, with a total engine population of approximately 35,000.

Given these projections and the promising development work completed to date, the Stirling engine could emerge as a viable candidate for natural gas applications.

5.0 TECHNOLOGY STATUS AND DEVELOPMENT NEEDS

At the completion of the ASE project, various aspects of ASE technology existed at different levels of maturity. The technology transfer efforts, especially the NASA TU project, were instrumental in the identification of specific technology areas for improvement. Further development or verification is necessary to realize the full potential of the Stirling concept and to raise the technology level to the point where automotive commercialization would be attractive to a potential engine manufacturer. Commercialization for applications other than passenger vehicles was not expected to require as much technology development owing to less stringent operating requirements, such as the less complex duty cycle of a stationary generator set or HVAC chiller. The various technology areas needing further development or verification before commercialization can be grouped into five major categories:

- Performance improvement
- Emissions reduction
- Manufacturing cost reduction
- Reliability/operational improvements
- Adaptation to nonautomotive applications.

A summary of the technology status and development needs is presented below.

5.1 Performance Improvement

There are several technologies which have not been fully developed that would provide further performance improvements. The following technologies were discussed in Section 3.0 and are repeated here for completeness:

- Heater head (Configuration 4, no manifold)
- Regenerators (sealed outer wall)
- Hydrogen storage and supply.

Additional technologies requiring further development and demonstration of performance characteristics are discussed in the following subsections.

Foil Regenerators. Development of a foil regenerator may provide a more open flow path and lower flow losses, which are particularly critical for applications using helium instead of hydrogen as the working fluid. Techniques to manufacture the foil regenerators and experimental evaluation to verify performance are required to assess this technology. The performance characteristics of the foil regenerator have not been documented in any kinematic engine tests. However, even if performance is relatively unchanged relative to screen regenerators, the foil regenerator has the potential for a significant reduction in manufacturing costs.

Piston Rings: Single Solid Ring Configuration. The standard Bill of Materials (BOM) ring configuration used in the ASE development project had been a double split/solid ring configuration, as shown in Figure 5-1a. A refined design incorporating a single solid ring was identified to provide reduced frictional losses and lower part count (see Figure 5-1b). Initial tests of the single piston ring in the engine dynamometer test cell indicated a performance improvement relative to the standard double split/solid ring configuration (see Figure 5-2). However, vehicle experience indicated possible ring deterioration, as evidenced by progressively increasing starting difficulty and by engine roughness (possibly uneven cycle-to-cycle pressure level) at steady load conditions. Development is required to achieve acceptable operating characteristics and life to take advantage of the single ring's reduced frictional losses.

Hot Piston Rings. One of the significant loss mechanisms in the Stirling engine is the appendix gap loss occurring in the space between the piston dome and the cylinder wall in the area above the piston rings. Current ASE designs utilize Teflon material for piston rings because of its good sealing characteristics and ability to operate under dry lubrication conditions. Since the maximum operating temperature of the material for long life is approximately 120°C, the rings are located on the lower end of the piston dome, where they ride against a water-cooled cylinder wall. This leaves a long appendix gap length above the top ring. A piston ring located at the top (hot) end of the dome would eliminate the appendix gap losses. However, the wear couple pair has to operate without lubrication at approximately 800°C. Tests of a prototype hot ring using NASA-developed PS-200 ceramic material, conducted at NASA-LeRC, indicated that substantial performance improvements (i.e., 3 to 7% reduction in fuel consumption) could be achieved (NASA 1988). Further development to assess the basic design in terms of both performance and life is required to bring the technology to maturity.

Cooling System. As a heat engine, the power and efficiency of the Stirling engine is strongly dependent on the cold-side (heat rejection) temperature. Vehicle and stationary installations to date have utilized only commercially available radiators and fans. During the course of the ASE project, vehicle installations have been made with essentially no changes to the vehicle exterior or allowable radiator space to accommodate the increased cooling desired for the Stirling installation. Radiator temperature during different operation has been documented in the course of the project. Table 5-1 lists the effects of typical top tank temperatures relative to the desired 50°C temperature for the Mod II USPS LLV installation.

To maximize the potential of the Stirling cycle for automotive use, optimization and improvement of coolant systems would be required.

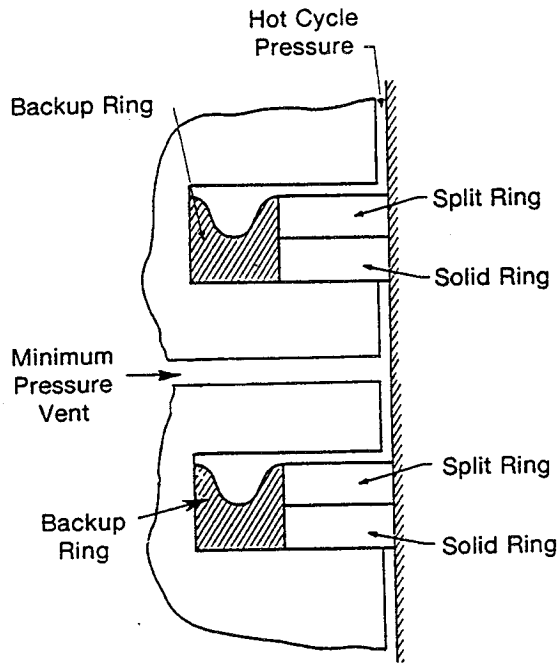

a) BOM Split-Solid Piston Rings

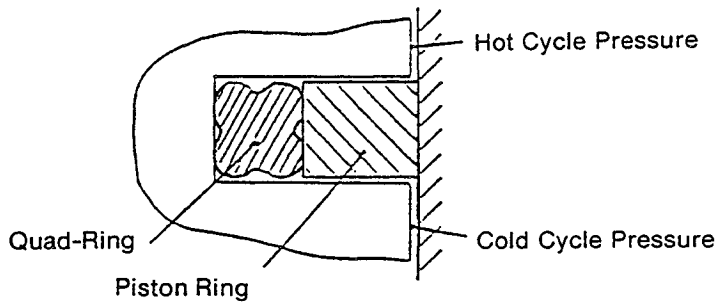

b) Single Solid and Single with Lap Joint Piston Rings

871678

Figure 5-1. Piston Ring Systems

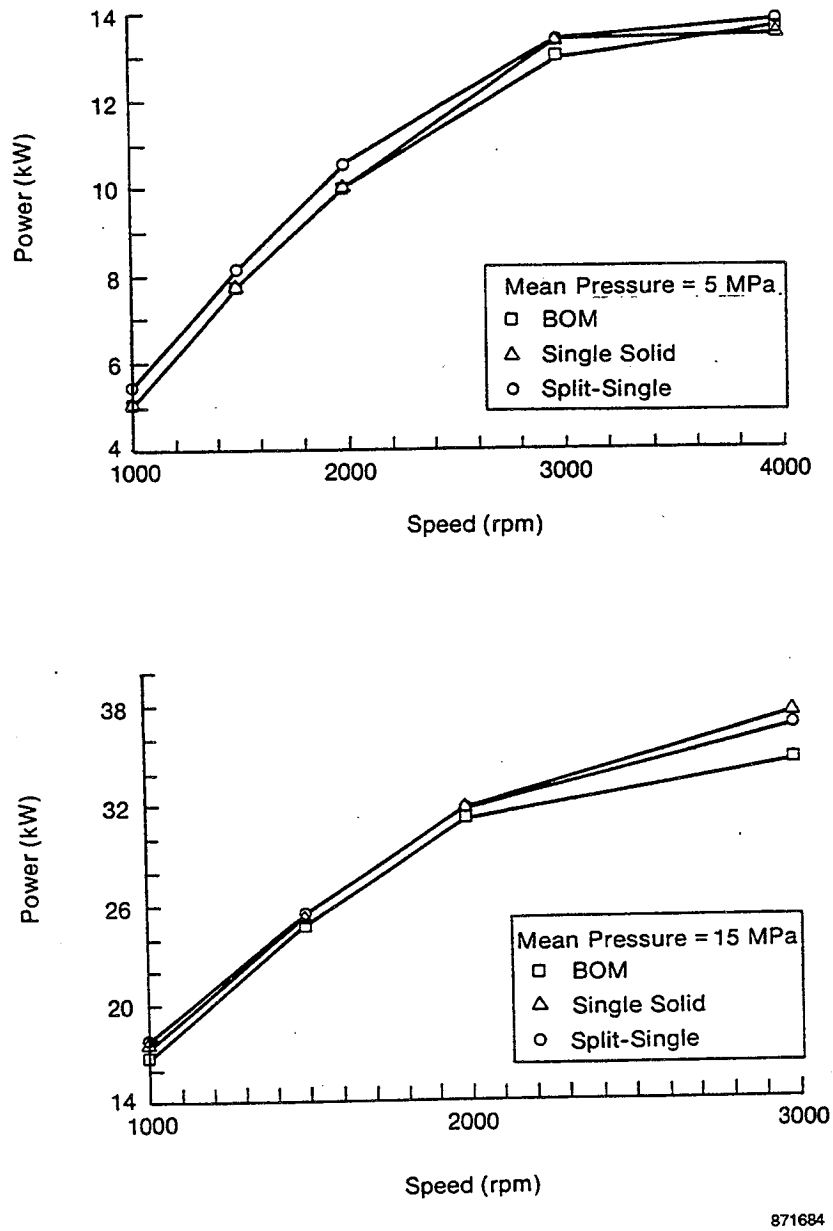

Figure 5-2. Mod I No. 3 Piston Ring Performance Tests

Table 5-1. Typical Mod II Top Tank Radiator Temperature Impact

Parameter	Top Tank Radiator Temperature (°C)	Performance Impact Relative to 50°C Design Point
Urban Driving Cycle	65	-3.5% mpg
Highway Driving Cycle	85	-8% mpg
0 to 50 mph Accelerations	80	10% Longer Acceleration Time

91TR15

Fuel Nozzle: Alternate Technology. Fuel nozzles in the ASE project have utilized air assist for fuel atomization. This incurs two performance penalties, i.e., power requirements for the atomizing air compressor (300 W), and the external heat system efficiency penalty caused by introducing cold atomizing air into the combustion zone (2% efficiency penalty). The total fuel economy penalty associated with the existing atomizing air assisted nozzle is approximately 7%, or for the Mod II USPS LLV approximately 1.5 mpg.

A sonically atomized fuel nozzle was investigated for the 1983 RESD update, but was not included in the Mod II due to its immature state of development. This concept would completely eliminate the efficiency penalty and atomizing air compressor power. Only a small amount of power (15 W) is required to drive the nozzle. Further development of this concept for the Mod II could provide substantial performance benefit.

5.2 Emissions Reduction

The major thrust of the ASE development effort has been to maximize fuel economy within the development constraints of the project. Emissions were addressed only to the point where current federal urban driving cycle emissions standards were met and the Federal Research Commission standards were attainable. Emissions, like fuel economy, were a moving target for which the requirements are even more strict today. With the advent of the Clean Air Act and the emphasis on environmental cleanup, substantial environmental benefit could be gained from use of Stirling engines.

Development of the entire combustion system for emissions optimization would involve both existing components and approaches as well as introduction of new techniques. It should be noted that current Stirling emissions levels (which meet federal standards) are achieved without exhaust after-treatment. Development of after-treatment systems similar to those employed by SI engines could produce dramatic reductions in emissions levels. In addition, the use of alternative fuels such as natural gas was not explored under the ASE project, and results from other MTI programs indicate that this fuel would be able to achieve very low emission levels. Current and emerging lean oxidizing catalyst technology indicated the possibility of reducing NO_x levels to one-half the raw engine-out levels. The following subsections describe known technologies that should be further developed.

CGR Combustor. Development efforts with the CGR system were halted due to problems encountered with the combustor hardware. The basic Mod II combustor design was structurally inadequate and resulted in distortion of the combustor after short exposure to operating temperature. The distortion produced temperature spreads considered unacceptable as well as data repeatability problems. Redesign of the combustor to be structurally sound would provide the opportunity to further investigate the emissions reduction potential of this concept.

Alternative Fuels. Combustion rig testing of various fuels at steady-state conditions was run earlier in the ASE project. Recent initiatives have started to provide full operational capability, including the ability to start and run on the selected fuel. The Phase II truck has been tested for emissions on gasoline and JP-4 jet fuel and is currently configured to also operate on diesel and alcohol-based fuels. No optimization tests have been run on these systems. The development of a natural-gas-fired system is currently underway in a separately funded MTI program, and results obtained to date indicate Stirling engines burning natural gas produce the lowest emissions known. Further testing and development are required to verify Stirling capability to provide low emissions on alternative "clean" fuels.

Exhaust After-Treatment. To date, no attempts have been made to reduce Stirling engine emissions levels using the after-treatment approach. The Stirling engine differs from current SI engines in that its combustion system operates at an excess air-to-fuel ratio ($\lambda \approx 1.3$). Existing catalysts utilized for NO_x reduction function effectively only at or near stoichiometric conditions ($\lambda \leq 1.0$). Therefore, no efforts were made to address the use of a catalyst in the Stirling system. New developments presented in SAE Paper 900496 are resulting in emerging catalysts which operate in lean burn conditions ($\lambda \leq 1.3$) and at low operating temperatures (150 - 230°C). This technology is being driven by emissions requirements for fuel-consumption-optimized, lean-burn gasoline engines. Application of this technology has the potential to reduce Stirling engine NO_x emissions reductions by one-half.

Combustion Development. Past development efforts have focused on optimization of overall external heat system efficiency, with limited effort devoted specifically to emissions reduction. Techniques such as improved combustion zone mixing, changes in residence time through combustion chamber redesign, incorporation of premixed combustion techniques and other approaches need to be investigated to further improve Stirling emissions levels.

5.3 Manufacturing Cost Reduction

Manufacturing studies and component development efforts have identified many approaches to provide reduced manufacturing costs. Continuing effort is required to develop these technologies to the point where estimated manufacturing costs are verified and performance and reliability issues are identified and corrected. The majority of manufacturing cost reduction approaches were identified in the VA/VE study performed by Deere & Co. The performance levels associated with these technologies must be verified to assess concept viability. Some of the major items requiring development are described below.

Foil Regenerators. This technology, discussed in Section 5.1, is also important to reduce manufacturing cost. Manufacturing techniques for this technology need to be developed. Upon development of a satisfactory manufacturing technique, the performance improvement would need to quantified and verified.

Low-Cost Preheaters. The current-technology ASE preheater is a welded-plate design, considered unacceptably expensive from a volume manufacturing standpoint. Two alternate approaches to this component have been identified. The first, near-term approach employs the concept of a folded-fin, parallel-plate, heat-exchanger section brazed into a tray at the top and bottom of the plates. An alternate approach is to use cast ceramic blocks held in a metal fixture for the heat exchanger section. Both manufacturing techniques need development effort. In particular, for the ceramic preheater, development of a leak-free block capable of withstanding repeated rapid thermal cycling is a key factor. Samples developed in the early 1980s have the potential to achieve acceptable operation under these constraints, but further testing and development of mass-production techniques is required. Development of a sealable metal support structure for the ceramic blocks is also required. It is expected that performance with these low-cost preheaters will be essentially the same as the current preheater, but verification is required.

Heater Head Tube Material. CG27 was selected as the preferred heater tube material due to superior properties of low hydrogen permeability, exceptional oxidation resistance, exceptionally high creep strength, and low strategic material content. Current engine heater heads are built with IN625 tubes due to the lack of experience in the manufacture of the CG27 tubing and the brazing cycle requirements. Manufacturing technique development is required to advance this technology to production readiness.

Heater Head Castings. NASA-UT-4GA1 is a recent development by NASA and United Technologies Research Center that offers improved strength characteristics relative to the current material of choice (XF818) while maintaining low strategic materials content. Casting technology development, machinability, and brazing technique need to be developed to make this alloy ready for use in the manufacture of heater heads. Performance impacts (lower conduction losses) and durability aspects also require engine test and evaluation.

5.4 Reliability/Operational Improvements

While the ASE project was not focused on the demonstration of specific reliability and life objectives, experience realized in the NASA TU vehicle demonstration project identified several areas of development to improve reliability and system operation. The deficiency areas identified include both basic engine and system-related technologies. The most significant technology requirements are discussed below.

Combustor Life. The Mod I EGR combustors began to deteriorate in approximately 500 hr, which was evidenced as cracking of the combustor shell. This condition impacts air/fuel mixing and can create locally rich combustion zones. Continued operation under such conditions can result in preheater soot deposits and deteriorated emissions levels. An improvement to the design was developed for the Mod II. The redesign appeared to provide many times the observed 500-hr life, but it was not fully tested. Endurance development and testing to eliminate the cracking problem is required.

Piston Rings. As noted in Section 5.1.2, problems were experienced with deterioration of single solid piston rings. Recent experience with the Mod II-powered USPS LLV has indicated the possibility of similar deterioration with the standard double split/solid ring configuration, as evidenced by slow starts. Other vehicle experience has revealed piston ring problems associated with oil deposits in the ring area, again accompanied by slow start problems. Further development of piston ring technology, combined with rod seal oil leakage and systems for removing oil from the engine prior to entering the piston ring area is considered desirable.

Rod Seals. Experience with rod seals has been mixed. There has been no indication of significant hydrogen leakage out of the engine through the rod seals. This has been confirmed by crankcase leakage measurements on the Phase I, Mod I powered NASA TU vehicle. However, as noted in the piston ring discussion above, there has been some oil infiltration into the working gas space past the rod seal of the Mod II engine. Further implementation of approaches to ameliorate oil leakage is desirable.

Hydrogen Leakage. A goal of the ASE project was to achieve a 6-month hydrogen recharge period. The Phase I van required, on average, a recharge each day of operation. The Phase II truck improved that figure to once every 6 days, and the Phase III USPS LLV raised the period further to once every 12 days. As mentioned previously, the leakage has not been via the rod seals. Identification and elimination of leakage sources is required in order to achieve the 6-month recharge interval. The improvements that were made did not result from any technical breakthrough, but rather from refined engineering that eliminated a number of fittings and O-ring seals. With further engineering, the number of fittings and O-rings and hydrogen leakage can be reduced to a negligible amount.

Systems and Auxiliaries Problems. Components of the Stirling control and auxiliary system have been the cause of operational reliability problems. They are generally not Stirling-specific technologies, but are necessary for operation of the Stirling engine as a stand-alone unit. Failures and malfunctions of items such as the combustion air blower drive systems (electrical, mechanical, or hydraulic), atomizing air compressor, hydrogen system valves, air throttle, and ignition systems caused both starting and intermittent operational problems. Development and maturation of improved systems is required to bring the engine to commercial readiness for automotive applications.

5.5 Adaptation to Nonautomotive Applications

Focus during the ASE project was, of necessity, centered on the automotive application. Other applications may require new technologies for optimization of performance specific to the application or to meet particular life, durability, or reliability requirements. For instance, natural-gas operation, which has the greatest potential application due to the abundant reserves, must be developed. Some installations may even require dual-fuel capability (e.g., natural gas with a liquid fuel option), lifetimes of 20,000 hr (the ASE design criteria was 3,500-hr life at the average operating point), increased coolant temperature for cogeneration applications, or frequency control for load changes in electrical generating installations. Technology development to address these specific needs has not been considered while developing the Mod II for the automotive application, but will be required for nonautomotive applications.

5.6 Other Technology Needs

Advanced technology to enhance Stirling benefits is desirable for both the basic engine and for systems development. For the basic engine, development of ceramics for the hot end of the engine (i.e., combustor, heater head, flamestone, regenerator, and preheater) can provide improvements in performance, manufacturing costs, and durability. Very little work has been done in this area. On the systems side, mating of the basic engine to a heat source via a heat pipe would provide capability to operate on practically any heat source, such as solid fuels, nuclear energy, and solar energy. Development of the heat pipe system, including the interface with both the heat source and the engine heater head, would be required to mature this technology.

5.7 Summary

The previous sections indicated specific technology areas where improvements would enhance the commercialization of Stirling engines. The list is not intended to be all inclusive. It is clear however that the automotive application is the most demanding and that progress toward full commercialization may proceed at a more rapid pace for stationary or other nonautomotive uses.

6.0 CONCLUSIONS

This final report has summarized work performed in the ASE project. The project's success can be determined by comparing accomplishments to the defined project goals and contract requirements. In so doing, the following conclusions can be made:

1. The potential for improvement in fuel economy for Stirling engines over SI engines has been demonstrated. A 10 to 13% improvement in fuel economy for the Mod II over the SI engine has been demonstrated for the USPS LLV in the EPA driving cycle. Based on test data obtained with the LLV, if the original Mod II Celebrity vehicle had been retained for fuel economy demonstration, the project goal of a 30% improvement could have been achieved. The Mod II engine had been sized and optimized for the Celebrity. Component optimization would also provide further improvements for USPS LLV fuel economy.

2. The potential for low emissions has been demonstrated in the Mod II engine: CO = <2.2 g/mi, NO_x = <0.9 g/mi, and HC = <0.4 g/mi with gasoline. The 1985 Federal emission limits were easily met without using a catalyst.

3. The ability to operate on a broad range of liquid fuels was demonstrated. This evaluation was achieved not only in an engine test cell but also in vehicle operation.

4. Measured Mod II SES power and efficiency performance was in excellent agreement with analytical projections, i.e., the differences were less than 4% in power and less than 1% in efficiency.

5. Vehicle performance of a Stirling engine can be predicted from engine dynamometer test results. The Mod II-powered USPS LLV prediction of a 10% fuel economy improvement in the EPA driving cycle over the comparable SI-powered vehicle was verified by experiment.

6. A manufacturable Stirling engine automotive design has been identified under the project. The engine is the Mod II (V-block design with annular heater head) concept modified per the Deere & Co. VA/VE study. Manufacturing costs of $3500 to $4000 were projected by Deere & Co. for commercial production of 15,000 units per year.

7. In accomplishing the objective of transferring European Stirling engine technology to the United States, the ASE project succeeded in establishing an extensive U.S. technology and vendor base capable of designing, developing, and commercializing Stirling engines. As a further indication of successful technology transfer, MTI, along with a gas industry consortium (GRI, NYGAS, and others) and Hercules Engines, Inc. of Canton, Ohio, is developing a commercial Stirling engine based on ASE technology developed in the Stirling Natural Gas Engine Program.

8. The NASA TU project demonstrated the ability of a Stirling-powered vehicle to be operated over the road by non-Stirling personnel; it demonstrated adequate availability and drivability.

7.0 REFERENCES

Bishop, R., et al. "Inspection of Stirling Engine from Air Force Van," Deere and Company report, February 1988.

Ernst, W. "Automotive Stirling Engine Program Overview." Proceedings of the 26th Automotive Technology Development Contractors' Coordination Meeting P-219, Dearborn, Michigan, October 24-27, 1988.

Gallagher, J. Letter, Colorado Department of Health to NASA-LeRC (Richard Shaltens), November 27, 1989.

Grandin, A., A. Richey, and M. Walsh. "Mod II Stirling Engine Design and Performance." Proceedings of the 23rd Automotive Technology Development Contractors' Coordination Meeting P-165, Dearborn, Michigan, October 21-24, 1985.

Hare, C. "Characterization of Multifuel Stirling Engine Emissions." Final Report SwRI-2213, prepared for Deere and Company, Southwest Research Institute, April 1988a.

Hare, C. "Characterization of Multifuel Stirling Engine Emissions." Final Report SwRI-2213, prepared for Deere and Company, Southwest Research Institute, April 1988b.

Hare, C. "Characterization of Stirling Vehicle Emissions Using Base Gasoline and an MTBE Blend." Southwest Research Institute Report SwRI-2546, November 1988b.

Haverdink, W., F. Heffner, and C. Amann. "Assessment of an Experimental Stirling-Engine-Powered Automobile," General Motors Research Publication GMR-4817, August 31, 1984.

Lundholm, G. "1000-hr Main Seal and Piston Reliability Test of Mod I Engine No. 7 Using a CVS Duty Cycle." MTI Report No. 86ASE504ER91 (February 1986).

Meacher, J. "Mod II Automotive Stirling Engine Performance and Manufacturing Cost Reduction Results." SAE paper 890151, presented at the International Congress and Exposition, Detroit, Michigan, February 27, 1989 through March 3, 1989.

Most, Dr. B. "Effects of Cold Temperature on Oxygenated Fuels at Various Altitudes." Fourth Annual Mobile Sources/Clean Air Conference, September 1988.

NASA. "Hot Piston Ring/Cylinder Liner Materials - Selection and Evaluation." NASA TM-100276 (N88-15872).

Nightingale, N. "Automotive Stirling Engine, Mod II Design Report." DOE/NASA/0032-28, NASA CR-175106, MTI Report No. 86ASE58SRI, October 1986.

Appendix A

Bibliography of Relevant ASE Project Publications

Engineering Reports

Ahlin, S. "Engineering Report: Influence of Dome-Cylinder Wall Gap on Power and Efficiency." MTI Report No. 80ASE115ER5 (February 1980).

Ahlin, S. "USAB SES Performance Test Report, Mod I Stirling Engine No. 2." MTI Report No. 83ASE315ER51 (March 1983).

Allen, M. "Product Assurance Report: Acceptance Test Data for P-40 No. 1 Engine for NASA." MTI Report No. 79ASE45PA3 (January 1979).

Allen, M. and C. Rohdenburg. "Equipment Failure Report: P-40 No. 5 in the Opel." MTI Report No. 79ASE50PA4 (April 1979).

Almstead, J., P. Fraser, and W. Ernst. "Engineering Report: Electronic Controls Test Report." MTI Report No. 82ASE240ER33 (April 1982).

Anton, D., D. Snow, and R. Bailey. "Identification of a Cast Iron Alloy Containing Non-strategic Elements." United Technology Report No. 1985-916609-18 (April 1985).

Battista, R. "Engineering Report: Mod I Combustor Ignition and Blowout Test Report." MTI Report No. 82ASE242ER34 (February 1982).

Battista, R. "Mod I Combustor Ignition and Blowout Test Report." (February 1982).

Battista, R. "Stirling Engine Altnerative Fuels Test Results." (May 1982).

Battista, R. "P-40 Engine Emissions Test Results." MTI Report No. 82ASE260ER37 (June 1982).

Battista, R. "Evaluation of Alternative Nonair-Atomized Fuel Nozzles." MTI Report No. 83ASE314ER50.

Battista, R. and M. Connelly. "Evaluation of Alternate Fuels Performance in an External Combustion System." (December 1985).

Berchowitz, D. and R. Berggren. "Appendix Gap Losses in Reciprocating Machines." MTI Report No. 81ASE187ER16 (February 1981).

Berggren, R. "User Manual for Stensy Interim No. 1." MTI Report No. 81ASE204ER25 (June 1981).

Berggren, R. "Analysis Documentation — Stensy U.C. Interim No. 1." MTI Report No. 82ASE286ER46 (March 1983).

Beremand, D. "Stirling Engines for Automobiles." NASA-LeRC Report No. TM-79222 (October 1979).

Beremand, D. and D. Evans. "Applicability of Advanced Automotive Heat Engines to Solar Thermal Power." NASA-LeRC Report No. TM-81658 (February 1981).

Bhate, S., H. Chen, and G. Dochat. "Advanced Propulsion System Concept for Hybrid Vehicles." MTI Report No. 80TR25 (December 1980).

Bhushan, B. and D. Wilcock. "Friction and Wear of Polymeric Composites for Reciprocating Stirling Engine Seals: Part I — Initial Screening Tests." MTI Report No. 80ASE141ER9 (August 1980).

Bookout, L. "Vehicle Definition for Mod II Engine System Design." MTI Report No. 84ASE407ER71 (December 1984).

Bulzan, D. "Experimental Study of an Integral Catalytic Combustor — Heat Exchanger for Stirling Engines." NASA-LeRC Report No. 82783 (February 1982).

Cairelli, J. and D. Horvath. "Compatibility of Alternative Fuels with Advanced Automotive Gas Turbine and Stirling Engines — A Literature Survey." NASA-LeRC Report No. TM-81754 (May 1981).

Connelly, M. "CVS Cycle CO and HC Emissions." MTI Report No. 85ASE434ER74 (February 1985).

Connelly, M. and G. Olsson. "Double Mantle Row Rig Testing for the Mod II Design." MTI Report No. 85ASE482ER78 (April 1986).

Cronin, M. "Fatigue Testing of XF-818 and CRM-6D Phase II." MTI Report No. 83ASE337ER55 (November 1983).

Cronin, M. "Fatigue Testing of Alloys XF-818 and CRM-6D in Hydrogen and Helium." MTI Report No. 83ASE339ER56 (November 1983).

Cronin, M. "Design-Proof Testing of Upgraded Mod I Cylinder Housing for Alloy XF-818." MTI Report No. 84ASE372ER61 (April 1984).

Cronin, M. "Crosshead/Rod Attachment Fatigue Test for the Mod II." MTI Report No. 84ASE374ER62 (August 1984).

Cronin, M. "Room Temperature Fatigue Properties of Alloy XF-818." MTI Report No. 85ASE440ER75 (April 1985).

Daly, J. "Initial P-40 Engine Testing Results." MTI Report No. 82ASE279ER43.

Daly, J. and T. Petrovich. "Combined Alternative Fuels and General Development Test Results of ASE P-40-7." MTI Report No. 82ASE264ER38 (July 1982).

Daly, J. "Initial P-40 Engine Test Results." MTI Report No. 82ASE275ER42 (November 1982).

Daly, J. "Upgraded Mod I Heater Head Brazing." MTI Report No. 83ASE328ER54.

Daly, J. "Engine Baseline Performance Test Results (Mod I Engine No. 1)." MTI Report No. 83ASE302ER48 (January 1983).

Daye, W. "Measurement of Thermal Conductivity: Alloy XF-818 and Comparison with Thermal Conduction of Other Alternative Heater Head Alloys." MTI Report No. 83ASE342ER57 (November 1983).

Daye, W. "High-Temperature Hydrogen Permeation Study of Heater Tube Alloys." MTI Report No. 84ASE343ER58 (March 1984).

Dochat, G., A. Artiles, and J. Killough. "Stirling Engine Electric Hybrid Vehicle Propulsion System Conceptual Design Study." MTI Report No. C00-4535-T1 (August 1978).

Egnell, R. and R. Farrell. "Combustion Development — Status Report, April 1984." MTI Report No. 84ASE418ER73 (October 1984).

Eusepi, M. "Experimental Evaluation of Hydrodynamic Oil Pumping Ring Seals: Monthly Report." (December 1980).

Eusepi, M., J. Walowit, and M. Cohen. "An Experimental Evaluation of Oil Pumping Rings." MTI Report No. 81TR3 (April 1981).

Farrell, R. "USAB Combustion Development Status Report, April 1984)." MTI Report No. 85ASE461ER77.

Foster, J. "Mod I Engine No. 10 Acceptance Test Report." MTI Report No. 83ASE31ER52 (January 1984).

Foster, J. "Upgraded Mod I Engine No. 5 Acceptance Test Report." MTI Report No. 85ASE457ER76 (July 1985).

Fraser, J. "Assessment of the State of Technology of Automotive Stirling Engines." MTI Report No. NASA CR-159361 (September 1979).

Gronwall, J. "Transient Temperature Measurement on a Mod I Heater Head Casting." MTI Report No. 86ASE493ER83 (February 1986).

Harris, J. "LERMA Vehicle Air/Fuel Control Test Report (May 1983 to May 1984)." MTI Report No. 84ASE399ER67 (May 1986).

Haverdink, W., F. Heffner, and C. Amann. "Assessment of an Experimental Stirling-Engine-Powered Automobile." General Motors Report No. GMR-4817 (August 1984).

Howarth, R. "Main Seal Screening Tests Summary Report." MTI Report No. 84ASE405ER70 (August 1984).

Howarth, R. "Single Piston Ring Development and Summary Report." MTI Report No. 84ASE403ER68 (October 1984).

Howarth, R. "Main Seal Technology/Design Review, October 1984." MTI Report No. 84ASE412ER72 (October 1984).

Huang, S. "Appendix Gap Loss in Stirling Engines, Analysis and User's Manual." MTI Report No. 85ASE487ER79 (December 1985).

Huang, S. "Upgraded Mod I Engine Raised Appendix Gap Test/Code Correlation." MTI Report No. 86ASE488ER80 (January 1986).

John Deere. "Test and Evaluation of a Mod I Automotive Stirling Engine." John Deere Report No. 83-PEC9 (August 1985).

Karl, D. and R. Howarth. "Engineering Report: Friction and Wear of Polymeric Composites for Reciprocating Stirling Engine Seals." MTI Report No. 81ASE189ER17 (February 1981).

Karl, D. and R. Howarth. "Engineering Report: Friction and Wear of Polymeric Composites for Reciprocating Stirling Engine Seals (Part III)." MTI Report No. 81ASE207ER27 (August 1981).

Kelm, G., J. Cairelli, and R. Walter. "Test Results and Facility Description for a 40-kW Stirling Engine." NASA-LeRC Report No. 82620 (June 1981).

Krauter, A. "Measurements of Rod Seal Lubrication for Stirling Engine Application." MTI Report No. 80TR62 (July 1980).

Lundholm, G. "Statistical Life Testing of Stirling Engine Main Seals." United Stirling AB, Sweden.

Lundholm, G. "Piston Rings and Seals Monitoring on Mod I Engine No. 6." MTI Report No. 86ASE499ER86 (February 1986).

Lundholm, G. "1000-hr Main Seal and Piston Ring Reliability Test of Mod I Engine No. 7 Using a CVS Duty Cycle." MTI Report No. 86ASE504ER91 (February 1986).

Mechanical Technology Incorporated. "Preliminary and Conceptual Design of a Stirling General-Purpose Test Engine." MTI Report No. **G7-819** (August 1977).

Mechanical Technology Incorporated. "MTI Stirling Engine Powertrain Development." MTI Report No. 78P98 (May 1978).

Mechanical Technology Incorporated. "Equipment Failure Report, P-40 No. 5 in the Opel." MTI Report No. 78ASE22PA2 (August 1978).

Mechanical Technology Incorporated. "Engineering Report: Cooling Tests of a P-40 Opel." MTI Report No. 79ASE48ER1 (February 1979).

Mechanical Technology Incorporated. "Engineering Report: Reference Engine Study by Ricardo Consulting Engineers (Under Task 1.2)." MTI Report No. 79ASE66ER2 (May 1979).

Mechanical Technology Incorporated. "Stirling Engine Component and Development Status." MTI Report No. 793106 (October 1979).

Mechanical Technology Incorporated. "Engineering Report: Ricardo's Design Assessment of MTI's V-S Z-C P-40." MTI Report No. 81ASE160ER10 (January 1980).

Mechanical Technology Incorporated. "Engineering Report: Cooling System Air Mass Flow Evaluation of: a) 1979 AMC Concord, b) 1980 Oldsmobile Omega." MTI Report No. 80ASE119ER6 (February 1980).

Mechanical Technology Incorporated. "High-Temperature Test of the P-40 Engine." MTI Report No. 80ASE136ER8 (June 1980).

Mechanical Technology Incorporated. "Engineering Report: NO_x Control by Radiative Heat Loss — A Preliminary Study." MTI Report No. 81ASE165ER11 (December 1980).

Mechanical Technology Incorporated. "Engineering Report: P-40 No. 6 Motored Engine Seal Development Testing." MTI Report No. 81ASE166ER12 (December 1980).

Mechanical Technology Incorporated. "Engineering Report: Measurement of CGR for Different Geometries Using a Straight Guide Vane Combustor." MTI Report No. 81ASE178ER15 (December 1980).

Mechanical Technology Incorporated. "Experiments Showing Capability of Iron-Nickel Base Alloy C627." MTI Report No. 81ASE216ER28.

Mechanical Technology Incorporated. "Test Report ASE40-7." MTI Report No. 81ASE217ER29.

Mechanical Technology Incorporated. "Sensitivity Study of Basic Reference Engine by Exercising the MTI First-Order Harmonic Code." MTI Report No. 81ASE188RE13 (February 1981).

Mechanical Technology Incorporated. "Installation Study of the Pre-Mod II Stirling Engine in the GM X-Body Car." MTI Report No. 81ASE202ER24 (March 1981).

Mechanical Technology Incorporated. "Engineering Report: Rebuild and Test of Concord P-40 Engine (ASE 40-12)." MTI Report No. 81ASE197ER19 (August 1981).

Mechanical Technology Incorporated. "Vehicle Integration Task Force No. 7 (Cooling System Development)." MTI Report No. 81ASE233ER31 (October 1981).

Mechanical Technology Incorporated. "Manufacturing Cost Analysis RESD Stirling Engine Final Report." MTI Report No. 82ASE247ER35 (December 1981).

Mechanical Technology Incorporated. "Test Report: Raised Appendix Gap and Varied Working Gas Test Data — Engine No. 5." MTI Report No. 86ASE492ER82.

Mechanical Technology Incorporated. "Engineering Report: Prediction of Mechanical Power Losses in the Mod I Engine." MTI Report No. 81ASE230ER30 (January 1982).

Mechanical Technology Incorporated. "USSW Acceptance Test Report: Mod I Basic Stirling Engine S/N 2." MTI Report No. 82ASE270ER40 (July 1982).

Mechanical Technology Incorporated. "The Critical Element of the Automotive Stirling Engine Development Program." MTI Report No. 832339 (1983).

Mechanical Technology Incorporated. "Fatigue Testing of HS-31, XF-818, CRM-6D, and SAF-11 — Phase I." MTI Report No. 82ASE268ER39 (February 1983).

Mechanical Technology Incorporated. "Engine No. 6 1000- and 1500-hr Endurance Test Report." MTI Report No. 86ASE500ER87.

Mechanical Technology Incorporated. "Engine No. 10 Final Report." MTI Report No. 86ASE502ER89.

Mechanical Technology Incorporated. "Engine No. 6 500-hr Endurance Test Report." MTI Report No. 86ASE503ER90.

Mieskowski, D., W. Sanders, and L. Pierce. "Reliability of Two Sintered Silicon Nitride Materials." NASA-LeRC Report No. 87092 (August 1985).

Misencik, J. "Evaluation of Candidate Stirling Engine Heater Tube Alloys for 1000 hr at 760°C." NASA-LeRC Report No. 81578 (November 1980).

Misencik, J. "Evaluation of Candidate Stirling Engine Heater Tube Alloys at 820 and 860°C." NASA-LeRC Report No. 82837 (June 1982).

Misencik, J. "Evaluation of Dopants in Hydrogen to Reduce Hydrogen Permeation in Candidate Stirling Engine Heater Head Tube Alloys at 760 and 820°C." NASA-LeRC Report No. TM-82920 (October 1982).

Misencik, J. and R. Titran. "Evaluation of Candidate Stirling Engine Heater Tube Alloys After 3000-hr Exposure to High-Pressure Doped Hydrogen or Helium." NASA-LeRC Report No. TM-83782 (October 1984).

Moore, G. "Alternative Fuels Used in the Stirling Engine." MTI Report No. 82ASE250ER36 (April 1982).

Nightingale, N. "Engineering Report: Variable Stroke Power Control Concept Study." MTI Report No. 81ASE196ER18 (August 1981).

Nightingale, N. "USSW Acceptance Test Report for Mod I SES No. 1." MTI Report No. 81ASE237ER32 (September 1981).

Nilsson, K. "Temperature Mapping of an Annular Heater Head Used in a P-40 Stirling Engine." MTI Report No. 84ASE398ER66 (July 1984).

Petersen, L. "Investigation of a Braze-Repaired Heater Tube/Regenerator Manifold Junction from ASE P-40-7, Quadrant No. 7." MTI Report No. 82ASE274ER41 (December 1982).

Petersen, L. "Metallurgical Service Report No. 28: Investigation of a Mod I Heat Regenerator." MTI Report No. 83ASE318ER53 (July 1983).

Petersen, L., M. Schreiner, and M. Cronin. "Time-Temperature Effects on Heater Tube Superalloy Microstructures." MTI Report No. 84ASE377ER63 (December 1984).

Petrovich, A. and G. Stelma. "Engineering Report: Metallographic Investigation of USS Engine Heat Quadrant." MTI Report No. 80ASE111ER4 (February 1980).

Petrovich, A. and G. Stelma. "Engineering Report: Investigation of Failures in Cylinder Heads on High-Temperature P-40 Endurance Test Engine." MTI Report No. 80ASE128ER7 (April 1980).

Richey, A. "Performance Report: Generator Set Preparatory Testing of Upgraded Mod I Engine No. 9." MTI Report No. 86ASE491ER81 (February 1986).

Richey, A. "P-40-R Partition Wall Testing and Analysis — Interim Report." MTI Report No. 86ASE495ER84 (February 1986).

Richey, A. "ASE Upgraded Mod I Engine No. 9 Testing — Multigas Support of John Deere ITEP Testing." MTI Report No. 86ASE496ER85 (February 1986).

Rohdenburg, C. "Post GMRL Testing/Disassembly Inspection of Upgraded Mod I Engine No. 8 — Spirit TTB." MTI Report No. 84ASE404ER69 (August 1984).

Schuon, S. and J. Misencik. "Effect of Oxide Films on Hydrogen Permeability of Candidate Stirling Heater Head Tube Alloys." NASA-LeRC Report No. 82824 (February 1981).

Shaltens, R. "Stirling-Powered Van Program Overview." NASA-LeRC Report No. TM-87227 (February 1986).

Shockley, T. "Engineering Report: Interim Test Report of P-40/Spirit Baseline Vehicle, Period July 20, 1979 to September 30, 1979." MTI Report No. 80ASE99ER3 (October 1979).

Simetkosky, M. "Functional Test of ASE Mod I Stirling Engine S/N 3." (June 1982).

Stephens, J. "Alloy Chemistry and Microstructural Control to Meet the Demands of the Automotive Stirling Engine." NASA-LeRC.

Stephens, J. and C. Barrett. "Oxidation and Corrosion Resistance of Candidate Stirling Engine Heater Head Tube Alloys." NASA-LeRC Report No. TM-83609 (May 1984).

Svensson, P. "ASE 4-123-0-3 Endurance Test Report." MTI Report No. 84ASE361ER60 (July 1984).

Tew, R., K. Jefferies, and D. Miao. "A Stirling Engine Computer Model for Performance Calculations." NASA-LeRC Report No. TM-78884 (July 1978).

Tew, R. "Computer Program for Stirling Engine Performance Calculations." NASA-LeRC Report No. TM-82960 (January 1983).

Titran, R. and J. Stephens. "Advanced High-Temperature Materials for the Energy-Efficient Automotive Stirling Engine." NASA-LeRC Report No. TM-83659 (May 1984).

Titran, R. "Creep Rupture Behavior of Candidate Stirling Engine Alloys After Long-Term Aging at 760°C in Low-Pressure Hydrogen." NASA-LeRC Report No. TM-83676 (May 1984).

Titran, R., J. Stephens, and C. Scheuermann. "Stirling Material Technology." NASA-LeRC Report No. TM-86888 (October 1984).

Tomazic, W. "Stirling Engine Supporting Research and Technology." NASA-LeRC Report No. TM-87175 (October 1985).

United Stirling and C. Rohdenburg. "Equipment Failure Report: P-40 No. 8 for Spirit Vehicle." MTI Report No. 79ASE64PA5 (May 1979).

United Stirling. "Engineering Report: CVS Simulation to Study the Influence of Air/Fuel Control Transient Response on Emissions." MTI Report No. 81ASE177ER14 (February 1981).

Vatsky, A. and H. Chen. "A Conceptual Study of the Potential for Automotive-Derived and Free-Piston Stirling Power Applications." (June 1982).

Vatsky, A. "Acceptance Test of Mod I Engine No. 3." MTI Report No. 82ASE297ER47 (April 1983).

Wilcock, D. and L. Hoogenboom. "Preliminary Study of Temperature Measurement Techniques for Stirling Engine Reciprocating Seals." MTI Report No. 82TR4 (August 1981).

Witzke, W. and J. Stephens. "Creep Rupture Behavior of Seven Iron-Base Alloys After Long-Term Aging at 760°C in Low-Pressure Hydrogen." NASA-LeRC Report No. CR-165262 (August 1980).

Design Reports

Ernst, W. "Mod II Basic Stirling Engine Design Review Report — Volume II." MTI Report No. 85TR24 (April 1985).

Ernst, W. "Mod II Basic Stirling Engine Design Review Report." MTI Report No. 85ASE444DR4 (April 1985).

Ernst, W. "Mod II Stirling Engine System Design Review Report." MTI Report No. 85ASE465DR5 (August 1985).

Mechanical Technology Incorporated. "Conceptual Design Study of an Automotive Stirling Reference Engine System." MTI Report No. 79ASE53RE1A (June 1979).

Mechanical Technology Incorporated. "Design Review Report: ASE Mod I." MTI Report No. 80ASE142DR1.

Mechanical Technology Incorporated. "ASE Mod I Design and Performance Audit." MTI Report No. 81ASE167DA1 (December 1980).

Mechanical Technology Incorporated. "Automotive Stirling Engine Development Program." MTI Report No. 84ASE356DR3 (May 1984).

Nightingale, N. "Automotive Stirling Reference Engine Design Report." MTI Report No. 81ASE164DR2 (June 1981).

Richey, A. "RESD Design Report." MTI Report No. 83ASE309ER49 (May 1983).

Technical Papers

Anton, D. and F. Lemkey. "Development of a High-Temperature Austenitic Stainless Steel for Stirling Engine Components." United Technologies Research Center, Presented at the 24th Contractor's Coordination Meeting (1986).

Battista, R. "Alternate Fuels' Emissions Performance of a Stirling Engine." MTI Report No. 82ASE259PR20 (April 1982).

Battista, R. "ASE Development Program: Stirling Engine Alternative Fuels Test Results." Presented at the 20th Contractor's Coordination Meeting, MTI Paper No. 195 (October 1982).

Berggren, R. "Mod II Engine Performance." Presented at the 25th Contractor's Coordination Meeting, MTI Paper No. 336 (October 1987).

Beremand, D., J. Slaby, and D. Miao. "Free-Piston Stirling Hydraulic Drive for Automobiles." Presented at the 20th Contractor's Coordination Meeting (1982).

Bulzan, D. "Experimental Evaluation of Catalytic Combustion with Heat Removal." Presented at the 19th Contractor's Coordination Meeting (1981).

Byrne. "Future Applications of Resonant Stirling Cycle Cryocoolers." MTI Paper No. 170 (September 1981).

Cairelli, J. and E. Skog. "Experimental Evaluation of Working Gas Contaminant in the Automotive Stirling Engine." Presented at the 21st Contractor's Coordination Meeting (1983).

Chiu, W., D. Darooka, and S. Musikant. "A Ceramic Automotive Stirling Engine Conceptual Design." Presented at the 21st Contractor's Coordination Meeting (1983).

Connelly, M. "Heat Transfer to Single- and Double-Row Stirling Engine Heater Tubes." Presented at the Society of Automotive Engineers IECEC Conference, MTI Paper No. P271 (February 1986).

Connelly, M. "Upgraded Mod I Stirling Engine Field Evaluation Program." Presented at the Energy Sources Technology Conference and Exhibit, MTI Paper No. P355 (January 1989).

Corey, J. and K. Khan. "Design Description of an Automotive Sstirling Engine with a Competitive Manufacturing Cost." Presented at the 22nd Contractor's Coordination Meeting, MTI Paper No. P229 (October 1984).

Corey, J. and J. Meacher. "Advancements in ASE Development." Presented at the 20th Society of Automotive Engineers IECEC Conference, MTI Paper No. P247 (August 1985).

Cosmus, T. "Stirling Engine Development Programs at the Stirling Engine Systems Division of MTI." Presented at the 3rd International Stirling Engine Conference, Rome (1986).

Cronin, M. "Materials Requirements for Advanced Stirling Engines." Presented at the ASME Internal Combustion Engine Division Conference, MTI Paper No. P290 (October 1986).

Department of Energy. "Proceedings of the 20th Automotive Technology Development Contractor's Meeting." DOE Report No. P-120 (October 1982).

Dowdy, M. "Mod I Stirling Engine System Performance." Presented at the 19th Contractor's Coordination Meeting (1981).

Ernst, W. "Mod I Stirling Engine Control." Presented at the 19th Contractor's Coordination Meeting (1981).

Ernst, W. "ASE Component Development Advances." Presented at the 21st Society of Automotive Engineers Contractor's Coordination Meeting, MTI Paper No. 214 (November 1983).

Ernst, W. "Mod II Engine and Technology Development." Presented at the 19th IECEC Conference, MTI Paper No. 849127 (1984).

Ernst, W. and T. Cosmus. "Kinematic Stirling Engines Offer Operational Flexibility and High-Conversion Efficiency in Cogeneration Systems." Presented at the ASME Conference, MTI Paper No. P331; ASME New Technology for Cogeneration ICE, Vol. 2 (July 1987).

Ernst, W. "Mod II Technology Applications." Presented at the 25th Contractor's Coordination Meeting, MTI Paper No. P338 (October 1987).

Ernst, W. "ASE Program Overview." Presented at the 26th Contractor's Coordination Meeting, MTI Paper No. P357 (October 1988).

Eusepi, M., M. Cohen, and J. Walowit. "An Analytical and Experimental Investigation of an Elastic Pumping Ring." Presented at the 19th Contractor's Coordination Meeting (1981).

Eusepi, M. and J. Walowit. "Pumping Leningrader Seal Analysis." Presented at the 22nd Contractor's Coordination Meeting (1984).

Farrell, R. "ASE Development Program: Mod I Stirling Engine Emissions with Exhaust Gas Recirculation." Presented at the 20th Society of Automotive Engineers Contractor's Coordination Meeting, MTI Paper No. P196 (October 1982).

Farrell, R. "ASE Development Program: Combustion System Development." Presented at the 19th IECEC Conference, MTI Paper No. 849129 (1984).

Farrell, R. "ASE Program Overview." Presented at the 25th Contractor's Coordination Meeting, MTI Paper No. P335 (October 1987).

Farrell, R. and A. Richey. "Upgraded Mod I Stirling Engine for an Air Force Van Installation." Presented at the ASME Energy Sources Technology Conference and Exhibition (ETCE), MTI Paper No. P297, and ASME 87-ICE-42 (February 1987).

Farrell, R. "Mod II Stirling Engine Overview." Presented at the Society of Automotive Engineers International Congress and Exposition, MTI Paper No. P339, and SAE880539 (1988).

Goldwater, B. "The Stirling Engine for Automotive Appllication." Presented to the Society of Automotive Engineers Congress, MTI Paper No. P74 (March 1979).

Grandin, A. "Correlation of Predicted Stirling Vehicle Performance with Dynamometer Test Results." Presented at the 22nd Society of Automotive Engineers Contractor's Coordination Meeting, MTI Paper No. P231 (October 1984).

Grandin, A. "Mod I Stirling Engine Vehicle Performance Update." Presented at the 23rd Society of Automotive Engineers Contractor's Coordination Meeting, MTI Paper No. P256 (October 1985).

Grandin, A., A. Richey, and M. Walsh. "Mod II Stirling Engine Design and Performance." Presented at the 23rd Society of Automotive Engineers Contractor's Coordination Meeting, MTI Paper No. P257 (October 1985).

Grandin, A., R. Shaltens. "Stirling Engine Applications Update." Presented at the 24th Society of Automotive Engineers Contractor's Coordination Meeting, MTI Paper No. P306 (October 1986).

Grandin, A. "Alternative Fuel Capabilities of the Mod II Stirling Engine." Presented at the Society of Automotive Engineers International Congress and Exposition, MTI Paper No. P343 (February 1988).

Gronwall, J. "Stirling Engine Heater Head Stress Analysis." Presented at the 21st Contractor's Coordination Meeting, MTI Report No. 84ASE360TR30 (1983).

Haaland, K. "The Automotive Mod I Stirling Engine." Presented at the 19th Contractor's Coordination Meeting, (1981).

Haverdink, W., F. Heffner, and C. Amann. "Assessment of an Experimental Stirling-Engine Powered Automobile." Presented at the 22nd Contractor's Coordination Meeting (1984).

Hindes, C. and R. Stotts. "ASE System Component Review." Presented for the Society of Automotive Engineers, MTI Paper No. P312 (January 1987).

Holgersson, S. and W. Percival. "The 4-95 Solar Stirling Engine — A Progress Report." USAB.

Holgersson, S. "Material Development for Automotive Stirling Engines." Presented at the 19th Contractor's Coordination Meeting (1981).

Howarth, R. "Stirling Engine Seal Development." Presented at the 19th Contractor's Coordination Meeting (1981).

Huang, S. "Two-Dimensional Analysis of One-Row Plate-Fin and Tube Heat Exchanger." MTI Paper No. 329 (July 1987).

Johnson, D., C. Congdon, and E. Britt. "Improved Stirling Engine Performance Using HET Impingement." Presented at the 19th Contractor's Coordination Meeting (1981).

Karl, D. "Mod II Engine Development." Presented at the American Institute of Aeronautics and Astronautics (AIAA), MTI Paper No. P323 (May 1987).

Karl, D. "Mod II Engine Test Program." Presented at the 25th Contractor's Coordination Meeting, MTI Paper No. P337 (October 1987).

Kelm, G., J. Cairelli, and R. Tew. "Emission Measurements from the P-40 Stirling Engine." Presented at the 19th Contractor's Coordination Meeting (1981).

Lundholm, G. "Statistical Life-Testing of Stirling Engine Main Seals." MTI Report No. 84ASE359TR29 (1984).

Mather, K. and M. Simetkosky. "Stirling Engine Manufacturability." Presented at the 19th Contractor's Coordination Meeting (1981).

Moodysson, B. "Upgraded Mod I Stirling Engine Design (Mod IA)." Presented at the 20th Contractor's Coordination Meeting (1982).

Nightingale, N. "Program Overview and Status." Presented at the 19th Contractor's Coordination Meeting (1981).

Nightingale, N. and M. Dowdy. "Mod I ASE System Performance." MTI Paper No. P172 (December 1981).

Nightingale, N. "ASE Development Program: Overview and Status Report." Presented at the 20th Contractor's Coordination Meeting, MTI Paper No. P188 (October 1982).

Nightingale, N. "ASE Development Program: Overview and Status Report." Presented at the 21st Society of Automotive Engineers Contractor's Coordination Meeting, MTI Paper No. P217 (November 1983).

Nightingale, N. "ASE Development Program: Overview and Status Report." Presented at the 22nd Society of Automotive Engineers Contractor's Coordination Meeting, MTI Paper No. P228 (October 1984).

Nightingale, N. "ASE Development Program: Hearings on DOE Transportation Programs." Subcommittee on Transportation, Aviation, and Materials; Committee on Science and Technology, U.S. House of Representatives, MTI Paper No. P270 (February 1986).

Nightingale, N. "The Development Status of an Automotive Stirling Engine." International Symposium on Alternative and Advanced Automotive Engines, Vancouver, B.C., MTI Paper No. P293 (1986).

Nightingale, N. "The Stirling Engine Program Testimony." MTI Paper No. P347 (March 1988).

Nightingale, N. "Stirling Engine Program: Hearings on DOE Transportation Programs." MTI Paper No. P350 (March 1988).

Petrovich, A. and M. Cronin. "The Construction of Life Prediction Models for the Design of Stirling Engine Heater Components." ASME, MTI Paper No. P197 (December 1982).

Richey, A. "ASE Development Program: Mod I Stirling Engine System Performance." Presented at the 20th Society of Automotive Engineers Contractor's Coordination Meeting, MTI Paper No. P194 (October 1982).

Richey, A. "ASE Development Program: Mod I Stirling Engine Performance Data and Analysis." Presented at the 21st Society of Automotive Engineers Contractor's Coordination Meeting, MTI Paper No. 215 (November 1983).

Richey, A. "Mod I Automotive Stirling Engine Performance Development." MTI Report No. 840461 (February 1984).

Richey, A. "Automotive Stirling Engine Systems Development." Presented at the 19th IECEC Conference, MTI Paper No. 849128 (1984).

Richey, A. and G. Smith. "Operational Maintenance Data Base Development for Kinematic Stirling Engines." ASME Paper No. ASME85-DGP-20.

Richey, A. "Mod II ASE Design Description and Performance Projections." Presented at the Society of Automotive Engineers International Congress and Exposition, MTI Paper No. P262, SAE No. 860059 (February 1986).

Richey, A. "Mod II Engine Performance." Presented at the 24th Society of Automotive Engineers Contractor's Coordination Meeting, MTI Paper No. 305 (October 1986).

Richey, A. and G. Smith. "Application of an Operational Maintenance Data Base to New Engine Design — The Mod II Stirling Engine." Presented at the ASME ETCE Conference, MTI Paper No. 298 (February 1987).

Richey, A. and S. Huang. "Mod II Engine Performance." Presented at the Society of Automotive Engineers International Congress, MTI Paper No. P304, SAE No. 870101 (February 1987).

Richey, A. "Status and Application of Stirling Engine Technology." Presented at the 14th Energy Technology Conference and Exposition, MTI Paper No. P313 (April 1987).

Richey, A. "The ASE Program Final Report." Presented at the 27th Contractor's Coordination Meeting, MTI Paper No. P359 (December 1989).

Richey, A. and M. Connelly. "Upgraded Mod I Stirling Engine Field Evalution Program." ASME Paper No. 89-ICE-7.

Simetkosky, M. "ASE Program: Mod I Engine Development Summary." Presented at the 23rd Contractor's Coordination Meeting Post Conference Proceedings, MTI Paper No. P303 (November 1986).

Simetkosky, M. "Automotive Stirling Engine Mod I Development." Presented at the 22nd Society of Automotive Engineers Contractor's Coordination Meeting, MTI Paper No. P230 (October 1984).

Simetkosky, M. and A. Grandin. "Development, Analysis, and Testing Background of the Mod II Automotive Stirling Engine." Presented at the 3rd International Stirling Engine Conference, Rome, MTI Paper No. P281 (June 1986).

Sliney, H. "Hot Piston Ring/Cylinder Liner Materials — Selection and Evaluation." NASA Report No. TM-100276 (N88-15872).

Society of Automotive Engineers. "Proceedings of the 21st Automotive Technology Development Contractor's Coordination Meeting." Report No. P-138 (November 1983).

Spatz, M. "Regenerator Matrices for Stirling Engines." Presented at the 19th Contractor's Coordination Meeting (1981).

Stephens, J. "Characterization of Stirling Engine Materials." Presented at the 19th Contractor's Coordination Meeting (1981).

Stephens, J., M. Cronin, and E. Skog. "Stirling Engine Materials Research at NASA-LeRC, MTI, and USAB." Presented at the 20th Contractor's Coordination Meeting (1982).

Sternlicht, B. "The Automotive Engine — Our Strategic Weapon in a War on Energy." MTI Paper No. G (September 1977).

Sternlicht, B. "Commercialization of New Automotive Technologies — The Last Frontier." Presented at the 7th Energy Technology Conference, MTI Paper No. P109 (March 1980).

Sutton, P. "An Overview of athe U.S. Department of Energy's ASE Technology Development Program." Presented at the 20th Contractor's Coordination Meeting (1982).

Tabata, W. and R. Shaltens. "Automotive Stirling Summary and Overview." Presented at the 23rd Contractor's Coordination Meeting (1985).

Teagen, W., D. Cunningham, and A. Little. "Stirling Engine Application Study." Presented at the 20th Contractor's Coordination Meeting (1982).

Tew, R. "Progress of Stirling Cycle Analysis and Loss Mechanism Characterization." Presented at the 24th Contractor's Coordination Meeting (1986).

Thieme, L. "Initial Testing of a Variable-Stroke Stirling Engine." Presented at the 21st Contractor's Coordination Meeting (1983).

Titran, S. and C. Stephens. "Creep-Rupture Behavior of Stirling Engine Materials." Presented at the 23rd Contractor's Coordination Meeting (1985).

Tomazic, W. "A Look at a Cooled, Insulated Stirling Engine." Presented at the 20th Contractor's Coordination Meeting (1982).

Tomazic, W. "Stirling Engine Supporting Research and Technology." Presented at the 23rd Contractor's Coordination Meeting (1985).

USAB. "Summary Report of P-40 Opel." Presented at the 16th Contractor's Coordination Meeting (1978).

Technical Specifications

Arnold, S. and S. Piller. "ASE Mod I Vehicle Definition." MTI Report No. 80ASE100TS3 (November 1979).

Arnold, S. and S. Piller. "Vehicle Definition for Reference Engine System Design." MTI Report No. 79ASE54TS1 (November 1979).

Arnold, S. and S. Piller. "ASE Development Program: Vehicle Definition for Reference Engine System Design, Revision 2." MTI Report No. 79ASE54TS1 (April 1980).

Mechanical Technology Incorporated. "ASE Development Facility: Electrical Specifications." (November 1978).

Mechanical Technology Incorporated. "ASE Development Facility: Mechanical Specifications." (November 1978).

Mechanical Technology Incorporated. "ASE Mod I Vehicle Definition." MTI Report No. 80ASE100TS3 (July 1980).

Mechanical Technology Incorporated. "Vehicle Definition for Reference Engine System Design." MTI Report No. 79ASE54TS1 (June 1981).

Mechanical Technology Incorporated. "ASE Reference Engine Design Report." MTI Report No. 81ASE164DR2 (June 1981).

Mechanical Technology Incorporated. "Design Specification for Reference Engine." MTI Report No. 81ASE191TS6 (June 1981).

United Stirling. "Design Specification for ASE Mod I." MTI Report No. 79ASE56TS2 (April 1979).

Miscellaneous Reports

Bankaitis, H. "System Safety in Stirling Engine Development." NASA-LeRC Report No. NASA TM-82615 (July 1981).

Decker, O. "Topical Report: Predevelopmental Demonstration of Stirling-Powered Vehicle — Genesis-I." MTI Report No. 79ASE33TO1 (January 1979).

Department of Energy. "Advanced Automotive Heat Engine Systems Development Project." (January 1979).

Department of Energy. "ASE Development Program: Energy Systems Acquisition Project Plan (ESAPP) (February 1981).

Department of Energy. "Draft: Automobile Stirling Engine Project Plan." (November 1983).

Department of Energy. "Annual Operating Plan: Transportation Energy Conservation for Fiscal Year 1985." (October 1984).

Goodale, T. "Study of Hydrogen Fire and Explosion Hazards of the Stirling Engine." Stanford Research Institute Report No. 47-R-310285 (March 1973).

Goodale, T. "Hydrogen Safety Tests of the Stirling Engine." Stanford Research Institute Report No. 373828 (December 1973).

Goodale, T. "Review of Hydrogen Safety Tests of the Ford Stirling Engine." Stanford Research Institute (February 1979).

Lombardi, P. and P. Sutton. "ASE Development Program: Program Status."

Mechanical Technology Incorporated. "ASE Development Program: Risk Assessment." (May 1980).

Mechanical Technology Incorporated. "Commercialization Strategy for ASE Technology." (June 1980).

Mechanical Technology Incorporated. "ASE Development Program." MTI Report No. 801244-1 (November 1980).

Mechanical Technology Incorporated. "Production Evalution of In-Line Automotive Stirling Engine Concepts." MTI Report No. G1-064 (December 1980).

Mechanical Technology Incorporated. "ASE Market and Industrial Readiness Program (MIRP)." (May 1982).

Mechanical Technology Incorporated. "Hearings on Department of Energy Transportation Programs." (February 1984).

Mechanical Technology Incorporated. "Coal-Fired Stirling Engines for Irrigation Pumping Systems." MTI Report No. G5-361 (May 1985).

Percival, W. "Historical Review of Stirling Engine Development in the United States from 1960 to 1970." NASA-LeRC Report No. CR-12097 (July 1974).

Pioneer Engineering. "Manufacturing Cost Analysis: RESD V-4 Mark V 60-kW Stirling Engine." (July 1984).

Rohdenburg, C. "ASE Development Program: Initial Product Assurance Plan." MTI Report No. 78ASE10PA1 (June 1978).

Rohdenburg, C. "Product Assurance Failure and Discrepancy Report." MTI Report No. 80ASE107PA6 (December 1979).

Smith, G. "Audit Report of United Stirling (Sweden) Product Assurance Program." MTI Report No. 80ASE135PA7 (June 1980).

Test Plans

A.M. General Corp. and B. Goldwater. "Test Plan: Stirling-Powered 1979 AMC Spirit Cooling System and Emissions Testing (By AMC)." MTI Report No. 79ASE71TP8 (May 1979).

A.M. General Corp. "ASE Development Program Test Plan: P-40 Spirit Baseline Vehicle (by AMG)." MTI Report No. 80ASE93TP14 (January 1981).

Battista, R. "Automotive Stirling Engine Combustion Performance Rig Test Plan." MTI Report No. 82ASE251TP39 (May 1982).

Battista, R. "Test Plan: Soot Probing and Combustor Evaluation." MTI Report No. 84ASE387TP65 (August 1984).

Bolton, R. and M. Simetkosky. "Test Plan: Simulation of Proposed General Motors Test Plan on the Upgraded Mod I Engine." MTI Report No. 83ASE340TP55 (September 1983).

Bolton, R. "Test Plan: Spirit TTB/Upgraded Mod I Engine No. 8 Development Test." MTI Report No. 84ASE413TP74 (November 1984).

Bolton, R. "Test Plan: Component Testing." MTI Report No. 85ASE474TP89 (February 1986).

Connelly, M. "Test Plan: Evaluation of Alternate-Fuels Performance in an External Combustion System." MTI Report No. 84SESD13 (July 1984).

Connelly, M. "Engine Test Plan for 12-Tube CGR Combustor." MTI Report No. 85ASE448TP82 (May 1985).

Connelly, M. "Test Plan: Mod I External Heat System: Performance Rig and Mod II Engine No. 1." MTI Report No. 86ASE494TP92 (February 1986).

Connelly, M. "Test Plan: Vehicle Test Plan for 12-Tube CGR Combustor." MTI Report No. 85ASE441TP81 (April 1990).

Egnell, R. "Test Plan: Development of CGR and EGR Combustors." MTI Report No. 85ASE419TP75 (October 1984).

Folsom, L. "Test Plan: Engine Drive System." MTI Report No. 82ASE238TP37 (December 1981).

Goldwater, B. "Test Plan: P-40 Engine Workaround Testing." MTI Report No. 79ASE79TP13 (September 1979).

Gronwall, J. "Endurance Test of SES Mod I Engine No. 3." MTI Report No. 82ASE293TP44 (April 1983).

Gronwall, J. "Test Plan: Transient Temperature Measurement on a Mod I Heater Head Casting." MTI Report No. 84ASE375TP62 (May 1984).

Gummesson, S. "Test Plan: Mod I Engine No. 3 EHS Endurance Development." MTI Report No. 84ASE362TP59 (January 1984).

Gummesson, S. "Test Plan: Upgraded Mod I Engine No. 6 Basic Stirling Engine Endurance." MTI Report No. 84ASE406TP72 (August 1984).

Howarth, R. "Test Plan: Preliminary Evaluation of Metal Bellows Rod Seals." MTI Report No. 84ASE410TP73 (November 1984).

Howarth, R. "Test Plan: Piston Ring Cold Start Tests in the Spirit Transient Test Bed Vehicle." MTI Report No. 85ASE438TP80 (May 1985).

Lundholm, G. "Test Plan: Test Program for Main Seal Reliability Engine." MTI Report No. 84ASE349TP58 (October 1984).

Lundholm, G. "Test Plan: Test Program for Main Seal Reliability of Engine No. 7." MTI Report No. 85ASE430TP78 (January 1985).

Lundholm, G. "Test Plan: Mod I/Mod II Power Colntrol Valve Electric Actuator." MTI Report No. 85ASE452TP84 (January 1986).

Mechanical Technology Incorporated. "Test Plan for P-40 Opel Engine." MTI Report No. 78ASETP1 (May 1978).

Mechanical Technology Incorporated. "Test Plan for P-40 Stirling-Engine-Powered Opel Vehicle." MTI Report No. 78ASE9TP2 (June 1978).

Mechanical Technology Incorporated. "Test Plan for P-40 Engine Acceptance Testing." MTI Report No. 78ASE17TP3 (July 1978).

Mechanical Technology Incorporated. "Test Plan for Emissions of the P-40 Opel Vehicle at A.M. General Corp." MTI Report No. 78ASE23TP4 (August 1978).

Mechanical Technology Incorporated. "Test Plan: P-40 Opel Cooling System Evaluation (by A.M. General)." MTI Report No. 79ASE24TP5 (November 1978).

Mechanical Technology Incorporated. "Test Plan: P-40 Engine Testing at Elevated Temperature." MTI Report No. 79ASE62TP6. (May 1979).

Mechanical Technology Incorporated. "Test Plan: Gear Noise for ASE Mod I (By USS)." MTI Report No. 79ASE637TP7 (May 1979).

Mechanical Technology Incorporated. "Test Plan: Influence of Dome-Cylinder Wall Gap on Power and Efficiency (By USS)." MTI Report No. 79ASE75TP11 (May 1979).

Mechanical Technology Incorporated. "Test Plan: Annular Regenerator Type Heater (By USS)." MTI Report No. 80ASE104TP15 (January 1980).

Mechanical Technology Incorporated. "Test Plan: P-40 Opel Testing Phase I — CGR System and Seal Component." MTI Report No. 80ASE120TP16 (April 1980).

Mechanical Technology Incorporated. "Test Plan: Capseal Screening Tests in Single-Cylinder Test Rig." MTI Report No. 80ASE148TP19 (August 1980).

Mechanical Technology Incorporated. "Test Plan: Piston Ring Material Temperature versus Wear Tests in a Single-Cylinder Test Rig." MTI Report No. 80ASE150TP21 (August 1980).

Mechanical Technology Incorporated. "Test Plan: P-40 Engine Testing." MTI Report No. 80ASE140TP17 (September 1980).

Mechanical Technology Incorporated. "Seals Development Test Plans (By USS)." MTI Report No. 80ASE147TP18 (November 1980).

Mechanical Technology Incorporated. "Test Plan: Cold-Start Seal Tests in a Single-Cylinder Test Rig." MTI Report No. 80ASE149TP20 (December 1980).

Mechanical Technology Incorporated. "Test Plan: Seals Materials Screening Tests." MTI Report No. 81ASE170TP25 (December 1980).

Mechanical Technology Incorporated. "Piston Ring and Capseal Duty Cycle Wear Tests in the P-40 No. 15 Motored Engine (By USS)." MTI Report No. 80ASE151TP22 (December 1980).

Mechanical Technology Incorporated. "Test Plan: P-40 Spirit Baseline Vehicle (By AMG)." MTI Report No. 80ASE93TP14 (January 1981).

Mechanical Technology Incorporated. "Test Plan: Hydrogen Permeation Evaluation." MTI Report No. 81ASE179TP26 (February 1981).

Mechanical Technology Incorporated. "Test Plan: Regenerator Matrix Materials Heat Transfer and Pressure Drop Characteristics." MTI Report No. 81ASE168TP23 (April 1981).

Mechanical Technology Incorporated. "Test Plan: Exploratory Seals Tests." MTI Report No. 81ASE169TP24 (April 1981).

Mechanical Technology Incorporated. "Test Plan: Combustor Development Rig Tests." MTI Report No. 81ASE186TP28 (April 1981).

Mechanical Technology Incorporated. "Test Plan: Mod I Engine Airflow." MTI Report No. 81ASE208TP32 (April 1981).

Mechanical Technology Incorporated. "Test Plan: Acceptance Test of the Mod I Stirling Engine System." MTI Report No. 81ASE198TP33 (June 1981).

Mechanical Technology Incorporated. "Test Plan: Analog and Digital Control System Testing of ASE P-40-7." MTI Report No. 81ASE201TP34 (July 1981).

Mechanical Technology Incorporated. "Test Plan: Fatigue Testing of Heater Alloys." MTI Report No. 81ASE190TP29 (August 1981).

Mechanical Technology Incorporated. "Test Plan: Vehicle Control Transient Test Plan." MTI Report No. 81ASE218TP35 (August 1981).

Mechanical Technology Incorporated. "Test Plan: Acceptance Test of the Mod I Stirling Engine System for the LERMA." MTI Report No. 82ASE245TP38 (February 1982).

Mechanical Technology Incorporated. "Test Plan: Modified Test Cycle for Destructive Test Phase of Alternative Material Test on HTP-40." MTI Report No. 82ASE254TP40, Rev. 1 (February 1982).

Mechanical Technology Incorporated. "Test Plan: Main Seal Reliability Test in P-40 Engines." MTI Report No. 82ASE294TP45 (January 1983).

Mechanical Technology Incorporated. "Test Plan: Mod IA CGR Combustor Testing." MTI Report No. 82ASE295TP46 (January 1983).

Mechanical Technology Incorporated. "Test Plan: P-40-R Dome Gap Variation Testing." MTI Report No. 84ASE379TP63.

Mechanical Technology Incorporated. "Test Plan: P-40-R Partition Wall Testing (USAB)." MTI Report No. 84ASE363TP60 (February 1984).

Mechanical Technology Incorporated. "Ceramic Preheater Test Plan." MTI Report No. 84ASE389TP67 (May 1984).

Mechanical Technology Incorporated. "Test Plan: Test Program for Main Seal Reliability of the P-40-9 Engine." MTI Report No. 84ASE383TP64 (June 1984).

Mechanical Technology Incorporated. "Test Plan: Preliminary Evaluation Test of Single H-Rings on the Upgraded Mod I Engine." MTI Report No. 84ASE390TP68 (June 1984).

Mechanical Technology Incorporated. "Test Program for USAB Engine No. 3." MTI Report No. 85ASE453TP85.

Mechanical Technology Incorporated. "Test Plan: Upgraded Mod I Engine No. 5 Program Year 1985." MTI Report No. 85ASE429TP77 (March 1985).

Mechanical Technology Incorporated. "Test Plan: Cold Start-Up Evaluation of Upgraded Mod I Engine No. 9 in a Generator Set Configuration." MTI Report No. 85ASE473TP88, (November 1985).

Munshi, J. "Test Plan: CGR Combustor Development." MTI Report No. 84ASE392TP70 (September 1984).

Nightingale, N. "Test Plan: Alternative Heater Material Tests on HT P-40." MTI Report No. 82ASE254TP40 (February 1982).

Olsson, G., G. Riecke, and M. Connelly. "Test Plan: Double Mantle Rig Tests for the Mod II Design of Heater Head Fins and Tubes." MTI Report No. 85ASE460TP87 (October 1985).

Olsson, G. and M. Connelly. "Test Plan: Double Mantle Rig Tests of Heater Head Fins and Tubes for 1986." MTI Report No. 86ASE486TP91 (January 1986).

Richey, A. "Test Plan: Modified Appendix Gap and Multigas Tests — Engine No. 5." MTI Report No. 85ASE450TP83 (July 1985).

Riecke, G. "Test Plan: Main Seal Reliability of a Simulated Mod II Main Seal in Mod I Engine No. 3." MTI Report No. 86ASE498TP93 (May 1986).

Rohdenburg, C. "Baseline and Development Testing of Mod I Transient Test Bed." MTI Report No. 82ASE273TP43 (January 1983).

Simetkosky, M. "Test Plan: Functional Test of ASE Mod I Stirling Engine S/N 3." MTI Report No. 82ASE255TP41 (June 1982).

Simetkosky, M. "Acceptance Test of the Upgraded Mod I Stirling Engine System." MTI Report No. 83ASE311TP49 (October 1983).

Simetkosky, M. "Test Plan: Tube Temperature Measurement on the Upgraded Mod I Engine." MTI Report No. 83ASE330TP54 (December 1983).

Simetkosky, M. "Mod II Basic Stirling Engine Assembly Program and Acceptance Tests." MTI Report No. 85ASE480TP90 (March 1986).

Simetkosky, M. "Test Plan: Mod II on Stirling Engine System." MTI Report No. 87ASE560TP94 (May 1987).

Simetkosky, M. "Test Plan: Mod II Motoring Test Rig Program Year 1987." MTI Report No. 87ASE567TP86 (July 1987).

Sjoholm, J. "Test Plan: P-40-R Mark II Heater Head Temperature Mapping."

Sjoholm, J. "Test Plan: Proposed Test Plan for P-40-R Heater Head Temperature Mapping." MTI Report No. 84ASE348TP57 (October 1984).

Sjoholm, J. "Test Plan: Upgraded Mod I Engine No. 6 Basic Stirling Engine Performance Improvement Test Series." MTI Report No. 84ASE364TP61 (January 1984).

Sjoholm, J. "Test Plan: P-40R MK II Heater Head Temperature Mapping." MTI Report No. 84ASE388TP66 (May 1984).

Sjoholm, J. "Test Plan: Regenerator Flow Distribution Tests Due to Manifold Effects on the Hot and Cold Sides." MTI Report No. 84ASE400TP71 (November 1984).

Sjoholm, J. "Test Plan: P-40-R Performance Test; Respect to Changes in Regenerator Mass Flow Distribution Due to Cold Annular Duct Cross Section Changes." MTI Report No. 85ASE421TP76 (December 1984).

Sjoholm, J. and G. Riecke. "Test Plan: P-40-R Short Partition Wall Test." MTI Report No. 85ASE437TP79 (April 1985).

Spatz, M. "ASE Ceramic Preheater Test Plan." MTI Report No. 83ASE303TP48 (November 1982).

Stotts, R. "Test Plan: Low-Speed Idle Testing on the Upgraded Mod I Engine." MTI Report No. 84ASE391TP69 (August 1984).

Svensson, P. "Test Plan: Temperature Evaluation of a Hot Engine System on a Mod I Engine." MTI Report No. 83ASE324TP51 (June 1983).

Svensson, P. "Test Plan: Lubrication Oil Pump and Engine Oil Testing." MTI Report No. 83ASE325TP52 (June 1983).

Svensson, P. "Test Plan: Upgraded Mod I External Heat System (EHS) Development Test." MTI Report No. 83ASE326TP53 (June 1983).

Svensson, P. "Test Plan: Acceptance Test of Basic Stirling Engine 4-123A-2." MTI Report No. 84ASE347TP56 (October 1983).

United Stirling. "Gear Noise for ASE Mod I." MTI Report No. 79ASE63TP7 (May 1979).

United Stirling. "Test Plan: CGR Combustor on the P-40." MTI Report No. 79ASE73TP9 (May 1979).

United Stirling and B. Goldwater. "Test Plan: 1979 Test Program for Seal Development Test Rig No. 1 on P-40 No. 6." MTI Report No. 79ASE74TP10 (May 1979).

Vatsky, A. "100-hr Maximum Power Endurance Test." MTI Report No. 82ASE267TP42.

Vatsky, A. "Combined Alternative Fuels and General Development Testing of ASE-40-7." MTI Report No. 81ASE236TP36 (July 1982).

Vatsky, A. "USA Mod I Engine No. 10 Development Testing." MTI Report No. 82ASE301TP47 (February 1983).

Work Plans

Daly, J. and P. Krantz. "Work Plan: MTI Facilities Workaround Plan." MTI Report No. 79ASE76WP4 (May 1979).

Ernst, W. "Work Plan for Program Year 1988 to 1989." MTI Report No. 88ASE594WP15 (May 1988).

Farrell, R. "Work Plan for Program Year 1987." MTI Report No. 87ASE542WP14 (May 1987).

Mechanical Technology Incorporated. "Volume I — Program and Technical Discussion." MTI Report No. 67-004 (June 1977).

Mechanical Technology Incorporated. "Volume II — Background, Experience, and Facilities." MTI Report No. 67-004 (June 1977).

Mechanical Technology Incorporated. "Overall Program Work Plan." MTI Report No. 78ASE11WP1 (July 1978).

Mechanical Technology Incorporated. "Computer Program Development Work Plan." MTI Report No. 78ASE12WP2 (July 1978).

Mechanical Technology Incorporated. "Overall Program Component and Subsystem Technology Development." MTI Report No. 78ASE19WP3 (July 1978).

Mechanical Technology Incorporated. "Overall Program Work Plan, 1980-1984." MTI Report No. 80ASE108WP5.

Mechanical Technology Incorporated. "Integrated Component Development Plan Update." MTI Report No. 80ASE155WP6 (December 1980).

Mechanical Technology Incorporated. "Program Year 1982 Work Plan." MTI Report No. 82ASE246WP8.

Mechanical Technology Incorporated. "Work Plan." MTI Report No. 82ASE257WP9 (February 1982).

Mechanical Technology Incorporated. "1983 Work Plan." MTI Report No. 82ASE284WP10 (November 1982).

Mechanical Technology Incorporated. "Work Plan: Revision for Program Year 1983 (5/1/83 to 10/31/83)." MTI Report No. 82ASE284WP10, Rev. 1 (July 1983).

Mechanical Technology Incorporated. "Work Plan for Program Years 1984 to 1987." MTI Report No. 84ASE368WP11.

Mechanical Technology Incorporated. "Volume I — Work Plan for Program Year 1985." MTI Report No. 85ASE433WP12 (January 1985).

Mechanical Technology Incorporated. "Volume II — Cost Estimate for Program Year 1985." MTI Report No. 85ASE433WP12 (January 1985).

Mechanical Technology Incorporated. "Cost Proposal for Program Year 1986." MTI Report No. 85ASE470WP13 (October 1985).

Mechanical Technology Incorporated. "Volume I — Work Plan for Program Year 1986." MTI Report No. 85ASE470WP13 (January 1986).

Mechanical Technology Incorporated. "Volume II — Cost Estimate for Program Year 1986." MTI Report No. 85ASE470WP13 (January 1986).

Nightingale, N. "Work Plan for Program Year 1982: Automotive Stirling Engine Development Program." MTI Report No. 81ASE231WP7 (February 1982).

Monthly Reports

Mechanical Technology Incorporated. "Monthly Technical Progress Narrative Reports for April 1978 through January 1989.

Quarterly Reports

Allen, M. "ASE Development Program Quarterly Technical Progress Report for Period March 23, 1978 through July 1, 1978." MTI Report No. 78ASE16QT1 (August 1978).

Allen, M. "ASE Development Program Quarterly Technical Progress Report for Period July 2, 1978 through September 30, 1978." MTI Report No. 79ASE32QT2 (December 1978).

Mechanical Technology Incorporated. "ASE Development Program Quarterly Technical Progress Report for Period October 1, 1978 through December 31, 1978." MTI Report No. 79ASE43QT3 (February 1979).

Mechanical Technology Incorporated. "ASE Development Program Quarterly Technical Progress Report for Period January 1, 1979 through March 31, 1979." MTI Report No. 79ASE67QT4 (June 1979).

Mechanical Technology Incorporated. "ASE Development Program Quarterly Technical Progress Report for Period April 1, 1979 through June 30, 1979." MTI Report No. 79ASE88QT5 (September 1979)

Mechanical Technology Incorporated. "ASE Development Program Quarterly Technical Progress Report for Period July 1, 1979 through September 30, 1979." MTI Report No. 79ASE101QT6 (January 1980).

Mechanical Technology Incorporated. "ASE Development Program Quarterly Technical Progress Report for Period October 1, 1979 through December 31, 1979." MTI Report No. 80ASE116QT7 (May 1980).

Mechanical Technology Incorporated. "ASE Development Program Quarterly Technical Progress Report for Period January 1, 1980 through March 29, 1980." MTI Report No. 80ASE129QT8 (June 1980).

Mechanical Technology Incorporated. "ASE Development Program Quarterly Technical Progress Report for Period April 1, 1980 through June 30, 1980." MTI Report No. 80ASE144QT9 (August 1980).

Mechanical Technology Incorporated. "ASE Development Program Quarterly Technical Progress Report for Period June 29, 1980 through October 3, 1980." MTI Report No. 81ASE163QT10 (December 1980).

Mechanical Technology Incorporated. "ASE Development Program Quarterly Technial Progress Report for Period October 4, 1980 through December 31, 1980." MTI Report No. 81ASE185QT11 (September 1981).

Mechanical Technology Incorporated. "ASE Development Program Quarterly Technical Progress Report for Period January 1, 1981 through March 31, 1981." MTI Report No. 81ASE213QT12 (August 1981).

Mechanical Technology Incorporated. "ASE Development Program Quarterly Technical Progress Report for Period April 1, 1981 through June 30, 1981." MTI Report No. 81ASE229QT13 (May 1982).

Semiannual Reports

Mechanical Technology Incorporated. "ASE Development Program Semiannual Technical Progress Report for Period July 1, 1980 through December 31, 1980." MTI Report No. 82ASE248SA1 (September 1982).

Mechanical Technology Incorporated. "ASE Development Program Semiannual Technical Progress Report for Period January 1, 1982 through June 30, 1982." MTI Report No. 82ASE27SA2 (October 1982).

Mechanical Technology Incorporated. "ASE Development Program Semiannual Technical Progress Report for Period July 1, 1982 through December 31, 1982." MTI Report No. 83ASE308SA3 (January 1983).

Mechanical Technology Incorporated. "ASE Development Program Semiannual Technical Progress Report for Period January 1, 1983 through June 30, 1983." MTI Report No. 83ASE334SA4 (August 1983).

Mechanical Technology Incorporated. "ASE Development Program Semiannual Technical Progress Report for Period July 1, 1983 through December 31, 1983." MTI Report No. 83ASE369SA5 (June 1984).

Mechanical Technology Incorporated. "ASE Development Program Semiannual Technical Progress Report for Period January 1, 1984 through June 30, 1984." MTI Report No. 84ASE408SA6 (October 1984).

Mechanical Technology Incorporated. "ASE Development Program Semiannual Technical Progress Report for Period July 1, 1984 through December 31, 1984." MTI Report No. 84ASE445SA7 (December 1985).

Mechanical Technology Incorporated. "ASE Development Program Semiannual Technical Progress Report for Period January 1, 1985 through June 30, 1985." MTI Report No. 85ASE476SA8 (December 1985).

Mechanical Technology Incorporated. "ASE Development Program Semiannual Technical Progress Report for Period July 1, 1985 through December 31, 1985." MTI Report No. 86ASE507SA9 (May 1986).

Mechanical Technology Incorporated. "ASE Development Program Semiannual Technical Progress Report for Period January 1, 1986 through June 30, 1986." MTI Report No. 86ASE236SA10 (November 1986).

Mechanical Technology Incorporated. "ASE Development Program Semiannual Technical Progress Report for Period July 1, 1986 through December 31, 1986." MTI Report No. 87ASE555SA11 (February 1988).

Mechanical Technology Incorporated. "ASE Development Program Semiannual Technical Progress Report for Period January 1, 1987 through June 30, 1987." MTI Report No. 87ASE575SA12 (February 1988).

Final Reports

Mechanical Technology Incorporated. "ASE Engine Market and Industrial Readiness Program (MIRP) Final Report for Phase I." MTI Report No. 84SESD14 (August 1984).

Appendix B

ASE Project Documentation Categorized by Engine Number

Mod I Engines

Engine No.	Documentation
1	Connelly, M. "CVS Cycle CO and HC Emissions." MTI Report No. 85ASE434ER74 (February 1985).
1	Daly, J. "Engine Baseline Performance Test Results (Mod I Engine No. 1)." MTI Report No. 83ASE302ER48 (January 1983).
1	Grandin, A. "Correlation of Predicted Stirling Vehicle Performance with Dynamometer Test Results." Presented at the 22nd Society of Automotive Engineers Contractor's Coordination Meeting, MTI Paper No. P231 (October 1984).
1	Grandin, A. "Mod I Stirling Engine Vehicle Performance Update." Presented at the 23rd Society of Automotive Engineers Contractor's Coordination Meeting, MTI Paper No. P256 (October 1985).
1	Harris, J. "LERMA Vehicle Air/Fuel Control Test Report (May 1983 to May 1984)." MTI Report No. 84ASE399ER67 (May 1986).
1	Nightingale, N. "USSW Acceptance Test Report for Mod I SES No. 1." MTI Report No. 81ASE237ER32 (September 1981).
2	Ahlin, S. "USAB SES Performance Test Report, Mod I Stirling Engine No. 2." MTI Report No. 83ASE315ER51 (March 1983).
2	Dowdy, M. "Mod I Stirling Engine System Performance." Presented at the 19th Contractor's Coordination Meeting (1981).
2	Mechanical Technology Incorporated. "USSW Acceptance Test Report: Mod I Basic Stirling Engine S/N 2." MTI Report No. 82ASE270ER40 (July 1982).
2	Nightingale, N. and M. Dowdy. "Mod I ASE System Performance." MTI Paper No. P172 (December 1981).
2	Simetkosky, M. "Automotive Stirling Engine Mod I Development." Presented at the 22nd Society of Automotive Engineers Contractor's Coordination Meeting, MTI Paper No. P230 (October 1984).
3	Simetkosky, M. "Functional Test of ASE Mod I Stirling Engine S/N 3." (June 1982).
3	Simetkosky, M. "Automotive Stirling Engine Mod I Development." Presented at the 22nd Society of Automotive Engineers Contractor's Coordination Meeting, MTI Paper No. P230 (October 1984).
3	Vatsky, A. "Acceptance Test of Mod I Engine No. 3." MTI Report No. 82ASE297ER47 (April 1983).
4	Battista, R. "Engineering Report: Mod I Combustor Ignition and Blowout Test Report." MTI Report No. 82ASE242ER34 (February 1982).
4	Battista, R. "Mod I Combustor Ignition and Blowout Test Report." (February 1982).

Mod I Engines (continued)

Engine No.	Documentation
4	Farrell, R. "ASE Development Program: Mod I Stirling Engine Emissions with Exhaust Gas Recirculation." Presented at the 20th Society of Automotive Engineers Contractor's Coordination Meeting, MTI Paper No. P196 (October 1982).
4	Foster, J. "Mod I Engine No. 10 Acceptance Test Report." MTI Report No. 83ASE31ER52 (January 1984).
4	Simetkosky, M. "Automotive Stirling Engine Mod I Development." Presented at the 22nd Society of Automotive Engineers Contractor's Coordination Meeting, MTI Paper No. P230 (October 1984).
7	Gronwall, J. "Transient Temperature Measurement on a Mod I Heater Head Casting." MTI Report No. 86ASE493ER83 (February 1986).
7	Lundholm, G. "Statistical Life Testing of Stirling Engine Main Seals." United Stirling AB, Sweden.
7	Lundholm, G. "Piston Rings and Seals Monitoring on Mod I Engine No. 6." MTI Report No. 86ASE499ER86 (February 1986).
7	Lundholm, G. "1000-hr Main Seal and Piston Ring Reliability Test of Mod I Engine No. 7 Using a CVS Duty Cycle." MTI Report No. 86ASE504ER91 (February 1986).
7	Lundholm, G. "Statistical Life-Testing of Stirling Engine Main Seals." MTI Report No. 84ASE359TR29 (1984).
7	Simetkosky, M. "Automotive Stirling Engine Mod I Development." Presented at the 22nd Society of Automotive Engineers Contractor's Coordination Meeting, MTI Paper No. P230 (October 1984).
11	Richey, A. "ASE Development Program: Mod I Stirling Engine Performance Data and Analysis." Presented at the 21st Society of Automotive Engineers Contractor's Coordination Meeting, MTI Paper No. 215 (November 1983).
11	Richey, A. "Mod I Automotive Stirling Engine Performance Development." MTI Report No. 840461 (February 1984).
11	Richey, A. "Automotive Stirling Engine Systems Development." Presented at the 19th IECEC Conference, MTI Paper No. 849128 (1984).
11	Simetkosky, M. "Automotive Stirling Engine Mod I Development." Presented at the 22nd Society of Automotive Engineers Contractor's Coordination Meeting, MTI Paper No. P230 (October 1984).

Upgraded Mod I Engines

Engine No.	Documentation
5	Connelly, M. "Upgraded Mod I Stirling Engine Field Evaluation Program." Presented at the Energy Sources Technology Conference and Exhibit, MTI Paper No. P355 (January 1989).
5	Farrell, R. and A. Richey. "Upgraded Mod I Stirling Engine for an Air Force Van Installation." Presented at the ASME Energy Sources Technology Conference and Exhibition (ETCE), MTI Paper No. P297, and ASME 87-ICE-42 (February 1987).
5	Foster, J. "Upgraded Mod I Engine No. 5 Acceptance Test Report." MTI Report No. 85ASE457ER76 (July 1985).
5	Mechanical Technology Incorporated. "Test Report: Raised Appendix Gap and Varied Working Gas Test Data – Engine No. 5." MTI Report No. 86ASE492ER82.
5	Shaltens, R. "Stirling-Powered Van Program Overview." NASA-LeRC Report No. TM-87227 (February 1986).
6	Mechanical Technology Incorporated. "Engine No. 6 1000- and 1500-hr Endurance Test Report." MTI Report No. 86ASE500ER87.
6	Mechanical Technology Incorporated. "Engine No. 6 500-hr Endurance Test Report." MTI Report No. 86ASE503ER90.
6	Simetkosky, M. "ASE Program: Mod I Engine Development Summary." Presented at the 23rd Contractor's Coordination Meeting Post Conference Proceedings, MTI Paper No. P303 (November 1986).
8	Harris, J. "LERMA Vehicle Air/Fuel Control Test Report (May 1983 to May 1984)." MTI Report No. 84ASE399ER67 (May 1986).
8	Haverdink, W., F. Heffner, and C. Amann. "Assessment of an Experimental Stirling-Engine Powered Automobile." Presented at the 22nd Contractor's Coordination Meeting (1984).
8	Rohdenburg, C. "Post GMRL Testing/Disassembly Inspection of Upgraded Mod I Engine No. 8 – Spirit TTB." MTI Report No. 84ASE404ER69 (August 1984).
9	John Deere. "Test and Evaluation of a Mod I Automotive Stirling Engine." John Deere Report No. 83-PEC9 (August 1985).
9	Richey, A. "Performance Report: Generator Set Preparatory Testing of Upgraded Mod I Engine No. 9." MTI Report No. 86ASE491ER81 (February 1986).
9	Richey, A. "ASE Upgraded Mod I Engine No. 9 Testing — Multigas Support of John Deere ITEP Testing." MTI Report No. 86ASE496ER85 (February 1986).
9	Richey, A. and M. Connelly. "Upgraded Mod I Stirling Engine Field Evalution Program." ASME Paper No. 89-ICE-7.
10	Mechanical Technology Incorporated. "Engine No. 10 Final Report." MTI Report No. 86ASE502ER89.
10	Simetkosky, M. "ASE Program: Mod I Engine Development Summary." Presented at the 23rd Contractor's Coordination Meeting Post Conference Proceedings, MTI Paper No. P303 (November 1986).

Mod II Engines

Engine No.	Documentation
1, 3, 4	Bookout, L. "Vehicle Definition for Mod II Engine System Design." MTI Report No. 84ASE407ER71 (December 1984).
1, 3, 4	Cronin, M. "Crosshead/Rod Attachment Fatigue Test for the Mod II." MTI Report No. 84ASE374ER62 (August 1984).
1, 3, 4	Ernst, W. "Mod II Basic Stirling Engine Design Review Report — Volume II." MTI Report No. 85TR24 (April 1985).
1, 3, 4	Ernst, W. "Mod II Basic Stirling Engine Design Review Report." MTI Report No. 85ASE444DR4 (April 1985).
1, 3, 4	Ernst, W. "Mod II Stirling Engine System Design Review Report." MTI Report No. 85ASE465DR5 (August 1985).
1, 3, 4	Berggren, R. "Mod II Engine Performance." Presented at the 25th Contractor's Coordination Meeting, MTI Paper No. 336 (October 1987).
1, 3, 4	Grandin, A., A. Richey, and M. Walsh. "Mod II Stirling Engine Design and Performance." Presented at the 23rd Society of Automotive Engineers Contractor's Coordination Meeting, MTI Paper No. P257 (October 1985).
1, 3, 4	Grandin, A., R. Shaltens. "Stirling Engine Applications Update." Presented at the 24th Society of Automotive Engineers Contractor's Coordination Meeting, MTI Paper No. P306 (October 1986).
1, 3, 4	Grandin, A. "Alternative Fuel Capabilities of the Mod II Stirling Engine." Presented at the Society of Automotive Engineers International Congress and Exposition, MTI Paper No. P343 (February 1988).
1, 3, 4	Karl, D. "Mod II Engine Development." Presented at the American Institute of Aeronautics and Astronautics (AIAA), MTI Paper No. P323 (May 1987).
1, 3, 4	Ernst, W. "Mod II Engine and Technology Development." Presented at the 19th IECEC Conference, MTI Paper No. 849127 (1984).
1, 3, 4	Ernst, W. "Mod II Technology Applications." Presented at the 25th Contractor's Coordination Meeting, MTI Paper No. P338 (October 1987).
1, 3, 4	Farrell, R. "Mod II Stirling Engine Overview." Presented at the Society of Automotive Engineers International Congress and Exposition, MTI Paper No. P339, and SAE880539 (1988).
1, 3, 4	Karl, D. "Mod II Engine Test Program." Presented at the 25th Contractor's Coordination Meeting, MTI Paper No. P337 (October 1987).
1, 3, 4	Richey, A. "Mod II ASE Design Description and Performance Projections." Presented at the Society of Automotive Engineers International Congress and Exposition, MTI Paper No. P262, SAE No. 860059 (February 1986).

REPORT DOCUMENTATION PAGE

Form Approved
OMB No. 0704-0188

Public reporting burden for this collection of information is estimated to average 1 hour per response, including the time for reviewing instructions, searching existing data sources gathering and maintaining the data needed, and completing and reviewing the collection of information. Send comments regarding this burden estimate or any other aspect of thi collection of information, including suggestions for reducing this burden, to Washington Headquarters Services, Directorate for Information Operations and Reports, 1215 Jefferson Davis Highway, Suite 1204, Arlington, VA 22202-4302, and to the Office of Management and Budget, Paperwork Reduction Project (0704-0188), Washington, DC 20503.

1. AGENCY USE ONLY (*Leave blank*)

2. REPORT DATE
February 1997

3. REPORT TYPE AND DATES COVERED
Final Contractor Report

4. TITLE AND SUBTITLE
Automotive Stirling Engine Development Project

5. FUNDING NUMBERS
WU–632–1A–1J
DEN3–32

6. AUTHOR(S)
William D. Ernst and Richard K. Shaltens

7. PERFORMING ORGANIZATION NAME(S) AND ADDRESS(ES)
Mechanical Technology Incorporated
968 Albany-Shaker Road
Latham, New York 12110

8. PERFORMING ORGANIZATION REPORT NUMBER
E–10573

9. SPONSORING/MONITORING AGENCY NAME(S) AND ADDRESS(ES)
National Aeronautics and Space Administration
Lewis Research Center
Cleveland, Ohio 44135–3191

10. SPONSORING/MONITORING AGENCY REPORT NUMBER
NASA CR–190780
MTI Report 91TR15

11. SUPPLEMENTARY NOTES
Prepared for NASA under Department of Energy Interagency Agreement No. DE–AI01–85CE50112. Project Manager, Richard K. Shaltens, Power Technology Division, NASA Lewis Research Center, organization code 5490, (216) 433–6138.

12a. DISTRIBUTION/AVAILABILITY STATEMENT
Unclassified - Unlimited
Subject Category 85

This publication is available from the NASA Center for AeroSpace Information, (301) 621–0390.

12b. DISTRIBUTION CODE

13. ABSTRACT (*Maximum 200 words*)

The development and verification of automotive Stirling engine (ASE) component and system technology is described a it evolved through two experimental engine designs: the Mod I and the Mod II. Engine operation and performance and endurance test results for the Mod I are summarized. Mod II engine and component development progress is traced fron the original design through hardware development, laboratory test, and vehicle installation. More than 21,000 hr of testing were accomplished, including 4800 hr with vehicles that were driven more than 59,000 miles. Mod II engine dynamometer tests demonstrated that the engine system configuration had accomplished its performance goals for powe (60 kW) and efficiency (38.5%) to within a few percent. Tests with the Mod II engine installed in a delivery van demon strated combined metro-highway fuel economy improvements consistent with engine performance goals and the potenti for low emission levels. A modified version of the Mod II has been identified as a manufacturable design for an ASE. A part of the ASE project, the Industry Test and Evaluation Program (ITEP), NASA Technology Utilization (TU) project, and the industry-funded Stirling Natural Gas Engine program were undertaken to transfer ASE technology to end users. The results of these technology transfer efforts are also summarized.

14. SUBJECT TERMS
Stirling powered van project; Automotive; Stirling; Heat engine; Alternative fuels; Clean emissions

15. NUMBER OF PAGES
162

16. PRICE CODE
A08

17. SECURITY CLASSIFICATION OF REPORT
Unclassified

18. SECURITY CLASSIFICATION OF THIS PAGE
Unclassified

19. SECURITY CLASSIFICATION OF ABSTRACT
Unclassified

20. LIMITATION OF ABSTRAC

Mod II Engines (continued)

Engine No.	Documentation
1, 3, 4	Richey, A. "Mod II Engine Performance." Presented at the 24th Society of Automotive Engineers Contractor's Coordination Meeting, MTI Paper No. 305 (October 1986).
1, 3, 4	Richey, A. and S. Huang. "Mod II Engine Performance." Presented at the Society of Automotive Engineers International Congress, MTI Paper No. P304, SAE No. 870101 (February 1987).
1, 3, 4	Richey, A. "Status and Application of Stirling Engine Technology." Presented at the 14th Energy Technology Conference and Exposition, MTI Paper No. P313 (April 1987).
1, 3, 4	Simetkosky, M. and A. Grandin. "Development, Analysis, and Testing Background of the Mod II Automotive Stirling Engine." Presented at the 3rd International Stirling Engine Conference, Rome, MTI Paper No. P281 (June 1986).