Report 10787
March 1996

CR-203659

GENCORP
AEROJET

Integrated Advanced Microwave Sounding Unit-A (AMSU-A)

METSAT Stress Analysis Report, A2 Module

Contract No.: NAS5-32314
CDRL: 113

Submitted to:

National Aeronautics and Space Administration
Goddard Space Flight Center
Greenbelt, Maryland 29771

Submitted by:

Aerojet
1100 W. Hollyvale St.
Azusa, CA 91702-0296

CAGE/Facility Ident: 70143

Aerojet

Report 10787
March 1996

Integrated Advanced Microwave Sounding Unit-A (AMSU-A)

METSAT Stress Analysis Report, A2 Module

Contract No.: NAS5-32314
CDRL: 113

Submitted to:

National Aeronautics and Space Administration
Goddard Space Flight Center
Greenbelt, Maryland 29771

Submitted by:

Aerojet
1100 W. Hollyvale St.
Azusa, CA 91702-0296

CAGE/Facility Ident: 70143

TABLE OF CONTENTS

Section		Page
1	INTRODUCTION	1-1
1.1	Identification	1-1
1.2	Purpose and Objectives	1-1
1.3	Document Status and Schedule	1-1
2	RELATED DOCUMENT	2-1
2.1	Parent Documents	2-1
2.2	Applicable Documents	2-1
3.	SUMMARY	3-1
4.	METHOD OF ANALYSIS	4-1
5.	RESULTS	5-1
6.	CONCLUSION	6-1

TABLES

Table		Page
I	Summary Margins of Safety Design Limit Loads	3-2
II	Summary Margins of Safety Random Vibration Loading	3-3
III	Qualification Level Random Vibration Rattlespace Summary, 3 Sigma	3-4
IV	Reflector Mass Changes	4-13
V	METSAT/AMSU-A2 Model Weight	4-14
VI	Design Limit Load Nastran Load Cases	4-15
VII	Qualification Level Random Vibration Peak Stress Results	5-2
VIII	MET/SAT/AM-A2 Peak Accelerations	5-3
IX	Qualification Level Random Vibration Peak Axial Force, Mounting Screws	5-4

FIGURES

Figure		Page
1	METSAT/AMSU-A2 Finite Element Model Compensator Side	4-3
2	METSAT/AMSU-A2 Finite Element Model Front Panel Side	4-4
3	METSAT/AMSU-A2 Finite Element Model COI Reflector Configuration	4-5
4	METSAT/AMSU-A2 Finite Element Model COI Reflector Configuration	4-6
5	Baseplate Boundary Grid Points	4-7
6	Random Vibration Input Spectrum	4-8
7	Rattlespace Location	4-9
8	Output Response Locations Front Panel and Top RF Enclosure	4-10
9	Output Response Locations Secondary Housing	4-11
10	Output Response Locations Main Reflector	4-12
11	1st Mode, f_N=91 Hz	5-5
12	1st Mode, f_N=91 Hz ZX Plane View	5-6
13	1st Mode, f_N=91 Hz Shade Image	5-7
14	2nd Mode, f_N=93 Hz	5-8
15	2nd Mode, f_N=93 Hz ZX Plane View	5-9
16	2nd Mode, f_N=93 Hz Shade Image	5-10
17	3rd Mode, f_N=104 Hz First Structural Mode	5-11
18	3rd Mode, f_N=104 Hz ZX Plane View	5-12
19	3rd Mode, f_N=104 Hz Shade Image	5-13
20	5th Mode, f_N=122 Hz COI Reflector First Mode	5-14
21	5th Mode, f_N=122 YZ Plane View	5-15
22	5th Mode, f_N=122 Hz Share Image	5-16
23	Mounting Screw Peak Force Location	5-17

APPENDIXES

Appendix Page

A COI REFLECTOR MODEL RENUMBERED GRID POINTS AND ELEMENTS

Figure Page

A1 COI Reflector Model, View Aft Cone A-1
A2 COI Reflector Model, View Secondary Portal A-2
A3 AFT Cone Pshell = 20101 Element Number A-3
A4 Element Number A-4
A5 Grid Point Number (1 of 2) A-5
A5 Grid Point Number (2 of 2) A-6
A6 Parabolic Shell Pshell = 20103 Element Number A-7
A7 Element Number (1 of 2) A-8
A7 Element Number (2 of 2) A-9
A8 Grid Point Number (Parabolic Shell) (1 of 3) A-10
A8 Grid Point Number (Parabolic Shell) (2 of 3) A-11
A8 Grid Point Number (3 of 3) A-12
A9 Main Shroud Pshell = 20104 Element Number A-13
A10 Element Number A-14
A11 Grid Point Number A-15
A12 Grid Point Number A-16
A13 Shroud Plate Pshell = 20105 Element Number A-17
A14 Grid Point Number A-18
A15 Secondary Shroud Pshell = 20106 Element Number A-19
A16 Element Number A-20
A17 Element Number A-21
A18 Grid Point Number A-22
A19 Grid Point Number A-23
A20 Grid Point Number A-24
A21 Forward Bulk Head Pshell = 20108 Element Number A-25
A22 Element Number A-26
A23 Grid Point Number A-27
A24 Grid Point Number A-28
A25 Forward Cone Pshell = 20109 Element Number A-29
A26 Element Number A-30
A27 Element Number A-31
A28 Grid Point Number A-32
A29 Grid Point Number A-33
A30 Grid Point Number A-34
A31 Vertical Web Pshell = 20110 Element Number A-35
A32 Element Number A-36
A33 Grid Point Number A-37
A34 Grid Point Number A-38

APPENDIXES (Cont.)

Appendix — Page

B DESIGN LIMIT LOAD ANALYSIS

Figure — Page

B1 Design Limit Load Nastran Load Case 1 Max Principal Stress, Z1 ..... B-1
B2 Design Limit Load Nastran Load Case 1 Max Principal Stress, Z2 ..... B-2
B3 Design Limit Load Nastran Load Case 2 Max Principal Stress, Z1 ..... B-3
B4 Design Limit Load Nastran Load Case 2 Max Principal Stress, Z2 ..... B-4
B5 Design Limit Load Nastran Load Case 3 Max Principal Stress, Z1 ..... B-5
B6 Design Limit Load Nastran Load Case 3 Max Principal Stress, Z2 ..... B-6
B7 Design Limit Load Nastran Load Case 4 Max Principal Stress, Z1 ..... B-7
B8 Design Limit Load Nastran Load Case 4 Max Principal Stress, Z2 ..... B-8
B9 Design Limit Load Nastran Load Case 5 Max Principal Stress, Z1 ..... B-9
B10 Design Limit Load Nastran Load Case 5 Max Principal Stress, Z2 ..... B-10
B11 Design Limit Load Nastran Load Case 6 Max Principal Stress, Z1 ..... B-11
B12 Design Limit Load Nastran Load Case 6 Max Principal Stress, Z2 ..... B-12
B13 Design Limit Load Nastran Load Case 7 Max Principal Stress, Z1 ..... B-13
B14 Design Limit Load Nastran Load Case 7 Max Principal Stress, Z2 ..... B-14
B15 Design Limit Load Nastran Load Case 8 Max Principal Stress, Z1 ..... B-15
B16 Design Limit Load Nastran Load Case 8 Max Principal Stress, Z2 ..... B-16
B17 Design Limit Load RF Shelf Peak Von Mises, Z2 ..... B-17
B18 Design Limit Load RF Shelf Max Principal Stress, Z2 ..... B-18
B19 Design Limit Load Warmload Shelf Peak Von Mises, Z2 ..... B-19
B20 Design Limit Load Warmload Shelf Max Principal Stress, Z2 ..... B-20
B21 Design Limit Load Side Panel, Dwg 1333379 Peak Von Mises, Z1 ..... B-21
B22 Design Limit Load Side Panel, Dwg 1333379 Max Principal Stress, Z1 ..... B-22
B23 Design Limit Load Compensator Rotor Peak Von Mises, Z1 ..... B-23
B24 Design Limit Load Compensator Rotor Max Principal Stress, Z1 ..... B-24
B25 Design Limit Load Compensator Housing Peak Von Mises, Z1 ..... B-25
B26 Design Limit Load Compensator Housing Max Principal Stress, Z1 ..... B-26
B27 Design Limit Load Baseplate Peak Von Mises, Z2 ..... B-27
B28 Design Limit Load Baseplate Critical Area Peak Von Mises, Z2 ..... B-28
B29 Design Limit Load Baseplate Max Principal Stress, Z2 ..... B-29
B30 Design Limit Load Baseplate, Critical Area Peak Von Mises, Z2 ..... B-30
B31 Design Limit Load Front Panel Peak Von Mises, Z1 ..... B-31
B32 Design Limit Load Front Panel Max Principal Stress, Z1 ..... B-32
B33 Design Limit Load Circuit Cards Peak Von Mises, Z1 ..... B-33
B34 Design Limit Load Circuit Cards Max Principal Stress, Z1 ..... B-34
B35 Design Limit Load Card Cage Peak Von Mises, Z2 ..... B-35
B36 Design Limit Load Card Cage Max Principal Stress, Z2 ..... B-36

Table — Page

B1 Limit Load Analysis Load Case Restraint Forces B-38

APPENDIXES (Cont.)

Appendix | Page

C RANDOM VIBRATION NASATRAN OUTPUT

Figure | Page

Input Grid Point 24000 ..... C-18
X Acceleration Grid Point 2086 ..... C-19
Y Acceleration Grid Point 2086 ..... C-20
Z Acceleration Grid Point 2086 ..... C-21
X Acceleration Grid Point 2173 ..... C-22
Y Acceleration Grid Point 2173 ..... C-23
Z Acceleration Grid Point 2173 ..... C-24
X Acceleration Grid Point 2441 ..... C-25
Y Acceleration Grid Point 2441 ..... C-26
Z Acceleration Grid Point 2441 ..... C-27
X Acceleration Grid Point 26206 ..... C-28
Y Acceleration Grid Point 26206 ..... C-29
Z Acceleration Grid Point 26206 ..... C-30
Y Axis Input Grid Point 24000 ..... C-113
X Acceleration Grid Point 2086 ..... C-114
Y Acceleration Grid Point 2086 ..... C-115
Z Acceleration Grid Point 2086 ..... C-116
X Acceleration Grid Point 2173 ..... C-117
Y Acceleration Grid Point 2173 ..... C-118
Z Acceleration Grid Point 2173 ..... C-119
X Acceleration Grid Point 2441 ..... C-120
Y Acceleration Grid Point 2441 ..... C-121
Z Acceleration Grid Point 2441` C-122
X Acceleration Grid Point 26206 ..... C-123
Y Acceleration Grid Point 26206 ..... C-124
Z Acceleration Grid Point 26206 ..... C-125
Z Axis Input Grid Point 2400 ..... C-198
X Acceleration Grid Point 2086 ..... C-199
Y Acceleration Grid Point 2086 ..... C-200
Z Acceleration Grid Point 2086 ..... C-201
X Acceleration Grid Point 2173 ..... C-202
Y Acceleration Grid Point 2173 ..... C-203
Z Acceleration Grid Point 2173 ..... C-204
X Acceleration Grid Point 2441 ..... C-205
Y Acceleration Grid Point 2441 ..... C-206
Z Acceleration Grid Point 2441 ..... C-207
X Acceleration Grid Point 26206 ..... C-208
Y Acceleration Grid Point 26206 ..... C-209
Z Acceleration Grid Point 26206 ..... C-210

C1 Power Control/Monitor Assembly Position Used In Analysis C-282
C2 Actual Position, Power C/M Assembly C-283
C3 Side Panel Refined Model C-284

Section 1

INTRODUCTION

This stress analysis report for the METSAT/Advanced Microwave Sounding Unit-A (AMSU-A), A2 module, reports the structural margins of safety and natural frequency predictions for the AMSU-A2 instrument design.

1.1 Identification

This is the stress analysis report for the METSAT/Advanced Microwave Sounding Unit-A (AMSU-A), A2 module. This report is submitted to fulfill the requirements of Contract NAS 5-32314, CDRL 113, Stress Analysis Report, for the METSAT AMSU-A2 module

1.2 Purpose and Objectives

The purpose of this analysis is to show that the AMSU-A2 instrument exhibits positive structural margins of safety when subjected to the loading environments specified in the PAR, GSFC S-480-79, Appendix E.

1.3 Document Status and Schedule

This is the final submittal of the Stress Analysis Report for the AMSU-A2 instrument.

Section 2

RELATED DOCUMENTATION

2.1 Parent Documents

None.

2.2 Applicable Documents

The following documents are referenced or applicable to this report. Unless otherwise specified, the latest issue is in effect.

National Aeronautics and Space Administration

GSFC S-480-79	EOS/METSAT Program Performance Assurance Requirements for General Instruments
Aerojet Report 10737	METSAT Advanced Microwave Sounding Unit-A2 (AMSU-A2) Structural Mathematical Model

Section 3

SUMMARY

The METSAT/AMSU-A2 Primary Structure exhibits positive margins of safety for the design limit load and qualification-level random vibration environments specified in GSFC S-480-79, Appendix E. The margins of safety for the design limit load conditions are summarized in Table I. The new machined baseplate has a minimum yield margin of safety of 1.1.

The random vibration margins of safety are summarized in Table II. The minimum yield margin of 0.13 occurs at the compensator rotor shaft.

It was found that the RF shelf support side panel (Drawing 1333379) wall thickness had to be increased to 0.06 inch at the lower pockets to give positive margins of safety. The rattlespace results are summarized in Table III. The warmload/reflector had a maximum relative displacement of 0.049 inch.

Table I
Summary Margins of Safety
Design Limit Loads

Components	Material	Allowable (psi)		Applied Stress (psi)		M.S. Yield	M.S. Ultimate
		Tu	Ty	Von Mises	Max Prin.		
RF Shelf (Dwg 1331086)	Beryllium	47,000	35,000	1194	1356	22.5	23.8
Front Panel (Dwg 1331214)	6061-T651	42,000	36,000	----	7599	2.8	2.9
Rear Panel, Shelf Support (Dwg 1331215)	6061-T651	42,000	36,000	2397	2122	11.0	13.1
Side Panel, Shelf Support (Dwg 13312217)	6061-T651	42,000	36,000	5005	4059	4.8	6.4
Side Panel, Shelf Support (Dwg 1331218)	6061-T651	42,000	36,000	5005	4059	4.8	6.4
Warmload Shelf (Dwg 1312222)	6061-T651	42,000	36,000	1272	1466	21.6	19.5
Side Panel, Shelf Support (Dwg 1331245)	6061-T651	42,000	36,000	1879	1889	14.3	14.9
Side Panel, Shelf Support (Dwg 1333379)	6061-T651	42,000	36,000	3755	3540	6.7	7.5
End Panel (Dwg 1333380)	6061-T651	42,000	36,000	1988	1861	13.5	15.1
Compensator Shaft (Dwg 1333390)	CRES 304 Annealed	85,000	35,000	3762	4191	6.4	13.5
Motor Output Shaft (Dwg 1333654)	CRES 303 Annealed	85,000	35,000	----	1913	13.6	30.7
Compensator Housing (Dwg 1333658)	6061-T651	42,000	36,000	1619	1616	16.8	17.6
Drive Assy Housing (Dwg 1333999)	6061-T651	42,000	36,000	594	426	47.5	69.4
Baseplate (Dwg 1356968)	6061-T	42,000	36,000	13934	14244	1.1	1.1
Circuit Cards	GX Fiber-glass	40,000	24,000	842	970	21.8	28.5
Card Gage (Dwg 1331330)	6061-T651	42,000	36,000	5523	6211	4.2	3.8

Note: yield factor of safety = 1.25
ultimate factor of safety = 1.4

Table II
Summary Margins of Safety
Random Vibration Loading

Components	Material	Allowable		Applied Peak Stress (psi)	M.S. Yield	M.S. Ultimate
		Tu (psi)	Ty (psi)			
RF Shelf (Dwg 1331086)	Beryllium	47,000	35,000	8,289	2.38	3.05
Front Panel (Dwg 1331214)	6061-T651	42,000	36,000	1,676	16.18	16.90
Rear Panel, Shelf Support (Dwg 1331215)	6061-T651	42,000	36,000	2,133	12.50	13.06
Side Panel, Shelf Support (Dwg 13312217)	6061-T651	42,000	36,000	7,023	3.10	3.27
Side Panel, Shelf Support (Dwg 1331218)	6061-T651	42,000	36,000	5,286	4.45	4.68
Warmload Shelf (Dwg 1312222)	6061-T651	42,000	36,000	11,797	1.44	1.54
Side Panel, Shelf Support (Dwg 1331245)	6061-T651	42,000	36,000	5,647	4.10	4.31
Side Panel, Shelf Support (Dwg 1333379)	6061-T651	42,000	36,000	21,225	0.36	0.41
End Panel (Dwg 1333380)	6061-T651	42,000	36,000	2,148	12.41	12.97
Compensator Shaft (Dwg 1333390)	CRES 304 Annealed	85,000	35,000	24,840	0.13	1.44
Motor Output Shaft (Dwg 1333654)	CRES 303 Annealed	85,000	35,000	10,734	1.61	4.66
Compensator Housing (Dwg 1333658)	6061-T651	42,000	36,000	4,306	5.69	5.97
Baseplate (Dwg 1356968)	6061-T651	42,000	36,000	13,857	1.08	1.16
Circuit Cards	GX Fiber-glass	40,000	24,000	3,240	4.93	7.82
Card Gage (Dwg 1331330)	6061-T651	42,000	36,000	10,837	1.66	1.77

Note: yield factor of safety = 1.25
ultimate factor of safety = 1.4

Table III
Qualification Level Random Vibration
Rattlespace Summary, 3 Sigma

Rattlespace Location ( ) = spoint ID	Random Vibration Axis X (in.)	Y (in.)	Z (in.)	Rattlespace Clearance (in.)
Warmload/Reflector Loc. A (23658)	0.015	0.03	0.009	0.05
Warmload/Reflector Loc. B (23659)	0.012	0.008	0.049	0.05
Warmload/Reflector Loc. C (23660)	0.031	0.037	0.013	0.05
Secondary Housing/Reflector Loc. D (23661)	0.031	0.037	0.013	0.05
Secondary/Housing/Reflector Loc. E (23662)	0.034	0.023	0.008	0.05
Secondary/Housing/Reflector Loc. D (23663)	0.021	0.068	0.015	0.095
Circuit Card	0.001	0.002	0.002	0.037

The maximum gap on the assembly drawing is 0.050 inch.

The first major structural natural frequency on the A2 instrument was found to be 104 Hz. The momentum compensator exhibits a natural frequency of 91 Hz.

Section 4

METHOD OF ANALYSIS

The finite element model is discussed in Aerojet Report 10737, METSAT/AMSU-A2 Structural Mathematical Model. This model includes a refined momentum compensator, a remodeled card cage, the new machined base plate, and additional hardware weight changes (power control/monitor assembly, motor transistor bracket, and DC/DC converter).

The model used to analyze the design limit loads is shown in Figures 1 and 2. This model contained the original reflector model. For the random vibration analysis, the model was modified by incorporating the COI composite reflector. This new model is shown in Figures 3 and 4. The grid point and element identification for this reflector is presented in Appendix A. The change to the COI reflector was made to more accurately model the reflector response. No significant weight change was made to the model as indicated in Table IV. It should also be noted that the COI reflector was positioned in the vibration test orientation with the aperture pointed at the warmload.

The current mass properties of the model are summarized in Table V. The weight of the METSAT model is 107.8 pounds.

The grid points at which boundary restraints are applied are shown in Figure 5. The restraints consist of fixing the Z axis translations at grid points 22783 through 22793 and the X, Y axes translations of grid points 22200 and 22458. The Z restraints are coupled to the baseplate using a scalar spring element (CELAS 1) of 1.57×10^6 lb/in stiffness. This is the calculated stiffness of the #10 mounting screw and hardware.

The design limit load requirements are specified in Appendix E, paragraph 1.2, of GSFC S-480-79. The load factors are specified in the NOAA/METSAT coordinate system and have the following levels:

X Axis	± 19.6
Y Axis	± 21.2
Z Axis	± 20.6

The model uses the EOS coordinate system and therefore, the following transformation is used:

EOS	NOAA/METSAT
X	Y
Y	Z
Z	X

The resulting eight NASTRAN load cases are summarized in Table VI.

The qualification level random vibration loading is specified in Appendix E, paragraph 1.3, GSFC S-480-79. The input spectrum is shown in Figure 6 and the overall G_{RMS} level is 8.8. The analysis will check for interference (rattlespace) at the locations shown in Figure 7. The response at points corresponding to accelerometer test locations (Figures 8 thru 10) will be outputted along with all lump mass locations.

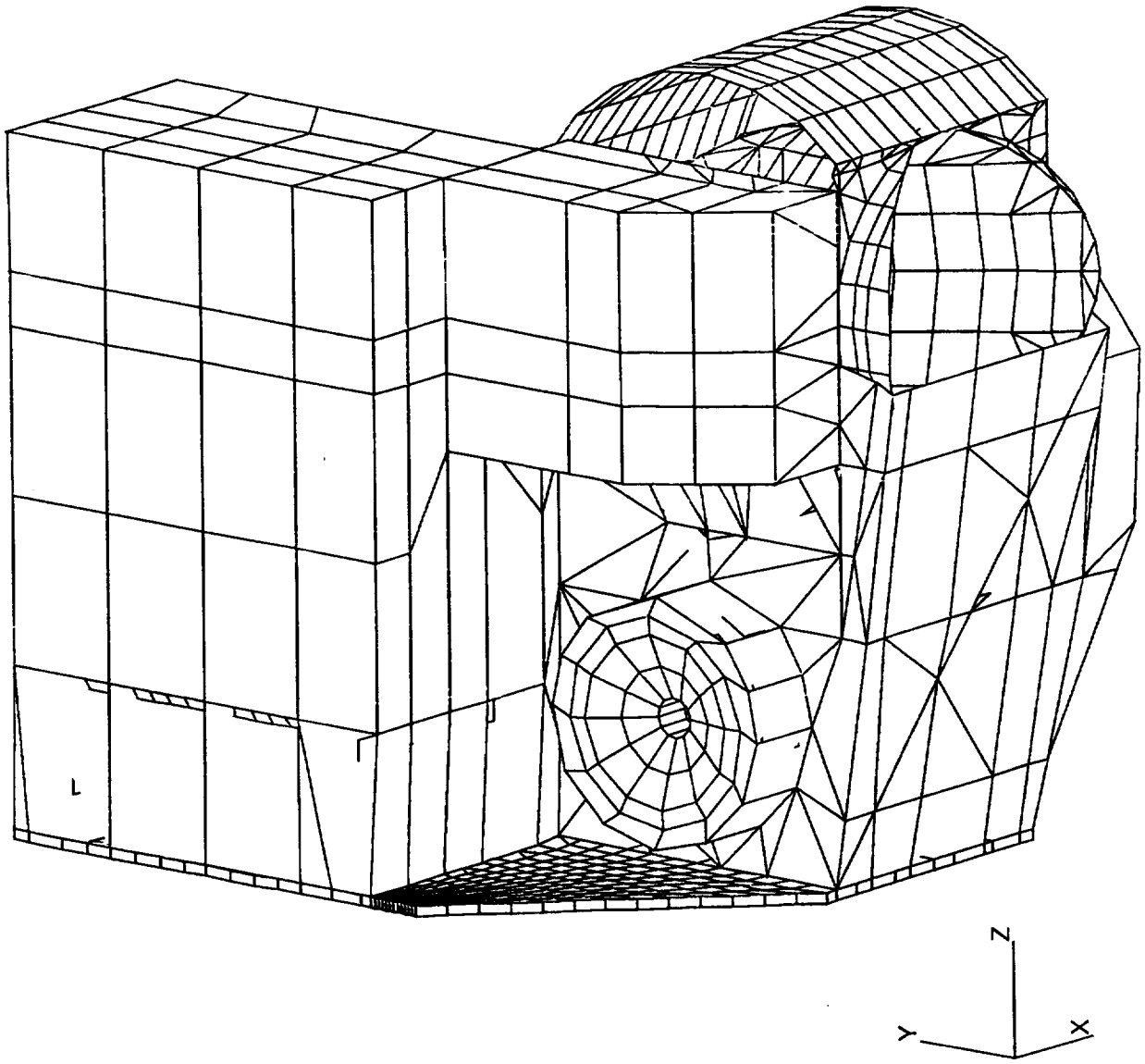

Figure 1 METSAT/AMSU-A2 Finite Element Model Compensator Side

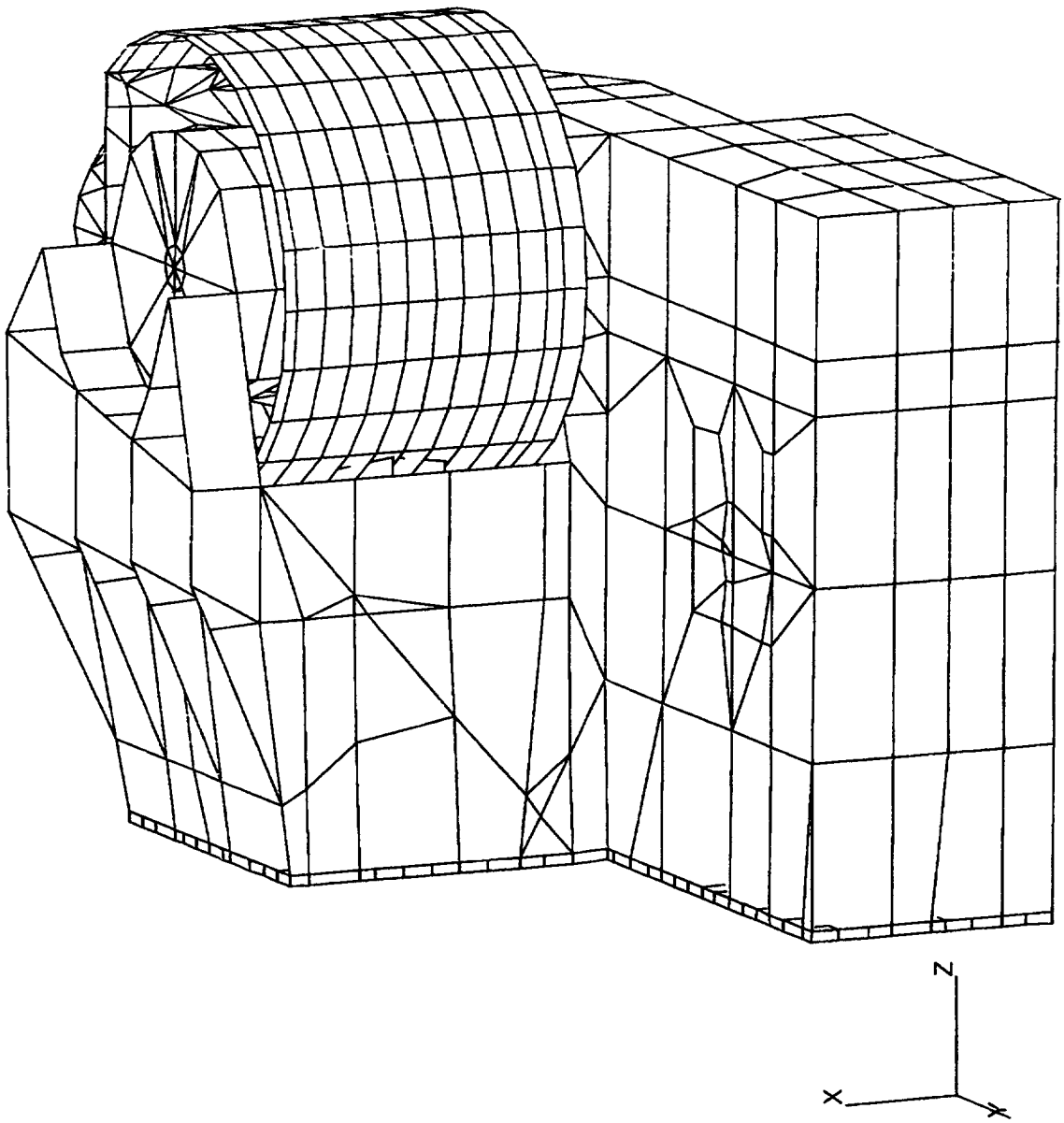

Figure 2 METSAT/AMSU-A2 Finite Element Model Front Panel Side

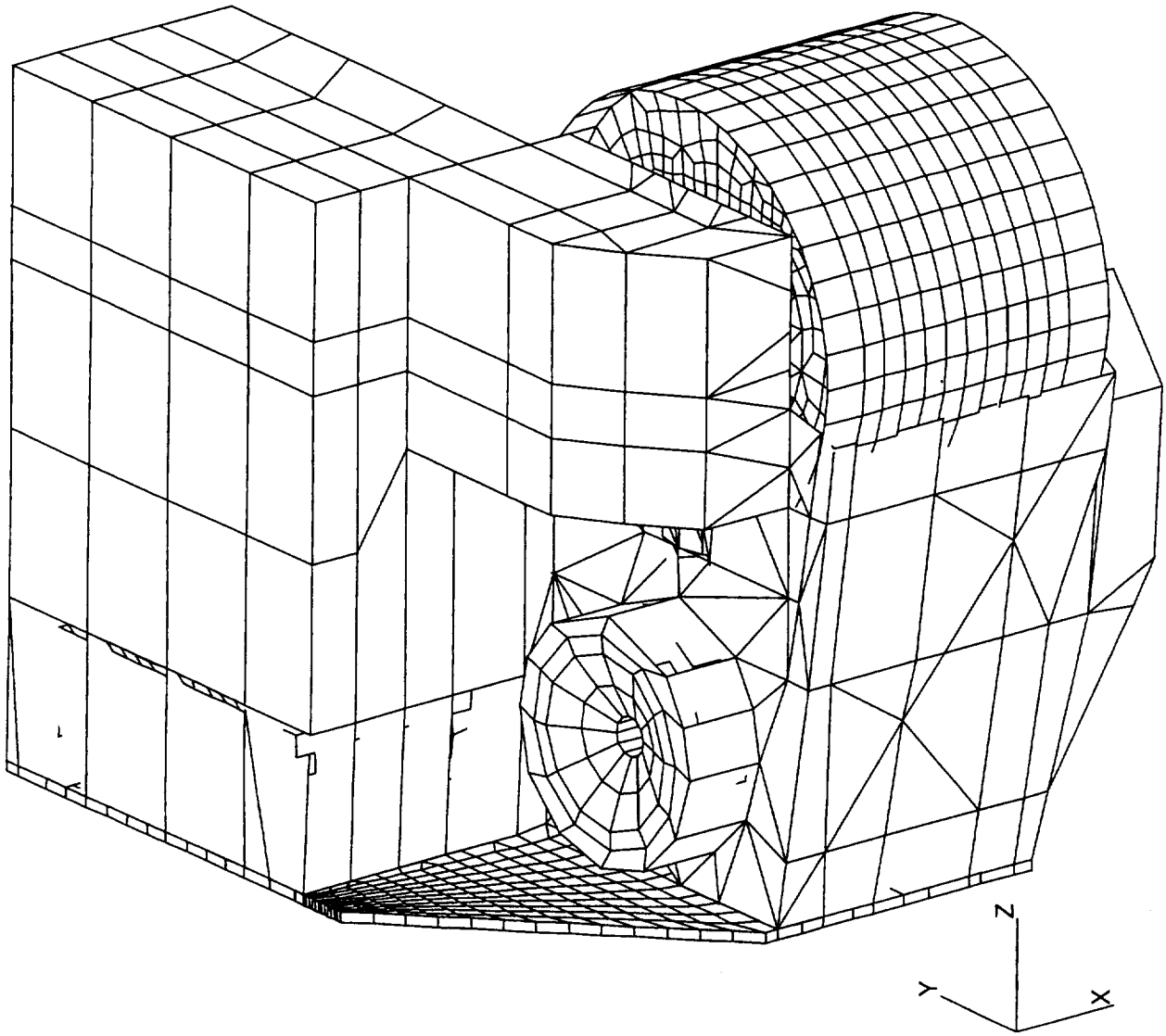

Figure 3 METSAT/AMSU-A2 Finite Element Model COI Reflector Configuration

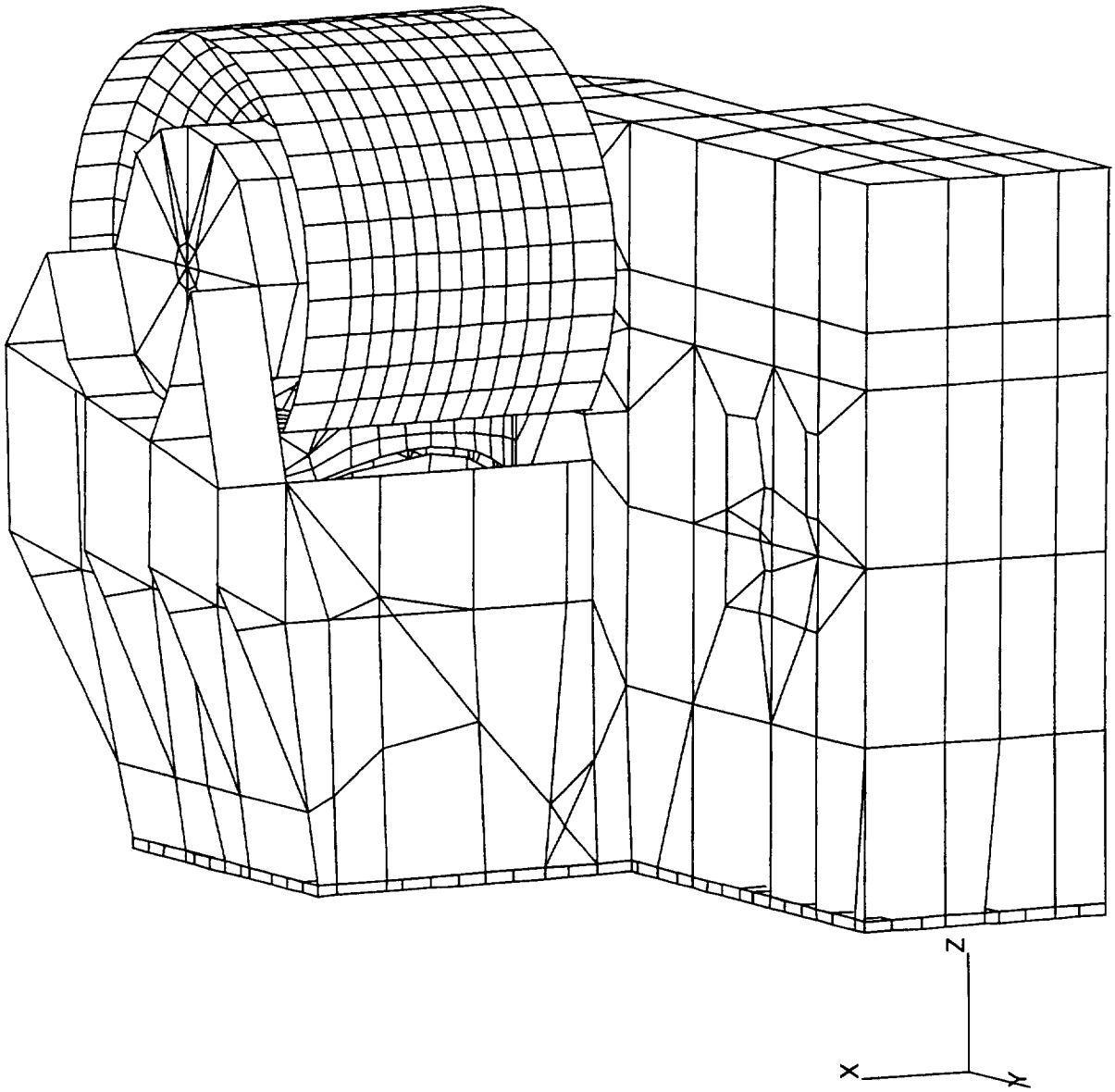

Figure 4 METSAT/AMSU-A2 Finite Element Model COI Reflector Configuration

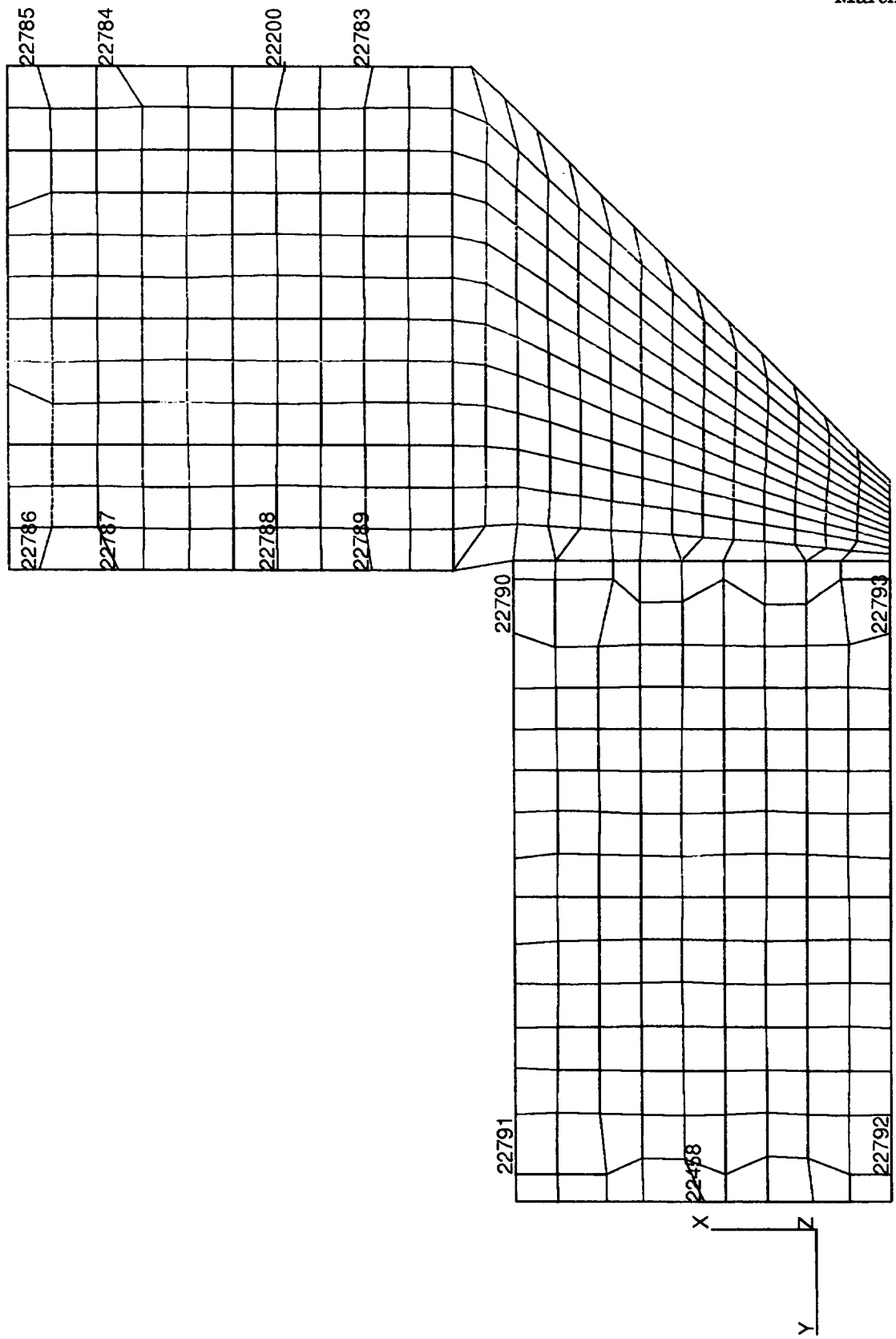

Figure 5 Baseplate Boundary Grid Points

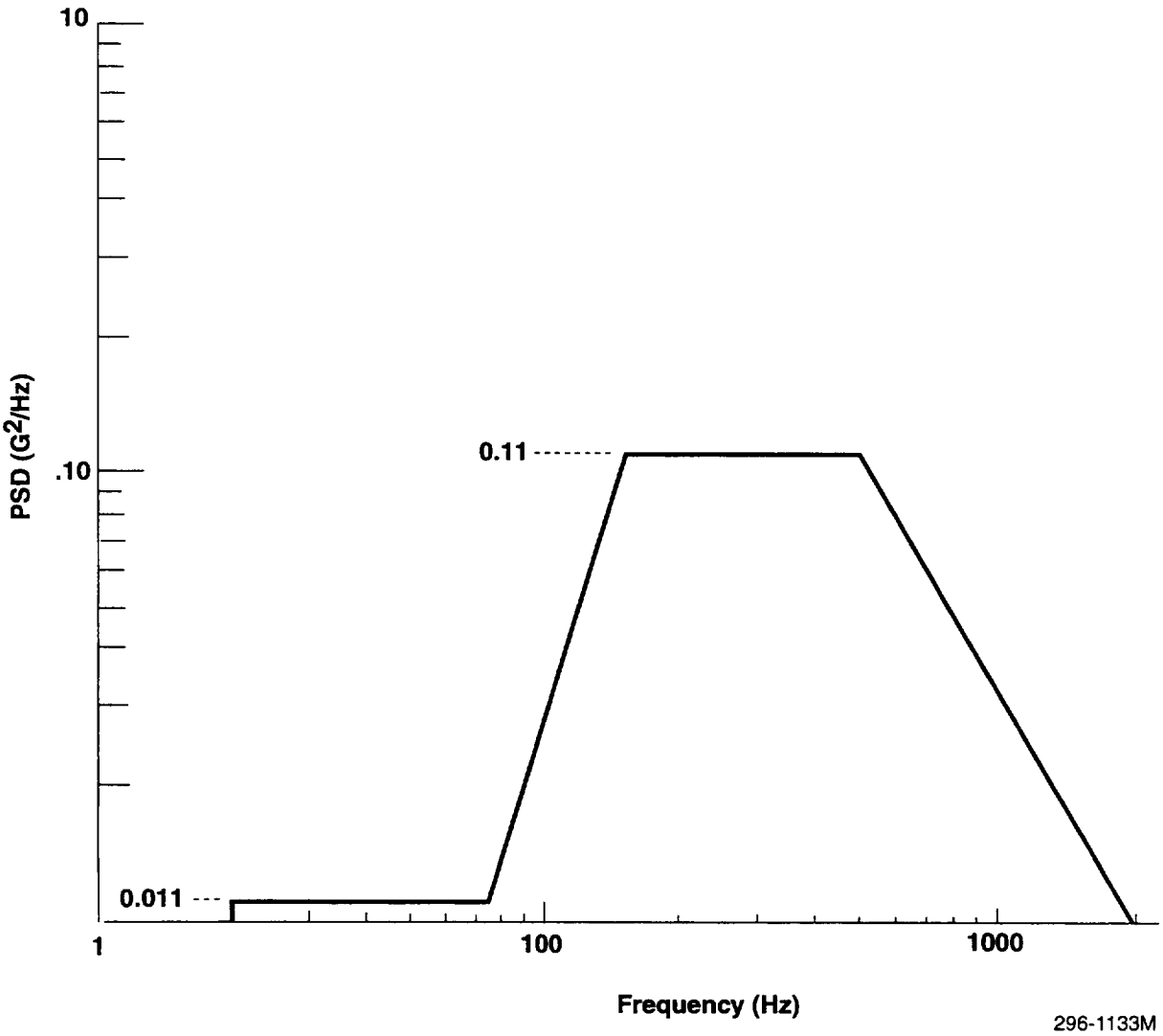

Figure 6 Random Vibration Input Spectrum

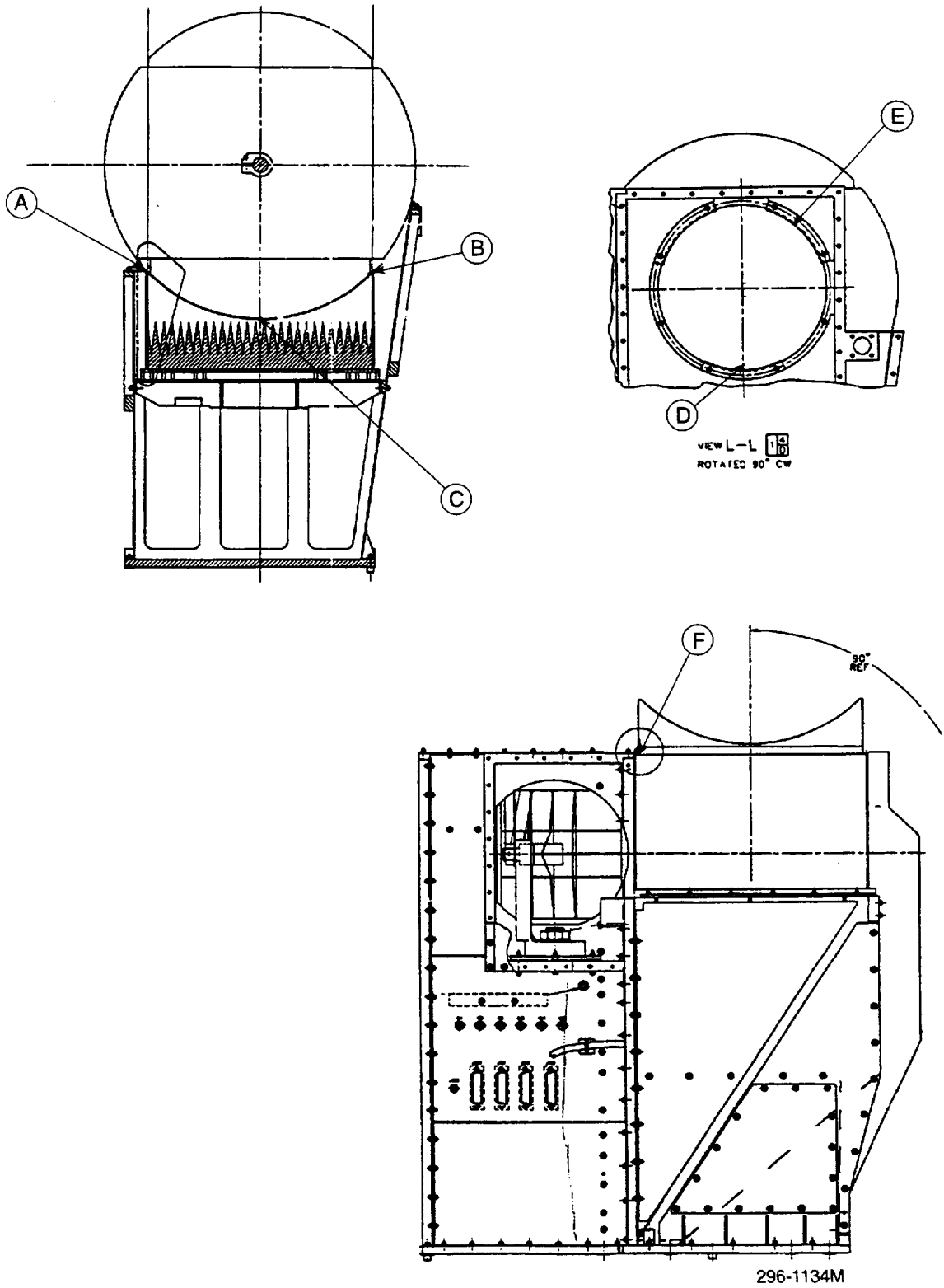

Figure 7 Rattlespace Location

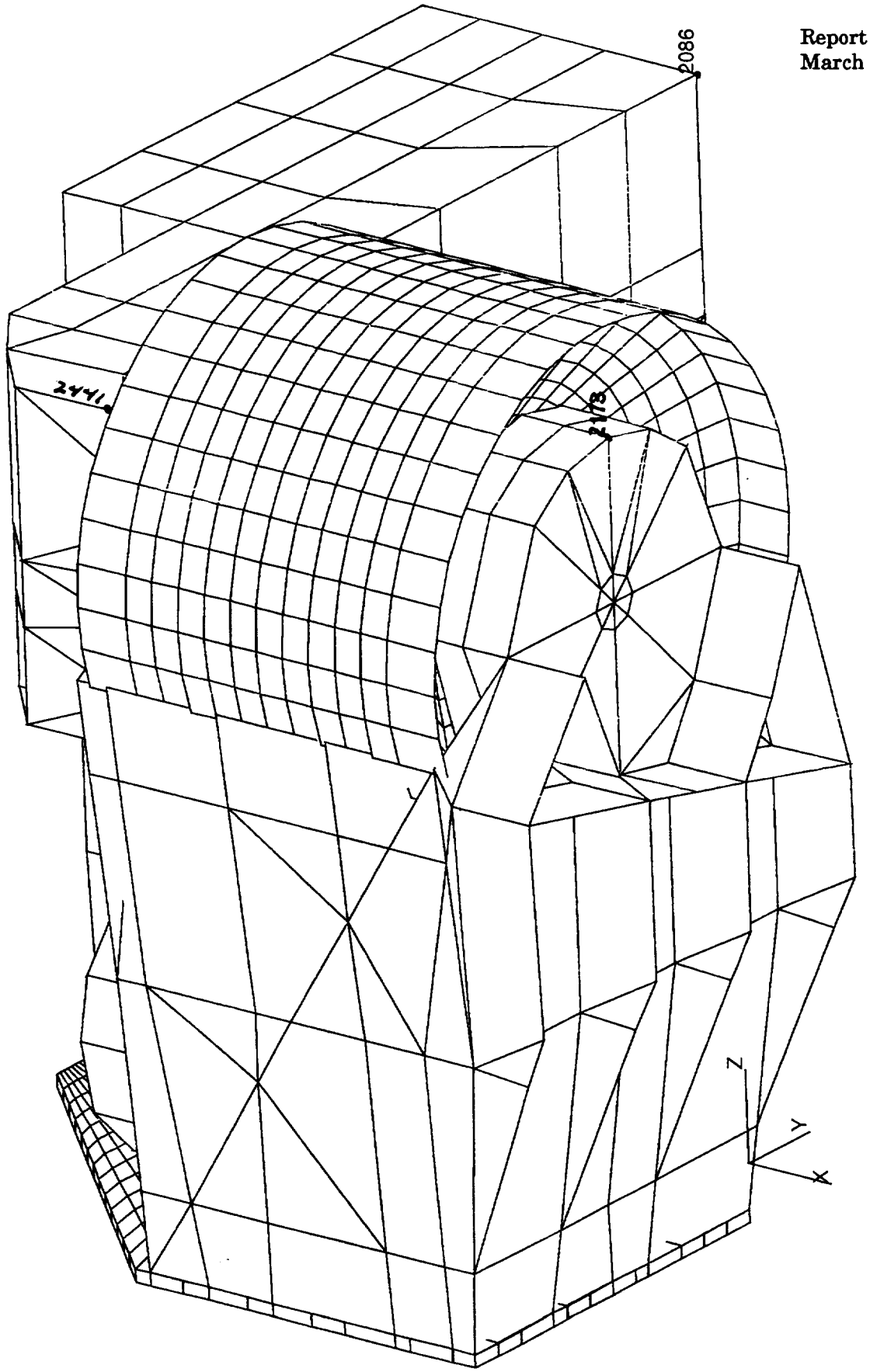

Figure 8 Output Response Locations Front Panel And Top RF Enclosure

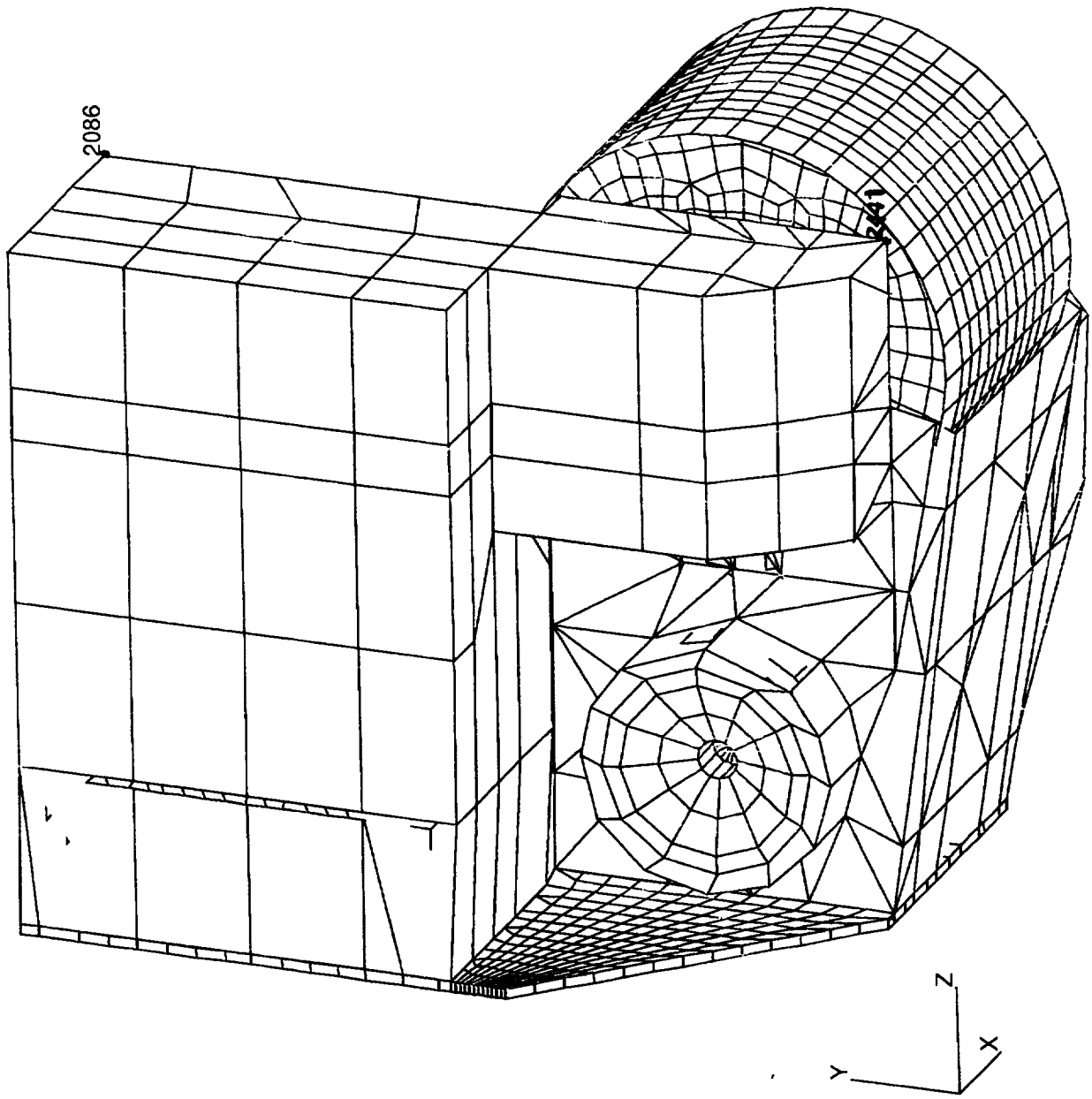

Figure 9 Output Response Locations Secondary Housing

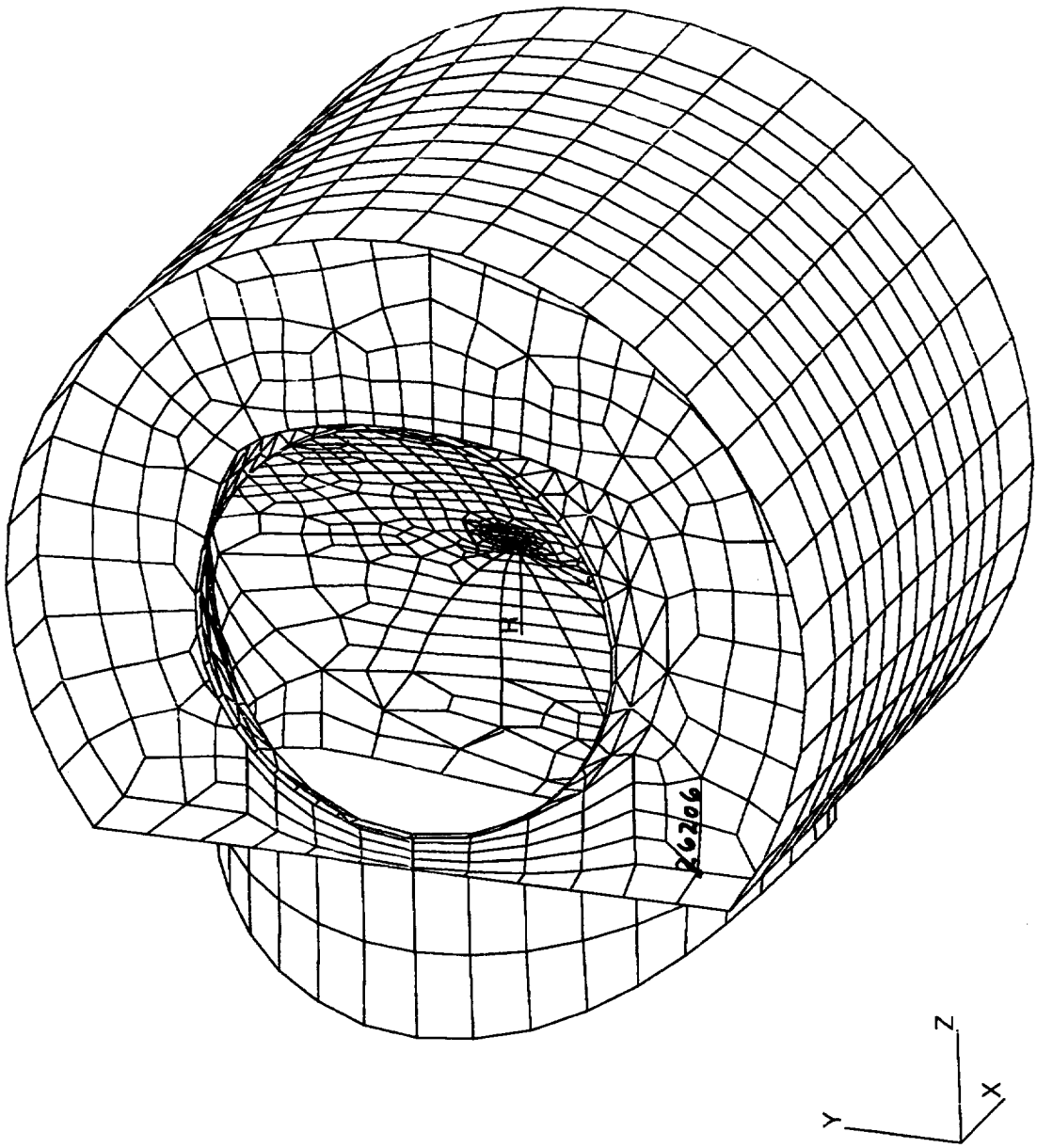

Figure 10 Output Response Locations Main Reflector

Table IV Reflector Mass Changes

Physical Property	Original Reflector	COI Reflector
Mass (lb.)	1.372	1.377
Center of Gravity (in.)		
X	1.613	1.355
Y	5.28	5.371
Y	18.944	18.944
Principal Inertia (lb in. sec^2)		
I1	42.1	51
I2	35	42.4
I2	32.6	35.3
Radius of Gyration (in.)		
X	5.531	6.099
Y	5.039	5.557
Z	4.863	5.071

Table V METSAT/AMSU-A2 Model Weight

```
O U T P U T   F R O M   G R I D   P O I N T   W E I G H T   G E N E R A T O R

                              REFERENCE POINT =        0
                                      M O
*  1.078183E+02  1.301056E-18 -3.510105E-18 -4.993942E-18  1.204537E+03 -1.022505E+03 *
*  1.301056E-18  1.078183E+02 -1.721171E-18 -1.204537E+03  1.537999E-17 -1.593460E+02 *
* -3.510105E-18 -1.721171E-18  1.078183E+02  1.022505E+03  1.593460E+02 -8.647933E-18 *
* -4.993942E-18 -1.204537E+03  1.022505E+03  3.385133E+04  4.949758E+03  6.951458E+02 *
*  1.204537E+03  1.537999E-17  1.593460E+02  4.949758E+03  2.395020E+04 -1.102775E+04 *
* -1.022505E+03 -1.593460E+02 -8.647933E-18  6.951458E+02 -1.102775E+04  2.106892E+04 *
                                      S
                    *  1.000000E+00  0.000000E+00  0.000000E+00 *
                    *  0.000000E+00  1.000000E+00  0.000000E+00 *
                    *  0.000000E+00  0.000000E+00  1.000000E+00 *
        DIRECTION
    MASS AXIS SYSTEM (S)     MASS              X-C.G.        Y-C.G.        Z-C.G.
           X            1.078183E+02     -4.631814E-20  9.483596E+00  1.117192E+01
           Y            1.078183E+02     -1.477913E+00  1.426473E-19  1.117192E+01
           Z            1.078183E+02     -1.477913E+00  9.483596E+00 -8.020843E-20
                                      I(S)
                    *  1.069732E+04 -3.438585E+03  1.085055E+03 *
                    * -3.438585E+03  1.025771E+04 -3.955898E+02 *
                    *  1.085055E+03 -3.955898E+02  1.113640E+04 *
                                      I(Q)
                    *  6.785511E+03                             *
                    *                1.402230E+04               *
                    *                              1.128364E+04 *
                                      Q
                    * -6.777068E-01  7.350349E-01  2.091590E-02 *
                    *  6.976281E-01  6.516884E-01 -2.976868E-01 *
                    * -2.324408E-01 -1.871529E-01 -9.544345E-01 *
```

Table VI Design Limit Load NASTRAN Load Cases

Subcase ID	Load Factor		
	X	Y	Z
1	0	20.6	19.6
2	0	20.6	−19.6
3	0	−20.6	19.6
4	0	−20.6	−19.6
5	21.2	20.6	0
6	−21.2	20.6	0
7	21.2	−20.6	0
8	−21.2	−20.6	0

Section 5

RESULTS

The design limit load results are summarized in Table I. High positive margins of safety are evident at all major components. A minimum margin of 1.1 occurs at the machined baseplate. Appendix B contains contour plots of the maximum principal stress for the eight load cases. In Figure B30, the baseplate area at which the maximum principal stress of 14,244 psi occurs is shown. Also included in the appendix is the analysis of the mounting hardware. A minimum ultimate margin of safety of 0.44 is calculated for the #10 (.190-32THD) mounting screw.

The normal modes analysis results are presented as deformed plots of the three lowest modes. (Figures 11 thru 19). The first two modes of 91 and 93 Hz are compensator rotor bending modes. The first major structural mode is shown in Figure 17. Mode is a 103.5 Hz bending mode of the baseplate directly below the warmload. For the COI reflector, its first mode is a torsional mode of 122 Hz and is shown in Figures 20 through 22.

The random vibration analysis is summarized in Table II. All major components have positive margins of safety. The peak stress at each component is summarized in Table VII and the NASTRAN XY-output summary for each input axis is included in Appendix C.

The lowest margin of safety occurs at the compensator rotor shaft, with a yield margin of 0.13. The RF shelf support side panel (Drawing 1333379) had a negative margin at its lower section (0.05 inch wall thickness). A refined model of the panel was made and analyzed for the peak accelerations at the power control/monitor lump masses supported by the panel. This analysis is enclosed in Appendix C. The results showed a wall thickness increase of 0.010 inch (total thickness of 0.060 inch) resulted in positive margins which are listed in Table II.

The peak acceleration responses at points on the structure that correspond to accelerometer test locations are summarized in Table VIII. The highest peak acceleration occurs at the main reflector and has a magnitude 138 g for the Z axis input. XY plots for the input and four locations in table are shown in Appendix C.

The peak rattlespace summary is shown in Table III. The maximum relative displacement occurs at location B in Figure 7. An 0.001 inch margin is shown, based on the minimum gap between the reflector and warmload. At the circuit cards, the maximum rattlespace closure is 0.002 inch versus a static gap of 0.037 inch.

The peak axial forces occurring at the #10 mounting screws are summarized in Table IX. A peak force of 1545 pounds occurs at the location shown in Figure 23. The resulting ultimate margin of safety, based on A-286 steel (140,000 psi), is 0.28.

Table VII

Qualification Level Random Vibration
Peak Stress Results

Component	Vib. axis	Element ID	Applied Stress (1 sigma) (psi)	Peak Stress (3 sigma) (psi)
RF Shelf (1331086)	Z	2156	2,762	8,289
Front Panel (1331214)	Y	22745	559	1,676
Rear Panel (13312125)	X	3273	711	2,133
Side Panel (1331217)	Y	22840	2,341	7,023
Side Panel (1331218)	X	22801	1,702	5,286
Warmload Shelf (1331222)	Z	2627	3,932	11,797
Side Panel (1331245)	Y	20023	1,882	5,647
Side Panel (1333379)	X	23544	11,584	34,752
End Panel (1333380)	Y	2049	716	2,148
Compensator Shaft (1333390)	Y	23181	12,420	24,840
Motor Output Shaft (1333654)	Y	2541	3,578	10,734
Compensator Housing (1333658)	Z	22962	1,435	4,306
Baseplate (1356968)	Y	22594	4,619	13,857
Circuit Cards	Y	21783	1,080	3,240
Card Cage (1331330)	Z	21355	3,612	10,837

Table VIII

METSAT/AMSU-A2 Peak Accelerations

Location	X Axis			Y Axis			Z Axis		
( ) - Grid Point ID	X(g)	Y(g)	Z(g)	X(g)	y(g)	Z(g)	X(g)	Y(g)	Z(g)
RF Enclosure (2086)	41.5	31.6	13.6	38.9	35.9	12.4	45.3	25.6	49.1
Front Motor Panel (92173)	51.6	37.5	28.4	50.8	42.9	7.8	57.9	32.9	53.8
Secondary Housing (2441)	91.6	46.6	15.8	59	38.6	17	117.8	41.9	40.8
Main Reflector (26206)	94.8	44.5	84.4	30.2	84.9	71	87.9	96	137.8

Table IX

Qualification Level Random Vibration Peak Axial Force, Mounting Screws

Celas 1 Element ID	Random Vibration Axis		
	X (lb.)	Y (lb.)	Z (lb.)
22894	1425	1545	642
22895	240	270	405
22896	855	861	936
22897	1413	1518	651
22898	411	432	258
22899	201	213	261
22900	156	210	321
22901	336	423	432
22902	813	885	453
22903	636	624	300
22904	1257	1284	330

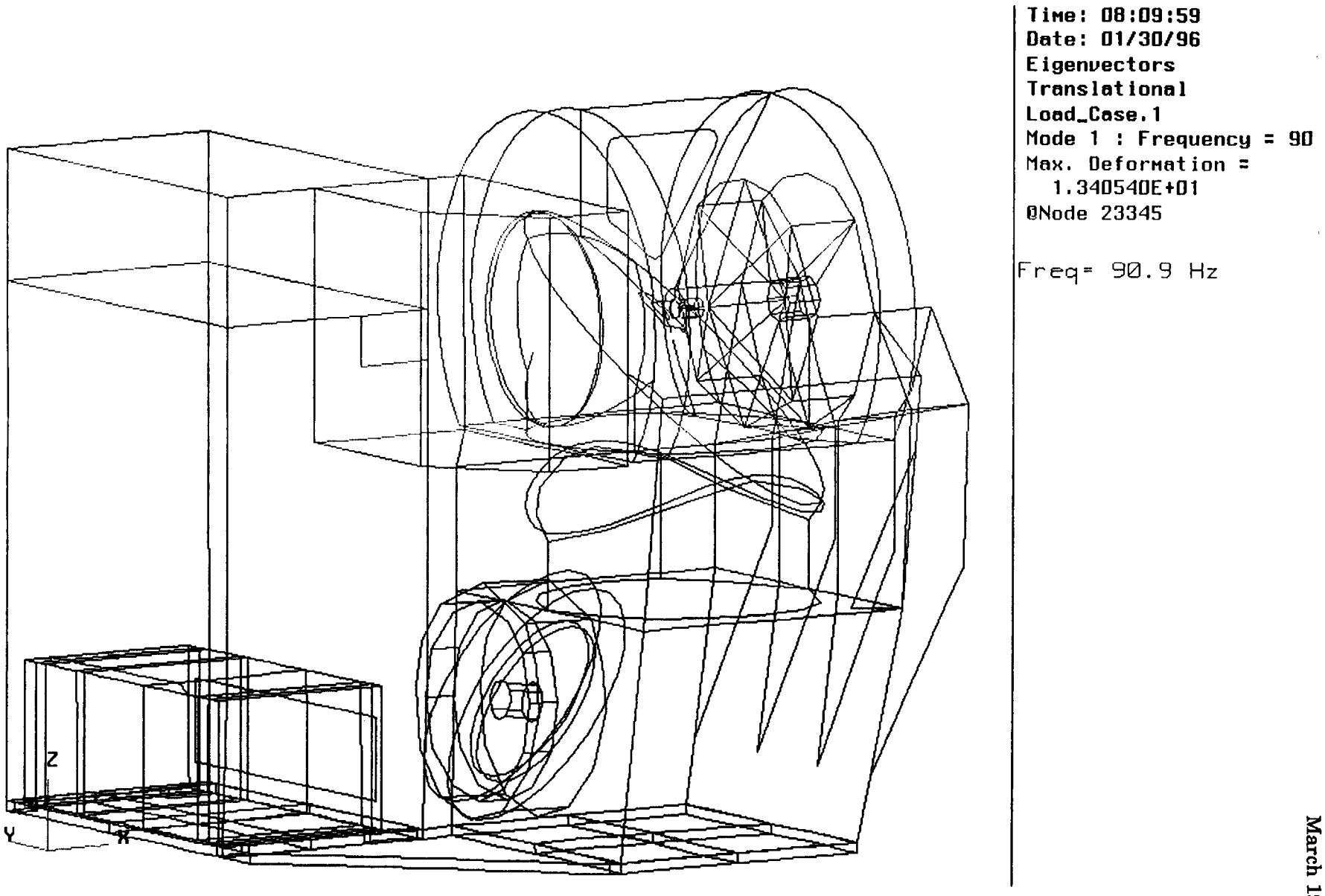

Figure 11 1St Mode, f_N = 91 Hz

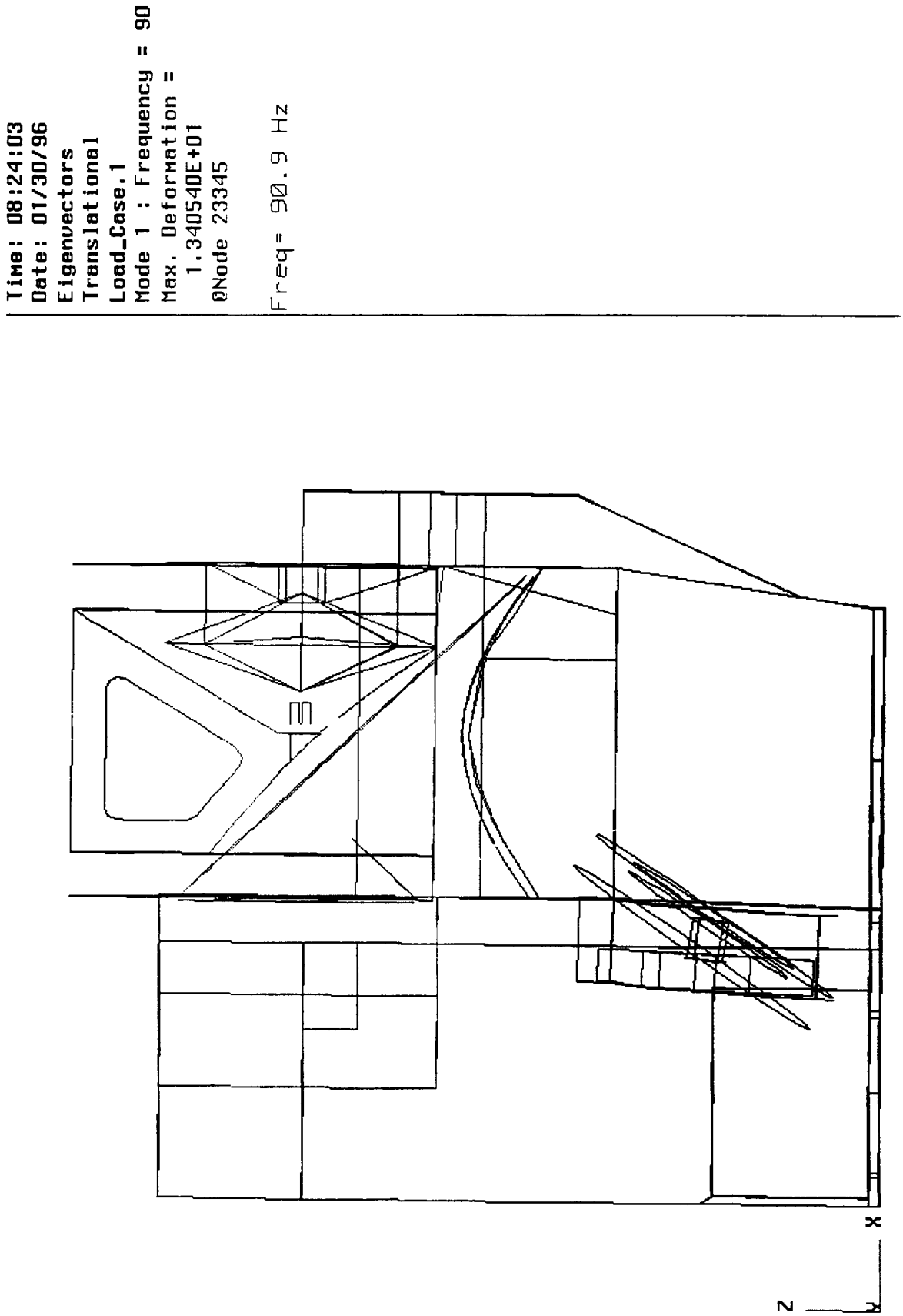

Figure 12 1St Mode, f_N = 91 Hz ZX Plane View

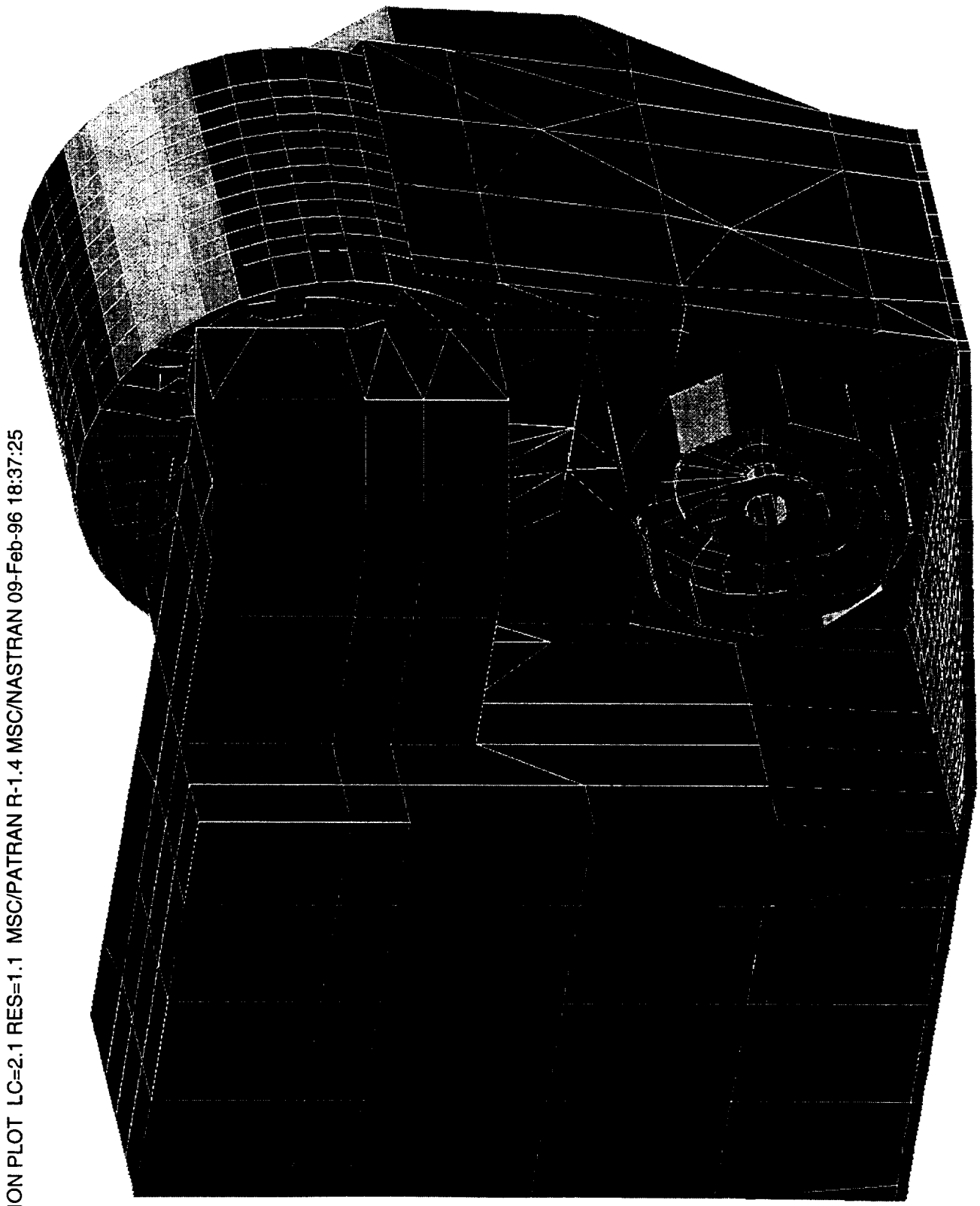

Figure 13 1St Mode, f_N = 91 Hz Shade Image

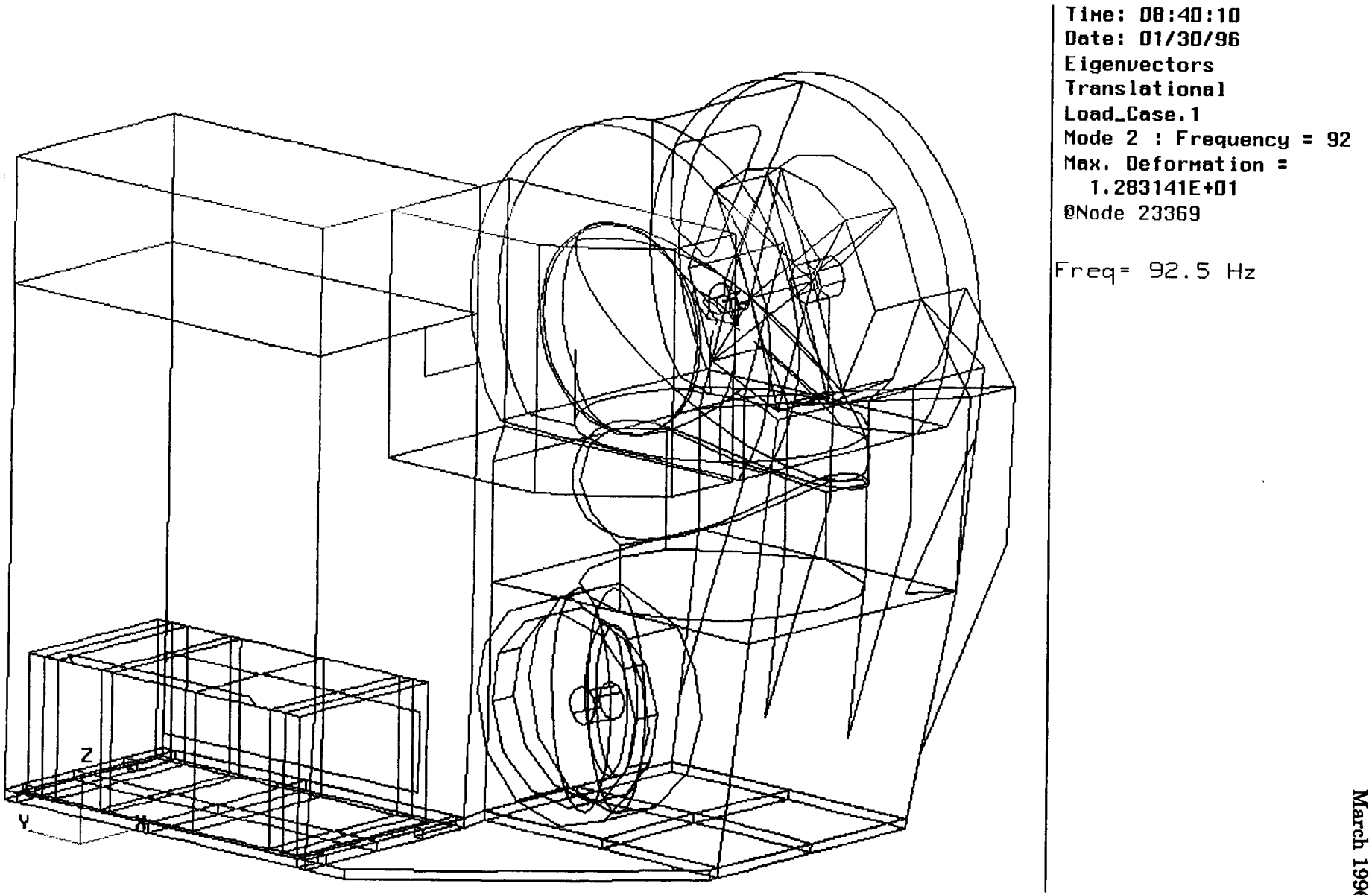

Figure 14 2Nd Mode, f_N = 93 Hz

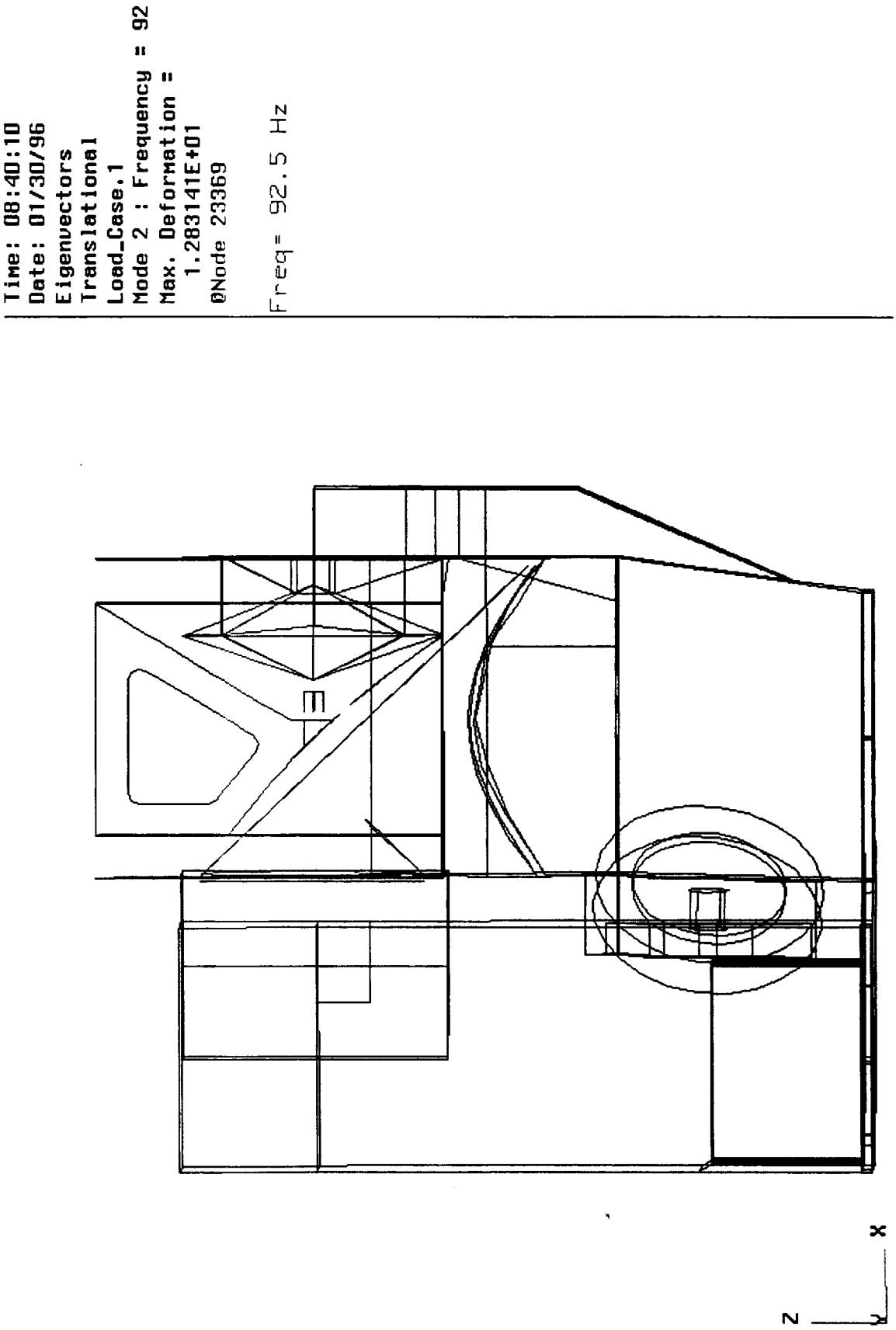

Figure 15 2Nd Mode, f_N = 93 Hz ZX Plane View

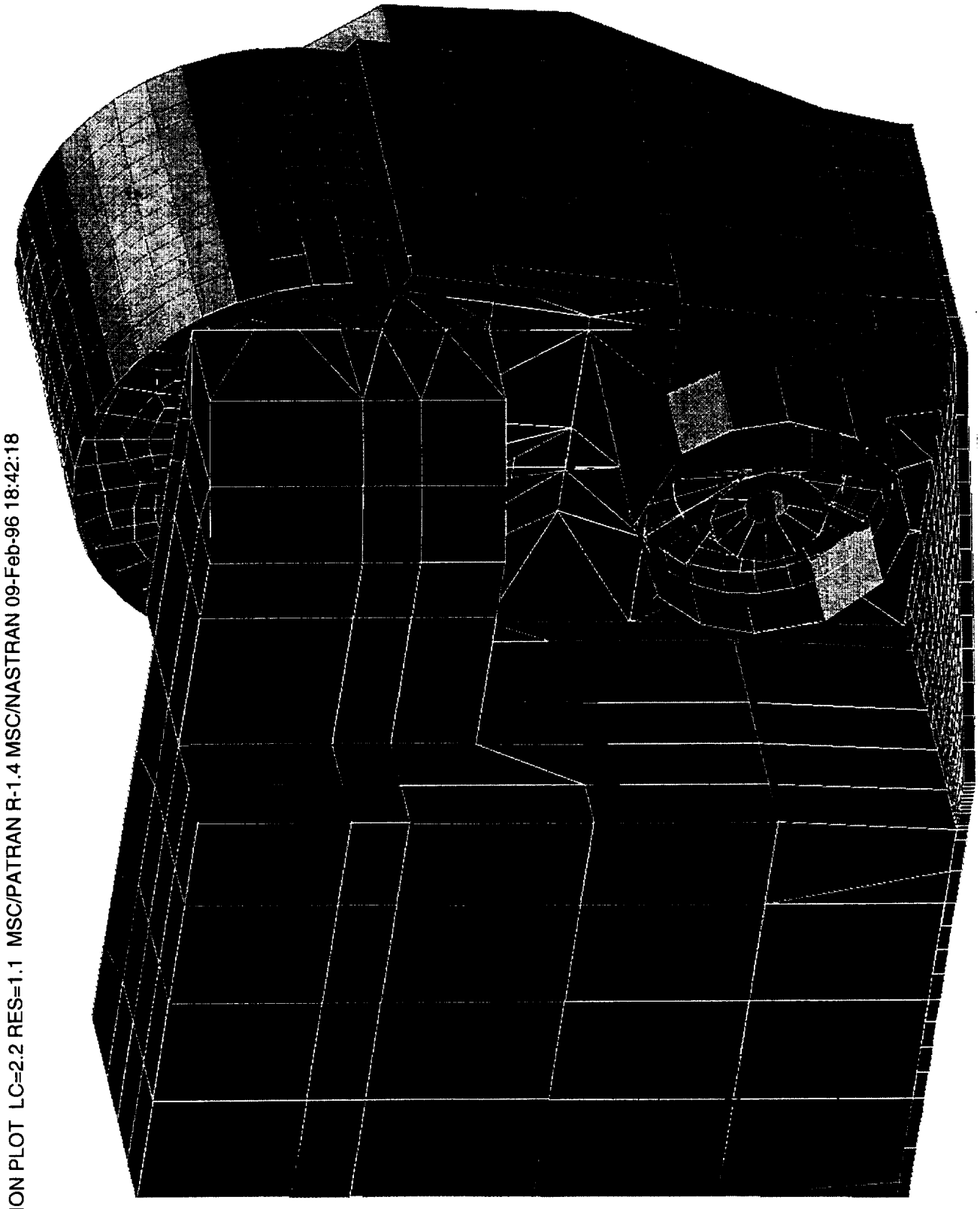

Figure 16 2Nd Mode, f_N = 93 Hz Shade Image

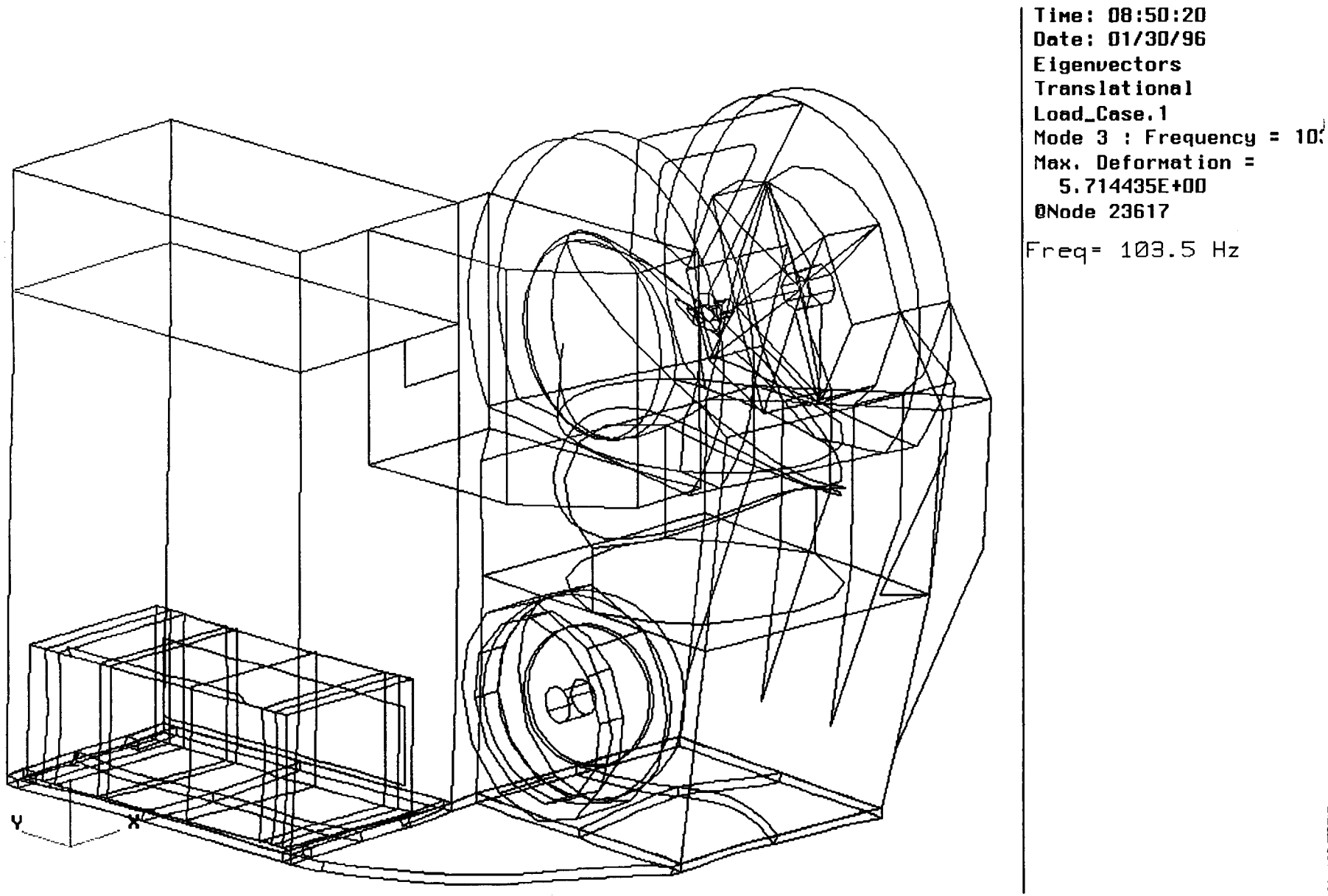

Figure 17 3Rd Mode, f_N = 104 Hz First Structural Mode

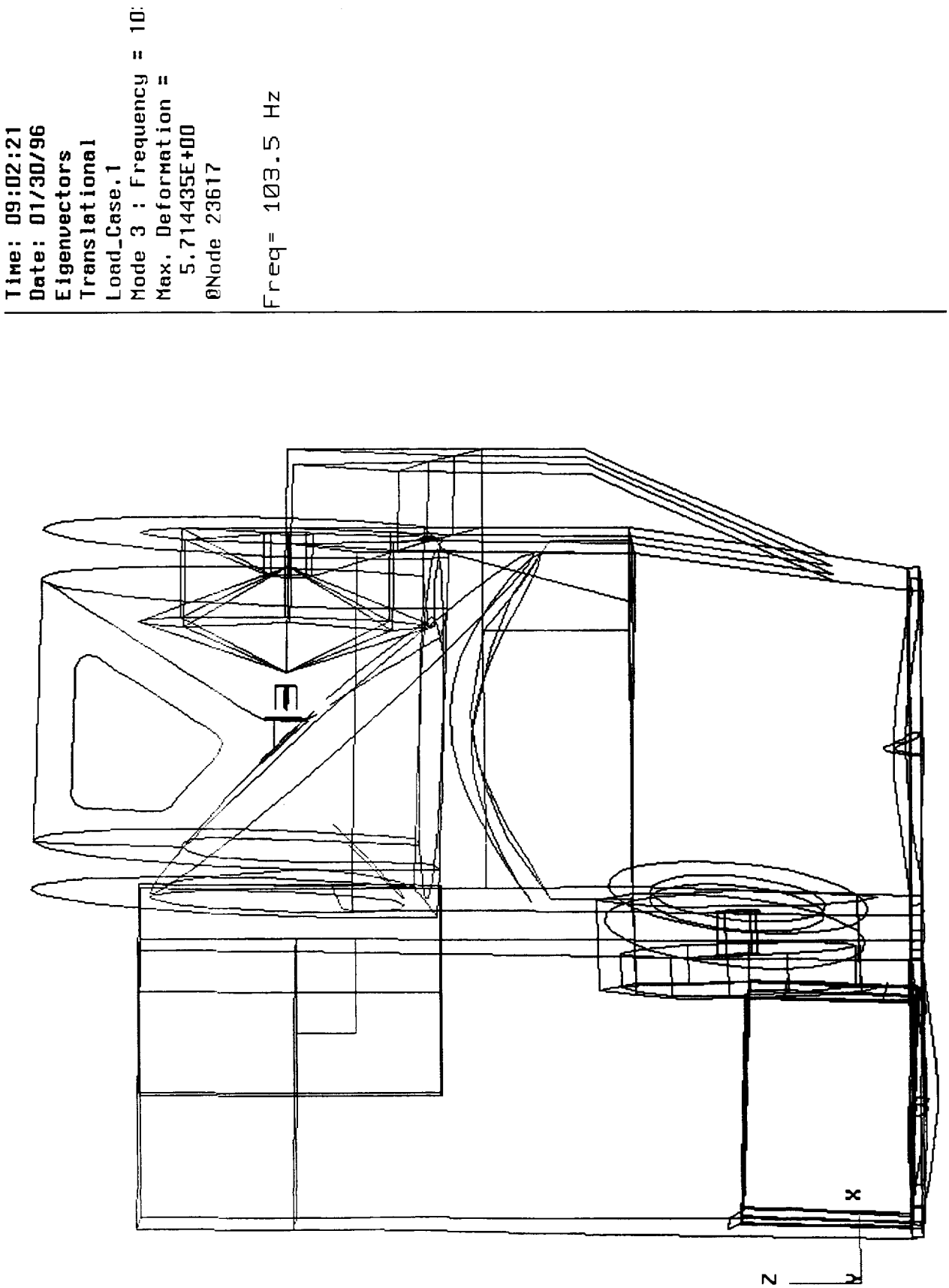

Figure 18 3Rd Mode, f_N = 104 Hz ZX Plane View

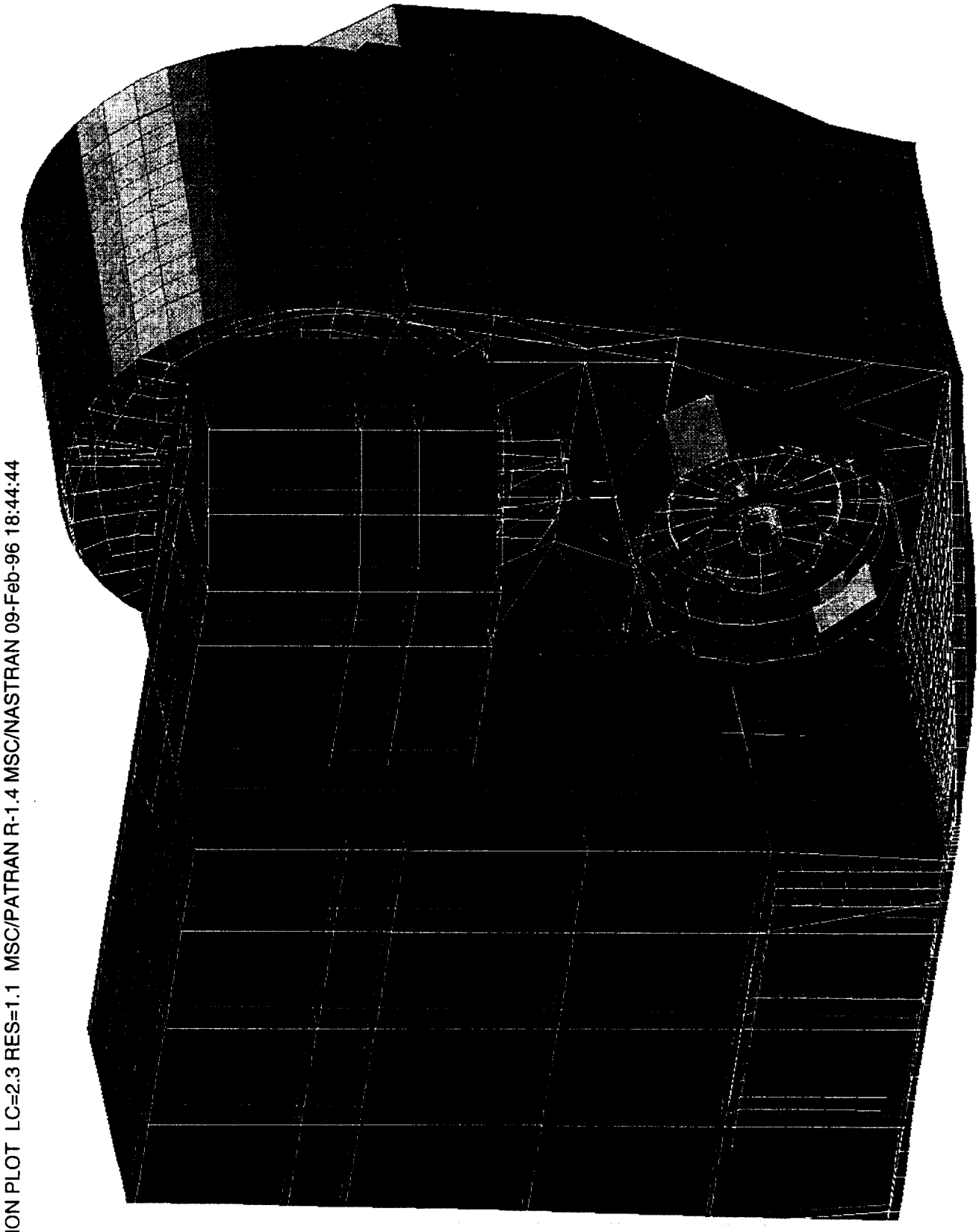

Figure 19 3Rd Mode, f_N = 104 Hz Shade Image

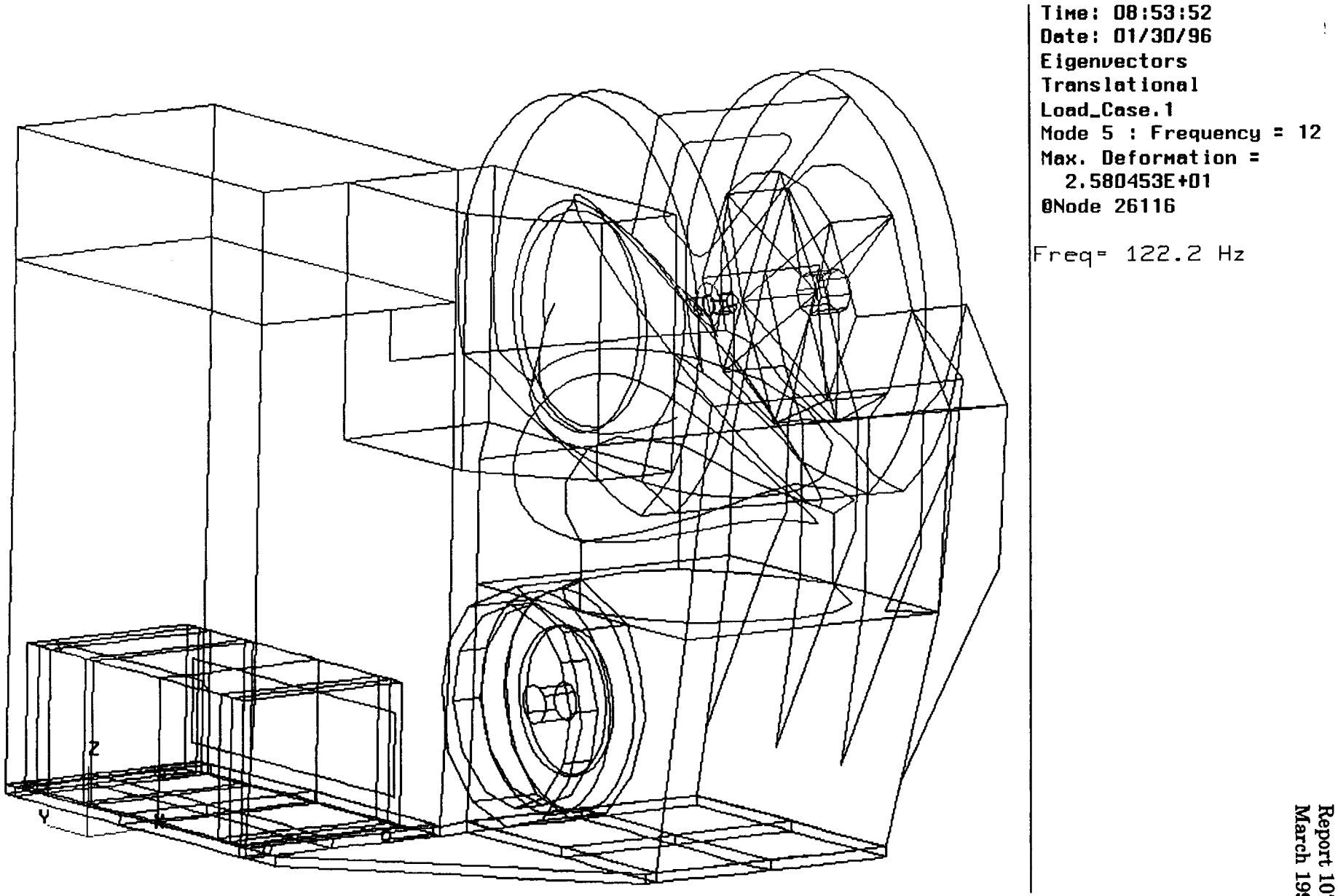

Figure 20 5Th Mode, f_N = 122 Hz COI Reflector First Mode

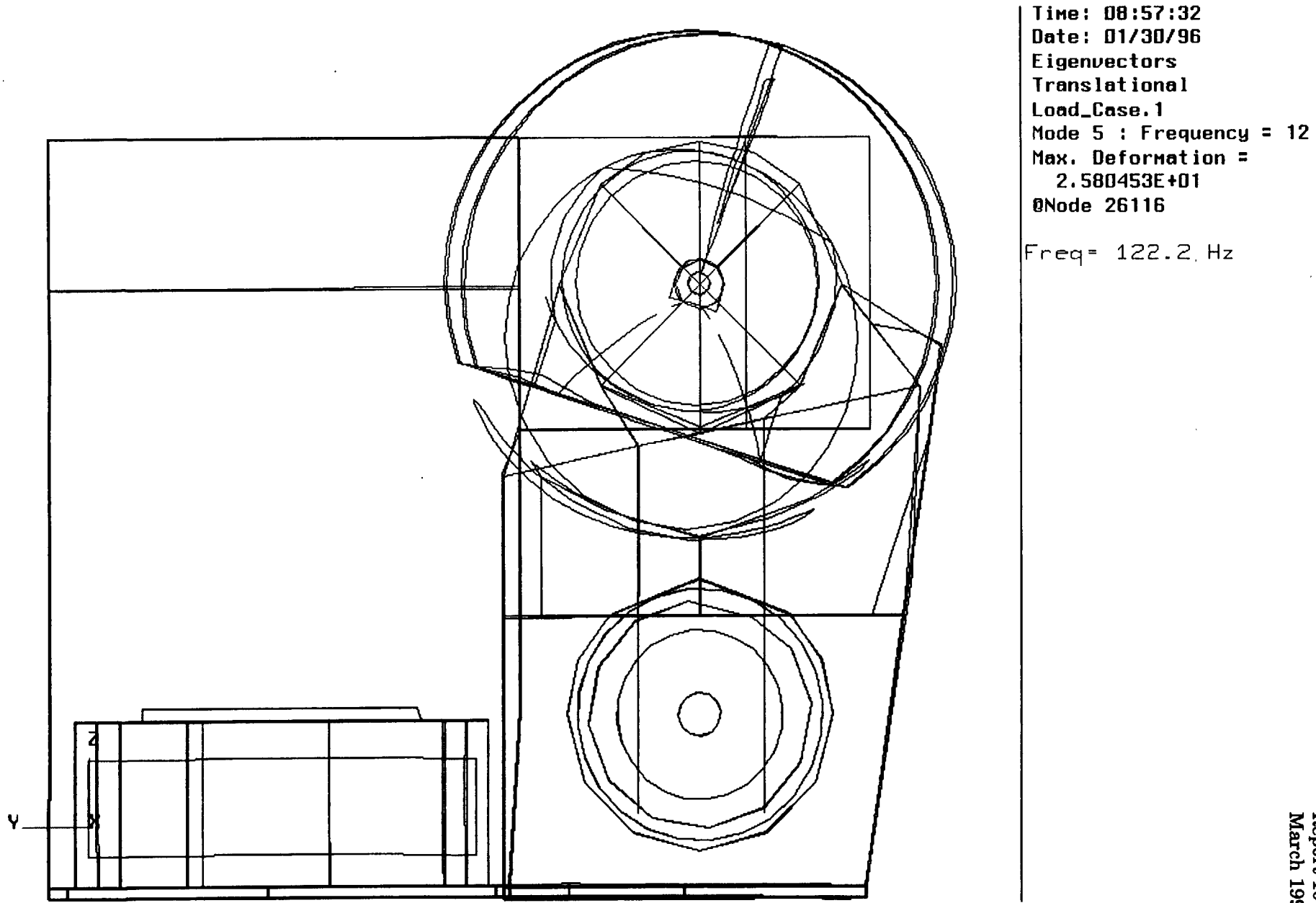

Figure 21 5Th Mode, f_N = 122 Hz YZ Plane View

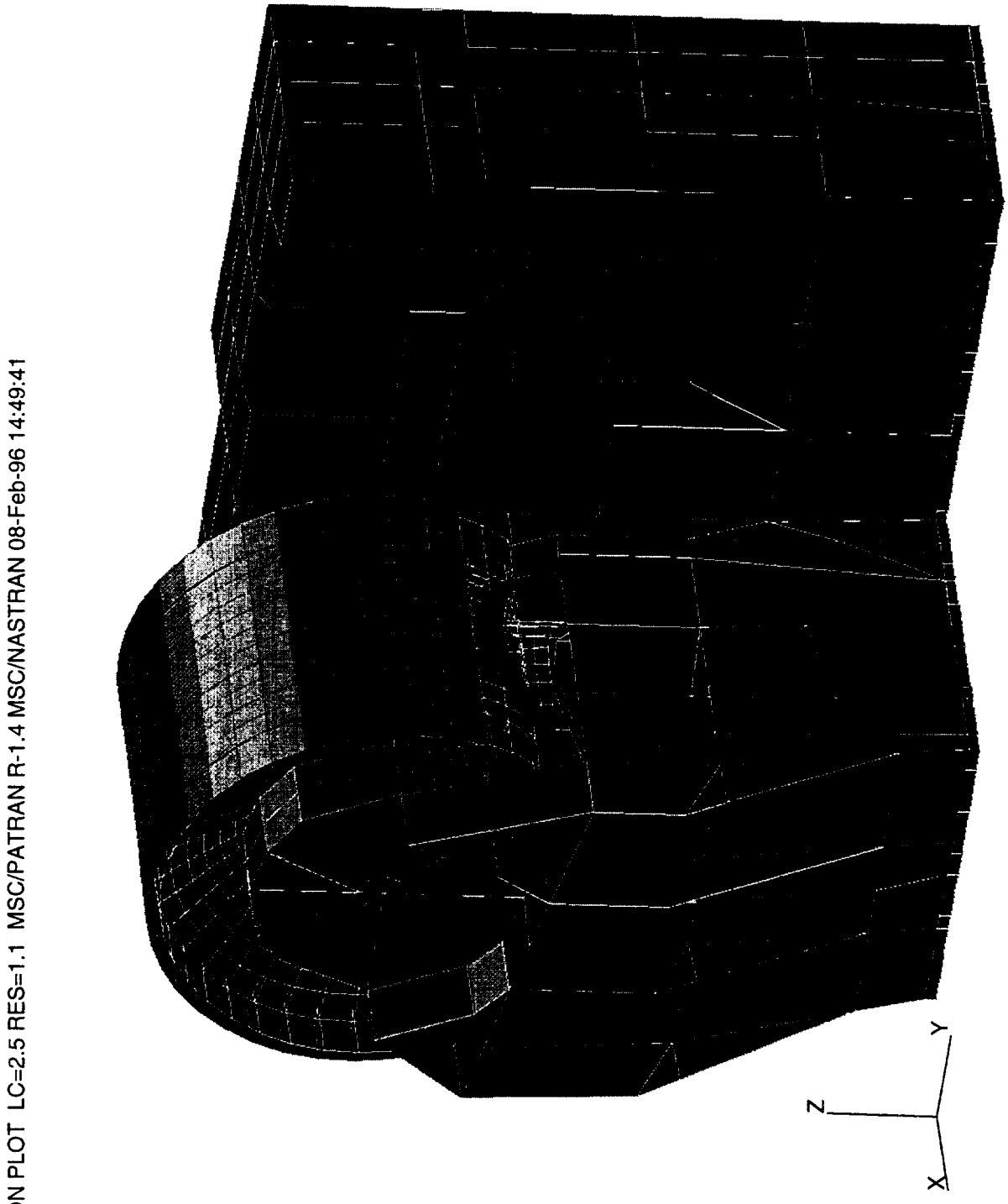

Figure 22 5Th Mode, f_N = 122 Hz Shade Image

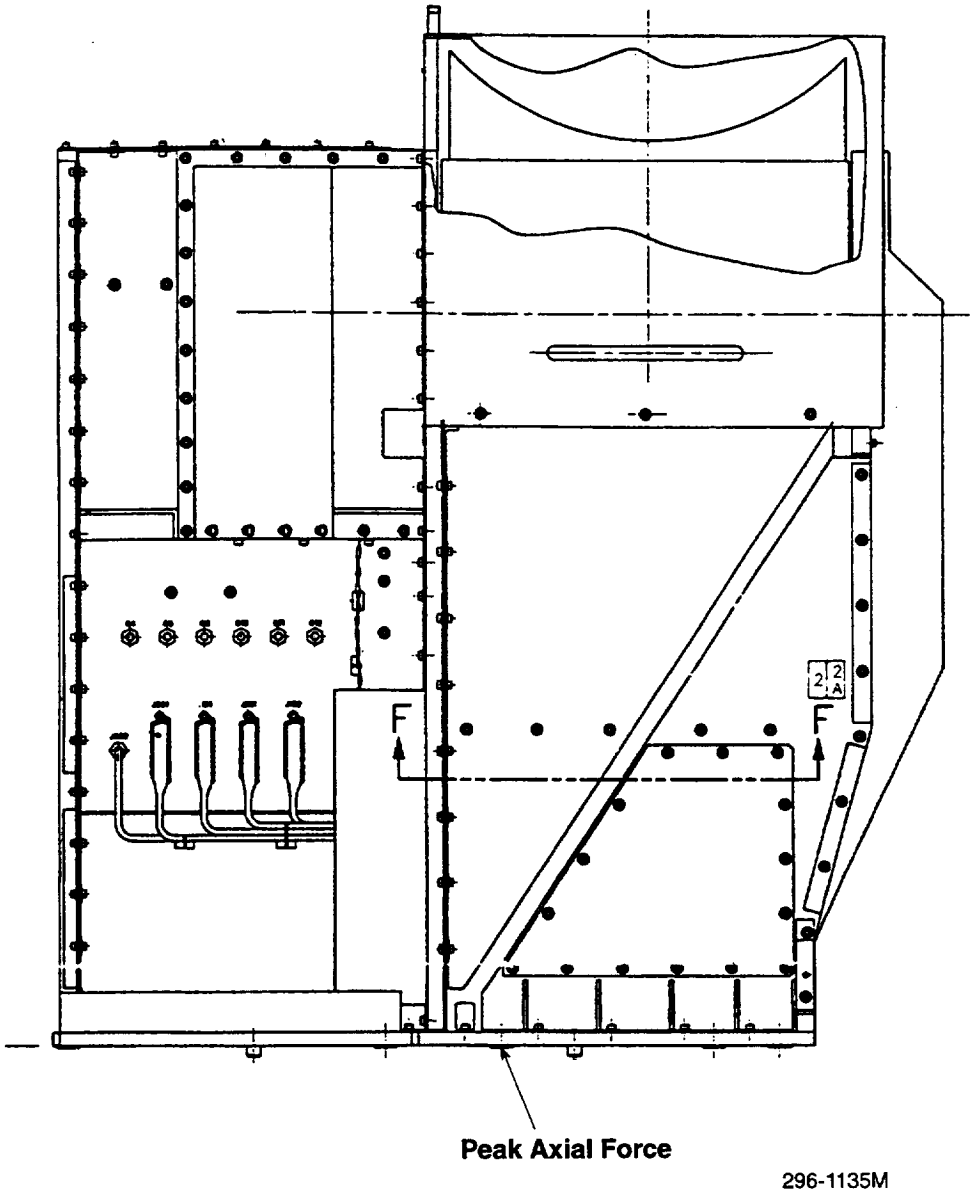

Figure 23 Mounting Screw Peak Force Location

Section 6

CONCLUSION

The instrument has postive margins of safety for both design limit load and qualification level random vibration environments. The change required to the structure because of negative margin at the qualification level random vibration is to increase the wall thickness to 0.060 inch at the lower pockets of the RF shelf support side panel; Drawing 1333379.

Appendix A

COI REFLECTOR MODEL
RENUMBERED GRID POINTS AND ELEMENTS

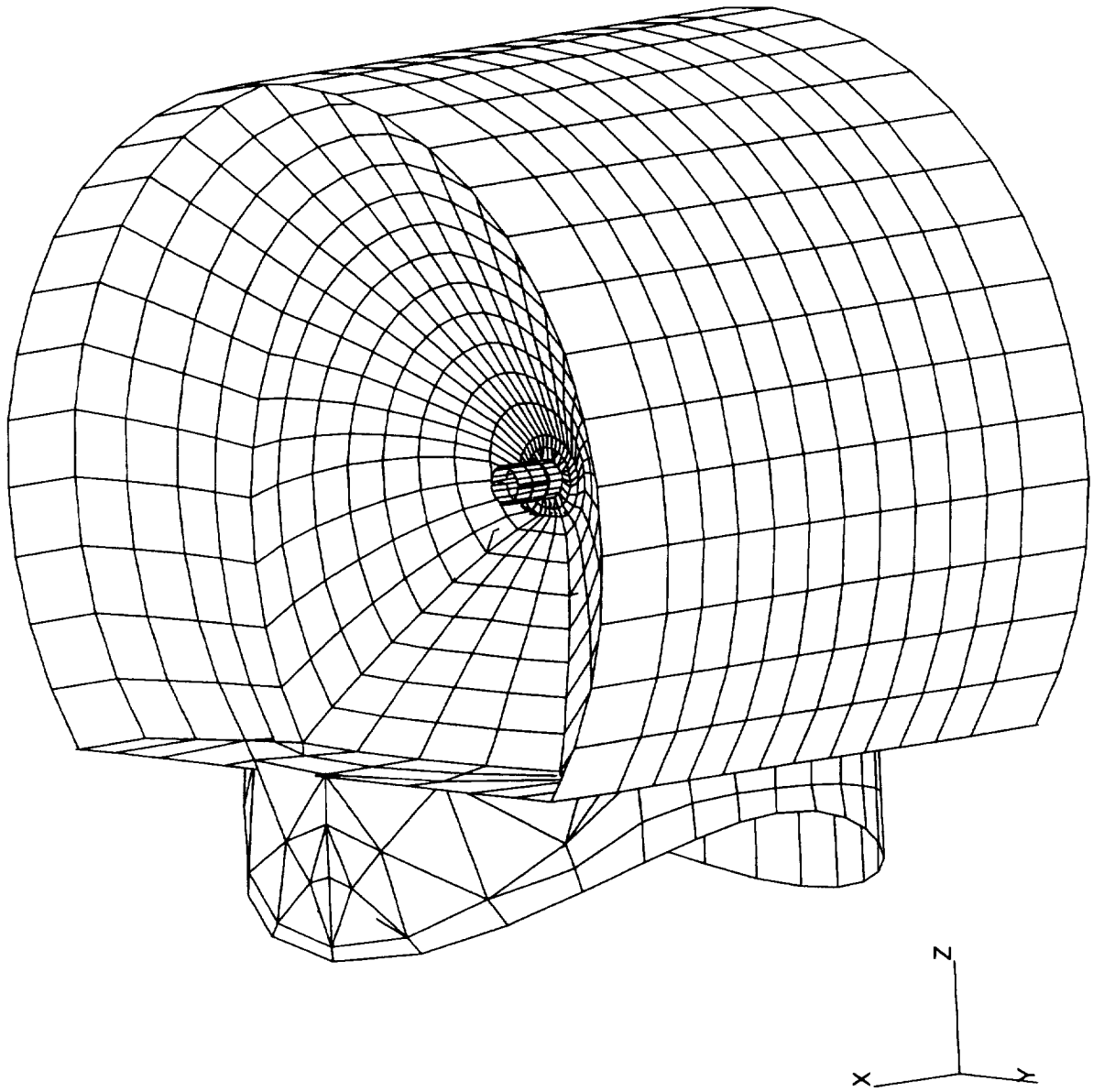

Figure A1 COI Reflector Model, View Aft Cone

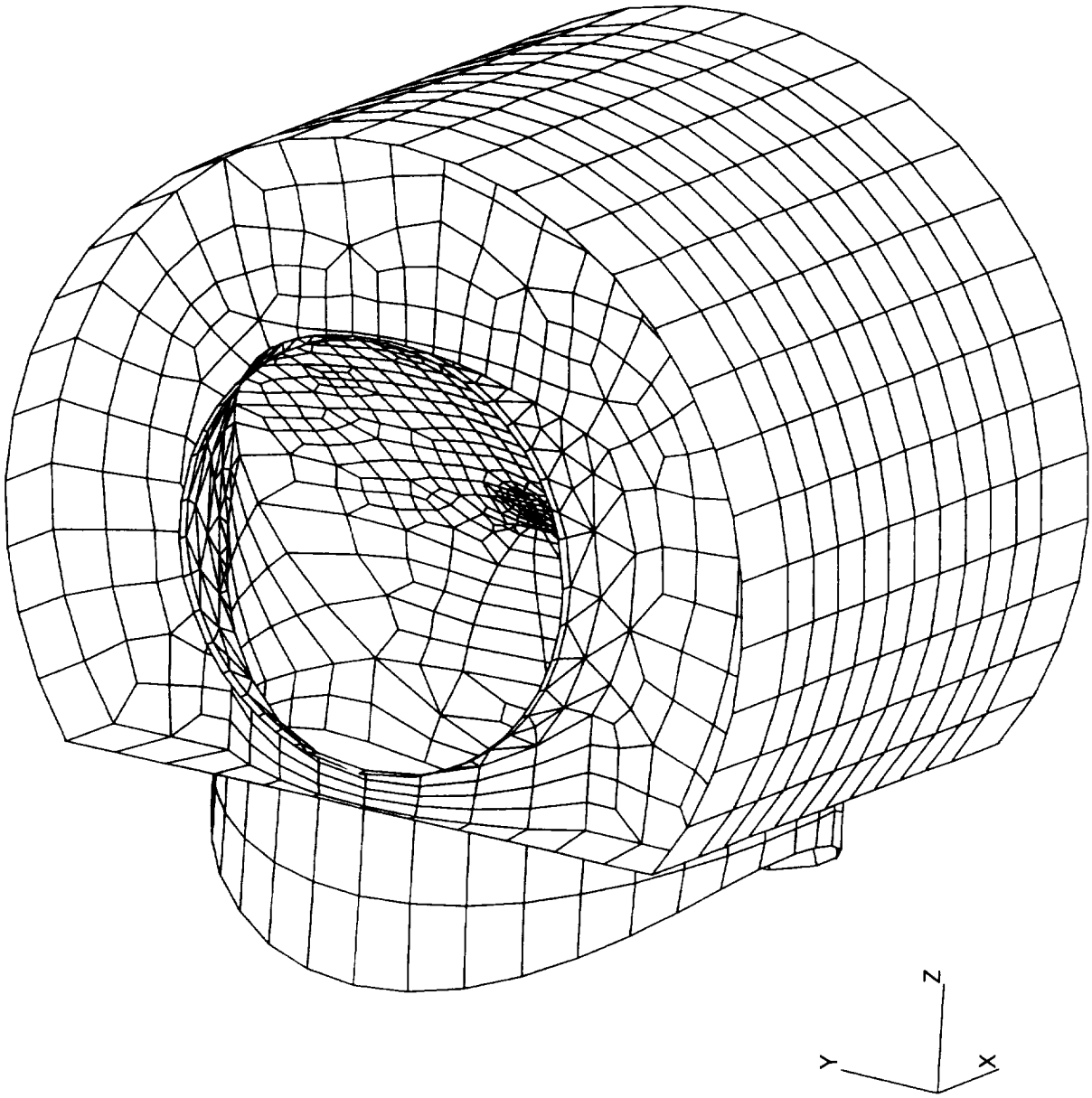

Figure A2 COI Reflector Model, View Secondary Portal

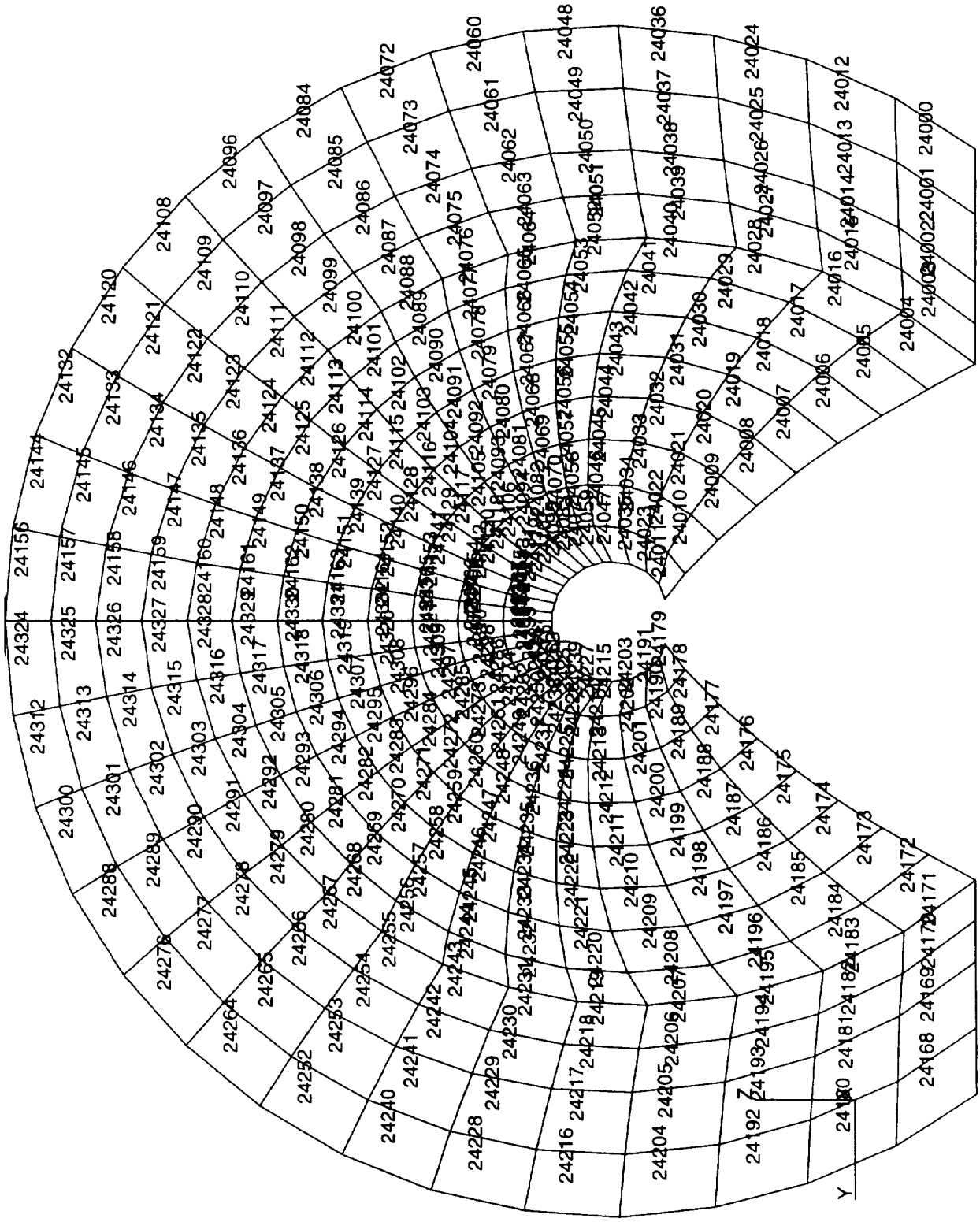

Figure A3 AFT Cone PShell = 20101 Element Number

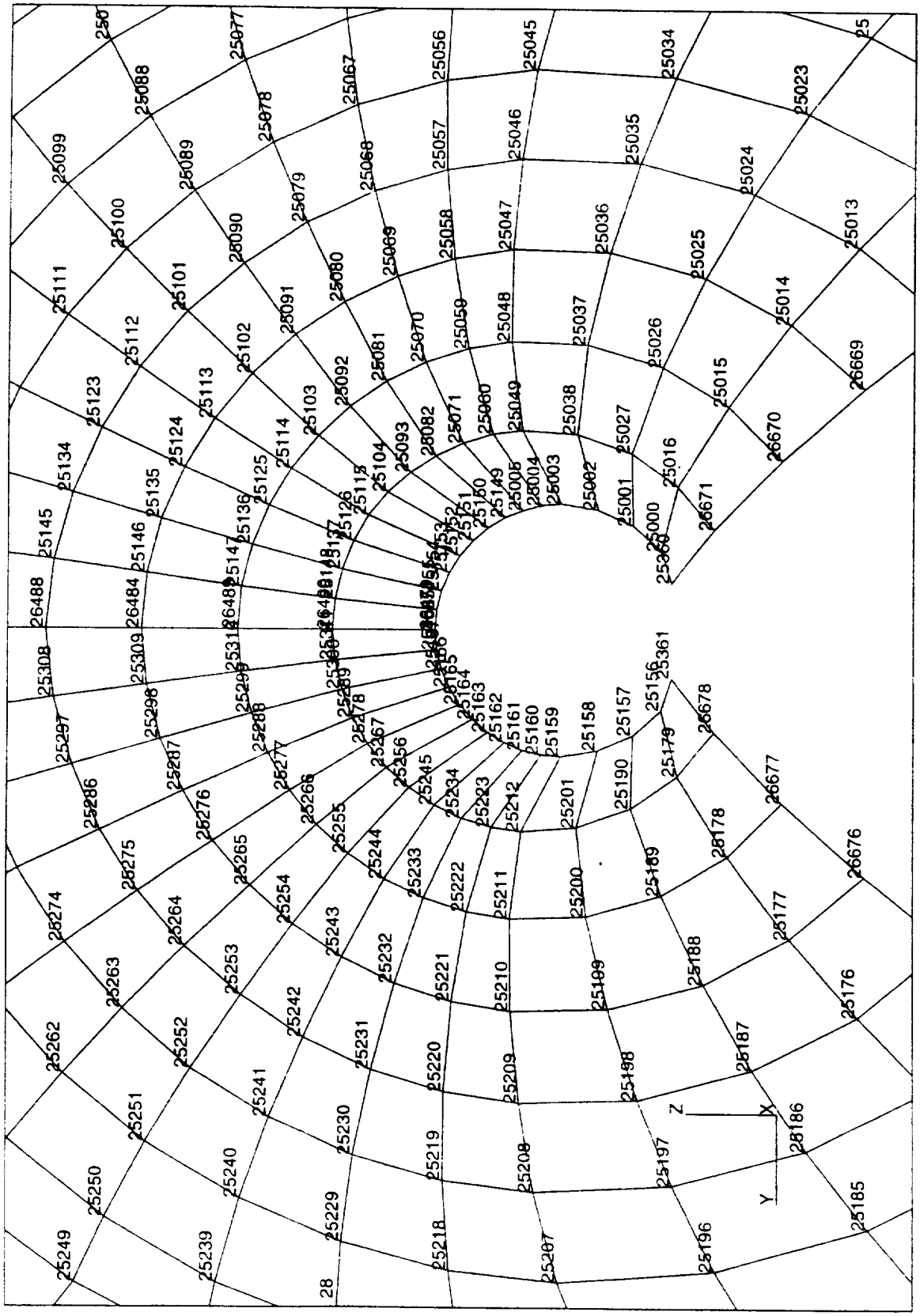

Figure A4 Element Number

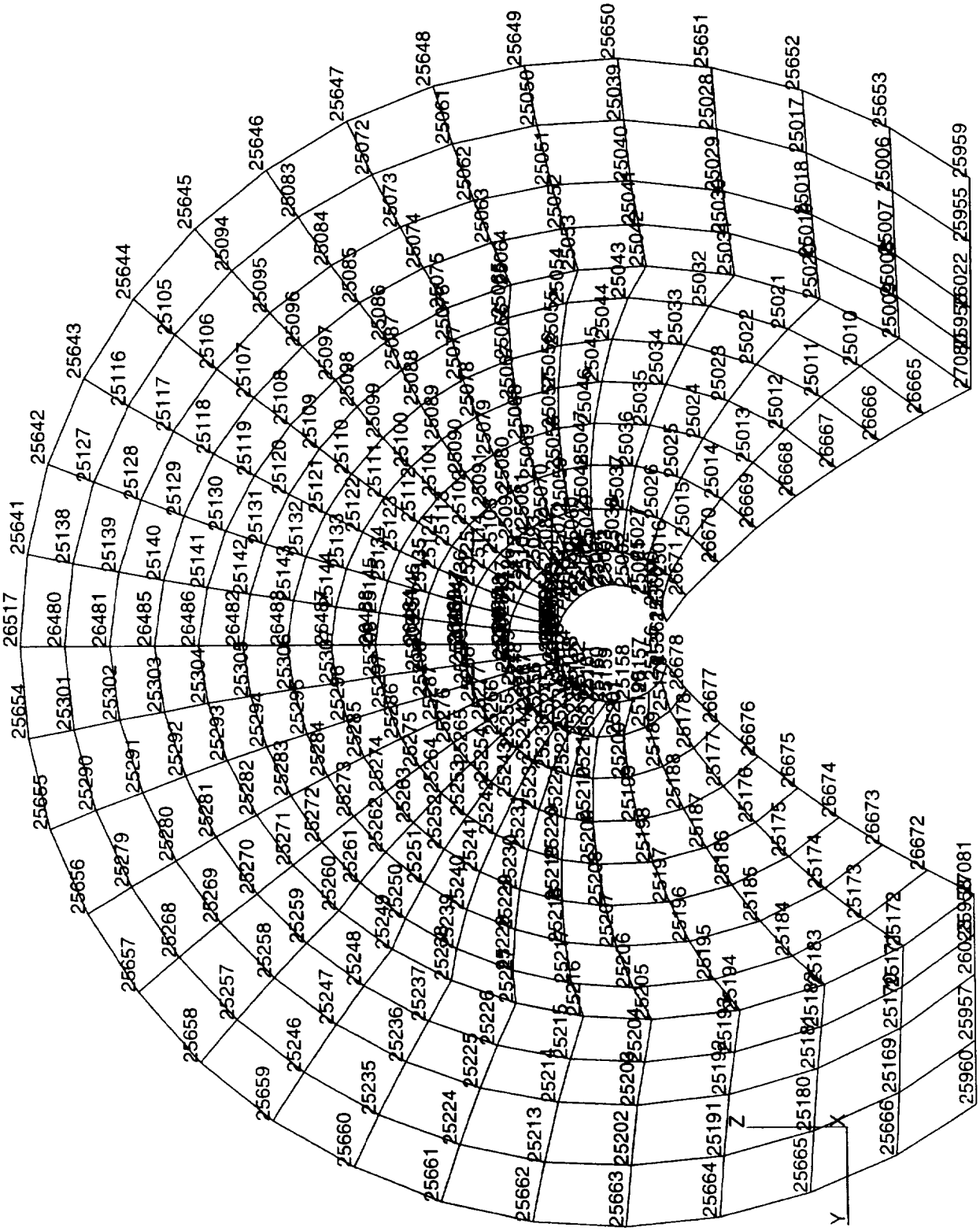

Figure A5 Grid Point Number (1 of 2)

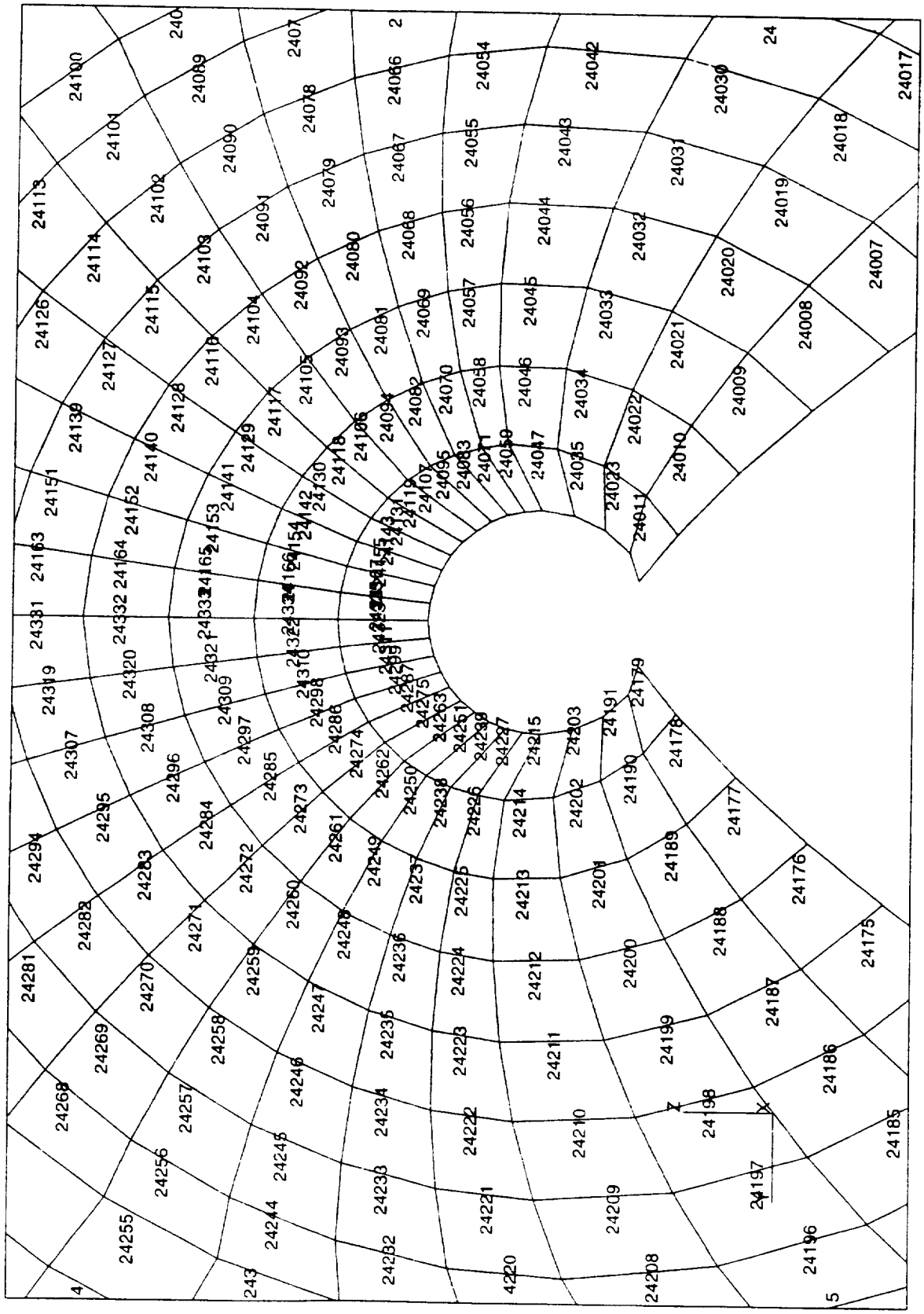

Figure A5 Grid Point Number (2 of 2)

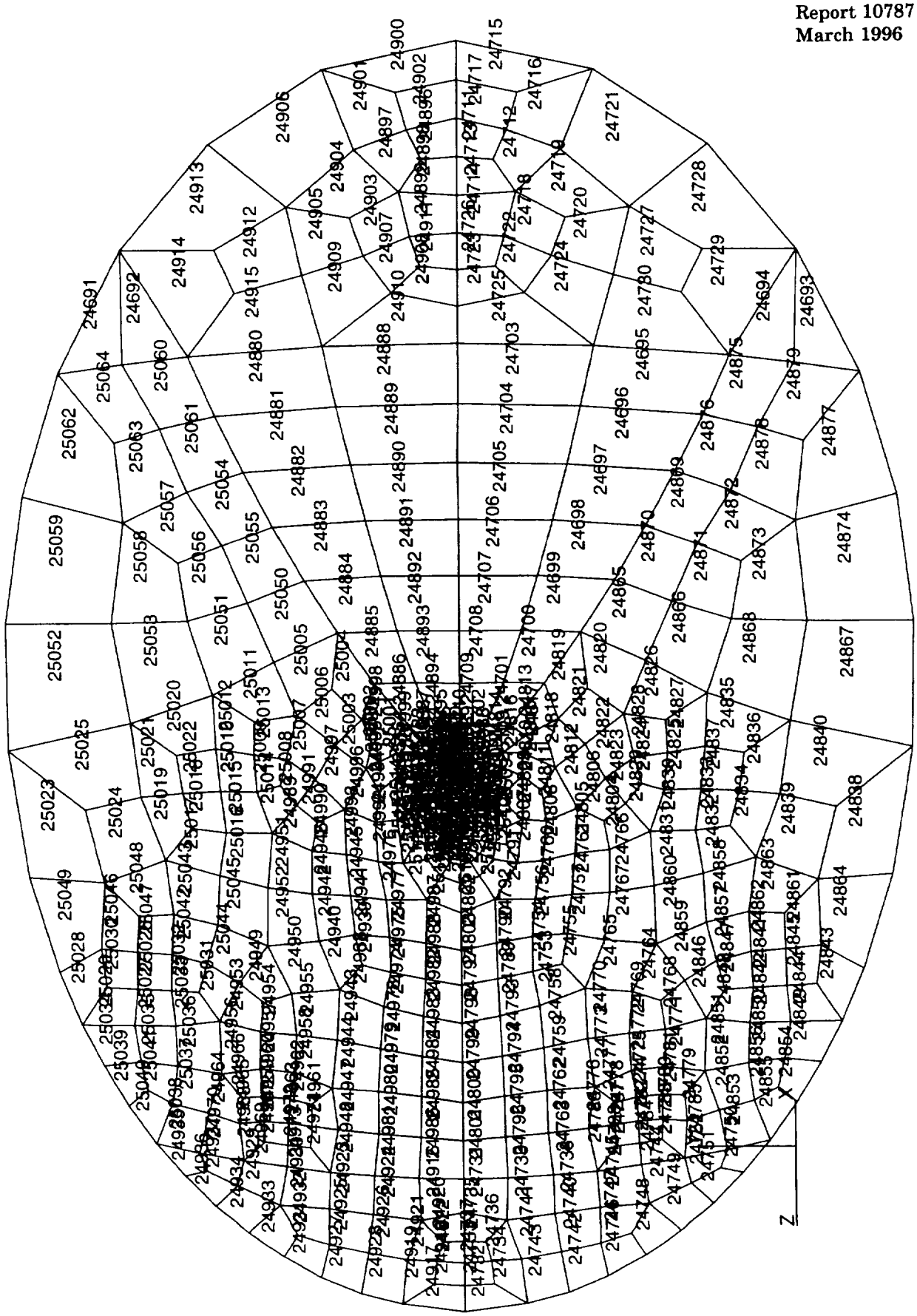

Figure A6 Parabolic Shell Pshell = 20103 Element Number

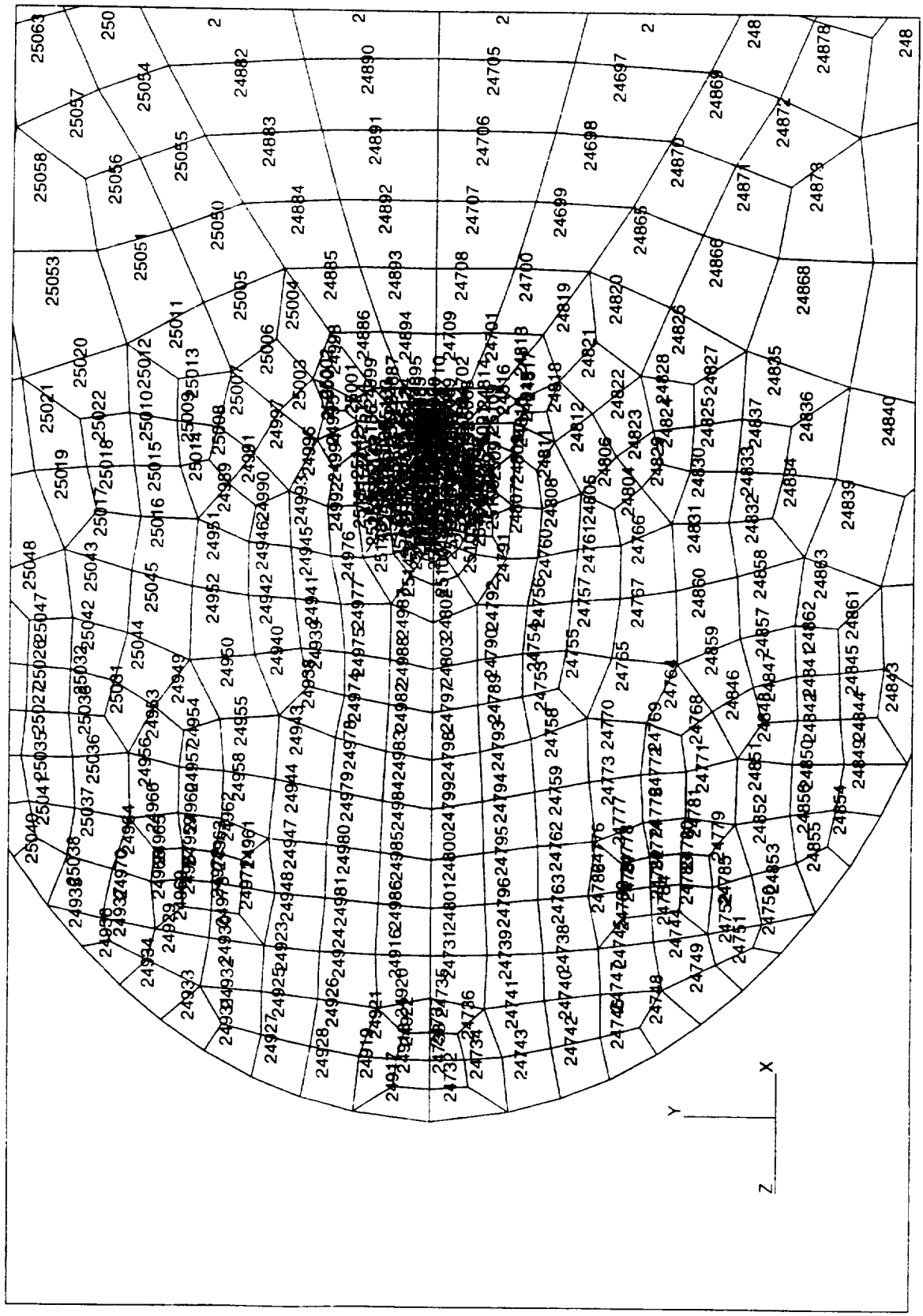

Figure A7 Element Number (1 of 2)

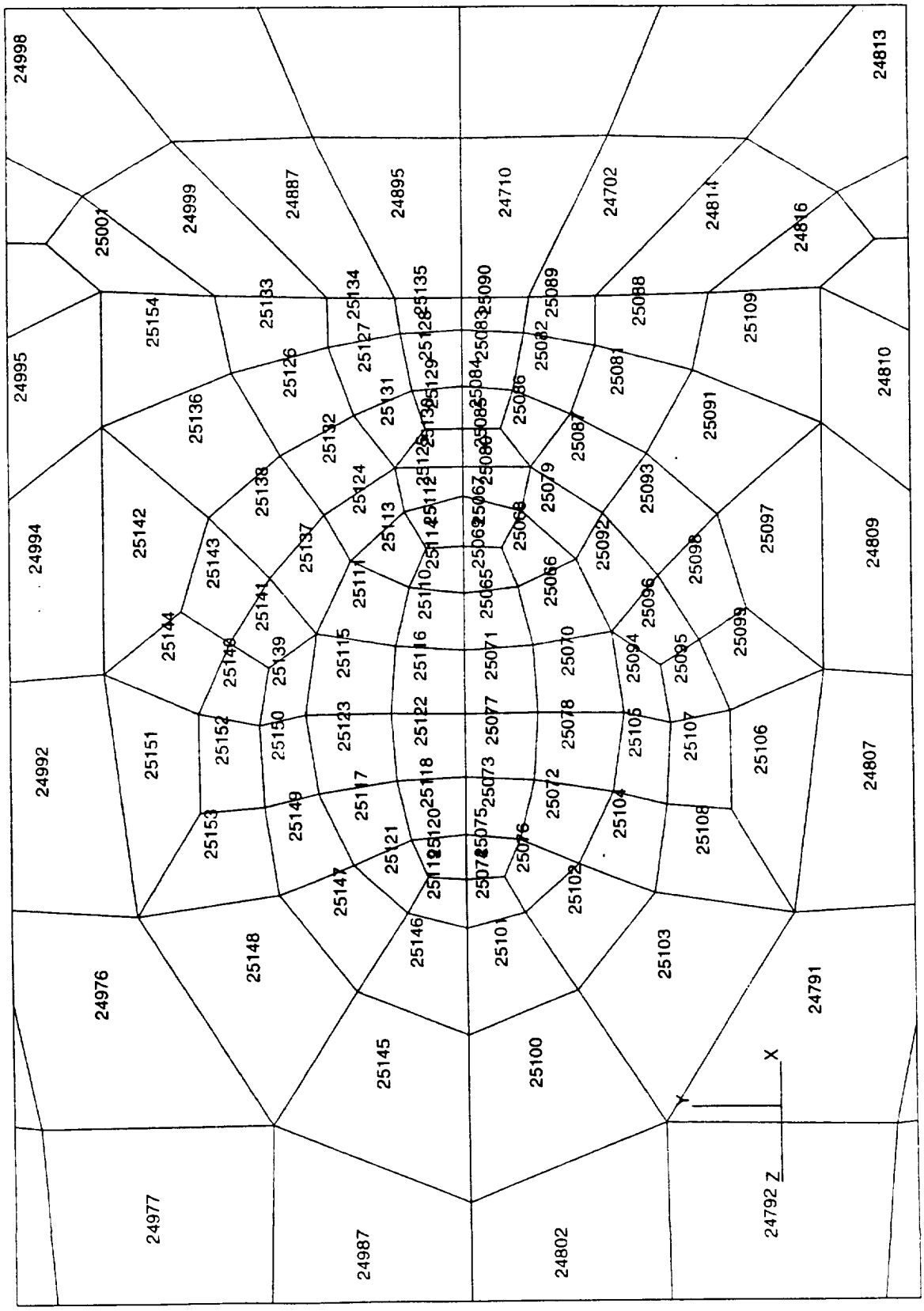

Figure A7 Element Number (2 of 2)

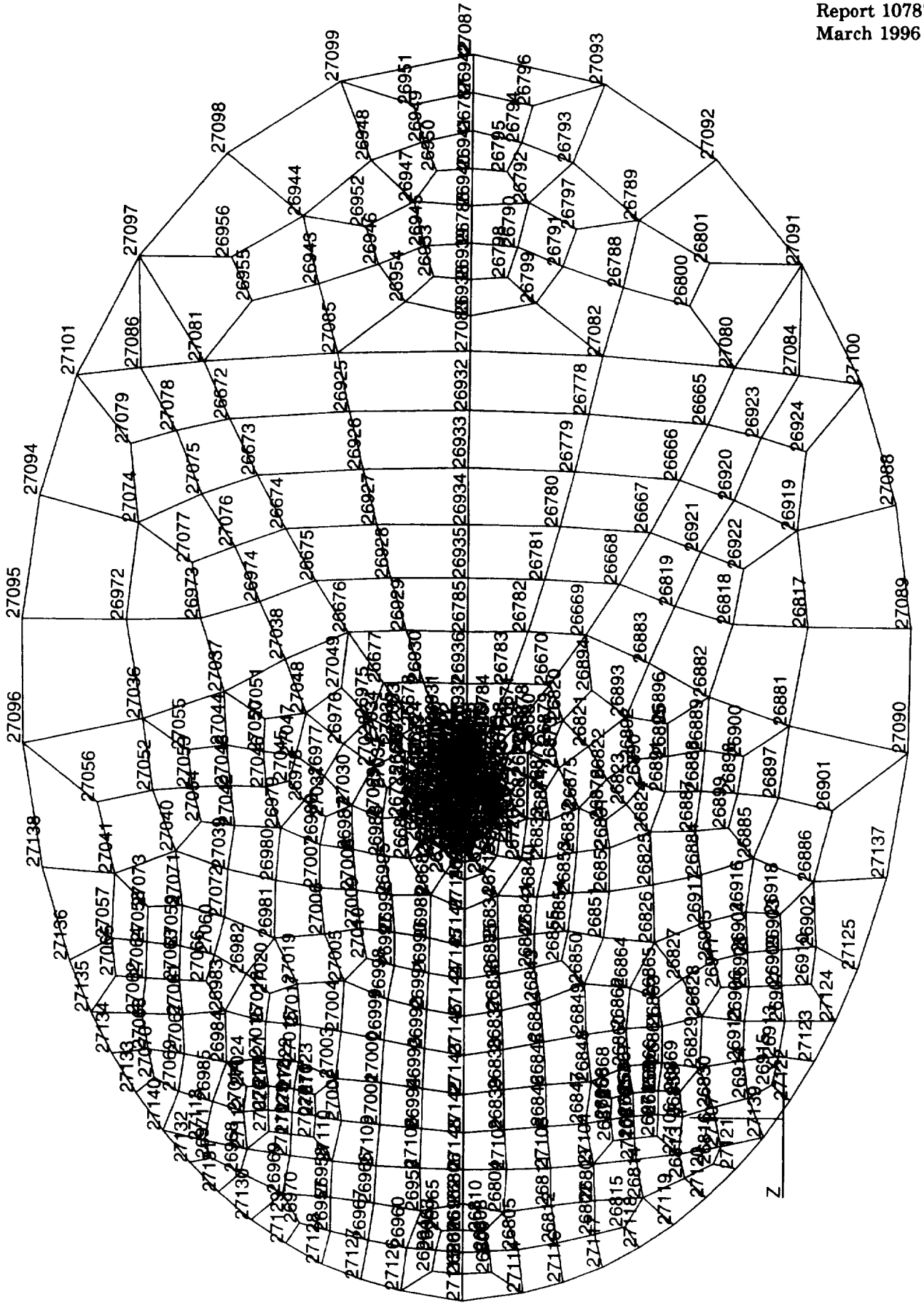

Figure A8 Grid Point Number (Parabolic Shell) (1 of 3)

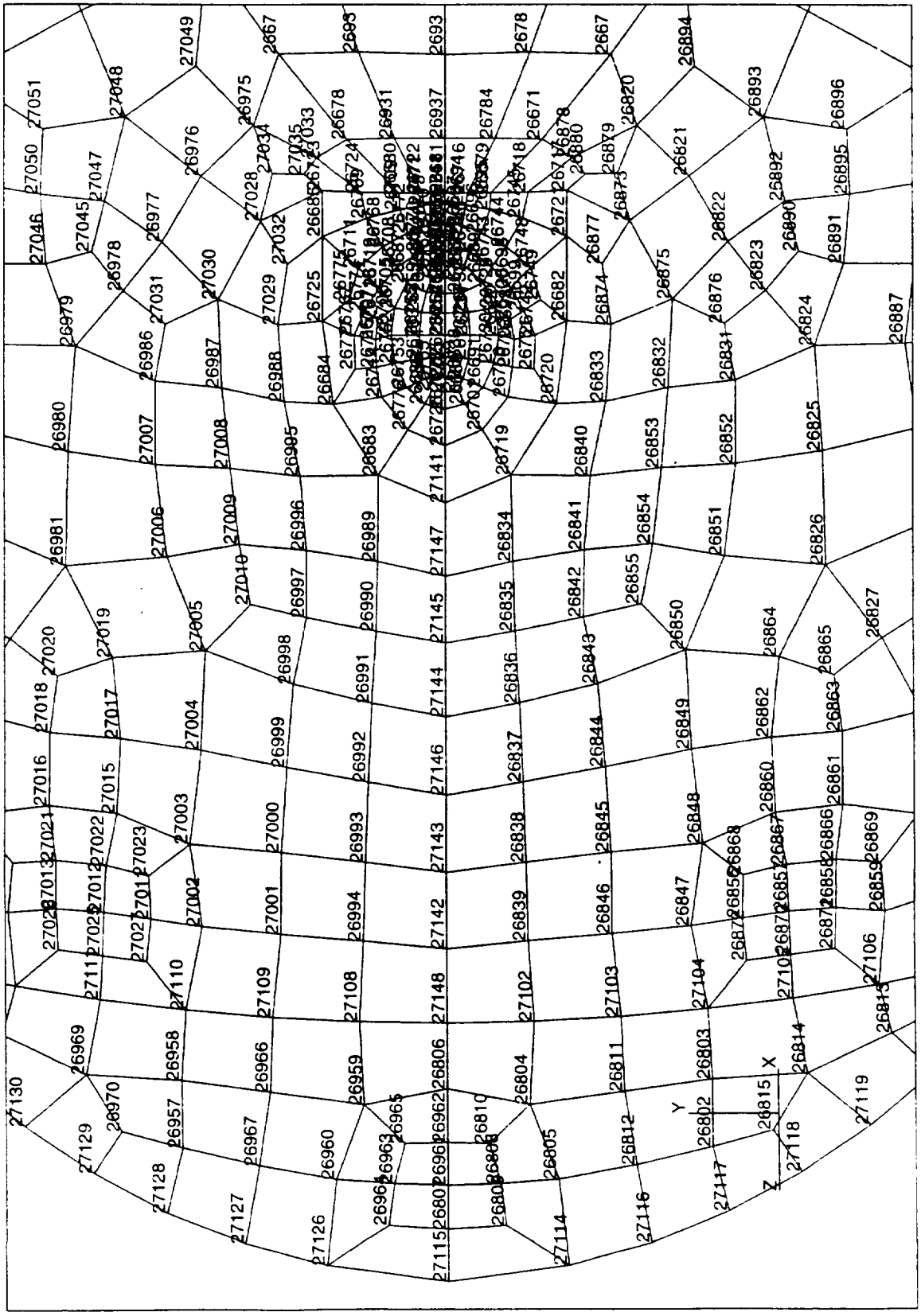

Figure A8 Grid Point Number (Parbolic Shell) (2 of 3)

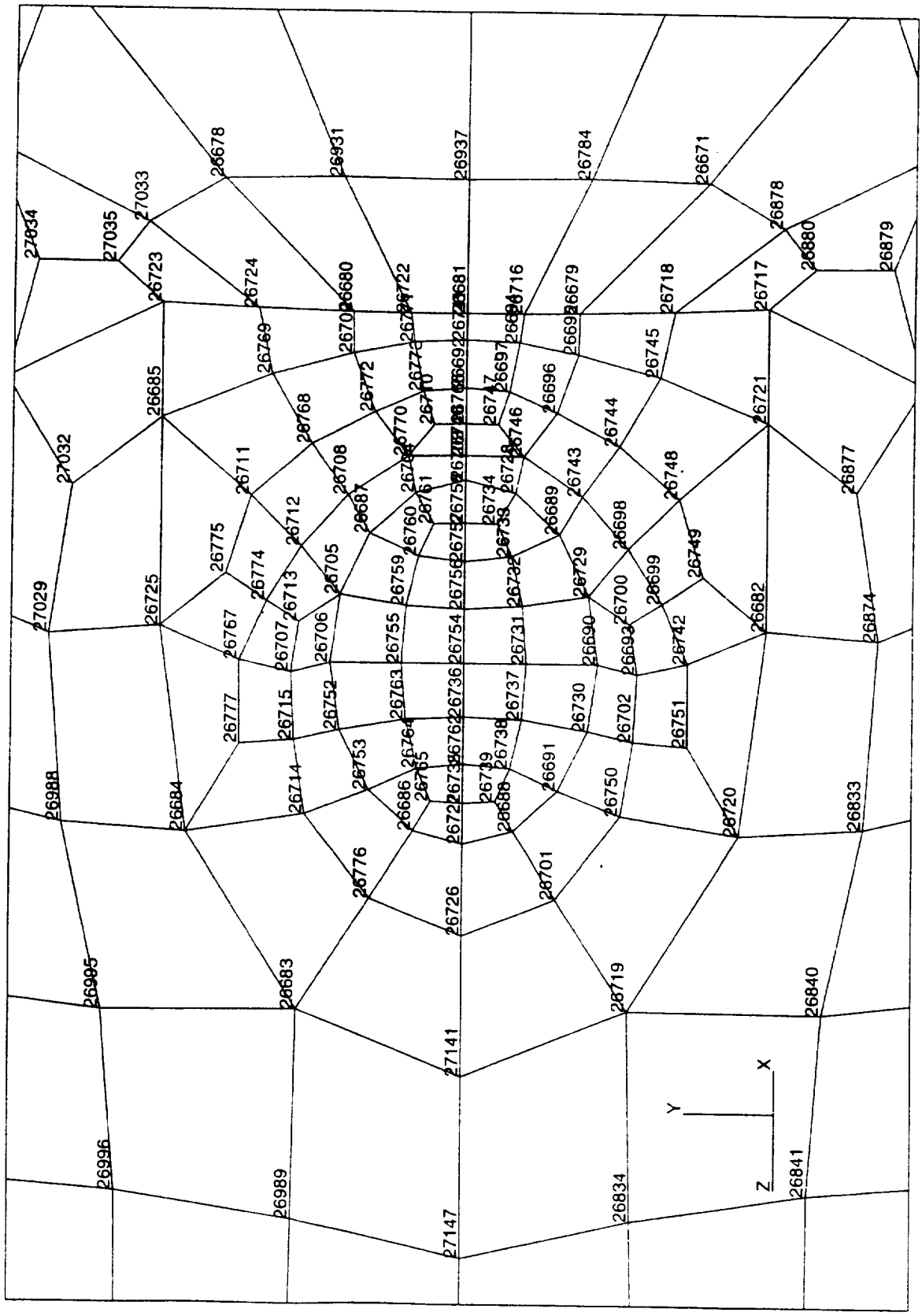

Figure A8 Grid Point Number (3 of 3)

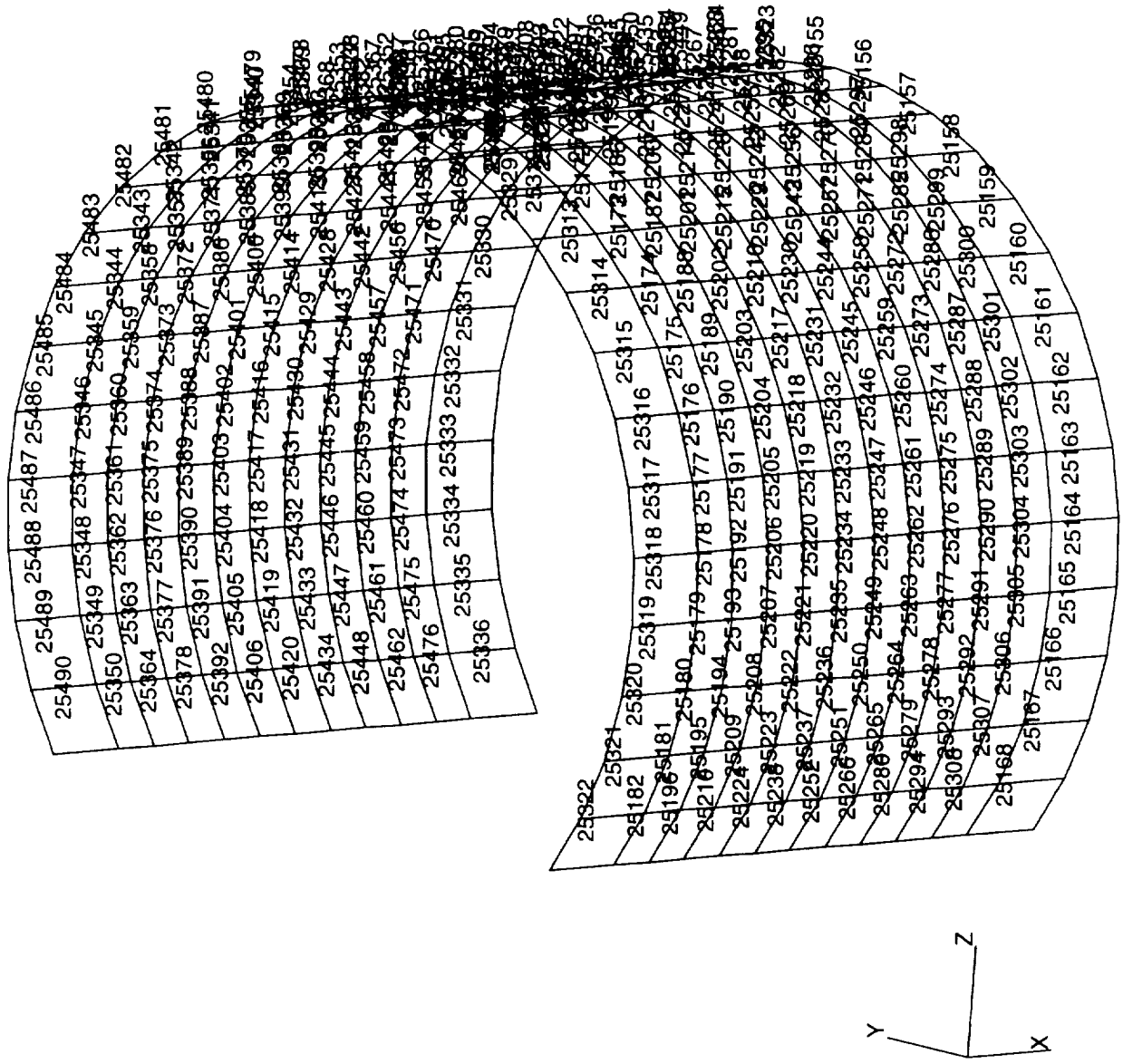

Figure A9 Main Shroud PShell = 20104 Element Number

25481	25341	25355	25369	25383	25397	25411	25425	25439	25453	25467	25327	
25480	25340	25354	25368	25382	25396	25410	25424	25438	25452	25466	25326	
25479	25339	25353	25367	25381	25395	25409	25423	25437	25451	25465	25325	
25478	25338	25352	25366	25380	25394	25408	25422	25436	25450	25464	25324	
25477	25337	25351	25365	25379	25393	25407	25421	25435	25449	25463	25323	
25309	25169	25183	25197	25211	25225	25239	25253	25267	25281	25295	25155	
25310	25170	25184	25198	25212	25226	25240	25254	25268	25282	25296	25156	
Y 25311	25171	25185	25199	25213	25227	25241	25255	25269	25283	25297	25157	
Z X 25312	25172	25186	25200	25214	25228	25242	25256	25270	25284	25298	25158	
25313	25173	25187	25201	25215	25229	25243	25257	25271	25285	25299	25159	

Figure A10 Element Number

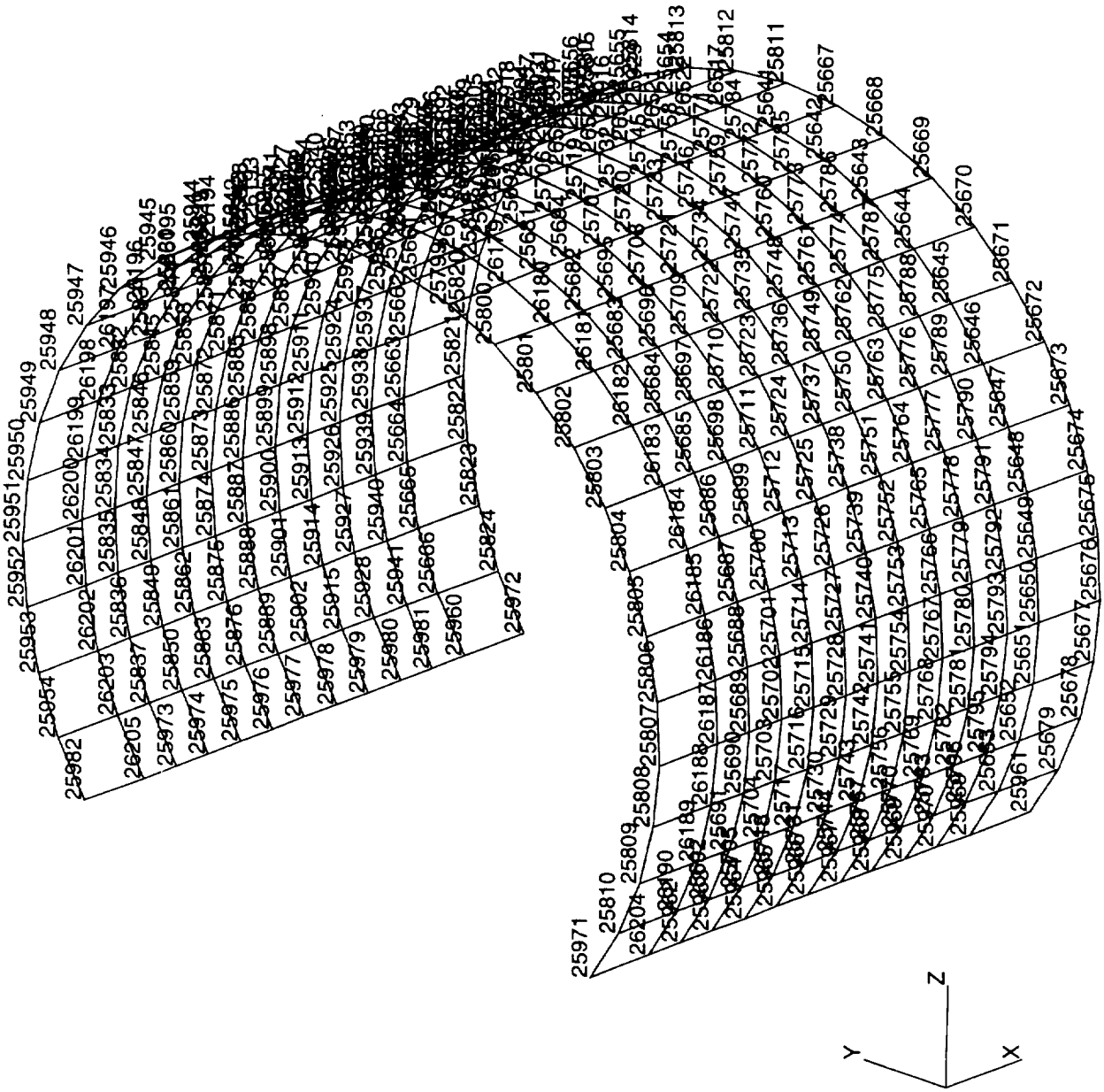

Figure A11 Grid Point Number

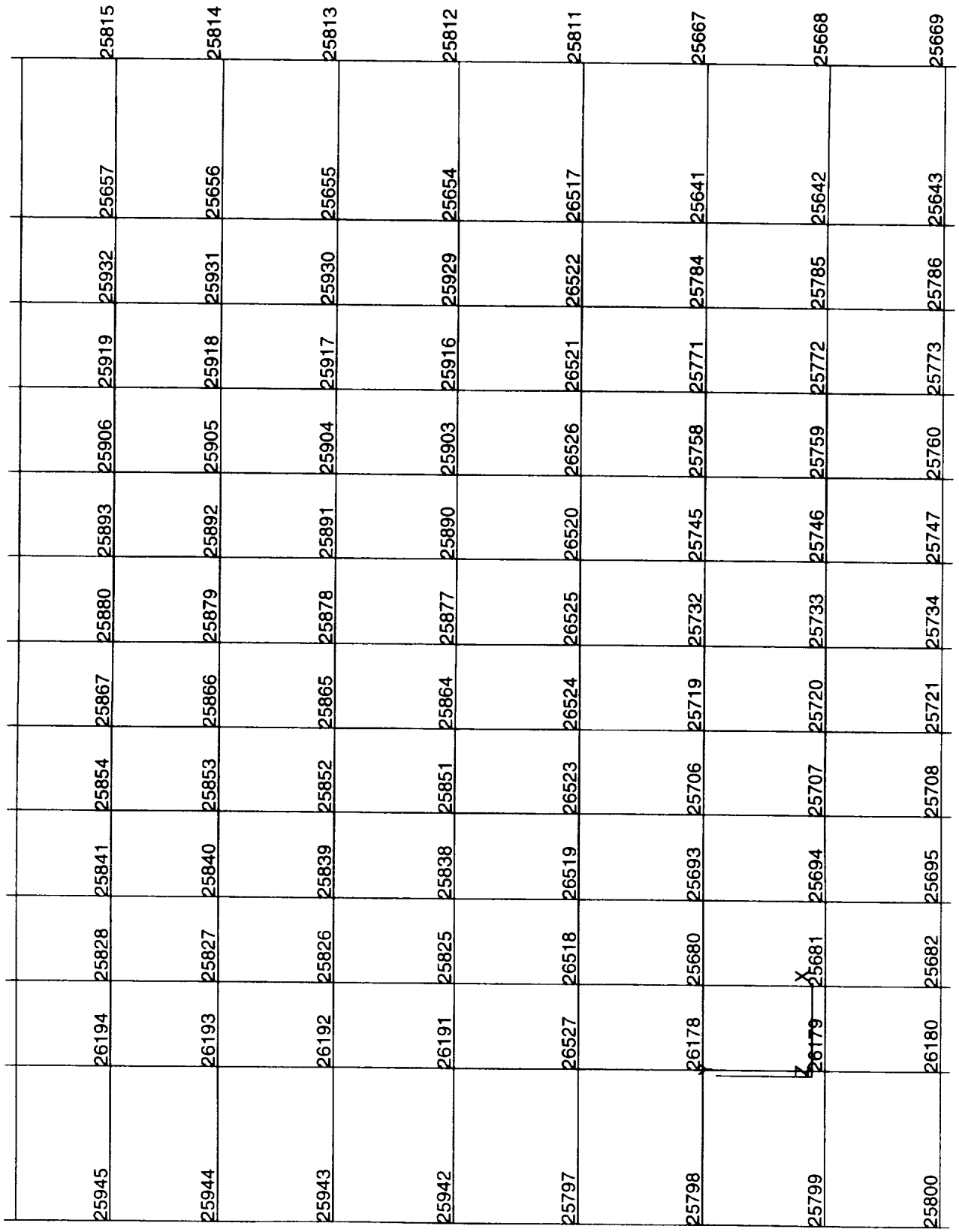

Figure A12 Grid Point Number

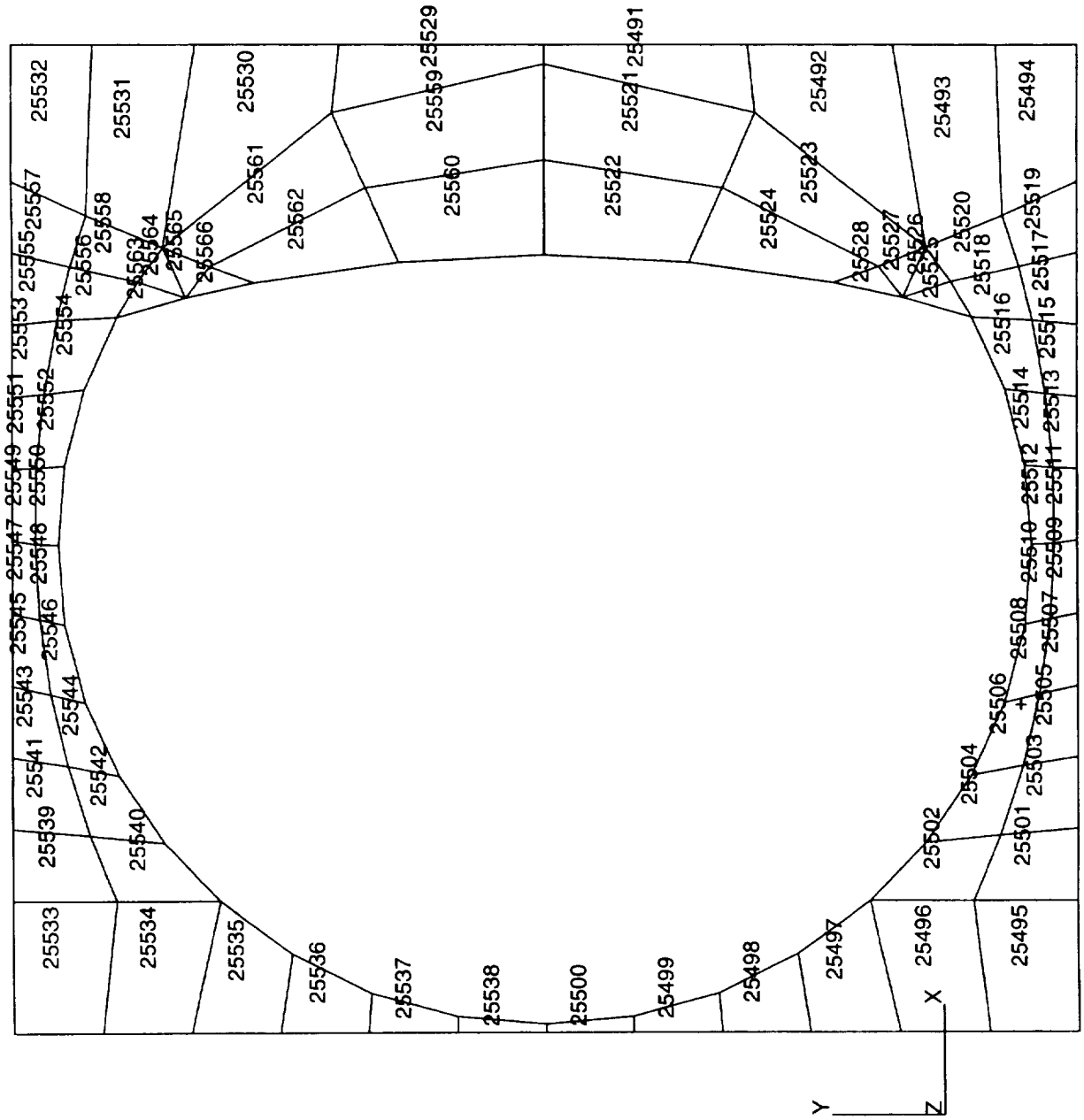

Figure A13 Shroud Plate PShell = 20105 Element Number

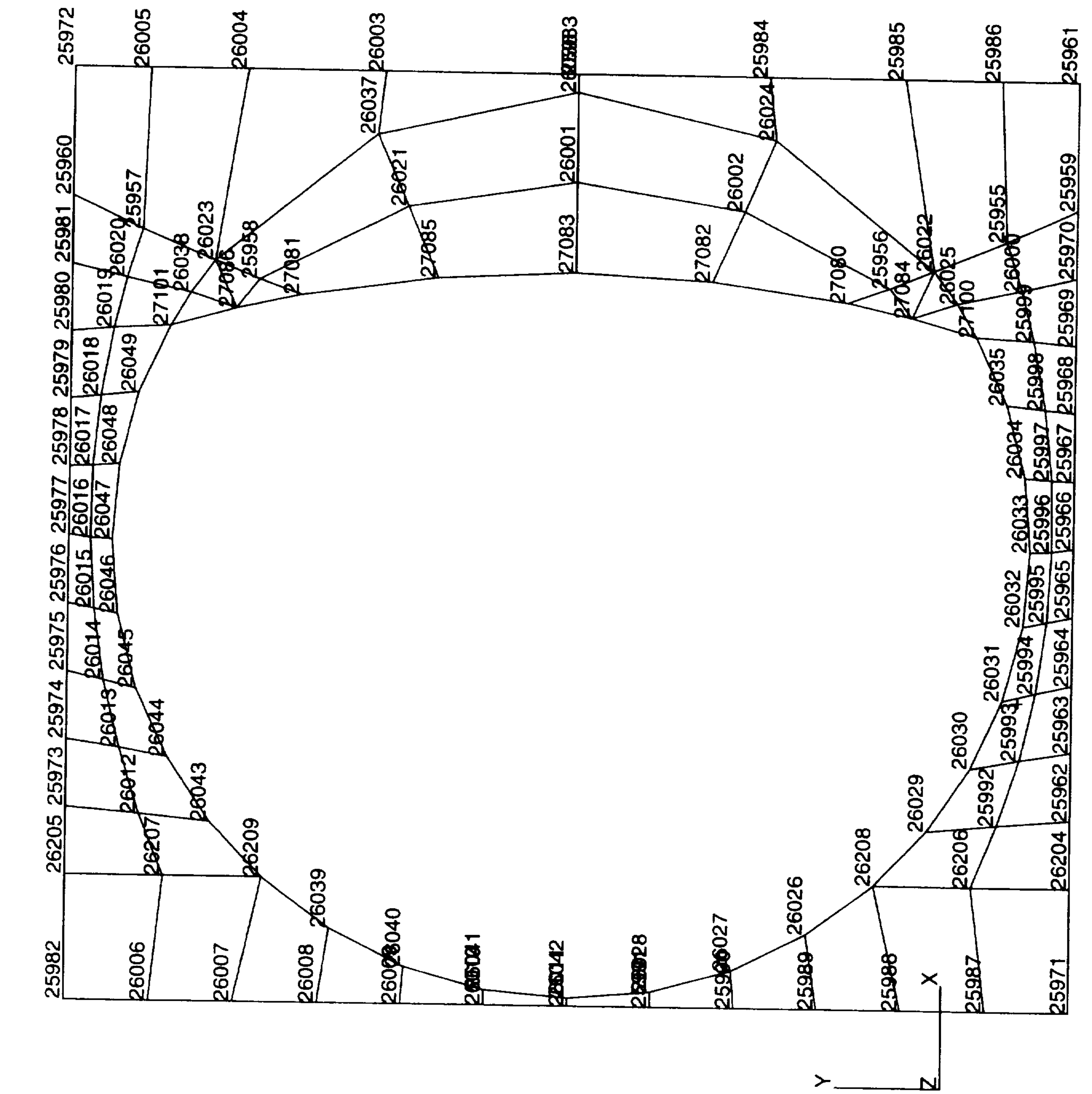

Figure A14 Grid Point Number

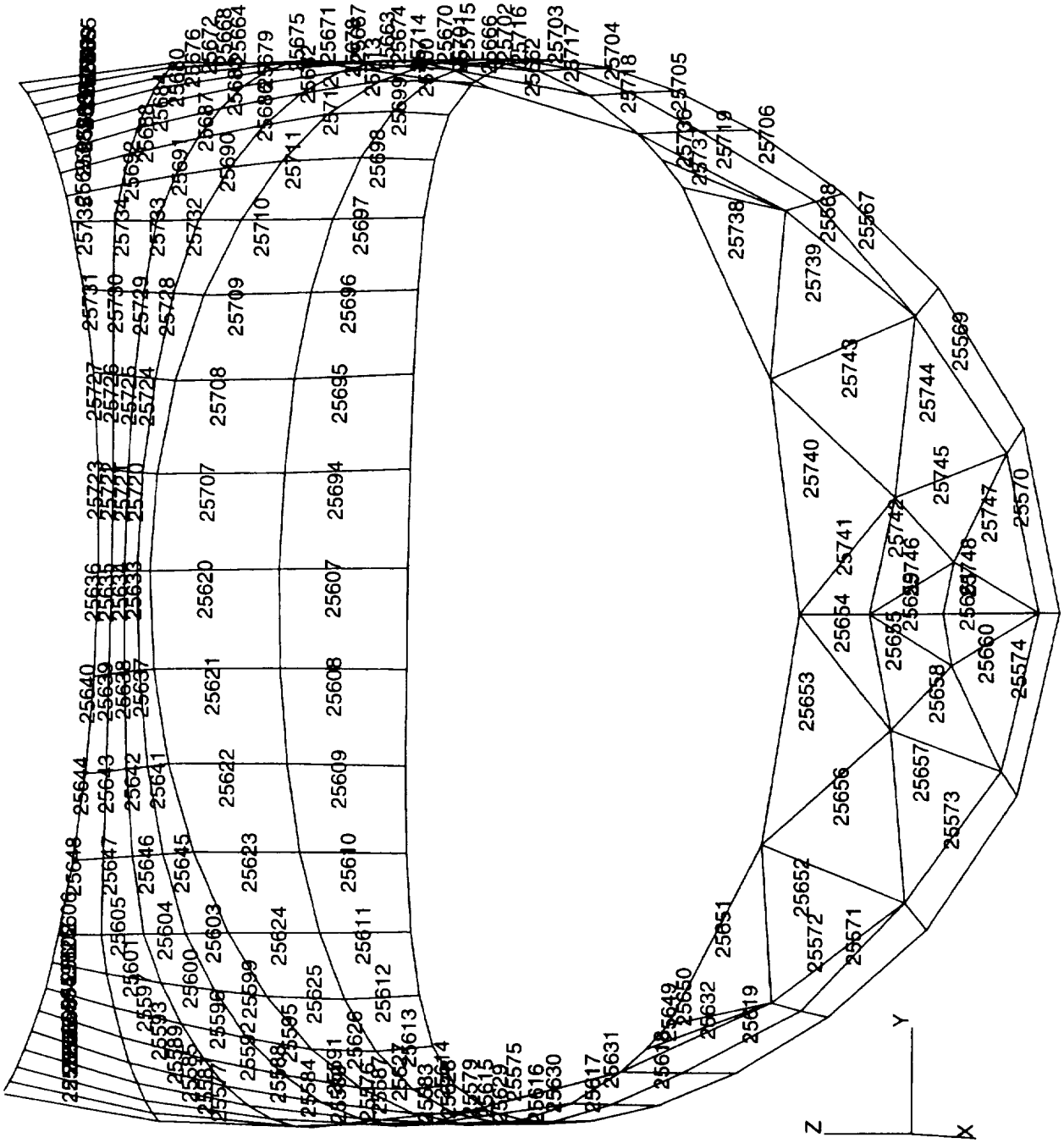

Figure A15 Secondary Shroud PShell = 20106 Element Number

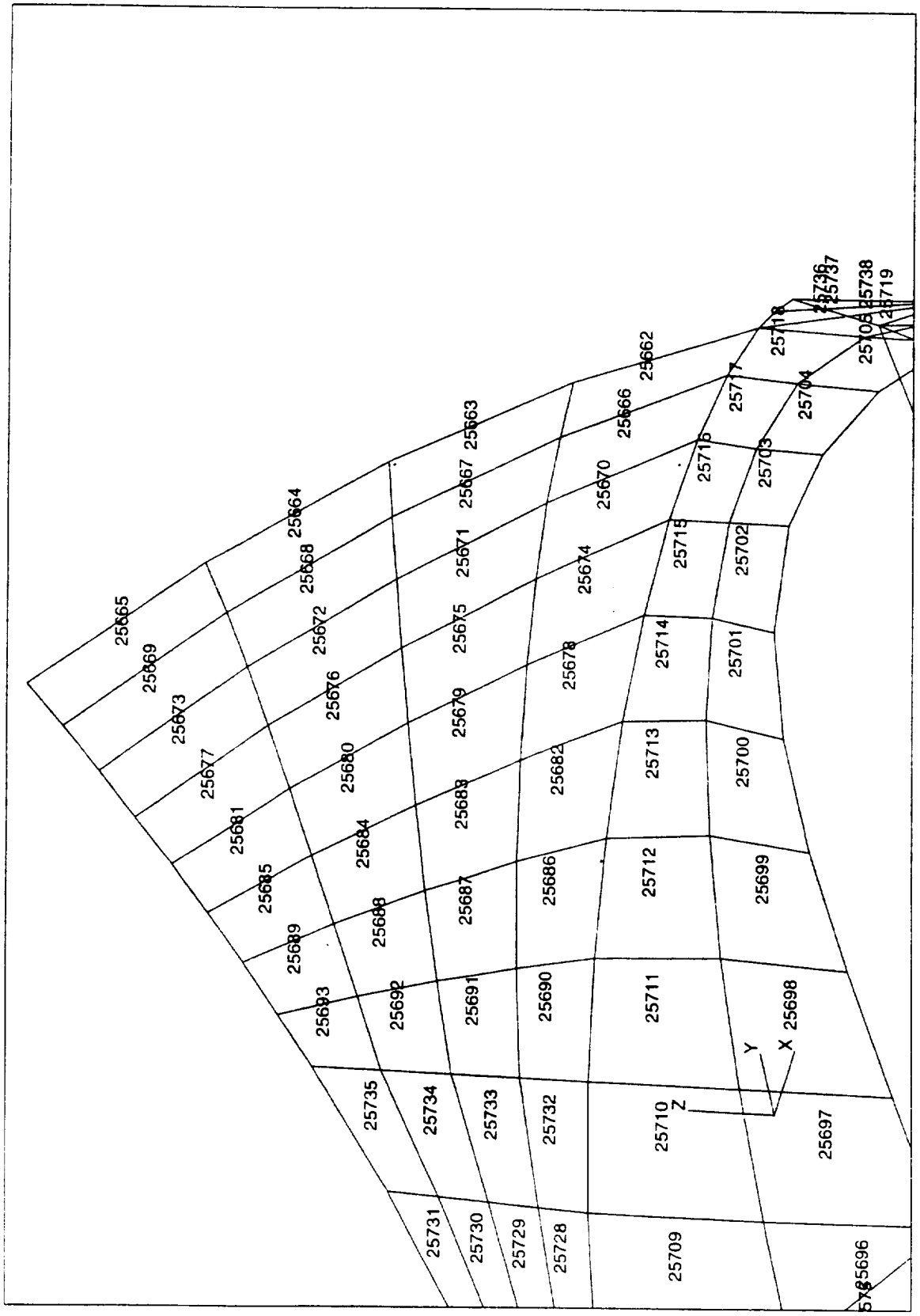

Figure A16 Element Number

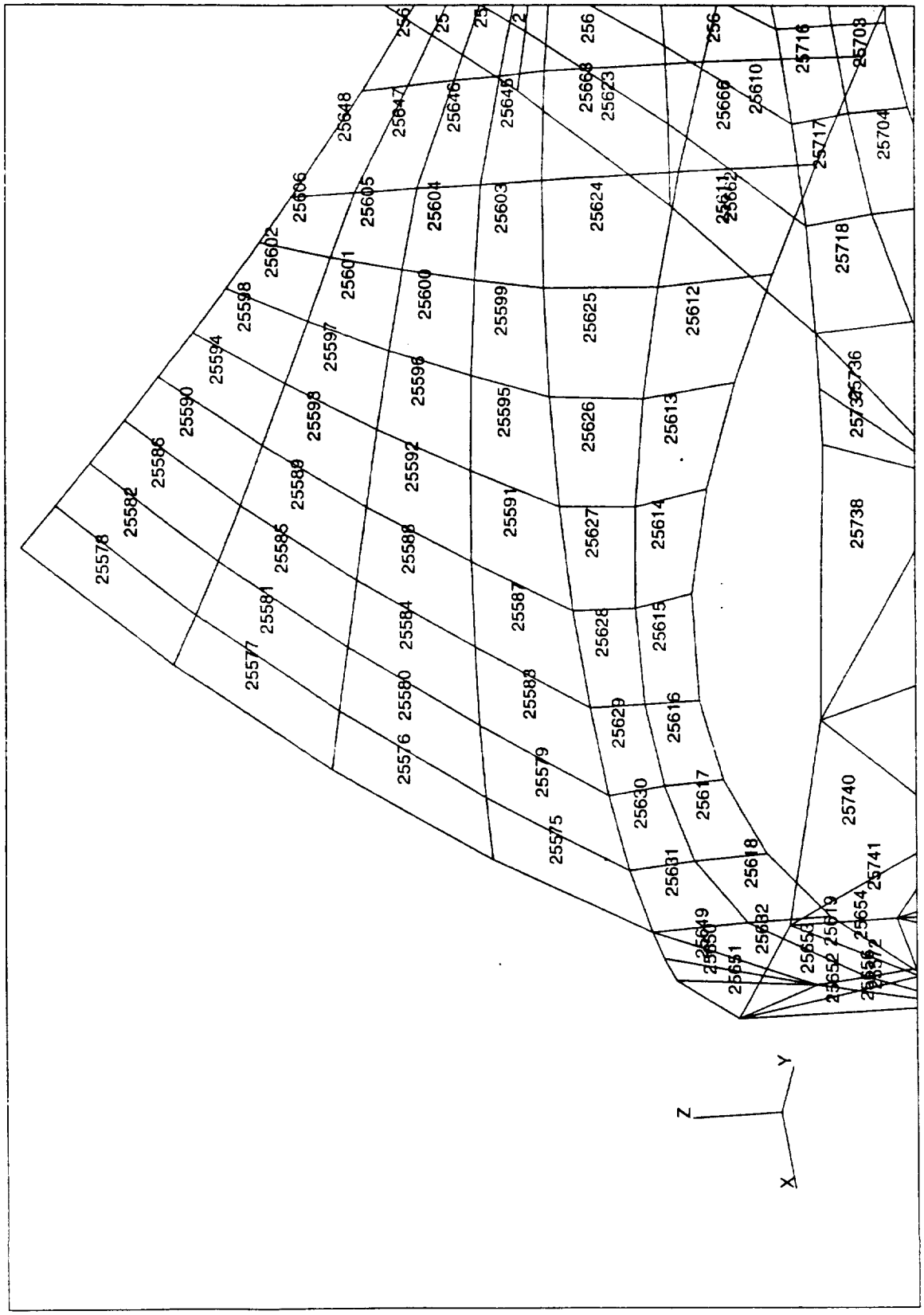

Figure A17 Element Number

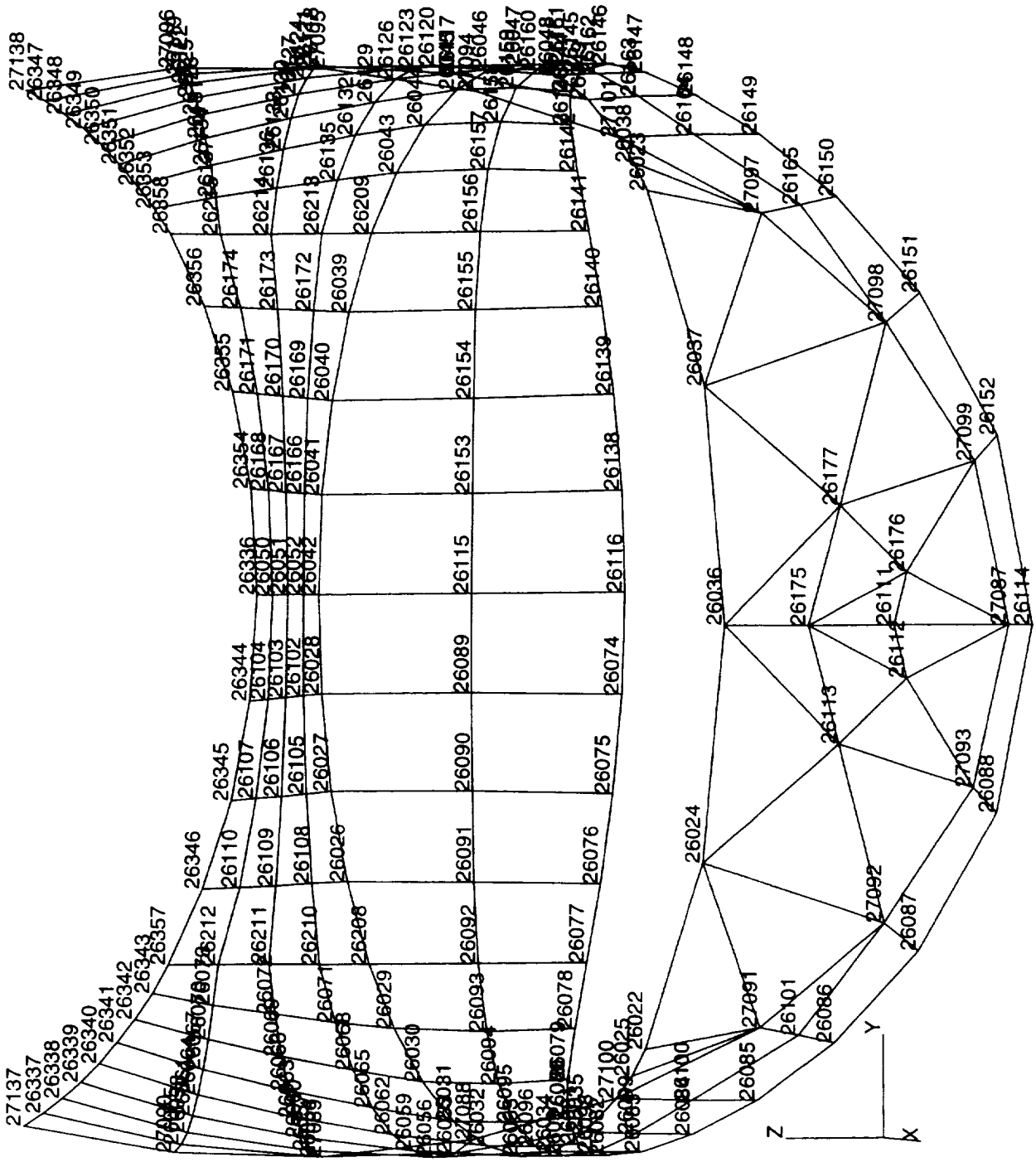

Figure A18 Grid Point Number

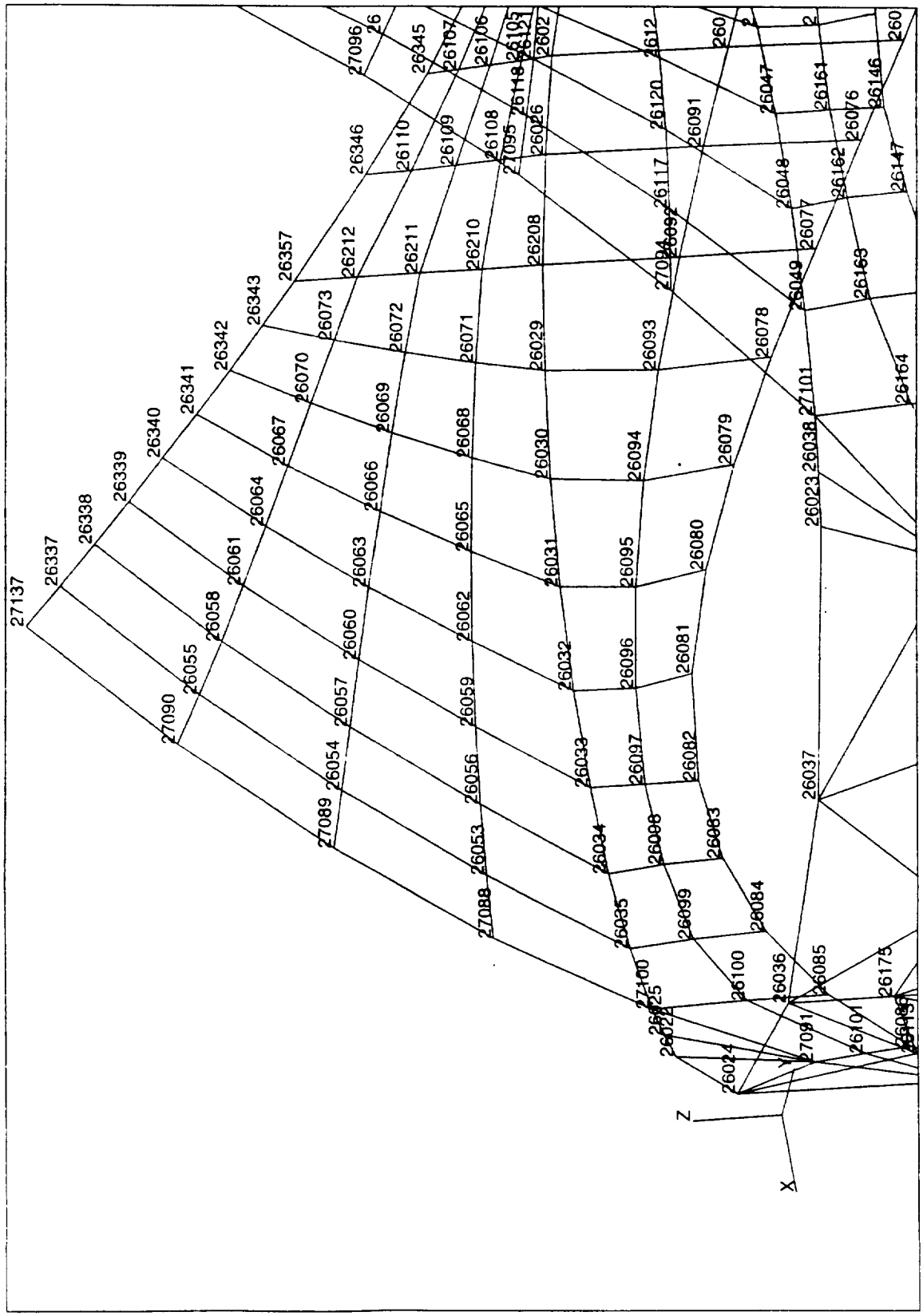

Figure A19 Grid Point Number

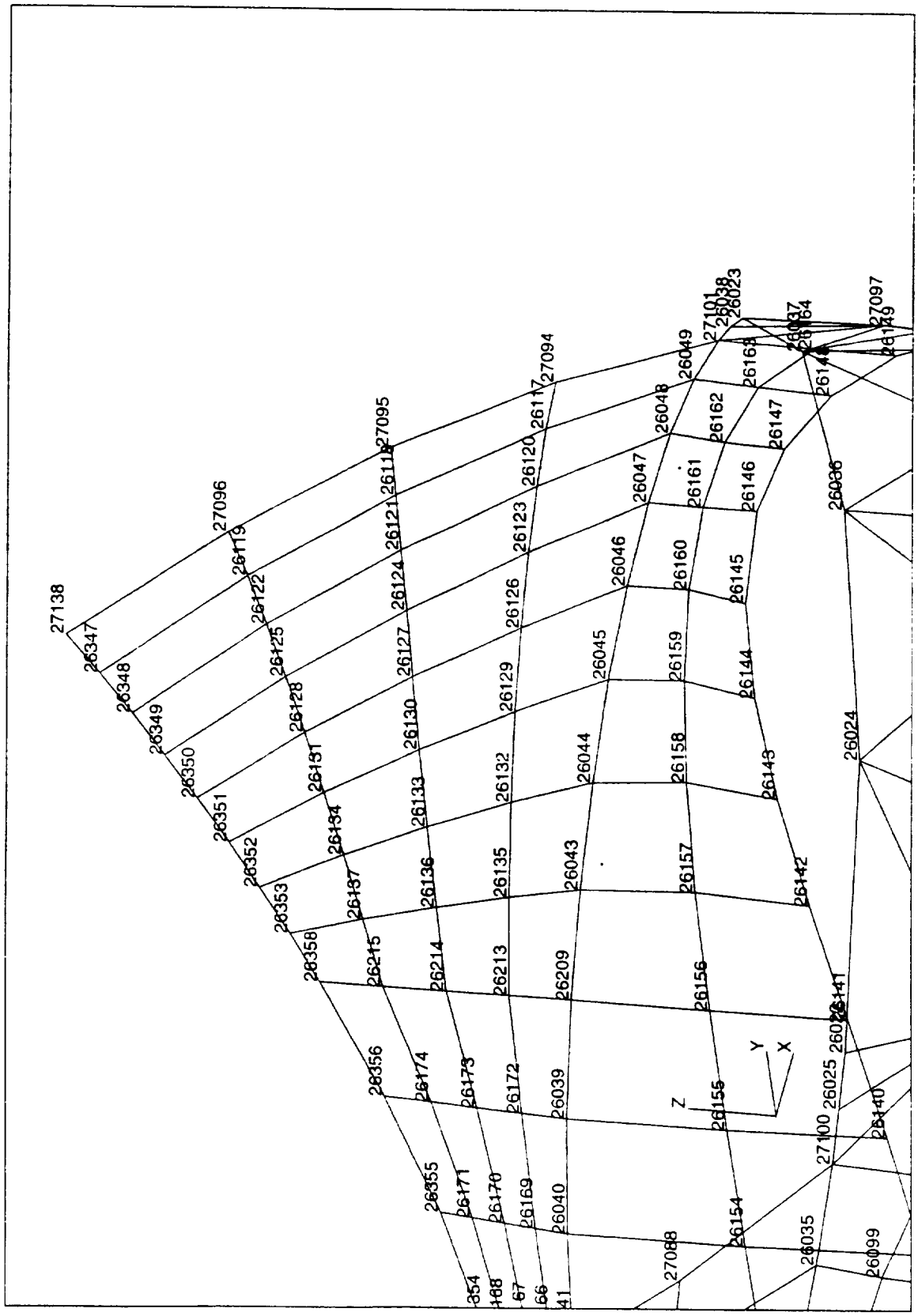

Figure A20 Grid Point Number

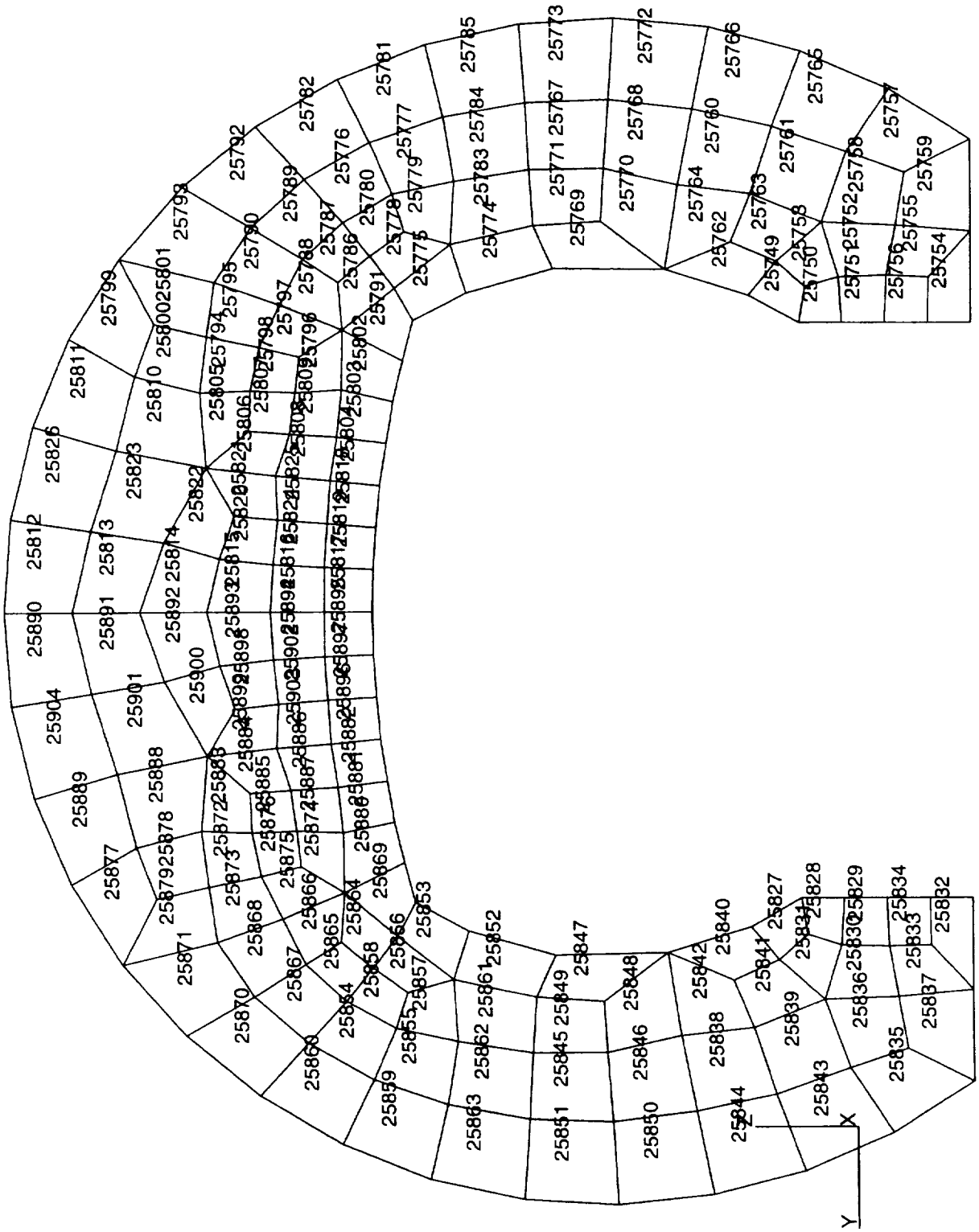

Figure A20 Forward Bulk Head Pshell = 20108 Element Number

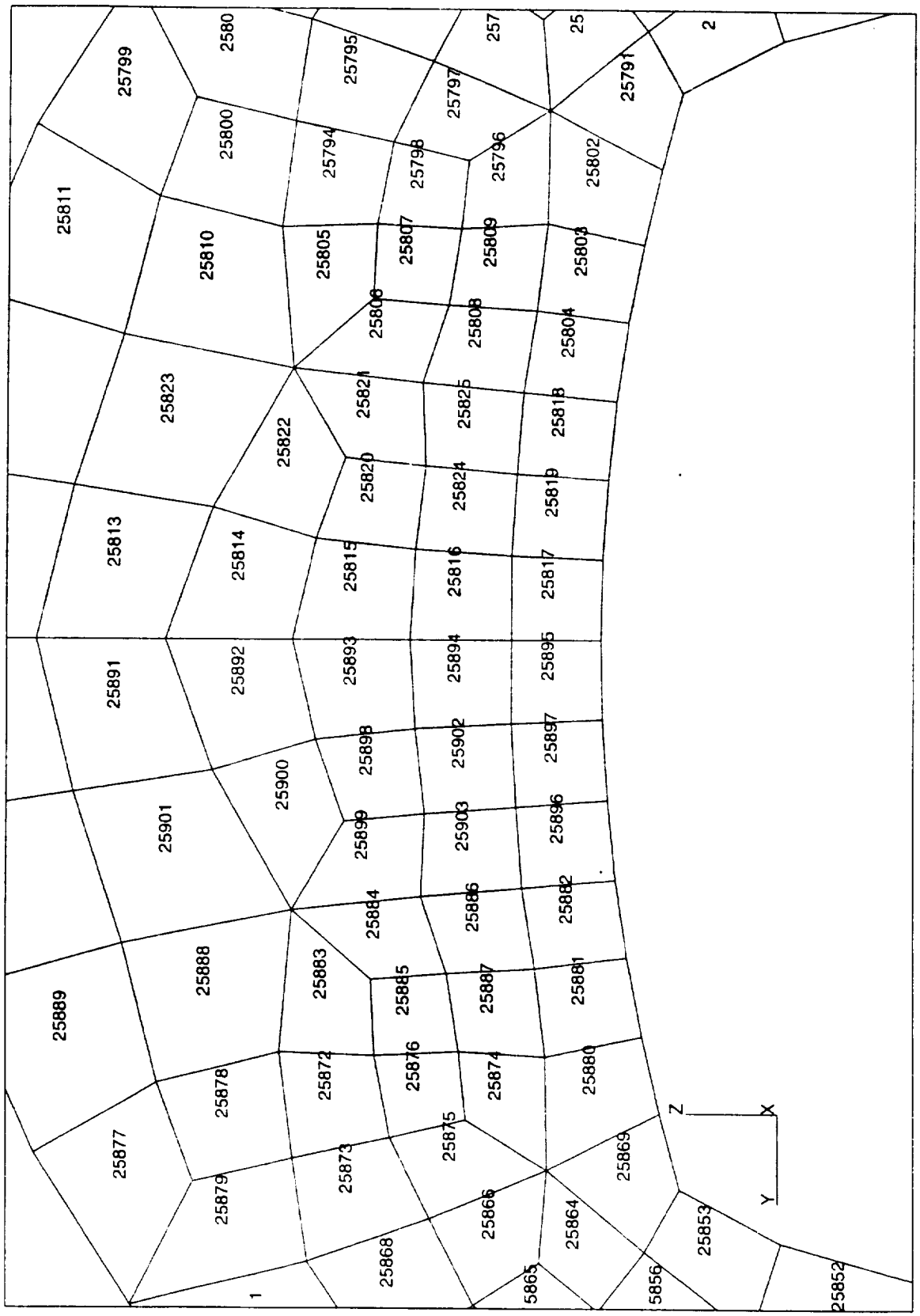

Figure A22 Element Number

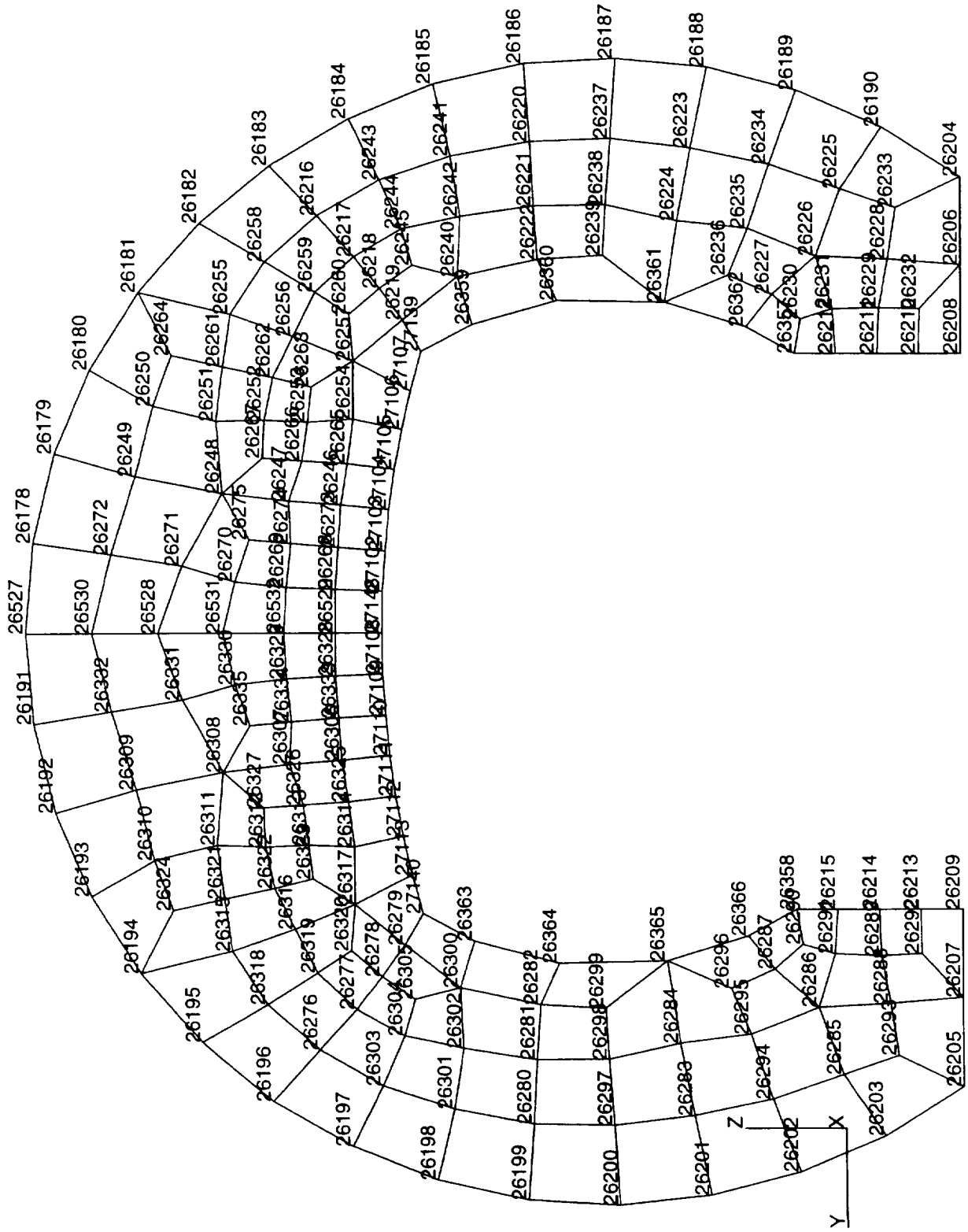

Figure A23 Grid Point Number

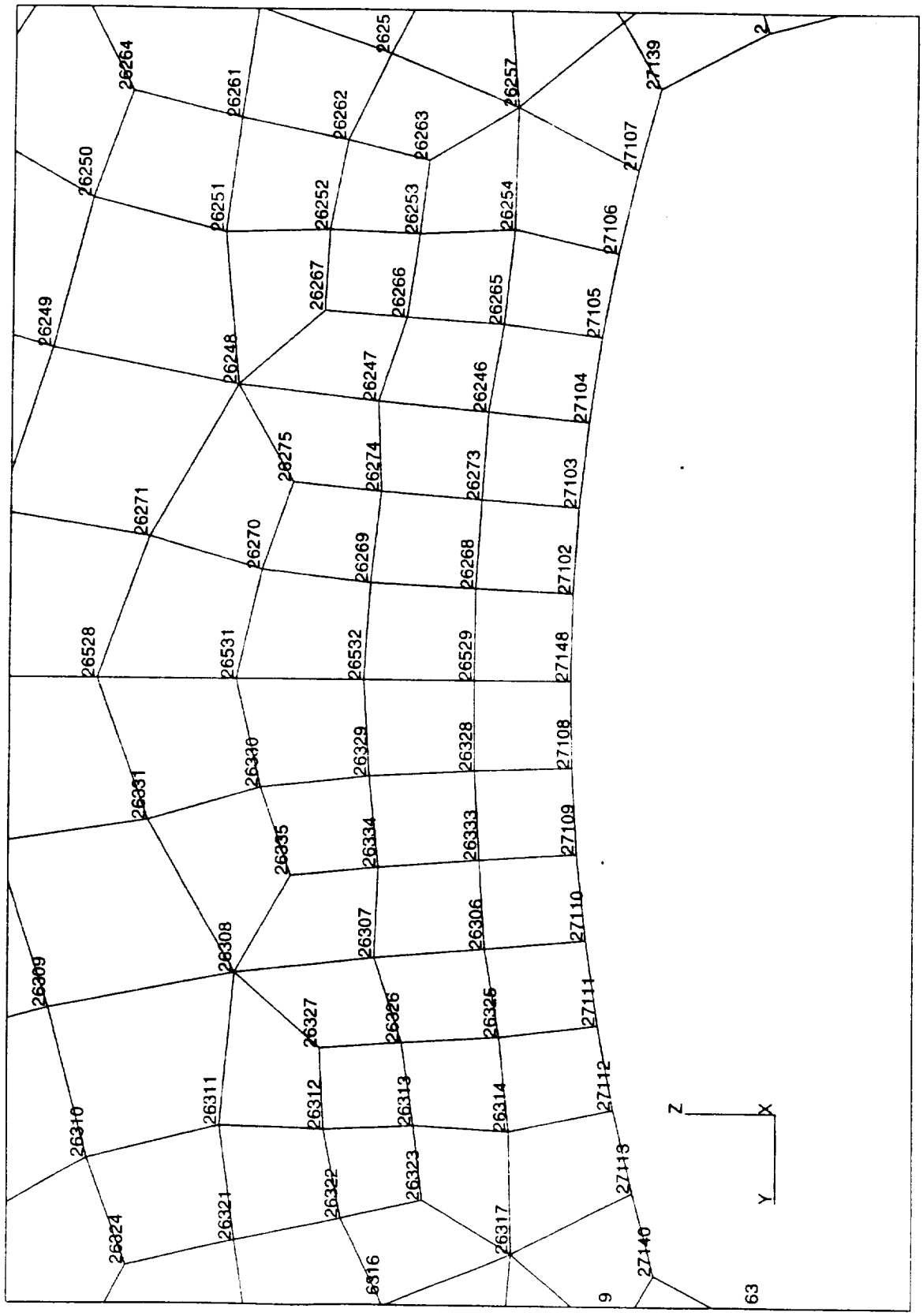

Figure A24 Grid Point Number

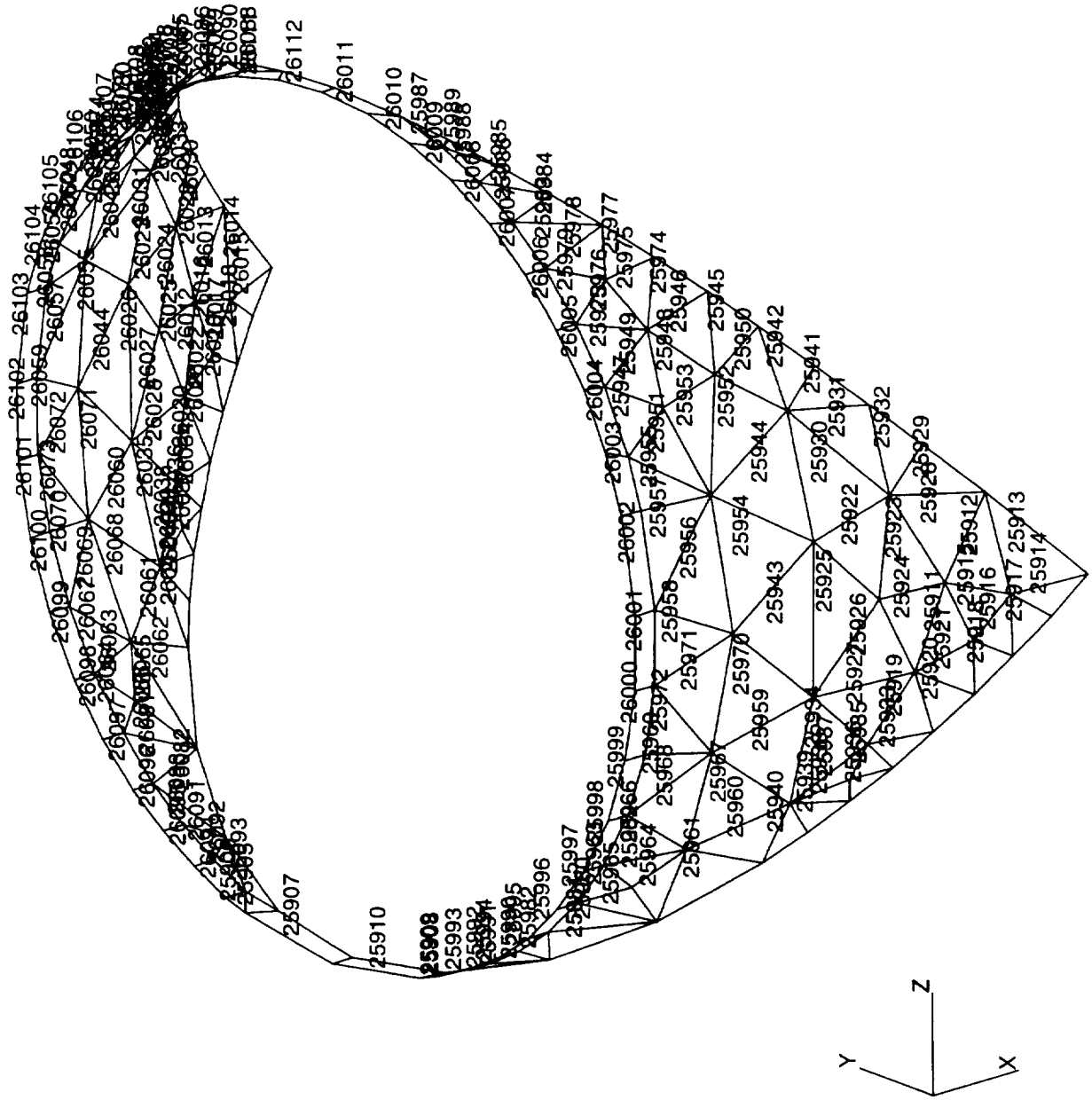

Figure A25 Forward Cone Pshell = 20109 Element Number

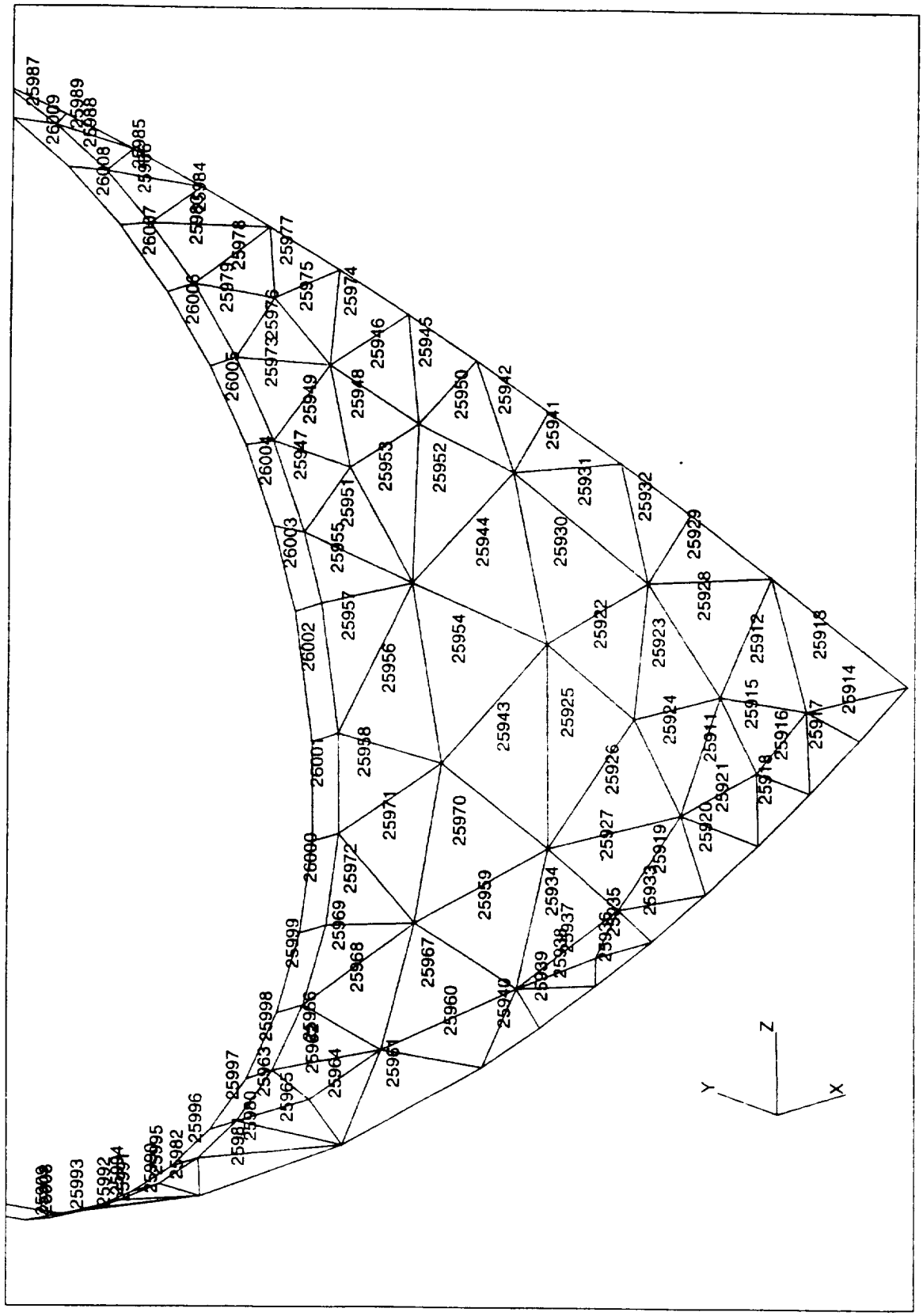

Figure A26 Element Number

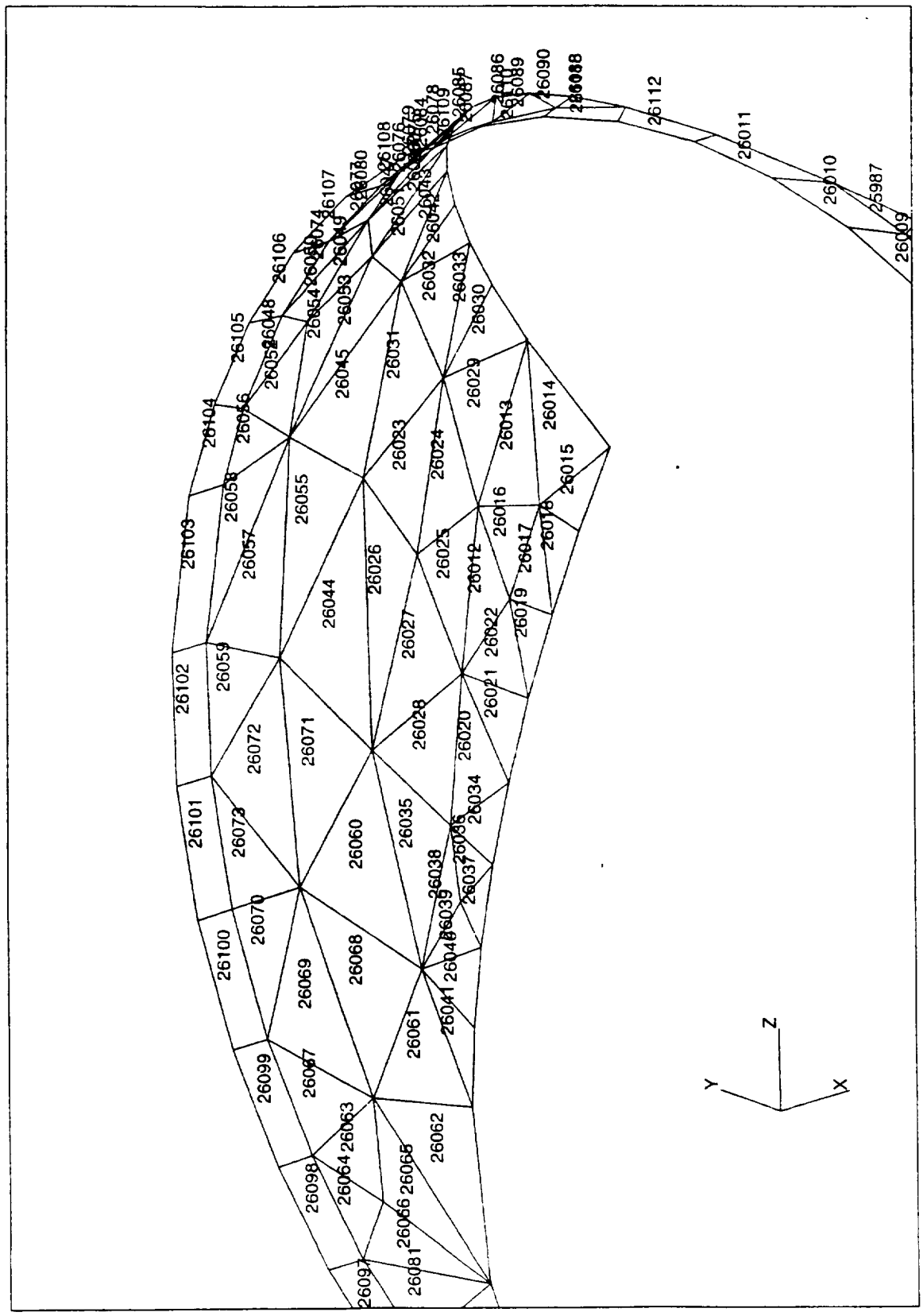

Figure A27 Element Number

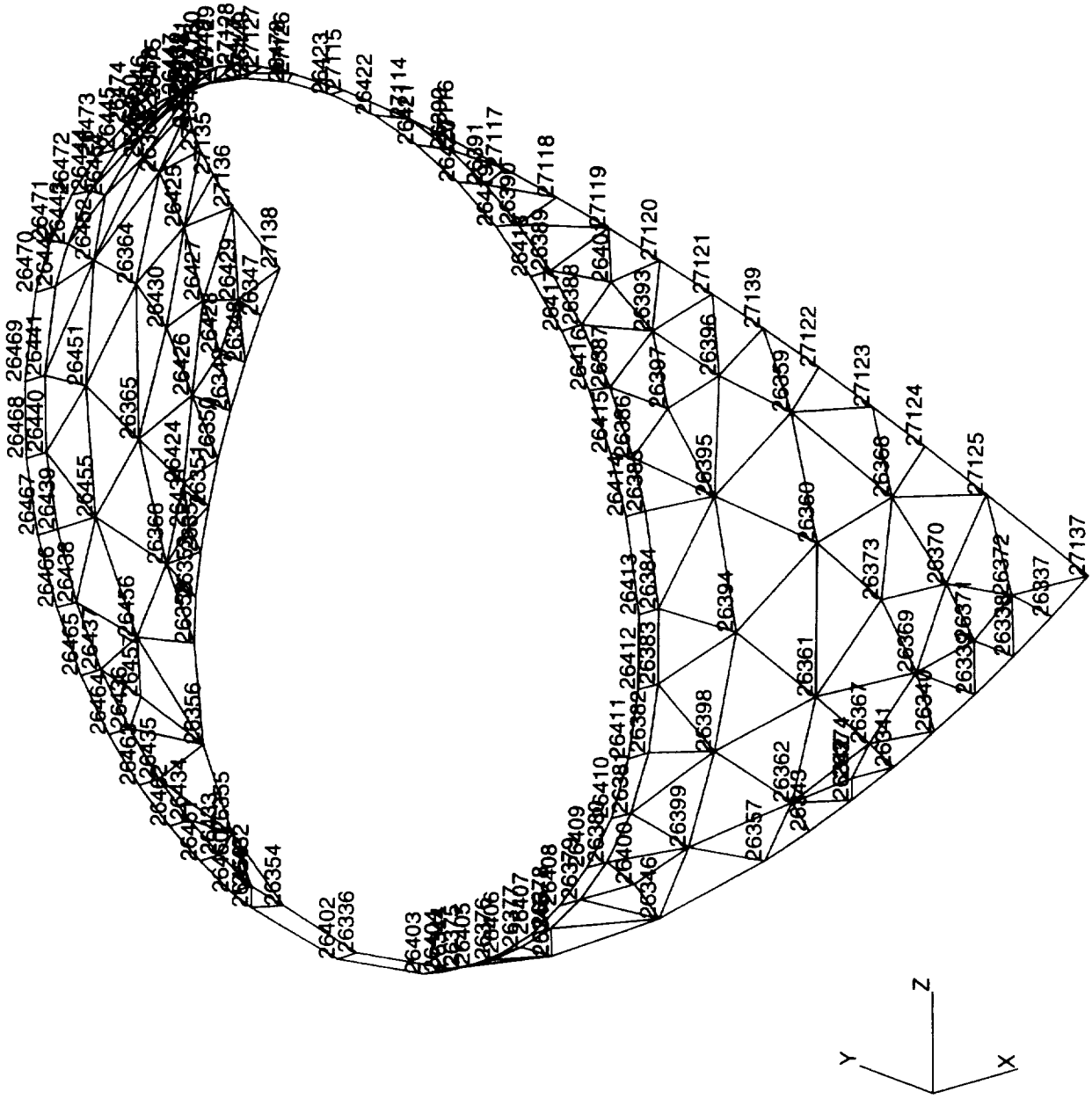

Figure A28 Grid Point Number

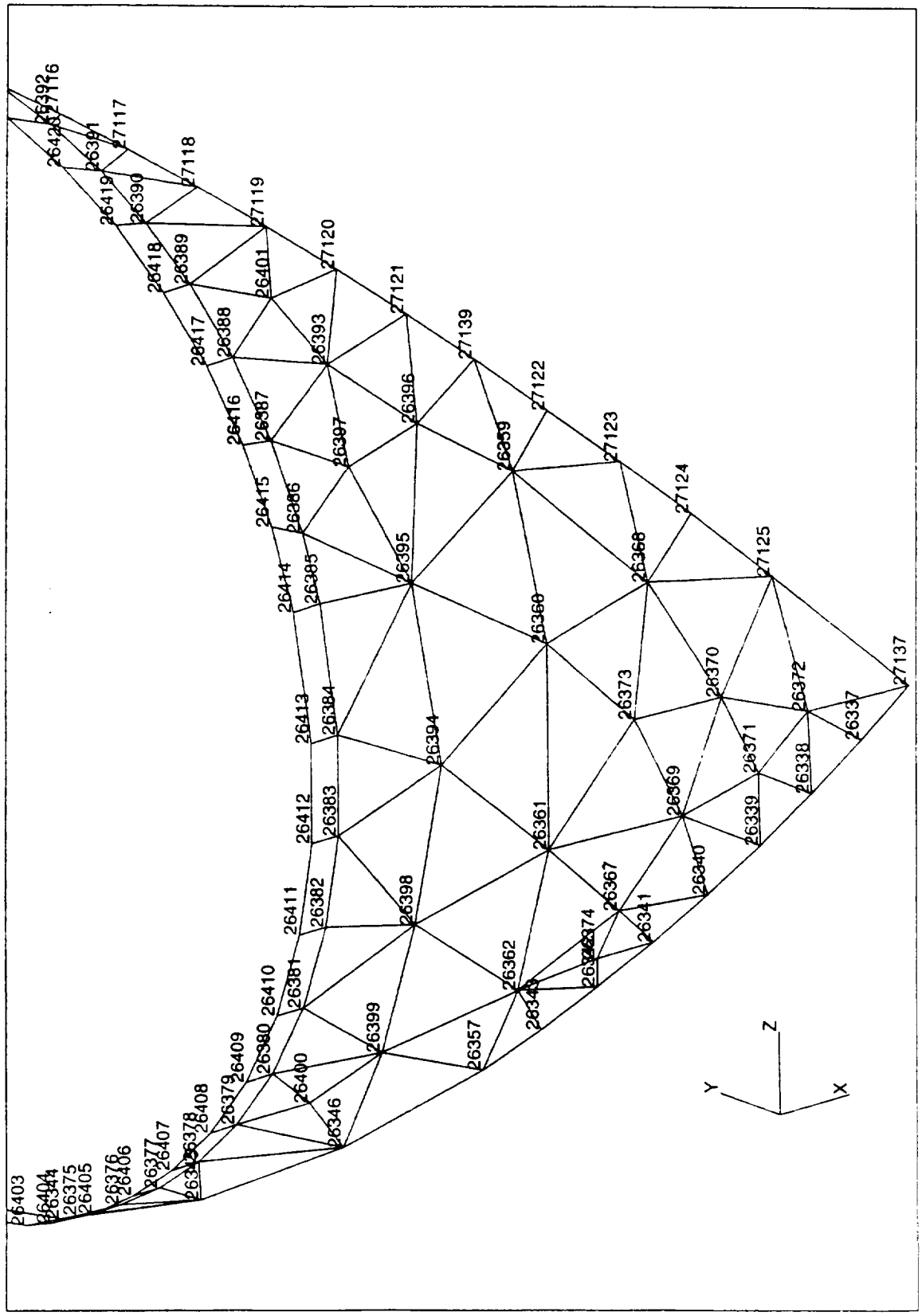

Figure A29 Grid Point Number

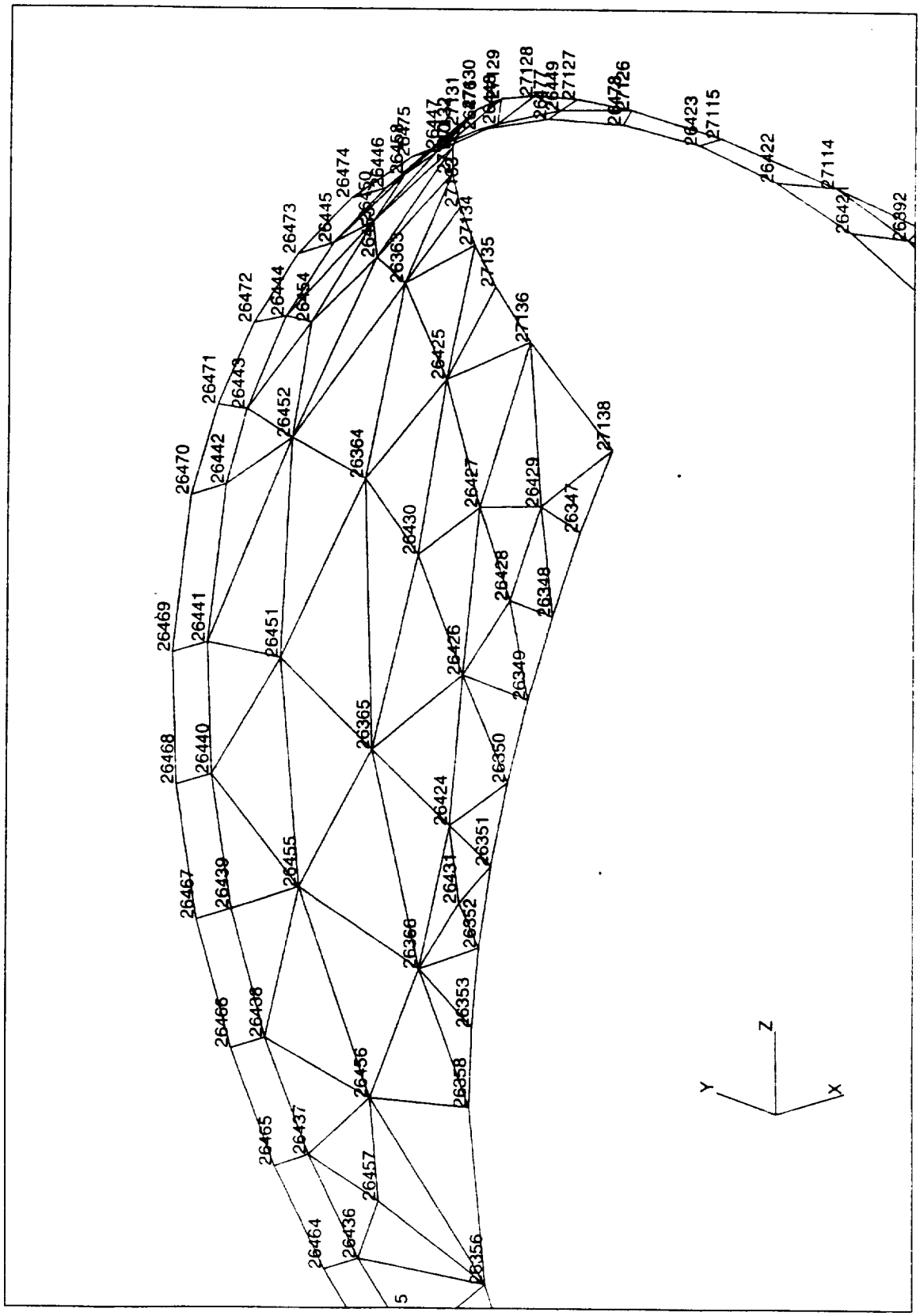

Figure A30 Grid Point Number

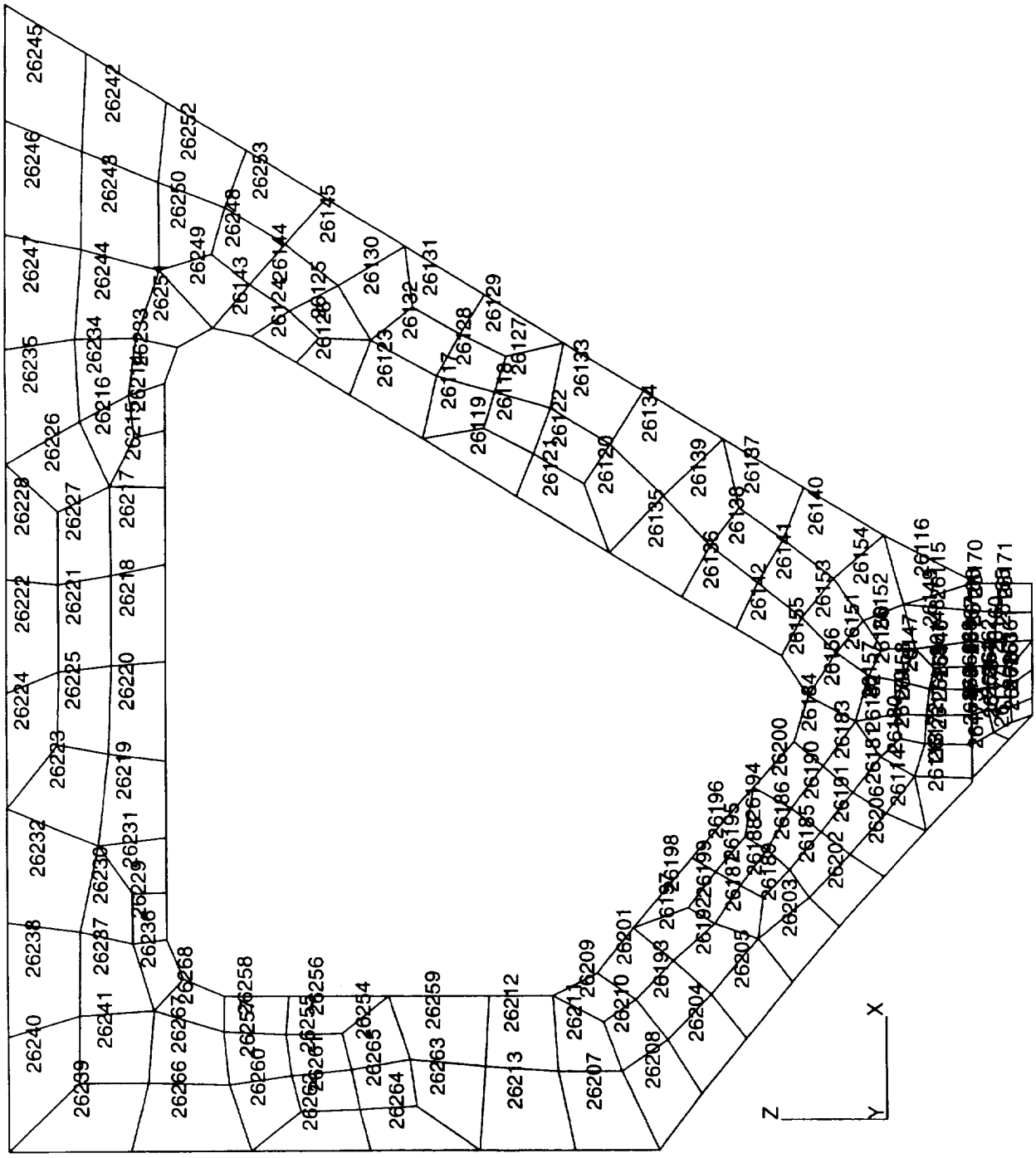

Figure A31 Vertical Web Pshell = 20110 Element Number

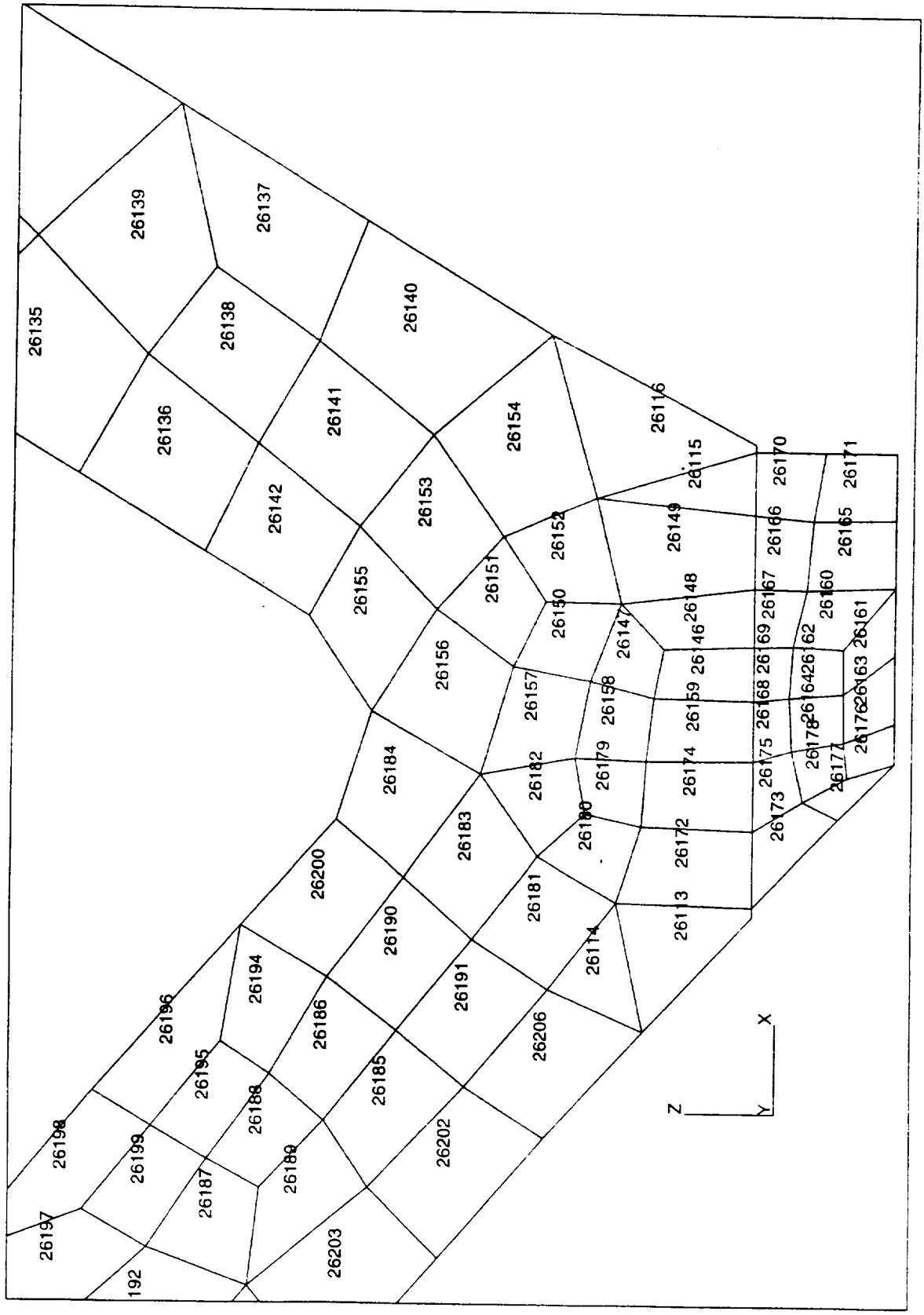

Figure A32 Element Number

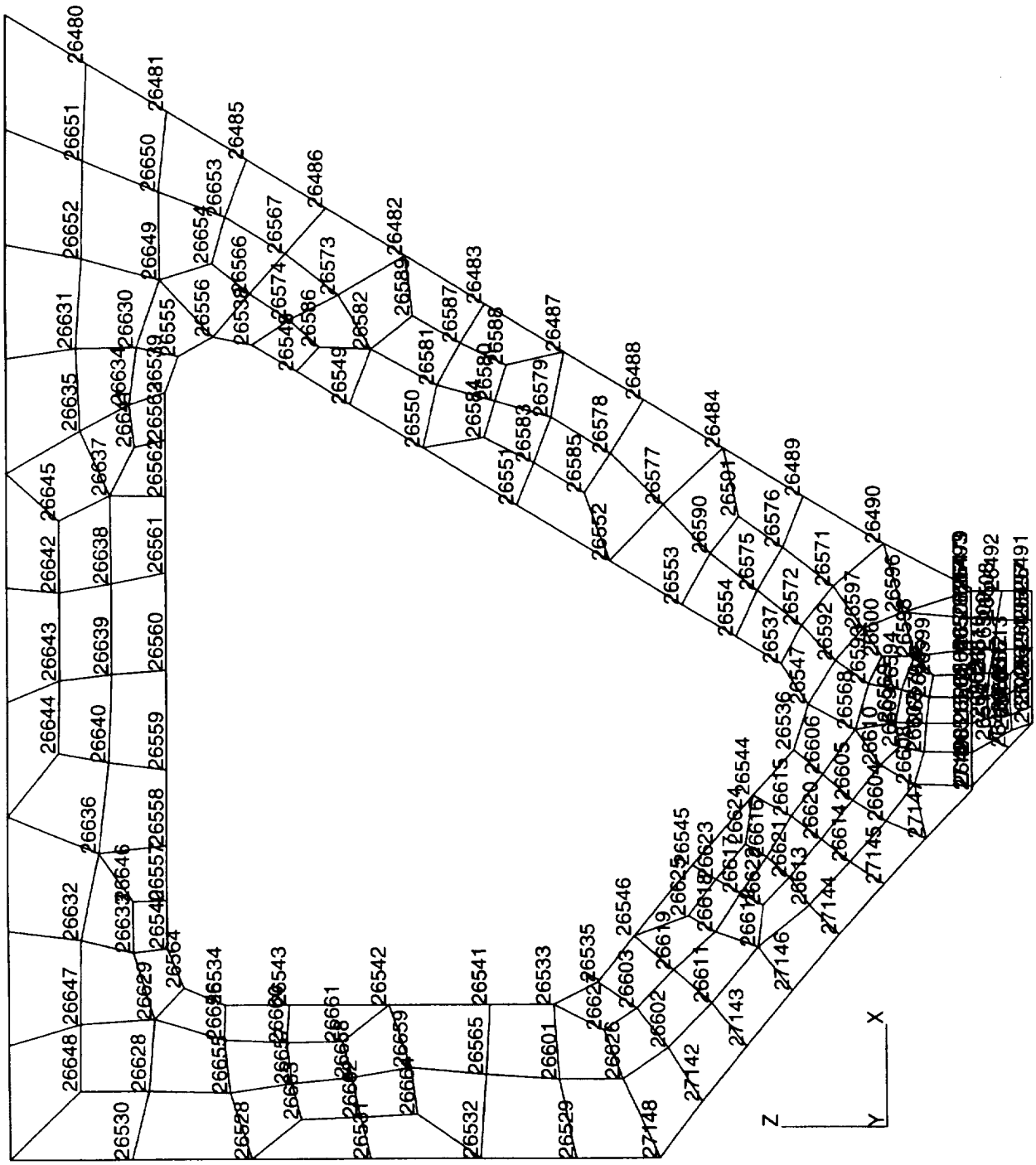

Figure A33 Grid Point Number

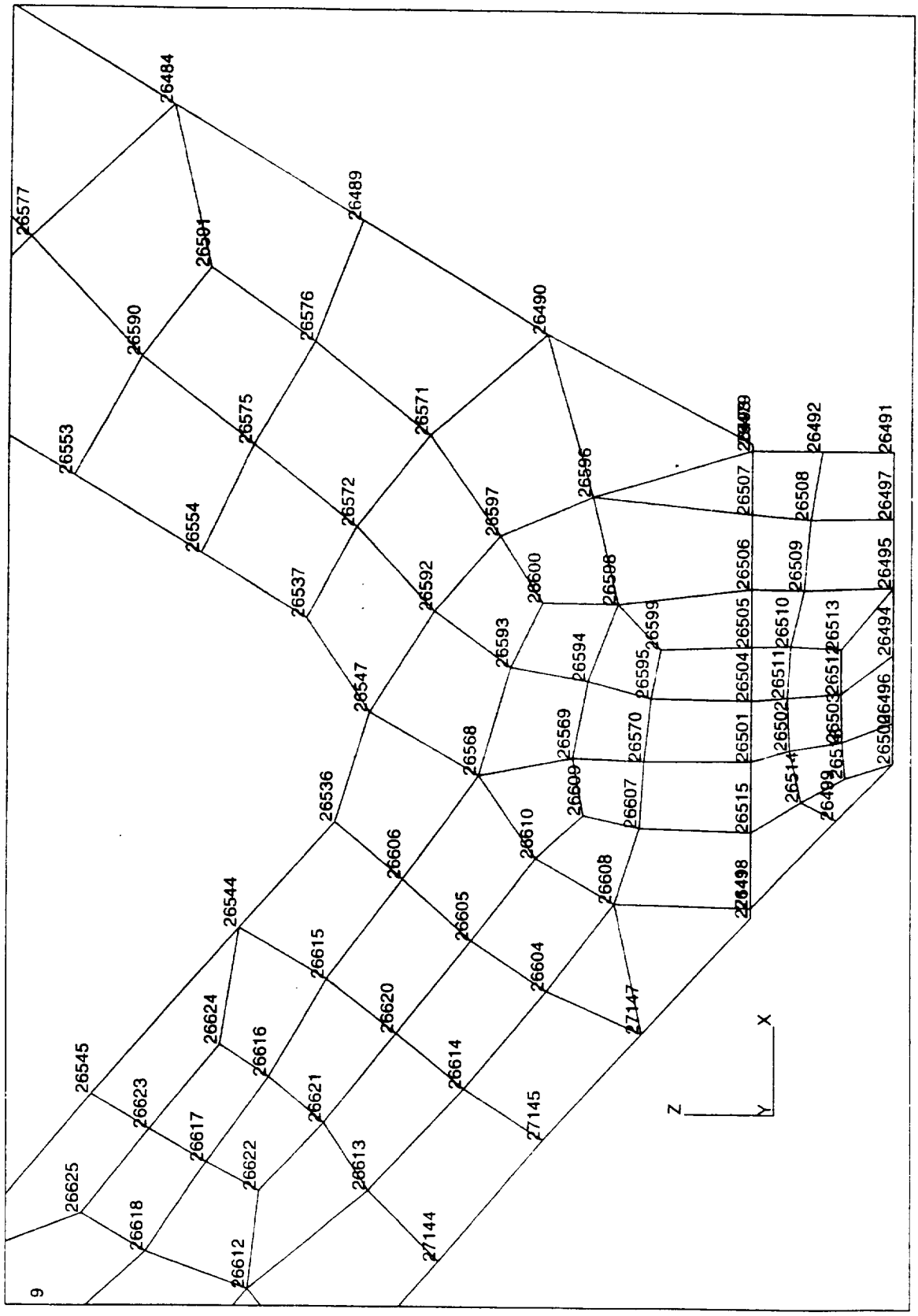

Figure A34 Grid Point Number

Appendix B

DESIGN LIMIT LOAD ANALYSIS

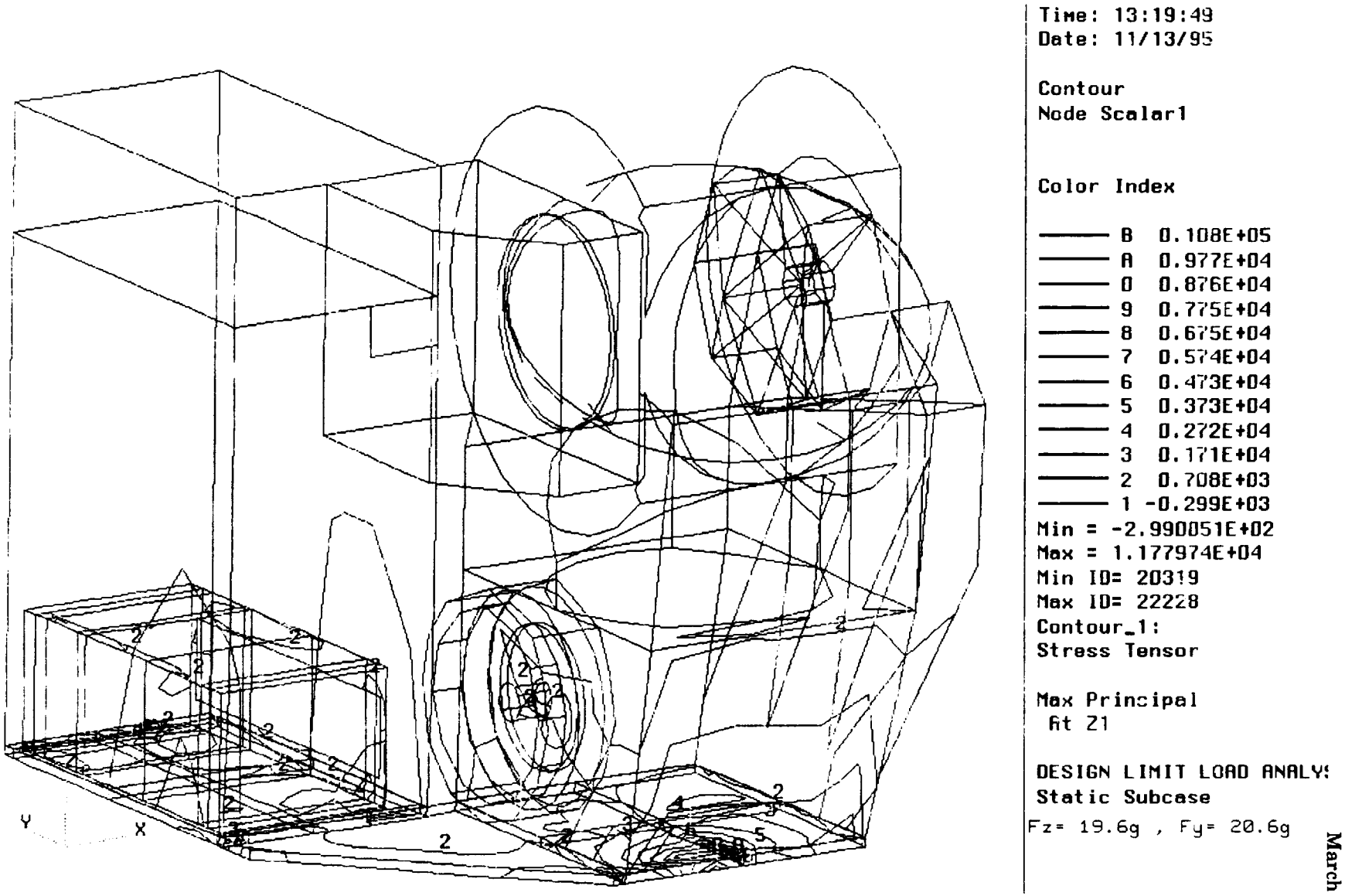

Figure B1 Design Limit Load Nastran Load Case 1 Max Principal Stress, Z1

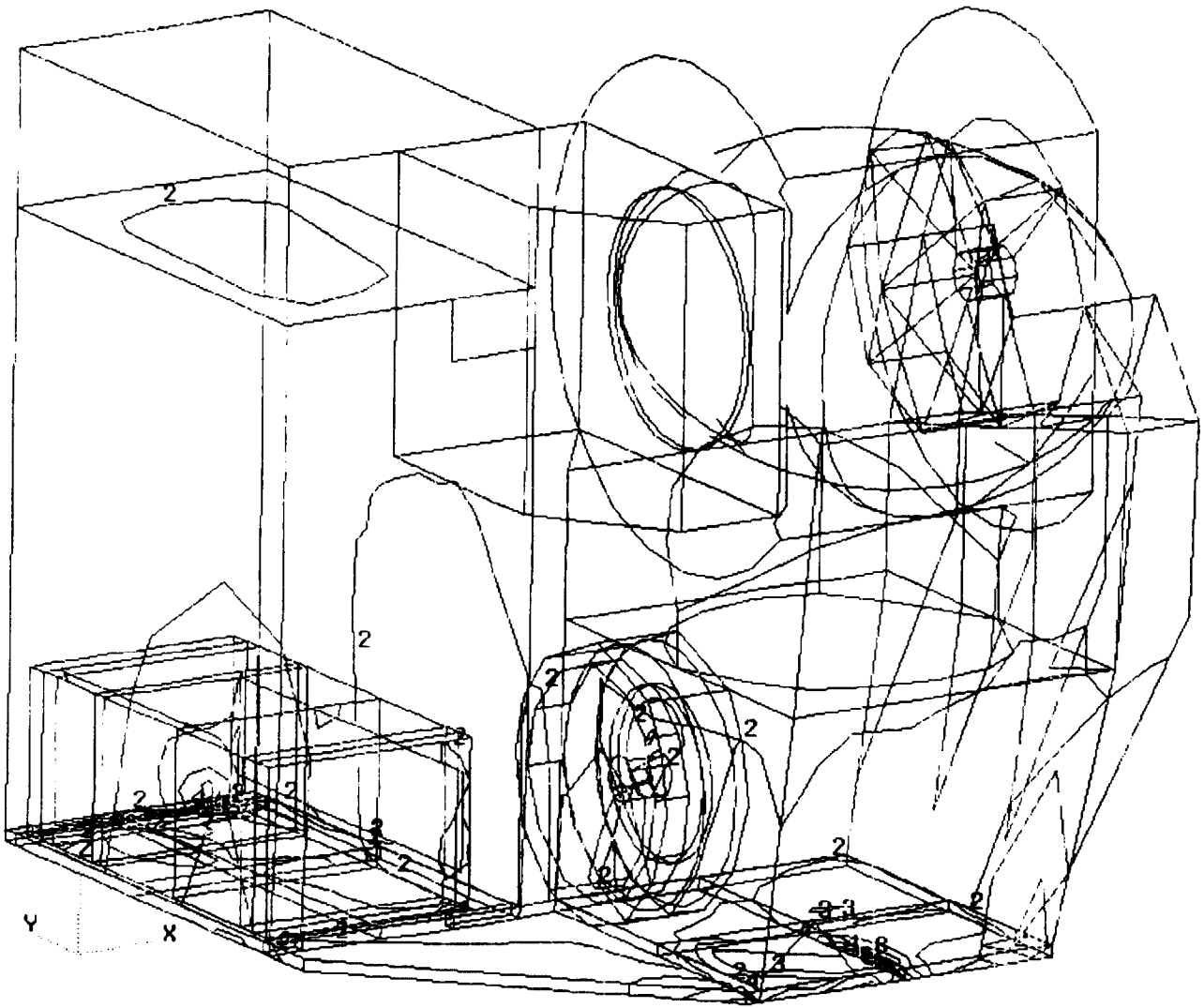

Time: 14:08:39
Date: 11/13/95

Contour
Node Scalar1

Color Index

B 0.112E+05
A 0.101E+05
0 0.904E+04
9 0.798E+04
8 0.693E+04
7 0.587E+04
6 0.481E+04
5 0.375E+04
4 0.270E+04
3 0.164E+04
2 0.580E+03
1 -0.477E+03
Min = -4.771223E+02
Max = 1.221240E+04
Min ID= 20311
Max ID= 22228
Contour_2:
Stress Tensor

Max Principal
At Z2

DESIGN LIMIT LOAD ANALYS
Static Subcase
Fz= 19.6g , Fy= 20.6g

Figure B2 Design Limit Load Nastran Load Case 1 Max Principal Stress, Z2

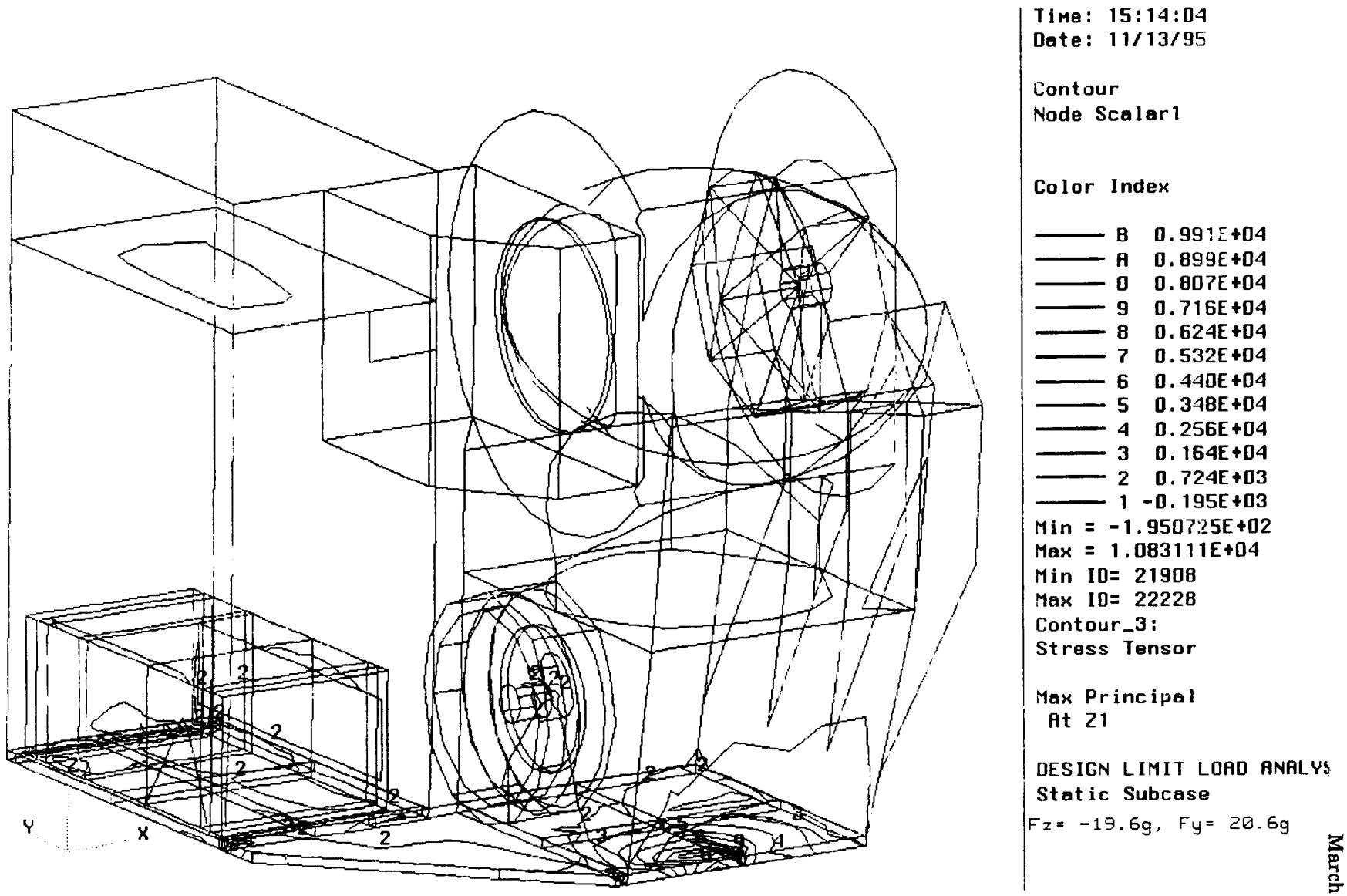

Figure B3 Design Limit Load Nastran Load Case 2 Max Principal Stress, Z1

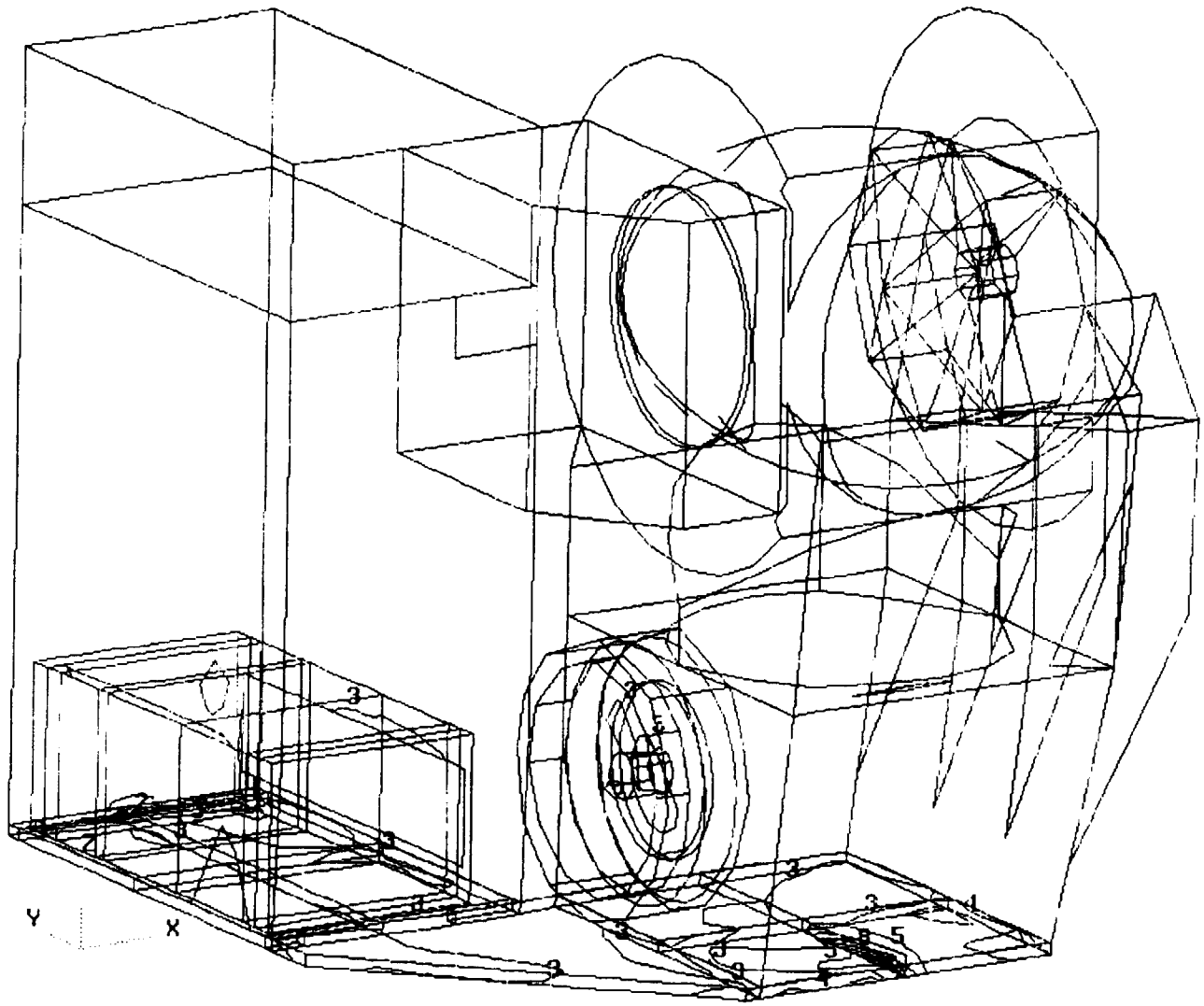

Time: 15:16:39
Date: 11/13/95

Contour
Node Scalar1

Color Index

B 0.102E+05
A 0.918E+04
0 0.814E+04
9 0.709E+04
8 0.605E+04
7 0.500E+04
6 0.396E+04
5 0.291E+04
4 0.187E+04
3 0.821E+03
2 -0.224E+03
1 -0.127E+04

Min = -1.269172E+03
Max = 1.127443E+04
Min ID= 20311
Max ID= 22228
Contour_4:
Stress Tensor

Max Principal
At Z2

DESIGN LIMIT LOAD ANALYS
Static Subcase
Fz= -19.6g, Fy= 20.6g

Figure B4 Design Limit Load Nastran Load Case 2 Max Principal Stress, Z2

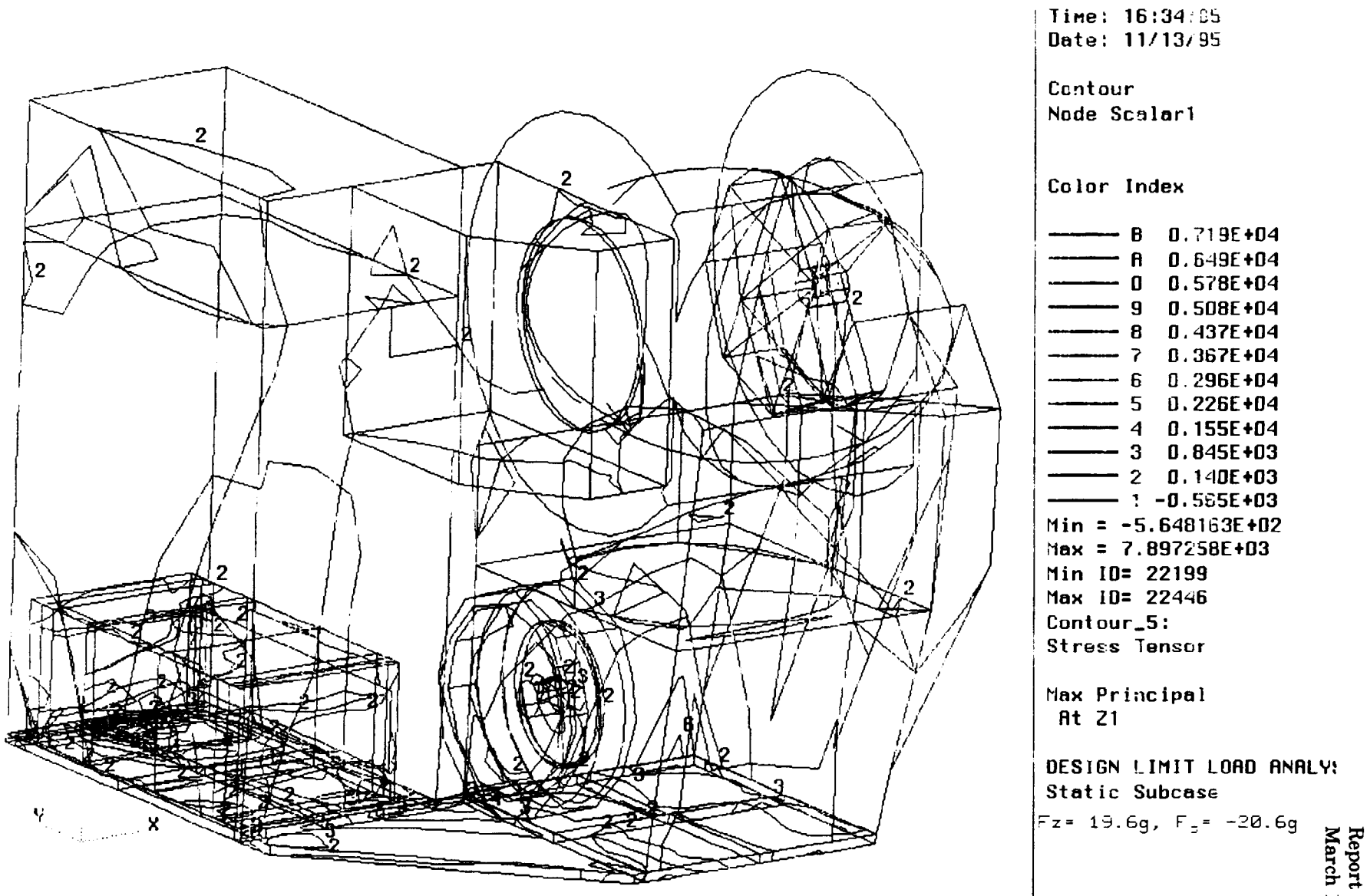

Figure B5 Design Limit Load Nastran Load Case 3 Max Principal Stress, Z1

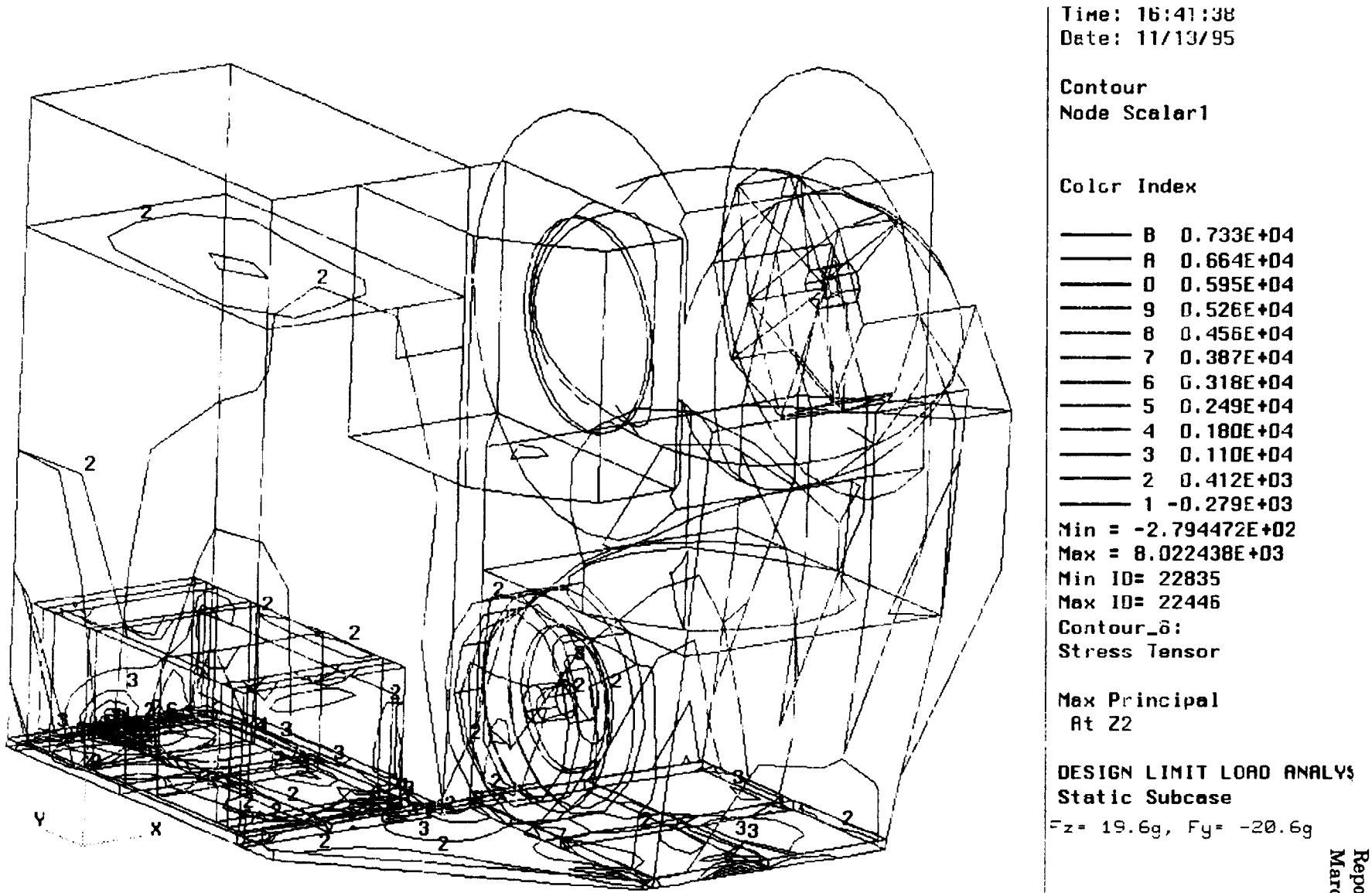

Figure B6 Design Limit Loa Nastran Load Case 3 Max Principal Stress, Z2

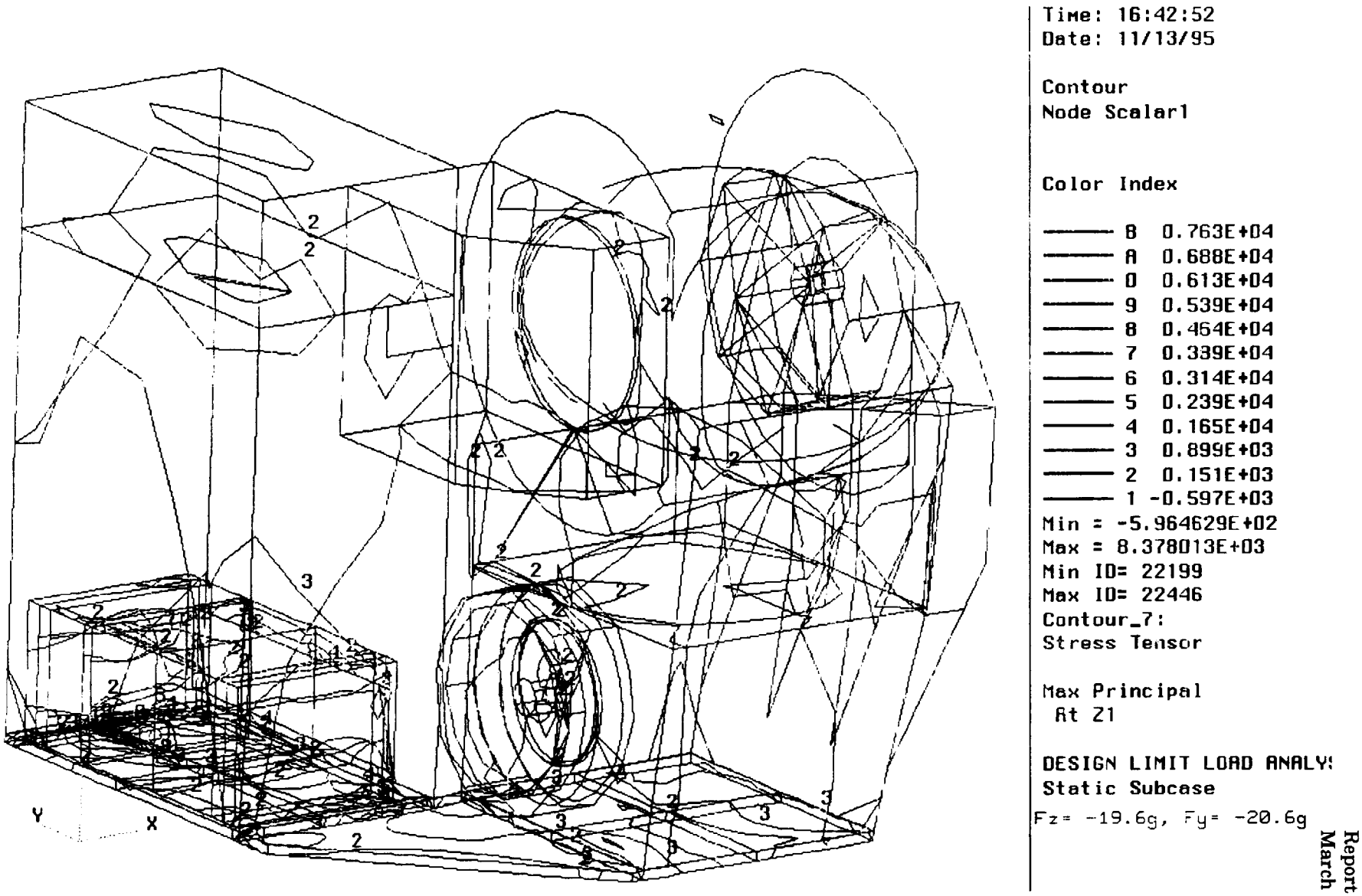

Figure B7 Design Limit Load Nastran Load Case 4 Max Principal Stress, Z1

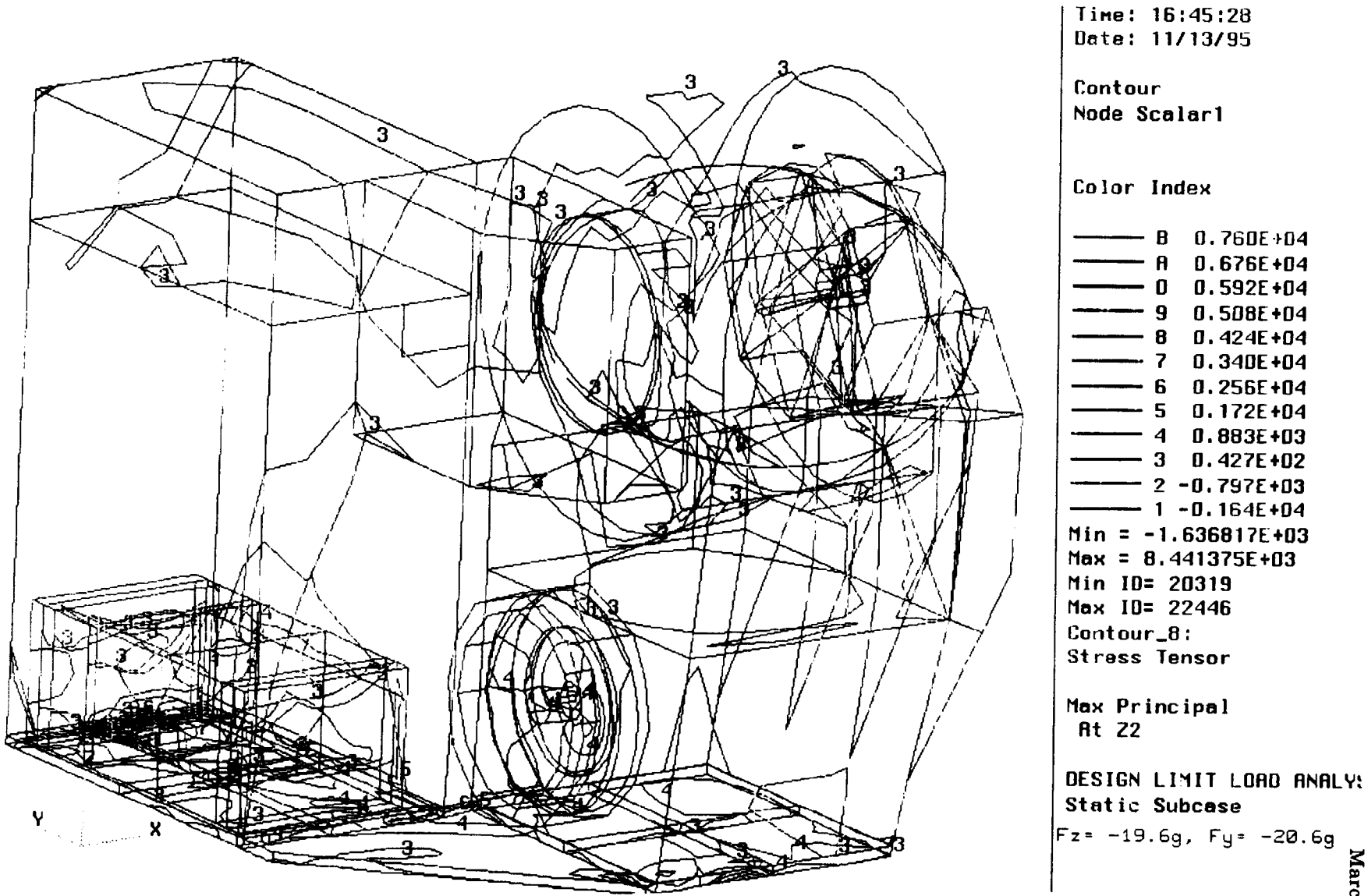

Figure B8 Design Limit Load Nastran Load Case 4 Max Principal Stress, Z2

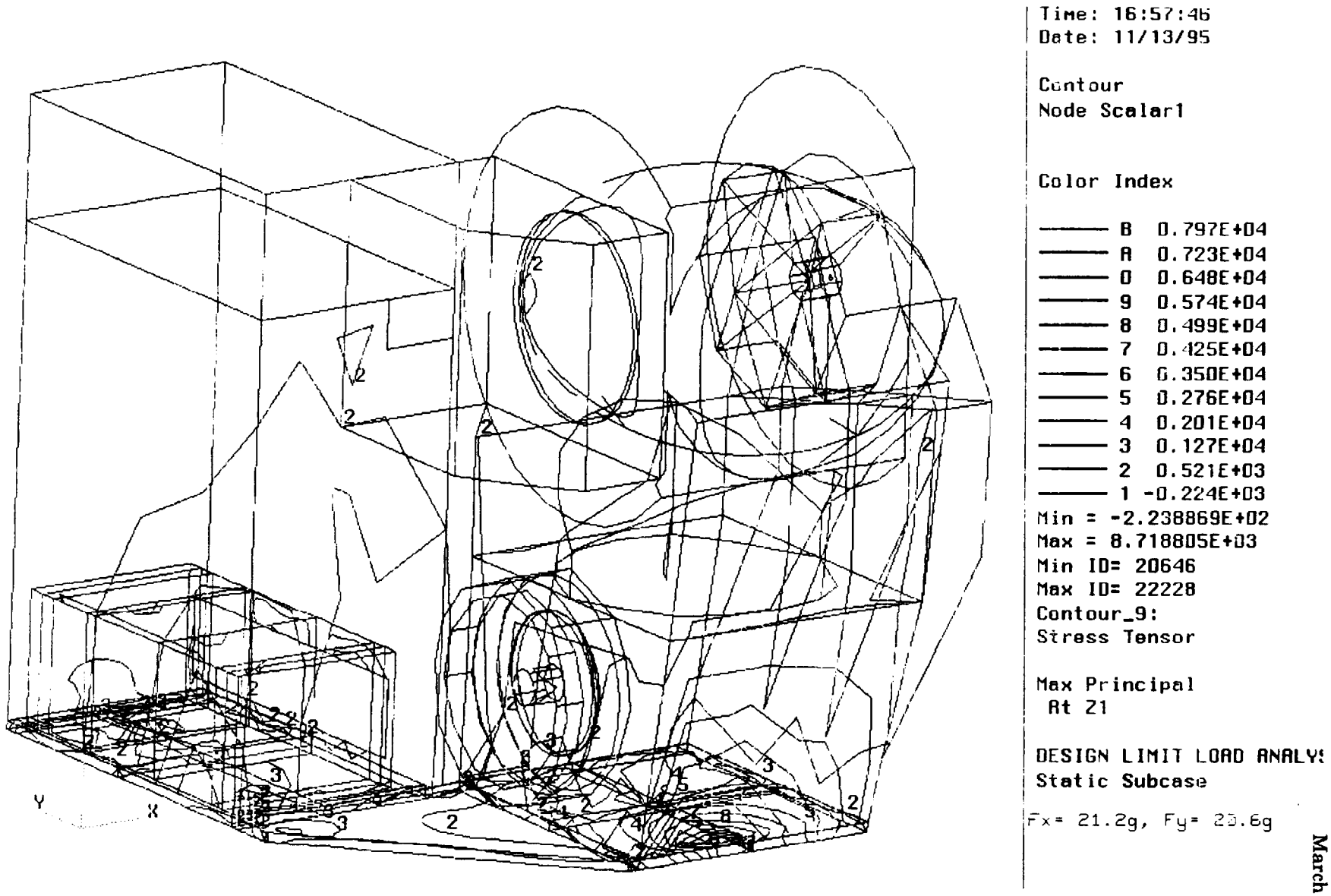

Figure B9 Design Limit Load Nastran Load Case 5 Max Principal Stress, Z1

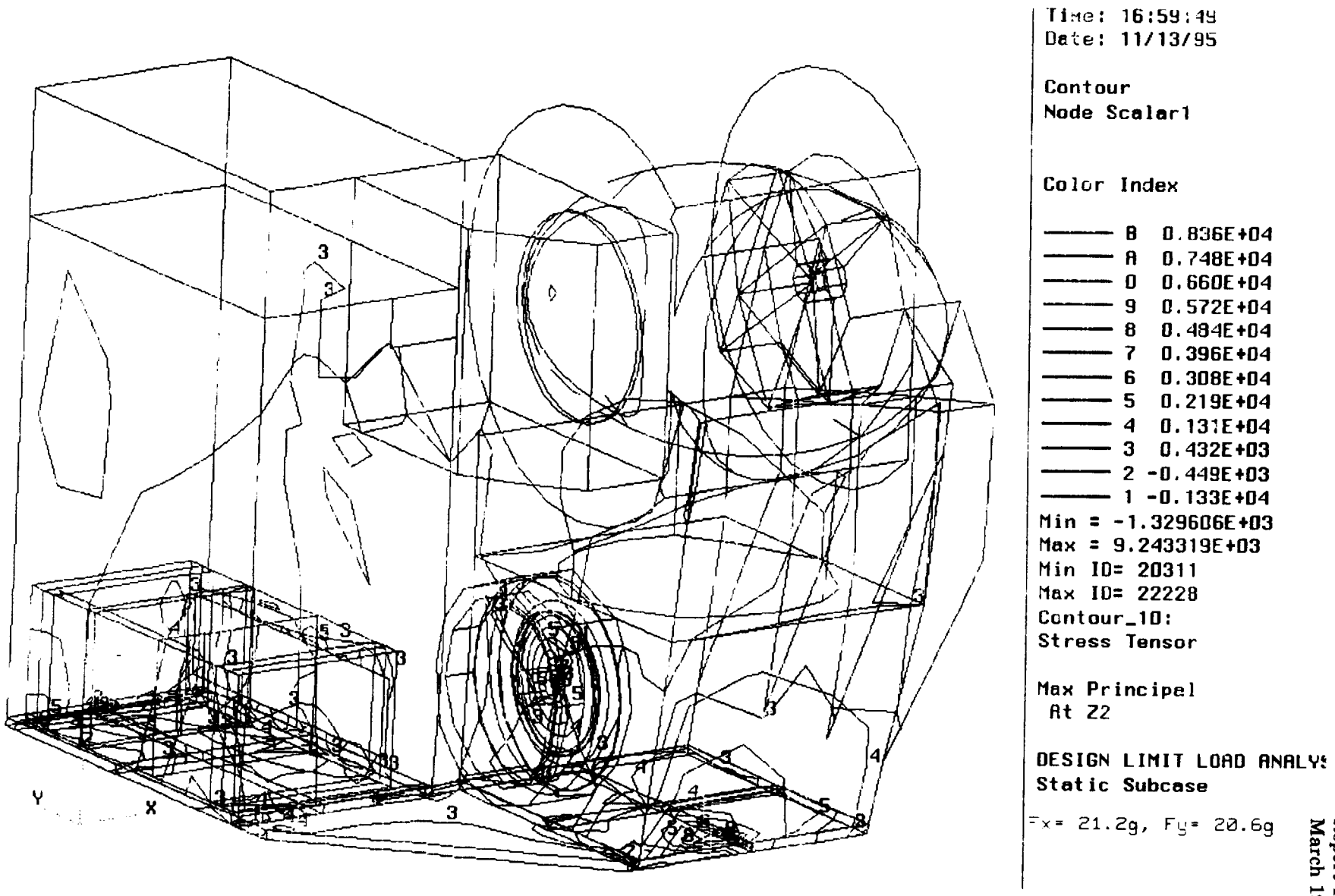

Figure B10 Design Limit Load Nastran Load Case 5 Max Principal Stress, Z2

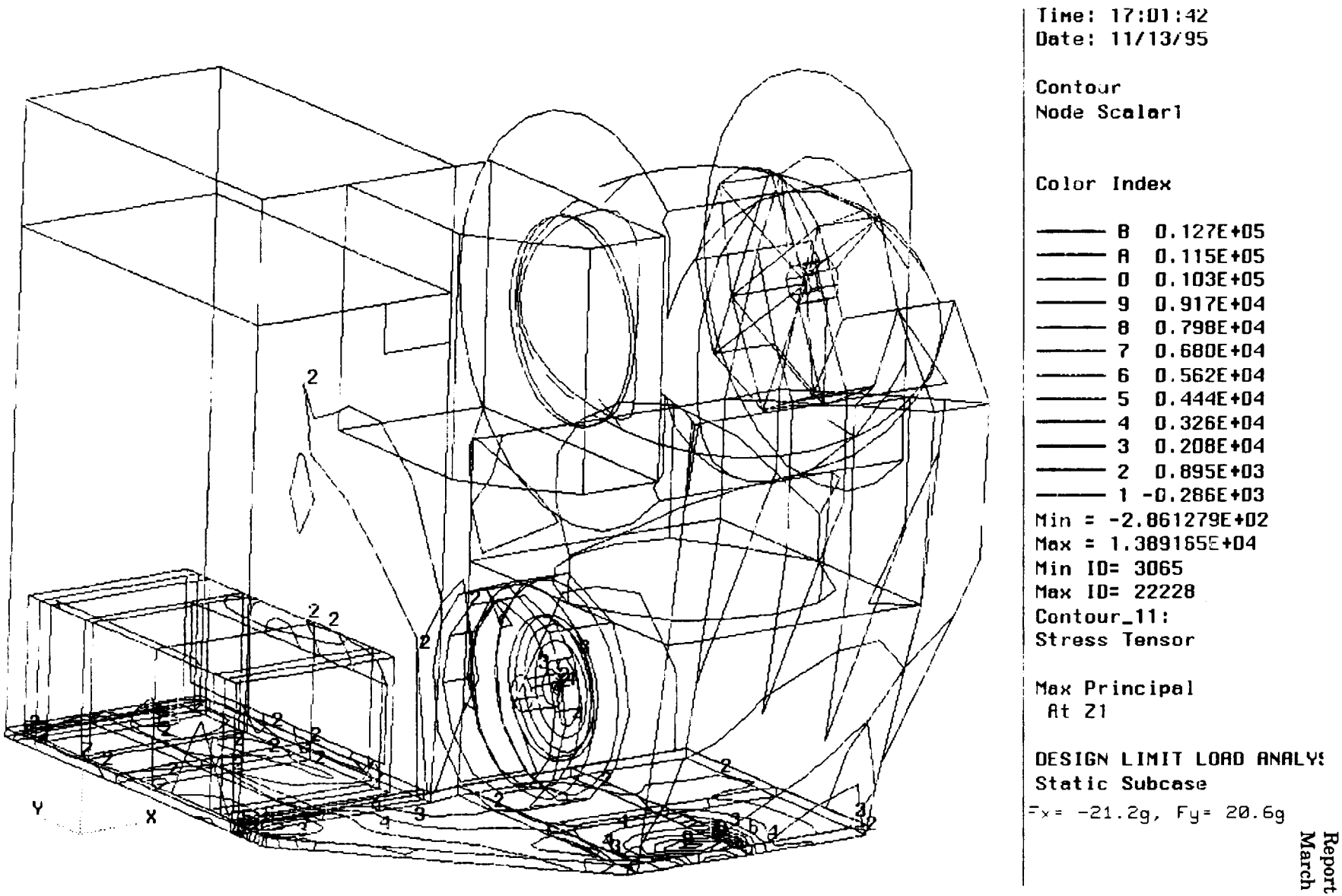

Figure B11 Design Limit Load Nastran Load Case 6 Max Principal Stress, Z1

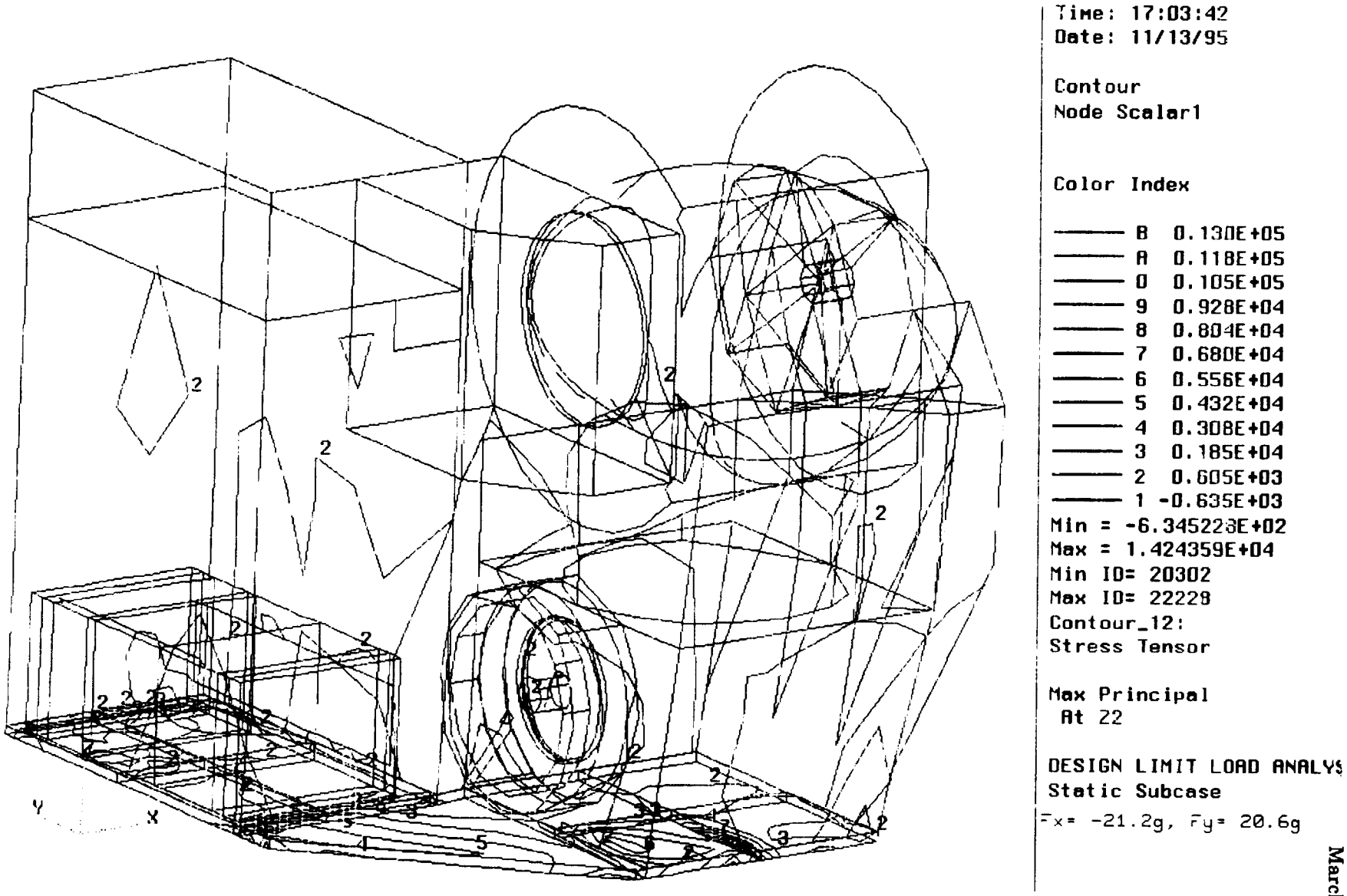

Figure B12 Design Limit Load Nastran Load Case 6 Max Principal Stress, Z2

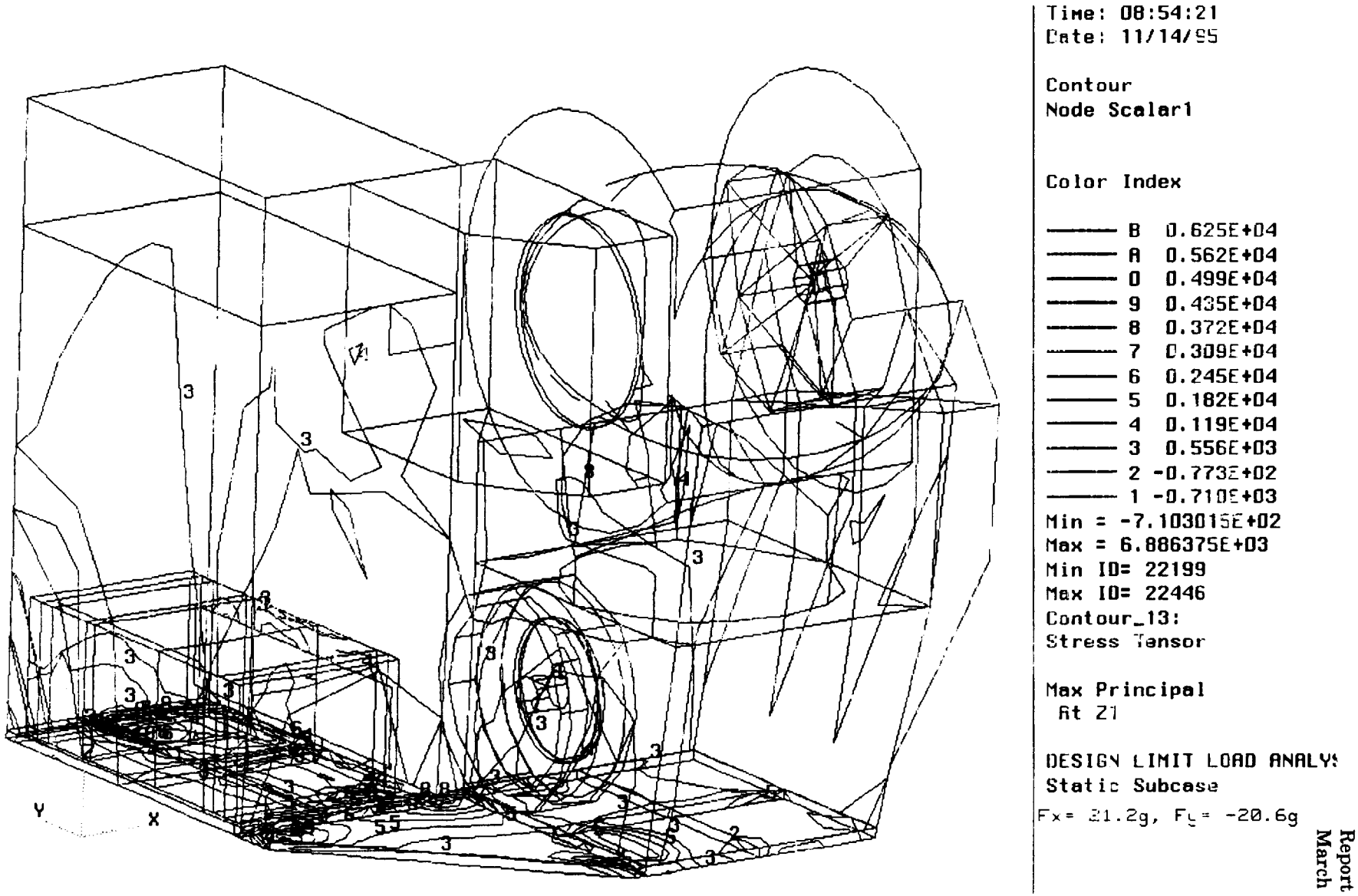

Figure B13 Design Limit Load Nastran Load Case 7 Max Principal Stress, Z1

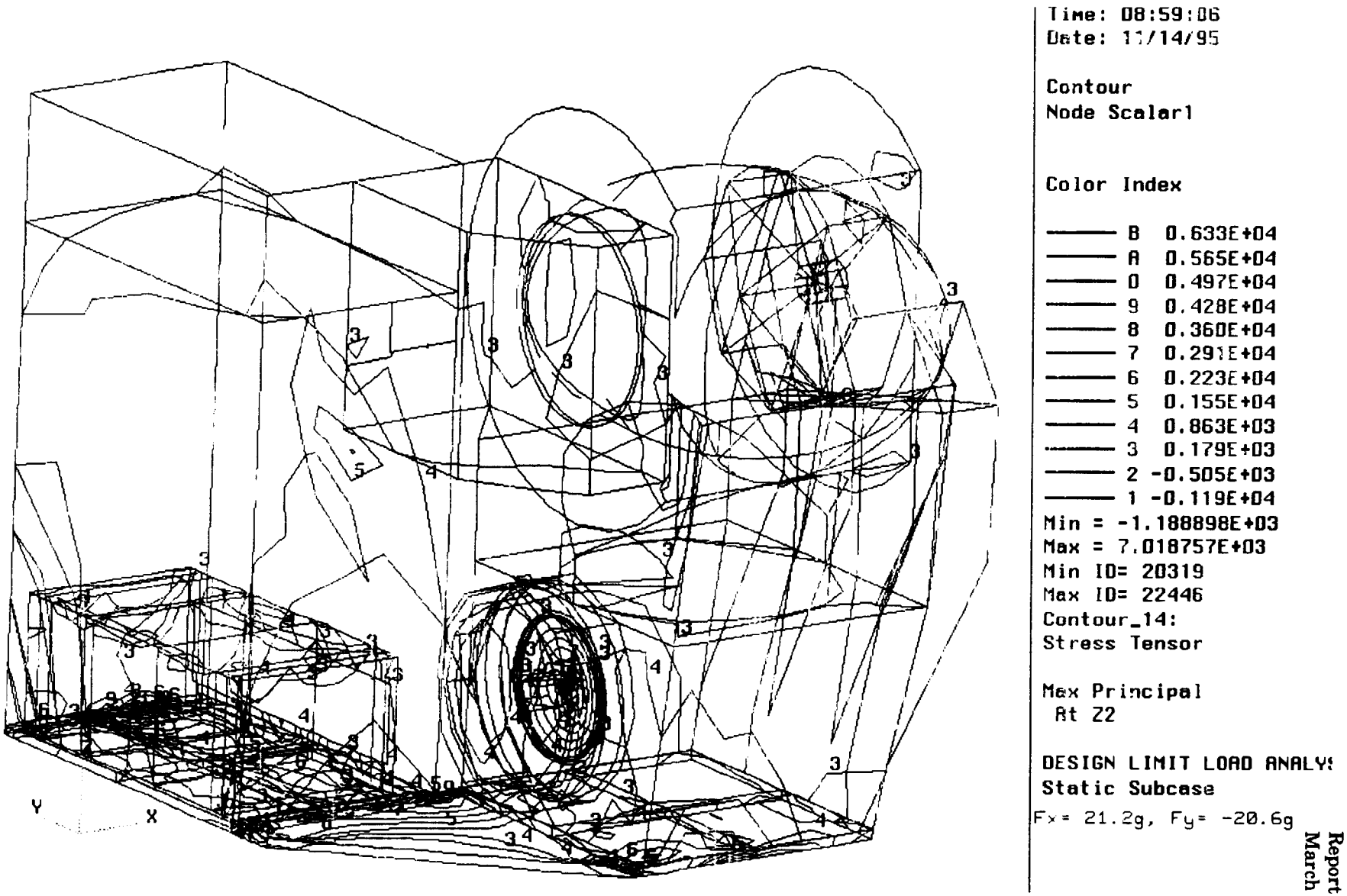

Figure B14 Design Limit Load Nastran Load Case 7 Max Principal Stress, Z2

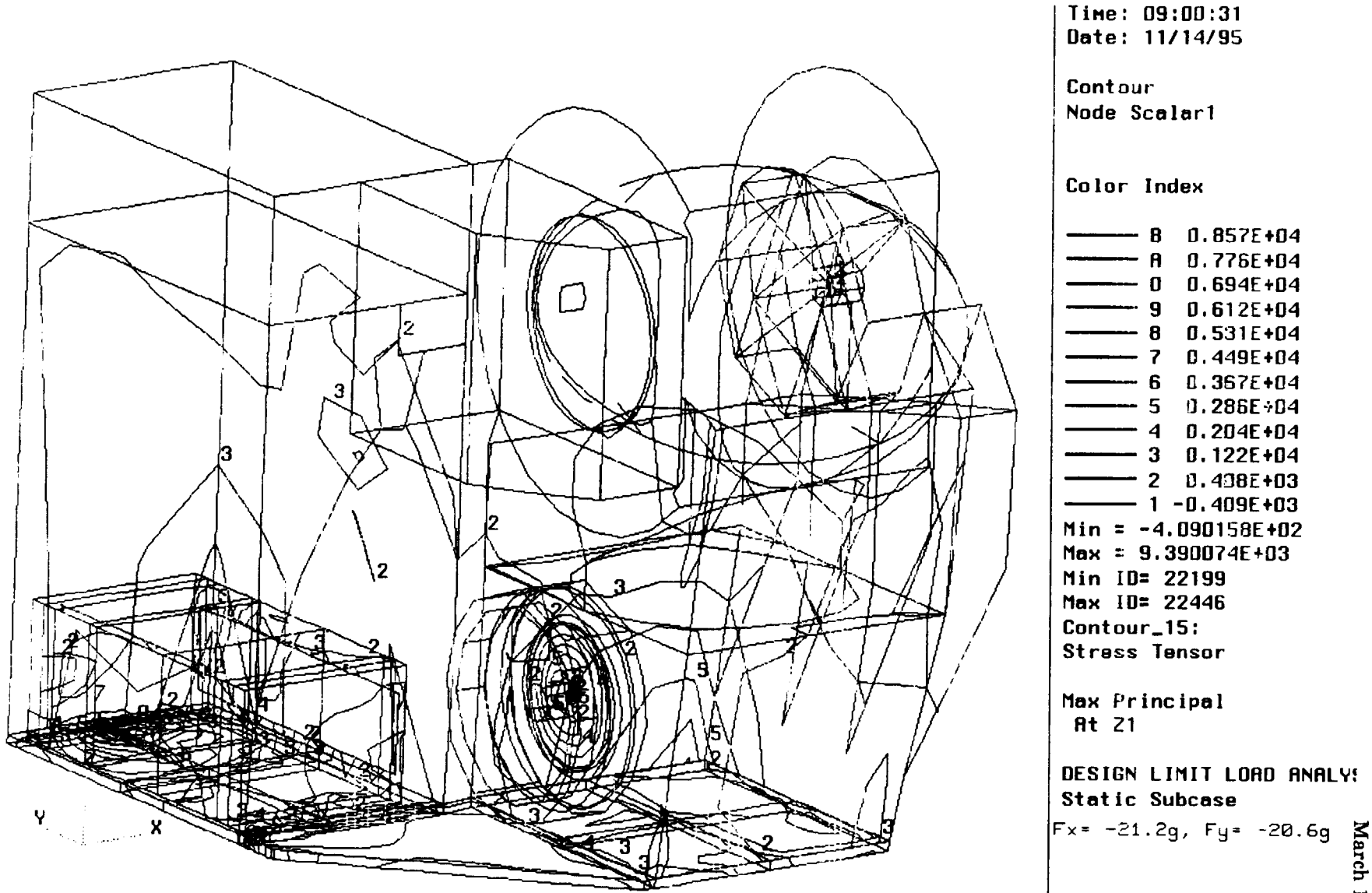

Figure B15 Design Limit Load Nastran Load Case 8 Max Principal Stress, Z1

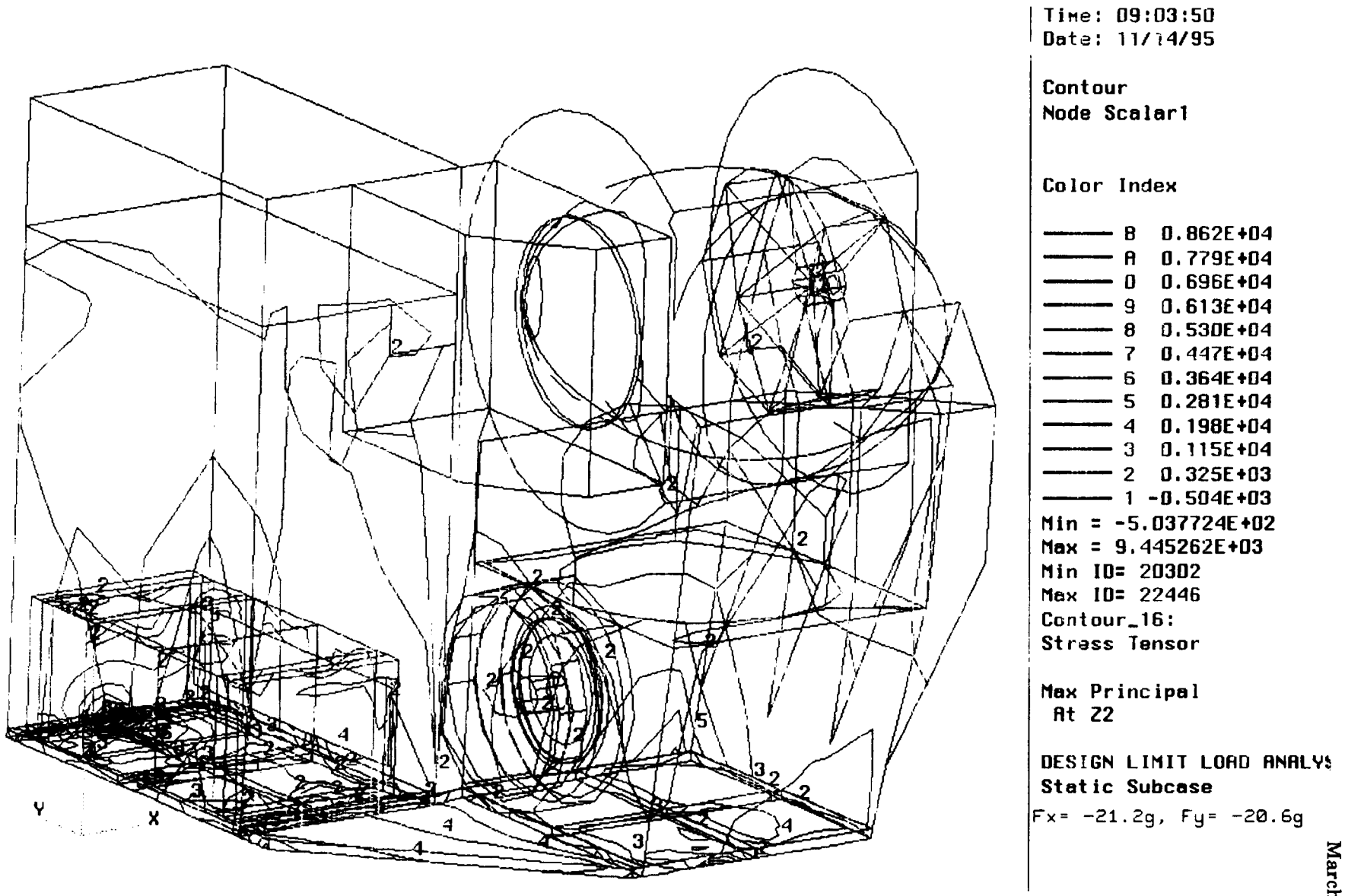

Figure B16 Design Limit Load Nastran Load Case 8 Max Principal Stress, Z2

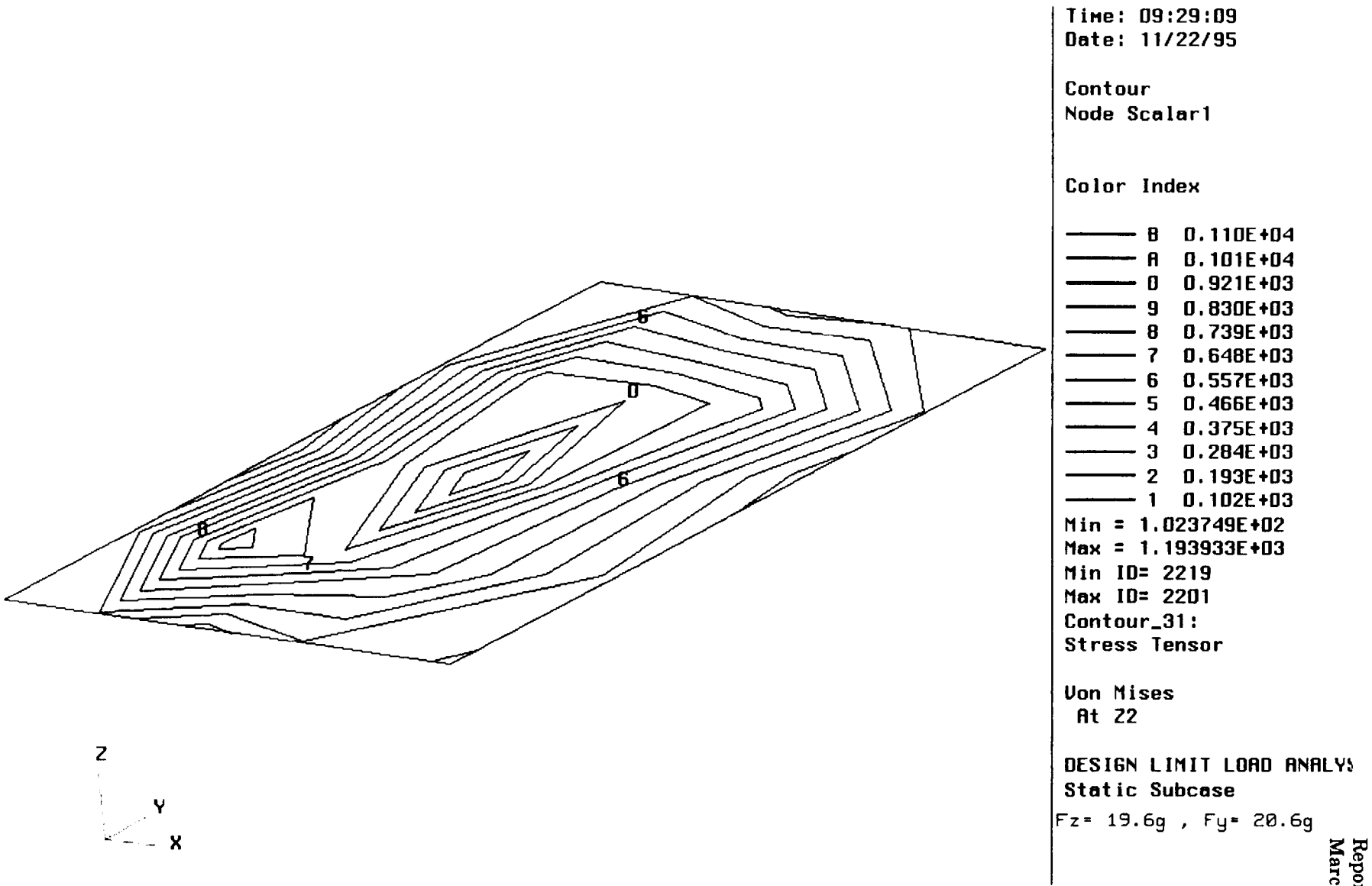

Figure B17 Design Limit Load RF Shelf Peak Von Mises, Z2

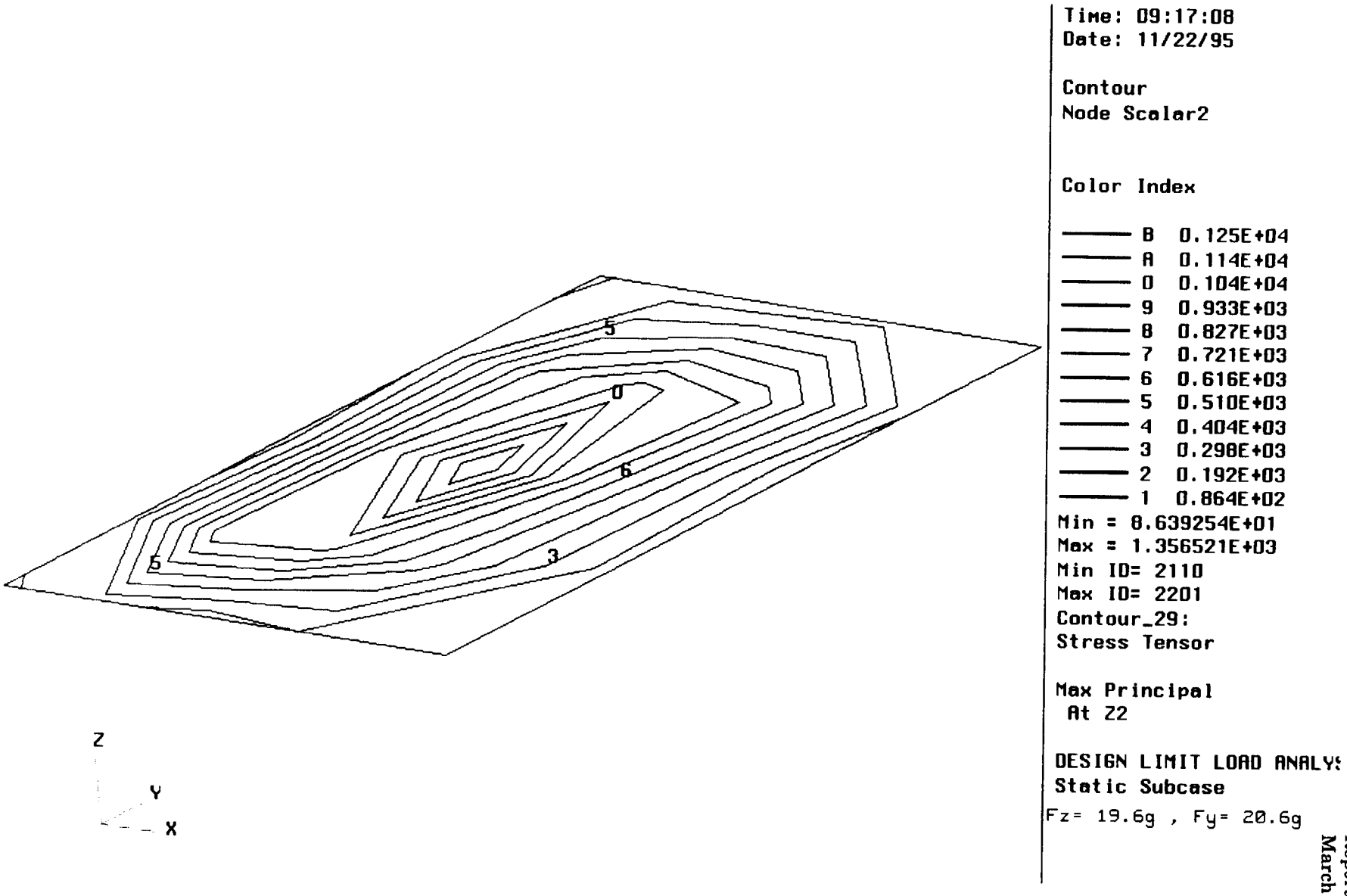

Figure B18 Design Limit Load Nastran Load RF Shelf Max Principal Stress, Z2

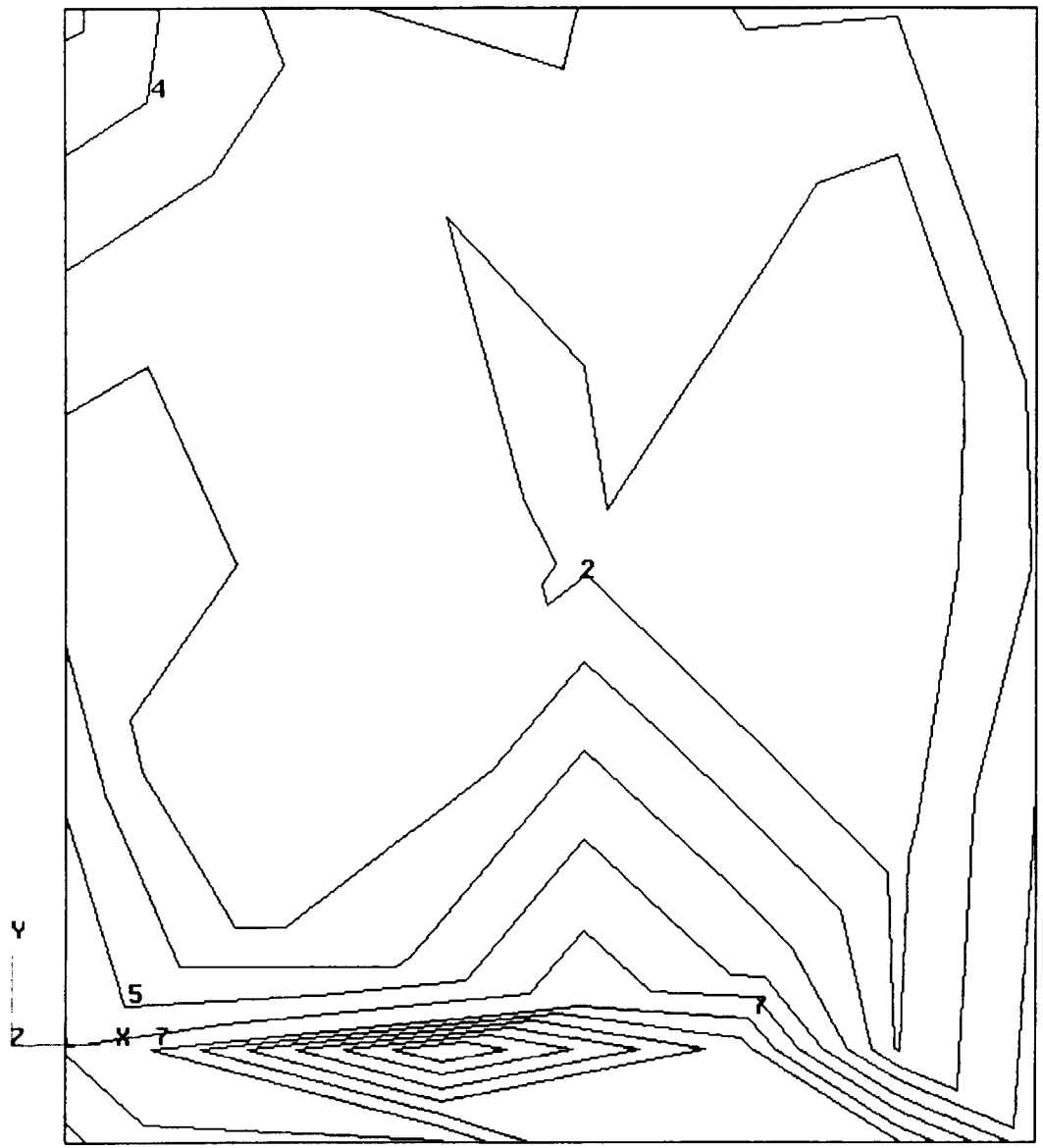

Time: 13:50:08
Date: 11/22/95

Contour
Node Scalar1

Color Index

B	0.117E+04
A	0.108E+04
0	0.979E+03
9	0.881E+03
8	0.783E+03
7	0.685E+03
6	0.587E+03
5	0.490E+03
4	0.392E+03
3	0.294E+03
2	0.196E+03
1	0.980E+02

Min = 9.803899E+01
Max = 1.272516E+03
Min ID= 2232
Max ID= 2227
Contour_35:
Stress Tensor

Von Mises
At Z2

DESIGN LIMIT LOAD ANALYS
Static Subcase
Fz= -19.6g, Fy= -20.6g

Figure B19 Design Limit Load Warmload Shelf Peak Von Mises, Z2

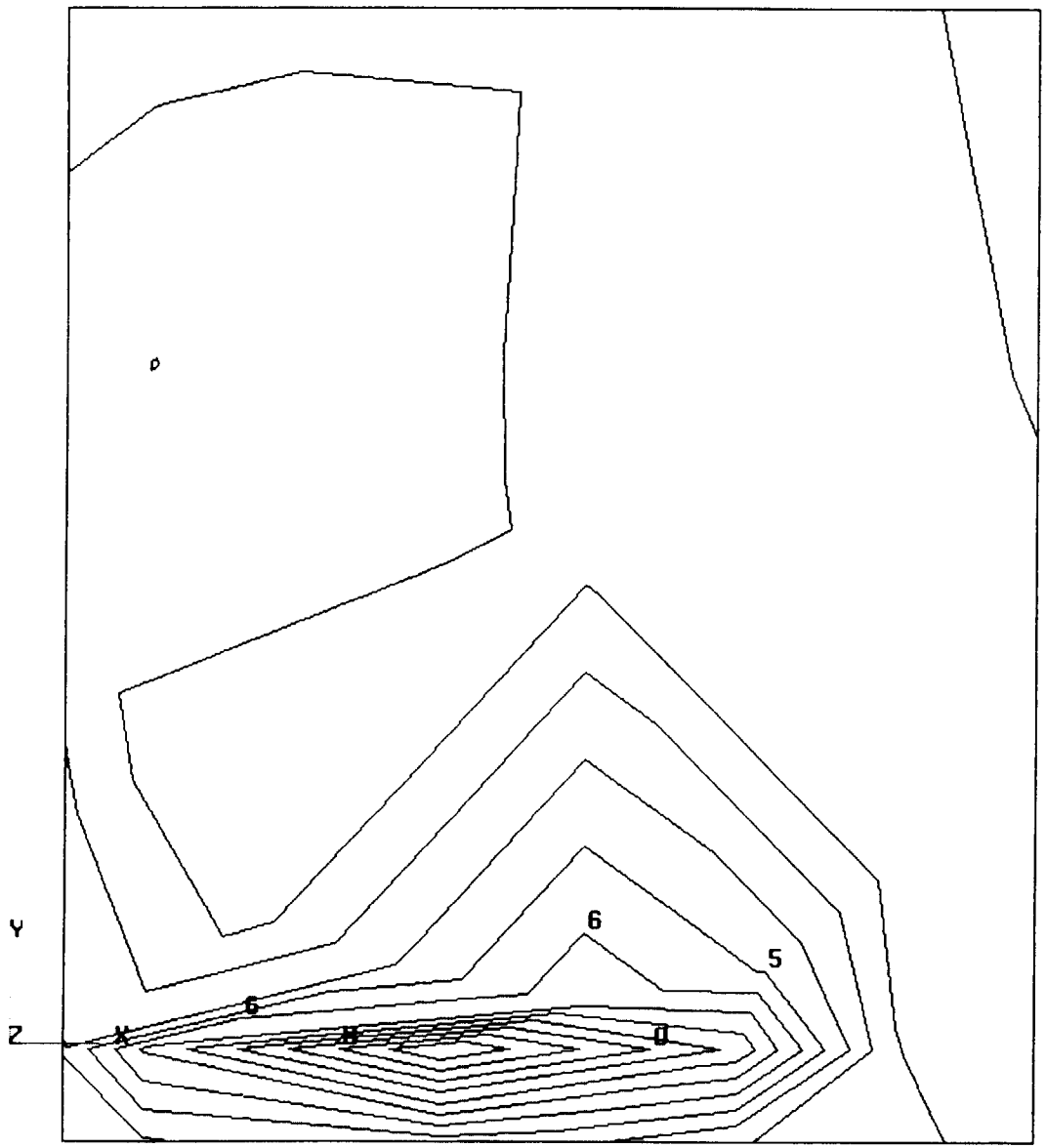

Time: 13:44:34
Date: 11/22/95

Contour
Node Scalar1

Color Index

B	0.135E+04
A	0.123E+04
0	0.111E+04
9	0.991E+03
8	0.872E+03
7	0.753E+03
6	0.634E+03
5	0.515E+03
4	0.397E+03
3	0.278E+03
2	0.159E+03
1	0.402E+02

Min = 4.024798E+01
Max = 1.465668E+03
Min ID= 22771
Max ID= 2227
Contour_8:
Stress Tensor

Max Principal
At Z2

DESIGN LIMIT LOAD ANALYS
Static Subcase
Fz= -19.6g, Fy= -20.6g

Figure B20 Design Limit Load Warmload Shelf Peak Max Principal Stress, Z2

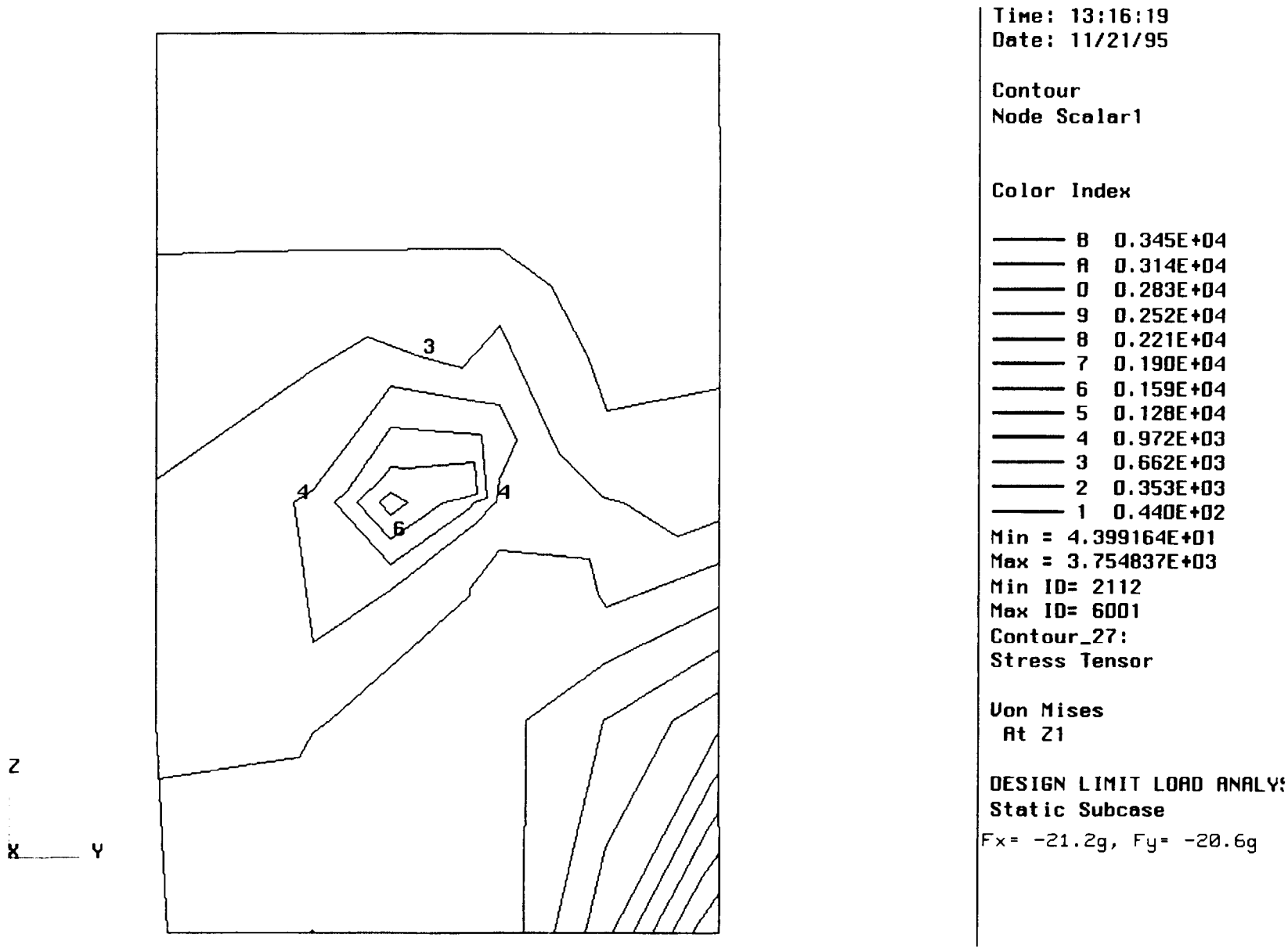

Figure B21 Design Limit Load Side Panel, Dwg 1333379 Peak Max Principal Stress, Z1

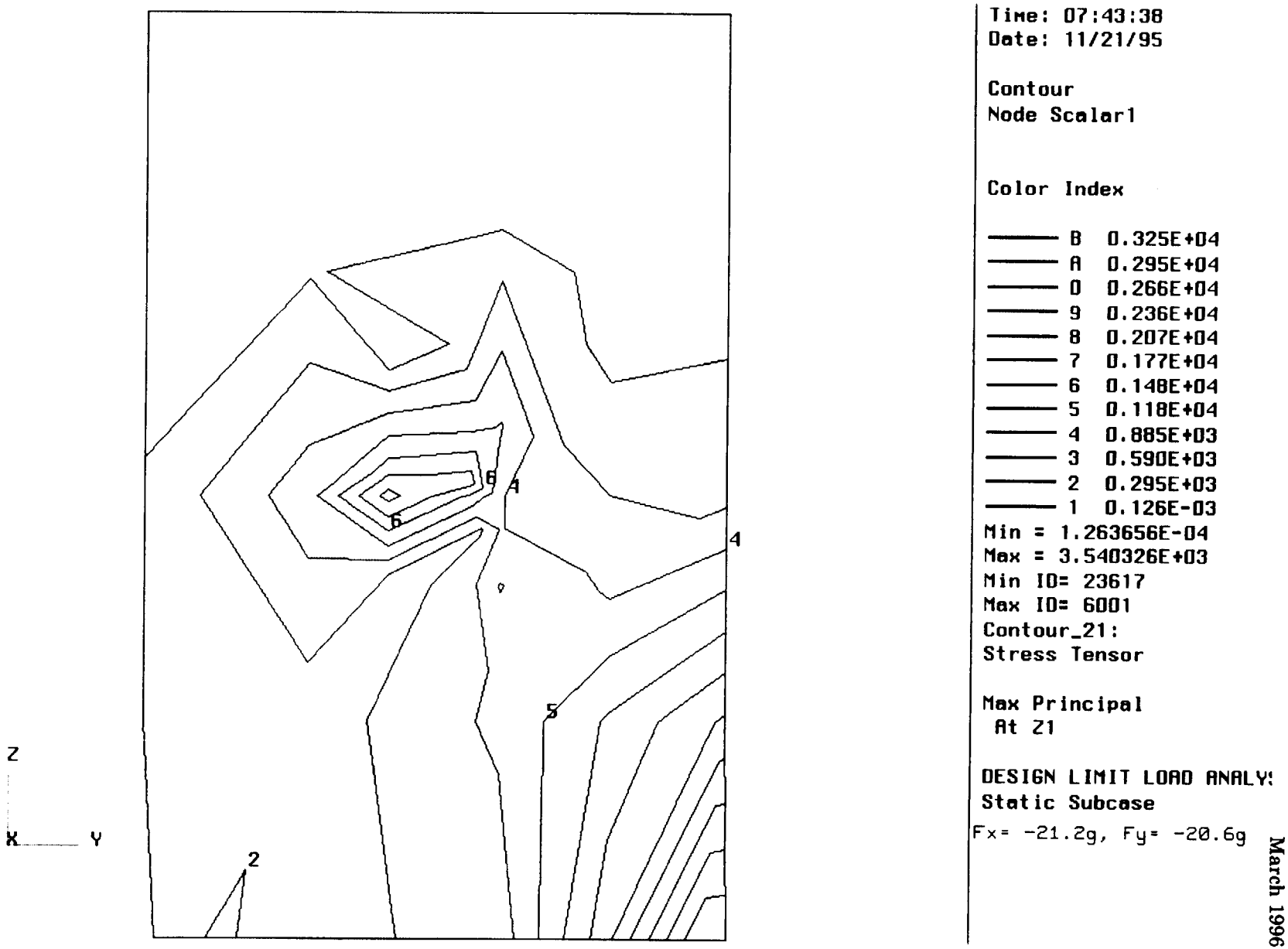

Figure B22 Design Limit Load Side Panel, Dwg 1333379 Max Principal Stress, Z1

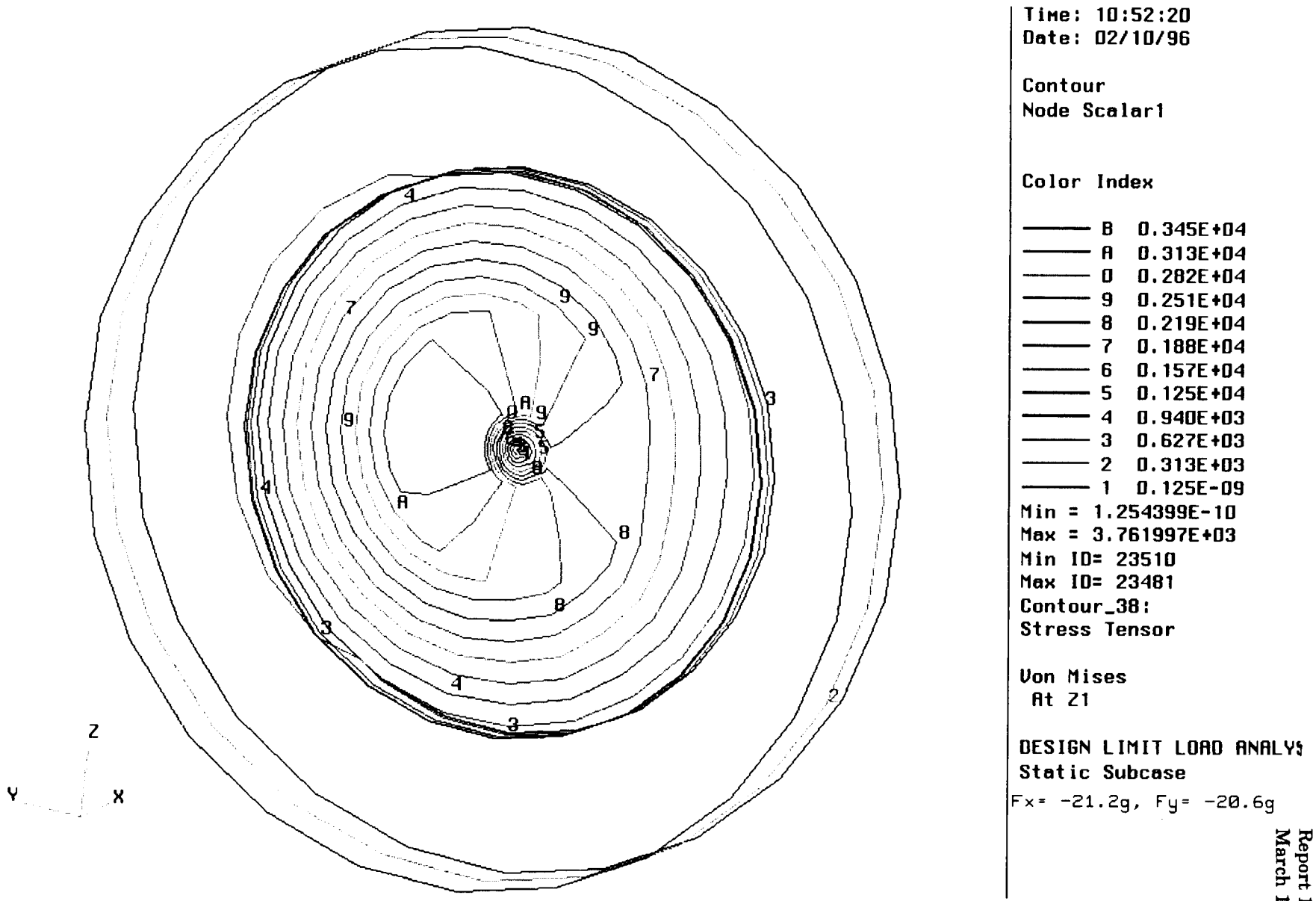

Figure B23 Design Limit Load Compensator Rotor Peak Von Mises, Z1

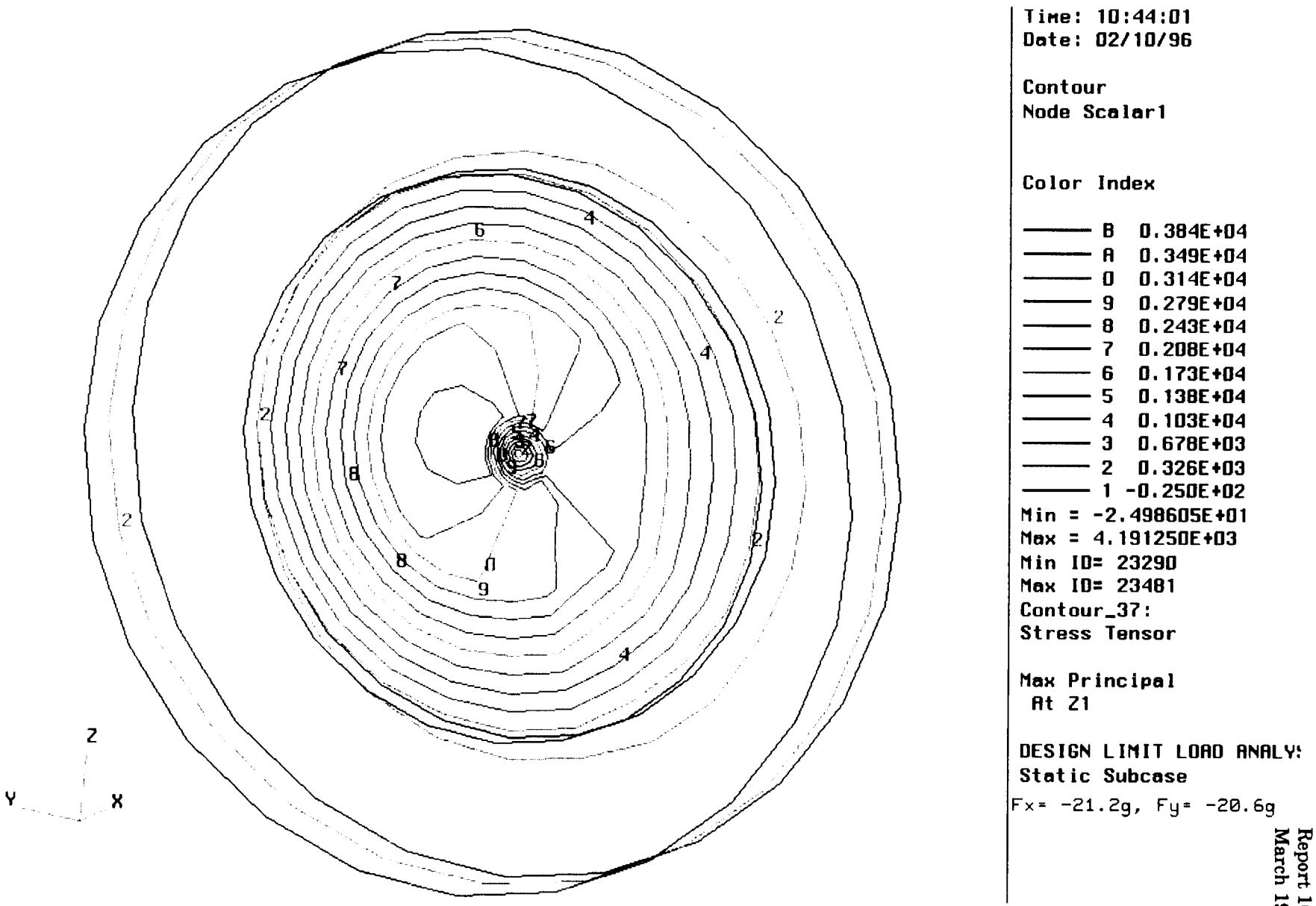

Figure B24 Design Limit Load Compensator Rotor Max Principal Stress, Z1

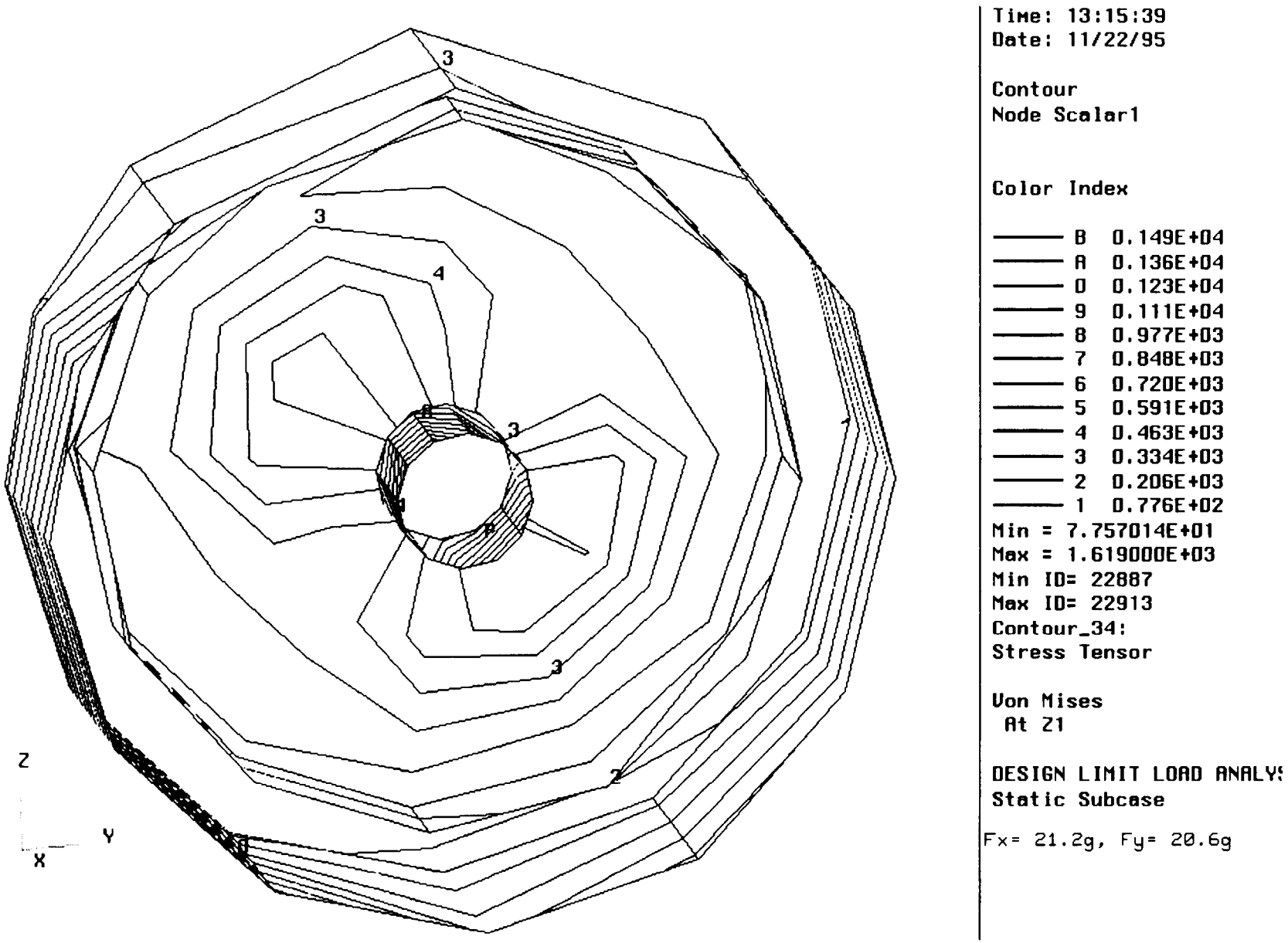

Figure B25 Design Limit Load Compensator Housing Peak Von Mises, Z1

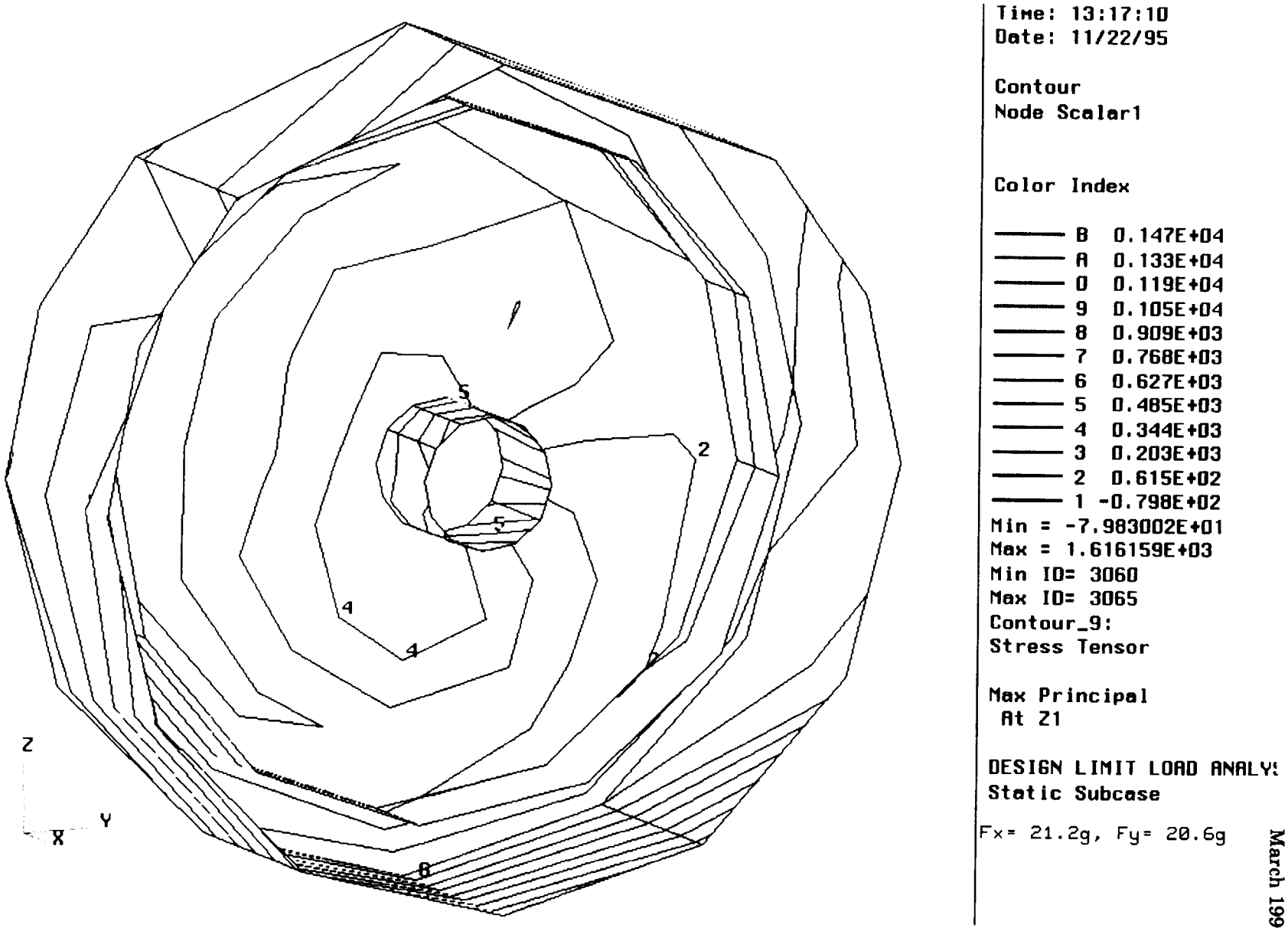

Figure B26 Design Limit Load Compensator Housing Max Principal Stress, Z1

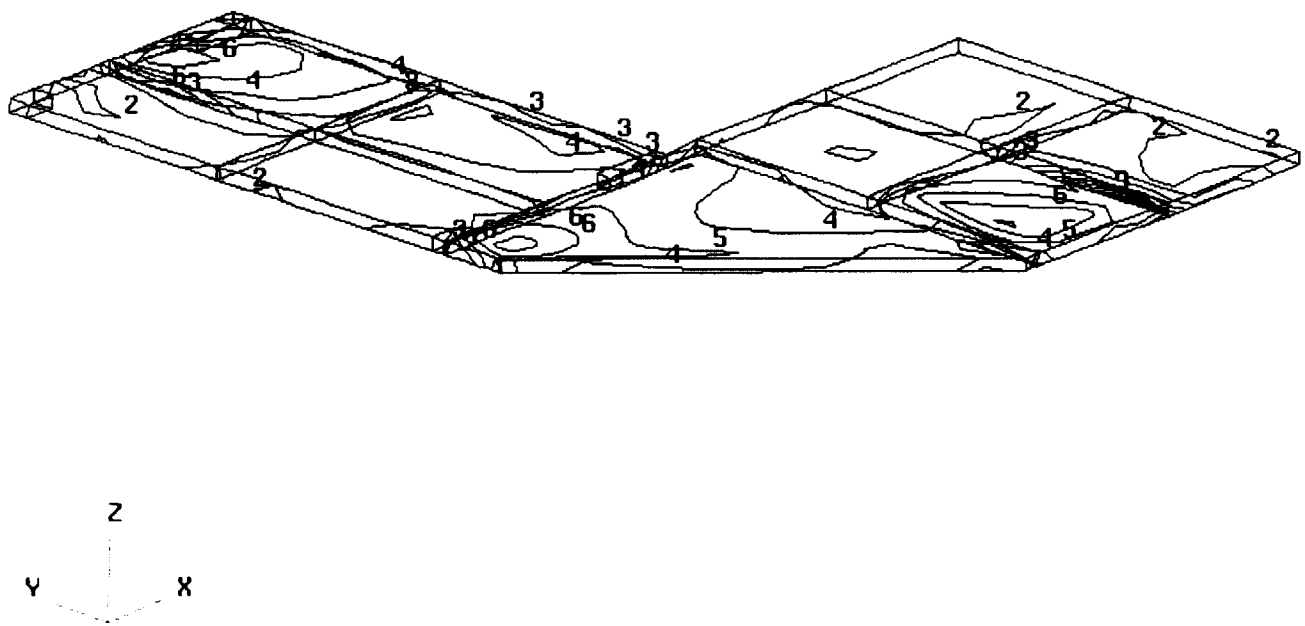

Time: 10:13:16
Date: 11/21/95

Contour
Node Scalar1

Color Index

B	0.128E+05
A	0.116E+05
0	0.105E+05
9	0.930E+04
8	0.814E+04
7	0.698E+04
6	0.582E+04
5	0.466E+04
4	0.351E+04
3	0.235E+04
2	0.119E+04
1	0.296E+02

Min = 2.957639E+01
Max = 1.393394E+04
Min ID= 22305
Max ID= 22228
Contour_26:
Stress Tensor

Von Mises
At Z2

DESIGN LIMIT LOAD ANALYS
Static Subcase
Fx= -21.2g, Fy= 20.6g

Figure B27 Design Limit Load Base Plate Peak Von Mises, Z2

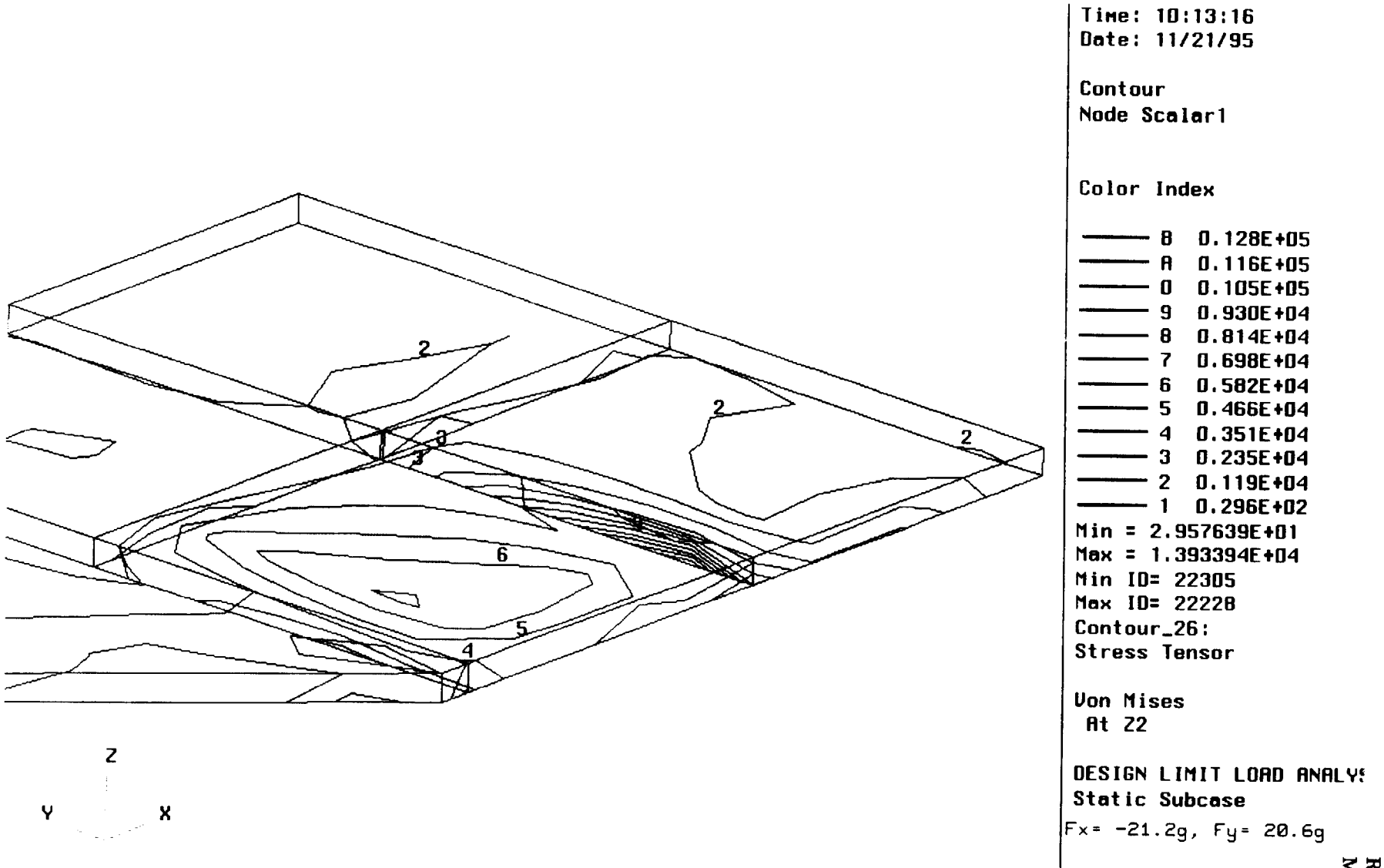

Figure B28 Design Limit Load Base Plate, Critical Area, Peak Von Mises , Z2

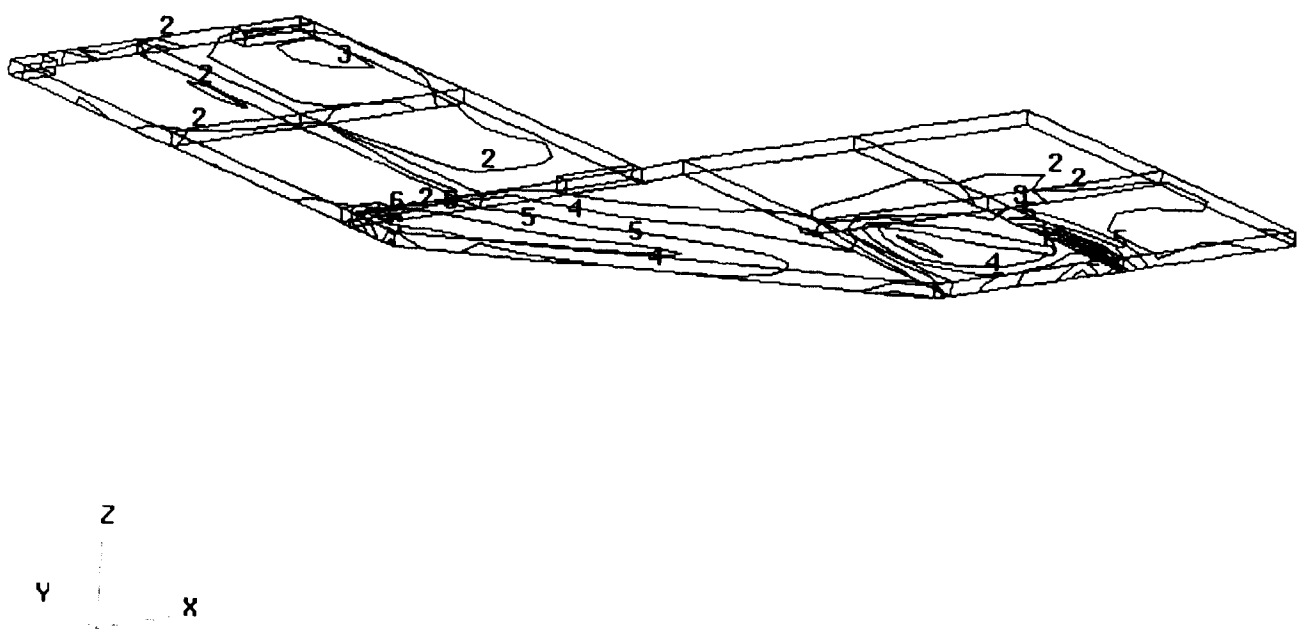

Time: 07:11:50
Date: 11/15/95

Contour
Node Scalar1

Color Index

B 0.130E+05
A 0.118E+05
0 0.106E+05
9 0.943E+04
8 0.823E+04
7 0.702E+04
6 0.582E+04
5 0.462E+04
4 0.341E+04
3 0.221E+04
2 0.101E+04
1 -0.197E+03
Min = -1.968383E+02
Max = 1.424359E+04
Min ID= 21908
Max ID= 22228
Contour_17:
Stress Tensor

Max Principal
At Z2

DESIGN LIMIT LOAD ANALYS
Static Subcase
Fx= -21.2g, Fy= 20.6g

Figure B29 Design Limit Load Base Plate Max Principal Stress, Z2

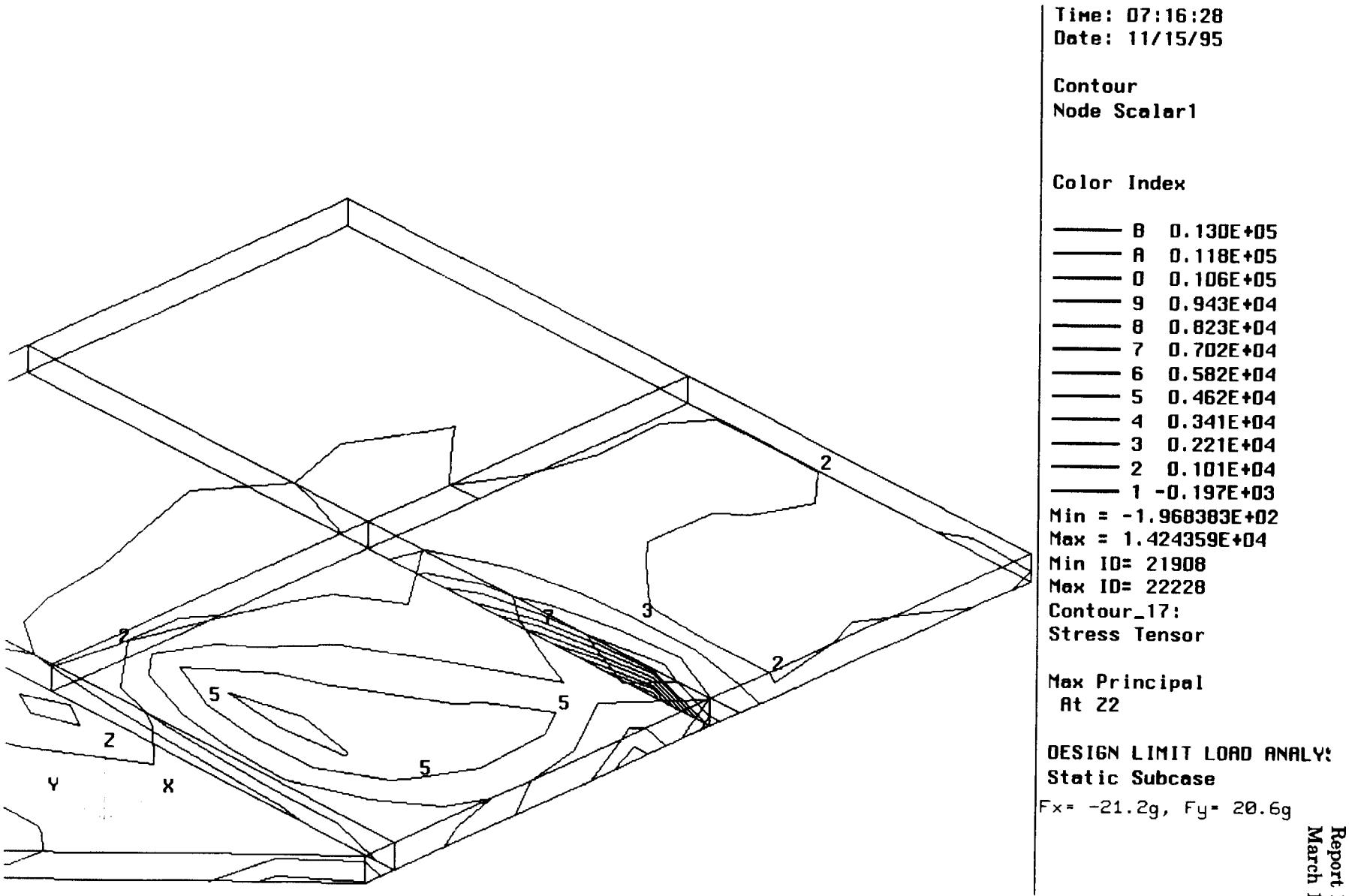

Figure B30 Design Limit Load Base Plate, Critical Area Max Principal Stress, Z2

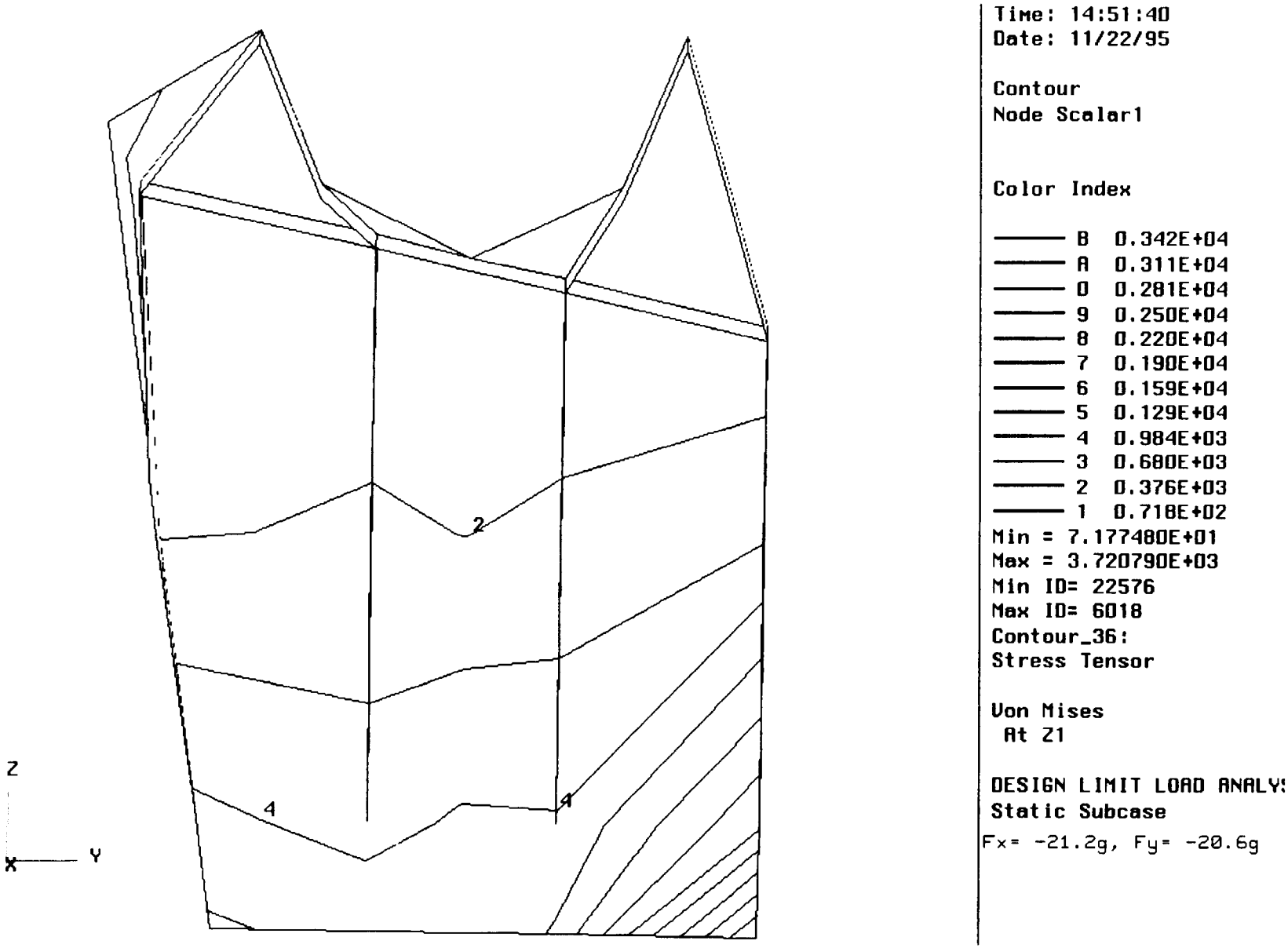

Figure B31 Design Limit Load Front Panel, Peak Von Mises, Z1

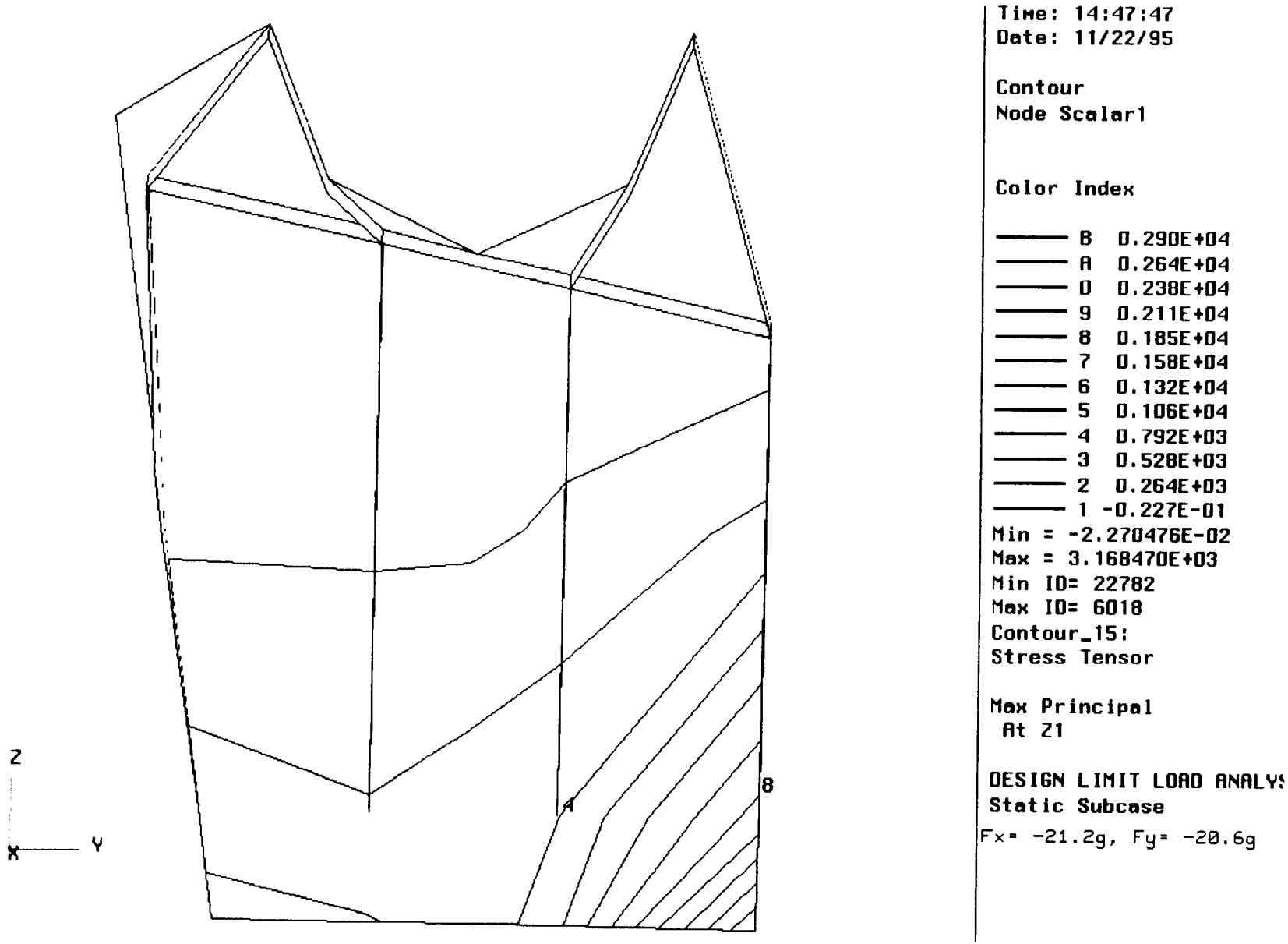

Figure B32 Design Limit Load Front Panel Max Principal Stress, Z1

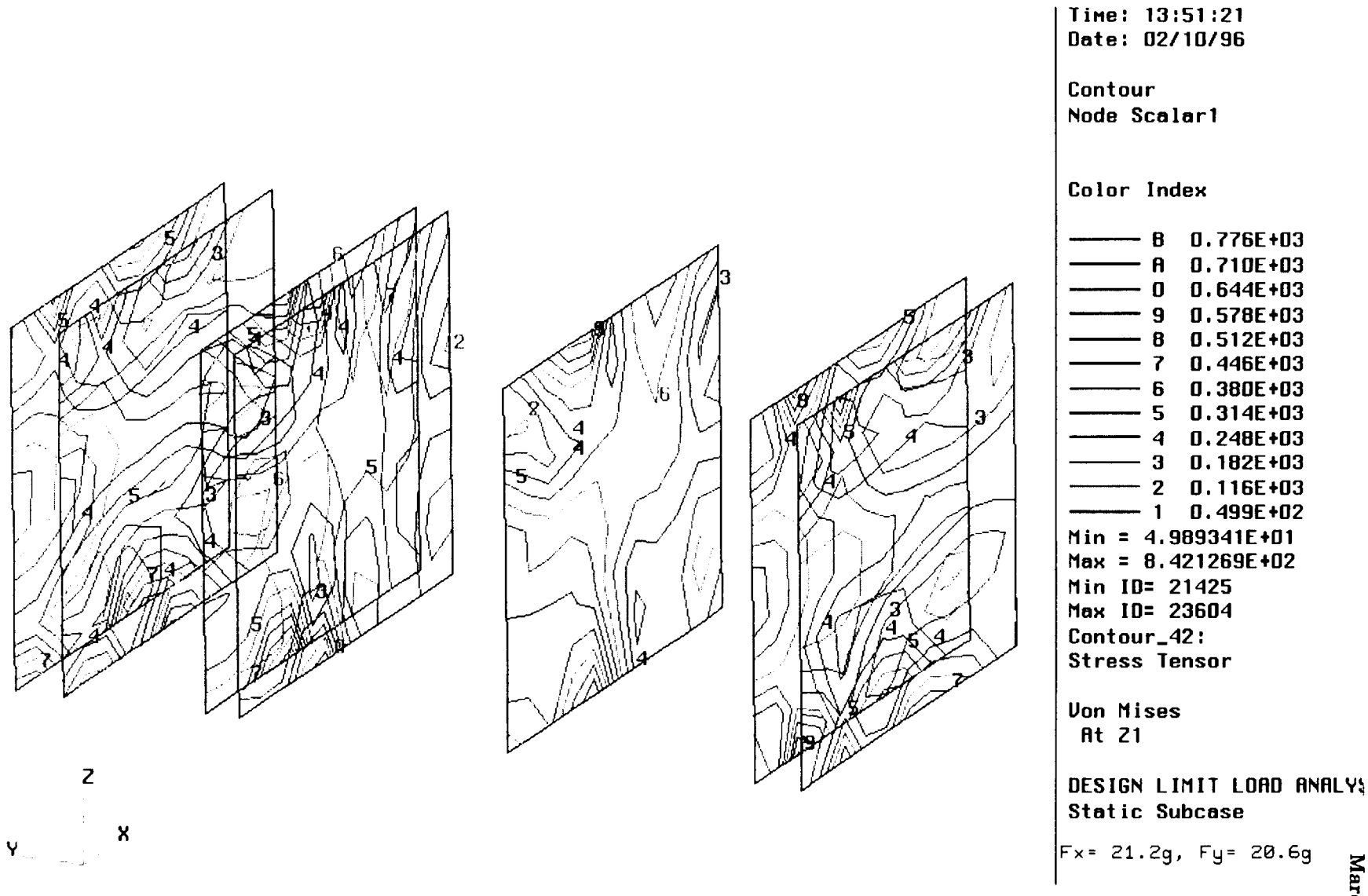

Figure B33 Design Limit Load Circuit Cards Peak Von Mises, Z1

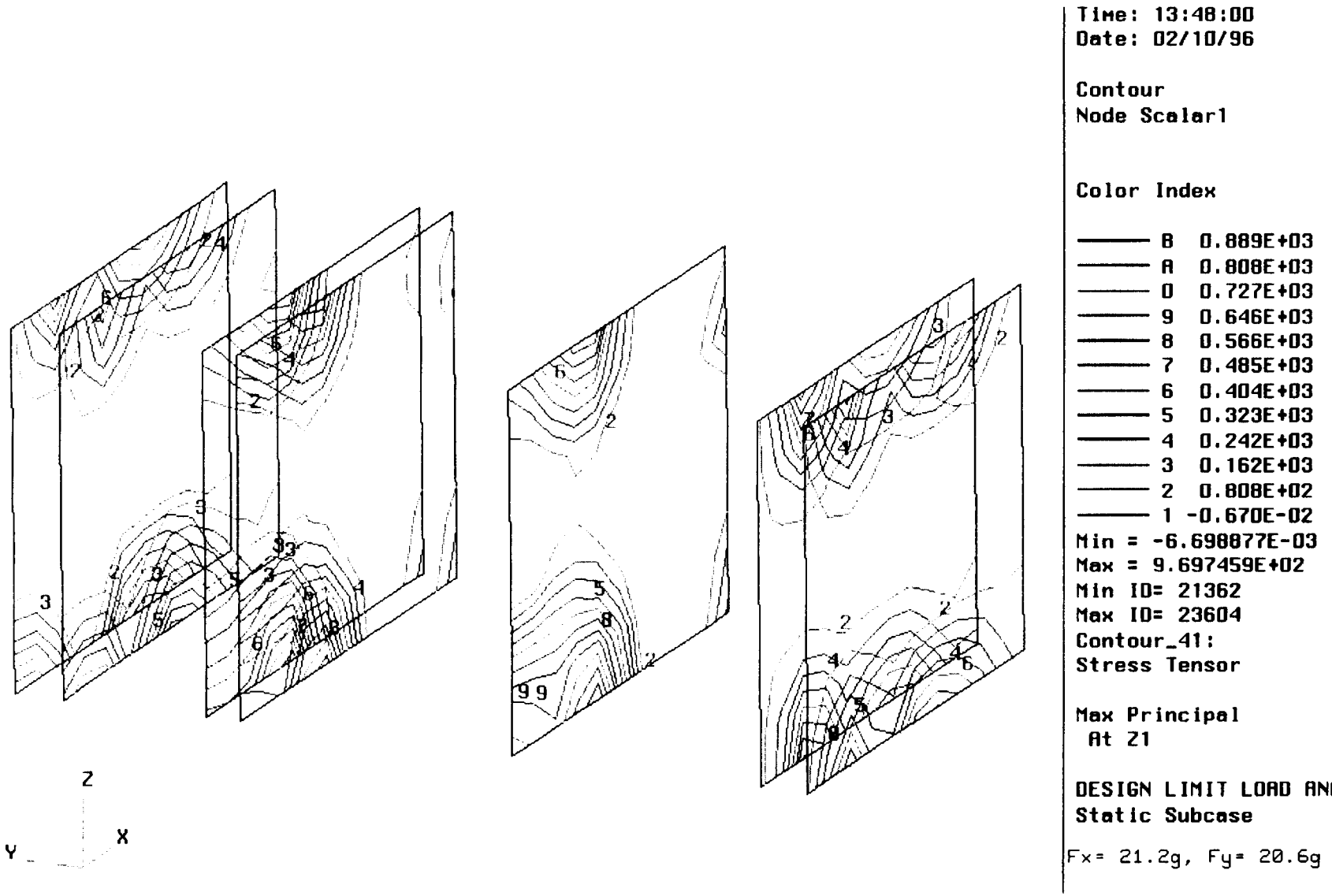

Figure B34 Design Limit Load Circuit Cards Max Principal Stress, Z1

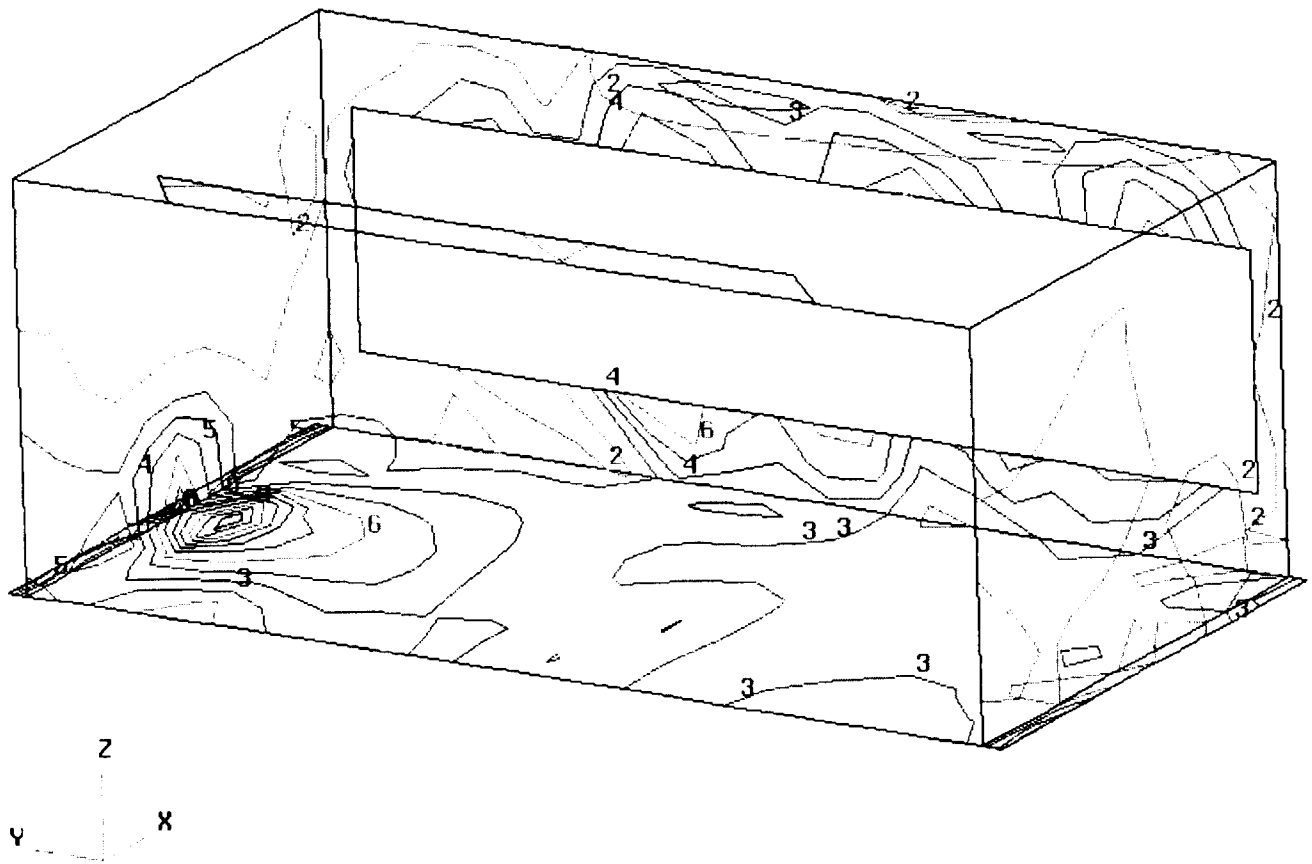

Time: 14:16:56
Date: 02/10/96

Contour
Node Scalar1

Color Index

B	0.507E+04
A	0.461E+04
0	0.416E+04
9	0.370E+04
8	0.325E+04
7	0.279E+04
6	0.233E+04
5	0.188E+04
4	0.142E+04
3	0.968E+03
2	0.513E+03
1	0.571E+02

Min = 5.709706E+01
Max = 5.523109E+03
Min ID= 21273
Max ID= 22613
Contour_45:
Stress Tensor

Von Mises
At Z2

DESIGN LIMIT LOAD ANALY:
Static Subcase
Fx= -21.2g, Fy= -20.6g

Figure B35 Design Limit Load Card Cage Peak Von Mises, Z2

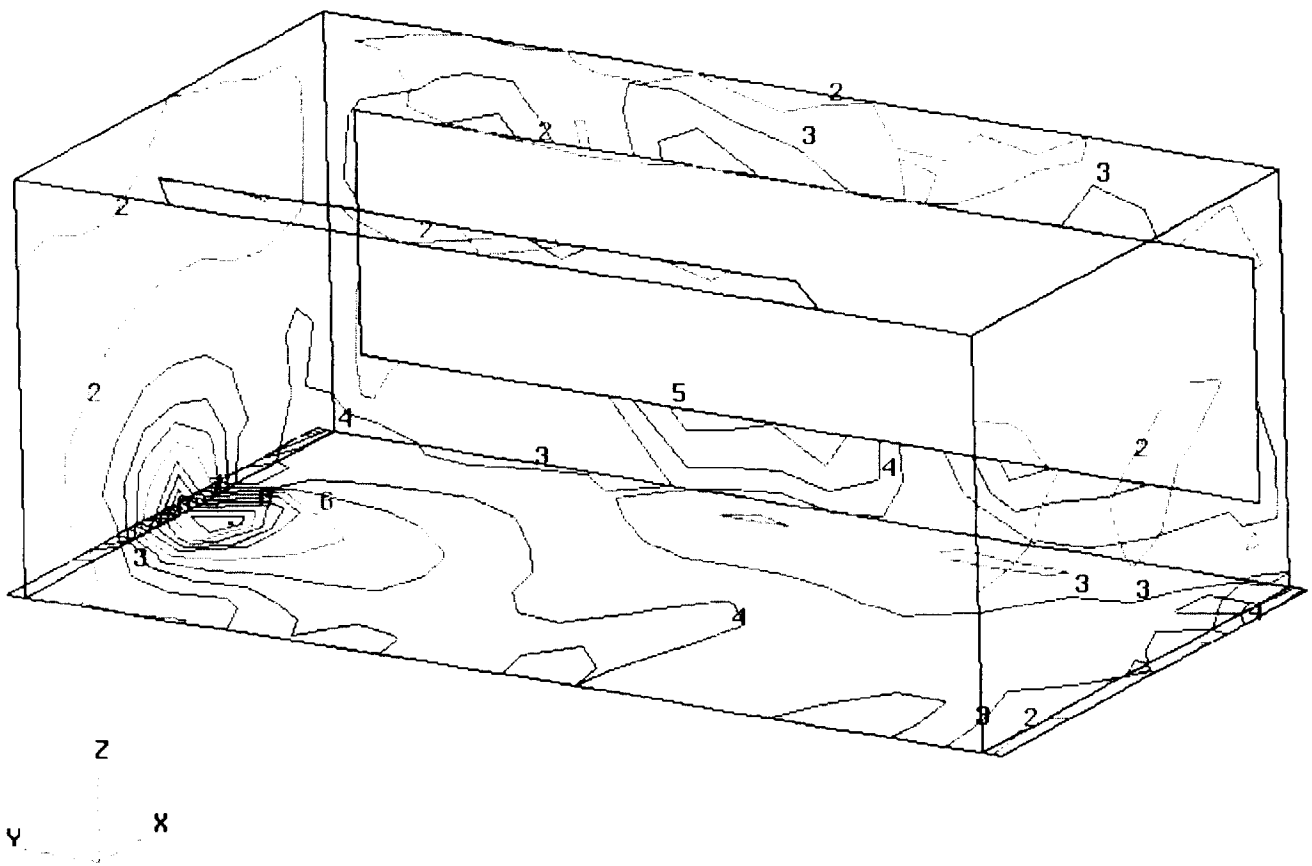

Time: 14:14:17
Date: 02/10/96

Contour
Node Scalar1

Color Index

B 0.565E+04
A 0.509E+04
0 0.453E+04
9 0.397E+04
8 0.341E+04
7 0.285E+04
6 0.229E+04
5 0.173E+04
4 0.117E+04
3 0.615E+03
2 0.558E+02
1 -0.504E+03
Min = -5.037724E+02
Max = 6.211429E+03
Min ID= 20302
Max ID= 22580
Contour_44:
Stress Tensor

Max Principal
At Z2

DESIGN LIMIT LOAD ANALYS
Static Subcase
Fx= -21.2g, Fy= -20.6g

Figure B36 Design Limit Load Card Cage Max Principal Stress, Z2

BASE PLATE (DWG. NO. 1356968)

Maximum principal stress occurs at rib beneath warmload area. From Figure B29,

T_{MAX} = 14,244 psi

T_{ULT} = 42,000 psi 6061-T651

$$M.S. = \frac{42{,}000}{1.4(14{,}244)} - 1 = \underline{1.1}$$

Restraint forces for all load cases are summarized in Table B1. The peak lateral forces at the shear pins occur for load cases 6 and 8. The forces are depicted in the sketch below. The vector sum of the component forces will be used to check bearing and shear tear-out failures at the holes.

Table B1 Limit Load Analysis Load Case Restraint Forces

Load Case 1

NODE	SYS	X-COMP	Y-COMP	Z-COMP
22200	NODL	-315.804016	-972.077393	0.000000
22458	NODL	315.804016	-1214.266724	0.000000
22783	NODL	0.000000	0.000000	-791.302612
22784	NODL	0.000000	0.000000	-339.296448
22785	NODL	0.000000	0.000000	-780.113098
22786	NODL	0.000000	0.000000	363.975769
22787	NODL	0.000000	0.000000	54.186626
22788	NODL	0.000000	0.000000	-48.137112
22789	NODL	0.000000	0.000000	-165.165436
22790	NODL	0.000000	0.000000	-377.831604
22791	NODL	0.000000	0.000000	315.570801
22792	NODL	0.000000	0.000000	327.213104
22793	NODL	0.000000	0.000000	-639.310852

Load Case 2

NODE	SYS	X-COMP	Y-COMP	Z-COMP
22200	NODL	-327.158539	940.765259	0.000000
22458	NODL	327.158539	-1245.578735	0.000000
22783	NODL	0.000000	0.000000	-274.964752
22784	NODL	0.000000	0.000000	-20.078049
22785	NODL	0.000000	0.000000	-129.057281
22786	NODL	0.000000	0.000000	816.507690
22787	NODL	0.000000	0.000000	272.241119
22788	NODL	0.000000	0.000000	209.337799
22789	NODL	0.000000	0.000000	156.726151
22790	NODL	0.000000	0.000000	103.057945
22791	NODL	0.000000	0.000000	624.446533
22792	NODL	0.000000	0.000000	557.347168
22793	NODL	0.000000	0.000000	-235.353271

Load Case 3

NODE	SYS	X-COMP	Y-COMP	Z-COMP
22200	NODL	327.158539	940.765259	0.000000
22458	NODL	-327.158539	1245.578735	0.000000
22783	NODL	0.000000	0.000000	274.964752
22784	NODL	0.000000	0.000000	20.078049
22785	NODL	0.000000	0.000000	129.057281
22786	NODL	0.000000	0.000000	-816.507690
22787	NODL	0.000000	0.000000	-272.241119
22788	NODL	0.000000	0.000000	-209.337799
22789	NODL	0.000000	0.000000	-156.726151
22790	NODL	0.000000	0.000000	-103.057945
22791	NODL	0.000000	0.000000	-624.446533
22792	NODL	0.000000	0.000000	-557.347168
22793	NODL	0.000000	0.000000	235.353271

Load Case 4

NODE	SYS	X-COMP	Y-COMP	Z-COMP
22200	NODL	315.804016	972.077393	0.000000
22458	NODL	-315.804016	1214.266724	0.000000
22783	NODL	0.000000	0.000000	791.302612
22784	NODL	0.000000	0.000000	339.296448
22785	NODL	0.000000	0.000000	780.113098
22786	NODL	0.000000	0.000000	-363.975769
22787	NODL	0.000000	0.000000	-54.186626
22788	NODL	0.000000	0.000000	48.137112
22789	NODL	0.000000	0.000000	165.165436
22790	NODL	0.000000	0.000000	377.831604
22791	NODL	0.000000	0.000000	-315.570801
22792	NODL	0.000000	0.000000	-327.213104
22793	NODL	0.000000	0.000000	639.310852

Load Case 5

NODE	SYS	X-COMP	Y-COMP	Z-COMP
22200	NODL	-1837.645508	-710.611267	0.000000
22458	NODL	-412.378601	-1475.732788	0.000000
22783	NODL	0.000000	0.000000	-1382.704712
22784	NODL	0.000000	0.000000	-39.195488
22785	NODL	0.000000	0.000000	124.334702
22786	NODL	0.000000	0.000000	1340.778320
22787	NODL	0.000000	0.000000	389.398651
22788	NODL	0.000000	0.000000	197.123123
22789	NODL	0.000000	0.000000	-66.964996
22790	NODL	0.000000	0.000000	-225.133209
22791	NODL	0.000000	0.000000	913.136169
22792	NODL	0.000000	0.000000	-18.651691
22793	NODL	0.000000	0.000000	-1232.120728

Load Case 6

NODE	SYS	X-COMP	Y-COMP	Z-COMP
22200	NODL	1194.682983	-1202.231445	0.000000
22458	NODL	1055.341064	-984.112854	0.000000
22783	NODL	0.000000	0.000000	316.437531
22784	NODL	0.000000	0.000000	-320.179047
22785	NODL	0.000000	0.000000	-1033.505249
22786	NODL	0.000000	0.000000	-160.294891
22787	NODL	0.000000	0.000000	-62.970905
22788	NODL	0.000000	0.000000	-35.922436
22789	NODL	0.000000	0.000000	58.525711
22790	NODL	0.000000	0.000000	-49.640450
22791	NODL	0.000000	0.000000	26.881138
22792	NODL	0.000000	0.000000	903.211853
22793	NODL	0.000000	0.000000	357.456665

Load Case 7

NODE	SYS	X-COMP	Y-COMP	Z-COMP
22200	NODL	-1194.682983	1202.231445	0.000000
22458	NODL	-1055.341064	984.112854	0.000000
22783	NODL	0.000000	0.000000	-316.437531
22784	NODL	0.000000	0.000000	320.179047
22785	NODL	0.000000	0.000000	1033.505249
22786	NODL	0.000000	0.000000	160.294891
22787	NODL	0.000000	0.000000	62.970905
22788	NODL	0.000000	0.000000	35.922436
22789	NODL	0.000000	0.000000	-58.525711
22790	NODL	0.000000	0.000000	49.640450
22791	NODL	0.000000	0.000000	-26.881138
22792	NODL	0.000000	0.000000	-903.211853
22793	NODL	0.000000	0.000000	-357.456665

Load Case 8

NODE	SYS	X-COMP	Y-COMP	Z-COMP
22200	NODL	1837.645508	710.611267	0.000000
22458	NODL	412.378601	1475.732788	0.000000
22783	NODL	0.000000	0.000000	1382.704712
22784	NODL	0.000000	0.000000	39.195488
22785	NODL	0.000000	0.000000	-124.334702
22786	NODL	0.000000	0.000000	-1340.778320
22787	NODL	0.000000	0.000000	-389.398651
22788	NODL	0.000000	0.000000	-197.123123
22789	NODL	0.000000	0.000000	66.964996
22790	NODL	0.000000	0.000000	225.133209
22791	NODL	0.000000	0.000000	-913.136169
22792	NODL	0.000000	0.000000	18.651691
22793	NODL	0.000000	0.000000	1232.120728

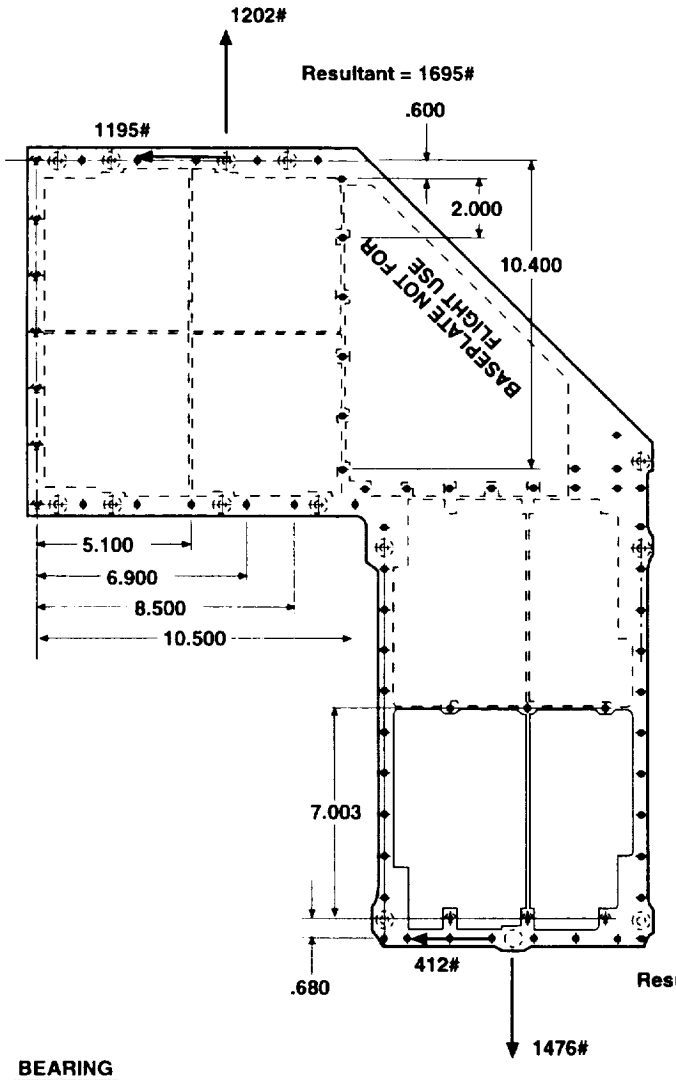

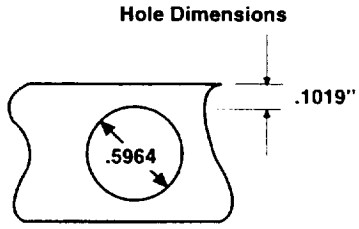

Baseplate Thick = 0.375"

Material: 6061 - T651

T_{bru} = 67,000 psi

T_{su} = 27,000 psi

296-3036M

BEARING

$$T = \frac{F}{Dt}$$

$$T = \frac{1695}{0.5964(.375)} = 7579 \text{ psi}$$

$$M.S. = \frac{67,000}{1.4(7579)} - 1 = \underline{5.31}$$

TEAR-OUT

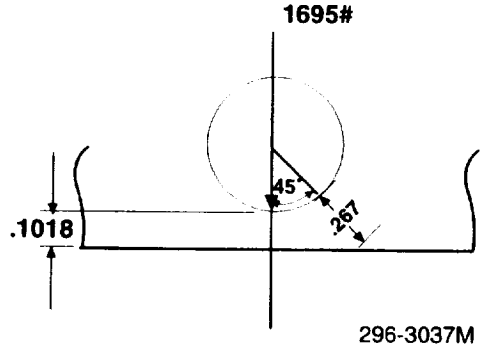

Assuming Max. Shear Stress Occurs At 45° To Center Line:

$$T = \frac{F}{2\ell_s t}$$

$$T = \frac{1695}{2(.267)(.375)} = 8464 \text{ psi}$$

$$T_{ult} = 27{,}000 \text{ psi}$$

$$M.S. = \frac{27{,}000}{1.4(8464)} - 1 = \underline{1.28}$$

DOWEL PIN (D22 - 750)

Material: 416 Stainless Steal

$$T_{tu} = 170{,}000 \text{ psi}$$

$$T_{su} = .6(170{,}000) = 102{,}000 \text{ psi}$$

$$T = \frac{F_R}{A} = \frac{1695}{\frac{\Pi}{4}(.375)^2} = 15{,}348 \text{ psi}$$

$$M.S. = \frac{102{,}000}{1.4(15{,}348)} - 1 = \underline{3.75}$$

INTERFACE ATTACHMENT SCREWS

Screw Size: 0.190 - 32 THD (#10)

Material: A-286 Low Alloy Steel

T_{ult} = 140,000 psi

Maximum Tensile And Compressive Force

At A SPC Occurs For Load Cases

5 And 8 At Grid Point 22783

For Screw: $A_T = 0.01985 \text{ in}^2$

$$T_T = \frac{1383}{0.01985} = 69{,}673 \text{ psi}$$

$$M.S. = \frac{140{,}000}{1.4\,(69{,}673)} - 1 = \underline{0.44}$$

For Isolator Spacer (1333395 - 6):

$$A = \frac{\Pi}{4}\,(.591^2 - .221^2) = .236 \text{ in}^2$$

$$T_c = \frac{1383}{.236} = 5860 \text{ psi}$$

G10 Fiber Glass, T_{ult} = 60,000 psi

$$M.S. = \frac{60{,}000}{1.4\,(5860)} - 1 = \underline{6.3}$$

296-3050M

Appendix C

RANDOM VIBRATION NASTRAN OUTPUT

Natural Frequency Output

X AXIS PSD RESPONSE

E I G E N V A L U E A N A L Y S I S S U M M A R Y (LANCZOS ITERATION)

BLOCK SIZE USED 7

NUMBER OF DECOMPOSITIONS 9

NUMBER OF ROOTS FOUND 552

NUMBER OF SOLVES REQUIRED 207

TERMINATION MESSAGE : REQUIRED NUMBER OF EIGENVALUES FOUND.

PAIR = 318, 316 , EPSILON = 1.00E-10

X AXIS PSD RESPONSE

R E A L E I G E N V A L U E S

MODE NO.	EXTRACTION ORDER	EIGENVALUE	RADIANS	CYCLES	GENERALIZED MASS	GENERALIZED STIFFNESS
1	1	-4.074536E-10	2.018548E-05	3.212619E-06	1.000000E+00	-4.074536E-10
2	2	-2.328306E-10	1.525879E-05	2.428512E-06	1.000000E+00	-2.328306E-10
3	3	0.0	0.0	0.0	1.000000E+00	0.0
4	4	3.259781E+05	5.709449E+02	9.086870E+01	1.000000E+00	3.259781E+05
5	5	3.373981E+05	5.808597E+02	9.244669E+01	1.000000E+00	3.373981E+05
6	6	4.156779E+05	6.447309E+02	1.026121E+02	1.000000E+00	4.156779E+05
7	7	5.255606E+05	7.249556E+02	1.153803E+02	1.000000E+00	5.255606E+05
8	8	5.889763E+05	7.674479E+02	1.221431E+02	1.000000E+00	5.889763E+05
9	9	5.982978E+05	7.734971E+02	1.231059E+02	1.000000E+00	5.982978E+05
10	10	7.816711E+05	8.841216E+02	1.407123E+02	1.000000E+00	7.816711E+05
11	11	8.101514E+05	9.000841E+02	1.432528E+02	1.000000E+00	8.101514E+05
12	12	8.239922E+05	9.077402E+02	1.444713E+02	1.000000E+00	8.239922E+05
13	13	8.453867E+05	9.194491E+02	1.463349E+02	1.000000E+00	8.453867E+05
14	14	8.629820E+05	9.289683E+02	1.478499E+02	1.000000E+00	8.629820E+05
15	15	8.830929E+05	9.397302E+02	1.495627E+02	1.000000E+00	8.830929E+05
16	16	9.040591E+05	9.508202E+02	1.513277E+02	1.000000E+00	9.040591E+05
17	17	9.102878E+05	9.540900E+02	1.518481E+02	1.000000E+00	9.102878E+05
18	18	9.914019E+05	9.956917E+02	1.584692E+02	1.000000E+00	9.914019E+05
19	19	1.000957E+06	1.000478E+03	1.592311E+02	1.000000E+00	1.000957E+06
20	20	1.038001E+06	1.018823E+03	1.621507E+02	1.000000E+00	1.038001E+06
21	21	1.057763E+06	1.028476E+03	1.636871E+02	1.000000E+00	1.057763E+06
22	22	1.119674E+06	1.058146E+03	1.684092E+02	1.000000E+00	1.119674E+06
23	23	1.198965E+06	1.094973E+03	1.742703E+02	1.000000E+00	1.198965E+06
24	24	1.297982E+06	1.139290E+03	1.813236E+02	1.000000E+00	1.297982E+06
25	25	1.317191E+06	1.147689E+03	1.826604E+02	1.000000E+00	1.317191E+06
26	26	1.484780E+06	1.218515E+03	1.939327E+02	1.000000E+00	1.484780E+06
27	27	1.616051E+06	1.271240E+03	2.023241E+02	1.000000E+00	1.616051E+06
28	28	1.696697E+06	1.302573E+03	2.073110E+02	1.000000E+00	1.696697E+06
29	29	1.762892E+06	1.327739E+03	2.113163E+02	1.000000E+00	1.762892E+06
30	30	1.783756E+06	1.335573E+03	2.125631E+02	1.000000E+00	1.783756E+06
31	31	1.809686E+06	1.345246E+03	2.141025E+02	1.000000E+00	1.809686E+06
32	32	1.816285E+06	1.347696E+03	2.144925E+02	1.000000E+00	1.816285E+06
33	33	1.825962E+06	1.351282E+03	2.150632E+02	1.000000E+00	1.825962E+06
34	34	1.842270E+06	1.357302E+03	2.160214E+02	1.000000E+00	1.842270E+06
35	35	1.854178E+06	1.361682E+03	2.167184E+02	1.000000E+00	1.854178E+06
36	36	1.883657E+06	1.372464E+03	2.184344E+02	1.000000E+00	1.883657E+06
37	37	1.920246E+06	1.385729E+03	2.205457E+02	1.000000E+00	1.920246E+06
38	38	1.944090E+06	1.394306E+03	2.219108E+02	1.000000E+00	1.944090E+06
39	39	1.959423E+06	1.399794E+03	2.227841E+02	1.000000E+00	1.959423E+06
40	40	2.016033E+06	1.419871E+03	2.259794E+02	1.000000E+00	2.016033E+06
41	41	2.024614E+06	1.422889E+03	2.264598E+02	1.000000E+00	2.024614E+06
42	42	2.092719E+06	1.446623E+03	2.302373E+02	1.000000E+00	2.092719E+06
43	43	2.214322E+06	1.488060E+03	2.368320E+02	1.000000E+00	2.214322E+06
44	44	2.328568E+06	1.525964E+03	2.428648E+02	1.000000E+00	2.328568E+06
45	45	2.498291E+06	1.580598E+03	2.515600E+02	1.000000E+00	2.498291E+06
46	46	2.550073E+06	1.596895E+03	2.541537E+02	1.000000E+00	2.550073E+06
47	47	2.570983E+06	1.603428E+03	2.551936E+02	1.000000E+00	2.570983E+06
48	48	2.586486E+06	1.608255E+03	2.559618E+02	1.000000E+00	2.586486E+06
49	49	2.693329E+06	1.641136E+03	2.611949E+02	1.000000E+00	2.693329E+06
50	50	2.708701E+06	1.645813E+03	2.619393E+02	1.000000E+00	2.708701E+06

X AXIS PSD RESPONSE

R E A L E I G E N V A L U E S

MODE NO.	EXTRACTION ORDER	EIGENVALUE	RADIANS	CYCLES	GENERALIZED MASS	GENERALIZED STIFFNESS
51	51	2.849041E+06	1.687910E+03	2.686393E+02	1.000000E+00	2.849041E+06
52	52	2.960519E+06	1.720616E+03	2.738445E+02	1.000000E+00	2.960519E+06
53	53	2.964290E+06	1.721711E+03	2.740189E+02	1.000000E+00	2.964290E+06
54	54	3.039637E+06	1.743456E+03	2.774796E+02	1.000000E+00	3.039637E+06
55	55	3.054592E+06	1.747739E+03	2.781613E+02	1.000000E+00	3.054592E+06
56	56	3.102269E+06	1.761326E+03	2.803237E+02	1.000000E+00	3.102269E+06
57	57	3.115546E+06	1.765091E+03	2.809229E+02	1.000000E+00	3.115546E+06
58	58	3.162688E+06	1.778395E+03	2.830403E+02	1.000000E+00	3.162688E+06
59	59	3.247881E+06	1.802188E+03	2.868271E+02	1.000000E+00	3.247881E+06
60	60	3.481226E+06	1.865804E+03	2.969520E+02	1.000000E+00	3.481226E+06
61	61	3.528644E+06	1.878468E+03	2.989675E+02	1.000000E+00	3.528644E+06
62	62	3.598008E+06	1.896841E+03	3.018917E+02	1.000000E+00	3.598008E+06
63	63	3.646900E+06	1.909686E+03	3.039359E+02	1.000000E+00	3.646900E+06
64	64	3.655764E+06	1.912005E+03	3.043051E+02	1.000000E+00	3.655764E+06
65	65	3.741507E+06	1.934298E+03	3.078530E+02	1.000000E+00	3.741507E+06
66	66	3.854341E+06	1.963248E+03	3.124606E+02	1.000000E+00	3.854341E+06
67	67	3.857014E+06	1.963928E+03	3.125689E+02	1.000000E+00	3.857014E+06
68	68	3.901204E+06	1.975146E+03	3.143543E+02	1.000000E+00	3.901204E+06
69	69	3.910441E+06	1.977484E+03	3.147263E+02	1.000000E+00	3.910441E+06
70	70	4.150735E+06	2.037335E+03	3.242520E+02	1.000000E+00	4.150735E+06
71	71	4.366089E+06	2.089519E+03	3.325573E+02	1.000000E+00	4.366089E+06
72	72	4.408758E+06	2.099704E+03	3.341783E+02	1.000000E+00	4.408758E+06
73	73	4.510105E+06	2.123701E+03	3.379975E+02	1.000000E+00	4.510105E+06
74	74	4.524199E+06	2.127016E+03	3.385251E+02	1.000000E+00	4.524199E+06
75	75	4.805655E+06	2.192180E+03	3.488963E+02	1.000000E+00	4.805655E+06
76	76	4.823515E+06	2.196250E+03	3.495440E+02	1.000000E+00	4.823515E+06
77	77	4.850114E+06	2.202297E+03	3.505065E+02	1.000000E+00	4.850114E+06
78	78	4.901926E+06	2.214029E+03	3.523737E+02	1.000000E+00	4.901926E+06
79	79	4.910978E+06	2.216073E+03	3.526989E+02	1.000000E+00	4.910978E+06
80	80	4.989950E+06	2.233820E+03	3.555234E+02	1.000000E+00	4.989950E+06
81	81	5.152692E+06	2.269954E+03	3.612744E+02	1.000000E+00	5.152692E+06
82	82	5.278087E+06	2.297409E+03	3.656440E+02	1.000000E+00	5.278087E+06
83	83	5.293004E+06	2.300653E+03	3.661602E+02	1.000000E+00	5.293004E+06
84	84	5.745062E+06	2.396886E+03	3.814762E+02	1.000000E+00	5.745062E+06
85	85	5.881197E+06	2.425118E+03	3.859695E+02	1.000000E+00	5.881197E+06
86	86	5.941651E+06	2.437550E+03	3.879482E+02	1.000000E+00	5.941651E+06
87	87	5.950871E+06	2.439441E+03	3.882490E+02	1.000000E+00	5.950871E+06
88	88	5.990818E+06	2.447615E+03	3.895500E+02	1.000000E+00	5.990818E+06
89	89	6.022203E+06	2.454018E+03	3.905691E+02	1.000000E+00	6.022203E+06
90	90	6.057625E+06	2.461224E+03	3.917160E+02	1.000000E+00	6.057625E+06
91	91	6.210197E+06	2.492027E+03	3.966183E+02	1.000000E+00	6.210197E+06
92	92	6.222098E+06	2.494413E+03	3.969982E+02	1.000000E+00	6.222098E+06
93	93	6.280555E+06	2.506104E+03	3.988588E+02	1.000000E+00	6.280555E+06
94	94	6.319785E+06	2.513918E+03	4.001025E+02	1.000000E+00	6.319785E+06
95	95	6.567024E+06	2.562620E+03	4.078537E+02	1.000000E+00	6.567024E+06
96	96	6.765603E+06	2.601077E+03	4.139743E+02	1.000000E+00	6.765603E+06
97	97	6.797837E+06	2.607266E+03	4.149593E+02	1.000000E+00	6.797837E+06
98	98	6.856095E+06	2.618415E+03	4.167336E+02	1.000000E+00	6.856095E+06
99	99	7.219882E+06	2.686984E+03	4.276467E+02	1.000000E+00	7.219882E+06
100	100	7.263448E+06	2.695078E+03	4.289350E+02	1.000000E+00	7.263448E+06

X AXIS PSD RESPONSE

R E A L E I G E N V A L U E S

MODE NO.	EXTRACTION ORDER	EIGENVALUE	RADIANS	CYCLES	GENERALIZED MASS	GENERALIZED STIFFNESS
101	101	7.264280E+06	2.695233E+03	4.289596E+02	1.000000E+00	7.264280E+06
102	102	7.407750E+06	2.721718E+03	4.331749E+02	1.000000E+00	7.407750E+06
103	103	7.571004E+06	2.751546E+03	4.379221E+02	1.000000E+00	7.571004E+06
104	104	7.578377E+06	2.752885E+03	4.381353E+02	1.000000E+00	7.578377E+06
105	105	7.583974E+06	2.753902E+03	4.382970E+02	1.000000E+00	7.583974E+06
106	106	7.706507E+06	2.776060E+03	4.418236E+02	1.000000E+00	7.706507E+06
107	107	7.814287E+06	2.795405E+03	4.449024E+02	1.000000E+00	7.814287E+06
108	108	7.926089E+06	2.815331E+03	4.480739E+02	1.000000E+00	7.926089E+06
109	109	8.019660E+06	2.831900E+03	4.507109E+02	1.000000E+00	8.019660E+06
110	110	8.153796E+06	2.855485E+03	4.544646E+02	1.000000E+00	8.153796E+06
111	111	8.292142E+06	2.879608E+03	4.583038E+02	1.000000E+00	8.292142E+06
112	112	8.320825E+06	2.884584E+03	4.590958E+02	1.000000E+00	8.320825E+06
113	113	8.345770E+06	2.888905E+03	4.597834E+02	1.000000E+00	8.345770E+06
114	114	8.503388E+06	2.916057E+03	4.641049E+02	1.000000E+00	8.503388E+06
115	115	8.682696E+06	2.946641E+03	4.689725E+02	1.000000E+00	8.682696E+06
116	116	8.782313E+06	2.963497E+03	4.716552E+02	1.000000E+00	8.782313E+06
117	117	8.922185E+06	2.987003E+03	4.753962E+02	1.000000E+00	8.922185E+06
118	118	8.929012E+06	2.988145E+03	4.755781E+02	1.000000E+00	8.929012E+06
119	119	8.967697E+06	2.994611E+03	4.766072E+02	1.000000E+00	8.967697E+06
120	120	8.990143E+06	2.998357E+03	4.772033E+02	1.000000E+00	8.990143E+06
121	121	9.168611E+06	3.027971E+03	4.819166E+02	1.000000E+00	9.168611E+06
122	122	9.233445E+06	3.038658E+03	4.836175E+02	1.000000E+00	9.233445E+06
123	123	9.280729E+06	3.046429E+03	4.848542E+02	1.000000E+00	9.280729E+06
124	124	9.344555E+06	3.056886E+03	4.865186E+02	1.000000E+00	9.344555E+06
125	125	9.443390E+06	3.073010E+03	4.890847E+02	1.000000E+00	9.443390E+06
126	126	9.611884E+06	3.100304E+03	4.934287E+02	1.000000E+00	9.611884E+06
127	127	9.775000E+06	3.126500E+03	4.975979E+02	1.000000E+00	9.775000E+06
128	128	1.002709E+07	3.166558E+03	5.039734E+02	1.000000E+00	1.002709E+07
129	129	1.006183E+07	3.172038E+03	5.048456E+02	1.000000E+00	1.006183E+07
130	130	1.009132E+07	3.176684E+03	5.055850E+02	1.000000E+00	1.009132E+07
131	131	1.015174E+07	3.186179E+03	5.070961E+02	1.000000E+00	1.015174E+07
132	132	1.038861E+07	3.223136E+03	5.129780E+02	1.000000E+00	1.038861E+07
133	133	1.047406E+07	3.236365E+03	5.150835E+02	1.000000E+00	1.047406E+07
134	134	1.073659E+07	3.276673E+03	5.214987E+02	1.000000E+00	1.073659E+07
135	135	1.076391E+07	3.280840E+03	5.221619E+02	1.000000E+00	1.076391E+07
136	136	1.086876E+07	3.296781E+03	5.246989E+02	1.000000E+00	1.086876E+07
137	137	1.095839E+07	3.310346E+03	5.268580E+02	1.000000E+00	1.095839E+07
138	138	1.100861E+07	3.317923E+03	5.280638E+02	1.000000E+00	1.100861E+07
139	139	1.105259E+07	3.324544E+03	5.291176E+02	1.000000E+00	1.105259E+07
140	140	1.116378E+07	3.341225E+03	5.317725E+02	1.000000E+00	1.116378E+07
141	141	1.123053E+07	3.351198E+03	5.333596E+02	1.000000E+00	1.123053E+07
142	142	1.138209E+07	3.373735E+03	5.369467E+02	1.000000E+00	1.138209E+07
143	143	1.145391E+07	3.384363E+03	5.386380E+02	1.000000E+00	1.145391E+07
144	144	1.149128E+07	3.389878E+03	5.395159E+02	1.000000E+00	1.149128E+07
145	145	1.160349E+07	3.406389E+03	5.421436E+02	1.000000E+00	1.160349E+07
146	146	1.175790E+07	3.428979E+03	5.457390E+02	1.000000E+00	1.175790E+07
147	147	1.189984E+07	3.449615E+03	5.490232E+02	1.000000E+00	1.189984E+07
148	148	1.192904E+07	3.453844E+03	5.496964E+02	1.000000E+00	1.192904E+07
149	149	1.199273E+07	3.463052E+03	5.511617E+02	1.000000E+00	1.199273E+07
150	150	1.200692E+07	3.465100E+03	5.514878E+02	1.000000E+00	1.200692E+07

X AXIS PSD RESPONSE

R E A L E I G E N V A L U E S

MODE NO.	EXTRACTION ORDER	EIGENVALUE	RADIANS	CYCLES	GENERALIZED MASS	GENERALIZED STIFFNESS
151	151	1.235489E+07	3.514952E+03	5.594221E+02	1.000000E+00	1.235489E+07
152	152	1.244848E+07	3.528240E+03	5.615369E+02	1.000000E+00	1.244848E+07
153	153	1.247275E+07	3.531678E+03	5.620840E+02	1.000000E+00	1.247275E+07
154	154	1.260049E+07	3.549717E+03	5.649550E+02	1.000000E+00	1.260049E+07
155	155	1.264890E+07	3.556529E+03	5.660392E+02	1.000000E+00	1.264890E+07
156	156	1.272562E+07	3.567298E+03	5.677531E+02	1.000000E+00	1.272562E+07
157	157	1.276787E+07	3.573215E+03	5.686949E+02	1.000000E+00	1.276787E+07
158	158	1.310616E+07	3.620243E+03	5.761795E+02	1.000000E+00	1.310616E+07
159	159	1.331843E+07	3.649442E+03	5.808268E+02	1.000000E+00	1.331843E+07
160	160	1.352337E+07	3.677413E+03	5.852785E+02	1.000000E+00	1.352337E+07
161	161	1.355297E+07	3.681435E+03	5.859186E+02	1.000000E+00	1.355297E+07
162	162	1.362149E+07	3.690730E+03	5.873979E+02	1.000000E+00	1.362149E+07
163	163	1.367587E+07	3.698090E+03	5.885692E+02	1.000000E+00	1.367587E+07
164	164	1.369554E+07	3.700748E+03	5.889923E+02	1.000000E+00	1.369554E+07
165	165	1.389999E+07	3.728269E+03	5.933725E+02	1.000000E+00	1.389999E+07
166	166	1.394764E+07	3.734653E+03	5.943885E+02	1.000000E+00	1.394764E+07
167	167	1.415785E+07	3.762692E+03	5.988510E+02	1.000000E+00	1.415785E+07
168	168	1.418917E+07	3.766851E+03	5.995129E+02	1.000000E+00	1.418917E+07
169	169	1.426076E+07	3.776342E+03	6.010234E+02	1.000000E+00	1.426076E+07
170	170	1.429249E+07	3.780541E+03	6.016918E+02	1.000000E+00	1.429249E+07
171	171	1.440795E+07	3.795780E+03	6.041171E+02	1.000000E+00	1.440795E+07
172	172	1.456547E+07	3.816474E+03	6.074107E+02	1.000000E+00	1.456547E+07
173	173	1.456966E+07	3.817022E+03	6.074980E+02	1.000000E+00	1.456966E+07
174	174	1.474191E+07	3.839519E+03	6.110784E+02	1.000000E+00	1.474191E+07
175	175	1.501314E+07	3.874679E+03	6.166743E+02	1.000000E+00	1.501314E+07
176	176	1.512350E+07	3.888894E+03	6.189367E+02	1.000000E+00	1.512350E+07
177	177	1.516650E+07	3.894419E+03	6.198160E+02	1.000000E+00	1.516650E+07
178	178	1.521574E+07	3.900736E+03	6.208214E+02	1.000000E+00	1.521574E+07
179	179	1.544592E+07	3.930130E+03	6.254996E+02	1.000000E+00	1.544592E+07
180	180	1.548425E+07	3.935003E+03	6.262752E+02	1.000000E+00	1.548425E+07
181	181	1.549483E+07	3.936348E+03	6.264892E+02	1.000000E+00	1.549483E+07
182	182	1.584822E+07	3.980982E+03	6.335930E+02	1.000000E+00	1.584822E+07
183	183	1.602090E+07	4.002612E+03	6.370355E+02	1.000000E+00	1.602090E+07
184	184	1.609138E+07	4.011406E+03	6.384352E+02	1.000000E+00	1.609138E+07
185	185	1.615519E+07	4.019352E+03	6.396996E+02	1.000000E+00	1.615519E+07
186	186	1.618268E+07	4.022770E+03	6.402437E+02	1.000000E+00	1.618268E+07
187	187	1.632143E+07	4.039979E+03	6.429826E+02	1.000000E+00	1.632143E+07
188	188	1.675763E+07	4.093609E+03	6.515180E+02	1.000000E+00	1.675763E+07
189	189	1.716123E+07	4.142611E+03	6.593170E+02	1.000000E+00	1.716123E+07
190	190	1.726456E+07	4.155065E+03	6.612991E+02	1.000000E+00	1.726456E+07
191	191	1.769301E+07	4.206306E+03	6.694543E+02	1.000000E+00	1.769301E+07
192	192	1.787742E+07	4.228169E+03	6.729340E+02	1.000000E+00	1.787742E+07
193	193	1.817035E+07	4.262669E+03	6.784248E+02	1.000000E+00	1.817035E+07
194	194	1.819075E+07	4.265061E+03	6.788055E+02	1.000000E+00	1.819075E+07
195	195	1.843906E+07	4.294072E+03	6.834228E+02	1.000000E+00	1.843906E+07
196	196	1.863010E+07	4.316259E+03	6.869540E+02	1.000000E+00	1.863010E+07
197	197	1.867183E+07	4.321091E+03	6.877230E+02	1.000000E+00	1.867183E+07
198	198	1.871278E+07	4.325827E+03	6.884767E+02	1.000000E+00	1.871278E+07
199	199	1.874741E+07	4.329828E+03	6.891135E+02	1.000000E+00	1.874741E+07
200	200	1.882044E+07	4.338253E+03	6.904545E+02	1.000000E+00	1.882044E+07

X AXIS PSD RESPONSE

R E A L E I G E N V A L U E S

MODE NO.	EXTRACTION ORDER	EIGENVALUE	RADIANS	CYCLES	GENERALIZED MASS	GENERALIZED STIFFNESS
201	201	1.907731E+07	4.367758E+03	6.951502E+02	1.000000E+00	1.907731E+07
202	202	1.929635E+07	4.392762E+03	6.991297E+02	1.000000E+00	1.929635E+07
203	203	1.933621E+07	4.397295E+03	6.998513E+02	1.000000E+00	1.933621E+07
204	204	1.944489E+07	4.409636E+03	7.018154E+02	1.000000E+00	1.944489E+07
205	205	1.952982E+07	4.419255E+03	7.033463E+02	1.000000E+00	1.952982E+07
206	206	1.963154E+07	4.430750E+03	7.051757E+02	1.000000E+00	1.963154E+07
207	207	1.983633E+07	4.453800E+03	7.088442E+02	1.000000E+00	1.983633E+07
208	208	1.987559E+07	4.458205E+03	7.095453E+02	1.000000E+00	1.987559E+07
209	209	1.997126E+07	4.468921E+03	7.112509E+02	1.000000E+00	1.997126E+07
210	210	2.007608E+07	4.480633E+03	7.131149E+02	1.000000E+00	2.007608E+07
211	211	2.018070E+07	4.492293E+03	7.149706E+02	1.000000E+00	2.018070E+07
212	212	2.058184E+07	4.536722E+03	7.220417E+02	1.000000E+00	2.058184E+07
213	213	2.058657E+07	4.537243E+03	7.221246E+02	1.000000E+00	2.058657E+07
214	214	2.070664E+07	4.550455E+03	7.242274E+02	1.000000E+00	2.070664E+07
215	215	2.071022E+07	4.550849E+03	7.242900E+02	1.000000E+00	2.071022E+07
216	216	2.074535E+07	4.554707E+03	7.249041E+02	1.000000E+00	2.074535E+07
217	217	2.079952E+07	4.560648E+03	7.258497E+02	1.000000E+00	2.079952E+07
218	218	2.085305E+07	4.566514E+03	7.267832E+02	1.000000E+00	2.085305E+07
219	219	2.091881E+07	4.573708E+03	7.279283E+02	1.000000E+00	2.091881E+07
220	220	2.100515E+07	4.583138E+03	7.294290E+02	1.000000E+00	2.100515E+07
221	221	2.110406E+07	4.593915E+03	7.311443E+02	1.000000E+00	2.110406E+07
222	222	2.137040E+07	4.622813E+03	7.357435E+02	1.000000E+00	2.137040E+07
223	223	2.142359E+07	4.628563E+03	7.366586E+02	1.000000E+00	2.142359E+07
224	224	2.155517E+07	4.642755E+03	7.389174E+02	1.000000E+00	2.155517E+07
225	225	2.161033E+07	4.648691E+03	7.398621E+02	1.000000E+00	2.161033E+07
226	226	2.191010E+07	4.680823E+03	7.449761E+02	1.000000E+00	2.191010E+07
227	227	2.196444E+07	4.686624E+03	7.458993E+02	1.000000E+00	2.196444E+07
228	228	2.198254E+07	4.688555E+03	7.462066E+02	1.000000E+00	2.198254E+07
229	229	2.215722E+07	4.707145E+03	7.491654E+02	1.000000E+00	2.215722E+07
230	230	2.218358E+07	4.709944E+03	7.496109E+02	1.000000E+00	2.218358E+07
231	231	2.226748E+07	4.718843E+03	7.510272E+02	1.000000E+00	2.226748E+07
232	232	2.244975E+07	4.738117E+03	7.540947E+02	1.000000E+00	2.244975E+07
233	233	2.255483E+07	4.749192E+03	7.558574E+02	1.000000E+00	2.255483E+07
234	234	2.276391E+07	4.771154E+03	7.593528E+02	1.000000E+00	2.276391E+07
235	235	2.280164E+07	4.775107E+03	7.599819E+02	1.000000E+00	2.280164E+07
236	236	2.320240E+07	4.816887E+03	7.666314E+02	1.000000E+00	2.320240E+07
237	237	2.341135E+07	4.838528E+03	7.700756E+02	1.000000E+00	2.341135E+07
238	238	2.388948E+07	4.887687E+03	7.778995E+02	1.000000E+00	2.388948E+07
239	239	2.409157E+07	4.908316E+03	7.811828E+02	1.000000E+00	2.409157E+07
240	240	2.416751E+07	4.916046E+03	7.824131E+02	1.000000E+00	2.416751E+07
241	241	2.417038E+07	4.916338E+03	7.824595E+02	1.000000E+00	2.417038E+07
242	242	2.423683E+07	4.923091E+03	7.835343E+02	1.000000E+00	2.423683E+07
243	243	2.431491E+07	4.931015E+03	7.847954E+02	1.000000E+00	2.431491E+07
244	244	2.444884E+07	4.944577E+03	7.869539E+02	1.000000E+00	2.444884E+07
245	245	2.454348E+07	4.954138E+03	7.884756E+02	1.000000E+00	2.454348E+07
246	246	2.456308E+07	4.956115E+03	7.887902E+02	1.000000E+00	2.456308E+07
247	247	2.463306E+07	4.963170E+03	7.899131E+02	1.000000E+00	2.463306E+07
248	248	2.490677E+07	4.990668E+03	7.942896E+02	1.000000E+00	2.490677E+07
249	249	2.508095E+07	5.008089E+03	7.970621E+02	1.000000E+00	2.508095E+07
250	250	2.542501E+07	5.042322E+03	8.025105E+02	1.000000E+00	2.542501E+07

X AXIS PSD RESPONSE

R E A L E I G E N V A L U E S

MODE NO.	EXTRACTION ORDER	EIGENVALUE	RADIANS	CYCLES	GENERALIZED MASS	GENERALIZED STIFFNESS
251	251	2.545095E+07	5.044894E+03	8.029197E+02	1.000000E+00	2.545095E+07
252	252	2.549710E+07	5.049466E+03	8.036474E+02	1.000000E+00	2.549710E+07
253	253	2.567639E+07	5.067188E+03	8.064680E+02	1.000000E+00	2.567639E+07
254	254	2.580005E+07	5.079375E+03	8.084076E+02	1.000000E+00	2.580005E+07
255	255	2.589896E+07	5.089103E+03	8.099558E+02	1.000000E+00	2.589896E+07
256	256	2.611662E+07	5.110442E+03	8.133521E+02	1.000000E+00	2.611662E+07
257	257	2.629749E+07	5.128108E+03	8.161637E+02	1.000000E+00	2.629749E+07
258	258	2.640917E+07	5.138985E+03	8.178948E+02	1.000000E+00	2.640917E+07
259	259	2.643278E+07	5.141282E+03	8.182604E+02	1.000000E+00	2.643278E+07
260	260	2.656451E+07	5.154077E+03	8.202968E+02	1.000000E+00	2.656451E+07
261	261	2.681870E+07	5.178678E+03	8.242122E+02	1.000000E+00	2.681870E+07
262	262	2.683280E+07	5.180039E+03	8.244287E+02	1.000000E+00	2.683280E+07
263	263	2.696112E+07	5.192410E+03	8.263976E+02	1.000000E+00	2.696112E+07
264	264	2.716430E+07	5.211938E+03	8.295057E+02	1.000000E+00	2.716430E+07
265	265	2.726046E+07	5.221155E+03	8.309727E+02	1.000000E+00	2.726046E+07
266	266	2.747880E+07	5.242022E+03	8.342938E+02	1.000000E+00	2.747880E+07
267	267	2.779131E+07	5.271746E+03	8.390244E+02	1.000000E+00	2.779131E+07
268	268	2.794957E+07	5.286735E+03	8.414100E+02	1.000000E+00	2.794957E+07
269	269	2.803125E+07	5.294455E+03	8.426386E+02	1.000000E+00	2.803125E+07
270	270	2.821588E+07	5.311862E+03	8.454091E+02	1.000000E+00	2.821588E+07
271	271	2.841344E+07	5.330426E+03	8.483636E+02	1.000000E+00	2.841344E+07
272	272	2.842031E+07	5.331070E+03	8.484661E+02	1.000000E+00	2.842031E+07
273	273	2.882822E+07	5.369192E+03	8.545334E+02	1.000000E+00	2.882822E+07
274	274	2.892594E+07	5.378285E+03	8.559806E+02	1.000000E+00	2.892594E+07
275	275	2.899826E+07	5.385003E+03	8.570499E+02	1.000000E+00	2.899826E+07
276	276	2.921754E+07	5.405325E+03	8.602842E+02	1.000000E+00	2.921754E+07
277	277	2.929191E+07	5.412200E+03	8.613783E+02	1.000000E+00	2.929191E+07
278	278	2.938245E+07	5.420558E+03	8.627086E+02	1.000000E+00	2.938245E+07
279	279	2.940011E+07	5.422187E+03	8.629678E+02	1.000000E+00	2.940011E+07
280	280	2.940102E+07	5.422271E+03	8.629811E+02	1.000000E+00	2.940102E+07
281	281	2.973372E+07	5.452864E+03	8.678502E+02	1.000000E+00	2.973372E+07
282	282	2.986343E+07	5.464745E+03	8.697411E+02	1.000000E+00	2.986343E+07
283	283	2.994234E+07	5.471960E+03	8.708895E+02	1.000000E+00	2.994234E+07
284	284	3.006903E+07	5.483523E+03	8.727299E+02	1.000000E+00	3.006903E+07
285	285	3.015904E+07	5.491724E+03	8.740350E+02	1.000000E+00	3.015904E+07
286	286	3.017532E+07	5.493207E+03	8.742709E+02	1.000000E+00	3.017532E+07
287	287	3.063562E+07	5.534945E+03	8.809139E+02	1.000000E+00	3.063562E+07
288	288	3.085079E+07	5.554349E+03	8.840020E+02	1.000000E+00	3.085079E+07
289	289	3.090185E+07	5.558943E+03	8.847333E+02	1.000000E+00	3.090185E+07
290	290	3.106554E+07	5.573647E+03	8.870735E+02	1.000000E+00	3.106554E+07
291	291	3.134233E+07	5.598422E+03	8.910165E+02	1.000000E+00	3.134233E+07
292	292	3.156408E+07	5.618192E+03	8.941630E+02	1.000000E+00	3.156408E+07
293	293	3.172859E+07	5.632813E+03	8.964901E+02	1.000000E+00	3.172859E+07
294	294	3.200779E+07	5.657543E+03	9.004259E+02	1.000000E+00	3.200779E+07
295	295	3.206767E+07	5.662832E+03	9.012677E+02	1.000000E+00	3.206767E+07
296	296	3.220007E+07	5.674510E+03	9.031263E+02	1.000000E+00	3.220007E+07
297	297	3.223663E+07	5.677731E+03	9.036389E+02	1.000000E+00	3.223663E+07
298	298	3.235174E+07	5.687859E+03	9.052509E+02	1.000000E+00	3.235174E+07
299	299	3.245063E+07	5.696545E+03	9.066334E+02	1.000000E+00	3.245063E+07
300	300	3.248685E+07	5.699723E+03	9.071391E+02	1.000000E+00	3.248685E+07

X AXIS PSD RESPONSE

MODE NO.	EXTRACTION ORDER	EIGENVALUE	REAL EIGENVALUES RADIANS	CYCLES	GENERALIZED MASS	GENERALIZED STIFFNESS
301	301	3.251136E+07	5.701873E+03	9.074813E+02	1.000000E-00	3.251136E+07
302	302	3.259317E+07	5.709042E+03	9.086223E+02	1.000000E-00	3.259317E+07
303	303	3.272878E+07	5.720907E+03	9.105106E+02	1.000000E+00	3.272878E+07
304	304	3.312394E+07	5.755340E+03	9.159908E+02	1.000000E+00	3.312394E+07
305	305	3.314822E+07	5.757449E+03	9.163264E+02	1.000000E+00	3.314822E+07
306	306	3.334850E+07	5.774816E+03	9.190906E+02	1.000000E+00	3.334850E+07
307	307	3.385708E+07	5.818684E+03	9.260723E+02	1.000000E+00	3.385708E+07
308	308	3.391174E+07	5.823378E+03	9.268195E+02	1.000000E+00	3.391174E+07
309	309	3.454428E+07	5.877438E+03	9.354233E+02	1.000000E+00	3.454428E+07
310	310	3.498000E+07	5.914389E+03	9.413043E+02	1.000000E+00	3.498000E+07
311	311	3.498626E+07	5.914918E+03	9.413884E+02	1.000000E+00	3.498626E+07
312	312	3.519137E+07	5.932231E+03	9.441439E+02	1.000000E+00	3.519137E+07
313	313	3.531833E+07	5.942923E+03	9.458455E+02	1.000000E+00	3.531833E+07
314	314	3.613191E+07	6.010982E+03	9.566776E+02	1.000000E+00	3.613191E+07
315	315	3.632134E+07	6.026719E+03	9.591821E+02	1.000000E+00	3.632134E+07
316	316	3.655212E+07	6.045835E+03	9.622245E+02	1.000000E+00	3.655212E+07
317	317	3.692707E+07	6.076765E+03	9.671472E+02	1.000000E+00	3.692707E+07
318	318	3.715110E+07	6.095170E+03	9.700765E+02	1.000000E+00	3.715110E+07
319	319	3.759367E+07	6.131368E+03	9.758375E+02	1.000000E+00	3.759367E+07
320	320	3.769638E+07	6.139737E+03	9.771695E+02	1.000000E+00	3.769638E+07
321	321	3.825572E+07	6.185121E+03	9.843926E+02	1.000000E+00	3.825572E+07
322	322	3.853446E+07	6.207613E+03	9.879722E+02	1.000000E+00	3.853446E+07
323	323	3.892178E+07	6.238732E+03	9.929250E+02	1.000000E+00	3.892178E+07
324	324	3.896832E+07	6.242461E+03	9.935186E+02	1.000000E+00	3.896832E+07
325	325	3.919069E+07	6.260247E+03	9.963492E+02	1.000000E+00	3.919069E+07
326	326	3.926996E+07	6.266575E+03	9.973563E+02	1.000000E+00	3.926996E+07
327	327	3.939041E+07	6.276178E+03	9.988848E+02	1.000000E+00	3.939041E+07
328	328	3.977682E+07	6.306887E+03	1.003772E+03	1.000000E+00	3.977682E+07
329	329	4.011846E+07	6.333914E+03	1.008074E+03	1.000000E+00	4.011846E+07
330	330	4.035039E+07	6.352195E+03	1.010983E+03	1.000000E+00	4.035039E+07
331	331	4.075995E+07	6.384352E+03	1.016101E+03	1.000000E+00	4.075995E+07
332	332	4.091435E+07	6.396433E+03	1.018024E+03	1.000000E+00	4.091435E+07
333	333	4.102644E+07	6.405189E+03	1.019417E+03	1.000000E+00	4.102644E+07
334	334	4.115612E+07	6.415303E+03	1.021027E+03	1.000000E+00	4.115612E+07
335	335	4.120759E+07	6.419313E+03	1.021665E+03	1.000000E+00	4.120759E+07
336	336	4.139483E+07	6.433881E+03	1.023984E+03	1.000000E+00	4.139483E+07
337	337	4.157982E+07	6.448241E+03	1.026269E+03	1.000000E+00	4.157982E+07
338	338	4.173063E+07	6.459925E+03	1.028129E+03	1.000000E+00	4.173063E+07
339	339	4.174646E+07	6.461150E+03	1.028324E+03	1.000000E+00	4.174646E+07
340	340	4.183204E+07	6.467769E+03	1.029377E+03	1.000000E+00	4.183204E+07
341	341	4.206208E+07	6.485528E+03	1.032204E+03	1.000000E+00	4.206208E+07
342	342	4.207716E+07	6.486691E+03	1.032389E+03	1.000000E+00	4.207716E+07
343	343	4.267996E+07	6.532990E+03	1.039758E+03	1.000000E+00	4.267996E+07
344	344	4.317824E+07	6.571015E+03	1.045809E+03	1.000000E+00	4.317824E+07
345	345	4.319358E+07	6.572183E+03	1.045995E+03	1.000000E+00	4.319358E+07
346	346	4.321870E+07	6.574093E+03	1.046299E+03	1.000000E+00	4.321870E+07
347	347	4.329921E+07	6.580214E+03	1.047274E+03	1.000000E+00	4.329921E+07
348	348	4.330929E+07	6.580979E+03	1.047395E+03	1.000000E+00	4.330929E+07
349	349	4.383865E+07	6.621076E+03	1.053777E+03	1.000000E+00	4.383865E+07
350	350	4.449670E+07	6.670585E+03	1.061656E+03	1.000000E+00	4.449670E+07

X AXIS PSD RESPONSE

R E A L E I G E N V A L U E S

MODE NO.	EXTRACTION ORDER	EIGENVALUE	RADIANS	CYCLES	GENERALIZED MASS	GENERALIZED STIFFNESS
351	351	4.467068E+07	6.683612E+03	1.063730E+03	1.000000E+00	4.467068E+07
352	352	4.503224E+07	6.710606E+03	1.068026E+03	1.000000E+00	4.503224E+07
353	353	4.509249E+07	6.715094E+03	1.068740E+03	1.000000E+00	4.509249E+07
354	354	4.510102E+07	6.715729E+03	1.068841E+03	1.000000E+00	4.510102E+07
355	355	4.513255E+07	6.718077E+03	1.069215E+03	1.000000E+00	4.513255E+07
356	356	4.545564E+07	6.742080E+03	1.073035E+03	1.000000E+00	4.545564E+07
357	357	4.561005E+07	6.753521E+03	1.074856E+03	1.000000E+00	4.561005E+07
358	358	4.573180E+07	6.762529E+03	1.076290E+03	1.000000E+00	4.573180E+07
359	359	4.575042E+07	6.763906E+03	1.076509E+03	1.000000E+00	4.575042E+07
360	360	4.589204E+07	6.774367E+03	1.078174E+03	1.000000E+00	4.589204E+07
361	361	4.606233E+07	6.786924E+03	1.080172E+03	1.000000E+00	4.606233E+07
362	362	4.637614E+07	6.810002E+03	1.083846E+03	1.000000E+00	4.637614E+07
363	363	4.647614E+07	6.817341E+03	1.085013E+03	1.000000E+00	4.647614E+07
364	364	4.650124E+07	6.819182E+03	1.085306E+03	1.000000E+00	4.650124E+07
365	365	4.654650E+07	6.822500E+03	1.085834E+03	1.000000E+00	4.654650E+07
366	366	4.666734E+07	6.831350E+03	1.087243E+03	1.000000E+00	4.666734E+07
367	367	4.681477E+07	6.842132E+03	1.088959E+03	1.000000E+00	4.681477E+07
368	368	4.699066E+07	6.854974E+03	1.091003E+03	1.000000E+00	4.699066E+07
369	369	4.701886E+07	6.857030E+03	1.091330E+03	1.000000E+00	4.701886E+07
370	370	4.717000E+07	6.868042E+03	1.093083E+03	1.000000E+00	4.717000E+07
371	371	4.758842E+07	6.898436E+03	1.097920E+03	1.000000E+00	4.758842E+07
372	372	4.865489E+07	6.975306E+03	1.110154E+03	1.000000E+00	4.865489E+07
373	373	4.912424E+07	7.008869E+03	1.115496E+03	1.000000E+00	4.912424E+07
374	374	4.952987E+07	7.037746E+03	1.120092E+03	1.000000E+00	4.952987E+07
375	375	4.979024E+07	7.056220E+03	1.123032E+03	1.000000E+00	4.979024E+07
376	376	4.981255E+07	7.057800E+03	1.123284E+03	1.000000E+00	4.981255E+07
377	377	4.994480E+07	7.067164E+03	1.124774E+03	1.000000E+00	4.994480E+07
378	378	5.013772E+07	7.080800E+03	1.126944E+03	1.000000E+00	5.013772E+07
379	379	5.026451E+07	7.089747E+03	1.128368E+03	1.000000E+00	5.026451E+07
380	380	5.050631E+07	7.106779E+03	1.131079E+03	1.000000E+00	5.050631E+07
381	381	5.055141E+07	7.109951E+03	1.131584E+03	1.000000E+00	5.055141E+07
382	382	5.063087E+07	7.115537E+03	1.132473E+03	1.000000E+00	5.063087E+07
383	383	5.068375E+07	7.119252E+03	1.133064E+03	1.000000E+00	5.068375E+07
384	384	5.090342E+07	7.134663E+03	1.135517E+03	1.000000E+00	5.090342E+07
385	385	5.113903E+07	7.151156E+03	1.138142E+03	1.000000E+00	5.113903E+07
386	386	5.132780E+07	7.164342E+03	1.140240E+03	1.000000E+00	5.132780E+07
387	387	5.140589E+07	7.169790E+03	1.141108E+03	1.000000E+00	5.140589E+07
388	388	5.146417E+07	7.173854E+03	1.141754E+03	1.000000E+00	5.146417E+07
389	389	5.149672E+07	7.176122E+03	1.142115E+03	1.000000E+00	5.149672E+07
390	390	5.176373E+07	7.194701E+03	1.145072E+03	1.000000E+00	5.176373E+07
391	391	5.188204E+07	7.202918E+03	1.146380E+03	1.000000E+00	5.188204E+07
392	392	5.190332E+07	7.204396E+03	1.146615E+03	1.000000E+00	5.190332E+07
393	393	5.202392E+07	7.212761E+03	1.147947E+03	1.000000E+00	5.202392E+07
394	394	5.212946E+07	7.220073E+03	1.149110E+03	1.000000E+00	5.212946E+07
395	395	5.266585E+07	7.257124E+03	1.155007E+03	1.000000E+00	5.266585E+07
396	396	5.309580E+07	7.286687E+03	1.159712E+03	1.000000E+00	5.309580E+07
397	397	5.325647E+07	7.297703E+03	1.161465E+03	1.000000E+00	5.325647E+07
398	398	5.334789E+07	7.303964E+03	1.162462E+03	1.000000E+00	5.334789E+07
399	399	5.339566E+07	7.307233E+03	1.162982E+03	1.000000E+00	5.339566E+07
400	400	5.355025E+07	7.317804E+03	1.164665E+03	1.000000E+00	5.355025E+07

X AXIS PSD RESPONSE

R E A L E I G E N V A L U E S

MODE NO.	EXTRACTION ORDER	EIGENVALUE	RADIANS	CYCLES	GENERALIZED MASS	GENERALIZED STIFFNESS
401	401	5.374108E+07	7.330831E+03	1.166738E+03	1.000000E+00	5.374108E+07
402	402	5.411576E+07	7.356341E+03	1.170798E+03	1.000000E+00	5.411576E+07
403	403	5.430739E+07	7.369355E+03	1.172869E+03	1.000000E+00	5.430739E+07
404	404	5.455115E+07	7.385875E+03	1.175499E+03	1.000000E+00	5.455115E+07
405	405	5.462480E+07	7.390859E+03	1.176292E+03	1.000000E+00	5.462480E+07
406	406	5.474197E+07	7.398782E+03	1.177553E+03	1.000000E+00	5.474197E+07
407	407	5.481822E+07	7.403933E+03	1.178373E+03	1.000000E+00	5.481822E+07
408	408	5.500660E+07	7.416644E+03	1.180396E+03	1.000000E+00	5.500660E+07
409	409	5.518273E+07	7.428508E+03	1.182284E+03	1.000000E+00	5.518273E+07
410	410	5.556629E+07	7.454280E+03	1.186385E+03	1.000000E+00	5.556629E+07
411	411	5.576180E+07	7.467382E+03	1.188471E+03	1.000000E+00	5.576180E+07
412	412	5.611764E+07	7.491171E+03	1.192257E+03	1.000000E+00	5.611764E+07
413	413	5.629784E+07	7.503188E+03	1.194170E+03	1.000000E+00	5.629784E+07
414	414	5.656739E+07	7.521129E+03	1.197025E+03	1.000000E+00	5.656739E+07
415	415	5.668438E+07	7.528903E+03	1.198262E+03	1.000000E+00	5.668438E+07
416	416	5.687852E+07	7.541785E+03	1.200312E+03	1.000000E+00	5.687852E+07
417	417	5.700853E+07	7.550399E+03	1.201683E+03	1.000000E+00	5.700853E+07
418	418	5.746820E+07	7.580778E+03	1.206518E+03	1.000000E+00	5.746820E+07
419	419	5.756052E+07	7.586865E+03	1.207487E+03	1.000000E+00	5.756052E+07
420	420	5.774483E+07	7.599002E+03	1.209419E+03	1.000000E+00	5.774483E+07
421	421	5.804196E+07	7.618527E+03	1.212526E+03	1.000000E+00	5.804196E+07
422	422	5.807820E+07	7.620905E+03	1.212905E+03	1.000000E+00	5.807820E+07
423	423	5.824302E+07	7.631711E+03	1.214625E+03	1.000000E+00	5.824302E+07
424	424	5.835966E+07	7.639350E+03	1.215840E+03	1.000000E+00	5.835966E+07
425	425	5.843601E+07	7.644345E+03	1.216635E+03	1.000000E+00	5.843601E+07
426	426	5.861559E+07	7.656082E+03	1.218503E+03	1.000000E+00	5.861559E+07
427	427	5.910948E+07	7.688269E+03	1.223626E+03	1.000000E+00	5.910948E+07
428	428	5.921496E+07	7.695126E+03	1.224717E+03	1.000000E+00	5.921496E+07
429	429	5.983629E+07	7.735392E+03	1.231126E+03	1.000000E+00	5.983629E+07
430	430	6.003862E+07	7.748459E+03	1.233206E+03	1.000000E+00	6.003862E+07
431	431	6.005944E+07	7.749803E+03	1.233419E+03	1.000000E+00	6.005944E+07
432	432	6.017154E+07	7.757031E+03	1.234570E+03	1.000000E+00	6.017154E+07
433	433	6.020741E+07	7.759344E+03	1.234938E+03	1.000000E+00	6.020741E+07
434	434	6.035386E+07	7.768775E+03	1.236439E+03	1.000000E+00	6.035386E+07
435	435	6.045456E+07	7.775253E+03	1.237470E+03	1.000000E+00	6.045456E+07
436	436	6.060778E+07	7.785100E+03	1.239037E+03	1.000000E+00	6.060778E+07
437	437	6.095780E+07	7.807547E+03	1.242610E+03	1.000000E+00	6.095780E+07
438	438	6.119828E+07	7.822933E+03	1.245058E+03	1.000000E+00	6.119828E+07
439	439	6.182253E+07	7.862730E+03	1.251392E+03	1.000000E+00	6.182253E+07
440	440	6.198656E+07	7.873155E+03	1.253052E+03	1.000000E+00	6.198656E+07
441	441	6.201029E+07	7.874661E+03	1.253291E+03	1.000000E+00	6.201029E+07
442	442	6.238893E+07	7.898666E+03	1.257112E+03	1.000000E+00	6.238893E+07
443	443	6.243759E+07	7.901746E+03	1.257602E+03	1.000000E+00	6.243759E+07
444	444	6.274288E+07	7.921041E+03	1.260673E+03	1.000000E+00	6.274288E+07
445	445	6.281571E+07	7.925636E+03	1.261404E+03	1.000000E+00	6.281571E+07
446	446	6.309381E+07	7.943161E+03	1.264193E+03	1.000000E+00	6.309381E+07
447	447	6.355645E+07	7.972230E+03	1.268820E+03	1.000000E+00	6.355645E+07
448	448	6.367572E+07	7.979707E+03	1.270010E+03	1.000000E+00	6.367572E+07
449	449	6.387821E+07	7.992385E+03	1.272027E+03	1.000000E+00	6.387821E+07
450	450	6.411689E+07	8.007302E+03	1.274402E+03	1.000000E+00	6.411689E+07

X AXIS PSD RESPONSE

R E A L E I G E N V A L U E S

MODE NO.	EXTRACTION ORDER	EIGENVALUE	RADIANS	CYCLES	GENERALIZED MASS	GENERALIZED STIFFNESS
451	451	6.450258E+07	8.031350E+03	1.278229E+03	1.000000E+00	6.450258E+07
452	452	6.486752E+07	8.054037E+03	1.281840E+03	1.000000E+00	6.486752E+07
453	453	6.507087E+07	8.066652E+03	1.283848E+03	1.000000E+00	6.507087E+07
454	454	6.529978E+07	8.080828E+03	1.286104E+03	1.000000E+00	6.529978E+07
455	455	6.586485E+07	8.115716E+03	1.291656E+03	1.000000E+00	6.586485E+07
456	456	6.592804E+07	8.119608E+03	1.292276E+03	1.000000E+00	6.592804E+07
457	457	6.597144E+07	8.122280E+03	1.292701E+03	1.000000E+00	6.597144E+07
458	458	6.610022E+07	8.130204E+03	1.293962E+03	1.000000E+00	6.610022E+07
459	459	6.620814E+07	8.136838E+03	1.295018E+03	1.000000E+00	6.620814E+07
460	460	6.634054E+07	8.144970E+03	1.296312E+03	1.000000E+00	6.634054E+07
461	461	6.645211E+07	8.151816E+03	1.297402E+03	1.000000E+00	6.645211E+07
462	462	6.664967E+07	8.163925E+03	1.299329E+03	1.000000E+00	6.664967E+07
463	463	6.710396E+07	8.191701E+03	1.303750E+03	1.000000E+00	6.710396E+07
464	464	6.728516E+07	8.202753E+03	1.305509E+03	1.000000E+00	6.728516E+07
465	465	6.783276E+07	8.236064E+03	1.310810E+03	1.000000E+00	6.783276E+07
466	466	6.784342E+07	8.236712E+03	1.310913E+03	1.000000E+00	6.784342E+07
467	467	6.806503E+07	8.250153E+03	1.313053E+03	1.000000E+00	6.806503E+07
468	468	6.819726E+07	8.258163E+03	1.314327E+03	1.000000E+00	6.819726E+07
469	469	6.853008E+07	8.278290E+03	1.317531E+03	1.000000E+00	6.853008E+07
470	470	6.859988E+07	8.282505E+03	1.318202E+03	1.000000E+00	6.859988E+07
471	471	6.867987E+07	8.287332E+03	1.318970E+03	1.000000E+00	6.867987E+07
472	472	6.872130E+07	8.289831E+03	1.319368E+03	1.000000E+00	6.872130E+07
473	473	6.916255E+07	8.316402E+03	1.323597E+03	1.000000E+00	6.916255E+07
474	474	6.931526E+07	8.325579E+03	1.325057E+03	1.000000E+00	6.931526E+07
475	475	6.933780E+07	8.326933E+03	1.325272E+03	1.000000E+00	6.933780E+07
476	476	6.993017E+07	8.362426E+03	1.330921E+03	1.000000E+00	6.993017E+07
477	477	7.091319E+07	8.420997E+03	1.340243E+03	1.000000E+00	7.091319E+07
478	478	7.101457E+07	8.427015E+03	1.341201E+03	1.000000E+00	7.101457E+07
479	479	7.113351E+07	8.434068E+03	1.342324E+03	1.000000E+00	7.113351E+07
480	480	7.127339E+07	8.442357E+03	1.343643E+03	1.000000E+00	7.127339E+07
481	481	7.144909E+07	8.452756E+03	1.345298E+03	1.000000E+00	7.144909E+07
482	482	7.152402E+07	8.457188E+03	1.346003E+03	1.000000E+00	7.152402E+07
483	483	7.158362E+07	8.460710E+03	1.346564E+03	1.000000E+00	7.158362E+07
484	484	7.180555E+07	8.473815E+03	1.348650E+03	1.000000E+00	7.180555E+07
485	485	7.181853E+07	8.474581E+03	1.348771E+03	1.000000E+00	7.181853E+07
486	486	7.190409E+07	8.479628E+03	1.349575E+03	1.000000E+00	7.190409E+07
487	487	7.207525E+07	8.489714E+03	1.351180E+03	1.000000E+00	7.207525E+07
488	488	7.233800E+07	8.505175E+03	1.353641E+03	1.000000E+00	7.233800E+07
489	489	7.242146E+07	8.510080E+03	1.354421E+03	1.000000E+00	7.242146E+07
490	490	7.269968E+07	8.526411E+03	1.357020E+03	1.000000E+00	7.269968E+07
491	491	7.275333E+07	8.529556E+03	1.357521E+03	1.000000E+00	7.275333E+07
492	492	7.287954E+07	8.536951E+03	1.358698E+03	1.000000E+00	7.287954E+07
493	493	7.308447E+07	8.548945E+03	1.360607E+03	1.000000E+00	7.308447E+07
494	494	7.377802E+07	8.589413E+03	1.367047E+03	1.000000E+00	7.377802E+07
495	495	7.389785E+07	8.596386E+03	1.368157E+03	1.000000E+00	7.389785E+07
496	496	7.443698E+07	8.627688E+03	1.373139E+03	1.000000E+00	7.443698E+07
497	497	7.496926E+07	8.658479E+03	1.378040E+03	1.000000E+00	7.496926E+07
498	498	7.500111E+07	8.660318E+03	1.378332E+03	1.000000E+00	7.500111E+07
499	499	7.509887E+07	8.665961E+03	1.379230E+03	1.000000E+00	7.509887E+07
500	500	7.587926E+07	8.710870E+03	1.386378E+03	1.000000E+00	7.587926E+07

X AXIS PSD RESPONSE

MODE NO.	EXTRACTION ORDER	EIGENVALUE	REAL EIGENVALUES RADIANS	CYCLES	GENERALIZED MASS	GENERALIZED STIFFNESS
501	501	7.599943E+07	8.717766E+03	1.387475E+03	1.000000E+00	7.599943E+07
502	502	7.622737E+07	8.730829E+03	1.389555E+03	1.000000E+00	7.622737E+07
503	503	7.653702E+07	8.748544E+03	1.392374E+03	1.000000E+00	7.653702E+07
504	504	7.665858E+07	8.755489E+03	1.393479E+03	1.000000E+00	7.665858E+07
505	505	7.707460E+07	8.779214E+03	1.397255E+03	1.000000E+00	7.707460E+07
506	506	7.735418E+07	8.795122E+03	1.399787E+03	1.000000E+00	7.735418E+07
507	507	7.764890E+07	8.811861E+03	1.402451E+03	1.000000E+00	7.764890E+07
508	508	7.827112E+07	8.847097E+03	1.408059E+03	1.000000E+00	7.827112E+07
509	509	7.841208E+07	8.855060E+03	1.409326E+03	1.000000E+00	7.841208E+07
510	510	7.868090E+07	8.870226E+03	1.411740E+03	1.000000E+00	7.868090E+07
511	511	7.874808E+07	8.874012E+03	1.412343E+03	1.000000E+00	7.874808E+07
512	512	7.887870E+07	8.881368E+03	1.413514E+03	1.000000E+00	7.887870E+07
513	513	7.913991E+07	8.896062E+03	1.415852E+03	1.000000E+00	7.913991E+07
514	514	7.956150E+07	8.919726E+03	1.419618E+03	1.000000E+00	7.956150E+07
515	515	7.966294E+07	8.925410E+03	1.420523E+03	1.000000E+00	7.966294E+07
516	516	7.992114E+07	8.939862E+03	1.422823E+03	1.000000E+00	7.992114E+07
517	517	7.999884E+07	8.944207E+03	1.423515E+03	1.000000E+00	7.999884E+07
518	518	8.017586E+07	8.954098E+03	1.425089E+03	1.000000E+00	8.017586E+07
519	519	8.022087E+07	8.956610E+03	1.425489E+03	1.000000E+00	8.022087E+07
520	520	8.071967E+07	8.984413E+03	1.429914E+03	1.000000E+00	8.071967E+07
521	521	8.086426E+07	8.992456E+03	1.431194E+03	1.000000E+00	8.086426E+07
522	522	8.166561E+07	9.036902E+03	1.438268E+03	1.000000E+00	8.166561E+07
523	523	8.211363E+07	9.061657E+03	1.442208E+03	1.000000E+00	8.211363E+07
524	524	8.254728E+07	9.085554E+03	1.446011E+03	1.000000E+00	8.254728E+07
525	525	8.283728E+07	9.101499E+03	1.448548E+03	1.000000E+00	8.283728E+07
526	526	8.296558E+07	9.108544E+03	1.449670E+03	1.000000E+00	8.296558E+07
527	527	8.319807E+07	9.121298E+03	1.451700E+03	1.000000E+00	8.319807E+07
528	528	8.332539E+07	9.128274E+03	1.452810E+03	1.000000E+00	8.332539E+07
529	529	8.357732E+07	9.142063E+03	1.455005E+03	1.000000E+00	8.357732E+07
530	530	8.361169E+07	9.143942E+03	1.455304E+03	1.000000E+00	8.361169E+07
531	531	8.400117E+07	9.165215E+03	1.458689E+03	1.000000E+00	8.400117E+07
532	532	8.407853E+07	9.169435E+03	1.459361E+03	1.000000E+00	8.407853E+07
533	533	8.460988E+07	9.198363E+03	1.463965E+03	1.000000E+00	8.460988E+07
534	534	8.471102E+07	9.203859E+03	1.464840E+03	1.000000E+00	8.471102E+07
535	535	8.477658E+07	9.207420E+03	1.465406E+03	1.000000E+00	8.477658E+07
536	536	8.481258E+07	9.209374E+03	1.465717E+03	1.000000E-00	8.481258E+07
537	537	8.501001E+07	9.220087E+03	1.467422E+03	1.000000E+00	8.501001E+07
538	538	8.504534E+07	9.222003E+03	1.467727E+03	1.000000E+00	8.504534E+07
539	539	8.523569E+07	9.232317E+03	1.469369E+03	1.000000E+00	8.523569E+07
540	540	8.545311E+07	9.244085E+03	1.471242E+03	1.000000E+00	8.545311E+07
541	541	8.557038E+07	9.250426E+03	1.472251E+03	1.000000E+00	8.557038E+07
542	542	8.583736E+07	9.264846E+03	1.474546E+03	1.000000E+00	8.583736E+07
543	543	8.595688E+07	9.271293E+03	1.475572E+03	1.000000E+00	8.595688E+07
544	544	8.616670E+07	9.282602E+03	1.477372E+03	1.000000E+00	8.616670E+07
545	545	8.650810E+07	9.300974E+03	1.480296E+03	1.000000E+00	8.650810E+07
546	546	8.691490E+07	9.322816E+03	1.483772E+03	1.000000E+00	8.691490E+07
547	547	8.699945E+07	9.327350E+03	1.484494E+03	1.000000E+00	8.699945E+07
548	548	8.729276E+07	9.343060E+03	1.486994E+03	1.000000E+00	8.729276E+07
549	549	8.818504E+07	9.390689E+03	1.494575E+03	1.000000E+00	8.818504E+07
550	550	8.840098E+07	9.402180E+03	1.496403E+03	1.000000E+00	8.840098E+07

X AXIS PSD RESPONSE

R E A L E I G E N V A L U E S

MODE NO.	EXTRACTION ORDER	EIGENVALUE	RADIANS	CYCLES	GENERALIZED MASS	GENERALIZED STIFFNESS
551	551	8.860060E+07	9.412789E+03	1.498092E+03	1.000000E+00	8.860060E+07
552	552	8.871854E+07	9.419052E+03	1.499089E+03	1.000000E+00	8.871854E+07

X Axis Output

Acceleration Response Plots

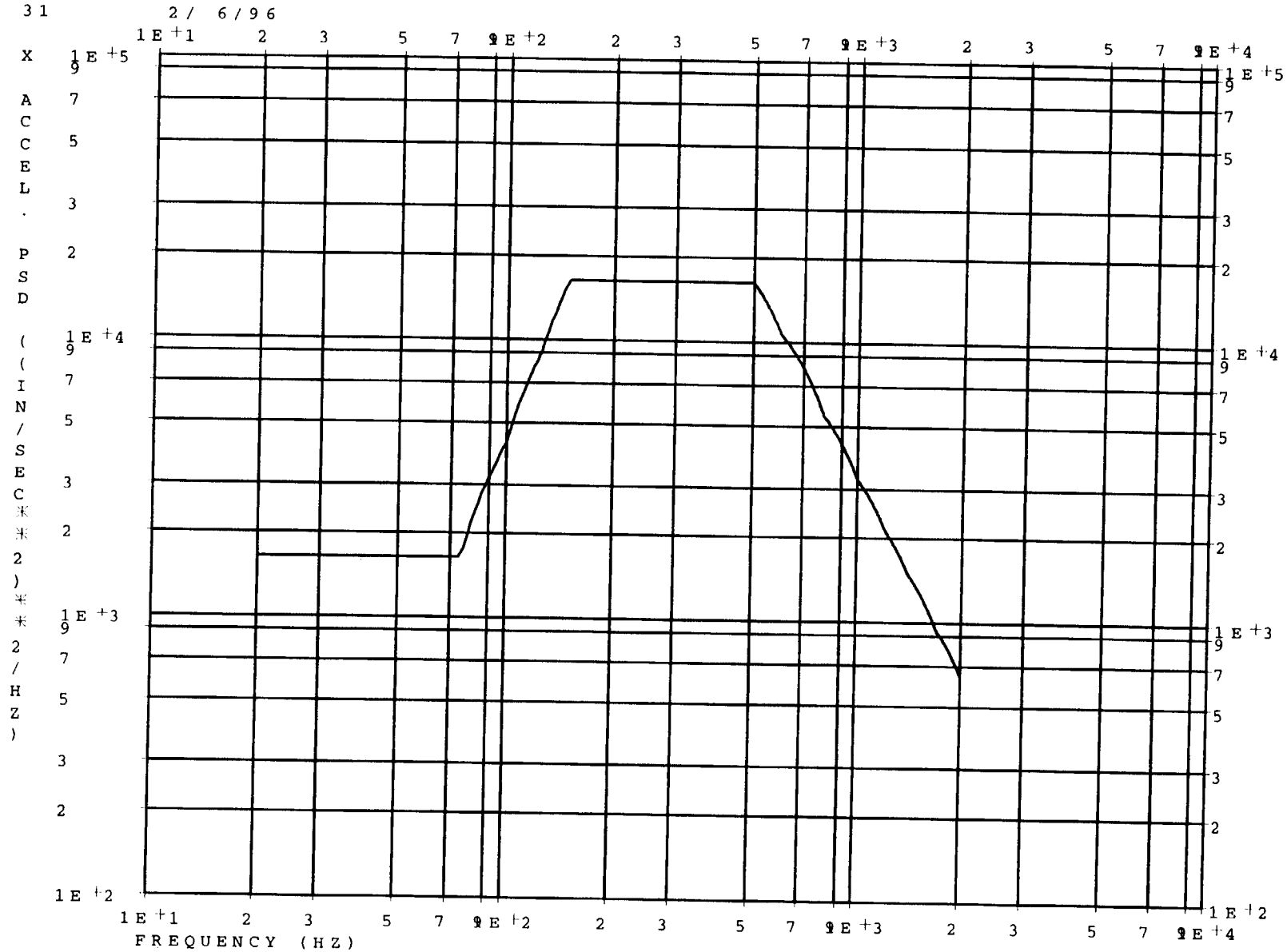

METSAT/AMSU-A2 WITH COI REFLECTOR
QUAL. LEVEL RANDOM VIBRATION (8.8 GRMS)
X AXIS PSD RESPONSE

Input Grid Point 24000

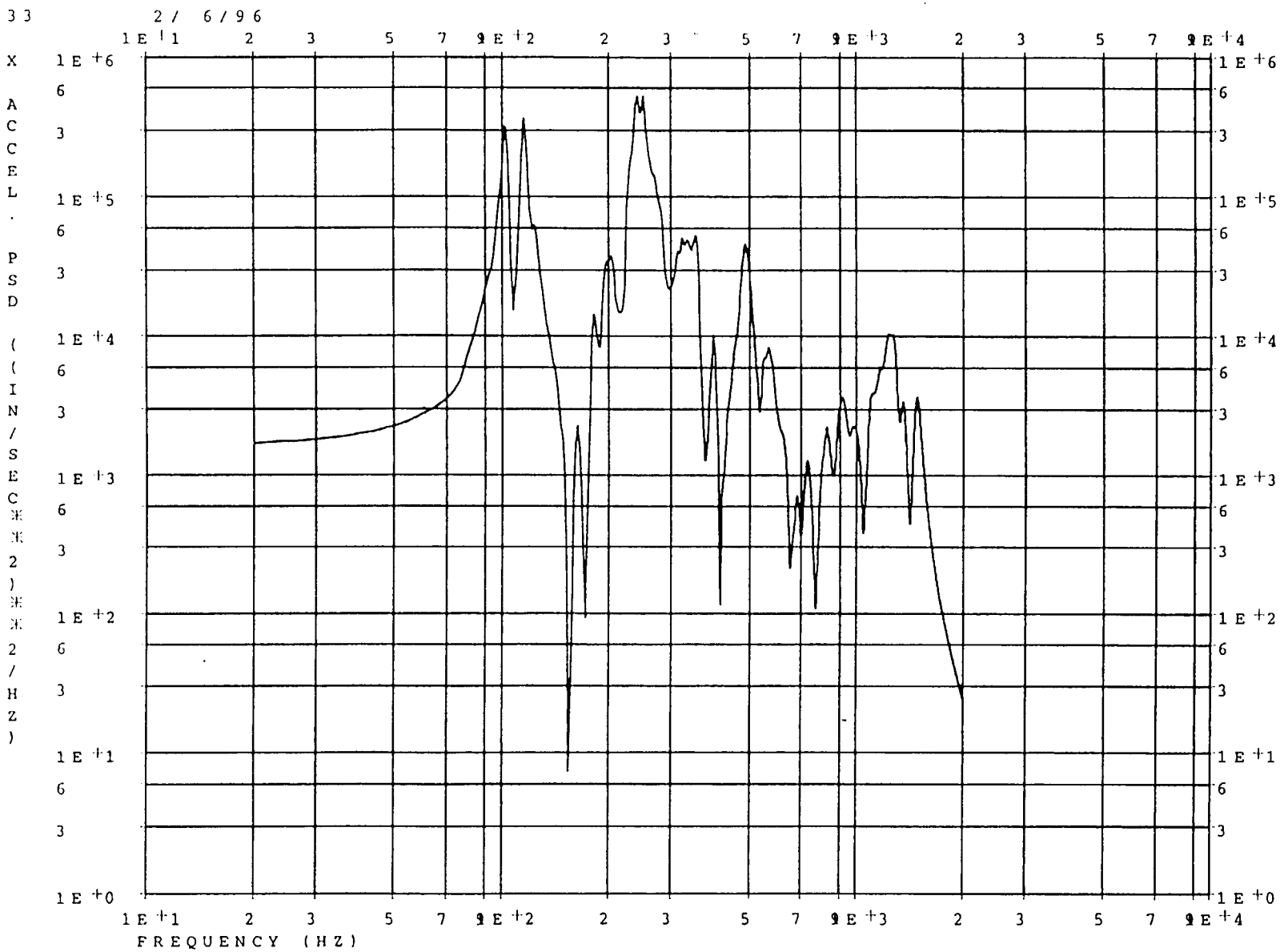

METSAT/AMSU-A2 WITH COI REFLECTOR
QUAL. LEVEL RANDOM VIBRATION (8.8 GRMS)
X AXIS PSD RESPONSE

X Acceleration Grid Point 2086

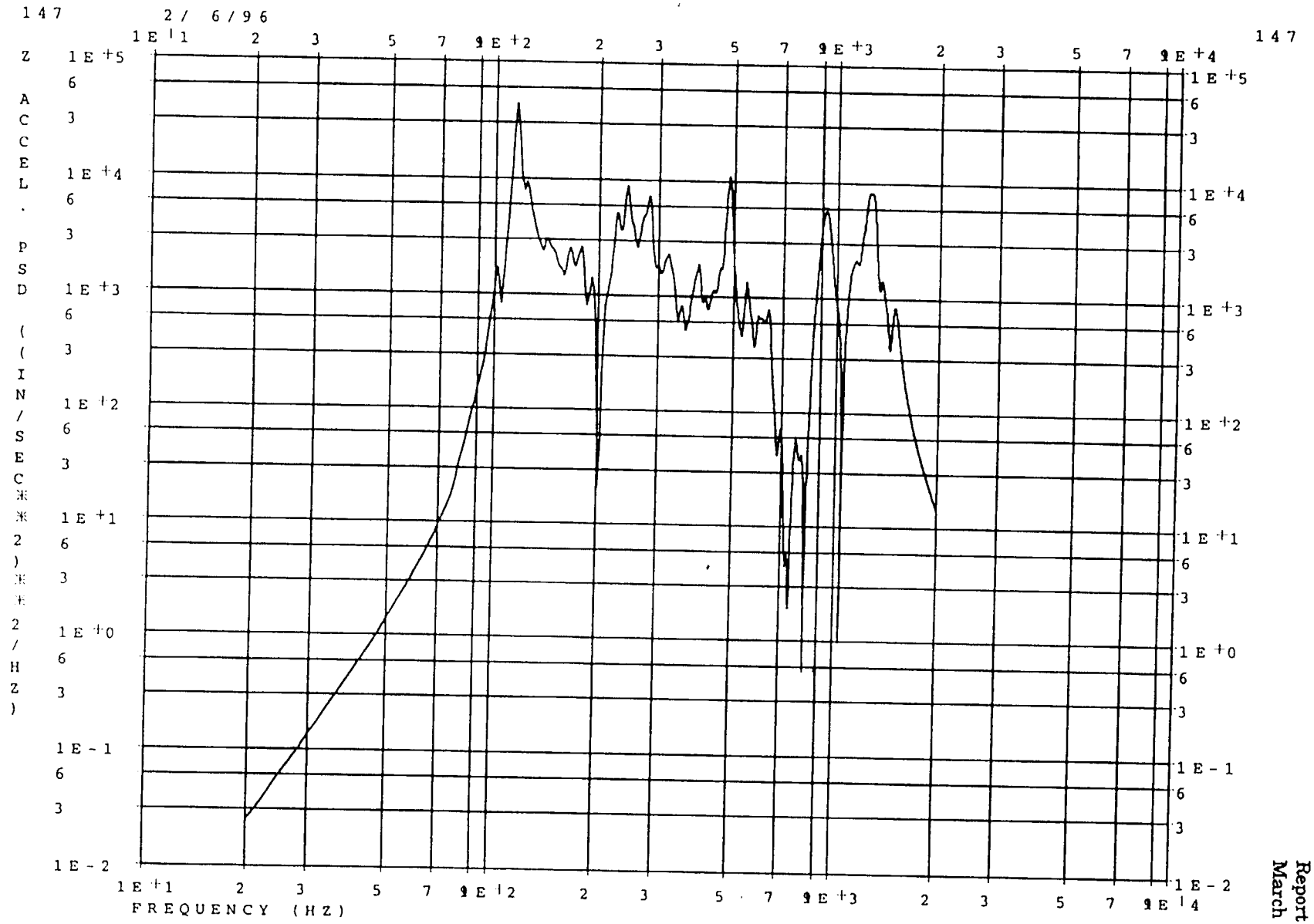

METSAT/AMSU-A2 WITH COI REFLECTOR
QUAL. LEVEL RANDOM VIBRATION (8.8 GRMS)
X AXIS PSD RESPONSE

Z Acceleration Grid Point 2086

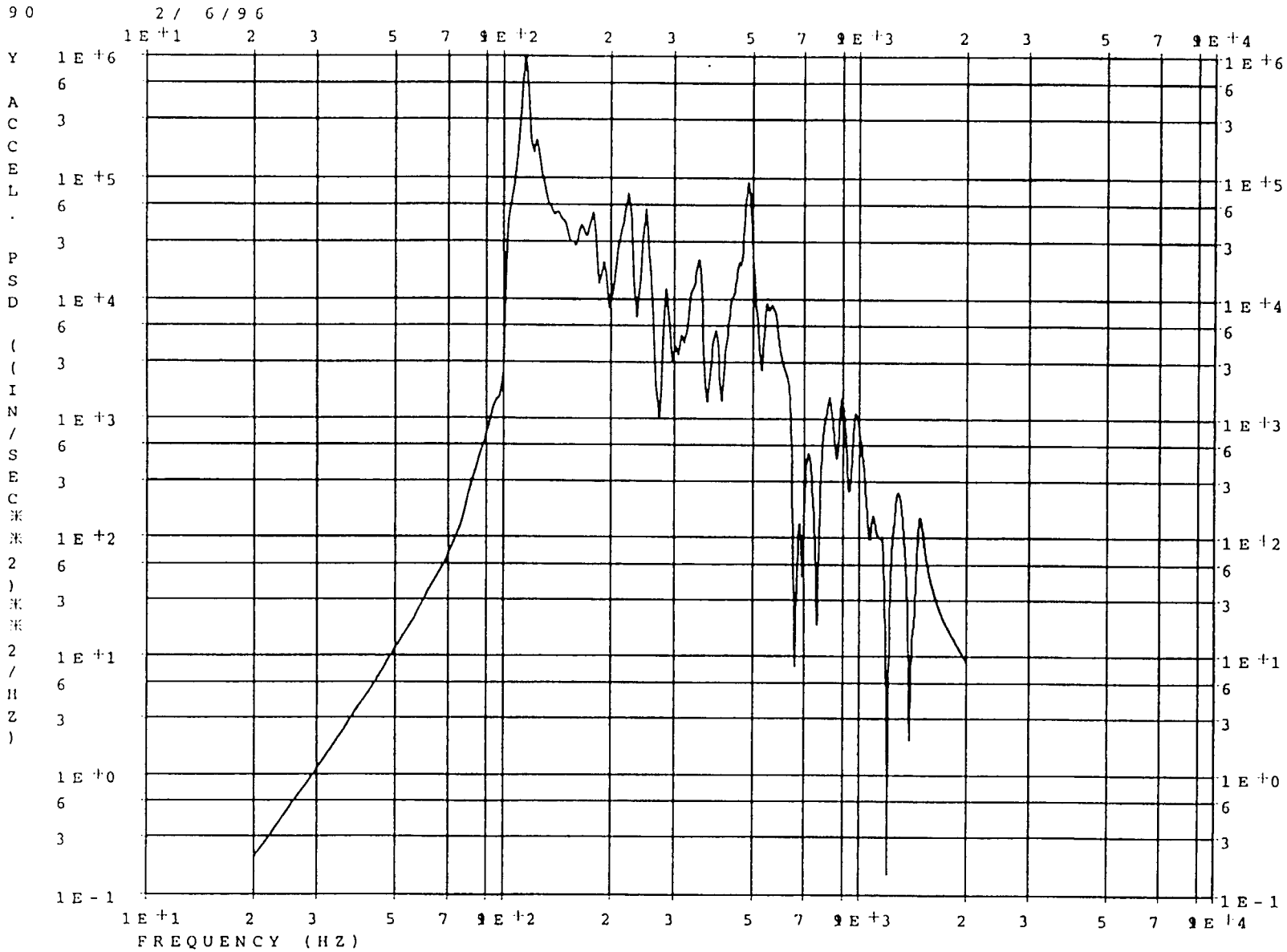

METSAT/AMSU-A2 WITH COI REFLECTOR
QUAL. LEVEL RANDOM VIBRATION (8.8 GRMS)
X AXIS PSD RESPONSE

Y Acceleration Grid Point 2086

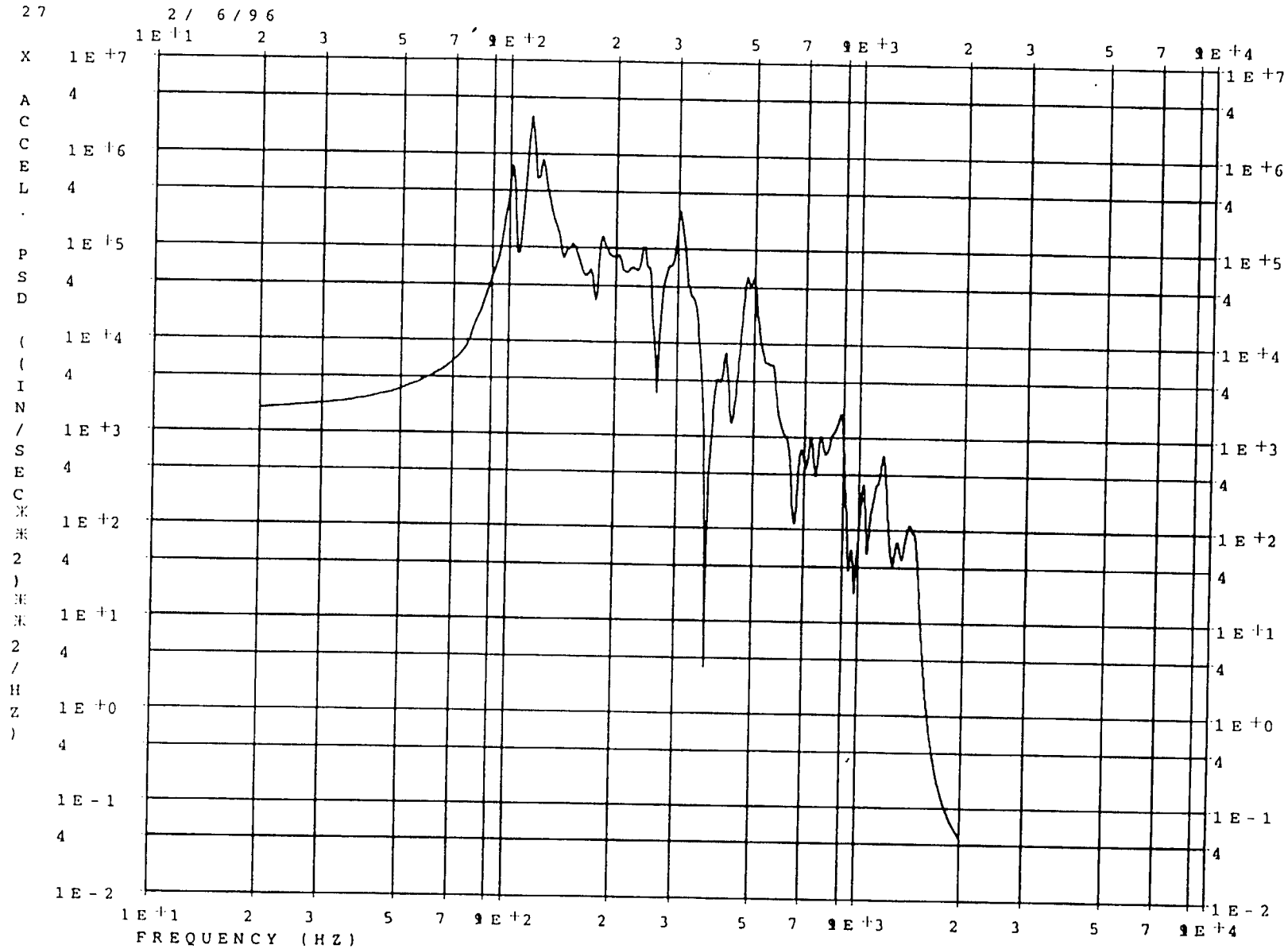

METSAT/AMSU-A2 WITH COI REFLECTOR
QUAL. LEVEL RANDOM VIBRATION (8.8 GRMS)
X AXIS PSD RESPONSE

X Acceleration Grid Point 2173

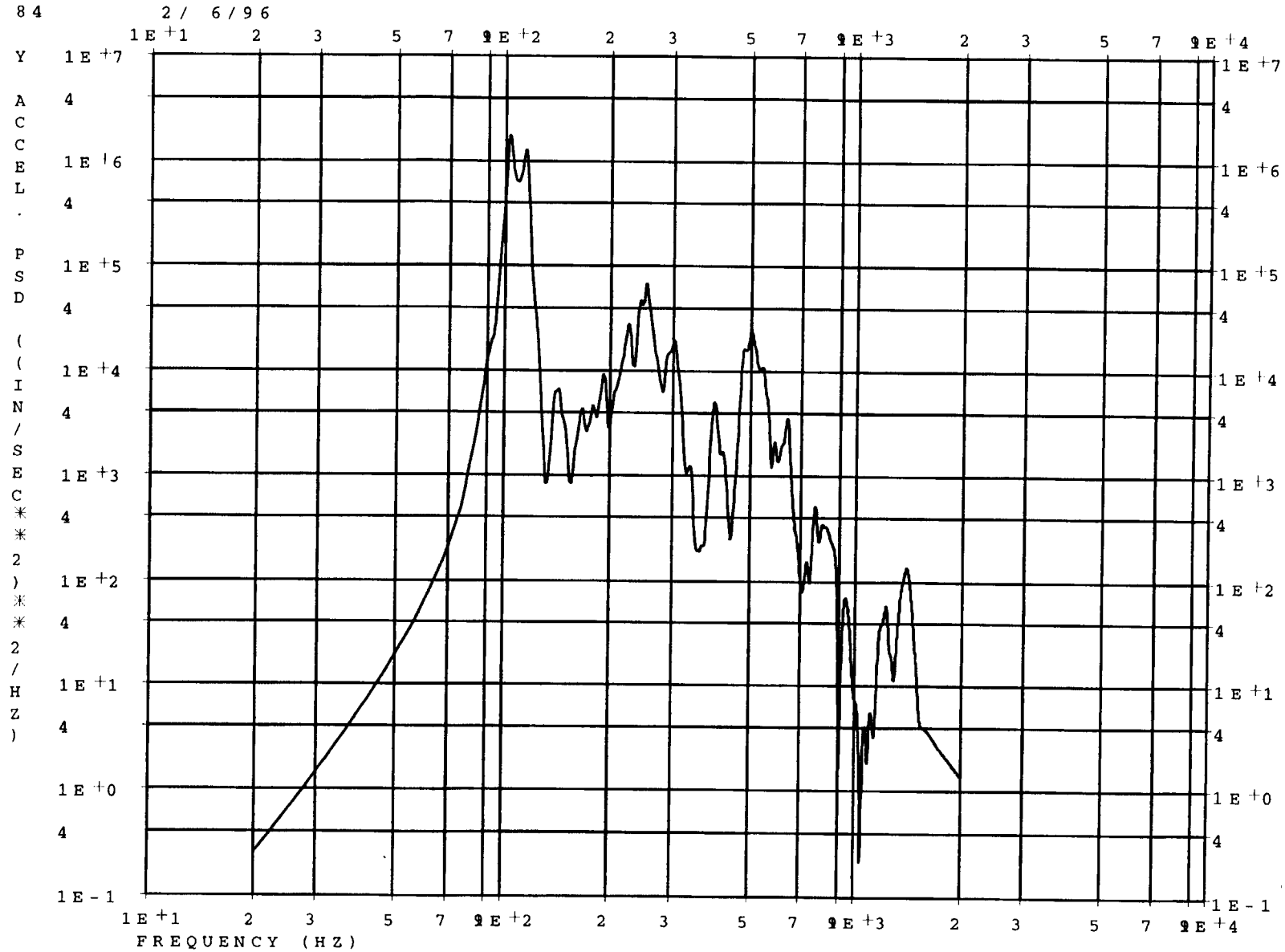

METSAT/AMSU-A2 WITH COI REFLECTOR
QUAL. LEVEL RANDOM VIBRATION (8.8 GRMS)
X AXIS PSD RESPONSE

Y Acceleration Grid Point 2173

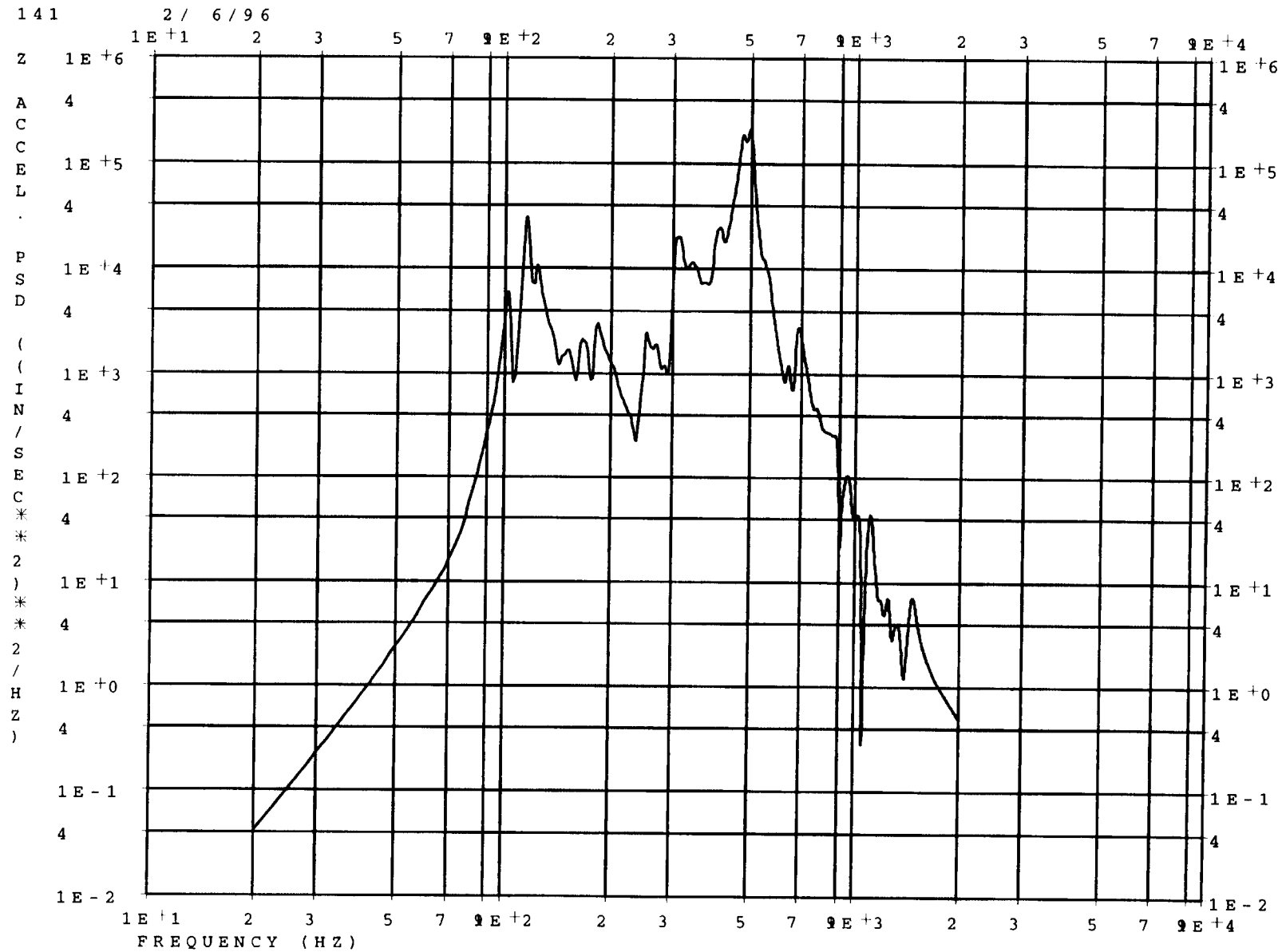

METSAT/AMSU-A2 WITH COI REFLECTOR
QUAL. LEVEL RANDOM VIBRATION (8.8 GRMS)
X AXIS PSD RESPONSE

Z Acceleration Grid Point 2173

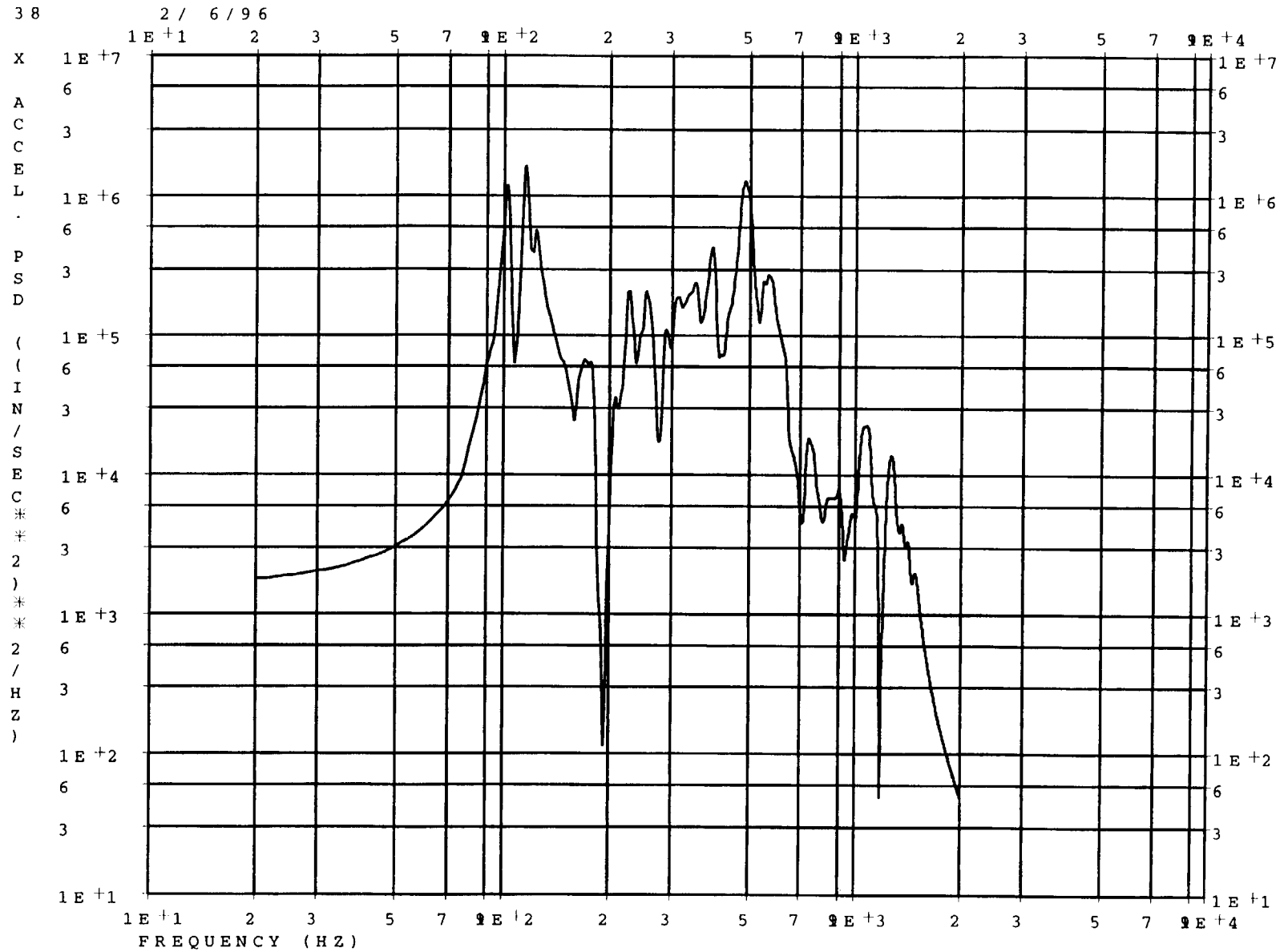

METSAT/AMSU-A2 WITH COI REFLECTOR
QUAL. LEVEL RANDOM VIBRATION (8.8 GRMS)
X AXIS PSD RESPONSE

X Acceleration Grid Point 2441

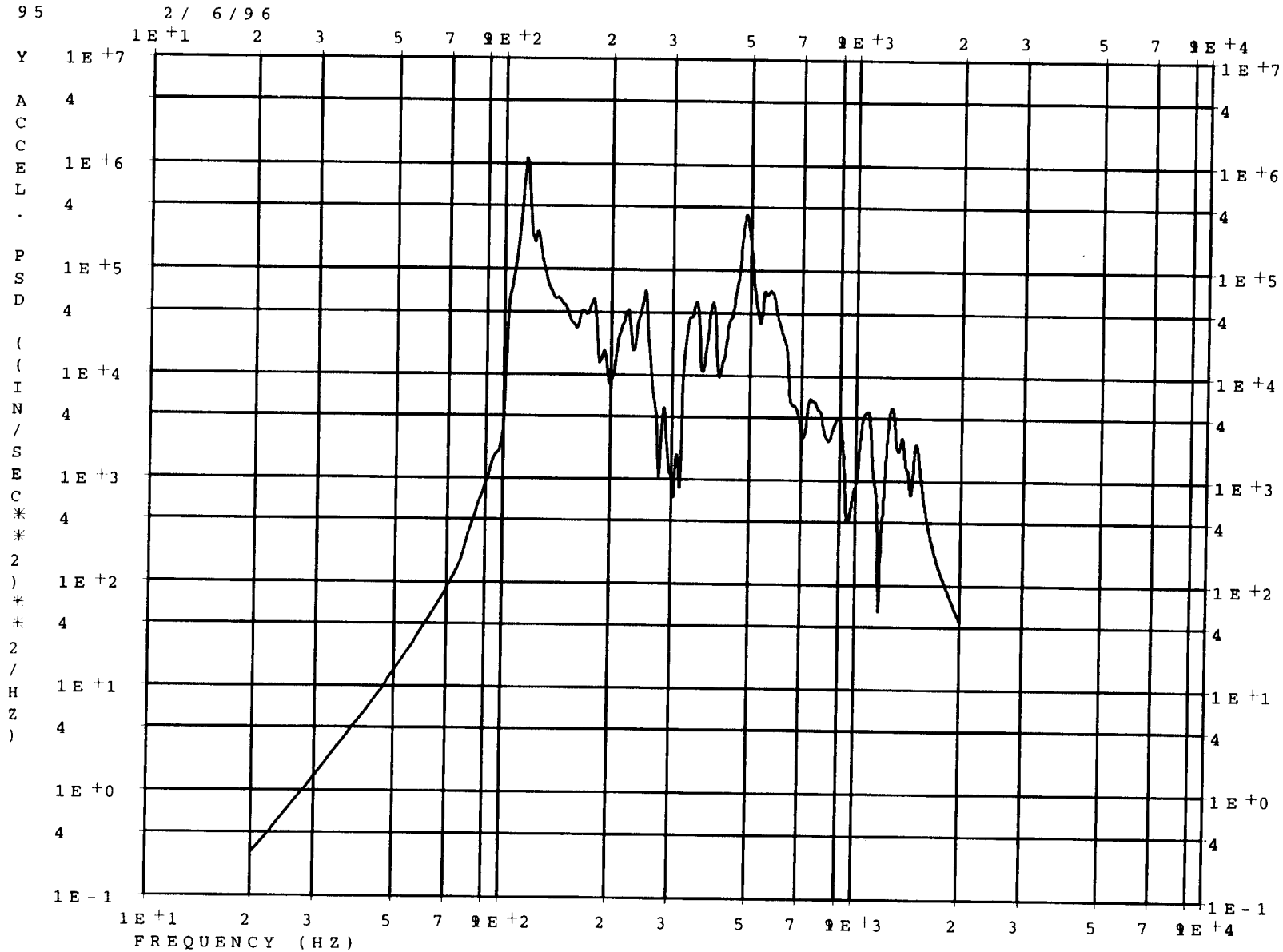

METSAT/AMSU-A2 WITH COI REFLECTOR
QUAL. LEVEL RANDOM VIBRATION (8.8 GRMS)
X AXIS PSD RESPONSE

Y Acceleration Grid Point 2441

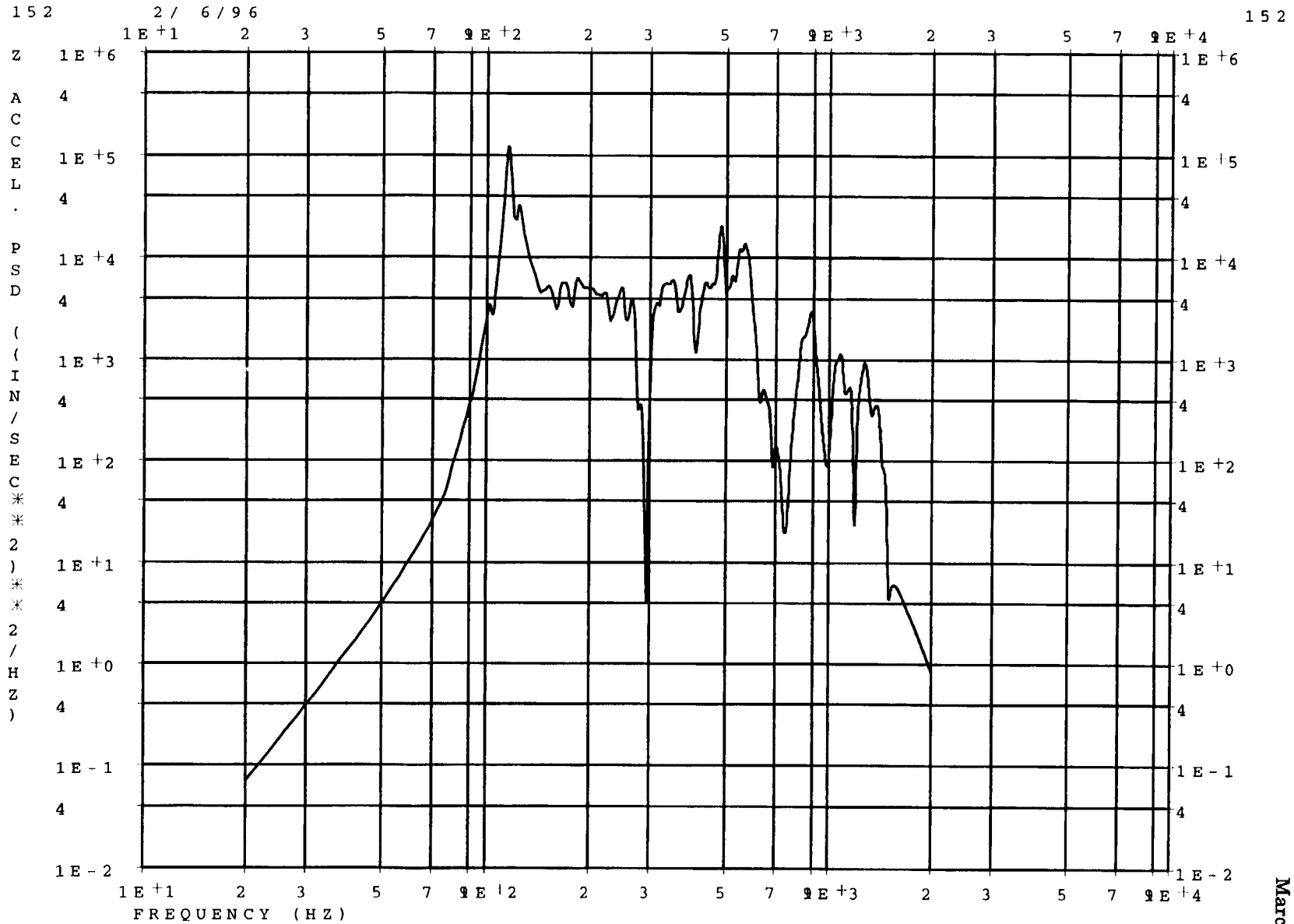

METSAT/AMSU-A2 WITH COI REFLECTOR
QUAL. LEVEL RANDOM VIBRATION (8.8 GRMS)
X AXIS PSD RESPONSE

Z Acceleration Grid Point 2441

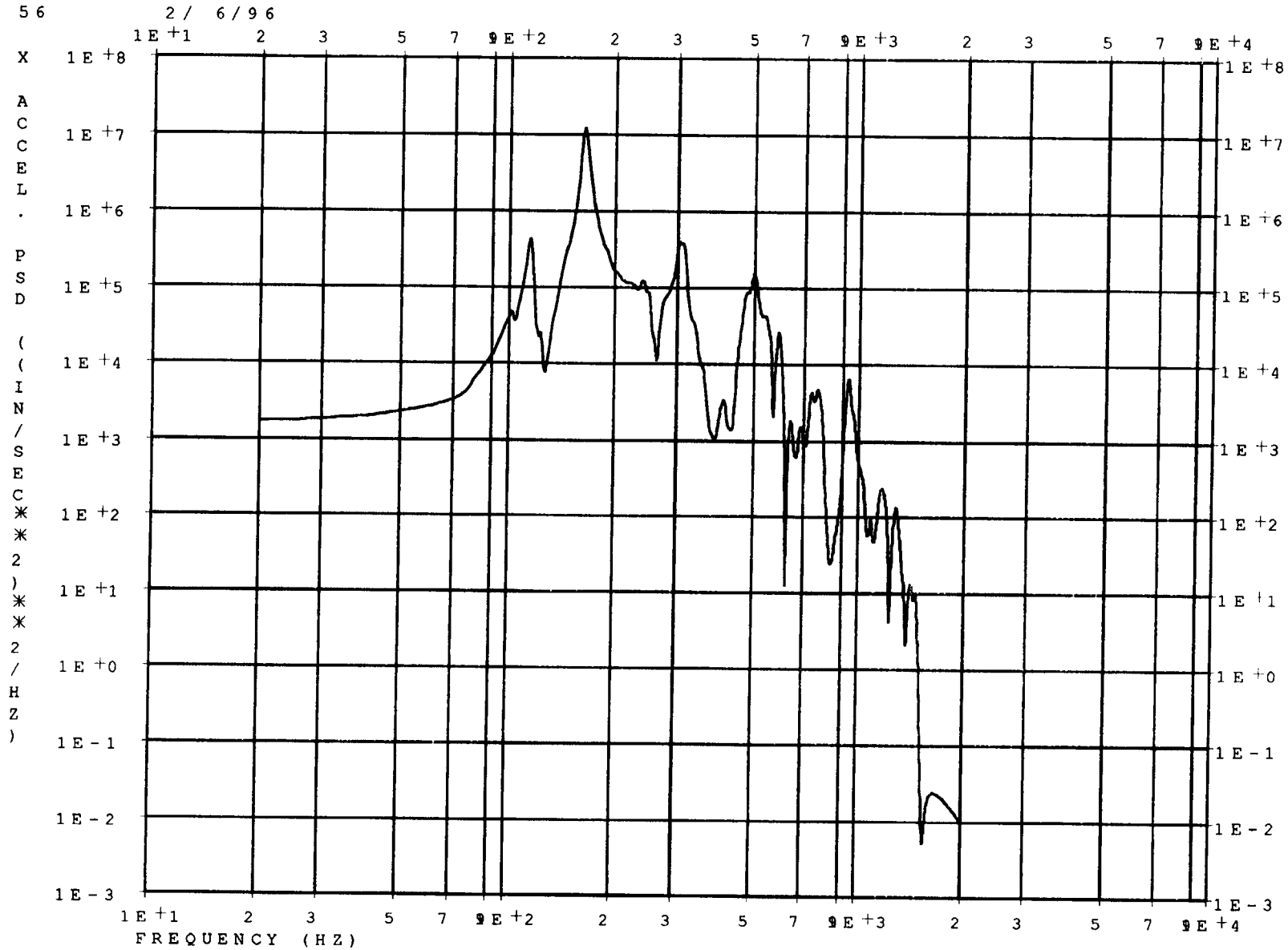

METSAT/AMSU-A2 WITH COI REFLECTOR
QUAL. LEVEL RANDOM VIBRATION (8.8 GRMS)
X AXIS PSD RESPONSE

X Acceleration Grid Point 26206

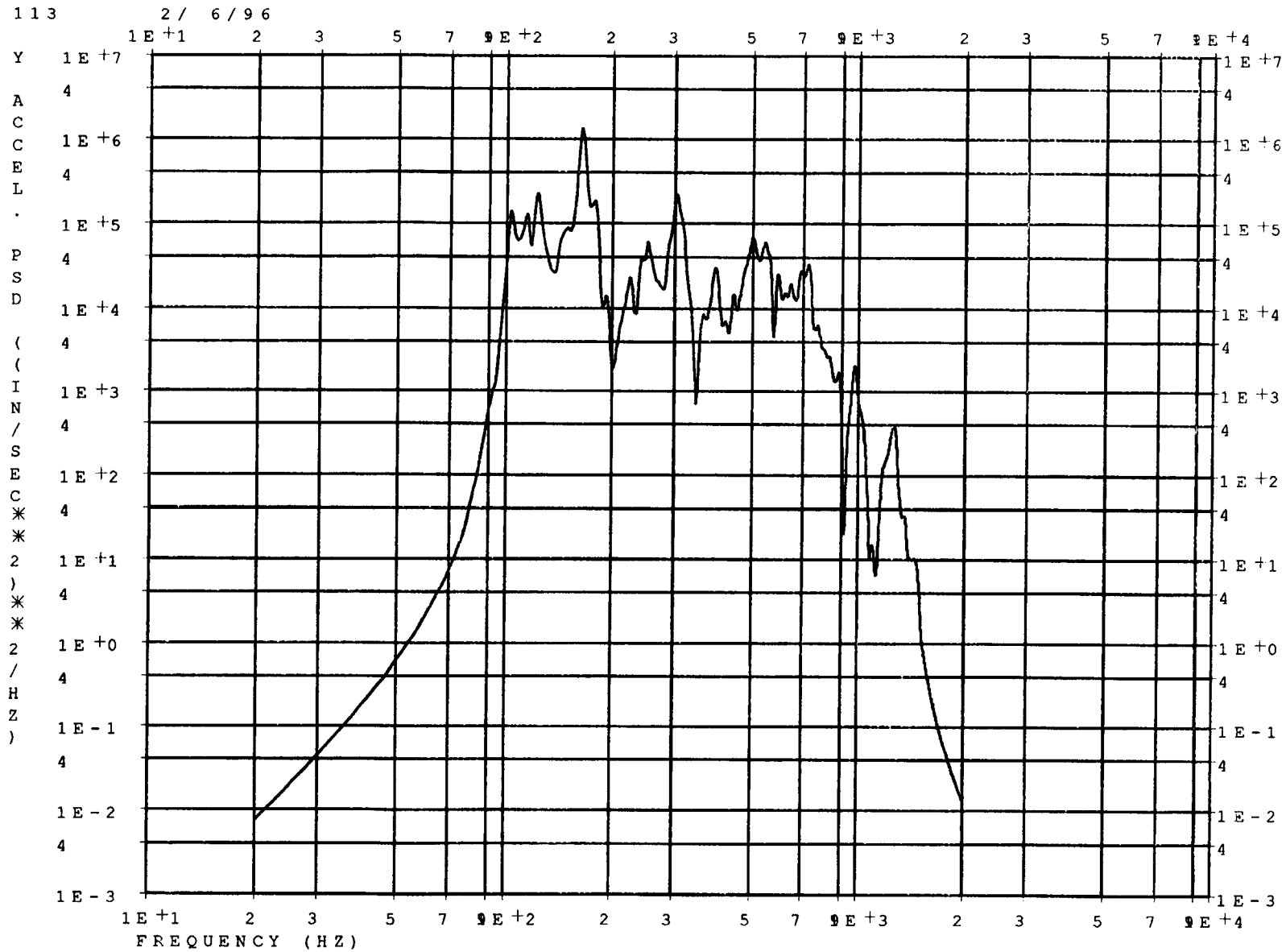

METSAT/AMSU-A2 WITH COI REFLECTOR
QUAL. LEVEL RANDOM VIBRATION (8.8 GRMS)
X AXIS PSD RESPONSE

Y Acceleration Grid Point 26206

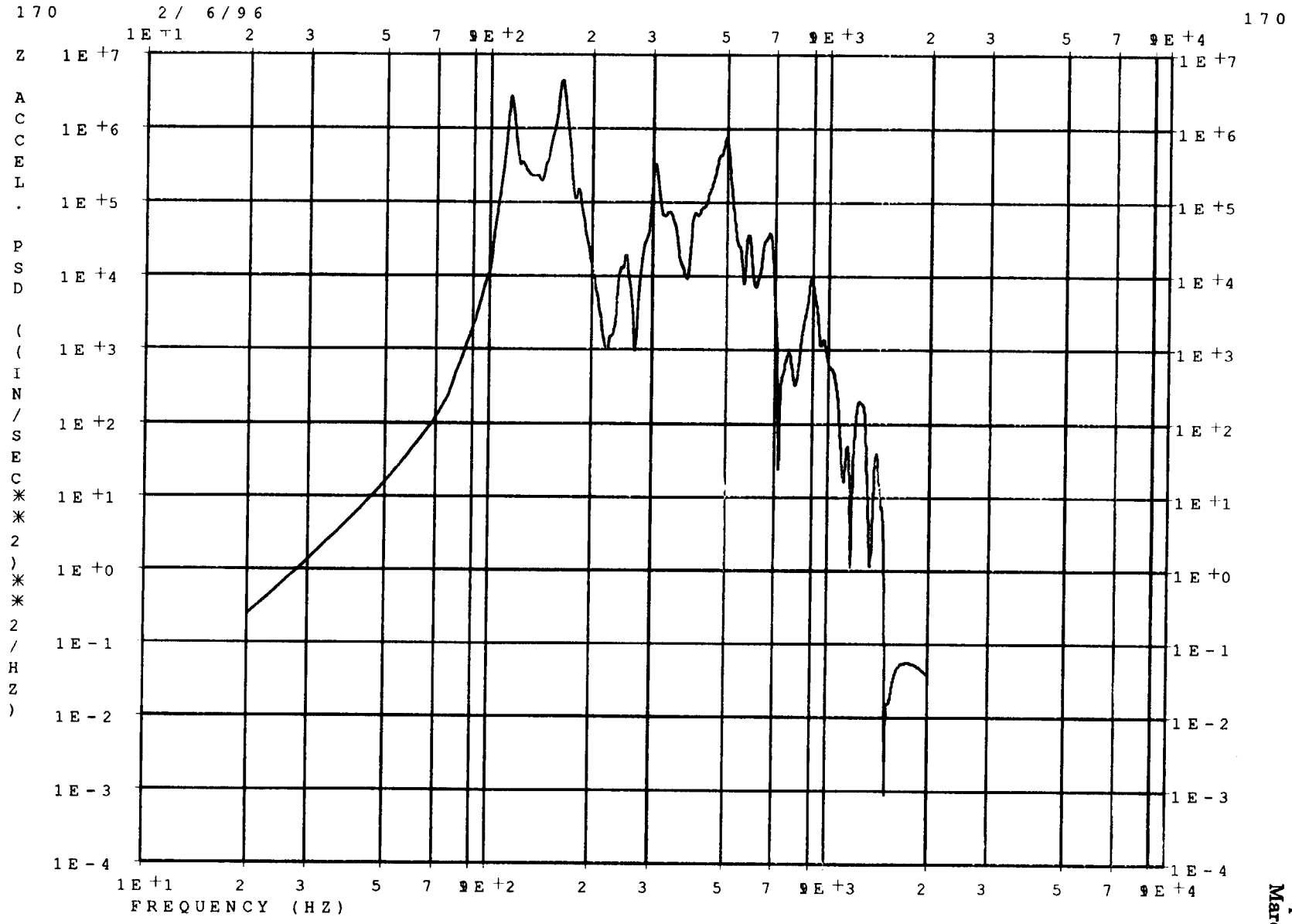

METSAT/AMSU-A2 WITH COI REFLECTOR
QUAL. LEVEL RANDOM VIBRATION (8.8 GRMS)
X AXIS PSD RESPONSE

Z Acceleration Grid Point 26206

X AXIS PSD RESPONSE

```
*** SYSTEM WARNING  MESSAGE  3002 MODULE = RANDOM
EOF ENCOUNTERED WHILE READING DATA BLOCK OES2    (FILE  107) IN SUBROUTINE RAND2
*** SYSTEM WARNING  MESSAGE  3002 MODULE = RANDOM
EOF ENCOUNTERED WHILE READING DATA BLOCK OES2    (FILE  107) IN SUBROUTINE RAND2
```

X AXIS PSD RESPONSE

X Y - O U T P U T S U M M A R Y (A U T O O R P S D F)

PLOT TYPE	CURVE TYPE	FRAME NO.	CURVE ID.	RMS VALUE	NO. POSITIVE CROSSINGS	XMIN FOR ALL DATA	XMAX FOR ALL DATA	YMIN FOR ALL DATA	X FOR YMIN	YMAX FOR ALL DATA	X FOR* YMAX
PSDF	ACCE	1	2201(3)	3.788552E+03	2.342628E+02	1.000E+01	2.000E+03	0.000E+00	1.000E+01	4.888E+05	1.021E+02
PSDF	ACCE	2	2660(3)	4.118733E+03	4.367367E+02	1.000E+01	2.000E+03	0.000E+00	1.000E+01	2.967E+05	1.151E+02
PSDF	ACCE	3	2648(3)	3.795462E+03	3.900046E+02	1.000E+01	2.000E+03	0.000E+00	1.000E+01	5.117E+05	1.021E+02
PSDF	ACCE	4	2650(3)	3.800050E+03	3.697940E+02	1.000E+01	2.000E+03	0.000E+00	1.000E+01	6.543E+05	1.021E+02
PSDF	ACCE	5	2658(3)	4.142552E+03	4.347151E+02	1.000E+01	2.000E+03	0.000E+00	1.000E+01	3.031E+05	1.151E+02
PSDF	ACCE	6	2200(3)	3.787206E+03	2.340711E+02	1.000E+01	2.000E+03	0.000E+00	1.000E+01	4.888E+05	1.021E+02
PSDF	ACCE	7	2205(3)	3.899658E+03	2.633189E+02	1.000E+01	2.000E+03	0.000E+00	1.000E+01	6.465E+05	1.021E+02
PSDF	ACCE	8	2206(3)	3.902968E+03	2.646219E+02	1.000E+01	2.000E+03	0.000E+00	1.000E+01	6.467E+05	1.021E+02
PSDF	ACCE	9	2196(3)	4.034344E+03	2.773394E+02	1.000E+01	2.000E+03	0.000E+00	1.000E+01	3.517E+05	1.021E+02
PSDF	ACCE	10	1890(3)	4.879726E+03	2.244747E+02	1.000E+01	2.000E+03	0.000E+00	1.000E+01	1.555E+06	1.151E+02
PSDF	ACCE	11	2197(3)	4.031689E+03	2.770114E+02	1.000E+01	2.000E+03	0.000E+00	1.000E+01	3.515E+05	1.021E+02
PSDF	ACCE	12	3053(3)	1.116768E+04	2.809462E+02	1.000E+01	2.000E+03	0.000E+00	1.000E+01	3.909E+06	2.400E+02
PSDF	ACCE	13	1885(3)	4.872767E+03	2.231400E+02	1.000E+01	2.000E+03	0.000E+00	1.000E+01	1.554E+06	1.151E+02
PSDF	ACCE	14	1886(3)	4.872227E+03	2.230679E+02	1.000E+01	2.000E+03	0.000E+00	1.000E+01	1.554E+06	1.151E+02
PSDF	ACCE	15	1887(3)	4.874224E+03	2.235125E+02	1.000E+01	2.000E+03	0.000E+00	1.000E+01	1.554E+06	1.151E+02
PSDF	ACCE	16	1888(3)	4.875262E+03	2.236925E+02	1.000E+01	2.000E+03	0.000E+00	1.000E+01	1.555E+06	1.151E+02
PSDF	ACCE	17	3037(3)	6.103520E+03	2.034304E+02	1.000E+01	2.000E+03	0.000E+00	1.000E+01	1.949E+06	1.151E+02
PSDF	ACCE	18	3038(3)	6.248744E+03	2.099745E+02	1.000E+01	2.000E+03	0.000E+00	1.000E+01	1.926E+06	1.151E+02
PSDF	ACCE	19	3039(3)	6.409744E+03	2.245119E+02	1.000E+01	2.000E+03	0.000E+00	1.000E+01	1.876E+06	1.151E+02
PSDF	ACCE	20	3040(3)	6.227971E+03	2.281126E+02	1.000E+01	2.000E+03	0.000E+00	1.000E+01	1.782E+06	1.151E+02
PSDF	ACCE	21	3041(3)	5.928070E+03	2.240540E+02	1.000E+01	2.000E+03	0.000E+00	1.000E+01	1.718E+06	1.151E+02
PSDF	ACCE	22	3042(3)	6.063095E+03	2.348119E+02	1.000E+01	2.000E+03	0.000E+00	1.000E+01	1.779E+06	1.151E+02
PSDF	ACCE	23	3043(3)	6.150971E+03	2.302972E+02	1.000E+01	2.000E+03	0.000E+00	1.000E+01	1.875E+06	1.151E+02
PSDF	ACCE	24	3044(3)	6.046614E+03	2.101744E+02	1.000E+01	2.000E+03	0.000E+00	1.000E+01	1.928E+06	1.151E+02

X AXIS PSD RESPONSE

X Y - O U T P U T S U M M A R Y (A U T O O R P S D F)

PLOT TYPE	CURVE TYPE	FRAME NO.	CURVE ID.	RMS VALUE	NO. POSITIVE CROSSINGS	XMIN FOR ALL DATA	XMAX FOR ALL DATA	YMIN FOR ALL DATA	X FOR YMIN	YMAX FOR ALL DATA	X FOR* YMAX
PSDF	ACCE	25	2097(3)	3.623248E+03	4.221061E+02	1.000E+01	2.000E+03	0.000E+00	1.000E+01	4.430E+05	1.159E+02
PSDF	ACCE	26	2098(3)	4.676187E+03	2.686507E+02	1.000E+01	2.000E+03	0.000E+00	1.000E+01	1.305E+06	1.160E+02
PSDF	ACCE	27	2173(3)	6.644777E+03	2.262854E+02	1.000E+01	2.000E+03	0.000E+00	1.000E+01	2.471E+06	1.151E+02
PSDF	ACCE	28	2168(3)	6.338743E+03	2.245752E+02	1.000E+01	2.000E+03	0.000E+00	1.000E+01	1.887E+06	1.151E+02
PSDF	ACCE	29	2202(3)	3.790539E+03	2.345789E+02	1.000E+01	2.000E+03	0.000E+00	1.000E+01	4.888E+05	1.021E+02
PSDF	ACCE	30	2204(3)	3.898130E+03	2.629643E+02	1.000E+01	2.000E+03	0.000E+00	1.000E+01	6.465E+05	1.021E+02
PSDF	ACCE	31	24000(3)	3.426399E+03	6.829276E+02	1.000E+01	2.000E+03	0.000E+00	1.000E+01	1.641E+04	1.500E+02
PSDF	ACCE	32	2135(3)	5.296105E+03	3.673514E+02	1.000E+01	2.000E+03	0.000E+00	1.000E+01	9.343E+05	1.159E+02
PSDF	ACCE	33	2086(3)	5.340522E+03	4.550836E+02	1.000E+01	2.000E+03	0.000E+00	1.000E+01	5.252E+05	2.420E+02
PSDF	ACCE	34	2090(3)	5.348660E+03	4.569753E+02	1.000E+01	2.000E+03	0.000E+00	1.000E+01	5.240E+05	2.420E+02
PSDF	ACCE	35	23231(3)	4.512064E+03	5.841917E+02	1.000E+01	2.000E+03	0.000E+00	1.000E+01	4.821E+05	1.151E+02
PSDF	ACCE	36	23232(3)	4.512622E+03	5.842092E+02	1.000E+01	2.000E+03	0.000E+00	1.000E+01	4.819E+05	1.151E+02
PSDF	ACCE	37	23233(3)	4.515803E+03	5.842498E+02	1.000E+01	2.000E+03	0.000E+00	1.000E+01	4.803E+05	1.151E+02
PSDF	ACCE	38	2441(3)	1.178924E+04	4.721798E+02	1.000E+01	2.000E+03	0.000E+00	1.000E+01	1.637E+06	1.159E+02
PSDF	ACCE	39	23234(3)	4.574359E+03	5.821323E+02	1.000E+01	2.000E+03	0.000E+00	1.000E+01	4.466E+05	1.151E+02
PSDF	ACCE	40	23235(3)	4.565597E+03	5.801602E+02	1.000E+01	2.000E+03	0.000E+00	1.000E+01	4.445E+05	1.151E+02
PSDF	ACCE	41	22859(3)	5.112036E+03	5.283952E+02	1.000E+01	2.000E+03	0.000E+00	1.000E+01	3.269E+05	4.980E+02
PSDF	ACCE	42	22868(3)	3.586106E+03	3.190688E+02	1.000E+01	2.000E+03	0.000E+00	1.000E+01	6.351E+05	1.021E+02
PSDF	ACCE	43	22644(3)	8.025373E+03	2.815905E+02	1.000E+01	2.000E+03	0.000E+00	1.000E+01	2.756E+06	1.940E+02
PSDF	ACCE	44	22632(3)	1.189365E+04	2.453597E+02	1.000E+01	2.000E+03	0.000E+00	1.000E+01	1.097E+07	1.940E+02
PSDF	ACCE	45	23609(3)	5.324958E+03	3.609154E+02	1.000E+01	2.000E+03	0.000E+00	1.000E+01	1.553E+06	1.160E+02
PSDF	ACCE	46	23610(3)	9.900316E+03	4.043352E+02	1.000E+01	2.000E+03	0.000E+00	1.000E+01	3.114E+06	1.160E+02
PSDF	ACCE	47	23611(3)	5.331395E+03	4.010652E+02	1.000E+01	2.000E+03	0.000E+00	1.000E+01	1.557E+06	1.160E+02
PSDF	ACCE	48	23612(3)	6.991220E+03	3.450404E+02	1.000E+01	2.000E+03	0.000E+00	1.000E+01	1.891E+06	1.160E+02

X AXIS PSD RESPONSE

X Y - O U T P U T S U M M A R Y (A U T O O R P S D F)

PLOT TYPE	CURVE TYPE	FRAME NO.	CURVE ID.	RMS VALUE	NO. POSITIVE CROSSINGS	XMIN FOR ALL DATA	XMAX FOR ALL DATA	YMIN FOR ALL DATA	X FOR YMIN	YMAX FOR ALL DATA	X FOR* YMAX
PSDF	ACCE	49	23613(3)	6.735778E+03	7.321091E+02	1.000E+01	2.000E+03	0.000E+00	1.000E+01	4.699E+05	1.159E+02
PSDF	ACCE	50	23614(3)	4.558589E+03	5.223054E+02	1.000E+01	2.000E+03	0.000E+00	1.000E+01	5.737E+05	1.159E+02
PSDF	ACCE	51	23615(3)	6.465289E+03	5.908464E+02	1.000E+01	2.000E+03	0.000E+00	1.000E+01	6.504E+05	5.000E+02
PSDF	ACCE	52	23616(3)	2.291174E+04	3.119221E+02	1.000E+01	2.000E+03	0.000E+00	1.000E+01	3.232E+07	1.220E+02
PSDF	ACCE	53	23617(3)	2.843832E+04	1.262213E+02	1.000E+01	2.000E+03	0.000E+00	1.000E+01	8.026E+07	1.227E+02
PSDF	ACCE	54	23618(3)	7.867807E+03	2.200665E+02	1.000E+01	2.000E+03	0.000E+00	1.000E+01	2.255E+06	1.160E+02
PSDF	ACCE	55	23619(3)	1.220081E+04	1.829221E+02	1.000E+01	2.000E+03	0.000E+00	1.000E+01	1.093E+07	1.220E+02
PSDF	ACCE	56	26206(3)	1.220258E+04	2.212403E+02	1.000E+01	2.000E+03	0.000E+00	1.000E+01	1.226E+07	1.640E+02
PSDF	ACCE	57	2122(3)	3.116626E+03	2.690884E+02	1.000E+01	2.000E+03	0.000E+00	1.000E+01	6.392E+05	1.021E+02
PSDF	ACCE	58	2201(4)	2.872170E+03	2.243110E+02	1.000E+01	2.000E+03	0.000E+00	1.000E+01	6.116E+05	1.151E+02
PSDF	ACCE	59	2660(4)	2.472260E+03	2.200739E+02	1.000E+01	2.000E+03	0.000E+00	1.000E+01	5.252E+05	1.151E+02
PSDF	ACCE	60	2648(4)	2.470001E+03	2.169876E+02	1.000E+01	2.000E+03	0.000E+00	1.000E+01	5.245E+05	1.151E+02
PSDF	ACCE	61	2650(4)	2.772978E+03	1.853469E+02	1.000E+01	2.000E+03	0.000E+00	1.000E+01	5.758E+05	1.151E+02
PSDF	ACCE	62	2658(4)	2.773143E+03	1.849389E+02	1.000E+01	2.000E+03	0.000E+00	1.000E+01	5.759E+05	1.151E+02
PSDF	ACCE	63	2200(4)	3.075236E+03	2.297419E+02	1.000E+01	2.000E+03	0.000E+00	1.000E+01	6.821E+05	1.151E+02
PSDF	ACCE	64	2205(4)	2.870751E+03	2.230878E+02	1.000E+01	2.000E+03	0.000E+00	1.000E+01	6.116E+05	1.151E+02
PSDF	ACCE	65	2206(4)	2.784164E+03	2.553624E+02	1.000E+01	2.000E+03	0.000E+00	1.000E+01	5.460E+05	1.151E+02
PSDF	ACCE	66	2196(4)	3.078073E+03	2.311653E+02	1.000E+01	2.000E+03	0.000E+00	1.000E+01	6.828E+05	1.151E+02
PSDF	ACCE	67	1890(4)	5.750323E+03	3.844723E+02	1.000E+01	2.000E+03	0.000E+00	1.000E+01	1.792E+06	1.028E+02
PSDF	ACCE	68	2197(4)	2.874451E+03	2.259144E+02	1.000E+01	2.000E+03	0.000E+00	1.000E+01	6.114E+05	1.151E+02
PSDF	ACCE	69	3053(4)	7.791401E+03	2.428246E+02	1.000E+01	2.000E+03	0.000E+00	1.000E+01	3.942E+06	1.440E+02
PSDF	ACCE	70	1885(4)	4.594046E+03	2.370789E+02	1.000E+01	2.000E+03	0.000E+00	1.000E+01	1.072E+06	1.151E+02
PSDF	ACCE	71	1886(4)	4.507387E+03	2.215285E+02	1.000E+01	2.000E+03	0.000E+00	1.000E+01	1.091E+06	1.028E+02
PSDF	ACCE	72	1887(4)	4.493691E+03	2.029537E+02	1.000E+01	2.000E+03	0.000E+00	1.000E+01	1.519E+06	1.028E+02

X AXIS PSD RESPONSE

X Y - O U T P U T S U M M A R Y (A U T O O R P S D F)

PLOT TYPE	CURVE TYPE	FRAME NO.	CURVE ID.	RMS VALUE	NO. POSITIVE CROSSINGS	XMIN FOR ALL DATA	XMAX FOR ALL DATA	YMIN FOR ALL DATA	X FOR YMIN	YMAX FOR ALL DATA	X FOR* YMAX
PSDF	ACCE	73	1888(4)	4.601940E+03	2.225255E+02	1.000E+01	2.000E+03	0.000E+00	1.000E+01	1.576E+06	1.028E+02
PSDF	ACCE	74	3037(4)	4.402923E+03	1.655674E+02	1.000E+01	2.000E+03	0.000E+00	1.000E+01	1.611E+06	1.028E+02
PSDF	ACCE	75	3038(4)	4.383609E+03	1.649317E+02	1.000E+01	2.000E+03	0.000E+00	1.000E+01	1.602E+06	1.028E+02
PSDF	ACCE	76	3039(4)	4.328321E+03	1.617937E+02	1.000E+01	2.000E+03	0.000E+00	1.000E+01	1.580E+06	1.028E+02
PSDF	ACCE	77	3040(4)	4.273359E+03	1.590894E+02	1.000E+01	2.000E+03	0.000E+00	1.000E+01	1.557E+06	1.028E+02
PSDF	ACCE	78	3041(4)	4.250363E+03	1.577594E+02	1.000E+01	2.000E+03	0.000E+00	1.000E+01	1.549E+06	1.028E+02
PSDF	ACCE	79	3042(4)	4.268563E+03	1.579522E+02	1.000E+01	2.000E+03	0.000E+00	1.000E+01	1.558E+06	1.028E+02
PSDF	ACCE	80	3043(4)	4.324408E+03	1.608119E+02	1.000E+01	2.000E+03	0.000E+00	1.000E+01	1.581E+06	1.028E+02
PSDF	ACCE	81	3044(4)	4.378254E+03	1.636720E+02	1.000E+01	2.000E+03	0.000E+00	1.000E+01	1.603E+06	1.028E+02
PSDF	ACCE	82	2097(4)	2.675323E+03	2.986223E+02	1.000E+01	2.000E+03	0.000E+00	1.000E+01	4.893E+05	1.151E+02
PSDF	ACCE	83	2098(4)	2.671165E+03	2.979843E+02	1.000E+01	2.000E+03	0.000E+00	1.000E+01	4.882E+05	1.151E+02
PSDF	ACCE	84	2173(4)	4.826007E+03	1.970139E+02	1.000E+01	2.000E+03	0.000E+00	1.000E+01	1.767E+06	1.028E+02
PSDF	ACCE	85	2168(4)	4.325830E+03	1.612419E+02	1.000E+01	2.000E+03	0.000E+00	1.000E+01	1.580E+06	1.028E+02
PSDF	ACCE	86	2202(4)	2.785867E+03	2.590740E+02	1.000E+01	2.000E+03	0.000E+00	1.000E+01	5.451E+05	1.151E+02
PSDF	ACCE	87	2204(4)	3.072006E+03	2.277872E+02	1.000E+01	2.000E+03	0.000E+00	1.000E+01	6.814E+05	1.151E+02
PSDF	ACCE	88	24000(4)	9.889535E-05	6.912574E+02	1.000E+01	2.000E+03	0.000E+00	1.000E+01	7.477E-11	1.880E+02
PSDF	ACCE	89	2135(4)	3.151793E+03	3.144908E+02	1.000E+01	2.000E+03	0.000E+00	1.000E+01	6.463E+05	1.151E+02
PSDF	ACCE	90	2086(4)	4.064008E+03	3.009951E+02	1.000E+01	2.000E+03	0.000E+00	1.000E+01	9.964E+05	1.151E+02
PSDF	ACCE	91	2090(4)	3.173300E+03	3.320445E+02	1.000E+01	2.000E+03	0.000E+00	1.000E+01	6.327E+05	1.151E+02
PSDF	ACCE	92	23231(4)	3.559808E+03	2.380371E+02	1.000E+01	2.000E+03	0.000E+00	1.000E+01	4.702E+05	1.151E+02
PSDF	ACCE	93	23232(4)	3.376868E+03	2.299594E+02	1.000E+01	2.000E+03	0.000E+00	1.000E+01	4.617E+05	1.151E+02
PSDF	ACCE	94	23233(4)	2.422321E+03	2.373029E+02	1.000E+01	2.000E+03	0.000E+00	1.000E+01	3.847E+05	1.151E+02
PSDF	ACCE	95	2441(4)	5.993713E+03	4.731886E+02	1.000E+01	2.000E+03	0.000E+00	1.000E+01	1.131E+06	1.151E+02
PSDF	ACCE	96	23234(4)	3.233967E+03	2.242343E+02	1.000E+01	2.000E+03	0.000E+00	1.000E+01	4.538E+05	1.151E+02

X AXIS PSD RESPONSE

X Y - O U T P U T S U M M A R Y (A U T O O R P S D F)

PLOT TYPE	CURVE TYPE	FRAME NO.	CURVE ID.	RMS VALUE	NO. POSITIVE CROSSINGS	XMIN FOR ALL DATA	XMAX FOR ALL DATA	YMIN FOR ALL DATA	X FOR YMIN	YMAX FOR ALL DATA	X FOR* YMAX
PSDF	ACCE	97	23235(4)	2.415377E+03	2.395164E+02	1.000E+01	2.000E+03	0.000E+00	1.000E+01	3.824E+05	1.151E+02
PSDF	ACCE	98	22859(4)	2.789513E+03	2.901632E+02	1.000E+01	2.000E+03	0.000E+00	1.000E+01	4.983E+05	1.151E+02
PSDF	ACCE	99	22868(4)	2.536299E+03	3.086988E+02	1.000E+01	2.000E+03	0.000E+00	1.000E+01	3.558E+05	1.151E+02
PSDF	ACCE	100	22644(4)	4.385969E+03	2.639632E+02	1.000E+01	2.000E+03	0.000E+00	1.000E+01	7.474E+05	2.440E+02
PSDF	ACCE	101	22632(4)	2.559836E+03	6.023968E+02	1.000E+01	2.000E+03	0.000E+00	1.000E+01	1.303E+05	1.151E+02
PSDF	ACCE	102	23609(4)	2.705229E+03	2.952166E+02	1.000E+01	2.000E+03	0.000E+00	1.000E+01	5.019E+05	1.151E+02
PSDF	ACCE	103	23610(4)	2.843777E+03	2.821111E+02	1.000E+01	2.000E+03	0.000E+00	1.000E+01	5.548E+05	1.151E+02
PSDF	ACCE	104	23611(4)	2.594023E+03	3.095953E+02	1.000E+01	2.000E+03	0.000E+00	1.000E+01	4.551E+05	1.151E+02
PSDF	ACCE	105	23612(4)	2.473647E+03	3.229820E+02	1.000E+01	2.000E+03	0.000E+00	1.000E+01	4.038E+05	1.151E+02
PSDF	ACCE	106	23613(4)	3.078128E+03	2.692253E+02	1.000E+01	2.000E+03	0.000E+00	1.000E+01	6.395E+05	1.151E+02
PSDF	ACCE	107	23614(4)	2.786295E+03	2.876743E+02	1.000E+01	2.000E+03	0.000E+00	1.000E+01	5.331E+05	1.151E+02
PSDF	ACCE	108	23615(4)	2.459832E+03	3.264279E+02	1.000E+01	2.000E+03	0.000E+00	1.000E+01	3.962E+05	1.151E+02
PSDF	ACCE	109	23616(4)	3.073315E+03	2.640162E+02	1.000E+01	2.000E+03	0.000E+00	1.000E+01	6.390E+05	1.151E+02
PSDF	ACCE	110	23617(4)	3.059496E+03	2.602540E+02	1.000E+01	2.000E+03	0.000E+00	1.000E+01	6.364E+05	1.151E+02
PSDF	ACCE	111	23618(4)	2.471051E+03	3.167981E+02	1.000E+01	2.000E+03	0.000E+00	1.000E+01	4.055E+05	1.151E+02
PSDF	ACCE	112	23619(4)	2.738627E+03	2.849409E+02	1.000E+01	2.000E+03	0.000E+00	1.000E+01	5.178E+05	1.151E+02
PSDF	ACCE	113	26206(4)	5.723817E+03	3.629395E+02	1.000E+01	2.000E+03	0.000E+00	1.000E+01	1.365E+06	1.640E+02
PSDF	ACCE	114	2122(4)	7.153753E+03	1.703325E+02	1.000E+01	2.000E+03	0.000E+00	1.000E+01	3.205E+06	1.680E+02
PSDF	ACCE	115	2201(5)	3.299592E+03	3.912741E+02	1.000E+01	2.000E+03	0.000E+00	1.000E+01	1.789E+05	3.140E+02
PSDF	ACCE	116	2660(5)	2.780486E+03	4.264064E+02	1.000E+01	2.000E+03	0.000E+00	1.000E+01	1.128E+05	3.040E+02
PSDF	ACCE	117	2648(5)	3.747894E+03	4.768336E+02	1.000E+01	2.000E+03	0.000E+00	1.000E+01	2.846E+05	4.760E+02
PSDF	ACCE	118	2650(5)	3.456951E+03	4.633558E+02	1.000E+01	2.000E+03	0.000E+00	1.000E+01	2.241E+05	4.800E+02
PSDF	ACCE	119	2658(5)	4.017612E+03	3.974268E+02	1.000E+01	2.000E+03	0.000E+00	1.000E+01	2.216E+05	3.040E+02
PSDF	ACCE	120	2200(5)	2.431826E+03	5.205838E+02	1.000E+01	2.000E+03	0.000E+00	1.000E+01	1.019E+05	3.160E+02

X AXIS PSD RESPONSE

X Y - O U T P U T S U M M A R Y (A U T O O R P S D F)

PLOT TYPE	CURVE TYPE	FRAME NO.	CURVE ID.	RMS VALUE	NO. POSITIVE CROSSINGS	XMIN FOR ALL DATA	XMAX FOR ALL DATA	YMIN FOR ALL DATA	X FOR YMIN	YMAX FOR ALL DATA	X FOR* YMAX
PSDF	ACCE	121	2205(5)	2.886509E+03	4.054893E+02	1.000E+01	2.000E+03	0.000E+00	1.000E+01	1.461E+05	3.980E+02
PSDF	ACCE	122	2206(5)	2.462834E+03	3.988320E+02	1.000E+01	2.000E+03	0.000E+00	1.000E+01	9.228E+04	3.960E+02
PSDF	ACCE	123	2196(5)	2.898096E+03	3.897712E+02	1.000E+01	2.000E+03	0.000E+00	1.000E+01	1.403E+05	3.160E+02
PSDF	ACCE	124	1890(5)	4.623440E+03	5.350392E+02	1.000E+01	2.000E+03	0.000E+00	1.000E+01	3.240E+05	4.980E+02
PSDF	ACCE	125	2197(5)	2.888348E+03	4.023992E+02	1.000E+01	2.000E+03	0.000E+00	1.000E+01	1.286E+05	3.160E+02
PSDF	ACCE	126	3053(5)	8.850695E+03	4.243684E+02	1.000E+01	2.000E+03	0.000E+00	1.000E+01	1.536E+06	2.420E+02
PSDF	ACCE	127	1885(5)	4.855293E+03	4.219568E+02	1.000E+01	2.000E+03	0.000E+00	1.000E+01	2.742E+05	4.960E+02
PSDF	ACCE	128	1886(5)	4.685489E+03	4.271714E+02	1.000E+01	2.000E+03	0.000E+00	1.000E+01	2.631E+05	4.960E+02
PSDF	ACCE	129	1887(5)	3.787616E+03	4.690404E+02	1.000E+01	2.000E+03	0.000E+00	1.000E+01	2.252E+05	4.960E+02
PSDF	ACCE	130	1888(5)	3.701055E+03	4.691107E+02	1.000E+01	2.000E+03	0.000E+00	1.000E+01	2.177E+05	4.960E+02
PSDF	ACCE	131	3037(5)	3.647209E+03	4.703767E+02	1.000E+01	2.000E+03	0.000E+00	1.000E+01	2.121E+05	4.960E+02
PSDF	ACCE	132	3038(5)	3.653255E+03	4.704417E+02	1.000E+01	2.000E+03	0.000E+00	1.000E+01	2.120E+05	4.960E+02
PSDF	ACCE	133	3039(5)	3.650503E+03	4.705928E+02	1.000E+01	2.000E+03	0.000E+00	1.000E+01	2.114E+05	4.960E+02
PSDF	ACCE	134	3040(5)	3.644454E+03	4.704921E+02	1.000E+01	2.000E+03	0.000E+00	1.000E+01	2.113E+05	4.960E+02
PSDF	ACCE	135	3041(5)	3.630616E+03	4.703853E+02	1.000E+01	2.000E+03	0.000E+00	1.000E+01	2.110E+05	4.960E+02
PSDF	ACCE	136	3042(5)	3.650496E+03	4.703238E+02	1.000E+01	2.000E+03	0.000E+00	1.000E+01	2.138E+05	4.960E+02
PSDF	ACCE	137	3043(5)	3.658294E+03	4.703622E+02	1.000E+01	2.000E+03	0.000E+00	1.000E+01	2.149E+05	4.960E+02
PSDF	ACCE	138	3044(5)	3.657027E+03	4.702307E+02	1.000E+01	2.000E+03	0.000E+00	1.000E+01	2.140E+05	4.960E+02
PSDF	ACCE	139	2097(5)	1.158892E+03	8.874172E+02	1.000E+01	2.000E+03	0.000E+00	1.000E+01	1.718E+04	1.159E+02
PSDF	ACCE	140	2098(5)	1.078194E+03	9.966345E+02	1.000E+01	2.000E+03	0.000E+00	1.000E+01	5.438E+03	1.159E+02
PSDF	ACCE	141	2173(5)	3.656270E+03	4.708676E+02	1.000E+01	2.000E+03	0.000E+00	1.000E+01	2.134E+05	4.960E+02
PSDF	ACCE	142	2168(5)	3.645122E+03	4.703528E+02	1.000E+01	2.000E+03	0.000E+00	1.000E+01	2.122E+05	4.960E+02
PSDF	ACCE	143	2202(5)	2.678525E+03	4.906411E+02	1.000E+01	2.000E+03	0.000E+00	1.000E+01	9.992E+04	2.540E+02
PSDF	ACCE	144	2204(5)	2.758860E+03	5.247447E+02	1.000E+01	2.000E+03	0.000E+00	1.000E+01	8.634E+04	3.980E+02

X AXIS PSD RESPONSE

X Y - O U T P U T S U M M A R Y (A U T O O R P S D F)

PLOT TYPE	CURVE TYPE	FRAME NO.	CURVE ID.	RMS VALUE	NO. POSITIVE CROSSINGS	XMIN FOR ALL DATA	XMAX FOR ALL DATA	YMIN FOR ALL DATA	X FOR YMIN	YMAX FOR ALL DATA	X FOR* YMAX
PSDF	ACCE	145	24000(5)	7.406629E-05	6.875171E+02	1.000E+01	2.000E+03	0.000E+00	1.000E+01	5.755E-11	3.520E+02
PSDF	ACCE	146	2135(5)	2.447961E+03	5.665043E+02	1.000E+01	2.000E+03	0.000E+00	1.000E+01	8.945E+04	1.151E+02
PSDF	ACCE	147	2086(5)	1.744447E+03	9.075521E+02	1.000E+01	2.000E+03	0.000E+00	1.000E+01	4.356E+04	1.151E+02
PSDF	ACCE	148	2090(5)	1.619017E+03	8.275867E+02	1.000E+01	2.000E+03	0.000E+00	1.000E+01	2.518E+04	2.520E+02
PSDF	ACCE	149	23231(5)	1.691268E+03	2.779932E+02	1.000E+01	2.000E+03	0.000E+00	1.000E+01	9.923E+04	2.700E+02
PSDF	ACCE	150	23232(5)	1.568688E+03	2.662581E+02	1.000E+01	2.000E+03	0.000E+00	1.000E+01	8.846E+04	2.680E+02
PSDF	ACCE	151	23233(5)	1.640875E+03	5.560054E+02	1.000E+01	2.000E+03	0.000E+00	1.000E+01	2.929E+04	1.151E+02
PSDF	ACCE	152	2441(5)	2.029826E+03	5.008727E+02	1.000E+01	2.000E+03	0.000E+00	1.000E+01	1.222E+05	1.151E+02
PSDF	ACCE	153	23234(5)	1.478921E+03	2.671005E+02	1.000E+01	2.000E+03	0.000E+00	1.000E+01	7.805E+04	2.680E+02
PSDF	ACCE	154	23235(5)	1.657127E+03	5.560840E+02	1.000E+01	2.000E+03	0.000E+00	1.000E+01	2.888E+04	1.151E+02
PSDF	ACCE	155	22859(5)	2.333936E+03	5.581376E+02	1.000E+01	2.000E+03	0.000E+00	1.000E+01	6.386E+04	4.980E+02
PSDF	ACCE	156	22868(5)	2.474508E+03	5.647148E+02	1.000E+01	2.000E+03	0.000E+00	1.000E+01	7.331E+04	4.980E+02
PSDF	ACCE	157	22644(5)	3.551057E+03	4.415627E+02	1.000E+01	2.000E+03	0.000E+00	1.000E+01	2.875E+05	1.410E+02
PSDF	ACCE	158	22632(5)	3.745608E+03	3.906942E+02	1.000E+01	2.000E+03	0.000E+00	1.000E+01	3.075E+05	1.410E+02
PSDF	ACCE	159	23609(5)	1.080309E+03	1.022117E+03	1.000E+01	2.000E+03	0.000E+00	1.000E+01	4.904E+03	9.100E+02
PSDF	ACCE	160	23610(5)	1.109732E+03	1.012341E+03	1.000E+01	2.000E+03	0.000E+00	1.000E+01	5.063E+03	9.100E+02
PSDF	ACCE	161	23611(5)	1.064004E+03	1.014952E+03	1.000E+01	2.000E+03	0.000E+00	1.000E+01	4.743E+03	9.100E+02
PSDF	ACCE	162	23612(5)	1.016076E+03	1.017255E+03	1.000E+01	2.000E+03	0.000E+00	1.000E+01	4.431E+03	9.100E+02
PSDF	ACCE	163	23613(5)	1.219594E+03	9.263375E+02	1.000E+01	2.000E+03	0.000E+00	1.000E+01	1.490E+04	1.159E+02
PSDF	ACCE	164	23614(5)	1.162417E+03	9.214729E+02	1.000E+01	2.000E+03	0.000E+00	1.000E+01	1.392E+04	1.159E+02
PSDF	ACCE	165	23615(5)	1.045622E+03	9.182391E+02	1.000E+01	2.000E+03	0.000E+00	1.000E+01	1.134E+04	1.159E+02
PSDF	ACCE	166	23616(5)	1.074287E+03	1.006763E+03	1.000E+01	2.000E+03	0.000E+00	1.000E+01	4.938E+03	9.100E+02
PSDF	ACCE	167	23617(5)	1.025325E+03	1.032627E+03	1.000E+01	2.000E+03	0.000E+00	1.000E+01	4.986E+03	9.040E+02
PSDF	ACCE	168	23618(5)	9.583358E+02	1.047592E+03	1.000E+01	2.000E+03	0.000E+00	1.000E+01	4.324E+03	9.060E+02

X AXIS PSD RESPONSE

X Y - O U T P U T S U M M A R Y (A U T O O R P S D F)

PLOT TYPE	CURVE TYPE	FRAME NO.	CURVE ID.	RMS VALUE	NO. POSITIVE CROSSINGS	XMIN FOR ALL DATA	XMAX FOR ALL DATA	YMIN FOR ALL DATA	X FOR YMIN	YMAX FOR ALL DATA	X FOR* YMAX
PSDF	ACCE	169	23619(5)	1.013887E+03	1.045896E+03	1.000E+01	2.000E+03	0.000E+00	1.000E+01	4.806E+03	9.060E+02
PSDF	ACCE	170	26206(5)	1.085406E+04	3.220656E+02	1.000E+01	2.000E+03	0.000E+00	1.000E+01	4.516E+06	1.640E+02
PSDF	ACCE	171	2122(5)	1.729190E+03	5.120422E+02	1.000E+01	2.000E+03	0.000E+00	1.000E+01	6.113E+04	1.151E+02
PSDF	DISP	171	2201(3)	9.477649E-03	7.339806E+01	1.000E+01	2.000E+03	0.000E+00	1.000E+01	6.959E-06	2.000E+01
PSDF	DISP	171	2660(3)	8.120186E-03	6.021246E+01	1.000E+01	2.000E+03	0.000E+00	1.000E+01	6.789E-06	2.000E+01
PSDF	DISP	171	2648(3)	9.188192E-03	6.758954E+01	1.000E+01	2.000E+03	0.000E+00	1.000E+01	6.930E-06	2.000E+01
PSDF	DISP	171	2650(3)	9.510269E-03	6.998952E+01	1.000E+01	2.000E+03	0.000E+00	1.000E+01	6.957E-06	2.000E+01
PSDF	DISP	171	2658(3)	8.065258E-03	6.032411E+01	1.000E+01	2.000E+03	0.000E+00	1.000E+01	6.770E-06	2.000E+01
PSDF	DISP	171	23636(3)	2.230833E-04	4.389337E+02	1.000E+01	2.000E+03	0.000E+00	1.000E+01	2.009E-09	4.840E+02
PSDF	DISP	171	23637(3)	2.644864E-04	2.822054E+02	1.000E+01	2.000E+03	0.000E+00	1.000E+01	8.283E-09	1.500E+02
PSDF	DISP	171	23638(3)	3.835308E-04	2.466602E+02	1.000E+01	2.000E+03	0.000E+00	1.000E+01	2.079E-08	1.500E+02
PSDF	DISP	171	23639(3)	4.614847E-04	2.614501E+02	1.000E+01	2.000E+03	0.000E+00	1.000E+01	3.001E-08	1.500E+02
PSDF	DISP	171	23640(3)	4.823329E-04	2.987820E+02	1.000E+01	2.000E+03	0.000E+00	1.000E+01	2.936E-08	1.500E+02
PSDF	DISP	171	23641(3)	4.318446E-04	3.124484E+02	1.000E+01	2.000E+03	0.000E+00	1.000E+01	2.166E-08	1.500E+02
PSDF	DISP	171	23642(3)	3.489413E-04	3.144448E+02	1.000E+01	2.000E+03	0.000E+00	1.000E+01	1.259E-08	1.500E+02
PSDF	DISP	171	23643(3)	2.912963E-04	3.156688E+02	1.000E+01	2.000E+03	0.000E+00	1.000E+01	6.353E-09	1.500E+02
PSDF	DISP	171	23644(3)	2.697451E-04	3.063502E+02	1.000E+01	2.000E+03	0.000E+00	1.000E+01	2.739E-09	1.500E+02
PSDF	DISP	171	23645(3)	2.902981E-04	2.919530E+02	1.000E+01	2.000E+03	0.000E+00	1.000E+01	4.017E-09	2.240E+02
PSDF	DISP	171	23646(3)	3.632094E-04	3.315936E+02	1.000E+01	2.000E+03	0.000E+00	1.000E+01	5.941E-09	2.240E+02
PSDF	DISP	171	23647(3)	2.147563E-04	3.749596E+02	1.000E+01	2.000E+03	0.000E+00	1.000E+01	1.737E-09	1.500E+02
PSDF	DISP	171	23648(3)	2.739791E-04	2.366283E+02	1.000E+01	2.000E+03	0.000E+00	1.000E+01	1.017E-08	1.500E+02
PSDF	DISP	171	23649(3)	3.693349E-04	2.182938E+02	1.000E+01	2.000E+03	0.000E+00	1.000E+01	2.246E-08	1.500E+02
PSDF	DISP	171	23650(3)	4.240401E-04	2.113072E+02	1.000E+01	2.000E+03	0.000E+00	1.000E+01	3.097E-08	1.500E+02
PSDF	DISP	171	23651(3)	4.270286E-04	2.356087E+02	1.000E+01	2.000E+03	0.000E+00	1.000E+01	2.984E-08	1.500E+02

X AXIS PSD RESPONSE

X Y - O U T P U T S U M M A R Y (A U T O O R P S D F)

PLOT TYPE	CURVE TYPE	FRAME NO.	CURVE ID.	RMS VALUE	NO. POSITIVE CROSSINGS	XMIN FOR ALL DATA	XMAX FOR ALL DATA	YMIN FOR ALL DATA	X FOR YMIN	YMAX FOR ALL DATA	X FOR* YMAX
PSDF	DISP	171	23652(3)	3.875526E-04	2.631816E+02	1.000E+01	2.000E+03	0.000E+00	1.000E+01	2.195E-08	1.500E+02
PSDF	DISP	171	23653(3)	3.340879E-04	3.087490E+02	1.000E+01	2.000E+03	0.000E+00	1.000E+01	1.256E-08	1.500E+02
PSDF	DISP	171	23654(3)	2.937465E-04	3.290702E+02	1.000E+01	2.000E+03	0.000E+00	1.000E+01	6.346E-09	1.500E+02
PSDF	DISP	171	23655(3)	2.739653E-04	2.879909E+02	1.000E+01	2.000E+03	0.000E+00	1.000E+01	2.885E-09	1.500E+02
PSDF	DISP	171	23656(3)	2.983843E-04	2.553182E+02	1.000E+01	2.000E+03	0.000E+00	1.000E+01	4.116E-09	2.240E+02
PSDF	DISP	171	23657(3)	3.745324E-04	3.207054E+02	1.000E+01	2.000E+03	0.000E+00	1.000E+01	6.125E-09	2.240E+02
PSDF	DISP	171	23658(3)	4.835695E-03	1.550887E+02	1.000E+01	2.000E+03	0.000E+00	1.000E+01	2.046E-06	1.159E+02
PSDF	DISP	171	23659(3)	3.836987E-03	3.136392E+02	1.000E+01	2.000E+03	0.000E+00	1.000E+01	4.331E-07	3.040E+02
PSDF	DISP	171	23660(3)	1.048813E-02	1.556223E+02	1.000E+01	2.000E+03	0.000E+00	1.000E+01	6.155E-06	1.640E+02
PSDF	DISP	171	23661(3)	1.048785E-02	1.556701E+02	1.000E+01	2.000E+03	0.000E+00	1.000E+01	6.154E-06	1.640E+02
PSDF	DISP	171	23662(3)	1.141027E-02	1.548188E+02	1.000E+01	2.000E+03	0.000E+00	1.000E+01	9.196E-06	1.640E+02
PSDF	DISP	171	23663(3)	6.903502E-03	1.455770E+02	1.000E+01	2.000E+03	0.000E+00	1.000E+01	3.106E-06	1.028E+02
PSDF	DISP	171	2441(3)	1.265348E-02	1.009001E+02	1.000E+01	2.000E+03	0.000E+00	1.000E+01	7.233E-06	2.000E+01
PSDF	DISP	171	2200(3)	9.477364E-03	7.339004E+01	1.000E+01	2.000E+03	0.000E+00	1.000E+01	6.959E-06	2.000E+01
PSDF	DISP	171	2205(3)	1.002836E-02	7.637120E+01	1.000E+01	2.000E+03	0.000E+00	1.000E+01	7.014E-06	2.000E+01
PSDF	DISP	171	2206(3)	1.002940E-02	7.638472E+01	1.000E+01	2.000E+03	0.000E+00	1.000E+01	7.014E-06	2.000E+01
PSDF	DISP	171	2196(3)	8.979612E-03	7.141062E+01	1.000E+01	2.000E+03	0.000E+00	1.000E+01	6.903E-06	2.000E+01
PSDF	DISP	171	1890(3)	1.130314E-02	8.654175E+01	1.000E+01	2.000E+03	0.000E+00	1.000E+01	7.093E-06	2.000E+01
PSDF	DISP	171	2197(3)	8.978924E-03	7.139626E+01	1.000E+01	2.000E+03	0.000E+00	1.000E+01	6.903E-06	2.000E+01
PSDF	DISP	171	3053(3)	1.288707E-02	1.145603E+02	1.000E+01	2.000E+03	0.000E+00	1.000E+01	7.188E-06	2.000E+01
PSDF	DISP	171	1885(3)	1.130090E-02	8.652205E+01	1.000E+01	2.000E+03	0.000E+00	1.000E+01	7.093E-06	2.000E+01
PSDF	DISP	171	1886(3)	1.130069E-02	8.652016E+01	1.000E+01	2.000E+03	0.000E+00	1.000E+01	7.093E-06	2.000E+01
PSDF	DISP	171	1887(3)	1.130125E-02	8.652528E+01	1.000E+01	2.000E+03	0.000E+00	1.000E+01	7.093E-06	2.000E+01
PSDF	DISP	171	1888(3)	1.130160E-02	8.652839E+01	1.000E+01	2.000E+03	0.000E+00	1.000E+01	7.093E-06	2.000E+01

X AXIS PSD RESPONSE

X Y - O U T P U T S U M M A R Y (A U T O O R P S D F)

PLOT TYPE	CURVE TYPE	FRAME NO.	CURVE ID.	RMS VALUE	NO. POSITIVE CROSSINGS	XMIN FOR ALL DATA	XMAX FOR ALL DATA	YMIN FOR ALL DATA	X FOR YMIN	YMAX FOR ALL DATA	X FOR* YMAX
PSDF	DISP	171	3037(3)	1.208220E-02	9.290269E+01	1.000E+01	2.000E+03	0.000E+00	1.000E+01	7.139E-06	2.000E+01
PSDF	DISP	171	3038(3)	1.212927E-02	9.327928E+01	1.000E+01	2.000E+03	0.000E+00	1.000E+01	7.144E-06	2.000E+01
PSDF	DISP	171	3039(3)	1.208785E-02	9.351209E+01	1.000E+01	2.000E+03	0.000E+00	1.000E+01	7.142E-06	2.000E+01
PSDF	DISP	171	3040(3)	1.188576E-02	9.246400E+01	1.000E+01	2.000E+03	0.000E+00	1.000E+01	7.128E-06	2.000E+01
PSDF	DISP	171	3041(3)	1.168565E-02	9.112927E+01	1.000E+01	2.000E+03	0.000E+00	1.000E+01	7.113E-06	2.000E+01
PSDF	DISP	171	3042(3)	1.172633E-02	9.168842E+01	1.000E+01	2.000E+03	0.000E+00	1.000E+01	7.113E-06	2.000E+01
PSDF	DISP	171	3043(3)	1.186356E-02	9.243291E+01	1.000E+01	2.000E+03	0.000E+00	1.000E+01	7.121E-06	2.000E+01
PSDF	DISP	171	3044(3)	1.197086E-02	9.252617E+01	1.000E+01	2.000E+03	0.000E+00	1.000E+01	7.130E-06	2.000E+01
PSDF	DISP	171	2097(3)	8.988003E-03	6.909487E+01	1.000E+01	2.000E+03	0.000E+00	1.000E+01	6.861E-06	2.000E+01
PSDF	DISP	171	2098(3)	1.105511E-02	8.442616E+01	1.000E+01	2.000E+03	0.000E+00	1.000E+01	6.992E-06	2.000E+01
PSDF	DISP	171	21086(3)	8.071278E-03	7.380727E+01	1.000E+01	2.000E+03	0.000E+00	1.000E+01	6.785E-06	2.000E+01
PSDF	DISP	171	21126(3)	8.029560E-03	7.210159E+01	1.000E+01	2.000E+03	0.000E+00	1.000E+01	6.779E-06	2.000E+01
PSDF	DISP	171	21139(3)	8.025186E-03	7.188630E+01	1.000E+01	2.000E+03	0.000E+00	1.000E+01	6.778E-06	2.000E+01
PSDF	DISP	171	21150(3)	8.022112E-03	7.176448E+01	1.000E+01	2.000E+03	0.000E+00	1.000E+01	6.778E-06	2.000E+01
PSDF	DISP	171	21159(3)	8.025430E-03	7.185282E+01	1.000E+01	2.000E+03	0.000E+00	1.000E+01	6.778E-06	2.000E+01
PSDF	DISP	171	21160(3)	8.022570E-03	7.173848E+01	1.000E+01	2.000E+03	0.000E+00	1.000E+01	6.778E-06	2.000E+01
PSDF	DISP	171	21161(3)	8.023002E-03	7.159880E+01	1.000E+01	2.000E+03	0.000E+00	1.000E+01	6.778E-06	2.000E+01
PSDF	DISP	171	21094(3)	8.063437E-03	7.378551E+01	1.000E+01	2.000E+03	0.000E+00	1.000E+01	6.783E-06	2.000E+01
PSDF	DISP	171	21190(3)	8.199060E-03	7.184339E+01	1.000E+01	2.000E+03	0.000E+00	1.000E+01	6.805E-06	2.000E+01
PSDF	DISP	171	21198(3)	8.183806E-03	7.163594E+01	1.000E+01	2.000E+03	0.000E+00	1.000E+01	6.802E-06	2.000E+01
PSDF	DISP	171	21206(3)	8.179543E-03	7.151363E+01	1.000E+01	2.000E+03	0.000E+00	1.000E+01	6.802E-06	2.000E+01
PSDF	DISP	171	21214(3)	8.172488E-03	7.136185E+01	1.000E+01	2.000E+03	0.000E+00	1.000E+01	6.801E-06	2.000E+01
PSDF	DISP	171	21227(3)	8.166234E-03	7.123505E+01	1.000E+01	2.000E+03	0.000E+00	1.000E+01	6.800E-06	2.000E+01
PSDF	DISP	171	21238(3)	8.161523E-03	7.115332E+01	1.000E+01	2.000E+03	0.000E+00	1.000E+01	6.799E-06	2.000E+01

X AXIS PSD RESPONSE

X Y - O U T P U T S U M M A R Y (A U T O O R P S D F)

PLOT TYPE	CURVE TYPE	FRAME NO.	CURVE ID.	RMS VALUE	NO. POSITIVE CROSSINGS	XMIN FOR ALL DATA	XMAX FOR ALL DATA	YMIN FOR ALL DATA	X FOR YMIN	YMAX FOR ALL DATA	X FOR* YMAX
PSDF	DISP	171	21249(3)	8.161721E-03	7.108786E+01	1.000E+01	2.000E+03	0.000E+00	1.000E+01	6.799E-06	2.000E+01
PSDF	DISP	171	21085(3)	7.977145E-03	7.180267E+01	1.000E+01	2.000E+03	0.000E+00	1.000E+01	6.770E-06	2.000E+01
PSDF	DISP	171	21093(3)	7.972258E-03	7.162048E+01	1.000E+01	2.000E+03	0.000E+00	1.000E+01	6.769E-06	2.000E+01
PSDF	DISP	171	21101(3)	7.961879E-03	7.139430E+01	1.000E+01	2.000E+03	0.000E+00	1.000E+01	6.768E-06	2.000E+01
PSDF	DISP	171	21109(3)	7.953153E-03	7.104026E+01	1.000E+01	2.000E+03	0.000E+00	1.000E+01	6.766E-06	2.000E+01
PSDF	DISP	171	21117(3)	7.943737E-03	7.060165E+01	1.000E+01	2.000E+03	0.000E+00	1.000E+01	6.765E-06	2.000E+01
PSDF	DISP	171	21149(3)	7.931385E-03	6.964584E+01	1.000E+01	2.000E+03	0.000E+00	1.000E+01	6.763E-06	2.000E+01
PSDF	DISP	171	21158(3)	7.930509E-03	6.943494E+01	1.000E+01	2.000E+03	0.000E+00	1.000E+01	6.763E-06	2.000E+01
PSDF	DISP	171	21165(3)	7.932206E-03	6.944641E+01	1.000E+01	2.000E+03	0.000E+00	1.000E+01	6.763E-06	2.000E+01
PSDF	DISP	171	21166(3)	7.931998E-03	6.922636E+01	1.000E+01	2.000E+03	0.000E+00	1.000E+01	6.763E-06	2.000E+01
PSDF	DISP	171	21173(3)	8.125412E-03	7.130829E+01	1.000E+01	2.000E+03	0.000E+00	1.000E+01	6.793E-06	2.000E+01
PSDF	DISP	171	21181(3)	8.119858E-03	7.122103E+01	1.000E+01	2.000E+03	0.000E+00	1.000E+01	6.792E-06	2.000E+01
PSDF	DISP	171	21205(3)	8.085124E-03	7.063297E+01	1.000E+01	2.000E+03	0.000E+00	1.000E+01	6.786E-06	2.000E+01
PSDF	DISP	171	21213(3)	8.078829E-03	7.040830E+01	1.000E+01	2.000E+03	0.000E+00	1.000E+01	6.786E-06	2.000E+01
PSDF	DISP	171	21226(3)	8.069014E-03	7.014718E+01	1.000E+01	2.000E+03	0.000E+00	1.000E+01	6.784E-06	2.000E+01
PSDF	DISP	171	21237(3)	8.062639E-03	6.992842E+01	1.000E+01	2.000E+03	0.000E+00	1.000E+01	6.783E-06	2.000E+01
PSDF	DISP	171	21246(3)	8.059531E-03	6.977015E+01	1.000E+01	2.000E+03	0.000E+00	1.000E+01	6.783E-06	2.000E+01
PSDF	DISP	171	21253(3)	8.061196E-03	6.977937E+01	1.000E+01	2.000E+03	0.000E+00	1.000E+01	6.783E-06	2.000E+01
PSDF	DISP	171	21118(3)	8.034809E-03	7.239702E+01	1.000E+01	2.000E+03	0.000E+00	1.000E+01	6.780E-06	2.000E+01
PSDF	DISP	171	21174(3)	8.218291E-03	7.206641E+01	1.000E+01	2.000E+03	0.000E+00	1.000E+01	6.807E-06	2.000E+01
PSDF	DISP	171	21182(3)	8.210554E-03	7.201156E+01	1.000E+01	2.000E+03	0.000E+00	1.000E+01	6.806E-06	2.000E+01
PSDF	DISP	171	21102(3)	8.052315E-03	7.325751E+01	1.000E+01	2.000E+03	0.000E+00	1.000E+01	6.782E-06	2.000E+01
PSDF	DISP	171	21110(3)	8.037732E-03	7.268782E+01	1.000E+01	2.000E+03	0.000E+00	1.000E+01	6.780E-06	2.000E+01
PSDF	DISP	171	21247(3)	8.164384E-03	7.120243E+01	1.000E+01	2.000E+03	0.000E+00	1.000E+01	6.800E-06	2.000E+01

X AXIS PSD RESPONSE

X Y - O U T P U T S U M M A R Y (A U T O O R P S D F)

PLOT TYPE	CURVE TYPE	FRAME NO.	CURVE ID.	RMS VALUE	NO. POSITIVE CROSSINGS	XMIN FOR ALL DATA	XMAX FOR ALL DATA	YMIN FOR ALL DATA	X FOR YMIN	YMAX FOR ALL DATA	X FOR* YMAX
PSDF	DISP	171	21248(3)	8.161020E-03	7.114274E+01	1.000E+01	2.000E+03	0.000E+00	1.000E+01	6.799E-06	2.000E+01
PSDF	DISP	171	21125(3)	7.940797E-03	7.030103E+01	1.000E+01	2.000E+03	0.000E+00	1.000E+01	6.764E-06	2.000E+01
PSDF	DISP	171	21138(3)	7.934611E-03	6.993632E+01	1.000E+01	2.000E+03	0.000E+00	1.000E+01	6.763E-06	2.000E+01
PSDF	DISP	171	21189(3)	8.109474E-03	7.113313E+01	1.000E+01	2.000E+03	0.000E+00	1.000E+01	6.790E-06	2.000E+01
PSDF	DISP	171	21197(3)	8.098196E-03	7.091857E+01	1.000E+01	2.000E+03	0.000E+00	1.000E+01	6.788E-06	2.000E+01
PSDF	DISP	171	21254(3)	8.060288E-03	6.965154E+01	1.000E+01	2.000E+03	0.000E+00	1.000E+01	6.783E-06	2.000E+01
PSDF	DISP	171	2204(3)	1.002796E-02	7.636391E+01	1.000E+01	2.000E+03	0.000E+00	1.000E+01	7.014E-06	2.000E+01
PSDF	DISP	171	2202(3)	9.478085E-03	7.340862E+01	1.000E+01	2.000E+03	0.000E+00	1.000E+01	6.959E-06	2.000E+01
PSDF	DISP	171	22644(3)	1.010818E-02	1.051367E+02	1.000E+01	2.000E+03	0.000E+00	1.000E+01	6.978E-06	2.000E+01
PSDF	DISP	171	22632(3)	1.145450E-02	1.360356E+02	1.000E+01	2.000E+03	0.000E+00	1.000E+01	6.939E-06	2.000E+01
PSDF	DISP	171	23231(3)	9.494483E-03	7.188490E+01	1.000E+01	2.000E+03	0.000E+00	1.000E+01	6.972E-06	2.000E+01
PSDF	DISP	171	23232(3)	9.493650E-03	7.187929E+01	1.000E+01	2.000E+03	0.000E+00	1.000E+01	6.972E-06	2.000E+01
PSDF	DISP	171	23233(3)	9.488209E-03	7.184212E+01	1.000E+01	2.000E+03	0.000E+00	1.000E+01	6.971E-06	2.000E+01
PSDF	DISP	171	23234(3)	9.373303E-03	7.106065E+01	1.000E+01	2.000E+03	0.000E+00	1.000E+01	6.961E-06	2.000E+01
PSDF	DISP	171	23235(3)	9.366147E-03	7.100095E+01	1.000E+01	2.000E+03	0.000E+00	1.000E+01	6.960E-06	2.000E+01
PSDF	DISP	171	22859(3)	8.725413E-03	6.653793E+01	1.000E+01	2.000E+03	0.000E+00	1.000E+01	6.883E-06	2.000E+01
PSDF	DISP	171	22868(3)	9.788598E-03	7.262858E+01	1.000E+01	2.000E+03	0.000E+00	1.000E+01	7.003E-06	2.000E+01
PSDF	DISP	171	23609(3)	1.158121E-02	8.731049E+01	1.000E+01	2.000E+03	0.000E+00	1.000E+01	7.027E-06	2.000E+01
PSDF	DISP	171	23610(3)	1.400287E-02	1.004180E+02	1.000E+01	2.000E+03	0.000E+00	1.000E+01	1.103E-05	1.160E+02
PSDF	DISP	171	23611(3)	1.164105E-02	8.778604E+01	1.000E+01	2.000E+03	0.000E+00	1.000E+01	7.027E-06	2.000E+01
PSDF	DISP	171	23612(3)	1.246286E-02	9.437128E+01	1.000E+01	2.000E+03	0.000E+00	1.000E+01	7.069E-06	2.000E+01
PSDF	DISP	171	23613(3)	9.163784E-03	7.429530E+01	1.000E+01	2.000E+03	0.000E+00	1.000E+01	6.906E-06	2.000E+01
PSDF	DISP	171	23614(3)	9.376237E-03	7.325671E+01	1.000E+01	2.000E+03	0.000E+00	1.000E+01	6.903E-06	2.000E+01
PSDF	DISP	171	23615(3)	9.433504E-03	7.810580E+01	1.000E+01	2.000E+03	0.000E+00	1.000E+01	6.884E-06	2.000E+01

X AXIS PSD RESPONSE

X Y - O U T P U T S U M M A R Y (A U T O O R P S D F)

PLOT TYPE	CURVE TYPE	FRAME NO.	CURVE ID.	RMS VALUE	NO. POSITIVE CROSSINGS	XMIN FOR ALL DATA	XMAX FOR ALL DATA	YMIN FOR ALL DATA	X FOR YMIN	YMAX FOR ALL DATA	X FOR* YMAX
PSDF	DISP	171	23616(3)	3.435657E-02	1.162480E+02	1.000E+01	2.000E+03	0.000E+00	1.000E+01	9.362E-05	1.220E+02
PSDF	DISP	171	23617(3)	5.185701E-02	1.166092E+02	1.000E+01	2.000E+03	0.000E+00	1.000E+01	2.323E-04	1.220E+02
PSDF	DISP	171	23618(3)	1.352438E-02	1.007345E+02	1.000E+01	2.000E+03	0.000E+00	1.000E+01	8.707E-06	1.021E+02
PSDF	DISP	171	23619(3)	2.274764E-02	1.096983E+02	1.000E+01	2.000E+03	0.000E+00	1.000E+01	3.715E-05	1.160E+02
PSDF	DISP	171	2752(3)	9.890902E-03	9.323827E+01	1.000E+01	2.000E+03	0.000E+00	1.000E+01	6.991E-06	2.000E+01
PSDF	DISP	171	2758(3)	8.583622E-03	6.914573E+01	1.000E+01	2.000E+03	0.000E+00	1.000E+01	6.825E-06	2.000E+01
PSDF	DISP	171	2748(3)	8.654377E-03	7.009703E+01	1.000E+01	2.000E+03	0.000E+00	1.000E+01	6.875E-06	2.000E+01
PSDF	DISP	171	618(3)	1.089698E-02	8.492931E+01	1.000E+01	2.000E+03	0.000E+00	1.000E+01	7.097E-06	2.000E+01
PSDF	DISP	171	603(3)	1.577040E-02	1.673734E+02	1.000E+01	2.000E+03	0.000E+00	1.000E+01	9.911E-06	1.021E+02
PSDF	DISP	171	2441(3)	1.265348E-02	1.009001E+02	1.000E+01	2.000E+03	0.000E+00	1.000E+01	7.233E-06	2.000E+01
PSDF	DISP	171	25803(3)	1.418850E-02	1.042308E+02	1.000E+01	2.000E+03	0.000E+00	1.000E+01	1.476E-05	1.151E+02
PSDF	DISP	171	2175(3)	8.012399E-03	6.049647E+01	1.000E+01	2.000E+03	0.000E+00	1.000E+01	6.742E-06	2.000E+01
PSDF	DISP	171	2086(3)	9.002763E-03	7.799628E+01	1.000E+01	2.000E+03	0.000E+00	1.000E+01	6.897E-06	2.000E+01
PSDF	DISP	171	26116(3)	1.463244E-02	1.749990E+02	1.000E+01	2.000E+03	0.000E+00	1.000E+01	1.225E-05	1.640E+02
PSDF	DISP	171	26146(3)	1.104771E-02	1.018840E+02	1.000E+01	2.000E+03	0.000E+00	1.000E+01	7.045E-06	2.000E+01
PSDF	DISP	171	26336(3)	1.081022E-02	1.067074E+02	1.000E+01	2.000E+03	0.000E+00	1.000E+01	7.010E-06	2.000E+01
PSDF	DISP	171	26417(3)	1.285719E-02	9.627483E+01	1.000E+01	2.000E+03	0.000E+00	1.000E+01	1.042E-05	1.151E+02
PSDF	DISP	171	26082(3)	1.465170E-02	1.407569E+02	1.000E+01	2.000E+03	0.000E+00	1.000E+01	1.478E-05	1.640E+02
PSDF	DISP	171	24000(3)	7.285419E-03	4.791333E+01	1.000E+01	2.000E+03	0.000E+00	1.000E+01	6.579E-06	2.000E+01
PSDF	DISP	171	2201(4)	4.431609E-03	1.204486E+02	1.000E+01	2.000E+03	0.000E+00	1.000E+01	2.233E-06	1.151E+02
PSDF	DISP	171	2660(4)	4.549762E-03	1.128278E+02	1.000E+01	2.000E+03	0.000E+00	1.000E+01	1.918E-06	1.151E+02
PSDF	DISP	171	2648(4)	4.550223E-03	1.128020E+02	1.000E+01	2.000E+03	0.000E+00	1.000E+01	1.915E-06	1.151E+02
PSDF	DISP	171	2650(4)	5.644827E-03	1.088812E+02	1.000E+01	2.000E+03	0.000E+00	1.000E+01	2.975E-06	1.028E+02
PSDF	DISP	171	2658(4)	5.646288E-03	1.088794E+02	1.000E+01	2.000E+03	0.000E+00	1.000E+01	2.977E-06	1.028E+02

X AXIS PSD RESPONSE

X Y - O U T P U T S U M M A R Y (A U T O O R P S D F)

PLOT TYPE	CURVE TYPE	FRAME NO.	CURVE ID.	RMS VALUE	NO. POSITIVE CROSSINGS	XMIN FOR ALL DATA	XMAX FOR ALL DATA	YMIN FOR ALL DATA	X FOR YMIN	YMAX FOR ALL DATA	X FOR* YMAX
PSDF	DISP	171	2441(4)	5.870367E-03	1.276315E+02	1.000E+01	2.000E+03	0.000E+00	1.000E+01	4.131E-06	1.151E+02
PSDF	DISP	171	2200(4)	4.609271E-03	1.216041E+02	1.000E+01	2.000E+03	0.000E+00	1.000E+01	2.491E-06	1.151E+02
PSDF	DISP	171	2205(4)	4.431712E-03	1.204512E+02	1.000E+01	2.000E+03	0.000E+00	1.000E+01	2.233E-06	1.151E+02
PSDF	DISP	171	2206(4)	4.297198E-03	1.195365E+02	1.000E+01	2.000E+03	0.000E+00	1.000E+01	1.994E-06	1.151E+02
PSDF	DISP	171	2196(4)	4.611383E-03	1.216134E+02	1.000E+01	2.000E+03	0.000E+00	1.000E+01	2.494E-06	1.151E+02
PSDF	DISP	171	1890(4)	9.546974E-03	1.089531E+02	1.000E+01	2.000E+03	0.000E+00	1.000E+01	1.029E-05	1.028E+02
PSDF	DISP	171	2197(4)	4.431376E-03	1.204511E+02	1.000E+01	2.000E+03	0.000E+00	1.000E+01	2.233E-06	1.151E+02
PSDF	DISP	171	3053(4)	1.096973E-02	1.291280E+02	1.000E+01	2.000E+03	0.000E+00	1.000E+01	8.791E-06	1.151E+02
PSDF	DISP	171	1885(4)	7.903902E-03	1.113179E+02	1.000E+01	2.000E+03	0.000E+00	1.000E+01	6.007E-06	1.028E+02
PSDF	DISP	171	1886(4)	8.002256E-03	1.107920E+02	1.000E+01	2.000E+03	0.000E+00	1.000E+01	6.264E-06	1.028E+02
PSDF	DISP	171	1887(4)	8.939332E-03	1.083224E+02	1.000E+01	2.000E+03	0.000E+00	1.000E+01	8.722E-06	1.028E+02
PSDF	DISP	171	1888(4)	9.060866E-03	1.082506E+02	1.000E+01	2.000E+03	0.000E+00	1.000E+01	9.048E-06	1.028E+02
PSDF	DISP	171	3037(4)	9.099079E-03	1.077768E+02	1.000E+01	2.000E+03	0.000E+00	1.000E+01	9.251E-06	1.028E+02
PSDF	DISP	171	3038(4)	9.071171E-03	1.077551E+02	1.000E+01	2.000E+03	0.000E+00	1.000E+01	9.198E-06	1.028E+02
PSDF	DISP	171	3039(4)	8.998442E-03	1.076846E+02	1.000E+01	2.000E+03	0.000E+00	1.000E+01	9.072E-06	1.028E+02
PSDF	DISP	171	3040(4)	8.925047E-03	1.076164E+02	1.000E+01	2.000E+03	0.000E+00	1.000E+01	8.944E-06	1.028E+02
PSDF	DISP	171	3041(4)	8.895500E-03	1.075860E+02	1.000E+01	2.000E+03	0.000E+00	1.000E+01	8.896E-06	1.028E+02
PSDF	DISP	171	3042(4)	8.924006E-03	1.076065E+02	1.000E+01	2.000E+03	0.000E+00	1.000E+01	8.948E-06	1.028E+02
PSDF	DISP	171	3043(4)	8.997758E-03	1.076760E+02	1.000E+01	2.000E+03	0.000E+00	1.000E+01	9.077E-06	1.028E+02
PSDF	DISP	171	3044(4)	9.070012E-03	1.077432E+02	1.000E+01	2.000E+03	0.000E+00	1.000E+01	9.205E-06	1.028E+02
PSDF	DISP	171	2097(4)	3.882429E-03	1.233292E+02	1.000E+01	2.000E+03	0.000E+00	1.000E+01	1.787E-06	1.151E+02
PSDF	DISP	171	2098(4)	3.878831E-03	1.232912E+02	1.000E+01	2.000E+03	0.000E+00	1.000E+01	1.783E-06	1.151E+02
PSDF	DISP	171	21086(4)	4.434998E-03	1.442528E+02	1.000E+01	2.000E+03	0.000E+00	1.000E+01	1.468E-06	1.151E+02
PSDF	DISP	171	21126(4)	1.193257E-02	1.454807E+02	1.000E+01	2.000E+03	0.000E+00	1.000E+01	8.803E-06	1.520E+02

X AXIS PSD RESPONSE

X Y - O U T P U T S U M M A R Y (A U T O O R P S D F)

PLOT TYPE	CURVE TYPE	FRAME NO.	CURVE ID.	RMS VALUE	NO. POSITIVE CROSSINGS	XMIN FOR ALL DATA	XMAX FOR ALL DATA	YMIN FOR ALL DATA	X FOR YMIN	YMAX FOR ALL DATA	X FOR* YMAX
PSDF	DISP	171	21139(4)	9.305356E-03	1.453967E+02	1.000E+01	2.000E+03	0.000E+00	1.000E+01	4.857E-06	1.520E+02
PSDF	DISP	171	21150(4)	7.116846E-03	1.484506E+02	1.000E+01	2.000E+03	0.000E+00	1.000E+01	2.273E-06	1.520E+02
PSDF	DISP	171	21159(4)	5.654074E-03	1.583195E+02	1.000E+01	2.000E+03	0.000E+00	1.000E+01	1.583E-06	1.151E+02
PSDF	DISP	171	21160(4)	5.145160E-03	1.740821E+02	1.000E+01	2.000E+03	0.000E+00	1.000E+01	1.229E-06	1.151E+02
PSDF	DISP	171	21161(4)	5.329584E-03	1.902416E+02	1.000E+01	2.000E+03	0.000E+00	1.000E+01	1.359E-06	2.240E+02
PSDF	DISP	171	21094(4)	8.485529E-03	1.415456E+02	1.000E+01	2.000E+03	0.000E+00	1.000E+01	3.826E-06	1.500E+02
PSDF	DISP	171	21190(4)	1.242756E-02	1.449145E+02	1.000E+01	2.000E+03	0.000E+00	1.000E+01	9.863E-06	1.520E+02
PSDF	DISP	171	21198(4)	1.441945E-02	1.460668E+02	1.000E+01	2.000E+03	0.000E+00	1.000E+01	1.395E-05	1.520E+02
PSDF	DISP	171	21206(4)	1.408905E-02	1.461913E+02	1.000E+01	2.000E+03	0.000E+00	1.000E+01	1.335E-05	1.520E+02
PSDF	DISP	171	21214(4)	1.209637E-02	1.457763E+02	1.000E+01	2.000E+03	0.000E+00	1.000E+01	9.515E-06	1.520E+02
PSDF	DISP	171	21227(4)	9.441279E-03	1.458687E+02	1.000E+01	2.000E+03	0.000E+00	1.000E+01	5.251E-06	1.520E+02
PSDF	DISP	171	21238(4)	7.241879E-03	1.492711E+02	1.000E+01	2.000E+03	0.000E+00	1.000E+01	2.459E-06	1.520E+02
PSDF	DISP	171	21249(4)	5.516936E-03	1.908966E+02	1.000E+01	2.000E+03	0.000E+00	1.000E+01	1.506E-06	2.240E+02
PSDF	DISP	171	21085(4)	5.189183E-03	1.519154E+02	1.000E+01	2.000E+03	0.000E+00	1.000E+01	1.582E-06	1.151E+02
PSDF	DISP	171	21093(4)	8.968108E-03	1.442407E+02	1.000E+01	2.000E+03	0.000E+00	1.000E+01	4.458E-06	1.520E+02
PSDF	DISP	171	21101(4)	1.240019E-02	1.451495E+02	1.000E+01	2.000E+03	0.000E+00	1.000E+01	9.678E-06	1.520E+02
PSDF	DISP	171	21109(4)	1.417272E-02	1.458573E+02	1.000E+01	2.000E+03	0.000E+00	1.000E+01	1.311E-05	1.520E+02
PSDF	DISP	171	21117(4)	1.373589E-02	1.459937E+02	1.000E+01	2.000E+03	0.000E+00	1.000E+01	1.230E-05	1.520E+02
PSDF	DISP	171	21149(4)	6.898358E-03	1.495659E+02	1.000E+01	2.000E+03	0.000E+00	1.000E+01	2.165E-06	1.520E+02
PSDF	DISP	171	21158(4)	5.518063E-03	1.599718E+02	1.000E+01	2.000E+03	0.000E+00	1.000E+01	1.420E-06	1.151E+02
PSDF	DISP	171	21165(4)	5.042778E-03	1.755279E+02	1.000E+01	2.000E+03	0.000E+00	1.000E+01	1.108E-06	1.151E+02
PSDF	DISP	171	21166(4)	5.272758E-03	1.921720E+02	1.000E+01	2.000E+03	0.000E+00	1.000E+01	1.383E-06	2.240E+02
PSDF	DISP	171	21173(4)	5.247610E-03	1.527667E+02	1.000E+01	2.000E+03	0.000E+00	1.000E+01	1.594E-06	1.151E+02
PSDF	DISP	171	21181(4)	9.078271E-03	1.443995E+02	1.000E+01	2.000E+03	0.000E+00	1.000E+01	4.816E-06	1.520E+02

X AXIS PSD RESPONSE

X Y - O U T P U T S U M M A R Y (A U T O O R P S D F)

PLOT TYPE	CURVE TYPE	FRAME NO.	CURVE ID.	RMS VALUE	NO. POSITIVE CROSSINGS	XMIN FOR ALL DATA	XMAX FOR ALL DATA	YMIN FOR ALL DATA	X FOR YMIN	YMAX FOR ALL DATA	X FOR* YMAX
PSDF	DISP	171	21205(4)	1.392281E-02	1.459537E+02	1.000E+01	2.000E+03	0.000E+00	1.000E+01	1.330E-05	1.520E+02
PSDF	DISP	171	21213(4)	1.194706E-02	1.458389E+02	1.000E+01	2.000E+03	0.000E+00	1.000E+01	9.446E-06	1.520E+02
PSDF	DISP	171	21226(4)	9.227142E-03	1.464795E+02	1.000E+01	2.000E+03	0.000E+00	1.000E+01	5.084E-06	1.520E+02
PSDF	DISP	171	21237(4)	7.037313E-03	1.503221E+02	1.000E+01	2.000E+03	0.000E+00	1.000E+01	2.346E-06	1.520E+02
PSDF	DISP	171	21246(4)	5.671454E-03	1.609215E+02	1.000E+01	2.000E+03	0.000E+00	1.000E+01	1.499E-06	1.151E+02
PSDF	DISP	171	21253(4)	5.222421E-03	1.761634E+02	1.000E+01	2.000E+03	0.000E+00	1.000E+01	1.190E-06	1.151E+02
PSDF	DISP	171	21118(4)	1.390044E-02	1.459754E+02	1.000E+01	2.000E+03	0.000E+00	1.000E+01	1.235E-05	1.520E+02
PSDF	DISP	171	21174(4)	4.481461E-03	1.446963E+02	1.000E+01	2.000E+03	0.000E+00	1.000E+01	1.482E-06	1.151E+02
PSDF	DISP	171	21182(4)	8.592793E-03	1.417411E+02	1.000E+01	2.000E+03	0.000E+00	1.000E+01	4.087E-06	1.500E+02
PSDF	DISP	171	21102(4)	1.226232E-02	1.447244E+02	1.000E+01	2.000E+03	0.000E+00	1.000E+01	9.130E-06	1.520E+02
PSDF	DISP	171	21110(4)	1.422632E-02	1.459061E+02	1.000E+01	2.000E+03	0.000E+00	1.000E+01	1.291E-05	1.520E+02
PSDF	DISP	171	21247(4)	5.785211E-03	1.595087E+02	1.000E+01	2.000E+03	0.000E+00	1.000E+01	1.644E-06	1.151E+02
PSDF	DISP	171	21248(4)	5.301267E-03	1.751315E+02	1.000E+01	2.000E+03	0.000E+00	1.000E+01	1.293E-06	1.151E+02
PSDF	DISP	171	21125(4)	1.177900E-02	1.457828E+02	1.000E+01	2.000E+03	0.000E+00	1.000E+01	8.731E-06	1.520E+02
PSDF	DISP	171	21138(4)	9.080544E-03	1.461483E+02	1.000E+01	2.000E+03	0.000E+00	1.000E+01	4.697E-06	1.520E+02
PSDF	DISP	171	21189(4)	1.256018E-02	1.451662E+02	1.000E+01	2.000E+03	0.000E+00	1.000E+01	1.046E-05	1.520E+02
PSDF	DISP	171	21197(4)	1.436038E-02	1.458091E+02	1.000E+01	2.000E+03	0.000E+00	1.000E+01	1.417E-05	1.520E+02
PSDF	DISP	171	21254(4)	5.487903E-03	1.920681E+02	1.000E+01	2.000E+03	0.000E+00	1.000E+01	1.537E-06	2.240E+02
PSDF	DISP	171	2204(4)	4.607877E-03	1.216127E+02	1.000E+01	2.000E+03	0.000E+00	1.000E+01	2.488E-06	1.151E+02
PSDF	DISP	171	2202(4)	4.295371E-03	1.195159E+02	1.000E+01	2.000E+03	0.000E+00	1.000E+01	1.991E-06	1.151E+02
PSDF	DISP	171	22644(4)	3.945854E-03	1.493689E+02	1.000E+01	2.000E+03	0.000E+00	1.000E+01	1.250E-06	1.151E+02
PSDF	DISP	171	22632(4)	2.042250E-03	1.331396E+02	1.000E+01	2.000E+03	0.000E+00	1.000E+01	4.757E-07	1.151E+02
PSDF	DISP	171	23231(4)	3.971632E-03	1.319595E+02	1.000E+01	2.000E+03	0.000E+00	1.000E+01	1.717E-06	1.151E+02
PSDF	DISP	171	23232(4)	3.921318E-03	1.304821E+02	1.000E+01	2.000E+03	0.000E+00	1.000E+01	1.686E-06	1.151E+02

X AXIS PSD RESPONSE

X Y - O U T P U T S U M M A R Y (A U T O O R P S D F)

PLOT TYPE	CURVE TYPE	FRAME NO.	CURVE ID.	RMS VALUE	NO. POSITIVE CROSSINGS	XMIN FOR ALL DATA	XMAX FOR ALL DATA	YMIN FOR ALL DATA	X FOR YMIN	YMAX FOR ALL DATA	X FOR* YMAX
PSDF	DISP	171	23233(4)	3.498540E-03	1.224568E+02	1.000E+01	2.000E+03	0.000E+00	1.000E+01	1.405E-06	1.151E+02
PSDF	DISP	171	23234(4)	3.880835E-03	1.291775E+02	1.000E+01	2.000E+03	0.000E+00	1.000E+01	1.657E-06	1.151E+02
PSDF	DISP	171	23235(4)	3.476579E-03	1.225926E+02	1.000E+01	2.000E+03	0.000E+00	1.000E+01	1.396E-06	1.151E+02
PSDF	DISP	171	22859(4)	3.902032E-03	1.228794E+02	1.000E+01	2.000E+03	0.000E+00	1.000E+01	1.820E-06	1.151E+02
PSDF	DISP	171	22868(4)	3.327122E-03	1.245385E+02	1.000E+01	2.000E+03	0.000E+00	1.000E+01	1.299E-06	1.151E+02
PSDF	DISP	171	23609(4)	3.932333E-03	1.232356E+02	1.000E+01	2.000E+03	0.000E+00	1.000E+01	1.833E-06	1.151E+02
PSDF	DISP	171	23610(4)	4.132147E-03	1.231627E+02	1.000E+01	2.000E+03	0.000E+00	1.000E+01	2.026E-06	1.151E+02
PSDF	DISP	171	23611(4)	3.747550E-03	1.234326E+02	1.000E+01	2.000E+03	0.000E+00	1.000E+01	1.662E-06	1.151E+02
PSDF	DISP	171	23612(4)	3.533445E-03	1.237408E+02	1.000E+01	2.000E+03	0.000E+00	1.000E+01	1.475E-06	1.151E+02
PSDF	DISP	171	23613(4)	4.433229E-03	1.232034E+02	1.000E+01	2.000E+03	0.000E+00	1.000E+01	2.335E-06	1.151E+02
PSDF	DISP	171	23614(4)	4.050787E-03	1.232207E+02	1.000E+01	2.000E+03	0.000E+00	1.000E+01	1.947E-06	1.151E+02
PSDF	DISP	171	23615(4)	3.501381E-03	1.238323E+02	1.000E+01	2.000E+03	0.000E+00	1.000E+01	1.447E-06	1.151E+02
PSDF	DISP	171	23616(4)	4.432313E-03	1.231461E+02	1.000E+01	2.000E+03	0.000E+00	1.000E+01	2.334E-06	1.151E+02
PSDF	DISP	171	23617(4)	4.423203E-03	1.230789E+02	1.000E+01	2.000E+03	0.000E+00	1.000E+01	2.324E-06	1.151E+02
PSDF	DISP	171	23618(4)	3.540513E-03	1.236628E+02	1.000E+01	2.000E+03	0.000E+00	1.000E+01	1.481E-06	1.151E+02
PSDF	DISP	171	23619(4)	3.993774E-03	1.231348E+02	1.000E+01	2.000E+03	0.000E+00	1.000E+01	1.891E-06	1.151E+02
PSDF	DISP	171	2752(4)	5.785933E-03	1.210791E+02	1.000E+01	2.000E+03	0.000E+00	1.000E+01	2.720E-06	1.028E+02
PSDF	DISP	171	2758(4)	6.511508E-03	1.742225E+02	1.000E+01	2.000E+03	0.000E+00	1.000E+01	2.873E-06	1.151E+02
PSDF	DISP	171	2748(4)	4.404101E-03	1.175304E+02	1.000E+01	2.000E+03	0.000E+00	1.000E+01	2.159E-06	1.151E+02
PSDF	DISP	171	618(4)	4.806380E-03	1.208184E+02	1.000E+01	2.000E+03	0.000E+00	1.000E+01	2.761E-06	1.151E+02
PSDF	DISP	171	603(4)	5.647181E-03	1.263062E+02	1.000E+01	2.000E+03	0.000E+00	1.000E+01	3.824E-06	1.151E+02
PSDF	DISP	171	2441(4)	5.870367E-03	1.276315E+02	1.000E+01	2.000E+03	0.000E+00	1.000E+01	4.131E-06	1.151E+02
PSDF	DISP	171	25803(4)	1.068504E-02	1.293121E+02	1.000E+01	2.000E+03	0.000E+00	1.000E+01	9.481E-06	1.151E+02
PSDF	DISP	171	2175(4)	6.874039E-03	1.073502E+02	1.000E+01	2.000E+03	0.000E+00	1.000E+01	5.325E-06	1.028E+02

X AXIS PSD RESPONSE

X Y - O U T P U T S U M M A R Y (A U T O O R P S D F)

PLOT TYPE	CURVE TYPE	FRAME NO.	CURVE ID.	RMS VALUE	NO. POSITIVE CROSSINGS	XMIN FOR ALL DATA	XMAX FOR ALL DATA	YMIN FOR ALL DATA	X FOR YMIN	YMAX FOR ALL DATA	X FOR* YMAX
PSDF	DISP	171	2086(4)	5.517215E-03	1.234681E+02	1.000E+01	2.000E+03	0.000E+00	1.000E+01	3.639E-06	1.151E+02
PSDF	DISP	171	26116(4)	5.263450E-03	1.603289E+02	1.000E+01	2.000E+03	0.000E+00	1.000E+01	1.681E-06	1.640E+02
PSDF	DISP	171	26146(4)	4.731703E-03	1.308531E+02	1.000E+01	2.000E+03	0.000E+00	1.000E+01	2.392E-06	1.028E+02
PSDF	DISP	171	26336(4)	5.925202E-03	1.541613E+02	1.000E+01	2.000E+03	0.000E+00	1.000E+01	2.300E-06	1.640E+02
PSDF	DISP	171	26417(4)	9.168289E-03	1.324615E+02	1.000E+01	2.000E+03	0.000E+00	1.000E+01	6.427E-06	1.151E+02
PSDF	DISP	171	26082(4)	4.738353E-03	1.217725E+02	1.000E+01	2.000E+03	0.000E+00	1.000E+01	2.443E-06	1.028E+02
PSDF	DISP	171	24000(4)	1.709765E-10	5.538495E+01	1.000E+01	2.000E+03	0.000E+00	1.000E+01	4.492E-21	2.400E+01
PSDF	DISP	171	2201(5)	1.054039E-03	2.608024E+02	1.000E+01	2.000E+03	0.000E+00	1.000E+01	2.555E-08	1.236E+02
PSDF	DISP	171	2660(5)	1.482600E-03	1.667946E+02	1.000E+01	2.000E+03	0.000E+00	1.000E+01	2.252E-07	1.151E+02
PSDF	DISP	171	2648(5)	5.964393E-04	3.558167E+02	1.000E+01	2.000E+03	0.000E+00	1.000E+01	1.289E-08	1.151E+02
PSDF	DISP	171	2650(5)	6.764647E-04	3.044274E+02	1.000E+01	2.000E+03	0.000E+00	1.000E+01	2.763E-08	1.151E+02
PSDF	DISP	171	2658(5)	1.118849E-03	2.596668E+02	1.000E+01	2.000E+03	0.000E+00	1.000E+01	6.208E-08	1.151E+02
PSDF	DISP	171	2441(5)	1.975260E-03	1.287751E+02	1.000E+01	2.000E+03	0.000E+00	1.000E+01	4.462E-07	1.151E+02
PSDF	DISP	171	2200(5)	7.895331E-04	2.464980E+02	1.000E+01	2.000E+03	0.000E+00	1.000E+01	2.538E-08	1.227E+02
PSDF	DISP	171	2205(5)	1.051691E-03	2.206412E+02	1.000E+01	2.000E+03	0.000E+00	1.000E+01	6.129E-08	1.151E+02
PSDF	DISP	171	2206(5)	1.244144E-03	1.812186E+02	1.000E+01	2.000E+03	0.000E+00	1.000E+01	1.216E-07	1.151E+02
PSDF	DISP	171	2196(5)	8.071681E-04	2.707481E+02	1.000E+01	2.000E+03	0.000E+00	1.000E+01	2.800E-08	1.159E+02
PSDF	DISP	171	1890(5)	1.491108E-03	1.950968E+02	1.000E+01	2.000E+03	0.000E+00	1.000E+01	1.829E-07	1.151E+02
PSDF	DISP	171	2197(5)	7.826221E-04	2.823000E+02	1.000E+01	2.000E+03	0.000E+00	1.000E+01	1.014E-08	2.520E+02
PSDF	DISP	171	3053(5)	3.003782E-03	2.414522E+02	1.000E+01	2.000E+03	0.000E+00	1.000E+01	2.873E-07	2.420E+02
PSDF	DISP	171	1885(5)	1.581885E-03	2.246737E+02	1.000E+01	2.000E+03	0.000E+00	1.000E+01	1.401E-07	1.151E+02
PSDF	DISP	171	1886(5)	1.388251E-03	2.395179E+02	1.000E+01	2.000E+03	0.000E+00	1.000E+01	9.765E-08	1.151E+02
PSDF	DISP	171	1887(5)	8.110913E-04	2.803763E+02	1.000E+01	2.000E+03	0.000E+00	1.000E+01	3.528E-08	1.151E+02
PSDF	DISP	171	1888(5)	9.407422E-04	2.419261E+02	1.000E+01	2.000E+03	0.000E+00	1.000E+01	6.019E-08	1.151E+02

X AXIS PSD RESPONSE

X Y - O U T P U T S U M M A R Y (A U T O O R P S D F)

PLOT TYPE	CURVE TYPE	FRAME NO.	CURVE ID.	RMS VALUE	NO. POSITIVE CROSSINGS	XMIN FOR ALL DATA	XMAX FOR ALL DATA	YMIN FOR ALL DATA	X FOR YMIN	YMAX FOR ALL DATA	X FOR* YMAX
PSDF	DISP	171	3037(5)	1.175265E-03	2.013861E+02	1.000E+01	2.000E+03	0.000E+00	1.000E+01	1.104E-07	1.151E+02
PSDF	DISP	171	3038(5)	1.193260E-03	1.996017E+02	1.000E+01	2.000E+03	0.000E+00	1.000E+01	1.219E-07	1.151E+02
PSDF	DISP	171	3039(5)	1.205512E-03	1.981184E+02	1.000E+01	2.000E+03	0.000E+00	1.000E+01	1.280E-07	1.151E+02
PSDF	DISP	171	3040(5)	1.195372E-03	1.990039E+02	1.000E+01	2.000E+03	0.000E+00	1.000E+01	1.227E-07	1.151E+02
PSDF	DISP	171	3041(5)	1.177242E-03	2.004837E+02	1.000E+01	2.000E+03	0.000E+00	1.000E+01	1.110E-07	1.151E+02
PSDF	DISP	171	3042(5)	1.157190E-03	2.036182E+02	1.000E+01	2.000E+03	0.000E+00	1.000E+01	9.828E-08	1.151E+02
PSDF	DISP	171	3043(5)	1.151929E-03	2.045526E+02	1.000E+01	2.000E+03	0.000E+00	1.000E+01	9.389E-08	1.151E+02
PSDF	DISP	171	3044(5)	1.156350E-03	2.040258E+02	1.000E+01	2.000E+03	0.000E+00	1.000E+01	9.843E-08	1.151E+02
PSDF	DISP	171	2097(5)	7.627876E-04	1.348415E+02	1.000E+01	2.000E+03	0.000E+00	1.000E+01	6.258E-08	1.151E+02
PSDF	DISP	171	2098(5)	4.613578E-04	1.455078E+02	1.000E+01	2.000E+03	0.000E+00	1.000E+01	1.934E-08	1.151E+02
PSDF	DISP	171	21086(5)	2.581392E-03	1.510258E+02	1.000E+01	2.000E+03	0.000E+00	1.000E+01	3.190E-07	1.410E+02
PSDF	DISP	171	21126(5)	1.333667E-03	1.757495E+02	1.000E+01	2.000E+03	0.000E+00	1.000E+01	8.210E-08	1.410E+02
PSDF	DISP	171	21139(5)	1.117181E-03	1.914737E+02	1.000E+01	2.000E+03	0.000E+00	1.000E+01	5.308E-08	1.410E+02
PSDF	DISP	171	21150(5)	9.332810E-04	2.141928E+02	1.000E+01	2.000E+03	0.000E+00	1.000E+01	3.179E-08	1.159E+02
PSDF	DISP	171	21159(5)	8.037795E-04	2.413007E+02	1.000E+01	2.000E+03	0.000E+00	1.000E+01	2.555E-08	1.159E+02
PSDF	DISP	171	21160(5)	7.640369E-04	2.601380E+02	1.000E+01	2.000E+03	0.000E+00	1.000E+01	1.994E-08	1.159E+02
PSDF	DISP	171	21161(5)	8.368112E-04	2.589778E+02	1.000E+01	2.000E+03	0.000E+00	1.000E+01	4.392E-08	1.021E+02
PSDF	DISP	171	21094(5)	2.334358E-03	1.526969E+02	1.000E+01	2.000E+03	0.000E+00	1.000E+01	2.619E-07	1.410E+02
PSDF	DISP	171	21190(5)	2.191870E-03	1.536099E+02	1.000E+01	2.000E+03	0.000E+00	1.000E+01	2.360E-07	1.410E+02
PSDF	DISP	171	21198(5)	1.919565E-03	1.573155E+02	1.000E+01	2.000E+03	0.000E+00	1.000E+01	1.814E-07	1.410E+02
PSDF	DISP	171	21206(5)	1.661670E-03	1.629491E+02	1.000E+01	2.000E+03	0.000E+00	1.000E+01	1.349E-07	1.410E+02
PSDF	DISP	171	21214(5)	1.411038E-03	1.718988E+02	1.000E+01	2.000E+03	0.000E+00	1.000E+01	9.464E-08	1.410E+02
PSDF	DISP	171	21227(5)	1.181680E-03	1.855712E+02	1.000E+01	2.000E+03	0.000E+00	1.000E+01	6.164E-08	1.410E+02
PSDF	DISP	171	21238(5)	9.846449E-04	2.052153E+02	1.000E+01	2.000E+03	0.000E+00	1.000E+01	3.660E-08	1.159E+02

X AXIS PSD RESPONSE

X Y - O U T P U T S U M M A R Y (A U T O O R P S D F)

PLOT TYPE	CURVE TYPE	FRAME NO.	CURVE ID.	RMS VALUE	NO. POSITIVE CROSSINGS	XMIN FOR ALL DATA	XMAX FOR ALL DATA	YMIN FOR ALL DATA	X FOR YMIN	YMAX FOR ALL DATA	X FOR* YMAX
PSDF	DISP	171	21249(5)	8.570653E-04	2.383018E+02	1.000E+01	2.000E+03	0.000E+00	1.000E+01	4.661E-08	1.021E+02
PSDF	DISP	171	21085(5)	2.584854E-03	1.510748E+02	1.000E+01	2.000E+03	0.000E+00	1.000E+01	3.196E-07	1.410E+02
PSDF	DISP	171	21093(5)	2.322922E-03	1.527375E+02	1.000E+01	2.000E+03	0.000E+00	1.000E+01	2.594E-07	1.410E+02
PSDF	DISP	171	21101(5)	2.069839E-03	1.553612E+02	1.000E+01	2.000E+03	0.000E+00	1.000E+01	2.067E-07	1.410E+02
PSDF	DISP	171	21109(5)	1.816992E-03	1.593507E+02	1.000E+01	2.000E+03	0.000E+00	1.000E+01	1.592E-07	1.410E+02
PSDF	DISP	171	21117(5)	1.553976E-03	1.661612E+02	1.000E+01	2.000E+03	0.000E+00	1.000E+01	1.152E-07	1.410E+02
PSDF	DISP	171	21149(5)	9.244704E-04	2.153537E+02	1.000E+01	2.000E+03	0.000E+00	1.000E+01	3.126E-08	1.159E+02
PSDF	DISP	171	21158(5)	8.004732E-04	2.431163E+02	1.000E+01	2.000E+03	0.000E+00	1.000E+01	2.517E-08	1.159E+02
PSDF	DISP	171	21165(5)	7.716587E-04	2.631646E+02	1.000E+01	2.000E+03	0.000E+00	1.000E+01	1.990E-08	1.159E+02
PSDF	DISP	171	21166(5)	8.560108E-04	2.644780E+02	1.000E+01	2.000E+03	0.000E+00	1.000E+01	4.438E-08	1.021E+02
PSDF	DISP	171	21173(5)	2.719337E-03	1.496820E+02	1.000E+01	2.000E+03	0.000E+00	1.000E+01	3.597E-07	1.410E+02
PSDF	DISP	171	21181(5)	2.445152E-03	1.513850E+02	1.000E+01	2.000E+03	0.000E+00	1.000E+01	2.923E-07	1.410E+02
PSDF	DISP	171	21205(5)	1.644045E-03	1.634561E+02	1.000E+01	2.000E+03	0.000E+00	1.000E+01	1.317E-07	1.410E+02
PSDF	DISP	171	21213(5)	1.402713E-03	1.722451E+02	1.000E+01	2.000E+03	0.000E+00	1.000E+01	9.308E-08	1.410E+02
PSDF	DISP	171	21226(5)	1.173627E-03	1.860916E+02	1.000E+01	2.000E+03	0.000E+00	1.000E+01	6.023E-08	1.410E+02
PSDF	DISP	171	21237(5)	9.801583E-04	2.057653E+02	1.000E+01	2.000E+03	0.000E+00	1.000E+01	3.663E-08	1.159E+02
PSDF	DISP	171	21246(5)	8.414183E-04	2.291736E+02	1.000E+01	2.000E+03	0.000E+00	1.000E+01	3.056E-08	1.159E+02
PSDF	DISP	171	21253(5)	7.988763E-04	2.440443E+02	1.000E+01	2.000E+03	0.000E+00	1.000E+01	2.519E-08	1.159E+02
PSDF	DISP	171	21118(5)	1.572057E-03	1.655768E+02	1.000E+01	2.000E+03	0.000E+00	1.000E+01	1.179E-07	1.410E+02
PSDF	DISP	171	21174(5)	2.712633E-03	1.495372E+02	1.000E+01	2.000E+03	0.000E+00	1.000E+01	3.587E-07	1.410E+02
PSDF	DISP	171	21182(5)	2.455133E-03	1.513436E+02	1.000E+01	2.000E+03	0.000E+00	1.000E+01	2.942E-07	1.410E+02
PSDF	DISP	171	21102(5)	2.080289E-03	1.551772E+02	1.000E+01	2.000E+03	0.000E+00	1.000E+01	2.088E-07	1.410E+02
PSDF	DISP	171	21110(5)	1.818861E-03	1.592840E+02	1.000E+01	2.000E+03	0.000E+00	1.000E+01	1.595E-07	1.410E+02
PSDF	DISP	171	21247(5)	8.424658E-04	2.284513E+02	1.000E+01	2.000E+03	0.000E+00	1.000E+01	3.051E-08	1.159E+02

X AXIS PSD RESPONSE

X Y - O U T P U T S U M M A R Y (A U T O O R P S D F)

PLOT TYPE	CURVE TYPE	FRAME NO.	CURVE ID.	RMS VALUE	NO. POSITIVE CROSSINGS	XMIN FOR ALL DATA	XMAX FOR ALL DATA	YMIN FOR ALL DATA	X FOR YMIN	YMAX FOR ALL DATA	X FOR* YMAX
PSDF	DISP	171	21248(5)	7.923652E-04	2.431935E+02	1.000E+01	2.000E+03	0.000E+00	1.000E+01	2.497E-08	1.159E+02
PSDF	DISP	171	21125(5)	1.322938E-03	1.761825E+02	1.000E+01	2.000E+03	0.000E+00	1.000E+01	8.084E-08	1.410E+02
PSDF	DISP	171	21138(5)	1.105133E-03	1.922382E+02	1.000E+01	2.000E+03	0.000E+00	1.000E+01	5.190E-08	1.410E+02
PSDF	DISP	171	21189(5)	2.180872E-03	1.537473E+02	1.000E+01	2.000E+03	0.000E+00	1.000E+01	2.337E-07	1.410E+02
PSDF	DISP	171	21197(5)	1.917882E-03	1.573785E+02	1.000E+01	2.000E+03	0.000E+00	1.000E+01	1.809E-07	1.410E+02
PSDF	DISP	171	21254(5)	8.736143E-04	2.394666E+02	1.000E+01	2.000E+03	0.000E+00	1.000E+01	4.768E-08	1.021E+02
PSDF	DISP	171	2204(5)	7.855303E-04	2.401006E+02	1.000E+01	2.000E+03	0.000E+00	1.000E+01	2.193E-08	1.151E+02
PSDF	DISP	171	2202(5)	9.838729E-04	2.227285E+02	1.000E+01	2.000E+03	0.000E+00	1.000E+01	2.742E-08	1.151E+02
PSDF	DISP	171	22644(5)	3.101843E-03	1.492604E+02	1.000E+01	2.000E+03	0.000E+00	1.000E+01	4.667E-07	1.410E+02
PSDF	DISP	171	22632(5)	3.221871E-03	1.499461E+02	1.000E+01	2.000E+03	0.000E+00	1.000E+01	4.991E-07	1.410E+02
PSDF	DISP	171	23231(5)	1.269760E-03	1.544499E+02	1.000E+01	2.000E+03	0.000E+00	1.000E+01	1.374E-07	1.151E+02
PSDF	DISP	171	23232(5)	1.226681E-03	1.523889E+02	1.000E+01	2.000E+03	0.000E+00	1.000E+01	1.351E-07	1.151E+02
PSDF	DISP	171	23233(5)	1.036196E-03	1.447120E+02	1.000E+01	2.000E+03	0.000E+00	1.000E+01	1.070E-07	1.151E+02
PSDF	DISP	171	23234(5)	1.199281E-03	1.499729E+02	1.000E+01	2.000E+03	0.000E+00	1.000E+01	1.337E-07	1.151E+02
PSDF	DISP	171	23235(5)	1.036322E-03	1.449907E+02	1.000E+01	2.000E+03	0.000E+00	1.000E+01	1.055E-07	1.151E+02
PSDF	DISP	171	22859(5)	1.043425E-03	1.645289E+02	1.000E+01	2.000E+03	0.000E+00	1.000E+01	7.980E-08	1.151E+02
PSDF	DISP	171	22868(5)	8.020078E-04	1.997698E+02	1.000E+01	2.000E+03	0.000E+00	1.000E+01	4.877E-08	1.028E+02
PSDF	DISP	171	23609(5)	3.871884E-04	1.524979E+02	1.000E+01	2.000E+03	0.000E+00	1.000E+01	1.222E-08	1.159E+02
PSDF	DISP	171	23610(5)	4.246771E-04	1.498823E+02	1.000E+01	2.000E+03	0.000E+00	1.000E+01	1.533E-08	1.159E+02
PSDF	DISP	171	23611(5)	4.077852E-04	1.493562E+02	1.000E+01	2.000E+03	0.000E+00	1.000E+01	1.423E-08	1.159E+02
PSDF	DISP	171	23612(5)	3.753327E-04	1.509952E+02	1.000E+01	2.000E+03	0.000E+00	1.000E+01	1.164E-08	1.159E+02
PSDF	DISP	171	23613(5)	7.197967E-04	1.372336E+02	1.000E+01	2.000E+03	0.000E+00	1.000E+01	5.402E-08	1.151E+02
PSDF	DISP	171	23614(5)	6.942206E-04	1.367569E+02	1.000E+01	2.000E+03	0.000E+00	1.000E+01	5.047E-08	1.151E+02
PSDF	DISP	171	23615(5)	6.265239E-04	1.364099E+02	1.000E+01	2.000E+03	0.000E+00	1.000E+01	4.112E-08	1.151E+02

X AXIS PSD RESPONSE

X Y - O U T P U T S U M M A R Y (A U T O O R P S D F)

PLOT TYPE	CURVE TYPE	FRAME NO.	CURVE ID.	RMS VALUE	NO. POSITIVE CROSSINGS	XMIN FOR ALL DATA	XMAX FOR ALL DATA	YMIN FOR ALL DATA	X FOR YMIN	YMAX FOR ALL DATA	X FOR* YMAX
PSDF	DISP	171	23616(5)	3.839571E-04	1.540099E+02	1.000E+01	2.000E+03	0.000E+00	1.000E+01	1.120E-08	1.159E+02
PSDF	DISP	171	23617(5)	2.489547E-04	1.787355E+02	1.000E+01	2.000E+03	0.000E+00	1.000E+01	5.470E-09	1.028E+02
PSDF	DISP	171	23618(5)	2.132600E-04	1.859993E+02	1.000E+01	2.000E+03	0.000E+00	1.000E+01	3.592E-09	1.028E+02
PSDF	DISP	171	23619(5)	2.291260E-04	1.843460E+02	1.000E+01	2.000E+03	0.000E+00	1.000E+01	4.398E-09	1.028E+02
PSDF	DISP	171	2752(5)	5.805418E-04	3.107461E+02	1.000E+01	2.000E+03	0.000E+00	1.000E+01	1.733E-08	1.151E+02
PSDF	DISP	171	2758(5)	1.439151E-03	2.682240E+02	1.000E+01	2.000E+03	0.000E+00	1.000E+01	1.002E-07	1.151E+02
PSDF	DISP	171	2748(5)	1.129989E-03	1.277821E+02	1.000E+01	2.000E+03	0.000E+00	1.000E+01	1.509E-07	1.151E+02
PSDF	DISP	171	618(5)	1.129808E-03	1.266675E+02	1.000E+01	2.000E+03	0.000E+00	1.000E+01	1.506E-07	1.151E+02
PSDF	DISP	171	603(5)	1.612549E-03	1.271489E+02	1.000E+01	2.000E+03	0.000E+00	1.000E+01	3.030E-07	1.151E+02
PSDF	DISP	171	2441(5)	1.975260E-03	1.287751E+02	1.000E+01	2.000E+03	0.000E+00	1.000E+01	4.462E-07	1.151E+02
PSDF	DISP	171	25803(5)	1.402159E-02	1.395586E+02	1.000E+01	2.000E+03	0.000E+00	1.000E+01	1.542E-05	1.151E+02
PSDF	DISP	171	2175(5)	8.708894E-04	1.909770E+02	1.000E+01	2.000E+03	0.000E+00	1.000E+01	8.911E-08	1.028E+02
PSDF	DISP	171	2086(5)	1.189039E-03	1.347387E+02	1.000E+01	2.000E+03	0.000E+00	1.000E+01	1.591E-07	1.151E+02
PSDF	DISP	171	26116(5)	1.109106E-02	1.516427E+02	1.000E+01	2.000E+03	0.000E+00	1.000E+01	6.133E-06	1.620E+02
PSDF	DISP	171	26146(5)	4.125368E-03	1.539518E+02	1.000E+01	2.000E+03	0.000E+00	1.000E+01	9.475E-07	1.159E+02
PSDF	DISP	171	26336(5)	1.109122E-02	1.516811E+02	1.000E+01	2.000E+03	0.000E+00	1.000E+01	6.132E-06	1.620E+02
PSDF	DISP	171	26417(5)	1.274951E-02	1.455963E+02	1.000E+01	2.000E+03	0.000E+00	1.000E+01	9.437E-06	1.151E+02
PSDF	DISP	171	26082(5)	5.983819E-03	1.353093E+02	1.000E+01	2.000E+03	0.000E+00	1.000E+01	4.565E-06	1.151E+02
PSDF	DISP	171	24000(5)	2.144048E-10	3.618690E+01	1.000E+01	2.000E+03	0.000E+00	1.000E+01	1.634E-20	2.200E+01
PSDF	EL STR	171	2150(3)	1.173740E+02	3.842762E+02	1.000E+01	2.000E+03	0.000E+00	1.000E+01	2.765E+02	1.227E+02
PSDF	EL STR	171	2150(5)	1.331474E+02	3.533910E+02	1.000E+01	2.000E+03	0.000E+00	1.000E+01	3.013E+02	3.160E+02
PSDF	EL STR	171	2150(7)	2.529453E+02	2.893792E+02	1.000E+01	2.000E+03	0.000E+00	1.000E+01	1.540E+03	1.160E+02
PSDF	EL STR	171	2151(3)	2.521459E+02	3.028728E+02	1.000E+01	2.000E+03	0.000E+00	1.000E+01	1.443E+03	1.160E+02
PSDF	EL STR	171	2151(5)	2.194617E+02	3.360485E+02	1.000E+01	2.000E+03	0.000E+00	1.000E+01	1.416E+03	1.167E+02

X AXIS PSD RESPONSE

X Y - O U T P U T S U M M A R Y (A U T O O R P S D F)

PLOT TYPE	CURVE TYPE	FRAME NO.	CURVE ID.	RMS VALUE	NO. POSITIVE CROSSINGS	XMIN FOR ALL DATA	XMAX FOR ALL DATA	YMIN FOR ALL DATA	X FOR YMIN	YMAX FOR ALL DATA	X FOR* YMAX
PSDF	EL STR	171	2151(7)	8.363920E+01	2.736121E+02	1.000E+01	2.000E+03	0.000E+00	1.000E+01	5.902E+02	1.028E+02
PSDF	EL STR	171	2152(3)	1.120708E+02	3.206219E+02	1.000E+01	2.000E+03	0.000E+00	1.000E+01	2.627E+02	2.520E+02
PSDF	EL STR	171	2152(5)	1.578499E+02	3.286688E+02	1.000E+01	2.000E+03	0.000E+00	1.000E+01	9.004E+02	1.220E+02
PSDF	EL STR	171	2152(7)	1.761738E+02	2.961987E+02	1.000E+01	2.000E+03	0.000E+00	1.000E+01	5.571E+02	1.028E+02
PSDF	EL STR	171	2153(3)	8.073706E+01	4.196991E+02	1.000E+01	2.000E+03	0.000E+00	1.000E+01	7.526E+01	3.160E+02
PSDF	EL STR	171	2153(5)	6.294767E+01	3.693257E+02	1.000E+01	2.000E+03	0.000E+00	1.000E+01	8.219E+01	1.227E+02
PSDF	EL STR	171	2153(7)	2.029469E+02	2.824169E+02	1.000E+01	2.000E+03	0.000E+00	1.000E+01	7.538E+02	2.520E+02
PSDF	EL STR	171	2154(3)	3.866658E+02	1.847834E+02	1.000E+01	2.000E+03	0.000E+00	1.000E+01	1.111E+04	1.220E+02
PSDF	EL STR	171	2154(5)	2.116304E+02	1.420401E+02	1.000E+01	2.000E+03	0.000E+00	1.000E+01	3.070E+03	1.167E+02
PSDF	EL STR	171	2154(7)	2.454708E+02	2.436192E+02	1.000E+01	2.000E+03	0.000E+00	1.000E+01	3.401E+03	1.220E+02
PSDF	EL STR	171	2155(3)	4.901621E+02	2.831570E+02	1.000E+01	2.000E+03	0.000E+00	1.000E+01	4.753E+03	3.160E+02
PSDF	EL STR	171	2155(5)	2.424722E+02	2.974359E+02	1.000E+01	2.000E+03	0.000E+00	1.000E+01	2.125E+03	1.160E+02
PSDF	EL STR	171	2155(7)	1.210281E+02	3.122705E+02	1.000E+01	2.000E+03	0.000E+00	1.000E+01	2.480E+02	2.540E+02
PSDF	EL STR	171	2156(3)	4.426345E+02	3.086313E+02	1.000E+01	2.000E+03	0.000E+00	1.000E+01	3.724E+03	2.540E+02
PSDF	EL STR	171	2156(5)	2.092332E+02	3.293365E+02	1.000E+01	2.000E+03	0.000E+00	1.000E+01	6.149E+02	3.960E+02
PSDF	EL STR	171	2156(7)	1.368216E+02	3.857422E+02	1.000E+01	2.000E+03	0.000E+00	1.000E+01	3.789E+02	1.227E+02
PSDF	EL STR	171	2157(3)	2.294724E+02	4.655107E+02	1.000E+01	2.000E+03	0.000E+00	1.000E+01	1.262E+03	3.160E+02
PSDF	EL STR	171	2157(5)	1.290070E+02	2.481668E+02	1.000E+01	2.000E+03	0.000E+00	1.000E+01	5.909E+02	1.159E+02
PSDF	EL STR	171	2157(7)	1.985518E+02	3.518171E+02	1.000E+01	2.000E+03	0.000E+00	1.000E+01	5.757E+02	3.980E+02
PSDF	EL STR	171	2158(3)	4.994231E+02	1.354547E+02	1.000E+01	2.000E+03	0.000E+00	1.000E+01	2.215E+04	1.220E+02
PSDF	EL STR	171	2158(5)	1.488697E+02	2.409206E+02	1.000E+01	2.000E+03	0.000E+00	1.000E+01	1.695E+03	1.028E+02
PSDF	EL STR	171	2158(7)	9.799554E+01	3.662151E+02	1.000E+01	2.000E+03	0.000E+00	1.000E+01	1.860E+02	1.028E+02
PSDF	EL STR	171	2159(3)	3.741930E+02	3.079858E+02	1.000E+01	2.000E+03	0.000E+00	1.000E+01	2.105E+03	3.140E+02
PSDF	EL STR	171	2159(5)	3.138763E+02	3.745204E+02	1.000E+01	2.000E+03	0.000E+00	1.000E+01	1.832E+03	3.980E+02

X AXIS PSD RESPONSE

X Y - O U T P U T S U M M A R Y (A U T O O R P S D F)

PLOT TYPE	CURVE TYPE	FRAME NO.	CURVE ID.	RMS VALUE	NO. POSITIVE CROSSINGS	XMIN FOR ALL DATA	XMAX FOR ALL DATA	YMIN FOR ALL DATA	X FOR YMIN	YMAX FOR ALL DATA	X FOR* YMAX
PSDF	EL STR	171	2159(7)	1.000487E+02	3.219901E+02	1.000E+01	2.000E+03	0.000E+00	1.000E+01	2.198E+02	1.028E+02
PSDF	EL STR	171	2160(3)	5.411498E+02	3.234899E+02	1.000E+01	2.000E+03	0.000E+00	1.000E+01	5.054E+03	2.540E+02
PSDF	EL STR	171	2160(5)	2.931960E+02	3.595014E+02	1.000E+01	2.000E+03	0.000E+00	1.000E+01	1.328E+03	3.980E+02
PSDF	EL STR	171	2160(7)	1.199608E+02	2.933135E+02	1.000E+01	2.000E+03	0.000E+00	1.000E+01	2.376E+02	2.520E+02
PSDF	EL STR	171	2161(3)	2.961849E+02	4.215973E+02	1.000E+01	2.000E+03	0.000E+00	1.000E+01	1.103E+03	3.160E+02
PSDF	EL STR	171	2161(5)	1.205253E+02	2.679088E+02	1.000E+01	2.000E+03	0.000E+00	1.000E+01	2.697E+02	2.520E+02
PSDF	EL STR	171	2161(7)	1.659539E+02	3.290349E+02	1.000E+01	2.000E+03	0.000E+00	1.000E+01	4.506E+02	1.028E+02
PSDF	EL STR	171	2162(3)	2.003083E+02	1.817663E+02	1.000E+01	2.000E+03	0.000E+00	1.000E+01	3.385E+03	1.220E+02
PSDF	EL STR	171	2162(5)	6.764988E+01	4.511558E+02	1.000E+01	2.000E+03	0.000E+00	1.000E+01	6.217E+01	1.236E+02
PSDF	EL STR	171	2162(7)	2.128675E+02	2.966384E+02	1.000E+01	2.000E+03	0.000E+00	1.000E+01	1.666E+03	1.227E+02
PSDF	EL STR	171	2163(3)	1.843025E+02	3.632854E+02	1.000E+01	2.000E+03	0.000E+00	1.000E+01	1.414E+03	1.159E+02
PSDF	EL STR	171	2163(5)	1.567386E+02	3.319921E+02	1.000E+01	2.000E+03	0.000E+00	1.000E+01	8.272E+02	1.236E+02
PSDF	EL STR	171	2163(7)	8.942798E+01	3.732174E+02	1.000E+01	2.000E+03	0.000E+00	1.000E+01	2.779E+02	1.227E+02
PSDF	EL STR	171	2164(3)	2.217122E+02	3.733976E+02	1.000E+01	2.000E+03	0.000E+00	1.000E+01	7.900E+02	2.520E+02
PSDF	EL STR	171	2164(5)	1.618044E+02	2.973459E+02	1.000E+01	2.000E+03	0.000E+00	1.000E+01	8.469E+02	1.227E+02
PSDF	EL STR	171	2164(7)	1.528110E+02	3.742929E+02	1.000E+01	2.000E+03	0.000E+00	1.000E+01	2.531E+02	2.420E+02
PSDF	EL STR	171	2165(3)	1.146474E+02	4.426326E+02	1.000E+01	2.000E+03	0.000E+00	1.000E+01	1.292E+02	2.520E+02
PSDF	EL STR	171	2165(5)	8.764727E+01	3.593987E+02	1.000E+01	2.000E+03	0.000E+00	1.000E+01	3.007E+02	1.159E+02
PSDF	EL STR	171	2165(7)	2.939226E+02	3.121794E+02	1.000E+01	2.000E+03	0.000E+00	1.000E+01	1.522E+03	2.520E+02

*** USER WARNING MESSAGE 979, AN XY-OUTPUT REQUEST FOR POINT OR ELEMENT ID 2005
-STRE- CURVE IS BEING PASSED OVER. THE ID COULD NOT BE FOUND IN DATA BLOCK 102

*** USER WARNING MESSAGE 979, AN XY-OUTPUT REQUEST FOR POINT OR ELEMENT ID 2005
-STRE- CURVE IS BEING PASSED OVER. THE ID COULD NOT BE FOUND IN DATA BLOCK 102

DELETED ORIGINAL BASEPLATE ELEMENTS

*** USER WARNING MESSAGE 979, AN XY-OUTPUT REQUEST FOR POINT OR ELEMENT ID 2005
-STRE- CURVE IS BEING PASSED OVER. THE ID COULD NOT BE FOUND IN DATA BLOCK 102

*** USER WARNING MESSAGE 979, AN XY-OUTPUT REQUEST FOR POINT OR ELEMENT ID 2006
-STRE- CURVE IS BEING PASSED OVER. THE ID COULD NOT BE FOUND IN DATA BLOCK 102

*** USER WARNING MESSAGE 979, AN XY-OUTPUT REQUEST FOR POINT OR ELEMENT ID 2006
-STRE- CURVE IS BEING PASSED OVER. THE ID COULD NOT BE FOUND IN DATA BLOCK 102

*** USER WARNING MESSAGE 979, AN XY-OUTPUT REQUEST FOR POINT OR ELEMENT ID 2006
-STRE- CURVE IS BEING PASSED OVER. THE ID COULD NOT BE FOUND IN DATA BLOCK 102

```
*** USER WARNING MESSAGE 979, AN XY-OUTPUT REQUEST FOR POINT OR ELEMENT ID      2007
    -STRE- CURVE IS BEING PASSED OVER.  THE ID COULD NOT BE FOUND IN DATA BLOCK       102

*** USER WARNING MESSAGE 979, AN XY-OUTPUT REQUEST FOR POINT OR ELEMENT ID      2007
    -STRE- CURVE IS BEING PASSED OVER.  THE ID COULD NOT BE FOUND IN DATA BLOCK       102

*** USER WARNING MESSAGE 979, AN XY-OUTPUT REQUEST FOR POINT OR ELEMENT ID      2007
    -STRE- CURVE IS BEING PASSED OVER.  THE ID COULD NOT BE FOUND IN DATA BLOCK       102

*** USER WARNING MESSAGE 979, AN XY-OUTPUT REQUEST FOR POINT OR ELEMENT ID      2008
    -STRE- CURVE IS BEING PASSED OVER.  THE ID COULD NOT BE FOUND IN DATA BLOCK       102

*** USER WARNING MESSAGE 979, AN XY-OUTPUT REQUEST FOR POINT OR ELEMENT ID      2008
    -STRE- CURVE IS BEING PASSED OVER.  THE ID COULD NOT BE FOUND IN DATA BLOCK       102

*** USER WARNING MESSAGE 979, AN XY-OUTPUT REQUEST FOR POINT OR ELEMENT ID      2008
    -STRE- CURVE IS BEING PASSED OVER.  THE ID COULD NOT BE FOUND IN DATA BLOCK       102

*** USER WARNING MESSAGE 979, AN XY-OUTPUT REQUEST FOR POINT OR ELEMENT ID      2009
    -STRE- CURVE IS BEING PASSED OVER.  THE ID COULD NOT BE FOUND IN DATA BLOCK       102

*** USER WARNING MESSAGE 979, AN XY-OUTPUT REQUEST FOR POINT OR ELEMENT ID      2009
    -STRE- CURVE IS BEING PASSED OVER.  THE ID COULD NOT BE FOUND IN DATA BLOCK       102

*** USER WARNING MESSAGE 979, AN XY-OUTPUT REQUEST FOR POINT OR ELEMENT ID      2009
    -STRE- CURVE IS BEING PASSED OVER.  THE ID COULD NOT BE FOUND IN DATA BLOCK       102

*** USER WARNING MESSAGE 979, AN XY-OUTPUT REQUEST FOR POINT OR ELEMENT ID      2010
    -STRE- CURVE IS BEING PASSED OVER.  THE ID COULD NOT BE FOUND IN DATA BLOCK       102

*** USER WARNING MESSAGE 979, AN XY-OUTPUT REQUEST FOR POINT OR ELEMENT ID      2010
    -STRE- CURVE IS BEING PASSED OVER.  THE ID COULD NOT BE FOUND IN DATA BLOCK       102

*** USER WARNING MESSAGE 979, AN XY-OUTPUT REQUEST FOR POINT OR ELEMENT ID      2010
    -STRE- CURVE IS BEING PASSED OVER.  THE ID COULD NOT BE FOUND IN DATA BLOCK       102

*** USER WARNING MESSAGE 979, AN XY-OUTPUT REQUEST FOR POINT OR ELEMENT ID      2011
    -STRE- CURVE IS BEING PASSED OVER.  THE ID COULD NOT BE FOUND IN DATA BLOCK       102

*** USER WARNING MESSAGE 979, AN XY-OUTPUT REQUEST FOR POINT OR ELEMENT ID      2011
    -STRE- CURVE IS BEING PASSED OVER.  THE ID COULD NOT BE FOUND IN DATA BLOCK       102

*** USER WARNING MESSAGE 979, AN XY-OUTPUT REQUEST FOR POINT OR ELEMENT ID      2011
    -STRE- CURVE IS BEING PASSED OVER.  THE ID COULD NOT BE FOUND IN DATA BLOCK       102

*** USER WARNING MESSAGE 979, AN XY-OUTPUT REQUEST FOR POINT OR ELEMENT ID      2012
    -STRE- CURVE IS BEING PASSED OVER.  THE ID COULD NOT BE FOUND IN DATA BLOCK       102

*** USER WARNING MESSAGE 979, AN XY-OUTPUT REQUEST FOR POINT OR ELEMENT ID      2012
    -STRE- CURVE IS BEING PASSED OVER.  THE ID COULD NOT BE FOUND IN DATA BLOCK       102

*** USER WARNING MESSAGE 979, AN XY-OUTPUT REQUEST FOR POINT OR ELEMENT ID      2012
    -STRE- CURVE IS BEING PASSED OVER.  THE ID COULD NOT BE FOUND IN DATA BLOCK       102

*** USER WARNING MESSAGE 979, AN XY-OUTPUT REQUEST FOR POINT OR ELEMENT ID      2018
    -STRE- CURVE IS BEING PASSED OVER.  THE ID COULD NOT BE FOUND IN DATA BLOCK       102

*** USER WARNING MESSAGE 979, AN XY-OUTPUT REQUEST FOR POINT OR ELEMENT ID      2018
    -STRE- CURVE IS BEING PASSED OVER.  THE ID COULD NOT BE FOUND IN DATA BLOCK       102

*** USER WARNING MESSAGE 979, AN XY-OUTPUT REQUEST FOR POINT OR ELEMENT ID      2018
    -STRE- CURVE IS BEING PASSED OVER.  THE ID COULD NOT BE FOUND IN DATA BLOCK       102

*** USER WARNING MESSAGE 979, AN XY-OUTPUT REQUEST FOR POINT OR ELEMENT ID      2019
    -STRE- CURVE IS BEING PASSED OVER.  THE ID COULD NOT BE FOUND IN DATA BLOCK       102
```

```
*** USER WARNING MESSAGE 979, AN XY-OUTPUT REQUEST FOR POINT OR ELEMENT ID      2019
    -STRE- CURVE IS BEING PASSED OVER.  THE ID COULD NOT BE FOUND IN DATA BLOCK       102

*** USER WARNING MESSAGE 979, AN XY-OUTPUT REQUEST FOR POINT OR ELEMENT ID      2019
    -STRE- CURVE IS BEING PASSED OVER.  THE ID COULD NOT BE FOUND IN DATA BLOCK       102

*** USER WARNING MESSAGE 979, AN XY-OUTPUT REQUEST FOR POINT OR ELEMENT ID      2020
    -STRE- CURVE IS BEING PASSED OVER.  THE ID COULD NOT BE FOUND IN DATA BLOCK       102

*** USER WARNING MESSAGE 979, AN XY-OUTPUT REQUEST FOR POINT OR ELEMENT ID      2020
    -STRE- CURVE IS BEING PASSED OVER.  THE ID COULD NOT BE FOUND IN DATA BLOCK       102

*** USER WARNING MESSAGE 979, AN XY-OUTPUT REQUEST FOR POINT OR ELEMENT ID      2020
    -STRE- CURVE IS BEING PASSED OVER.  THE ID COULD NOT BE FOUND IN DATA BLOCK       102

*** USER WARNING MESSAGE 979, AN XY-OUTPUT REQUEST FOR POINT OR ELEMENT ID      2021
    -STRE- CURVE IS BEING PASSED OVER.  THE ID COULD NOT BE FOUND IN DATA BLOCK       102

*** USER WARNING MESSAGE 979, AN XY-OUTPUT REQUEST FOR POINT OR ELEMENT ID      2021
    -STRE- CURVE IS BEING PASSED OVER.  THE ID COULD NOT BE FOUND IN DATA BLOCK       102

*** USER WARNING MESSAGE 979, AN XY-OUTPUT REQUEST FOR POINT OR ELEMENT ID      2021
    -STRE- CURVE IS BEING PASSED OVER.  THE ID COULD NOT BE FOUND IN DATA BLOCK       102

*** USER WARNING MESSAGE 979, AN XY-OUTPUT REQUEST FOR POINT OR ELEMENT ID      2022
    -STRE- CURVE IS BEING PASSED OVER.  THE ID COULD NOT BE FOUND IN DATA BLOCK       102

*** USER WARNING MESSAGE 979, AN XY-OUTPUT REQUEST FOR POINT OR ELEMENT ID      2022
    -STRE- CURVE IS BEING PASSED OVER.  THE ID COULD NOT BE FOUND IN DATA BLOCK       102

*** USER WARNING MESSAGE 979, AN XY-OUTPUT REQUEST FOR POINT OR ELEMENT ID      2022
    -STRE- CURVE IS BEING PASSED OVER.  THE ID COULD NOT BE FOUND IN DATA BLOCK       102

*** USER WARNING MESSAGE 979, AN XY-OUTPUT REQUEST FOR POINT OR ELEMENT ID      2023
    -STRE- CURVE IS BEING PASSED OVER.  THE ID COULD NOT BE FOUND IN DATA BLOCK       102

*** USER WARNING MESSAGE 979, AN XY-OUTPUT REQUEST FOR POINT OR ELEMENT ID      2023
    -STRE- CURVE IS BEING PASSED OVER.  THE ID COULD NOT BE FOUND IN DATA BLOCK       102

*** USER WARNING MESSAGE 979, AN XY-OUTPUT REQUEST FOR POINT OR ELEMENT ID      2023
    -STRE- CURVE IS BEING PASSED OVER.  THE ID COULD NOT BE FOUND IN DATA BLOCK       102

*** USER WARNING MESSAGE 979, AN XY-OUTPUT REQUEST FOR POINT OR ELEMENT ID      2024
    -STRE- CURVE IS BEING PASSED OVER.  THE ID COULD NOT BE FOUND IN DATA BLOCK       102

*** USER WARNING MESSAGE 979, AN XY-OUTPUT REQUEST FOR POINT OR ELEMENT ID      2024
    -STRE- CURVE IS BEING PASSED OVER.  THE ID COULD NOT BE FOUND IN DATA BLOCK       102

*** USER WARNING MESSAGE 979, AN XY-OUTPUT REQUEST FOR POINT OR ELEMENT ID      2024
    -STRE- CURVE IS BEING PASSED OVER.  THE ID COULD NOT BE FOUND IN DATA BLOCK       102

*** USER WARNING MESSAGE 979, AN XY-OUTPUT REQUEST FOR POINT OR ELEMENT ID      2025
    -STRE- CURVE IS BEING PASSED OVER.  THE ID COULD NOT BE FOUND IN DATA BLOCK       102

*** USER WARNING MESSAGE 979, AN XY-OUTPUT REQUEST FOR POINT OR ELEMENT ID      2025
    -STRE- CURVE IS BEING PASSED OVER.  THE ID COULD NOT BE FOUND IN DATA BLOCK       102

*** USER WARNING MESSAGE 979, AN XY-OUTPUT REQUEST FOR POINT OR ELEMENT ID      2025
    -STRE- CURVE IS BEING PASSED OVER.  THE ID COULD NOT BE FOUND IN DATA BLOCK       102

*** USER WARNING MESSAGE 979, AN XY-OUTPUT REQUEST FOR POINT OR ELEMENT ID      2026
    -STRE- CURVE IS BEING PASSED OVER.  THE ID COULD NOT BE FOUND IN DATA BLOCK       102

*** USER WARNING MESSAGE 979, AN XY-OUTPUT REQUEST FOR POINT OR ELEMENT ID      2026
    -STRE- CURVE IS BEING PASSED OVER.  THE ID COULD NOT BE FOUND IN DATA BLOCK       102
```

```
*** USER WARNING MESSAGE 979, AN XY-OUTPUT REQUEST FOR POINT OR ELEMENT ID      2026
    -STRE- CURVE IS BEING PASSED OVER.  THE ID COULD NOT BE FOUND IN DATA BLOCK       102

*** USER WARNING MESSAGE 979, AN XY-OUTPUT REQUEST FOR POINT OR ELEMENT ID      2027
    -STRE- CURVE IS BEING PASSED OVER.  THE ID COULD NOT BE FOUND IN DATA BLOCK       102

*** USER WARNING MESSAGE 979, AN XY-OUTPUT REQUEST FOR POINT OR ELEMENT ID      2027
    -STRE- CURVE IS BEING PASSED OVER.  THE ID COULD NOT BE FOUND IN DATA BLOCK       102

*** USER WARNING MESSAGE 979, AN XY-OUTPUT REQUEST FOR POINT OR ELEMENT ID      2027
    -STRE- CURVE IS BEING PASSED OVER.  THE ID COULD NOT BE FOUND IN DATA BLOCK       102

*** USER WARNING MESSAGE 979, AN XY-OUTPUT REQUEST FOR POINT OR ELEMENT ID      2028
    -STRE- CURVE IS BEING PASSED OVER.  THE ID COULD NOT BE FOUND IN DATA BLOCK       102

*** USER WARNING MESSAGE 979, AN XY-OUTPUT REQUEST FOR POINT OR ELEMENT ID      2028
    -STRE- CURVE IS BEING PASSED OVER.  THE ID COULD NOT BE FOUND IN DATA BLOCK       102

*** USER WARNING MESSAGE 979, AN XY-OUTPUT REQUEST FOR POINT OR ELEMENT ID      2028
    -STRE- CURVE IS BEING PASSED OVER.  THE ID COULD NOT BE FOUND IN DATA BLOCK       102

*** USER WARNING MESSAGE 979, AN XY-OUTPUT REQUEST FOR POINT OR ELEMENT ID      2029
    -STRE- CURVE IS BEING PASSED OVER.  THE ID COULD NOT BE FOUND IN DATA BLOCK       102

*** USER WARNING MESSAGE 979, AN XY-OUTPUT REQUEST FOR POINT OR ELEMENT ID      2029
    -STRE- CURVE IS BEING PASSED OVER.  THE ID COULD NOT BE FOUND IN DATA BLOCK       102

*** USER WARNING MESSAGE 979, AN XY-OUTPUT REQUEST FOR POINT OR ELEMENT ID      2029
    -STRE- CURVE IS BEING PASSED OVER.  THE ID COULD NOT BE FOUND IN DATA BLOCK       102

*** USER WARNING MESSAGE 979, AN XY-OUTPUT REQUEST FOR POINT OR ELEMENT ID      2030
    -STRE- CURVE IS BEING PASSED OVER.  THE ID COULD NOT BE FOUND IN DATA BLOCK       102

*** USER WARNING MESSAGE 979, AN XY-OUTPUT REQUEST FOR POINT OR ELEMENT ID      2030
    -STRE- CURVE IS BEING PASSED OVER.  THE ID COULD NOT BE FOUND IN DATA BLOCK       102

*** USER WARNING MESSAGE 979, AN XY-OUTPUT REQUEST FOR POINT OR ELEMENT ID      2030
    -STRE- CURVE IS BEING PASSED OVER.  THE ID COULD NOT BE FOUND IN DATA BLOCK       102

*** USER WARNING MESSAGE 979, AN XY-OUTPUT REQUEST FOR POINT OR ELEMENT ID      2031
    -STRE- CURVE IS BEING PASSED OVER.  THE ID COULD NOT BE FOUND IN DATA BLOCK       102

*** USER WARNING MESSAGE 979, AN XY-OUTPUT REQUEST FOR POINT OR ELEMENT ID      2031
    -STRE- CURVE IS BEING PASSED OVER.  THE ID COULD NOT BE FOUND IN DATA BLOCK       102

*** USER WARNING MESSAGE 979, AN XY-OUTPUT REQUEST FOR POINT OR ELEMENT ID      2031
    -STRE- CURVE IS BEING PASSED OVER.  THE ID COULD NOT BE FOUND IN DATA BLOCK       102

*** USER WARNING MESSAGE 979, AN XY-OUTPUT REQUEST FOR POINT OR ELEMENT ID      2032
    -STRE- CURVE IS BEING PASSED OVER.  THE ID COULD NOT BE FOUND IN DATA BLOCK       102

*** USER WARNING MESSAGE 979, AN XY-OUTPUT REQUEST FOR POINT OR ELEMENT ID      2032
    -STRE- CURVE IS BEING PASSED OVER.  THE ID COULD NOT BE FOUND IN DATA BLOCK       102

*** USER WARNING MESSAGE 979, AN XY-OUTPUT REQUEST FOR POINT OR ELEMENT ID      2032
    -STRE- CURVE IS BEING PASSED OVER.  THE ID COULD NOT BE FOUND IN DATA BLOCK       102

*** USER WARNING MESSAGE 979, AN XY-OUTPUT REQUEST FOR POINT OR ELEMENT ID      2033
    -STRE- CURVE IS BEING PASSED OVER.  THE ID COULD NOT BE FOUND IN DATA BLOCK       102

*** USER WARNING MESSAGE 979, AN XY-OUTPUT REQUEST FOR POINT OR ELEMENT ID      2033
    -STRE- CURVE IS BEING PASSED OVER.  THE ID COULD NOT BE FOUND IN DATA BLOCK       102

*** USER WARNING MESSAGE 979, AN XY-OUTPUT REQUEST FOR POINT OR ELEMENT ID      2033
    -STRE- CURVE IS BEING PASSED OVER.  THE ID COULD NOT BE FOUND IN DATA BLOCK       102
```

```
*** USER WARNING MESSAGE 979, AN XY-OUTPUT REQUEST FOR POINT OR ELEMENT ID      2034
    -STRE- CURVE IS BEING PASSED OVER.  THE ID COULD NOT BE FOUND IN DATA BLOCK       102

*** USER WARNING MESSAGE 979, AN XY-OUTPUT REQUEST FOR POINT OR ELEMENT ID      2034
    -STRE- CURVE IS BEING PASSED OVER.  THE ID COULD NOT BE FOUND IN DATA BLOCK       102

*** USER WARNING MESSAGE 979, AN XY-OUTPUT REQUEST FOR POINT OR ELEMENT ID      2034
    -STRE- CURVE IS BEING PASSED OVER.  THE ID COULD NOT BE FOUND IN DATA BLOCK       102

*** USER WARNING MESSAGE 979, AN XY-OUTPUT REQUEST FOR POINT OR ELEMENT ID      2035
    -STRE- CURVE IS BEING PASSED OVER.  THE ID COULD NOT BE FOUND IN DATA BLOCK       102

*** USER WARNING MESSAGE 979, AN XY-OUTPUT REQUEST FOR POINT OR ELEMENT ID      2035
    -STRE- CURVE IS BEING PASSED OVER.  THE ID COULD NOT BE FOUND IN DATA BLOCK       102

*** USER WARNING MESSAGE 979, AN XY-OUTPUT REQUEST FOR POINT OR ELEMENT ID      2035
    -STRE- CURVE IS BEING PASSED OVER.  THE ID COULD NOT BE FOUND IN DATA BLOCK       102

*** USER WARNING MESSAGE 979, AN XY-OUTPUT REQUEST FOR POINT OR ELEMENT ID      2036
    -STRE- CURVE IS BEING PASSED OVER.  THE ID COULD NOT BE FOUND IN DATA BLOCK       102

*** USER WARNING MESSAGE 979, AN XY-OUTPUT REQUEST FOR POINT OR ELEMENT ID      2036
    -STRE- CURVE IS BEING PASSED OVER.  THE ID COULD NOT BE FOUND IN DATA BLOCK       102

*** USER WARNING MESSAGE 979, AN XY-OUTPUT REQUEST FOR POINT OR ELEMENT ID      2036
    -STRE- CURVE IS BEING PASSED OVER.  THE ID COULD NOT BE FOUND IN DATA BLOCK       102

*** USER WARNING MESSAGE 979, AN XY-OUTPUT REQUEST FOR POINT OR ELEMENT ID      2037
    -STRE- CURVE IS BEING PASSED OVER.  THE ID COULD NOT BE FOUND IN DATA BLOCK       102

*** USER WARNING MESSAGE 979, AN XY-OUTPUT REQUEST FOR POINT OR ELEMENT ID      2037
    -STRE- CURVE IS BEING PASSED OVER.  THE ID COULD NOT BE FOUND IN DATA BLOCK       102

*** USER WARNING MESSAGE 979, AN XY-OUTPUT REQUEST FOR POINT OR ELEMENT ID      2037
    -STRE- CURVE IS BEING PASSED OVER.  THE ID COULD NOT BE FOUND IN DATA BLOCK       102

*** USER WARNING MESSAGE 979, AN XY-OUTPUT REQUEST FOR POINT OR ELEMENT ID      2038
    -STRE- CURVE IS BEING PASSED OVER.  THE ID COULD NOT BE FOUND IN DATA BLOCK       102

*** USER WARNING MESSAGE 979, AN XY-OUTPUT REQUEST FOR POINT OR ELEMENT ID      2038
    -STRE- CURVE IS BEING PASSED OVER.  THE ID COULD NOT BE FOUND IN DATA BLOCK       102

*** USER WARNING MESSAGE 979, AN XY-OUTPUT REQUEST FOR POINT OR ELEMENT ID      2038
    -STRE- CURVE IS BEING PASSED OVER.  THE ID COULD NOT BE FOUND IN DATA BLOCK       102

*** USER WARNING MESSAGE 979, AN XY-OUTPUT REQUEST FOR POINT OR ELEMENT ID      2042
    -STRE- CURVE IS BEING PASSED OVER.  THE ID COULD NOT BE FOUND IN DATA BLOCK       102

*** USER WARNING MESSAGE 979, AN XY-OUTPUT REQUEST FOR POINT OR ELEMENT ID      2042
    -STRE- CURVE IS BEING PASSED OVER.  THE ID COULD NOT BE FOUND IN DATA BLOCK       102

*** USER WARNING MESSAGE 979, AN XY-OUTPUT REQUEST FOR POINT OR ELEMENT ID      2042
    -STRE- CURVE IS BEING PASSED OVER.  THE ID COULD NOT BE FOUND IN DATA BLOCK       102

*** USER WARNING MESSAGE 979, AN XY-OUTPUT REQUEST FOR POINT OR ELEMENT ID      2043
    -STRE- CURVE IS BEING PASSED OVER.  THE ID COULD NOT BE FOUND IN DATA BLOCK       102

*** USER WARNING MESSAGE 979, AN XY-OUTPUT REQUEST FOR POINT OR ELEMENT ID      2043
    -STRE- CURVE IS BEING PASSED OVER.  THE ID COULD NOT BE FOUND IN DATA BLOCK       102

*** USER WARNING MESSAGE 979, AN XY-OUTPUT REQUEST FOR POINT OR ELEMENT ID      2043
    -STRE- CURVE IS BEING PASSED OVER.  THE ID COULD NOT BE FOUND IN DATA BLOCK       102

*** USER WARNING MESSAGE 979, AN XY-OUTPUT REQUEST FOR POINT OR ELEMENT ID      2044
    -STRE- CURVE IS BEING PASSED OVER.  THE ID COULD NOT BE FOUND IN DATA BLOCK       102
```

```
*** USER WARNING MESSAGE 979, AN XY-OUTPUT REQUEST FOR POINT OR ELEMENT ID      2044
    -STRE- CURVE IS BEING PASSED OVER.  THE ID COULD NOT BE FOUND IN DATA BLOCK      102

*** USER WARNING MESSAGE 979, AN XY-OUTPUT REQUEST FOR POINT OR ELEMENT ID      2044
    -STRE- CURVE IS BEING PASSED OVER.  THE ID COULD NOT BE FOUND IN DATA BLOCK      102

*** USER WARNING MESSAGE 979, AN XY-OUTPUT REQUEST FOR POINT OR ELEMENT ID      2610
    -STRE- CURVE IS BEING PASSED OVER.  THE ID COULD NOT BE FOUND IN DATA BLOCK      102

*** USER WARNING MESSAGE 979, AN XY-OUTPUT REQUEST FOR POINT OR ELEMENT ID      2610
    -STRE- CURVE IS BEING PASSED OVER.  THE ID COULD NOT BE FOUND IN DATA BLOCK      102

*** USER WARNING MESSAGE 979, AN XY-OUTPUT REQUEST FOR POINT OR ELEMENT ID      2610
    -STRE- CURVE IS BEING PASSED OVER.  THE ID COULD NOT BE FOUND IN DATA BLOCK      102

*** USER WARNING MESSAGE 979, AN XY-OUTPUT REQUEST FOR POINT OR ELEMENT ID      2611
    -STRE- CURVE IS BEING PASSED OVER.  THE ID COULD NOT BE FOUND IN DATA BLOCK      102

*** USER WARNING MESSAGE 979, AN XY-OUTPUT REQUEST FOR POINT OR ELEMENT ID      2611
    -STRE- CURVE IS BEING PASSED OVER.  THE ID COULD NOT BE FOUND IN DATA BLOCK      102

*** USER WARNING MESSAGE 979, AN XY-OUTPUT REQUEST FOR POINT OR ELEMENT ID      2611
    -STRE- CURVE IS BEING PASSED OVER.  THE ID COULD NOT BE FOUND IN DATA BLOCK      102

*** USER WARNING MESSAGE 979, AN XY-OUTPUT REQUEST FOR POINT OR ELEMENT ID      2612
    -STRE- CURVE IS BEING PASSED OVER.  THE ID COULD NOT BE FOUND IN DATA BLOCK      102

*** USER WARNING MESSAGE 979, AN XY-OUTPUT REQUEST FOR POINT OR ELEMENT ID      2612
    -STRE- CURVE IS BEING PASSED OVER.  THE ID COULD NOT BE FOUND IN DATA BLOCK      102

*** USER WARNING MESSAGE 979, AN XY-OUTPUT REQUEST FOR POINT OR ELEMENT ID      2612
    -STRE- CURVE IS BEING PASSED OVER.  THE ID COULD NOT BE FOUND IN DATA BLOCK      102

*** USER WARNING MESSAGE 979, AN XY-OUTPUT REQUEST FOR POINT OR ELEMENT ID      2613
    -STRE- CURVE IS BEING PASSED OVER.  THE ID COULD NOT BE FOUND IN DATA BLOCK      102

*** USER WARNING MESSAGE 979, AN XY-OUTPUT REQUEST FOR POINT OR ELEMENT ID      2613
    -STRE- CURVE IS BEING PASSED OVER.  THE ID COULD NOT BE FOUND IN DATA BLOCK      102

*** USER WARNING MESSAGE 979, AN XY-OUTPUT REQUEST FOR POINT OR ELEMENT ID      2613
    -STRE- CURVE IS BEING PASSED OVER.  THE ID COULD NOT BE FOUND IN DATA BLOCK      102

PSDF EL STR   171     2616(  3)    1.282608E+02  2.391190E+02  1.000E+01  2.000E+03  0.000E+00  1.000E+01  1.430E+03  1.151E+02

PSDF EL STR   171     2616(  5)    1.527533E+02  2.839856E+02  1.000E+01  2.000E-03  0.000E+00  1.000E+01  1.855E+03  1.151E+02

PSDF EL STR   171     2616(  7)    1.608360E+02  1.440500E+02  1.000E+01  2.000E+03  0.000E+00  1.000E+01  2.547E+03  1.028E+02

PSDF EL STR   171     2617(  3)    1.895271E+02  1.916600E+02  1.000E+01  2.000E+03  0.000E+00  1.000E+01  2.823E+03  1.028E+02

PSDF EL STR   171     2617(  5)    1.906058E+02  1.532854E+02  1.000E+01  2.000E+03  0.000E+00  1.000E+01  4.728E+03  1.028E+02
```

X AXIS PSD RESPONSE

X Y - O U T P U T S U M M A R Y (A U T O O R P S D F)

PLOT TYPE	CURVE TYPE	FRAME NO.	CURVE ID.	RMS VALUE	NO. POSITIVE CROSSINGS	XMIN FOR ALL DATA	XMAX FOR ALL DATA	YMIN FOR ALL DATA	X FOR YMIN	YMAX FOR ALL DATA	X FOR* YMAX
PSDF	EL STR	171	2617(7)	7.501369E+01	1.729566E+02	1.000E+01	2.000E+03	0.000E+00	1.000E+01	6.515E+02	1.028E+02
PSDF	EL STR	171	2618(3)	9.027926E+01	2.744968E+02	1.000E+01	2.000E+03	0.000E+00	1.000E+01	7.372E+02	1.028E+02
PSDF	EL STR	171	2618(5)	2.412646E+02	1.650388E+02	1.000E+01	2.000E+03	0.000E+00	1.000E+01	5.640E+03	1.028E+02
PSDF	EL STR	171	2618(7)	9.254758E+01	2.011232E+02	1.000E+01	2.000E+03	0.000E+00	1.000E+01	5.435E+02	1.021E+02
PSDF	EL STR	171	2619(3)	1.131169E+02	2.257059E+02	1.000E+01	2.000E+03	0.000E+00	1.000E+01	1.325E+03	1.028E+02
PSDF	EL STR	171	2619(5)	1.371960E+02	2.614408E+02	1.000E+01	2.000E+03	0.000E+00	1.000E+01	1.557E+03	1.028E+02
PSDF	EL STR	171	2619(7)	1.488494E+02	1.864001E+02	1.000E-01	2.000E+03	0.000E+00	1.000E+01	1.637E+03	1.021E+02

*** USER WARNING MESSAGE 979, AN XY-OUTPUT REQUEST FOR POINT OR ELEMENT ID 2620
-STRE- CURVE IS BEING PASSED OVER. THE ID COULD NOT BE FOUND IN DATA BLOCK 102 DELETED WARM LOAD ELEMENTS

*** USER WARNING MESSAGE 979, AN XY-OUTPUT REQUEST FOR POINT OR ELEMENT ID 2620
-STRE- CURVE IS BEING PASSED OVER. THE ID COULD NOT BE FOUND IN DATA BLOCK 102

*** USER WARNING MESSAGE 979, AN XY-OUTPUT REQUEST FOR POINT OR ELEMENT ID 2620
-STRE- CURVE IS BEING PASSED OVER. THE ID COULD NOT BE FOUND IN DATA BLOCK 102

PSDF	EL STR	171	2621(3)	2.032674E+02	4.119970E+02	1.000E+01	2.000E+03	0.000E+00	1.000E+01	1.467E+03	1.028E+02
PSDF	EL STR	171	2621(5)	3.326168E+02	4.483239E+02	1.000E+01	2.000E+03	0.000E+00	1.000E+01	3.258E+03	4.800E+02
PSDF	EL STR	171	2621(7)	1.706052E+02	1.819147E+02	1.000E+01	2.000E+03	0.000E+00	1.000E+01	3.063E+03	1.028E+02
PSDF	EL STR	171	2622(3)	1.124162E+02	4.477198E+02	1.000E+01	2.000E+03	0.000E+00	1.000E+01	3.836E+02	4.760E+02
PSDF	EL STR	171	2622(5)	1.034826E+02	4.049465E+02	1.000E+01	2.000E+03	0.000E+00	1.000E+01	1.447E+02	4.180E+02
PSDF	EL STR	171	2622(7)	5.730655E+01	2.858378E+02	1.000E+01	2.000E+03	0.000E+00	1.000E+01	2.760E+02	1.028E+02
PSDF	EL STR	171	2625(3)	9.569675E+01	4.345329E+02	1.000E+01	2.000E+03	0.000E+00	1.000E+01	1.845E+02	4.740E+02
PSDF	EL STR	171	2625(5)	1.104856E+02	4.115351E+02	1.000E+01	2.000E+03	0.000E+00	1.000E+01	1.634E+02	4.180E+02
PSDF	EL STR	171	2625(7)	8.216137E+01	2.738134E+02	1.000E+01	2.000E+03	0.000E+00	1.000E+01	4.300E+02	1.028E+02
PSDF	EL STR	171	2626(3)	1.607770E+02	2.020930E+02	1.000E+01	2.000E+03	0.000E+00	1.000E+01	2.501E+03	1.028E+02
PSDF	EL STR	171	2626(5)	2.067217E+02	3.231822E+02	1.000E+01	2.000E+03	0.000E+00	1.000E+01	1.801E+03	1.028E+02
PSDF	EL STR	171	2626(7)	1.696191E+02	2.349821E+02	1.000E+01	2.000E+03	0.000E+00	1.000E+01	2.056E+03	1.028E+02
PSDF	EL STR	171	2627(3)	2.401853E+02	3.433750E+02	1.000E+01	2.000E+03	0.000E+00	1.000E+01	1.244E+03	3.040E+02
PSDF	EL STR	171	2627(5)	6.679111E+02	3.615126E+02	1.000E+01	2.000E+03	0.000E+00	1.000E+01	8.385E+03	3.040E+02
PSDF	EL STR	171	2627(7)	1.595458E+02	2.614587E+02	1.000E+01	2.000E+03	0.000E+00	1.000E+01	1.265E+03	1.028E+02
PSDF	EL STR	171	2628(3)	3.417935E+02	3.493404E+02	1.000E+01	2.000E+03	0.000E+00	1.000E+01	2.136E+03	3.040E+02
PSDF	EL STR	171	2628(5)	4.286612E+02	3.587687E+02	1.000E+01	2.000E+03	0.000E+00	1.000E+01	3.890E+03	3.040E+02

X AXIS PSD RESPONSE

X Y - O U T P U T S U M M A R Y (A U T O O R P S D F)

PLOT TYPE	CURVE TYPE	FRAME NO.	CURVE ID.	RMS VALUE	NO. POSITIVE CROSSINGS	XMIN FOR ALL DATA	XMAX FOR ALL DATA	YMIN FOR ALL DATA	X FOR YMIN	YMAX FOR ALL DATA	X FOR* YMAX
PSDF	EL STR	171	2628(7)	1.827344E+02	3.599341E+02	1.000E+01	2.000E+03	0.000E+00	1.000E+01	5.044E+02	3.040E+02
PSDF	EL STR	171	2629(3)	1.469872E+02	4.128099E+02	1.000E+01	2.000E+03	0.000E+00	1.000E+01	3.015E+02	4.980E+02
PSDF	EL STR	171	2629(5)	9.367670E+01	2.337856E+02	1.000E+01	2.000E+03	0.000E+00	1.000E+01	6.681E+02	1.028E+02
PSDF	EL STR	171	2629(7)	4.649475E+01	2.054569E+02	1.000E+01	2.000E+03	0.000E+00	1.000E+01	2.409E+02	1.028E+02
PSDF	EL STR	171	2630(3)	8.910175E+01	3.273879E+02	1.000E+01	2.000E+03	0.000E+00	1.000E+01	2.331E+02	1.151E+02
PSDF	EL STR	171	2630(5)	1.585399E+02	1.596644E+02	1.000E+01	2.000E+03	0.000E+00	1.000E+01	3.441E+03	1.028E+02
PSDF	EL STR	171	2630(7)	8.943441E+01	2.227233E+02	1.000E+01	2.000E+03	0.000E+00	1.000E+01	7.273E+02	1.028E+02
PSDF	EL STR	171	2631(3)	1.518907E+02	2.069294E+02	1.000E+01	2.000E+03	0.000E+00	1.000E+01	2.965E+03	1.028E+02
PSDF	EL STR	171	2631(5)	1.769660E+02	3.044369E+02	1.000E+01	2.000E+03	0.000E+00	1.000E+01	3.506E+03	1.028E+02
PSDF	EL STR	171	2631(7)	1.785691E+02	1.481256E+02	1.000E+01	2.000E+03	0.000E+00	1.000E+01	4.149E+03	1.028E+02
PSDF	EL STR	171	3202(3)	6.995231E+01	4.322210E+02	1.000E+01	2.000E+03	0.000E+00	1.000E+01	8.362E+01	4.160E+02
PSDF	EL STR	171	3202(5)	8.113110E+01	2.779922E+02	1.000E+01	2.000E+03	0.000E+00	1.000E+01	2.648E+02	1.028E+02
PSDF	EL STR	171	3202(7)	7.151443E+01	4.570428E+02	1.000E+01	2.000E+03	0.000E+00	1.000E+01	6.632E+01	4.840E+02
PSDF	EL STR	171	3203(3)	1.449377E+02	3.018456E+02	1.000E+01	2.000E+03	0.000E+00	1.000E+01	5.987E+02	3.040E+02
PSDF	EL STR	171	3203(5)	9.671399E+01	3.859294E+02	1.000E+01	2.000E+03	0.000E+00	1.000E+01	1.329E+02	1.151E+02
PSDF	EL STR	171	3203(7)	5.377179E+01	3.544434E+02	1.000E+01	2.000E+03	0.000E+00	1.000E+01	1.229E+02	1.028E+02
PSDF	EL STR	171	3204(3)	9.096907E+01	3.119274E+02	1.000E+01	2.000E+03	0.000E+00	1.000E+01	2.595E+02	1.151E+02
PSDF	EL STR	171	3204(5)	1.012293E+02	4.246834E+02	1.000E+01	2.000E+03	0.000E+00	1.000E+01	1.917E+02	4.740E+02
PSDF	EL STR	171	3204(7)	5.036911E+01	2.444358E+02	1.000E+01	2.000E+03	0.000E+00	1.000E+01	1.861E+02	1.028E+02
PSDF	EL STR	171	3205(3)	1.793353E+02	3.656909E+02	1.000E+01	2.000E+03	0.000E+00	1.000E+01	7.142E+02	1.151E+02
PSDF	EL STR	171	3205(5)	1.442109E+02	4.175013E+02	1.000E+01	2.000E+03	0.000E+00	1.000E+01	3.629E+02	4.740E+02
PSDF	EL STR	171	3205(7)	8.095813E+01	3.506469E+02	1.000E+01	2.000E+03	0.000E+00	1.000E+01	2.285E+02	1.028E+02
PSDF	EL STR	171	3206(3)	1.102915E+02	3.455800E+02	1.000E+01	2.000E+03	0.000E+00	1.000E+01	4.652E+02	1.151E+02
PSDF	EL STR	171	3206(5)	1.297127E+02	3.444435E+02	1.000E+01	2.000E+03	0.000E+00	1.000E+01	3.819E+02	1.028E+02

X AXIS PSD RESPONSE

X Y - O U T P U T S U M M A R Y (A U T O O R P S D F)

PLOT TYPE	CURVE TYPE	FRAME NO.	CURVE ID.	RMS VALUE	NO. POSITIVE CROSSINGS	XMIN FOR ALL DATA	XMAX FOR ALL DATA	YMIN FOR ALL DATA	X FOR YMIN	YMAX FOR ALL DATA	X FOR* YMAX
PSDF	EL STR	171	3206(7)	3.861672E+01	4.177956E+02	1.000E+01	2.000E+03	0.000E+00	1.000E+01	2.487E+01	4.160E+02
PSDF	EL STR	171	3207(3)	9.631222E+01	3.973958E+02	1.000E+01	2.000E+03	0.000E+00	1.000E+01	3.014E+02	1.028E+02
PSDF	EL STR	171	3207(5)	1.277178E+02	3.831401E+02	1.000E+01	2.000E+03	0.000E+00	1.000E+01	3.942E+02	1.028E+02
PSDF	EL STR	171	3207(7)	6.463115E+01	2.063783E+02	1.000E+01	2.000E+03	0.000E+00	1.000E+01	4.853E+02	1.028E+02
PSDF	EL STR	171	2615(3)	1.210370E+02	4.101216E+02	1.000E+01	2.000E+03	0.000E+00	1.000E+01	3.825E+02	1.151E+02
PSDF	EL STR	171	2615(5)	1.789117E+02	4.430203E+02	1.000E+01	2.000E+03	0.000E+00	1.000E+01	4.218E+02	4.760E+02
PSDF	EL STR	171	2615(7)	5.115956E+01	3.624025E+02	1.000E+01	2.000E+03	0.000E+00	1.000E+01	5.642E+01	3.040E+02
PSDF	EL STR	171	2252(3)	6.750315E+01	3.245425E+02	1.000E+01	2.000E+03	0.000E+00	1.000E+01	3.012E+02	1.028E+02
PSDF	EL STR	171	2252(5)	8.098498E+01	2.568380E+02	1.000E+01	2.000E+03	0.000E+00	1.000E+01	2.498E+02	1.028E+02
PSDF	EL STR	171	2252(7)	7.775132E+01	2.340615E+02	1.000E+01	2.000E+03	0.000E+00	1.000E+01	4.744E+02	1.028E+02
PSDF	EL STR	171	2253(3)	1.450108E+02	2.207115E+02	1.000E+01	2.000E+03	0.000E+00	1.000E+01	1.914E+03	1.028E+02
PSDF	EL STR	171	2253(5)	1.312554E+02	3.562727E+02	1.000E+01	2.000E+03	0.000E+00	1.000E+01	5.922E+02	1.151E+02
PSDF	EL STR	171	2253(7)	1.522041E+02	2.947904E+02	1.000E+01	2.000E+03	0.000E+00	1.000E+01	1.023E+03	1.028E+02

*** USER WARNING MESSAGE 979, AN XY-OUTPUT REQUEST FOR POINT OR ELEMENT ID 2254
-STRE- CURVE IS BEING PASSED OVER. THE ID COULD NOT BE FOUND IN DATA BLOCK 102

DELETED WARM LOAD ELEMENTS

*** USER WARNING MESSAGE 979, AN XY-OUTPUT REQUEST FOR POINT OR ELEMENT ID 2254
-STRE- CURVE IS BEING PASSED OVER. THE ID COULD NOT BE FOUND IN DATA BLOCK 102

*** USER WARNING MESSAGE 979, AN XY-OUTPUT REQUEST FOR POINT OR ELEMENT ID 2254
-STRE- CURVE IS BEING PASSED OVER. THE ID COULD NOT BE FOUND IN DATA BLOCK 102

PSDF	EL STR	171	2255(3)	9.640239E+01	2.181524E+02	1.000E+01	2.000E+03	0.000E+00	1.000E+01	5.893E+02	1.151E+02
PSDF	EL STR	171	2255(5)	2.614774E+01	3.009910E+02	1.000E+01	2.000E+03	0.000E+00	1.000E+01	2.799E+01	1.151E+02
PSDF	EL STR	171	2255(7)	1.181885E+02	3.005393E+02	1.000E+01	2.000E+03	0.000E+00	1.000E+01	4.784E+02	1.028E+02
PSDF	EL STR	171	2256(3)	1.298202E+02	3.983158E+02	1.000E+01	2.000E+03	0.000E+00	1.000E+01	7.047E+02	1.028E+02
PSDF	EL STR	171	2256(5)	1.967920E+02	3.696784E+02	1.000E+01	2.000E+03	0.000E+00	1.000E+01	2.327E+03	1.028E+02
PSDF	EL STR	171	2256(7)	2.144910E+02	2.404302E+02	1.000E+01	2.000E+03	0.000E+00	1.000E+01	3.555E+03	1.028E+02
PSDF	EL STR	171	2249(3)	1.272658E+02	4.418034E+02	1.000E+01	2.000E+03	0.000E+00	1.000E+01	4.799E+02	4.780E+02
PSDF	EL STR	171	2249(5)	1.890865E+02	2.222267E+02	1.000E+01	2.000E+03	0.000E+00	1.000E+01	3.132E+03	1.151E+02
PSDF	EL STR	171	2249(7)	1.073405E+02	2.379768E+02	1.000E+01	2.000E+03	0.000E+00	1.000E+01	9.609E+02	1.028E+02
PSDF	EL STR	171	2623(3)	1.992979E+02	2.991875E+02	1.000E+01	2.000E+03	0.000E+00	1.000E+01	1.532E+03	1.021E+02
PSDF	EL STR	171	2623(5)	1.163487E+02	4.170232E+02	1.000E+01	2.000E+03	0.000E+00	1.000E+01	2.357E+02	4.740E+02

X AXIS PSD RESPONSE

X Y - O U T P U T S U M M A R Y (A U T O O R P S D F)

PLOT TYPE	CURVE TYPE	FRAME NO.	CURVE ID.	RMS VALUE	NO. POSITIVE CROSSINGS	XMIN FOR ALL DATA	XMAX FOR ALL DATA	YMIN FOR ALL DATA	X FOR YMIN	YMAX FOR ALL DATA	X FOR* YMAX
PSDF	EL STR	171	2623(7)	6.333097E+01	3.730000E+02	1.000E+01	2.000E+03	0.000E+00	1.000E+01	6.775E+01	1.151E+02
PSDF	EL STR	171	2624(3)	1.378752E+02	3.092740E+02	1.000E+01	2.000E+03	0.000E+00	1.000E+01	5.195E+02	3.020E+02
PSDF	EL STR	171	2624(5)	1.458295E+02	2.766258E+02	1.000E+01	2.000E+03	0.000E+00	1.000E+01	1.231E+03	1.028E+02
PSDF	EL STR	171	2624(7)	7.232539E+01	2.650293E+02	1.000E+01	2.000E+03	0.000E+00	1.000E+01	1.295E+02	3.020E+02
PSDF	EL STR	171	20018(3)	7.986077E+02	1.303712E+02	1.000E+01	2.000E+03	0.000E+00	1.000E+01	7.359E+04	1.151E+02
PSDF	EL STR	171	20018(5)	1.244371E+02	1.425642E+02	1.000E+01	2.000E+03	0.000E+00	1.000E+01	1.668E+03	1.151E+02
PSDF	EL STR	171	20018(7)	4.458690E+02	1.327009E+02	1.000E+01	2.000E+03	0.000E+00	1.000E+01	2.022E+04	1.151E+02
PSDF	EL STR	171	20019(3)	1.381367E+03	1.304373E+02	1.000E+01	2.000E+03	0.000E+00	1.000E+01	2.157E+05	1.151E+02
PSDF	EL STR	171	20019(5)	1.171804E+02	1.352599E+02	1.000E+01	2.000E+03	0.000E+00	1.000E+01	1.534E+03	1.151E+02
PSDF	EL STR	171	20019(7)	6.325664E+02	1.332737E+02	1.000E+01	2.000E+03	0.000E+00	1.000E+01	4.582E+04	1.151E+02
PSDF	EL STR	171	20020(3)	4.424502E+02	1.478666E+02	1.000E+01	2.000E+03	0.000E+00	1.000E+01	2.097E+04	1.151E+02
PSDF	EL STR	171	20020(5)	4.888081E+02	1.149944E+02	1.000E+01	2.000E+03	0.000E+00	1.000E+01	3.188E+04	1.028E+02
PSDF	EL STR	171	20020(7)	2.435319E+02	1.555248E+02	1.000E+01	2.000E+03	0.000E+00	1.000E+01	5.899E+03	1.151E+02
PSDF	EL STR	171	20021(3)	3.627805E+02	1.375962E+02	1.000E+01	2.000E+03	0.000E+00	1.000E+01	1.229E+04	1.151E+02
PSDF	EL STR	171	20021(5)	1.124377E+02	1.536245E+02	1.000E+01	2.000E+03	0.000E+00	1.000E+01	1.713E+03	1.028E+02
PSDF	EL STR	171	20021(7)	9.524044E+01	2.207435E+02	1.000E+01	2.000E+03	0.000E+00	1.000E+01	3.386E+02	1.151E+02
PSDF	EL STR	171	20022(3)	9.467950E+02	1.413886E+02	1.000E+01	2.000E+03	0.000E+00	1.000E+01	1.017E+05	1.151E+02
PSDF	EL STR	171	20022(5)	1.750959E+02	1.369201E+02	1.000E+01	2.000E+03	0.000E+00	1.000E+01	3.014E+03	1.028E+02
PSDF	EL STR	171	20022(7)	7.143424E+02	1.304679E+02	1.000E+01	2.000E+03	0.000E+00	1.000E+01	4.347E+04	1.151E+02
PSDF	EL STR	171	20023(3)	9.358583E+02	1.391793E+02	1.000E+01	2.000E+03	0.000E+00	1.000E+01	9.996E+04	1.151E+02
PSDF	EL STR	171	20023(5)	5.128043E+02	1.171868E+02	1.000E+01	2.000E+03	0.000E+00	1.000E+01	3.274E+04	1.028E+02
PSDF	EL STR	171	20023(7)	1.051773E+03	1.368699E+02	1.000E+01	2.000E+03	0.000E+00	1.000E+01	1.267E+05	1.151E+02
PSDF	EL STR	171	20024(3)	9.323602E+02	1.445018E+02	1.000E+01	2.000E+03	0.000E+00	1.000E+01	1.130E+05	1.028E+02
PSDF	EL STR	171	20024(5)	7.108975E+01	1.763591E+02	1.000E+01	2.000E+03	0.000E+00	1.000E+01	5.573E+02	1.028E+02

X AXIS PSD RESPONSE

X Y - O U T P U T S U M M A R Y (A U T O O R P S D F)

PLOT TYPE	CURVE TYPE	FRAME NO.	CURVE ID.	RMS VALUE	NO. POSITIVE CROSSINGS	XMIN FOR ALL DATA	XMAX FOR ALL DATA	YMIN FOR ALL DATA	X FOR YMIN	YMAX FOR ALL DATA	X FOR* YMAX
PSDF	EL STR	171	20024(7)	6.010443E+02	1.449654E+02	1.000E+01	2.000E+03	0.000E+00	1.000E+01	4.633E+04	1.028E+02
PSDF	EL STR	171	20025(3)	5.597230E+02	1.469141E+02	1.000E+01	2.000E+03	0.000E+00	1.000E+01	4.103E+04	1.028E+02
PSDF	EL STR	171	20025(5)	6.885527E+01	2.097168E+02	1.000E+01	2.000E+03	0.000E+00	1.000E+01	2.592E+02	1.151E+02
PSDF	EL STR	171	20025(7)	2.251591E+02	1.952570E+02	1.000E+01	2.000E+03	0.000E+00	1.000E+01	4.130E+03	1.028E+02
PSDF	EL STR	171	2226(3)	1.449747E+02	1.368371E+02	1.000E+01	2.000E+03	0.000E+00	1.000E+01	1.743E+03	1.028E+02
PSDF	EL STR	171	2226(5)	8.240634E+01	2.316459E+02	1.000E+01	2.000E+03	0.000E+00	1.000E+01	2.391E+02	1.940E+02
PSDF	EL STR	171	2226(7)	1.318871E+02	2.095978E+02	1.000E+01	2.000E+03	0.000E+00	1.000E+01	1.264E+03	1.151E+02
PSDF	EL STR	171	2227(3)	2.207179E+02	1.415226E+02	1.000E+01	2.000E+03	0.000E+00	1.000E+01	6.217E+03	1.028E+02
PSDF	EL STR	171	2227(5)	5.010848E+02	1.436654E+02	1.000E+01	2.000E+03	0.000E+00	1.000E+01	2.764E+04	1.151E+02
PSDF	EL STR	171	2227(7)	3.164168E+02	1.439478E+02	1.000E+01	2.000E+03	0.000E+00	1.000E+01	1.117E+04	1.151E+02
PSDF	EL STR	171	2070(3)	1.698842E+02	1.221542E+02	1.000E+01	2.000E+03	0.000E+00	1.000E+01	2.875E+03	1.028E+02
PSDF	EL STR	171	2070(5)	9.281477E+01	1.442422E+02	1.000E+01	2.000E+03	0.000E+00	1.000E+01	9.021E+02	1.151E+02
PSDF	EL STR	171	2070(7)	3.129512E+02	1.333254E+02	1.000E+01	2.000E+03	0.000E+00	1.000E+01	7.923E+03	1.151E+02
PSDF	EL STR	171	2071(3)	1.924225E+02	1.227268E+02	1.000E+01	2.000E+03	0.000E+00	1.000E+01	5.420E+03	1.028E+02
PSDF	EL STR	171	2071(5)	7.417011E+01	1.762758E+02	1.000E+01	2.000E+03	0.000E+00	1.000E+01	5.346E+02	1.151E+02
PSDF	EL STR	171	2071(7)	2.631704E+02	1.423273E+02	1.000E+01	2.000E+03	0.000E+00	1.000E+01	5.394E+03	1.028E+02
PSDF	EL STR	171	2089(3)	3.818660E+02	1.227179E+02	1.000E+01	2.000E+03	0.000E+00	1.000E+01	2.033E+04	1.028E+02
PSDF	EL STR	171	2089(5)	7.106470E+01	1.857856E+02	1.000E+01	2.000E+03	0.000E+00	1.000E+01	2.325E+02	1.028E+02
PSDF	EL STR	171	2089(7)	4.307419E+02	1.311267E+02	1.000E+01	2.000E+03	0.000E+00	1.000E+01	1.204E+04	1.021E+02
PSDF	EL STR	171	2090(3)	3.472054E+02	1.337998E+02	1.000E+01	2.000E+03	0.000E+00	1.000E+01	1.684E+04	1.028E+02
PSDF	EL STR	171	2090(5)	7.112880E+01	3.015756E+02	1.000E+01	2.000E+03	0.000E+00	1.000E+01	1.690E+02	1.028E+02
PSDF	EL STR	171	2090(7)	4.122890E+02	1.311971E+02	1.000E+01	2.000E+03	0.000E+00	1.000E+01	1.252E+04	1.159E+02
PSDF	EL STR	171	2091(3)	2.437436E+02	1.497318E+02	1.000E+01	2.000E+03	0.000E+00	1.000E+01	7.294E+03	1.028E+02
PSDF	EL STR	171	2091(5)	2.162910E+02	1.864895E+02	1.000E+01	2.000E+03	0.000E+00	1.000E+01	2.510E+03	1.680E+02

X AXIS PSD RESPONSE

X Y - O U T P U T S U M M A R Y (A U T O O R P S D F)

PLOT TYPE	CURVE TYPE	FRAME NO.	CURVE ID.	RMS VALUE	NO. POSITIVE CROSSINGS	XMIN FOR ALL DATA	XMAX FOR ALL DATA	YMIN FOR ALL DATA	X FOR YMIN	YMAX FOR ALL DATA	X FOR* YMAX
PSDF	EL STR	171	2091(7)	4.534673E+02	1.275784E+02	1.000E+01	2.000E+03	0.000E+00	1.000E+01	1.460E+04	1.159E+02
PSDF	EL STR	171	2092(3)	1.769236E+02	1.270078E+02	1.000E+01	2.000E+03	0.000E+00	1.000E+01	3.029E+03	1.028E+02
PSDF	EL STR	171	2092(5)	3.426428E+02	1.631565E+02	1.000E+01	2.000E+03	0.000E+00	1.000E+01	9.090E+03	1.151E+02
PSDF	EL STR	171	2092(7)	5.583052E+02	1.269221E+02	1.000E+01	2.000E+03	0.000E+00	1.000E+01	2.630E+04	1.151E+02
PSDF	EL STR	171	2093(3)	2.071974E+02	2.189902E+02	1.000E+01	2.000E+03	0.000E+00	1.000E+01	2.237E+03	1.236E+02
PSDF	EL STR	171	2093(5)	1.363752E+02	1.422367E+02	1.000E+01	2.000E+03	0.000E+00	1.000E+01	1.356E+03	1.151E+02
PSDF	EL STR	171	2093(7)	3.593394E+02	1.404779E+02	1.000E+01	2.000E+03	0.000E+00	1.000E+01	1.142E+04	1.151E+02
PSDF	EL STR	171	2094(3)	6.660354E+01	2.528627E+02	1.000E+01	2.000E+03	0.000E+00	1.000E+01	1.934E+02	1.151E+02
PSDF	EL STR	171	2094(5)	8.956319E+01	2.522691E+02	1.000E+01	2.000E+03	0.000E+00	1.000E+01	1.979E+02	1.151E+02
PSDF	EL STR	171	2094(7)	3.345899E+02	1.458840E+02	1.000E+01	2.000E+03	0.000E+00	1.000E+01	1.069E+04	1.151E+02
PSDF	EL STR	171	2095(3)	2.661764E+02	1.863474E+02	1.000E+01	2.000E+03	0.000E+00	1.000E+01	5.199E+03	1.680E+02
PSDF	EL STR	171	2095(5)	2.696653E+02	1.877937E+02	1.000E+01	2.000E+03	0.000E+00	1.000E+01	4.279E+03	1.700E+02
PSDF	EL STR	171	2095(7)	3.565716E+02	1.561160E+02	1.000E+01	2.000E+03	0.000E+00	1.000E+01	1.312E+04	1.151E+02
PSDF	EL STR	171	2096(3)	1.566036E+02	2.696938E+02	1.000E+01	2.000E+03	0.000E+00	1.000E+01	6.871E+02	1.151E+02
PSDF	EL STR	171	2096(5)	4.315587E+02	1.700184E+02	1.000E+01	2.000E+03	0.000E+00	1.000E+01	1.358E+04	1.151E+02
PSDF	EL STR	171	2096(7)	3.601826E+02	1.516668E+02	1.000E+01	2.000E+03	0.000E+00	1.000E+01	1.365E+04	1.151E+02

*** USER WARNING MESSAGE 979, AN XY-OUTPUT REQUEST FOR POINT OR ELEMENT ID 2125
-STRE- CURVE IS BEING PASSED OVER. THE ID COULD NOT BE FOUND IN DATA BLOCK 102

DELETED SIDE PANEL ELEMENTS

*** USER WARNING MESSAGE 979, AN XY-OUTPUT REQUEST FOR POINT OR ELEMENT ID 2125
-STRE- CURVE IS BEING PASSED OVER. THE ID COULD NOT BE FOUND IN DATA BLOCK 102

*** USER WARNING MESSAGE 979, AN XY-OUTPUT REQUEST FOR POINT OR ELEMENT ID 2125
-STRE- CURVE IS BEING PASSED OVER. THE ID COULD NOT BE FOUND IN DATA BLOCK 102

*** USER WARNING MESSAGE 979, AN XY-OUTPUT REQUEST FOR POINT OR ELEMENT ID 2126
-STRE- CURVE IS BEING PASSED OVER. THE ID COULD NOT BE FOUND IN DATA BLOCK 102

*** USER WARNING MESSAGE 979, AN XY-OUTPUT REQUEST FOR POINT OR ELEMENT ID 2126
-STRE- CURVE IS BEING PASSED OVER. THE ID COULD NOT BE FOUND IN DATA BLOCK 102

*** USER WARNING MESSAGE 979, AN XY-OUTPUT REQUEST FOR POINT OR ELEMENT ID 2126
-STRE- CURVE IS BEING PASSED OVER. THE ID COULD NOT BE FOUND IN DATA BLOCK 102

*** USER WARNING MESSAGE 979, AN XY-OUTPUT REQUEST FOR POINT OR ELEMENT ID 2127
-STRE- CURVE IS BEING PASSED OVER. THE ID COULD NOT BE FOUND IN DATA BLOCK 102

*** USER WARNING MESSAGE 979, AN XY-OUTPUT REQUEST FOR POINT OR ELEMENT ID 2127
-STRE- CURVE IS BEING PASSED OVER. THE ID COULD NOT BE FOUND IN DATA BLOCK 102

```
*** USER WARNING MESSAGE 979, AN XY-OUTPUT REQUEST FOR POINT OR ELEMENT ID      2127
    -STRE- CURVE IS BEING PASSED OVER.  THE ID COULD NOT BE FOUND IN DATA BLOCK      102

*** USER WARNING MESSAGE 979, AN XY-OUTPUT REQUEST FOR POINT OR ELEMENT ID      2128
    -STRE- CURVE IS BEING PASSED OVER.  THE ID COULD NOT BE FOUND IN DATA BLOCK      102

*** USER WARNING MESSAGE 979, AN XY-OUTPUT REQUEST FOR POINT OR ELEMENT ID      2128
    -STRE- CURVE IS BEING PASSED OVER.  THE ID COULD NOT BE FOUND IN DATA BLOCK      102

*** USER WARNING MESSAGE 979, AN XY-OUTPUT REQUEST FOR POINT OR ELEMENT ID      2128
    -STRE- CURVE IS BEING PASSED OVER.  THE ID COULD NOT BE FOUND IN DATA BLOCK      102

*** USER WARNING MESSAGE 979, AN XY-OUTPUT REQUEST FOR POINT OR ELEMENT ID      2109
    -STRE- CURVE IS BEING PASSED OVER.  THE ID COULD NOT BE FOUND IN DATA BLOCK      102

*** USER WARNING MESSAGE 979, AN XY-OUTPUT REQUEST FOR POINT OR ELEMENT ID      2109
    -STRE- CURVE IS BEING PASSED OVER.  THE ID COULD NOT BE FOUND IN DATA BLOCK      102

*** USER WARNING MESSAGE 979, AN XY-OUTPUT REQUEST FOR POINT OR ELEMENT ID      2109
    -STRE- CURVE IS BEING PASSED OVER.  THE ID COULD NOT BE FOUND IN DATA BLOCK      102

*** USER WARNING MESSAGE 979, AN XY-OUTPUT REQUEST FOR POINT OR ELEMENT ID      2110
    -STRE- CURVE IS BEING PASSED OVER.  THE ID COULD NOT BE FOUND IN DATA BLOCK      102

*** USER WARNING MESSAGE 979, AN XY-OUTPUT REQUEST FOR POINT OR ELEMENT ID      2110
    -STRE- CURVE IS BEING PASSED OVER.  THE ID COULD NOT BE FOUND IN DATA BLOCK      102

*** USER WARNING MESSAGE 979, AN XY-OUTPUT REQUEST FOR POINT OR ELEMENT ID      2110
    -STRE- CURVE IS BEING PASSED OVER.  THE ID COULD NOT BE FOUND IN DATA BLOCK      102

*** USER WARNING MESSAGE 979, AN XY-OUTPUT REQUEST FOR POINT OR ELEMENT ID      2111
    -STRE- CURVE IS BEING PASSED OVER.  THE ID COULD NOT BE FOUND IN DATA BLOCK      102

*** USER WARNING MESSAGE 979, AN XY-OUTPUT REQUEST FOR POINT OR ELEMENT ID      2111
    -STRE- CURVE IS BEING PASSED OVER.  THE ID COULD NOT BE FOUND IN DATA BLOCK      102

*** USER WARNING MESSAGE 979, AN XY-OUTPUT REQUEST FOR POINT OR ELEMENT ID      2111
    -STRE- CURVE IS BEING PASSED OVER.  THE ID COULD NOT BE FOUND IN DATA BLOCK      102

*** USER WARNING MESSAGE 979, AN XY-OUTPUT REQUEST FOR POINT OR ELEMENT ID      2112
    -STRE- CURVE IS BEING PASSED OVER.  THE ID COULD NOT BE FOUND IN DATA BLOCK      102

*** USER WARNING MESSAGE 979, AN XY-OUTPUT REQUEST FOR POINT OR ELEMENT ID      2112
    -STRE- CURVE IS BEING PASSED OVER.  THE ID COULD NOT BE FOUND IN DATA BLOCK      102

*** USER WARNING MESSAGE 979, AN XY-OUTPUT REQUEST FOR POINT OR ELEMENT ID      2112
    -STRE- CURVE IS BEING PASSED OVER.  THE ID COULD NOT BE FOUND IN DATA BLOCK      102
```

DELETED FRONT PANEL ELEMENTS

PSDF EL STR	171	2615(3)	1.210370E+02	4.101216E+02	1.000E+01	2.000E+03	0.000E+00	1.000E+01	3.825E+02	1.151E+02
PSDF EL STR	171	2615(5)	1.789117E+02	4.430203E+02	1.000E+01	2.000E+03	0.000E+00	1.000E+01	4.218E+02	4.760E+02
PSDF EL STR	171	2615(7)	5.115956E+01	3.624025E+02	1.000E+01	2.000E+03	0.000E+00	1.000E+01	5.642E+01	3.040E+02
PSDF EL STR	171	2616(3)	1.282608E+02	2.391190E+02	1.000E+01	2.000E+03	0.000E+00	1.000E+01	1.430E+03	1.151E+02
PSDF EL STR	171	2616(5)	1.527533E+02	2.839856E+02	1.000E+01	2.000E+03	0.000E+00	1.000E+01	1.855E+03	1.151E+02
PSDF EL STR	171	2616(7)	1.608360E+02	1.440500E+02	1.000E+01	2.000E+03	0.000E+00	1.000E+01	2.547E+03	1.028E+02
PSDF EL STR	171	2617(3)	1.895271E+02	1.916600E+02	1.000E+01	2.000E+03	0.000E+00	1.000E+01	2.823E+03	1.028E+02
PSDF EL STR	171	2617(5)	1.906058E+02	1.532854E+02	1.000E+01	2.000E+03	0.000E+00	1.000E+01	4.728E+03	1.028E+02

X AXIS PSD RESPONSE

X Y - O U T P U T S U M M A R Y (A U T O O R P S D F)

PLOT TYPE	CURVE TYPE	FRAME NO.	CURVE ID.	RMS VALUE	NO. POSITIVE CROSSINGS	XMIN FOR ALL DATA	XMAX FOR ALL DATA	YMIN FOR ALL DATA	X FOR YMIN	YMAX FOR ALL DATA	X FOR* YMAX
PSDF	EL STR	171	2617(7)	7.501369E+01	1.729566E+02	1.000E+01	2.000E+03	0.000E+00	1.000E+01	6.515E+02	1.028E+02
PSDF	EL STR	171	2618(3)	9.027926E+01	2.744968E+02	1.000E+01	2.000E+03	0.000E+00	1.000E+01	7.372E+02	1.028E+02
PSDF	EL STR	171	2618(5)	2.412646E+02	1.650388E+02	1.000E+01	2.000E+03	0.000E+00	1.000E+01	5.640E+03	1.028E+02
PSDF	EL STR	171	2618(7)	9.254758E+01	2.011232E+02	1.000E+01	2.000E+03	0.000E+00	1.000E+01	5.435E+02	1.021E+02
PSDF	EL STR	171	2619(3)	1.131169E+02	2.257059E+02	1.000E+01	2.000E+03	0.000E+00	1.000E+01	1.325E+03	1.028E+02
PSDF	EL STR	171	2619(5)	1.371960E+02	2.614408E+02	1.000E+01	2.000E+03	0.000E+00	1.000E+01	1.557E+03	1.028E+02
PSDF	EL STR	171	2619(7)	1.488494E+02	1.864001E+02	1.000E+01	2.000E+03	0.000E+00	1.000E+01	1.637E+03	1.021E+02

*** USER WARNING MESSAGE 979, AN XY-OUTPUT REQUEST FOR POINT OR ELEMENT ID 2620
-STRE- CURVE IS BEING PASSED OVER. THE ID COULD NOT BE FOUND IN DATA BLOCK 102

DELETED WARM LOAD ELEMENTS

*** USER WARNING MESSAGE 979, AN XY-OUTPUT REQUEST FOR POINT OR ELEMENT ID 2620
-STRE- CURVE IS BEING PASSED OVER. THE ID COULD NOT BE FOUND IN DATA BLOCK 102

*** USER WARNING MESSAGE 979, AN XY-OUTPUT REQUEST FOR POINT OR ELEMENT ID 2620
-STRE- CURVE IS BEING PASSED OVER. THE ID COULD NOT BE FOUND IN DATA BLOCK 102

PSDF	EL STR	171	2621(3)	2.032674E+02	4.119970E+02	1.000E+01	2.000E+03	0.000E+00	1.000E+01	1.467E+03	1.028E+02
PSDF	EL STR	171	2621(5)	3.326168E+02	4.483239E+02	1.000E+01	2.000E+03	0.000E+00	1.000E+01	3.258E+03	4.800E+02
PSDF	EL STR	171	2621(7)	1.706052E+02	1.819147E+02	1.000E+01	2.000E+03	0.000E+00	1.000E+01	3.063E+03	1.028E+02
PSDF	EL STR	171	2622(3)	1.124162E+02	4.477198E+02	1.000E+01	2.000E+03	0.000E+00	1.000E+01	3.836E+02	4.760E+02
PSDF	EL STR	171	2622(5)	1.034826E+02	4.049465E+02	1.000E+01	2.000E+03	0.000E+00	1.000E+01	1.447E+02	4.180E+02
PSDF	EL STR	171	2622(7)	5.730655E+01	2.858378E+02	1.000E+01	2.000E+03	0.000E+00	1.000E+01	2.760E+02	1.028E+02
PSDF	EL STR	171	2623(3)	1.992979E+02	2.991875E+02	1.000E+01	2.000E+03	0.000E+00	1.000E+01	1.532E+03	1.021E+02
PSDF	EL STR	171	2623(5)	1.163487E+02	4.170232E+02	1.000E+01	2.000E+03	0.000E+00	1.000E+01	2.357E+02	4.740E+02
PSDF	EL STR	171	2623(7)	6.333097E+01	3.730000E+02	1.000E+01	2.000E+03	0.000E+00	1.000E+01	6.775E+01	1.151E+02
PSDF	EL STR	171	2624(3)	1.378752E+02	3.092740E+02	1.000E+01	2.000E+03	0.000E+00	1.000E+01	5.195E+02	3.020E+02
PSDF	EL STR	171	2624(5)	1.458295E+02	2.766258E+02	1.000E+01	2.000E+03	0.000E+00	1.000E+01	1.231E+03	1.028E+02
PSDF	EL STR	171	2624(7)	7.232539E+01	2.650293E+02	1.000E+01	2.000E+03	0.000E+00	1.000E+01	1.295E+02	3.020E+02
PSDF	EL STR	171	2625(3)	9.569675E+01	4.345329E+02	1.000E+01	2.000E+03	0.000E+00	1.000E+01	1.845E+02	4.740E+02
PSDF	EL STR	171	2625(5)	1.104856E+02	4.115351E+02	1.000E+01	2.000E+03	0.000E+00	1.000E+01	1.634E+02	4.180E+02
PSDF	EL STR	171	2625(7)	8.216137E+01	2.738134E+02	1.000E+01	2.000E+03	0.000E+00	1.000E+01	4.300E+02	1.028E+02
PSDF	EL STR	171	2626(3)	1.607770E+02	2.020930E+02	1.000E+01	2.000E+03	0.000E+00	1.000E+01	2.501E+03	1.028E+02
PSDF	EL STR	171	2626(5)	2.067217E+02	3.231822E+02	1.000E+01	2.000E+03	0.000E+00	1.000E+01	1.801E+03	1.028E+02

X AXIS PSD RESPONSE

X Y - O U T P U T S U M M A R Y (A U T O O R P S D F)

PLOT TYPE	CURVE TYPE	FRAME NO.	CURVE ID.	RMS VALUE	NO. POSITIVE CROSSINGS	XMIN FOR ALL DATA	XMAX FOR ALL DATA	YMIN FOR ALL DATA	X FOR YMIN	YMAX FOR ALL DATA	X FOR* YMAX
PSDF	EL STR	171	2626(7)	1.696191E+02	2.349821E+02	1.000E+01	2.000E+03	0.000E+00	1.000E+01	2.056E+03	1.028E+02
PSDF	EL STR	171	2627(3)	2.401853E+02	3.433750E+02	1.000E+01	2.000E+03	0.000E+00	1.000E+01	1.244E+03	3.040E+02
PSDF	EL STR	171	2627(5)	6.679111E+02	3.615126E+02	1.000E+01	2.000E+03	0.000E+00	1.000E+01	8.385E+03	3.040E+02
PSDF	EL STR	171	2627(7)	1.595458E+02	2.614587E+02	1.000E+01	2.000E+03	0.000E+00	1.000E+01	1.265E+03	1.028E+02
PSDF	EL STR	171	2628(3)	3.417935E+02	3.493404E+02	1.000E+01	2.000E+03	0.000E+00	1.000E+01	2.136E+03	3.040E+02
PSDF	EL STR	171	2628(5)	4.286612E+02	3.587687E+02	1.000E+01	2.000E+03	0.000E+00	1.000E+01	3.890E+03	3.040E+02
PSDF	EL STR	171	2628(7)	1.827344E+02	3.599341E+02	1.000E+01	2.000E+03	0.000E+00	1.000E+01	5.044E+02	3.040E+02
PSDF	EL STR	171	2629(3)	1.469872E+02	4.128099E+02	1.000E+01	2.000E+03	0.000E+00	1.000E+01	3.015E+02	4.980E+02
PSDF	EL STR	171	2629(5)	9.367670E+01	2.337856E+02	1.000E+01	2.000E+03	0.000E+00	1.000E+01	6.681E+02	1.028E+02
PSDF	EL STR	171	2629(7)	4.649475E+01	2.054569E+02	1.000E+01	2.000E+03	0.000E+00	1.000E+01	2.409E+02	1.028E+02
PSDF	EL STR	171	2630(3)	8.910175E+01	3.273879E+02	1.000E+01	2.000E+03	0.000E+00	1.000E+01	2.331E+02	1.151E+02
PSDF	EL STR	171	2630(5)	1.585399E+02	1.596644E+02	1.000E+01	2.000E+03	0.000E+00	1.000E+01	3.441E+03	1.028E+02
PSDF	EL STR	171	2630(7)	8.943441E+01	2.227233E+02	1.000E+01	2.000E+03	0.000E+00	1.000E+01	7.273E+02	1.028E+02
PSDF	EL STR	171	2631(3)	1.518907E+02	2.069294E+02	1.000E+01	2.000E+03	0.000E+00	1.000E+01	2.965E+03	1.028E+02
PSDF	EL STR	171	2631(5)	1.769660E+02	3.044369E+02	1.000E+01	2.000E+03	0.000E+00	1.000E+01	3.506E+03	1.028E+02
PSDF	EL STR	171	2631(7)	1.785691E+02	1.481256E+02	1.000E+01	2.000E+03	0.000E+00	1.000E+01	4.149E+03	1.028E+02
PSDF	EL STR	171	3202(3)	6.995231E+01	4.322210E+02	1.000E+01	2.000E+03	0.000E+00	1.000E+01	8.362E+01	4.160E+02
PSDF	EL STR	171	3202(5)	8.113110E+01	2.779922E+02	1.000E+01	2.000E+03	0.000E+00	1.000E+01	2.648E+02	1.028E+02
PSDF	EL STR	171	3202(7)	7.151443E+01	4.570428E+02	1.000E+01	2.000E+03	0.000E+00	1.000E+01	6.632E+01	4.840E+02
PSDF	EL STR	171	3203(3)	1.449377E+02	3.018456E+02	1.000E+01	2.000E+03	0.000E+00	1.000E+01	5.987E+02	3.040E+02
PSDF	EL STR	171	3203(5)	9.671399E+01	3.859294E+02	1.000E+01	2.000E+03	0.000E+00	1.000E+01	1.329E+02	1.151E+02
PSDF	EL STR	171	3203(7)	5.377179E+01	3.544434E+02	1.000E+01	2.000E+03	0.000E+00	1.000E+01	1.229E+02	1.028E+02
PSDF	EL STR	171	3204(3)	9.096907E+01	3.119274E+02	1.000E+01	2.000E+03	0.000E+00	1.000E+01	2.595E+02	1.151E+02
PSDF	EL STR	171	3204(5)	1.012293E+02	4.246834E+02	1.000E+01	2.000E+03	0.000E+00	1.000E+01	1.917E+02	4.740E+02

X AXIS PSD RESPONSE

X Y - O U T P U T S U M M A R Y (A U T O O R P S D F)

PLOT TYPE	CURVE TYPE	FRAME NO.	CURVE ID.	RMS VALUE	NO. POSITIVE CROSSINGS	XMIN FOR ALL DATA	XMAX FOR ALL DATA	YMIN FOR ALL DATA	X FOR YMIN	YMAX FOR ALL DATA	X FOR* YMAX
PSDF	EL STR	171	3204(7)	5.036911E+01	2.444358E+02	1.000E+01	2.000E+03	0.000E+00	1.000E+01	1.861E+02	1.028E+02
PSDF	EL STR	171	3205(3)	1.793353E+02	3.656909E+02	1.000E+01	2.000E+03	0.000E+00	1.000E+01	7.142E+02	1.151E+02
PSDF	EL STR	171	3205(5)	1.442109E+02	4.175013E+02	1.000E+01	2.000E+03	0.000E+00	1.000E+01	3.629E+02	4.740E+02
PSDF	EL STR	171	3205(7)	8.095813E+01	3.506469E+02	1.000E+01	2.000E+03	0.000E+00	1.000E+01	2.285E+02	1.028E+02
PSDF	EL STR	171	3206(3)	1.102915E+02	3.455800E+02	1.000E+01	2.000E+03	0.000E+00	1.000E+01	4.652E+02	1.151E+02
PSDF	EL STR	171	3206(5)	1.297127E+02	3.444435E+02	1.000E+01	2.000E+03	0.000E+00	1.000E+01	3.819E+02	1.028E+02
PSDF	EL STR	171	3206(7)	3.861672E+01	4.177956E+02	1.000E+01	2.000E+03	0.000E+00	1.000E+01	2.487E+01	4.160E+02
PSDF	EL STR	171	3207(3)	9.631222E+01	3.973958E+02	1.000E+01	2.000E+03	0.000E+00	1.000E+01	3.014E+02	1.028E+02
PSDF	EL STR	171	3207(5)	1.277178E+02	3.831401E+02	1.000E+01	2.000E+03	0.000E+00	1.000E+01	3.942E+02	1.028E+02
PSDF	EL STR	171	3207(7)	6.463115E+01	2.063783E+02	1.000E+01	2.000E+03	0.000E+00	1.000E+01	4.853E+02	1.028E+02
PSDF	EL STR	171	3196(3)	1.075682E+02	3.437813E+02	1.000E+01	2.000E+03	0.000E+00	1.000E+01	7.884E+02	1.028E+02
PSDF	EL STR	171	3196(5)	1.254502E+02	3.981469E+02	1.000E+01	2.000E+03	0.000E+00	1.000E+01	2.371E+02	1.028E+02
PSDF	EL STR	171	3196(7)	5.011625E+01	2.302471E+02	1.000E+01	2.000E+03	0.000E+00	1.000E+01	1.929E+02	1.028E+02
PSDF	EL STR	171	3197(3)	1.417731E+02	3.905882E+02	1.000E+01	2.000E+03	0.000E+00	1.000E+01	8.841E+02	1.028E+02
PSDF	EL STR	171	3197(5)	1.335979E+02	3.709220E+02	1.000E+01	2.000E+03	0.000E+00	1.000E+01	6.064E+02	1.028E+02
PSDF	EL STR	171	3197(7)	5.405170E+01	3.194050E+02	1.000E+01	2.000E+03	0.000E+00	1.000E+01	1.714E+02	1.028E+02
PSDF	EL STR	171	3198(3)	2.049771E+02	4.367165E+02	1.000E+01	2.000E+03	0.000E+00	1.000E+01	1.091E+03	4.760E+02
PSDF	EL STR	171	3198(5)	1.228967E+02	3.606675E+02	1.000E+01	2.000E+03	0.000E+00	1.000E+01	6.240E+02	1.028E+02
PSDF	EL STR	171	3198(7)	5.499744E+01	3.672135E+02	1.000E+01	2.000E+03	0.000E+00	1.000E+01	1.728E+02	1.028E+02
PSDF	EL STR	171	3199(3)	1.073340E+02	4.173153E+02	1.000E+01	2.000E+03	0.000E+00	1.000E+01	2.825E+02	1.028E+02
PSDF	EL STR	171	3199(5)	8.265102E+01	4.067260E+02	1.000E+01	2.000E+03	0.000E+00	1.000E+01	1.251E+02	4.160E+02
PSDF	EL STR	171	3199(7)	8.317882E+01	3.164344E+02	1.000E+01	2.000E+03	0.000E+00	1.000E+01	5.287E+02	1.028E+02
PSDF	EL STR	171	3200(3)	1.385290E+02	4.217127E+02	1.000E+01	2.000E+03	0.000E+00	1.000E+01	4.398E+02	4.160E+02
PSDF	EL STR	171	3200(5)	1.076247E+02	4.316225E+02	1.000E+01	2.000E+03	0.000E+00	1.000E+01	1.976E+02	4.760E+02

X AXIS PSD RESPONSE

X Y - O U T P U T S U M M A R Y (A U T O O R P S D F)

PLOT TYPE	CURVE TYPE	FRAME NO.	CURVE ID.	RMS VALUE	NO. POSITIVE CROSSINGS	XMIN FOR ALL DATA	XMAX FOR ALL DATA	YMIN FOR ALL DATA	X FOR YMIN	YMAX FOR ALL DATA	X FOR* YMAX
PSDF	EL STR	171	3200(7)	1.053688E+02	3.291770E+02	1.000E+01	2.000E+03	0.000E+00	1.000E+01	6.804E+02	1.028E+02
PSDF	EL STR	171	3201(3)	1.356542E+02	4.277996E+02	1.000E+01	2.000E+03	0.000E+00	1.000E+01	3.449E+02	4.800E+02
PSDF	EL STR	171	3201(5)	1.124088E+02	3.196562E+02	1.000E+01	2.000E+03	0.000E+00	1.000E+01	8.193E+02	1.028E+02
PSDF	EL STR	171	3201(7)	9.979916E+01	4.726974E+02	1.000E+01	2.000E+03	0.000E+00	1.000E+01	3.140E+02	4.800E+02
PSDF	EL STR	171	2249(3)	1.272658E+02	4.418034E+02	1.000E+01	2.000E+03	0.000E+00	1.000E+01	4.799E+02	4.780E+02
PSDF	EL STR	171	2249(5)	1.890865E+02	2.222267E+02	1.000E+01	2.000E+03	0.000E+00	1.000E+01	3.132E+03	1.151E+02
PSDF	EL STR	171	2249(7)	1.073405E+02	2.379768E+02	1.000E+01	2.000E+03	0.000E+00	1.000E+01	9.609E+02	1.028E+02
PSDF	EL STR	171	2250(3)	1.807849E+02	3.701267E+02	1.000E+01	2.000E+03	0.000E+00	1.000E+01	5.228E+02	3.020E+02
PSDF	EL STR	171	2250(5)	7.740388E+01	3.811308E+02	1.000E+01	2.000E+03	0.000E+00	1.000E+01	9.880E+01	1.159E+02
PSDF	EL STR	171	2250(7)	5.336408E+01	3.248688E+02	1.000E+01	2.000E+03	0.000E+00	1.000E+01	1.380E+02	1.021E+02
PSDF	EL STR	171	2251(3)	1.860658E+02	3.753273E+02	1.000E+01	2.000E+03	0.000E+00	1.000E+01	4.480E+02	1.021E+02
PSDF	EL STR	171	2251(5)	3.825255E+01	2.761158E+02	1.000E+01	2.000E+03	0.000E+00	1.000E+01	1.254E+02	1.028E+02
PSDF	EL STR	171	2251(7)	7.199469E+01	2.970269E+02	1.000E+01	2.000E+03	0.000E+00	1.000E+01	2.246E+02	1.028E+02
PSDF	EL STR	171	2252(3)	6.750315E+01	3.245425E+02	1.000E+01	2.000E+03	0.000E+00	1.000E+01	3.012E+02	1.028E+02
PSDF	EL STR	171	2252(5)	8.088488E+01	2.568380E+02	1.000E+01	2.000E+03	0.000E+00	1.000E+01	2.498E+02	1.028E+02
PSDF	EL STR	171	2252(7)	7.775132E+01	2.340615E+02	1.000E+01	2.000E+03	0.000E+00	1.000E+01	4.744E+02	1.028E+02
PSDF	EL STR	171	2253(3)	1.450108E+02	2.207115E+02	1.000E+01	2.000E+03	0.000E+00	1.000E+01	1.914E+03	1.028E+02
PSDF	EL STR	171	2253(5)	1.312554E+02	3.562727E+02	1.000E+01	2.000E+03	0.000E+00	1.000E+01	5.922E+02	1.151E+02
PSDF	EL STR	171	2253(7)	1.522041E+02	2.947904E+02	1.000E+01	2.000E+03	0.000E+00	1.000E+01	1.023E+03	1.028E+02

*** USER WARNING MESSAGE 979, AN XY-OUTPUT REQUEST FOR POINT OR ELEMENT ID 2254
-STRE- CURVE IS BEING PASSED OVER. THE ID COULD NOT BE FOUND IN DATA BLOCK 102

DELETED WARMLOAD ELEMENTS

*** USER WARNING MESSAGE 979, AN XY-OUTPUT REQUEST FOR POINT OR ELEMENT ID 2254
-STRE- CURVE IS BEING PASSED OVER. THE ID COULD NOT BE FOUND IN DATA BLOCK 102

*** USER WARNING MESSAGE 979, AN XY-OUTPUT REQUEST FOR POINT OR ELEMENT ID 2254
-STRE- CURVE IS BEING PASSED OVER. THE ID COULD NOT BE FOUND IN DATA BLOCK 102

PSDF	EL STR	171	2255(3)	9.640239E+01	2.181524E+02	1.000E+01	2.000E+03	0.000E+00	1.000E+01	5.893E+02	1.151E+02
PSDF	EL STR	171	2255(5)	2.614774E+01	3.009910E+02	1.000E+01	2.000E+03	0.000E+00	1.000E+01	2.799E+01	1.151E+02
PSDF	EL STR	171	2255(7)	1.181885E+02	3.005393E+02	1.000E+01	2.000E+03	0.000E+00	1.000E+01	4.784E+02	1.028E+02
PSDF	EL STR	171	2256(3)	1.298202E+02	3.983158E+02	1.000E+01	2.000E+03	0.000E+00	1.000E+01	7.047E+02	1.028E+02
PSDF	EL STR	171	2256(5)	1.967920E+02	3.696784E+02	1.000E+01	2.000E+03	0.000E+00	1.000E+01	2.327E+03	1.028E+02

X AXIS PSD RESPONSE

X Y - O U T P U T S U M M A R Y (A U T O O R P S D F)

PLOT TYPE	CURVE TYPE	FRAME NO.	CURVE ID.	RMS VALUE	NO. POSITIVE CROSSINGS	XMIN FOR ALL DATA	XMAX FOR ALL DATA	YMIN FOR ALL DATA	X FOR YMIN	YMAX FOR ALL DATA	X FOR* YMAX
PSDF	EL STR	171	2256(7)	2.144910E+02	2.404302E+02	1.000E+01	2.000E+03	0.000E+00	1.000E+01	3.555E+03	1.028E+02
PSDF	EL STR	171	21745(3)	2.163319E+02	2.021875E+02	1.000E+01	2.000E+03	0.000E+00	1.000E+01	2.250E+03	1.520E+02
PSDF	EL STR	171	21745(5)	2.169030E+02	2.712386E+02	1.000E+01	2.000E+03	0.000E+00	1.000E+01	2.556E+03	2.140E+02
PSDF	EL STR	171	21745(7)	1.988821E+02	2.211020E+02	1.000E+01	2.000E+03	0.000E+00	1.000E+01	1.083E+03	2.440E+02
PSDF	EL STR	171	21675(3)	2.147139E+02	2.855880E+02	1.000E+01	2.000E+03	0.000E+00	1.000E+01	1.839E+03	1.520E+02
PSDF	EL STR	171	21675(5)	2.313825E+02	2.594247E+02	1.000E+01	2.000E+03	0.000E+00	1.000E+01	2.523E+03	2.140E+02
PSDF	EL STR	171	21675(7)	1.715133E+02	2.810645E+02	1.000E+01	2.000E+03	0.000E+00	1.000E+01	5.992E+02	1.500E+02
PSDF	EL STR	171	21679(3)	3.551044E+02	2.773486E+02	1.000E+01	2.000E+03	0.000E+00	1.000E+01	6.690E+03	2.240E+02
PSDF	EL STR	171	21679(5)	8.049796E+01	2.714607E+02	1.000E+01	2.000E+03	0.000E+00	1.000E+01	3.797E+02	2.240E+02
PSDF	EL STR	171	21679(7)	6.402057E+01	3.538281E+02	1.000E+01	2.000E+03	0.000E+00	1.000E+01	1.001E+02	1.520E+02
PSDF	EL STR	171	21749(3)	3.141175E+02	2.336861E+02	1.000E+01	2.000E+03	0.000E+00	1.000E+01	7.140E+03	2.240E+02
PSDF	EL STR	171	21749(5)	7.893974E+01	2.482403E+02	1.000E+01	2.000E+03	0.000E+00	1.000E+01	3.995E+02	2.240E+02
PSDF	EL STR	171	21749(7)	5.111181E+01	3.176617E+02	1.000E+01	2.000E+03	0.000E+00	1.000E+01	1.016E+02	1.520E+02
PSDF	EL STR	171	21672(3)	2.081212E+02	3.466017E+02	1.000E+01	2.000E+03	0.000E+00	1.000E+01	1.417E+03	3.560E+02
PSDF	EL STR	171	21672(5)	3.094437E+02	2.387463E+02	1.000E+01	2.000E+03	0.000E+00	1.000E+01	6.992E+03	2.240E+02
PSDF	EL STR	171	21672(7)	9.023354E+01	3.369947E+02	1.000E+01	2.000E+03	0.000E+00	1.000E+01	2.434E+02	3.560E+02
PSDF	EL STR	171	21742(3)	2.525405E+02	2.220380E+02	1.000E+01	2.000E+03	0.000E+00	1.000E+01	4.421E+03	1.940E+02
PSDF	EL STR	171	21742(5)	2.816576E+02	2.307535E+02	1.000E+01	2.000E+03	0.000E+00	1.000E+01	5.696E+03	2.240E+02
PSDF	EL STR	171	21742(7)	1.214175E+02	2.230896E+02	1.000E+01	2.000E+03	0.000E+00	1.000E+01	9.008E+02	1.940E+02
PSDF	EL STR	171	21783(3)	5.630962E+02	1.534749E+02	1.000E+01	2.000E+03	0.000E+00	1.000E+01	2.469E+04	1.520E+02
PSDF	EL STR	171	21783(5)	3.912635E+02	1.698199E+02	1.000E+01	2.000E+03	0.000E+00	1.000E+01	1.020E+04	1.520E+02
PSDF	EL STR	171	21783(7)	5.366968E+01	2.650088E+02	1.000E+01	2.000E+03	0.000E+00	1.000E+01	1.322E+02	2.440E+02
PSDF	EL STR	171	21713(3)	5.511408E+02	1.562948E+02	1.000E+01	2.000E+03	0.000E+00	1.000E+01	2.234E+04	1.520E+02
PSDF	EL STR	171	21713(5)	3.848788E+02	1.711763E+02	1.000E+01	2.000E+03	0.000E+00	1.000E+01	9.263E+03	1.520E+02

X AXIS PSD RESPONSE

X Y - O U T P U T S U M M A R Y (A U T O O R P S D F)

PLOT TYPE	CURVE TYPE	FRAME NO.	CURVE ID.	RMS VALUE	NO. POSITIVE CROSSINGS	XMIN FOR ALL DATA	XMAX FOR ALL DATA	YMIN FOR ALL DATA	X FOR YMIN	YMAX FOR ALL DATA	X FOR* YMAX
PSDF	EL STR	171	21713(7)	5.214331E+01	3.551379E+02	1.000E+01	2.000E+03	0.000E+00	1.000E+01	4.152E+01	3.560E+02
PSDF	EL STR	171	21041(3)	9.259720E+02	3.054890E+02	1.000E+01	2.000E+03	0.000E+00	1.000E+01	1.732E+04	1.021E+02
PSDF	EL STR	171	21041(5)	7.609277E+02	2.665888E+02	1.000E+01	2.000E+03	0.000E+00	1.000E+01	2.080E+04	1.021E+02
PSDF	EL STR	171	21041(7)	1.801502E+02	3.513195E+02	1.000E+01	2.000E+03	0.000E+00	1.000E+01	7.539E+02	1.028E+02
PSDF	EL STR	171	21042(3)	1.183532E+03	3.107404E+02	1.000E+01	2.000E+03	0.000E+00	1.000E+01	2.314E+04	2.440E+02
PSDF	EL STR	171	21042(5)	2.990603E+02	2.231876E+02	1.000E+01	2.000E+03	0.000E+00	1.000E+01	1.038E+04	1.028E+02
PSDF	EL STR	171	21042(7)	4.888113E+02	2.317144E+02	1.000E+01	2.000E+03	0.000E+00	1.000E+01	1.110E+04	1.021E+02
PSDF	EL STR	171	21043(3)	3.523058E+02	2.979752E+02	1.000E+01	2.000E+03	0.000E+00	1.000E+01	2.364E+03	2.440E+02
PSDF	EL STR	171	21043(5)	1.697968E+02	3.023719E+02	1.000E+01	2.000E+03	0.000E+00	1.000E+01	6.177E+02	2.440E+02
PSDF	EL STR	171	21043(7)	2.327908E+02	2.599337E+02	1.000E+01	2.000E+03	0.000E+00	1.000E+01	2.176E+03	1.151E+02
PSDF	EL STR	171	21044(3)	1.123949E+02	2.356856E+02	1.000E+01	2.000E+03	0.000E+00	1.000E+01	4.135E+02	1.021E+02
PSDF	EL STR	171	21044(5)	1.472249E+02	1.795098E+02	1.000E+01	2.000E+03	0.000E+00	1.000E+01	1.992E+03	1.151E+02
PSDF	EL STR	171	21044(7)	2.368370E+02	2.310698E+02	1.000E+01	2.000E+03	0.000E+00	1.000E+01	2.879E+03	1.021E+02
PSDF	EL STR	171	21045(3)	3.148099E+02	2.154028E+02	1.000E+01	2.000E+03	0.000E+00	1.000E+01	1.025E+04	1.151E+02
PSDF	EL STR	171	21045(5)	1.025458E+03	1.401983E+02	1.000E+01	2.000E+03	0.000E+00	1.000E+01	1.216E+05	1.151E+02
PSDF	EL STR	171	21045(7)	1.076088E+03	1.429959E+02	1.000E+01	2.000E+03	0.000E+00	1.000E+01	1.238E+05	1.151E+02
PSDF	EL STR	171	21046(3)	9.681328E+02	1.416710E+02	1.000E+01	2.000E+03	0.000E+00	1.000E+01	1.068E+05	1.151E+02
PSDF	EL STR	171	21046(5)	3.978844E+02	2.320923E+02	1.000E+01	2.000E+03	0.000E+00	1.000E+01	1.226E+04	1.028E+02
PSDF	EL STR	171	21046(7)	8.905927E+02	1.430672E+02	1.000E+01	2.000E+03	0.000E+00	1.000E+01	8.223E+04	1.151E+02
PSDF	EL STR	171	21047(3)	6.938457E+01	3.050643E+02	1.000E+01	2.000E+03	0.000E+00	1.000E+01	9.217E+01	1.420E+02
PSDF	EL STR	171	21047(5)	2.090618E+02	2.237057E+02	1.000E+01	2.000E+03	0.000E+00	1.000E+01	1.970E+03	1.410E+02
PSDF	EL STR	171	21047(7)	2.460573E+02	1.794948E+02	1.000E+01	2.000E+03	0.000E+00	1.000E+01	4.851E+03	1.151E+02
PSDF	EL STR	171	21048(3)	4.625330E+02	1.778039E+02	1.000E+01	2.000E+03	0.000E+00	1.000E+01	8.999E+03	1.400E+02
PSDF	EL STR	171	21048(5)	6.022848E+02	1.439870E+02	1.000E+01	2.000E+03	0.000E+00	1.000E+01	3.198E+04	1.151E+02

X AXIS PSD RESPONSE

X Y - O U T P U T S U M M A R Y (A U T O O R P S D F)

PLOT TYPE	CURVE TYPE	FRAME NO.	CURVE ID.	RMS VALUE	NO. POSITIVE CROSSINGS	XMIN FOR ALL DATA	XMAX FOR ALL DATA	YMIN FOR ALL DATA	X FOR YMIN	YMAX FOR ALL DATA	X FOR* YMAX
PSDF	EL STR	171	21048(7)	3.384849E+02	1.731629E+02	1.000E+01	2.000E+03	0.000E+00	1.000E+01	7.830E+03	1.151E+02
PSDF	EL STR	171	21049(3)	1.229122E+03	1.880659E+02	1.000E+01	2.000E+03	0.000E+00	1.000E+01	7.531E+04	1.400E+02
PSDF	EL STR	171	21049(5)	7.035329E+02	1.567901E+02	1.000E+01	2.000E+03	0.000E+00	1.000E+01	4.554E+04	1.028E+02
PSDF	EL STR	171	21049(7)	7.969819E+02	1.491904E+02	1.000E+01	2.000E+03	0.000E+00	1.000E+01	5.456E+04	1.028E+02
PSDF	EL STR	171	21050(3)	9.446201E+02	1.840841E+02	1.000E+01	2.000E+03	0.000E+00	1.000E+01	3.401E+04	1.151E+02
PSDF	EL STR	171	21050(5)	7.784211E+02	1.843594E+02	1.000E+01	2.000E+03	0.000E+00	1.000E+01	2.773E+04	1.400E+02
PSDF	EL STR	171	21050(7)	2.389019E+02	2.280646E+02	1.000E+01	2.000E+03	0.000E+00	1.000E+01	2.192E+03	1.028E+02
PSDF	EL STR	171	21410(3)	1.464660E+02	3.837765E+02	1.000E+01	2.000E+03	0.000E+00	1.000E+01	4.520E+02	1.021E+02
PSDF	EL STR	171	21410(5)	4.136873E+02	4.431537E+02	1.000E+01	2.000E+03	0.000E+00	1.000E+01	4.169E+03	3.960E+02
PSDF	EL STR	171	21410(7)	1.474102E+02	3.480032E+02	1.000E+01	2.000E+03	0.000E+00	1.000E+01	4.015E+02	1.151E+02
PSDF	EL STR	171	21409(3)	3.179986E+02	1.997847E+02	1.000E+01	2.000E+03	0.000E+00	1.000E+01	5.186E+03	1.151E+02
PSDF	EL STR	171	21409(5)	1.779768E+02	1.785244E+02	1.000E+01	2.000E+03	0.000E+00	1.000E+01	1.679E+03	1.028E+02
PSDF	EL STR	171	21409(7)	1.276399E+02	2.914626E+02	1.000E+01	2.000E+03	0.000E+00	1.000E+01	5.550E+02	2.460E+02
PSDF	EL STR	171	21425(3)	2.985599E+02	2.166779E+02	1.000E+01	2.000E+03	0.000E+00	1.000E+01	3.773E+03	1.028E+02
PSDF	EL STR	171	21425(5)	2.232119E+02	1.943275E+02	1.000E+01	2.000E+03	0.000E+00	1.000E+01	2.815E+03	1.028E+02
PSDF	EL STR	171	21425(7)	3.309869E+02	2.118829E+02	1.000E+01	2.000E+03	0.000E+00	1.000E+01	3.774E+03	1.028E+02
PSDF	EL STR	171	21426(3)	1.978250E+02	3.979491E+02	1.000E+01	2.000E+03	0.000E+00	1.000E+01	9.043E+02	1.410E+02
PSDF	EL STR	171	21426(5)	2.359292E+02	1.426075E+02	1.000E+01	2.000E+03	0.000E+00	1.000E+01	5.990E+03	1.028E+02
PSDF	EL STR	171	21426(7)	9.437485E+01	3.219076E+02	1.000E+01	2.000E+03	0.000E+00	1.000E+01	2.526E+02	2.440E+02
PSDF	EL STR	171	21427(3)	2.605378E+02	4.024006E+02	1.000E+01	2.000E+03	0.000E+00	1.000E+01	8.311E+02	1.420E+02
PSDF	EL STR	171	21427(5)	9.953678E+01	2.869745E+02	1.000E+01	2.000E+03	0.000E+00	1.000E+01	5.451E+02	1.151E+02
PSDF	EL STR	171	21427(7)	7.025250E+01	3.147707E+02	1.000E+01	2.000E+03	0.000E+00	1.000E+01	1.356E+02	2.440E+02
PSDF	EL STR	171	21428(3)	4.288069E+02	3.046462E+02	1.000E+01	2.000E+03	0.000E+00	1.000E+01	8.687E+03	1.151E+02
PSDF	EL STR	171	21428(5)	4.312123E+02	1.520390E+02	1.000E+01	2.000E+03	0.000E+00	1.000E+01	1.985E+04	1.151E+02

X AXIS PSD RESPONSE

X Y - O U T P U T S U M M A R Y (A U T O O R P S D F)

PLOT TYPE	CURVE TYPE	FRAME NO.	CURVE ID.	RMS VALUE	NO. POSITIVE CROSSINGS	XMIN FOR ALL DATA	XMAX FOR ALL DATA	YMIN FOR ALL DATA	X FOR YMIN	YMAX FOR ALL DATA	X FOR* YMAX
PSDF	EL STR	171	21428(7)	1.262326E+02	2.197339E+02	1.000E+01	2.000E+03	0.000E+00	1.000E+01	9.510E+02	1.151E+02
PSDF	EL STR	171	21429(3)	4.199239E+02	2.858005E+02	1.000E+01	2.000E+03	0.000E+00	1.000E+01	8.845E+03	1.151E+02
PSDF	EL STR	171	21429(5)	3.367289E+02	1.583755E+02	1.000E+01	2.000E+03	0.000E+00	1.000E+01	1.191E+04	1.151E+02
PSDF	EL STR	171	21429(7)	1.772305E+02	1.669581E+02	1.000E+01	2.000E+03	0.000E+00	1.000E+01	3.590E+03	1.151E+02
PSDF	EL STR	171	21430(3)	2.247648E+02	3.873764E+02	1.000E+01	2.000E+03	0.000E+00	1.000E+01	1.126E+03	3.960E+02
PSDF	EL STR	171	21430(5)	3.309431E+02	1.436218E+02	1.000E+01	2.000E+03	0.000E+00	1.000E+01	1.245E+04	1.151E+02
PSDF	EL STR	171	21430(7)	7.299471E+01	3.950747E+02	1.000E+01	2.000E+03	0.000E+00	1.000E+01	7.607E+01	1.420E+02
PSDF	EL STR	171	21431(3)	2.244671E+02	3.927454E+02	1.000E+01	2.000E+03	0.000E+00	1.000E+01	1.555E+03	3.960E+02
PSDF	EL STR	171	21431(5)	1.264036E+02	2.887755E+02	1.000E+01	2.000E+03	0.000E+00	1.000E+01	5.967E+02	1.021E+02
PSDF	EL STR	171	21431(7)	9.280026E+01	3.632283E+02	1.000E+01	2.000E+03	0.000E+00	1.000E+01	3.177E+02	1.151E+02
PSDF	EL STR	171	21432(3)	1.321999E+02	4.180653E+02	1.000E+01	2.000E+03	0.000E+00	1.000E+01	5.008E+02	3.960E+02
PSDF	EL STR	171	21432(5)	3.393256E+02	4.080674E+02	1.000E+01	2.000E+03	0.000E+00	1.000E+01	3.201E+03	3.960E+02
PSDF	EL STR	171	21432(7)	1.862018E+02	3.322150E+02	1.000E+01	2.000E+03	0.000E+00	1.000E+01	7.487E+02	1.021E+02
PSDF	EL STR	171	21241(3)	6.396899E+02	1.571249E+02	1.000E+01	2.000E+03	0.000E+00	1.000E+01	3.136E+04	1.028E+02
PSDF	EL STR	171	21241(5)	6.734772E+02	1.983927E+02	1.000E+01	2.000E+03	0.000E+00	1.000E+01	2.472E+04	1.028E+02
PSDF	EL STR	171	21241(7)	5.130749E+02	1.772445E+02	1.000E+01	2.000E+03	0.000E+00	1.000E+01	9.986E+03	1.028E+02
PSDF	EL STR	171	21242(3)	1.318374E+03	1.458236E+02	1.000E+01	2.000E+03	0.000E+00	1.000E+01	1.664E+05	1.028E+02
PSDF	EL STR	171	21242(5)	1.290180E+03	1.234587E+02	1.000E+01	2.000E+03	0.000E+00	1.000E+01	2.354E+05	1.028E+02
PSDF	EL STR	171	21242(7)	5.993908E+02	1.902573E+02	1.000E+01	2.000E+03	0.000E+00	1.000E+01	1.550E+04	1.410E+02
PSDF	EL STR	171	21243(3)	4.608743E+02	1.593304E+02	1.000E+01	2.000E+03	0.000E+00	1.000E+01	1.417E+04	1.028E+02
PSDF	EL STR	171	21243(5)	3.203294E+02	1.900343E+02	1.000E+01	2.000E+03	0.000E+00	1.000E+01	4.365E+03	1.410E+02
PSDF	EL STR	171	21243(7)	3.272383E+02	1.804817E+02	1.000E+01	2.000E+03	0.000E+00	1.000E+01	6.103E+03	1.028E+02
PSDF	EL STR	171	21244(3)	8.210871E+01	2.610653E+02	1.000E+01	2.000E+03	0.000E+00	1.000E+01	1.844E+02	1.940E+02
PSDF	EL STR	171	21244(5)	3.024724E+02	1.820776E+02	1.000E+01	2.000E+03	0.000E+00	1.000E+01	4.778E+03	1.028E+02

X AXIS PSD RESPONSE

X Y - O U T P U T S U M M A R Y (A U T O O R P S D F)

PLOT TYPE	CURVE TYPE	FRAME NO.	CURVE ID.	RMS VALUE	NO. POSITIVE CROSSINGS	XMIN FOR ALL DATA	XMAX FOR ALL DATA	YMIN FOR ALL DATA	X FOR YMIN	YMAX FOR ALL DATA	X FOR* YMAX
PSDF	EL STR	171	21244(7)	1.395736E+02	2.535994E+02	1.000E+01	2.000E+03	0.000E+00	1.000E+01	6.918E+02	1.028E+02
PSDF	EL STR	171	21245(3)	4.127716E+02	1.642139E+02	1.000E+01	2.000E+03	0.000E+00	1.000E+01	1.110E+04	1.151E+02
PSDF	EL STR	171	21245(5)	5.006369E+02	1.643801E+02	1.000E+01	2.000E+03	0.000E+00	1.000E+01	2.589E+04	1.028E+02
PSDF	EL STR	171	21245(7)	2.889864E+02	2.434933E+02	1.000E+01	2.000E+03	0.000E+00	1.000E+01	2.483E+03	1.021E+02
PSDF	EL STR	171	21246(3)	2.197406E+02	1.984140E+02	1.000E+01	2.000E+03	0.000E+00	1.000E+01	2.456E+03	1.151E+02
PSDF	EL STR	171	21246(5)	2.275335E+02	2.381961E+02	1.000E+01	2.000E+03	0.000E+00	1.000E+01	1.614E+03	1.410E+02
PSDF	EL STR	171	21246(7)	4.240962E+02	1.740070E+02	1.000E+01	2.000E+03	0.000E+00	1.000E+01	1.132E+04	1.028E+02
PSDF	EL STR	171	21247(3)	9.119454E+01	2.226514E+02	1.000E+01	2.000E+03	0.000E+00	1.000E+01	4.581E+02	1.028E+02
PSDF	EL STR	171	21247(5)	3.093769E+02	1.329990E+02	1.000E+01	2.000E+03	0.000E+00	1.000E+01	1.043E+04	1.028E+02
PSDF	EL STR	171	21247(7)	1.915901E+02	2.054418E+02	1.000E+01	2.000E+03	0.000E+00	1.000E+01	1.989E+03	1.028E+02
PSDF	EL STR	171	21248(3)	4.505594E+02	2.421098E+02	1.000E+01	2.000E+03	0.000E+00	1.000E+01	9.762E+03	1.021E+02
PSDF	EL STR	171	21248(5)	5.298672E+02	1.408629E+02	1.000E+01	2.000E+03	0.000E+00	1.000E+01	3.336E+04	1.028E+02
PSDF	EL STR	171	21248(7)	3.001231E+02	2.463947E+02	1.000E+01	2.000E+03	0.000E+00	1.000E+01	4.713E+03	1.028E+02
PSDF	EL STR	171	21249(3)	1.571115E+03	2.328365E+02	1.000E+01	2.000E+03	0.000E+00	1.000E+01	1.154E+05	1.021E+02
PSDF	EL STR	171	21249(5)	4.069009E+02	1.594308E+02	1.000E+01	2.000E+03	0.000E+00	1.000E+01	1.963E+04	1.028E+02
PSDF	EL STR	171	21249(7)	4.598816E+02	2.349633E+02	1.000E+01	2.000E+03	0.000E+00	1.000E+01	5.848E+03	1.410E+02
PSDF	EL STR	171	21250(3)	1.131158E+03	1.806782E+02	1.000E+01	2.000E+03	0.000E+00	1.000E+01	1.018E+05	1.028E+02
PSDF	EL STR	171	21250(5)	1.247865E+03	2.292866E+02	1.000E+01	2.000E+03	0.000E+00	1.000E+01	8.554E+04	1.021E+02
PSDF	EL STR	171	21250(7)	3.627732E+02	2.382286E+02	1.000E+01	2.000E+03	0.000E+00	1.000E+01	1.086E+04	1.028E+02
PSDF	EL STR	171	21339(3)	1.179966E+03	1.619188E+02	1.000E+01	2.000E+03	0.000E+00	1.000E+01	6.555E+04	1.410E+02
PSDF	EL STR	171	21339(5)	1.819079E+02	1.953279E+02	1.000E+01	2.000E+03	0.000E+00	1.000E+01	2.057E+03	1.410E+02
PSDF	EL STR	171	21339(7)	4.361013E+02	1.823298E+02	1.000E+01	2.000E+03	0.000E+00	1.000E+01	9.434E+03	1.028E+02
PSDF	EL STR	171	21340(3)	2.786297E+02	2.640149E+02	1.000E+01	2.000E+03	0.000E+00	1.000E+01	4.721E+03	1.028E+02
PSDF	EL STR	171	21340(5)	7.406895E+02	3.638512E+02	1.000E+01	2.000E+03	0.000E+00	1.000E+01	9.825E+03	3.900E+02

X AXIS PSD RESPONSE

X Y - O U T P U T S U M M A R Y (A U T O O R P S D F)

PLOT TYPE	CURVE TYPE	FRAME NO.	CURVE ID.	RMS VALUE	NO. POSITIVE CROSSINGS	XMIN FOR ALL DATA	XMAX FOR ALL DATA	YMIN FOR ALL DATA	X FOR YMIN	YMAX FOR ALL DATA	X FOR* YMAX
PSDF	EL STR	171	21340(7)	7.064252E+01	3.615824E+02	1.000E+01	2.000E+03	0.000E+00	1.000E+01	2.028E+02	1.151E+02
PSDF	EL STR	171	21355(3)	1.388179E+03	1.732967E+02	1.000E+01	2.000E+03	0.000E+00	1.000E+01	8.561E+04	1.410E+02
PSDF	EL STR	171	21355(5)	5.768414E+02	1.915004E+02	1.000E+01	2.000E+03	0.000E+00	1.000E+01	1.895E+04	1.410E+02
PSDF	EL STR	171	21355(7)	2.957117E+02	2.197230E+02	1.000E+01	2.000E+03	0.000E+00	1.000E+01	3.583E+03	1.410E+02
PSDF	EL STR	171	21356(3)	1.850746E+02	3.295301E+02	1.000E+01	2.000E+03	0.000E+00	1.000E+01	1.277E+03	1.410E+02
PSDF	EL STR	171	21356(5)	3.542745E+02	1.269297E+02	1.000E+01	2.000E+03	0.000E+00	1.000E+01	1.659E+04	1.028E+02
PSDF	EL STR	171	21356(7)	1.714054E+02	2.590252E+02	1.000E+01	2.000E+03	0.000E+00	1.000E+01	6.469E+02	1.410E+02
PSDF	EL STR	171	21357(3)	2.786637E+02	3.321985E+02	1.000E+01	2.000E+03	0.000E+00	1.000E+01	1.885E+03	1.410E+02
PSDF	EL STR	171	21357(5)	2.623846E+02	1.582613E+02	1.000E+01	2.000E+03	0.000E+00	1.000E+01	7.373E+03	1.028E+02
PSDF	EL STR	171	21357(7)	1.114055E+02	3.280119E+02	1.000E+01	2.000E+03	0.000E+00	1.000E+01	2.443E+02	3.560E+02
PSDF	EL STR	171	21358(3)	5.611297E+02	2.795911E+02	1.000E+01	2.000E+03	0.000E+00	1.000E+01	1.134E+04	1.028E+02
PSDF	EL STR	171	21358(5)	2.362144E+02	2.405067E+02	1.000E+01	2.000E+03	0.000E+00	1.000E+01	2.048E+03	1.400E+02
PSDF	EL STR	171	21358(7)	1.260715E+02	3.271015E+02	1.000E+01	2.000E+03	0.000E+00	1.000E+01	3.174E+02	3.560E+02
PSDF	EL STR	171	21359(3)	5.189102E+02	3.013718E+02	1.000E+01	2.000E+03	0.000E+00	1.000E+01	9.046E+03	1.028E+02
PSDF	EL STR	171	21359(5)	2.180747E+02	2.573476E+02	1.000E+01	2.000E+03	0.000E+00	1.000E+01	1.835E+03	1.028E+02
PSDF	EL STR	171	21359(7)	2.052471E+02	2.059746E+02	1.000E+01	2.000E+03	0.000E+00	1.000E+01	2.575E+03	1.028E+02
PSDF	EL STR	171	21360(3)	3.312776E+02	3.875712E+02	1.000E+01	2.000E+03	0.000E+00	1.000E+01	2.778E+03	3.900E+02
PSDF	EL STR	171	21360(5)	2.174330E+02	2.124749E+02	1.000E+01	2.000E+03	0.000E+00	1.000E+01	4.692E+03	1.028E+02
PSDF	EL STR	171	21360(7)	1.998159E+02	2.204583E+02	1.000E+01	2.000E+03	0.000E+00	1.000E+01	2.545E+03	1.028E+02
PSDF	EL STR	171	21361(3)	3.901566E+02	3.872467E+02	1.000E+01	2.000E+03	0.000E+00	1.000E+01	4.299E+03	3.880E+02
PSDF	EL STR	171	21361(5)	2.487500E+02	2.063221E+02	1.000E+01	2.000E+03	0.000E+00	1.000E+01	6.511E+03	1.028E+02
PSDF	EL STR	171	21361(7)	2.584313E+02	2.357086E+02	1.000E+01	2.000E+03	0.000E+00	1.000E+01	3.964E+03	1.028E+02
PSDF	EL STR	171	21362(3)	4.127157E+02	2.734407E+02	1.000E+01	2.000E+03	0.000E+00	1.000E+01	1.005E+04	1.028E+02
PSDF	EL STR	171	21362(5)	8.590131E+02	3.361353E+02	1.000E+01	2.000E+03	0.000E+00	1.000E+01	1.226E+04	1.021E+02

X AXIS PSD RESPONSE

X Y - O U T P U T S U M M A R Y (A U T O O R P S D F)

PLOT TYPE	CURVE TYPE	FRAME NO.	CURVE ID.	RMS VALUE	NO. POSITIVE CROSSINGS	XMIN FOR ALL DATA	XMAX FOR ALL DATA	YMIN FOR ALL DATA	X FOR YMIN	YMAX FOR ALL DATA	X FOR* YMAX
PSDF	EL STR	171	21362(7)	4.853646E+02	2.453676E+02	1.000E+01	2.000E+03	0.000E+00	1.000E+01	1.191E+04	1.028E+02
PSDF	EL STR	171	22742(3)	1.544029E+02	2.605547E+02	1.000E+01	2.000E+03	0.000E+00	1.000E+01	1.769E+03	1.028E+02
PSDF	EL STR	171	22742(5)	1.358799E+02	1.581745E+02	1.000E+01	2.000E+03	0.000E+00	1.000E+01	1.539E+03	1.151E+02
PSDF	EL STR	171	22742(7)	2.842393E+02	2.300742E+02	1.000E+01	2.000E+03	0.000E+00	1.000E+01	5.474E+03	1.151E+02
PSDF	EL STR	171	22743(3)	7.603673E+01	2.167149E+02	1.000E+01	2.000E+03	0.000E+00	1.000E+01	4.745E+02	1.151E+02
PSDF	EL STR	171	22743(5)	3.680782E+01	4.594899E+02	1.000E+01	2.000E+03	0.000E+00	1.000E+01	1.950E+01	4.980E+02
PSDF	EL STR	171	22743(7)	2.248040E+02	1.645837E+02	1.000E+01	2.000E+03	0.000E+00	1.000E+01	5.182E+03	1.151E+02
PSDF	EL STR	171	22744(3)	6.837053E+01	1.657183E+02	1.000E+01	2.000E+03	0.000E+00	1.000E+01	3.545E+02	1.151E+02
PSDF	EL STR	171	22744(5)	4.122973E+01	3.757957E+02	1.000E+01	2.000E+03	0.000E+00	1.000E+01	4.346E+01	1.021E+02
PSDF	EL STR	171	22744(7)	1.772704E+02	1.644688E+02	1.000E+01	2.000E+03	0.000E+00	1.000E+01	3.225E+03	1.151E+02
PSDF	EL STR	171	22745(3)	2.865436E+02	1.761389E+02	1.000E+01	2.000E+03	0.000E+00	1.000E+01	9.353E+03	1.151E+02
PSDF	EL STR	171	22745(5)	2.156907E+01	3.467601E+02	1.000E+01	2.000E+03	0.000E+00	1.000E+01	2.965E+01	1.028E+02
PSDF	EL STR	171	22745(7)	3.204389E+02	1.311821E+02	1.000E+01	2.000E+03	0.000E+00	1.000E+01	1.204E+04	1.151E+02
PSDF	EL STR	171	22840(3)	1.550710E+03	1.785213E+02	1.000E+01	2.000E+03	0.000E+00	1.000E+01	2.745E+05	1.151E+02
PSDF	EL STR	171	22840(5)	6.122313E+02	4.706432E+02	1.000E+01	2.000E+03	0.000E+00	1.000E+01	9.361E+03	4.920E+02
PSDF	EL STR	171	22840(7)	1.087890E+03	1.735600E+02	1.000E+01	2.000E+03	0.000E+00	1.000E+01	1.281E+05	1.151E+02
PSDF	EL STR	171	22801(3)	2.662603E+02	3.821883E+02	1.000E+01	2.000E+03	0.000E+00	1.000E+01	1.599E+03	1.151E+02
PSDF	EL STR	171	22801(5)	9.463784E+02	1.908514E+02	1.000E+01	2.000E+03	0.000E+00	1.000E+01	9.353E+04	1.028E+02
PSDF	EL STR	171	22801(7)	1.105027E+03	2.527942E+02	1.000E+01	2.000E+03	0.000E+00	1.000E+01	1.213E+05	1.028E+02

*** USER WARNING MESSAGE 979, AN XY-OUTPUT REQUEST FOR POINT OR ELEMENT ID 951
-STRE- CURVE IS BEING PASSED OVER. THE ID COULD NOT BE FOUND IN DATA BLOCK 102

*** USER WARNING MESSAGE 979, AN XY-OUTPUT REQUEST FOR POINT OR ELEMENT ID 951
-STRE- CURVE IS BEING PASSED OVER. THE ID COULD NOT BE FOUND IN DATA BLOCK 102

DELETED ORIGINAL REFLECTOR ELEMENTS

*** USER WARNING MESSAGE 979, AN XY-OUTPUT REQUEST FOR POINT OR ELEMENT ID 951
-STRE- CURVE IS BEING PASSED OVER. THE ID COULD NOT BE FOUND IN DATA BLOCK 102

*** USER WARNING MESSAGE 979, AN XY-OUTPUT REQUEST FOR POINT OR ELEMENT ID 952
-STRE- CURVE IS BEING PASSED OVER. THE ID COULD NOT BE FOUND IN DATA BLOCK 102

*** USER WARNING MESSAGE 979, AN XY-OUTPUT REQUEST FOR POINT OR ELEMENT ID 952
-STRE- CURVE IS BEING PASSED OVER. THE ID COULD NOT BE FOUND IN DATA BLOCK 102

*** USER WARNING MESSAGE 979, AN XY-OUTPUT REQUEST FOR POINT OR ELEMENT ID 952
-STRE- CURVE IS BEING PASSED OVER. THE ID COULD NOT BE FOUND IN DATA BLOCK 102

```
*** USER WARNING MESSAGE 979, AN XY-OUTPUT REQUEST FOR POINT OR ELEMENT ID       955
    -STRE- CURVE IS BEING PASSED OVER.  THE ID COULD NOT BE FOUND IN DATA BLOCK       102

*** USER WARNING MESSAGE 979, AN XY-OUTPUT REQUEST FOR POINT OR ELEMENT ID       955
    -STRE- CURVE IS BEING PASSED OVER.  THE ID COULD NOT BE FOUND IN DATA BLOCK       102

*** USER WARNING MESSAGE 979, AN XY-OUTPUT REQUEST FOR POINT OR ELEMENT ID       955
    -STRE- CURVE IS BEING PASSED OVER.  THE ID COULD NOT BE FOUND IN DATA BLOCK       102

*** USER WARNING MESSAGE 979, AN XY-OUTPUT REQUEST FOR POINT OR ELEMENT ID       993
    -STRE- CURVE IS BEING PASSED OVER.  THE ID COULD NOT BE FOUND IN DATA BLOCK       102

*** USER WARNING MESSAGE 979, AN XY-OUTPUT REQUEST FOR POINT OR ELEMENT ID       993
    -STRE- CURVE IS BEING PASSED OVER.  THE ID COULD NOT BE FOUND IN DATA BLOCK       102

*** USER WARNING MESSAGE 979, AN XY-OUTPUT REQUEST FOR POINT OR ELEMENT ID       993
    -STRE- CURVE IS BEING PASSED OVER.  THE ID COULD NOT BE FOUND IN DATA BLOCK       102

 PSDF EL STR   171     2541(  2)    2.804284E+03  1.710943E+02  1.000E+01  2.000E+03  0.000E+00  1.000E+01  5.785E+05  1.640E+02

 PSDF EL STR   171     2541(  6)    3.449992E+01  2.091287E+02  1.000E+01  2.000E+03  0.000E+00  1.000E+01  7.828E+01  1.151E+02

 PSDF EL STR   171     2541( 12)    2.801404E+03  1.705908E+02  1.000E+01  2.000E+03  0.000E+00  1.000E+01  5.778E+05  1.640E+02

 PSDF EL STR   171     2597(  2)    1.533903E+03  2.822407E+02  1.000E+01  2.000E+03  0.000E+00  1.000E+01  6.168E+04  1.028E+02

 PSDF EL STR   171     2597(  6)    5.193169E+01  1.872335E+02  1.000E+01  2.000E+03  0.000E+00  1.000E+01  2.120E+02  1.028E+02
```

X AXIS PSD RESPONSE

X Y - O U T P U T S U M M A R Y (A U T O O R P S D F)

PLOT TYPE	CURVE TYPE	FRAME NO.	CURVE ID.	RMS VALUE	NO. POSITIVE CROSSINGS	XMIN FOR ALL DATA	XMAX FOR ALL DATA	YMIN FOR ALL DATA	X FOR YMIN	YMAX FOR ALL DATA	X FOR* YMAX
PSDF	EL STR	171	2597(12)	1.193667E+03	3.298292E+02	1.000E+01	2.000E+03	0.000E+00	1.000E+01	3.161E+04	3.160E+02

*** USER WARNING MESSAGE 979, AN XY-OUTPUT REQUEST FOR POINT OR ELEMENT ID 2558
-STRE- CURVE IS BEING PASSED OVER. THE ID COULD NOT BE FOUND IN DATA BLOCK 102

*** USER WARNING MESSAGE 979, AN XY-OUTPUT REQUEST FOR POINT OR ELEMENT ID 2558
-STRE- CURVE IS BEING PASSED OVER. THE ID COULD NOT BE FOUND IN DATA BLOCK 102

*** USER WARNING MESSAGE 979, AN XY-OUTPUT REQUEST FOR POINT OR ELEMENT ID 2558
-STRE- CURVE IS BEING PASSED OVER. THE ID COULD NOT BE FOUND IN DATA BLOCK 102

PSDF	EL STR	171	2700(2)	1.784111E+03	3.116441E+02	1.000E+01	2.000E+03	0.000E+00	1.000E+01	7.500E+04	3.160E+02
PSDF	EL STR	171	2700(6)	4.043644E+01	1.696541E+02	1.000E+01	2.000E+03	0.000E+00	1.000E+01	1.065E+02	1.151E+02
PSDF	EL STR	171	2700(12)	8.804818E+02	1.767297E+02	1.000E+01	2.000E+03	0.000E+00	1.000E+01	4.655E+04	1.680E+02
PSDF	EL STR	171	2713(2)	1.414160E+03	1.296496E+02	1.000E+01	2.000E+03	0.000E+00	1.000E+01	1.424E+05	1.220E+02
PSDF	EL STR	171	2713(6)	6.006390E+01	1.612183E+02	1.000E+01	2.000E+03	0.000E+00	1.000E+01	4.143E+02	1.159E+02
PSDF	EL STR	171	2713(12)	6.195143E+02	2.421012E+02	1.000E+01	2.000E+03	0.000E+00	1.000E+01	3.540E+04	1.159E+02
PSDF	EL STR	171	2716(2)	1.437528E+03	1.287693E+02	1.000E+01	2.000E+03	0.000E+00	1.000E+01	1.489E+05	1.167E+02
PSDF	EL STR	171	2716(6)	1.103465E+02	1.865984E+02	1.000E+01	2.000E+03	0.000E+00	1.000E+01	3.844E+02	1.021E+02
PSDF	EL STR	171	2716(12)	1.767462E+02	2.025146E+02	1.000E+01	2.000E+03	0.000E+00	1.000E+01	7.532E+02	1.680E+02
PSDF	EL STR	171	2819(2)	8.930363E+01	2.227693E+02	1.000E+01	2.000E+03	0.000E+00	1.000E+01	4.727E+02	1.151E+02
PSDF	EL STR	171	2819(6)	1.011653E+02	2.136785E+02	1.000E+01	2.000E+03	0.000E+00	1.000E+01	3.537E+02	1.151E+02
PSDF	EL STR	171	2819(12)	1.755316E+02	1.270953E+02	1.000E+01	2.000E+03	0.000E+00	1.000E+01	3.810E+03	1.028E+02
PSDF	EL STR	171	3302(2)	5.136978E+02	3.161397E+02	1.000E+01	2.000E+03	0.000E+00	1.000E+01	1.016E+04	1.820E+02
PSDF	EL STR	171	3302(6)	1.496902E+01	1.991409E+02	1.000E+01	2.000E+03	0.000E+00	1.000E+01	2.239E+01	1.028E+02
PSDF	EL STR	171	3302(12)	1.930475E+02	5.485369E+02	1.000E+01	2.000E+03	0.000E+00	1.000E+01	4.443E+02	4.740E+02
PSDF	EL STR	171	3304(2)	3.301439E+02	3.925000E+02	1.000E+01	2.000E+03	0.000E+00	1.000E+01	4.960E+03	1.820E+02
PSDF	EL STR	171	3304(6)	9.437661E+01	1.999495E+02	1.000E+01	2.000E+03	0.000E+00	1.000E+01	1.045E+03	1.028E+02
PSDF	EL STR	171	3304(12)	3.626642E+02	3.852198E+02	1.000E+01	2.000E+03	0.000E+00	1.000E+01	3.523E+03	2.800E+02
PSDF	EL STR	171	3307(2)	2.599157E+02	2.794703E+02	1.000E+01	2.000E+03	0.000E+00	1.000E+01	2.117E+03	1.021E+02
PSDF	EL STR	171	3307(6)	5.318472E+01	1.525213E+02	1.000E+01	2.000E+03	0.000E+00	1.000E+01	2.282E+02	1.151E+02
PSDF	EL STR	171	3307(12)	5.081515E+01	2.783775E+02	1.000E+01	2.000E+03	0.000E+00	1.000E+01	1.566E+02	1.151E+02
PSDF	EL STR	171	9980(2)	1.626592E+03	2.418611E+02	1.000E+01	2.000E+03	0.000E+00	1.000E+01	1.055E+05	2.420E+02
PSDF	EL STR	171	9980(6)	3.439886E+01	1.470565E+02	1.000E+01	2.000E+03	0.000E+00	1.000E+01	1.443E+02	1.028E+02

X AXIS PSD RESPONSE

X Y - O U T P U T S U M M A R Y (A U T O O R P S D F)

PLOT TYPE	CURVE TYPE	FRAME NO.	CURVE ID.	RMS VALUE	NO. POSITIVE CROSSINGS	XMIN FOR ALL DATA	XMAX FOR ALL DATA	YMIN FOR ALL DATA	X FOR YMIN	YMAX FOR ALL DATA	X FOR* YMAX
PSDF	EL STR	171	9980(12)	6.266224E+02	2.468131E+02	1.000E+01	2.000E+03	0.000E+00	1.000E+01	1.447E+04	2.400E+02
PSDF	EL STR	171	9982(2)	9.065229E+02	2.477299E+02	1.000E+01	2.000E+03	0.000E+00	1.000E+01	3.231E+04	2.420E+02
PSDF	EL STR	171	9982(6)	1.668320E+02	2.005699E+02	1.000E+01	2.000E+03	0.000E+00	1.000E+01	2.434E+03	1.028E+02
PSDF	EL STR	171	9982(12)	1.091950E+03	2.547133E+02	1.000E+01	2.000E+03	0.000E+00	1.000E+01	4.379E+04	2.420E+02
PSDF	EL STR	171	9999(2)	2.857364E+03	1.562099E+02	1.000E+01	2.000E+03	0.000E+00	1.000E+01	9.389E+05	1.028E+02
PSDF	EL STR	171	9999(6)	9.996535E+01	2.047935E+02	1.000E+01	2.000E+03	0.000E+00	1.000E+01	9.412E+02	1.151E+02
PSDF	EL STR	171	9999(12)	1.592660E+03	1.559408E+02	1.000E+01	2.000E+03	0.000E+00	1.000E+01	2.918E+05	1.028E+02
PSDF	EL STR	171	23180(2)	2.878830E+03	1.145358E+02	1.000E+01	2.000E+03	0.000E+00	1.000E+01	8.689E+05	1.021E+02
PSDF	EL STR	171	23180(6)	2.204069E+02	1.461709E+02	1.000E+01	2.000E+03	0.000E+00	1.000E+01	2.640E+03	1.151E+02
PSDF	EL STR	171	23180(12)	2.756828E+03	1.032035E+02	1.000E+01	2.000E+03	0.000E+00	1.000E+01	8.308E+05	1.021E+02
PSDF	EL STR	171	23181(2)	6.895189E+03	1.032035E+02	1.000E+01	2.000E+03	0.000E+00	1.000E+01	5.197E+06	1.021E+02
PSDF	EL STR	171	23181(6)	2.037937E+02	1.456554E+02	1.000E+01	2.000E+03	0.000E+00	1.000E+01	2.260E+03	1.151E+02
PSDF	EL STR	171	23181(12)	2.262581E-04	1.081241E+02	1.000E+01	2.000E+03	0.000E+00	1.000E+01	6.988E-09	1.028E+02
PSDF	EL FOR	171	22813(2)	2.992174E+01	1.273033E+02	1.000E+01	2.000E+03	0.000E+00	1.000E+01	1.079E+02	1.151E+02
PSDF	EL FOR	171	22813(3)	8.732822E+01	1.367306E+02	1.000E+01	2.000E+03	0.000E+00	1.000E+01	8.916E+02	1.151E+02
PSDF	EL FOR	171	22813(5)	5.641526E-02	1.129855E+02	1.000E+01	2.000E+03	0.000E+00	1.000E+01	2.672E-04	1.028E+02
PSDF	EL FOR	171	22813(6)	1.320838E-01	1.099603E+02	1.000E+01	2.000E+03	0.000E+00	1.000E+01	1.883E-03	1.028E+02
PSDF	EL FOR	171	22813(8)	2.152166E-02	1.198985E+02	1.000E+01	2.000E+03	0.000E+00	1.000E+01	5.038E-05	1.151E+02
PSDF	EL FOR	171	22813(9)	7.400561E-01	1.089218E+02	1.000E+01	2.000E+03	0.000E+00	1.000E+01	6.549E-02	1.028E+02
PSDF	EL FOR	171	22815(2)	1.712640E+01	1.611862E+02	1.000E+01	2.000E+03	0.000E+00	1.000E+01	3.064E+01	1.151E+02
PSDF	EL FOR	171	22815(3)	9.081293E+01	1.272452E+02	1.000E+01	2.000E+03	0.000E+00	1.000E+01	9.591E+02	1.151E+02
PSDF	EL FOR	171	22815(5)	3.451001E-02	2.729533E+02	1.000E+01	2.000E+03	0.000E+00	1.000E+01	8.014E-05	1.028E+02
PSDF	EL FOR	171	22815(6)	2.530358E-01	1.121718E+02	1.000E+01	2.000E+03	0.000E+00	1.000E+01	6.681E-03	1.028E+02
PSDF	EL FOR	171	22815(8)	1.243389E-01	1.352721E+02	1.000E+01	2.000E+03	0.000E+00	1.000E+01	1.411E-03	1.151E+02

X AXIS PSD RESPONSE

X Y - O U T P U T S U M M A R Y (A U T O O R P S D F)

PLOT TYPE	CURVE TYPE	FRAME NO.	CURVE ID.	RMS VALUE	NO. POSITIVE CROSSINGS	XMIN FOR ALL DATA	XMAX FOR ALL DATA	YMIN FOR ALL DATA	X FOR YMIN	YMAX FOR ALL DATA	X FOR* YMAX
PSDF	EL FOR	171	22815(9)	3.141499E-01	1.209235E+02	1.000E+01	2.000E+03	0.000E+00	1.000E+01	1.115E-02	1.028E+02
PSDF	EL FOR	171	22806(2)	1.990558E+01	1.911677E+02	1.000E+01	2.000E+03	0.000E+00	1.000E+01	4.397E+01	1.028E+02
PSDF	EL FOR	171	22806(3)	1.990355E+01	2.447678E+02	1.000E+01	2.000E+03	0.000E+00	1.000E+01	2.614E+01	1.028E+02
PSDF	EL FOR	171	22806(5)	8.340826E-02	1.172422E+02	1.000E+01	2.000E+03	0.000E+00	1.000E+01	6.952E-04	1.028E+02
PSDF	EL FOR	171	22806(6)	2.518359E-01	1.122443E+02	1.000E+01	2.000E+03	0.000E+00	1.000E+01	6.620E-03	1.028E+02
PSDF	EL FOR	171	22806(8)	1.004393E-02	1.814911E+02	1.000E+01	2.000E+03	0.000E+00	1.000E+01	1.371E-05	1.028E+02
PSDF	EL FOR	171	22806(9)	2.050059E-01	2.585411E+02	1.000E+01	2.000E+03	0.000E+00	1.000E+01	3.210E-03	1.028E+02
PSDF	EL FOR	171	22805(2)	1.101079E+01	2.314814E+02	1.000E+01	2.000E+03	0.000E+00	1.000E+01	1.140E+01	1.151E+02
PSDF	EL FOR	171	22805(3)	5.662001E+01	2.048711E+02	1.000E+01	2.000E+03	0.000E+00	1.000E+01	3.557E+02	1.028E+02
PSDF	EL FOR	171	22805(5)	3.878915E-02	3.950048E+02	1.000E+01	2.000E+03	0.000E+00	1.000E+01	3.442E-05	4.360E+02
PSDF	EL FOR	171	22805(6)	7.069863E-02	1.141248E+02	1.000E+01	2.000E+03	0.000E+00	1.000E+01	5.138E-04	1.028E+02
PSDF	EL FOR	171	22805(8)	8.196189E-02	1.833167E+02	1.000E+01	2.000E+03	0.000E+00	1.000E+01	7.674E-04	1.028E+02
PSDF	EL FOR	171	22805(9)	1.316523E-01	3.596717E+02	1.000E+01	2.000E+03	0.000E+00	1.000E+01	4.457E-04	1.028E+02
PSDF	EL FOR	171	22801(2)	6.256185E+00	2.274764E+02	1.000E+01	2.000E+03	0.000E+00	1.000E+01	3.466E+00	1.151E+02
PSDF	EL FOR	171	22801(3)	4.663745E+01	1.929364E+02	1.000E+01	2.000E+03	0.000E+00	1.000E+01	2.146E+02	1.028E+02
PSDF	EL FOR	171	22801(5)	9.766266E-02	4.165732E+02	1.000E+01	2.000E+03	0.000E+00	1.000E+01	2.694E-04	4.360E+02
PSDF	EL FOR	171	22801(6)	3.649239E-02	3.465872E+02	1.000E+01	2.000E+03	0.000E+00	1.000E+01	4.658E-05	1.151E+02
PSDF	EL FOR	171	22801(8)	1.915254E-01	1.834826E+02	1.000E+01	2.000E+03	0.000E+00	1.000E+01	2.522E-03	1.028E+02
PSDF	EL FOR	171	22801(9)	5.022584E-02	2.356107E+02	1.000E+01	2.000E+03	0.000E+00	1.000E+01	1.587E-04	1.028E+02
PSDF	EL FOR	171	22742(2)	1.849596E+01	2.503285E+02	1.000E+01	2.000E+03	0.000E+00	1.000E+01	3.123E+01	1.028E+02
PSDF	EL FOR	171	22742(3)	9.439888E+00	1.644417E+02	1.000E+01	2.000E+03	0.000E+00	1.000E+01	7.748E+00	1.151E+02
PSDF	EL FOR	171	22742(5)	6.682003E-02	1.765402E+02	1.000E+01	2.000E+03	0.000E+00	1.000E+01	5.374E-04	1.028E+02
PSDF	EL FOR	171	22742(6)	7.036738E-02	1.665406E+02	1.000E+01	2.000E+03	0.000E+00	1.000E+01	3.846E-04	1.028E+02
PSDF	EL FOR	171	22742(8)	4.942236E-02	2.838580E+02	1.000E+01	2.000E+03	0.000E+00	1.000E+01	2.227E-04	1.028E+02

X AXIS PSD RESPONSE

X Y - O U T P U T S U M M A R Y (A U T O O R P S D F)

PLOT TYPE	CURVE TYPE	FRAME NO.	CURVE ID.	RMS VALUE	NO. POSITIVE CROSSINGS	XMIN FOR ALL DATA	XMAX FOR ALL DATA	YMIN FOR ALL DATA	X FOR YMIN	YMAX FOR ALL DATA	X FOR* YMAX
PSDF	EL FOR	171	22742(9)	6.867233E-02	2.977974E+02	1.000E+01	2.000E+03	0.000E+00	1.000E+01	4.127E-04	1.028E+02
PSDF	EL FOR	171	22743(2)	4.797996E+00	2.210643E+02	1.000E+01	2.000E+03	0.000E+00	1.000E+01	1.521E+00	1.151E+02
PSDF	EL FOR	171	22743(3)	4.210247E+00	4.661917E+02	1.000E+01	2.000E+03	0.000E+00	1.000E+01	2.651E-01	4.980E+02
PSDF	EL FOR	171	22743(5)	5.721813E-02	2.081948E+02	1.000E+01	2.000E+03	0.000E+00	1.000E+01	2.505E-04	1.151E+02
PSDF	EL FOR	171	22743(6)	2.460944E-02	3.048717E+02	1.000E+01	2.000E+03	0.000E+00	1.000E+01	3.446E-05	1.028E+02
PSDF	EL FOR	171	22743(8)	7.094046E-02	3.330197E+02	1.000E+01	2.000E+03	0.000E+00	1.000E+01	3.361E-04	1.028E+02
PSDF	EL FOR	171	22743(9)	3.848450E-02	3.729805E+02	1.000E+01	2.000E+03	0.000E+00	1.000E+01	5.374E-05	1.151E+02
PSDF	EL FOR	171	22744(2)	2.183876E+00	2.105692E+02	1.000E+01	2.000E+03	0.000E+00	1.000E+01	2.728E-01	1.151E+02
PSDF	EL FOR	171	22744(3)	5.048400E+00	3.215520E+02	1.000E+01	2.000E+03	0.000E+00	1.000E+01	1.658E+00	1.151E+02
PSDF	EL FOR	171	22744(5)	8.208308E-02	1.621952E+02	1.000E+01	2.000E+03	0.000E+00	1.000E+01	5.142E-04	1.151E+02
PSDF	EL FOR	171	22744(6)	5.745134E-02	1.695988E+02	1.000E+01	2.000E+03	0.000E+00	1.000E+01	3.004E-04	1.028E+02
PSDF	EL FOR	171	22744(8)	7.442586E-02	3.362059E+02	1.000E+01	2.000E+03	0.000E+00	1.000E+01	3.474E-04	1.028E+02
PSDF	EL FOR	171	22744(9)	1.936111E-01	2.205082E+02	1.000E+01	2.000E+03	0.000E+00	1.000E+01	3.489E-03	1.028E+02
PSDF	EL FOR	171	22745(2)	2.946681E+01	1.711467E+02	1.000E+01	2.000E+03	0.000E+00	1.000E+01	1.000E+02	1.151E+02
PSDF	EL FOR	171	22745(3)	2.370655E+00	3.887925E+02	1.000E+01	2.000E+03	0.000E+00	1.000E+01	1.274E-01	1.021E+02
PSDF	EL FOR	171	22745(5)	1.727103E-02	2.084389E+02	1.000E+01	2.000E+03	0.000E+00	1.000E+01	3.040E-05	1.151E+02
PSDF	EL FOR	171	22745(6)	1.773683E-02	2.756867E+02	1.000E+01	2.000E+03	0.000E+00	1.000E+01	1.932E-05	1.151E+02
PSDF	EL FOR	171	22745(8)	1.319979E-01	1.739050E+02	1.000E+01	2.000E+03	0.000E+00	1.000E+01	1.992E-03	1.151E+02
PSDF	EL FOR	171	22745(9)	3.569631E-02	1.874147E+02	1.000E+01	2.000E+03	0.000E+00	1.000E+01	1.363E-04	1.151E+02
PSDF	EL FOR	171	22840(2)	7.638337E+01	1.588176E+02	1.000E+01	2.000E+03	0.000E+00	1.000E+01	6.861E+02	1.151E+02
PSDF	EL FOR	171	22840(3)	1.064915E+01	1.880220E+02	1.000E+01	2.000E+03	0.000E+00	1.000E+01	6.112E+00	1.159E+02
PSDF	EL FOR	171	22840(5)	7.894889E-02	4.908879E+02	1.000E+01	2.000E+03	0.000E+00	1.000E+01	1.831E-04	4.820E+02
PSDF	EL FOR	171	22840(6)	2.329103E-01	4.926697E+02	1.000E+01	2.000E+03	0.000E+00	1.000E+01	1.556E-03	4.820E+02
PSDF	EL FOR	171	22840(8)	2.608990E-01	4.994740E+02	1.000E+01	2.000E+03	0.000E+00	1.000E+01	1.800E-03	4.920E+02

X AXIS PSD RESPONSE

X Y - O U T P U T S U M M A R Y (A U T O O R P S D F)

PLOT TYPE	CURVE TYPE	FRAME NO.	CURVE ID.	RMS VALUE	NO. POSITIVE CROSSINGS	XMIN FOR ALL DATA	XMAX FOR ALL DATA	YMIN FOR ALL DATA	X FOR YMIN	YMAX FOR ALL DATA	X FOR* YMAX
PSDF	EL FOR	171	22840(9)	6.061665E-02	3.482373E+02	1.000E+01	2.000E+03	0.000E+00	1.000E+01	2.220E-04	1.151E+02
PSDF	EL FOR	171	22842(2)	7.911256E+01	1.607738E+02	1.000E+01	2.000E+03	0.000E+00	1.000E+01	7.329E+02	1.151E+02
PSDF	EL FOR	171	22842(3)	4.633676E+00	2.606824E+02	1.000E+01	2.000E+03	0.000E+00	1.000E+01	1.463E+00	1.028E+02
PSDF	EL FOR	171	22842(5)	4.656118E-02	5.009762E+02	1.000E+01	2.000E+03	0.000E+00	1.000E+01	5.745E-05	4.920E+02
PSDF	EL FOR	171	22842(6)	1.627599E-01	4.923636E+02	1.000E+01	2.000E+03	0.000E+00	1.000E+01	7.639E-04	4.820E+02
PSDF	EL FOR	171	22842(8)	2.933386E-01	4.931481E+02	1.000E+01	2.000E+03	0.000E+00	1.000E+01	2.139E-03	4.920E+02
PSDF	EL FOR	171	22842(9)	2.592835E-02	4.188974E+02	1.000E+01	2.000E+03	0.000E+00	1.000E+01	2.631E-05	1.151E+02
PSDF	EL FOR	171	22844(2)	3.669320E+01	1.790909E+02	1.000E+01	2.000E+03	0.000E+00	1.000E+01	1.505E+02	1.151E+02
PSDF	EL FOR	171	22844(3)	2.206301E+01	1.552784E+02	1.000E+01	2.000E+03	0.000E+00	1.000E+01	5.442E+01	1.151E+02
PSDF	EL FOR	171	22844(5)	1.408232E-02	4.541616E+02	1.000E+01	2.000E+03	0.000E+00	1.000E+01	5.628E-06	4.800E+02
PSDF	EL FOR	171	22844(6)	2.307551E-02	4.817296E+02	1.000E+01	2.000E+03	0.000E+00	1.000E+01	1.633E-05	4.820E+02
PSDF	EL FOR	171	22844(8)	4.547706E-02	4.660699E+02	1.000E+01	2.000E+03	0.000E+00	1.000E+01	5.247E-05	4.820E+02
PSDF	EL FOR	171	22844(9)	4.686504E-02	4.947599E+02	1.000E+01	2.000E+03	0.000E+00	1.000E+01	6.200E-05	4.840E+02
PSDF	EL FOR	171	22838(2)	1.659271E+01	2.321976E+02	1.000E+01	2.000E+03	0.000E+00	1.000E+01	1.798E+01	1.151E+02
PSDF	EL FOR	171	22838(3)	1.922445E+01	1.156912E+02	1.000E+01	2.000E+03	0.000E+00	1.000E+01	5.310E+01	1.028E+02
PSDF	EL FOR	171	22838(5)	6.726355E-03	2.515436E+02	1.000E+01	2.000E+03	0.000E+00	1.000E+01	3.062E-06	1.151E+02
PSDF	EL FOR	171	22838(6)	3.534343E-03	3.905843E+02	1.000E+01	2.000E+03	0.000E+00	1.000E+01	5.729E-07	1.028E+02
PSDF	EL FOR	171	22838(8)	1.284564E-01	3.113969E+02	1.000E+01	2.000E+03	0.000E+00	1.000E+01	8.721E-04	1.151E+02
PSDF	EL FOR	171	22838(9)	3.963916E-02	3.236838E+02	1.000E+01	2.000E+03	0.000E+00	1.000E+01	7.303E-05	1.151E+02
PSDF	EL FOR	171	22832(2)	1.502046E+01	3.070525E+02	1.000E+01	2.000E+03	0.000E+00	1.000E+01	3.548E+00	2.260E+02
PSDF	EL FOR	171	22832(3)	2.322339E+01	1.174119E+02	1.000E+01	2.000E+03	0.000E+00	1.000E+01	7.539E+01	1.028E+02
PSDF	EL FOR	171	22832(5)	8.703059E-03	2.463632E+02	1.000E+01	2.000E+03	0.000E+00	1.000E+01	3.371E-06	1.159E+02
PSDF	EL FOR	171	22832(6)	1.047539E-02	1.485538E+02	1.000E+01	2.000E+03	0.000E+00	1.000E+01	1.532E-05	1.028E+02
PSDF	EL FOR	171	22832(8)	1.371415E-01	2.388559E+02	1.000E+01	2.000E+03	0.000E+00	1.000E+01	1.270E-03	1.151E+02

X AXIS PSD RESPONSE

X Y - O U T P U T S U M M A R Y (A U T O O R P S D F)

PLOT TYPE	CURVE TYPE	FRAME NO.	CURVE ID.	RMS VALUE	NO. POSITIVE CROSSINGS	XMIN FOR ALL DATA	XMAX FOR ALL DATA	YMIN FOR ALL DATA	X FOR YMIN	YMAX FOR ALL DATA	X FOR* YMAX
PSDF	EL FOR	171	22832(9)	7.026379E-03	4.174391E+02	1.000E+01	2.000E+03	0.000E+00	1.000E+01	1.359E-06	1.151E+02
PSDF	EL FOR	171	22774(2)	2.444036E+01	1.359070E+02	1.000E+01	2.000E+03	0.000E+00	1.000E+01	7.639E+01	1.028E+02
PSDF	EL FOR	171	22774(3)	3.139645E+00	2.134716E+02	1.000E+01	2.000E+03	0.000E+00	1.000E+01	2.270E-01	1.151E+02
PSDF	EL FOR	171	22774(5)	4.742274E-02	1.801977E+02	1.000E+01	2.000E+03	0.000E+00	1.000E+01	2.380E-04	1.151E+02
PSDF	EL FOR	171	22774(6)	1.590068E-02	1.874455E+02	1.000E+01	2.000E+03	0.000E+00	1.000E+01	1.954E-05	1.151E+02
PSDF	EL FOR	171	22774(8)	2.399154E-01	1.307326E+02	1.000E+01	2.000E+03	0.000E+00	1.000E+01	7.273E-03	1.028E+02
PSDF	EL FOR	171	22774(9)	1.855935E-01	1.755598E+02	1.000E+01	2.000E+03	0.000E+00	1.000E+01	2.559E-03	1.028E+02
PSDF	EL FOR	171	20021(2)	1.816489E+01	1.369236E+02	1.000E+01	2.000E+03	0.000E+00	1.000E+01	2.807E+01	1.151E+02
PSDF	EL FOR	171	20021(3)	6.448263E+00	1.296374E+02	1.000E+01	2.000E+03	0.000E+00	1.000E+01	5.870E+00	1.028E+02
PSDF	EL FOR	171	20021(5)	1.265756E-02	1.541818E+02	1.000E+01	2.000E+03	0.000E+00	1.000E+01	1.106E-05	1.028E+02
PSDF	EL FOR	171	20021(6)	1.258065E-02	2.320511E+02	1.000E+01	2.000E+03	0.000E+00	1.000E+01	8.681E-06	1.028E+02
PSDF	EL FOR	171	20021(8)	1.368149E-02	1.808107E+02	1.000E+01	2.000E+03	0.000E+00	1.000E+01	1.575E-05	1.028E+02
PSDF	EL FOR	171	20021(9)	3.620125E-02	1.748006E+02	1.000E+01	2.000E+03	0.000E+00	1.000E+01	9.317E-05	1.028E+02
PSDF	EL FOR	171	20020(2)	2.147565E+01	1.478211E+02	1.000E+01	2.000E+03	0.000E+00	1.000E+01	4.715E+01	1.151E+02
PSDF	EL FOR	171	20020(3)	2.486106E+01	1.154512E+02	1.000E+01	2.000E+03	0.000E+00	1.000E+01	8.419E+01	1.028E+02
PSDF	EL FOR	171	20020(5)	1.841221E-02	1.322545E+02	1.000E+01	2.000E+03	0.000E+00	1.000E+01	2.714E-05	1.028E+02
PSDF	EL FOR	171	20020(6)	8.031582E-03	2.044028E+02	1.000E+01	2.000E+03	0.000E+00	1.000E+01	4.393E-06	1.028E+02
PSDF	EL FOR	171	20020(8)	1.004614E-02	1.984850E+02	1.000E+01	2.000E+03	0.000E+00	1.000E+01	5.837E-06	1.021E+02
PSDF	EL FOR	171	20020(9)	1.559089E-02	1.894306E+02	1.000E+01	2.000E+03	0.000E+00	1.000E+01	1.562E-05	1.151E+02
PSDF	EL FOR	171	2071(2)	8.931422E+00	1.183559E+02	1.000E+01	2.000E+03	0.000E+00	1.000E+01	1.163E+01	1.028E+02
PSDF	EL FOR	171	2071(3)	3.476698E+00	1.630935E+02	1.000E+01	2.000E+03	0.000E+00	1.000E+01	1.111E+00	1.151E+02
PSDF	EL FOR	171	2071(5)	1.382580E-02	1.533969E+02	1.000E+01	2.000E+03	0.000E+00	1.000E+01	1.411E-05	1.160E+02
PSDF	EL FOR	171	2071(6)	4.907202E-03	3.305521E+02	1.000E+01	2.000E+03	0.000E+00	1.000E+01	7.218E-07	1.151E+02
PSDF	EL FOR	171	2071(8)	3.149010E-03	3.232047E+02	1.000E+01	2.000E+03	0.000E+00	1.000E+01	2.325E-07	1.236E+02

X AXIS PSD RESPONSE

X Y - O U T P U T S U M M A R Y (A U T O O R P S D F)

PLOT TYPE	CURVE TYPE	FRAME NO.	CURVE ID.	RMS VALUE	NO. POSITIVE CROSSINGS	XMIN FOR ALL DATA	XMAX FOR ALL DATA	YMIN FOR ALL DATA	X FOR YMIN	YMAX FOR ALL DATA	X FOR* YMAX
PSDF	EL FOR	171	2071(9)	4.492930E-03	2.358525E+02	1.000E+01	2.000E+03	0.000E+00	1.000E+01	1.555E-06	1.028E+02
PSDF	EL FOR	171	2070(2)	8.528233E+00	1.190380E+02	1.000E+01	2.000E+03	0.000E+00	1.000E+01	6.783E+00	1.028E+02
PSDF	EL FOR	171	2070(3)	4.773277E+00	1.333705E+02	1.000E+01	2.000E+03	0.000E+00	1.000E+01	2.585E+00	1.151E+02
PSDF	EL FOR	171	2070(5)	7.378376E-03	2.842295E+02	1.000E+01	2.000E+03	0.000E+00	1.000E+01	3.057E-06	1.220E+02
PSDF	EL FOR	171	2070(6)	4.937345E-03	3.119608E+02	1.000E+01	2.000E+03	0.000E+00	1.000E+01	1.084E-06	1.160E+02
PSDF	EL FOR	171	2070(8)	4.604556E-03	3.110771E+02	1.000E+01	2.000E+03	0.000E+00	1.000E+01	1.723E-06	1.160E+02
PSDF	EL FOR	171	2070(9)	3.822464E-03	2.397034E+02	1.000E+01	2.000E+03	0.000E+00	1.000E+01	6.923E-07	1.028E+02
PSDF	EL FOR	171	20018(2)	3.996962E+01	1.308168E+02	1.000E+01	2.000E+03	0.000E+00	1.000E+01	1.821E+02	1.151E+02
PSDF	EL FOR	171	20018(3)	5.884986E+00	1.330528E+02	1.000E+01	2.000E+03	0.000E+00	1.000E+01	3.811E+00	1.151E+02
PSDF	EL FOR	171	20018(5)	7.397383E-03	2.182519E+02	1.000E+01	2.000E+03	0.000E+00	1.000E+01	2.425E-06	1.028E+02
PSDF	EL FOR	171	20018(6)	6.257494E-03	3.957222E+02	1.000E+01	2.000E+03	0.000E+00	1.000E+01	1.318E-06	1.028E+02
PSDF	EL FOR	171	20018(8)	4.099130E-03	2.473167E+02	1.000E+01	2.000E+03	0.000E+00	1.000E+01	8.453E-07	1.028E+02
PSDF	EL FOR	171	20018(9)	6.446755E-03	3.115997E+02	1.000E+01	2.000E+03	0.000E+00	1.000E+01	2.543E-06	1.028E+02
PSDF	EL FOR	171	20019(2)	6.918083E+01	1.308309E+02	1.000E+01	2.000E+03	0.000E+00	1.000E+01	5.355E+02	1.151E+02
PSDF	EL FOR	171	20019(3)	5.807088E+00	1.344754E+02	1.000E+01	2.000E+03	0.000E+00	1.000E+01	3.883E+00	1.151E+02
PSDF	EL FOR	171	20019(5)	9.547015E-03	1.763991E+02	1.000E+01	2.000E+03	0.000E+00	1.000E+01	4.746E-06	1.028E+02
PSDF	EL FOR	171	20019(6)	2.716907E-03	1.235293E+02	1.000E+01	2.000E+03	0.000E+00	1.000E+01	1.085E-06	1.028E+02
PSDF	EL FOR	171	20019(8)	6.244693E-03	2.213678E+02	1.000E+01	2.000E+03	0.000E+00	1.000E+01	2.141E-06	1.151E+02
PSDF	EL FOR	171	20019(9)	1.010881E-01	1.740229E+02	1.000E+01	2.000E+03	0.000E+00	1.000E+01	9.698E-04	1.151E+02
PSDF	EL FOR	171	2049(2)	7.481053E+00	1.451073E+02	1.000E+01	2.000E+03	0.000E+00	1.000E+01	3.808E+00	1.028E+02
PSDF	EL FOR	171	2049(3)	3.112477E+01	1.334506E+02	1.000E+01	2.000E+03	0.000E+00	1.000E+01	1.169E+02	1.151E+02
PSDF	EL FOR	171	2049(5)	2.249642E-02	2.132218E+02	1.000E+01	2.000E+03	0.000E+00	1.000E+01	3.244E-05	1.160E+02
PSDF	EL FOR	171	2049(6)	2.191729E-02	1.426986E+02	1.000E+01	2.000E+03	0.000E+00	1.000E+01	3.266E-05	1.151E+02
PSDF	EL FOR	171	2049(8)	4.492309E-02	3.270936E+02	1.000E+01	2.000E+03	0.000E+00	1.000E+01	1.452E-04	1.151E+02

X AXIS PSD RESPONSE

X Y - O U T P U T S U M M A R Y (A U T O O R P S D F)

PLOT TYPE	CURVE TYPE	FRAME NO.	CURVE ID.	RMS VALUE	NO. POSITIVE CROSSINGS	XMIN FOR ALL DATA	XMAX FOR ALL DATA	YMIN FOR ALL DATA	X FOR YMIN	YMAX FOR ALL DATA	X FOR* YMAX
PSDF	EL FOR	171	2049(9)	1.015782E-02	2.118320E+02	1.000E+01	2.000E+03	0.000E+00	1.000E+01	1.139E-05	1.151E+02
PSDF	EL FOR	171	2050(2)	8.968943E+00	1.257202E+02	1.000E+01	2.000E+03	0.000E+00	1.000E+01	9.182E+00	1.151E+02
PSDF	EL FOR	171	2050(3)	8.744938E+00	1.596712E+02	1.000E+01	2.000E+03	0.000E+00	1.000E+01	7.010E+00	1.028E+02
PSDF	EL FOR	171	2050(5)	2.314617E-02	2.434203E+02	1.000E+01	2.000E+03	0.000E+00	1.000E+01	4.977E-05	1.151E+02
PSDF	EL FOR	171	2050(6)	4.639652E-02	1.390335E+02	1.000E+01	2.000E+03	0.000E+00	1.000E+01	2.316E-04	1.151E+02
PSDF	EL FOR	171	2050(8)	1.064569E-01	3.952809E+02	1.000E+01	2.000E+03	0.000E+00	1.000E+01	3.834E-04	1.151E+02
PSDF	EL FOR	171	2050(9)	9.305052E-03	3.661165E+02	1.000E+01	2.000E+03	0.000E+00	1.000E+01	6.001E-06	1.151E+02
PSDF	EL FOR	171	2051(2)	5.962364E+00	1.490153E+02	1.000E+01	2.000E+03	0.000E+00	1.000E+01	3.270E+00	1.151E+02
PSDF	EL FOR	171	2051(3)	3.008277E+00	3.155188E+02	1.000E+01	2.000E+03	0.000E+00	1.000E+01	2.501E-01	1.151E+02
PSDF	EL FOR	171	2051(5)	4.576339E-02	1.661337E+02	1.000E+01	2.000E+03	0.000E+00	1.000E+01	1.959E-04	1.151E+02
PSDF	EL FOR	171	2051(6)	4.076813E-02	1.402995E+02	1.000E+01	2.000E+03	0.000E+00	1.000E+01	1.739E-04	1.151E+02
PSDF	EL FOR	171	2051(8)	1.472302E-02	4.460461E+02	1.000E+01	2.000E+03	0.000E+00	1.000E+01	7.669E-06	1.021E+02
PSDF	EL FOR	171	2051(9)	7.925111E-03	1.955891E+02	1.000E+01	2.000E+03	0.000E+00	1.000E+01	6.475E-06	1.151E+02
PSDF	EL FOR	171	2052(2)	3.283589E+00	2.253812E+02	1.000E+01	2.000E+03	0.000E+00	1.000E+01	5.155E-01	1.028E+02
PSDF	EL FOR	171	2052(3)	2.493844E+01	1.485131E+02	1.000E+01	2.000E+03	0.000E+00	1.000E+01	7.944E+01	1.028E+02
PSDF	EL FOR	171	2052(5)	4.676923E-02	1.687209E+02	1.000E+01	2.000E+03	0.000E+00	1.000E+01	1.401E-04	1.151E+02
PSDF	EL FOR	171	2052(6)	1.407550E-02	2.101872E+02	1.000E+01	2.000E+03	0.000E+00	1.000E+01	1.032E-05	1.151E+02
PSDF	EL FOR	171	2052(8)	5.744559E-02	3.101427E+02	1.000E+01	2.000E+03	0.000E+00	1.000E+01	2.374E-04	1.151E+02
PSDF	EL FOR	171	2052(9)	9.324785E-03	1.398222E+02	1.000E+01	2.000E+03	0.000E+00	1.000E+01	8.150E-06	1.151E+02
PSDF	EL FOR	171	20024(2)	4.767002E+01	1.451130E+02	1.000E+01	2.000E+03	0.000E+00	1.000E+01	2.949E+02	1.028E+02
PSDF	EL FOR	171	20024(3)	3.759261E+00	1.751633E+02	1.000E+01	2.000E+03	0.000E+00	1.000E+01	1.528E+00	1.028E+02
PSDF	EL FOR	171	20024(5)	1.195387E-02	2.085095E+02	1.000E+01	2.000E+03	0.000E+00	1.000E+01	9.244E-06	1.021E+02
PSDF	EL FOR	171	20024(6)	2.918890E-03	2.049812E+02	1.000E+01	2.000E+03	0.000E+00	1.000E+01	2.928E-07	1.160E+02
PSDF	EL FOR	171	20024(8)	7.892041E-03	2.006439E+02	1.000E+01	2.000E+03	0.000E+00	1.000E+01	5.018E-06	1.151E+02

X AXIS PSD RESPONSE

X Y - O U T P U T S U M M A R Y (A U T O O R P S D F)

PLOT TYPE	CURVE TYPE	FRAME NO.	CURVE ID.	RMS VALUE	NO. POSITIVE CROSSINGS	XMIN FOR ALL DATA	XMAX FOR ALL DATA	YMIN FOR ALL DATA	X FOR YMIN	YMAX FOR ALL DATA	X FOR* YMAX
PSDF	EL FOR	171	20024(9)	1.453036E-01	2.575690E+02	1.000E+01	2.000E+03	0.000E+00	1.000E+01	8.037E-04	1.151E+02
PSDF	EL FOR	171	20025(2)	2.825767E+01	1.466636E+02	1.000E+01	2.000E+03	0.000E+00	1.000E+01	1.032E+02	1.028E+02
PSDF	EL FOR	171	20025(3)	3.125129E+00	2.221379E+02	1.000E+01	2.000E+03	0.000E+00	1.000E+01	4.028E-01	1.151E+02
PSDF	EL FOR	171	20025(5)	1.486867E-02	2.480661E+02	1.000E+01	2.000E+03	0.000E+00	1.000E+01	5.473E-06	1.159E+02
PSDF	EL FOR	171	20025(6)	1.058751E-02	3.074928E+02	1.000E+01	2.000E+03	0.000E+00	1.000E+01	2.494E-06	1.160E+02
PSDF	EL FOR	171	20025(8)	1.485275E-02	2.576397E+02	1.000E+01	2.000E+03	0.000E+00	1.000E+01	1.256E-05	1.940E+02
PSDF	EL FOR	171	20025(9)	1.884861E-02	2.463001E+02	1.000E+01	2.000E+03	0.000E+00	1.000E+01	1.290E-05	1.028E+02
PSDF	EL FOR	171	2226(2)	7.177492E+00	1.315955E+02	1.000E+01	2.000E+03	0.000E+00	1.000E+01	4.717E+00	1.028E+02
PSDF	EL FOR	171	2226(3)	1.985873E+00	1.830077E+02	1.000E+01	2.000E+03	0.000E+00	1.000E+01	2.514E-01	1.159E+02
PSDF	EL FOR	171	2226(5)	1.128281E-02	2.897338E+02	1.000E+01	2.000E+03	0.000E+00	1.000E+01	3.478E-06	1.940E+02
PSDF	EL FOR	171	2226(6)	3.005832E-02	2.348170E+02	1.000E+01	2.000E+03	0.000E+00	1.000E+01	4.330E-05	1.940E+02
PSDF	EL FOR	171	2226(8)	1.442211E-02	2.008931E+02	1.000E+01	2.000E+03	0.000E+00	1.000E+01	1.537E-05	1.940E+02
PSDF	EL FOR	171	2226(9)	1.737031E-02	2.198139E+02	1.000E+01	2.000E+03	0.000E+00	1.000E+01	2.075E-05	1.940E+02
PSDF	EL FOR	171	2227(2)	1.160082E+01	1.364462E+02	1.000E+01	2.000E+03	0.000E+00	1.000E+01	1.753E+01	1.028E+02
PSDF	EL FOR	171	2227(3)	2.537263E+01	1.413924E+02	1.000E+01	2.000E+03	0.000E+00	1.000E+01	7.272E+01	1.151E+02
PSDF	EL FOR	171	2227(5)	1.081897E-02	2.030064E+02	1.000E+01	2.000E+03	0.000E+00	1.000E+01	4.635E-06	1.940E+02
PSDF	EL FOR	171	2227(6)	2.179367E-02	2.290019E+02	1.000E+01	2.000E+03	0.000E+00	1.000E+01	1.727E-05	1.940E+02
PSDF	EL FOR	171	2227(8)	1.164474E-02	2.294998E+02	1.000E+01	2.000E+03	0.000E+00	1.000E+01	7.319E-06	1.940E+02
PSDF	EL FOR	171	2227(9)	1.522088E-02	2.690481E+02	1.000E+01	2.000E+03	0.000E+00	1.000E+01	8.725E-06	1.940E+02
PSDF	EL FOR	171	20023(2)	4.724053E+01	1.397581E+02	1.000E+01	2.000E+03	0.000E+00	1.000E+01	2.560E+02	1.151E+02
PSDF	EL FOR	171	20023(3)	2.698797E+01	1.168938E+02	1.000E+01	2.000E+03	0.000E+00	1.000E+01	9.128E+01	1.028E+02
PSDF	EL FOR	171	20023(5)	1.495762E-02	2.789543E+02	1.000E+01	2.000E+03	0.000E+00	1.000E+01	3.942E-06	1.028E+02
PSDF	EL FOR	171	20023(6)	1.215020E-02	1.549193E+02	1.000E+01	2.000E+03	0.000E+00	1.000E+01	1.782E-05	1.028E+02
PSDF	EL FOR	171	20023(8)	1.316887E-02	2.610649E+02	1.000E+01	2.000E+03	0.000E+00	1.000E+01	6.465E-06	1.940E+02

X AXIS PSD RESPONSE

X Y - O U T P U T S U M M A R Y (A U T O O R P S D F)

PLOT TYPE	CURVE TYPE	FRAME NO.	CURVE ID.	RMS VALUE	NO. POSITIVE CROSSINGS	XMIN FOR ALL DATA	XMAX FOR ALL DATA	YMIN FOR ALL DATA	X FOR YMIN	YMAX FOR ALL DATA	X FOR* YMAX
PSDF	EL FOR	171	20023(9)	8.124739E-02	2.602827E+02	1.000E+01	2.000E+03	0.000E+00	1.000E+01	2.961E-04	1.410E+02
PSDF	EL FOR	171	20022(2)	4.835982E+01	1.427268E+02	1.000E+01	2.000E+03	0.000E+00	1.000E+01	2.664E+02	1.151E+02
PSDF	EL FOR	171	20022(3)	8.020599E+00	1.292772E+02	1.000E+01	2.000E+03	0.000E+00	1.000E+01	7.834E+00	1.028E+02
PSDF	EL FOR	171	20022(5)	1.374023E-02	2.844388E+02	1.000E+01	2.000E+03	0.000E+00	1.000E+01	1.006E-05	1.151E+02
PSDF	EL FOR	171	20022(6)	1.953511E-02	2.908023E+02	1.000E+01	2.000E+03	0.000E+00	1.000E+01	2.695E-05	1.151E+02
PSDF	EL FOR	171	20022(8)	1.387154E-02	3.088079E+02	1.000E+01	2.000E+03	0.000E+00	1.000E+01	4.054E-06	3.560E+02
PSDF	EL FOR	171	20022(9)	1.111867E-01	2.484514E+02	1.000E+01	2.000E+03	0.000E+00	1.000E+01	4.494E-04	1.021E+02
PSDF	EL FOR	171	2092(2)	8.071056E+00	1.178942E+02	1.000E+01	2.000E+03	0.000E+00	1.000E+01	7.198E+00	1.028E+02
PSDF	EL FOR	171	2092(3)	1.184649E+01	1.627790E+02	1.000E+01	2.000E+03	0.000E+00	1.000E+01	1.403E+01	1.151E+02
PSDF	EL FOR	171	2092(5)	2.117245E-02	1.872381E+02	1.000E+01	2.000E+03	0.000E+00	1.000E+01	3.106E-05	1.680E+02
PSDF	EL FOR	171	2092(6)	8.541682E-02	1.739497E+02	1.000E+01	2.000E+03	0.000E+00	1.000E+01	4.959E-04	1.680E+02
PSDF	EL FOR	171	2092(8)	2.288722E-02	1.944117E+02	1.000E+01	2.000E+03	0.000E+00	1.000E+01	3.132E-05	1.021E+02
PSDF	EL FOR	171	2092(9)	3.402176E-02	1.735026E+02	1.000E+01	2.000E+03	0.000E+00	1.000E+01	6.637E-05	1.680E+02
PSDF	EL FOR	171	2091(2)	1.360550E+01	1.308584E+02	1.000E+01	2.000E+03	0.000E+00	1.000E+01	2.435E+01	1.028E+02
PSDF	EL FOR	171	2091(3)	4.477038E+00	2.418079E+02	1.000E+01	2.000E+03	0.000E+00	1.000E+01	9.146E-01	1.021E+02
PSDF	EL FOR	171	2091(5)	2.971812E-02	2.089297E+02	1.000E+01	2.000E+03	0.000E+00	1.000E+01	4.253E-05	1.700E+02
PSDF	EL FOR	171	2091(6)	9.145395E-02	1.731372E+02	1.000E+01	2.000E+03	0.000E+00	1.000E+01	5.155E-04	1.680E+02
PSDF	EL FOR	171	2091(8)	9.077989E-03	1.841929E+02	1.000E+01	2.000E+03	0.000E+00	1.000E+01	6.599E-06	1.028E+02
PSDF	EL FOR	171	2091(9)	2.878400E-02	2.009281E+02	1.000E+01	2.000E+03	0.000E+00	1.000E+01	5.057E-05	1.680E+02
PSDF	EL FOR	171	2090(2)	1.928361E+01	1.216930E+02	1.000E+01	2.000E+03	0.000E+00	1.000E+01	5.142E+01	1.028E+02
PSDF	EL FOR	171	2090(3)	7.042691E+00	1.731469E+02	1.000E+01	2.000E+03	0.000E+00	1.000E+01	3.325E+00	1.028E+02
PSDF	EL FOR	171	2090(5)	2.473125E-02	2.201366E+02	1.000E+01	2.000E+03	0.000E+00	1.000E+01	3.331E-05	1.021E+02
PSDF	EL FOR	171	2090(6)	3.684504E-02	1.596920E+02	1.000E+01	2.000E+03	0.000E+00	1.000E+01	9.563E-05	1.028E+02
PSDF	EL FOR	171	2090(8)	9.967459E-03	1.953069E+02	1.000E+01	2.000E+03	0.000E+00	1.000E+01	8.095E-06	1.028E+02

X AXIS PSD RESPONSE

X Y - O U T P U T S U M M A R Y (A U T O O R P S D F)

PLOT TYPE	CURVE TYPE	FRAME NO.	CURVE ID.	RMS VALUE	NO. POSITIVE CROSSINGS	XMIN FOR ALL DATA	XMAX FOR ALL DATA	YMIN FOR ALL DATA	X FOR YMIN	YMAX FOR ALL DATA	X FOR* YMAX
PSDF	EL FOR	171	2090(9)	1.635058E-02	2.587389E+02	1.000E+01	2.000E+03	0.000E+00	1.000E+01	1.277E-05	1.680E+02
PSDF	EL FOR	171	2089(2)	2.062793E+01	1.209240E+02	1.000E+01	2.000E+03	0.000E+00	1.000E+01	6.046E+01	1.028E+02
PSDF	EL FOR	171	2089(3)	4.360642E+00	1.860092E+02	1.000E+01	2.000E+03	0.000E+00	1.000E+01	6.942E-01	1.410E+02
PSDF	EL FOR	171	2089(5)	1.646348E-02	1.479899E+02	1.000E+01	2.000E+03	0.000E+00	1.000E+01	2.927E-05	1.028E+02
PSDF	EL FOR	171	2089(6)	2.004041E-02	1.507873E+02	1.000E+01	2.000E+03	0.000E+00	1.000E+01	2.976E-05	1.028E+02
PSDF	EL FOR	171	2089(8)	8.120328E-03	3.685263E+02	1.000E+01	2.000E+03	0.000E+00	1.000E+01	1.011E-06	1.236E+02
PSDF	EL FOR	171	2089(9)	7.920125E-03	2.418731E+02	1.000E+01	2.000E+03	0.000E+00	1.000E+01	2.120E-06	1.680E+02
PSDF	EL FOR	171	3266(2)	6.290672E+00	1.697498E+02	1.000E+01	2.000E+03	0.000E+00	1.000E+01	4.640E+00	1.028E+02
PSDF	EL FOR	171	3266(3)	1.070800E+01	1.406775E+02	1.000E+01	2.000E+03	0.000E+00	1.000E+01	1.101E+01	1.151E+02
PSDF	EL FOR	171	3266(5)	1.418948E-02	1.363569E+02	1.000E+01	2.000E+03	0.000E+00	1.000E+01	2.438E-05	1.028E+02
PSDF	EL FOR	171	3266(6)	4.139810E-02	1.648281E+02	1.000E+01	2.000E+03	0.000E+00	1.000E+01	1.454E-04	1.151E+02
PSDF	EL FOR	171	3266(8)	1.666639E-02	1.909671E+02	1.000E+01	2.000E+03	0.000E+00	1.000E+01	2.366E-05	1.028E+02
PSDF	EL FOR	171	3266(9)	4.416051E-02	1.917103E+02	1.000E+01	2.000E+03	0.000E+00	1.000E+01	1.208E-04	1.028E+02
PSDF	EL FOR	171	3268(2)	5.398074E+00	1.450547E+02	1.000E+01	2.000E+03	0.000E+00	1.000E+01	3.450E+00	1.028E+02
PSDF	EL FOR	171	3268(3)	1.804987E+01	1.192669E+02	1.000E+01	2.000E+03	0.000E+00	1.000E+01	4.046E+01	1.028E+02
PSDF	EL FOR	171	3268(5)	6.576150E-02	1.840482E+02	1.000E+01	2.000E+03	0.000E+00	1.000E+01	2.832E-04	1.151E+02
PSDF	EL FOR	171	3268(6)	9.075495E-02	1.499266E+02	1.000E+01	2.000E+03	0.000E+00	1.000E+01	4.446E-04	1.151E+02
PSDF	EL FOR	171	3268(8)	2.851325E-01	1.644761E+02	1.000E+01	2.000E+03	0.000E+00	1.000E+01	4.466E-03	1.028E+02
PSDF	EL FOR	171	3268(9)	5.488415E-02	1.544334E+02	1.000E+01	2.000E+03	0.000E+00	1.000E+01	1.600E-04	1.159E+02
PSDF	EL FOR	171	3271(2)	9.979517E+00	1.274828E+02	1.000E+01	2.000E+03	0.000E+00	1.000E+01	1.057E+01	1.028E+02
PSDF	EL FOR	171	3271(3)	2.660892E+01	1.300565E+02	1.000E+01	2.000E+03	0.000E+00	1.000E+01	8.245E+01	1.151E+02
PSDF	EL FOR	171	3271(5)	1.942254E-02	1.713425E+02	1.000E+01	2.000E+03	0.000E+00	1.000E+01	2.899E-05	1.151E+02
PSDF	EL FOR	171	3271(6)	2.691242E-02	2.686327E+02	1.000E+01	2.000E+03	0.000E+00	1.000E+01	4.899E-05	1.028E+02
PSDF	EL FOR	171	3271(8)	4.330570E-02	1.450700E+02	1.000E+01	2.000E+03	0.000E+00	1.000E+01	2.169E-04	1.028E+02

X AXIS PSD RESPONSE

X Y - O U T P U T S U M M A R Y (A U T O O R P S D F)

PLOT TYPE	CURVE TYPE	FRAME NO.	CURVE ID.	RMS VALUE	NO. POSITIVE CROSSINGS	XMIN FOR ALL DATA	XMAX FOR ALL DATA	YMIN FOR ALL DATA	X FOR YMIN	YMAX FOR ALL DATA	X FOR* YMAX
PSDF	EL FOR	171	3271(9)	2.979843E-01	1.661351E+02	1.000E+01	2.000E+03	0.000E+00	1.000E+01	6.480E-03	1.151E+02
PSDF	EL FOR	171	3273(2)	1.196000E+01	1.243908E+02	1.000E+01	2.000E+03	0.000E+00	1.000E+01	1.704E+01	1.028E+02
PSDF	EL FOR	171	3273(3)	3.479757E+01	1.339824E+02	1.000E+01	2.000E+03	0.000E+00	1.000E+01	8.367E+01	1.159E+02
PSDF	EL FOR	171	3273(5)	5.424523E-02	1.492981E+02	1.000E+01	2.000E+03	0.000E+00	1.000E+01	2.390E-04	1.151E+02
PSDF	EL FOR	171	3273(6)	3.749526E-02	1.196087E+02	1.000E+01	2.000E+03	0.000E+00	1.000E+01	1.953E-04	1.028E+02
PSDF	EL FOR	171	3273(8)	2.572001E-02	2.238299E+02	1.000E+01	2.000E+03	0.000E+00	1.000E+01	3.823E-05	1.151E+02
PSDF	EL FOR	171	3273(9)	8.302453E-02	1.238223E+02	1.000E+01	2.000E+03	0.000E+00	1.000E+01	9.174E-04	1.028E+02

X AXIS PSD RESPONSE
* * * * D B D I C T P R I N T * * * * SUBDMAP = PRTSUM , DMAP STATEMENT NO. 5

* * * * A N A L Y S I S S U M M A R Y T A B L E * * * *

SEID	PEID	PROJ	VERS	APRCH	SEMG	SEMR	SEKR	SELG	SELR	MODES	DYNRED	SOLLIN	PVALID	SOLNL	LOOPID	DESIGN CYCLE	SENSITIVITY
0	0	1	1	' '	T	T	T	T	T	T	F	T	0	F	-1	0	F

SEID = SUPERELEMENT ID.
PEID = PRIMARY SUPERELEMENT ID OF IMAGE SUPERELEMENT.
PROJ = PROJECT ID NUMBER.
VERS = VERSION ID.
APRCH = BLANK FOR STRUCTURAL ANALYSIS. HEAT FOR HEAT TRANSFER ANALYSIS.
SEMG = STIFFNESS AND MASS MATRIX GENERATION STEP.
SEMR = MASS MATRIX REDUCTION STEP (INCLUDES EIGENVALUE SOLUTION FOR MODES).
SEKR = STIFFNESS MATRIX REDUCTION STEP.
SELG = LOAD MATRIX GENERATION STEP.
SELR = LOAD MATRIX REDUCTION STEP.
MODES = T (TRUE) IF NORMAL MODES OR BUCKLING MODES CALCULATED.
DYNRED = T (TRUE) MEANS GENERALIZED DYNAMIC AND/OR COMPONENT MODE REDUCTION PERFORMED.
SOLLIN = T (TRUE) IF LINEAR SOLUTION EXISTS IN DATABASE.
PVALID = P-DISTRIBUTION ID OF P-VALUE FOR P-ELEMENTS
LOOPID = THE LAST LOOPID VALUE USED IN THE NONLINEAR ANALYSIS. USEFUL FOR RESTARTS.
SOLNL = T (TRUE) IF NONLINEAR SOLUTION EXISTS IN DATABASE.
DESIGN CYCLE = THE LAST DESIGN CYCLE (ONLY VALID IN OPTIMIZATION).
SENSITIVITY = SENSITIVITY MATRIX GENERATION FLAG.

X AXIS PSD RESPONSE

X Y - O U T P U T S U M M A R Y (A U T O O R P S D F)

PLOT TYPE	CURVE TYPE	FRAME NO.	CURVE ID.	RMS VALUE	NO. POSITIVE CROSSINGS	XMIN FOR ALL DATA	XMAX FOR ALL DATA	YMIN FOR ALL DATA	X FOR YMIN	YMAX FOR ALL DATA	X FOR* YMAX
PSDF	EL STR	0	23538(3)	6.078828E+02	1.557229E+02	1.000E+01	2.000E+03	0.000E+00	1.000E+01	2.917E+04	1.167E+02
PSDF	EL STR	0	23538(5)	1.857313E+03	1.218342E+02	1.000E+01	2.000E+03	0.000E+00	1.000E+01	3.371E+05	1.220E+02
PSDF	EL STR	0	23538(7)	5.378296E+02	1.406337E+02	1.000E+01	2.000E+03	0.000E+00	1.000E+01	2.879E+04	1.227E+02
PSDF	EL STR	0	23539(3)	7.831040E+03	1.195972E+02	1.000E+01	2.000E+03	0.000E+00	1.000E+01	6.084E+06	1.220E+02
PSDF	EL STR	0	23539(5)	2.106716E+03	1.277632E+02	1.000E+01	2.000E+03	0.000E+00	1.000E+01	4.256E+05	1.220E+02
PSDF	EL STR	0	23539(7)	1.245298E+03	1.238800E+02	1.000E+01	2.000E+03	0.000E+00	1.000E+01	1.491E+05	1.220E+02
PSDF	EL STR	0	23540(3)	4.929709E+03	1.201046E+02	1.000E+01	2.000E+03	0.000E+00	1.000E+01	2.370E+06	1.220E+02
PSDF	EL STR	0	23540(5)	4.327095E+03	1.211692E+02	1.000E+01	2.000E+03	0.000E+00	1.000E+01	1.844E+06	1.220E+02
PSDF	EL STR	0	23540(7)	1.742038E+02	2.249472E+02	1.000E+01	2.000E+03	0.000E+00	1.000E+01	1.951E+03	1.028E+02
PSDF	EL STR	0	23541(3)	5.128827E+02	1.561972E+02	1.000E+01	2.000E+03	0.000E+00	1.000E+01	2.459E+04	1.227E+02
PSDF	EL STR	0	23541(5)	1.124627E+03	1.259817E+02	1.000E+01	2.000E+03	0.000E+00	1.000E+01	1.232E+05	1.220E+02
PSDF	EL STR	0	23541(7)	6.702144E+02	1.263505E+02	1.000E+01	2.000E+03	0.000E+00	1.000E+01	4.717E+04	1.227E+02
PSDF	EL STR	0	23542(3)	2.515294E+03	1.449670E+02	1.000E+01	2.000E+03	0.000E+00	1.000E+01	5.832E+05	1.220E+02
PSDF	EL STR	0	23542(5)	1.396327E+03	1.531045E+02	1.000E+01	2.000E+03	0.000E+00	1.000E+01	1.807E+05	1.220E+02
PSDF	EL STR	0	23542(7)	9.895878E+02	1.389993E+02	1.000E+01	2.000E+03	0.000E+00	1.000E+01	8.722E+04	1.160E+02
PSDF	EL STR	0	23543(3)	2.742493E+03	1.219812E+02	1.000E+01	2.000E+03	0.000E+00	1.000E+01	7.346E+05	1.220E+02
PSDF	EL STR	0	23543(5)	7.346954E+03	1.210561E+02	1.000E+01	2.000E+03	0.000E+00	1.000E+01	5.189E+06	1.220E+02
PSDF	EL STR	0	23543(7)	1.574395E+03	1.211639E+02	1.000E+01	2.000E+03	0.000E+00	1.000E+01	2.319E+05	1.220E+02
PSDF	EL STR	0	23544(3)	3.342365E+03	1.203782E+02	1.000E+01	2.000E+03	0.000E+00	1.000E+01	1.094E+06	1.220E+02
PSDF	EL STR	0	23544(5)	1.147305E+04	1.199580E+02	1.000E+01	2.000E+03	0.000E+00	1.000E+01	1.281E+07	1.220E+02
PSDF	EL STR	0	23544(7)	9.555221E+02	1.269941E+02	1.000E+01	2.000E+03	0.000E+00	1.000E+01	8.360E+04	1.220E+02
PSDF	EL STR	0	23545(3)	4.120503E+02	1.925647E+02	1.000E+01	2.000E+03	0.000E+00	1.000E+01	1.567E+04	1.227E+02
PSDF	EL STR	0	23545(5)	1.139237E+03	2.156396E+02	1.000E+01	2.000E+03	0.000E+00	1.000E+01	1.234E+05	1.227E+02
PSDF	EL STR	0	23545(7)	2.516360E+02	2.704145E+02	1.000E+01	2.000E+03	0.000E+00	1.000E+01	2.698E+03	1.236E+02

X AXIS PSD RESPONSE

X Y - O U T P U T S U M M A R Y (A U T O O R P S D F)

PLOT TYPE	CURVE TYPE	FRAME NO.	CURVE ID.	RMS VALUE	NO. POSITIVE CROSSINGS	XMIN FOR ALL DATA	XMAX FOR ALL DATA	YMIN FOR ALL DATA	X FOR YMIN	YMAX FOR ALL DATA	X FOR* YMAX
PSDF	EL STR	0	23546(3)	2.324684E+02	1.690722E+02	1.000E+01	2.000E+03	0.000E+00	1.000E+01	2.840E+03	1.236E+02
PSDF	EL STR	0	23546(5)	1.544519E+02	2.998288E+02	1.000E+01	2.000E+03	0.000E+00	1.000E+01	2.402E+03	1.159E+02
PSDF	EL STR	0	23546(7)	1.142506E+02	1.546334E+02	1.000E+01	2.000E+03	0.000E+00	1.000E+01	1.192E+03	1.028E+02
PSDF	EL STR	0	23547(3)	6.565401E+01	2.081963E+02	1.000E+01	2.000E+03	0.000E+00	1.000E+01	2.932E+02	1.236E+02
PSDF	EL STR	0	23547(5)	1.130678E+02	2.221899E+02	1.000E+01	2.000E+03	0.000E+00	1.000E+01	8.881E+02	1.151E+02
PSDF	EL STR	0	23547(7)	1.106362E+02	2.216701E+02	1.000E+01	2.000E+03	0.000E+00	1.000E+01	1.095E+03	1.028E+02
PSDF	EL STR	0	23548(3)	1.011048E+02	3.714943E+02	1.000E+01	2.000E+03	0.000E+00	1.000E+01	6.007E+02	1.028E+02
PSDF	EL STR	0	23548(5)	9.589568E+01	3.241024E+02	1.000E+01	2.000E+03	0.000E+00	1.000E+01	5.784E+02	1.151E+02
PSDF	EL STR	0	23548(7)	1.365243E+02	2.115226E+02	1.000E+01	2.000E+03	0.000E+00	1.000E+01	1.321E+03	1.028E+02
PSDF	EL STR	0	23549(3)	1.113673E+02	1.684600E+02	1.000E+01	2.000E+03	0.000E+00	1.000E+01	8.368E+02	1.151E+02
PSDF	EL STR	0	23549(5)	6.268848E+01	2.411012E+02	1.000E+01	2.000E+03	0.000E+00	1.000E+01	2.526E+02	1.160E+02
PSDF	EL STR	0	23549(7)	1.306111E+02	2.107796E+02	1.000E+01	2.000E+03	0.000E+00	1.000E+01	8.384E+02	1.028E+02
PSDF	EL STR	0	23550(3)	5.934689E+01	2.030716E+02	1.000E+01	2.000E+03	0.000E+00	1.000E+01	2.303E+02	1.028E+02
PSDF	EL STR	0	23550(5)	9.464051E+01	2.490218E+02	1.000E+01	2.000E+03	0.000E+00	1.000E+01	5.378E+02	1.151E+02
PSDF	EL STR	0	23550(7)	1.625334E+02	1.966623E+02	1.000E+01	2.000E+03	0.000E+00	1.000E+01	1.626E+03	1.151E+02
PSDF	EL STR	0	23551(3)	2.941193E+01	3.063542E+02	1.000E+01	2.000E+03	0.000E+00	1.000E+01	9.274E+01	1.159E+02
PSDF	EL STR	0	23551(5)	1.122046E+02	2.036460E+02	1.000E+01	2.000E+03	0.000E+00	1.000E+01	9.783E+02	1.151E+02
PSDF	EL STR	0	23551(7)	1.373090E+02	1.986268E+02	1.000E+01	2.000E+03	0.000E+00	1.000E+01	1.926E+03	1.028E+02
PSDF	EL STR	0	23552(3)	7.024395E+01	2.406339E+02	1.000E+01	2.000E+03	0.000E+00	1.000E+01	4.278E+02	1.159E+02
PSDF	EL STR	0	23552(5)	3.330688E+01	2.983420E+02	1.000E+01	2.000E+03	0.000E+00	1.000E+01	8.745E+01	1.159E+02
PSDF	EL STR	0	23552(7)	1.278090E+02	2.256409E+02	1.000E+01	2.000E+03	0.000E+00	1.000E+01	1.475E+03	1.028E+02
PSDF	EL STR	0	23553(3)	2.619098E+01	1.929626E+02	1.000E+01	2.000E+03	0.000E+00	1.000E+01	5.136E+01	1.159E+02
PSDF	EL STR	0	23553(5)	1.557375E+02	1.606561E+02	1.000E+01	2.000E+03	0.000E+00	1.000E+01	2.083E+03	1.151E+02
PSDF	EL STR	0	23553(7)	1.422611E+02	1.900711E+02	1.000E+01	2.000E+03	0.000E+00	1.000E+01	2.189E+03	1.028E+02

X AXIS PSD RESPONSE

X Y - O U T P U T S U M M A R Y (A U T O O R P S D F)

PLOT TYPE	CURVE TYPE	FRAME NO.	CURVE ID.	RMS VALUE	NO. POSITIVE CROSSINGS	XMIN FOR ALL DATA	XMAX FOR ALL DATA	YMIN FOR ALL DATA	X FOR YMIN	YMAX FOR ALL DATA	X FOR* YMAX
PSDF	EL STR	0	23554(3)	2.184394E+03	1.222782E+02	1.000E+01	2.000E+03	0.000E+00	1.000E+01	4.753E+05	1.220E+02
PSDF	EL STR	0	23554(5)	2.172295E+03	1.471791E+02	1.000E+01	2.000E+03	0.000E+00	1.000E+01	4.598E+05	1.227E+02
PSDF	EL STR	0	23554(7)	2.453248E+03	1.213240E+02	1.000E+01	2.000E+03	0.000E+00	1.000E+01	5.725E+05	1.220E+02
PSDF	EL STR	0	23555(3)	9.222654E+02	1.747215E+02	1.000E+01	2.000E+03	0.000E+00	1.000E+01	3.653E+04	1.160E+02
PSDF	EL STR	0	23555(5)	5.153593E+02	1.935161E+02	1.000E+01	2.000E+03	0.000E+00	1.000E+01	1.121E+04	1.160E+02
PSDF	EL STR	0	23555(7)	3.550838E+02	1.378682E+02	1.000E+01	2.000E+03	0.000E+00	1.000E+01	1.396E+04	1.028E+02
PSDF	EL STR	0	23556(3)	1.200103E+02	2.996980E+02	1.000E+01	2.000E+03	0.000E+00	1.000E+01	8.339E+02	1.160E+02
PSDF	EL STR	0	23556(5)	1.806872E+02	1.641929E+02	1.000E+01	2.000E+03	0.000E+00	1.000E+01	2.668E+03	1.151E+02
PSDF	EL STR	0	23556(7)	1.993766E+02	1.672847E+02	1.000E+01	2.000E+03	0.000E+00	1.000E+01	3.247E+03	1.028E+02
PSDF	EL STR	0	23557(3)	2.003572E+02	1.486549E+02	1.000E+01	2.000E+03	0.000E+00	1.000E+01	3.893E+03	1.151E+02
PSDF	EL STR	0	23557(5)	3.721126E+01	1.623453E+02	1.000E+01	2.000E+03	0.000E+00	1.000E+01	1.449E+02	1.159E+02
PSDF	EL STR	0	23557(7)	1.982010E+02	1.648309E+02	1.000E+01	2.000E+03	0.000E+00	1.000E+01	4.402E+03	1.028E+02
PSDF	EL STR	0	23558(3)	2.035108E+02	1.451226E+02	1.000E+01	2.000E+03	0.000E+00	1.000E+01	3.701E+03	1.151E+02
PSDF	EL STR	0	23558(5)	2.993570E+02	1.438840E+02	1.000E+01	2.000E+03	0.000E+00	1.000E+01	8.128E+03	1.151E+02
PSDF	EL STR	0	23558(7)	1.257372E+02	1.411526E+02	1.000E+01	2.000E+03	0.000E+00	1.000E+01	1.335E+03	1.151E+02
PSDF	EL STR	0	23559(3)	9.238855E+01	1.640808E+02	1.000E+01	2.000E+03	0.000E+00	1.000E+01	9.911E+02	1.151E+02
PSDF	EL STR	0	23559(5)	1.794485E+02	1.542190E+02	1.000E+01	2.000E+03	0.000E+00	1.000E+01	2.296E+03	1.151E+02
PSDF	EL STR	0	23559(7)	1.651928E+02	1.517976E+02	1.000E+01	2.000E+03	0.000E+00	1.000E+01	2.390E+03	1.028E+02
PSDF	EL STR	0	23560(3)	3.803226E+02	1.893726E+02	1.000E+01	2.000E+03	0.000E+00	1.000E+01	1.207E+04	1.151E+02
PSDF	EL STR	0	23560(5)	9.525707E+02	1.940342E+02	1.000E+01	2.000E+03	0.000E+00	1.000E+01	3.168E+04	1.028E+02
PSDF	EL STR	0	23560(7)	3.107361E+02	1.628185E+02	1.000E+01	2.000E+03	0.000E+00	1.000E+01	9.337E+03	1.151E+02
PSDF	EL STR	0	23561(3)	3.902088E+02	2.115715E+02	1.000E+01	2.000E+03	0.000E+00	1.000E+01	3.849E+03	1.820E+02
PSDF	EL STR	0	23561(5)	2.771566E+02	1.814360E+02	1.000E+01	2.000E+03	0.000E+00	1.000E+01	7.095E+03	1.159E+02
PSDF	EL STR	0	23561(7)	2.636820E+02	1.572974E+02	1.000E+01	2.000E+03	0.000E+00	1.000E+01	6.812E+03	1.028E+02

X AXIS PSD RESPONSE

X Y - O U T P U T S U M M A R Y (A U T O O R P S D F)

PLOT TYPE	CURVE TYPE	FRAME NO.	CURVE ID.	RMS VALUE	NO. POSITIVE CROSSINGS	XMIN FOR ALL DATA	XMAX FOR ALL DATA	YMIN FOR ALL DATA	X FOR YMIN	YMAX FOR ALL DATA	X FOR* YMAX
PSDF	EL STR	0	23562(3)	2.776471E+02	1.760379E+02	1.000E+01	2.000E+03	0.000E+00	1.000E+01	5.041E+03	1.159E+02
PSDF	EL STR	0	23562(5)	2.372000E+02	1.466266E+02	1.000E+01	2.000E+03	0.000E+00	1.000E+01	6.897E+03	1.159E+02
PSDF	EL STR	0	23562(7)	2.548562E+02	1.270067E+02	1.000E+01	2.000E+03	0.000E+00	1.000E+01	6.250E+03	1.028E+02
PSDF	EL STR	0	23563(3)	1.570676E+02	2.181535E+02	1.000E+01	2.000E+03	0.000E+00	1.000E+01	9.652E+02	1.160E+02
PSDF	EL STR	0	23563(5)	1.675862E+02	1.673923E+02	1.000E+01	2.000E+03	0.000E+00	1.000E+01	1.992E+03	1.151E+02
PSDF	EL STR	0	23563(7)	3.109834E+02	1.409178E+02	1.000E+01	2.000E+03	0.000E+00	1.000E+01	7.953E+03	1.151E+02
PSDF	EL STR	0	23564(3)	3.101097E+02	1.659722E+02	1.000E+01	2.000E+03	0.000E+00	1.000E+01	4.724E+03	1.028E+02
PSDF	EL STR	0	23564(5)	2.050809E+02	1.744984E+02	1.000E+01	2.000E+03	0.000E+00	1.000E+01	2.401E+03	1.160E+02
PSDF	EL STR	0	23564(7)	2.947843E+02	1.332045E+02	1.000E+01	2.000E+03	0.000E+00	1.000E+01	7.172E+03	1.028E+02
PSDF	EL STR	0	23565(3)	9.043932E+02	2.004028E+02	1.000E+01	2.000E+03	0.000E+00	1.000E+01	3.339E+04	1.159E+02
PSDF	EL STR	0	23565(5)	1.913322E+02	2.492763E+02	1.000E+01	2.000E+03	0.000E+00	1.000E+01	1.447E+03	1.028E+02
PSDF	EL STR	0	23565(7)	2.997540E+02	1.387664E+02	1.000E+01	2.000E+03	0.000E+00	1.000E+01	9.357E+03	1.028E+02
PSDF	EL STR	0	23566(3)	6.931932E+01	1.548141E+02	1.000E+01	2.000E+03	0.000E+00	1.000E+01	3.120E+02	1.151E+02
PSDF	EL STR	0	23566(5)	1.949042E+02	1.445927E+02	1.000E+01	2.000E+03	0.000E+00	1.000E+01	3.829E+03	1.151E+02
PSDF	EL STR	0	23566(7)	2.537795E+02	1.466077E+02	1.000E+01	2.000E+03	0.000E+00	1.000E+01	5.533E+03	1.151E+02
PSDF	EL STR	0	23567(3)	2.455639E+02	1.502613E+02	1.000E+01	2.000E+03	0.000E+00	1.000E+01	5.953E+03	1.151E+02
PSDF	EL STR	0	23567(5)	1.524366E+02	1.760211E+02	1.000E+01	2.000E+03	0.000E+00	1.000E+01	9.884E+02	1.151E+02
PSDF	EL STR	0	23567(7)	3.140163E+02	1.347283E+02	1.000E+01	2.000E+03	0.000E+00	1.000E+01	1.089E+04	1.151E+02
PSDF	EL STR	0	23568(3)	4.603277E+01	1.926431E+02	1.000E+01	2.000E+03	0.000E+00	1.000E+01	2.351E+02	1.028E+02
PSDF	EL STR	0	23568(5)	2.901952E+02	1.540419E+02	1.000E+01	2.000E+03	0.000E+00	1.000E+01	8.877E+03	1.151E+02
PSDF	EL STR	0	23568(7)	1.794655E+02	1.764738E+02	1.000E+01	2.000E+03	0.000E+00	1.000E+01	3.756E+03	1.028E+02
PSDF	EL STR	0	22917(3)	1.139349E+02	1.835010E+02	1.000E+01	2.000E+03	0.000E+00	1.000E+01	7.375E+02	1.151E+02
PSDF	EL STR	0	22917(5)	1.550019E+02	1.891745E+02	1.000E+01	2.000E+03	0.000E+00	1.000E+01	1.354E+03	1.021E+02
PSDF	EL STR	0	22917(7)	2.588580E+02	1.546262E+02	1.000E+01	2.000E+03	0.000E+00	1.000E+01	4.942E+03	1.021E+02

X AXIS PSD RESPONSE

X Y - O U T P U T S U M M A R Y (A U T O O R P S D F)

PLOT TYPE	CURVE TYPE	FRAME NO.	CURVE ID.	RMS VALUE	NO. POSITIVE CROSSINGS	XMIN FOR ALL DATA	XMAX FOR ALL DATA	YMIN FOR ALL DATA	X FOR YMIN	YMAX FOR ALL DATA	X FOR* YMAX
PSDF	EL STR	0	22918(3)	6.650685E+01	2.430932E+02	1.000E+01	2.000E+03	0.000E+00	1.000E+01	2.493E+02	9.127E+01
PSDF	EL STR	0	22918(5)	1.880869E+02	1.644916E+02	1.000E+01	2.000E+03	0.000E+00	1.000E+01	2.480E+03	1.021E+02
PSDF	EL STR	0	22918(7)	2.649369E+02	1.650501E+02	1.000E+01	2.000E+03	0.000E+00	1.000E+01	4.820E+03	1.021E+02
PSDF	EL STR	0	22919(3)	8.736450E+01	2.551094E+02	1.000E+01	2.000E+03	0.000E+00	1.000E+01	3.249E+02	1.151E+02
PSDF	EL STR	0	22919(5)	2.218837E+02	1.617423E+02	1.000E+01	2.000E+03	0.000E+00	1.000E+01	3.388E+03	1.021E+02
PSDF	EL STR	0	22919(7)	2.324575E+02	1.948362E+02	1.000E+01	2.000E+03	0.000E+00	1.000E+01	2.469E+03	1.021E+02
PSDF	EL STR	0	22920(3)	1.357499E+02	2.224573E+02	1.000E+01	2.000E+03	0.000E+00	1.000E+01	1.030E+03	1.151E+02
PSDF	EL STR	0	22920(5)	2.749756E+02	1.697955E+02	1.000E+01	2.000E+03	0.000E+00	1.000E+01	3.922E+03	1.021E+02
PSDF	EL STR	0	22920(7)	1.244362E+02	2.478990E+02	1.000E+01	2.000E+03	0.000E+00	1.000E+01	6.474E+02	9.127E+01
PSDF	EL STR	0	22921(3)	4.073296E+01	2.681912E+02	1.000E+01	2.000E+03	0.000E+00	1.000E+01	9.517E+01	9.250E+01
PSDF	EL STR	0	22921(5)	3.041091E+02	1.773873E+02	1.000E+01	2.000E+03	0.000E+00	1.000E+01	4.557E+03	1.151E+02
PSDF	EL STR	0	22921(7)	2.044649E+02	1.670181E+02	1.000E+01	2.000E+03	0.000E+00	1.000E+01	3.162E+03	1.021E+02
PSDF	EL STR	0	22922(3)	3.388713E+01	2.425367E+02	1.000E+01	2.000E+03	0.000E+00	1.000E+01	7.193E+01	9.250E+01
PSDF	EL STR	0	22922(5)	2.869383E+02	1.796443E+02	1.000E+01	2.000E+03	0.000E+00	1.000E+01	4.929E+03	1.151E+02
PSDF	EL STR	0	22922(7)	2.598947E+02	1.534709E+02	1.000E+01	2.000E+03	0.000E+00	1.000E+01	5.005E+03	1.021E+02
PSDF	EL STR	0	22923(3)	6.498580E+01	1.804895E+02	1.000E+01	2.000E+03	0.000E+00	1.000E+01	2.680E+02	1.151E+02
PSDF	EL STR	0	22923(5)	2.230209E+02	1.846603E+02	1.000E+01	2.000E+03	0.000E+00	1.000E+01	3.178E+03	1.151E+02
PSDF	EL STR	0	22923(7)	2.837290E+02	1.614823E+02	1.000E+01	2.000E+03	0.000E+00	1.000E+01	5.354E+03	1.021E+02
PSDF	EL STR	0	22924(3)	8.907159E+01	1.575922E+02	1.000E+01	2.000E+03	0.000E+00	1.000E+01	6.214E+02	1.021E+02
PSDF	EL STR	0	22924(5)	1.594117E+02	2.088306E+02	1.000E+01	2.000E+03	0.000E+00	1.000E+01	1.091E+03	1.151E+02
PSDF	EL STR	0	22924(7)	2.775755E+02	1.741861E+02	1.000E+01	2.000E+03	0.000E+00	1.000E+01	4.347E+03	1.021E+02
PSDF	EL STR	0	22925(3)	7.318291E+01	1.540633E+02	1.000E+01	2.000E+03	0.000E+00	1.000E+01	5.719E+02	1.021E+02
PSDF	EL STR	0	22925(5)	1.552466E+02	2.411799E+02	1.000E+01	2.000E+03	0.000E+00	1.000E+01	8.781E+02	9.188E+01
PSDF	EL STR	0	22925(7)	2.126668E+02	2.002833E+02	1.000E+01	2.000E+03	0.000E+00	1.000E+01	1.408E+03	1.021E+02

X AXIS PSD RESPONSE

X Y - O U T P U T S U M M A R Y (A U T O O R P S D F)

PLOT TYPE	CURVE TYPE	FRAME NO.	CURVE ID.	RMS VALUE	NO. POSITIVE CROSSINGS	XMIN FOR ALL DATA	XMAX FOR ALL DATA	YMIN FOR ALL DATA	X FOR YMIN	YMAX FOR ALL DATA	X FOR* YMAX
PSDF	EL STR	0	22926(3)	6.492625E+01	1.828399E+02	1.000E+01	2.000E+03	0.000E+00	1.000E+01	4.616E+02	1.021E+02
PSDF	EL STR	0	22926(5)	1.735354E+02	2.530845E+02	1.000E+01	2.000E+03	0.000E+00	1.000E+01	1.092E+03	9.250E+01
PSDF	EL STR	0	22926(7)	1.357391E+02	2.442201E+02	1.000E+01	2.000E+03	0.000E+00	1.000E+01	7.098E+02	9.127E+01
PSDF	EL STR	0	22927(3)	1.196560E+02	2.001777E+02	1.000E+01	2.000E+03	0.000E+00	1.000E+01	1.075E+03	1.021E+02
PSDF	EL STR	0	22927(5)	1.648302E+02	2.601353E+02	1.000E+01	2.000E+03	0.000E+00	1.000E+01	7.484E+02	9.250E+01
PSDF	EL STR	0	22927(7)	1.763366E+02	1.642562E+02	1.000E+01	2.000E+03	0.000E+00	1.000E+01	2.369E+03	1.021E+02
PSDF	EL STR	0	22928(3)	1.407134E+02	1.674940E+02	1.000E+01	2.000E+03	0.000E+00	1.000E+01	1.277E+03	1.021E+02
PSDF	EL STR	0	22928(5)	1.458603E+02	2.425205E+02	1.000E+01	2.000E+03	0.000E+00	1.000E+01	4.522E+02	1.028E+02
PSDF	EL STR	0	22928(7)	2.483005E+02	1.588536E+02	1.000E+01	2.000E+03	0.000E+00	1.000E+01	4.487E+03	1.021E+02
PSDF	EL STR	0	22954(3)	5.611471E+01	1.621138E+02	1.000E+01	2.000E+03	0.000E+00	1.000E+01	2.419E+02	1.021E+02
PSDF	EL STR	0	22954(5)	1.774238E+02	1.604372E+02	1.000E+01	2.000E+03	0.000E+00	1.000E+01	2.461E+03	1.021E+02
PSDF	EL STR	0	22954(7)	4.594981E+02	1.926074E+02	1.000E+01	2.000E+03	0.000E+00	1.000E+01	6.275E+03	1.020E+02
PSDF	EL STR	0	22955(3)	6.516075E+01	1.546311E+02	1.000E+01	2.000E+03	0.000E+00	1.000E+01	2.884E+02	1.021E+02
PSDF	EL STR	0	22955(5)	2.291513E+02	1.539263E+02	1.000E+01	2.000E+03	0.000E+00	1.000E+01	3.571E+03	1.021E+02
PSDF	EL STR	0	22955(7)	3.753235E+02	2.081292E+02	1.000E+01	2.000E+03	0.000E+00	1.000E+01	4.718E+03	1.151E+02
PSDF	EL STR	0	22956(3)	7.282930E+01	1.628073E+02	1.000E+01	2.000E+03	0.000E+00	1.000E+01	2.953E+02	1.021E+02
PSDF	EL STR	0	22956(5)	2.511651E+02	1.616921E+02	1.000E+01	2.000E+03	0.000E+00	1.000E+01	3.523E+03	1.021E+02
PSDF	EL STR	0	22956(7)	2.761183E+02	2.185712E+02	1.000E+01	2.000E+03	0.000E+00	1.000E+01	2.389E+03	1.151E+02
PSDF	EL STR	0	22957(3)	7.860613E+01	1.690533E+02	1.000E+01	2.000E+03	0.000E+00	1.000E+01	2.825E+02	1.021E+02
PSDF	EL STR	0	22957(5)	2.472948E+02	1.695472E+02	1.000E+01	2.000E+03	0.000E+00	1.000E+01	2.813E+03	1.021E+02
PSDF	EL STR	0	22957(7)	2.702441E+02	1.898286E+02	1.000E+01	2.000E+03	0.000E+00	1.000E+01	3.335E+03	1.021E+02
PSDF	EL STR	0	22958(3)	6.534213E+01	1.796513E+02	1.000E+01	2.000E+03	0.000E+00	1.000E+01	1.992E+02	1.151E+02
PSDF	EL STR	0	22958(5)	2.104082E+02	1.792425E+02	1.000E+01	2.000E+03	0.000E+00	1.000E+01	2.011E+03	1.159E+02
PSDF	EL STR	0	22958(7)	3.485822E+02	1.740923E+02	1.000E+01	2.000E+03	0.000E+00	1.000E+01	7.908E+03	1.021E+02

X AXIS PSD RESPONSE

X Y - O U T P U T S U M M A R Y (A U T O O R P S D F)

PLOT TYPE	CURVE TYPE	FRAME NO.	CURVE ID.	RMS VALUE	NO. POSITIVE CROSSINGS	XMIN FOR ALL DATA	XMAX FOR ALL DATA	YMIN FOR ALL DATA	X FOR YMIN	YMAX FOR ALL DATA	X FOR* YMAX
PSDF	EL STR	0	22959(3)	4.418589E+01	2.006265E+02	1.000E+01	2.000E+03	0.000E+00	1.000E+01	1.001E+02	1.151E+02
PSDF	EL STR	0	22959(5)	1.478976E+02	1.966362E+02	1.000E+01	2.000E+03	0.000E+00	1.000E+01	1.140E+03	1.151E+02
PSDF	EL STR	0	22959(7)	4.018018E+02	1.826365E+02	1.000E+01	2.000E+03	0.000E+00	1.000E+01	9.307E+03	1.021E+02
PSDF	EL STR	0	22960(3)	3.477172E+01	2.177920E+02	1.000E+01	2.000E+03	0.000E+00	1.000E+01	4.459E+01	9.065E+01
PSDF	EL STR	0	22960(5)	1.174628E+02	2.111896E+02	1.000E+01	2.000E+03	0.000E+00	1.000E+01	5.122E+02	9.065E+01
PSDF	EL STR	0	22960(7)	3.802464E+02	2.001040E+02	1.000E+01	2.000E+03	0.000E+00	1.000E+01	6.118E+03	1.021E+02
PSDF	EL STR	0	22961(3)	4.185321E+01	2.153603E+02	1.000E+01	2.000E+03	0.000E+00	1.000E+01	9.354E+01	9.200E+01
PSDF	EL STR	0	22961(5)	1.372592E+02	2.122083E+02	1.000E+01	2.000E+03	0.000E+00	1.000E+01	1.011E+03	9.200E+01
PSDF	EL STR	0	22961(7)	2.914940E+02	2.281167E+02	1.000E+01	2.000E+03	0.000E+00	1.000E+01	2.326E+03	9.250E+01
PSDF	EL STR	0	22962(3)	4.822548E+01	2.238505E+02	1.000E+01	2.000E+03	0.000E+00	1.000E+01	1.294E+02	9.250E+01
PSDF	EL STR	0	22962(5)	1.564136E+02	2.200059E+02	1.000E+01	2.000E+03	0.000E+00	1.000E+01	1.392E+03	9.250E+01
PSDF	EL STR	0	22962(7)	2.148322E+02	2.456295E+02	1.000E+01	2.000E+03	0.000E+00	1.000E+01	1.100E+03	2.700E+02
PSDF	EL STR	0	22963(3)	4.586959E+01	2.363936E+02	1.000E+01	2.000E+03	0.000E+00	1.000E+01	1.011E+02	9.250E+01
PSDF	EL STR	0	22963(5)	1.555179E+02	2.353008E+02	1.000E+01	2.000E+03	0.000E+00	1.000E+01	1.188E+03	9.250E+01
PSDF	EL STR	0	22963(7)	2.762251E+02	1.918062E+02	1.000E+01	2.000E+03	0.000E+00	1.000E+01	3.383E+03	1.021E+02
PSDF	EL STR	0	22964(3)	4.057678E+01	2.555727E+02	1.000E+01	2.000E+03	0.000E+00	1.000E+01	5.321E+01	9.250E+01
PSDF	EL STR	0	22964(5)	1.350973E+02	2.548112E+02	1.000E+01	2.000E+03	0.000E+00	1.000E+01	6.165E+02	9.250E+01
PSDF	EL STR	0	22964(7)	3.970052E+02	1.754984E+02	1.000E+01	2.000E+03	0.000E+00	1.000E+01	8.043E+03	1.021E+02
PSDF	EL STR	0	22965(3)	1.341133E+01	2.945988E+02	1.000E+01	2.000E+03	0.000E+00	1.000E+01	1.304E+01	1.028E+02
PSDF	EL STR	0	22965(5)	3.441570E+02	2.230435E+02	1.000E+01	2.000E+03	0.000E+00	1.000E+01	7.051E+03	1.021E+02
PSDF	EL STR	0	22965(7)	9.600267E+01	2.278230E+02	1.000E+01	2.000E+03	0.000E+00	1.000E+01	2.591E+02	1.021E+02
PSDF	EL STR	0	23372(3)	3.617774E+03	1.424947E+02	1.000E+01	2.000E+03	0.000E+00	1.000E+01	8.304E+05	1.021E+02
PSDF	EL STR	0	23372(5)	5.306125E+03	1.388963E+02	1.000E+01	2.000E+03	0.000E+00	1.000E+01	1.916E+06	1.021E+02
PSDF	EL STR	0	23372(7)	1.204617E+03	1.100996E+02	1.000E+01	2.000E+03	0.000E+00	1.000E+01	1.561E+05	1.021E+02

X AXIS PSD RESPONSE

X Y - O U T P U T S U M M A R Y (A U T O O R P S D F)

PLOT TYPE	CURVE TYPE	FRAME NO.	CURVE ID.	RMS VALUE	NC. POSITIVE CROSSINGS	XMIN FOR ALL DATA	XMAX FOR ALL DATA	YMIN FOR ALL DATA	X FOR YMIN	YMAX FOR ALL DATA	X FOR* YMAX
PSDF	EL STR	0	23373(3)	3.301961E+03	1.484951E+02	1.000E+01	2.000E+03	0.000E+00	1.000E+01	5.871E+05	1.151E+02
PSDF	EL STR	0	23373(5)	4.691872E+03	1.467016E+02	1.000E+01	2.000E+03	0.000E+00	1.000E+01	1.159E+06	1.151E+02
PSDF	EL STR	0	23373(7)	1.291698E+03	1.085796E+02	1.000E+01	2.000E+03	0.000E+00	1.000E+01	1.804E+05	1.021E+02
PSDF	EL STR	0	23374(3)	3.101281E+03	1.526575E+02	1.000E+01	2.000E+03	0.000E+00	1.000E+01	6.504E+05	1.151E+02
PSDF	EL STR	0	23374(5)	4.335645E+03	1.519484E+02	1.000E+01	2.000E+03	0.000E+00	1.000E+01	1.302E+06	1.151E+02
PSDF	EL STR	0	23374(7)	1.297483E+03	1.078452E+02	1.000E+01	2.000E+03	0.000E+00	1.000E+01	1.811E+05	1.021E+02
PSDF	EL STR	0	23375(3)	3.051244E+03	1.527702E+02	1.000E+01	2.000E+03	0.000E+00	1.000E+01	6.957E+05	1.151E+02
PSDF	EL STR	0	23375(5)	4.327349E+03	1.506936E+02	1.000E+01	2.000E+03	0.000E+00	1.000E+01	1.404E+06	1.151E+02
PSDF	EL STR	0	23375(7)	1.221986E+03	1.078290E+02	1.000E+01	2.000E+03	0.000E+00	1.000E+01	1.578E+05	1.021E+02
PSDF	EL STR	0	23376(3)	3.126835E+03	1.490998E+02	1.000E+01	2.000E+03	0.000E+00	1.000E+01	7.173E+05	1.151E+02
PSDF	EL STR	0	23376(5)	4.596238E+03	1.442304E+02	1.000E+01	2.000E+03	0.000E+00	1.000E+01	1.452E+06	1.151E+02
PSDF	EL STR	0	23376(7)	1.072830E+03	1.089214E+02	1.000E+01	2.000E+03	0.000E+00	1.000E+01	1.170E+05	1.021E+02
PSDF	EL STR	0	23377(3)	3.255381E+03	1.439448E+02	1.000E+01	2.000E+03	0.000E+00	1.000E+01	7.118E+05	1.151E+02
PSDF	EL STR	0	23377(5)	4.965310E+03	1.369011E+02	1.000E+01	2.000E+03	0.000E+00	1.000E+01	1.436E+06	1.151E+02
PSDF	EL STR	0	23377(7)	8.660510E+02	1.124688E+02	1.000E+01	2.000E+03	0.000E+00	1.000E+01	6.948E+04	1.021E+02
PSDF	EL STR	0	23378(3)	3.358116E+03	1.393257E+02	1.000E+01	2.000E+03	0.000E+00	1.000E+01	6.795E+05	1.151E+02
PSDF	EL STR	0	23378(5)	5.264487E+03	1.311456E+02	1.000E+01	2.000E+03	0.000E+00	1.000E+01	1.435E+06	9.250E+01
PSDF	EL STR	0	23378(7)	6.325313E+02	1.227263E+02	1.000E+01	2.000E+03	0.000E+00	1.000E+01	3.104E+04	9.127E+01
PSDF	EL STR	0	23379(3)	3.375022E+03	1.362243E+02	1.000E+01	2.000E+03	0.000E+00	1.000E+01	6.242E+05	1.151E+02
PSDF	EL STR	0	23379(5)	5.377835E+03	1.274858E+02	1.000E+01	2.000E+03	0.000E+00	1.000E+01	1.594E+06	9.250E+01
PSDF	EL STR	0	23379(7)	4.432803E+02	1.469095E+02	1.000E+01	2.000E+03	0.000E+00	1.000E+01	1.874E+04	9.127E+01
PSDF	EL STR	0	23380(3)	3.273708E+03	1.350978E+02	1.000E+01	2.000E+03	0.000E+00	1.000E+01	5.522E+05	1.151E+02
PSDF	EL STR	0	23380(5)	5.245094E+03	1.259419E+02	1.000E+01	2.000E+03	0.000E+00	1.000E+01	1.564E+06	9.250E+01
PSDF	EL STR	0	23380(7)	4.419259E+02	1.543494E+02	1.000E+01	2.000E+03	0.000E+00	1.000E+01	1.215E+04	9.188E+01

X AXIS PSD RESPONSE

X Y - O U T P U T S U M M A R Y (A U T O O R P S D F)

PLOT TYPE	CURVE TYPE	FRAME NO.	CURVE ID.	RMS VALUE	NO. POSITIVE CROSSINGS	XMIN FOR ALL DATA	XMAX FOR ALL DATA	YMIN FOR ALL DATA	X FOR YMIN	YMAX FOR ALL DATA	X FOR* YMAX
PSDF	EL STR	0	23381(3)	3.051336E+03	1.364484E+02	1.000E+01	2.000E+03	0.000E+00	1.000E+01	4.716E+05	1.151E+02
PSDF	EL STR	0	23381(5)	4.855997E+03	1.268259E+02	1.000E+01	2.000E+03	0.000E+00	1.000E+01	1.346E+06	9.250E+01
PSDF	EL STR	0	23381(7)	6.307320E+02	1.344011E+02	1.000E+01	2.000E+03	0.000E+00	1.000E+01	2.743E+04	1.028E+02
PSDF	EL STR	0	23382(3)	2.737628E+03	1.410959E+02	1.000E+01	2.000E+03	0.000E+00	1.000E+01	3.906E+05	1.151E+02
PSDF	EL STR	0	23382(5)	4.251688E+03	1.312370E+02	1.000E+01	2.000E+03	0.000E+00	1.000E+01	1.045E+06	9.127E+01
PSDF	EL STR	0	23382(7)	8.663199E+02	1.221114E+02	1.000E+01	2.000E+03	0.000E+00	1.000E+01	6.783E+04	1.028E+02
PSDF	EL STR	0	23383(3)	2.403856E+03	1.496841E+02	1.000E+01	2.000E+03	0.000E+00	1.000E+01	3.165E+05	1.151E+02
PSDF	EL STR	0	23383(5)	3.542731E+03	1.413370E+02	1.000E+01	2.000E+03	0.000E+00	1.000E+01	7.919E+05	9.127E+01
PSDF	EL STR	0	23383(7)	1.076469E+03	1.160617E+02	1.000E+01	2.000E+03	0.000E+00	1.000E+01	1.146E+05	1.021E+02
PSDF	EL STR	0	23384(3)	2.172484E+03	1.597583E+02	1.000E+01	2.000E+03	0.000E+00	1.000E+01	2.544E+05	1.151E+02
PSDF	EL STR	0	23384(5)	2.956021E+03	1.573881E+02	1.000E+01	2.000E+03	0.000E+00	1.000E+01	5.504E+05	9.065E+01
PSDF	EL STR	0	23384(7)	1.230002E+03	1.128390E+02	1.000E+01	2.000E+03	0.000E+00	1.000E+01	1.560E+05	1.021E+02
PSDF	EL STR	0	23385(3)	2.183665E+03	1.630488E+02	1.000E+01	2.000E+03	0.000E+00	1.000E+01	2.106E+05	1.159E+02
PSDF	EL STR	0	23385(5)	2.841647E+03	1.662145E+02	1.000E+01	2.000E+03	0.000E+00	1.000E+01	3.212E+05	1.159E+02
PSDF	EL STR	0	23385(7)	1.310350E+03	1.110310E+02	1.000E+01	2.000E+03	0.000E+00	1.000E+01	1.802E+05	1.021E+02
PSDF	EL STR	0	23386(3)	2.476794E+03	1.562965E+02	1.000E+01	2.000E+03	0.000E+00	1.000E+01	4.317E+05	1.021E+02
PSDF	EL STR	0	23386(5)	3.359553E+03	1.565050E+02	1.000E+01	2.000E+03	0.000E+00	1.000E+01	8.633E+05	1.021E+02
PSDF	EL STR	0	23386(7)	1.309624E+03	1.101068E+02	1.000E+01	2.000E+03	0.000E+00	1.000E+01	1.808E+05	1.021E+02
PSDF	EL STR	0	23387(3)	2.952448E+03	1.466540E+02	1.000E+01	2.000E+03	0.000E+00	1.000E+01	8.235E+05	1.021E+02
PSDF	EL STR	0	23387(5)	4.260832E+03	1.430580E+02	1.000E+01	2.000E+03	0.000E+00	1.000E+01	1.875E+06	1.021E+02
PSDF	EL STR	0	23387(7)	1.227205E+03	1.099717E+02	1.000E+01	2.000E+03	0.000E+00	1.000E+01	1.576E+05	1.021E+02
PSDF	EL STR	0	23389(3)	3.480293E+03	1.389910E+02	1.000E+01	2.000E+03	0.000E+00	1.000E+01	1.282E+06	1.021E+02
PSDF	EL STR	0	23389(5)	5.247037E+03	1.338510E+02	1.000E+01	2.000E+03	0.000E+00	1.000E+01	3.113E+06	1.021E+02
PSDF	EL STR	0	23389(7)	1.069486E+03	1.109568E+02	1.000E+01	2.000E+03	0.000E+00	1.000E+01	1.167E+05	1.021E+02

X AXIS PSD RESPONSE

X Y - O U T P U T S U M M A R Y (A U T O O R P S D F)

PLOT TYPE	CURVE TYPE	FRAME NO.	CURVE ID.	RMS VALUE	NO. POSITIVE CROSSINGS	XMIN FOR ALL DATA	XMAX FOR ALL DATA	YMIN FOR ALL DATA	X FOR YMIN	YMAX FOR ALL DATA	X FOR* YMAX
PSDF	EL STR	0	23390(3)	3.962799E+03	1.339052E+02	1.000E+01	2.000E+03	0.000E+00	1.000E+01	1.731E+06	1.021E+02
PSDF	EL STR	0	23390(5)	6.132138E+03	1.283781E+02	1.000E+01	2.000E+03	0.000E+00	1.000E+01	4.358E+06	1.021E+02
PSDF	EL STR	0	23390(7)	8.507155E+02	1.143639E+02	1.000E+01	2.000E+03	0.000E+00	1.000E+01	6.926E+04	1.021E+02
PSDF	EL STR	0	23391(3)	4.336558E+03	1.308567E+02	1.000E+01	2.000E+03	0.000E+00	1.000E+01	2.090E+06	1.021E+02
PSDF	EL STR	0	23391(5)	6.806145E+03	1.253145E+02	1.000E+01	2.000E+03	0.000E+00	1.000E+01	5.368E+06	1.021E+02
PSDF	EL STR	0	23391(7)	5.968307E+02	1.248699E+02	1.000E+01	2.000E+03	0.000E+00	1.000E+01	3.089E+04	9.127E+01
PSDF	EL STR	0	23392(3)	4.563831E+03	1.293660E+02	1.000E+01	2.000E+03	0.000E+00	1.000E+01	2.289E+06	1.021E+02
PSDF	EL STR	0	23392(5)	7.205651E+03	1.238834E+02	1.000E+01	2.000E+03	0.000E+00	1.000E+01	5.937E+06	1.021E+02
PSDF	EL STR	0	23392(7)	3.716013E+02	1.558013E+02	1.000E+01	2.000E+03	0.000E+00	1.000E+01	1.850E+04	9.127E+01
PSDF	EL STR	0	23393(3)	4.628318E+03	1.291946E+02	1.000E+01	2.000E+03	0.000E+00	1.000E+01	2.291E+06	1.021E+02
PSDF	EL STR	0	23393(5)	7.303111E+03	1.237599E+02	1.000E+01	2.000E+03	0.000E+00	1.000E+01	5.946E+06	1.021E+02
PSDF	EL STR	0	23393(7)	3.554469E+02	1.642192E+02	1.000E+01	2.000E+03	0.000E+00	1.000E+01	1.176E+04	9.188E+01
PSDF	EL STR	0	23394(3)	4.533309E+03	1.303127E+02	1.000E+01	2.000E+03	0.000E+00	1.000E+01	2.094E+06	1.021E+02
PSDF	EL STR	0	23394(5)	7.104142E+03	1.249264E+02	1.000E+01	2.000E+03	0.000E+00	1.000E+01	5.394E+06	1.021E+02
PSDF	EL STR	0	23394(7)	5.683792E+02	1.324721E+02	1.000E+01	2.000E+03	0.000E+00	1.000E+01	2.682E+04	1.028E+02
PSDF	EL STR	0	23395(3)	4.301857E+03	1.328439E+02	1.000E+01	2.000E+03	0.000E+00	1.000E+01	1.737E+06	1.021E+02
PSDF	EL STR	0	23395(5)	6.648064E+03	1.276073E+02	1.000E+01	2.000E+03	0.000E+00	1.000E+01	4.397E+06	1.021E+02
PSDF	EL STR	0	23395(7)	8.215575E+02	1.186701E+02	1.000E+01	2.000E+03	0.000E+00	1.000E+01	6.712E+04	1.021E+02
PSDF	EL STR	0	23396(3)	3.976155E+03	1.369430E+02	1.000E+01	2.000E+03	0.000E+00	1.000E+01	1.288E+06	1.021E+02
PSDF	EL STR	0	23396(5)	6.010205E+03	1.321905E+02	1.000E+01	2.000E+03	0.000E+00	1.000E+01	3.157E+06	1.021E+02
PSDF	EL STR	0	23396(7)	1.042892E+03	1.129265E+02	1.000E+01	2.000E+03	0.000E+00	1.000E+01	1.147E+05	1.021E+02
PSDF	EL STR	0	22530(3)	2.038548E+03	1.154698E+02	1.000E+01	2.000E+03	0.000E+00	1.000E+01	3.649E+05	1.028E+02
PSDF	EL STR	0	22530(5)	1.041107E+03	1.256547E+02	1.000E+01	2.000E+03	0.000E+00	1.000E+01	1.416E+05	1.028E+02
PSDF	EL STR	0	22530(7)	1.291344E+03	1.325674E+02	1.000E+01	2.000E+03	0.000E+00	1.000E+01	2.261E+05	1.028E+02

X AXIS PSD RESPONSE

X Y - O U T P U T S U M M A R Y (A U T O O R P S D F)

PLOT TYPE	CURVE TYPE	FRAME NO.	CURVE ID.	RMS VALUE	NO. POSITIVE CROSSINGS	XMIN FOR ALL DATA	XMAX FOR ALL DATA	YMIN FOR ALL DATA	X FOR YMIN	YMAX FOR ALL DATA	X FOR* YMAX
PSDF	EL STR	0	22581(3)	6.652236E+02	1.577496E+02	1.000E+01	2.000E+03	0.000E+00	1.000E+01	5.793E+04	1.028E+02
PSDF	EL STR	0	22581(5)	2.337865E+02	1.329977E+02	1.000E+01	2.000E+03	0.000E+00	1.000E+01	5.237E+03	1.151E+02
PSDF	EL STR	0	22581(7)	6.355789E+02	1.202407E+02	1.000E+01	2.000E+03	0.000E+00	1.000E+01	3.861E+04	1.151E+02
PSDF	EL STR	0	22535(3)	2.239911E+03	1.112223E+02	1.000E+01	2.000E+03	0.000E+00	1.000E+01	4.358E+05	1.028E+02
PSDF	EL STR	0	22535(5)	4.958181E+02	1.260387E+02	1.000E+01	2.000E+03	0.000E+00	1.000E+01	3.182E+04	1.028E+02
PSDF	EL STR	0	22535(7)	7.463755E+02	1.549084E+02	1.000E+01	2.000E+03	0.000E+00	1.000E+01	3.443E+04	1.021E+02
PSDF	EL STR	0	22536(3)	3.680705E+03	1.111706E+02	1.000E+01	2.000E+03	0.000E+00	1.000E+01	1.244E+06	1.028E+02
PSDF	EL STR	0	22536(5)	1.517952E+03	1.273714E+02	1.000E+01	2.000E+03	0.000E+00	1.000E+01	1.898E+05	1.151E+02
PSDF	EL STR	0	22536(7)	9.741506E+02	1.445877E+02	1.000E+01	2.000E+03	0.000E+00	1.000E+01	9.442E+04	1.021E+02
PSDF	EL STR	0	22580(3)	3.100777E+03	1.176098E+02	1.000E+01	2.000E+03	0.000E+00	1.000E+01	1.376E+06	1.028E+02
PSDF	EL STR	0	22580(5)	3.338274E+02	1.457792E+02	1.000E+01	2.000E+03	0.000E+00	1.000E+01	1.512E+04	1.028E+02
PSDF	EL STR	0	22580(7)	1.155279E+03	1.166352E+02	1.000E+01	2.000E+03	0.000E+00	1.000E+01	1.135E+05	1.151E+02
PSDF	EL STR	0	22541(3)	1.714594E+03	1.106437E+02	1.000E+01	2.000E+03	0.000E+00	1.000E+01	2.565E+05	1.028E+02
PSDF	EL STR	0	22541(5)	5.720084E+02	1.398240E+02	1.000E+01	2.000E+03	0.000E+00	1.000E+01	3.547E+04	1.028E+02
PSDF	EL STR	0	22541(7)	9.657666E+02	1.466816E+02	1.000E+01	2.000E+03	0.000E+00	1.000E+01	1.084E+05	1.151E+02
PSDF	EL STR	0	22542(3)	2.314804E+03	1.100196E+02	1.000E+01	2.000E+03	0.000E+00	1.000E+01	5.370E+05	1.028E+02
PSDF	EL STR	0	22542(5)	9.776003E+02	1.093462E+02	1.000E+01	2.000E+03	0.000E+00	1.000E+01	1.324E+05	1.028E+02
PSDF	EL STR	0	22542(7)	1.113503E+03	1.316789E+02	1.000E+01	2.000E+03	0.000E+00	1.000E+01	1.455E+05	1.151E+02
PSDF	EL STR	0	22579(3)	2.613038E+03	1.273375E+02	1.000E+01	2.000E+03	0.000E+00	1.000E+01	6.025E+05	1.151E+02
PSDF	EL STR	0	22579(5)	1.758359E+02	1.784536E+02	1.000E+01	2.000E+03	0.000E+00	1.000E+01	3.283E+03	1.151E+02
PSDF	EL STR	0	22579(7)	6.803481E+02	1.122201E+02	1.000E+01	2.000E+03	0.000E+00	1.000E+01	5.259E+04	1.028E+02
PSDF	EL STR	0	22593(3)	3.849040E+03	1.101815E+02	1.000E+01	2.000E+03	0.000E+00	1.000E+01	1.458E+06	1.028E+02
PSDF	EL STR	0	22593(5)	6.237729E+01	1.517972E+02	1.000E+01	2.000E+03	0.000E+00	1.000E+01	5.445E+02	1.028E+02
PSDF	EL STR	0	22593(7)	1.932010E+02	1.539714E+02	1.000E+01	2.000E+03	0.000E+00	1.000E+01	3.356E+03	1.028E+02

X AXIS PSD RESPONSE

X Y - O U T P U T S U M M A R Y (A U T O O R P S D F)

PLOT TYPE	CURVE TYPE	FRAME NO.	CURVE ID.	RMS VALUE	NO. POSITIVE CROSSINGS	XMIN FOR ALL DATA	XMAX FOR ALL DATA	YMIN FOR ALL DATA	X FOR YMIN	YMAX FOR ALL DATA	X FOR* YMAX
PSDF	EL STR	0	22594(3)	4.146091E+03	1.113102E+02	1.000E+01	2.000E+03	0.000E+00	1.000E+01	1.786E+06	1.028E+02
PSDF	EL STR	0	22594(5)	4.899996E+02	1.277144E+02	1.000E+01	2.000E+03	0.000E+00	1.000E+01	3.300E+04	1.028E+02
PSDF	EL STR	0	22594(7)	2.743080E+02	1.391181E+02	1.000E+01	2.000E+03	0.000E+00	1.000E+01	7.684E+03	1.028E+02
PSDF	EL STR	0	22547(3)	9.889669E+02	1.118998E+02	1.000E+01	2.000E+03	0.000E+00	1.000E+01	8.891E+04	1.028E+02
PSDF	EL STR	0	22547(5)	7.787702E+02	1.279097E+02	1.000E+01	2.000E+03	0.000E+00	1.000E+01	6.093E+04	1.028E+02
PSDF	EL STR	0	22547(7)	1.049835E+03	1.236089E+02	1.000E+01	2.000E+03	0.000E+00	1.000E+01	1.239E+05	1.151E+02
PSDF	EL STR	0	22548(3)	5.769775E+02	1.112401E+02	1.000E+01	2.000E+03	0.000E+00	1.000E+01	3.105E+04	1.028E+02
PSDF	EL STR	0	22548(5)	7.987919E+02	1.281028E+02	1.000E+01	2.000E+03	0.000E+00	1.000E+01	5.921E+04	1.028E+02
PSDF	EL STR	0	22548(7)	1.146314E+03	1.327728E+02	1.000E+01	2.000E+03	0.000E+00	1.000E+01	1.549E+05	1.151E+02
PSDF	EL STR	0	22584(3)	1.139761E+02	1.297098E+02	1.000E+01	2.000E+03	0.000E+00	1.000E+01	1.647E+03	1.028E+02
PSDF	EL STR	0	22584(5)	1.384302E+03	1.568344E+02	1.000E+01	2.000E+03	0.000E+00	1.000E+01	2.006E+05	1.151E+02
PSDF	EL STR	0	22584(7)	5.483940E+02	1.139976E+02	1.000E+01	2.000E+03	0.000E+00	1.000E+01	2.487E+04	1.028E+02
PSDF	EL STR	0	22587(3)	9.156921E+01	2.126725E+02	1.000E+01	2.000E+03	0.000E+00	1.000E+01	7.077E+02	1.028E+02
PSDF	EL STR	0	22587(5)	3.459553E+02	1.745666E+02	1.000E+01	2.000E+03	0.000E+00	1.000E+01	1.104E+04	1.028E+02
PSDF	EL STR	0	22587(7)	2.263674E+02	1.300366E+02	1.000E+01	2.000E+03	0.000E+00	1.000E+01	4.353E+03	1.151E+02
PSDF	EL STR	0	22588(3)	2.457415E+02	1.807778E+02	1.000E+01	2.000E+03	0.000E+00	1.000E+01	7.882E+03	1.028E+02
PSDF	EL STR	0	22588(5)	2.997829E+02	1.367224E+02	1.000E+01	2.000E+03	0.000E+00	1.000E+01	7.535E+03	1.028E+02
PSDF	EL STR	0	22588(7)	5.103940E+02	1.632312E+02	1.000E+01	2.000E+03	0.000E+00	1.000E+01	3.484E+04	1.028E+02
PSDF	EL STR	0	22605(3)	2.909104E+02	1.993623E+02	1.000E+01	2.000E+03	0.000E+00	1.000E+01	8.656E+03	1.151E+02
PSDF	EL STR	0	22605(5)	1.741881E+01	1.560536E+02	1.000E+01	2.000E+03	0.000E+00	1.000E+01	3.352E+01	1.151E+02
PSDF	EL STR	0	22605(7)	3.197724E+01	1.757731E+02	1.000E+01	2.000E+03	0.000E+00	1.000E+01	8.683E+01	1.028E+02
PSDF	EL STR	0	22628(3)	2.025765E+02	2.706693E+02	1.000E+01	2.000E+03	0.000E+00	1.000E+01	3.502E+03	1.151E+02
PSDF	EL STR	0	22628(5)	1.125077E+01	3.063174E+02	1.000E+01	2.000E+03	0.000E+00	1.000E+01	9.821E+00	1.151E+02
PSDF	EL STR	0	22628(7)	5.896027E+01	1.880432E+02	1.000E+01	2.000E+03	0.000E+00	1.000E+01	2.667E+02	1.028E+02

X AXIS PSD RESPONSE

X Y - O U T P U T S U M M A R Y (A U T O O R P S D F)

PLOT TYPE	CURVE TYPE	FRAME NO.	CURVE ID.	RMS VALUE	NO. POSITIVE CROSSINGS	XMIN FOR ALL DATA	XMAX FOR ALL DATA	YMIN FOR ALL DATA	X FOR YMIN	YMAX FOR ALL DATA	X FOR* YMAX
PSDF	EL STR	0	22637(3)	4.162884E+02	1.496942E+02	1.000E+01	2.000E+03	0.000E+00	1.000E+01	1.995E+04	1.151E+02
PSDF	EL STR	0	22637(5)	2.273305E+02	1.540851E+02	1.000E+01	2.000E+03	0.000E+00	1.000E+01	6.086E+03	1.151E+02
PSDF	EL STR	0	22637(7)	1.574239E+02	1.633727E+02	1.000E+01	2.000E+03	0.000E+00	1.000E+01	2.776E+03	1.151E+02
PSDF	EL STR	0	22638(3)	1.625514E+02	2.089988E+02	1.000E+01	2.000E+03	0.000E+00	1.000E+01	2.806E+03	1.151E+02
PSDF	EL STR	0	22638(5)	2.532599E+02	1.649042E+02	1.000E+01	2.000E+03	0.000E+00	1.000E+01	7.459E+03	1.151E+02
PSDF	EL STR	0	22638(7)	6.140430E+02	1.573120E+02	1.000E+01	2.000E+03	0.000E+00	1.000E+01	4.469E+04	1.151E+02
PSDF	EL STR	0	22705(3)	7.105511E+02	1.164341E+02	1.000E+01	2.000E+03	0.000E+00	1.000E+01	6.886E+04	1.028E+02
PSDF	EL STR	0	22705(5)	2.184661E+02	1.347005E+02	1.000E+01	2.000E+03	0.000E+00	1.000E+01	5.222E+03	1.151E+02
PSDF	EL STR	0	22705(7)	1.146536E+02	1.372038E+02	1.000E+01	2.000E+03	0.000E+00	1.000E+01	1.266E+03	1.151E+02
PSDF	EL STR	0	22706(3)	7.113729E+02	1.264621E+02	1.000E+01	2.000E+03	0.000E+00	1.000E+01	7.012E+04	1.028E+02
PSDF	EL STR	0	22706(5)	3.200076E+02	1.405694E+02	1.000E+01	2.000E+03	0.000E+00	1.000E+01	1.116E+04	1.151E+02
PSDF	EL STR	0	22706(7)	3.197429E+02	1.763206E+02	1.000E+01	2.000E+03	0.000E+00	1.000E+01	8.080E+03	1.151E+02
PSDF	EL STR	0	22654(3)	7.641284E+02	1.203002E+02	1.000E+01	2.000E+03	0.000E+00	1.000E+01	8.111E+04	1.028E+02
PSDF	EL STR	0	22654(5)	8.176295E+01	1.448456E+02	1.000E+01	2.000E+03	0.000E+00	1.000E+01	6.246E+02	1.151E+02
PSDF	EL STR	0	22654(7)	9.314061E+01	1.515416E+02	1.000E+01	2.000E+03	0.000E+00	1.000E+01	6.764E+02	1.028E+02
PSDF	EL STR	0	22655(3)	8.444506E+02	1.163228E+02	1.000E+01	2.000E+03	0.000E+00	1.000E+01	1.028E+05	1.028E+02
PSDF	EL STR	0	22655(5)	8.093823E+01	1.269348E+02	1.000E+01	2.000E+03	0.000E+00	1.000E+01	5.033E+02	1.151E+02
PSDF	EL STR	0	22655(7)	5.225035E+01	1.646607E+02	1.000E+01	2.000E+03	0.000E+00	1.000E+01	2.303E+02	1.151E+02
PSDF	EL STR	0	22658(3)	2.275614E+02	1.249657E+02	1.000E+01	2.000E+03	0.000E+00	1.000E+01	4.539E+03	1.151E+02
PSDF	EL STR	0	22658(5)	1.024840E+02	1.289461E+02	1.000E+01	2.000E+03	0.000E+00	1.000E+01	1.224E+03	1.151E+02
PSDF	EL STR	0	22658(7)	7.319038E+01	1.371133E+02	1.000E+01	2.000E+03	0.000E+00	1.000E+01	4.529E+02	1.159E+02
PSDF	EL STR	0	22689(3)	1.855519E+03	1.284718E+02	1.000E+01	2.000E+03	0.000E+00	1.000E+01	2.667E+05	1.151E+02
PSDF	EL STR	0	22689(5)	5.444659E+02	1.262671E+02	1.000E+01	2.000E+03	0.000E+00	1.000E+01	3.543E+04	1.151E+02
PSDF	EL STR	0	22689(7)	3.055697E+02	1.929823E+02	1.000E+01	2.000E+03	0.000E+00	1.000E+01	6.692E+03	1.021E+02

X AXIS PSD RESPONSE

X Y - O U T P U T S U M M A R Y (A U T O O R P S D F)

PLOT TYPE	CURVE TYPE	FRAME NO.	CURVE ID.	RMS VALUE	NO. POSITIVE CROSSINGS	XMIN FOR ALL DATA	XMAX FOR ALL DATA	YMIN FOR ALL DATA	X FOR YMIN	YMAX FOR ALL DATA	X FOR* YMAX
PSDF	EL STR	0	22688(3)	1.534405E+03	1.302838E+02	1.000E+01	2.000E+03	0.000E+00	1.000E+01	2.756E+05	1.151E+02
PSDF	EL STR	0	22688(5)	7.028293E+02	1.254818E+02	1.000E+01	2.000E+03	0.000E+00	1.000E+01	4.698E+04	1.151E+02
PSDF	EL STR	0	22688(7)	1.525860E+02	2.487606E+02	1.000E+01	2.000E+03	0.000E+00	1.000E+01	1.197E+03	1.028E+02
PSDF	EL STR	0	22687(3)	1.935204E+03	1.278620E+02	1.000E+01	2.000E+03	0.000E+00	1.000E+01	4.377E+05	1.151E+02
PSDF	EL STR	0	22687(5)	6.982747E+01	1.774173E+02	1.000E+01	2.000E+03	0.000E+00	1.000E+01	3.630E+02	1.159E+02
PSDF	EL STR	0	22687(7)	4.074139E+02	1.339714E+02	1.000E+01	2.000E+03	0.000E+00	1.000E+01	1.870E+04	1.151E+02
PSDF	EL STR	0	22702(3)	1.530578E+02	2.074670E+02	1.000E+01	2.000E+03	0.000E+00	1.000E+01	1.090E+03	1.151E+02
PSDF	EL STR	0	22702(5)	8.138469E+01	1.439485E+02	1.000E+01	2.000E+03	0.000E+00	1.000E+01	8.682E+02	1.028E+02
PSDF	EL STR	0	22702(7)	1.036667E+02	2.406046E+02	1.000E+01	2.000E+03	0.000E+00	1.000E+01	4.521E+02	1.028E+02
PSDF	EL STR	0	22407(3)	1.893966E+03	1.296376E+02	1.000E+01	2.000E+03	0.000E+00	1.000E+01	4.099E+05	1.151E+02
PSDF	EL STR	0	22407(5)	2.369178E+02	2.320255E+02	1.000E+01	2.000E+03	0.000E+00	1.000E+01	3.393E+03	1.151E+02
PSDF	EL STR	0	22407(7)	4.201390E+02	1.620691E+02	1.000E+01	2.000E+03	0.000E+00	1.000E+01	1.939E+04	1.028E+02
PSDF	EL STR	0	22686(3)	2.855305E+03	1.236458E+02	1.000E+01	2.000E+03	0.000E+00	1.000E+01	8.817E+05	1.151E+02
PSDF	EL STR	0	22686(5)	4.196880E+02	1.337890E+02	1.000E+01	2.000E+03	0.000E+00	1.000E+01	1.937E+04	1.151E+02
PSDF	EL STR	0	22686(7)	2.201732E+02	3.340489E+02	1.000E+01	2.000E+03	0.000E+00	1.000E+01	3.398E+03	1.151E+02
PSDF	EL STR	0	22372(3)	5.873939E+02	1.306285E+02	1.000E+01	2.000E+03	0.000E+00	1.000E+01	3.105E+04	1.151E+02
PSDF	EL STR	0	22372(5)	3.029432E+02	1.675814E+02	1.000E+01	2.000E+03	0.000E+00	1.000E+01	9.683E+03	1.151E+02
PSDF	EL STR	0	22372(7)	8.661855E+02	1.362724E+02	1.000E+01	2.000E+03	0.000E+00	1.000E+01	8.330E+04	1.151E+02
PSDF	EL STR	0	22371(3)	1.071591E+03	1.298793E+02	1.000E+01	2.000E+03	0.000E+00	1.000E+01	1.252E+05	1.151E+02
PSDF	EL STR	0	22371(5)	9.911497E+02	1.297019E+02	1.000E+01	2.000E+03	0.000E+00	1.000E+01	1.111E+05	1.151E+02
PSDF	EL STR	0	22371(7)	6.393105E+02	1.458595E+02	1.000E+01	2.000E+03	0.000E+00	1.000E+01	3.614E+04	1.159E+02
PSDF	EL STR	0	22351(3)	2.654855E+02	2.119219E+02	1.000E+01	2.000E+03	0.000E+00	1.000E+01	8.098E+03	1.028E+02
PSDF	EL STR	0	22351(5)	1.857601E+02	3.603369E+02	1.000E+01	2.000E+03	0.000E+00	1.000E+01	1.732E+03	1.151E+02
PSDF	EL STR	0	22351(7)	3.383526E+02	1.721898E+02	1.000E+01	2.000E+03	0.000E+00	1.000E+01	6.784E+03	1.159E+02

X AXIS PSD RESPONSE

X Y - O U T P U T S U M M A R Y (A U T O O R P S D F)

PLOT TYPE	CURVE TYPE	FRAME NO.	CURVE ID.	RMS VALUE	NO. POSITIVE CROSSINGS	XMIN FOR ALL DATA	XMAX FOR ALL DATA	YMIN FOR ALL DATA	X FOR YMIN	YMAX FOR ALL DATA	X FOR* YMAX
PSDF	EL STR	0	22379(3)	5.695640E+02	1.283375E+02	1.000E+01	2.000E+03	0.000E+00	1.000E+01	3.889E+04	1.151E+02
PSDF	EL STR	0	22379(5)	1.465295E+02	1.939090E+02	1.000E+01	2.000E+03	0.000E+00	1.000E+01	2.199E+03	1.151E+02
PSDF	EL STR	0	22379(7)	4.848655E+02	1.227171E+02	1.000E+01	2.000E+03	0.000E+00	1.000E+01	3.412E+04	1.028E+02

X AXIS PSD RESPONSE
* * * * D B D I C T P R I N T * * * * SUBDMAP = PRTSUM , DMAP STATEMENT NO. 5

* * * * A N A L Y S I S S U M M A R Y T A B L E * * * *

SEID	PEID	PROJ	VERS	APRCH	SEMG	SEMR	SEKR	SELG	SELR	MODES	DYNRED	SOLLIN	PVALID	SOLNL	LOOPID	DESIGN CYCLE	SENSITIVITY
0	0	1	4	' '	T	T	T	T	T	T	F	T	0	F	-1	0	F

SEID = SUPERELEMENT ID.
PEID = PRIMARY SUPERELEMENT ID OF IMAGE SUPERELEMENT.
PROJ = PROJECT ID NUMBER.
VERS = VERSION ID.
APRCH = BLANK FOR STRUCTURAL ANALYSIS. HEAT FOR HEAT TRANSFER ANALYSIS.
SEMG = STIFFNESS AND MASS MATRIX GENERATION STEP.
SEMR = MASS MATRIX REDUCTION STEP (INCLUDES EIGENVALUE SOLUTION FOR MODES).
SEKR = STIFFNESS MATRIX REDUCTION STEP.
SELG = LOAD MATRIX GENERATION STEP.
SELR = LOAD MATRIX REDUCTION STEP.
MODES = T (TRUE) IF NORMAL MODES OR BUCKLING MODES CALCULATED.
DYNRED = T (TRUE) MEANS GENERALIZED DYNAMIC AND/OR COMPONENT MODE REDUCTION PERFORMED.
SOLLIN = T (TRUE) IF LINEAR SOLUTION EXISTS IN DATABASE.
PVALID = P-DISTRIBUTION ID OF P-VALUE FOR P-ELEMENTS
LOOPID = THE LAST LOOPID VALUE USED IN THE NONLINEAR ANALYSIS. USEFUL FOR RESTARTS.
SOLNL = T (TRUE) IF NONLINEAR SOLUTION EXISTS IN DATABASE.
DESIGN CYCLE = THE LAST DESIGN CYCLE (ONLY VALID IN OPTIMIZATION).
SENSITIVITY = SENSITIVITY MATRIX GENERATION FLAG.

X AXIS PSD RESPONSE

X Y - O U T P U T S U M M A R Y (A U T O O R P S D F)

PLOT TYPE	CURVE TYPE	FRAME NO.	CURVE ID.	RMS VALUE	NO. POSITIVE CROSSINGS	XMIN FOR ALL DATA	XMAX FOR ALL DATA	YMIN FOR ALL DATA	X FOR YMIN	YMAX FOR ALL DATA	X FOR* YMAX
PSDF	EL FOR	0	22894(2)	4.753101E+02	1.291708E+02	1.000E+01	2.000E+03	0.000E+00	1.000E+01	2.703E+04	1.151E+02
PSDF	EL FOR	0	22895(2)	8.021518E+01	2.035599E+02	1.000E+01	2.000E+03	0.000E+00	1.000E+01	7.577E+02	1.028E+02
PSDF	EL FOR	0	22896(2)	2.846208E+02	2.067593E+02	1.000E+01	2.000E+03	0.000E+00	1.000E+01	8.500E+03	1.028E+02
PSDF	EL FOR	0	22897(2)	4.705501E+02	1.544913E+02	1.000E+01	2.000E+03	0.000E+00	1.000E+01	2.619E+04	1.151E+02
PSDF	EL FOR	0	22898(2)	1.369684E+02	1.682505E+02	1.000E+01	2.000E+03	0.000E+00	1.000E+01	2.147E+03	1.151E+02
PSDF	EL FOR	0	22899(2)	6.748691E+01	2.068474E+02	1.000E+01	2.000E+03	0.000E+00	1.000E+01	4.526E+02	1.151E+02
PSDF	EL FOR	0	22900(2)	5.150776E+01	2.042269E+02	1.000E+01	2.000E+03	0.000E+00	1.000E+01	1.612E+02	1.151E+02
PSDF	EL FOR	0	22901(2)	1.123900E+02	1.396702E+02	1.000E+01	2.000E+03	0.000E+00	1.000E+01	1.347E+03	1.151E+02
PSDF	EL FOR	0	22902(2)	2.711163E+02	1.302609E+02	1.000E+01	2.000E+03	0.000E+00	1.000E+01	8.634E+03	1.151E+02
PSDF	EL FOR	0	22903(2)	2.119767E+02	1.496856E+02	1.000E+01	2.000E+03	0.000E+00	1.000E+01	5.801E+03	1.028E+02
PSDF	EL FOR	0	22904(2)	4.190067E+02	1.357271E+02	1.000E+01	2.000E+03	0.000E+00	1.000E+01	1.890E+04	1.151E+02

X AXIS PSD RESPONSE
* * * * D B D I C T P R I N T * * * * SUBDMAP = PRTSUM , DMAP STATEMENT NO. 5

* * * * A N A L Y S I S S U M M A R Y T A B L E * * * *

SEID	PEID	PROJ	VERS	APRCH	SEMG	SEMR	SEKR	SELG	SELR	MODES	DYNRED	SOLLIN	PVALID	SOLNL	LOOPID	DESIGN CYCLE	SENSITIVITY
0	0	1	7	' '	T	T	T	T	T	T	F	T	0	F	-1	0	F

SEID = SUPERELEMENT ID.
PEID = PRIMARY SUPERELEMENT ID OF IMAGE SUPERELEMENT.
PROJ = PROJECT ID NUMBER.
VERS = VERSION ID.
APRCH = BLANK FOR STRUCTURAL ANALYSIS. HEAT FOR HEAT TRANSFER ANALYSIS.
SEMG = STIFFNESS AND MASS MATRIX GENERATION STEP.
SEMR = MASS MATRIX REDUCTION STEP (INCLUDES EIGENVALUE SOLUTION FOR MODES).
SEKR = STIFFNESS MATRIX REDUCTION STEP.
SELG = LOAD MATRIX GENERATION STEP.
SELR = LOAD MATRIX REDUCTION STEP.
MODES = T (TRUE) IF NORMAL MODES OR BUCKLING MODES CALCULATED.
DYNRED = T (TRUE) MEANS GENERALIZED DYNAMIC AND/OR COMPONENT MODE REDUCTION PERFORMED.
SOLLIN = T (TRUE) IF LINEAR SOLUTION EXISTS IN DATABASE.
PVALID = P-DISTRIBUTION ID OF P-VALUE FOR P-ELEMENTS
LOOPID = THE LAST LOOPID VALUE USED IN THE NONLINEAR ANALYSIS. USEFUL FOR RESTARTS.
SOLNL = T (TRUE) IF NONLINEAR SOLUTION EXISTS IN DATABASE.
DESIGN CYCLE = THE LAST DESIGN CYCLE (ONLY VALID IN OPTIMIZATION).
SENSITIVITY = SENSITIVITY MATRIX GENERATION FLAG.

Y Axis Output

Acceleration Response Plots

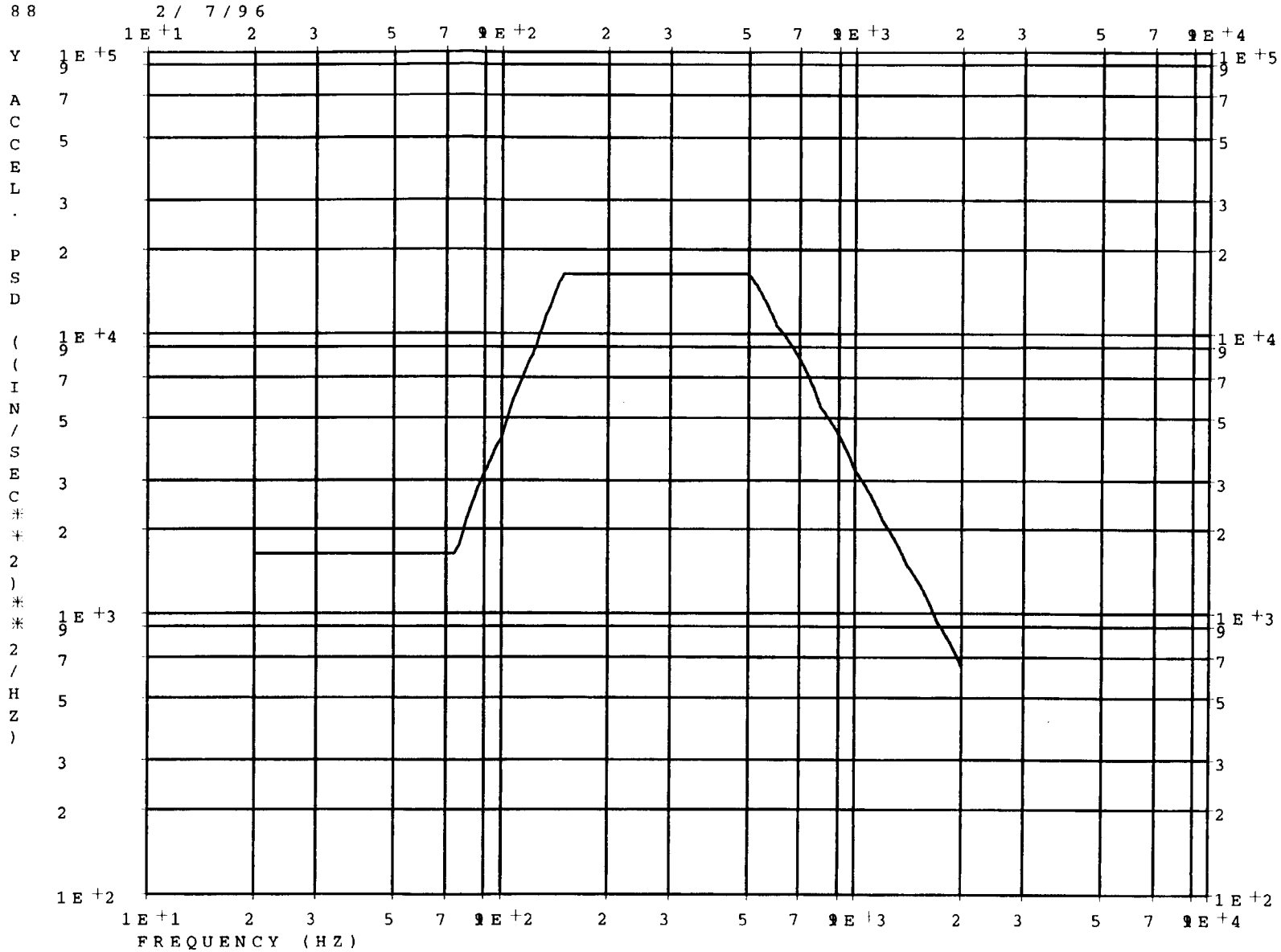

METSAT/AMSU-A2 WITH COI REFLECTOR
QUAL. LEVEL RANDOM VIBRATION (8.8 GRMS)
Y AXIS PSD RESPONSE

Y Ais Input Grid Point 24000

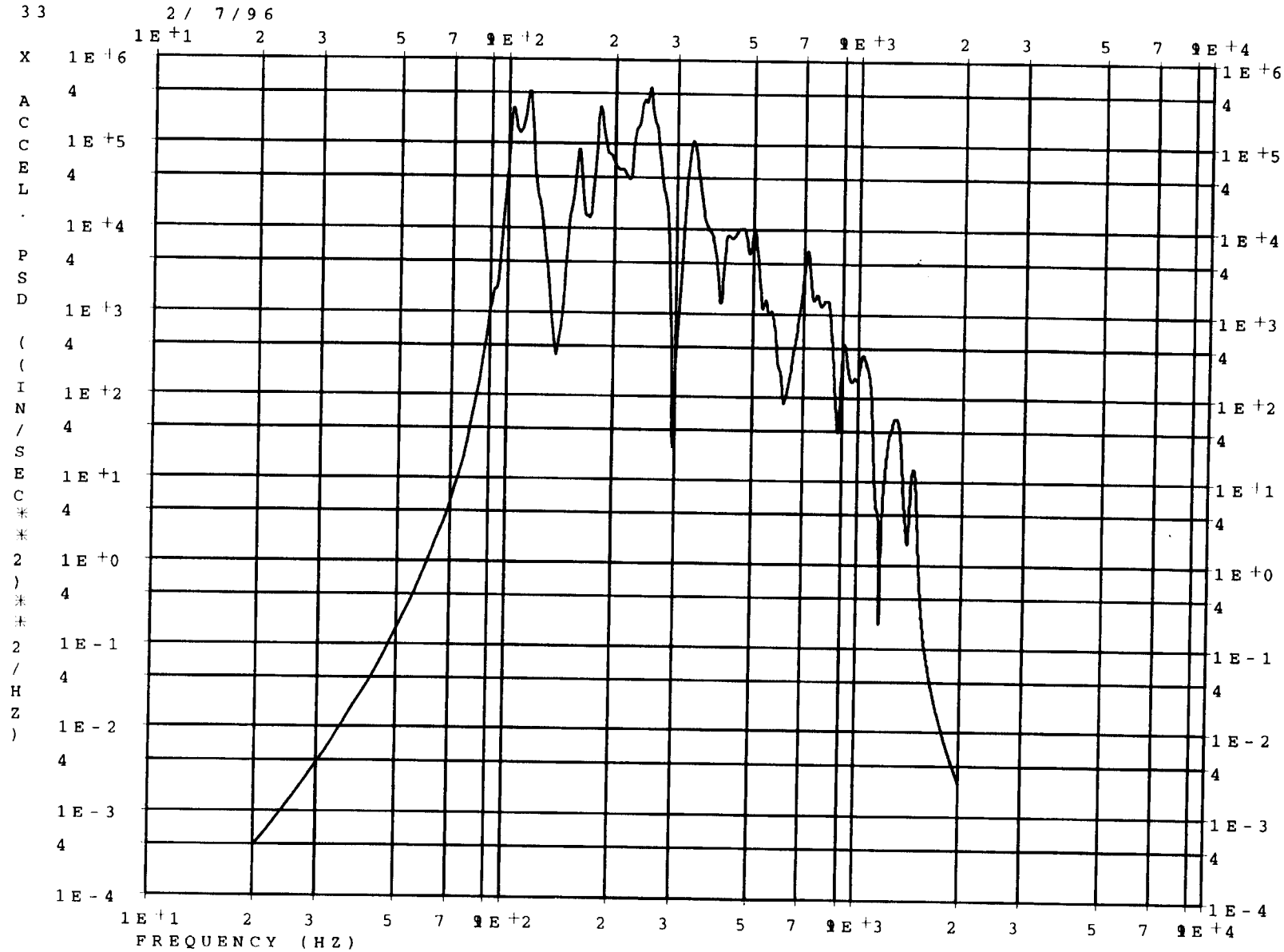

METSAT/AMSU-A2 WITH COI REFLECTOR
QUAL. LEVEL RANDOM VIBRATION (8.8 GRMS)
Y AXIS PSD RESPONSE

X Accelration Grid Point 2086

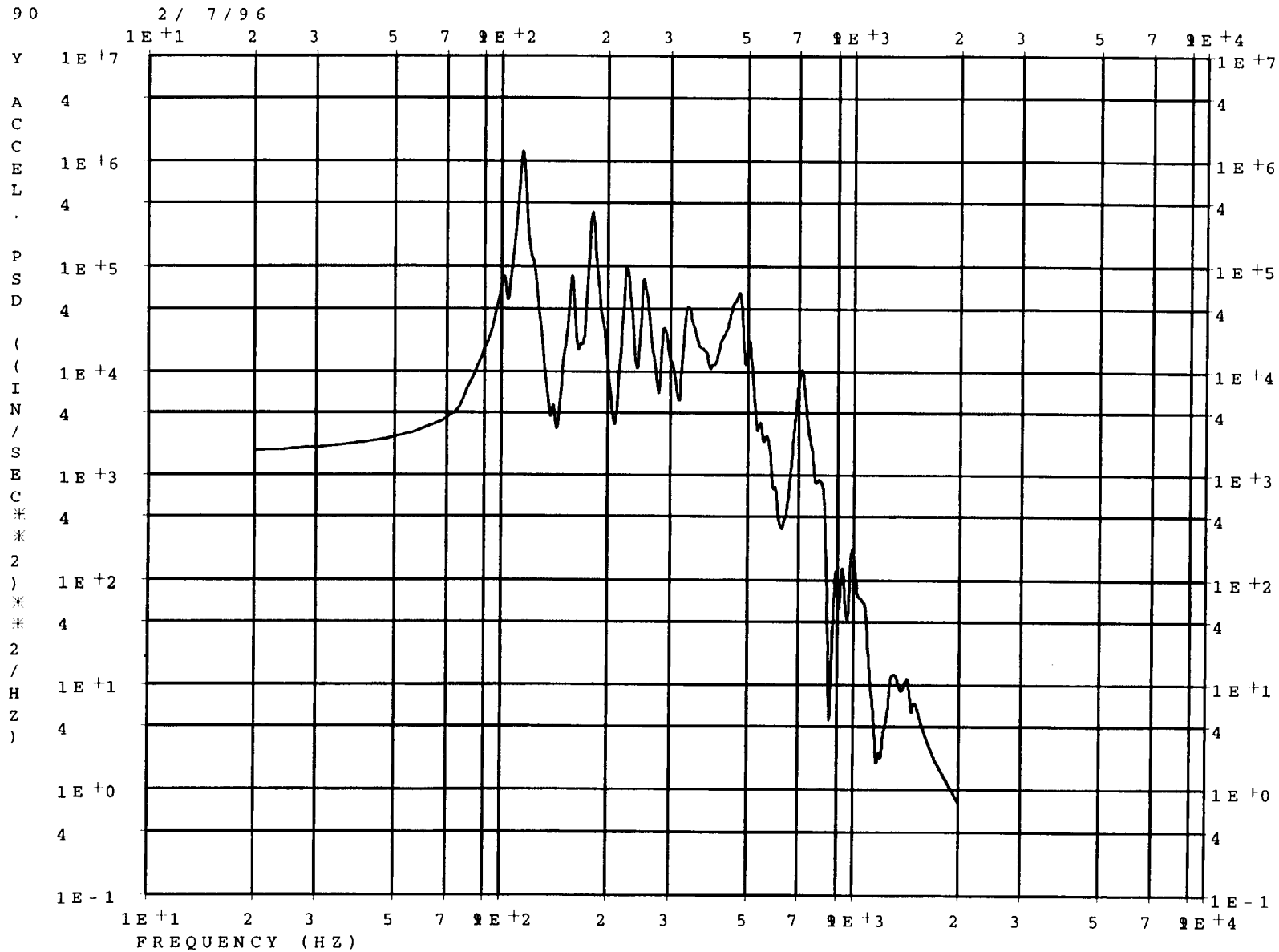

METSAT/AMSU-A2 WITH COI REFLECTOR
QUAL. LEVEL RANDOM VIBRATION (8.8 GRMS)
Y AXIS PSD RESPONSE

Y Acceleation Grid Point 2086

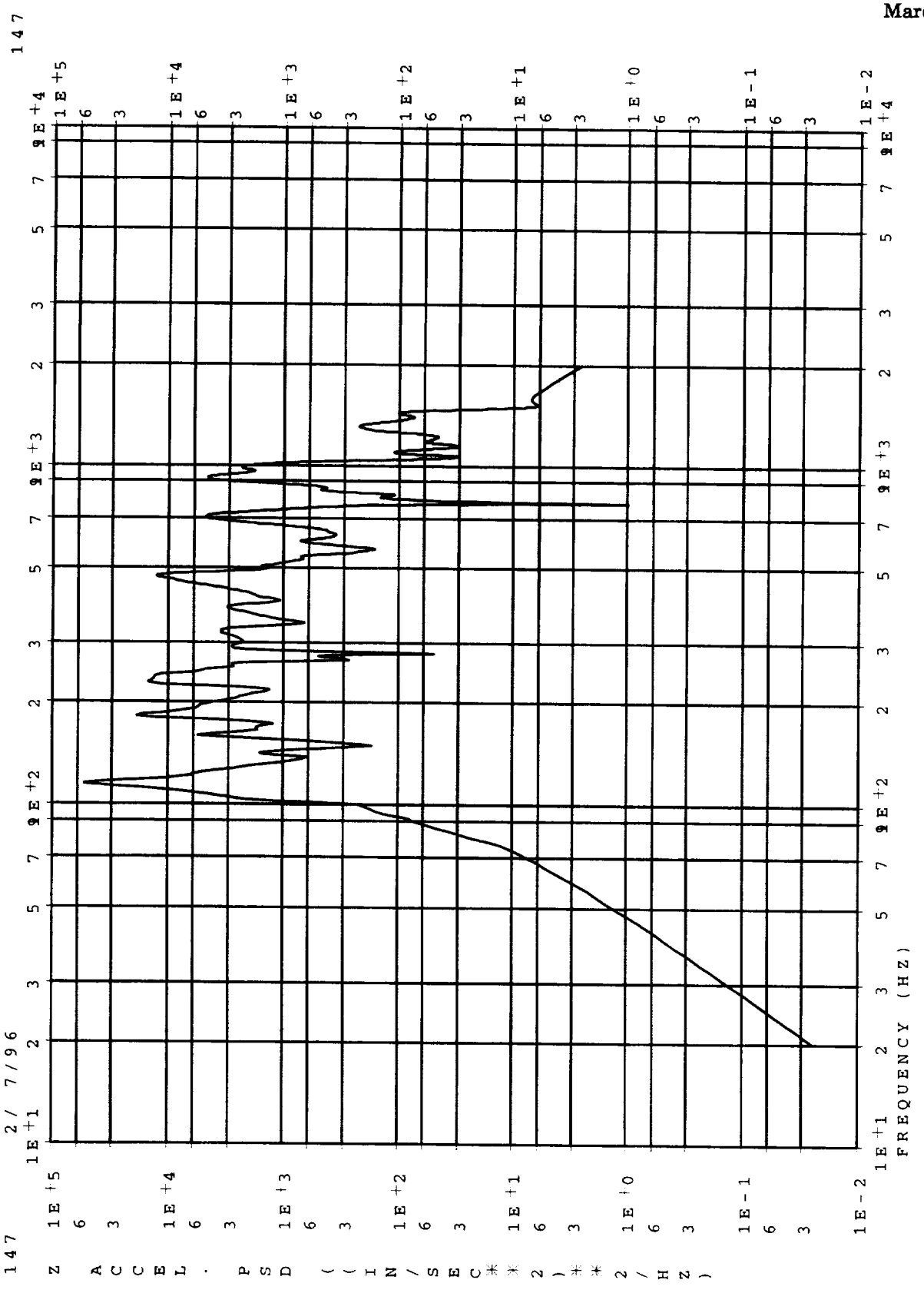

Z Acceleration Grid Point 2086

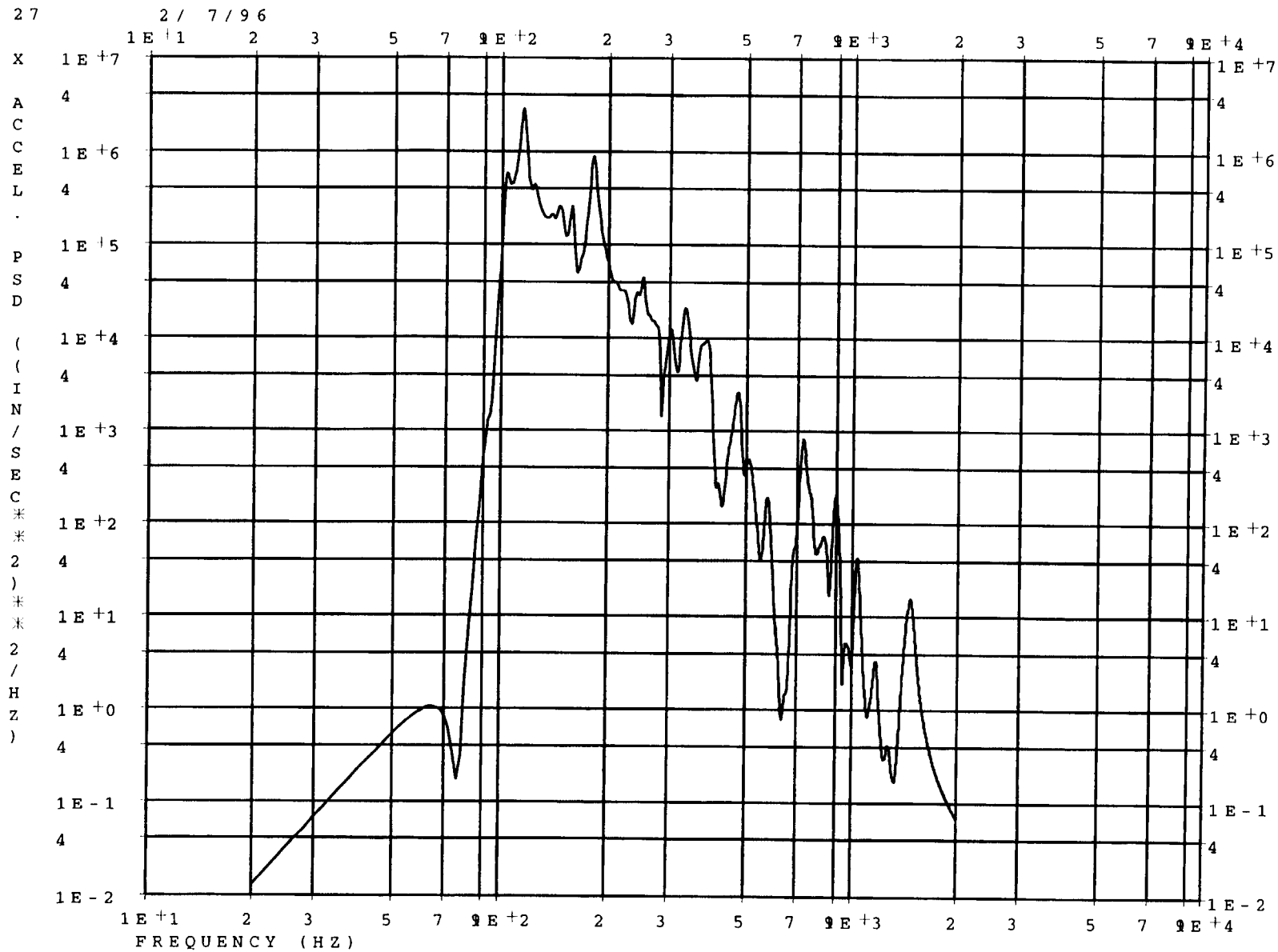

METSAT/AMSU-A2 WITH COI REFLECTOR
QUAL. LEVEL RANDOM VIBRATION (8.8 GRMS)
Y AXIS PSD RESPONSE

X Acceleration Grid Point 2173

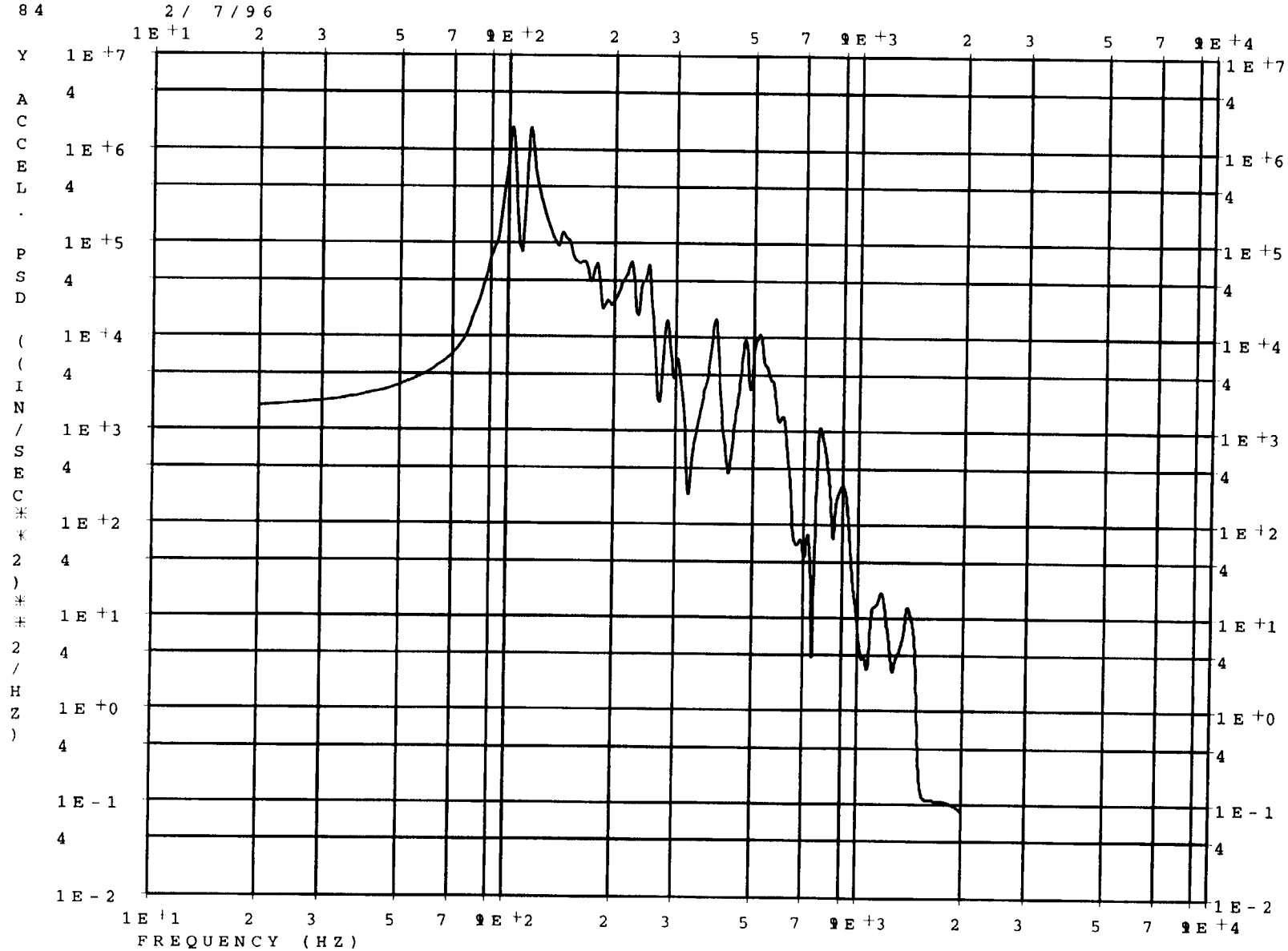

METSAT/AMSU-A2 WITH COI REFLECTOR
QUAL. LEVEL RANDOM VIBRATION (8.8 GRMS)
Y AXIS PSD RESPONSE

Y Acceleration Grid Point 2173

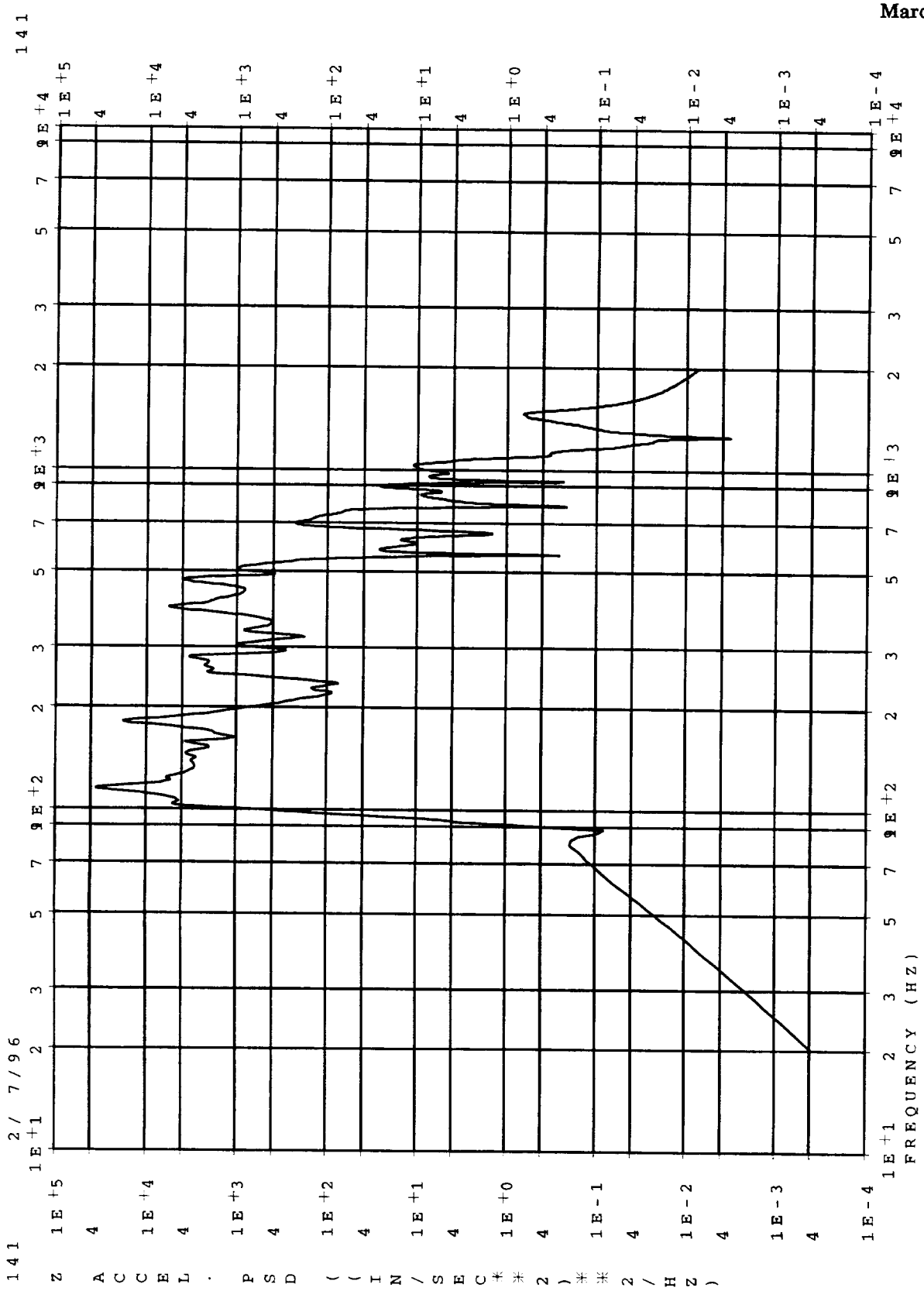

Z Acceleration Grid Point 2173

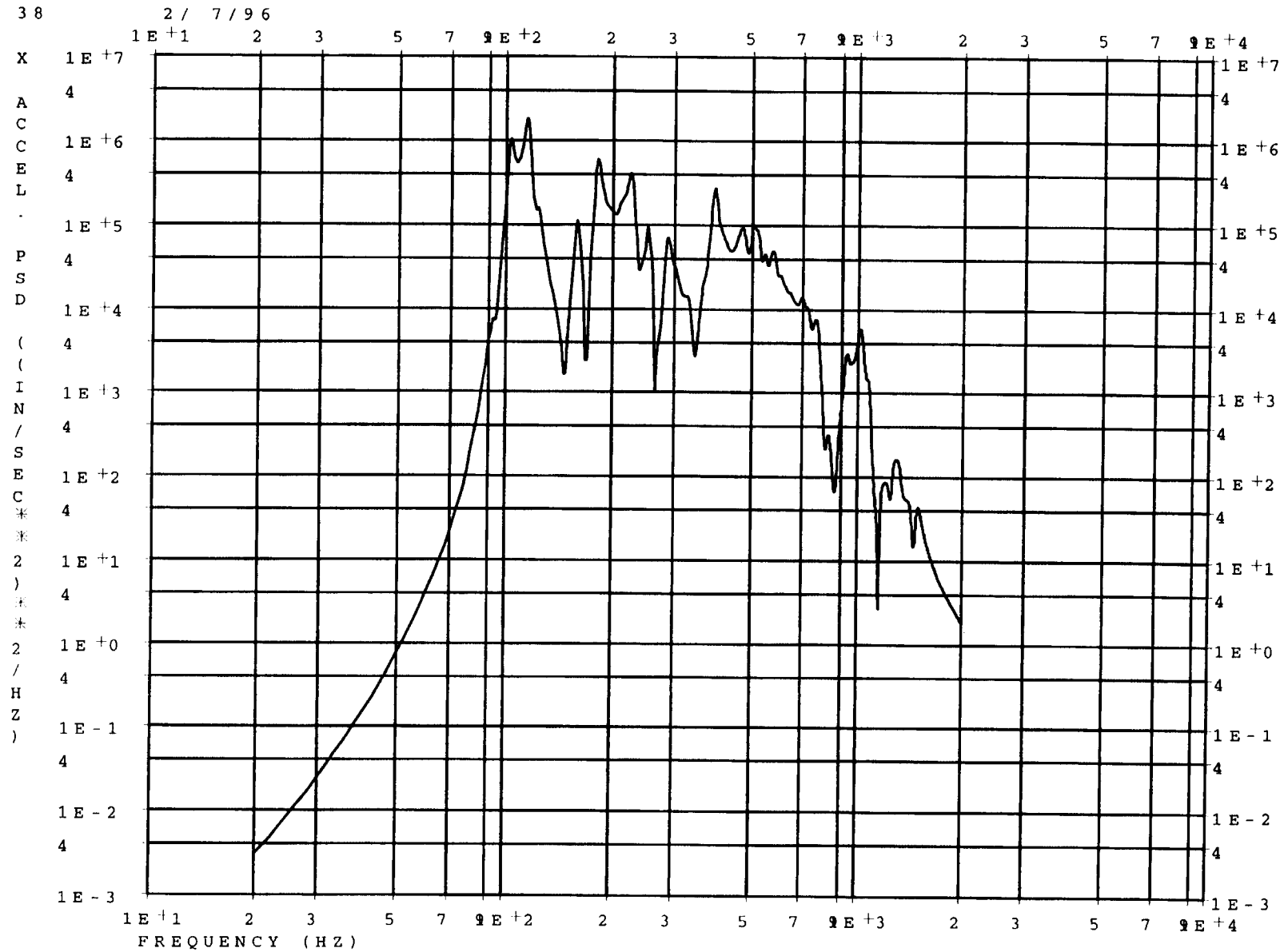

METSAT/AMSU-A2 WITH COI REFLECTOR
QUAL. LEVEL RANDOM VIBRATION (8.8 GRMS)
Y AXIS PSD RESPONSE

X Acceleration Grid Point 2441

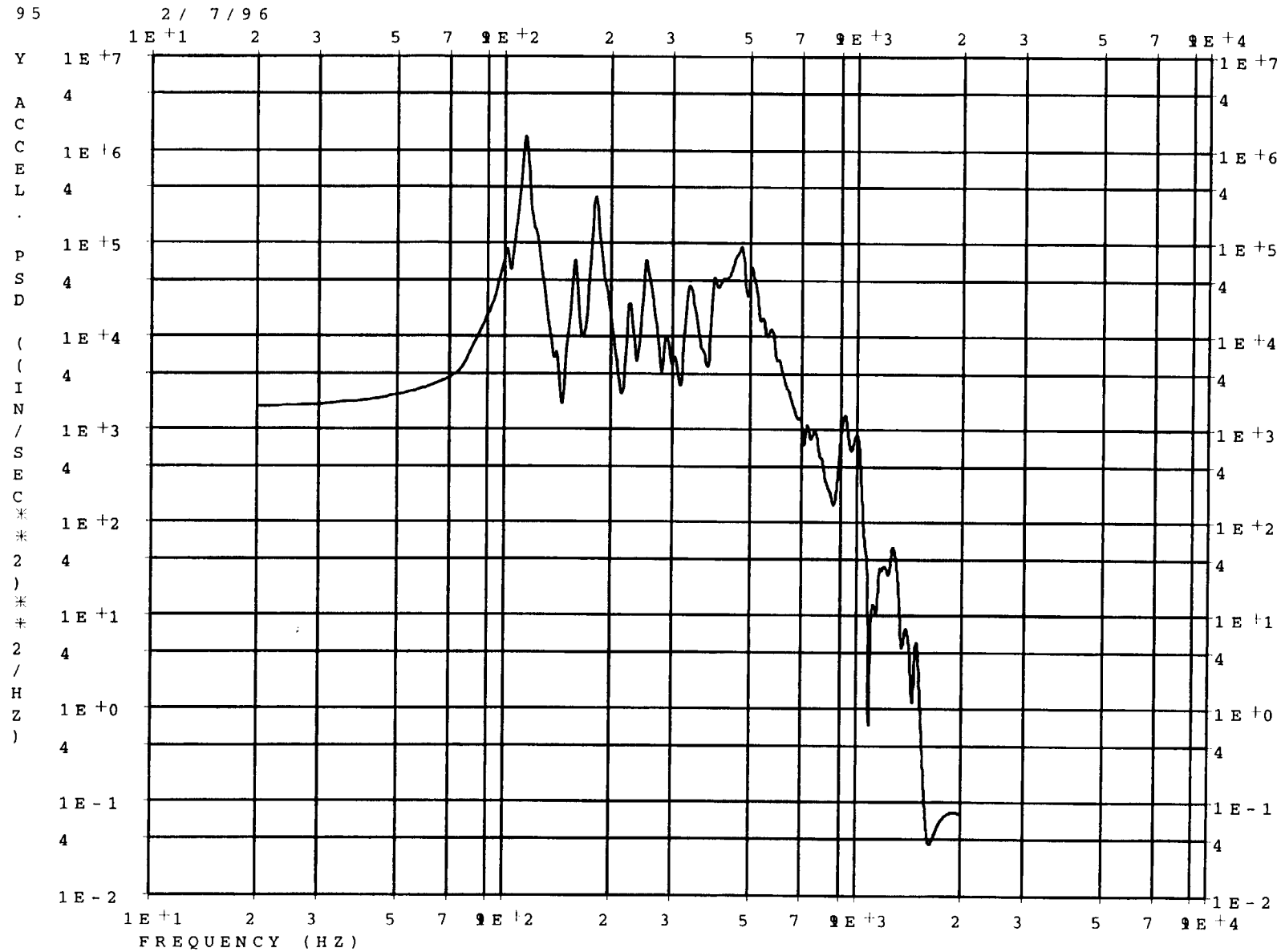

METSAT/AMSU-A2 WITH COI REFLECTOR
QUAL. LEVEL RANDOM VIBRATION (8.8 GRMS)
Y AXIS PSD RESPONSE

Y Acceleration Grid Point 2441

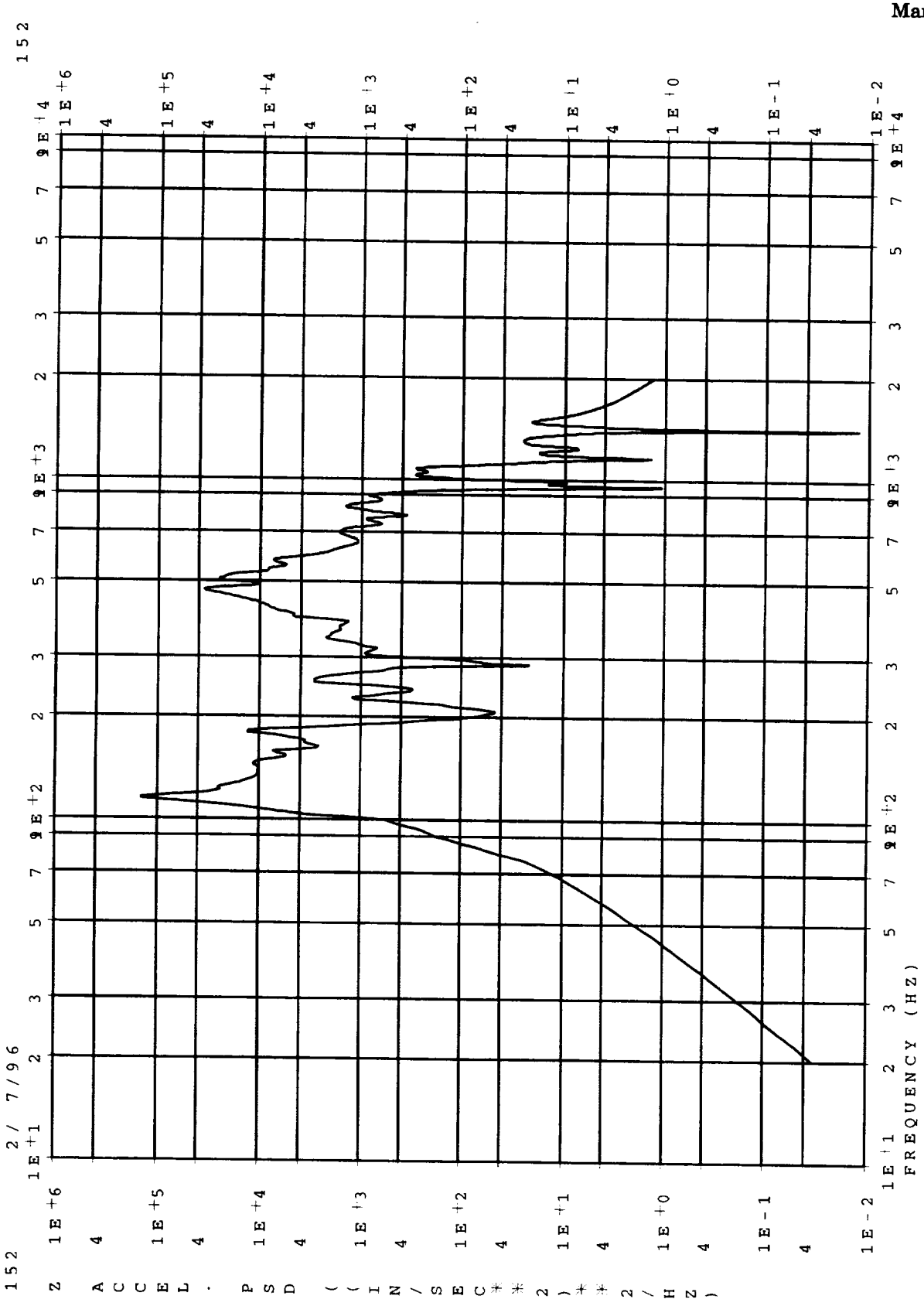

Z Acceleration Grid Point 2441

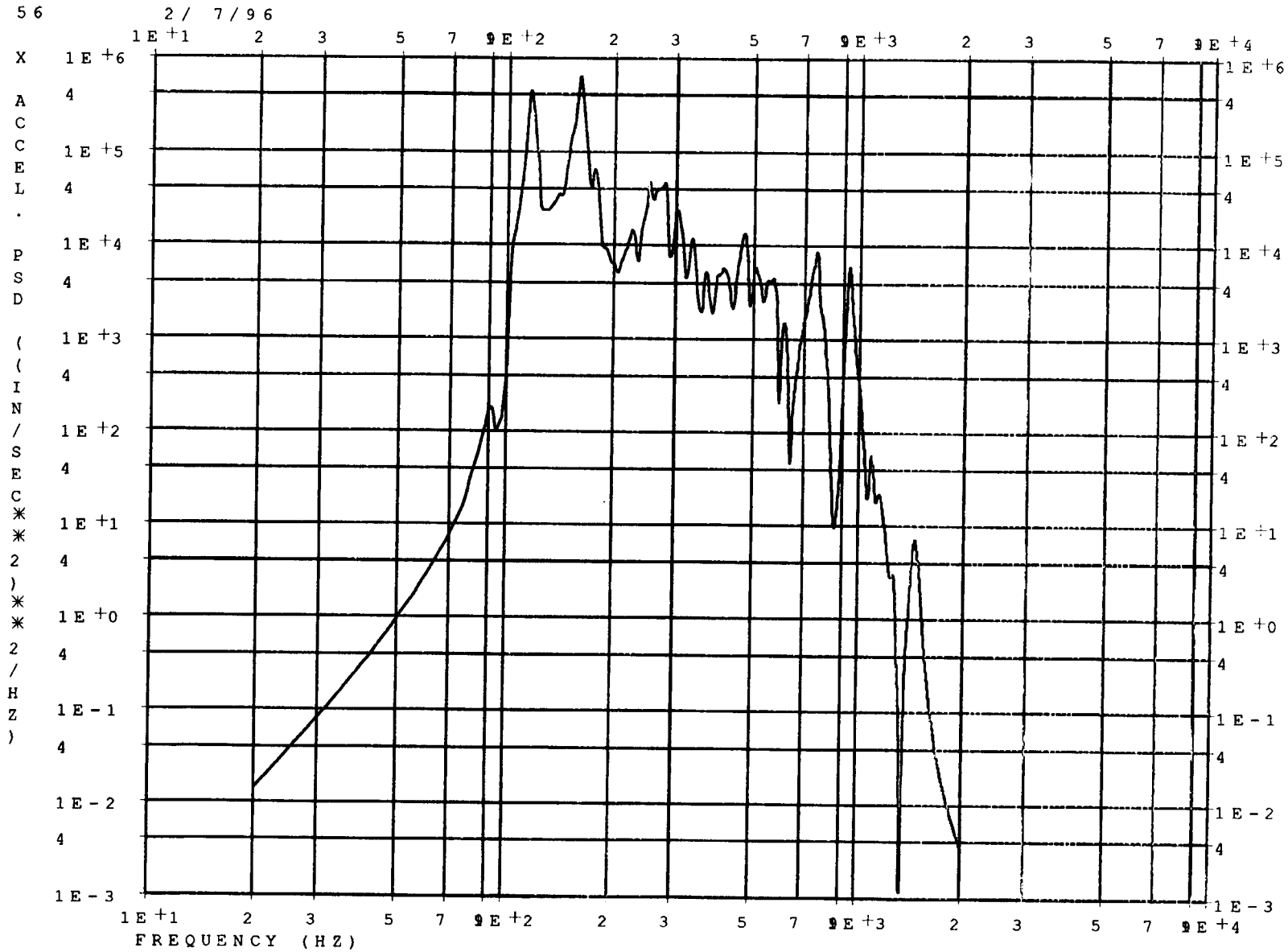

METSAT/AMSU-A2 WITH COI REFLECTOR
QUAL. LEVEL RANDOM VIBRATION (8.8 GRMS)
Y AXIS PSD RESPONSE

X Acceleration Grid Point 26206

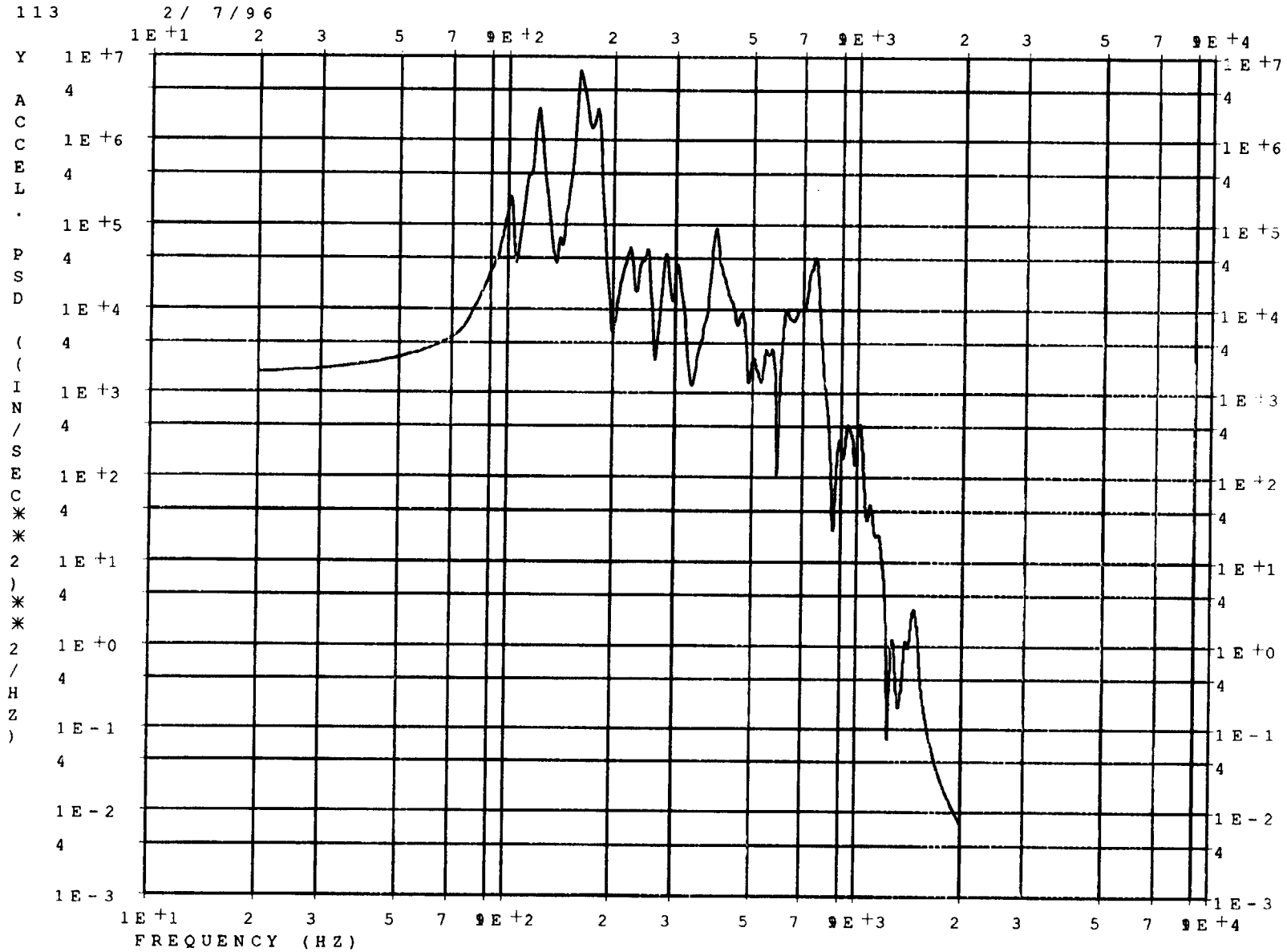

METSAT/AMSU-A2 WITH COI REFLECTOR
QUAL. LEVEL RANDOM VIBRATION (8.8 GRMS)
Y AXIS PSD RESPONSE

Y Acceleration Grid Point 26206

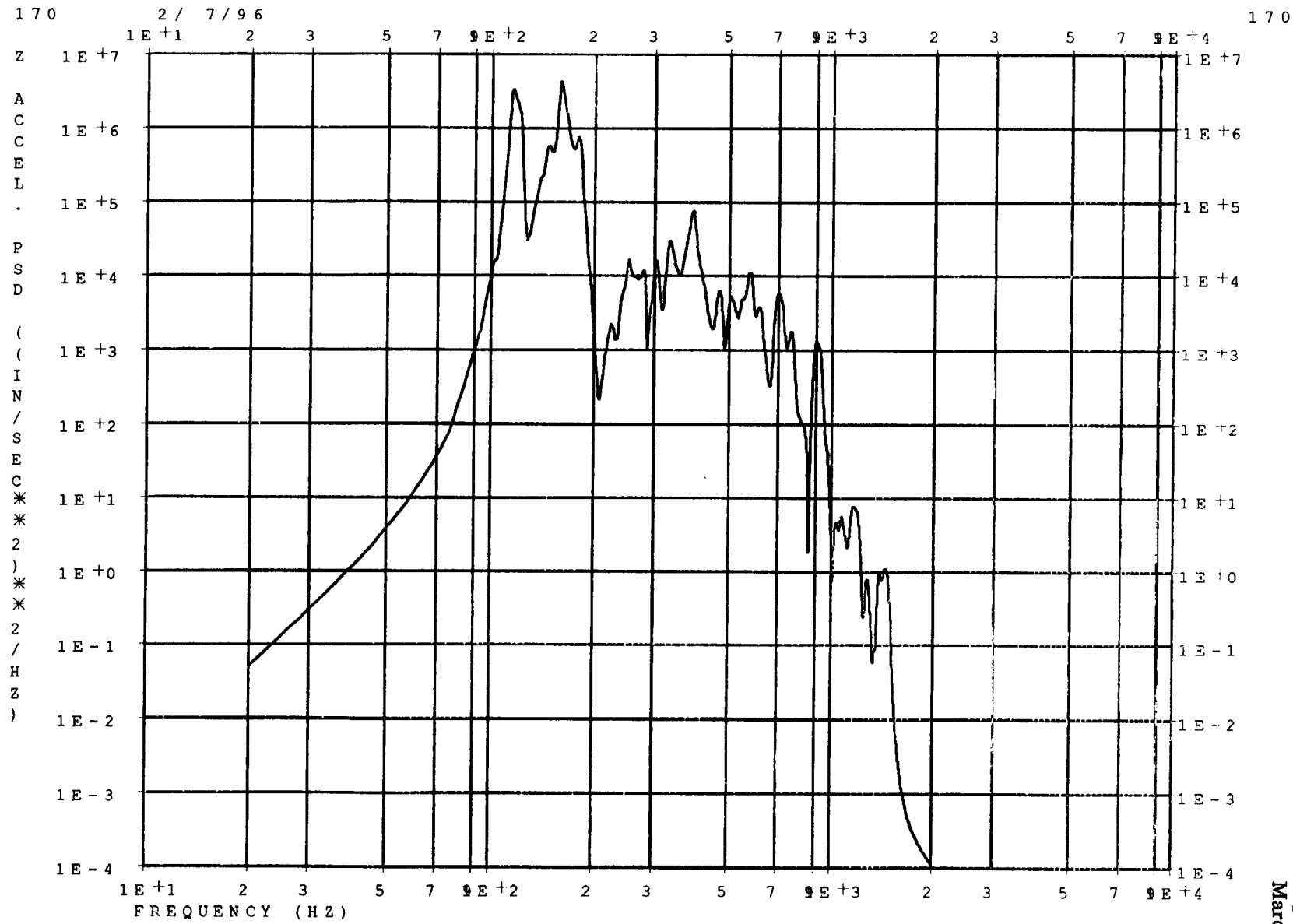

METSAT/AMSU-A2 WITH COI REFLECTOR
QUAL. LEVEL RANDOM VIBRATION (8.8 GRMS)
Y AXIS PSD RESPONSE

Z Acceleration Grid Point 26206

Y AXIS PSD RESPONSE

X Y - O U T P U T S U M M A R Y (A U T O O R P S D F)

PLOT TYPE	CURVE TYPE	FRAME NO.	CURVE ID.	RMS VALUE	NO. POSITIVE CROSSINGS	XMIN FOR ALL DATA	XMAX FOR ALL DATA	YMIN FOR ALL DATA	X FOR YMIN	YMAX FOR ALL DATA	X FOR* YMAX
PSDF	ACCE	1	2201(3)	3.925186E+03	2.023542E+02	1.000E+01	2.000E+03	0.000E+00	1.000E+01	5.320E+05	1.151E+02
PSDF	ACCE	2	2660(3)	2.221982E+03	1.871477E+02	1.000E+01	2.000E+03	0.000E+00	1.000E+01	3.226E+05	1.151E+02
PSDF	ACCE	3	2648(3)	2.420762E+03	1.722924E+02	1.000E+01	2.000E+03	0.000E+00	1.000E+01	4.462E+05	1.028E+02
PSDF	ACCE	4	2650(3)	2.752594E+03	1.718086E+02	1.000E+01	2.000E+03	0.000E+00	1.000E+01	5.843E+05	1.028E+02
PSDF	ACCE	5	2658(3)	2.395450E+03	1.911767E+02	1.000E+01	2.000E+03	0.000E+00	1.000E+01	3.273E+05	1.151E+02
PSDF	ACCE	6	2200(3)	3.923697E+03	2.022987E+02	1.000E+01	2.000E+03	0.000E+00	1.000E+01	5.319E+05	1.151E+02
PSDF	ACCE	7	2205(3)	4.039722E+03	2.073289E+02	1.000E+01	2.000E+03	0.000E+00	1.000E+01	6.834E+05	1.151E+02
PSDF	ACCE	8	2206(3)	4.042009E+03	2.075559E+02	1.000E+01	2.000E+03	0.000E+00	1.000E+01	6.838E+05	1.151E+02
PSDF	ACCE	9	2196(3)	3.982368E+03	2.317098E+02	1.000E+01	2.000E+03	0.000E+00	1.000E+01	3.974E+05	1.151E+02
PSDF	ACCE	10	1890(3)	4.949074E+03	1.490054E+02	1.000E+01	2.000E+03	0.000E+00	1.000E+01	1.770E+06	1.151E+02
PSDF	ACCE	11	2197(3)	3.980468E+03	2.315966E+02	1.000E+01	2.000E+03	0.000E+00	1.000E+01	3.972E+05	1.151E+02
PSDF	ACCE	12	3053(3)	1.180423E+04	2.394850E+02	1.000E+01	2.000E+03	0.000E+00	1.000E+01	5.326E+06	2.260E+02
PSDF	ACCE	13	1885(3)	4.946199E+03	1.488438E+02	1.000E+01	2.000E+03	0.000E+00	1.000E+01	1.769E+06	1.151E+02
PSDF	ACCE	14	1886(3)	4.945911E+03	1.488256E+02	1.000E+01	2.000E+03	0.000E+00	1.000E+01	1.769E+06	1.151E+02
PSDF	ACCE	15	1887(3)	4.946611E+03	1.488608E+02	1.000E+01	2.000E+03	0.000E+00	1.000E+01	1.769E+06	1.151E+02
PSDF	ACCE	16	1888(3)	4.947078E+03	1.488878E+02	1.000E+01	2.000E+03	0.000E+00	1.000E+01	1.769E+06	1.151E+02
PSDF	ACCE	17	3037(3)	6.069381E+03	1.713736E+02	1.000E+01	2.000E+03	0.000E+00	1.000E+01	2.220E+06	1.151E+02
PSDF	ACCE	18	3038(3)	5.985419E+03	1.735305E+02	1.000E+01	2.000E+03	0.000E+00	1.000E+01	2.195E+06	1.151E+02
PSDF	ACCE	19	3039(3)	5.984739E+03	1.824904E+02	1.000E+01	2.000E+03	0.000E+00	1.000E+01	2.138E+06	1.151E+02
PSDF	ACCE	20	3040(3)	5.881096E+03	1.846520E+02	1.000E+01	2.000E+03	0.000E+00	1.000E+01	2.029E+06	1.151E+02
PSDF	ACCE	21	3041(3)	5.815133E+03	1.820314E+02	1.000E+01	2.000E+03	0.000E+00	1.000E+01	1.955E+06	1.151E+02
PSDF	ACCE	22	3042(3)	6.082946E+03	1.882099E+02	1.000E+01	2.000E+03	0.000E+00	1.000E+01	2.023E+06	1.151E+02
PSDF	ACCE	23	3043(3)	6.264344E+03	1.869682E+02	1.000E+01	2.000E+03	0.000E+00	1.000E+01	2.131E+06	1.151E+02
PSDF	ACCE	24	3044(3)	6.178598E+03	1.767135E+02	1.000E+01	2.000E+03	0.000E+00	1.000E+01	2.193E+06	1.151E+02

Y AXIS PSD RESPONSE

X Y - O U T P U T S U M M A R Y (A U T O O R P S D F)

PLOT TYPE	CURVE TYPE	FRAME NO.	CURVE ID.	RMS VALUE	NO. POSITIVE CROSSINGS	XMIN FOR ALL DATA	XMAX FOR ALL DATA	YMIN FOR ALL DATA	X FOR YMIN	YMAX FOR ALL DATA	X FOR* YMAX
PSDF	ACCE	25	2097(3)	4.057466E+03	3.551105E+02	1.000E+01	2.000E+03	0.000E+00	1.000E+01	4.789E+05	1.151E+02
PSDF	ACCE	26	2098(3)	6.008419E+03	2.547966E+02	1.000E+01	2.000E+03	0.000E+00	1.000E+01	1.337E+06	1.151E+02
PSDF	ACCE	27	2173(3)	6.536654E+03	1.567802E+02	1.000E+01	2.000E+03	0.000E+00	1.000E+01	2.821E+06	1.151E+02
PSDF	ACCE	28	2168(3)	6.161450E+03	1.834503E+02	1.000E+01	2.000E+03	0.000E+00	1.000E+01	2.148E+06	1.151E+02
PSDF	ACCE	29	2202(3)	3.927087E+03	2.024531E+02	1.000E+01	2.000E+03	0.000E+00	1.000E+01	5.322E+05	1.151E+02
PSDF	ACCE	30	2204(3)	4.038414E+03	2.073193E+02	1.000E+01	2.000E+03	0.000E+00	1.000E+01	6.832E+05	1.151E+02
PSDF	ACCE	31	24000(3)	6.068881E-05	6.756208E+02	1.000E+01	2.000E+03	0.000E+00	1.000E+01	3.137E-11	4.600E+02
PSDF	ACCE	32	2135(3)	5.017438E+03	2.463032E+02	1.000E+01	2.000E+03	0.000E+00	1.000E+01	1.065E+06	1.151E+02
PSDF	ACCE	33	2086(3)	4.966379E+03	2.632523E+02	1.000E+01	2.000E+03	0.000E+00	1.000E+01	4.691E+05	2.520E+02
PSDF	ACCE	34	2090(3)	4.965927E+03	2.645786E+02	1.000E+01	2.000E+03	0.000E+00	1.000E+01	4.679E+05	2.520E+02
PSDF	ACCE	35	23231(3)	2.829418E+03	3.581911E+02	1.000E+01	2.000E+03	0.000E+00	1.000E+01	5.496E+05	1.151E+02
PSDF	ACCE	36	23232(3)	2.828920E+03	3.582819E+02	1.000E+01	2.000E+03	0.000E+00	1.000E+01	5.493E+05	1.151E+02
PSDF	ACCE	37	23233(3)	2.825564E+03	3.588058E+02	1.000E+01	2.000E+03	0.000E+00	1.000E+01	5.475E+05	1.151E+02
PSDF	ACCE	38	2441(3)	7.592332E+03	3.327490E+02	1.000E+01	2.000E+03	0.000E+00	1.000E+01	1.867E+06	1.151E+02
PSDF	ACCE	39	23234(3)	2.752272E+03	3.675999E+02	1.000E+01	2.000E+03	0.000E+00	1.000E+01	5.090E+05	1.151E+02
PSDF	ACCE	40	23235(3)	2.744978E+03	3.663165E+02	1.000E+01	2.000E+03	0.000E+00	1.000E+01	5.066E+05	1.151E+02
PSDF	ACCE	41	22859(3)	2.369447E+03	3.452388E+02	1.000E+01	2.000E+03	0.000E+00	1.000E+01	3.507E+05	1.151E+02
PSDF	ACCE	42	22868(3)	3.148284E+03	3.734189E+02	1.000E+01	2.000E+03	0.000E+00	1.000E+01	5.588E+05	1.028E+02
PSDF	ACCE	43	22644(3)	5.871664E+03	2.395716E+02	1.000E+01	2.000E+03	0.000E+00	1.000E+01	1.360E+06	1.410E+02
PSDF	ACCE	44	22632(3)	5.633944E+03	2.126794E+02	1.000E+01	2.000E+03	0.000E+00	1.000E+01	1.409E+06	1.920E+02
PSDF	ACCE	45	23609(3)	6.743412E+03	3.237874E+02	1.000E+01	2.000E+03	0.000E+00	1.000E+01	1.587E+06	1.151E+02
PSDF	ACCE	46	23610(3)	9.138649E+03	3.757704E+02	1.000E+01	2.000E+03	0.000E+00	1.000E+01	3.078E+06	1.151E+02
PSDF	ACCE	47	23611(3)	7.339018E+03	2.344295E+02	1.000E+01	2.000E+03	0.000E+00	1.000E+01	2.721E+06	1.800E+02
PSDF	ACCE	48	23612(3)	1.105805E+04	3.427170E+02	1.000E+01	2.000E+03	0.000E+00	1.000E+01	6.648E+06	1.800E+02

Y AXIS PSD RESPONSE

X Y - O U T P U T S U M M A R Y (A U T O O R P S D F)

PLOT TYPE	CURVE TYPE	FRAME NO.	CURVE ID.	RMS VALUE	NO. POSITIVE CROSSINGS	XMIN FOR ALL DATA	XMAX FOR ALL DATA	YMIN FOR ALL DATA	X FOR YMIN	YMAX FOR ALL DATA	X FOR* YMAX
PSDF	ACCE	49	23613(3)	8.508833E+03	6.612524E+02	1.000E+01	2.000E+03	0.000E+00	1.000E+01	6.755E+05	7.020E+02
PSDF	ACCE	50	23614(3)	5.956645E+03	5.557612E+02	1.000E+01	2.000E+03	0.000E+00	1.000E+01	6.179E+05	1.151E+02
PSDF	ACCE	51	23615(3)	6.883479E+03	5.250085E+02	1.000E+01	2.000E+03	0.000E+00	1.000E+01	8.314E+05	1.800E+02
PSDF	ACCE	52	23616(3)	1.971808E+04	3.401024E+02	1.000E+01	2.000E+03	0.000E+00	1.000E+01	2.375E+07	1.159E+02
PSDF	ACCE	53	23617(3)	2.231461E+04	1.266534E+02	1.000E+01	2.000E+03	0.000E+00	1.000E+01	5.455E+07	1.159E+02
PSDF	ACCE	54	23618(3)	1.291866E+04	1.977843E+02	1.000E+01	2.000E+03	0.000E+00	1.000E+01	1.131E+07	1.800E+02
PSDF	ACCE	55	23619(3)	1.113742E+04	2.093014E+02	1.000E+01	2.000E+03	0.000E+00	1.000E+01	9.913E+06	1.151E+02
PSDF	ACCE	56	26206(3)	3.881712E+03	2.752514E+02	1.000E+01	2.000E+03	0.000E+00	1.000E+01	6.374E+05	1.600E+02
PSDF	ACCE	57	2122(3)	3.040440E+03	1.849608E+02	1.000E+01	2.000E+03	0.000E+00	1.000E+01	5.613E+05	1.028E+02
PSDF	ACCE	58	2201(4)	3.618309E+03	2.183617E+02	1.000E+01	2.000E+03	0.000E+00	1.000E+01	7.752E+05	1.151E+02
PSDF	ACCE	59	2660(4)	3.044635E+03	2.468241E+02	1.000E+01	2.000E+03	0.000E+00	1.000E+01	6.583E+05	1.151E+02
PSDF	ACCE	60	2648(4)	3.046052E+03	2.469951E+02	1.000E+01	2.000E+03	0.000E+00	1.000E+01	6.574E+05	1.151E+02
PSDF	ACCE	61	2650(4)	3.196315E+03	2.155907E+02	1.000E+01	2.000E+03	0.000E+00	1.000E+01	7.351E+05	1.159E+02
PSDF	ACCE	62	2658(4)	3.196106E+03	2.157508E+02	1.000E+01	2.000E+03	0.000E+00	1.000E+01	7.352E+05	1.159E+02
PSDF	ACCE	63	2200(4)	3.764459E+03	2.284436E+02	1.000E+01	2.000E+03	0.000E+00	1.000E+01	8.616E+05	1.151E+02
PSDF	ACCE	64	2205(4)	3.619078E+03	2.182412E+02	1.000E+01	2.000E+03	0.000E+00	1.000E+01	7.752E+05	1.151E+02
PSDF	ACCE	65	2206(4)	3.519048E+03	2.160975E+02	1.000E+01	2.000E+03	0.000E+00	1.000E+01	6.946E+05	1.151E+02
PSDF	ACCE	66	2196(4)	3.768752E+03	2.288039E+02	1.000E+01	2.000E+03	0.000E+00	1.000E+01	8.626E+05	1.151E+02
PSDF	ACCE	67	1890(4)	5.741064E+03	2.757917E+02	1.000E+01	2.000E+03	0.000E+00	1.000E+01	1.713E+06	1.021E+02
PSDF	ACCE	68	2197(4)	3.618322E+03	2.186180E+02	1.000E+01	2.000E+03	0.000E+00	1.000E+01	7.750E+05	1.151E+02
PSDF	ACCE	69	3053(4)	6.140666E+03	1.985291E+02	1.000E+01	2.000E+03	0.000E+00	1.000E+01	3.024E+06	1.151E+02
PSDF	ACCE	70	1885(4)	4.897256E+03	1.786301E+02	1.000E+01	2.000E+03	0.000E+00	1.000E+01	1.405E+06	1.159E+02
PSDF	ACCE	71	1886(4)	4.878198E+03	1.745202E+02	1.000E+01	2.000E+03	0.000E+00	1.000E+01	1.414E+06	1.159E+02
PSDF	ACCE	72	1887(4)	5.068483E+03	1.701124E+02	1.000E+01	2.000E+03	0.000E+00	1.000E+01	1.511E+06	1.159E+02

Y AXIS PSD RESPONSE

X Y - O U T P U T S U M M A R Y (A U T O O R P S D F)

PLOT TYPE	CURVE TYPE	FRAME NO.	CURVE ID.	RMS VALUE	NO. POSITIVE CROSSINGS	XMIN FOR ALL DATA	XMAX FOR ALL DATA	YMIN FOR ALL DATA	X FOR YMIN	YMAX FOR ALL DATA	X FOR* YMAX
PSDF	ACCE	73	1888(4)	5.136032E+03	1.751416E+02	1.000E+01	2.000E+03	0.000E+00	1.000E+01	1.526E+06	1.159E+02
PSDF	ACCE	74	3037(4)	5.041108E+03	1.429106E+02	1.000E+01	2.000E+03	0.000E+00	1.000E+01	1.550E+06	1.021E+02
PSDF	ACCE	75	3038(4)	5.017078E+03	1.415930E+02	1.000E+01	2.000E+03	0.000E+00	1.000E+01	1.541E+06	1.021E+02
PSDF	ACCE	76	3039(4)	4.954255E+03	1.385010E+02	1.000E+01	2.000E+03	0.000E+00	1.000E+01	1.519E+06	1.021E+02
PSDF	ACCE	77	3040(4)	4.892358E+03	1.354218E+02	1.000E+01	2.000E+03	0.000E+00	1.000E+01	1.498E+06	1.021E+02
PSDF	ACCE	78	3041(4)	4.867664E+03	1.343286E+02	1.000E+01	2.000E+03	0.000E+00	1.000E+01	1.489E+06	1.021E+02
PSDF	ACCE	79	3042(4)	4.890688E+03	1.354046E+02	1.000E+01	2.000E+03	0.000E+00	1.000E+01	1.498E+06	1.021E+02
PSDF	ACCE	80	3043(4)	4.952975E+03	1.385049E+02	1.000E+01	2.000E+03	0.000E+00	1.000E+01	1.520E+06	1.021E+02
PSDF	ACCE	81	3044(4)	5.015160E+03	1.416209E+02	1.000E+01	2.000E+03	0.000E+00	1.000E+01	1.542E+06	1.021E+02
PSDF	ACCE	82	2097(4)	3.141571E+03	2.473538E+02	1.000E+01	2.000E+03	0.000E+00	1.000E+01	6.233E+05	1.151E+02
PSDF	ACCE	83	2098(4)	3.130711E+03	2.478770E+02	1.000E+01	2.000E+03	0.000E+00	1.000E+01	6.218E+05	1.151E+02
PSDF	ACCE	84	2173(4)	5.515333E+03	1.684342E+02	1.000E+01	2.000E+03	0.000E+00	1.000E+01	1.717E+06	1.159E+02
PSDF	ACCE	85	2168(4)	4.953327E+03	1.384584E+02	1.000E+01	2.000E+03	0.000E+00	1.000E+01	1.520E+06	1.021E+02
PSDF	ACCE	86	2202(4)	3.515600E+03	2.168835E+02	1.000E+01	2.000E+03	0.000E+00	1.000E+01	6.935E+05	1.151E+02
PSDF	ACCE	87	2204(4)	3.766676E+03	2.286610E+02	1.000E+01	2.000E+03	0.000E+00	1.000E+01	8.608E+05	1.151E+02
PSDF	ACCE	88	24000(4)	3.426399E+03	6.829276E+02	1.000E+01	2.000E+03	0.000E+00	1.000E+01	1.641E+04	1.500E+02
PSDF	ACCE	89	2135(4)	3.979274E+03	2.422193E+02	1.000E+01	2.000E+03	0.000E+00	1.000E+01	8.198E+05	1.151E+02
PSDF	ACCE	90	2086(4)	4.621226E+03	2.816438E+02	1.000E+01	2.000E+03	0.000E+00	1.000E+01	1.247E+06	1.151E+02
PSDF	ACCE	91	2090(4)	3.936137E+03	2.514590E+02	1.000E+01	2.000E+03	0.000E+00	1.000E+01	8.030E+05	1.151E+02
PSDF	ACCE	92	23231(4)	4.656297E+03	2.355589E+02	1.000E+01	2.000E+03	0.000E+00	1.000E+01	5.997E+05	1.151E+02
PSDF	ACCE	93	23232(4)	4.441303E+03	2.268770E+02	1.000E+01	2.000E+03	0.000E+00	1.000E+01	5.896E+05	1.151E+02
PSDF	ACCE	94	23233(4)	3.412497E+03	2.470094E+02	1.000E+01	2.000E+03	0.000E+00	1.000E+01	4.962E+05	1.151E+02
PSDF	ACCE	95	2441(4)	4.966215E+03	3.167092E+02	1.000E+01	2.000E+03	0.000E+00	1.000E+01	1.407E+06	1.151E+02
PSDF	ACCE	96	23234(4)	4.253564E+03	2.206001E+02	1.000E+01	2.000E+03	0.000E+00	1.000E+01	5.796E+05	1.151E+02

Y AXIS PSD RESPONSE

X Y - O U T P U T S U M M A R Y (A U T O O R P S D F)

PLOT TYPE	CURVE TYPE	FRAME NO.	CURVE ID.	RMS VALUE	NO. POSITIVE CROSSINGS	XMIN FOR ALL DATA	XMAX FOR ALL DATA	YMIN FOR ALL DATA	X FOR YMIN	YMAX FOR ALL DATA	X FOR* YMAX
PSDF	ACCE	97	23235(4)	3.409055E+03	2.491974E+02	1.000E+01	2.000E+03	0.000E+00	1.000E+01	4.932E+05	1.151E+02
PSDF	ACCE	98	22859(4)	3.803247E+03	2.929673E+02	1.000E+01	2.000E+03	0.000E+00	1.000E+01	6.383E+05	1.151E+02
PSDF	ACCE	99	22868(4)	3.676338E+03	3.092328E+02	1.000E+01	2.000E+03	0.000E+00	1.000E+01	4.925E+05	1.820E+02
PSDF	ACCE	100	22644(4)	5.172893E+03	2.045090E+02	1.000E+01	2.000E+03	0.000E+00	1.000E+01	1.286E+06	1.820E+02
PSDF	ACCE	101	22632(4)	3.590759E+03	5.538283E+02	1.000E+01	2.000E+03	0.000E+00	1.000E+01	1.790E+05	1.151E+02
PSDF	ACCE	102	23609(4)	3.160507E+03	2.445743E+02	1.000E+01	2.000E+03	0.000E+00	1.000E+01	6.386E+05	1.151E+02
PSDF	ACCE	103	23610(4)	3.299158E+03	2.340760E+02	1.000E+01	2.000E+03	0.000E+00	1.000E+01	7.039E+05	1.151E+02
PSDF	ACCE	104	23611(4)	3.060395E+03	2.600479E+02	1.000E+01	2.000E+03	0.000E+00	1.000E+01	5.810E+05	1.151E+02
PSDF	ACCE	105	23612(4)	2.964267E+03	2.811638E+02	1.000E+01	2.000E+03	0.000E+00	1.000E+01	5.177E+05	1.151E+02
PSDF	ACCE	106	23613(4)	3.547651E+03	2.299560E+02	1.000E+01	2.000E+03	0.000E+00	1.000E+01	8.083E+05	1.151E+02
PSDF	ACCE	107	23614(4)	3.247047E+03	2.368541E+02	1.000E+01	2.000E+03	0.000E+00	1.000E+01	6.774E+05	1.151E+02
PSDF	ACCE	108	23615(4)	2.956661E+03	2.840689E+02	1.000E+01	2.000E+03	0.000E+00	1.000E+01	5.085E+05	1.151E+02
PSDF	ACCE	109	23616(4)	3.539730E+03	2.291377E+02	1.000E+01	2.000E+03	0.000E+00	1.000E+01	8.076E+05	1.151E+02
PSDF	ACCE	110	23617(4)	3.522607E+03	2.276207E+02	1.000E+01	2.000E+03	0.000E+00	1.000E+01	8.042E+05	1.151E+02
PSDF	ACCE	111	23618(4)	2.957985E+03	2.790330E+02	1.000E+01	2.000E+03	0.000E+00	1.000E+01	5.198E+05	1.151E+02
PSDF	ACCE	112	23619(4)	3.187018E+03	2.387111E+02	1.000E+01	2.000E+03	0.000E+00	1.000E+01	6.581E+05	1.151E+02
PSDF	ACCE	113	26206(4)	1.092965E+04	2.063440E+02	1.000E+01	2.000E+03	0.000E+00	1.000E+01	6.939E+06	1.600E+02
PSDF	ACCE	114	2122(4)	1.500388E+04	1.713410E+02	1.000E+01	2.000E+03	0.000E+00	1.000E+01	1.321E+07	1.700E+02
PSDF	ACCE	115	2201(5)	2.333168E+03	3.328179E+02	1.000E+01	2.000E+03	0.000E+00	1.000E+01	1.181E+05	2.520E+02
PSDF	ACCE	116	2660(5)	2.187797E+03	3.840092E+02	1.000E+01	2.000E+03	0.000E+00	1.000E+01	1.322E+05	2.820E+02
PSDF	ACCE	117	2648(5)	9.387219E+02	4.640073E+02	1.000E+01	2.000E+03	0.000E+00	1.000E+01	1.204E+04	2.820E+02
PSDF	ACCE	118	2650(5)	1.037903E+03	4.721426E+02	1.000E+01	2.000E+03	0.000E+00	1.000E+01	1.655E+04	5.720E+02
PSDF	ACCE	119	2658(5)	2.762822E+03	3.066446E+02	1.000E+01	2.000E+03	0.000E+00	1.000E+01	3.721E+05	2.840E+02
PSDF	ACCE	120	2200(5)	1.598429E+03	3.737239E+02	1.000E+01	2.000E+03	0.000E+00	1.000E+01	4.989E+04	2.520E+02

Y AXIS PSD RESPONSE

X Y - O U T P U T S U M M A R Y (A U T O O R P S D F)

PLOT TYPE	CURVE TYPE	FRAME NO.	CURVE ID.	RMS VALUE	NO. POSITIVE CROSSINGS	XMIN FOR ALL DATA	XMAX FOR ALL DATA	YMIN FOR ALL DATA	X FOR YMIN	YMAX FOR ALL DATA	X FOR* YMAX
PSDF	ACCE	121	2205(5)	2.744644E+03	3.909691E+02	1.000E+01	2.000E+03	0.000E+00	1.000E+01	1.612E+05	3.920E+02
PSDF	ACCE	122	2206(5)	2.273144E+03	3.782666E+02	1.000E+01	2.000E+03	0.000E+00	1.000E+01	8.731E+04	3.920E+02
PSDF	ACCE	123	2196(5)	2.534018E+03	3.820003E+02	1.000E+01	2.000E+03	0.000E+00	1.000E+01	1.195E+05	3.940E+02
PSDF	ACCE	124	1890(5)	1.385101E+03	5.508729E+02	1.000E+01	2.000E+03	0.000E+00	1.000E+01	5.780E+04	1.151E+02
PSDF	ACCE	125	2197(5)	2.528903E+03	4.117263E+02	1.000E+01	2.000E+03	0.000E+00	1.000E+01	1.061E+05	3.920E+02
PSDF	ACCE	126	3053(5)	7.339388E+03	4.061894E+02	1.000E+01	2.000E+03	0.000E+00	1.000E+01	1.311E+06	2.280E+02
PSDF	ACCE	127	1885(5)	1.980560E+03	3.121190E+02	1.000E+01	2.000E+03	0.000E+00	1.000E+01	4.442E+04	1.151E+02
PSDF	ACCE	128	1886(5)	1.829706E+03	3.189821E+02	1.000E+01	2.000E+03	0.000E+00	1.000E+01	3.650E+04	3.900E+02
PSDF	ACCE	129	1887(5)	9.445849E+02	3.513560E+02	1.000E+01	2.000E+03	0.000E+00	1.000E+01	1.114E+04	1.151E+02
PSDF	ACCE	130	1888(5)	9.365255E+02	3.300078E+02	1.000E+01	2.000E+03	0.000E+00	1.000E+01	1.901E+04	1.151E+02
PSDF	ACCE	131	3037(5)	9.964935E+02	2.939947E+02	1.000E+01	2.000E+03	0.000E+00	1.000E+01	3.489E+04	1.151E+02
PSDF	ACCE	132	3038(5)	9.978619E+02	2.895871E+02	1.000E+01	2.000E+03	0.000E+00	1.000E+01	3.866E+04	1.151E+02
PSDF	ACCE	133	3039(5)	1.002852E+03	2.872477E+02	1.000E+01	2.000E+03	0.000E+00	1.000E+01	4.067E+04	1.151E+02
PSDF	ACCE	134	3040(5)	9.985073E+02	2.883412E+02	1.000E+01	2.000E+03	0.000E+00	1.000E+01	3.893E+04	1.151E+02
PSDF	ACCE	135	3041(5)	9.957198E+02	2.915857E+02	1.000E+01	2.000E+03	0.000E+00	1.000E+01	3.506E+04	1.151E+02
PSDF	ACCE	136	3042(5)	1.004283E+03	3.001118E+02	1.000E+01	2.000E+03	0.000E+00	1.000E+01	3.091E+04	1.151E+02
PSDF	ACCE	137	3043(5)	1.010852E+03	3.035266E+02	1.000E+01	2.000E+03	0.000E+00	1.000E+01	2.948E+04	1.151E+02
PSDF	ACCE	138	3044(5)	1.004504E+03	3.009382E+02	1.000E+01	2.000E+03	0.000E+00	1.000E+01	3.097E+04	1.151E+02
PSDF	ACCE	139	2097(5)	1.048027E+03	5.815178E+02	1.000E+01	2.000E+03	0.000E+00	1.000E+01	2.084E+04	1.151E+02
PSDF	ACCE	140	2098(5)	7.622828E+02	6.657208E+02	1.000E+01	2.000E+03	0.000E+00	1.000E+01	7.182E+03	1.820E+02
PSDF	ACCE	141	2173(5)	1.001928E+03	2.928276E+02	1.000E+01	2.000E+03	0.000E+00	1.000E+01	3.573E+04	1.151E+02
PSDF	ACCE	142	2168(5)	9.962269E+02	2.935537E+02	1.000E+01	2.000E+03	0.000E+00	1.000E+01	3.485E+04	1.151E+02
PSDF	ACCE	143	2202(5)	1.889006E+03	3.698914E+02	1.000E+01	2.000E+03	0.000E+00	1.000E+01	8.526E+04	2.520E+02
PSDF	ACCE	144	2204(5)	2.292655E+03	4.673236E+02	1.000E+01	2.000E+03	0.000E+00	1.000E+01	1.021E+05	3.920E+02

Y AXIS PSD RESPONSE

X Y - O U T P U T S U M M A R Y (A U T O O R P S D F)

PLOT TYPE	CURVE TYPE	FRAME NO.	CURVE ID.	RMS VALUE	NO. POSITIVE CROSSINGS	XMIN FOR ALL DATA	XMAX FOR ALL DATA	YMIN FOR ALL DATA	X FOR YMIN	YMAX FOR ALL DATA	X FOR* YMAX
PSDF	ACCE	145	24000(5)	1.923835E-05	6.791840E+02	1.000E+01	2.000E+03	0.000E+00	1.000E+01	2.705E-12	1.720E+02
PSDF	ACCE	146	2135(5)	1.706892E+03	3.779117E+02	1.000E+01	2.000E+03	0.000E+00	1.000E+01	1.071E+05	1.151E+02
PSDF	ACCE	147	2086(5)	1.598409E+03	5.408755E+02	1.000E+01	2.000E+03	0.000E+00	1.000E+01	5.286E+04	1.151E+02
PSDF	ACCE	148	2090(5)	1.563597E+03	5.811879E+02	1.000E+01	2.000E+03	0.000E+00	1.000E+01	2.543E+04	2.520E+02
PSDF	ACCE	149	23231(5)	1.662703E+03	2.861507E+02	1.000E+01	2.000E+03	0.000E+00	1.000E+01	6.098E+04	3.340E+02
PSDF	ACCE	150	23232(5)	1.525988E+03	2.724394E+02	1.000E+01	2.000E+03	0.000E+00	1.000E+01	4.790E+04	1.159E+02
PSDF	ACCE	151	23233(5)	1.145587E+03	3.553378E+02	1.000E+01	2.000E+03	0.000E+00	1.000E+01	3.862E+04	1.159E+02
PSDF	ACCE	152	2441(5)	2.184304E+03	4.403214E+02	1.000E+01	2.000E+03	0.000E+00	1.000E+01	1.441E+05	1.151E+02
PSDF	ACCE	153	23234(5)	1.430140E+03	2.634865E+02	1.000E+01	2.000E+03	0.000E+00	1.000E+01	4.718E+04	1.159E+02
PSDF	ACCE	154	23235(5)	1.154638E+03	3.557930E+02	1.000E+01	2.000E+03	0.000E+00	1.000E+01	3.828E+04	1.159E+02
PSDF	ACCE	155	22859(5)	1.413766E+03	3.796611E+02	1.000E+01	2.000E+03	0.000E+00	1.000E+01	3.642E+04	1.470E+02
PSDF	ACCE	156	22868(5)	1.395860E+03	4.230953E+02	1.000E+01	2.000E+03	0.000E+00	1.000E+01	3.765E+04	1.820E+02
PSDF	ACCE	157	22644(5)	4.407352E+03	2.168158E+02	1.000E+01	2.000E+03	0.000E+00	1.000E+01	1.257E+06	1.410E+02
PSDF	ACCE	158	22632(5)	4.655411E+03	2.490061E+02	1.000E+01	2.000E+03	0.000E+00	1.000E+01	1.343E+06	1.410E+02
PSDF	ACCE	159	23609(5)	7.049055E+02	6.957476E+02	1.000E+01	2.000E+03	0.000E+00	1.000E+01	6.670E+03	1.820E+02
PSDF	ACCE	160	23610(5)	7.467194E+02	6.836239E+02	1.000E+01	2.000E+03	0.000E+00	1.000E+01	7.327E+03	1.820E+02
PSDF	ACCE	161	23611(5)	7.128930E+02	6.874128E+02	1.000E+01	2.000E+03	0.000E+00	1.000E+01	6.520E+03	1.820E+02
PSDF	ACCE	162	23612(5)	6.711650E+02	6.934886E+02	1.000E+01	2.000E+03	0.000E+00	1.000E+01	5.949E+03	1.820E+02
PSDF	ACCE	163	23613(5)	1.030332E+03	5.978038E+02	1.000E+01	2.000E+03	0.000E+00	1.000E+01	1.799E+04	1.151E+02
PSDF	ACCE	164	23614(5)	9.893336E+02	5.994667E+02	1.000E+01	2.000E+03	0.000E+00	1.000E+01	1.681E+04	1.151E+02
PSDF	ACCE	165	23615(5)	8.871953E+02	6.031633E+02	1.000E+01	2.000E+03	0.000E+00	1.000E+01	1.370E+04	1.151E+02
PSDF	ACCE	166	23616(5)	7.078958E+02	6.853620E+02	1.000E+01	2.000E+03	0.000E+00	1.000E+01	7.427E+03	1.820E+02
PSDF	ACCE	167	23617(5)	5.979133E+02	7.258760E+02	1.000E+01	2.000E+03	0.000E+00	1.000E+01	6.252E+03	1.820E+02
PSDF	ACCE	168	23618(5)	5.484916E+02	7.457492E+02	1.000E+01	2.000E+03	0.000E+00	1.000E+01	4.704E+03	1.820E+02

Y AXIS PSD RESPONSE

X Y - O U T P U T S U M M A R Y (A U T O O R P S D F)

PLOT TYPE	CURVE TYPE	FRAME NO.	CURVE ID.	RMS VALUE	NO. POSITIVE CROSSINGS	XMIN FOR ALL DATA	XMAX FOR ALL DATA	YMIN FOR ALL DATA	X FOR YMIN	YMAX FOR ALL DATA	X FOR* YMAX
PSDF	ACCE	169	23619(5)	5.796734E+02	7.404567E+02	1.000E+01	2.000E+03	0.000E+00	1.000E+01	5.503E+03	1.820E+02
PSDF	ACCE	170	26206(5)	9.129574E+03	1.788273E+02	1.000E+01	2.000E+03	0.000E+00	1.000E+01	4.297E+06	1.600E+02
PSDF	ACCE	171	2122(5)	1.289635E+03	4.030894E+02	1.000E+01	2.000E+03	0.000E+00	1.000E+01	7.329E+04	1.151E+02
PSDF	DISP	171	2201(3)	5.507335E-03	1.218807E+02	1.000E+01	2.000E+03	0.000E+00	1.000E+01	2.370E-06	1.028E+02
PSDF	DISP	171	2660(3)	3.334203E-03	1.238977E+02	1.000E+01	2.000E+03	0.000E+00	1.000E+01	1.178E-06	1.151E+02
PSDF	DISP	171	2648(3)	4.813357E-03	1.089736E+02	1.000E+01	2.000E+03	0.000E+00	1.000E+01	2.562E-06	1.028E+02
PSDF	DISP	171	2650(3)	5.342471E-03	1.095893E+02	1.000E+01	2.000E+03	0.000E+00	1.000E+01	3.355E-06	1.028E+02
PSDF	DISP	171	2658(3)	3.378191E-03	1.275650E+02	1.000E+01	2.000E+03	0.000E+00	1.000E+01	1.195E-06	1.151E+02
PSDF	DISP	171	23636(3)	1.206501E-04	3.403310E+02	1.000E+01	2.000E+03	0.000E+00	1.000E+01	1.527E-09	1.520E+02
PSDF	DISP	171	23637(3)	3.521064E-04	1.721111E+02	1.000E+01	2.000E+03	0.000E+00	1.000E+01	1.904E-08	1.520E+02
PSDF	DISP	171	23638(3)	5.585846E-04	1.618288E+02	1.000E+01	2.000E+03	0.000E+00	1.000E+01	4.780E-08	1.520E+02
PSDF	DISP	171	23639(3)	6.700172E-04	1.667891E+02	1.000E-01	2.000E+03	0.000E+00	1.000E+01	6.828E-08	1.520E+02
PSDF	DISP	171	23640(3)	6.614280E-04	1.794650E+02	1.000E+01	2.000E+03	0.000E+00	1.000E+01	6.558E-08	1.520E+02
PSDF	DISP	171	23641(3)	5.607940E-04	1.879246E+02	1.000E+01	2.000E+03	0.000E+00	1.000E+01	4.683E-08	1.520E+02
PSDF	DISP	171	23642(3)	4.180195E-04	1.958011E+02	1.000E+01	2.000E+03	0.000E+00	1.000E+01	2.581E-08	1.520E+02
PSDF	DISP	171	23643(3)	2.968134E-04	2.216699E+02	1.000E+01	2.000E+03	0.000E+00	1.000E+01	1.207E-08	1.520E+02
PSDF	DISP	171	23644(3)	2.217520E-04	2.599848E+02	1.000E+01	2.000E+03	0.000E+00	1.000E+01	4.880E-09	1.500E+02
PSDF	DISP	171	23645(3)	2.099719E-04	2.606436E+02	1.000E+01	2.000E+03	0.000E+00	1.000E+01	2.202E-09	1.500E+02
PSDF	DISP	171	23646(3)	2.504765E-04	3.131844E+02	1.000E+01	2.000E+03	0.000E+00	1.000E+01	1.608E-09	1.600E+02
PSDF	DISP	171	23647(3)	1.881017E-04	2.833141E+02	1.000E+01	2.000E+03	0.000E+00	1.000E+01	3.890E-09	1.520E+02
PSDF	DISP	171	23648(3)	3.918015E-04	1.670345E+02	1.000E-01	2.000E+03	0.000E+00	1.000E+01	2.329E-08	1.520E+02
PSDF	DISP	171	23649(3)	5.759125E-04	1.567374E+02	1.000E+01	2.000E+03	0.000E+00	1.000E+01	5.141E-08	1.520E+02
PSDF	DISP	171	23650(3)	6.700250E-04	1.559577E+02	1.000E+01	2.000E+03	0.000E+00	1.000E+01	7.020E-08	1.520E+02
PSDF	DISP	171	23651(3)	6.477288E-04	1.589067E+02	1.000E+01	2.000E+03	0.000E+00	1.000E+01	6.616E-08	1.520E+02

Y AXIS PSD RESPONSE

X Y - O U T P U T S U M M A R Y (A U T O O R P S D F)

PLOT TYPE	CURVE TYPE	FRAME NO.	CURVE ID.	RMS VALUE	NO. POSITIVE CROSSINGS	XMIN FOR ALL DATA	XMAX FOR ALL DATA	YMIN FOR ALL DATA	X FOR YMIN	YMAX FOR ALL DATA	X FOR* YMAX
PSDF	DISP	171	3037(3)	9.232257E-03	1.224547E+02	1.000E+01	2.000E+03	0.000E+00	1.000E+01	8.106E-06	1.151E+02
PSDF	DISP	171	3038(3)	9.201501E-03	1.216872E+02	1.000E+01	2.000E+03	0.000E+00	1.000E+01	8.015E-06	1.151E+02
PSDF	DISP	171	3039(3)	9.111261E-03	1.216479E+02	1.000E+01	2.000E+03	0.000E+00	1.000E+01	7.809E-06	1.151E+02
PSDF	DISP	171	3040(3)	8.882152E-03	1.219057E+02	1.000E+01	2.000E+03	0.000E+00	1.000E+01	7.410E-06	1.151E+02
PSDF	DISP	171	3041(3)	8.706104E-03	1.225462E+02	1.000E+01	2.000E+03	0.000E+00	1.000E+01	7.139E-06	1.151E+02
PSDF	DISP	171	3042(3)	8.857050E-03	1.238367E+02	1.000E+01	2.000E+03	0.000E+00	1.000E+01	7.387E-06	1.151E+02
PSDF	DISP	171	3043(3)	9.080082E-03	1.242651E+02	1.000E+01	2.000E+03	0.000E+00	1.000E+01	7.783E-06	1.151E+02
PSDF	DISP	171	3044(3)	9.181745E-03	1.234932E+02	1.000E+01	2.000E+03	0.000E+00	1.000E+01	8.009E-06	1.151E+02
PSDF	DISP	171	2097(3)	4.991103E-03	1.239673E+02	1.000E+01	2.000E+03	0.000E+00	1.000E+01	1.749E-06	1.151E+02
PSDF	DISP	171	2098(3)	8.188953E-03	1.244645E+02	1.000E+01	2.000E+03	0.000E+00	1.000E+01	4.884E-06	1.151E+02
PSDF	DISP	171	21086(3)	3.134137E-03	1.255115E+02	1.000E+01	2.000E+03	0.000E+00	1.000E+01	8.892E-07	1.028E+02
PSDF	DISP	171	21126(3)	2.987753E-03	1.244139E+02	1.000E+01	2.000E+03	0.000E+00	1.000E+01	8.389E-07	1.028E+02
PSDF	DISP	171	21139(3)	2.973355E-03	1.242921E+02	1.000E+01	2.000E+03	0.000E+00	1.000E+01	8.339E-07	1.028E+02
PSDF	DISP	171	21150(3)	2.962415E-03	1.242034E+02	1.000E+01	2.000E+03	0.000E+00	1.000E+01	8.299E-07	1.028E+02
PSDF	DISP	171	21159(3)	2.975788E-03	1.242966E+02	1.000E+01	2.000E+03	0.000E+00	1.000E+01	8.343E-07	1.028E+02
PSDF	DISP	171	21160(3)	2.965912E-03	1.242195E+02	1.000E+01	2.000E+03	0.000E+00	1.000E+01	8.308E-07	1.028E+02
PSDF	DISP	171	21161(3)	2.972772E-03	1.242477E+02	1.000E+01	2.000E+03	0.000E+00	1.000E+01	8.330E-07	1.028E+02
PSDF	DISP	171	21094(3)	3.098315E-03	1.253228E+02	1.000E+01	2.000E+03	0.000E+00	1.000E+01	8.766E-07	1.028E+02
PSDF	DISP	171	21190(3)	3.385166E-03	1.230372E+02	1.000E+01	2.000E+03	0.000E+00	1.000E+01	1.061E-06	1.028E+02
PSDF	DISP	171	21198(3)	3.328435E-03	1.227622E+02	1.000E+01	2.000E+03	0.000E+00	1.000E+01	1.038E-06	1.028E+02
PSDF	DISP	171	21206(3)	3.318758E-03	1.227120E+02	1.000E+01	2.000E+03	0.000E+00	1.000E+01	1.034E-06	1.028E+02
PSDF	DISP	171	21214(3)	3.297858E-03	1.226084E+02	1.000E+01	2.000E+03	0.000E+00	1.000E+01	1.026E-06	1.028E+02
PSDF	DISP	171	21227(3)	3.278962E-03	1.225158E+02	1.000E+01	2.000E+03	0.000E+00	1.000E+01	1.018E-06	1.028E+02
PSDF	DISP	171	21238(3)	3.264239E-03	1.224460E+02	1.000E+01	2.000E+03	0.000E+00	1.000E+01	1.013E-06	1.028E+02

Y AXIS PSD RESPONSE

X Y - O U T P U T S U M M A R Y (A U T O O R P S D F)

PLOT TYPE	CURVE TYPE	FRAME NO.	CURVE ID.	RMS VALUE	NO. POSITIVE CROSSINGS	XMIN FOR ALL DATA	XMAX FOR ALL DATA	YMIN FOR ALL DATA	X FOR YMIN	YMAX FOR ALL DATA	X FOR* YMAX
PSDF	DISP	171	23652(3)	5.443462E-04	1.621159E+02	1.000E+01	2.000E+03	0.000E+00	1.000E+01	4.704E-08	1.520E+02
PSDF	DISP	171	23653(3)	4.033769E-04	1.764573E+02	1.000E+01	2.000E+03	0.000E+00	1.000E+01	2.543E-08	1.520E+02
PSDF	DISP	171	23654(3)	2.918765E-04	2.102112E+02	1.000E+01	2.000E+03	0.000E+00	1.000E+01	1.183E-08	1.520E+02
PSDF	DISP	171	23655(3)	2.314599E-04	2.297897E+02	1.000E+01	2.000E+03	0.000E+00	1.000E+01	5.201E-09	1.500E+02
PSDF	DISP	171	23656(3)	2.318280E-04	2.293520E+02	1.000E+01	2.000E+03	0.000E+00	1.000E+01	2.435E-09	1.500E+02
PSDF	DISP	171	23657(3)	2.797635E-04	2.704930E+02	1.000E+01	2.000E+03	0.000E+00	1.000E+01	2.560E-09	1.151E+02
PSDF	DISP	171	23658(3)	1.001080E-02	1.239617E+02	1.000E+01	2.000E+03	0.000E+00	1.000E+01	1.277E-05	1.219E+02
PSDF	DISP	171	23659(3)	2.501716E-03	2.536517E+02	1.000E+01	2.000E+03	0.000E+00	1.000E+01	2.006E-07	1.159E+02
PSDF	DISP	171	23660(3)	1.248215E-02	1.543015E+02	1.000E+01	2.000E+03	0.000E+00	1.000E+01	9.616E-06	1.600E+02
PSDF	DISP	171	23661(3)	1.248367E-02	1.543190E+02	1.000E+01	2.000E+03	0.000E+00	1.000E+01	9.611E-06	1.600E+02
PSDF	DISP	171	23662(3)	7.684662E-03	1.317358E+02	1.000E+01	2.000E+03	0.000E+00	1.000E+01	6.234E-06	1.160E+02
PSDF	DISP	171	23663(3)	2.276548E-02	1.584056E+02	1.000E+01	2.000E+03	0.000E+00	1.000E+01	4.066E-05	1.600E+02
PSDF	DISP	171	2441(3)	9.447964E-03	1.222616E+02	1.000E+01	2.000E+03	0.000E+00	1.000E+01	6.817E-06	1.151E+02
PSDF	DISP	171	2200(3)	5.506885E-03	1.218688E+02	1.000E+01	2.000E+03	0.000E+00	1.000E+01	2.370E-06	1.028E+02
PSDF	DISP	171	2205(3)	6.240751E-03	1.183177E+02	1.000E+01	2.000E+03	0.000E+00	1.000E+01	3.174E-06	1.028E+02
PSDF	DISP	171	2206(3)	6.242226E-03	1.183265E+02	1.000E+01	2.000E+03	0.000E+00	1.000E+01	3.175E-06	1.028E+02
PSDF	DISP	171	2196(3)	4.782982E-03	1.279527E+02	1.000E+01	2.000E+03	0.000E+00	1.000E+01	1.674E-06	1.028E+02
PSDF	DISP	171	1890(3)	8.172264E-03	1.198013E+02	1.000E+01	2.000E+03	0.000E+00	1.000E+01	6.464E-06	1.151E+02
PSDF	DISP	171	2197(3)	4.781783E-03	1.279465E+02	1.000E+01	2.000E+03	0.000E+00	1.000E+01	1.673E-06	1.028E+02
PSDF	DISP	171	3053(3)	1.023042E-02	1.516828E+02	1.000E+01	2.000E+03	0.000E+00	1.000E+01	5.804E-06	1.028E+02
PSDF	DISP	171	1885(3)	8.169159E-03	1.197950E+02	1.000E+01	2.000E+03	0.000E+00	1.000E+01	6.460E-06	1.151E+02
PSDF	DISP	171	1886(3)	8.168857E-03	1.197943E+02	1.000E+01	2.000E+03	0.000E+00	1.000E+01	6.459E-06	1.151E+02
PSDF	DISP	171	1887(3)	8.169633E-03	1.197958E+02	1.000E+01	2.000E+03	0.000E+00	1.000E+01	6.460E-06	1.151E+02
PSDF	DISP	171	1888(3)	8.170129E-03	1.197969E+02	1.000E+01	2.000E+03	0.000E+00	1.000E+01	6.461E-06	1.151E+02

Y AXIS PSD RESPONSE

X Y - O U T P U T S U M M A R Y (A U T O O R P S D F)

PLOT TYPE	CURVE TYPE	FRAME NO.	CURVE ID.	RMS VALUE	NO. POSITIVE CROSSINGS	XMIN FOR ALL DATA	XMAX FOR ALL DATA	YMIN FOR ALL DATA	X FOR YMIN	YMAX FOR ALL DATA	X FOR* YMAX
PSDF	DISP	171	21249(3)	3.270634E-03	1.224848E+02	1.000E+01	2.000E+03	0.000E+00	1.000E+01	1.016E-06	1.028E+02
PSDF	DISP	171	21085(3)	2.746220E-03	1.229216E+02	1.000E+01	2.000E+03	0.000E+00	1.000E+01	7.558E-07	1.028E+02
PSDF	DISP	171	21093(3)	2.727997E-03	1.227931E+02	1.000E+01	2.000E+03	0.000E+00	1.000E+01	7.496E-07	1.028E+02
PSDF	DISP	171	21101(3)	2.684461E-03	1.224904E+02	1.000E+01	2.000E+03	0.000E+00	1.000E+01	7.347E-07	1.028E+02
PSDF	DISP	171	21109(3)	2.652114E-03	1.222180E+02	1.000E+01	2.000E+03	0.000E+00	1.000E+01	7.237E-07	1.028E+02
PSDF	DISP	171	21117(3)	2.618706E-03	1.219196E+02	1.000E+01	2.000E+03	0.000E+00	1.000E+01	7.123E-07	1.028E+02
PSDF	DISP	171	21149(3)	2.585685E-03	1.214854E+02	1.000E+01	2.000E+03	0.000E+00	1.000E+01	7.008E-07	1.028E+02
PSDF	DISP	171	21158(3)	2.587585E-03	1.214432E+02	1.000E+01	2.000E+03	0.000E+00	1.000E+01	7.013E-07	1.028E+02
PSDF	DISP	171	21165(3)	2.595803E-03	1.214966E+02	1.000E+01	2.000E+03	0.000E+00	1.000E+01	7.040E-07	1.028E+02
PSDF	DISP	171	21166(3)	2.601801E-03	1.214896E+02	1.000E+01	2.000E+03	0.000E+00	1.000E+01	7.060E-07	1.028E+02
PSDF	DISP	171	21173(3)	3.068270E-03	1.215760E+02	1.000E+01	2.000E+03	0.000E+00	1.000E+01	9.351E-07	1.028E+02
PSDF	DISP	171	21181(3)	3.048824E-03	1.215006E+02	1.000E+01	2.000E+03	0.000E+00	1.000E+01	9.273E-07	1.028E+02
PSDF	DISP	171	21205(3)	2.927992E-03	1.209424E+02	1.000E+01	2.000E+03	0.000E+00	1.000E+01	8.791E-07	1.028E+02
PSDF	DISP	171	21213(3)	2.915842E-03	1.208551E+02	1.000E+01	2.000E+03	0.000E+00	1.000E+01	8.743E-07	1.028E+02
PSDF	DISP	171	21226(3)	2.889186E-03	1.207099E+02	1.000E+01	2.000E+03	0.000E+00	1.000E+01	8.638E-07	1.028E+02
PSDF	DISP	171	21237(3)	2.875585E-03	1.206188E+02	1.000E+01	2.000E+03	0.000E+00	1.000E+01	8.586E-07	1.028E+02
PSDF	DISP	171	21246(3)	2.872725E-03	1.205786E+02	1.000E+01	2.000E+03	0.000E+00	1.000E+01	8.577E-07	1.028E+02
PSDF	DISP	171	21253(3)	2.880294E-03	1.206109E+02	1.000E+01	2.000E+03	0.000E+00	1.000E+01	8.608E-07	1.028E+02
PSDF	DISP	171	21118(3)	3.003977E-03	1.245572E+02	1.000E+01	2.000E+03	0.000E+00	1.000E+01	8.445E-07	1.028E+02
PSDF	DISP	171	21174(3)	3.460363E-03	1.233881E+02	1.000E+01	2.000E+03	0.000E+00	1.000E+01	1.091E-06	1.028E+02
PSDF	DISP	171	21182(3)	3.426590E-03	1.232403E+02	1.000E+01	2.000E+03	0.000E+00	1.000E+01	1.077E-06	1.028E+02
PSDF	DISP	171	21102(3)	3.061458E-03	1.250270E+02	1.000E+01	2.000E+03	0.000E+00	1.000E+01	8.641E-07	1.028E+02
PSDF	DISP	171	21110(3)	3.009380E-03	1.246359E+02	1.000E+01	2.000E+03	0.000E+00	1.000E+01	8.463E-07	1.028E+02
PSDF	DISP	171	21247(3)	3.276084E-03	1.225113E+02	1.000E+01	2.000E+03	0.000E+00	1.000E+01	1.018E-06	1.028E+02

Y AXIS PSD RESPONSE

X Y - O U T P U T S U M M A R Y (A U T O O R P S D F)

PLOT TYPE	CURVE TYPE	FRAME NO.	CURVE ID.	RMS VALUE	NO. POSITIVE CROSSINGS	XMIN FOR ALL DATA	XMAX FOR ALL DATA	YMIN FOR ALL DATA	X FOR YMIN	YMAX FOR ALL DATA	X FOR* YMAX
PSDF	DISP	171	21248(3)	3.264575E-03	1.224571E+02	1.000E+01	2.000E+03	0.000E+00	1.000E+01	1.013E-06	1.028E+02
PSDF	DISP	171	21125(3)	2.612822E-03	1.218095E+02	1.000E+01	2.000E+03	0.000E+00	1.000E+01	7.103E-07	1.028E+02
PSDF	DISP	171	21138(3)	2.593040E-03	1.216031E+02	1.000E+01	2.000E+03	0.000E+00	1.000E+01	7.035E-07	1.028E+02
PSDF	DISP	171	21189(3)	3.004897E-03	1.213158E+02	1.000E+01	2.000E+03	0.000E+00	1.000E+01	9.098E-07	1.028E+02
PSDF	DISP	171	21197(3)	2.967942E-03	1.211394E+02	1.000E+01	2.000E+03	0.000E+00	1.000E+01	8.950E-07	1.028E+02
PSDF	DISP	171	21254(3)	2.883937E-03	1.206026E+02	1.000E+01	2.000E+03	0.000E+00	1.000E+01	8.623E-07	1.028E+02
PSDF	DISP	171	2204(3)	6.240163E-03	1.183099E+02	1.000E+01	2.000E+03	0.000E+00	1.000E+01	3.174E-06	1.028E+02
PSDF	DISP	171	2202(3)	5.508018E-03	1.218933E+02	1.000E+01	2.000E+03	0.000E+00	1.000E+01	2.370E-06	1.028E+02
PSDF	DISP	171	22644(3)	6.558235E-03	1.370144E+02	1.000E+01	2.000E+03	0.000E+00	1.000E+01	2.918E-06	1.028E+02
PSDF	DISP	171	22632(3)	5.521745E-03	1.502394E+02	1.000E+01	2.000E+03	0.000E+00	1.000E+01	1.954E-06	1.028E+02
PSDF	DISP	171	23231(3)	5.186036E-03	1.114193E+02	1.000E+01	2.000E+03	0.000E+00	1.000E+01	2.041E-06	1.028E+02
PSDF	DISP	171	23232(3)	5.184816E-03	1.114184E+02	1.000E+01	2.000E+03	0.000E+00	1.000E+01	2.040E-06	1.028E+02
PSDF	DISP	171	23233(3)	5.176836E-03	1.114126E+02	1.000E+01	2.000E+03	0.000E+00	1.000E+01	2.035E-06	1.028E+02
PSDF	DISP	171	23234(3)	5.006626E-03	1.112960E+02	1.000E+01	2.000E+03	0.000E+00	1.000E+01	1.930E-06	1.028E+02
PSDF	DISP	171	23235(3)	4.995976E-03	1.112868E+02	1.000E+01	2.000E+03	0.000E+00	1.000E+01	1.923E-06	1.028E+02
PSDF	DISP	171	22859(3)	4.068906E-03	1.120633E+02	1.000E+01	2.000E+03	0.000E+00	1.000E+01	1.281E-06	1.151E+02
PSDF	DISP	171	22868(3)	5.599036E-03	1.100290E+02	1.000E+01	2.000E+03	0.000E+00	1.000E+01	3.209E-06	1.028E+02
PSDF	DISP	171	23609(3)	8.900113E-03	1.246857E+02	1.000E+01	2.000E+03	0.000E+00	1.000E+01	5.794E-06	1.151E+02
PSDF	DISP	171	23610(3)	1.097318E-02	1.202783E+02	1.000E+01	2.000E+03	0.000E+00	1.000E+01	1.124E-05	1.151E+02
PSDF	DISP	171	23611(3)	9.362037E-03	1.298541E+02	1.000E+01	2.000E+03	0.000E+00	1.000E+01	5.787E-06	1.151E+02
PSDF	DISP	171	23612(3)	1.138673E-02	1.405032E+02	1.000E+01	2.000E+03	0.000E+00	1.000E+01	6.994E-06	1.151E+02
PSDF	DISP	171	23613(3)	5.165205E-03	1.323483E+02	1.000E+01	2.000E+03	0.000E+00	1.000E+01	1.950E-06	1.028E+02
PSDF	DISP	171	23614(3)	5.635599E-03	1.255538E+02	1.000E+01	2.000E+03	0.000E+00	1.000E+01	2.256E-06	1.151E+02
PSDF	DISP	171	23615(3)	5.908213E-03	1.334081E+02	1.000E+01	2.000E+03	0.000E+00	1.000E+01	2.291E-06	1.151E+02

Y AXIS PSD RESPONSE

X Y - O U T P U T S U M M A R Y (A U T O O R P S D F)

PLOT TYPE	CURVE TYPE	FRAME NO.	CURVE ID.	RMS VALUE	NO. POSITIVE CROSSINGS	XMIN FOR ALL DATA	XMAX FOR ALL DATA	YMIN FOR ALL DATA	X FOR YMIN	YMAX FOR ALL DATA	X FOR* YMAX
PSDF	DISP	171	23616(3)	2.791582E-02	1.172978E+02	1.000E+01	2.000E+03	0.000E+00	1.000E+01	8.516E-05	1.151E+02
PSDF	DISP	171	23617(3)	4.200462E-02	1.152023E+02	1.000E+01	2.000E+03	0.000E+00	1.000E+01	1.940E-04	1.159E+02
PSDF	DISP	171	23618(3)	1.360868E-02	1.455411E+02	1.000E+01	2.000E+03	0.000E+00	1.000E+01	8.372E-06	1.151E+02
PSDF	DISP	171	23619(3)	1.879403E-02	1.160188E+02	1.000E+01	2.000E+03	0.000E+00	1.000E+01	3.620E-05	1.151E+02
PSDF	DISP	171	2752(3)	5.709605E-03	1.123675E+02	1.000E+01	2.000E+03	0.000E+00	1.000E+01	3.274E-06	1.028E+02
PSDF	DISP	171	2758(3)	4.632138E-03	1.285234E+02	1.000E+01	2.000E+03	0.000E+00	1.000E+01	2.234E-06	1.151E+02
PSDF	DISP	171	2748(3)	3.983859E-03	1.157343E+02	1.000E+01	2.000E+03	0.000E+00	1.000E+01	1.336E-06	1.151E+02
PSDF	DISP	171	618(3)	7.225111E-03	1.173098E+02	1.000E+01	2.000E+03	0.000E+00	1.000E+01	4.282E-06	1.028E+02
PSDF	DISP	171	603(3)	1.242695E-02	1.632689E+02	1.000E+01	2.000E+03	0.000E+00	1.000E+01	8.386E-06	1.028E+02
PSDF	DISP	171	2441(3)	9.447964E-03	1.222616E+02	1.000E+01	2.000E+03	0.000E+00	1.000E+01	6.817E-06	1.151E+02
PSDF	DISP	171	25803(3)	2.434500E-02	1.539042E+02	1.000E+01	2.000E+03	0.000E+00	1.000E+01	3.655E-05	1.600E+02
PSDF	DISP	171	2175(3)	3.530444E-03	1.322327E+02	1.000E+01	2.000E+03	0.000E+00	1.000E+01	1.201E-06	1.151E+02
PSDF	DISP	171	2086(3)	4.905493E-03	1.381970E+02	1.000E+01	2.000E+03	0.000E+00	1.000E+01	1.542E-06	1.151E+02
PSDF	DISP	171	26116(3)	1.574661E-02	1.673406E+02	1.000E+01	2.000E+03	0.000E+00	1.000E+01	1.602E-05	1.600E+02
PSDF	DISP	171	26146(3)	2.329121E-02	1.639616E+02	1.000E+01	2.000E+03	0.000E+00	1.000E+01	3.418E-05	1.600E+02
PSDF	DISP	171	26336(3)	8.922913E-03	1.569261E+02	1.000E+01	2.000E+03	0.000E+00	1.000E+01	3.192E-06	1.600E+02
PSDF	DISP	171	26417(3)	1.478196E-02	1.426899E+02	1.000E+01	2.000E+03	0.000E+00	1.000E+01	1.164E-05	1.151E+02
PSDF	DISP	171	26082(3)	3.669623E-03	1.441315E+02	1.000E+01	2.000E+03	0.000E+00	1.000E+01	1.016E-06	1.159E+02
PSDF	DISP	171	24000(3)	1.276115E-10	5.013755E+01	1.000E+01	2.000E+03	0.000E+00	1.000E+01	3.160E-21	2.600E+01
PSDF	DISP	171	2201(4)	9.119515E-03	7.313427E+01	1.000E+01	2.000E+03	0.000E+00	1.000E+01	6.908E-06	2.000E+01
PSDF	DISP	171	2660(4)	9.159884E-03	6.894823E+01	1.000E+01	2.000E+03	0.000E+00	1.000E+01	6.926E-06	2.000E+01
PSDF	DISP	171	2648(4)	9.160141E-03	6.894706E+01	1.000E+01	2.000E+03	0.000E+00	1.000E+01	6.926E-06	2.000E+01
PSDF	DISP	171	2650(4)	9.827982E-03	7.277766E+01	1.000E+01	2.000E+03	0.000E+00	1.000E+01	6.986E-06	2.000E+01
PSDF	DISP	171	2658(4)	9.829011E-03	7.278375E+01	1.000E+01	2.000E+03	0.000E+00	1.000E+01	6.986E-06	2.000E+01

Y AXIS PSD RESPONSE

X Y - O U T P U T S U M M A R Y (A U T O O R P S D F)

PLOT TYPE	CURVE TYPE	FRAME NO.	CURVE ID.	RMS VALUE	NO. POSITIVE CROSSINGS	XMIN FOR ALL DATA	XMAX FOR ALL DATA	YMIN FOR ALL DATA	X FOR YMIN	YMAX FOR ALL DATA	X FOR* YMAX
PSDF	DISP	171	2441(4)	9.941890E-03	8.240195E+01	1.000E+01	2.000E+03	0.000E+00	1.000E+01	6.934E-06	2.000E+01
PSDF	DISP	171	2200(4)	9.197435E-03	7.453700E+01	1.000E+01	2.000E+03	0.000E+00	1.000E+01	6.903E-06	2.000E+01
PSDF	DISP	171	2205(4)	9.119736E-03	7.314127E+01	1.000E+01	2.000E+03	0.000E+00	1.000E+01	6.908E-06	2.000E+01
PSDF	DISP	171	2206(4)	9.060086E-03	7.198375E+01	1.000E+01	2.000E+03	0.000E+00	1.000E+01	6.912E-06	2.000E+01
PSDF	DISP	171	2196(4)	9.198899E-03	7.456824E+01	1.000E+01	2.000E+03	0.000E+00	1.000E+01	6.903E-06	2.000E+01
PSDF	DISP	171	1890(4)	1.301782E-02	9.017016E+01	1.000E+01	2.000E+03	0.000E+00	1.000E+01	1.011E-05	1.021E+02
PSDF	DISP	171	2197(4)	9.119197E-03	7.312719E+01	1.000E+01	2.000E+03	0.000E+00	1.000E+01	6.908E-06	2.000E+01
PSDF	DISP	171	3053(4)	1.229229E-02	9.524541E+01	1.000E+01	2.000E+03	0.000E+00	1.000E+01	1.105E-05	1.151E+02
PSDF	DISP	171	1885(4)	1.170022E-02	8.636854E+01	1.000E+01	2.000E+03	0.000E+00	1.000E+01	7.134E-06	2.000E+01
PSDF	DISP	171	1886(4)	1.176847E-02	8.639694E+01	1.000E+01	2.000E+03	0.000E+00	1.000E+01	7.138E-06	2.000E+01
PSDF	DISP	171	1887(4)	1.249623E-02	8.812376E+01	1.000E+01	2.000E+03	0.000E+00	1.000E+01	8.669E-06	1.021E+02
PSDF	DISP	171	1888(4)	1.259713E-02	8.845984E+01	1.000E+01	2.000E+03	0.000E+00	1.000E+01	8.966E-06	1.021E+02
PSDF	DISP	171	3037(4)	1.262333E-02	8.836167E+01	1.000E+01	2.000E+03	0.000E+00	1.000E+01	9.142E-06	1.021E+02
PSDF	DISP	171	3038(4)	1.259800E-02	8.825380E+01	1.000E+01	2.000E+03	0.000E+00	1.000E+01	9.089E-06	1.021E+02
PSDF	DISP	171	3039(4)	1.252988E-02	8.795097E+01	1.000E+01	2.000E+03	0.000E+00	1.000E+01	8.964E-06	1.021E+02
PSDF	DISP	171	3040(4)	1.246182E-02	8.764844E+01	1.000E+01	2.000E+03	0.000E+00	1.000E+01	8.836E-06	1.021E+02
PSDF	DISP	171	3041(4)	1.243405E-02	8.752241E+01	1.000E+01	2.000E+03	0.000E+00	1.000E+01	8.788E-06	1.021E+02
PSDF	DISP	171	3042(4)	1.246002E-02	8.763563E+01	1.000E+01	2.000E+03	0.000E+00	1.000E+01	8.839E-06	1.021E+02
PSDF	DISP	171	3043(4)	1.252836E-02	8.793997E+01	1.000E+01	2.000E+03	0.000E+00	1.000E+01	8.968E-06	1.021E+02
PSDF	DISP	171	3044(4)	1.259550E-02	8.823609E+01	1.000E+01	2.000E+03	0.000E+00	1.000E+01	9.095E-06	1.021E+02
PSDF	DISP	171	2097(4)	8.697485E-03	6.860880E+01	1.000E+01	2.000E+03	0.000E+00	1.000E+01	6.839E-06	2.000E+01
PSDF	DISP	171	2098(4)	8.694530E-03	6.850774E+01	1.000E+01	2.000E+03	0.000E+00	1.000E+01	6.839E-06	2.000E+01
PSDF	DISP	171	21086(4)	9.539599E-03	9.453423E+01	1.000E+01	2.000E+03	0.000E+00	1.000E+01	6.839E-06	2.000E+01
PSDF	DISP	171	21126(4)	2.221166E-02	1.419947E+02	1.000E+01	2.000E+03	0.000E+00	1.000E+01	3.693E-05	1.520E+02

Y AXIS PSD RESPONSE

X Y - O U T P U T S U M M A R Y (A U T O O R P S D F)

PLOT TYPE	CURVE TYPE	FRAME NO.	CURVE ID.	RMS VALUE	NO. POSITIVE CROSSINGS	XMIN FOR ALL DATA	XMAX FOR ALL DATA	YMIN FOR ALL DATA	X FOR YMIN	YMAX FOR ALL DATA	X FOR* YMAX
PSDF	DISP	171	21139(4)	1.747937E-02	1.360270E+02	1.000E+01	2.000E+03	0.000E+00	1.000E+01	2.030E-05	1.520E+02
PSDF	DISP	171	21150(4)	1.364196E-02	1.274148E+02	1.000E+01	2.000E+03	0.000E+00	1.000E+01	9.451E-06	1.520E+02
PSDF	DISP	171	21159(4)	1.120704E-02	1.195959E+02	1.000E+01	2.000E+03	0.000E+00	1.000E+01	6.949E-06	2.000E+01
PSDF	DISP	171	21160(4)	1.033384E-02	1.208679E+02	1.000E+01	2.000E+03	0.000E+00	1.000E+01	6.934E-06	2.000E+01
PSDF	DISP	171	21161(4)	1.041859E-02	1.316274E+02	1.000E+01	2.000E+03	0.000E+00	1.000E+01	6.934E-06	2.000E+01
PSDF	DISP	171	21094(4)	1.582752E-02	1.303292E+02	1.000E+01	2.000E+03	0.000E+00	1.000E+01	1.588E-05	1.520E+02
PSDF	DISP	171	21190(4)	2.293823E-02	1.422800E+02	1.000E+01	2.000E+03	0.000E+00	1.000E+01	4.142E-05	1.520E+02
PSDF	DISP	171	21198(4)	2.672514E-02	1.453389E+02	1.000E+01	2.000E+03	0.000E+00	1.000E+01	5.833E-05	1.520E+02
PSDF	DISP	171	21206(4)	2.617659E-02	1.450603E+02	1.000E+01	2.000E+03	0.000E+00	1.000E+01	5.567E-05	1.520E+02
PSDF	DISP	171	21214(4)	2.253529E-02	1.423598E+02	1.000E+01	2.000E+03	0.000E+00	1.000E+01	3.957E-05	1.520E+02
PSDF	DISP	171	21227(4)	1.770801E-02	1.365086E+02	1.000E+01	2.000E+03	0.000E+00	1.000E+01	2.176E-05	1.520E+02
PSDF	DISP	171	21238(4)	1.378578E-02	1.279698E+02	1.000E+01	2.000E+03	0.000E+00	1.000E+01	1.014E-05	1.520E+02
PSDF	DISP	171	21249(4)	1.046346E-02	1.317151E+02	1.000E+01	2.000E+03	0.000E+00	1.000E+01	6.937E-06	2.000E+01
PSDF	DISP	171	21085(4)	1.047743E-02	1.073192E+02	1.000E+01	2.000E+03	0.000E+00	1.000E+01	6.844E-06	2.000E+01
PSDF	DISP	171	21093(4)	1.683947E-02	1.342157E+02	1.000E+01	2.000E+03	0.000E+00	1.000E+01	1.873E-05	1.520E+02
PSDF	DISP	171	21101(4)	2.315894E-02	1.431795E+02	1.000E+01	2.000E+03	0.000E+00	1.000E+01	4.050E-05	1.520E+02
PSDF	DISP	171	21109(4)	2.652391E-02	1.457783E+02	1.000E+01	2.000E+03	0.000E+00	1.000E+01	5.476E-05	1.520E+02
PSDF	DISP	171	21117(4)	2.576881E-02	1.454468E+02	1.000E+01	2.000E+03	0.000E+00	1.000E+01	5.128E-05	1.520E+02
PSDF	DISP	171	21149(4)	1.338771E-02	1.271916E+02	1.000E+01	2.000E+03	0.000E+00	1.000E+01	8.921E-06	1.520E+02
PSDF	DISP	171	21158(4)	1.106744E-02	1.192612E+02	1.000E+01	2.000E+03	0.000E+00	1.000E+01	6.934E-06	2.000E+01
PSDF	DISP	171	21165(4)	1.023742E-02	1.204670E+02	1.000E+01	2.000E+03	0.000E+00	1.000E+01	6.922E-06	2.000E+01
PSDF	DISP	171	21166(4)	1.036090E-02	1.320775E+02	1.000E+01	2.000E+03	0.000E+00	1.000E+01	6.923E-06	2.000E+01
PSDF	DISP	171	21173(4)	1.053360E-02	1.081116E+02	1.000E+01	2.000E+03	0.000E+00	1.000E+01	6.844E-06	2.000E+01
PSDF	DISP	171	21181(4)	1.705047E-02	1.347169E+02	1.000E+01	2.000E+03	0.000E+00	1.000E+01	2.004E-05	1.520E+02

Y AXIS PSD RESPONSE

X Y - O U T P U T S U M M A R Y (A U T O O R P S D F)

PLOT TYPE	CURVE TYPE	FRAME NO.	CURVE ID.	RMS VALUE	NO. POSITIVE CROSSINGS	XMIN FOR ALL DATA	XMAX FOR ALL DATA	YMIN FOR ALL DATA	X FOR YMIN	YMAX FOR ALL DATA	X FOR* YMAX
PSDF	DISP	171	21205(4)	2.615802E-02	1.456788E+02	1.000E+01	2.000E+03	0.000E+00	1.000E+01	5.498E-05	1.520E+02
PSDF	DISP	171	21213(4)	2.247036E-02	1.430018E+02	1.000E+01	2.000E+03	0.000E+00	1.000E+01	3.896E-05	1.520E+02
PSDF	DISP	171	21226(4)	1.745932E-02	1.368145E+02	1.000E-01	2.000E+03	0.000E+00	1.000E+01	2.089E-05	1.520E+02
PSDF	DISP	171	21237(4)	1.353582E-02	1.277325E+02	1.000E+01	2.000E+03	0.000E+00	1.000E+01	9.581E-06	1.520E+02
PSDF	DISP	171	21246(4)	1.116361E-02	1.198416E+02	1.000E+01	2.000E+03	0.000E+00	1.000E+01	6.938E-06	2.000E+01
PSDF	DISP	171	21253(4)	1.030895E-02	1.208759E+02	1.000E+01	2.000E+03	0.000E+00	1.000E+01	6.927E-06	2.000E+01
PSDF	DISP	171	21118(4)	2.578625E-02	1.447717E+02	1.000E+01	2.000E+03	0.000E+00	1.000E+01	5.197E-05	1.520E+02
PSDF	DISP	171	21174(4)	9.566472E-03	9.481222E+01	1.000E+01	2.000E+03	0.000E+00	1.000E+01	6.840E-06	2.000E+01
PSDF	DISP	171	21182(4)	1.601075E-02	1.308492E+02	1.000E+01	2.000E+03	0.000E+00	1.000E+01	1.697E-05	1.520E+02
PSDF	DISP	171	21102(4)	2.261479E-02	1.419508E+02	1.000E+01	2.000E+03	0.000E+00	1.000E+01	3.871E-05	1.520E+02
PSDF	DISP	171	21110(4)	2.632724E-02	1.450685E+02	1.000E+01	2.000E+03	0.000E+00	1.000E+01	5.447E-05	1.520E+02
PSDF	DISP	171	21247(4)	1.128796E-02	1.200643E+02	1.000E+01	2.000E+03	0.000E+00	1.000E+01	6.950E-06	2.000E+01
PSDF	DISP	171	21248(4)	1.038718E-02	1.211309E+02	1.000E+01	2.000E+03	0.000E+00	1.000E+01	6.937E-06	2.000E+01
PSDF	DISP	171	21125(4)	2.214903E-02	1.427117E+02	1.000E+01	2.000E+03	0.000E+00	1.000E+01	3.633E-05	1.520E+02
PSDF	DISP	171	21138(4)	1.723237E-02	1.364057E+02	1.000E+01	2.000E+03	0.000E+00	1.000E+01	1.947E-05	1.520E+02
PSDF	DISP	171	21189(4)	2.349841E-02	1.434852E+02	1.000E+01	2.000E+03	0.000E+00	1.000E+01	4.339E-05	1.520E+02
PSDF	DISP	171	21197(4)	2.692755E-02	1.460141E+02	1.000E+01	2.000E+03	0.000E+00	1.000E+01	5.869E-05	1.520E+02
PSDF	DISP	171	21254(4)	1.042583E-02	1.322015E+02	1.000E+01	2.000E+03	0.000E+00	1.000E+01	6.929E-06	2.000E+01
PSDF	DISP	171	2204(4)	9.196770E-03	7.453865E+01	1.000E+01	2.000E+03	0.000E+00	1.000E+01	6.904E-06	2.000E+01
PSDF	DISP	171	2202(4)	9.058339E-03	7.193972E+01	1.000E+01	2.000E+03	0.000E+00	1.000E+01	6.912E-06	2.000E+01
PSDF	DISP	171	22644(4)	9.024744E-03	8.811148E+01	1.000E+01	2.000E+03	0.000E+00	1.000E+01	6.821E-06	2.000E+01
PSDF	DISP	171	22632(4)	7.812567E-03	5.719668E+01	1.000E+01	2.000E+03	0.000E+00	1.000E+01	6.711E-06	2.000E+01
PSDF	DISP	171	23231(4)	8.991319E-03	7.865204E+01	1.000E+01	2.000E+03	0.000E+00	1.000E+01	6.916E-06	2.000E+01
PSDF	DISP	171	23232(4)	8.952418E-03	7.744619E+01	1.000E+01	2.000E+03	0.000E+00	1.000E+01	6.908E-06	2.000E+01

Y AXIS PSD RESPONSE

X Y - O U T P U T S U M M A R Y (A U T O O R P S D F)

PLOT TYPE	CURVE TYPE	FRAME NO.	CURVE ID.	RMS VALUE	NO. POSITIVE CROSSINGS	XMIN FOR ALL DATA	XMAX FOR ALL DATA	YMIN FOR ALL DATA	X FOR YMIN	YMAX FOR ALL DATA	X FOR* YMAX
PSDF	DISP	171	23233(4)	8.646763E-03	6.966506E+01	1.000E+01	2.000E+03	0.000E+00	1.000E+01	6.849E-06	2.000E+01
PSDF	DISP	171	23234(4)	8.916697E-03	7.620371E+01	1.000E+01	2.000E+03	0.000E+00	1.000E+01	6.903E-06	2.000E+01
PSDF	DISP	171	23235(4)	8.634788E-03	6.973640E+01	1.000E+01	2.000E+03	0.000E+00	1.000E+01	6.849E-06	2.000E+01
PSDF	DISP	171	22859(4)	8.862221E-03	7.356512E+01	1.000E+01	2.000E+03	0.000E+00	1.000E+01	6.856E-06	2.000E+01
PSDF	DISP	171	22868(4)	8.578045E-03	7.078299E+01	1.000E+01	2.000E+03	0.000E+00	1.000E+01	6.829E-06	2.000E+01
PSDF	DISP	171	23609(4)	8.725097E-03	6.890361E+01	1.000E+01	2.000E+03	0.000E+00	1.000E+01	6.842E-06	2.000E+01
PSDF	DISP	171	23610(4)	8.841936E-03	7.050638E+01	1.000E+01	2.000E+03	0.000E+00	1.000E+01	6.853E-06	2.000E+01
PSDF	DISP	171	23611(4)	8.620293E-03	6.749335E+01	1.000E+01	2.000E+03	0.000E+00	1.000E+01	6.831E-06	2.000E+01
PSDF	DISP	171	23612(4)	8.502838E-03	6.589532E+01	1.000E+01	2.000E+03	0.000E+00	1.000E+01	6.817E-06	2.000E+01
PSDF	DISP	171	23613(4)	9.023364E-03	7.294731E+01	1.000E+01	2.000E+03	0.000E+00	1.000E+01	6.870E-06	2.000E+01
PSDF	DISP	171	23614(4)	8.794285E-03	6.991515E+01	1.000E+01	2.000E+03	0.000E+00	1.000E+01	6.848E-06	2.000E+01
PSDF	DISP	171	23615(4)	8.486585E-03	6.569308E+01	1.000E+01	2.000E+03	0.000E+00	1.000E+01	6.816E-06	2.000E+01
PSDF	DISP	171	23616(4)	9.023581E-03	7.288754E+01	1.000E+01	2.000E+03	0.000E+00	1.000E+01	6.870E-06	2.000E+01
PSDF	DISP	171	23617(4)	9.018828E-03	7.276475E+01	1.000E+01	2.000E+03	0.000E+00	1.000E+01	6.870E-06	2.000E+01
PSDF	DISP	171	23618(4)	8.505965E-03	6.588599E+01	1.000E+01	2.000E+03	0.000E+00	1.000E+01	6.818E-06	2.000E+01
PSDF	DISP	171	23619(4)	8.760057E-03	6.930479E+01	1.000E+01	2.000E+03	0.000E+00	1.000E+01	6.846E-06	2.000E+01
PSDF	DISP	171	2752(4)	9.958687E-03	7.815488E+01	1.000E+01	2.000E+03	0.000E+00	1.000E+01	6.997E-06	2.000E+01
PSDF	DISP	171	2758(4)	1.033220E-02	9.713690E+01	1.000E+01	2.000E+03	0.000E+00	1.000E+01	6.996E-06	2.000E+01
PSDF	DISP	171	2748(4)	9.096604E-03	7.092118E+01	1.000E+01	2.000E+03	0.000E+00	1.000E+01	6.905E-06	2.000E+01
PSDF	DISP	171	618(4)	9.291412E-03	7.408218E+01	1.000E+01	2.000E+03	0.000E+00	1.000E+01	6.902E-06	2.000E+01
PSDF	DISP	171	603(4)	9.796922E-03	8.067962E+01	1.000E+01	2.000E+03	0.000E+00	1.000E+01	6.927E-06	2.000E+01
PSDF	DISP	171	2441(4)	9.941890E-03	8.240195E+01	1.000E+01	2.000E+03	0.000E+00	1.000E+01	6.934E-06	2.000E+01
PSDF	DISP	171	25803(4)	1.900040E-02	1.365204E+02	1.000E+01	2.000E+03	0.000E+00	1.000E+01	1.568E-05	1.600E+02
PSDF	DISP	171	2175(4)	1.069609E-02	7.866760E+01	1.000E+01	2.000E+03	0.000E+00	1.000E+01	7.041E-06	2.000E+01

Y AXIS PSD RESPONSE

X Y - O U T P U T S U M M A R Y (A U T O O R P S D F)

PLOT TYPE	CURVE TYPE	FRAME NO.	CURVE ID.	RMS VALUE	NO. POSITIVE CROSSINGS	XMIN FOR ALL DATA	XMAX FOR ALL DATA	YMIN FOR ALL DATA	X FOR YMIN	YMAX FOR ALL DATA	X FOR* YMAX
PSDF	DISP	171	2086(4)	9.735080E-03	8.103580E+01	1.000E+01	2.000E+03	0.000E+00	1.000E+01	6.927E-06	2.000E+01
PSDF	DISP	171	26116(4)	1.710178E-02	1.292212E+02	1.000E+01	2.000E+03	0.000E+00	1.000E+01	1.757E-05	1.219E+02
PSDF	DISP	171	26146(4)	1.166497E-02	9.386609E+01	1.000E+01	2.000E+03	0.000E+00	1.000E+01	7.259E-06	1.220E+02
PSDF	DISP	171	26336(4)	1.623936E-02	1.361324E+02	1.000E+01	2.000E+03	0.000E+00	1.000E+01	1.222E-05	1.600E+02
PSDF	DISP	171	26417(4)	1.803717E-02	1.384988E+02	1.000E+01	2.000E+03	0.000E+00	1.000E+01	1.570E-05	1.600E+02
PSDF	DISP	171	26082(4)	1.165914E-02	9.380804E+01	1.000E+01	2.000E+03	0.000E+00	1.000E+01	7.233E-06	1.220E+02
PSDF	DISP	171	24000(4)	7.285419E-03	4.791333E+01	1.000E+01	2.000E+03	0.000E+00	1.000E+01	6.579E-06	2.000E+01
PSDF	DISP	171	2201(5)	8.292088E-04	2.528241E+02	1.000E+01	2.000E+03	0.000E+00	1.000E+01	1.879E-08	2.520E+02
PSDF	DISP	171	2660(5)	1.572355E-03	1.497127E+02	1.000E+01	2.000E+03	0.000E+00	1.000E+01	2.670E-07	1.151E+02
PSDF	DISP	171	2648(5)	4.671804E-04	1.750222E+02	1.000E+01	2.000E+03	0.000E+00	1.000E+01	1.538E-08	1.159E+02
PSDF	DISP	171	2650(5)	5.404264E-04	1.601008E+02	1.000E+01	2.000E+03	0.000E+00	1.000E+01	3.272E-08	1.151E+02
PSDF	DISP	171	2658(5)	1.205116E-03	2.146543E+02	1.000E+01	2.000E+03	0.000E+00	1.000E+01	7.642E-08	1.159E+02
PSDF	DISP	171	2441(5)	2.087490E-03	1.283319E+02	1.000E+01	2.000E+03	0.000E+00	1.000E+01	5.262E-07	1.151E+02
PSDF	DISP	171	2200(5)	6.051742E-04	2.371794E+02	1.000E+01	2.000E+03	0.000E+00	1.000E+01	7.938E-09	2.520E+02
PSDF	DISP	171	2205(5)	9.922446E-04	2.184238E+02	1.000E+01	2.000E+03	0.000E+00	1.000E+01	7.023E-08	1.151E+02
PSDF	DISP	171	2206(5)	1.220878E-03	1.731297E+02	1.000E+01	2.000E+03	0.000E+00	1.000E+01	1.434E-07	1.151E+02
PSDF	DISP	171	2196(5)	7.760829E-04	2.487729E+02	1.000E+01	2.000E+03	0.000E+00	1.000E+01	3.514E-08	1.151E+02
PSDF	DISP	171	1890(5)	1.476814E-03	1.296344E+02	1.000E+01	2.000E+03	0.000E+00	1.000E+01	2.111E-07	1.151E+02
PSDF	DISP	171	2197(5)	7.091735E-04	2.708038E+02	1.000E+01	2.000E+03	0.000E+00	1.000E+01	1.055E-08	2.520E+02
PSDF	DISP	171	3053(5)	3.081697E-03	2.195601E+02	1.000E+01	2.000E+03	0.000E+00	1.000E+01	3.112E-07	2.280E+02
PSDF	DISP	171	1885(5)	1.455167E-03	1.555755E+02	1.000E+01	2.000E+03	0.000E+00	1.000E+01	1.622E-07	1.151E+02
PSDF	DISP	171	1886(5)	1.238281E-03	1.613577E+02	1.000E-01	2.000E+03	0.000E+00	1.000E+01	1.131E-07	1.151E+02
PSDF	DISP	171	1887(5)	6.639378E-04	1.499782E+02	1.000E-01	2.000E+03	0.000E+00	1.000E+01	4.067E-08	1.151E+02
PSDF	DISP	171	1888(5)	8.491311E-04	1.372619E+02	1.000E+01	2.000E+03	0.000E+00	1.000E+01	6.943E-08	1.151E+02

Y AXIS PSD RESPONSE

X Y - O U T P U T S U M M A R Y (A U T O O R P S D F)

PLOT TYPE	CURVE TYPE	FRAME NO.	CURVE ID.	RMS VALUE	NO. POSITIVE CROSSINGS	XMIN FOR ALL DATA	XMAX FOR ALL DATA	YMIN FOR ALL DATA	X FOR YMIN	YMAX FOR ALL DATA	X FOR* YMAX
PSDF	DISP	171	3037(5)	1.142550E-03	1.301593E+02	1.000E+01	2.000E+03	0.000E+00	1.000E+01	1.274E-07	1.151E+02
PSDF	DISP	171	3038(5)	1.168489E-03	1.292600E+02	1.000E+01	2.000E+03	0.000E+00	1.000E+01	1.412E-07	1.151E+02
PSDF	DISP	171	3039(5)	1.186395E-03	1.289162E+02	1.000E+01	2.000E+03	0.000E+00	1.000E+01	1.485E-07	1.151E+02
PSDF	DISP	171	3040(5)	1.172482E-03	1.292469E+02	1.000E+01	2.000E+03	0.000E+00	1.000E+01	1.422E-07	1.151E+02
PSDF	DISP	171	3041(5)	1.146634E-03	1.301566E+02	1.000E+01	2.000E+03	0.000E+00	1.000E+01	1.280E-07	1.151E+02
PSDF	DISP	171	3042(5)	1.116779E-03	1.314111E+02	1.000E+01	2.000E+03	0.000E+00	1.000E+01	1.129E-07	1.151E+02
PSDF	DISP	171	3043(5)	1.108526E-03	1.319346E+02	1.000E+01	2.000E+03	0.000E+00	1.000E+01	1.076E-07	1.151E+02
PSDF	DISP	171	3044(5)	1.115376E-03	1.313910E+02	1.000E+01	2.000E+03	0.000E+00	1.000E+01	1.131E-07	1.151E+02
PSDF	DISP	171	2097(5)	8.276755E-04	1.399920E+02	1.000E+01	2.000E+03	0.000E+00	1.000E+01	7.609E-08	1.151E+02
PSDF	DISP	171	2098(5)	5.154252E-04	1.473810E+02	1.000E+01	2.000E+03	0.000E+00	1.000E+01	2.363E-08	1.151E+02
PSDF	DISP	171	21086(5)	4.403645E-03	1.518949E+02	1.000E+01	2.000E+03	0.000E+00	1.000E+01	1.358E-06	1.410E+02
PSDF	DISP	171	21126(5)	2.280979E-03	1.564040E+02	1.000E+01	2.000E+03	0.000E+00	1.000E+01	3.538E-07	1.410E+02
PSDF	DISP	171	21139(5)	1.863181E-03	1.586507E+02	1.000E+01	2.000E+03	0.000E+00	1.000E+01	2.299E-07	1.410E+02
PSDF	DISP	171	21150(5)	1.458887E-03	1.620986E+02	1.000E+01	2.000E+03	0.000E+00	1.000E+01	1.327E-07	1.410E+02
PSDF	DISP	171	21159(5)	1.078264E-03	1.675650E+02	1.000E+01	2.000E+03	0.000E+00	1.000E+01	6.141E-08	1.410E+02
PSDF	DISP	171	21160(5)	7.681225E-04	1.744620E+02	1.000E+01	2.000E+03	0.000E+00	1.000E+01	2.124E-08	1.151E+02
PSDF	DISP	171	21161(5)	6.595114E-04	1.701302E+02	1.000E+01	2.000E+03	0.000E+00	1.000E+01	3.947E-08	1.028E+02
PSDF	DISP	171	21094(5)	3.996463E-03	1.523141E+02	1.000E+01	2.000E+03	0.000E+00	1.000E+01	1.116E-06	1.410E+02
PSDF	DISP	171	21190(5)	3.730061E-03	1.510926E+02	1.000E+01	2.000E+03	0.000E+00	1.000E+01	1.014E-06	1.410E+02
PSDF	DISP	171	21198(5)	3.274549E-03	1.518120E+02	1.000E+01	2.000E+03	0.000E+00	1.000E+01	7.805E-07	1.410E+02
PSDF	DISP	171	21206(5)	2.833467E-03	1.527932E+02	1.000E+01	2.000E+03	0.000E+00	1.000E+01	5.822E-07	1.410E+02
PSDF	DISP	171	21214(5)	2.389117E-03	1.542443E+02	1.000E+01	2.000E+03	0.000E+00	1.000E+01	4.096E-07	1.410E+02
PSDF	DISP	171	21227(5)	1.955909E-03	1.564294E+02	1.000E+01	2.000E+03	0.000E+00	1.000E+01	2.680E-07	1.410E+02
PSDF	DISP	171	21238(5)	1.536236E-03	1.598933E+02	1.000E+01	2.000E+03	0.000E+00	1.000E+01	1.557E-07	1.410E+02

Y AXIS PSD RESPONSE

X Y - O U T P U T S U M M A R Y (A U T O O R P S D F)

PLOT TYPE	CURVE TYPE	FRAME NO.	CURVE ID.	RMS VALUE	NO. POSITIVE CROSSINGS	XMIN FOR ALL DATA	XMAX FOR ALL DATA	YMIN FOR ALL DATA	X FOR YMIN	YMAX FOR ALL DATA	X FOR* YMAX
PSDF	DISP	171	21249(5)	7.091612E-04	1.692865E+02	1.000E+01	2.000E+03	0.000E+00	1.000E+01	4.150E-08	1.028E+02
PSDF	DISP	171	21085(5)	4.410216E-03	1.519530E+02	1.000E+01	2.000E+03	0.000E+00	1.000E+01	1.360E-06	1.410E+02
PSDF	DISP	171	21093(5)	3.979084E-03	1.523761E+02	1.000E+01	2.000E+03	0.000E+00	1.000E+01	1.106E-06	1.410E+02
PSDF	DISP	171	21101(5)	3.558952E-03	1.529636E+02	1.000E+01	2.000E+03	0.000E+00	1.000E+01	8.827E-07	1.410E+02
PSDF	DISP	171	21109(5)	3.133467E-03	1.537686E+02	1.000E+01	2.000E+03	0.000E+00	1.000E+01	6.816E-07	1.410E+02
PSDF	DISP	171	21117(5)	2.680056E-03	1.549384E+02	1.000E+01	2.000E+03	0.000E+00	1.000E+01	4.948E-07	1.410E+02
PSDF	DISP	171	21149(5)	1.444990E-03	1.622477E+02	1.000E+01	2.000E+03	0.000E+00	1.000E+01	1.298E-07	1.410E+02
PSDF	DISP	171	21158(5)	1.067929E-03	1.679203E+02	1.000E+01	2.000E+03	0.000E+00	1.000E+01	5.967E-08	1.410E+02
PSDF	DISP	171	21165(5)	7.687972E-04	1.750906E+02	1.000E+01	2.000E+03	0.000E+00	1.000E+01	2.120E-08	1.151E+02
PSDF	DISP	171	21166(5)	6.633467E-04	1.711977E+02	1.000E+01	2.000E+03	0.000E+00	1.000E+01	3.986E-08	1.028E+02
PSDF	DISP	171	21173(5)	4.600149E-03	1.501651E+02	1.000E+01	2.000E+03	0.000E+00	1.000E+01	1.541E-06	1.410E+02
PSDF	DISP	171	21181(5)	4.148766E-03	1.506045E+02	1.000E+01	2.000E+03	0.000E+00	1.000E+01	1.253E-06	1.410E+02
PSDF	DISP	171	21205(5)	2.799885E-03	1.528824E+02	1.000E+01	2.000E+03	0.000E+00	1.000E+01	5.680E-07	1.410E+02
PSDF	DISP	171	21213(5)	2.369399E-03	1.542996E+02	1.000E+01	2.000E+03	0.000E+00	1.000E+01	4.026E-07	1.410E+02
PSDF	DISP	171	21226(5)	1.933762E-03	1.565181E+02	1.000E+01	2.000E+03	0.000E+00	1.000E+01	2.614E-07	1.410E+02
PSDF	DISP	171	21237(5)	1.518381E-03	1.600344E+02	1.000E+01	2.000E+03	0.000E+00	1.000E+01	1.514E-07	1.410E+02
PSDF	DISP	171	21246(5)	1.128695E-03	1.658924E+02	1.000E+01	2.000E+03	0.000E+00	1.000E+01	7.005E-08	1.410E+02
PSDF	DISP	171	21253(5)	8.218342E-04	1.735731E+02	1.000E+01	2.000E+03	0.000E+00	1.000E+01	2.735E-08	1.151E+02
PSDF	DISP	171	21118(5)	2.710062E-03	1.548568E+02	1.000E+01	2.000E+03	0.000E+00	1.000E+01	5.062E-07	1.410E+02
PSDF	DISP	171	21174(5)	4.589372E-03	1.500720E+02	1.000E+01	2.000E+03	0.000E+00	1.000E+01	1.536E-06	1.410E+02
PSDF	DISP	171	21182(5)	4.162968E-03	1.505871E+02	1.000E+01	2.000E+03	0.000E+00	1.000E+01	1.262E-06	1.410E+02
PSDF	DISP	171	21102(5)	3.576552E-03	1.529380E+02	1.000E+01	2.000E+03	0.000E+00	1.000E+01	8.917E-07	1.410E+02
PSDF	DISP	171	21110(5)	3.136393E-03	1.537668E+02	1.000E+01	2.000E+03	0.000E+00	1.000E+01	6.828E-07	1.410E+02
PSDF	DISP	171	21247(5)	1.141523E-03	1.655807E+02	1.000E+01	2.000E+03	0.000E+00	1.000E+01	7.247E-08	1.410E+02

Y AXIS PSD RESPONSE

X Y - O U T P U T S U M M A R Y (A U T O O R P S D F)

PLOT TYPE	CURVE TYPE	FRAME NO.	CURVE ID.	RMS VALUE	NO. POSITIVE CROSSINGS	XMIN FOR ALL DATA	XMAX FOR ALL DATA	YMIN FOR ALL DATA	X FOR YMIN	YMAX FOR ALL DATA	X FOR* YMAX
PSDF	DISP	171	21248(5)	8.212753E-04	1.730022E+02	1.000E+01	2.000E+03	0.000E+00	1.000E+01	2.708E-08	1.151E+02
PSDF	DISP	171	21125(5)	2.265370E-03	1.564629E+02	1.000E+01	2.000E+03	0.000E+00	1.000E+01	3.488E-07	1.410E+02
PSDF	DISP	171	21138(5)	1.845789E-03	1.587550E+02	1.000E+01	2.000E+03	0.000E+00	1.000E+01	2.253E-07	1.410E+02
PSDF	DISP	171	21189(5)	3.711648E-03	1.511271E+02	1.000E+01	2.000E+03	0.000E+00	1.000E+01	1.004E-06	1.410E+02
PSDF	DISP	171	21197(5)	3.270446E-03	1.518295E+02	1.000E+01	2.000E+03	0.000E+00	1.000E+01	7.783E-07	1.410E+02
PSDF	DISP	171	21254(5)	7.177169E-04	1.699934E+02	1.000E+01	2.000E+03	0.000E+00	1.000E+01	4.245E-08	1.028E+02
PSDF	DISP	171	2204(5)	6.915361E-04	2.389753E+02	1.000E+01	2.000E+03	0.000E+00	1.000E+01	2.242E-08	1.151E+02
PSDF	DISP	171	2202(5)	8.613428E-04	2.075298E+02	1.000E+01	2.000E+03	0.000E+00	1.000E+01	3.094E-08	1.151E+02
PSDF	DISP	171	22644(5)	4.976969E-03	1.443145E+02	1.000E+01	2.000E+03	0.000E+00	1.000E+01	2.041E-06	1.410E+02
PSDF	DISP	171	22632(5)	5.165031E-03	1.444834E+02	1.000E+01	2.000E+03	0.000E+00	1.000E+01	2.180E-06	1.410E+02
PSDF	DISP	171	23231(5)	1.482139E-03	1.428593E+02	1.000E+01	2.000E+03	0.000E+00	1.000E+01	1.737E-07	1.159E+02
PSDF	DISP	171	23232(5)	1.450403E-03	1.405651E+02	1.000E+01	2.000E+03	0.000E+00	1.000E+01	1.703E-07	1.159E+02
PSDF	DISP	171	23233(5)	1.313374E-03	1.330045E+02	1.000E+01	2.000E+03	0.000E+00	1.000E+01	1.373E-07	1.159E+02
PSDF	DISP	171	23234(5)	1.421728E-03	1.388448E+02	1.000E+01	2.000E+03	0.000E+00	1.000E+01	1.678E-07	1.159E+02
PSDF	DISP	171	23235(5)	1.318354E-03	1.330348E+02	1.000E+01	2.000E+03	0.000E+00	1.000E+01	1.361E-07	1.159E+02
PSDF	DISP	171	22859(5)	1.356954E-03	1.395106E+02	1.000E+01	2.000E+03	0.000E+00	1.000E+01	1.101E-07	1.159E+02
PSDF	DISP	171	22868(5)	1.075061E-03	1.545804E+02	1.000E+01	2.000E+03	0.000E+00	1.000E+01	4.528E-08	1.028E+02
PSDF	DISP	171	23609(5)	4.436368E-04	1.514369E+02	1.000E+01	2.000E+03	0.000E+00	1.000E+01	1.477E-08	1.151E+02
PSDF	DISP	171	23610(5)	4.816506E-04	1.501027E+02	1.000E+01	2.000E+03	0.000E+00	1.000E+01	1.860E-08	1.151E+02
PSDF	DISP	171	23611(5)	4.612819E-04	1.495373E+02	1.000E+01	2.000E+03	0.000E+00	1.000E+01	1.728E-08	1.151E+02
PSDF	DISP	171	23612(5)	4.279572E-04	1.505163E+02	1.000E+01	2.000E+03	0.000E+00	1.000E+01	1.409E-08	1.151E+02
PSDF	DISP	171	23613(5)	7.838587E-04	1.418245E+02	1.000E+01	2.000E+03	0.000E+00	1.000E+01	6.571E-08	1.151E+02
PSDF	DISP	171	23614(5)	7.562356E-04	1.414914E+02	1.000E+01	2.000E+03	0.000E+00	1.000E+01	6.141E-08	1.151E+02
PSDF	DISP	171	23615(5)	6.820709E-04	1.410332E+02	1.000E+01	2.000E+03	0.000E+00	1.000E+01	5.003E-08	1.151E+02

Y AXIS PSD RESPONSE

X Y - O U T P U T S U M M A R Y (A U T O O R P S D F)

PLOT TYPE	CURVE TYPE	FRAME NO.	CURVE ID.	RMS VALUE	NO. POSITIVE CROSSINGS	XMIN FOR ALL DATA	XMAX FOR ALL DATA	YMIN FOR ALL DATA	X FOR YMIN	YMAX FOR ALL DATA	X FOR* YMAX
PSDF	DISP	171	23616(5)	4.450028E-04	1.528896E+02	1.000E+01	2.000E+03	0.000E+00	1.000E+01	1.346E-08	1.151E+02
PSDF	DISP	171	23617(5)	3.304245E-04	1.623998E+02	1.000E+01	2.000E+03	0.000E+00	1.000E+01	5.061E-09	1.028E+02
PSDF	DISP	171	23618(5)	2.867223E-04	1.649102E+02	1.000E+01	2.000E+03	0.000E+00	1.000E+01	3.326E-09	1.028E+02
PSDF	DISP	171	23619(5)	3.079678E-04	1.642417E+02	1.000E+01	2.000E+03	0.000E+00	1.000E+01	4.071E-09	1.028E+02
PSDF	DISP	171	2752(5)	4.464406E-04	1.750531E+02	1.000E+01	2.000E+03	0.000E+00	1.000E+01	2.054E-08	1.151E+02
PSDF	DISP	171	2758(5)	1.486321E-03	2.192396E+02	1.000E+01	2.000E+03	0.000E+00	1.000E+01	1.212E-07	1.151E+02
PSDF	DISP	171	2748(5)	1.249482E-03	1.286781E+02	1.000E+01	2.000E+03	0.000E+00	1.000E+01	1.783E-07	1.151E+02
PSDF	DISP	171	618(5)	1.250812E-03	1.291983E+02	1.000E+01	2.000E+03	0.000E+00	1.000E+01	1.779E-07	1.151E+02
PSDF	DISP	171	603(5)	1.756934E-03	1.265432E+02	1.000E+01	2.000E+03	0.000E+00	1.000E+01	3.565E-07	1.151E+02
PSDF	DISP	171	2441(5)	2.087490E-03	1.283319E+02	1.000E+01	2.000E+03	0.000E+00	1.000E+01	5.262E-07	1.151E+02
PSDF	DISP	171	25803(5)	1.525138E-02	1.366722E+02	1.000E+01	2.000E+03	0.000E+00	1.000E+01	1.895E-05	1.159E+02
PSDF	DISP	171	2175(5)	9.219008E-04	1.501459E+02	1.000E+01	2.000E+03	0.000E+00	1.000E+01	8.196E-08	1.028E+02
PSDF	DISP	171	2086(5)	1.283501E-03	1.388627E+02	1.000E+01	2.000E+03	0.000E+00	1.000E+01	1.930E-07	1.151E+02
PSDF	DISP	171	26116(5)	1.305968E-02	1.511414E+02	1.000E+01	2.000E+03	0.000E+00	1.000E+01	9.755E-06	1.600E+02
PSDF	DISP	171	26146(5)	7.653940E-03	1.242702E+02	1.000E+01	2.000E+03	0.000E+00	1.000E+01	6.639E-06	1.219E+02
PSDF	DISP	171	26336(5)	1.305941E-02	1.511416E+02	1.000E+01	2.000E+03	0.000E+00	1.000E+01	9.755E-06	1.600E+02
PSDF	DISP	171	26417(5)	1.359182E-02	1.447491E+02	1.000E+01	2.000E+03	0.000E+00	1.000E+01	1.094E-05	1.159E+02
PSDF	DISP	171	26082(5)	8.134115E-03	1.216026E+02	1.000E+01	2.000E+03	0.000E+00	1.000E+01	6.569E-06	1.167E+02
PSDF	DISP	171	24000(5)	5.076395E-11	4.190770E+01	1.000E+01	2.000E+03	0.000E+00	1.000E+01	5.737E-22	2.200E+01
PSDF	EL STR	171	2150(3)	1.074129E+02	3.829102E+02	1.000E+01	2.000E+03	0.000E+00	1.000E+01	2.163E+02	1.159E+02
PSDF	EL STR	171	2150(5)	1.176565E+02	3.727839E+02	1.000E+01	2.000E+03	0.000E+00	1.000E+01	2.532E+02	3.940E+02
PSDF	EL STR	171	2150(7)	2.261802E+02	2.884956E+02	1.000E+01	2.000E+03	0.000E+00	1.000E+01	1.550E+03	1.151E+02
PSDF	EL STR	171	2151(3)	2.245218E+02	3.137697E+02	1.000E+01	2.000E+03	0.000E+00	1.000E+01	1.399E+03	1.151E+02
PSDF	EL STR	171	2151(5)	2.010502E+02	3.121217E+02	1.000E+01	2.000E+03	0.000E+00	1.000E+01	1.343E+03	1.151E+02

Y AXIS PSD RESPONSE

X Y - O U T P U T S U M M A R Y (A U T O O R P S D F)

PLOT TYPE	CURVE TYPE	FRAME NO.	CURVE ID.	RMS VALUE	NO. POSITIVE CROSSINGS	XMIN FOR ALL DATA	XMAX FOR ALL DATA	YMIN FOR ALL DATA	X FOR YMIN	YMAX FOR ALL DATA	X FOR* YMAX
PSDF	EL STR	171	2151(7)	7.972903E+01	2.246953E+02	1.000E+01	2.000E+03	0.000E+00	1.000E+01	5.375E+02	1.028E+02
PSDF	EL STR	171	2152(3)	9.919801E+01	2.875658E+02	1.000E+01	2.000E+03	0.000E+00	1.000E+01	2.528E+02	2.520E+02
PSDF	EL STR	171	2152(5)	1.458941E+02	2.823749E+02	1.000E+01	2.000E+03	0.000E+00	1.000E+01	7.908E+02	1.151E+02
PSDF	EL STR	171	2152(7)	1.457858E+02	2.926004E+02	1.000E+01	2.000E+03	0.000E+00	1.000E+01	5.179E+02	1.028E+02
PSDF	EL STR	171	2153(3)	5.571085E+01	3.453670E+02	1.000E+01	2.000E+03	0.000E+00	1.000E+01	4.071E+01	1.028E+02
PSDF	EL STR	171	2153(5)	4.977015E+01	3.155054E+02	1.000E+01	2.000E+03	0.000E+00	1.000E+01	3.658E+01	1.028E+02
PSDF	EL STR	171	2153(7)	1.808675E+02	2.825611E+02	1.000E+01	2.000E+03	0.000E+00	1.000E+01	7.528E+02	2.520E+02
PSDF	EL STR	171	2154(3)	3.591721E+02	1.953510E+02	1.000E+01	2.000E+03	0.000E+00	1.000E+01	9.027E+03	1.151E+02
PSDF	EL STR	171	2154(5)	1.964151E+02	1.342690E+02	1.000E+01	2.000E+03	0.000E+00	1.000E+01	2.735E+03	1.151E+02
PSDF	EL STR	171	2154(7)	2.236767E+02	2.432667E+02	1.000E+01	2.000E+03	0.000E+00	1.000E+01	2.807E+03	1.151E+02
PSDF	EL STR	171	2155(3)	3.804140E+02	2.853970E+02	1.000E+01	2.000E+03	0.000E+00	1.000E+01	3.018E+03	2.520E+02
PSDF	EL STR	171	2155(5)	2.508279E+02	3.068670E+02	1.000E+01	2.000E+03	0.000E+00	1.000E+01	2.148E+03	1.151E+02
PSDF	EL STR	171	2155(7)	9.804605E+01	2.909878E+02	1.000E+01	2.000E+03	0.000E+00	1.000E+01	2.204E+02	2.520E+02
PSDF	EL STR	171	2156(3)	3.534289E+02	2.868071E+02	1.000E+01	2.000E+03	0.000E+00	1.000E+01	3.418E+03	2.520E+02
PSDF	EL STR	171	2156(5)	2.050548E+02	3.419281E+02	1.000E+01	2.000E+03	0.000E+00	1.000E+01	6.309E+02	3.940E+02
PSDF	EL STR	171	2156(7)	1.197341E+02	3.657435E+02	1.000E+01	2.000E+03	0.000E+00	1.000E+01	2.839E+02	3.920E+02
PSDF	EL STR	171	2157(3)	1.456762E+02	3.634117E+02	1.000E+01	2.000E+03	0.000E+00	1.000E+01	4.546E+02	1.820E+02
PSDF	EL STR	171	2157(5)	1.218426E+02	2.025717E+02	1.000E+01	2.000E+03	0.000E+00	1.000E+01	6.878E+02	1.151E+02
PSDF	EL STR	171	2157(7)	1.869905E+02	3.449890E+02	1.000E+01	2.000E+03	0.000E+00	1.000E+01	5.606E+02	3.920E+02
PSDF	EL STR	171	2158(3)	4.202371E+02	1.362230E+02	1.000E+01	2.000E+03	0.000E+00	1.000E+01	1.661E+04	1.159E+02
PSDF	EL STR	171	2158(5)	1.416312E+02	2.362433E+02	1.000E+01	2.000E+03	0.000E+00	1.000E+01	1.538E+03	1.028E+02
PSDF	EL STR	171	2158(7)	9.569274E+01	3.538457E+02	1.000E+01	2.000E+03	0.000E+00	1.000E+01	1.725E+02	1.028E+02
PSDF	EL STR	171	2159(3)	2.825022E+02	2.786268E+02	1.000E+01	2.000E+03	0.000E+00	1.000E+01	1.864E+03	2.520E+02
PSDF	EL STR	171	2159(5)	3.015206E+02	3.728779E+02	1.000E+01	2.000E+03	0.000E+00	1.000E+01	2.053E+03	3.920E+02

Y AXIS PSD RESPONSE

X Y - O U T P U T S U M M A R Y (A U T O O R P S D F)

PLOT TYPE	CURVE TYPE	FRAME NO.	CURVE ID.	RMS VALUE	NO. POSITIVE CROSSINGS	XMIN FOR ALL DATA	XMAX FOR ALL DATA	YMIN FOR ALL DATA	X FOR YMIN	YMAX FOR ALL DATA	X FOR* YMAX
PSDF	EL STR	171	2159(7)	8.173524E+01	3.080468E+02	1.000E+01	2.000E+03	0.000E+00	1.000E+01	2.061E+02	1.028E+02
PSDF	EL STR	171	2160(3)	4.509337E+02	3.115309E+02	1.000E+01	2.000E+03	0.000E+00	1.000E+01	4.428E+03	2.520E+02
PSDF	EL STR	171	2160(5)	2.813999E+02	3.569987E+02	1.000E+01	2.000E+03	0.000E+00	1.000E+01	1.508E+03	3.920E+02
PSDF	EL STR	171	2160(7)	1.061758E+02	2.882989E+02	1.000E+01	2.000E+03	0.000E+00	1.000E+01	2.245E+02	2.520E+02
PSDF	EL STR	171	2161(3)	2.110178E+02	2.900253E+02	1.000E+01	2.000E+03	0.000E+00	1.000E+01	8.619E+02	1.820E+02
PSDF	EL STR	171	2161(5)	1.196494E+02	2.327870E+02	1.000E+01	2.000E+03	0.000E+00	1.000E+01	3.271E+02	1.820E+02
PSDF	EL STR	171	2161(7)	1.501224E+02	3.206146E+02	1.000E+01	2.000E+03	0.000E+00	1.000E+01	4.066E+02	1.028E+02
PSDF	EL STR	171	2162(3)	1.558341E+02	1.646467E+02	1.000E-01	2.000E+03	0.000E+00	1.000E+01	2.261E+03	1.159E+02
PSDF	EL STR	171	2162(5)	7.383229E+01	3.538523E+02	1.000E+01	2.000E+03	0.000E+00	1.000E+01	9.097E+01	3.920E+02
PSDF	EL STR	171	2162(7)	1.805181E+02	3.004865E+02	1.000E+01	2.000E+03	0.000E+00	1.000E+01	9.553E+02	1.159E+02
PSDF	EL STR	171	2163(3)	1.771121E+02	2.955262E+02	1.000E+01	2.000E+03	0.000E+00	1.000E+01	1.655E+03	1.151E+02
PSDF	EL STR	171	2163(5)	1.519857E+02	2.731355E+02	1.000E+01	2.000E+03	0.000E+00	1.000E+01	4.414E+02	2.260E+02
PSDF	EL STR	171	2163(7)	1.048285E+02	3.360510E+02	1.000E+01	2.000E+03	0.000E+00	1.000E+01	1.470E+02	3.920E+02
PSDF	EL STR	171	2164(3)	2.125000E+02	3.410499E+02	1.000E+01	2.000E+03	0.000E+00	1.000E+01	6.510E+02	2.520E+02
PSDF	EL STR	171	2164(5)	1.798032E+02	2.812274E+02	1.000E+01	2.000E+03	0.000E+00	1.000E+01	4.372E+02	2.260E+02
PSDF	EL STR	171	2164(7)	1.247359E+02	3.139236E+02	1.000E+01	2.000E+03	0.000E+00	1.000E+01	2.170E+02	1.820E+02
PSDF	EL STR	171	2165(3)	1.038776E+02	3.902552E+02	1.000E+01	2.000E+03	0.000E+00	1.000E+01	1.259E+02	1.800E+02
PSDF	EL STR	171	2165(5)	1.042861E+02	3.206351E+02	1.000E+01	2.000E+03	0.000E+00	1.000E+01	3.304E+02	1.151E+02
PSDF	EL STR	171	2165(7)	2.780504E+02	3.089413E+02	1.000E+01	2.000E+03	0.000E+00	1.000E+01	1.280E+03	2.520E+02
PSDF	EL STR	171	2616(3)	1.376274E+02	1.901842E+02	1.000E+01	2.000E+03	0.000E+00	1.000E+01	1.724E+03	1.151E+02
PSDF	EL STR	171	2616(5)	1.562017E+02	2.563910E+02	1.000E+01	2.000E+03	0.000E+00	1.000E+01	2.238E+03	1.151E+02
PSDF	EL STR	171	2616(7)	1.851652E+02	1.624007E+02	1.000E+01	2.000E+03	0.000E+00	1.000E+01	2.511E+03	1.021E+02
PSDF	EL STR	171	2617(3)	1.636805E+02	1.599262E+02	1.000E+01	2.000E+03	0.000E+00	1.000E+01	2.584E+03	1.028E+02
PSDF	EL STR	171	2617(5)	1.931962E+02	1.463734E+02	1.000E+01	2.000E+03	0.000E+00	1.000E+01	4.421E+03	1.028E+02

Y AXIS PSD RESPONSE

X Y - O U T P U T S U M M A R Y (A U T O O R P S D F)

PLOT TYPE	CURVE TYPE	FRAME NO.	CURVE ID.	RMS VALUE	NO. POSITIVE CROSSINGS	XMIN FOR ALL DATA	XMAX FOR ALL DATA	YMIN FOR ALL DATA	X FOR YMIN	YMAX FOR ALL DATA	X FOR* YMAX
PSDF	EL STR	171	2617(7)	7.731578E+01	1.539434E+02	1.000E+01	2.000E+03	0.000E+00	1.000E+01	6.111E+02	1.028E+02
PSDF	EL STR	171	2618(3)	7.842155E+01	1.837212E+02	1.000E+01	2.000E+03	0.000E+00	1.000E+01	6.848E+02	1.028E+02
PSDF	EL STR	171	2618(5)	2.082909E+02	1.358343E+02	1.000E+01	2.000E+03	0.000E+00	1.000E+01	5.158E+03	1.028E+02
PSDF	EL STR	171	2618(7)	7.772531E+01	1.573249E+02	1.000E+01	2.000E+03	0.000E+00	1.000E+01	4.831E+02	1.028E+02
PSDF	EL STR	171	2619(3)	1.110157E+02	1.445874E+02	1.000E+01	2.000E+03	0.000E+00	1.000E+01	1.247E+03	1.028E+02
PSDF	EL STR	171	2619(5)	1.101467E+02	1.732879E+02	1.000E+01	2.000E+03	0.000E+00	1.000E+01	1.431E+03	1.028E+02
PSDF	EL STR	171	2619(7)	1.245837E+02	1.448292E+02	1.000E+01	2.000E+03	0.000E+00	1.000E+01	1.482E+03	1.028E+02
PSDF	EL STR	171	2621(3)	1.245692E+02	1.814148E+02	1.000E+01	2.000E+03	0.000E+00	1.000E+01	1.364E+03	1.028E+02
PSDF	EL STR	171	2621(5)	1.172269E+02	2.096404E+02	1.000E+01	2.000E+03	0.000E+00	1.000E+01	1.348E+03	1.028E+02
PSDF	EL STR	171	2621(7)	1.518818E+02	1.384736E+02	1.000E+01	2.000E+03	0.000E+00	1.000E+01	2.822E+03	1.028E+02
PSDF	EL STR	171	2622(3)	4.563290E+01	2.453079E+02	1.000E+01	2.000E+03	0.000E+00	1.000E+01	1.235E+02	1.151E+02
PSDF	EL STR	171	2622(5)	6.672373E+01	2.920919E+02	1.000E+01	2.000E+03	0.000E+00	1.000E+01	1.731E+02	2.820E+02
PSDF	EL STR	171	2622(7)	5.473542E+01	1.963521E+02	1.000E+01	2.000E+03	0.000E+00	1.000E+01	2.557E+02	1.028E+02
PSDF	EL STR	171	2625(3)	4.114699E+01	3.001511E+02	1.000E+01	2.000E+03	0.000E+00	1.000E+01	5.538E+01	2.840E+02
PSDF	EL STR	171	2625(5)	6.507057E+01	3.175933E+02	1.000E+01	2.000E+03	0.000E+00	1.000E+01	1.961E+02	2.840E+02
PSDF	EL STR	171	2625(7)	6.211398E+01	1.650630E+02	1.000E+01	2.000E+03	0.000E+00	1.000E+01	3.984E+02	1.028E+02
PSDF	EL STR	171	2626(3)	1.701703E+02	1.511749E+02	1.000E+01	2.000E+03	0.000E+00	1.000E+01	2.353E+03	1.028E+02
PSDF	EL STR	171	2626(5)	1.440061E+02	2.053445E+02	1.000E+01	2.000E+03	0.000E+00	1.000E+01	1.675E+03	1.028E+02
PSDF	EL STR	171	2626(7)	1.873775E+02	1.703532E+02	1.000E+01	2.000E+03	0.000E+00	1.000E+01	1.942E+03	1.028E+02
PSDF	EL STR	171	2627(3)	1.783734E+02	2.938567E+02	1.000E+01	2.000E+03	0.000E+00	1.000E+01	1.450E+03	2.840E+02
PSDF	EL STR	171	2627(5)	5.297454E+02	2.846830E+02	1.000E+01	2.000E+03	0.000E+00	1.000E+01	1.274E+04	2.840E+02
PSDF	EL STR	171	2627(7)	1.562664E+02	1.669267E+02	1.000E+01	2.000E+03	0.000E+00	1.000E+01	1.183E+03	1.028E+02
PSDF	EL STR	171	2628(3)	2.582242E+02	2.760906E+02	1.000E+01	2.000E+03	0.000E+00	1.000E+01	3.019E+03	2.820E+02
PSDF	EL STR	171	2628(5)	3.412771E+02	2.768839E+02	1.000E+01	2.000E+03	0.000E+00	1.000E+01	5.330E+03	2.840E+02

Y AXIS PSD RESPONSE

X Y - O U T P U T S U M M A R Y (A U T O O R P S D F)

PLOT TYPE	CURVE TYPE	FRAME NO.	CURVE ID.	RMS VALUE	NO. POSITIVE CROSSINGS	XMIN FOR ALL DATA	XMAX FOR ALL DATA	YMIN FOR ALL DATA	X FOR YMIN	YMAX FOR ALL DATA	X FOR* YMAX
PSDF	EL STR	171	2628(7)	1.400107E+02	2.819688E+02	1.000E+01	2.000E+03	0.000E+00	1.000E+01	9.500E+02	2.820E+02
PSDF	EL STR	171	2629(3)	9.955367E+01	3.364801E+02	1.000E+01	2.000E+03	0.000E+00	1.000E+01	1.724E+02	2.820E+02
PSDF	EL STR	171	2629(5)	9.872596E+01	1.939162E+02	1.000E+01	2.000E+03	0.000E+00	1.000E+01	6.245E+02	1.028E+02
PSDF	EL STR	171	2629(7)	4.584946E+01	1.740665E+02	1.000E+01	2.000E+03	0.000E+00	1.000E+01	2.233E+02	1.028E+02
PSDF	EL STR	171	2630(3)	8.604115E+01	2.364692E+02	1.000E+01	2.000E+03	0.000E+00	1.000E+01	2.532E+02	1.151E+02
PSDF	EL STR	171	2630(5)	1.610645E+02	1.486371E+02	1.000E+01	2.000E+03	0.000E+00	1.000E+01	3.222E+03	1.028E+02
PSDF	EL STR	171	2630(7)	9.216211E+01	1.586676E+02	1.000E+01	2.000E+03	0.000E+00	1.000E+01	6.801E+02	1.028E+02
PSDF	EL STR	171	2631(3)	1.448261E+02	1.522345E+02	1.000E+01	2.000E+03	0.000E+00	1.000E+01	2.766E+03	1.028E+02
PSDF	EL STR	171	2631(5)	1.744823E+02	2.192859E+02	1.000E+01	2.000E+03	0.000E+00	1.000E+01	3.234E+03	1.028E+02
PSDF	EL STR	171	2631(7)	1.855067E+02	1.370470E+02	1.000E+01	2.000E+03	0.000E+00	1.000E+01	3.907E+03	1.028E+02
PSDF	EL STR	171	3202(3)	3.779121E+01	2.997137E+02	1.000E+01	2.000E+03	0.000E+00	1.000E+01	4.877E+01	2.820E+02
PSDF	EL STR	171	3202(5)	9.638393E+01	2.268293E+02	1.000E+01	2.000E+03	0.000E+00	1.000E+01	3.028E+02	1.159E+02
PSDF	EL STR	171	3202(7)	3.904935E+01	2.865059E+02	1.000E+01	2.000E+03	0.000E+00	1.000E+01	4.521E+01	2.840E+02
PSDF	EL STR	171	3203(3)	1.566894E+02	2.811608E+02	1.000E+01	2.000E+03	0.000E+00	1.000E+01	1.124E+03	2.840E+02
PSDF	EL STR	171	3203(5)	7.744703E+01	2.556031E+02	1.000E+01	2.000E+03	0.000E+00	1.000E+01	2.170E+02	2.840E+02
PSDF	EL STR	171	3203(7)	5.137085E+01	2.207874E+02	1.000E+01	2.000E+03	0.000E+00	1.000E+01	1.159E+02	1.028E+02
PSDF	EL STR	171	3204(3)	9.864529E+01	2.465758E+02	1.000E+01	2.000E+03	0.000E+00	1.000E+01	3.253E+02	1.159E+02
PSDF	EL STR	171	3204(5)	4.648984E+01	2.975612E+02	1.000E+01	2.000E+03	0.000E+00	1.000E+01	8.950E+01	2.820E+02
PSDF	EL STR	171	3204(7)	4.797482E+01	1.653740E+02	1.000E+01	2.000E+03	0.000E+00	1.000E+01	1.757E+02	1.028E+02
PSDF	EL STR	171	3205(3)	1.514184E+02	2.605868E+02	1.000E+01	2.000E+03	0.000E+00	1.000E+01	8.542E+02	1.159E+02
PSDF	EL STR	171	3205(5)	6.897086E+01	2.988448E+02	1.000E+01	2.000E+03	0.000E+00	1.000E+01	1.840E+02	2.820E+02
PSDF	EL STR	171	3205(7)	5.690400E+01	1.832851E+02	1.000E+01	2.000E+03	0.000E+00	1.000E+01	2.187E+02	1.021E+02
PSDF	EL STR	171	3206(3)	9.600716E+01	2.115970E+02	1.000E+01	2.000E+03	0.000E+00	1.000E+01	5.732E+02	1.159E+02
PSDF	EL STR	171	3206(5)	9.538640E+01	2.573124E+02	1.000E+01	2.000E+03	0.000E+00	1.000E+01	3.500E+02	1.028E+02

Y AXIS PSD RESPONSE

X Y - O U T P U T S U M M A R Y (A U T O O R P S D F)

PLOT TYPE	CURVE TYPE	FRAME NO.	CURVE ID.	RMS VALUE	NO. POSITIVE CROSSINGS	XMIN FOR ALL DATA	XMAX FOR ALL DATA	YMIN FOR ALL DATA	X FOR YMIN	YMAX FOR ALL DATA	X FOR* YMAX
PSDF	EL STR	171	3206(7)	2.650231E+01	2.898180E+02	1.000E+01	2.000E+03	0.000E+00	1.000E+01	2.764E+01	1.159E+02
PSDF	EL STR	171	3207(3)	6.144658E+01	2.049501E+02	1.000E+01	2.000E+03	0.000E+00	1.000E+01	2.882E+02	1.021E+02
PSDF	EL STR	171	3207(5)	1.005391E+02	2.594626E+02	1.000E+01	2.000E+03	0.000E+00	1.000E+01	3.713E+02	1.028E+02
PSDF	EL STR	171	3207(7)	6.251722E+01	1.889288E+02	1.000E+01	2.000E+03	0.000E+00	1.000E+01	4.469E+02	1.028E+02
PSDF	EL STR	171	2615(3)	9.230747E+01	2.238379E+02	1.000E+01	2.000E+03	0.000E+00	1.000E+01	4.730E+02	1.159E+02
PSDF	EL STR	171	2615(5)	1.223748E+02	3.106359E+02	1.000E+01	2.000E+03	0.000E+00	1.000E+01	7.192E+02	2.820E+02
PSDF	EL STR	171	2615(7)	3.349767E+01	2.886498E+02	1.000E+01	2.000E+03	0.000E+00	1.000E+01	3.595E+01	2.840E+02
PSDF	EL STR	171	2623(3)	1.546899E+02	1.671120E+02	1.000E+01	2.000E+03	0.000E+00	1.000E+01	1.436E+03	1.151E+02
PSDF	EL STR	171	2623(5)	6.501099E+01	2.901669E+02	1.000E+01	2.000E+03	0.000E+00	1.000E+01	1.185E+02	2.820E+02
PSDF	EL STR	171	2623(7)	4.357007E+01	2.455026E+02	1.000E+01	2.000E+03	0.000E+00	1.000E+01	7.772E+01	1.151E+02
PSDF	EL STR	171	2624(3)	1.352504E+02	2.757603E+02	1.000E+01	2.000E+03	0.000E+00	1.000E+01	8.203E+02	2.820E+02
PSDF	EL STR	171	2624(5)	1.702139E+02	2.389107E+02	1.000E+01	2.000E+03	0.000E+00	1.000E+01	1.123E+03	1.028E+02
PSDF	EL STR	171	2624(7)	8.285909E+01	2.516261E+02	1.000E+01	2.000E+03	0.000E+00	1.000E+01	2.494E+02	2.840E+02
PSDF	EL STR	171	20018(3)	8.713967E+02	1.368754E+02	1.000E+01	2.000E+03	0.000E+00	1.000E+01	8.959E+04	1.151E+02
PSDF	EL STR	171	20018(5)	1.432131E+02	1.382333E+02	1.000E+01	2.000E+03	0.000E+00	1.000E+01	2.099E+03	1.159E+02
PSDF	EL STR	171	20018(7)	5.034609E+02	1.349277E+02	1.000E+01	2.000E+03	0.000E+00	1.000E+01	2.466E+04	1.151E+02
PSDF	EL STR	171	20019(3)	1.492278E+03	1.362355E+02	1.000E+01	2.000E+03	0.000E+00	1.000E+01	2.623E+05	1.151E+02
PSDF	EL STR	171	20019(5)	1.337937E+02	1.441626E+02	1.000E+01	2.000E+03	0.000E+00	1.000E+01	1.881E+03	1.151E+02
PSDF	EL STR	171	20019(7)	7.438674E+02	1.435047E+02	1.000E+01	2.000E+03	0.000E+00	1.000E+01	5.627E+04	1.151E+02
PSDF	EL STR	171	20020(3)	4.971179E+02	1.452962E+02	1.000E+01	2.000E+03	0.000E+00	1.000E+01	2.510E+04	1.151E+02
PSDF	EL STR	171	20020(5)	5.306586E+02	1.164553E+02	1.000E+01	2.000E+03	0.000E+00	1.000E+01	3.012E+04	1.028E+02
PSDF	EL STR	171	20020(7)	2.598407E+02	1.524735E+02	1.000E+01	2.000E+03	0.000E+00	1.000E+01	7.062E+03	1.151E+02
PSDF	EL STR	171	20021(3)	4.396245E+02	1.371814E+02	1.000E+01	2.000E+03	0.000E+00	1.000E+01	1.547E+04	1.159E+02
PSDF	EL STR	171	20021(5)	1.233237E+02	1.510921E+02	1.000E+01	2.000E+03	0.000E+00	1.000E+01	1.595E+03	1.028E+02

Y AXIS PSD RESPONSE

X Y - O U T P U T S U M M A R Y (A U T O O R P S D F)

PLOT TYPE	CURVE TYPE	FRAME NO.	CURVE ID.	RMS VALUE	NO. POSITIVE CROSSINGS	XMIN FOR ALL DATA	XMAX FOR ALL DATA	YMIN FOR ALL DATA	X FOR YMIN	YMAX FOR ALL DATA	X FOR* YMAX
PSDF	EL STR	171	20021(7)	1.460962E+02	1.841389E+02	1.000E+01	2.000E+03	0.000E+00	1.000E+01	6.093E+02	1.820E+02
PSDF	EL STR	171	20022(3)	9.925190E+02	1.304859E+02	1.000E+01	2.000E+03	0.000E+00	1.000E+01	1.221E+05	1.151E+02
PSDF	EL STR	171	20022(5)	1.651472E+02	1.269140E+02	1.000E+01	2.000E+03	0.000E+00	1.000E+01	2.743E+03	1.028E+02
PSDF	EL STR	171	20022(7)	6.797806E+02	1.185639E+02	1.000E+01	2.000E+03	0.000E+00	1.000E+01	5.076E+04	1.151E+02
PSDF	EL STR	171	20023(3)	9.794931E+02	1.291660E+02	1.000E+01	2.000E+03	0.000E+00	1.000E+01	1.199E+05	1.151E+02
PSDF	EL STR	171	20023(5)	5.043492E+02	1.196954E+02	1.000E+01	2.000E+03	0.000E+00	1.000E+01	3.009E+04	1.028E+02
PSDF	EL STR	171	20023(7)	1.116379E+03	1.315388E+02	1.000E+01	2.000E+03	0.000E+00	1.000E+01	1.529E+05	1.151E+02
PSDF	EL STR	171	20024(3)	9.204203E+02	1.531380E+02	1.000E+01	2.000E+03	0.000E+00	1.000E+01	1.045E+05	1.028E+02
PSDF	EL STR	171	20024(5)	7.400732E+01	1.846154E+02	1.000E+01	2.000E+03	0.000E+00	1.000E+01	5.169E+02	1.028E+02
PSDF	EL STR	171	20024(7)	6.127784E+02	1.556985E+02	1.000E+01	2.000E+03	0.000E+00	1.000E+01	4.320E+04	1.028E+02
PSDF	EL STR	171	20025(3)	5.531171E+02	1.533967E+02	1.000E+01	2.000E+03	0.000E+00	1.000E+01	3.805E+04	1.028E+02
PSDF	EL STR	171	20025(5)	9.176083E+01	2.113813E+02	1.000E+01	2.000E+03	0.000E+00	1.000E+01	3.367E+02	1.151E+02
PSDF	EL STR	171	20025(7)	2.487588E+02	1.750099E+02	1.000E+01	2.000E+03	0.000E+00	1.000E+01	4.099E+03	1.021E+02
PSDF	EL STR	171	2226(3)	1.491632E+02	1.380415E+02	1.000E+01	2.000E+03	0.000E+00	1.000E+01	1.600E+03	1.028E+02
PSDF	EL STR	171	2226(5)	6.410905E+01	1.515109E+02	1.000E+01	2.000E+03	0.000E+00	1.000E+01	2.749E+02	1.151E+02
PSDF	EL STR	171	2226(7)	1.721476E+02	1.838752E+02	1.000E+01	2.000E+03	0.000E+00	1.000E+01	1.638E+03	1.151E+02
PSDF	EL STR	171	2227(3)	2.399230E+02	1.301800E+02	1.000E+01	2.000E+03	0.000E+00	1.000E+01	5.840E+03	1.028E+02
PSDF	EL STR	171	2227(5)	5.185463E+02	1.300441E+02	1.000E+01	2.000E+03	0.000E+00	1.000E+01	3.310E+04	1.151E+02
PSDF	EL STR	171	2227(7)	3.594280E+02	1.475273E+02	1.000E+01	2.000E+03	0.000E+00	1.000E+01	1.376E+04	1.151E+02
PSDF	EL STR	171	2070(3)	1.911701E+02	1.271682E+02	1.000E+01	2.000E+03	0.000E+00	1.000E+01	2.809E+03	1.021E+02
PSDF	EL STR	171	2070(5)	1.074511E+02	1.425883E+02	1.000E+01	2.000E+03	0.000E+00	1.000E+01	1.099E+03	1.151E+02
PSDF	EL STR	171	2070(7)	3.517753E+02	1.309145E+02	1.000E+01	2.000E+03	0.000E+00	1.000E+01	1.033E+04	1.159E+02
PSDF	EL STR	171	2071(3)	1.903579E+02	1.238262E+02	1.000E+01	2.000E+03	0.000E+00	1.000E+01	5.021E+03	1.028E+02
PSDF	EL STR	171	2071(5)	9.088464E+01	1.579126E+02	1.000E+01	2.000E+03	0.000E+00	1.000E+01	6.266E+02	1.151E+02

Y AXIS PSD RESPONSE

X Y - O U T P U T S U M M A R Y (A U T O O R P S D F)

PLOT TYPE	CURVE TYPE	FRAME NO.	CURVE ID.	RMS VALUE	NO. POSITIVE CROSSINGS	XMIN FOR ALL DATA	XMAX FOR ALL DATA	YMIN FOR ALL DATA	X FOR YMIN	YMAX FOR ALL DATA	X FOR* YMAX
PSDF	EL STR	171	2071(7)	2.856464E+02	1.380345E+02	1.000E+01	2.000E+03	0.000E+00	1.000E+01	5.362E+03	1.021E+02
PSDF	EL STR	171	2089(3)	4.492530E+02	1.307176E+02	1.000E+01	2.000E+03	0.000E+00	1.000E+01	1.898E+04	1.028E+02
PSDF	EL STR	171	2089(5)	9.431757E+01	1.666696E+02	1.000E+01	2.000E+03	0.000E+00	1.000E+01	4.939E+02	1.410E+02
PSDF	EL STR	171	2089(7)	3.945113E+02	1.226639E+02	1.000E+01	2.000E+03	0.000E+00	1.000E+01	1.117E+04	1.151E+02
PSDF	EL STR	171	2090(3)	3.590051E+02	1.193392E+02	1.000E+01	2.000E+03	0.000E+00	1.000E+01	1.564E+04	1.028E+02
PSDF	EL STR	171	2090(5)	7.317373E+01	2.198491E+02	1.000E+01	2.000E+03	0.000E+00	1.000E+01	2.473E+02	1.410E+02
PSDF	EL STR	171	2090(7)	4.031862E+02	1.274853E+02	1.000E+01	2.000E+03	0.000E+00	1.000E+01	1.432E+04	1.151E+02
PSDF	EL STR	171	2091(3)	2.472802E+02	1.267283E+02	1.000E+01	2.000E+03	0.000E+00	1.000E+01	6.726E+03	1.028E+02
PSDF	EL STR	171	2091(5)	4.275662E+02	1.739894E+02	1.000E+01	2.000E+03	0.000E+00	1.000E+01	1.042E+04	1.700E+02
PSDF	EL STR	171	2091(7)	4.304984E+02	1.215278E+02	1.000E+01	2.000E+03	0.000E+00	1.000E+01	1.663E+04	1.151E+02
PSDF	EL STR	171	2092(3)	1.812025E+02	1.285754E+02	1.000E+01	2.000E+03	0.000E+00	1.000E+01	2.767E+03	1.028E+02
PSDF	EL STR	171	2092(5)	5.404679E+02	1.631534E+02	1.000E+01	2.000E+03	0.000E+00	1.000E+01	1.301E+04	1.700E+02
PSDF	EL STR	171	2092(7)	5.303555E+02	1.170928E+02	1.000E+01	2.000E+03	0.000E+00	1.000E+01	3.065E+04	1.151E+02
PSDF	EL STR	171	2093(3)	2.366288E+02	2.157511E+02	1.000E+01	2.000E+03	0.000E+00	1.000E+01	1.207E+03	1.820E+02
PSDF	EL STR	171	2093(5)	1.485691E+02	1.436817E+02	1.000E+01	2.000E+03	0.000E+00	1.000E+01	1.488E+03	1.159E+02
PSDF	EL STR	171	2093(7)	3.561977E+02	1.243646E+02	1.000E+01	2.000E+03	0.000E+00	1.000E+01	1.315E+04	1.151E+02
PSDF	EL STR	171	2094(3)	8.785769E+01	1.833946E+02	1.000E+01	2.000E+03	0.000E+00	1.000E+01	2.083E+02	1.159E+02
PSDF	EL STR	171	2094(5)	1.264764E+02	2.123532E+02	1.000E-01	2.000E+03	0.000E+00	1.000E+01	8.524E+02	1.820E+02
PSDF	EL STR	171	2094(7)	3.383158E+02	1.250968E+02	1.000E+01	2.000E+03	0.000E+00	1.000E+01	1.242E+04	1.151E+02
PSDF	EL STR	171	2095(3)	5.778323E+02	1.730467E+02	1.000E+01	2.000E+03	0.000E+00	1.000E+01	2.042E+04	1.700E+02
PSDF	EL STR	171	2095(5)	5.680413E+02	1.766930E+02	1.000E+01	2.000E+03	0.000E+00	1.000E+01	1.698E+04	1.800E+02
PSDF	EL STR	171	2095(7)	3.696049E+02	1.273655E+02	1.000E+01	2.000E+03	0.000E+00	1.000E+01	1.542E+04	1.151E+02
PSDF	EL STR	171	2096(3)	1.508368E+02	1.923726E+02	1.000E+01	2.000E+03	0.000E+00	1.000E+01	8.461E+02	1.151E+02
PSDF	EL STR	171	2096(5)	5.574625E+02	1.631323E+02	1.000E+01	2.000E+03	0.000E+00	1.000E+01	1.599E+04	1.151E+02

Y AXIS PSD RESPONSE

X Y - O U T P U T S U M M A R Y (A U T O O R P S D F)

PLOT TYPE	CURVE TYPE	FRAME NO.	CURVE ID.	RMS VALUE	NO. POSITIVE CROSSINGS	XMIN FOR ALL DATA	XMAX FOR ALL DATA	YMIN FOR ALL DATA	X FOR YMIN	YMAX FOR ALL DATA	X FOR* YMAX
PSDF	EL STR	171	2096(7)	4.093714E+02	1.364755E+02	1.000E+01	2.000E+03	0.000E+00	1.000E+01	1.611E+04	1.151E+02
PSDF	EL STR	171	2615(3)	9.230747E+01	2.238379E+02	1.000E+01	2.000E+03	0.000E+00	1.000E+01	4.730E+02	1.159E+02
PSDF	EL STR	171	2615(5)	1.223748E+02	3.106359E+02	1.000E+01	2.000E+03	0.000E+00	1.000E+01	7.192E+02	2.820E+02
PSDF	EL STR	171	2615(7)	3.349767E+01	2.886498E+02	1.000E+01	2.000E+03	0.000E+00	1.000E+01	3.595E+01	2.840E+02
PSDF	EL STR	171	2616(3)	1.376274E+02	1.901842E+02	1.000E+01	2.000E+03	0.000E+00	1.000E+01	1.724E+03	1.151E+02
PSDF	EL STR	171	2616(5)	1.562017E+02	2.563910E+02	1.000E+01	2.000E+03	0.000E+00	1.000E+01	2.238E+03	1.151E+02
PSDF	EL STR	171	2616(7)	1.851652E+02	1.624007E+02	1.000E+01	2.000E+03	0.000E+00	1.000E+01	2.511E+03	1.021E+02
PSDF	EL STR	171	2617(3)	1.636805E+02	1.599262E+02	1.000E+01	2.000E+03	0.000E+00	1.000E+01	2.584E+03	1.028E+02
PSDF	EL STR	171	2617(5)	1.931962E+02	1.463734E+02	1.000E+01	2.000E+03	0.000E+00	1.000E+01	4.421E+03	1.028E+02
PSDF	EL STR	171	2617(7)	7.731578E+01	1.539434E+02	1.000E+01	2.000E+03	0.000E+00	1.000E+01	6.111E+02	1.028E+02
PSDF	EL STR	171	2618(3)	7.842155E+01	1.837212E+02	1.000E+01	2.000E+03	0.000E+00	1.000E+01	6.848E+02	1.028E+02
PSDF	EL STR	171	2618(5)	2.082909E+02	1.358343E+02	1.000E+01	2.000E+03	0.000E+00	1.000E+01	5.158E+03	1.028E+02
PSDF	EL STR	171	2618(7)	7.772531E+01	1.573249E+02	1.000E+01	2.000E+03	0.000E+00	1.000E+01	4.831E+02	1.028E+02
PSDF	EL STR	171	2619(3)	1.110157E+02	1.445874E+02	1.000E+01	2.000E+03	0.000E+00	1.000E+01	1.247E+03	1.028E+02
PSDF	EL STR	171	2619(5)	1.101467E+02	1.732879E+02	1.000E+01	2.000E+03	0.000E+00	1.000E+01	1.431E+03	1.028E+02
PSDF	EL STR	171	2619(7)	1.245837E+02	1.448292E+02	1.000E+01	2.000E+03	0.000E+00	1.000E+01	1.482E+03	1.028E+02
PSDF	EL STR	171	2621(3)	1.245692E+02	1.814148E+02	1.000E+01	2.000E+03	0.000E+00	1.000E+01	1.364E+03	1.028E+02
PSDF	EL STR	171	2621(5)	1.172269E+02	2.096404E+02	1.000E+01	2.000E+03	0.000E+00	1.000E+01	1.348E+03	1.028E+02
PSDF	EL STR	171	2621(7)	1.518818E+02	1.384736E+02	1.000E+01	2.000E+03	0.000E+00	1.000E+01	2.822E+03	1.028E+02
PSDF	EL STR	171	2622(3)	4.563290E+01	2.453079E+02	1.000E+01	2.000E+03	0.000E+00	1.000E+01	1.235E+02	1.151E+02
PSDF	EL STR	171	2622(5)	6.672373E+01	2.920919E+02	1.000E+01	2.000E+03	0.000E+00	1.000E+01	1.731E+02	2.820E+02
PSDF	EL STR	171	2622(7)	5.473542E+01	1.963521E+02	1.000E+01	2.000E+03	0.000E+00	1.000E+01	2.557E+02	1.028E+02
PSDF	EL STR	171	2623(3)	1.546899E+02	1.671120E+02	1.000E+01	2.000E+03	0.000E+00	1.000E+01	1.436E+03	1.151E+02
PSDF	EL STR	171	2623(5)	6.501099E+01	2.901669E+02	1.000E+01	2.000E+03	0.000E+00	1.000E+01	1.185E+02	2.820E+02

Y AXIS PSD RESPONSE

X Y - O U T P U T S U M M A R Y (A U T O O R P S D F)

PLOT TYPE	CURVE TYPE	FRAME NO.	CURVE ID.	RMS VALUE	NO. POSITIVE CROSSINGS	XMIN FOR ALL DATA	XMAX FOR ALL DATA	YMIN FOR ALL DATA	X FOR YMIN	YMAX FOR ALL DATA	X FOR* YMAX
PSDF	EL STR	171	2623(7)	4.357007E+01	2.455026E+02	1.000E+01	2.000E+03	0.000E+00	1.000E+01	7.772E+01	1.151E+02
PSDF	EL STR	171	2624(3)	1.352504E+02	2.757603E+02	1.000E+01	2.000E+03	0.000E+00	1.000E+01	8.203E+02	2.820E+02
PSDF	EL STR	171	2624(5)	1.702139E+02	2.389107E+02	1.000E+01	2.000E+03	0.000E+00	1.000E+01	1.123E+03	1.028E+02
PSDF	EL STR	171	2624(7)	8.285909E+01	2.516261E+02	1.000E+01	2.000E+03	0.000E+00	1.000E+01	2.494E+02	2.840E+02
PSDF	EL STR	171	2625(3)	4.114699E+01	3.001511E+02	1.000E+01	2.000E+03	0.000E+00	1.000E+01	5.538E+01	2.840E+02
PSDF	EL STR	171	2625(5)	6.507057E+01	3.175933E+02	1.000E+01	2.000E+03	0.000E+00	1.000E+01	1.961E+02	2.840E+02
PSDF	EL STR	171	2625(7)	6.211398E+01	1.650630E+02	1.000E+01	2.000E+03	0.000E+00	1.000E+01	3.984E+02	1.028E+02
PSDF	EL STR	171	2626(3)	1.701703E+02	1.511749E+02	1.000E+01	2.000E+03	0.000E+00	1.000E+01	2.353E+03	1.028E+02
PSDF	EL STR	171	2626(5)	1.440061E+02	2.053445E+02	1.000E+01	2.000E+03	0.000E+00	1.000E+01	1.675E+03	1.028E+02
PSDF	EL STR	171	2626(7)	1.873775E+02	1.703532E+02	1.000E+01	2.000E+03	0.000E+00	1.000E+01	1.942E+03	1.028E+02
PSDF	EL STR	171	2627(3)	1.783734E+02	2.938567E+02	1.000E+01	2.000E+03	0.000E+00	1.000E+01	1.450E+03	2.840E+02
PSDF	EL STR	171	2627(5)	5.297454E+02	2.846830E+02	1.000E+01	2.000E+03	0.000E+00	1.000E+01	1.274E+04	2.840E+02
PSDF	EL STR	171	2627(7)	1.562664E+02	1.669267E+02	1.000E+01	2.000E+03	0.000E+00	1.000E+01	1.183E+03	1.028E+02
PSDF	EL STR	171	2628(3)	2.582242E+02	2.760906E+02	1.000E+01	2.000E+03	0.000E+00	1.000E+01	3.019E+03	2.820E+02
PSDF	EL STR	171	2628(5)	3.412771E+02	2.768839E+02	1.000E+01	2.000E+03	0.000E+00	1.000E+01	5.330E+03	2.840E+02
PSDF	EL STR	171	2628(7)	1.400107E+02	2.819688E+02	1.000E+01	2.000E+03	0.000E+00	1.000E+01	9.500E+02	2.820E+02
PSDF	EL STR	171	2629(3)	9.955367E+01	3.364801E+02	1.000E+01	2.000E+03	0.000E+00	1.000E+01	1.724E+02	2.820E+02
PSDF	EL STR	171	2629(5)	9.872596E+01	1.939162E+02	1.000E+01	2.000E+03	0.000E+00	1.000E+01	6.245E+02	1.028E+02
PSDF	EL STR	171	2629(7)	4.584946E+01	1.740665E+02	1.000E+01	2.000E+03	0.000E+00	1.000E+01	2.233E+02	1.028E+02
PSDF	EL STR	171	2630(3)	8.604115E+01	2.364692E+02	1.000E+01	2.000E+03	0.000E+00	1.000E+01	2.532E+02	1.151E+02
PSDF	EL STR	171	2630(5)	1.610645E+02	1.486371E+02	1.000E+01	2.000E+03	0.000E+00	1.000E+01	3.222E+03	1.028E+02
PSDF	EL STR	171	2630(7)	9.216211E+01	1.586676E+02	1.000E+01	2.000E+03	0.000E+00	1.000E+01	6.801E+02	1.028E+02
PSDF	EL STR	171	2631(3)	1.448261E+02	1.522345E+02	1.000E+01	2.000E+03	0.000E+00	1.000E+01	2.766E+03	1.028E+02
PSDF	EL STR	171	2631(5)	1.744823E+02	2.192859E+02	1.000E+01	2.000E+03	0.000E+00	1.000E+01	3.234E+03	1.028E+02

Y AXIS PSD RESPONSE

X Y - O U T P U T S U M M A R Y (A U T O O R P S D F)

PLOT TYPE	CURVE TYPE	FRAME NO.	CURVE ID.	RMS VALUE	NO. POSITIVE CROSSINGS	XMIN FOR ALL DATA	XMAX FOR ALL DATA	YMIN FOR ALL DATA	X FOR YMIN	YMAX FOR ALL DATA	X FOR* YMAX
PSDF	EL STR	171	2631(7)	1.855067E+02	1.370470E+02	1.000E+01	2.000E+03	0.000E+00	1.000E+01	3.907E+03	1.028E+02
PSDF	EL STR	171	3202(3)	3.779121E+01	2.997137E+02	1.000E+01	2.000E+03	0.000E+00	1.000E+01	4.877E+01	2.820E+02
PSDF	EL STR	171	3202(5)	9.638393E+01	2.268293E+02	1.000E+01	2.000E+03	0.000E+00	1.000E+01	3.028E+02	1.159E+02
PSDF	EL STR	171	3202(7)	3.904935E+01	2.865059E+02	1.000E+01	2.000E+03	0.000E+00	1.000E+01	4.521E+01	2.840E+02
PSDF	EL STR	171	3203(3)	1.566894E+02	2.811608E+02	1.000E+01	2.000E+03	0.000E+00	1.000E+01	1.124E+03	2.840E+02
PSDF	EL STR	171	3203(5)	7.744703E+01	2.556031E+02	1.000E+01	2.000E+03	0.000E+00	1.000E+01	2.170E+02	2.840E+02
PSDF	EL STR	171	3203(7)	5.137085E+01	2.207874E+02	1.000E+01	2.000E+03	0.000E+00	1.000E+01	1.159E+02	1.028E+02
PSDF	EL STR	171	3204(3)	9.864529E+01	2.465758E+02	1.000E+01	2.000E+03	0.000E+00	1.000E+01	3.253E+02	1.159E+02
PSDF	EL STR	171	3204(5)	4.648984E+01	2.975612E+02	1.000E+01	2.000E+03	0.000E+00	1.000E+01	8.950E+01	2.820E+02
PSDF	EL STR	171	3204(7)	4.797482E+01	1.653740E+02	1.000E+01	2.000E+03	0.000E+00	1.000E+01	1.757E+02	1.028E+02
PSDF	EL STR	171	3205(3)	1.514184E+02	2.605868E+02	1.000E+01	2.000E+03	0.000E+00	1.000E+01	8.542E+02	1.159E+02
PSDF	EL STR	171	3205(5)	6.897086E+01	2.988448E+02	1.000E+01	2.000E+03	0.000E+00	1.000E+01	1.840E+02	2.820E+02
PSDF	EL STR	171	3205(7)	5.690400E+01	1.832851E+02	1.000E+01	2.000E+03	0.000E+00	1.000E+01	2.187E+02	1.021E+02
PSDF	EL STR	171	3206(3)	9.600716E+01	2.115970E+02	1.000E+01	2.000E+03	0.000E+00	1.000E+01	5.732E+02	1.159E+02
PSDF	EL STR	171	3206(5)	9.538640E+01	2.573124E+02	1.000E+01	2.000E+03	0.000E+00	1.000E+01	3.500E+02	1.028E+02
PSDF	EL STR	171	3206(7)	2.650231E+01	2.898180E+02	1.000E+01	2.000E+03	0.000E+00	1.000E+01	2.764E+01	1.159E+02
PSDF	EL STR	171	3207(3)	6.144658E+01	2.049501E+02	1.000E+01	2.000E+03	0.000E+00	1.000E+01	2.882E+02	1.021E+02
PSDF	EL STR	171	3207(5)	1.005391E+02	2.594626E+02	1.000E+01	2.000E+03	0.000E+00	1.000E+01	3.713E+02	1.028E+02
PSDF	EL STR	171	3207(7)	6.251722E+01	1.889288E+02	1.000E+01	2.000E+03	0.000E+00	1.000E+01	4.469E+02	1.028E+02
PSDF	EL STR	171	3196(3)	9.302477E+01	2.310116E+02	1.000E+01	2.000E+03	0.000E+00	1.000E+01	7.366E+02	1.028E+02
PSDF	EL STR	171	3196(5)	6.467136E+01	2.491445E+02	1.000E+01	2.000E+03	0.000E+00	1.000E+01	2.209E+02	1.028E+02
PSDF	EL STR	171	3196(7)	5.768359E+01	1.804583E+02	1.000E+01	2.000E+03	0.000E+00	1.000E+01	1.913E+02	1.021E+02
PSDF	EL STR	171	3197(3)	1.006140E+02	2.081915E+02	1.000E+01	2.000E+03	0.000E+00	1.000E+01	8.294E+02	1.028E+02
PSDF	EL STR	171	3197(5)	7.746210E+01	2.029184E+02	1.000E+01	2.000E+03	0.000E+00	1.000E+01	5.612E+02	1.028E+02

Y AXIS PSD RESPONSE

X Y - O U T P U T S U M M A R Y (A U T O O R P S D F)

PLOT TYPE	CURVE TYPE	FRAME NO.	CURVE ID.	RMS VALUE	NO. POSITIVE CROSSINGS	XMIN FOR ALL DATA	XMAX FOR ALL DATA	YMIN FOR ALL DATA	X FOR YMIN	YMAX FOR ALL DATA	X FOR* YMAX
PSDF	EL STR	171	3197(7)	4.620416E+01	2.152046E+02	1.000E+01	2.000E+03	0.000E+00	1.000E+01	1.577E+02	1.028E+02
PSDF	EL STR	171	3198(3)	1.015235E+02	2.453120E+02	1.000E+01	2.000E+03	0.000E+00	1.000E+01	7.423E+02	1.028E+02
PSDF	EL STR	171	3198(5)	7.228467E+01	1.805174E+02	1.000E+01	2.000E+03	0.000E+00	1.000E+01	5.754E+02	1.028E+02
PSDF	EL STR	171	3198(7)	3.858433E+01	2.394635E+02	1.000E+01	2.000E+03	0.000E+00	1.000E+01	1.597E+02	1.028E+02
PSDF	EL STR	171	3199(3)	6.708546E+01	2.242990E+02	1.000E+01	2.000E+03	0.000E+00	1.000E+01	2.669E+02	1.028E+02
PSDF	EL STR	171	3199(5)	3.318947E+01	2.528242E+02	1.000E+01	2.000E+03	0.000E+00	1.000E+01	8.295E+01	1.028E+02
PSDF	EL STR	171	3199(7)	6.250277E+01	1.558379E+02	1.000E+01	2.000E+03	0.000E+00	1.000E+01	4.878E+02	1.028E+02
PSDF	EL STR	171	3200(3)	6.192263E+01	3.488075E+02	1.000E+01	2.000E+03	0.000E+00	1.000E+01	1.054E+02	2.820E+02
PSDF	EL STR	171	3200(5)	4.039321E+01	2.801169E+02	1.000E+01	2.000E+03	0.000E+00	1.000E+01	1.336E+02	1.028E+02
PSDF	EL STR	171	3200(7)	7.425653E+01	1.672912E+02	1.000E+01	2.000E+03	0.000E+00	1.000E+01	6.272E+02	1.028E+02
PSDF	EL STR	171	3201(3)	5.794861E+01	3.402223E+02	1.000E+01	2.000E+03	0.000E+00	1.000E+01	1.765E+02	1.028E+02
PSDF	EL STR	171	3201(5)	8.428866E+01	1.717068E+02	1.000E+01	2.000E+03	0.000E+00	1.000E+01	7.608E+02	1.028E+02
PSDF	EL STR	171	3201(7)	2.647971E+01	3.519236E+02	1.000E+01	2.000E+03	0.000E+00	1.000E+01	3.011E+01	1.151E+02
PSDF	EL STR	171	2249(3)	5.997840E+01	2.165163E+02	1.000E+01	2.000E+03	0.000E+00	1.000E+01	1.905E+02	1.021E+02
PSDF	EL STR	171	2249(5)	1.991248E+02	1.551249E+02	1.000E+01	2.000E+03	0.000E+00	1.000E+01	3.814E+03	1.159E+02
PSDF	EL STR	171	2249(7)	9.071941E+01	1.624270E+02	1.000E+01	2.000E+03	0.000E+00	1.000E+01	8.878E+02	1.028E+02
PSDF	EL STR	171	2250(3)	1.263201E+02	2.773382E+02	1.000E+01	2.000E+03	0.000E+00	1.000E+01	6.496E+02	2.840E+02
PSDF	EL STR	171	2250(5)	5.269427E+01	2.299550E+02	1.000E+01	2.000E+03	0.000E+00	1.000E+01	1.107E+02	1.151E+02
PSDF	EL STR	171	2250(7)	4.466843E+01	2.131114E+02	1.000E+01	2.000E+03	0.000E+00	1.000E+01	1.249E+02	1.028E+02
PSDF	EL STR	171	2251(3)	1.400134E+02	2.533758E+02	1.000E+01	2.000E+03	0.000E+00	1.000E+01	6.430E+02	2.820E+02
PSDF	EL STR	171	2251(5)	3.806395E+01	2.139169E+02	1.000E+01	2.000E+03	0.000E+00	1.000E+01	1.162E+02	1.028E+02
PSDF	EL STR	171	2251(7)	4.718977E+01	1.868685E+02	1.000E+01	2.000E+03	0.000E+00	1.000E+01	2.058E+02	1.028E+02
PSDF	EL STR	171	2252(3)	5.858562E+01	1.777257E+02	1.000E+01	2.000E+03	0.000E+00	1.000E+01	2.843E+02	1.028E+02
PSDF	EL STR	171	2252(5)	1.002033E+02	2.493261E+02	1.000E+01	2.000E+03	0.000E+00	1.000E+01	3.786E+02	2.820E+02

Y AXIS PSD RESPONSE

X Y - O U T P U T S U M M A R Y (A U T O O R P S D F)

PLOT TYPE	CURVE TYPE	FRAME NO.	CURVE ID.	RMS VALUE	NO. POSITIVE CROSSINGS	XMIN FOR ALL DATA	XMAX FOR ALL DATA	YMIN FOR ALL DATA	X FOR YMIN	YMAX FOR ALL DATA	X FOR* YMAX
PSDF	EL STR	171	2252(7)	9.224442E+01	1.942284E+02	1.000E+01	2.000E+03	0.000E+00	1.000E+01	4.484E+02	1.028E+02
PSDF	EL STR	171	2253(3)	1.623627E+02	1.800049E+02	1.000E+01	2.000E+03	0.000E+00	1.000E+01	1.812E+03	1.028E+02
PSDF	EL STR	171	2253(5)	1.352509E+02	2.914403E+02	1.000E+01	2.000E+03	0.000E+00	1.000E+01	7.244E+02	1.159E+02
PSDF	EL STR	171	2253(7)	1.577506E+02	1.864936E+02	1.000E+01	2.000E+03	0.000E+00	1.000E+01	1.131E+03	1.159E+02
PSDF	EL STR	171	2255(3)	9.710509E+01	1.521030E+02	1.000E+01	2.000E+03	0.000E+00	1.000E+01	7.525E+02	1.159E+02
PSDF	EL STR	171	2255(5)	2.429226E+01	2.408947E+02	1.000E+01	2.000E+03	0.000E+00	1.000E+01	3.363E+01	1.151E+02
PSDF	EL STR	171	2255(7)	1.023813E+02	2.102954E+02	1.000E+01	2.000E+03	0.000E+00	1.000E+01	4.401E+02	1.028E+02
PSDF	EL STR	171	2256(3)	1.126585E+02	3.134626E+02	1.000E+01	2.000E+03	0.000E+00	1.000E+01	6.576E+02	1.028E+02
PSDF	EL STR	171	2256(5)	1.911720E+02	2.813400E+02	1.000E+01	2.000E+03	0.000E+00	1.000E+01	2.157E+03	1.028E+02
PSDF	EL STR	171	2256(7)	1.750640E+02	1.809363E+02	1.000E+01	2.000E+03	0.000E+00	1.000E+01	3.263E+03	1.028E+02
PSDF	EL STR	171	21745(3)	3.174604E+02	1.685270E+02	1.000E+01	2.000E+03	0.000E+00	1.000E+01	8.237E+03	1.520E+02
PSDF	EL STR	171	21745(5)	3.301158E+02	2.207660E+02	1.000E+01	2.000E+03	0.000E+00	1.000E+01	5.624E+03	2.160E+02
PSDF	EL STR	171	21745(7)	2.249919E+02	1.937549E+02	1.000E+01	2.000E+03	0.000E+00	1.000E+01	2.748E+03	1.520E+02
PSDF	EL STR	171	21675(3)	2.976280E+02	1.641912E+02	1.000E+01	2.000E+03	0.000E+00	1.000E+01	7.610E+03	1.520E+02
PSDF	EL STR	171	21675(5)	3.322057E+02	2.210353E+02	1.000E+01	2.000E+03	0.000E+00	1.000E+01	5.576E+03	2.160E+02
PSDF	EL STR	171	21675(7)	1.976753E+02	1.881478E+02	1.000E+01	2.000E+03	0.000E+00	1.000E+01	2.418E+03	1.520E+02
PSDF	EL STR	171	21679(3)	4.257083E+02	2.200921E+02	1.000E+01	2.000E+03	0.000E+00	1.000E+01	1.430E+04	2.240E+02
PSDF	EL STR	171	21679(5)	1.056113E+02	2.273842E+02	1.000E+01	2.000E+03	0.000E+00	1.000E+01	8.595E+02	2.240E+02
PSDF	EL STR	171	21679(7)	7.622148E+01	2.231628E+02	1.000E+01	2.000E+03	0.000E+00	1.000E+01	3.833E+02	1.520E+02
PSDF	EL STR	171	21749(3)	3.991267E+02	2.205382E+02	1.000E+01	2.000E+03	0.000E+00	1.000E+01	1.308E+04	2.240E+02
PSDF	EL STR	171	21749(5)	1.051734E+02	2.258232E+02	1.000E+01	2.000E+03	0.000E+00	1.000E+01	8.472E+02	2.240E+02
PSDF	EL STR	171	21749(7)	7.586716E+01	2.047210E+02	1.000E+01	2.000E+03	0.000E+00	1.000E+01	3.995E+02	1.520E+02
PSDF	EL STR	171	21672(3)	1.023349E+02	2.611719E+02	1.000E+01	2.000E+03	0.000E+00	1.000E+01	7.365E+02	2.240E+02
PSDF	EL STR	171	21672(5)	4.062828E+02	2.151528E+02	1.000E+01	2.000E+03	0.000E+00	1.000E+01	1.315E+04	2.240E+02

Y AXIS PSD RESPONSE

X Y - O U T P U T S U M M A R Y (A U T O O R P S D F)

PLOT TYPE	CURVE TYPE	FRAME NO.	CURVE ID.	RMS VALUE	NO. POSITIVE CROSSINGS	XMIN FOR ALL DATA	XMAX FOR ALL DATA	YMIN FOR ALL DATA	X FOR YMIN	YMAX FOR ALL DATA	X FOR* YMAX
PSDF	EL STR	171	21045(7)	1.241435E+03	1.495289E+02	1.000E+01	2.000E+03	0.000E+00	1.000E+01	1.529E+05	1.151E+02
PSDF	EL STR	171	21046(3)	1.180638E+03	1.557847E+02	1.000E+01	2.000E+03	0.000E+00	1.000E+01	1.334E+05	1.151E+02
PSDF	EL STR	171	21046(5)	3.899383E+02	1.762331E+02	1.000E+01	2.000E+03	0.000E+00	1.000E+01	1.132E+04	1.028E+02
PSDF	EL STR	171	21046(7)	1.037072E+03	1.553593E+02	1.000E+01	2.000E+03	0.000E+00	1.000E+01	1.027E+05	1.151E+02
PSDF	EL STR	171	21047(3)	7.760203E+01	2.957709E+02	1.000E+01	2.000E+03	0.000E+00	1.000E+01	3.487E+02	1.410E+02
PSDF	EL STR	171	21047(5)	3.427723E+02	1.822635E+02	1.000E+01	2.000E+03	0.000E+00	1.000E+01	8.379E+03	1.410E+02
PSDF	EL STR	171	21047(7)	2.835730E+02	1.809810E+02	1.000E+01	2.000E+03	0.000E+00	1.000E+01	6.079E+03	1.151E+02
PSDF	EL STR	171	21048(3)	7.891744E+02	1.608674E+02	1.000E+01	2.000E+03	0.000E+00	1.000E+01	3.558E+04	1.410E+02
PSDF	EL STR	171	21048(5)	8.189321E+02	1.529345E+02	1.000E+01	2.000E+03	0.000E+00	1.000E+01	4.062E+04	1.151E+02
PSDF	EL STR	171	21048(7)	5.046357E+02	1.566113E+02	1.000E+01	2.000E+03	0.000E+00	1.000E+01	1.015E+04	1.159E+02
PSDF	EL STR	171	21049(3)	2.195422E+03	1.649529E+02	1.000E+01	2.000E+03	0.000E+00	1.000E+01	3.038E+05	1.410E+02
PSDF	EL STR	171	21049(5)	7.746940E+02	1.379959E+02	1.000E+01	2.000E+03	0.000E+00	1.000E+01	4.463E+04	1.021E+02
PSDF	EL STR	171	21049(7)	1.017928E+03	1.426433E+02	1.000E+01	2.000E+03	0.000E+00	1.000E+01	5.269E+04	1.028E+02
PSDF	EL STR	171	21050(3)	1.419304E+03	1.620623E+02	1.000E+01	2.000E+03	0.000E+00	1.000E+01	7.567E+04	1.410E+02
PSDF	EL STR	171	21050(5)	1.351762E+03	1.632221E+02	1.000E+01	2.000E+03	0.000E+00	1.000E+01	1.096E+05	1.410E+02
PSDF	EL STR	171	21050(7)	3.852917E+02	1.970154E+02	1.000E+01	2.000E+03	0.000E+00	1.000E+01	9.365E+03	1.410E+02
PSDF	EL STR	171	21410(3)	1.456898E+02	2.761004E+02	1.000E+01	2.000E+03	0.000E+00	1.000E+01	1.008E+03	1.410E+02
PSDF	EL STR	171	21410(5)	3.465254E+02	3.929877E+02	1.000E+01	2.000E+03	0.000E+00	1.000E+01	6.240E+03	3.880E+02
PSDF	EL STR	171	21410(7)	1.391834E+02	2.445308E+02	1.000E+01	2.000E+03	0.000E+00	1.000E+01	1.089E+03	1.410E+02
PSDF	EL STR	171	21409(3)	4.206296E+02	1.775001E+02	1.000E+01	2.000E+03	0.000E+00	1.000E+01	6.716E+03	1.151E+02
PSDF	EL STR	171	21409(5)	2.518868E+02	1.578702E+02	1.000E+01	2.000E+03	0.000E+00	1.000E+01	5.684E+03	1.410E+02
PSDF	EL STR	171	21409(7)	1.917256E+02	2.254283E+02	1.000E+01	2.000E+03	0.000E+00	1.000E+01	1.464E+03	1.410E+02
PSDF	EL STR	171	21425(3)	4.396542E+02	1.726458E+02	1.000E+01	2.000E+03	0.000E+00	1.000E+01	8.150E+03	1.410E+02
PSDF	EL STR	171	21425(5)	3.336349E+02	1.750367E+02	1.000E+01	2.000E+03	0.000E+00	1.000E+01	6.452E+03	1.410E+02

Y AXIS PSD RESPONSE

X Y - O U T P U T S U M M A R Y (A U T O O R P S D F)

PLOT TYPE	CURVE TYPE	FRAME NO.	CURVE ID.	RMS VALUE	NO. POSITIVE CROSSINGS	XMIN FOR ALL DATA	XMAX FOR ALL DATA	YMIN FOR ALL DATA	X FOR YMIN	YMAX FOR ALL DATA	X FOR* YMAX
PSDF	EL STR	171	21672(7)	7.740166E+01	2.085273E+02	1.000E+01	2.000E+03	0.000E+00	1.000E+01	4.032E+02	1.520E+02
PSDF	EL STR	171	21742(3)	1.653712E+02	1.840487E+02	1.000E+01	2.000E+03	0.000E+00	1.000E+01	8.679E+02	1.820E+02
PSDF	EL STR	171	21742(5)	3.690037E+02	2.141864E+02	1.000E+01	2.000E+03	0.000E+00	1.000E+01	1.078E+04	2.240E+02
PSDF	EL STR	171	21742(7)	1.039484E+02	1.815343E+02	1.000E+01	2.000E+03	0.000E+00	1.000E+01	4.210E+02	1.520E+02
PSDF	EL STR	171	21783(3)	1.071364E+03	1.565401E+02	1.000E+01	2.000E+03	0.000E+00	1.000E+01	1.013E+05	1.520E+02
PSDF	EL STR	171	21783(5)	7.119104E+02	1.602581E+02	1.000E+01	2.000E+03	0.000E+00	1.000E+01	4.224E+04	1.520E+02
PSDF	EL STR	171	21783(7)	5.560921E+01	2.201325E+02	1.000E+01	2.000E+03	0.000E+00	1.000E+01	7.575E+01	2.460E+02
PSDF	EL STR	171	21713(3)	1.045075E+03	1.562092E+02	1.000E+01	2.000E+03	0.000E+00	1.000E+01	9.350E+04	1.520E+02
PSDF	EL STR	171	21713(5)	6.939924E+02	1.603884E+02	1.000E+01	2.000E+03	0.000E+00	1.000E+01	3.874E+04	1.520E+02
PSDF	EL STR	171	21713(7)	4.261438E+01	2.496714E+02	1.000E+01	2.000E+03	0.000E+00	1.000E+01	5.452E+01	1.520E+02
PSDF	EL STR	171	21041(3)	7.582552E+02	2.416388E+02	1.000E+01	2.000E+03	0.000E+00	1.000E+01	2.955E+04	1.410E+02
PSDF	EL STR	171	21041(5)	7.613162E+02	1.872431E+02	1.000E+01	2.000E+03	0.000E+00	1.000E+01	3.053E+04	1.410E+02
PSDF	EL STR	171	21041(7)	1.267891E+02	3.212368E+02	1.000E+01	2.000E+03	0.000E+00	1.000E+01	7.077E+02	1.028E+02
PSDF	EL STR	171	21042(3)	9.827515E+02	2.441009E+02	1.000E+01	2.000E+03	0.000E+00	1.000E+01	5.295E+04	1.410E+02
PSDF	EL STR	171	21042(5)	2.848430E+02	1.580991E+02	1.000E+01	2.000E+03	0.000E+00	1.000E+01	9.570E+03	1.028E+02
PSDF	EL STR	171	21042(7)	5.285782E+02	1.662760E+02	1.000E+01	2.000E+03	0.000E+00	1.000E+01	1.651E+04	1.410E+02
PSDF	EL STR	171	21043(3)	3.118078E+02	2.216042E+02	1.000E+01	2.000E+03	0.000E+00	1.000E+01	5.706E+03	1.410E+02
PSDF	EL STR	171	21043(5)	1.313655E+02	2.474830E+02	1.000E+01	2.000E+03	0.000E+00	1.000E+01	4.962E+02	1.420E+02
PSDF	EL STR	171	21043(7)	2.620067E+02	1.851699E+02	1.000E+01	2.000E+03	0.000E+00	1.000E+01	4.554E+03	1.410E+02
PSDF	EL STR	171	21044(3)	1.355740E+02	1.841417E+02	1.000E+01	2.000E+03	0.000E+00	1.000E+01	1.374E+03	1.410E+02
PSDF	EL STR	171	21044(5)	1.783867E+02	1.581458E+02	1.000E+01	2.000E+03	0.000E+00	1.000E+01	2.502E+03	1.159E+02
PSDF	EL STR	171	21044(7)	2.878709E+02	1.672908E+02	1.000E+01	2.000E+03	0.000E+00	1.000E+01	6.203E+03	1.410E+02
PSDF	EL STR	171	21045(3)	3.868240E+02	1.869409E+02	1.000E+01	2.000E+03	0.000E+00	1.000E+01	1.276E+04	1.151E+02
PSDF	EL STR	171	21045(5)	1.194172E+03	1.465888E+02	1.000E+01	2.000E+03	0.000E+00	1.000E+01	1.498E+05	1.151E+02

Y AXIS PSD RESPONSE

X Y - O U T P U T S U M M A R Y (A U T O O R P S D F)

PLOT TYPE	CURVE TYPE	FRAME NO.	CURVE ID.	RMS VALUE	NO. POSITIVE CROSSINGS	XMIN FOR ALL DATA	XMAX FOR ALL DATA	YMIN FOR ALL DATA	X FOR YMIN	YMAX FOR ALL DATA	X FOR* YMAX
PSDF	EL STR	171	21425(7)	4.482556E+02	1.706610E+02	1.000E+01	2.000E+03	0.000E+00	1.000E+01	6.136E+03	1.820E+02
PSDF	EL STR	171	21426(3)	2.191494E+02	2.614438E+02	1.000E+01	2.000E+03	0.000E+00	1.000E+01	4.017E+03	1.410E+02
PSDF	EL STR	171	21426(5)	2.725057E+02	1.303507E+02	1.000E+01	2.000E+03	0.000E+00	1.000E+01	5.738E+03	1.028E+02
PSDF	EL STR	171	21426(7)	6.717815E+01	2.916003E+02	1.000E+01	2.000E+03	0.000E+00	1.000E+01	1.168E+02	1.400E+02
PSDF	EL STR	171	21427(3)	2.468082E+02	3.012884E+02	1.000E+01	2.000E+03	0.000E+00	1.000E+01	3.437E+03	1.410E+02
PSDF	EL STR	171	21427(5)	1.156087E+02	1.992848E+02	1.000E+01	2.000E+03	0.000E+00	1.000E+01	8.077E+02	1.410E+02
PSDF	EL STR	171	21427(7)	4.897031E+01	3.000269E+02	1.000E+01	2.000E+03	0.000E+00	1.000E+01	5.519E+01	2.460E+02
PSDF	EL STR	171	21428(3)	4.543493E+02	2.378786E+02	1.000E+01	2.000E+03	0.000E+00	1.000E+01	1.114E+04	1.151E+02
PSDF	EL STR	171	21428(5)	5.034024E+02	1.579328E+02	1.000E+01	2.000E+03	0.000E+00	1.000E+01	2.464E+04	1.151E+02
PSDF	EL STR	171	21428(7)	1.337178E+02	1.864185E+02	1.000E+01	2.000E+03	0.000E+00	1.000E+01	1.211E+03	1.151E+02
PSDF	EL STR	171	21429(3)	4.496626E+02	2.376813E+02	1.000E+01	2.000E+03	0.000E+00	1.000E+01	1.130E+04	1.151E+02
PSDF	EL STR	171	21429(5)	3.916496E+02	1.625341E+02	1.000E+01	2.000E+03	0.000E+00	1.000E+01	1.478E+04	1.151E+02
PSDF	EL STR	171	21429(7)	2.040396E+02	1.575184E+02	1.000E+01	2.000E+03	0.000E+00	1.000E+01	4.398E+03	1.151E+02
PSDF	EL STR	171	21430(3)	2.304784E+02	3.444933E+02	1.000E+01	2.000E+03	0.000E+00	1.000E+01	1.959E+03	1.410E+02
PSDF	EL STR	171	21430(5)	4.018678E+02	1.543219E+02	1.000E+01	2.000E+03	0.000E+00	1.000E+01	1.550E+04	1.151E+02
PSDF	EL STR	171	21430(7)	6.497536E+01	2.331204E+02	1.000E+01	2.000E+03	0.000E+00	1.000E+01	3.088E+02	1.410E+02
PSDF	EL STR	171	21431(3)	2.215064E+02	3.688857E+02	1.000E+01	2.000E+03	0.000E+00	1.000E+01	2.063E+03	3.880E+02
PSDF	EL STR	171	21431(5)	1.146714E+02	2.572365E+02	1.000E+01	2.000E+03	0.000E+00	1.000E+01	5.350E+02	1.028E+02
PSDF	EL STR	171	21431(7)	7.490498E+01	2.105438E+02	1.000E+01	2.000E+03	0.000E+00	1.000E+01	4.065E+02	1.151E+02
PSDF	EL STR	171	21432(3)	1.229409E+02	3.549287E+02	1.000E+01	2.000E+03	0.000E+00	1.000E+01	6.118E+02	3.880E+02
PSDF	EL STR	171	21432(5)	3.116118E+02	3.691523E+02	1.000E+01	2.000E+03	0.000E+00	1.000E+01	4.718E+03	3.880E+02
PSDF	EL STR	171	21432(7)	1.408251E+02	2.147289E+02	1.000E+01	2.000E+03	0.000E+00	1.000E+01	7.078E+02	1.410E+02
PSDF	EL STR	171	21241(3)	8.315519E+02	1.428241E+02	1.000E+01	2.000E+03	0.000E+00	1.000E+01	4.525E+04	1.400E+02
PSDF	EL STR	171	21241(5)	9.049666E+02	1.521420E+02	1.000E+01	2.000E+03	0.000E+00	1.000E+01	6.151E+04	1.410E+02

Y AXIS PSD RESPONSE

X Y - O U T P U T S U M M A R Y (A U T O O R P S D F)

PLOT TYPE	CURVE TYPE	FRAME NO.	CURVE ID.	RMS VALUE	NO. POSITIVE CROSSINGS	XMIN FOR ALL DATA	XMAX FOR ALL DATA	YMIN FOR ALL DATA	X FOR YMIN	YMAX FOR ALL DATA	X FOR* YMAX
PSDF	EL STR	171	21241(7)	6.461570E+02	1.567638E+02	1.000E+01	2.000E+03	0.000E+00	1.000E+01	3.559E+04	1.410E+02
PSDF	EL STR	171	21242(3)	1.576373E+03	1.356308E+02	1.000E+01	2.000E+03	0.000E+00	1.000E+01	1.563E+05	1.028E+02
PSDF	EL STR	171	21242(5)	1.288774E+03	1.116041E+02	1.000E+01	2.000E+03	0.000E+00	1.000E+01	2.194E+05	1.028E+02
PSDF	EL STR	171	21242(7)	8.835369E+02	1.508722E+02	1.000E+01	2.000E+03	0.000E+00	1.000E+01	7.314E+04	1.410E+02
PSDF	EL STR	171	21243(3)	6.088727E+02	1.418179E+02	1.000E+01	2.000E+03	0.000E+00	1.000E+01	2.928E+04	1.410E+02
PSDF	EL STR	171	21243(5)	4.755610E+02	1.577917E+02	1.000E+01	2.000E+03	0.000E+00	1.000E+01	2.050E+04	1.410E+02
PSDF	EL STR	171	21243(7)	4.415103E+02	1.461016E+02	1.000E+01	2.000E+03	0.000E+00	1.000E+01	1.571E+04	1.410E+02
PSDF	EL STR	171	21244(3)	1.122025E+02	2.402529E+02	1.000E+01	2.000E+03	0.000E+00	1.000E+01	6.560E+02	1.410E+02
PSDF	EL STR	171	21244(5)	4.583901E+02	1.720138E+02	1.000E+01	2.000E+03	0.000E+00	1.000E+01	1.369E+04	1.410E+02
PSDF	EL STR	171	21244(7)	1.718448E+02	2.108092E+02	1.000E+01	2.000E+03	0.000E+00	1.000E+01	1.558E+03	1.410E+02
PSDF	EL STR	171	21245(3)	4.109156E+02	1.651591E+02	1.000E+01	2.000E+03	0.000E+00	1.000E+01	1.327E+04	1.151E+02
PSDF	EL STR	171	21245(5)	6.336207E+02	1.531423E+02	1.000E+01	2.000E+03	0.000E+00	1.000E+01	2.438E+04	1.028E+02
PSDF	EL STR	171	21245(7)	2.816404E+02	1.988391E+02	1.000E+01	2.000E+03	0.000E+00	1.000E+01	2.639E+03	1.151E+02
PSDF	EL STR	171	21246(3)	2.483020E+02	1.870442E+02	1.000E+01	2.000E+03	0.000E+00	1.000E+01	2.981E+03	1.151E+02
PSDF	EL STR	171	21246(5)	3.511966E+02	1.682504E+02	1.000E+01	2.000E+03	0.000E+00	1.000E+01	7.657E+03	1.410E+02
PSDF	EL STR	171	21246(7)	5.065771E+02	1.485698E+02	1.000E+01	2.000E+03	0.000E+00	1.000E+01	1.668E+04	1.410E+02
PSDF	EL STR	171	21247(3)	8.910223E+01	2.085910E+02	1.000E+01	2.000E+03	0.000E+00	1.000E+01	4.261E+02	1.028E+02
PSDF	EL STR	171	21247(5)	3.460863E+02	1.423896E+02	1.000E+01	2.000E+03	0.000E+00	1.000E+01	9.620E+03	1.028E+02
PSDF	EL STR	171	21247(7)	2.578842E+02	1.666217E+02	1.000E+01	2.000E+03	0.000E+00	1.000E+01	4.786E+03	1.410E+02
PSDF	EL STR	171	21248(3)	5.246651E+02	1.724713E+02	1.000E+01	2.000E+03	0.000E+00	1.000E+01	1.054E+04	1.820E+02
PSDF	EL STR	171	21248(5)	6.343298E+02	1.440848E+02	1.000E+01	2.000E+03	0.000E+00	1.000E+01	3.092E+04	1.028E+02
PSDF	EL STR	171	21248(7)	3.794015E+02	1.625168E+02	1.000E+01	2.000E+03	0.000E+00	1.000E+01	6.200E+03	1.400E+02
PSDF	EL STR	171	21249(3)	1.691132E+03	1.706071E+02	1.000E+01	2.000E+03	0.000E+00	1.000E+01	1.034E+05	1.035E+02
PSDF	EL STR	171	21249(5)	4.854564E+02	1.403212E+02	1.000E+01	2.000E+03	0.000E+00	1.000E+01	1.852E+04	1.028E+02

Y AXIS PSD RESPONSE

X Y - O U T P U T S U M M A R Y (A U T O O R P S D F)

PLOT TYPE	CURVE TYPE	FRAME NO.	CURVE ID.	RMS VALUE	NO. POSITIVE CROSSINGS	XMIN FOR ALL DATA	XMAX FOR ALL DATA	YMIN FOR ALL DATA	X FOR YMIN	YMAX FOR ALL DATA	X FOR* YMAX
PSDF	EL STR	171	21249(7)	6.316340E+02	1.578263E+02	1.000E+01	2.000E+03	0.000E+00	1.000E+01	2.933E+04	1.400E+02
PSDF	EL STR	171	21250(3)	1.287690E+03	1.501132E+02	1.000E+01	2.000E+03	0.000E+00	1.000E+01	9.427E+04	1.028E+02
PSDF	EL STR	171	21250(5)	1.353650E+03	1.678739E+02	1.000E+01	2.000E+03	0.000E+00	1.000E+01	7.782E+04	1.028E+02
PSDF	EL STR	171	21250(7)	3.433656E+02	1.769135E+02	1.000E+01	2.000E+03	0.000E+00	1.000E+01	9.948E+03	1.028E+02
PSDF	EL STR	171	21339(3)	1.738059E+03	1.437496E+02	1.000E+01	2.000E+03	0.000E+00	1.000E+01	2.908E+05	1.410E+02
PSDF	EL STR	171	21339(5)	3.031522E+02	1.537285E+02	1.000E+01	2.000E+03	0.000E+00	1.000E+01	9.327E+03	1.410E+02
PSDF	EL STR	171	21339(7)	5.209538E+02	1.607445E+02	1.000E+01	2.000E+03	0.000E+00	1.000E+01	1.673E+04	1.400E+02
PSDF	EL STR	171	21340(3)	3.308637E+02	1.792010E+02	1.000E+01	2.000E+03	0.000E+00	1.000E+01	4.423E+03	1.028E+02
PSDF	EL STR	171	21340(5)	7.546119E+02	2.344184E+02	1.000E+01	2.000E+03	0.000E+00	1.000E+01	1.920E+04	1.820E+02
PSDF	EL STR	171	21340(7)	7.632314E+01	2.447346E+02	1.000E+01	2.000E+03	0.000E+00	1.000E+01	2.391E+02	1.151E+02
PSDF	EL STR	171	21355(3)	1.988979E+03	1.487555E+02	1.000E+01	2.000E+03	0.000E+00	1.000E+01	3.821E+05	1.410E+02
PSDF	EL STR	171	21355(5)	8.997866E+02	1.547147E+02	1.000E+01	2.000E+03	0.000E+00	1.000E+01	8.669E+04	1.410E+02
PSDF	EL STR	171	21355(7)	4.308574E+02	1.610163E+02	1.000E+01	2.000E+03	0.000E+00	1.000E+01	1.667E+04	1.410E+02
PSDF	EL STR	171	21356(3)	2.678298E+02	2.024737E+02	1.000E+01	2.000E+03	0.000E+00	1.000E+01	5.588E+03	1.410E+02
PSDF	EL STR	171	21356(5)	4.038754E+02	1.324491E+02	1.000E+01	2.000E+03	0.000E+00	1.000E+01	1.536E+04	1.028E+02
PSDF	EL STR	171	21356(7)	2.283181E+02	1.777832E+02	1.000E+01	2.000E+03	0.000E+00	1.000E+01	3.026E+03	1.410E+02
PSDF	EL STR	171	21357(3)	3.514650E+02	2.095465E+02	1.000E+01	2.000E+03	0.000E+00	1.000E+01	8.037E+03	1.410E+02
PSDF	EL STR	171	21357(5)	3.537820E+02	1.532409E+02	1.000E+01	2.000E+03	0.000E+00	1.000E+01	6.811E+03	1.028E+02
PSDF	EL STR	171	21357(7)	1.338560E+02	2.311258E+02	1.000E+01	2.000E+03	0.000E+00	1.000E+01	9.185E+02	1.820E+02
PSDF	EL STR	171	21358(3)	6.909578E+02	1.987687E+02	1.000E+01	2.000E+03	0.000E+00	1.000E+01	3.282E+04	1.410E+02
PSDF	EL STR	171	21358(5)	3.661297E+02	1.799819E+02	1.000E+01	2.000E+03	0.000E+00	1.000E+01	8.610E+03	1.410E+02
PSDF	EL STR	171	21358(7)	1.550924E+02	2.298845E+02	1.000E+01	2.000E+03	0.000E+00	1.000E+01	1.263E+03	1.820E+02
PSDF	EL STR	171	21359(3)	6.008054E+02	2.117354E+02	1.000E+01	2.000E+03	0.000E+00	1.000E+01	2.261E+04	1.410E+02
PSDF	EL STR	171	21359(5)	3.248606E+02	1.862439E+02	1.000E+01	2.000E+03	0.000E+00	1.000E+01	5.772E+03	1.410E+02

Y AXIS PSD RESPONSE

X Y - O U T P U T S U M M A R Y (A U T O O R P S D F)

PLOT TYPE	CURVE TYPE	FRAME NO.	CURVE ID.	RMS VALUE	NO. POSITIVE CROSSINGS	XMIN FOR ALL DATA	XMAX FOR ALL DATA	YMIN FOR ALL DATA	X FOR YMIN	YMAX FOR ALL DATA	X FOR* YMAX
PSDF	EL STR	171	21359(7)	2.333522E+02	1.592283E+02	1.000E+01	2.000E+03	0.000E+00	1.000E+01	2.837E+03	1.410E+02
PSDF	EL STR	171	21360(3)	2.782072E+02	3.112639E+02	1.000E+01	2.000E+03	0.000E+00	1.000E+01	1.974E+03	1.410E+02
PSDF	EL STR	171	21360(5)	2.445337E+02	1.737629E+02	1.000E+01	2.000E+03	0.000E+00	1.000E+01	4.329E+03	1.028E+02
PSDF	EL STR	171	21360(7)	2.255055E+02	1.608119E+02	1.000E+01	2.000E+03	0.000E+00	1.000E+01	2.366E+03	1.028E+02
PSDF	EL STR	171	21361(3)	2.835981E+02	3.357302E+02	1.000E+01	2.000E+03	0.000E+00	1.000E+01	2.574E+03	3.860E+02
PSDF	EL STR	171	21361(5)	2.760114E+02	1.677458E+02	1.000E+01	2.000E+03	0.000E+00	1.000E+01	6.033E+03	1.028E+02
PSDF	EL STR	171	21361(7)	3.009102E+02	1.660331E+02	1.000E+01	2.000E+03	0.000E+00	1.000E+01	3.704E+03	1.028E+02
PSDF	EL STR	171	21362(3)	4.781580E+02	1.859214E+02	1.000E+01	2.000E+03	0.000E+00	1.000E+01	9.402E+03	1.028E+02
PSDF	EL STR	171	21362(5)	9.554661E+02	2.130239E+02	1.000E+01	2.000E+03	0.000E+00	1.000E+01	3.516E+04	1.820E+02
PSDF	EL STR	171	21362(7)	5.718054E+02	1.697351E+02	1.000E+01	2.000E+03	0.000E+00	1.000E+01	1.114E+04	1.028E+02
PSDF	EL STR	171	22742(3)	1.388297E+02	1.498947E+02	1.000E+01	2.000E+03	0.000E+00	1.000E+01	1.599E+03	1.028E+02
PSDF	EL STR	171	22742(5)	1.525250E+02	1.188326E+02	1.000E+01	2.000E+03	0.000E+00	1.000E+01	1.950E+03	1.159E+02
PSDF	EL STR	171	22742(7)	2.965449E+02	1.234506E+02	1.000E+01	2.000E+03	0.000E+00	1.000E+01	6.931E+03	1.159E+02
PSDF	EL STR	171	22743(3)	7.902660E+01	1.560003E+02	1.000E+01	2.000E+03	0.000E+00	1.000E+01	5.597E+02	1.151E+02
PSDF	EL STR	171	22743(5)	2.724728E+01	2.251164E+02	1.000E+01	2.000E+03	0.000E+00	1.000E+01	3.049E+01	1.820E+02
PSDF	EL STR	171	22743(7)	2.550970E+02	1.326657E+02	1.000E+01	2.000E+03	0.000E+00	1.000E+01	6.167E+03	1.159E+02
PSDF	EL STR	171	22744(3)	7.985531E+01	1.474336E+02	1.000E+01	2.000E+03	0.000E+00	1.000E+01	4.499E+02	1.159E+02
PSDF	EL STR	171	22744(5)	2.443054E+01	1.995258E+02	1.000E+01	2.000E+03	0.000E+00	1.000E+01	3.866E+01	1.028E+02
PSDF	EL STR	171	22744(7)	2.054371E+02	1.400851E+02	1.000E+01	2.000E+03	0.000E+00	1.000E+01	3.797E+03	1.159E+02
PSDF	EL STR	171	22745(3)	3.083244E+02	1.269791E+02	1.000E+01	2.000E+03	0.000E+00	1.000E+01	1.113E+04	1.151E+02
PSDF	EL STR	171	22745(5)	1.531340E+01	1.687064E+02	1.000E+01	2.000E+03	0.000E+00	1.000E+01	2.725E+01	1.028E+02
PSDF	EL STR	171	22745(7)	3.688203E+02	1.231579E+02	1.000E+01	2.000E+03	0.000E+00	1.000E+01	1.435E+04	1.159E+02
PSDF	EL STR	171	22840(3)	1.647696E+03	1.259674E+02	1.000E+01	2.000E+03	0.000E+00	1.000E+01	3.259E+05	1.151E+02
PSDF	EL STR	171	22840(5)	1.953952E+02	2.714560E+02	1.000E+01	2.000E+03	0.000E+00	1.000E+01	2.814E+03	1.151E+02

Y AXIS PSD RESPONSE

X Y - O U T P U T S U M M A R Y (A U T O O R P S D F)

PLOT TYPE	CURVE TYPE	FRAME NO.	CURVE ID.	RMS VALUE	NO. POSITIVE CROSSINGS	XMIN FOR ALL DATA	XMAX FOR ALL DATA	YMIN FOR ALL DATA	X FOR YMIN	YMAX FOR ALL DATA	X FOR* YMAX
PSDF	EL STR	171	22840(7)	1.218671E+03	1.275497E+02	1.000E+01	2.000E+03	0.000E+00	1.000E+01	1.547E+05	1.159E+02
PSDF	EL STR	171	22801(3)	2.230839E+02	3.249128E+02	1.000E+01	2.000E+03	0.000E+00	1.000E+01	1.819E+03	1.151E+02
PSDF	EL STR	171	22801(5)	9.584157E+02	1.433954E+02	1.000E+01	2.000E+03	0.000E+00	1.000E+01	8.495E+04	1.028E+02
PSDF	EL STR	171	22801(7)	1.061773E+03	1.395123E+02	1.000E+01	2.000E+03	0.000E+00	1.000E+01	1.139E+05	1.028E+02
PSDF	EL STR	171	2541(2)	3.542439E+03	1.632613E+02	1.000E+01	2.000E+03	0.000E+00	1.000E+01	8.156E+05	1.600E+02
PSDF	EL STR	171	2541(6)	3.558223E+01	1.558770E+02	1.000E+01	2.000E+03	0.000E+00	1.000E+01	8.930E+01	1.151E+02
PSDF	EL STR	171	2541(12)	3.540524E+03	1.632700E+02	1.000E+01	2.000E+03	0.000E+00	1.000E+01	8.144E+05	1.600E+02
PSDF	EL STR	171	2597(2)	1.130540E+03	2.237990E+02	1.000E+01	2.000E+03	0.000E+00	1.000E+01	5.803E+04	1.028E+02
PSDF	EL STR	171	2597(6)	6.199045E+01	1.955972E+02	1.000E+01	2.000E+03	0.000E+00	1.000E+01	2.126E+02	1.021E+02
PSDF	EL STR	171	2597(12)	7.932320E+02	3.430500E+02	1.000E+01	2.000E+03	0.000E+00	1.000E+01	2.327E+04	1.410E+02

*** USER WARNING MESSAGE 979, AN XY-OUTPUT REQUEST FOR POINT OR ELEMENT ID 2558
-STRE- CURVE IS BEING PASSED OVER. THE ID COULD NOT BE FOUND IN DATA BLOCK 102

*** USER WARNING MESSAGE 979, AN XY-OUTPUT REQUEST FOR POINT OR ELEMENT ID 2558
-STRE- CURVE IS BEING PASSED OVER. THE ID COULD NOT BE FOUND IN DATA BLOCK 102

*** USER WARNING MESSAGE 979, AN XY-OUTPUT REQUEST FOR POINT OR ELEMENT ID 2558
-STRE- CURVE IS BEING PASSED OVER. THE ID COULD NOT BE FOUND IN DATA BLOCK 102

PSDF	EL STR	171	2700(2)	1.602794E+03	2.310755E+02	1.000E+01	2.000E+03	0.000E+00	1.000E+01	8.239E+04	1.410E+02
PSDF	EL STR	171	2700(6)	6.205231E+01	1.659701E+02	1.000E+01	2.000E+03	0.000E+00	1.000E+01	1.663E+02	1.700E+02
PSDF	EL STR	171	2700(12)	1.798895E+03	1.709636E+02	1.000E+01	2.000E+03	0.000E+00	1.000E+01	1.920E+05	1.700E+02
PSDF	EL STR	171	2713(2)	1.523248E+03	1.609531E+02	1.000E+01	2.000E+03	0.000E+00	1.000E+01	1.130E+05	1.800E+02
PSDF	EL STR	171	2713(6)	7.005682E+01	1.753260E+02	1.000E+01	2.000E+03	0.000E+00	1.000E+01	5.132E+02	1.151E+02
PSDF	EL STR	171	2713(12)	7.403843E+02	2.336544E+02	1.000E+01	2.000E+03	0.000E+00	1.000E+01	4.443E+04	1.151E+02
PSDF	EL STR	171	2716(2)	1.436934E+03	1.410747E+02	1.000E+01	2.000E+03	0.000E+00	1.000E+01	1.335E+05	1.151E+02
PSDF	EL STR	171	2716(6)	1.288447E+02	1.941573E+02	1.000E+01	2.000E+03	0.000E+00	1.000E+01	5.138E+02	1.820E+02
PSDF	EL STR	171	2716(12)	2.062448E+02	1.740742E+02	1.000E+01	2.000E+03	0.000E+00	1.000E+01	1.563E+03	1.700E+02
PSDF	EL STR	171	2819(2)	1.118896E+02	2.006616E+02	1.000E+01	2.000E+03	0.000E+00	1.000E+01	5.966E+02	1.151E+02
PSDF	EL STR	171	2819(6)	1.222840E+02	1.921257E+02	1.000E+01	2.000E+03	0.000E+00	1.000E+01	5.311E+02	1.820E+02
PSDF	EL STR	171	2819(12)	1.648824E+02	1.385395E+02	1.000E+01	2.000E+03	0.000E+00	1.000E+01	3.501E+03	1.028E+02
PSDF	EL STR	171	3302(2)	7.891506E+02	2.197128E+02	1.000E+01	2.000E+03	0.000E+00	1.000E+01	8.254E+04	1.820E+02
PSDF	EL STR	171	3302(6)	1.529362E+01	1.855856E+02	1.000E+01	2.000E+03	0.000E+00	1.000E+01	2.075E+01	1.028E+02

Y AXIS PSD RESPONSE

X Y - O U T P U T S U M M A R Y (A U T O O R P S D F)

PLOT TYPE	CURVE TYPE	FRAME NO.	CURVE ID.	RMS VALUE	NO. POSITIVE CROSSINGS	XMIN FOR ALL DATA	XMAX FOR ALL DATA	YMIN FOR ALL DATA	X FOR YMIN	YMAX FOR ALL DATA	X FOR* YMAX
PSDF	EL STR	171	3302(12)	1.557488E+02	5.194636E+02	1.000E+01	2.000E+03	0.000E+00	1.000E+01	2.675E+02	3.920E+02
PSDF	EL STR	171	3304(2)	5.679619E+02	2.267207E+02	1.000E+01	2.000E+03	0.000E+00	1.000E+01	4.584E+04	1.820E+02
PSDF	EL STR	171	3304(6)	9.291902E+01	1.577744E+02	1.000E+01	2.000E+03	0.000E+00	1.000E+01	9.693E+02	1.028E+02
PSDF	EL STR	171	3304(12)	5.251282E+02	2.654252E+02	1.000E+01	2.000E+03	0.000E+00	1.000E+01	3.229E+04	1.820E+02
PSDF	EL STR	171	3307(2)	1.801126E+02	1.924770E+02	1.000E+01	2.000E+03	0.000E+00	1.000E+01	1.890E+03	1.028E+02
PSDF	EL STR	171	3307(6)	5.861464E+01	1.428232E+02	1.000E+01	2.000E+03	0.000E+00	1.000E+01	2.585E+02	1.151E+02
PSDF	EL STR	171	3307(12)	5.199475E+01	1.737268E+02	1.000E+01	2.000E+03	0.000E+00	1.000E+01	1.767E+02	1.151E+02
PSDF	EL STR	171	9980(2)	1.631263E+03	2.292977E+02	1.000E+01	2.000E+03	0.000E+00	1.000E+01	1.045E+05	2.280E+02
PSDF	EL STR	171	9980(6)	3.482310E+01	1.427611E+02	1.000E+01	2.000E+03	0.000E+00	1.000E+01	1.347E+02	1.028E+02
PSDF	EL STR	171	9980(12)	6.632262E+02	2.307632E+02	1.000E+01	2.000E+03	0.000E+00	1.000E+01	1.825E+04	2.260E+02
PSDF	EL STR	171	9982(2)	9.001233E+02	2.332522E+02	1.000E+01	2.000E+03	0.000E+00	1.000E+01	3.125E+04	2.280E+02
PSDF	EL STR	171	9982(6)	1.400248E+02	1.585561E+02	1.000E+01	2.000E+03	0.000E+00	1.000E+01	2.214E+03	1.028E+02
PSDF	EL STR	171	9982(12)	1.067470E+03	2.397493E+02	1.000E+01	2.000E+03	0.000E+00	1.000E+01	3.957E+04	2.280E+02
PSDF	EL STR	171	9999(2)	3.670742E+03	1.557372E+02	1.000E+01	2.000E+03	0.000E+00	1.000E+01	8.674E+05	1.028E+02
PSDF	EL STR	171	9999(6)	1.043267E+02	1.811973E+02	1.000E+01	2.000E+03	0.000E+00	1.000E+01	1.094E+03	1.151E+02
PSDF	EL STR	171	9999(12)	2.192062E+03	1.615166E+02	1.000E+01	2.000E+03	0.000E+00	1.000E+01	2.701E+05	1.028E+02
PSDF	EL STR	171	23180(2)	3.062253E+03	1.175327E+02	1.000E+01	2.000E+03	0.000E+00	1.000E+01	8.837E+05	1.021E+02
PSDF	EL STR	171	23180(6)	1.986675E+02	1.253221E+02	1.000E+01	2.000E+03	0.000E+00	1.000E+01	3.022E+03	1.151E+02
PSDF	EL STR	171	23180(12)	2.905926E+03	1.031696E+02	1.000E+01	2.000E+03	0.000E+00	1.000E+01	8.189E+05	1.021E+02
PSDF	EL STR	171	23181(2)	7.268113E+03	1.031695E+02	1.000E+01	2.000E+03	0.000E+00	1.000E+01	5.122E+06	1.021E+02
PSDF	EL STR	171	23181(6)	1.837908E+02	1.252384E+02	1.000E+01	2.000E+03	0.000E+00	1.000E+01	2.588E+03	1.151E+02
PSDF	EL STR	171	23181(12)	2.279263E-04	1.097234E+02	1.000E+01	2.000E+03	0.000E+00	1.000E+01	6.526E-09	1.028E+02
PSDF	EL FOR	171	22813(2)	3.570385E+01	1.330135E+02	1.000E+01	2.000E+03	0.000E+00	1.000E+01	1.273E+02	1.151E+02
PSDF	EL FOR	171	22813(3)	9.519669E+01	1.296724E+02	1.000E+01	2.000E+03	0.000E+00	1.000E+01	1.066E+03	1.151E+02

Y AXIS PSD RESPONSE

X Y - O U T P U T S U M M A R Y (A U T O O R P S D F)

PLOT TYPE	CURVE TYPE	FRAME NO.	CURVE ID.	RMS VALUE	NO. POSITIVE CROSSINGS	XMIN FOR ALL DATA	XMAX FOR ALL DATA	YMIN FOR ALL DATA	X FOR YMIN	YMAX FOR ALL DATA	X FOR* YMAX
PSDF	EL FOR	171	22813(5)	6.400542E-02	1.252650E+02	1.000E+01	2.000E+03	0.000E+00	1.000E+01	2.964E-04	1.159E+02
PSDF	EL FOR	171	22813(6)	1.463303E-01	1.205730E+02	1.000E+01	2.000E+03	0.000E+00	1.000E+01	1.828E-03	1.021E+02
PSDF	EL FOR	171	22813(8)	2.427199E-02	1.235354E+02	1.000E+01	2.000E+03	0.000E+00	1.000E+01	6.147E-05	1.159E+02
PSDF	EL FOR	171	22813(9)	8.068876E-01	1.188734E+02	1.000E+01	2.000E+03	0.000E+00	1.000E+01	6.243E-02	1.021E+02
PSDF	EL FOR	171	22815(2)	2.056705E+01	1.277903E+02	1.000E+01	2.000E+03	0.000E+00	1.000E+01	3.725E+01	1.159E+02
PSDF	EL FOR	171	22815(3)	9.769438E+01	1.248608E+02	1.000E+01	2.000E+03	0.000E+00	1.000E+01	1.126E+03	1.151E+02
PSDF	EL FOR	171	22815(5)	3.366654E-02	2.190673E+02	1.000E+01	2.000E+03	0.000E+00	1.000E+01	7.809E-05	1.021E+02
PSDF	EL FOR	171	22815(6)	2.805445E-01	1.212996E+02	1.000E+01	2.000E+03	0.000E+00	1.000E+01	6.509E-03	1.021E+02
PSDF	EL FOR	171	22815(8)	1.425092E-01	1.528169E+02	1.000E+01	2.000E+03	0.000E+00	1.000E+01	1.778E-03	1.159E+02
PSDF	EL FOR	171	22815(9)	3.428285E-01	1.239413E+02	1.000E+01	2.000E+03	0.000E+00	1.000E+01	1.070E-02	1.021E+02
PSDF	EL FOR	171	22806(2)	2.039197E+01	1.225527E+02	1.000E+01	2.000E+03	0.000E+00	1.000E+01	4.150E+01	1.028E+02
PSDF	EL FOR	171	22806(3)	2.176017E+01	1.550335E+02	1.000E+01	2.000E+03	0.000E+00	1.000E+01	2.774E+01	1.159E+02
PSDF	EL FOR	171	22806(5)	9.288110E-02	1.255246E+02	1.000E+01	2.000E+03	0.000E+00	1.000E+01	6.815E-04	1.021E+02
PSDF	EL FOR	171	22806(6)	2.792446E-01	1.208299E+02	1.000E+01	2.000E+03	0.000E+00	1.000E+01	6.445E-03	1.021E+02
PSDF	EL FOR	171	22806(8)	1.037048E-02	2.851132E+02	1.000E+01	2.000E+03	0.000E+00	1.000E+01	1.276E-05	1.028E+02
PSDF	EL FOR	171	22806(9)	2.005418E-01	1.955792E+02	1.000E+01	2.000E+03	0.000E+00	1.000E+01	3.086E-03	1.021E+02
PSDF	EL FOR	171	22805(2)	1.181818E+01	1.299654E+02	1.000E+01	2.000E+03	0.000E+00	1.000E+01	1.369E+01	1.159E+02
PSDF	EL FOR	171	22805(3)	6.002606E+01	1.551000E+02	1.000E+01	2.000E+03	0.000E+00	1.000E+01	3.257E+02	1.028E+02
PSDF	EL FOR	171	22805(5)	2.798445E-02	4.453891E+02	1.000E+01	2.000E+03	0.000E+00	1.000E+01	3.109E-05	1.028E+02
PSDF	EL FOR	171	22805(6)	7.841501E-02	1.230728E+02	1.000E+01	2.000E+03	0.000E+00	1.000E+01	5.007E-04	1.021E+02
PSDF	EL FOR	171	22805(8)	8.529509E-02	1.512156E+02	1.000E+01	2.000E+03	0.000E+00	1.000E+01	7.277E-04	1.028E+02
PSDF	EL FOR	171	22805(9)	1.090944E-01	2.925188E+02	1.000E+01	2.000E+03	0.000E+00	1.000E+01	5.705E-04	1.159E+02
PSDF	EL FOR	171	22801(2)	7.089039E+00	1.439187E+02	1.000E+01	2.000E+03	0.000E+00	1.000E+01	4.195E+00	1.159E+02
PSDF	EL FOR	171	22801(3)	4.756182E+01	1.474046E+02	1.000E+01	2.000E+03	0.000E+00	1.000E+01	1.941E+02	1.028E+02

Y AXIS PSD RESPONSE

X Y - O U T P U T S U M M A R Y (A U T O O R P S D F)

PLOT TYPE	CURVE TYPE	FRAME NO.	CURVE ID.	RMS VALUE	NO. POSITIVE CROSSINGS	XMIN FOR ALL DATA	XMAX FOR ALL DATA	YMIN FOR ALL DATA	X FOR YMIN	YMAX FOR ALL DATA	X FOR* YMAX
PSDF	EL FOR	171	22801(5)	6.351269E-02	4.208923E+02	1.000E+01	2.000E+03	0.000E+00	1.000E+01	5.240E-05	1.028E+02
PSDF	EL FOR	171	22801(6)	3.165020E-02	2.820730E+02	1.000E+01	2.000E+03	0.000E+00	1.000E+01	5.850E-05	1.159E+02
PSDF	EL FOR	171	22801(8)	2.078204E-01	1.469978E+02	1.000E+01	2.000E+03	0.000E+00	1.000E+01	3.197E-03	1.159E+02
PSDF	EL FOR	171	22801(9)	5.163397E-02	1.795627E+02	1.000E+01	2.000E+03	0.000E+00	1.000E+01	1.825E-04	1.159E+02
PSDF	EL FOR	171	22742(2)	1.721355E+01	1.487607E+02	1.000E+01	2.000E+03	0.000E+00	1.000E+01	2.854E+01	1.028E+02
PSDF	EL FOR	171	22742(3)	1.065730E+01	1.198861E+02	1.000E+01	2.000E+03	0.000E+00	1.000E+01	9.737E+00	1.159E+02
PSDF	EL FOR	171	22742(5)	7.268651E-02	1.389292E+02	1.000E+01	2.000E+03	0.000E+00	1.000E+01	5.081E-04	1.028E+02
PSDF	EL FOR	171	22742(6)	7.900377E-02	1.253680E+02	1.000E+01	2.000E+03	0.000E+00	1.000E+01	4.667E-04	1.159E+02
PSDF	EL FOR	171	22742(8)	4.053232E-02	1.295490E+02	1.000E+01	2.000E+03	0.000E+00	1.000E+01	2.048E-04	1.028E+02
PSDF	EL FOR	171	22742(9)	6.507996E-02	1.649612E+02	1.000E+01	2.000E+03	0.000E+00	1.000E+01	3.788E-04	1.028E+02
PSDF	EL FOR	171	22743(2)	4.958138E+00	1.558862E+02	1.000E+01	2.000E+03	0.000E+00	1.000E+01	1.753E+00	1.151E+02
PSDF	EL FOR	171	22743(3)	2.355740E+00	2.067882E+02	1.000E+01	2.000E+03	0.000E+00	1.000E+01	2.473E-01	1.820E+02
PSDF	EL FOR	171	22743(5)	6.294371E-02	1.849380E+02	1.000E+01	2.000E+03	0.000E+00	1.000E+01	3.098E-04	1.159E+02
PSDF	EL FOR	171	22743(6)	2.297988E-02	1.989768E+02	1.000E+01	2.000E+03	0.000E+00	1.000E+01	3.212E-05	1.028E+02
PSDF	EL FOR	171	22743(8)	5.782739E-02	1.641205E+02	1.000E+01	2.000E+03	0.000E+00	1.000E+01	3.129E-04	1.028E+02
PSDF	EL FOR	171	22743(9)	3.268550E-02	2.699267E+02	1.000E+01	2.000E+03	0.000E+00	1.000E+01	6.333E-05	1.151E+02
PSDF	EL FOR	171	22744(2)	2.929735E+00	1.765680E+02	1.000E+01	2.000E+03	0.000E+00	1.000E+01	3.347E-01	1.159E+02
PSDF	EL FOR	171	22744(3)	4.220180E+00	1.420512E+02	1.000E+01	2.000E+03	0.000E+00	1.000E+01	1.996E+00	1.151E+02
PSDF	EL FOR	171	22744(5)	9.433842E-02	1.557486E+02	1.000E+01	2.000E+03	0.000E+00	1.000E+01	6.609E-04	1.159E+02
PSDF	EL FOR	171	22744(6)	6.401733E-02	1.320117E+02	1.000E+01	2.000E+03	0.000E+00	1.000E+01	2.916E-04	1.021E+02
PSDF	EL FOR	171	22744(8)	6.044433E-02	1.728139E+02	1.000E+01	2.000E+03	0.000E+00	1.000E+01	3.226E-04	1.028E+02
PSDF	EL FOR	171	22744(9)	2.046061E-01	1.829828E+02	1.000E+01	2.000E+03	0.000E+00	1.000E+01	3.310E-03	1.028E+02
PSDF	EL FOR	171	22745(2)	3.187396E+01	1.268341E+02	1.000E+01	2.000E+03	0.000E+00	1.000E+01	1.190E+02	1.151E+02
PSDF	EL FOR	171	22745(3)	1.465125E+00	1.777825E+02	1.000E+01	2.000E+03	0.000E+00	1.000E+01	1.228E-01	1.151E+02

Y AXIS PSD RESPONSE

X Y - O U T P U T S U M M A R Y (A U T O O R P S D F)

PLOT TYPE	CURVE TYPE	FRAME NO.	CURVE ID.	RMS VALUE	NO. POSITIVE CROSSINGS	XMIN FOR ALL DATA	XMAX FOR ALL DATA	YMIN FOR ALL DATA	X FOR YMIN	YMAX FOR ALL DATA	X FOR* YMAX
PSDF	EL FOR	171	22745(5)	1.852098E-02	1.505278E+02	1.000E+01	2.000E+03	0.000E+00	1.000E+01	3.625E-05	1.151E+02
PSDF	EL FOR	171	22745(6)	1.723443E-02	1.488826E+02	1.000E+01	2.000E+03	0.000E+00	1.000E+01	2.380E-05	1.159E+02
PSDF	EL FOR	171	22745(8)	1.432594E-01	1.254749E+02	1.000E+01	2.000E+03	0.000E+00	1.000E+01	2.368E-03	1.151E+02
PSDF	EL FOR	171	22745(9)	3.987704E-02	1.300678E+02	1.000E+01	2.000E+03	0.000E+00	1.000E+01	1.605E-04	1.151E+02
PSDF	EL FOR	171	22840(2)	8.236196E+01	1.255353E+02	1.000E+01	2.000E+03	0.000E+00	1.000E+01	8.149E+02	1.151E+02
PSDF	EL FOR	171	22840(3)	9.283274E+00	1.311037E+02	1.000E+01	2.000E+03	0.000E+00	1.000E+01	7.095E+00	1.151E+02
PSDF	EL FOR	171	22840(5)	1.263612E-02	5.122498E+02	1.000E+01	2.000E+03	0.000E+00	1.000E+01	2.690E-06	5.740E+02
PSDF	EL FOR	171	22840(6)	3.992049E-02	5.255559E+02	1.000E+01	2.000E+03	0.000E+00	1.000E+01	2.936E-05	5.740E+02
PSDF	EL FOR	171	22840(8)	7.018641E-02	5.020375E+02	1.000E+01	2.000E+03	0.000E+00	1.000E+01	8.514E-05	5.740E+02
PSDF	EL FOR	171	22840(9)	5.514718E-02	2.111594E+02	1.000E+01	2.000E+03	0.000E+00	1.000E+01	2.705E-04	1.159E+02
PSDF	EL FOR	171	22842(2)	8.480119E+01	1.258835E+02	1.000E+01	2.000E+03	0.000E+00	1.000E+01	8.705E+02	1.151E+02
PSDF	EL FOR	171	22842(3)	4.326030E+00	1.649984E+02	1.000E+01	2.000E+03	0.000E+00	1.000E+01	1.355E+00	1.028E+02
PSDF	EL FOR	171	22842(5)	1.138795E-02	5.285063E+02	1.000E+01	2.000E+03	0.000E+00	1.000E+01	2.470E-06	5.740E+02
PSDF	EL FOR	171	22842(6)	2.877989E-02	5.146862E+02	1.000E+01	2.000E+03	0.000E+00	1.000E+01	1.454E-05	5.740E+02
PSDF	EL FOR	171	22842(8)	9.796474E-02	4.144350E+02	1.000E+01	2.000E+03	0.000E+00	1.000E+01	3.892E-04	1.159E+02
PSDF	EL FOR	171	22842(9)	2.079833E-02	2.828662E+02	1.000E+01	2.000E+03	0.000E+00	1.000E+01	3.199E-05	1.159E+02
PSDF	EL FOR	171	22844(2)	3.854161E+01	1.309293E+02	1.000E+01	2.000E+03	0.000E+00	1.000E+01	1.793E+02	1.151E+02
PSDF	EL FOR	171	22844(3)	2.560270E+01	1.260302E+02	1.000E+01	2.000E+03	0.000E+00	1.000E+01	6.566E+01	1.159E+02
PSDF	EL FOR	171	22844(5)	6.200283E-03	2.604679E+02	1.000E+01	2.000E+03	0.000E+00	1.000E+01	2.382E-06	1.151E+02
PSDF	EL FOR	171	22844(6)	4.594050E-03	3.237040E+02	1.000E+01	2.000E+03	0.000E+00	1.000E+01	9.697E-07	1.159E+02
PSDF	EL FOR	171	22844(8)	1.936807E-02	2.705789E+02	1.000E+01	2.000E+03	0.000E+00	1.000E+01	2.388E-05	1.159E+02
PSDF	EL FOR	171	22844(9)	8.241178E-03	5.470568E+02	1.000E+01	2.000E+03	0.000E+00	1.000E+01	1.395E-06	5.740E+02
PSDF	EL FOR	171	22838(2)	1.826767E+01	1.686644E+02	1.000E+01	2.000E+03	0.000E+00	1.000E+01	2.160E+01	1.151E+02
PSDF	EL FOR	171	22838(3)	2.087586E+01	1.214612E+02	1.000E+01	2.000E+03	0.000E+00	1.000E+01	4.945E+01	1.028E+02

Y AXIS PSD RESPONSE

X Y - O U T P U T S U M M A R Y (A U T O O R P S D F)

PLOT TYPE	CURVE TYPE	FRAME NO.	CURVE ID.	RMS VALUE	NO. POSITIVE CROSSINGS	XMIN FOR ALL DATA	XMAX FOR ALL DATA	YMIN FOR ALL DATA	X FOR YMIN	YMAX FOR ALL DATA	X FOR* YMAX
PSDF	EL FOR	171	22838(5)	7.445826E-03	2.522982E+02	1.000E+01	2.000E+03	0.000E+00	1.000E+01	3.713E-06	1.151E+02
PSDF	EL FOR	171	22838(6)	2.371927E-03	2.832577E+02	1.000E+01	2.000E+03	0.000E+00	1.000E+01	5.238E-07	1.028E+02
PSDF	EL FOR	171	22838(8)	1.210450E-01	1.939772E+02	1.000E+01	2.000E+03	0.000E+00	1.000E+01	1.079E-03	1.159E+02
PSDF	EL FOR	171	22838(9)	3.702164E-02	2.169777E+02	1.000E+01	2.000E+03	0.000E+00	1.000E+01	9.091E-05	1.159E+02
PSDF	EL FOR	171	22832(2)	2.302974E+01	2.053840E+02	1.000E+01	2.000E+03	0.000E+00	1.000E+01	2.226E+01	1.820E+02
PSDF	EL FOR	171	22832(3)	2.367084E+01	1.189896E+02	1.000E+01	2.000E+03	0.000E+00	1.000E+01	6.964E+01	1.028E+02
PSDF	EL FOR	171	22832(5)	8.404768E-03	2.425239E+02	1.000E+01	2.000E+03	0.000E+00	1.000E+01	3.938E-06	1.151E+02
PSDF	EL FOR	171	22832(6)	1.029600E-02	1.212636E+02	1.000E+01	2.000E+03	0.000E+00	1.000E+01	1.427E-05	1.028E+02
PSDF	EL FOR	171	22832(8)	1.436881E-01	1.591555E+02	1.000E+01	2.000E+03	0.000E+00	1.000E+01	1.571E-03	1.159E+02
PSDF	EL FOR	171	22832(9)	4.800681E-03	2.548301E+02	1.000E+01	2.000E+03	0.000E+00	1.000E+01	1.662E-06	1.159E+02
PSDF	EL FOR	171	22774(2)	2.718254E+01	1.246643E+02	1.000E+01	2.000E+03	0.000E+00	1.000E+01	7.167E+01	1.028E+02
PSDF	EL FOR	171	22774(3)	3.600648E+00	1.932737E+02	1.000E+01	2.000E+03	0.000E+00	1.000E+01	3.864E-01	1.820E+02
PSDF	EL FOR	171	22774(5)	5.361498E-02	1.404001E+02	1.000E+01	2.000E+03	0.000E+00	1.000E+01	2.874E-04	1.151E+02
PSDF	EL FOR	171	22774(6)	1.567524E-02	1.370660E+02	1.000E+01	2.000E+03	0.000E+00	1.000E+01	2.315E-05	1.151E+02
PSDF	EL FOR	171	22774(8)	2.245800E-01	1.201099E+02	1.000E+01	2.000E+03	0.000E+00	1.000E+01	6.718E-03	1.028E+02
PSDF	EL FOR	171	22774(9)	1.649336E-01	1.496668E+02	1.000E+01	2.000E+03	0.000E+00	1.000E+01	2.342E-03	1.028E+02
PSDF	EL FOR	171	20021(2)	2.162704E+01	1.356702E+02	1.000E+01	2.000E+03	0.000E+00	1.000E+01	3.528E+01	1.159E+02
PSDF	EL FOR	171	20021(3)	6.754117E+00	1.376774E+02	1.000E+01	2.000E+03	0.000E+00	1.000E+01	5.452E+00	1.028E+02
PSDF	EL FOR	171	20021(5)	1.529696E-02	1.554844E+02	1.000E+01	2.000E+03	0.000E+00	1.000E+01	1.063E-05	1.800E+02
PSDF	EL FOR	171	20021(6)	1.020095E-02	1.768710E+02	1.000E+01	2.000E+03	0.000E+00	1.000E+01	8.060E-06	1.028E+02
PSDF	EL FOR	171	20021(8)	1.240793E-02	1.475319E+02	1.000E+01	2.000E+03	0.000E+00	1.000E+01	1.450E-05	1.028E+02
PSDF	EL FOR	171	20021(9)	3.608100E-02	1.570913E+02	1.000E+01	2.000E+03	0.000E+00	1.000E+01	8.794E-05	1.028E+02
PSDF	EL FOR	171	20020(2)	2.395631E+01	1.448680E+02	1.000E+01	2.000E+03	0.000E+00	1.000E+01	5.596E+01	1.151E+02
PSDF	EL FOR	171	20020(3)	2.676625E+01	1.159691E+02	1.000E+01	2.000E+03	0.000E+00	1.000E+01	7.940E+01	1.028E+02

Y AXIS PSD RESPONSE

X Y - O U T P U T S U M M A R Y (A U T O O R P S D F)

PLOT TYPE	CURVE TYPE	FRAME NO.	CURVE ID.	RMS VALUE	NO. POSITIVE CROSSINGS	XMIN FOR ALL DATA	XMAX FOR ALL DATA	YMIN FOR ALL DATA	X FOR YMIN	YMAX FOR ALL DATA	X FOR* YMAX
PSDF	EL FOR	171	20020(5)	2.171470E-02	1.487478E+02	1.000E+01	2.000E+03	0.000E+00	1.000E+01	2.462E-05	1.028E+02
PSDF	EL FOR	171	20020(6)	8.430181E-03	1.774616E+02	1.000E+01	2.000E+03	0.000E+00	1.000E+01	3.957E-06	1.028E+02
PSDF	EL FOR	171	20020(8)	1.030238E-02	1.672219E+02	1.000E+01	2.000E+03	0.000E+00	1.000E+01	5.250E-06	1.028E+02
PSDF	EL FOR	171	20020(9)	1.858894E-02	1.668320E+02	1.000E+01	2.000E+03	0.000E+00	1.000E+01	1.988E-05	1.410E+02
PSDF	EL FOR	171	2071(2)	8.872643E+00	1.193172E+02	1.000E+01	2.000E+03	0.000E+00	1.000E+01	1.084E+01	1.028E+02
PSDF	EL FOR	171	2071(3)	4.168634E+00	1.552300E+02	1.000E+01	2.000E+03	0.000E+00	1.000E+01	1.283E+00	1.151E+02
PSDF	EL FOR	171	2071(5)	1.875163E-02	1.660049E+02	1.000E+01	2.000E+03	0.000E+00	1.000E+01	1.905E-05	1.800E+02
PSDF	EL FOR	171	2071(6)	6.235308E-03	2.475602E+02	1.000E+01	2.000E+03	0.000E+00	1.000E+01	1.147E-06	1.159E+02
PSDF	EL FOR	171	2071(8)	4.035568E-03	2.632893E+02	1.000E+01	2.000E+03	0.000E+00	1.000E+01	8.043E-07	1.800E+02
PSDF	EL FOR	171	2071(9)	5.273596E-03	1.997439E+02	1.000E+01	2.000E+03	0.000E+00	1.000E+01	1.413E-06	1.028E+02
PSDF	EL FOR	171	2070(2)	9.762116E+00	1.261351E+02	1.000E+01	2.000E+03	0.000E+00	1.000E+01	6.705E+00	1.021E+02
PSDF	EL FOR	171	2070(3)	5.646391E+00	1.392869E+02	1.000E+01	2.000E+03	0.000E+00	1.000E+01	3.194E+00	1.151E+02
PSDF	EL FOR	171	2070(5)	6.595708E-03	2.865781E+02	1.000E+01	2.000E+03	0.000E+00	1.000E+01	2.674E-06	1.159E+02
PSDF	EL FOR	171	2070(6)	5.967885E-03	2.359256E+02	1.000E+01	2.000E+03	0.000E+00	1.000E+01	1.224E-06	1.410E+02
PSDF	EL FOR	171	2070(8)	4.790645E-03	2.843347E+02	1.000E+01	2.000E+03	0.000E+00	1.000E+01	1.924E-06	1.151E+02
PSDF	EL FOR	171	2070(9)	5.147296E-03	2.013710E+02	1.000E+01	2.000E+03	0.000E+00	1.000E+01	1.536E-06	1.800E+02
PSDF	EL FOR	171	20018(2)	4.330816E+01	1.364958E+02	1.000E+01	2.000E+03	0.000E+00	1.000E+01	2.215E+02	1.151E+02
PSDF	EL FOR	171	20018(3)	6.731870E+00	1.320631E+02	1.000E+01	2.000E+03	0.000E+00	1.000E+01	4.727E+00	1.159E+02
PSDF	EL FOR	171	20018(5)	1.023276E-02	1.696149E+02	1.000E+01	2.000E+03	0.000E+00	1.000E+01	6.837E-06	1.410E+02
PSDF	EL FOR	171	20018(6)	6.393372E-03	3.446239E+02	1.000E+01	2.000E+03	0.000E+00	1.000E+01	1.261E-06	1.028E+02
PSDF	EL FOR	171	20018(8)	6.273691E-03	1.919061E+02	1.000E+01	2.000E+03	0.000E+00	1.000E+01	1.823E-06	1.800E+02
PSDF	EL FOR	171	20018(9)	8.466106E-03	2.984515E+02	1.000E+01	2.000E+03	0.000E+00	1.000E+01	2.369E-06	1.028E+02
PSDF	EL FOR	171	20019(2)	7.434399E+01	1.359694E+02	1.000E+01	2.000E+03	0.000E+00	1.000E+01	6.506E+02	1.151E+02
PSDF	EL FOR	171	20019(3)	6.692421E+00	1.433961E+02	1.000E+01	2.000E+03	0.000E+00	1.000E+01	4.765E+00	1.151E+02

Y AXIS PSD RESPONSE

X Y - O U T P U T S U M M A R Y (A U T O O R P S D F)

PLOT TYPE	CURVE TYPE	FRAME NO.	CURVE ID.	RMS VALUE	NO. POSITIVE CROSSINGS	XMIN FOR ALL DATA	XMAX FOR ALL DATA	YMIN FOR ALL DATA	X FOR YMIN	YMAX FOR ALL DATA	X FOR* YMAX
PSDF	EL FOR	171	20019(5)	1.326814E-02	1.532457E+02	1.000E+01	2.000E+03	0.000E+00	1.000E+01	1.161E-05	1.410E+02
PSDF	EL FOR	171	20019(6)	2.759888E-03	1.554264E+02	1.000E+01	2.000E+03	0.000E+00	1.000E+01	1.010E-06	1.028E+02
PSDF	EL FOR	171	20019(8)	9.436226E-03	1.826313E+02	1.000E+01	2.000E+03	0.000E+00	1.000E+01	3.516E-06	1.420E+02
PSDF	EL FOR	171	20019(9)	1.206342E-01	1.561064E+02	1.000E+01	2.000E+03	0.000E+00	1.000E+01	1.327E-03	1.159E+02
PSDF	EL FOR	171	2049(2)	8.530478E+00	1.341125E+02	1.000E+01	2.000E+03	0.000E+00	1.000E+01	4.320E+00	1.159E+02
PSDF	EL FOR	171	2049(3)	3.522386E+01	1.391849E+02	1.000E+01	2.000E+03	0.000E+00	1.000E+01	1.432E+02	1.151E+02
PSDF	EL FOR	171	2049(5)	2.435082E-02	2.090578E+02	1.000E+01	2.000E+03	0.000E+00	1.000E+01	3.056E-05	1.151E+02
PSDF	EL FOR	171	2049(6)	2.902583E-02	1.585683E+02	1.000E+01	2.000E+03	0.000E+00	1.000E+01	3.978E-05	1.159E+02
PSDF	EL FOR	171	2049(8)	5.820477E-02	3.803914E+02	1.000E+01	2.000E+03	0.000E+00	1.000E+01	1.843E-04	1.151E+02
PSDF	EL FOR	171	2049(9)	1.245615E-02	2.510869E+02	1.000E+01	2.000E+03	0.000E+00	1.000E+01	1.415E-05	1.151E+02
PSDF	EL FOR	171	2050(2)	1.143943E+01	1.443738E+02	1.000E+01	2.000E+03	0.000E+00	1.000E+01	1.144E+01	1.151E+02
PSDF	EL FOR	171	2050(3)	1.170249E+01	1.489425E+02	1.000E+01	2.000E+03	0.000E+00	1.000E+01	6.646E+00	1.028E+02
PSDF	EL FOR	171	2050(5)	3.016707E-02	2.342244E+02	1.000E+01	2.000E+03	0.000E+00	1.000E+01	6.287E-05	1.151E+02
PSDF	EL FOR	171	2050(6)	5.951270E-02	1.543141E+02	1.000E+01	2.000E+03	0.000E+00	1.000E+01	2.914E-04	1.151E+02
PSDF	EL FOR	171	2050(8)	1.594311E-01	4.639066E+02	1.000E+01	2.000E+03	0.000E+00	1.000E+01	5.197E-04	1.159E+02
PSDF	EL FOR	171	2050(9)	1.116555E-02	4.376393E+02	1.000E+01	2.000E+03	0.000E+00	1.000E+01	7.458E-06	1.151E+02
PSDF	EL FOR	171	2051(2)	6.835175E+00	1.536038E+02	1.000E+01	2.000E+03	0.000E+00	1.000E+01	4.005E+00	1.151E+02
PSDF	EL FOR	171	2051(3)	3.016101E+00	2.561082E+02	1.000E+01	2.000E+03	0.000E+00	1.000E+01	3.016E-01	1.159E+02
PSDF	EL FOR	171	2051(5)	5.761621E-02	1.788002E+02	1.000E+01	2.000E+03	0.000E+00	1.000E+01	2.432E-04	1.151E+02
PSDF	EL FOR	171	2051(6)	5.010865E-02	1.562258E+02	1.000E+01	2.000E+03	0.000E+00	1.000E+01	2.164E-04	1.151E+02
PSDF	EL FOR	171	2051(8)	2.256530E-02	6.853741E+02	1.000E+01	2.000E+03	0.000E+00	1.000E+01	6.868E-06	1.151E+02
PSDF	EL FOR	171	2051(9)	9.355160E-03	2.051029E+02	1.000E+01	2.000E+03	0.000E+00	1.000E+01	8.144E-06	1.151E+02
PSDF	EL FOR	171	2052(2)	3.638826E+00	2.101954E+02	1.000E+01	2.000E+03	0.000E+00	1.000E+01	5.289E-01	1.021E+02
PSDF	EL FOR	171	2052(3)	2.491726E+01	1.598932E+02	1.000E+01	2.000E+03	0.000E+00	1.000E+01	7.343E+01	1.028E+02

Y AXIS PSD RESPONSE

X Y - O U T P U T S U M M A R Y (A U T O O R P S D F)

PLOT TYPE	CURVE TYPE	FRAME NO.	CURVE ID.	RMS VALUE	NO. POSITIVE CROSSINGS	XMIN FOR ALL DATA	XMAX FOR ALL DATA	YMIN FOR ALL DATA	X FOR YMIN	YMAX FOR ALL DATA	X FOR* YMAX
PSDF	EL FOR	171	2052(5)	6.395072E-02	1.854686E+02	1.000E+01	2.000E+03	0.000E+00	1.000E+01	1.831E-04	1.159E+02
PSDF	EL FOR	171	2052(6)	2.040574E-02	2.039806E+02	1.000E+01	2.000E+03	0.000E+00	1.000E+01	1.364E-05	1.820E+02
PSDF	EL FOR	171	2052(8)	7.956054E-02	3.703091E+02	1.000E+01	2.000E+03	0.000E+00	1.000E+01	2.952E-04	1.151E+02
PSDF	EL FOR	171	2052(9)	1.108625E-02	1.707989E+02	1.000E+01	2.000E+03	0.000E+00	1.000E+01	1.025E-05	1.159E+02
PSDF	EL FOR	171	20024(2)	4.700285E+01	1.529169E+02	1.000E+01	2.000E+03	0.000E+00	1.000E+01	2.724E+02	1.028E+02
PSDF	EL FOR	171	20024(3)	3.959251E+00	1.835864E+02	1.000E+01	2.000E+03	0.000E+00	1.000E+01	1.413E+00	1.028E+02
PSDF	EL FOR	171	20024(5)	1.021580E-02	1.597144E+02	1.000E+01	2.000E+03	0.000E+00	1.000E+01	8.267E-06	1.028E+02
PSDF	EL FOR	171	20024(6)	3.565027E-03	1.674286E+02	1.000E+01	2.000E+03	0.000E+00	1.000E+01	5.270E-07	1.410E+02
PSDF	EL FOR	171	20024(8)	9.659893E-03	2.102996E+02	1.000E+01	2.000E+03	0.000E+00	1.000E+01	6.062E-06	1.151E+02
PSDF	EL FOR	171	20024(9)	1.194852E-01	2.634663E+02	1.000E+01	2.000E+03	0.000E+00	1.000E+01	1.009E-03	1.159E+02
PSDF	EL FOR	171	20025(2)	2.805035E+01	1.558115E+02	1.000E+01	2.000E+03	0.000E+00	1.000E+01	9.559E+01	1.028E+02
PSDF	EL FOR	171	20025(3)	3.763464E+00	2.056353E+02	1.000E+01	2.000E+03	0.000E+00	1.000E+01	5.217E-01	1.151E+02
PSDF	EL FOR	171	20025(5)	1.537661E-02	1.829061E+02	1.000E+01	2.000E+03	0.000E+00	1.000E+01	1.150E-05	1.410E+02
PSDF	EL FOR	171	20025(6)	1.498059E-02	2.731801E+02	1.000E+01	2.000E+03	0.000E+00	1.000E+01	7.147E-06	1.410E+02
PSDF	EL FOR	171	20025(8)	1.144935E-02	1.970878E+02	1.000E+01	2.000E+03	0.000E+00	1.000E+01	8.099E-06	1.820E+02
PSDF	EL FOR	171	20025(9)	2.410683E-02	2.652880E+02	1.000E+01	2.000E+03	0.000E+00	1.000E+01	1.785E-05	1.159E+02
PSDF	EL FOR	171	2226(2)	7.389620E+00	1.369539E+02	1.000E+01	2.000E+03	0.000E+00	1.000E+01	4.336E+00	1.028E+02
PSDF	EL FOR	171	2226(3)	1.932283E+00	1.495031E+02	1.000E+01	2.000E+03	0.000E+00	1.000E+01	2.961E-01	1.151E+02
PSDF	EL FOR	171	2226(5)	7.453172E-03	1.797704E+02	1.000E+01	2.000E+03	0.000E+00	1.000E+01	2.740E-06	1.410E+02
PSDF	EL FOR	171	2226(6)	2.279870E-02	1.553093E+02	1.000E+01	2.000E+03	0.000E+00	1.000E+01	3.455E-05	1.410E+02
PSDF	EL FOR	171	2226(8)	9.230888E-03	1.657002E+02	1.000E+01	2.000E+03	0.000E+00	1.000E+01	2.887E-06	1.028E+02
PSDF	EL FOR	171	2226(9)	1.396686E-02	1.885579E+02	1.000E+01	2.000E+03	0.000E+00	1.000E+01	1.297E-05	1.820E+02
PSDF	EL FOR	171	2227(2)	1.274534E+01	1.289485E+02	1.000E+01	2.000E+03	0.000E+00	1.000E+01	1.647E+01	1.028E+02
PSDF	EL FOR	171	2227(3)	2.653565E+01	1.302285E+02	1.000E+01	2.000E+03	0.000E+00	1.000E+01	8.720E+01	1.151E+02

Y AXIS PSD RESPONSE

X Y - O U T P U T S U M M A R Y (A U T O O R P S D F)

PLOT TYPE	CURVE TYPE	FRAME NO.	CURVE ID.	RMS VALUE	NO. POSITIVE CROSSINGS	XMIN FOR ALL DATA	XMAX FOR ALL DATA	YMIN FOR ALL DATA	X FOR YMIN	YMAX FOR ALL DATA	X FOR* YMAX
PSDF	EL FOR	171	2227(5)	1.146708E-02	1.484098E+02	1.000E+01	2.000E+03	0.000E+00	1.000E+01	8.385E-06	1.400E+02
PSDF	EL FOR	171	2227(6)	1.993509E-02	1.519265E+02	1.000E+01	2.000E+03	0.000E+00	1.000E+01	2.710E-05	1.400E+02
PSDF	EL FOR	171	2227(8)	7.730015E-03	1.805876E+02	1.000E+01	2.000E+03	0.000E+00	1.000E+01	2.218E-06	1.820E+02
PSDF	EL FOR	171	2227(9)	9.883928E-03	1.901690E+02	1.000E+01	2.000E+03	0.000E+00	1.000E+01	3.832E-06	1.410E+02
PSDF	EL FOR	171	20023(2)	4.964869E+01	1.295467E+02	1.000E+01	2.000E+03	0.000E+00	1.000E+01	3.071E+02	1.151E+02
PSDF	EL FOR	171	20023(3)	2.656375E+01	1.193532E+02	1.000E+01	2.000E+03	0.000E+00	1.000E+01	8.390E+01	1.028E+02
PSDF	EL FOR	171	20023(5)	1.541993E-02	1.659117E+02	1.000E+01	2.000E+03	0.000E+00	1.000E+01	1.348E-05	1.400E+02
PSDF	EL FOR	171	20023(6)	1.168428E-02	1.220454E+02	1.000E+01	2.000E+03	0.000E+00	1.000E+01	1.648E-05	1.028E+02
PSDF	EL FOR	171	20023(8)	7.818070E-03	2.188312E+02	1.000E+01	2.000E+03	0.000E+00	1.000E+01	1.613E-06	1.820E+02
PSDF	EL FOR	171	20023(9)	1.252741E-01	1.624576E+02	1.000E+01	2.000E+03	0.000E+00	1.000E+01	1.434E-03	1.410E+02
PSDF	EL FOR	171	20022(2)	5.085550E+01	1.306157E+02	1.000E+01	2.000E+03	0.000E+00	1.000E+01	3.201E+02	1.151E+02
PSDF	EL FOR	171	20022(3)	7.634919E+00	1.188388E+02	1.000E+01	2.000E+03	0.000E+00	1.000E+01	7.187E+00	1.028E+02
PSDF	EL FOR	171	20022(5)	1.313354E-02	1.681214E+02	1.000E+01	2.000E+03	0.000E+00	1.000E+01	1.314E-05	1.159E+02
PSDF	EL FOR	171	20022(6)	2.618336E-02	1.758672E+02	1.000E+01	2.000E+03	0.000E+00	1.000E+01	3.359E-05	1.151E+02
PSDF	EL FOR	171	20022(8)	1.372261E-02	1.646230E+02	1.000E+01	2.000E+03	0.000E+00	1.000E+01	1.745E-05	1.410E+02
PSDF	EL FOR	171	20022(9)	1.394076E-01	1.645830E+02	1.000E+01	2.000E+03	0.000E+00	1.000E+01	1.352E-03	1.410E+02
PSDF	EL FOR	171	2092(2)	7.613106E+00	1.180654E+02	1.000E+01	2.000E+03	0.000E+00	1.000E+01	6.571E+00	1.028E+02
PSDF	EL FOR	171	2092(3)	1.201009E+01	1.405131E+02	1.000E+01	2.000E+03	0.000E+00	1.000E+01	1.675E+01	1.151E+02
PSDF	EL FOR	171	2092(5)	4.450889E-02	1.726274E+02	1.000E+01	2.000E+03	0.000E+00	1.000E+01	1.219E-04	1.700E+02
PSDF	EL FOR	171	2092(6)	1.831067E-01	1.721704E+02	1.000E+01	2.000E+03	0.000E+00	1.000E+01	2.003E-03	1.700E+02
PSDF	EL FOR	171	2092(8)	2.651951E-02	1.565642E+02	1.000E+01	2.000E+03	0.000E+00	1.000E+01	2.820E-05	1.028E+02
PSDF	EL FOR	171	2092(9)	6.958038E-02	1.719293E+02	1.000E+01	2.000E+03	0.000E+00	1.000E+01	2.781E-04	1.700E+02
PSDF	EL FOR	171	2091(2)	1.298890E+01	1.171776E+02	1.000E+01	2.000E+03	0.000E+00	1.000E+01	2.245E+01	1.028E+02
PSDF	EL FOR	171	2091(3)	3.961719E+00	2.109416E+02	1.000E+01	2.000E+03	0.000E+00	1.000E+01	7.918E-01	1.028E+02

Y AXIS PSD RESPONSE

X Y - O U T P U T S U M M A R Y (A U T O O R P S D F)

PLOT TYPE	CURVE TYPE	FRAME NO.	CURVE ID.	RMS VALUE	NO. POSITIVE CROSSINGS	XMIN FOR ALL DATA	XMAX FOR ALL DATA	YMIN FOR ALL DATA	X FOR YMIN	YMAX FOR ALL DATA	X FOR* YMAX
PSDF	EL FOR	171	2091(5)	5.392580E-02	1.753303E+02	1.000E+01	2.000E+03	0.000E+00	1.000E+01	1.609E-04	1.700E+02
PSDF	EL FOR	171	2091(6)	1.883288E-01	1.716025E+02	1.000E+01	2.000E+03	0.000E+00	1.000E+01	2.067E-03	1.700E+02
PSDF	EL FOR	171	2091(8)	8.794529E-03	1.501597E+02	1.000E+01	2.000E+03	0.000E+00	1.000E+01	5.909E-06	1.028E+02
PSDF	EL FOR	171	2091(9)	5.924048E-02	1.747092E+02	1.000E+01	2.000E+03	0.000E+00	1.000E+01	2.083E-04	1.700E+02
PSDF	EL FOR	171	2090(2)	1.943708E+01	1.172501E+02	1.000E+01	2.000E+03	0.000E+00	1.000E+01	4.765E+01	1.028E+02
PSDF	EL FOR	171	2090(3)	8.039004E+00	1.546707E+02	1.000E+01	2.000E+03	0.000E+00	1.000E+01	3.759E+00	1.410E+02
PSDF	EL FOR	171	2090(5)	2.231469E-02	1.556952E+02	1.000E+01	2.000E+03	0.000E+00	1.000E+01	2.999E-05	1.028E+02
PSDF	EL FOR	171	2090(6)	4.024822E-02	1.407202E+02	1.000E+01	2.000E+03	0.000E+00	1.000E+01	9.229E-05	1.410E+02
PSDF	EL FOR	171	2090(8)	9.881467E-03	1.644980E+02	1.000E+01	2.000E+03	0.000E+00	1.000E+01	7.506E-06	1.028E+02
PSDF	EL FOR	171	2090(9)	3.059613E-02	1.779801E+02	1.000E+01	2.000E+03	0.000E+00	1.000E+01	5.167E-05	1.700E+02
PSDF	EL FOR	171	2089(2)	2.351318E+01	1.268574E+02	1.000E+01	2.000E+03	0.000E+00	1.000E+01	5.636E+01	1.028E+02
PSDF	EL FOR	171	2089(3)	6.059343E+00	1.634969E+02	1.000E+01	2.000E+03	0.000E+00	1.000E+01	3.060E+00	1.410E+02
PSDF	EL FOR	171	2089(5)	1.633857E-02	1.417948E+02	1.000E+01	2.000E+03	0.000E+00	1.000E+01	2.681E-05	1.028E+02
PSDF	EL FOR	171	2089(6)	2.209258E-02	1.389525E+02	1.000E+01	2.000E+03	0.000E+00	1.000E+01	2.829E-05	1.410E+02
PSDF	EL FOR	171	2089(8)	7.351210E-03	2.802437E+02	1.000E+01	2.000E+03	0.000E+00	1.000E+01	1.182E-06	1.820E+02
PSDF	EL FOR	171	2089(9)	1.427036E-02	1.736756E+02	1.000E+01	2.000E+03	0.000E+00	1.000E+01	9.139E-06	1.700E+02
PSDF	EL FOR	171	3266(2)	8.492489E+00	1.653488E+02	1.000E+01	2.000E+03	0.000E+00	1.000E+01	4.379E+00	1.028E+02
PSDF	EL FOR	171	3266(3)	1.482191E+01	1.615105E+02	1.000E+01	2.000E+03	0.000E+00	1.000E+01	1.373E+01	1.151E+02
PSDF	EL FOR	171	3266(5)	1.329697E-02	1.370218E+02	1.000E+01	2.000E+03	0.000E+00	1.000E+01	2.227E-05	1.028E+02
PSDF	EL FOR	171	3266(6)	4.172691E-02	1.602330E+02	1.000E+01	2.000E+03	0.000E+00	1.000E+01	1.712E-04	1.151E+02
PSDF	EL FOR	171	3266(8)	2.025934E-02	1.857317E+02	1.000E+01	2.000E+03	0.000E+00	1.000E+01	2.213E-05	1.028E+02
PSDF	EL FOR	171	3266(9)	4.319678E-02	1.966145E+02	1.000E+01	2.000E+03	0.000E+00	1.000E+01	1.109E-04	1.028E+02
PSDF	EL FOR	171	3268(2)	6.537877E+00	1.498171E+02	1.000E+01	2.000E+03	0.000E+00	1.000E+01	3.328E+00	1.021E+02
PSDF	EL FOR	171	3268(3)	1.639884E+01	1.100533E+02	1.000E+01	2.000E+03	0.000E+00	1.000E+01	3.704E+01	1.028E+02

Y AXIS PSD RESPONSE

X Y - O U T P U T S U M M A R Y (A U T O O R P S D F)

PLOT TYPE	CURVE TYPE	FRAME NO.	CURVE ID.	RMS VALUE	NO. POSITIVE CROSSINGS	XMIN FOR ALL DATA	XMAX FOR ALL DATA	YMIN FOR ALL DATA	X FOR YMIN	YMAX FOR ALL DATA	X FOR* YMAX
PSDF	EL FOR	171	3268(5)	6.540821E-02	1.845264E+02	1.000E+01	2.000E+03	0.000E+00	1.000E+01	3.342E-04	1.151E+02
PSDF	EL FOR	171	3268(6)	8.185378E-02	1.312917E+02	1.000E+01	2.000E+03	0.000E+00	1.000E+01	5.168E-04	1.151E+02
PSDF	EL FOR	171	3268(8)	2.642061E-01	1.562732E+02	1.000E+01	2.000E+03	0.000E+00	1.000E+01	4.083E-03	1.028E+02
PSDF	EL FOR	171	3268(9)	5.081153E-02	1.399562E+02	1.000E+01	2.000E+03	0.000E+00	1.000E+01	1.884E-04	1.151E+02
PSDF	EL FOR	171	3271(2)	8.915293E+00	1.144975E+02	1.000E+01	2.000E+03	0.000E+00	1.000E+01	9.559E+00	1.028E+02
PSDF	EL FOR	171	3271(3)	3.520236E+01	1.537733E+02	1.000E+01	2.000E+03	0.000E+00	1.000E+01	1.025E+02	1.151E+02
PSDF	EL FOR	171	3271(5)	2.103603E-02	1.860276E+02	1.000E+01	2.000E+03	0.000E+00	1.000E+01	3.283E-05	1.151E+02
PSDF	EL FOR	171	3271(6)	3.460773E-02	2.342720E+02	1.000E+01	2.000E+03	0.000E+00	1.000E+01	4.624E-05	1.028E+02
PSDF	EL FOR	171	3271(8)	4.011871E-02	1.606819E+02	1.000E+01	2.000E+03	0.000E+00	1.000E+01	1.971E-04	1.028E+02
PSDF	EL FOR	171	3271(9)	2.840571E-01	1.545110E+02	1.000E+01	2.000E+03	0.000E+00	1.000E+01	7.645E-03	1.151E+02
PSDF	EL FOR	171	3273(2)	1.142709E+01	1.332058E+02	1.000E+01	2.000E+03	0.000E+00	1.000E+01	1.548E+01	1.028E+02
PSDF	EL FOR	171	3273(3)	3.625019E+01	1.400126E+02	1.000E+01	2.000E+03	0.000E+00	1.000E+01	9.855E+01	1.151E+02
PSDF	EL FOR	171	3273(5)	5.422943E-02	1.451161E+02	1.000E+01	2.000E+03	0.000E+00	1.000E+01	2.741E-04	1.151E+02
PSDF	EL FOR	171	3273(6)	3.569239E-02	1.119199E+02	1.000E+01	2.000E+03	0.000E+00	1.000E+01	1.806E-04	1.028E+02
PSDF	EL FOR	171	3273(8)	2.527860E-02	2.300788E+02	1.000E+01	2.000E+03	0.000E+00	1.000E+01	4.523E-05	1.151E+02
PSDF	EL FOR	171	3273(9)	7.845160E-02	1.243655E+02	1.000E+01	2.000E+03	0.000E+00	1.000E+01	8.396E-04	1.028E+02

Y AXIS PSD RESPONSE

X Y - O U T P U T S U M M A R Y (A U T O O R P S D F)

PLOT TYPE	CURVE TYPE	FRAME NO.	CURVE ID.	RMS VALUE	NO. POSITIVE CROSSINGS	XMIN FOR ALL DATA	XMAX FOR ALL DATA	YMIN FOR ALL DATA	X FOR YMIN	YMAX FOR ALL DATA	X FOR* YMAX
PSDF	EL STR	0	23538(3)	5.299462E+02	1.577315E+02	1.000E+01	2.000E+03	0.000E+00	1.000E+01	2.740E+04	1.151E+02
PSDF	EL STR	0	23538(5)	1.461163E+03	1.222843E+02	1.000E+01	2.000E+03	0.000E+00	1.000E+01	2.214E+05	1.159E+02
PSDF	EL STR	0	23538(7)	3.846289E+02	1.532137E+02	1.000E+01	2.000E+03	0.000E+00	1.000E+01	9.174E+03	1.159E+02
PSDF	EL STR	0	23539(3)	6.143761E+03	1.174551E+02	1.000E+01	2.000E+03	0.000E+00	1.000E+01	4.226E+06	1.159E+02
PSDF	EL STR	0	23539(5)	1.701786E+03	1.282010E+02	1.000E+01	2.000E+03	0.000E+00	1.000E+01	3.320E+05	1.159E+02
PSDF	EL STR	0	23539(7)	1.036685E+03	1.241456E+02	1.000E+01	2.000E+03	0.000E+00	1.000E+01	1.291E+05	1.159E+02
PSDF	EL STR	0	23540(3)	3.884872E+03	1.180653E+02	1.000E+01	2.000E+03	0.000E+00	1.000E+01	1.678E+06	1.159E+02
PSDF	EL STR	0	23540(5)	3.373458E+03	1.190473E+02	1.000E+01	2.000E+03	0.000E+00	1.000E+01	1.254E+06	1.159E+02
PSDF	EL STR	0	23540(7)	1.772877E+02	2.242056E+02	1.000E+01	2.000E+03	0.000E+00	1.000E+01	1.932E+03	1.021E+02
PSDF	EL STR	0	23541(3)	4.574153E+02	1.737006E+02	1.000E+01	2.000E+03	0.000E+00	1.000E+01	2.204E+04	1.159E+02
PSDF	EL STR	0	23541(5)	9.087723E+02	1.297552E+02	1.000E+01	2.000E+03	0.000E+00	1.000E+01	9.810E+04	1.159E+02
PSDF	EL STR	0	23541(7)	4.767976E+02	1.308317E+02	1.000E+01	2.000E+03	0.000E+00	1.000E+01	1.545E+04	1.159E+02
PSDF	EL STR	0	23542(3)	2.045255E+03	1.445156E+02	1.000E+01	2.000E+03	0.000E+00	1.000E+01	4.817E+05	1.159E+02
PSDF	EL STR	0	23542(5)	1.128014E+03	1.643573E+02	1.000E+01	2.000E+03	0.000E+00	1.000E+01	1.322E+05	1.159E+02
PSDF	EL STR	0	23542(7)	8.539382E+02	1.371023E+02	1.000E+01	2.000E+03	0.000E+00	1.000E+01	9.183E+04	1.159E+02
PSDF	EL STR	0	23543(3)	2.199619E+03	1.215718E+02	1.000E+01	2.000E+03	0.000E+00	1.000E+01	5.667E+05	1.159E+02
PSDF	EL STR	0	23543(5)	5.814148E+03	1.202407E+02	1.000E+01	2.000E+03	0.000E+00	1.000E+01	3.765E+06	1.159E+02
PSDF	EL STR	0	23543(7)	1.321475E+03	1.202047E+02	1.000E+01	2.000E+03	0.000E+00	1.000E+01	2.169E+05	1.159E+02
PSDF	EL STR	0	23544(3)	2.670961E+03	1.188596E+02	1.000E+01	2.000E+03	0.000E+00	1.000E+01	8.348E+05	1.159E+02
PSDF	EL STR	0	23544(5)	9.037095E+03	1.180058E+02	1.000E+01	2.000E+03	0.000E+00	1.000E+01	9.130E+06	1.159E+02
PSDF	EL STR	0	23544(7)	8.343467E+02	1.267926E+02	1.000E+01	2.000E+03	0.000E+00	1.000E+01	8.953E+04	1.159E+02
PSDF	EL STR	0	23545(3)	3.424152E+02	2.476269E+02	1.000E+01	2.000E+03	0.000E+00	1.000E+01	4.090E+03	1.159E+02
PSDF	EL STR	0	23545(5)	1.056477E+03	2.597968E+02	1.000E+01	2.000E+03	0.000E+00	1.000E+01	3.554E+04	1.160E+02
PSDF	EL STR	0	23545(7)	2.246003E+02	2.708310E+02	1.000E+01	2.000E+03	0.000E+00	1.000E+01	2.290E+03	1.021E+02

Y AXIS PSD RESPONSE

X Y - O U T P U T S U M M A R Y (A U T O O R P S D F)

PLOT TYPE	CURVE TYPE	FRAME NO.	CURVE ID.	RMS VALUE	NO. POSITIVE CROSSINGS	XMIN FOR ALL DATA	XMAX FOR ALL DATA	YMIN FOR ALL DATA	X FOR YMIN	YMAX FOR ALL DATA	X FOR* YMAX
PSDF	EL STR	0	23546(3)	2.149189E+02	1.703440E+02	1.000E+01	2.000E+03	0.000E+00	1.000E+01	2.141E+03	1.021E+02
PSDF	EL STR	0	23546(5)	1.698464E+02	3.537389E+02	1.000E+01	2.000E+03	0.000E+00	1.000E+01	3.052E+03	1.159E+02
PSDF	EL STR	0	23546(7)	1.083266E+02	1.543961E+02	1.000E+01	2.000E+03	0.000E+00	1.000E+01	1.084E+03	1.028E+02
PSDF	EL STR	0	23547(3)	5.173227E+01	2.672605E+02	1.000E+01	2.000E+03	0.000E+00	1.000E+01	6.772E+01	1.227E+02
PSDF	EL STR	0	23547(5)	1.152440E+02	1.876040E+02	1.000E+01	2.000E+03	0.000E+00	1.000E+01	1.029E+03	1.151E+02
PSDF	EL STR	0	23547(7)	1.105234E+02	2.113012E+02	1.000E+01	2.000E+03	0.000E+00	1.000E+01	1.034E+03	1.028E+02
PSDF	EL STR	0	23548(3)	1.079187E+02	4.649014E+02	1.000E+01	2.000E+03	0.000E+00	1.000E+01	5.457E+02	1.028E+02
PSDF	EL STR	0	23548(5)	1.060560E+02	3.901356E+02	1.000E+01	2.000E+03	0.000E+00	1.000E+01	6.793E+02	1.151E+02
PSDF	EL STR	0	23548(7)	1.406062E+02	1.844840E+02	1.000E+01	2.000E+03	0.000E+00	1.000E+01	1.299E+03	1.021E+02
PSDF	EL STR	0	23549(3)	1.271741E+02	1.520639E+02	1.000E+01	2.000E+03	0.000E+00	1.000E+01	1.322E+03	1.159E+02
PSDF	EL STR	0	23549(5)	6.683501E+01	2.971819E+02	1.000E+01	2.000E+03	0.000E+00	1.000E+01	2.586E+02	1.151E+02
PSDF	EL STR	0	23549(7)	1.250422E+02	2.001905E+02	1.000E+01	2.000E+03	0.000E+00	1.000E+01	8.467E+02	1.021E+02
PSDF	EL STR	0	23550(3)	7.430116E+01	1.775705E+02	1.000E+01	2.000E+03	0.000E+00	1.000E+01	3.443E+02	1.159E+02
PSDF	EL STR	0	23550(5)	1.079319E+02	2.408309E+02	1.000E+01	2.000E+03	0.000E+00	1.000E+01	6.218E+02	1.151E+02
PSDF	EL STR	0	23550(7)	1.756205E+02	1.820091E+02	1.000E+01	2.000E+03	0.000E+00	1.000E+01	2.058E+03	1.159E+02
PSDF	EL STR	0	23551(3)	3.593033E+01	2.359705E+02	1.000E+01	2.000E+03	0.000E+00	1.000E+01	1.165E+02	1.159E+02
PSDF	EL STR	0	23551(5)	1.158403E+02	1.744617E+02	1.000E+01	2.000E+03	0.000E+00	1.000E+01	1.170E+03	1.151E+02
PSDF	EL STR	0	23551(7)	1.309662E+02	1.807747E+02	1.000E+01	2.000E+03	0.000E+00	1.000E+01	1.791E+03	1.028E+02
PSDF	EL STR	0	23552(3)	7.177032E+01	2.315773E+02	1.000E+01	2.000E+03	0.000E+00	1.000E+01	5.105E+02	1.151E+02
PSDF	EL STR	0	23552(5)	3.813957E+01	3.216096E+02	1.000E+01	2.000E+03	0.000E+00	1.000E+01	9.666E+01	1.151E+02
PSDF	EL STR	0	23552(7)	1.224827E+02	2.169503E+02	1.000E+01	2.000E+03	0.000E+00	1.000E+01	1.375E+03	1.028E+02
PSDF	EL STR	0	23553(3)	2.690693E+01	1.608293E+02	1.000E+01	2.000E+03	0.000E+00	1.000E+01	5.235E+01	1.151E+02
PSDF	EL STR	0	23553(5)	1.658626E+02	1.578202E+02	1.000E+01	2.000E+03	0.000E+00	1.000E+01	2.489E+03	1.151E+02
PSDF	EL STR	0	23553(7)	1.373418E+02	1.748250E+02	1.000E+01	2.000E+03	0.000E+00	1.000E+01	2.045E+03	1.028E+02

Y AXIS PSD RESPONSE

X Y - O U T P U T S U M M A R Y (A U T O O R P S D F)

PLOT TYPE	CURVE TYPE	FRAME NO.	CURVE ID.	RMS VALUE	NO. POSITIVE CROSSINGS	XMIN FOR ALL DATA	XMAX FOR ALL DATA	YMIN FOR ALL DATA	X FOR YMIN	YMAX FOR ALL DATA	X FOR* YMAX
PSDF	EL STR	0	23554(3)	1.780345E+03	1.243630E+02	1.000E+01	2.000E+03	0.000E+00	1.000E+01	3.642E+05	1.159E+02
PSDF	EL STR	0	23554(5)	1.750287E+03	1.660148E+02	1.000E+01	2.000E+03	0.000E+00	1.000E+01	2.968E+05	1.159E+02
PSDF	EL STR	0	23554(7)	2.005162E+03	1.191266E+02	1.000E+01	2.000E+03	0.000E+00	1.000E+01	4.820E+05	1.159E+02
PSDF	EL STR	0	23555(3)	1.490460E+03	1.800444E+02	1.000E+01	2.000E+03	0.000E+00	1.000E+01	1.508E+05	1.800E+02
PSDF	EL STR	0	23555(5)	8.623193E+02	1.974531E+02	1.000E+01	2.000E+03	0.000E+00	1.000E+01	5.342E+04	1.800E+02
PSDF	EL STR	0	23555(7)	4.620128E+02	1.633381E+02	1.000E+01	2.000E+03	0.000E+00	1.000E+01	1.305E+04	1.028E+02
PSDF	EL STR	0	23556(3)	1.306393E+02	2.949510E+02	1.000E+01	2.000E+03	0.000E+00	1.000E+01	8.156E+02	1.151E+02
PSDF	EL STR	0	23556(5)	1.986311E+02	1.682321E+02	1.000E+01	2.000E+03	0.000E+00	1.000E+01	3.144E+03	1.151E+02
PSDF	EL STR	0	23556(7)	2.145090E+02	1.458443E+02	1.000E+01	2.000E+03	0.000E+00	1.000E+01	3.193E+03	1.021E+02
PSDF	EL STR	0	23557(3)	2.199381E+02	1.514563E+02	1.000E+01	2.000E+03	0.000E+00	1.000E+01	4.689E+03	1.151E+02
PSDF	EL STR	0	23557(5)	3.807865E+01	1.360384E+02	1.000E+01	2.000E+03	0.000E+00	1.000E+01	1.645E+02	1.151E+02
PSDF	EL STR	0	23557(7)	2.036884E+02	1.506063E+02	1.000E+01	2.000E+03	0.000E+00	1.000E+01	4.157E+03	1.028E+02
PSDF	EL STR	0	23558(3)	2.366357E+02	1.453571E+02	1.000E+01	2.000E+03	0.000E+00	1.000E+01	4.949E+03	1.159E+02
PSDF	EL STR	0	23558(5)	3.298788E+02	1.354239E+02	1.000E+01	2.000E+03	0.000E+00	1.000E+01	9.981E+03	1.159E+02
PSDF	EL STR	0	23558(7)	1.452617E+02	1.416370E+02	1.000E+01	2.000E+03	0.000E+00	1.000E+01	1.721E+03	1.159E+02
PSDF	EL STR	0	23559(3)	1.064229E+02	1.678618E+02	1.000E+01	2.000E+03	0.000E+00	1.000E+01	1.286E+03	1.151E+02
PSDF	EL STR	0	23559(5)	2.047537E+02	1.559138E+02	1.000E+01	2.000E+03	0.000E+00	1.000E+01	2.644E+03	1.151E+02
PSDF	EL STR	0	23559(7)	1.825766E+02	1.403763E+02	1.000E+01	2.000E+03	0.000E+00	1.000E+01	2.340E+03	1.021E+02
PSDF	EL STR	0	23560(3)	5.865463E+02	1.755155E+02	1.000E+01	2.000E+03	0.000E+00	1.000E+01	1.835E+04	1.800E+02
PSDF	EL STR	0	23560(5)	1.647048E+03	1.825794E+02	1.000E+01	2.000E+03	0.000E+00	1.000E+01	1.920E+05	1.800E+02
PSDF	EL STR	0	23560(7)	4.170469E+02	1.620540E+02	1.000E+01	2.000E+03	0.000E+00	1.000E+01	1.191E+04	1.159E+02
PSDF	EL STR	0	23561(3)	7.511039E+02	1.893973E+02	1.000E+01	2.000E+03	0.000E+00	1.000E+01	4.377E+04	1.800E+02
PSDF	EL STR	0	23561(5)	4.038232E+02	1.871359E+02	1.000E+01	2.000E+03	0.000E+00	1.000E+01	8.450E+03	1.151E+02
PSDF	EL STR	0	23561(7)	3.987053E+02	1.747120E+02	1.000E+01	2.000E+03	0.000E+00	1.000E+01	8.126E+03	1.800E+02

Y AXIS PSD RESPONSE

X Y - O U T P U T S U M M A R Y (A U T O O R P S D F)

PLOT TYPE	CURVE TYPE	FRAME NO.	CURVE ID.	RMS VALUE	NO. POSITIVE CROSSINGS	XMIN FOR ALL DATA	XMAX FOR ALL DATA	YMIN FOR ALL DATA	X FOR YMIN	YMAX FOR ALL DATA	X FOR* YMAX
PSDF	EL STR	0	23562(3)	4.413929E+02	1.743329E+02	1.000E+01	2.000E+03	0.000E+00	1.000E+01	1.193E+04	1.800E+02
PSDF	EL STR	0	23562(5)	2.562529E+02	1.569609E+02	1.000E+01	2.000E+03	0.000E+00	1.000E+01	8.705E+03	1.159E+02
PSDF	EL STR	0	23562(7)	2.903319E+02	1.312424E+02	1.000E+01	2.000E+03	0.000E+00	1.000E+01	6.097E+03	1.021E+02
PSDF	EL STR	0	23563(3)	2.625097E+02	2.037494E+02	1.000E+01	2.000E+03	0.000E+00	1.000E+01	5.035E+03	1.800E+02
PSDF	EL STR	0	23563(5)	1.969509E+02	1.611936E+02	1.000E+01	2.000E+03	0.000E+00	1.000E+01	3.025E+03	1.159E+02
PSDF	EL STR	0	23563(7)	3.724389E+02	1.390209E+02	1.000E+01	2.000E+03	0.000E+00	1.000E+01	1.052E+04	1.159E+02
PSDF	EL STR	0	23564(3)	4.990641E+02	1.788051E+02	1.000E+01	2.000E+03	0.000E+00	1.000E+01	1.812E+04	1.800E+02
PSDF	EL STR	0	23564(5)	3.172565E+02	1.747257E+02	1.000E+01	2.000E+03	0.000E+00	1.000E+01	6.840E+03	1.800E+02
PSDF	EL STR	0	23564(7)	3.246523E+02	1.311184E+02	1.000E+01	2.000E+03	0.000E+00	1.000E+01	7.247E+03	1.159E+02
PSDF	EL STR	0	23565(3)	1.598185E+03	1.830908E+02	1.000E+01	2.000E+03	0.000E+00	1.000E+01	1.828E+05	1.800E+02
PSDF	EL STR	0	23565(5)	3.064015E+02	2.083786E+02	1.000E+01	2.000E+03	0.000E+00	1.000E+01	5.277E+03	1.800E+02
PSDF	EL STR	0	23565(7)	3.873807E+02	1.597808E+02	1.000E+01	2.000E+03	0.000E+00	1.000E+01	8.857E+03	1.028E+02
PSDF	EL STR	0	23566(3)	6.778319E+01	1.645290E+02	1.000E+01	2.000E+03	0.000E+00	1.000E+01	3.277E+02	1.151E+02
PSDF	EL STR	0	23566(5)	2.176655E+02	1.513715E+02	1.000E+01	2.000E+03	0.000E+00	1.000E+01	4.585E+03	1.151E+02
PSDF	EL STR	0	23566(7)	2.833386E+02	1.397001E+02	1.000E+01	2.000E+03	0.000E+00	1.000E+01	7.022E+03	1.159E+02
PSDF	EL STR	0	23567(3)	2.656667E+02	1.453535E+02	1.000E+01	2.000E+03	0.000E+00	1.000E+01	7.067E+03	1.151E+02
PSDF	EL STR	0	23567(5)	1.711069E+02	1.781777E+02	1.000E+01	2.000E+03	0.000E+00	1.000E+01	1.188E+03	1.151E+02
PSDF	EL STR	0	23567(7)	3.547882E+02	1.351162E+02	1.000E+01	2.000E+03	0.000E+00	1.000E+01	1.344E+04	1.151E+02
PSDF	EL STR	0	23568(3)	4.496921E+01	1.663610E+02	1.000E+01	2.000E+03	0.000E+00	1.000E+01	2.158E+02	1.028E+02
PSDF	EL STR	0	23568(5)	3.128221E+02	1.470805E+02	1.000E+01	2.000E+03	0.000E+00	1.000E+01	1.071E+04	1.151E+02
PSDF	EL STR	0	23568(7)	1.810112E+02	1.542445E+02	1.000E+01	2.000E+03	0.000E+00	1.000E+01	3.519E+03	1.028E+02
PSDF	EL STR	0	22917(3)	1.062666E+02	1.653427E+02	1.000E+01	2.000E+03	0.000E+00	1.000E+01	8.647E+02	1.151E+02
PSDF	EL STR	0	22917(5)	1.488496E+02	1.867384E+02	1.000E+01	2.000E+03	0.000E+00	1.000E+01	1.194E+03	1.028E+02
PSDF	EL STR	0	22917(7)	3.092121E+02	1.785283E+02	1.000E+01	2.000E+03	0.000E+00	1.000E+01	4.816E+03	9.250E+01

Y AXIS PSD RESPONSE

X Y - O U T P U T S U M M A R Y (A U T O O R P S D F)

PLOT TYPE	CURVE TYPE	FRAME NO.	CURVE ID.	RMS VALUE	NO. POSITIVE CROSSINGS	XMIN FOR ALL DATA	XMAX FOR ALL DATA	YMIN FOR ALL DATA	X FOR YMIN	YMAX FOR ALL DATA	X FOR* YMAX
PSDF	EL STR	0	22918(3)	8.538905E+01	2.057881E+02	1.000E+01	2.000E+03	0.000E+00	1.000E+01	2.191E+02	1.820E+02
PSDF	EL STR	0	22918(5)	1.714710E+02	1.601760E+02	1.000E+01	2.000E+03	0.000E+00	1.000E+01	2.100E+03	1.028E+02
PSDF	EL STR	0	22918(7)	3.099310E+02	1.809093E+02	1.000E+01	2.000E+03	0.000E+00	1.000E+01	4.963E+03	9.250E+01
PSDF	EL STR	0	22919(3)	9.693707E+01	1.803329E+02	1.000E+01	2.000E+03	0.000E+00	1.000E+01	3.649E+02	1.151E+02
PSDF	EL STR	0	22919(5)	2.082636E+02	1.686544E+02	1.000E+01	2.000E+03	0.000E+00	1.000E+01	2.772E+03	1.028E+02
PSDF	EL STR	0	22919(7)	2.647249E+02	1.968490E+02	1.000E+01	2.000E+03	0.000E+00	1.000E+01	3.279E+03	9.250E+01
PSDF	EL STR	0	22920(3)	1.227871E+02	1.670961E+02	1.000E+01	2.000E+03	0.000E+00	1.000E+01	1.194E+03	1.151E+02
PSDF	EL STR	0	22920(5)	2.756560E+02	1.850815E+02	1.000E-01	2.000E+03	0.000E+00	1.000E+01	3.439E+03	1.151E+02
PSDF	EL STR	0	22920(7)	1.250705E+02	2.463360E+02	1.000E+01	2.000E+03	0.000E+00	1.000E+01	6.172E+02	9.200E+01
PSDF	EL STR	0	22921(3)	4.502553E+01	1.465020E+02	1.000E+01	2.000E+03	0.000E+00	1.000E+01	1.446E+02	9.250E+01
PSDF	EL STR	0	22921(5)	3.131529E+02	1.917890E+02	1.000E+01	2.000E+03	0.000E+00	1.000E+01	5.428E+03	1.151E+02
PSDF	EL STR	0	22921(7)	1.996295E+02	1.855189E+02	1.000E+01	2.000E+03	0.000E+00	1.000E+01	2.660E+03	1.028E+02
PSDF	EL STR	0	22922(3)	4.049972E+01	1.469812E+02	1.000E+01	2.000E+03	0.000E+00	1.000E+01	1.307E+02	9.250E+01
PSDF	EL STR	0	22922(5)	2.836654E+02	1.887138E+02	1.000E+01	2.000E+03	0.000E+00	1.000E+01	5.877E+03	1.151E+02
PSDF	EL STR	0	22922(7)	2.886197E+02	1.749789E+02	1.000E+01	2.000E+03	0.000E+00	1.000E+01	4.123E+03	1.021E+02
PSDF	EL STR	0	22923(3)	6.131469E+01	1.337860E+02	1.000E+01	2.000E+03	0.000E+00	1.000E+01	3.090E+02	1.151E+02
PSDF	EL STR	0	22923(5)	1.994946E+02	1.804876E+02	1.000E+01	2.000E+03	0.000E+00	1.000E+01	3.754E+03	1.151E+02
PSDF	EL STR	0	22923(7)	3.328386E+02	1.785621E+02	1.000E+01	2.000E+03	0.000E+00	1.000E+01	4.901E+03	9.250E+01
PSDF	EL STR	0	22924(3)	7.998123E+01	1.266712E+02	1.000E+01	2.000E+03	0.000E+00	1.000E+01	5.143E+02	1.028E+02
PSDF	EL STR	0	22924(5)	1.713023E+02	1.999993E+02	1.000E+01	2.000E+03	0.000E+00	1.000E+01	1.240E+03	1.151E+02
PSDF	EL STR	0	22924(7)	3.231553E+02	1.865018E+02	1.000E+01	2.000E+03	0.000E+00	1.000E+01	4.747E+03	9.250E+01
PSDF	EL STR	0	22925(3)	6.624129E+01	1.220431E+02	1.000E+01	2.000E+03	0.000E+00	1.000E+01	4.834E+02	1.028E+02
PSDF	EL STR	0	22925(5)	2.438497E+02	2.177784E+02	1.000E+01	2.000E+03	0.000E+00	1.000E+01	2.486E+03	1.820E+02
PSDF	EL STR	0	22925(7)	2.473395E+02	2.044642E+02	1.000E+01	2.000E+03	0.000E+00	1.000E+01	2.823E+03	9.250E+01

Y AXIS PSD RESPONSE

X Y - O U T P U T S U M M A R Y (A U T O O R P S D F)

PLOT TYPE	CURVE TYPE	FRAME NO.	CURVE ID.	RMS VALUE	NO. POSITIVE CROSSINGS	XMIN FOR ALL DATA	XMAX FOR ALL DATA	YMIN FOR ALL DATA	X FOR YMIN	YMAX FOR ALL DATA	X FOR* YMAX
PSDF	EL STR	0	22926(3)	5.954747E+01	1.201600E+02	1.000E+01	2.000E+03	0.000E+00	1.000E+01	3.952E+02	1.028E+02
PSDF	EL STR	0	22926(5)	2.794658E+02	2.252762E+02	1.000E+01	2.000E+03	0.000E+00	1.000E+01	3.016E+03	1.820E+02
PSDF	EL STR	0	22926(7)	1.481178E+02	2.425252E+02	1.000E+01	2.000E+03	0.000E+00	1.000E+01	8.021E+02	9.200E+01
PSDF	EL STR	0	22927(3)	1.124669E+02	1.697097E+02	1.000E+01	2.000E+03	0.000E+00	1.000E+01	9.089E+02	1.028E+02
PSDF	EL STR	0	22927(5)	2.389378E+02	2.337894E+02	1.000E+01	2.000E+03	0.000E+00	1.000E+01	1.740E+03	1.820E+02
PSDF	EL STR	0	22927(7)	1.765746E+02	1.841420E+02	1.000E+01	2.000E+03	0.000E+00	1.000E+01	2.095E+03	1.028E+02
PSDF	EL STR	0	22928(3)	1.279285E+02	1.408985E+02	1.000E+01	2.000E+03	0.000E+00	1.000E+01	1.088E+03	1.151E+02
PSDF	EL STR	0	22928(5)	1.724102E+02	2.315853E+02	1.000E+01	2.000E+03	0.000E+00	1.000E+01	4.923E+02	1.820E+02
PSDF	EL STR	0	22928(7)	2.892813E+02	1.835186E+02	1.000E+01	2.000E+03	0.000E+00	1.000E+01	3.798E+03	1.021E+02
PSDF	EL STR	0	22954(3)	5.228644E+01	1.719608E+02	1.000E+01	2.000E+03	0.000E+00	1.000E+01	2.025E+02	1.028E+02
PSDF	EL STR	0	22954(5)	1.648131E+02	1.716695E+02	1.000E+01	2.000E+03	0.000E+00	1.000E+01	2.067E+03	1.028E+02
PSDF	EL STR	0	22954(7)	5.848344E+02	1.996585E+02	1.000E+01	2.000E+03	0.000E+00	1.000E+01	8.337E+03	9.250E+01
PSDF	EL STR	0	22955(3)	6.701962E+01	1.762315E+02	1.000E+01	2.000E+03	0.000E+00	1.000E+01	2.275E+02	1.028E+02
PSDF	EL STR	0	22955(5)	2.348041E+02	1.751668E+02	1.000E+01	2.000E+03	0.000E+00	1.000E+01	2.814E+03	1.028E+02
PSDF	EL STR	0	22955(7)	4.810764E+02	2.067838E+02	1.000E+01	2.000E+03	0.000E+00	1.000E+01	5.694E+03	1.151E+02
PSDF	EL STR	0	22956(3)	7.754929E+01	1.842898E+02	1.000E+01	2.000E+03	0.000E+00	1.000E+01	2.228E+02	1.028E+02
PSDF	EL STR	0	22956(5)	2.658652E+02	1.827464E+02	1.000E+01	2.000E+03	0.000E+00	1.000E+01	2.658E+03	1.028E+02
PSDF	EL STR	0	22956(7)	3.599264E+02	2.123437E+02	1.000E+01	2.000E+03	0.000E+00	1.000E+01	5.338E+03	2.020E+02
PSDF	EL STR	0	22957(3)	8.106094E+01	1.868709E+02	1.000E+01	2.000E+03	0.000E+00	1.000E+01	2.889E+02	1.151E+02
PSDF	EL STR	0	22957(5)	2.552915E+02	1.867014E+02	1.000E+01	2.000E+03	0.000E+00	1.000E+01	2.781E+03	1.151E+02
PSDF	EL STR	0	22957(7)	3.599583E+02	2.028928E+02	1.000E+01	2.000E+03	0.000E+00	1.000E+01	5.578E+03	2.020E+02
PSDF	EL STR	0	22958(3)	6.355147E+01	1.908375E+02	1.000E+01	2.000E+03	0.000E+00	1.000E+01	2.345E+02	1.151E+02
PSDF	EL STR	0	22958(5)	2.035512E+02	1.894656E+02	1.000E+01	2.000E+03	0.000E+00	1.000E+01	2.361E+03	1.151E+02
PSDF	EL STR	0	22958(7)	4.670234E+02	1.979825E+02	1.000E+01	2.000E+03	0.000E+00	1.000E+01	6.783E+03	1.021E+02

Y AXIS PSD RESPONSE

X Y - O U T P U T S U M M A R Y (A U T O O R P S D F)

PLOT TYPE	CURVE TYPE	FRAME NO.	CURVE ID.	RMS VALUE	NO. POSITIVE CROSSINGS	XMIN FOR ALL DATA	XMAX FOR ALL DATA	YMIN FOR ALL DATA	X FOR YMIN	YMAX FOR ALL DATA	X FOR* YMAX
PSDF	EL STR	0	22959(3)	3.834876E+01	1.985991E+02	1.000E+01	2.000E+03	0.000E+00	1.000E+01	1.180E+02	1.151E+02
PSDF	EL STR	0	22959(5)	1.284941E+02	1.950757E+02	1.000E+01	2.000E+03	0.000E+00	1.000E+01	1.340E+03	1.151E+02
PSDF	EL STR	0	22959(7)	5.423639E+02	2.016208E+02	1.000E+01	2.000E+03	0.000E+00	1.000E+01	8.349E+03	9.250E+01
PSDF	EL STR	0	22960(3)	3.628410E+01	2.109126E+02	1.000E+01	2.000E+03	0.000E+00	1.000E+01	3.974E+01	1.159E+02
PSDF	EL STR	0	22960(5)	1.224946E+02	2.052370E+02	1.000E+01	2.000E+03	0.000E+00	1.000E+01	5.328E+02	1.151E+02
PSDF	EL STR	0	22960(7)	5.219552E+02	2.090349E+02	1.000E+01	2.000E+03	0.000E+00	1.000E+01	8.330E+03	9.250E+01
PSDF	EL STR	0	22961(3)	5.684983E+01	2.112054E+02	1.000E+01	2.000E+03	0.000E+00	1.000E+01	1.049E+02	1.820E+02
PSDF	EL STR	0	22961(5)	1.830913E+02	2.092646E+02	1.000E+01	2.000E+03	0.000E+00	1.000E+01	1.048E+03	1.820E+02
PSDF	EL STR	0	22961(7)	4.136156E+02	2.206312E+02	1.000E+01	2.000E+03	0.000E+00	1.000E+01	5.826E+03	2.020E+02
PSDF	EL STR	0	22962(3)	6.998249E+01	2.144651E+02	1.000E+01	2.000E+03	0.000E+00	1.000E+01	1.592E+02	1.820E+02
PSDF	EL STR	0	22962(5)	2.240433E+02	2.127193E+02	1.000E+01	2.000E+03	0.000E+00	1.000E+01	1.648E+03	9.250E+01
PSDF	EL STR	0	22962(7)	3.077309E+02	2.265114E+02	1.000E+01	2.000E+03	0.000E+00	1.000E+01	5.580E+03	2.020E+02
PSDF	EL STR	0	22963(3)	6.659038E+01	2.197807E+02	1.000E+01	2.000E+03	0.000E+00	1.000E+01	1.468E+02	9.250E+01
PSDF	EL STR	0	22963(5)	2.272229E+02	2.190181E+02	1.000E+01	2.000E+03	0.000E+00	1.000E+01	1.718E+03	9.250E+01
PSDF	EL STR	0	22963(7)	3.588607E+02	2.003232E+02	1.000E+01	2.000E+03	0.000E+00	1.000E+01	5.376E+03	2.020E+02
PSDF	EL STR	0	22964(3)	5.619522E+01	2.315004E+02	1.000E+01	2.000E+03	0.000E+00	1.000E+01	9.470E+01	9.250E+01
PSDF	EL STR	0	22964(5)	1.888621E+02	2.300956E+02	1.000E+01	2.000E+03	0.000E+00	1.000E+01	1.095E+03	9.250E+01
PSDF	EL STR	0	22964(7)	5.022465E+02	1.917301E+02	1.000E+01	2.000E+03	0.000E+00	1.000E+01	6.139E+03	1.028E+02
PSDF	EL STR	0	22965(3)	1.627421E+01	2.365844E+02	1.000E+01	2.000E+03	0.000E+00	1.000E+01	1.265E+01	1.028E+02
PSDF	EL STR	0	22965(5)	3.293869E+02	1.685910E+02	1.000E+01	2.000E+03	0.000E+00	1.000E+01	6.217E+03	1.028E+02
PSDF	EL STR	0	22965(7)	1.104444E+02	2.187317E+02	1.000E+01	2.000E+03	0.000E+00	1.000E+01	3.047E+02	1.820E+02
PSDF	EL STR	0	23372(3)	3.177334E+03	1.244196E+02	1.000E+01	2.000E+03	0.000E+00	1.000E+01	6.770E+05	1.028E+02
PSDF	EL STR	0	23372(5)	4.623518E+03	1.232801E+02	1.000E+01	2.000E+03	0.000E+00	1.000E+01	1.563E+06	1.028E+02
PSDF	EL STR	0	23372(7)	1.291324E+03	1.159683E+02	1.000E+01	2.000E+03	0.000E+00	1.000E+01	1.552E+05	1.021E+02

Y AXIS PSD RESPONSE

X Y - O U T P U T S U M M A R Y (A U T O O R P S D F)

PLOT TYPE	CURVE TYPE	FRAME NO.	CURVE ID.	RMS VALUE	NO. POSITIVE CROSSINGS	XMIN FOR ALL DATA	XMAX FOR ALL DATA	YMIN FOR ALL DATA	X FOR YMIN	YMAX FOR ALL DATA	X FOR* YMAX
PSDF	EL STR	0	23373(3)	2.954557E+03	1.278074E+02	1.000E+01	2.000E+03	0.000E+00	1.000E+01	6.747E+05	1.151E+02
PSDF	EL STR	0	23373(5)	4.190894E+03	1.283284E+02	1.000E+01	2.000E+03	0.000E+00	1.000E+01	1.332E+06	1.151E+02
PSDF	EL STR	0	23373(7)	1.342224E+03	1.138279E+02	1.000E+01	2.000E+03	0.000E+00	1.000E+01	1.755E+05	1.021E+02
PSDF	EL STR	0	23374(3)	2.904319E+03	1.296894E+02	1.000E+01	2.000E+03	0.000E+00	1.000E+01	7.560E+05	1.151E+02
PSDF	EL STR	0	23374(5)	4.140162E+03	1.305733E+02	1.000E+01	2.000E+03	0.000E+00	1.000E+01	1.516E+06	1.151E+02
PSDF	EL STR	0	23374(7)	1.308840E+03	1.128869E+02	1.000E+01	2.000E+03	0.000E+00	1.000E+01	1.725E+05	1.021E+02
PSDF	EL STR	0	23375(3)	3.018127E+03	1.290177E+02	1.000E+01	2.000E+03	0.000E+00	1.000E+01	8.169E+05	1.151E+02
PSDF	EL STR	0	23375(5)	4.448888E+03	1.285649E+02	1.000E+01	2.000E+03	0.000E+00	1.000E+01	1.654E+06	1.151E+02
PSDF	EL STR	0	23375(7)	1.194643E+03	1.133155E+02	1.000E+01	2.000E+03	0.000E+00	1.000E+01	1.469E+05	1.021E+02
PSDF	EL STR	0	23376(3)	3.220409E+03	1.266640E+02	1.000E+01	2.000E+03	0.000E+00	1.000E+01	8.499E+05	1.151E+02
PSDF	EL STR	0	23376(5)	4.932553E+03	1.246663E+02	1.000E+01	2.000E+03	0.000E+00	1.000E+01	1.728E+06	1.151E+02
PSDF	EL STR	0	23376(7)	1.011230E+03	1.162039E+02	1.000E+01	2.000E+03	0.000E+00	1.000E+01	1.057E+05	1.021E+02
PSDF	EL STR	0	23377(3)	3.415926E+03	1.239285E+02	1.000E+01	2.000E+03	0.000E+00	1.000E+01	8.501E+05	1.151E+02
PSDF	EL STR	0	23377(5)	5.388831E+03	1.209566E+02	1.000E+01	2.000E+03	0.000E+00	1.000E+01	1.793E+06	9.312E+01
PSDF	EL STR	0	23377(7)	7.813067E+02	1.250010E+02	1.000E+01	2.000E+03	0.000E+00	1.000E+01	5.987E+04	1.021E+02
PSDF	EL STR	0	23378(3)	3.528572E+03	1.215287E+02	1.000E+01	2.000E+03	0.000E+00	1.000E+01	8.169E+05	1.151E+02
PSDF	EL STR	0	23378(5)	5.672770E+03	1.180618E+02	1.000E+01	2.000E+03	0.000E+00	1.000E+01	2.094E+06	9.312E+01
PSDF	EL STR	0	23378(7)	5.515498E+02	1.485538E+02	1.000E+01	2.000E+03	0.000E+00	1.000E+01	2.277E+04	1.028E+02
PSDF	EL STR	0	23379(3)	3.510322E+03	1.197553E+02	1.000E+01	2.000E+03	0.000E+00	1.000E+01	7.541E+05	1.151E+02
PSDF	EL STR	0	23379(5)	5.699104E+03	1.160311E+02	1.000E+01	2.000E+03	0.000E+00	1.000E+01	2.129E+06	9.312E+01
PSDF	EL STR	0	23379(7)	4.345777E+02	1.803112E+02	1.000E+01	2.000E+03	0.000E+00	1.000E+01	7.796E+03	1.151E+02
PSDF	EL STR	0	23380(3)	3.341302E+03	1.188409E+02	1.000E+01	2.000E+03	0.000E+00	1.000E+01	6.689E+05	1.151E+02
PSDF	EL STR	0	23380(5)	5.431870E+03	1.149202E+02	1.000E+01	2.000E+03	0.000E+00	1.000E+01	1.889E+06	9.312E+01
PSDF	EL STR	0	23380(7)	5.461127E+02	1.640000E+02	1.000E+01	2.000E+03	0.000E+00	1.000E+01	1.892E+04	9.250E+01

Y AXIS PSD RESPONSE

X Y - O U T P U T S U M M A R Y (A U T O O R P S D F)

PLOT TYPE	CURVE TYPE	FRAME NO.	CURVE ID.	RMS VALUE	NO. POSITIVE CROSSINGS	XMIN FOR ALL DATA	XMAX FOR ALL DATA	YMIN FOR ALL DATA	X FOR YMIN	YMAX FOR ALL DATA	X FOR* YMAX
PSDF	EL STR	0	23381(3)	3.029485E+03	1.192799E+02	1.000E+01	2.000E+03	0.000E+00	1.000E+01	5.709E+05	1.151E+02
PSDF	EL STR	0	23381(5)	4.878963E+03	1.151217E+02	1.000E+01	2.000E+03	0.000E+00	1.000E+01	1.435E+06	9.312E+01
PSDF	EL STR	0	23381(7)	7.781750E+02	1.401424E+02	1.000E+01	2.000E+03	0.000E+00	1.000E+01	4.501E+04	9.312E+01
PSDF	EL STR	0	23382(3)	2.614569E+03	1.222300E+02	1.000E+01	2.000E+03	0.000E+00	1.000E+01	4.704E+05	1.151E+02
PSDF	EL STR	0	23382(5)	4.095656E+03	1.179201E+02	1.000E+01	2.000E+03	0.000E+00	1.000E+01	9.033E+05	9.250E+01
PSDF	EL STR	0	23382(7)	1.015235E+03	1.274819E+02	1.000E+01	2.000E+03	0.000E+00	1.000E+01	7.782E+04	9.312E+01
PSDF	EL STR	0	23383(3)	2.182084E+03	1.297525E+02	1.000E+01	2.000E+03	0.000E+00	1.000E+01	3.768E+05	1.151E+02
PSDF	EL STR	0	23383(5)	3.208947E+03	1.267357E+02	1.000E+01	2.000E+03	0.000E+00	1.000E+01	6.503E+05	1.151E+02
PSDF	EL STR	0	23383(7)	1.208722E+03	1.207699E+02	1.000E+01	2.000E+03	0.000E+00	1.000E+01	1.210E+05	1.021E+02
PSDF	EL STR	0	23384(3)	1.886760E+03	1.417442E+02	1.000E+01	2.000E+03	0.000E+00	1.000E+01	2.968E+05	1.151E+02
PSDF	EL STR	0	23384(5)	2.497061E+03	1.455945E+02	1.000E+01	2.000E+03	0.000E+00	1.000E+01	4.803E+05	1.151E+02
PSDF	EL STR	0	23384(7)	1.334915E+03	1.169075E+02	1.000E+01	2.000E+03	0.000E+00	1.000E+01	1.598E+05	1.021E+02
PSDF	EL STR	0	23385(3)	1.911775E+03	1.481194E+02	1.000E+01	2.000E+03	0.000E+00	1.000E+01	2.348E+05	1.151E+02
PSDF	EL STR	0	23385(5)	2.433817E+03	1.570686E+02	1.000E+01	2.000E+03	0.000E+00	1.000E+01	3.536E+05	1.151E+02
PSDF	EL STR	0	23385(7)	1.381130E+03	1.146264E+02	1.000E+01	2.000E+03	0.000E+00	1.000E+01	1.803E+05	1.021E+02
PSDF	EL STR	0	23386(3)	2.273071E+03	1.432725E+02	1.000E+01	2.000E+03	0.000E+00	1.000E+01	3.625E+05	1.028E+02
PSDF	EL STR	0	23386(5)	3.129729E+03	1.458938E+02	1.000E+01	2.000E+03	0.000E+00	1.000E+01	7.302E+05	1.028E+02
PSDF	EL STR	0	23386(7)	1.342800E+03	1.134885E+02	1.000E+01	2.000E+03	0.000E+00	1.000E+01	1.772E+05	1.021E+02
PSDF	EL STR	0	23387(3)	2.805561E+03	1.356658E+02	1.000E+01	2.000E+03	0.000E+00	1.000E+01	7.007E+05	1.028E+02
PSDF	EL STR	0	23387(5)	4.152374E+03	1.337542E+02	1.000E+01	2.000E+03	0.000E+00	1.000E+01	1.612E+06	1.028E+02
PSDF	EL STR	0	23387(7)	1.222775E+03	1.136028E+02	1.000E+01	2.000E+03	0.000E+00	1.000E+01	1.512E+05	1.021E+02
PSDF	EL STR	0	23389(3)	3.353498E+03	1.296797E+02	1.000E+01	2.000E+03	0.000E+00	1.000E+01	1.099E+06	1.028E+02
PSDF	EL STR	0	23389(5)	5.171833E+03	1.261659E+02	1.000E+01	2.000E+03	0.000E+00	1.000E+01	2.697E+06	1.028E+02
PSDF	EL STR	0	23389(7)	1.031461E+03	1.158954E+02	1.000E+01	2.000E+03	0.000E+00	1.000E+01	1.092E+05	1.021E+02

Y AXIS PSD RESPONSE

X Y - O U T P U T S U M M A R Y (A U T O O R P S D F)

PLOT TYPE	CURVE TYPE	FRAME NO.	CURVE ID.	RMS VALUE	NO. POSITIVE CROSSINGS	XMIN FOR ALL DATA	XMAX FOR ALL DATA	YMIN FOR ALL DATA	X FOR YMIN	YMAX FOR ALL DATA	X FOR* YMAX
PSDF	EL STR	0	23390(3)	3.820748E+03	1.254934E+02	1.000E+01	2.000E+03	0.000E+00	1.000E+01	1.489E+06	1.028E+02
PSDF	EL STR	0	23390(5)	6.021774E+03	1.215330E+02	1.000E+01	2.000E+03	0.000E+00	1.000E+01	3.795E+06	1.021E+02
PSDF	EL STR	0	23390(7)	7.889445E+02	1.235468E+02	1.000E+01	2.000E+03	0.000E+00	1.000E+01	6.252E+04	1.021E+02
PSDF	EL STR	0	23391(3)	4.151497E+03	1.226059E+02	1.000E+01	2.000E+03	0.000E+00	1.000E+01	1.796E+06	1.028E+02
PSDF	EL STR	0	23391(5)	6.611733E+03	1.185939E+02	1.000E+01	2.000E+03	0.000E+00	1.000E+01	4.667E+06	1.021E+02
PSDF	EL STR	0	23391(7)	5.346874E+02	1.467478E+02	1.000E+01	2.000E+03	0.000E+00	1.000E+01	2.386E+04	1.028E+02
PSDF	EL STR	0	23392(3)	4.316783E+03	1.206554E+02	1.000E+01	2.000E+03	0.000E+00	1.000E+01	1.961E+06	1.028E+02
PSDF	EL STR	0	23392(5)	6.894956E+03	1.167298E+02	1.000E+01	2.000E+03	0.000E+00	1.000E+01	5.126E+06	1.028E+02
PSDF	EL STR	0	23392(7)	3.762003E+02	1.898915E+02	1.000E+01	2.000E+03	0.000E+00	1.000E+01	6.647E+03	9.188E+01
PSDF	EL STR	0	23393(3)	4.309880E+03	1.194800E+02	1.000E+01	2.000E+03	0.000E+00	1.000E+01	1.951E+06	1.028E+02
PSDF	EL STR	0	23393(5)	6.860430E+03	1.156987E+02	1.000E+01	2.000E+03	0.000E+00	1.000E+01	5.102E+06	1.028E+02
PSDF	EL STR	0	23393(7)	4.744656E+02	1.708986E+02	1.000E+01	2.000E+03	0.000E+00	1.000E+01	1.907E+04	9.250E+01
PSDF	EL STR	0	23394(3)	4.145038E+03	1.190888E+02	1.000E+01	2.000E+03	0.000E+00	1.000E+01	1.769E+06	1.028E+02
PSDF	EL STR	0	23394(5)	6.532012E+03	1.155135E+02	1.000E+01	2.000E+03	0.000E+00	1.000E+01	4.588E+06	1.028E+02
PSDF	EL STR	0	23394(7)	7.153129E+02	1.407453E+02	1.000E+01	2.000E+03	0.000E+00	1.000E+01	4.485E+04	9.250E+01
PSDF	EL STR	0	23395(3)	3.858460E+03	1.196468E+02	1.000E+01	2.000E+03	0.000E+00	1.000E+01	1.452E+06	1.028E+02
PSDF	EL STR	0	23395(5)	5.971153E+03	1.164242E+02	1.000E+01	2.000E+03	0.000E+00	1.000E+01	3.697E+06	1.028E+02
PSDF	EL STR	0	23395(7)	9.603948E+02	1.266775E+02	1.000E+01	2.000E+03	0.000E+00	1.000E+01	7.717E+04	9.312E+01
PSDF	EL STR	0	23396(3)	3.508846E+03	1.214100E+02	1.000E+01	2.000E+03	0.000E+00	1.000E+01	1.063E+06	1.028E+02
PSDF	EL STR	0	23396(5)	5.282842E+03	1.189047E+02	1.000E+01	2.000E+03	0.000E+00	1.000E+01	2.616E+06	1.028E+02
PSDF	EL STR	0	23396(7)	1.160021E+03	1.197655E+02	1.000E+01	2.000E+03	0.000E+00	1.000E+01	1.170E+05	1.021E+02
PSDF	EL STR	0	22530(3)	2.290610E+03	1.296396E+02	1.000E+01	2.000E+03	0.000E+00	1.000E+01	3.755E+05	1.159E+02
PSDF	EL STR	0	22530(5)	9.513098E+02	1.129215E+02	1.000E+01	2.000E+03	0.000E+00	1.000E+01	1.293E+05	1.028E+02
PSDF	EL STR	0	22530(7)	1.218349E+03	1.172819E+02	1.000E+01	2.000E+03	0.000E+00	1.000E+01	2.070E+05	1.028E+02

Y AXIS PSD RESPONSE

X Y - O U T P U T S U M M A R Y (A U T O O R P S D F)

PLOT TYPE	CURVE TYPE	FRAME NO.	CURVE ID.	RMS VALUE	NO. POSITIVE CROSSINGS	XMIN FOR ALL DATA	XMAX FOR ALL DATA	YMIN FOR ALL DATA	X FOR YMIN	YMAX FOR ALL DATA	X FOR* YMAX
PSDF	EL STR	0	22581(3)	6.053223E+02	1.110836E+02	1.000E+01	2.000E+03	0.000E+00	1.000E+01	5.317E+04	1.028E+02
PSDF	EL STR	0	22581(5)	2.375025E+02	1.262598E+02	1.000E+01	2.000E+03	0.000E+00	1.000E+01	6.060E+03	1.151E+02
PSDF	EL STR	0	22581(7)	7.224830E+02	1.192502E+02	1.000E+01	2.000E+03	0.000E+00	1.000E+01	4.823E+04	1.159E+02
PSDF	EL STR	0	22535(3)	2.522088E+03	1.225018E+02	1.000E+01	2.000E+03	0.000E+00	1.000E+01	4.620E+05	1.159E+02
PSDF	EL STR	0	22535(5)	4.652252E+02	1.731612E+02	1.000E+01	2.000E+03	0.000E+00	1.000E+01	2.915E+04	1.028E+02
PSDF	EL STR	0	22535(7)	7.043057E+02	1.307287E+02	1.000E+01	2.000E+03	0.000E+00	1.000E+01	3.576E+04	1.151E+02
PSDF	EL STR	0	22536(3)	4.120957E+03	1.218004E+02	1.000E+01	2.000E+03	0.000E+00	1.000E+01	1.231E+06	1.021E+02
PSDF	EL STR	0	22536(5)	1.733109E+03	1.199005E+02	1.000E+01	2.000E+03	0.000E+00	1.000E+01	2.425E+05	1.159E+02
PSDF	EL STR	0	22536(7)	9.003936E+02	1.234685E+02	1.000E+01	2.000E+03	0.000E+00	1.000E+01	8.454E+04	1.028E+02
PSDF	EL STR	0	22580(3)	3.199988E+03	1.150696E+02	1.000E+01	2.000E+03	0.000E+00	1.000E+01	1.293E+06	1.028E+02
PSDF	EL STR	0	22580(5)	3.129495E+02	1.184422E+02	1.000E+01	2.000E+03	0.000E+00	1.000E+01	1.385E+04	1.028E+02
PSDF	EL STR	0	22580(7)	1.309003E+03	1.190213E+02	1.000E+01	2.000E+03	0.000E+00	1.000E+01	1.444E+05	1.159E+02
PSDF	EL STR	0	22541(3)	1.926971E+03	1.204243E+02	1.000E+01	2.000E+03	0.000E+00	1.000E+01	2.699E+05	1.159E+02
PSDF	EL STR	0	22541(5)	6.372791E+02	1.534376E+02	1.000E+01	2.000E+03	0.000E+00	1.000E+01	3.362E+04	1.028E+02
PSDF	EL STR	0	22541(7)	1.036317E+03	1.274646E+02	1.000E+01	2.000E+03	0.000E+00	1.000E+01	1.274E+05	1.151E+02
PSDF	EL STR	0	22542(3)	2.575767E+03	1.200356E+02	1.000E+01	2.000E+03	0.000E+00	1.000E+01	5.261E+05	1.021E+02
PSDF	EL STR	0	22542(5)	1.029797E+03	1.156758E+02	1.000E+01	2.000E+03	0.000E+00	1.000E+01	1.248E+05	1.028E+02
PSDF	EL STR	0	22542(7)	1.237539E+03	1.235483E+02	1.000E+01	2.000E+03	0.000E+00	1.000E+01	1.738E+05	1.151E+02
PSDF	EL STR	0	22579(3)	2.960309E+03	1.189455E+02	1.000E+01	2.000E+03	0.000E+00	1.000E+01	7.592E+05	1.159E+02
PSDF	EL STR	0	22579(5)	1.777536E+02	1.219341E+02	1.000E+01	2.000E+03	0.000E+00	1.000E+01	3.832E+03	1.151E+02
PSDF	EL STR	0	22579(7)	7.476175E+02	1.212242E+02	1.000E+01	2.000E+03	0.000E+00	1.000E+01	5.069E+04	1.021E+02
PSDF	EL STR	0	22593(3)	4.293979E+03	1.211580E+02	1.000E+01	2.000E+03	0.000E+00	1.000E+01	1.434E+06	1.021E+02
PSDF	EL STR	0	22593(5)	6.218888E+01	1.428471E+02	1.000E+01	2.000E+03	0.000E+00	1.000E+01	5.028E+02	1.028E+02
PSDF	EL STR	0	22593(7)	2.121638E+02	1.544750E+02	1.000E+01	2.000E+03	0.000E+00	1.000E+01	3.315E+03	1.021E+02

Y AXIS PSD RESPONSE

X Y - O U T P U T S U M M A R Y (A U T O O R P S D F)

PLOT TYPE	CURVE TYPE	FRAME NO.	CURVE ID.	RMS VALUE	NO. POSITIVE CROSSINGS	XMIN FOR ALL DATA	XMAX FOR ALL DATA	YMIN FOR ALL DATA	X FOR YMIN	YMAX FOR ALL DATA	X FOR* YMAX
PSDF	EL STR	0	22594(3)	4.597040E+03	1.227448E+02	1.000E+01	2.000E+03	0.000E+00	1.000E+01	1.742E+06	1.021E+02
PSDF	EL STR	0	22594(5)	5.152380E+02	1.272083E+02	1.000E+01	2.000E+03	0.000E+00	1.000E+01	3.111E+04	1.028E+02
PSDF	EL STR	0	22594(7)	3.002483E+02	1.427480E+02	1.000E+01	2.000E+03	0.000E+00	1.000E+01	7.498E+03	1.021E+02
PSDF	EL STR	0	22547(3)	1.110361E+03	1.218582E+02	1.000E+01	2.000E+03	0.000E+00	1.000E+01	8.828E+04	1.021E+02
PSDF	EL STR	0	22547(5)	8.701371E+02	1.379949E+02	1.000E+01	2.000E+03	0.000E+00	1.000E+01	5.875E+04	1.021E+02
PSDF	EL STR	0	22547(7)	1.187780E+03	1.263937E+02	1.000E+01	2.000E+03	0.000E+00	1.000E+01	1.487E+05	1.159E+02
PSDF	EL STR	0	22548(3)	6.470756E+02	1.227517E+02	1.000E+01	2.000E+03	0.000E+00	1.000E+01	3.070E+04	1.021E+02
PSDF	EL STR	0	22548(5)	8.946868E+02	1.197196E+02	1.000E+01	2.000E+03	0.000E+00	1.000E+01	5.764E+04	1.021E+02
PSDF	EL STR	0	22548(7)	1.282555E+03	1.244701E+02	1.000E+01	2.000E+03	0.000E+00	1.000E+01	1.847E+05	1.151E+02
PSDF	EL STR	0	22584(3)	1.204455E+02	1.218905E+02	1.000E+01	2.000E+03	0.000E+00	1.000E+01	1.562E+03	1.028E+02
PSDF	EL STR	0	22584(5)	1.558813E+03	1.210412E+02	1.000E+01	2.000E+03	0.000E+00	1.000E+01	2.441E+05	1.159E+02
PSDF	EL STR	0	22584(7)	6.170526E+02	1.209455E+02	1.000E+01	2.000E+03	0.000E+00	1.000E+01	2.859E+04	1.159E+02
PSDF	EL STR	0	22587(3)	9.164353E+01	1.506190E+02	1.000E+01	2.000E+03	0.000E+00	1.000E+01	6.359E+02	1.028E+02
PSDF	EL STR	0	22587(5)	3.740830E+02	1.207222E+02	1.000E+01	2.000E+03	0.000E+00	1.000E+01	1.072E+04	1.021E+02
PSDF	EL STR	0	22587(7)	2.539021E+02	1.231794E+02	1.000E+01	2.000E+03	0.000E+00	1.000E+01	5.516E+03	1.159E+02
PSDF	EL STR	0	22588(3)	2.547077E+02	1.369439E+02	1.000E+01	2.000E+03	0.000E+00	1.000E+01	7.323E+03	1.028E+02
PSDF	EL STR	0	22588(5)	3.335928E+02	1.228905E+02	1.000E+01	2.000E+03	0.000E+00	1.000E+01	7.981E+03	1.159E+02
PSDF	EL STR	0	22588(7)	5.360300E+02	1.295807E+02	1.000E+01	2.000E+03	0.000E+00	1.000E+01	3.262E+04	1.028E+02
PSDF	EL STR	0	22605(3)	2.952501E+02	1.325132E+02	1.000E+01	2.000E+03	0.000E+00	1.000E+01	1.028E+04	1.151E+02
PSDF	EL STR	0	22605(5)	1.975782E+01	1.323326E+02	1.000E+01	2.000E+03	0.000E+00	1.000E+01	3.984E+01	1.151E+02
PSDF	EL STR	0	22605(7)	3.749466E+01	1.805322E+02	1.000E+01	2.000E+03	0.000E+00	1.000E+01	8.345E+01	1.021E+02
PSDF	EL STR	0	22628(3)	1.872147E+02	1.438285E+02	1.000E+01	2.000E+03	0.000E+00	1.000E+01	4.178E+03	1.151E+02
PSDF	EL STR	0	22628(5)	1.176691E+01	1.836494E+02	1.000E+01	2.000E+03	0.000E+00	1.000E+01	1.129E+01	1.151E+02
PSDF	EL STR	0	22628(7)	6.942155E+01	1.973397E+02	1.000E+01	2.000E+03	0.000E+00	1.000E+01	2.656E+02	1.021E+02

Y AXIS PSD RESPONSE

X Y - O U T P U T S U M M A R Y (A U T O O R P S D F)

PLOT TYPE	CURVE TYPE	FRAME NO.	CURVE ID.	RMS VALUE	NO. POSITIVE CROSSINGS	XMIN FOR ALL DATA	XMAX FOR ALL DATA	YMIN FOR ALL DATA	X FOR YMIN	YMAX FOR ALL DATA	X FOR* YMAX
PSDF	EL STR	0	22637(3)	4.718486E+02	1.243474E+02	1.000E+01	2.000E+03	0.000E+00	1.000E+01	2.391E+04	1.159E+02
PSDF	EL STR	0	22637(5)	2.429588E+02	1.248826E+02	1.000E+01	2.000E+03	0.000E+00	1.000E+01	7.222E+03	1.151E+02
PSDF	EL STR	0	22637(7)	1.637388E+02	1.268362E+02	1.000E+01	2.000E+03	0.000E+00	1.000E+01	3.278E+03	1.151E+02
PSDF	EL STR	0	22638(3)	1.664276E+02	1.334224E+02	1.000E+01	2.000E+03	0.000E+00	1.000E+01	3.339E+03	1.151E+02
PSDF	EL STR	0	22638(5)	2.699217E+02	1.255426E+02	1.000E+01	2.000E+03	0.000E+00	1.000E+01	8.850E+03	1.151E+02
PSDF	EL STR	0	22638(7)	6.662352E+02	1.248195E+02	1.000E+01	2.000E+03	0.000E+00	1.000E+01	5.310E+04	1.151E+02
PSDF	EL STR	0	22705(3)	7.094031E+02	1.184188E+02	1.000E+01	2.000E+03	0.000E+00	1.000E+01	6.359E+04	1.028E+02
PSDF	EL STR	0	22705(5)	2.236304E+02	1.257592E+02	1.000E+01	2.000E+03	0.000E+00	1.000E+01	6.231E+03	1.151E+02
PSDF	EL STR	0	22705(7)	1.203406E+02	1.308494E+02	1.000E+01	2.000E+03	0.000E+00	1.000E+01	1.504E+03	1.151E+02
PSDF	EL STR	0	22706(3)	7.710328E+02	1.237708E+02	1.000E+01	2.000E+03	0.000E+00	1.000E+01	6.568E+04	1.028E+02
PSDF	EL STR	0	22706(5)	3.309369E+02	1.307182E+02	1.000E+01	2.000E+03	0.000E+00	1.000E+01	1.339E+04	1.151E+02
PSDF	EL STR	0	22706(7)	3.544461E+02	1.455890E+02	1.000E+01	2.000E+03	0.000E+00	1.000E+01	9.817E+03	1.151E+02
PSDF	EL STR	0	22654(3)	7.172556E+02	1.154853E+02	1.000E+01	2.000E+03	0.000E+00	1.000E+01	7.466E+04	1.028E+02
PSDF	EL STR	0	22654(5)	9.408025E+01	1.437928E+02	1.000E+01	2.000E+03	0.000E+00	1.000E+01	7.239E+02	1.151E+02
PSDF	EL STR	0	22654(7)	1.140822E+02	1.506323E+02	1.000E+01	2.000E+03	0.000E+00	1.000E+01	6.211E+02	1.028E+02
PSDF	EL STR	0	22655(3)	8.167252E+02	1.126933E+02	1.000E+01	2.000E+03	0.000E+00	1.000E+01	9.524E+04	1.028E+02
PSDF	EL STR	0	22655(5)	1.005043E+02	1.324581E+02	1.000E+01	2.000E+03	0.000E+00	1.000E+01	6.496E+02	1.159E+02
PSDF	EL STR	0	22655(7)	7.595737E+01	1.503913E+02	1.000E+01	2.000E+03	0.000E+00	1.000E+01	3.203E+02	1.159E+02
PSDF	EL STR	0	22658(3)	2.635275E+02	1.273792E+02	1.000E+01	2.000E+03	0.000E+00	1.000E+01	6.057E+03	1.159E+02
PSDF	EL STR	0	22658(5)	1.129234E+02	1.374986E+02	1.000E+01	2.000E+03	0.000E+00	1.000E+01	1.491E+03	1.151E+02
PSDF	EL STR	0	22658(7)	7.836949E+01	1.353062E+02	1.000E+01	2.000E+03	0.000E+00	1.000E+01	5.070E+02	1.151E+02
PSDF	EL STR	0	22689(3)	2.115413E+03	1.389792E+02	1.000E+01	2.000E+03	0.000E+00	1.000E+01	3.352E+05	1.159E+02
PSDF	EL STR	0	22689(5)	6.668189E+02	1.452631E+02	1.000E+01	2.000E+03	0.000E+00	1.000E+01	4.417E+04	1.151E+02
PSDF	EL STR	0	22689(7)	3.360694E+02	1.613206E+02	1.000E+01	2.000E+03	0.000E+00	1.000E+01	6.104E+03	1.410E+02

Y AXIS PSD RESPONSE

X Y - O U T P U T S U M M A R Y (A U T O O R P S D F)

PLOT TYPE	CURVE TYPE	FRAME NO.	CURVE ID.	RMS VALUE	NO. POSITIVE CROSSINGS	XMIN FOR ALL DATA	XMAX FOR ALL DATA	YMIN FOR ALL DATA	X FOR YMIN	YMAX FOR ALL DATA	X FOR* YMAX
PSDF	EL STR	0	22688(3)	1.828466E+03	1.462508E+02	1.000E+01	2.000E+03	0.000E+00	1.000E+01	3.405E+05	1.151E+02
PSDF	EL STR	0	22688(5)	8.333004E+02	1.391053E+02	1.000E+01	2.000E+03	0.000E+00	1.000E+01	5.918E+04	1.151E+02
PSDF	EL STR	0	22688(7)	1.732404E+02	2.608614E+02	1.000E+01	2.000E+03	0.000E+00	1.000E+01	1.215E+03	1.021E+02
PSDF	EL STR	0	22687(3)	2.334295E+03	1.467741E+02	1.000E+01	2.000E+03	0.000E+00	1.000E+01	5.420E+05	1.151E+02
PSDF	EL STR	0	22687(5)	9.365609E+01	1.650228E+02	1.000E+01	2.000E+03	0.000E+00	1.000E+01	4.390E+02	1.151E+02
PSDF	EL STR	0	22687(7)	4.774634E+02	1.484136E+02	1.000E+01	2.000E+03	0.000E+00	1.000E+01	2.314E+04	1.151E+02
PSDF	EL STR	0	22702(3)	1.604959E+02	1.667154E+02	1.000E+01	2.000E+03	0.000E+00	1.000E+01	1.438E+03	1.151E+02
PSDF	EL STR	0	22702(5)	8.151625E+01	1.532744E+02	1.000E+01	2.000E+03	0.000E+00	1.000E+01	8.072E+02	1.028E+02
PSDF	EL STR	0	22702(7)	7.754212E+01	1.394823E+02	1.000E+01	2.000E+03	0.000E+00	1.000E+01	4.213E+02	1.028E+02
PSDF	EL STR	0	22407(3)	2.220574E+03	1.433548E+02	1.000E+01	2.000E+03	0.000E+00	1.000E+01	5.087E+05	1.151E+02
PSDF	EL STR	0	22407(5)	2.842692E+02	2.039725E+02	1.000E+01	2.000E+03	0.000E+00	1.000E+01	4.517E+03	1.159E+02
PSDF	EL STR	0	22407(7)	4.339274E+02	1.471203E+02	1.000E+01	2.000E+03	0.000E+00	1.000E+01	1.783E+04	1.028E+02
PSDF	EL STR	0	22686(3)	3.488385E+03	1.451120E+02	1.000E+01	2.000E+03	0.000E+00	1.000E+01	1.091E+06	1.151E+02
PSDF	EL STR	0	22686(5)	5.216318E+02	1.538734E+02	1.000E+01	2.000E+03	0.000E+00	1.000E+01	2.386E+04	1.151E+02
PSDF	EL STR	0	22686(7)	2.503629E+02	2.809596E+02	1.000E+01	2.000E+03	0.000E+00	1.000E+01	4.214E+03	1.151E+02
PSDF	EL STR	0	22372(3)	7.274856E+02	1.406418E+02	1.000E+01	2.000E+03	0.000E+00	1.000E+01	4.004E+04	1.159E+02
PSDF	EL STR	0	22372(5)	4.117531E+02	1.762077E+02	1.000E+01	2.000E+03	0.000E+00	1.000E+01	1.205E+04	1.151E+02
PSDF	EL STR	0	22372(7)	1.037258E+03	1.535704E+02	1.000E+01	2.000E+03	0.000E+00	1.000E+01	1.032E+05	1.151E+02
PSDF	EL STR	0	22371(3)	1.254599E+03	1.464770E+02	1.000E+01	2.000E+03	0.000E+00	1.000E+01	1.553E+05	1.151E+02
PSDF	EL STR	0	22371(5)	1.194785E+03	1.487611E+02	1.000E+01	2.000E+03	0.000E+00	1.000E+01	1.385E+05	1.151E+02
PSDF	EL STR	0	22371(7)	7.296609E+02	1.474374E+02	1.000E+01	2.000E+03	0.000E+00	1.000E+01	4.434E+04	1.151E+02
PSDF	EL STR	0	22351(3)	2.637398E+02	1.999375E+02	1.000E+01	2.000E+03	0.000E+00	1.000E+01	7.596E+03	1.028E+02
PSDF	EL STR	0	22351(5)	1.958333E+02	3.126235E+02	1.000E+01	2.000E+03	0.000E+00	1.000E+01	2.148E+03	1.151E+02
PSDF	EL STR	0	22351(7)	3.809495E+02	1.583178E+02	1.000E+01	2.000E+03	0.000E+00	1.000E+01	8.048E+03	1.151E+02

Y AXIS PSD RESPONSE

X Y - O U T P U T S U M M A R Y (A U T O O R P S D F)

PLOT TYPE	CURVE TYPE	FRAME NO.	CURVE ID.	RMS VALUE	NO. POSITIVE CROSSINGS	XMIN FOR ALL DATA	XMAX FOR ALL DATA	YMIN FOR ALL DATA	X FOR YMIN	YMAX FOR ALL DATA	X FOR* YMAX
PSDF	EL STR	0	22379(3)	6.418745E+02	1.394412E+02	1.000E+01	2.000E+03	0.000E+00	1.000E+01	4.763E+04	1.151E+02
PSDF	EL STR	0	22379(5)	1.773144E+02	2.040627E+02	1.000E+01	2.000E+03	0.000E+00	1.000E+01	2.745E+03	1.151E+02
PSDF	EL STR	0	22379(7)	4.975699E+02	1.187907E+02	1.000E+01	2.000E+03	0.000E+00	1.000E+01	3.193E+04	1.028E+02

Y AXIS PSD RESPONSE
* * * * D B D I C T P R I N T * * * * SUBDMAP = PRTSUM , DMAP STATEMENT NO. 5

* * * * A N A L Y S I S S U M M A R Y T A B L E * * * *

SEID	PEID	PROJ	VERS	APRCH	SEMG	SEMR	SEKR	SELG	SELR	MODES	DYNRED	SOLLIN	PVALID	SOLNL	LOOPID	DESIGN CYCLE	SENSITIVITY
0	0	1	5	' '	T	T	T	T	T	T	F	T	0	F	-1	0	F

SEID = SUPERELEMENT ID.
PEID = PRIMARY SUPERELEMENT ID OF IMAGE SUPERELEMENT.
PROJ = PROJECT ID NUMBER.
VERS = VERSION ID.
APRCH = BLANK FOR STRUCTURAL ANALYSIS. HEAT FOR HEAT TRANSFER ANALYSIS.
SEMG = STIFFNESS AND MASS MATRIX GENERATION STEP.
SEMR = MASS MATRIX REDUCTION STEP (INCLUDES EIGENVALUE SOLUTION FOR MODES).
SEKR = STIFFNESS MATRIX REDUCTION STEP.
SELG = LOAD MATRIX GENERATION STEP.
SELR = LOAD MATRIX REDUCTION STEP.
MODES = T (TRUE) IF NORMAL MODES OR BUCKLING MODES CALCULATED.
DYNRED = T (TRUE) MEANS GENERALIZED DYNAMIC AND/OR COMPONENT MODE REDUCTION PERFORMED.
SOLLIN = T (TRUE) IF LINEAR SOLUTION EXISTS IN DATABASE.
PVALID = P-DISTRIBUTION ID OF P-VALUE FOR P-ELEMENTS
LOOPID = THE LAST LOOPID VALUE USED IN THE NONLINEAR ANALYSIS. USEFUL FOR RESTARTS.
SOLNL = T (TRUE) IF NONLINEAR SOLUTION EXISTS IN DATABASE.
DESIGN CYCLE = THE LAST DESIGN CYCLE (ONLY VALID IN OPTIMIZATION).
SENSITIVITY = SENSITIVITY MATRIX GENERATION FLAG.

Y AXIS PSD RESPONSE

X Y - O U T P U T S U M M A R Y (A U T O O R P S D F)

PLOT TYPE	CURVE TYPE	FRAME NO.	CURVE ID.	RMS VALUE	NO. POSITIVE CROSSINGS	XMIN FOR ALL DATA	XMAX FOR ALL DATA	YMIN FOR ALL DATA	X FOR YMIN	YMAX FOR ALL DATA	X FOR* YMAX
PSDF	EL FOR	0	22894(2)	5.151848E+02	1.245807E+02	1.000E+01	2.000E+03	0.000E+00	1.000E+01	3.184E+04	1.151E+02
PSDF	EL FOR	0	22895(2)	8.999999E+01	1.667670E+02	1.000E+01	2.000E+03	0.000E+00	1.000E+01	7.086E+02	1.028E+02
PSDF	EL FOR	0	22896(2)	2.874132E+02	1.476030E+02	1.000E+01	2.000E+03	0.000E+00	1.000E+01	7.742E+03	1.028E+02
PSDF	EL FOR	0	22897(2)	5.063741E+02	1.246965E+02	1.000E+01	2.000E+03	0.000E+00	1.000E+01	3.108E+04	1.151E+02
PSDF	EL FOR	0	22898(2)	1.442280E+02	1.269824E+02	1.000E+01	2.000E+03	0.000E+00	1.000E+01	2.551E+03	1.151E+02
PSDF	EL FOR	0	22899(2)	7.079941E+01	1.442409E+02	1.000E+01	2.000E+03	0.000E+00	1.000E+01	5.421E+02	1.151E+02
PSDF	EL FOR	0	22900(2)	6.967831E+01	1.729400E+02	1.000E+01	2.000E+03	0.000E+00	1.000E+01	1.829E+02	1.151E+02
PSDF	EL FOR	0	22901(2)	1.410559E+02	1.405840E+02	1.000E+01	2.000E+03	0.000E+00	1.000E+01	1.628E+03	1.159E+02
PSDF	EL FOR	0	22902(2)	2.948042E+02	1.351899E+02	1.000E+01	2.000E+03	0.000E+00	1.000E+01	1.052E+04	1.151E+02
PSDF	EL FOR	0	22903(2)	2.082131E+02	1.535260E+02	1.000E+01	2.000E+03	0.000E+00	1.000E+01	5.388E+03	1.028E+02
PSDF	EL FOR	0	22904(2)	4.282645E+02	1.271605E+02	1.000E+01	2.000E+03	0.000E+00	1.000E+01	2.257E+04	1.151E+02

Y AXIS PSD RESPONSE
* * * * D B D I C T P R I N T * * * * SUBDMAP = PRTSUM , DMAP STATEMENT NO. 5

* * * * A N A L Y S I S S U M M A R Y T A B L E * * * *

SEID	PEID	PROJ	VERS	APRCH	SEMG	SEMR	SEKR	SELG	SELR	MODES	DYNRED	SOLLIN	PVALID	SOLNL	LOOPID	DESIGN CYCLE	SENSITIVITY
0	0	1	8	' '	T	T	T	T	T	T	F	T	0	F	-1	0	F

SEID = SUPERELEMENT ID.
PEID = PRIMARY SUPERELEMENT ID OF IMAGE SUPERELEMENT.
PROJ = PROJECT ID NUMBER.
VERS = VERSION ID.
APRCH = BLANK FOR STRUCTURAL ANALYSIS. HEAT FOR HEAT TRANSFER ANALYSIS.
SEMG = STIFFNESS AND MASS MATRIX GENERATION STEP.
SEMR = MASS MATRIX REDUCTION STEP (INCLUDES EIGENVALUE SOLUTION FOR MODES).
SEKR = STIFFNESS MATRIX REDUCTION STEP.
SELG = LOAD MATRIX GENERATION STEP.
SELR = LOAD MATRIX REDUCTION STEP.
MODES = T (TRUE) IF NORMAL MODES OR BUCKLING MODES CALCULATED.
DYNRED = T (TRUE) MEANS GENERALIZED DYNAMIC AND/OR COMPONENT MODE REDUCTION PERFORMED.
SOLLIN = T (TRUE) IF LINEAR SOLUTION EXISTS IN DATABASE.
PVALID = P-DISTRIBUTION ID OF P-VALUE FOR P-ELEMENTS
LOOPID = THE LAST LOOPID VALUE USED IN THE NONLINEAR ANALYSIS. USEFUL FOR RESTARTS.
SOLNL = T (TRUE) IF NONLINEAR SOLUTION EXISTS IN DATABASE.
DESIGN CYCLE = THE LAST DESIGN CYCLE (ONLY VALID IN OPTIMIZATION).
SENSITIVITY = SENSITIVITY MATRIX GENERATION FLAG.

Z Axis Output

Acceleration Response Plots

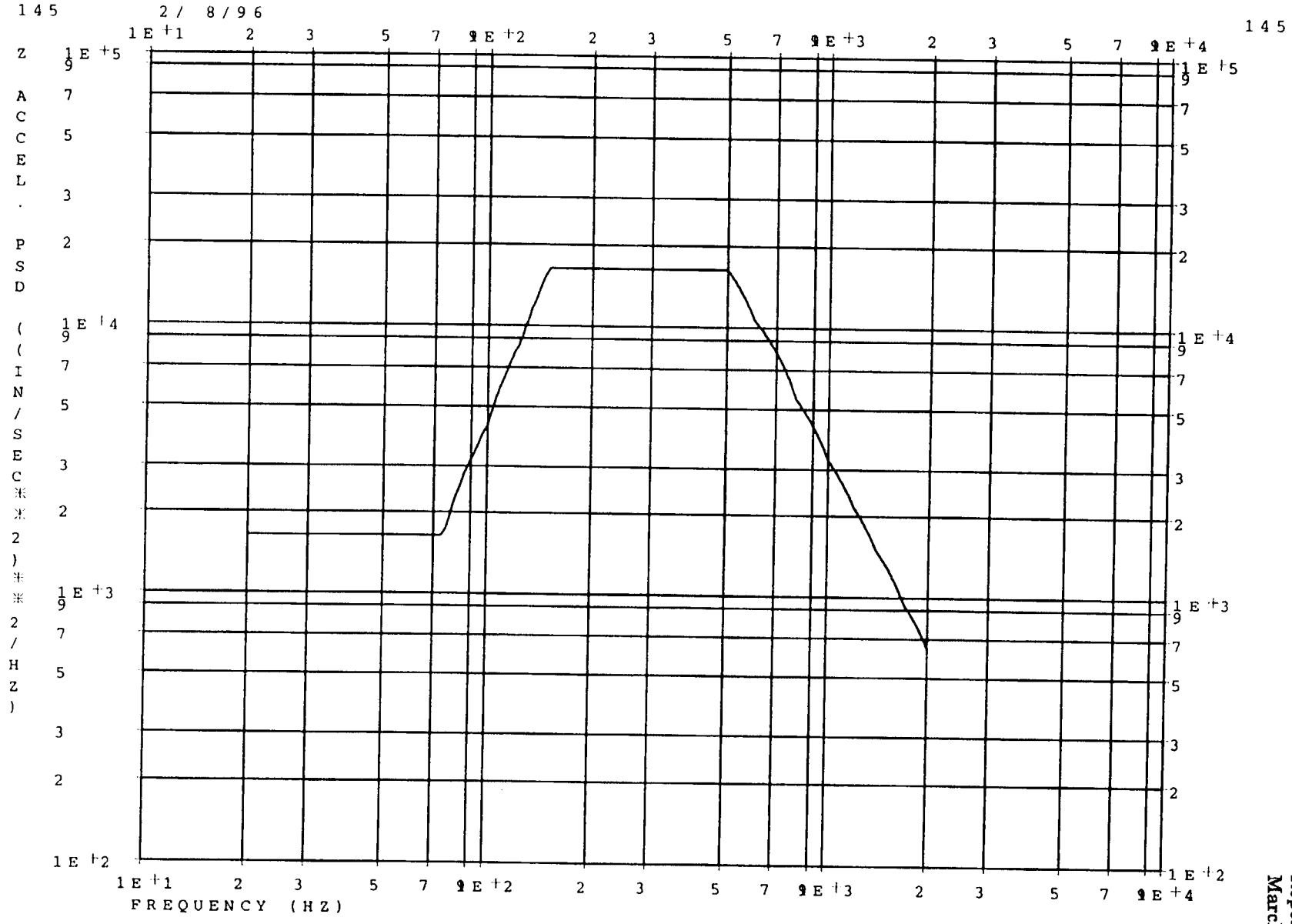

METSAT/AMSU-A2 WITH COI REFLECTOR
QUAL. LEVEL RANDOM VIBRATION (8.8 GRMS)
Z AXIS PSD RESPONSE

Z Axis Input Grid Point 2400

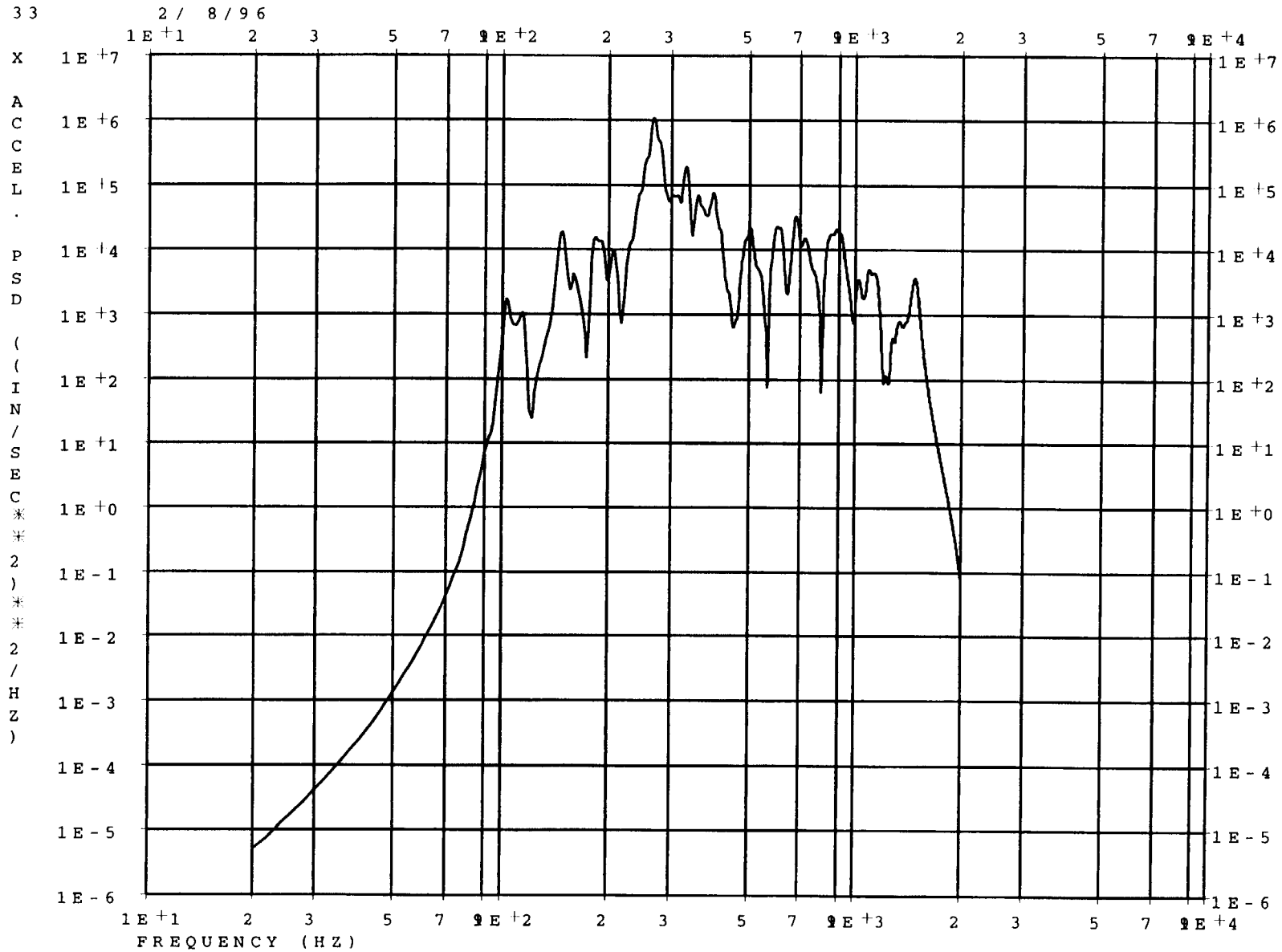

METSAT/AMSU-A2 WITH COI REFLECTOR
QUAL. LEVEL RANDOM VIBRATION (8.8 GRMS)
Z AXIS PSD RESPONSE

X Acceleration Grid Point 2086

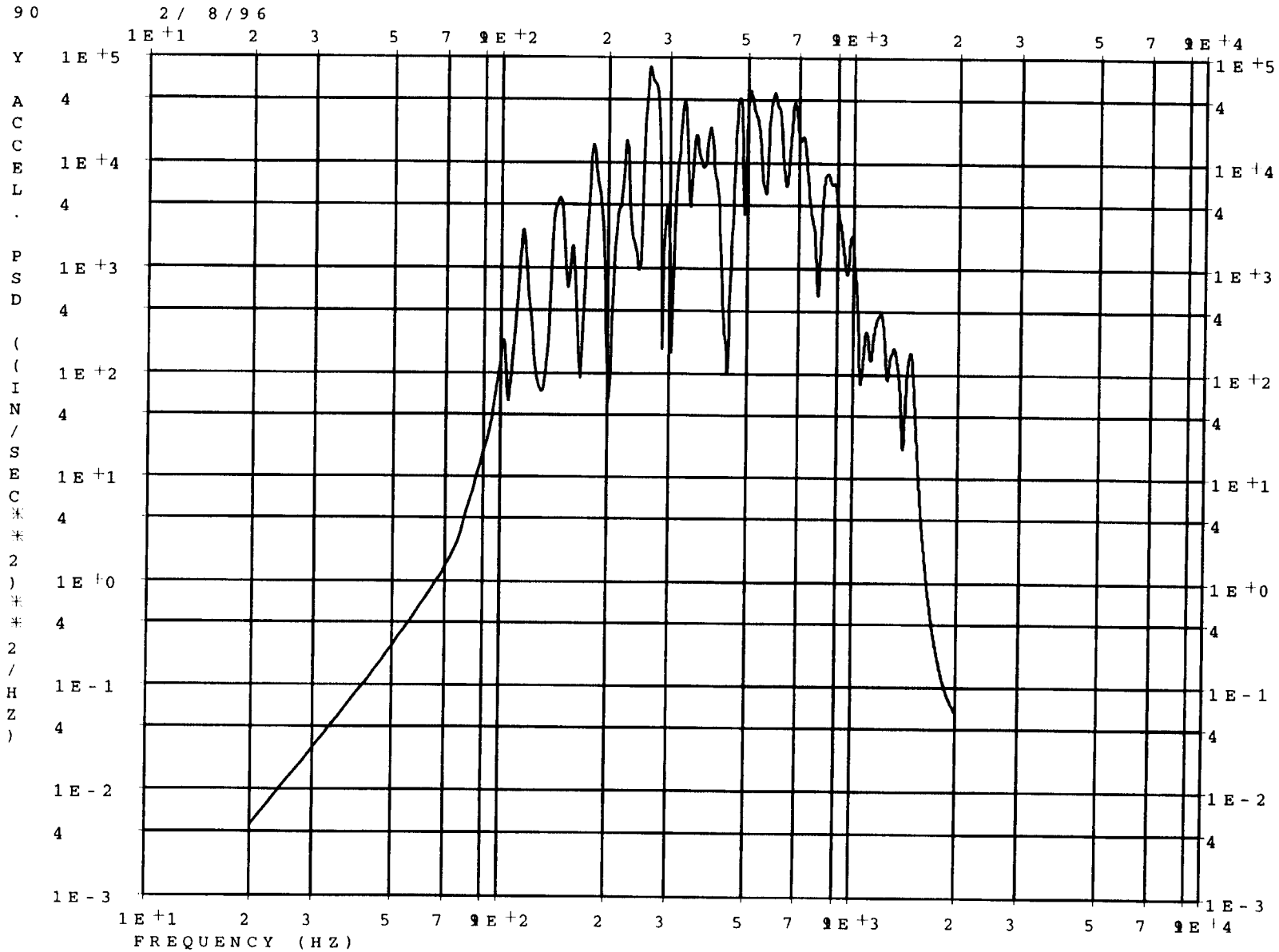

METSAT/AMSU-A2 WITH COI REFLECTOR
QUAL. LEVEL RANDOM VIBRATION (8.8 GRMS)
Z AXIS PSD RESPONSE

Y Acceleration Grid Point 2086

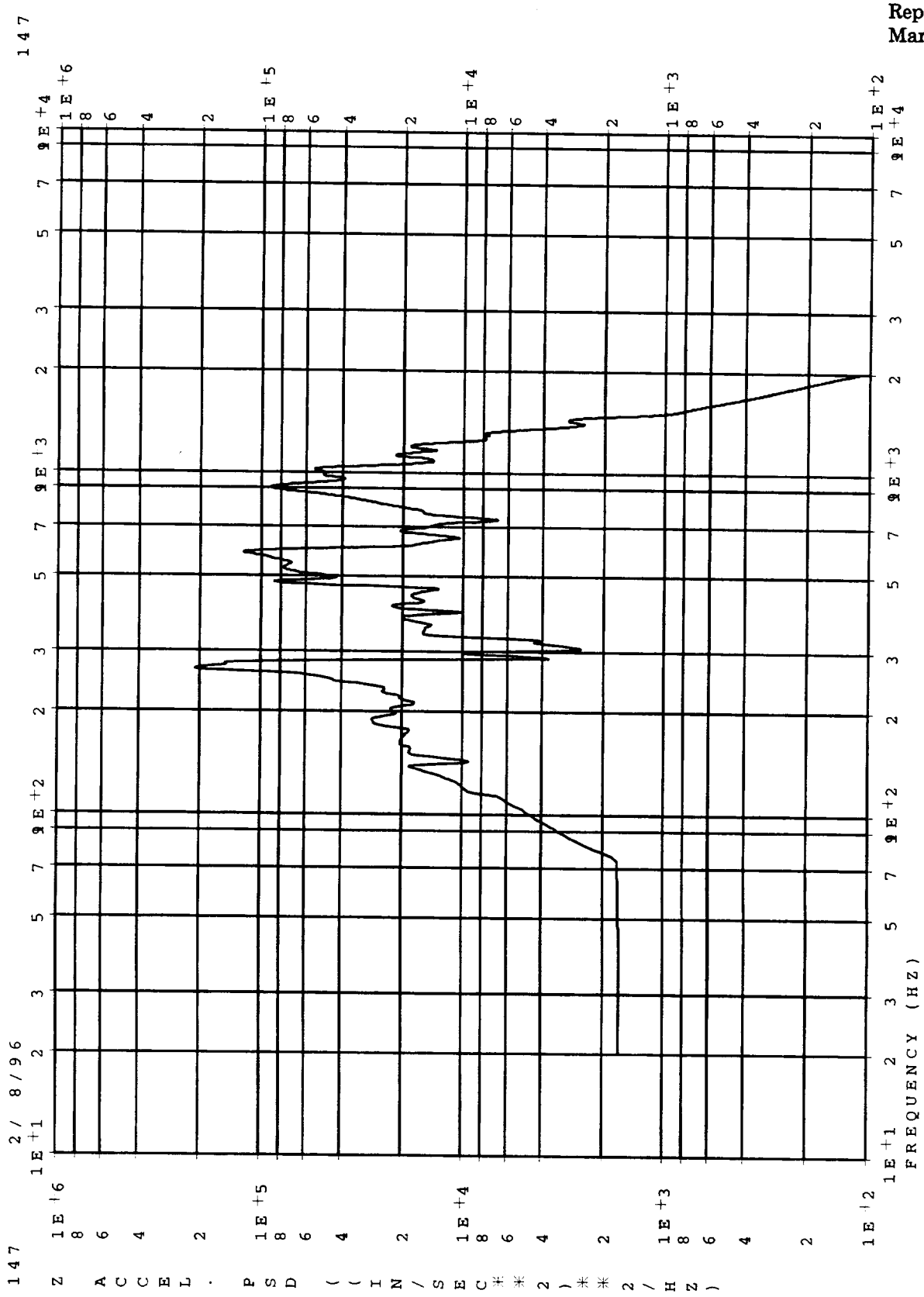

Z Acceleration Grid Point 2086

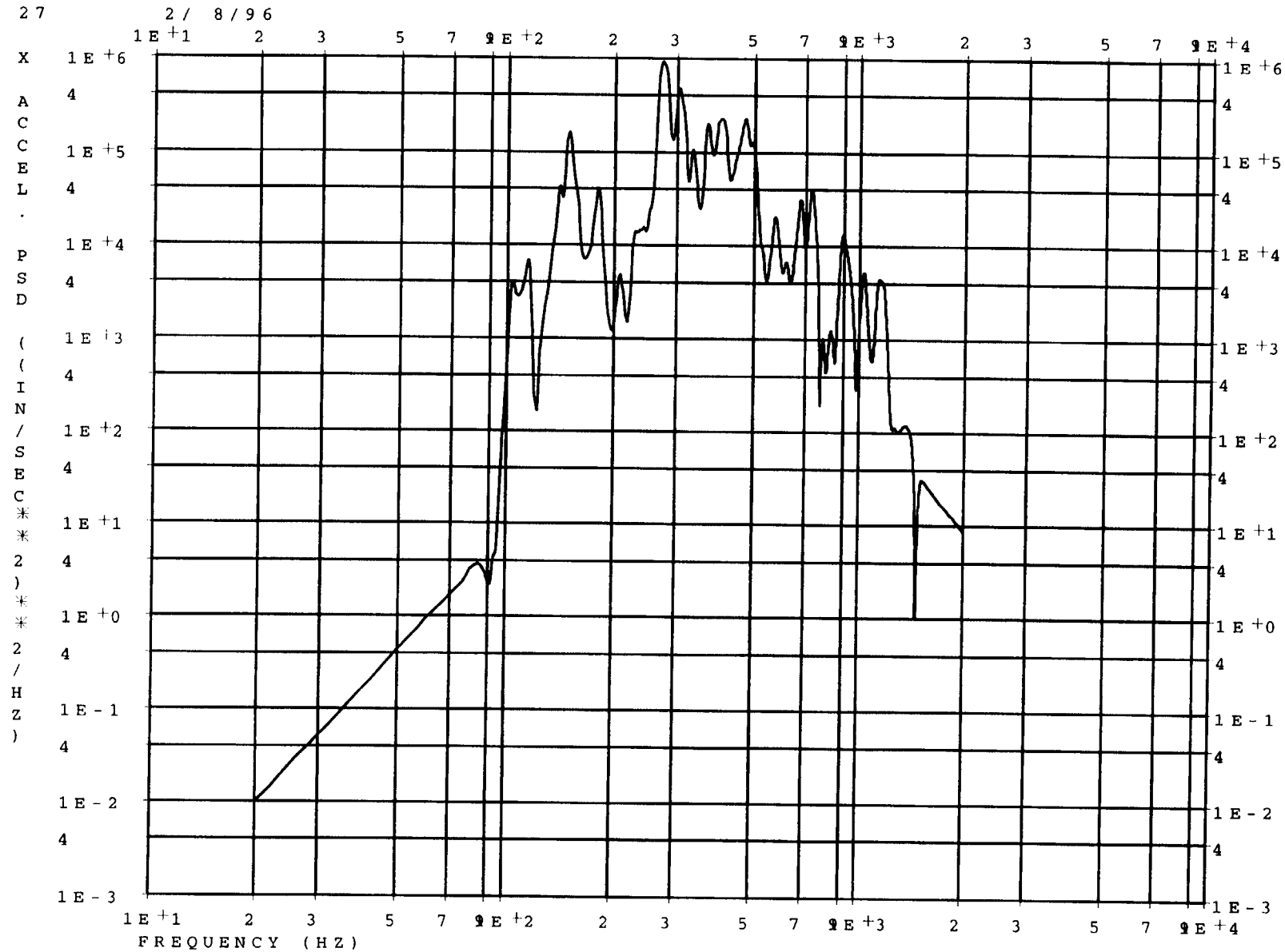

METSAT/AMSU-A2 WITH COI REFLECTOR
QUAL. LEVEL RANDOM VIBRATION (8.8 GRMS)
Z AXIS PSD RESPONSE

X Acceleration Grid Point 2173

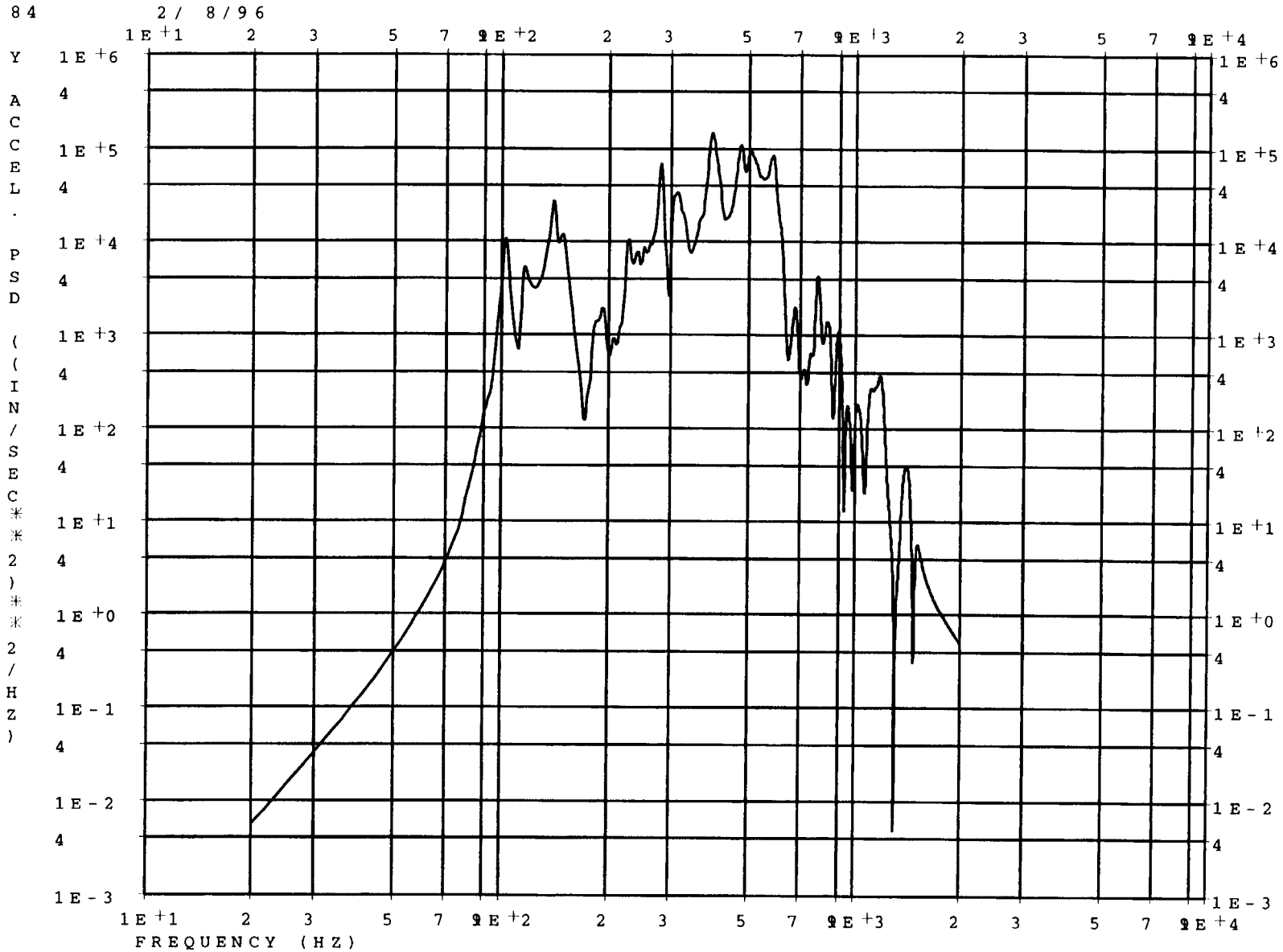

METSAT/AMSU-A2 WITH COI REFLECTOR
QUAL. LEVEL RANDOM VIBRATION (8.8 GRMS)
Z AXIS PSD RESPONSE

Y Acceleration Grid Point 2173

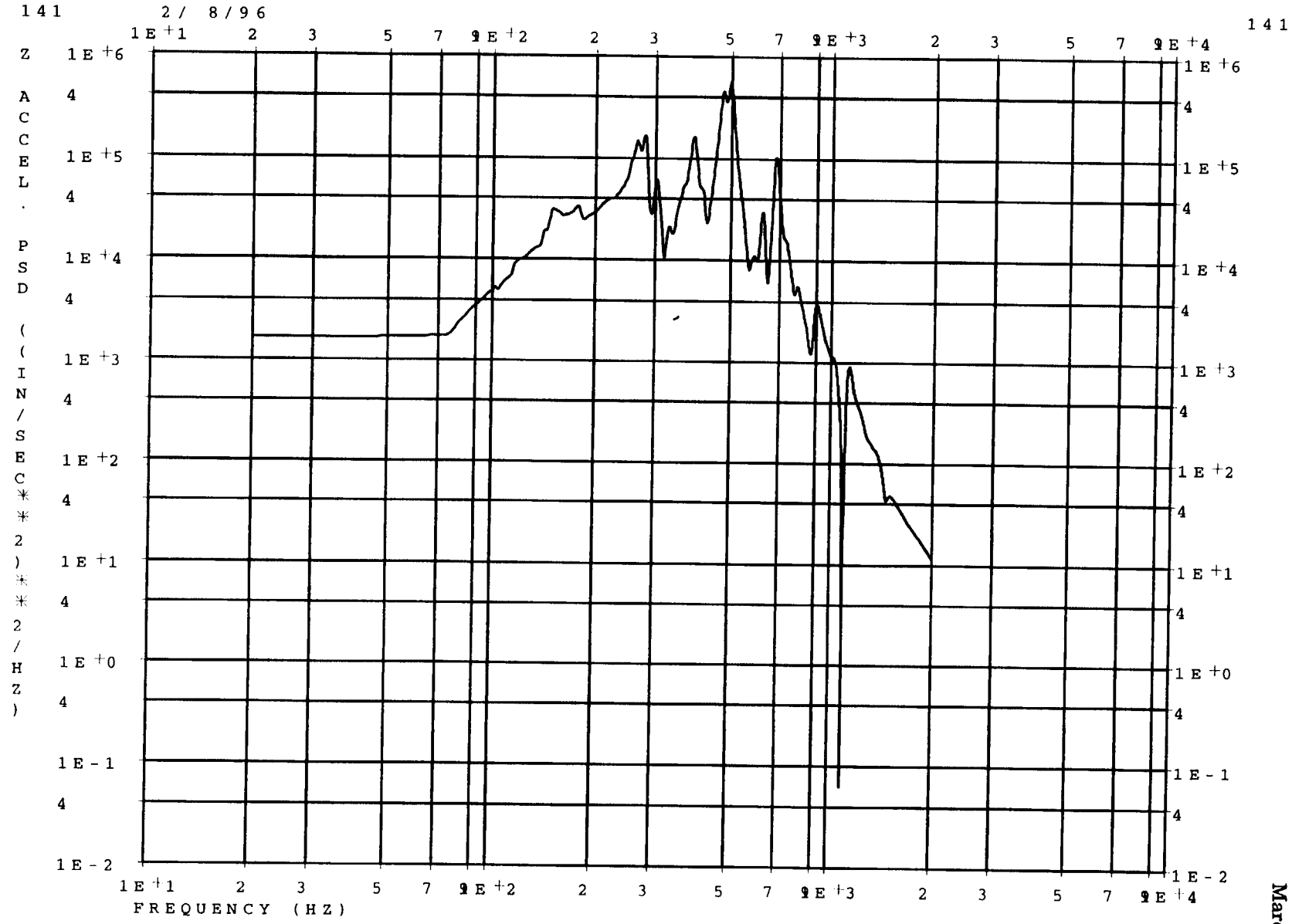

METSAT/AMSU-A2 WITH COI REFLECTOR
QUAL. LEVEL RANDOM VIBRATION (8.8 GRMS)
Z AXIS PSD RESPONSE

Z Acceleration Grid Point 2173

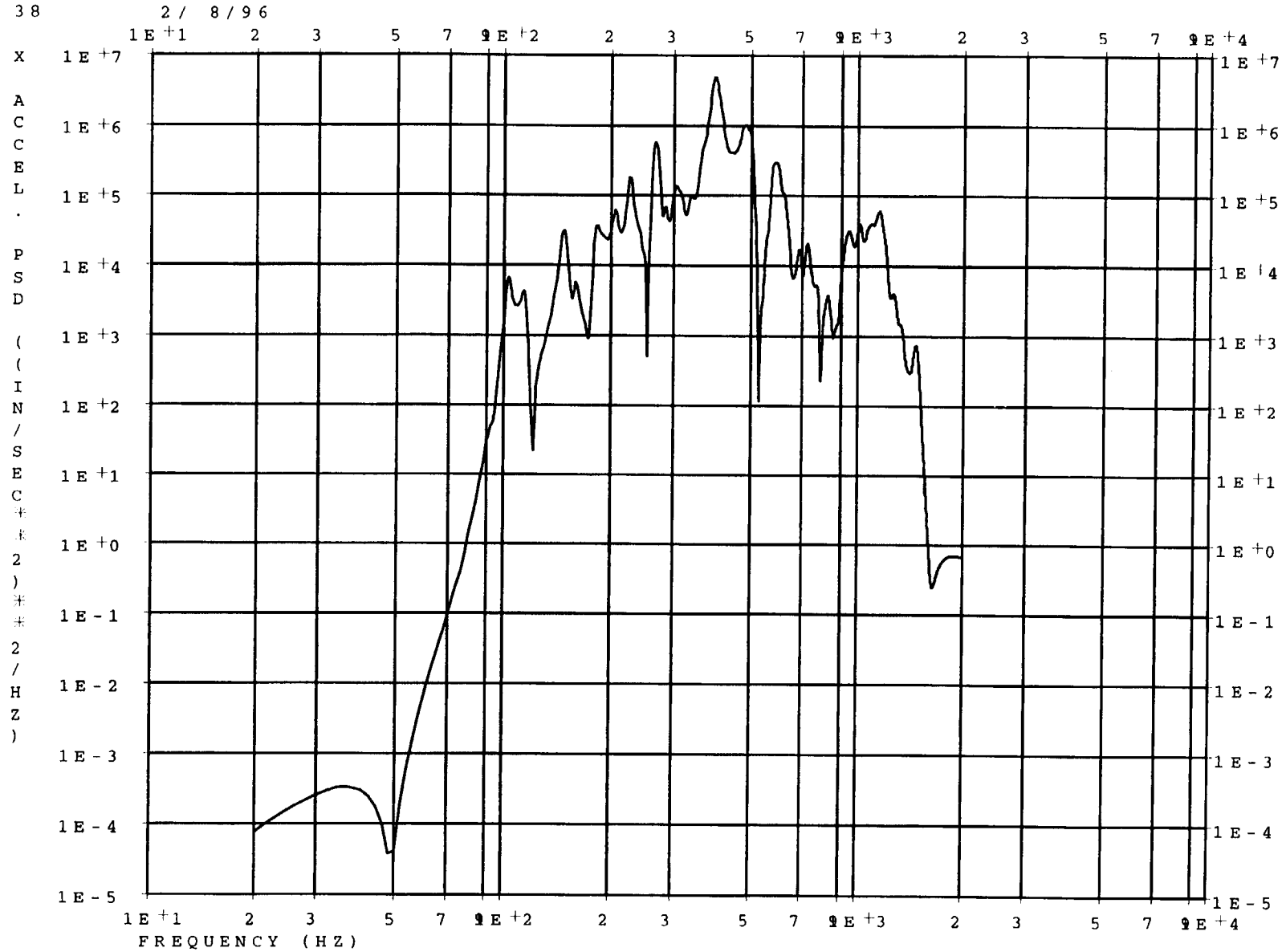

METSAT/AMSU-A2 WITH COI REFLECTOR
QUAL. LEVEL RANDOM VIBRATION (8.8 GRMS)
Z AXIS PSD RESPONSE

X Acceleration Grid Point 2441

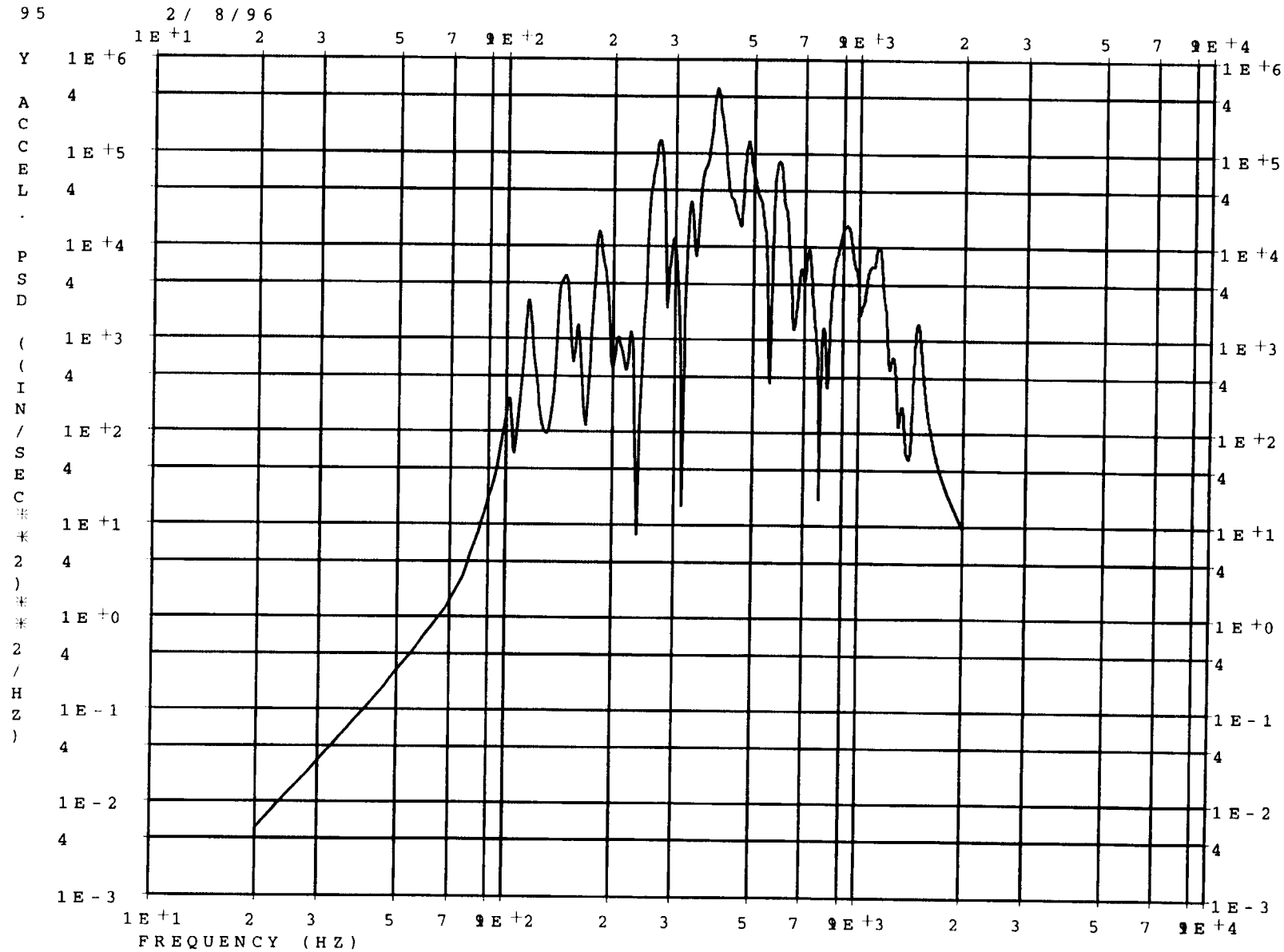

METSAT/AMSU-A2 WITH COI REFLECTOR
QUAL. LEVEL RANDOM VIBRATION (8.8 GRMS)
Z AXIS PSD RESPONSE

Y Acceleration Grid Point 2441

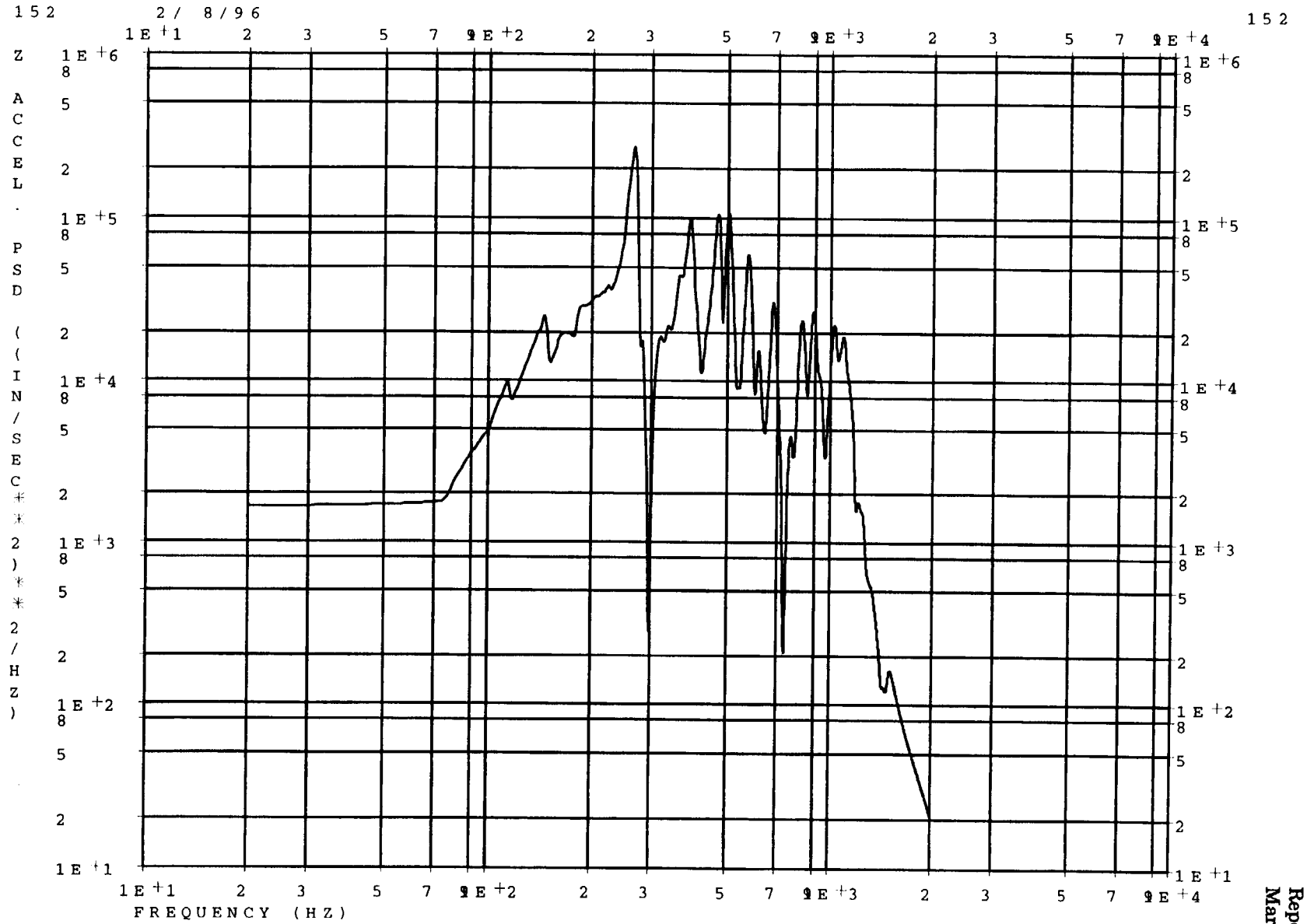

METSAT/AMSU-A2 WITH COI REFLECTOR
QUAL. LEVEL RANDOM VIBRATION (8.8 GRMS)
Z AXIS PSD RESPONSE

Z Acceleration Grid Point 2441

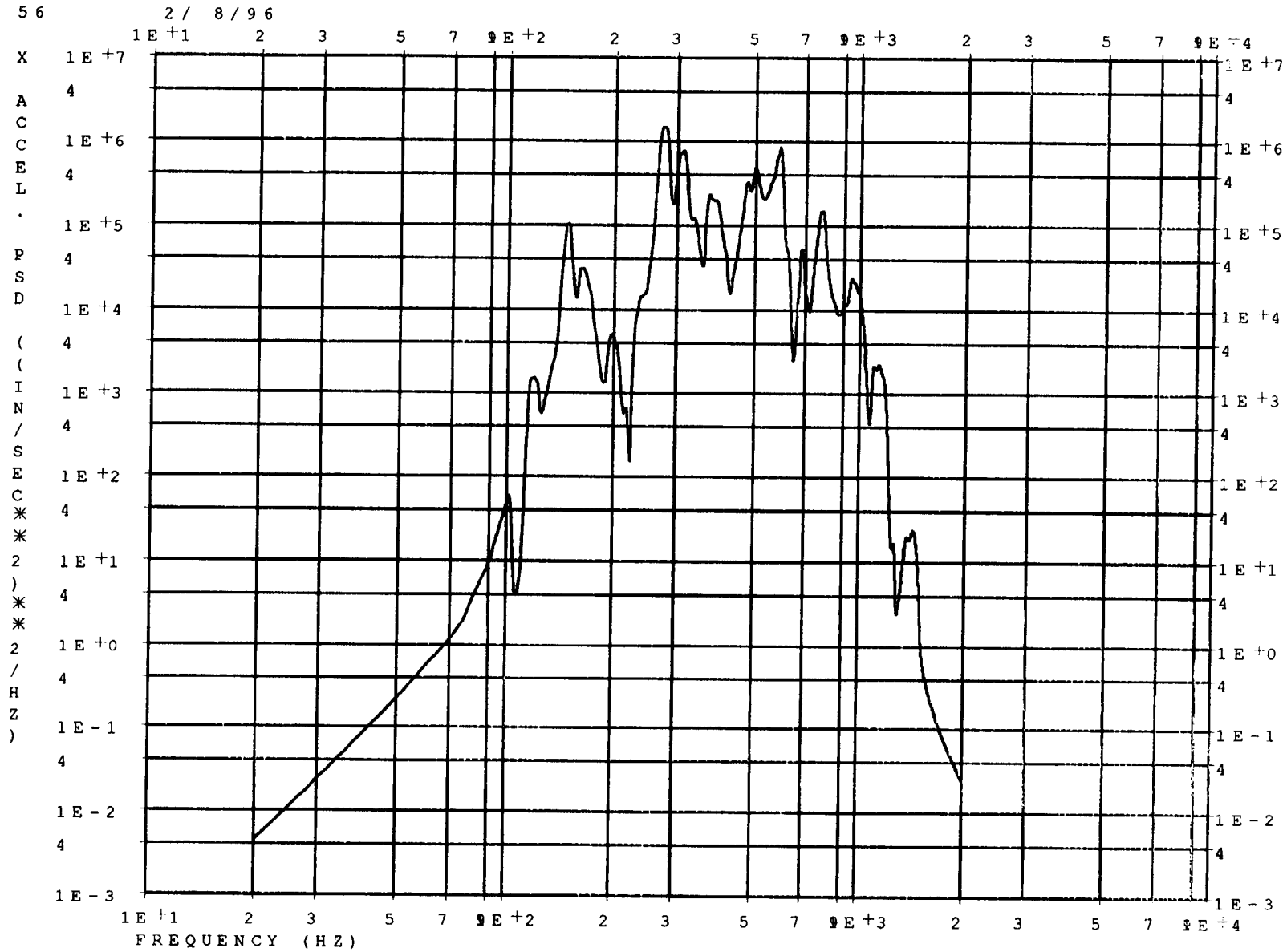

METSAT/AMSU-A2 WITH COI REFLECTOR
QUAL. LEVEL RANDOM VIBRATION (8.8 GRMS)
Z AXIS PSD RESPONSE

X Acceleration Grid Point 26206

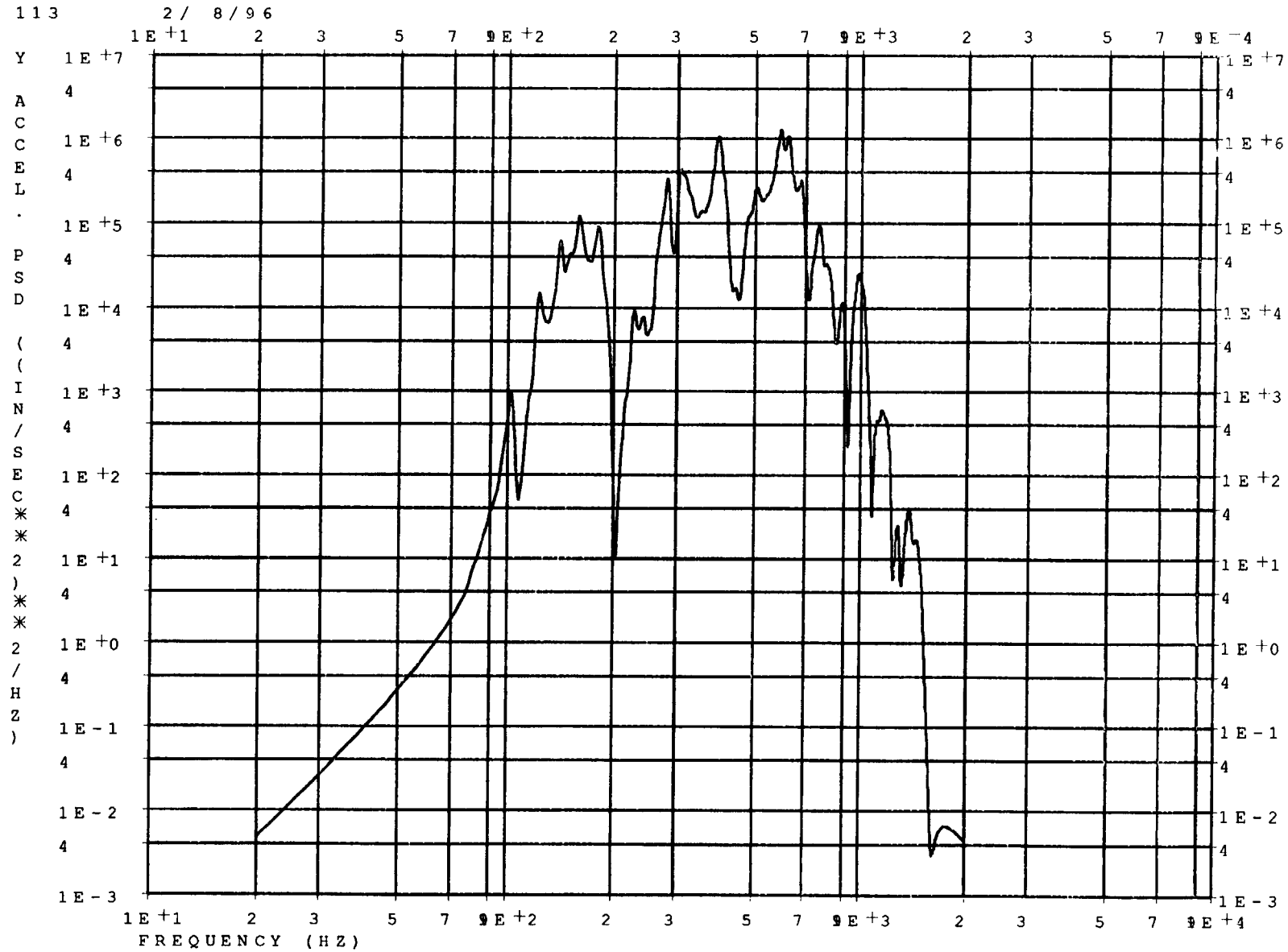

METSAT/AMSU-A2 WITH COI REFLECTOR
QUAL. LEVEL RANDOM VIBRATION (8.8 GRMS)
Z AXIS PSD RESPONSE

Y Acceleration Grid Point 26206

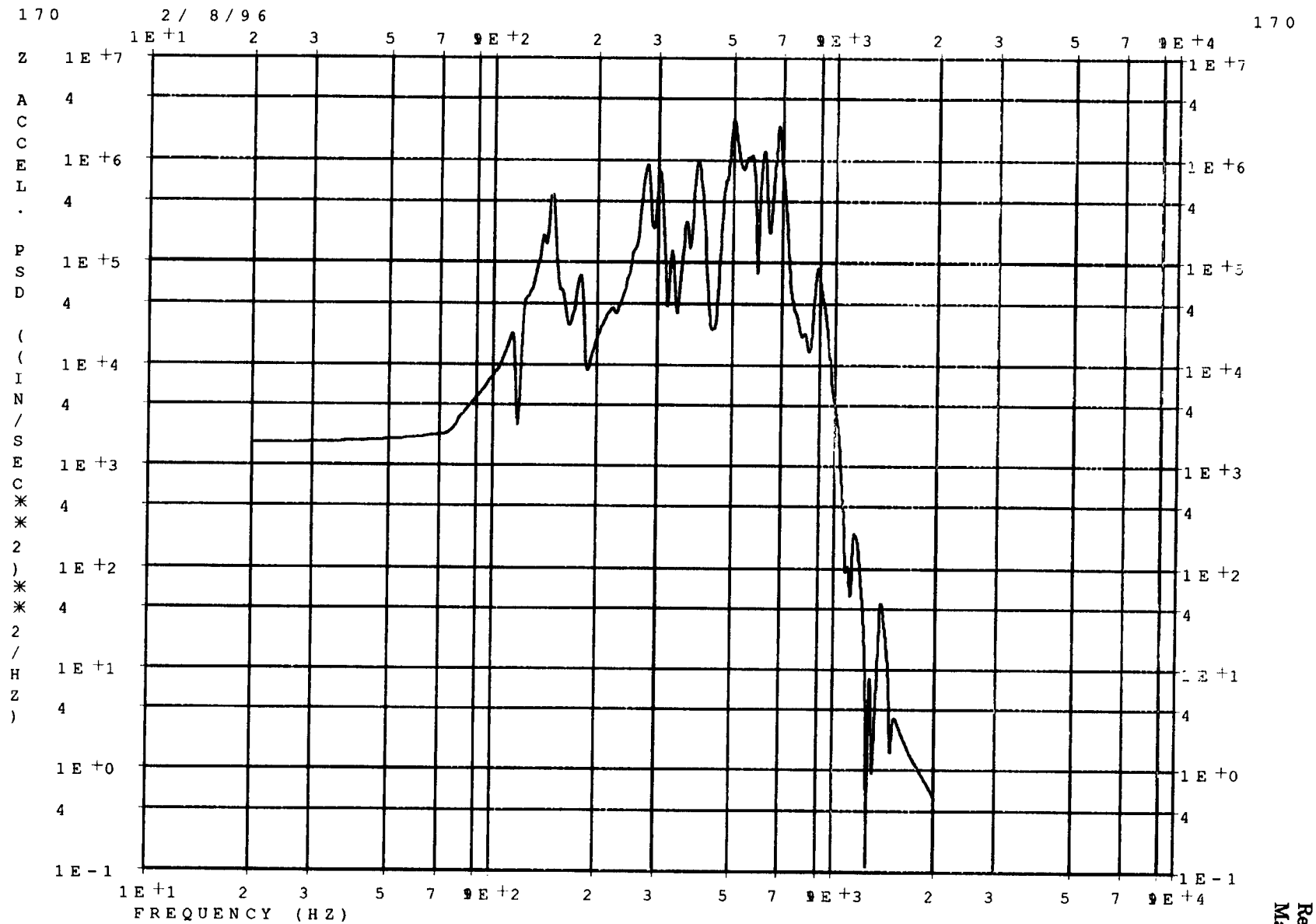

METSAT/AMSU-A2 WITH COI REFLECTOR
QUAL. LEVEL RANDOM VIBRATION (8.8 GRMS)
Z AXIS PSD RESPONSE

Z Acceleration Grid Point 26206

Z AXIS PSD RESPONSE

X Y - O U T P U T S U M M A R Y (A U T O O R P S D F)

PLOT TYPE	CURVE TYPE	FRAME NO.	CURVE ID.	RMS VALUE	NO. POSITIVE CROSSINGS	XMIN FOR ALL DATA	XMAX FOR ALL DATA	YMIN FOR ALL DATA	X FOR YMIN	YMAX FOR ALL DATA	X FOR* YMAX
PSDF	ACCE	1	2201(3)	2.736930E+03	3.355272E+02	1.000E+01	2.000E+03	0.000E+00	1.000E+01	2.218E+05	2.680E+02
PSDF	ACCE	2	2660(3)	6.003760E+03	4.865049E+02	1.000E+01	2.000E+03	0.000E+00	1.000E+01	4.842E+05	4.980E+02
PSDF	ACCE	3	2648(3)	4.413184E+03	4.962136E+02	1.000E+01	2.000E+03	0.000E+00	1.000E+01	2.844E+05	4.980E+02
PSDF	ACCE	4	2650(3)	4.132747E+03	4.986227E+02	1.000E+01	2.000E+03	0.000E+00	1.000E+01	2.423E+05	4.980E+02
PSDF	ACCE	5	2658(3)	6.084453E+03	4.873639E+02	1.000E+01	2.000E+03	0.000E+00	1.000E+01	4.770E+05	4.980E+02
PSDF	ACCE	6	2200(3)	2.735509E+03	3.353841E+02	1.000E+01	2.000E+03	0.000E+00	1.000E+01	2.217E+05	2.680E+02
PSDF	ACCE	7	2205(3)	2.851161E+03	5.617596E+02	1.000E+01	2.000E+03	0.000E+00	1.000E+01	6.806E+04	2.680E+02
PSDF	ACCE	8	2206(3)	2.861225E+03	5.628976E+02	1.000E+01	2.000E+03	0.000E+00	1.000E+01	6.792E+04	2.680E+02
PSDF	ACCE	9	2196(3)	3.725701E+03	3.577931E+02	1.000E+01	2.000E+03	0.000E+00	1.000E+01	4.589E+05	2.680E+02
PSDF	ACCE	10	1890(3)	4.881989E+03	5.087169E+02	1.000E+01	2.000E+03	0.000E+00	1.000E+01	2.534E+05	2.700E+02
PSDF	ACCE	11	2197(3)	3.720201E+03	3.574557E+02	1.000E+01	2.000E+03	0.000E+00	1.000E+01	4.579E+05	2.680E+02
PSDF	ACCE	12	3053(3)	8.623867E+03	3.899495E+02	1.000E+01	2.000E+03	0.000E+00	1.000E+01	2.154E+06	2.260E+02
PSDF	ACCE	13	1885(3)	4.843402E+03	5.060192E+02	1.000E+01	2.000E+03	0.000E+00	1.000E+01	2.525E+05	2.700E+02
PSDF	ACCE	14	1886(3)	4.841170E+03	5.059538E+02	1.000E+01	2.000E+03	0.000E+00	1.000E+01	2.524E+05	2.700E+02
PSDF	ACCE	15	1887(3)	4.853739E+03	5.070165E+02	1.000E+01	2.000E+03	0.000E+00	1.000E+01	2.525E+05	2.700E+02
PSDF	ACCE	16	1888(3)	4.859044E+03	5.073353E+02	1.000E+01	2.000E+03	0.000E+00	1.000E+01	2.527E+05	2.700E+02
PSDF	ACCE	17	3037(3)	9.203313E+03	3.374260E+02	1.000E+01	2.000E+03	0.000E+00	1.000E+01	2.283E+06	3.660E+02
PSDF	ACCE	18	3038(3)	9.960615E+03	3.403189E+02	1.000E+01	2.000E+03	0.000E+00	1.000E+01	2.759E+06	3.660E+02
PSDF	ACCE	19	3039(3)	1.155467E+04	3.512255E+02	1.000E+01	2.000E+03	0.000E+00	1.000E+01	4.064E+06	3.660E+02
PSDF	ACCE	20	3040(3)	1.181963E+04	3.539146E+02	1.000E+01	2.000E+03	0.000E+00	1.000E+01	4.491E+06	3.660E+02
PSDF	ACCE	21	3041(3)	1.112636E+04	3.527981E+02	1.000E+01	2.000E+03	0.000E+00	1.000E+01	4.067E+06	3.660E+02
PSDF	ACCE	22	3042(3)	1.163094E+04	3.614147E+02	1.000E+01	2.000E+03	0.000E+00	1.000E+01	4.431E+06	3.660E+02
PSDF	ACCE	23	3043(3)	1.123019E+04	3.612462E+02	1.000E+01	2.000E+03	0.000E+00	1.000E+01	3.968E+06	3.660E+02
PSDF	ACCE	24	3044(3)	9.674660E+03	3.476267E+02	1.000E+01	2.000E+03	0.000E+00	1.000E+01	2.700E+06	3.660E+02

Z AXIS PSD RESPONSE

X Y - O U T P U T S U M M A R Y (A U T O O R P S D F)

PLOT TYPE	CURVE TYPE	FRAME NO.	CURVE ID.	RMS VALUE	NO. POSITIVE CROSSINGS	XMIN FOR ALL DATA	XMAX FOR ALL DATA	YMIN FOR ALL DATA	X FOR YMIN	YMAX FOR ALL DATA	X FOR* YMAX
PSDF	ACCE	25	2097(3)	7.299672E+03	5.495286E+02	1.000E+01	2.000E+03	0.000E+00	1.000E+01	1.086E+06	2.800E+02
PSDF	ACCE	26	2098(3)	9.348996E+03	4.057485E+02	1.000E+01	2.000E+03	0.000E+00	1.000E+01	2.347E+06	2.800E+02
PSDF	ACCE	27	2173(3)	7.447175E+03	4.073799E+02	1.000E+01	2.000E+03	0.000E+00	1.000E+01	9.229E+05	2.720E+02
PSDF	ACCE	28	2168(3)	1.161310E+04	3.493356E+02	1.000E+01	2.000E+03	0.000E+00	1.000E+01	4.231E+06	3.660E+02
PSDF	ACCE	29	2202(3)	2.738820E+03	3.358430E+02	1.000E+01	2.000E+03	0.000E+00	1.000E+01	2.219E+05	2.680E+02
PSDF	ACCE	30	2204(3)	2.846545E+03	5.620204E+02	1.000E+01	2.000E+03	0.000E+00	1.000E+01	6.817E+04	2.680E+02
PSDF	ACCE	31	24000(3)	6.046132E-05	7.021238E+02	1.000E+01	2.000E+03	0.000E+00	1.000E+01	7.479E-11	3.300E+02
PSDF	ACCE	32	2135(3)	4.891805E+03	6.007668E+02	1.000E+01	2.000E+03	0.000E+00	1.000E+01	2.713E+05	3.920E+02
PSDF	ACCE	33	2086(3)	5.829729E+03	4.483470E+02	1.000E+01	2.000E+03	0.000E+00	1.000E+01	1.084E+06	2.680E+02
PSDF	ACCE	34	2090(3)	5.819590E+03	4.445392E+02	1.000E+01	2.000E+03	0.000E+00	1.000E+01	1.082E+06	2.680E+02
PSDF	ACCE	35	23231(3)	8.242152E+03	7.602419E+02	1.000E+01	2.000E+03	0.000E+00	1.000E+01	5.381E+05	2.700E+02
PSDF	ACCE	36	23232(3)	8.244822E+03	7.600541E+02	1.000E+01	2.000E+03	0.000E+00	1.000E+01	5.395E+05	2.700E+02
PSDF	ACCE	37	23233(3)	8.260799E+03	7.587643E+02	1.000E+01	2.000E+03	0.000E+00	1.000E+01	5.488E+05	2.700E+02
PSDF	ACCE	38	2441(3)	1.515231E+04	4.759021E+02	1.000E+01	2.000E+03	0.000E+00	1.000E+01	4.897E+06	3.940E+02
PSDF	ACCE	39	23234(3)	8.572264E+03	7.288906E+02	1.000E+01	2.000E+03	0.000E+00	1.000E+01	7.637E+05	2.700E+02
PSDF	ACCE	40	23235(3)	8.554965E+03	7.253763E+02	1.000E+01	2.000E+03	0.000E+00	1.000E+01	7.767E+05	2.700E+02
PSDF	ACCE	41	22859(3)	8.525233E+03	6.570922E+02	1.000E+01	2.000E+03	0.000E+00	1.000E+01	7.471E+05	4.980E+02
PSDF	ACCE	42	22868(3)	5.842424E+03	4.606987E+02	1.000E+01	2.000E+03	0.000E+00	1.000E+01	1.178E+06	2.700E+02
PSDF	ACCE	43	22644(3)	1.157198E+04	2.736982E+02	1.000E+01	2.000E+03	0.000E+00	1.000E+01	4.455E+06	1.410E+02
PSDF	ACCE	44	22632(3)	1.237636E+04	3.304322E+02	1.000E+01	2.000E+03	0.000E+00	1.000E+01	6.773E+06	1.940E+02
PSDF	ACCE	45	23609(3)	1.328845E+04	4.470999E+02	1.000E+01	2.000E+03	0.000E+00	1.000E+01	4.728E+06	2.980E+02
PSDF	ACCE	46	23610(3)	1.501029E+04	4.569768E+02	1.000E+01	2.000E+03	0.000E+00	1.000E+01	4.000E+06	2.800E+02
PSDF	ACCE	47	23611(3)	7.758969E+03	5.622347E+02	1.000E+01	2.000E+03	0.000E+00	1.000E+01	1.042E+06	2.980E+02
PSDF	ACCE	48	23612(3)	1.167342E+04	5.709013E+02	1.000E+01	2.000E+03	0.000E+00	1.000E+01	1.241E+06	5.100E+02

Z AXIS PSD RESPONSE

X Y - O U T P U T S U M M A R Y (A U T O O R P S D F)

PLOT TYPE	CURVE TYPE	FRAME NO.	CURVE ID.	RMS VALUE	NO. POSITIVE CROSSINGS	XMIN FOR ALL DATA	XMAX FOR ALL DATA	YMIN FOR ALL DATA	X FOR YMIN	YMAX FOR ALL DATA	X FOR* YMAX
PSDF	ACCE	49	23613(3)	2.014636E+04	6.869830E+02	1.000E+01	2.000E+03	0.000E+00	1.000E+01	3.225E+06	2.780E+02
PSDF	ACCE	50	23614(3)	1.267094E+04	6.520461E+02	1.000E+01	2.000E+03	0.000E+00	1.000E+01	2.121E+06	2.800E+02
PSDF	ACCE	51	23615(3)	1.390227E+04	7.682977E+02	1.000E+01	2.000E+03	0.000E+00	1.000E+01	1.731E+06	2.980E+02
PSDF	ACCE	52	23616(3)	2.231580E+04	4.967450E+02	1.000E+01	2.000E+03	0.000E+00	1.000E+01	1.090E+07	5.060E+02
PSDF	ACCE	53	23617(3)	7.421313E+03	3.488414E+02	1.000E+01	2.000E+03	0.000E+00	1.000E+01	1.367E+06	2.800E+02
PSDF	ACCE	54	23618(3)	1.785635E+04	2.956135E+02	1.000E+01	2.000E+03	0.000E+00	1.000E+01	1.036E+07	2.800E+02
PSDF	ACCE	55	23619(3)	1.811257E+04	3.254924E+02	1.000E+01	2.000E+03	0.000E+00	1.000E+01	1.235E+07	2.980E+02
PSDF	ACCE	56	26206(3)	1.130469E+04	4.872076E+02	1.000E+01	2.000E+03	0.000E+00	1.000E+01	1.486E+06	2.740E+02
PSDF	ACCE	57	2122(3)	2.211038E+03	5.480186E+02	1.000E+01	2.000E+03	0.000E+00	1.000E+01	6.086E+04	4.980E+02
PSDF	ACCE	58	2201(4)	2.233960E+03	4.741113E+02	1.000E+01	2.000E+03	0.000E+00	1.000E+01	1.182E+05	2.660E+02
PSDF	ACCE	59	2660(4)	3.225583E+03	4.735179E+02	1.000E+01	2.000E+03	0.000E+00	1.000E+01	1.582E+05	3.920E+02
PSDF	ACCE	60	2648(4)	3.246462E+03	4.762680E+02	1.000E+01	2.000E+03	0.000E+00	1.000E+01	1.608E+05	3.920E+02
PSDF	ACCE	61	2650(4)	2.963115E+03	4.531794E+02	1.000E+01	2.000E+03	0.000E+00	1.000E+01	1.610E+05	3.920E+02
PSDF	ACCE	62	2658(4)	2.973854E+03	4.526423E+02	1.000E+01	2.000E+03	0.000E+00	1.000E+01	1.604E+05	3.920E+02
PSDF	ACCE	63	2200(4)	2.166063E+03	4.899909E+02	1.000E+01	2.000E+03	0.000E+00	1.000E+01	7.717E+04	2.640E+02
PSDF	ACCE	64	2205(4)	2.237920E+03	4.724333E+02	1.000E+01	2.000E+03	0.000E+00	1.000E+01	1.187E+05	2.660E+02
PSDF	ACCE	65	2206(4)	2.657259E+03	4.964216E+02	1.000E+01	2.000E+03	0.000E+00	1.000E+01	1.852E+05	2.660E+02
PSDF	ACCE	66	2196(4)	2.179392E+03	4.921688E+02	1.000E+01	2.000E+03	0.000E+00	1.000E+01	7.757E+04	2.640E+02
PSDF	ACCE	67	1890(4)	9.098969E+03	5.962311E+02	1.000E+01	2.000E+03	0.000E+00	1.000E+01	7.136E+05	5.840E+02
PSDF	ACCE	68	2197(4)	2.232205E+03	4.763848E+02	1.000E+01	2.000E+03	0.000E+00	1.000E+01	1.177E+05	2.660E+02
PSDF	ACCE	69	3053(4)	7.273299E+03	5.864589E+02	1.000E+01	2.000E+03	0.000E+00	1.000E+01	2.305E+06	2.680E+02
PSDF	ACCE	70	1885(4)	6.235454E+03	4.043510E+02	1.000E+01	2.000E+03	0.000E+00	1.000E+01	5.354E+05	3.920E+02
PSDF	ACCE	71	1886(4)	5.710749E+03	3.955433E+02	1.000E+01	2.000E+03	0.000E+00	1.000E+01	4.779E+05	3.920E+02
PSDF	ACCE	72	1887(4)	3.880523E+03	4.976209E+02	1.000E+01	2.000E+03	0.000E+00	1.000E+01	1.395E+05	3.920E+02

Z AXIS PSD RESPONSE

X Y - O U T P U T S U M M A R Y (A U T O O R P S D F)

PLOT TYPE	CURVE TYPE	FRAME NO.	CURVE ID.	RMS VALUE	NO. POSITIVE CROSSINGS	XMIN FOR ALL DATA	XMAX FOR ALL DATA	YMIN FOR ALL DATA	X FOR YMIN	YMAX FOR ALL DATA	X FOR* YMAX
PSDF	ACCE	73	1888(4)	4.304385E+03	5.248384E+02	1.000E+01	2.000E+03	0.000E+00	1.000E+01	1.185E+05	5.840E+02
PSDF	ACCE	74	3037(4)	2.652358E+03	4.770832E+02	1.000E+01	2.000E+03	0.000E+00	1.000E+01	5.112E+04	4.740E+02
PSDF	ACCE	75	3038(4)	2.593104E+03	4.773641E+02	1.000E+01	2.000E+03	0.000E+00	1.000E+01	4.964E+04	4.740E+02
PSDF	ACCE	76	3039(4)	2.380405E+03	4.774282E+02	1.000E+01	2.000E+03	0.000E+00	1.000E+01	4.297E+04	4.740E+02
PSDF	ACCE	77	3040(4)	2.161448E+03	4.758908E+02	1.000E+01	2.000E+03	0.000E+00	1.000E+01	3.643E+04	4.740E+02
PSDF	ACCE	78	3041(4)	2.064319E+03	4.739875E+02	1.000E+01	2.000E+03	0.000E+00	1.000E+01	3.361E+04	4.740E+02
PSDF	ACCE	79	3042(4)	2.119950E+03	4.733398E+02	1.000E+01	2.000E+03	0.000E+00	1.000E+01	3.501E+04	4.740E+02
PSDF	ACCE	80	3043(4)	2.342781E+03	4.753943E+02	1.000E+01	2.000E+03	0.000E+00	1.000E+01	4.164E+04	4.740E+02
PSDF	ACCE	81	3044(4)	2.542120E+03	4.764596E+02	1.000E+01	2.000E+03	0.000E+00	1.000E+01	4.722E+04	4.740E+02
PSDF	ACCE	82	2097(4)	1.981040E+03	6.807756E+02	1.000E+01	2.000E+03	0.000E+00	1.000E+01	3.415E+04	3.320E+02
PSDF	ACCE	83	2098(4)	1.976166E+03	6.880233E+02	1.000E+01	2.000E+03	0.000E+00	1.000E+01	3.423E+04	3.320E+02
PSDF	ACCE	84	2173(4)	4.235963E+03	4.761290E+02	1.000E+01	2.000E+03	0.000E+00	1.000E+01	1.489E+05	3.920E+02
PSDF	ACCE	85	2168(4)	2.357327E+03	4.762073E+02	1.000E+01	2.000E+03	0.000E+00	1.000E+01	4.212E+04	4.740E+02
PSDF	ACCE	86	2202(4)	2.646485E+03	5.031322E+02	1.000E+01	2.000E+03	0.000E+00	1.000E+01	1.829E+05	2.660E+02
PSDF	ACCE	87	2204(4)	2.171587E+03	4.888548E+02	1.000E+01	2.000E+03	0.000E+00	1.000E+01	7.752E+04	2.640E+02
PSDF	ACCE	88	24000(4)	2.613043E-05	6.859504E+02	1.000E+01	2.000E+03	0.000E+00	1.000E+01	8.862E-12	3.300E+02
PSDF	ACCE	89	2135(4)	3.590760E+03	4.982804E+02	1.000E+01	2.000E+03	0.000E+00	1.000E+01	3.423E+05	2.660E+02
PSDF	ACCE	90	2086(4)	3.290867E+03	5.605149E+02	1.000E+01	2.000E+03	0.000E+00	1.000E+01	8.029E+04	2.620E+02
PSDF	ACCE	91	2090(4)	3.647837E+03	5.648881E+02	1.000E+01	2.000E+03	0.000E+00	1.000E+01	3.049E+05	2.660E+02
PSDF	ACCE	92	23231(4)	4.345175E+03	3.641457E+02	1.000E+01	2.000E+03	0.000E+00	1.000E+01	2.736E+05	3.920E+02
PSDF	ACCE	93	23232(4)	3.763164E+03	3.519398E+02	1.000E+01	2.000E+03	0.000E+00	1.000E+01	1.965E+05	3.920E+02
PSDF	ACCE	94	23233(4)	3.143386E+03	5.003380E+02	1.000E+01	2.000E+03	0.000E+00	1.000E+01	8.679E+04	4.720E+02
PSDF	ACCE	95	2441(4)	5.396632E+03	5.296860E+02	1.000E+01	2.000E+03	0.000E+00	1.000E+01	4.917E+05	3.940E+02
PSDF	ACCE	96	23234(4)	3.348333E+03	3.423422E+02	1.000E+01	2.000E+03	0.000E+00	1.000E+01	1.656E+05	2.800E+02

Z AXIS PSD RESPONSE

X Y - O U T P U T S U M M A R Y (A U T O O R P S D F)

PLOT TYPE	CURVE TYPE	FRAME NO.	CURVE ID.	RMS VALUE	NO. POSITIVE CROSSINGS	XMIN FOR ALL DATA	XMAX FOR ALL DATA	YMIN FOR ALL DATA	X FOR YMIN	YMAX FOR ALL DATA	X FOR* YMAX
PSDF	ACCE	97	23235(4)	3.194731E+03	5.010274E+02	1.000E+01	2.000E+03	0.000E+00	1.000E+01	9.023E+04	4.720E+02
PSDF	ACCE	98	22859(4)	4.455560E+03	5.057933E+02	1.000E+01	2.000E+03	0.000E+00	1.000E+01	1.540E+05	4.720E+02
PSDF	ACCE	99	22868(4)	4.587896E+03	5.365770E+02	1.000E+01	2.000E+03	0.000E+00	1.000E+01	1.895E+05	4.720E+02
PSDF	ACCE	100	22644(4)	2.927953E+03	3.266357E+02	1.000E+01	2.000E+03	0.000E+00	1.000E+01	1.284E+05	2.600E+02
PSDF	ACCE	101	22632(4)	2.905790E+03	7.739586E+02	1.000E+01	2.000E+03	0.000E+00	1.000E+01	4.285E+04	9.040E+02
PSDF	ACCE	102	23609(4)	1.988719E+03	6.831350E+02	1.000E+01	2.000E+03	0.000E+00	1.000E+01	3.471E+04	3.320E+02
PSDF	ACCE	103	23610(4)	2.054123E+03	6.450925E+02	1.000E+01	2.000E+03	0.000E+00	1.000E+01	3.617E+04	3.320E+02
PSDF	ACCE	104	23611(4)	1.972439E+03	7.095817E+02	1.000E+01	2.000E+03	0.000E+00	1.000E+01	3.337E+04	3.320E+02
PSDF	ACCE	105	23612(4)	1.960890E+03	7.288945E+02	1.000E+01	2.000E+03	0.000E+00	1.000E+01	3.142E+04	3.320E+02
PSDF	ACCE	106	23613(4)	2.224303E+03	5.869240E+02	1.000E+01	2.000E+03	0.000E+00	1.000E+01	3.777E+04	3.320E+02
PSDF	ACCE	107	23614(4)	2.021288E+03	6.541667E+02	1.000E+01	2.000E+03	0.000E+00	1.000E+01	3.528E+04	3.320E+02
PSDF	ACCE	108	23615(4)	1.971890E+03	7.306732E+02	1.000E+01	2.000E+03	0.000E+00	1.000E+01	3.137E+04	3.320E+02
PSDF	ACCE	109	23616(4)	2.202226E+03	5.852400E+02	1.000E+01	2.000E+03	0.000E+00	1.000E+01	3.801E+04	3.320E+02
PSDF	ACCE	110	23617(4)	2.166533E+03	5.792380E+02	1.000E+01	2.000E+03	0.000E+00	1.000E+01	3.791E+04	3.320E+02
PSDF	ACCE	111	23618(4)	1.953977E+03	7.311434E+02	1.000E+01	2.000E+03	0.000E+00	1.000E+01	3.122E+04	3.320E+02
PSDF	ACCE	112	23619(4)	1.973832E+03	6.712838E+02	1.000E+01	2.000E+03	0.000E+00	1.000E+01	3.517E+04	3.320E+02
PSDF	ACCE	113	26206(4)	1.235477E+04	5.441848E+02	1.000E+01	2.000E+03	0.000E+00	1.000E+01	1.281E+06	5.880E+02
PSDF	ACCE	114	2122(4)	3.782287E+03	2.483416E+02	1.000E+01	2.000E+03	0.000E+00	1.000E+01	4.030E+05	1.820E+02
PSDF	ACCE	115	2201(5)	1.787016E+04	3.889924E+02	1.000E+01	2.000E+03	0.000E+00	1.000E+01	1.063E+07	2.780E+02
PSDF	ACCE	116	2660(5)	1.385232E+04	3.454225E+02	1.000E+01	2.000E+03	0.000E+00	1.000E+01	5.955E+06	2.840E+02
PSDF	ACCE	117	2648(5)	1.188704E+04	4.973530E+02	1.000E+01	2.000E+03	0.000E+00	1.000E+01	1.221E+06	4.160E+02
PSDF	ACCE	118	2650(5)	1.063195E+04	4.664335E+02	1.000E+01	2.000E+03	0.000E+00	1.000E+01	1.890E+06	4.160E+02
PSDF	ACCE	119	2658(5)	2.174364E+04	3.120536E+02	1.000E+01	2.000E+03	0.000E+00	1.000E+01	1.577E+07	2.840E+02
PSDF	ACCE	120	2200(5)	1.185273E+04	3.488228E+02	1.000E+01	2.000E+03	0.000E+00	1.000E+01	5.793E+06	2.780E+02

Z AXIS PSD RESPONSE

X Y - O U T P U T S U M M A R Y (A U T O O R P S D F)

PLOT TYPE	CURVE TYPE	FRAME NO.	CURVE ID.	RMS VALUE	NO. POSITIVE CROSSINGS	XMIN FOR ALL DATA	XMAX FOR ALL DATA	YMIN FOR ALL DATA	X FOR YMIN	YMAX FOR ALL DATA	X FOR* YMAX
PSDF	ACCE	121	2205(5)	1.107208E+04	4.764993E+02	1.000E+01	2.000E-03	0.000E+00	1.000E+01	2.774E+06	2.780E+02
PSDF	ACCE	122	2206(5)	1.079537E+04	5.017328E+02	1.000E+01	2.000E+03	0.000E+00	1.000E+01	1.578E+06	2.780E+02
PSDF	ACCE	123	2196(5)	1.324283E+04	3.675500E+02	1.000E+01	2.000E+03	0.000E+00	1.000E+01	6.015E+06	2.780E+02
PSDF	ACCE	124	1890(5)	1.116123E+04	7.331325E+02	1.000E+01	2.000E+03	0.000E+00	1.000E+01	8.380E+05	4.980E+02
PSDF	ACCE	125	2197(5)	1.216772E+04	3.303629E+02	1.000E+01	2.000E+03	0.000E+00	1.000E+01	5.994E+06	2.780E+02
PSDF	ACCE	126	3053(5)	1.220007E+04	5.754285E+02	1.000E+01	2.000E+03	0.000E+00	1.000E+01	1.203E+06	3.920E+02
PSDF	ACCE	127	1885(5)	9.712374E+03	4.302402E+02	1.000E+01	2.000E+03	0.000E+00	1.000E+01	1.084E+06	2.800E+02
PSDF	ACCE	128	1886(5)	9.284775E+03	4.281344E+02	1.000E+01	2.000E+03	0.000E+00	1.000E+01	9.873E+05	2.800E+02
PSDF	ACCE	129	1887(5)	7.070527E+03	4.475693E+02	1.000E+01	2.000E+03	0.000E+00	1.000E+01	6.154E+05	4.980E+02
PSDF	ACCE	130	1888(5)	6.910073E+03	4.518897E+02	1.000E+01	2.000E+03	0.000E+00	1.000E+01	5.871E+05	4.980E+02
PSDF	ACCE	131	3037(5)	6.902724E+03	4.707751E+02	1.000E+01	2.000E+03	0.000E+00	1.000E+01	5.600E+05	4.980E+02
PSDF	ACCE	132	3038(5)	6.864167E+03	4.705257E+02	1.000E+01	2.000E+03	0.000E+00	1.000E+01	5.503E+05	4.980E+02
PSDF	ACCE	133	3039(5)	6.841928E+03	4.706239E+02	1.000E+01	2.000E+03	0.000E+00	1.000E+01	5.441E+05	4.980E+02
PSDF	ACCE	134	3040(5)	6.847479E+03	4.700170E+02	1.000E+01	2.000E+03	0.000E+00	1.000E+01	5.481E+05	4.980E+02
PSDF	ACCE	135	3041(5)	6.867896E+03	4.691295E+02	1.000E+01	2.000E+03	0.000E+00	1.000E+01	5.573E+05	4.980E+02
PSDF	ACCE	136	3042(5)	6.947920E+03	4.694826E+02	1.000E+01	2.000E+03	0.000E+00	1.000E+01	5.752E+05	4.980E+02
PSDF	ACCE	137	3043(5)	6.982645E+03	4.698885E+02	1.000E+01	2.000E+03	0.000E+00	1.000E+01	5.820E+05	4.980E+02
PSDF	ACCE	138	3044(5)	6.960464E+03	4.702249E+02	1.000E+01	2.000E+03	0.000E+00	1.000E+01	5.750E+05	4.980E+02
PSDF	ACCE	139	2097(5)	5.706173E+03	7.404745E+02	1.000E+01	2.000E+03	0.000E+00	1.000E+01	1.453E+05	2.660E+02
PSDF	ACCE	140	2098(5)	5.783068E+03	7.576026E+02	1.000E+01	2.000E+03	0.000E+00	1.000E+01	1.220E+05	2.660E+02
PSDF	ACCE	141	2173(5)	6.924845E+03	4.723910E+02	1.000E+01	2.000E+03	0.000E+00	1.000E+01	5.631E+05	4.980E+02
PSDF	ACCE	142	2168(5)	6.894074E+03	4.700199E+02	1.000E+01	2.000E+03	0.000E+00	1.000E+01	5.604E+05	4.980E+02
PSDF	ACCE	143	2202(5)	1.200098E+04	4.230097E+02	1.000E+01	2.000E+03	0.000E+00	1.000E+01	4.657E+06	2.780E+02
PSDF	ACCE	144	2204(5)	8.987301E+03	4.908424E+02	1.000E+01	2.000E+03	0.000E+00	1.000E+01	2.200E+06	2.780E+02

Z AXIS PSD RESPONSE

X Y - O U T P U T S U M M A R Y (A U T O O R P S D F)

PLOT TYPE	CURVE TYPE	FRAME NO.	CURVE ID.	RMS VALUE	NO. POSITIVE CROSSINGS	XMIN FOR ALL DATA	XMAX FOR ALL DATA	YMIN FOR ALL DATA	X FOR YMIN	YMAX FOR ALL DATA	X FOR* YMAX
PSDF	ACCE	145	24000(5)	3.426399E+03	6.829276E+02	1.000E+01	2.000E+03	0.000E+00	1.000E+01	1.641E+04	1.500E+02
PSDF	ACCE	146	2135(5)	5.788884E+03	6.676248E+02	1.000E+01	2.000E+03	0.000E+00	1.000E+01	2.380E+05	5.760E+02
PSDF	ACCE	147	2086(5)	6.316362E+03	7.579438E+02	1.000E+01	2.000E+03	0.000E+00	1.000E+01	2.120E+05	2.660E+02
PSDF	ACCE	148	2090(5)	5.825264E+03	7.393994E+02	1.000E+01	2.000E+03	0.000E+00	1.000E+01	1.091E+05	5.660E+02
PSDF	ACCE	149	23231(5)	1.337528E+04	2.781030E+02	1.000E+01	2.000E+03	0.000E+00	1.000E+01	9.535E+06	2.680E+02
PSDF	ACCE	150	23232(5)	1.254465E+04	2.744099E+02	1.000E+01	2.000E+03	0.000E+00	1.000E+01	8.525E+06	2.680E+02
PSDF	ACCE	151	23233(5)	7.782996E+03	3.775167E+02	1.000E+01	2.000E+03	0.000E+00	1.000E+01	2.705E+06	2.680E+02
PSDF	ACCE	152	2441(5)	5.247490E+03	5.785716E+02	1.000E+01	2.000E+03	0.000E+00	1.000E+01	2.726E+05	2.680E+02
PSDF	ACCE	153	23234(5)	1.174811E+04	2.733296E+02	1.000E+01	2.000E+03	0.000E+00	1.000E+01	7.521E+06	2.680E+02
PSDF	ACCE	154	23235(5)	7.769311E+03	3.783704E+02	1.000E+01	2.000E+03	0.000E+00	1.000E+01	2.672E+06	2.680E+02
PSDF	ACCE	155	22859(5)	8.641094E+03	3.956287E+02	1.000E+01	2.000E+03	0.000E+00	1.000E+01	2.844E+06	2.700E+02
PSDF	ACCE	156	22868(5)	8.518435E+03	4.053501E+02	1.000E+01	2.000E+03	0.000E+00	1.000E+01	2.576E+06	2.700E+02
PSDF	ACCE	157	22644(5)	7.702989E+03	3.571675E+02	1.000E+01	2.000E+03	0.000E+00	1.000E+01	4.170E+06	1.410E+02
PSDF	ACCE	158	22632(5)	8.956729E+03	4.193272E+02	1.000E+01	2.000E+03	0.000E+00	1.000E+01	4.458E+06	1.410E+02
PSDF	ACCE	159	23609(5)	5.857899E+03	7.650720E+02	1.000E+01	2.000E+03	0.000E+00	1.000E+01	1.176E+05	2.660E+02
PSDF	ACCE	160	23610(5)	5.941748E+03	7.683822E+02	1.000E+01	2.000E+03	0.000E+00	1.000E+01	1.258E+05	2.660E+02
PSDF	ACCE	161	23611(5)	5.773740E+03	7.598840E+02	1.000E+01	2.000E+03	0.000E+00	1.000E+01	1.149E+05	2.660E+02
PSDF	ACCE	162	23612(5)	5.633595E+03	7.509491E+02	1.000E+01	2.000E+03	0.000E+00	1.000E+01	1.075E+05	2.660E+02
PSDF	ACCE	163	23613(5)	5.964073E+03	7.547863E+02	1.000E+01	2.000E+03	0.000E+00	1.000E+01	1.575E+05	2.660E+02
PSDF	ACCE	164	23614(5)	5.807243E+03	7.492401E+02	1.000E+01	2.000E+03	0.000E+00	1.000E+01	1.446E+05	2.660E+02
PSDF	ACCE	165	23615(5)	5.489032E+03	7.323436E+02	1.000E+01	2.000E+03	0.000E+00	1.000E+01	1.238E+05	2.660E+02
PSDF	ACCE	166	23616(5)	5.903517E+03	7.620441E+02	1.000E+01	2.000E+03	0.000E+00	1.000E+01	1.293E+05	2.660E+02
PSDF	ACCE	167	23617(5)	5.889778E+03	7.621653E+02	1.000E+01	2.000E+03	0.000E+00	1.000E+01	1.167E+05	5.840E+02
PSDF	ACCE	168	23618(5)	5.570431E+03	7.478056E+02	1.000E+01	2.000E+03	0.000E+00	1.000E+01	9.907E+04	5.820E+02

Z AXIS PSD RESPONSE

X Y - O U T P U T S U M M A R Y (A U T O O R P S D F)

PLOT TYPE	CURVE TYPE	FRAME NO.	CURVE ID.	RMS VALUE	NO. POSITIVE CROSSINGS	XMIN FOR ALL DATA	XMAX FOR ALL DATA	YMIN FOR ALL DATA	X FOR YMIN	YMAX FOR ALL DATA	X FOR* YMAX
PSDF	ACCE	169	23619(5)	5.796086E+03	7.610391E+02	1.000E+01	2.000E+03	0.000E+00	1.000E+01	1.093E+05	5.840E+02
PSDF	ACCE	170	26206(5)	1.772531E+04	5.537749E+02	1.000E+01	2.000E+03	0.000E+00	1.000E+01	2.513E+06	5.000E+02
PSDF	ACCE	171	2122(5)	5.337358E+03	6.917992E+02	1.000E+01	2.000E+03	0.000E+00	1.000E+01	1.523E+05	5.760E+02
PSDF	DISP	171	2201(3)	1.102584E-03	2.330536E+02	1.000E+01	2.000E+03	0.000E+00	1.000E+01	2.758E-08	2.680E+02
PSDF	DISP	171	2660(3)	9.567029E-04	3.668604E+02	1.000E+01	2.000E+03	0.000E+00	1.000E+01	1.078E-08	2.800E+02
PSDF	DISP	171	2648(3)	8.103339E-04	3.169542E+02	1.000E+01	2.000E+03	0.000E+00	1.000E+01	1.696E-08	1.028E+02
PSDF	DISP	171	2650(3)	8.358295E-04	2.933626E+02	1.000E+01	2.000E+03	0.000E+00	1.000E+01	2.222E-08	1.028E+02
PSDF	DISP	171	2658(3)	9.938463E-04	3.616856E+02	1.000E+01	2.000E+03	0.000E+00	1.000E+01	1.216E-08	2.820E+02
PSDF	DISP	171	23636(3)	3.381532E-04	4.082149E+02	1.000E+01	2.000E+03	0.000E+00	1.000E+01	2.212E-09	4.840E+02
PSDF	DISP	171	23637(3)	3.894801E-04	2.991349E+02	1.000E+01	2.000E+03	0.000E+00	1.000E+01	1.050E-08	1.500E+02
PSDF	DISP	171	23638(3)	5.374473E-04	2.401421E+02	1.000E+01	2.000E+03	0.000E+00	1.000E+01	2.652E-08	1.500E+02
PSDF	DISP	171	23639(3)	6.282819E-04	2.297384E+02	1.000E+01	2.000E+03	0.000E+00	1.000E+01	3.828E-08	1.500E+02
PSDF	DISP	171	23640(3)	6.341141E-04	2.594384E+02	1.000E+01	2.000E+03	0.000E+00	1.000E+01	3.727E-08	1.500E+02
PSDF	DISP	171	23641(3)	5.609095E-04	2.699491E+02	1.000E+01	2.000E+03	0.000E+00	1.000E+01	2.713E-08	1.500E+02
PSDF	DISP	171	23642(3)	4.682894E-04	2.806023E+02	1.000E+01	2.000E+03	0.000E+00	1.000E+01	1.533E-08	1.500E+02
PSDF	DISP	171	23643(3)	4.280103E-04	3.226143E+02	1.000E+01	2.000E+03	0.000E+00	1.000E+01	7.307E-09	1.500E+02
PSDF	DISP	171	23644(3)	4.518387E-04	3.447906E+02	1.000E+01	2.000E+03	0.000E+00	1.000E+01	6.338E-09	2.260E+02
PSDF	DISP	171	23645(3)	5.245320E-04	3.364944E+02	1.000E+01	2.000E+03	0.000E+00	1.000E+01	8.732E-09	2.260E+02
PSDF	DISP	171	23646(3)	6.790693E-04	3.808707E+02	1.000E+01	2.000E+03	0.000E+00	1.000E+01	1.237E-08	2.260E+02
PSDF	DISP	171	23647(3)	3.843686E-04	3.017994E+02	1.000E+01	2.000E+03	0.000E+00	1.000E+01	3.341E-09	2.560E+02
PSDF	DISP	171	23648(3)	4.250552E-04	2.248721E+02	1.000E+01	2.000E+03	0.000E+00	1.000E+01	1.296E-08	1.500E+02
PSDF	DISP	171	23649(3)	5.400765E-04	1.984313E+02	1.000E+01	2.000E+03	0.000E+00	1.000E+01	2.877E-08	1.500E+02
PSDF	DISP	171	23650(3)	6.092963E-04	1.922838E+02	1.000E+01	2.000E+03	0.000E+00	1.000E+01	3.966E-08	1.500E+02
PSDF	DISP	171	23651(3)	6.011239E-04	2.110793E+02	1.000E+01	2.000E+03	0.000E+00	1.000E+01	3.799E-08	1.500E+02

Z AXIS PSD RESPONSE

X Y - O U T P U T S U M M A R Y (A U T O O R P S D F)

PLOT TYPE	CURVE TYPE	FRAME NO.	CURVE ID.	RMS VALUE	NO. POSITIVE CROSSINGS	XMIN FOR ALL DATA	XMAX FOR ALL DATA	YMIN FOR ALL DATA	X FOR YMIN	YMAX FOR ALL DATA	X FOR* YMAX
PSDF	DISP	171	23652(3)	5.368526E-04	2.358217E+02	1.000E+01	2.000E+03	0.000E+00	1.000E+01	2.754E-08	1.500E+02
PSDF	DISP	171	23653(3)	4.599322E-04	3.020606E+02	1.000E+01	2.000E+03	0.000E+00	1.000E+01	1.526E-08	1.500E+02
PSDF	DISP	171	23654(3)	4.262252E-04	3.685591E+02	1.000E+01	2.000E+03	0.000E+00	1.000E+01	7.210E-09	1.500E+02
PSDF	DISP	171	23655(3)	4.354038E-04	3.637616E+02	1.000E+01	2.000E+03	0.000E+00	1.000E+01	5.832E-09	2.260E+02
PSDF	DISP	171	23656(3)	5.000419E-04	3.343242E+02	1.000E+01	2.000E+03	0.000E+00	1.000E+01	8.106E-09	2.240E+02
PSDF	DISP	171	23657(3)	6.383450E-04	3.578466E+02	1.000E+01	2.000E+03	0.000E+00	1.000E+01	1.185E-08	2.240E+02
PSDF	DISP	171	23658(3)	3.103347E-03	3.498634E+02	1.000E+01	2.000E+03	0.000E+00	1.000E+01	1.869E-07	2.700E+02
PSDF	DISP	171	23659(3)	1.633302E-02	2.980223E+02	1.000E+01	2.000E+03	0.000E+00	1.000E+01	8.724E-06	2.840E+02
PSDF	DISP	171	23660(3)	4.186403E-03	3.258840E+02	1.000E+01	2.000E+03	0.000E+00	1.000E+01	9.320E-07	1.480E+02
PSDF	DISP	171	23661(3)	4.187436E-03	3.267416E+02	1.000E+01	2.000E+03	0.000E+00	1.000E+01	9.285E-07	1.480E+02
PSDF	DISP	171	23662(3)	2.776140E-03	2.623917E+02	1.000E+01	2.000E+03	0.000E+00	1.000E+01	3.703E-07	1.480E+02
PSDF	DISP	171	23663(3)	5.087124E-03	2.551012E+02	1.000E+01	2.000E+03	0.000E+00	1.000E+01	8.441E-07	1.580E+02
PSDF	DISP	171	2441(3)	2.728103E-03	3.483655E+02	1.000E+01	2.000E+03	0.000E+00	1.000E+01	1.319E-07	3.920E+02
PSDF	DISP	171	2200(3)	1.102307E-03	2.330377E+02	1.000E+01	2.000E+03	0.000E+00	1.000E+01	2.758E-08	2.680E+02
PSDF	DISP	171	2205(3)	9.984772E-04	2.217807E+02	1.000E+01	2.000E+03	0.000E+00	1.000E+01	2.552E-08	1.480E+02
PSDF	DISP	171	2206(3)	9.991254E-04	2.219687E+02	1.000E+01	2.000E+03	0.000E+00	1.000E+01	2.554E-08	1.480E+02
PSDF	DISP	171	2196(3)	1.296306E-03	2.539293E+02	1.000E+01	2.000E+03	0.000E+00	1.000E+01	5.708E-08	2.680E+02
PSDF	DISP	171	1890(3)	1.535128E-03	2.271907E+02	1.000E+01	2.000E+03	0.000E+00	1.000E+01	1.155E-07	1.480E+02
PSDF	DISP	171	2197(3)	1.295085E-03	2.538752E+02	1.000E+01	2.000E+03	0.000E+00	1.000E+01	5.696E-08	2.680E+02
PSDF	DISP	171	3053(3)	3.580244E-03	2.325340E+02	1.000E+01	2.000E+03	0.000E+00	1.000E+01	5.299E-07	2.260E+02
PSDF	DISP	171	1885(3)	1.533041E-03	2.266909E+02	1.000E+01	2.000E+03	0.000E+00	1.000E+01	1.154E-07	1.480E+02
PSDF	DISP	171	1886(3)	1.532836E-03	2.266583E+02	1.000E+01	2.000E+03	0.000E+00	1.000E+01	1.153E-07	1.480E+02
PSDF	DISP	171	1887(3)	1.533355E-03	2.268139E+02	1.000E+01	2.000E+03	0.000E+00	1.000E+01	1.154E-07	1.480E+02
PSDF	DISP	171	1888(3)	1.533689E-03	2.268847E+02	1.000E+01	2.000E+03	0.000E+00	1.000E+01	1.154E-07	1.480E+02

Z AXIS PSD RESPONSE

X Y - O U T P U T S U M M A R Y (A U T O O R P S D F)

PLOT TYPE	CURVE TYPE	FRAME NO.	CURVE ID.	RMS VALUE	NO. POSITIVE CROSSINGS	XMIN FOR ALL DATA	XMAX FOR ALL DATA	YMIN FOR ALL DATA	X FOR YMIN	YMAX FOR ALL DATA	X FOR* YMAX
PSDF	DISP	171	3037(3)	2.685535E-03	2.750765E+02	1.000E+01	2.000E+03	0.000E+00	1.000E+01	1.652E-07	1.480E+02
PSDF	DISP	171	3038(3)	2.821013E-03	2.807792E+02	1.000E+01	2.000E+03	0.000E+00	1.000E+01	1.638E-07	1.480E+02
PSDF	DISP	171	3039(3)	3.061288E-03	2.921448E+02	1.000E+01	2.000E+03	0.000E+00	1.000E+01	1.599E-07	1.480E+02
PSDF	DISP	171	3040(3)	3.036617E-03	2.969688E+02	1.000E+01	2.000E+03	0.000E+00	1.000E+01	1.606E-07	3.660E+02
PSDF	DISP	171	3041(3)	2.852847E-03	2.961138E+02	1.000E+01	2.000E+03	0.000E+00	1.000E+01	1.454E-07	3.660E+02
PSDF	DISP	171	3042(3)	2.934023E-03	2.980079E+02	1.000E+01	2.000E+03	0.000E+00	1.000E+01	1.584E-07	3.660E+02
PSDF	DISP	171	3043(3)	2.910147E-03	2.928823E+02	1.000E+01	2.000E+03	0.000E+00	1.000E+01	1.594E-07	1.480E+02
PSDF	DISP	171	3044(3)	2.712201E-03	2.801283E+02	1.000E+01	2.000E+03	0.000E+00	1.000E+01	1.632E-07	1.480E+02
PSDF	DISP	171	2097(3)	1.940205E-03	2.784436E+02	1.000E+01	2.000E+03	0.000E+00	1.000E+01	1.134E-07	2.800E+02
PSDF	DISP	171	2098(3)	2.928572E-03	2.677215E+02	1.000E+01	2.000E+03	0.000E+00	1.000E+01	2.450E-07	2.800E+02
PSDF	DISP	171	21086(3)	3.727759E-03	1.745772E+02	1.000E+01	2.000E+03	0.000E+00	1.000E+01	1.380E-06	1.410E+02
PSDF	DISP	171	21126(3)	3.475816E-03	1.762198E+02	1.000E+01	2.000E+03	0.000E+00	1.000E+01	1.188E-06	1.410E+02
PSDF	DISP	171	21139(3)	3.450395E-03	1.762994E+02	1.000E+01	2.000E+03	0.000E+00	1.000E+01	1.170E-06	1.410E+02
PSDF	DISP	171	21150(3)	3.431609E-03	1.764243E+02	1.000E+01	2.000E+03	0.000E+00	1.000E+01	1.156E-06	1.410E+02
PSDF	DISP	171	21159(3)	3.454520E-03	1.761684E+02	1.000E+01	2.000E+03	0.000E+00	1.000E+01	1.173E-06	1.410E+02
PSDF	DISP	171	21160(3)	3.437491E-03	1.762792E+02	1.000E+01	2.000E+03	0.000E+00	1.000E+01	1.161E-06	1.410E+02
PSDF	DISP	171	21161(3)	3.447323E-03	1.758546E+02	1.000E+01	2.000E+03	0.000E+00	1.000E+01	1.170E-06	1.410E+02
PSDF	DISP	171	21094(3)	3.669778E-03	1.754815E+02	1.000E+01	2.000E+03	0.000E+00	1.000E+01	1.332E-06	1.410E+02
PSDF	DISP	171	21190(3)	4.003682E-03	1.664727E+02	1.000E+01	2.000E+03	0.000E+00	1.000E+01	1.582E-06	1.410E+02
PSDF	DISP	171	21198(3)	3.905049E-03	1.673193E+02	1.000E+01	2.000E+03	0.000E+00	1.000E+01	1.496E-06	1.410E+02
PSDF	DISP	171	21206(3)	3.886909E-03	1.673755E+02	1.000E+01	2.000E+03	0.000E+00	1.000E+01	1.483E-06	1.410E+02
PSDF	DISP	171	21214(3)	3.849886E-03	1.676315E+02	1.000E+01	2.000E+03	0.000E+00	1.000E+01	1.453E-06	1.410E+02
PSDF	DISP	171	21227(3)	3.816697E-03	1.678919E+02	1.000E+01	2.000E+03	0.000E+00	1.000E+01	1.426E-06	1.410E+02
PSDF	DISP	171	21238(3)	3.791068E-03	1.681315E+02	1.000E+01	2.000E+03	0.000E+00	1.000E+01	1.405E-06	1.410E+02

Z AXIS PSD RESPONSE

X Y - O U T P U T S U M M A R Y (A U T O O R P S D F)

PLOT TYPE	CURVE TYPE	FRAME NO.	CURVE ID.	RMS VALUE	NO. POSITIVE CROSSINGS	XMIN FOR ALL DATA	XMAX FOR ALL DATA	YMIN FOR ALL DATA	X FOR YMIN	YMAX FOR ALL DATA	X FOR* YMAX
PSDF	DISP	171	21249(3)	3.801235E-03	1.679175E+02	1.000E+01	2.000E+03	0.000E+00	1.000E+01	1.416E-06	1.410E+02
PSDF	DISP	171	21085(3)	3.074241E-03	1.844192E+02	1.000E+01	2.000E+03	0.000E+00	1.000E+01	8.933E-07	1.410E+02
PSDF	DISP	171	21093(3)	3.042071E-03	1.848716E+02	1.000E+01	2.000E+03	0.000E+00	1.000E+01	8.723E-07	1.410E+02
PSDF	DISP	171	21101(3)	2.966697E-03	1.864009E+02	1.000E+01	2.000E+03	0.000E+00	1.000E+01	8.227E-07	1.410E+02
PSDF	DISP	171	21109(3)	2.908389E-03	1.871527E+02	1.000E+01	2.000E+03	0.000E+00	1.000E+01	7.865E-07	1.410E+02
PSDF	DISP	171	21117(3)	2.847120E-03	1.877989E+02	1.000E+01	2.000E+03	0.000E+00	1.000E+01	7.497E-07	1.410E+02
PSDF	DISP	171	21149(3)	2.781277E-03	1.871810E+02	1.000E+01	2.000E+03	0.000E+00	1.000E+01	7.144E-07	1.410E+02
PSDF	DISP	171	21158(3)	2.782647E-03	1.865743E+02	1.000E+01	2.000E+03	0.000E+00	1.000E+01	7.167E-07	1.410E+02
PSDF	DISP	171	21165(3)	2.796906E-03	1.861929E+02	1.000E+01	2.000E+03	0.000E+00	1.000E+01	7.257E-07	1.410E+02
PSDF	DISP	171	21166(3)	2.805108E-03	1.854166E+02	1.000E+01	2.000E+03	0.000E+00	1.000E+01	7.326E-07	1.410E+02
PSDF	DISP	171	21173(3)	3.455416E-03	1.730522E+02	1.000E+01	2.000E+03	0.000E+00	1.000E+01	1.119E-06	1.410E+02
PSDF	DISP	171	21181(3)	3.420732E-03	1.735464E+02	1.000E+01	2.000E+03	0.000E+00	1.000E+01	1.093E-06	1.410E+02
PSDF	DISP	171	21205(3)	3.202671E-03	1.765471E+02	1.000E+01	2.000E+03	0.000E+00	1.000E+01	9.368E-07	1.410E+02
PSDF	DISP	171	21213(3)	3.179302E-03	1.766367E+02	1.000E+01	2.000E+03	0.000E+00	1.000E+01	9.239E-07	1.410E+02
PSDF	DISP	171	21226(3)	3.129867E-03	1.772007E+02	1.000E+01	2.000E+03	0.000E+00	1.000E+01	8.927E-07	1.410E+02
PSDF	DISP	171	21237(3)	3.104003E-03	1.773667E+02	1.000E+01	2.000E+03	0.000E+00	1.000E+01	8.781E-07	1.410E+02
PSDF	DISP	171	21246(3)	3.097732E-03	1.772267E+02	1.000E+01	2.000E+03	0.000E+00	1.000E+01	8.766E-07	1.410E+02
PSDF	DISP	171	21253(3)	3.111287E-03	1.769665E+02	1.000E+01	2.000E+03	0.000E+00	1.000E+01	8.863E-07	1.410E+02
PSDF	DISP	171	21118(3)	3.504950E-03	1.762058E+02	1.000E+01	2.000E+03	0.000E+00	1.000E+01	1.209E-06	1.410E+02
PSDF	DISP	171	21174(3)	4.132517E-03	1.653649E+02	1.000E+01	2.000E+03	0.000E+00	1.000E+01	1.699E-06	1.410E+02
PSDF	DISP	171	21182(3)	4.076178E-03	1.659052E+02	1.000E+01	2.000E+03	0.000E+00	1.000E+01	1.646E-06	1.410E+02
PSDF	DISP	171	21102(3)	3.605823E-03	1.757937E+02	1.000E+01	2.000E+03	0.000E+00	1.000E+01	1.283E-06	1.410E+02
PSDF	DISP	171	21110(3)	3.516363E-03	1.764866E+02	1.000E+01	2.000E+03	0.000E+00	1.000E+01	1.216E-06	1.410E+02
PSDF	DISP	171	21247(3)	3.811727E-03	1.679661E+02	1.000E+01	2.000E+03	0.000E+00	1.000E+01	1.423E-06	1.410E+02

Z AXIS PSD RESPONSE

X Y - O U T P U T S U M M A R Y (A U T O O R P S D F)

PLOT TYPE	CURVE TYPE	FRAME NO.	CURVE ID.	RMS VALUE	NO. POSITIVE CROSSINGS	XMIN FOR ALL DATA	XMAX FOR ALL DATA	YMIN FOR ALL DATA	X FOR YMIN	YMAX FOR ALL DATA	X FOR* YMAX
PSDF	DISP	171	21248(3)	3.791603E-03	1.681393E+02	1.000E+01	2.000E+03	0.000E+00	1.000E+01	1.406E-06	1.410E+02
PSDF	DISP	171	21125(3)	2.834062E-03	1.873732E+02	1.000E+01	2.000E+03	0.000E+00	1.000E+01	7.434E-07	1.410E+02
PSDF	DISP	171	21138(3)	2.796636E-03	1.875096E+02	1.000E+01	2.000E+03	0.000E+00	1.000E+01	7.221E-07	1.410E+02
PSDF	DISP	171	21189(3)	3.342868E-03	1.747474E+02	1.000E+01	2.000E+03	0.000E+00	1.000E+01	1.033E-06	1.410E+02
PSDF	DISP	171	21197(3)	3.275818E-03	1.756148E+02	1.000E+01	2.000E+03	0.000E+00	1.000E+01	9.861E-07	1.410E+02
PSDF	DISP	171	21254(3)	3.116609E-03	1.766092E+02	1.000E+01	2.000E+03	0.000E+00	1.000E+01	8.922E-07	1.410E+02
PSDF	DISP	171	2204(3)	9.979603E-04	2.216442E+02	1.000E+01	2.000E+03	0.000E+00	1.000E+01	2.551E-08	1.480E+02
PSDF	DISP	171	2202(3)	1.102951E-03	2.330760E+02	1.000E+01	2.000E+03	0.000E+00	1.000E+01	2.760E-08	2.680E+02
PSDF	DISP	171	22644(3)	9.431675E-03	1.647557E+02	1.000E+01	2.000E+03	0.000E+00	1.000E+01	7.232E-06	1.410E+02
PSDF	DISP	171	22632(3)	7.748419E-03	1.911667E+02	1.000E+01	2.000E+03	0.000E+00	1.000E+01	3.068E-06	1.940E+02
PSDF	DISP	171	23231(3)	2.174374E-03	2.239298E+02	1.000E+01	2.000E+03	0.000E+00	1.000E+01	3.728E-07	1.470E+02
PSDF	DISP	171	23232(3)	2.174290E-03	2.240367E+02	1.000E+01	2.000E+03	0.000E+00	1.000E+01	3.724E-07	1.470E+02
PSDF	DISP	171	23233(3)	2.173747E-03	2.247249E+02	1.000E+01	2.000E+03	0.000E+00	1.000E+01	3.696E-07	1.470E+02
PSDF	DISP	171	23234(3)	2.176907E-03	2.387859E+02	1.000E+01	2.000E+03	0.000E+00	1.000E+01	3.125E-07	1.470E+02
PSDF	DISP	171	23235(3)	2.177029E-03	2.393688E+02	1.000E+01	2.000E+03	0.000E+00	1.000E+01	3.091E-07	1.470E+02
PSDF	DISP	171	22859(3)	1.099310E-03	3.942359E+02	1.000E+01	2.000E+03	0.000E+00	1.000E+01	1.043E-08	3.340E+02
PSDF	DISP	171	22868(3)	2.182255E-03	2.315402E+02	1.000E+01	2.000E+03	0.000E+00	1.000E+01	2.297E-07	1.470E+02
PSDF	DISP	171	23609(3)	3.909684E-03	2.764359E+02	1.000E+01	2.000E+03	0.000E+00	1.000E+01	4.581E-07	2.800E+02
PSDF	DISP	171	23610(3)	3.590422E-03	2.995205E+02	1.000E+01	2.000E+03	0.000E+00	1.000E+01	4.175E-07	2.800E+02
PSDF	DISP	171	23611(3)	2.498604E-03	2.412564E+02	1.000E+01	2.000E+03	0.000E+00	1.000E+01	1.207E-07	1.820E+02
PSDF	DISP	171	23612(3)	3.145485E-03	2.376535E+02	1.000E+01	2.000E+03	0.000E+00	1.000E+01	3.080E-07	1.820E+02
PSDF	DISP	171	23613(3)	3.050174E-03	3.369309E+02	1.000E+01	2.000E+03	0.000E+00	1.000E+01	3.465E-07	2.780E+02
PSDF	DISP	171	23614(3)	2.548414E-03	3.004765E+02	1.000E+01	2.000E+03	0.000E+00	1.000E+01	2.259E-07	2.780E+02
PSDF	DISP	171	23615(3)	2.484386E-03	3.105497E+02	1.000E+01	2.000E+03	0.000E+00	1.000E+01	1.409E-07	2.980E+02

Z AXIS PSD RESPONSE

X Y - O U T P U T S U M M A R Y (A U T O O R P S D F)

PLOT TYPE	CURVE TYPE	FRAME NO.	CURVE ID.	RMS VALUE	NO. POSITIVE CROSSINGS	XMIN FOR ALL DATA	XMAX FOR ALL DATA	YMIN FOR ALL DATA	X FOR YMIN	YMAX FOR ALL DATA	X FOR* YMAX
PSDF	DISP	171	23616(3)	3.996015E-03	3.315746E+02	1.000E+01	2.000E+03	0.000E+00	1.000E+01	3.175E-07	2.980E+02
PSDF	DISP	171	23617(3)	3.922398E-03	1.853788E+02	1.000E+01	2.000E+03	0.000E+00	1.000E+01	4.516E-07	1.151E+02
PSDF	DISP	171	23618(3)	6.386722E-03	2.561133E+02	1.000E+01	2.000E+03	0.000E+00	1.000E+01	1.081E-06	2.800E+02
PSDF	DISP	171	23619(3)	5.308636E-03	2.873392E+02	1.000E+01	2.000E+03	0.000E+00	1.000E+01	1.005E-06	2.980E+02
PSDF	DISP	171	2752(3)	2.401095E-03	4.395724E+02	1.000E+01	2.000E+03	0.000E+00	1.000E+01	1.208E-07	4.800E+02
PSDF	DISP	171	2758(3)	1.662063E-03	3.212252E+02	1.000E+01	2.000E+03	0.000E+00	1.000E+01	5.629E-08	2.700E+02
PSDF	DISP	171	2748(3)	3.412065E-03	3.128328E+02	1.000E+01	2.000E+03	0.000E+00	1.000E+01	4.236E-07	2.840E+02
PSDF	DISP	171	618(3)	1.762851E-03	3.099090E+02	1.000E+01	2.000E+03	0.000E+00	1.000E+01	8.085E-08	2.680E+02
PSDF	DISP	171	603(3)	1.269406E-02	2.630675E+02	1.000E+01	2.000E+03	0.000E+00	1.000E+01	6.707E-06	2.680E+02
PSDF	DISP	171	2441(3)	2.728103E-03	3.483655E+02	1.000E+01	2.000E+03	0.000E+00	1.000E+01	1.319E-07	3.920E+02
PSDF	DISP	171	25803(3)	4.561361E-03	1.819918E+02	1.000E+01	2.000E+03	0.000E+00	1.000E+01	1.111E-06	1.490E+02
PSDF	DISP	171	2175(3)	1.055476E-03	3.460903E+02	1.000E+01	2.000E+03	0.000E+00	1.000E+01	1.558E-08	2.820E+02
PSDF	DISP	171	2086(3)	1.819459E-03	2.668081E+02	1.000E+01	2.000E+03	0.000E+00	1.000E+01	1.348E-07	2.680E+02
PSDF	DISP	171	26116(3)	1.216831E-02	6.054788E+02	1.000E+01	2.000E+03	0.000E+00	1.000E+01	2.407E-06	6.220E+02
PSDF	DISP	171	26146(3)	4.187818E-03	2.001576E+02	1.000E+01	2.000E+03	0.000E+00	1.000E+01	6.438E-07	1.800E+02
PSDF	DISP	171	26336(3)	2.198718E-03	3.250455E+02	1.000E+01	2.000E+03	0.000E+00	1.000E+01	9.718E-08	1.820E+02
PSDF	DISP	171	26417(3)	2.882905E-03	1.820464E+02	1.000E+01	2.000E+03	0.000E+00	1.000E+01	5.457E-07	1.490E+02
PSDF	DISP	171	26082(3)	2.963306E-03	2.724414E+02	1.000E+01	2.000E+03	0.000E+00	1.000E+01	2.632E-07	1.480E+02
PSDF	DISP	171	24000(3)	9.788770E-11	5.717252E+01	1.000E+01	2.000E+03	0.000E+00	1.000E+01	1.344E-21	2.200E+01
PSDF	DISP	171	2201(4)	7.185964E-04	2.469748E+02	1.000E+01	2.000E+03	0.000E+00	1.000E+01	1.542E-08	2.640E+02
PSDF	DISP	171	2660(4)	6.347394E-04	3.079365E+02	1.000E+01	2.000E+03	0.000E+00	1.000E+01	7.528E-09	1.028E+02
PSDF	DISP	171	2648(4)	6.350257E-04	3.088500E+02	1.000E+01	2.000E+03	0.000E+00	1.000E+01	7.554E-09	1.028E+02
PSDF	DISP	171	2650(4)	7.071787E-04	2.708400E+02	1.000E+01	2.000E+03	0.000E+00	1.000E+01	1.837E-08	1.028E+02
PSDF	DISP	171	2658(4)	7.056649E-04	2.715707E+02	1.000E+01	2.000E+03	0.000E+00	1.000E+01	1.838E-08	1.028E+02

Z AXIS PSD RESPONSE

X Y - O U T P U T S U M M A R Y (A U T O O R P S D F)

PLOT TYPE	CURVE TYPE	FRAME NO.	CURVE ID.	RMS VALUE	NO. POSITIVE CROSSINGS	XMIN FOR ALL DATA	XMAX FOR ALL DATA	YMIN FOR ALL DATA	X FOR YMIN	YMAX FOR ALL DATA	X FOR* YMAX
PSDF	DISP	171	2441(4)	1.016864E-03	3.283439E+02	1.000E+01	2.000E+03	0.000E+00	1.000E+01	1.660E-08	2.700E+02
PSDF	DISP	171	2200(4)	6.611241E-04	2.459682E+02	1.000E+01	2.000E+03	0.000E+00	1.000E+01	1.019E-08	2.640E+02
PSDF	DISP	171	2205(4)	7.195870E-04	2.471665E+02	1.000E+01	2.000E+03	0.000E+00	1.000E+01	1.547E-08	2.640E+02
PSDF	DISP	171	2206(4)	8.146603E-04	2.555777E+02	1.000E+01	2.000E+03	0.000E+00	1.000E+01	2.374E-08	2.660E+02
PSDF	DISP	171	2196(4)	6.621755E-04	2.462916E+02	1.000E+01	2.000E+03	0.000E+00	1.000E+01	1.025E-08	2.640E+02
PSDF	DISP	171	1890(4)	1.293094E-03	3.328867E+02	1.000E+01	2.000E+03	0.000E+00	1.000E+01	6.351E-08	1.028E+02
PSDF	DISP	171	2197(4)	7.176343E-04	2.468513E+02	1.000E+01	2.000E+03	0.000E+00	1.000E+01	1.536E-08	2.640E+02
PSDF	DISP	171	3053(4)	2.583164E-03	2.313245E+02	1.000E+01	2.000E+03	0.000E+00	1.000E+01	3.418E-07	1.440E+02
PSDF	DISP	171	1885(4)	1.566519E-03	2.857851E+02	1.000E+01	2.000E+03	0.000E+00	1.000E+01	3.794E-08	1.400E+02
PSDF	DISP	171	1886(4)	1.502800E-03	2.783582E+02	1.000E+01	2.000E+03	0.000E+00	1.000E+01	3.864E-08	1.028E+02
PSDF	DISP	171	1887(4)	1.137106E-03	2.260284E+02	1.000E+01	2.000E+03	0.000E+00	1.000E+01	5.382E-08	1.028E+02
PSDF	DISP	171	1888(4)	1.129718E-03	2.323232E+02	1.000E+01	2.000E+03	0.000E+00	1.000E+01	5.583E-08	1.028E+02
PSDF	DISP	171	3037(4)	1.036400E-03	1.849693E+02	1.000E+01	2.000E+03	0.000E+00	1.000E+01	5.709E-08	1.028E+02
PSDF	DISP	171	3038(4)	1.028639E-03	1.832428E+02	1.000E+01	2.000E+03	0.000E+00	1.000E+01	5.675E-08	1.028E+02
PSDF	DISP	171	3039(4)	1.007361E-03	1.764867E+02	1.000E+01	2.000E+03	0.000E+00	1.000E+01	5.598E-08	1.028E+02
PSDF	DISP	171	3040(4)	9.872528E-04	1.696902E+02	1.000E+01	2.000E+03	0.000E+00	1.000E+01	5.519E-08	1.028E+02
PSDF	DISP	171	3041(4)	9.798064E-04	1.667304E+02	1.000E+01	2.000E+03	0.000E+00	1.000E+01	5.490E-08	1.028E+02
PSDF	DISP	171	3042(4)	9.869598E-04	1.684937E+02	1.000E+01	2.000E+03	0.000E+00	1.000E+01	5.522E-08	1.028E+02
PSDF	DISP	171	3043(4)	1.006879E-03	1.753548E+02	1.000E+01	2.000E+03	0.000E+00	1.000E+01	5.601E-08	1.028E+02
PSDF	DISP	171	3044(4)	1.027068E-03	1.814771E+02	1.000E+01	2.000E+03	0.000E+00	1.000E+01	5.680E-08	1.028E+02
PSDF	DISP	171	2097(4)	5.050683E-04	2.544076E+02	1.000E+01	2.000E+03	0.000E+00	1.000E+01	6.593E-09	1.820E+02
PSDF	DISP	171	2098(4)	5.030290E-04	2.540730E+02	1.000E+01	2.000E+03	0.000E+00	1.000E+01	6.530E-09	1.820E+02
PSDF	DISP	171	21086(4)	1.694790E-03	2.314362E+02	1.000E+01	2.000E+03	0.000E+00	1.000E+01	1.623E-07	1.410E+02
PSDF	DISP	171	21126(4)	4.237503E-03	1.620325E+02	1.000E+01	2.000E+03	0.000E+00	1.000E+01	1.164E-06	1.520E+02

Z AXIS PSD RESPONSE

X Y - O U T P U T S U M M A R Y (A U T O O R P S D F)

PLOT TYPE	CURVE TYPE	FRAME NO.	CURVE ID.	RMS VALUE	NO. POSITIVE CROSSINGS	XMIN FOR ALL DATA	XMAX FOR ALL DATA	YMIN FOR ALL DATA	X FOR YMIN	YMAX FOR ALL DATA	X FOR* YMAX
PSDF	DISP	171	21139(4)	3.315557E-03	1.729981E+02	1.000E+01	2.000E+03	0.000E+00	1.000E+01	6.427E-07	1.520E+02
PSDF	DISP	171	21150(4)	2.691155E-03	1.990963E+02	1.000E+01	2.000E+03	0.000E+00	1.000E+01	3.002E-07	1.520E+02
PSDF	DISP	171	21159(4)	2.487066E-03	2.282508E+02	1.000E+01	2.000E+03	0.000E+00	1.000E+01	3.818E-07	2.240E+02
PSDF	DISP	171	21160(4)	2.718085E-03	2.404073E+02	1.000E+01	2.000E+03	0.000E+00	1.000E+01	5.508E-07	2.240E+02
PSDF	DISP	171	21161(4)	3.254555E-03	2.526373E+02	1.000E+01	2.000E+03	0.000E+00	1.000E+01	7.960E-07	2.240E+02
PSDF	DISP	171	21094(4)	2.993312E-03	1.639118E+02	1.000E+01	2.000E+03	0.000E+00	1.000E+01	5.214E-07	1.500E+02
PSDF	DISP	171	21190(4)	4.808487E-03	1.560255E+02	1.000E+01	2.000E+03	0.000E+00	1.000E+01	1.591E-06	1.500E+02
PSDF	DISP	171	21198(4)	5.608241E-03	1.563168E+02	1.000E+01	2.000E+03	0.000E+00	1.000E+01	2.234E-06	1.520E+02
PSDF	DISP	171	21206(4)	5.466281E-03	1.572345E+02	1.000E+01	2.000E+03	0.000E+00	1.000E+01	2.143E-06	1.520E+02
PSDF	DISP	171	21214(4)	4.637149E-03	1.591264E+02	1.000E+01	2.000E+03	0.000E+00	1.000E+01	1.533E-06	1.520E+02
PSDF	DISP	171	21227(4)	3.559940E-03	1.656250E+02	1.000E+01	2.000E+03	0.000E+00	1.000E+01	8.481E-07	1.520E+02
PSDF	DISP	171	21238(4)	2.736412E-03	1.840416E+02	1.000E+01	2.000E+03	0.000E+00	1.000E+01	3.983E-07	1.520E+02
PSDF	DISP	171	21249(4)	2.797067E-03	2.424457E+02	1.000E+01	2.000E+03	0.000E+00	1.000E+01	6.190E-07	2.240E+02
PSDF	DISP	171	21085(4)	1.917700E-03	2.310534E+02	1.000E+01	2.000E+03	0.000E+00	1.000E+01	1.207E-07	1.500E+02
PSDF	DISP	171	21093(4)	3.093868E-03	1.670158E+02	1.000E+01	2.000E+03	0.000E+00	1.000E+01	6.000E-07	1.520E+02
PSDF	DISP	171	21101(4)	4.358188E-03	1.594742E+02	1.000E+01	2.000E+03	0.000E+00	1.000E+01	1.304E-06	1.520E+02
PSDF	DISP	171	21109(4)	5.033076E-03	1.591357E+02	1.000E+01	2.000E+03	0.000E+00	1.000E+01	1.766E-06	1.520E+02
PSDF	DISP	171	21117(4)	4.870410E-03	1.601063E+02	1.000E+01	2.000E+03	0.000E+00	1.000E+01	1.657E-06	1.520E+02
PSDF	DISP	171	21149(4)	2.594010E-03	1.975236E+02	1.000E+01	2.000E+03	0.000E+00	1.000E+01	2.908E-07	1.520E+02
PSDF	DISP	171	21158(4)	2.448979E-03	2.257656E+02	1.000E+01	2.000E+03	0.000E+00	1.000E+01	3.852E-07	2.240E+02
PSDF	DISP	171	21165(4)	2.685992E-03	2.393019E+02	1.000E+01	2.000E+03	0.000E+00	1.000E+01	5.488E-07	2.240E+02
PSDF	DISP	171	21166(4)	3.242914E-03	2.515104E+02	1.000E+01	2.000E+03	0.000E+00	1.000E+01	8.004E-07	2.240E+02
PSDF	DISP	171	21173(4)	1.885407E-03	2.282546E+02	1.000E+01	2.000E+03	0.000E+00	1.000E+01	1.546E-07	1.500E+02
PSDF	DISP	171	21181(4)	3.341690E-03	1.620548E+02	1.000E+01	2.000E+03	0.000E+00	1.000E+01	7.863E-07	1.520E+02

Z AXIS PSD RESPONSE

X Y - O U T P U T S U M M A R Y (A U T O O R P S D F)

PLOT TYPE	CURVE TYPE	FRAME NO.	CURVE ID.	RMS VALUE	NO. POSITIVE CROSSINGS	XMIN FOR ALL DATA	XMAX FOR ALL DATA	YMIN FOR ALL DATA	X FOR YMIN	YMAX FOR ALL DATA	X FOR* YMAX
PSDF	DISP	171	21205(4)	5.360340E-03	1.576282E+02	1.000E+01	2.000E+03	0.000E+00	1.000E+01	2.180E-06	1.520E+02
PSDF	DISP	171	21213(4)	4.543286E-03	1.588833E+02	1.000E+01	2.000E+03	0.000E+00	1.000E+01	1.548E-06	1.520E+02
PSDF	DISP	171	21226(4)	3.446913E-03	1.649675E+02	1.000E+01	2.000E+03	0.000E+00	1.000E+01	8.355E-07	1.520E+02
PSDF	DISP	171	21237(4)	2.640531E-03	1.832228E+02	1.000E+01	2.000E+03	0.000E+00	1.000E+01	3.869E-07	1.520E+02
PSDF	DISP	171	21246(4)	2.288048E-03	2.111106E+02	1.000E+01	2.000E+03	0.000E+00	1.000E+01	3.004E-07	2.240E+02
PSDF	DISP	171	21253(4)	2.374973E-03	2.295046E+02	1.000E+01	2.000E+03	0.000E+00	1.000E+01	4.283E-07	2.240E+02
PSDF	DISP	171	21118(4)	4.975463E-03	1.598139E+02	1.000E+01	2.000E+03	0.000E+00	1.000E+01	1.630E-06	1.520E+02
PSDF	DISP	171	21174(4)	1.682603E-03	2.223628E+02	1.000E+01	2.000E+03	0.000E+00	1.000E+01	1.642E-07	1.410E+02
PSDF	DISP	171	21182(4)	3.222810E-03	1.596045E+02	1.000E+01	2.000E+03	0.000E+00	1.000E+01	6.776E-07	1.500E+02
PSDF	DISP	171	21102(4)	4.399418E-03	1.586101E+02	1.000E+01	2.000E+03	0.000E+00	1.000E+01	1.216E-06	1.500E+02
PSDF	DISP	171	21110(4)	5.108311E-03	1.588860E+02	1.000E+01	2.000E+03	0.000E+00	1.000E+01	1.700E-06	1.520E+02
PSDF	DISP	171	21247(4)	2.318790E-03	2.118955E+02	1.000E+01	2.000E+03	0.000E+00	1.000E+01	2.960E-07	2.240E+02
PSDF	DISP	171	21248(4)	2.388377E-03	2.288611E+02	1.000E+01	2.000E+03	0.000E+00	1.000E+01	4.284E-07	2.240E+02
PSDF	DISP	171	21125(4)	4.142255E-03	1.625705E+02	1.000E+01	2.000E+03	0.000E+00	1.000E+01	1.175E-06	1.520E+02
PSDF	DISP	171	21138(4)	3.203975E-03	1.728224E+02	1.000E+01	2.000E+03	0.000E+00	1.000E+01	6.314E-07	1.520E+02
PSDF	DISP	171	21189(4)	4.776757E-03	1.563643E+02	1.000E+01	2.000E+03	0.000E+00	1.000E+01	1.711E-06	1.520E+02
PSDF	DISP	171	21197(4)	5.534390E-03	1.567573E+02	1.000E+01	2.000E+03	0.000E+00	1.000E+01	2.320E-06	1.520E+02
PSDF	DISP	171	21254(4)	2.815348E-03	2.461140E+02	1.000E+01	2.000E+03	0.000E+00	1.000E+01	6.246E-07	2.240E+02
PSDF	DISP	171	2204(4)	6.621381E-04	2.462227E+02	1.000E+01	2.000E+03	0.000E+00	1.000E+01	1.024E-08	2.640E+02
PSDF	DISP	171	2202(4)	8.106441E-04	2.551411E+02	1.000E+01	2.000E+03	0.000E+00	1.000E+01	2.344E-08	2.660E+02
PSDF	DISP	171	22644(4)	1.612099E-03	1.955625E+02	1.000E+01	2.000E+03	0.000E+00	1.000E+01	1.253E-07	1.410E+02
PSDF	DISP	171	22632(4)	4.506567E-04	2.916797E+02	1.000E+01	2.000E+03	0.000E+00	1.000E+01	6.985E-09	1.410E+02
PSDF	DISP	171	23231(4)	1.165292E-03	2.875303E+02	1.000E+01	2.000E+03	0.000E+00	1.000E+01	2.507E-08	2.680E+02
PSDF	DISP	171	23232(4)	1.075660E-03	2.786675E+02	1.000E+01	2.000E+03	0.000E+00	1.000E+01	2.215E-08	2.680E+02

Z AXIS PSD RESPONSE

X Y - O U T P U T S U M M A R Y (A U T O O R P S D F)

PLOT TYPE	CURVE TYPE	FRAME NO.	CURVE ID.	RMS VALUE	NO. POSITIVE CROSSINGS	XMIN FOR ALL DATA	XMAX FOR ALL DATA	YMIN FOR ALL DATA	X FOR YMIN	YMAX FOR ALL DATA	X FOR* YMAX
PSDF	DISP	171	23233(4)	6.642543E-04	2.907078E+02	1.000E+01	2.000E+03	0.000E+00	1.000E+01	1.176E-08	1.820E+02
PSDF	DISP	171	23234(4)	1.005597E-03	2.720199E+02	1.000E+01	2.000E+03	0.000E+00	1.000E+01	1.959E-08	2.680E+02
PSDF	DISP	171	23235(4)	6.648300E-04	2.934340E+02	1.000E+01	2.000E+03	0.000E+00	1.000E+01	1.177E-08	1.820E+02
PSDF	DISP	171	22859(4)	7.980265E-04	3.274270E+02	1.000E+01	2.000E+03	0.000E+00	1.000E+01	1.362E-08	1.820E+02
PSDF	DISP	171	22368(4)	7.541366E-04	3.389638E+02	1.000E+01	2.000E+03	0.000E+00	1.000E+01	1.370E-08	1.820E+02
PSDF	DISP	171	23609(4)	5.082965E-04	2.537917E+02	1.000E+01	2.000E+03	0.000E+00	1.000E+01	6.569E-09	1.820E+02
PSDF	DISP	171	23610(4)	5.323990E-04	2.538454E+02	1.000E+01	2.000E+03	0.000E+00	1.000E+01	6.832E-09	1.820E+02
PSDF	DISP	171	23611(4)	4.903942E-04	2.554887E+02	1.000E+01	2.000E+03	0.000E+00	1.000E+01	6.400E-09	1.820E+02
PSDF	DISP	171	23612(4)	4.714762E-04	2.580172E+02	1.000E+01	2.000E+03	0.000E+00	1.000E+01	6.240E-09	1.820E+02
PSDF	DISP	171	23613(4)	5.760734E-04	2.564250E+02	1.000E+01	2.000E+03	0.000E+00	1.000E+01	7.273E-09	1.820E+02
PSDF	DISP	171	23614(4)	5.236745E-04	2.537257E+02	1.000E+01	2.000E+03	0.000E+00	1.000E+01	6.780E-09	1.820E+02
PSDF	DISP	171	23615(4)	4.699347E-04	2.588943E+02	1.000E+01	2.000E+03	0.000E+00	1.000E+01	6.231E-09	1.820E+02
PSDF	DISP	171	23616(4)	5.732012E-04	2.557889E+02	1.000E+01	2.000E+03	0.000E+00	1.000E+01	7.223E-09	1.820E+02
PSDF	DISP	171	23617(4)	5.699418E-04	2.550505E+02	1.000E+01	2.000E+03	0.000E+00	1.000E+01	7.164E-09	1.820E+02
PSDF	DISP	171	23618(4)	4.702447E-04	2.575244E+02	1.000E+01	2.000E+03	0.000E+00	1.000E+01	6.199E-09	1.820E+02
PSDF	DISP	171	23619(4)	5.131165E-04	2.527084E+02	1.000E+01	2.000E+03	0.000E+00	1.000E+01	6.561E-09	1.820E+02
PSDF	DISP	171	2752(4)	2.388574E-03	5.177108E+02	1.000E+01	2.000E+03	0.000E+00	1.000E+01	5.303E-08	2.680E+02
PSDF	DISP	171	2758(4)	1.584949E-02	3.010250E+02	1.000E+01	2.000E+03	0.000E+00	1.000E+01	9.068E-06	2.840E+02
PSDF	DISP	171	2748(4)	8.833661E-04	3.067238E+02	1.000E+01	2.000E+03	0.000E+00	1.000E+01	1.545E-08	2.680E+02
PSDF	DISP	171	618(4)	7.831757E-04	3.217240E+02	1.000E+01	2.000E+03	0.000E+00	1.000E+01	8.911E-09	3.920E+02
PSDF	DISP	171	603(4)	9.232631E-04	3.268197E+02	1.000E+01	2.000E+03	0.000E+00	1.000E+01	1.165E-08	3.920E+02
PSDF	DISP	171	2441(4)	1.016864E-03	3.283439E+02	1.000E+01	2.000E+03	0.000E+00	1.000E+01	1.660E-08	2.700E+02
PSDF	DISP	171	25303(4)	2.804753E-03	2.459495E+02	1.000E+01	2.000E+03	0.000E+00	1.000E+01	3.074E-07	1.600E+02
PSDF	DISP	171	2175(4)	8.679921E-04	2.420497E+02	1.000E+01	2.000E+03	0.000E+00	1.000E+01	3.290E-08	1.028E+02

Z AXIS PSD RESPONSE

X Y - O U T P U T S U M M A R Y (A U T O O R P S D F)

PLOT TYPE	CURVE TYPE	FRAME NO.	CURVE ID.	RMS VALUE	NO. POSITIVE CROSSINGS	XMIN FOR ALL DATA	XMAX FOR ALL DATA	YMIN FOR ALL DATA	X FOR YMIN	YMAX FOR ALL DATA	X FOR* YMAX
PSDF	DISP	171	2086(4)	7.566975E-04	2.721178E+02	1.000E+01	2.000E+03	0.000E+00	1.000E+01	1.093E-08	2.620E+02
PSDF	DISP	171	26116(4)	3.159859E-03	3.598783E+02	1.000E+01	2.000E+03	0.000E+00	1.000E+01	1.693E-07	1.580E+02
PSDF	DISP	171	26146(4)	2.309737E-03	3.962353E+02	1.000E+01	2.000E+03	0.000E+00	1.000E+01	7.784E-08	1.400E+02
PSDF	DISP	171	26336(4)	2.709815E-03	2.565064E+02	1.000E+01	2.000E+03	0.000E+00	1.000E+01	2.266E-07	1.600E+02
PSDF	DISP	171	26417(4)	2.874482E-03	2.636794E+02	1.000E+01	2.000E+03	0.000E+00	1.000E+01	3.008E-07	1.600E+02
PSDF	DISP	171	26082(4)	2.174188E-03	3.440919E+02	1.000E+01	2.000E+03	0.000E+00	1.000E+01	7.605E-08	1.400E+02
PSDF	DISP	171	24000(4)	4.897732E-11	5.182954E+01	1.000E+01	2.000E+03	0.000E+00	1.000E+01	5.233E-22	2.200E+01
PSDF	DISP	171	2201(5)	9.085502E-03	1.635901E+02	1.000E+01	2.000E+03	0.000E+00	1.000E+01	6.674E-06	2.000E+01
PSDF	DISP	171	2660(5)	8.626057E-03	1.442637E+02	1.000E+01	2.000E+03	0.000E+00	1.000E+01	6.654E-06	2.000E+01
PSDF	DISP	171	2648(5)	7.707796E-03	1.033389E+02	1.000E+01	2.000E+03	0.000E+00	1.000E+01	6.628E-06	2.000E+01
PSDF	DISP	171	2650(5)	7.621563E-03	9.635788E+01	1.000E+01	2.000E+03	0.000E+00	1.000E+01	6.623E-06	2.000E+01
PSDF	DISP	171	2658(5)	1.003255E-02	1.901540E+02	1.000E+01	2.000E+03	0.000E+00	1.000E+01	6.674E-06	2.000E+01
PSDF	DISP	171	2441(5)	7.423360E-03	6.176419E+01	1.000E+01	2.000E+03	0.000E+00	1.000E+01	6.610E-06	2.000E+01
PSDF	DISP	171	2200(5)	8.363375E-03	1.305560E+02	1.000E+01	2.000E+03	0.000E+00	1.000E+01	6.653E-06	2.000E+01
PSDF	DISP	171	2205(5)	7.968354E-03	1.114124E+02	1.000E+01	2.000E+03	0.000E+00	1.000E+01	6.646E-06	2.000E+01
PSDF	DISP	171	2206(5)	7.754793E-03	9.966985E+01	1.000E+01	2.000E+03	0.000E+00	1.000E+01	6.636E-06	2.000E+01
PSDF	DISP	171	2196(5)	8.405781E-03	1.362820E+02	1.000E+01	2.000E+03	0.000E+00	1.000E+01	6.650E-06	2.000E+01
PSDF	DISP	171	1890(5)	7.476605E-03	8.230061E+01	1.000E+01	2.000E+03	0.000E+00	1.000E+01	6.609E-06	2.000E+01
PSDF	DISP	171	2197(5)	8.381326E-03	1.330773E+02	1.000E+01	2.000E+03	0.000E+00	1.000E+01	6.649E-06	2.000E+01
PSDF	DISP	171	3053(5)	7.794097E-03	1.033277E+02	1.000E+01	2.000E+03	0.000E+00	1.000E+01	6.637E-06	2.000E+01
PSDF	DISP	171	1885(5)	7.694418E-03	9.662068E+01	1.000E+01	2.000E+03	0.000E+00	1.000E+01	6.633E-06	2.000E+01
PSDF	DISP	171	1886(5)	7.665703E-03	9.364969E+01	1.000E+01	2.000E+03	0.000E+00	1.000E+01	6.631E-06	2.000E+01
PSDF	DISP	171	1887(5)	7.486055E-03	7.445560E+01	1.000E+01	2.000E+03	0.000E+00	1.000E+01	6.613E-06	2.000E+01
PSDF	DISP	171	1888(5)	7.470437E-03	7.274967E+01	1.000E+01	2.000E+03	0.000E+00	1.000E+01	6.611E-06	2.000E+01

Z AXIS PSD RESPONSE

X Y - O U T P U T S U M M A R Y (A U T O O R P S D F)

PLOT TYPE	CURVE TYPE	FRAME NO.	CURVE ID.	RMS VALUE	NO. POSITIVE CROSSINGS	XMIN FOR ALL DATA	XMAX FOR ALL DATA	YMIN FOR ALL DATA	X FOR YMIN	YMAX FOR ALL DATA	X FOR* YMAX
PSDF	DISP	171	3037(5)	7.451910E-03	7.123341E+01	1.000E+01	2.000E+03	0.000E+00	1.000E+01	6.608E-06	2.000E+01
PSDF	DISP	171	3038(5)	7.449271E-03	7.096091E+01	1.000E+01	2.000E+03	0.000E+00	1.000E+01	6.608E-06	2.000E+01
PSDF	DISP	171	3039(5)	7.448266E-03	7.081614E+01	1.000E+01	2.000E+03	0.000E+00	1.000E+01	6.608E-06	2.000E+01
PSDF	DISP	171	3040(5)	7.449405E-03	7.089982E+01	1.000E+01	2.000E+03	0.000E+00	1.000E+01	6.608E-06	2.000E+01
PSDF	DISP	171	3041(5)	7.452335E-03	7.112705E+01	1.000E+01	2.000E+03	0.000E+00	1.000E+01	6.608E-06	2.000E+01
PSDF	DISP	171	3042(5)	7.455552E-03	7.161974E+01	1.000E+01	2.000E+03	0.000E+00	1.000E+01	6.609E-06	2.000E+01
PSDF	DISP	171	3043(5)	7.456840E-03	7.182399E+01	1.000E+01	2.000E+03	0.000E+00	1.000E+01	6.609E-06	2.000E+01
PSDF	DISP	171	3044(5)	7.455305E-03	7.165549E+01	1.000E+01	2.000E+03	0.000E+00	1.000E+01	6.609E-06	2.000E+01
PSDF	DISP	171	2097(5)	7.348967E-03	5.675918E+01	1.000E+01	2.000E+03	0.000E+00	1.000E+01	6.593E-06	2.000E+01
PSDF	DISP	171	2098(5)	7.351752E-03	5.662608E+01	1.000E+01	2.000E+03	0.000E+00	1.000E+01	6.595E-06	2.000E+01
PSDF	DISP	171	21086(5)	9.953253E-03	9.721279E+01	1.000E+01	2.000E+03	0.000E+00	1.000E+01	6.797E-06	2.000E+01
PSDF	DISP	171	21126(5)	8.176324E-03	7.224820E+01	1.000E+01	2.000E+03	0.000E+00	1.000E+01	6.703E-06	2.000E+01
PSDF	DISP	171	21139(5)	7.923989E-03	6.767710E+01	1.000E+01	2.000E+03	0.000E+00	1.000E+01	6.684E-06	2.000E+01
PSDF	DISP	171	21150(5)	7.716930E-03	6.410732E+01	1.000E+01	2.000E+03	0.000E+00	1.000E+01	6.665E-06	2.000E+01
PSDF	DISP	171	21159(5)	7.556644E-03	6.204763E+01	1.000E+01	2.000E+03	0.000E+00	1.000E+01	6.645E-06	2.000E+01
PSDF	DISP	171	21160(5)	7.448439E-03	6.220741E+01	1.000E+01	2.000E+03	0.000E+00	1.000E+01	6.625E-06	2.000E+01
PSDF	DISP	171	21161(5)	7.399523E-03	6.522913E+01	1.000E+01	2.000E+03	0.000E+00	1.000E+01	6.605E-06	2.000E+01
PSDF	DISP	171	21094(5)	9.558937E-03	9.283997E+01	1.000E+01	2.000E+03	0.000E+00	1.000E+01	6.779E-06	2.000E+01
PSDF	DISP	171	21190(5)	9.380556E-03	9.042748E+01	1.000E+01	2.000E+03	0.000E+00	1.000E+01	6.771E-06	2.000E+01
PSDF	DISP	171	21198(5)	8.975006E-03	8.495046E+01	1.000E+01	2.000E+03	0.000E+00	1.000E+01	6.751E-06	2.000E+01
PSDF	DISP	171	21206(5)	8.613480E-03	7.943557E+01	1.000E+01	2.000E+03	0.000E+00	1.000E+01	6.731E-06	2.000E+01
PSDF	DISP	171	21214(5)	8.284589E-03	7.389001E+01	1.000E+01	2.000E+03	0.000E+00	1.000E+01	6.710E-06	2.000E+01
PSDF	DISP	171	21227(5)	8.002104E-03	6.882819E+01	1.000E+01	2.000E+03	0.000E+00	1.000E+01	6.690E-06	2.000E+01
PSDF	DISP	171	21238(5)	7.768014E-03	6.472271E+01	1.000E+01	2.000E+03	0.000E+00	1.000E+01	6.670E-06	2.000E+01

Z AXIS PSD RESPONSE

X Y - O U T P U T S U M M A R Y (A U T O O R P S D F)

PLOT TYPE	CURVE TYPE	FRAME NO.	CURVE ID.	RMS VALUE	NO. POSITIVE CROSSINGS	XMIN FOR ALL DATA	XMAX FOR ALL DATA	YMIN FOR ALL DATA	X FOR YMIN	YMAX FOR ALL DATA	X FOR* YMAX
PSDF	DISP	171	21249(5)	7.405368E-03	6.505013E+01	1.000E+01	2.000E+03	0.000E+00	1.000E+01	6.608E-06	2.000E+01
PSDF	DISP	171	21085(5)	9.957481E-03	9.725220E+01	1.000E+01	2.000E+03	0.000E+00	1.000E+01	6.797E-06	2.000E+01
PSDF	DISP	171	21093(5)	9.541438E-03	9.261903E+01	1.000E+01	2.000E+03	0.000E+00	1.000E+01	6.778E-06	2.000E+01
PSDF	DISP	171	21101(5)	9.159693E-03	8.778594E+01	1.000E+01	2.000E+03	0.000E+00	1.000E+01	6.760E-06	2.000E+01
PSDF	DISP	171	21109(5)	8.800304E-03	8.263185E+01	1.000E+01	2.000E+03	0.000E+00	1.000E+01	6.741E-06	2.000E+01
PSDF	DISP	171	21117(5)	8.451042E-03	7.702264E+01	1.000E+01	2.000E+03	0.000E+00	1.000E+01	6.721E-06	2.000E+01
PSDF	DISP	171	21149(5)	7.709964E-03	6.396418E+01	1.000E+01	2.000E+03	0.000E+00	1.000E+01	6.664E-06	2.000E+01
PSDF	DISP	171	21158(5)	7.552841E-03	6.212366E+01	1.000E+01	2.000E+03	0.000E+00	1.000E+01	6.645E-06	2.000E+01
PSDF	DISP	171	21165(5)	7.450038E-03	6.264306E+01	1.000E+01	2.000E+03	0.000E+00	1.000E+01	6.625E-06	2.000E+01
PSDF	DISP	171	21166(5)	7.403750E-03	6.607484E+01	1.000E+01	2.000E+03	0.000E+00	1.000E+01	6.606E-06	2.000E+01
PSDF	DISP	171	21173(5)	1.023242E-02	9.985591E+01	1.000E+01	2.000E+03	0.000E+00	1.000E+01	6.809E-06	2.000E+01
PSDF	DISP	171	21181(5)	9.778409E-03	9.515710E+01	1.000E+01	2.000E+03	0.000E+00	1.000E+01	6.790E-06	2.000E+01
PSDF	DISP	171	21205(5)	8.587580E-03	7.899973E+01	1.000E+01	2.000E+03	0.000E+00	1.000E+01	6.729E-06	2.000E+01
PSDF	DISP	171	21213(5)	8.271342E-03	7.362201E+01	1.000E+01	2.000E+03	0.000E+00	1.000E+01	6.710E-06	2.000E+01
PSDF	DISP	171	21226(5)	7.989245E-03	6.854233E+01	1.000E+01	2.000E+03	0.000E+00	1.000E+01	6.689E-06	2.000E+01
PSDF	DISP	171	21237(5)	7.759278E-03	6.453661E+01	1.000E+01	2.000E+03	0.000E+00	1.000E+01	6.669E-06	2.000E+01
PSDF	DISP	171	21246(5)	7.580425E-03	6.220815E+01	1.000E+01	2.000E+03	0.000E+00	1.000E+01	6.649E-06	2.000E+01
PSDF	DISP	171	21253(5)	7.462107E-03	6.234699E+01	1.000E+01	2.000E+03	0.000E+00	1.000E+01	6.629E-06	2.000E+01
PSDF	DISP	171	21118(5)	8.473225E-03	7.741155E+01	1.000E+01	2.000E+03	0.000E+00	1.000E+01	6.722E-06	2.000E+01
PSDF	DISP	171	21174(5)	1.022464E-02	9.975686E+01	1.000E+01	2.000E+03	0.000E+00	1.000E+01	6.809E-06	2.000E+01
PSDF	DISP	171	21182(5)	9.793039E-03	9.531937E+01	1.000E+01	2.000E+03	0.000E+00	1.000E+01	6.790E-06	2.000E+01
PSDF	DISP	171	21102(5)	9.175455E-03	8.799437E+01	1.000E+01	2.000E+03	0.000E+00	1.000E+01	6.761E-06	2.000E+01
PSDF	DISP	171	21110(5)	8.802752E-03	8.267257E+01	1.000E+01	2.000E+03	0.000E+00	1.000E+01	6.741E-06	2.000E+01
PSDF	DISP	171	21247(5)	7.585359E-03	6.220227E+01	1.000E+01	2.000E+03	0.000E+00	1.000E+01	6.650E-06	2.000E+01

Z AXIS PSD RESPONSE

X Y - O U T P U T S U M M A R Y (A U T O O R P S D F)

PLOT TYPE	CURVE TYPE	FRAME NO.	CURVE ID.	RMS VALUE	NO. POSITIVE CROSSINGS	XMIN FOR ALL DATA	XMAX FOR ALL DATA	YMIN FOR ALL DATA	X FOR YMIN	YMAX FOR ALL DATA	X FOR* YMAX
PSDF	DISP	171	21248(5)	7.461525E-03	6.208918E+01	1.000E+01	2.000E+03	0.000E+00	1.000E+01	6.629E-06	2.000E+01
PSDF	DISP	171	21125(5)	8.165698E-03	7.202249E+01	1.000E+01	2.000E+03	0.000E+00	1.000E+01	6.702E-06	2.000E+01
PSDF	DISP	171	21138(5)	7.913603E-03	6.743544E+01	1.000E+01	2.000E+03	0.000E+00	1.000E+01	6.683E-06	2.000E+01
PSDF	DISP	171	21189(5)	9.363526E-03	9.021944E+01	1.000E+01	2.000E+03	0.000E+00	1.000E+01	6.770E-06	2.000E+01
PSDF	DISP	171	21197(5)	8.971448E-03	8.489724E+01	1.000E+01	2.000E+03	0.000E+00	1.000E+01	6.750E-06	2.000E+01
PSDF	DISP	171	21254(5)	7.408405E-03	6.554955E+01	1.000E+01	2.000E+03	0.000E+00	1.000E+01	6.608E-06	2.000E+01
PSDF	DISP	171	2204(5)	7.842829E-03	9.973813E+01	1.000E+01	2.000E+03	0.000E+00	1.000E+01	6.639E-06	2.000E+01
PSDF	DISP	171	2202(5)	8.194746E-03	1.239957E+02	1.000E+01	2.000E+03	0.000E+00	1.000E+01	6.648E-06	2.000E+01
PSDF	DISP	171	22644(5)	1.095551E-02	1.065460E+02	1.000E+01	2.000E+03	0.000E+00	1.000E+01	6.840E-06	2.000E+01
PSDF	DISP	171	22632(5)	1.115866E-02	1.091502E+02	1.000E+01	2.000E+03	0.000E+00	1.000E+01	7.261E-06	1.400E+02
PSDF	DISP	171	23231(5)	8.870440E-03	1.459364E+02	1.000E+01	2.000E+03	0.000E+00	1.000E+01	6.675E-06	2.000E+01
PSDF	DISP	171	23232(5)	8.728277E-03	1.403570E+02	1.000E+01	2.000E+03	0.000E+00	1.000E+01	6.671E-06	2.000E+01
PSDF	DISP	171	23233(5)	7.889550E-03	9.667516E+01	1.000E+01	2.000E+03	0.000E+00	1.000E+01	6.643E-06	2.000E+01
PSDF	DISP	171	23234(5)	8.585799E-03	1.345853E+02	1.000E+01	2.000E+03	0.000E+00	1.000E+01	6.666E-06	2.000E+01
PSDF	DISP	171	23235(5)	7.886332E-03	9.641859E+01	1.000E+01	2.000E+03	0.000E+00	1.000E+01	6.643E-06	2.000E+01
PSDF	DISP	171	22859(5)	7.964455E-03	1.013101E+02	1.000E+01	2.000E+03	0.000E+00	1.000E+01	6.646E-06	2.000E+01
PSDF	DISP	171	22868(5)	7.924804E-03	9.925945E+01	1.000E+01	2.000E+03	0.000E+00	1.000E+01	6.643E-06	2.000E+01
PSDF	DISP	171	23609(5)	7.353390E-03	5.676531E+01	1.000E+01	2.000E+03	0.000E+00	1.000E+01	6.596E-06	2.000E+01
PSDF	DISP	171	23610(5)	7.355976E-03	5.716631E+01	1.000E+01	2.000E+03	0.000E+00	1.000E+01	6.596E-06	2.000E+01
PSDF	DISP	171	23611(5)	7.350795E-03	5.644795E+01	1.000E+01	2.000E+03	0.000E+00	1.000E+01	6.595E-06	2.000E+01
PSDF	DISP	171	23612(5)	7.348059E-03	5.596157E+01	1.000E+01	2.000E+03	0.000E+00	1.000E+01	6.595E-06	2.000E+01
PSDF	DISP	171	23613(5)	7.357372E-03	5.783860E+01	1.000E+01	2.000E+03	0.000E+00	1.000E+01	6.595E-06	2.000E+01
PSDF	DISP	171	23614(5)	7.352028E-03	5.706770E+01	1.000E+01	2.000E+03	0.000E+00	1.000E+01	6.594E-06	2.000E+01
PSDF	DISP	171	23615(5)	7.343922E-03	5.577639E+01	1.000E+01	2.000E+03	0.000E+00	1.000E+01	6.593E-06	2.000E+01

Z AXIS PSD RESPONSE

X Y - O U T P U T S U M M A R Y (A U T O O R P S D F)

PLOT TYPE	CURVE TYPE	FRAME NO.	CURVE ID.	RMS VALUE	NO. POSITIVE CROSSINGS	XMIN FOR ALL DATA	XMAX FOR ALL DATA	YMIN FOR ALL DATA	X FOR YMIN	YMAX FOR ALL DATA	X FOR* YMAX
PSDF	DISP	171	23616(5)	7.359483E-03	5.734824E+01	1.000E+01	2.000E+03	0.000E+00	1.000E+01	6.597E-06	2.000E+01
PSDF	DISP	171	23617(5)	7.360641E-03	5.721243E+01	1.000E+01	2.000E+03	0.000E+00	1.000E+01	6.598E-06	2.000E+01
PSDF	DISP	171	23618(5)	7.349196E-03	5.572538E+01	1.000E+01	2.000E+03	0.000E+00	1.000E+01	6.596E-06	2.000E+01
PSDF	DISP	171	23619(5)	7.355230E-03	5.658782E+01	1.000E+01	2.000E+03	0.000E+00	1.000E+01	6.597E-06	2.000E+01
PSDF	DISP	171	2752(5)	7.640815E-03	9.716587E+01	1.000E+01	2.000E+03	0.000E+00	1.000E+01	6.625E-06	2.000E+01
PSDF	DISP	171	2758(5)	1.130546E-02	2.140910E+02	1.000E+01	2.000E+03	0.000E+00	1.000E+01	6.691E-06	2.000E+01
PSDF	DISP	171	2748(5)	7.421858E-03	6.184621E+01	1.000E+01	2.000E+03	0.000E+00	1.000E+01	6.609E-06	2.000E+01
PSDF	DISP	171	618(5)	7.405254E-03	5.986781E+01	1.000E+01	2.000E+03	0.000E+00	1.000E+01	6.607E-06	2.000E+01
PSDF	DISP	171	603(5)	7.401012E-03	5.898659E+01	1.000E+01	2.000E+03	0.000E+00	1.000E+01	6.607E-06	2.000E+01
PSDF	DISP	171	2441(5)	7.423360E-03	6.176419E+01	1.000E+01	2.000E+03	0.000E+00	1.000E+01	6.610E-06	2.000E+01
PSDF	DISP	171	25803(5)	8.516050E-03	1.235971E+02	1.000E+01	2.000E+03	0.000E+00	1.000E+01	6.695E-06	2.000E+01
PSDF	DISP	171	2175(5)	7.435251E-03	6.684135E+01	1.000E+01	2.000E+03	0.000E+00	1.000E+01	6.606E-06	2.000E+01
PSDF	DISP	171	2086(5)	7.360667E-03	5.959285E+01	1.000E+01	2.000E+03	0.000E+00	1.000E+01	6.593E-06	2.000E+01
PSDF	DISP	171	26116(5)	8.629360E-03	1.609305E+02	1.000E+01	2.000E+03	0.000E+00	1.000E+01	6.693E-06	2.000E+01
PSDF	DISP	171	26146(5)	7.975095E-03	1.328119E+02	1.000E+01	2.000E+03	0.000E+00	1.000E+01	6.642E-06	2.000E+01
PSDF	DISP	171	26336(5)	8.632544E-03	1.615210E+02	1.000E+01	2.000E+03	0.000E+00	1.000E+01	6.693E-06	2.000E+01
PSDF	DISP	171	26417(5)	8.551205E-03	1.349735E+02	1.000E+01	2.000E+03	0.000E+00	1.000E+01	6.695E-06	2.000E+01
PSDF	DISP	171	26082(5)	7.962333E-03	1.248471E+02	1.000E+01	2.000E+03	0.000E+00	1.000E+01	6.650E-06	2.000E+01
PSDF	DISP	171	24000(5)	7.285419E-03	4.791333E+01	1.000E+01	2.000E+03	0.000E+00	1.000E+01	6.579E-06	2.000E+01
PSDF	EL STR	171	2150(3)	5.665662E+02	4.064221E+02	1.000E+01	2.000E+03	0.000E+00	1.000E+01	1.066E+04	2.780E+02
PSDF	EL STR	171	2150(5)	5.306460E+02	3.077274E+02	1.000E+01	2.000E+03	0.000E+00	1.000E+01	1.088E+04	2.780E+02
PSDF	EL STR	171	2150(7)	1.231479E+03	2.901970E+02	1.000E+01	2.000E+03	0.000E+00	1.000E+01	6.860E+04	2.780E+02
PSDF	EL STR	171	2151(3)	1.134539E+03	2.971193E+02	1.000E+01	2.000E+03	0.000E+00	1.000E+01	5.663E+04	2.780E+02
PSDF	EL STR	171	2151(5)	4.836034E+02	4.814543E+02	1.000E+01	2.000E+03	0.000E+00	1.000E+01	3.312E+03	3.980E+02

Z AXIS PSD RESPONSE

X Y - O U T P U T S U M M A R Y (A U T O O R P S D F)

PLOT TYPE	CURVE TYPE	FRAME NO.	CURVE ID.	RMS VALUE	NO. POSITIVE CROSSINGS	XMIN FOR ALL DATA	XMAX FOR ALL DATA	YMIN FOR ALL DATA	X FOR YMIN	YMAX FOR ALL DATA	X FOR* YMAX
PSDF	EL STR	171	2151(7)	2.311443E+02	5.846420E+02	1.000E+01	2.000E+03	0.000E+00	1.000E+01	7.682E+02	5.940E+02
PSDF	EL STR	171	2152(3)	5.538318E+02	3.360018E+02	1.000E+01	2.000E+03	0.000E+00	1.000E+01	1.284E+04	2.780E+02
PSDF	EL STR	171	2152(5)	5.590963E+02	4.290878E+02	1.000E+01	2.000E+03	0.000E+00	1.000E+01	8.601E+03	2.780E+02
PSDF	EL STR	171	2152(7)	6.937222E+02	2.937969E+02	1.000E+01	2.000E+03	0.000E+00	1.000E+01	2.115E+04	2.780E+02
PSDF	EL STR	171	2153(3)	3.056043E+02	4.133502E+02	1.000E+01	2.000E+03	0.000E+00	1.000E+01	2.996E+03	2.780E+02
PSDF	EL STR	171	2153(5)	3.184680E+02	3.467119E+02	1.000E+01	2.000E+03	0.000E+00	1.000E+01	3.999E+03	2.780E+02
PSDF	EL STR	171	2153(7)	1.090066E+03	2.924966E+02	1.000E+01	2.000E+03	0.000E+00	1.000E+01	5.461E+04	2.780E+02
PSDF	EL STR	171	2154(3)	5.144915E+02	5.611785E+02	1.000E+01	2.000E+03	0.000E+00	1.000E+01	3.376E+03	5.920E+02
PSDF	EL STR	171	2154(5)	2.995459E+02	3.438830E+02	1.000E+01	2.000E+03	0.000E+00	1.000E+01	3.696E+03	2.780E+02
PSDF	EL STR	171	2154(7)	2.525813E+02	4.099969E+02	1.000E+01	2.000E+03	0.000E+00	1.000E+01	2.782E+03	3.980E+02
PSDF	EL STR	171	2155(3)	2.520160E+03	2.892364E+02	1.000E+01	2.000E+03	0.000E+00	1.000E+01	2.900E+05	2.780E+02
PSDF	EL STR	171	2155(5)	9.189660E+02	3.258037E+02	1.000E+01	2.000E+03	0.000E+00	1.000E+01	3.352E+04	2.780E+02
PSDF	EL STR	171	2155(7)	6.703743E+02	2.942427E+02	1.000E+01	2.000E+03	0.000E+00	1.000E+01	2.003E+04	2.780E+02
PSDF	EL STR	171	2156(3)	2.699622E+03	3.535649E+02	1.000E+01	2.000E+03	0.000E+00	1.000E+01	2.770E+05	2.780E+02
PSDF	EL STR	171	2156(5)	1.054089E+03	3.688072E+02	1.000E+01	2.000E+03	0.000E+00	1.000E+01	3.946E+04	2.780E+02
PSDF	EL STR	171	2156(7)	3.277716E+02	4.511815E+02	1.000E+01	2.000E+03	0.000E+00	1.000E+01	1.926E+03	3.980E+02
PSDF	EL STR	171	2157(3)	5.880406E+02	6.347715E+02	1.000E+01	2.000E+03	0.000E+00	1.000E+01	4.094E+03	5.880E+02
PSDF	EL STR	171	2157(5)	3.085999E+02	3.612923E+02	1.000E+01	2.000E+03	0.000E+00	1.000E+01	3.748E+03	2.780E+02
PSDF	EL STR	171	2157(7)	7.097944E+02	3.382312E+02	1.000E+01	2.000E+03	0.000E+00	1.000E+01	1.771E+04	2.780E+02
PSDF	EL STR	171	2158(3)	1.807077E+02	5.787637E+02	1.000E+01	2.000E+03	0.000E+00	1.000E+01	8.011E+02	3.000E+02
PSDF	EL STR	171	2158(5)	2.563357E+02	3.806634E+02	1.000E+01	2.000E+03	0.000E+00	1.000E+01	1.693E+03	2.780E+02
PSDF	EL STR	171	2158(7)	4.109698E+02	3.298040E+02	1.000E+01	2.000E+03	0.000E+00	1.000E+01	6.584E+03	2.780E+02
PSDF	EL STR	171	2159(3)	1.836480E+03	2.926227E+02	1.000E+01	2.000E+03	0.000E+00	1.000E+01	1.510E+05	2.780E+02
PSDF	EL STR	171	2159(5)	9.057521E+02	3.378489E+02	1.000E+01	2.000E+03	0.000E+00	1.000E+01	2.494E+04	2.780E+02

Z AXIS PSD RESPONSE

X Y - O U T P U T S U M M A R Y (A U T O O R P S D F)

PLOT TYPE	CURVE TYPE	FRAME NO.	CURVE ID.	RMS VALUE	NO. POSITIVE CROSSINGS	XMIN FOR ALL DATA	XMAX FOR ALL DATA	YMIN FOR ALL DATA	X FOR YMIN	YMAX FOR ALL DATA	X FOR* YMAX
PSDF	EL STR	171	2159(7)	6.668476E+02	3.966845E+02	1.000E+01	2.000E+03	0.000E+00	1.000E+01	1.434E+04	2.780E+02
PSDF	EL STR	171	2160(3)	2.697716E+03	3.174065E+02	1.000E+01	2.000E+03	0.000E+00	1.000E+01	3.079E+05	2.780E+02
PSDF	EL STR	171	2160(5)	9.545595E+02	3.154118E+02	1.000E+01	2.000E+03	0.000E+00	1.000E+01	3.338E+04	2.780E+02
PSDF	EL STR	171	2160(7)	5.715193E+02	3.103990E+02	1.000E+01	2.000E+03	0.000E+00	1.000E+01	1.481E+04	2.780E+02
PSDF	EL STR	171	2161(3)	8.952716E+02	5.734457E+02	1.000E+01	2.000E+03	0.000E+00	1.000E+01	8.743E+03	2.780E+02
PSDF	EL STR	171	2161(5)	3.130591E+02	2.919276E+02	1.000E+01	2.000E+03	0.000E+00	1.000E+01	4.696E+03	2.780E+02
PSDF	EL STR	171	2161(7)	9.185929E+02	4.087393E+02	1.000E+01	2.000E+03	0.000E+00	1.000E+01	2.632E+04	2.780E+02
PSDF	EL STR	171	2162(3)	3.539765E+02	3.607163E+02	1.000E+01	2.000E+03	0.000E+00	1.000E+01	5.132E+03	2.780E+02
PSDF	EL STR	171	2162(5)	1.649386E+02	4.926119E+02	1.000E+01	2.000E+03	0.000E+00	1.000E+01	7.589E+02	2.780E+02
PSDF	EL STR	171	2162(7)	8.136011E+02	2.953305E+02	1.000E+01	2.000E+03	0.000E+00	1.000E+01	2.832E+04	2.780E+02
PSDF	EL STR	171	2163(3)	5.458450E+02	3.778357E+02	1.000E+01	2.000E+03	0.000E+00	1.000E+01	9.879E+03	2.780E+02
PSDF	EL STR	171	2163(5)	5.800676E+02	3.753213E+02	1.000E+01	2.000E+03	0.000E+00	1.000E+01	1.103E+04	2.780E+02
PSDF	EL STR	171	2163(7)	2.607391E+02	5.144229E+02	1.000E+01	2.000E+03	0.000E+00	1.000E+01	1.494E+03	2.780E+02
PSDF	EL STR	171	2164(3)	8.838163E+02	4.806242E+02	1.000E+01	2.000E+03	0.000E+00	1.000E+01	2.018E+04	2.780E+02
PSDF	EL STR	171	2164(5)	8.568948E+02	3.969022E+02	1.000E+01	2.000E+03	0.000E+00	1.000E+01	2.281E+04	2.780E+02
PSDF	EL STR	171	2164(7)	3.642862E+02	3.916941E+02	1.000E+01	2.000E+03	0.000E+00	1.000E+01	4.650E+03	2.780E+02
PSDF	EL STR	171	2165(3)	5.759145E+02	4.811162E+02	1.000E+01	2.000E+03	0.000E+00	1.000E+01	1.248E+04	2.780E+02
PSDF	EL STR	171	2165(5)	2.369815E+02	4.828138E+02	1.000E+01	2.000E+03	0.000E+00	1.000E+01	1.054E+03	2.780E+02
PSDF	EL STR	171	2165(7)	1.164612E+03	3.127243E+02	1.000E+01	2.000E+03	0.000E+00	1.000E+01	5.617E+04	2.780E+02
PSDF	EL STR	171	2616(3)	1.955579E+02	3.263270E+02	1.000E+01	2.000E+03	0.000E+00	1.000E+01	1.837E+03	2.680E+02
PSDF	EL STR	171	2616(5)	2.495695E+02	4.042351E+02	1.000E+01	2.000E+03	0.000E+00	1.000E+01	2.203E+03	2.680E+02
PSDF	EL STR	171	2616(7)	1.712276E+02	3.170201E+02	1.000E+01	2.000E+03	0.000E+00	1.000E+01	9.757E+02	2.680E+02
PSDF	EL STR	171	2617(3)	1.775794E+02	3.788771E+02	1.000E+01	2.000E+03	0.000E+00	1.000E+01	9.061E+02	2.820E+02
PSDF	EL STR	171	2617(5)	1.884652E+02	3.299292E+02	1.000E+01	2.000E+03	0.000E+00	1.000E+01	7.833E+02	2.820E+02

Z AXIS PSD RESPONSE

X Y - O U T P U T S U M M A R Y (A U T O O R P S D F)

PLOT TYPE	CURVE TYPE	FRAME NO.	CURVE ID.	RMS VALUE	NO. POSITIVE CROSSINGS	XMIN FOR ALL DATA	XMAX FOR ALL DATA	YMIN FOR ALL DATA	X FOR YMIN	YMAX FOR ALL DATA	X FOR* YMAX
PSDF	EL STR	171	2617(7)	6.992973E+01	3.706682E+02	1.000E+01	2.000E+03	0.000E+00	1.000E+01	1.286E+02	2.820E+02
PSDF	EL STR	171	2618(3)	1.772427E+02	3.803779E+02	1.000E+01	2.000E+03	0.000E+00	1.000E+01	8.433E+02	2.820E+02
PSDF	EL STR	171	2618(5)	1.691353E+02	3.532901E+02	1.000E+01	2.000E+03	0.000E+00	1.000E+01	8.524E+02	2.820E+02
PSDF	EL STR	171	2618(7)	9.497263E+01	3.856334E+02	1.000E+01	2.000E+03	0.000E+00	1.000E+01	1.870E+02	2.800E+02
PSDF	EL STR	171	2619(3)	1.097250E+02	3.910896E+02	1.000E+01	2.000E+03	0.000E+00	1.000E+01	2.399E+02	2.820E+02
PSDF	EL STR	171	2619(5)	2.094799E+02	4.834658E+02	1.000E+01	2.000E+03	0.000E+00	1.000E+01	6.253E+02	4.140E+02
PSDF	EL STR	171	2619(7)	1.419976E+02	3.800111E+02	1.000E+01	2.000E+03	0.000E+00	1.000E+01	4.551E+02	2.800E+02
PSDF	EL STR	171	2621(3)	2.922692E+02	4.766539E+02	1.000E+01	2.000E+03	0.000E+00	1.000E+01	2.071E+03	4.820E+02
PSDF	EL STR	171	2621(5)	5.360427E+02	4.734405E+02	1.000E+01	2.000E+03	0.000E+00	1.000E+01	7.208E+03	4.800E+02
PSDF	EL STR	171	2621(7)	1.766417E+02	3.425074E+02	1.000E+01	2.000E+03	0.000E+00	1.000E+01	7.422E+02	2.680E+02
PSDF	EL STR	171	2622(3)	2.528507E+02	4.284371E+02	1.000E+01	2.000E+03	0.000E+00	1.000E+01	1.008E+03	2.840E+02
PSDF	EL STR	171	2622(5)	5.143901E+02	3.411641E+02	1.000E+01	2.000E+03	0.000E+00	1.000E+01	7.655E+03	2.840E+02
PSDF	EL STR	171	2622(7)	1.967730E+02	3.288530E+02	1.000E+01	2.000E+03	0.000E+00	1.000E+01	1.464E+03	2.840E+02
PSDF	EL STR	171	2625(3)	3.248386E+02	3.684657E+02	1.000E+01	2.000E+03	0.000E+00	1.000E+01	2.496E+03	2.840E+02
PSDF	EL STR	171	2625(5)	5.341196E+02	3.431411E+02	1.000E+01	2.000E+03	0.000E+00	1.000E+01	8.660E+03	2.840E+02
PSDF	EL STR	171	2625(7)	1.859134E+02	3.397006E+02	1.000E+01	2.000E+03	0.000E+00	1.000E+01	7.704E+02	2.840E+02
PSDF	EL STR	171	2626(3)	1.717122E+02	3.449987E+02	1.000E+01	2.000E+03	0.000E+00	1.000E+01	7.205E+02	2.840E+02
PSDF	EL STR	171	2626(5)	5.986443E+02	3.280114E+02	1.000E+01	2.000E+03	0.000E+00	1.000E+01	1.014E+04	2.840E+02
PSDF	EL STR	171	2626(7)	3.633372E+02	3.065709E+02	1.000E+01	2.000E+03	0.000E+00	1.000E+01	4.637E+03	2.840E+02
PSDF	EL STR	171	2627(3)	1.353391E+03	2.997191E+02	1.000E+01	2.000E+03	0.000E+00	1.000E+01	6.553E+04	2.840E+02
PSDF	EL STR	171	2627(5)	3.890196E+03	2.997336E+02	1.000E+01	2.000E+03	0.000E+00	1.000E+01	5.380E+05	2.840E+02
PSDF	EL STR	171	2627(7)	3.296105E+02	3.303729E+02	1.000E+01	2.000E+03	0.000E+00	1.000E+01	3.290E+03	2.840E+02
PSDF	EL STR	171	2628(3)	1.987856E+03	2.983133E+02	1.000E+01	2.000E+03	0.000E+00	1.000E+01	1.403E+05	2.840E+02
PSDF	EL STR	171	2628(5)	2.498299E+03	3.021416E+02	1.000E+01	2.000E+03	0.000E+00	1.000E+01	2.179E+05	2.840E+02

Z AXIS PSD RESPONSE

X Y - O U T P U T S U M M A R Y (A U T O O R P S D F)

PLOT TYPE	CURVE TYPE	FRAME NO.	CURVE ID.	RMS VALUE	NO. POSITIVE CROSSINGS	XMIN FOR ALL DATA	XMAX FOR ALL DATA	YMIN FOR ALL DATA	X FOR YMIN	YMAX FOR ALL DATA	X FOR* YMAX
PSDF	EL STR	171	2628(7)	1.105567E+03	2.988434E+02	1.000E+01	2.000E+03	0.000E+00	1.000E+01	4.355E+04	2.840E+02
PSDF	EL STR	171	2629(3)	5.302736E+02	3.221581E+02	1.000E+01	2.000E+03	0.000E+00	1.000E+01	1.010E+04	2.840E+02
PSDF	EL STR	171	2629(5)	2.213968E+02	3.517303E+02	1.000E+01	2.000E+03	0.000E+00	1.000E+01	1.665E+03	2.840E+02
PSDF	EL STR	171	2629(7)	6.884609E+01	3.284196E+02	1.000E+01	2.000E+03	0.000E+00	1.000E+01	1.813E+02	2.840E+02
PSDF	EL STR	171	2630(3)	1.873679E+02	3.785748E+02	1.000E+01	2.000E+03	0.000E+00	1.000E+01	8.815E+02	2.820E+02
PSDF	EL STR	171	2630(5)	1.411094E+02	4.654353E+02	1.000E+01	2.000E+03	0.000E+00	1.000E+01	5.988E+02	2.700E+02
PSDF	EL STR	171	2630(7)	7.757703E+01	4.034409E+02	1.000E+01	2.000E+03	0.000E+00	1.000E+01	1.083E+02	2.700E+02
PSDF	EL STR	171	2631(3)	1.740942E+02	3.721331E+02	1.000E+01	2.000E+03	0.000E+00	1.000E+01	1.286E+03	2.700E+02
PSDF	EL STR	171	2631(5)	2.203073E+02	5.422159E+02	1.000E+01	2.000E+03	0.000E+00	1.000E+01	8.930E+02	2.700E+02
PSDF	EL STR	171	2631(7)	1.401582E+02	4.032954E+02	1.000E+01	2.000E+03	0.000E+00	1.000E+01	4.820E+02	2.700E+02
PSDF	EL STR	171	3202(3)	3.283384E+02	3.799395E+02	1.000E+01	2.000E+03	0.000E+00	1.000E+01	2.364E+03	2.840E+02
PSDF	EL STR	171	3202(5)	4.978298E+02	3.045957E+02	1.000E+01	2.000E+03	0.000E+00	1.000E+01	9.224E+03	2.840E+02
PSDF	EL STR	171	3202(7)	2.376356E+02	3.520952E+02	1.000E+01	2.000E+03	0.000E+00	1.000E+01	1.595E+03	2.840E+02
PSDF	EL STR	171	3203(3)	1.125902E+03	2.878342E+02	1.000E+01	2.000E+03	0.000E+00	1.000E+01	4.854E+04	2.840E+02
PSDF	EL STR	171	3203(5)	5.172256E+02	3.135424E+02	1.000E+01	2.000E+03	0.000E+00	1.000E+01	9.195E+03	2.840E+02
PSDF	EL STR	171	3203(7)	1.693388E+02	3.447176E+02	1.000E+01	2.000E+03	0.000E+00	1.000E+01	8.827E+02	2.840E+02
PSDF	EL STR	171	3204(3)	5.751332E+02	2.883594E+02	1.000E+01	2.000E+03	0.000E+00	1.000E+01	1.247E+04	2.840E+02
PSDF	EL STR	171	3204(5)	4.043597E+02	3.429848E+02	1.000E+01	2.000E+03	0.000E+00	1.000E+01	4.349E+03	2.840E+02
PSDF	EL STR	171	3204(7)	1.514438E+02	3.048371E+02	1.000E+01	2.000E+03	0.000E+00	1.000E+01	7.534E+02	2.840E+02
PSDF	EL STR	171	3205(3)	9.341667E+02	2.950436E+02	1.000E+01	2.000E+03	0.000E+00	1.000E+01	3.084E+04	2.840E+02
PSDF	EL STR	171	3205(5)	5.720991E+02	3.313254E+02	1.000E+01	2.000E+03	0.000E+00	1.000E+01	9.017E+03	2.840E+02
PSDF	EL STR	171	3205(7)	2.504549E+02	3.660676E+02	1.000E-01	2.000E+03	0.000E+00	1.000E+01	1.212E+03	2.840E+02
PSDF	EL STR	171	3206(3)	4.389695E+02	3.117354E+02	1.000E+01	2.000E+03	0.000E+00	1.000E+01	5.939E+03	2.840E+02
PSDF	EL STR	171	3206(5)	6.901927E+02	2.892052E+02	1.000E+01	2.000E+03	0.000E+00	1.000E+01	1.652E+04	2.840E+02

Z AXIS PSD RESPONSE

X Y - O U T P U T S U M M A R Y (A U T O O R P S D F)

PLOT TYPE	CURVE TYPE	FRAME NO.	CURVE ID.	RMS VALUE	NO. POSITIVE CROSSINGS	XMIN FOR ALL DATA	XMAX FOR ALL DATA	YMIN FOR ALL DATA	X FOR YMIN	YMAX FOR ALL DATA	X FOR* YMAX
PSDF	EL STR	171	3206(7)	1.161594E+02	3.820100E+02	1.000E+01	2.000E+03	0.000E+00	1.000E+01	2.507E+02	2.840E+02
PSDF	EL STR	171	3207(3)	2.278004E+02	4.513952E+02	1.000E+01	2.000E+03	0.000E+00	1.000E+01	1.092E+03	4.180E+02
PSDF	EL STR	171	3207(5)	6.240180E+02	3.066857E+02	1.000E+01	2.000E+03	0.000E+00	1.000E+01	1.401E+04	2.840E+02
PSDF	EL STR	171	3207(7)	8.794284E+01	4.979293E+02	1.000E+01	2.000E+03	0.000E+00	1.000E+01	6.924E+01	4.140E+02
PSDF	EL STR	171	2615(3)	4.535974E+02	3.319627E+02	1.000E+01	2.000E+03	0.000E+00	1.000E+01	6.872E+03	2.840E+02
PSDF	EL STR	171	2615(5)	9.302962E+02	3.236379E+02	1.000E+01	2.000E+03	0.000E+00	1.000E+01	2.984E+04	2.840E+02
PSDF	EL STR	171	2615(7)	2.148616E+02	3.106069E+02	1.000E+01	2.000E+03	0.000E+00	1.000E+01	1.488E+03	2.840E+02
PSDF	EL STR	171	2623(3)	5.256384E+02	3.570232E+02	1.000E+01	2.000E+03	0.000E+00	1.000E+01	6.317E+03	2.840E+02
PSDF	EL STR	171	2623(5)	4.893040E+02	3.346451E+02	1.000E+01	2.000E+03	0.000E+00	1.000E+01	6.320E+03	2.840E+02
PSDF	EL STR	171	2623(7)	2.859598E+02	3.269890E+02	1.000E+01	2.000E+03	0.000E+00	1.000E+01	2.085E+03	2.840E+02
PSDF	EL STR	171	2624(3)	1.008270E+03	2.848565E+02	1.000E+01	2.000E+03	0.000E+00	1.000E+01	3.784E+04	2.840E+02
PSDF	EL STR	171	2624(5)	9.714790E+02	2.905325E+02	1.000E+01	2.000E+03	0.000E+00	1.000E+01	3.626E+04	2.840E+02
PSDF	EL STR	171	2624(7)	5.346595E+02	2.841337E+02	1.000E+01	2.000E+03	0.000E+00	1.000E+01	1.067E+04	2.840E+02
PSDF	EL STR	171	20018(3)	4.247561E+02	3.334241E+02	1.000E+01	2.000E+03	0.000E+00	1.000E+01	6.501E+03	2.680E+02
PSDF	EL STR	171	20018(5)	6.265276E+01	3.620454E+02	1.000E+01	2.000E+03	0.000E+00	1.000E+01	1.137E+02	2.680E+02
PSDF	EL STR	171	20018(7)	1.540111E+02	3.907987E+02	1.000E+01	2.000E+03	0.000E+00	1.000E+01	6.217E+02	2.760E+02
PSDF	EL STR	171	20019(3)	7.308921E+02	3.317186E+02	1.000E+01	2.000E+03	0.000E+00	1.000E+01	1.912E+04	2.680E+02
PSDF	EL STR	171	20019(5)	6.268554E+01	3.419638E+02	1.000E+01	2.000E+03	0.000E+00	1.000E+01	1.397E+02	2.680E+02
PSDF	EL STR	171	20019(7)	3.700981E+02	2.884037E+02	1.000E+01	2.000E+03	0.000E+00	1.000E+01	3.916E+03	2.680E+02
PSDF	EL STR	171	20020(3)	4.849632E+02	3.499341E+02	1.000E+01	2.000E+03	0.000E+00	1.000E+01	6.990E+03	2.680E+02
PSDF	EL STR	171	20020(5)	1.820508E+02	3.764129E+02	1.000E+01	2.000E+03	0.000E+00	1.000E+01	1.165E+03	1.410E+02
PSDF	EL STR	171	20020(7)	2.376628E+02	3.385739E+02	1.000E+01	2.000E+03	0.000E+00	1.000E+01	1.832E+03	2.680E+02
PSDF	EL STR	171	20021(3)	3.530234E+02	3.527031E+02	1.000E+01	2.000E+03	0.000E+00	1.000E+01	3.327E+03	2.680E+02
PSDF	EL STR	171	20021(5)	9.885376E+01	2.797175E+02	1.000E+01	2.000E+03	0.000E+00	1.000E+01	5.425E+02	1.400E+02

Z AXIS PSD RESPONSE

X Y - O U T P U T S U M M A R Y (A U T O O R P S D F)

PLOT TYPE	CURVE TYPE	FRAME NO.	CURVE ID.	RMS VALUE	NO. POSITIVE CROSSINGS	XMIN FOR ALL DATA	XMAX FOR ALL DATA	YMIN FOR ALL DATA	X FOR YMIN	YMAX FOR ALL DATA	X FOR* YMAX
PSDF	EL STR	171	20021(7)	1.595394E+02	3.694691E+02	1.000E+01	2.000E+03	0.000E+00	1.000E+01	4.558E+02	1.400E+02
PSDF	EL STR	171	20022(3)	2.613483E+02	4.115196E+02	1.000E+01	2.000E+03	0.000E+00	1.000E+01	1.166E+03	1.470E+02
PSDF	EL STR	171	20022(5)	7.397543E+01	3.804003E+02	1.000E+01	2.000E+03	0.000E+00	1.000E+01	6.557E+01	2.780E+02
PSDF	EL STR	171	20022(7)	1.906733E+02	3.691839E+02	1.000E+01	2.000E+03	0.000E+00	1.000E+01	8.338E+02	2.680E+02
PSDF	EL STR	171	20023(3)	2.682324E+02	4.088170E+02	1.000E+01	2.000E+03	0.000E+00	1.000E+01	1.079E+03	1.470E+02
PSDF	EL STR	171	20023(5)	1.339182E+02	2.790080E+02	1.000E+01	2.000E+03	0.000E+00	1.000E+01	3.844E+02	2.680E+02
PSDF	EL STR	171	20023(7)	3.262391E+02	3.609568E+02	1.000E+01	2.000E+03	0.000E+00	1.000E+01	2.209E+03	1.400E+02
PSDF	EL STR	171	20024(3)	4.205628E+02	4.037811E+02	1.000E+01	2.000E+03	0.000E+00	1.000E+01	3.554E+03	1.400E+02
PSDF	EL STR	171	20024(5)	4.975316E+01	3.430761E+02	1.000E+01	2.000E+03	0.000E+00	1.000E+01	1.394E+02	1.400E+02
PSDF	EL STR	171	20024(7)	2.689920E+02	3.576670E+02	1.000E+01	2.000E+03	0.000E+00	1.000E+01	3.166E+03	1.400E+02
PSDF	EL STR	171	20025(3)	2.435848E+02	4.281794E+02	1.000E+01	2.000E+03	0.000E+00	1.000E+01	8.790E+02	2.760E+02
PSDF	EL STR	171	20025(5)	5.932662E+01	4.852294E+02	1.000E+01	2.000E+03	0.000E+00	1.000E+01	3.946E+01	2.280E+02
PSDF	EL STR	171	20025(7)	1.951171E+02	3.748539E+02	1.000E+01	2.000E+03	0.000E+00	1.000E+01	6.718E+02	2.680E+02
PSDF	EL STR	171	2226(3)	4.427753E+01	3.412013E+02	1.000E+01	2.000E+03	0.000E+00	1.000E+01	2.163E+01	2.680E+02
PSDF	EL STR	171	2226(5)	9.837084E+01	2.350493E+02	1.000E+01	2.000E+03	0.000E+00	1.000E+01	5.268E+02	1.410E+02
PSDF	EL STR	171	2226(7)	1.091773E+02	3.601555E+02	1.000E+01	2.000E+03	0.000E+00	1.000E+01	2.999E+02	2.680E+02
PSDF	EL STR	171	2227(3)	7.768102E+01	3.638445E+02	1.000E+01	2.000E+03	0.000E+00	1.000E+01	1.765E+02	2.660E+02
PSDF	EL STR	171	2227(5)	1.607282E+02	3.880854E+02	1.000E+01	2.000E+03	0.000E+00	1.000E+01	4.220E+02	1.460E+02
PSDF	EL STR	171	2227(7)	1.292296E+02	3.530966E+02	1.000E+01	2.000E+03	0.000E+00	1.000E+01	3.729E+02	2.660E+02
PSDF	EL STR	171	2070(3)	5.428907E+01	3.068109E+02	1.000E+01	2.000E+03	0.000E+00	1.000E+01	8.395E+01	1.410E+02
PSDF	EL STR	171	2070(5)	5.707473E+01	3.244084E+02	1.000E+01	2.000E+03	0.000E+00	1.000E+01	9.678E+01	2.680E+02
PSDF	EL STR	171	2070(7)	6.785217E+01	4.036538E+02	1.000E+01	2.000E+03	0.000E+00	1.000E+01	4.652E+01	2.740E+02
PSDF	EL STR	171	2071(3)	7.762337E+01	3.205698E+02	1.000E+01	2.000E+03	0.000E+00	1.000E+01	1.521E+02	2.680E+02
PSDF	EL STR	171	2071(5)	1.248347E+02	3.474612E+02	1.000E+01	2.000E+03	0.000E+00	1.000E+01	3.824E+02	2.680E+02

Z AXIS PSD RESPONSE

X Y - O U T P U T S U M M A R Y (A U T O O R P S D F)

PLOT TYPE	CURVE TYPE	FRAME NO.	CURVE ID.	RMS VALUE	NO. POSITIVE CROSSINGS	XMIN FOR ALL DATA	XMAX FOR ALL DATA	YMIN FOR ALL DATA	X FOR YMIN	YMAX FOR ALL DATA	X FOR* YMAX
PSDF	EL STR	171	2071(7)	1.350397E+02	3.326488E+02	1.000E+01	2.000E+03	0.000E+00	1.000E+01	6.425E+02	2.680E+02
PSDF	EL STR	171	2089(3)	1.095885E+02	3.538285E+02	1.000E+01	2.000E+03	0.000E+00	1.000E+01	1.839E+02	1.820E+02
PSDF	EL STR	171	2089(5)	1.346604E+02	2.121695E+02	1.000E+01	2.000E+03	0.000E+00	1.000E+01	1.483E+03	1.410E+02
PSDF	EL STR	171	2089(7)	1.421404E+02	3.032140E+02	1.000E+01	2.000E+03	0.000E+00	1.000E+01	7.310E+02	2.680E+02
PSDF	EL STR	171	2090(3)	9.059597E+01	4.249712E+02	1.000E+01	2.000E+03	0.000E+00	1.000E+01	1.023E+02	1.028E+02
PSDF	EL STR	171	2090(5)	1.294054E+02	3.591808E+02	1.000E+01	2.000E+03	0.000E+00	1.000E+01	7.852E+02	1.410E+02
PSDF	EL STR	171	2090(7)	1.819417E+02	2.547602E+02	1.000E+01	2.000E+03	0.000E+00	1.000E+01	1.362E+03	1.410E+02
PSDF	EL STR	171	2091(3)	1.069227E+02	3.719178E+02	1.000E+01	2.000E+03	0.000E+00	1.000E+01	2.933E+02	1.410E+02
PSDF	EL STR	171	2091(5)	1.496319E+02	3.394088E+02	1.000E+01	2.000E+03	0.000E+00	1.000E+01	4.579E+02	1.410E+02
PSDF	EL STR	171	2091(7)	1.771420E+02	2.724733E+02	1.000E+01	2.000E+03	0.000E+00	1.000E+01	1.267E+03	1.410E+02
PSDF	EL STR	171	2092(3)	5.467942E+01	3.201353E+02	1.000E+01	2.000E+03	0.000E+00	1.000E+01	7.791E+01	2.680E+02
PSDF	EL STR	171	2092(5)	1.632042E+02	2.800274E+02	1.000E+01	2.000E+03	0.000E+00	1.000E+01	4.769E+02	1.410E+02
PSDF	EL STR	171	2092(7)	1.604895E+02	3.364820E+02	1.000E+01	2.000E+03	0.000E+00	1.000E+01	7.206E+02	2.680E+02
PSDF	EL STR	171	2093(3)	2.311209E+02	3.734397E+02	1.000E+01	2.000E+03	0.000E+00	1.000E+01	9.359E+02	3.920E+02
PSDF	EL STR	171	2093(5)	1.319291E+02	3.679166E+02	1.000E+01	2.000E+03	0.000E+00	1.000E+01	3.571E+02	2.680E+02
PSDF	EL STR	171	2093(7)	1.154371E+02	4.064343E+02	1.000E+01	2.000E+03	0.000E+00	1.000E+01	1.818E+02	1.490E+02
PSDF	EL STR	171	2094(3)	9.888562E+01	3.921466E+02	1.000E+01	2.000E+03	0.000E+00	1.000E+01	3.756E+02	1.410E+02
PSDF	EL STR	171	2094(5)	1.384458E+02	4.317417E+02	1.000E+01	2.000E+03	0.000E+00	1.000E+01	2.314E+02	1.410E+02
PSDF	EL STR	171	2094(7)	1.100852E+02	3.966550E+02	1.000E+01	2.000E+03	0.000E+00	1.000E+01	1.944E+02	1.490E+02
PSDF	EL STR	171	2095(3)	2.182468E+02	3.000870E+02	1.000E+01	2.000E+03	0.000E+00	1.000E+01	1.490E+03	2.780E+02
PSDF	EL STR	171	2095(5)	2.006084E+02	3.747609E+02	1.000E+01	2.000E+03	0.000E+00	1.000E+01	8.542E+02	1.800E+02
PSDF	EL STR	171	2095(7)	1.323617E+02	3.493606E+02	1.000E+01	2.000E+03	0.000E+00	1.000E+01	2.890E+02	2.680E+02
PSDF	EL STR	171	2096(3)	2.841128E+02	2.864868E+02	1.000E+01	2.000E+03	0.000E+00	1.000E+01	2.916E+03	2.780E+02
PSDF	EL STR	171	2096(5)	2.023604E+02	3.680639E+02	1.000E+01	2.000E+03	0.000E+00	1.000E+01	6.140E+02	1.420E+02

Z AXIS PSD RESPONSE

X Y - O U T P U T S U M M A R Y (A U T O O R P S D F)

PLOT TYPE	CURVE TYPE	FRAME NO.	CURVE ID.	RMS VALUE	NO. POSITIVE CROSSINGS	XMIN FOR ALL DATA	XMAX FOR ALL DATA	YMIN FOR ALL DATA	X FOR YMIN	YMAX FOR ALL DATA	X FOR* YMAX
PSDF	EL STR	171	2096(7)	1.459863E+02	3.321839E+02	1.000E+01	2.000E+03	0.000E+00	1.000E+01	6.255E+02	1.410E+02
PSDF	EL STR	171	2615(3)	4.535974E+02	3.319627E+02	1.000E+01	2.000E+03	0.000E+00	1.000E+01	6.872E+03	2.840E+02
PSDF	EL STR	171	2615(5)	9.302962E+02	3.236379E+02	1.000E+01	2.000E+03	0.000E+00	1.000E+01	2.984E+04	2.840E+02
PSDF	EL STR	171	2615(7)	2.148616E+02	3.106069E+02	1.000E+01	2.000E+03	0.000E+00	1.000E+01	1.488E+03	2.840E+02
PSDF	EL STR	171	2616(3)	1.955579E+02	3.263270E+02	1.000E+01	2.000E+03	0.000E+00	1.000E+01	1.837E+03	2.680E+02
PSDF	EL STR	171	2616(5)	2.495695E+02	4.042351E+02	1.000E+01	2.000E+03	0.000E+00	1.000E+01	2.203E+03	2.680E+02
PSDF	EL STR	171	2616(7)	1.712276E+02	3.170201E+02	1.000E+01	2.000E+03	0.000E+00	1.000E+01	9.757E+02	2.680E+02
PSDF	EL STR	171	2617(3)	1.775794E+02	3.788771E+02	1.000E+01	2.000E+03	0.000E+00	1.000E+01	9.061E+02	2.820E+02
PSDF	EL STR	171	2617(5)	1.884652E+02	3.299292E+02	1.000E+01	2.000E+03	0.000E+00	1.000E+01	7.833E+02	2.820E+02
PSDF	EL STR	171	2617(7)	6.992973E+01	3.706682E+02	1.000E+01	2.000E+03	0.000E+00	1.000E+01	1.286E+02	2.820E+02
PSDF	EL STR	171	2618(3)	1.772427E+02	3.803779E+02	1.000E+01	2.000E+03	0.000E+00	1.000E+01	8.433E+02	2.820E+02
PSDF	EL STR	171	2618(5)	1.691353E+02	3.532901E+02	1.000E+01	2.000E+03	0.000E+00	1.000E+01	8.524E+02	2.820E+02
PSDF	EL STR	171	2618(7)	9.497263E+01	3.856334E+02	1.000E+01	2.000E+03	0.000E+00	1.000E+01	1.870E+02	2.800E+02
PSDF	EL STR	171	2619(3)	1.097250E+02	3.910896E+02	1.000E+01	2.000E+03	0.000E+00	1.000E+01	2.399E+02	2.820E+02
PSDF	EL STR	171	2619(5)	2.094799E+02	4.834658E+02	1.000E+01	2.000E+03	0.000E+00	1.000E+01	6.253E+02	4.140E+02
PSDF	EL STR	171	2619(7)	1.419976E+02	3.800111E+02	1.000E+01	2.000E+03	0.000E+00	1.000E+01	4.551E+02	2.800E+02
PSDF	EL STR	171	2621(3)	2.922692E+02	4.766539E+02	1.000E+01	2.000E+03	0.000E+00	1.000E+01	2.071E+03	4.820E+02
PSDF	EL STR	171	2621(5)	5.360427E+02	4.734405E+02	1.000E+01	2.000E+03	0.000E+00	1.000E+01	7.208E+03	4.800E+02
PSDF	EL STR	171	2621(7)	1.766417E+02	3.425074E+02	1.000E+01	2.000E+03	0.000E+00	1.000E+01	7.422E+02	2.680E+02
PSDF	EL STR	171	2622(3)	2.528507E+02	4.284371E+02	1.000E+01	2.000E+03	0.000E+00	1.000E+01	1.008E+03	2.840E+02
PSDF	EL STR	171	2622(5)	5.143901E+02	3.411641E+02	1.000E+01	2.000E+03	0.000E+00	1.000E+01	7.655E+03	2.840E+02
PSDF	EL STR	171	2622(7)	1.967730E+02	3.288530E+02	1.000E+01	2.000E+03	0.000E+00	1.000E+01	1.464E+03	2.840E+02
PSDF	EL STR	171	2623(3)	5.256384E+02	3.570232E+02	1.000E+01	2.000E+03	0.000E+00	1.000E+01	6.317E+03	2.840E+02
PSDF	EL STR	171	2623(5)	4.893040E+02	3.346451E+02	1.000E+01	2.000E+03	0.000E+00	1.000E+01	6.320E+03	2.840E+02

Z AXIS PSD RESPONSE

X Y - O U T P U T S U M M A R Y (A U T O O R P S D F)

PLOT TYPE	CURVE TYPE	FRAME NO.	CURVE ID.	RMS VALUE	NO. POSITIVE CROSSINGS	XMIN FOR ALL DATA	XMAX FOR ALL DATA	YMIN FOR ALL DATA	X FOR YMIN	YMAX FOR ALL DATA	X FOR* YMAX
PSDF	EL STR	171	2623(7)	2.859598E+02	3.269890E+02	1.000E+01	2.000E+03	0.000E+00	1.000E+01	2.085E+03	2.840E+02
PSDF	EL STR	171	2624(3)	1.008270E+03	2.848565E+02	1.000E+01	2.000E+03	0.000E+00	1.000E+01	3.784E+04	2.840E+02
PSDF	EL STR	171	2624(5)	9.714790E+02	2.905325E+02	1.000E+01	2.000E+03	0.000E+00	1.000E+01	3.626E+04	2.840E+02
PSDF	EL STR	171	2624(7)	5.346595E+02	2.841337E+02	1.000E+01	2.000E+03	0.000E+00	1.000E+01	1.067E+04	2.840E+02
PSDF	EL STR	171	2625(3)	3.248386E+02	3.684657E+02	1.000E+01	2.000E+03	0.000E+00	1.000E+01	2.496E+03	2.840E+02
PSDF	EL STR	171	2625(5)	5.341196E+02	3.431411E+02	1.000E+01	2.000E+03	0.000E+00	1.000E+01	8.660E+03	2.840E+02
PSDF	EL STR	171	2625(7)	1.859134E+02	3.397006E+02	1.000E+01	2.000E+03	0.000E+00	1.000E+01	7.704E+02	2.840E+02
PSDF	EL STR	171	2626(3)	1.717122E+02	3.449987E+02	1.000E+01	2.000E+03	0.000E+00	1.000E+01	7.205E+02	2.840E+02
PSDF	EL STR	171	2626(5)	5.986443E+02	3.280114E+02	1.000E+01	2.000E+03	0.000E+00	1.000E+01	1.014E+04	2.840E+02
PSDF	EL STR	171	2626(7)	3.633372E+02	3.065709E+02	1.000E+01	2.000E+03	0.000E+00	1.000E+01	4.637E+03	2.840E+02
PSDF	EL STR	171	2627(3)	1.353391E+03	2.997191E+02	1.000E+01	2.000E+03	0.000E+00	1.000E+01	6.553E+04	2.840E+02
PSDF	EL STR	171	2627(5)	3.890196E+03	2.997336E+02	1.000E+01	2.000E+03	0.000E+00	1.000E+01	5.380E+05	2.840E+02
PSDF	EL STR	171	2627(7)	3.296105E+02	3.303729E+02	1.000E+01	2.000E+03	0.000E+00	1.000E+01	3.290E+03	2.840E+02
PSDF	EL STR	171	2628(3)	1.987856E+03	2.983133E+02	1.000E+01	2.000E+03	0.000E+00	1.000E+01	1.403E+05	2.840E+02
PSDF	EL STR	171	2628(5)	2.498299E+03	3.021416E+02	1.000E+01	2.000E+03	0.000E+00	1.000E+01	2.179E+05	2.840E+02
PSDF	EL STR	171	2628(7)	1.105567E+03	2.988434E+02	1.000E+01	2.000E+03	0.000E+00	1.000E+01	4.355E+04	2.840E+02
PSDF	EL STR	171	2629(3)	5.302736E+02	3.221581E+02	1.000E+01	2.000E+03	0.000E+00	1.000E+01	1.010E+04	2.840E+02
PSDF	EL STR	171	2629(5)	2.213968E+02	3.517303E+02	1.000E+01	2.000E+03	0.000E+00	1.000E+01	1.665E+03	2.840E+02
PSDF	EL STR	171	2629(7)	6.884609E+01	3.284196E+02	1.000E+01	2.000E+03	0.000E+00	1.000E+01	1.813E+02	2.840E+02
PSDF	EL STR	171	2630(3)	1.873679E+02	3.785748E+02	1.000E+01	2.000E+03	0.000E+00	1.000E+01	8.815E+02	2.820E+02
PSDF	EL STR	171	2630(5)	1.411094E+02	4.654353E+02	1.000E+01	2.000E+03	0.000E+00	1.000E+01	5.988E+02	2.700E+02
PSDF	EL STR	171	2630(7)	7.757703E+01	4.034409E+02	1.000E+01	2.000E+03	0.000E+00	1.000E+01	1.083E+02	2.700E+02
PSDF	EL STR	171	2631(3)	1.740942E+02	3.721331E+02	1.000E+01	2.000E+03	0.000E+00	1.000E+01	1.286E+03	2.700E+02
PSDF	EL STR	171	2631(5)	2.203073E+02	5.422159E+02	1.000E+01	2.000E+03	0.000E+00	1.000E+01	8.930E+02	2.700E+02

Z AXIS PSD RESPONSE

X Y - O U T P U T S U M M A R Y (A U T O O R P S D F)

PLOT TYPE	CURVE TYPE	FRAME NO.	CURVE ID.	RMS VALUE	NO. POSITIVE CROSSINGS	XMIN FOR ALL DATA	XMAX FOR ALL DATA	YMIN FOR ALL DATA	X FOR YMIN	YMAX FOR ALL DATA	X FOR* YMAX
PSDF	EL STR	171	2631(7)	1.401582E+02	4.032954E+02	1.000E+01	2.000E+03	0.000E+00	1.000E+01	4.820E+02	2.700E+02
PSDF	EL STR	171	3202(3)	3.283384E+02	3.799395E+02	1.000E+01	2.000E+03	0.000E+00	1.000E+01	2.364E+03	2.840E+02
PSDF	EL STR	171	3202(5)	4.978298E+02	3.045957E+02	1.000E+01	2.000E+03	0.000E+00	1.000E+01	9.224E+03	2.840E+02
PSDF	EL STR	171	3202(7)	2.376356E+02	3.520952E+02	1.000E+01	2.000E+03	0.000E+00	1.000E+01	1.595E+03	2.840E+02
PSDF	EL STR	171	3203(3)	1.125902E+03	2.878342E+02	1.000E+01	2.000E+03	0.000E+00	1.000E+01	4.854E+04	2.840E+02
PSDF	EL STR	171	3203(5)	5.172256E+02	3.135424E+02	1.000E+01	2.000E+03	0.000E+00	1.000E+01	9.195E+03	2.840E+02
PSDF	EL STR	171	3203(7)	1.693388E+02	3.447176E+02	1.000E+01	2.000E+03	0.000E+00	1.000E+01	8.827E+02	2.840E+02
PSDF	EL STR	171	3204(3)	5.751332E+02	2.883594E+02	1.000E+01	2.000E+03	0.000E+00	1.000E+01	1.247E+04	2.840E+02
PSDF	EL STR	171	3204(5)	4.043597E+02	3.429848E+02	1.000E+01	2.000E+03	0.000E+00	1.000E+01	4.349E+03	2.840E+02
PSDF	EL STR	171	3204(7)	1.514438E+02	3.048371E+02	1.000E+01	2.000E+03	0.000E+00	1.000E+01	7.534E+02	2.840E+02
PSDF	EL STR	171	3205(3)	9.341667E+02	2.950436E+02	1.000E+01	2.000E+03	0.000E+00	1.000E+01	3.084E+04	2.840E+02
PSDF	EL STR	171	3205(5)	5.720991E+02	3.313254E+02	1.000E+01	2.000E+03	0.000E+00	1.000E+01	9.017E+03	2.840E+02
PSDF	EL STR	171	3205(7)	2.504549E+02	3.660676E+02	1.000E+01	2.000E+03	0.000E+00	1.000E+01	1.212E+03	2.840E+02
PSDF	EL STR	171	3206(3)	4.389695E+02	3.117354E+02	1.000E+01	2.000E+03	0.000E+00	1.000E+01	5.939E+03	2.840E+02
PSDF	EL STR	171	3206(5)	6.901927E+02	2.892052E+02	1.000E+01	2.000E+03	0.000E+00	1.000E+01	1.652E+04	2.840E+02
PSDF	EL STR	171	3206(7)	1.161594E+02	3.820100E+02	1.000E+01	2.000E+03	0.000E+00	1.000E+01	2.507E+02	2.840E+02
PSDF	EL STR	171	3207(3)	2.278004E+02	4.513952E+02	1.000E+01	2.000E+03	0.000E+00	1.000E+01	1.092E+03	4.180E+02
PSDF	EL STR	171	3207(5)	6.240180E+02	3.066857E+02	1.000E+01	2.000E+03	0.000E+00	1.000E+01	1.401E+04	2.840E+02
PSDF	EL STR	171	3207(7)	8.794284E+01	4.979293E+02	1.000E+01	2.000E+03	0.000E+00	1.000E+01	6.924E+01	4.140E+02
PSDF	EL STR	171	3196(3)	3.413873E+02	3.661093E+02	1.000E+01	2.000E+03	0.000E+00	1.000E+01	3.177E+03	2.840E+02
PSDF	EL STR	171	3196(5)	4.510945E+02	3.280155E+02	1.000E+01	2.000E+03	0.000E+00	1.000E+01	5.687E+03	2.840E+02
PSDF	EL STR	171	3196(7)	1.892900E+02	3.118542E+02	1.000E+01	2.000E+03	0.000E+00	1.000E+01	1.253E+03	2.840E+02
PSDF	EL STR	171	3197(3)	4.457029E+02	3.574814E+02	1.000E+01	2.000E+03	0.000E+00	1.000E+01	5.934E+03	2.840E+02
PSDF	EL STR	171	3197(5)	3.856329E+02	3.460985E+02	1.000E+01	2.000E+03	0.000E+00	1.000E+01	3.434E+03	2.840E+02

Z AXIS PSD RESPONSE

X Y - O U T P U T S U M M A R Y (A U T O O R P S D F)

PLOT TYPE	CURVE TYPE	FRAME NO.	CURVE ID.	RMS VALUE	NO. POSITIVE CROSSINGS	XMIN FOR ALL DATA	XMAX FOR ALL DATA	YMIN FOR ALL DATA	X FOR YMIN	YMAX FOR ALL DATA	X FOR* YMAX
PSDF	EL STR	171	3197(7)	2.027512E+02	3.179427E+02	1.000E+01	2.000E+03	0.000E+00	1.000E+01	1.636E+03	2.840E+02
PSDF	EL STR	171	3198(3)	5.244364E+02	3.934300E+02	1.000E+01	2.000E+03	0.000E+00	1.000E+01	6.057E+03	2.840E+02
PSDF	EL STR	171	3198(5)	2.988236E+02	3.824712E+02	1.000E+01	2.000E+03	0.000E+00	1.000E+01	1.377E+03	4.180E+02
PSDF	EL STR	171	3198(7)	9.524324E+01	4.427134E+02	1.000E+01	2.000E+03	0.000E+00	1.000E+01	1.223E+02	2.840E+02
PSDF	EL STR	171	3199(3)	3.049286E+02	3.831741E+02	1.000E+01	2.000E+03	0.000E+00	1.000E+01	2.539E+03	2.840E+02
PSDF	EL STR	171	3199(5)	2.358503E+02	3.901754E+02	1.000E+01	2.000E+03	0.000E+00	1.000E+01	1.152E+03	4.180E+02
PSDF	EL STR	171	3199(7)	9.647739E+01	4.768047E+02	1.000E+01	2.000E+03	0.000E+00	1.000E+01	1.841E+02	4.800E+02
PSDF	EL STR	171	3200(3)	4.995930E+02	3.674619E+02	1.000E+01	2.000E+03	0.000E+00	1.000E+01	4.712E+03	2.840E+02
PSDF	EL STR	171	3200(5)	2.641568E+02	4.143270E+02	1.000E+01	2.000E+03	0.000E+00	1.000E+01	1.486E+03	4.180E+02
PSDF	EL STR	171	3200(7)	1.848409E+02	3.945792E+02	1.000E+01	2.000E+03	0.000E+00	1.000E+01	4.756E+02	2.680E+02
PSDF	EL STR	171	3201(3)	3.870470E+02	4.232550E+02	1.000E+01	2.000E+03	0.000E+00	1.000E+01	2.205E+03	4.160E+02
PSDF	EL STR	171	3201(5)	2.200452E+02	4.205045E+02	1.000E+01	2.000E+03	0.000E+00	1.000E+01	1.281E+03	4.160E+02
PSDF	EL STR	171	3201(7)	1.856519E+02	4.583761E+02	1.000E+01	2.000E+03	0.000E+00	1.000E+01	7.636E+02	4.820E+02
PSDF	EL STR	171	2249(3)	2.309150E+02	4.574598E+02	1.000E+01	2.000E+03	0.000E+00	1.000E+01	1.010E+03	4.780E+02
PSDF	EL STR	171	2249(5)	3.930417E+02	3.289093E+02	1.000E+01	2.000E+03	0.000E+00	1.000E+01	3.234E+03	2.840E+02
PSDF	EL STR	171	2249(7)	1.833859E+02	3.562129E+02	1.000E+01	2.000E+03	0.000E+00	1.000E+01	6.217E+02	2.680E+02
PSDF	EL STR	171	2250(3)	9.629850E+02	3.114081E+02	1.000E+01	2.000E+03	0.000E+00	1.000E+01	2.957E+04	2.840E+02
PSDF	EL STR	171	2250(5)	2.769049E+02	3.263637E+02	1.000E+01	2.000E+03	0.000E+00	1.000E+01	2.197E+03	2.840E+02
PSDF	EL STR	171	2250(7)	1.694401E+02	3.458623E+02	1.000E+01	2.000E+03	0.000E+00	1.000E+01	1.013E+03	2.840E+02
PSDF	EL STR	171	2251(3)	9.601130E+02	3.144353E+02	1.000E+01	2.000E+03	0.000E+00	1.000E+01	2.912E+04	2.840E+02
PSDF	EL STR	171	2251(5)	1.868436E+02	3.027760E+02	1.000E+01	2.000E+03	0.000E+00	1.000E+01	1.263E+03	2.840E+02
PSDF	EL STR	171	2251(7)	1.672272E+02	3.481928E+02	1.000E+01	2.000E+03	0.000E+00	1.000E+01	5.389E+02	2.840E+02
PSDF	EL STR	171	2252(3)	1.434902E+02	4.042390E+02	1.000E+01	2.000E-03	0.000E+00	1.000E+01	4.478E+02	2.840E+02
PSDF	EL STR	171	2252(5)	6.408740E+02	2.848192E+02	1.000E+01	2.000E+03	0.000E+00	1.000E+01	1.577E+04	2.840E+02

Z AXIS PSD RESPONSE

X Y - O U T P U T S U M M A R Y (A U T O O R P S D F)

PLOT TYPE	CURVE TYPE	FRAME NO.	CURVE ID.	RMS VALUE	NO. POSITIVE CROSSINGS	XMIN FOR ALL DATA	XMAX FOR ALL DATA	YMIN FOR ALL DATA	X FOR YMIN	YMAX FOR ALL DATA	X FOR* YMAX
PSDF	EL STR	171	2252(7)	2.940296E+02	2.921305E+02	1.000E+01	2.000E+03	0.000E+00	1.000E+01	3.368E+03	2.840E+02
PSDF	EL STR	171	2253(3)	3.393372E+02	2.941307E+02	1.000E+01	2.000E+03	0.000E+00	1.000E+01	4.230E+03	2.840E+02
PSDF	EL STR	171	2253(5)	5.596193E+02	3.037642E+02	1.000E+01	2.000E+03	0.000E+00	1.000E+01	1.134E+04	2.840E+02
PSDF	EL STR	171	2253(7)	4.922625E+02	3.085326E+02	1.000E+01	2.000E+03	0.000E+00	1.000E+01	8.205E+03	2.840E+02
PSDF	EL STR	171	2255(3)	2.564635E+02	3.037398E+02	1.000E+01	2.000E+03	0.000E+00	1.000E+01	2.154E+03	2.840E+02
PSDF	EL STR	171	2255(5)	1.261693E+02	3.033629E+02	1.000E+01	2.000E+03	0.000E+00	1.000E+01	5.838E+02	2.840E+02
PSDF	EL STR	171	2255(7)	4.815041E+02	2.949644E+02	1.000E+01	2.000E+03	0.000E+00	1.000E+01	8.042E+03	2.840E+02
PSDF	EL STR	171	2256(3)	3.112376E+02	4.341856E+02	1.000E+01	2.000E+03	0.000E+00	1.000E+01	1.285E+03	3.960E+02
PSDF	EL STR	171	2256(5)	4.007592E+02	4.509966E+02	1.000E+01	2.000E+03	0.000E+00	1.000E+01	3.692E+03	4.900E+02
PSDF	EL STR	171	2256(7)	5.641397E+02	2.895190E+02	1.000E+01	2.000E+03	0.000E+00	1.000E+01	9.345E+03	2.840E+02
PSDF	EL STR	171	21745(3)	2.062384E+02	2.359438E+02	1.000E+01	2.000E+03	0.000E+00	1.000E+01	1.588E+03	2.260E+02
PSDF	EL STR	171	21745(5)	2.521332E+02	2.896634E+02	1.000E+01	2.000E+03	0.000E+00	1.000E+01	2.490E+03	1.410E+02
PSDF	EL STR	171	21745(7)	1.885929E+02	2.455776E+02	1.000E+01	2.000E+03	0.000E+00	1.000E+01	1.371E+03	2.260E+02
PSDF	EL STR	171	21675(3)	1.403239E+02	3.571800E+02	1.000E+01	2.000E+03	0.000E+00	1.000E+01	4.659E+02	3.560E+02
PSDF	EL STR	171	21675(5)	2.417937E+02	3.437480E+02	1.000E+01	2.000E+03	0.000E+00	1.000E+01	1.965E+03	2.080E+02
PSDF	EL STR	171	21675(7)	1.250084E+02	3.380981E+02	1.000E+01	2.000E+03	0.000E+00	1.000E+01	3.277E+02	2.080E+02
PSDF	EL STR	171	21679(3)	3.345881E+02	3.879382E+02	1.000E+01	2.000E+03	0.000E+00	1.000E+01	4.953E+03	2.240E+02
PSDF	EL STR	171	21679(5)	6.617958E+01	4.136676E+02	1.000E+01	2.000E+03	0.000E+00	1.000E+01	1.370E+02	2.240E+02
PSDF	EL STR	171	21679(7)	6.101961E+01	5.045676E+02	1.000E+01	2.000E+03	0.000E+00	1.000E+01	5.823E+01	3.540E+02
PSDF	EL STR	171	21749(3)	2.800855E+02	3.203239E+02	1.000E+01	2.000E+03	0.000E+00	1.000E+01	4.800E+03	2.260E+02
PSDF	EL STR	171	21749(5)	4.821719E+01	3.990291E+02	1.000E+01	2.000E+03	0.000E+00	1.000E+01	8.608E+01	2.240E+02
PSDF	EL STR	171	21749(7)	4.453442E+01	4.956797E+02	1.000E+01	2.000E+03	0.000E+00	1.000E+01	2.692E+01	1.520E+02
PSDF	EL STR	171	21672(3)	2.111042E+02	3.935643E+02	1.000E+01	2.000E+03	0.000E+00	1.000E+01	1.091E+03	3.560E+02
PSDF	EL STR	171	21672(5)	2.726341E+02	3.488201E+02	1.000E+01	2.000E+03	0.000E+00	1.000E+01	4.177E+03	2.260E+02

Z AXIS PSD RESPONSE

X Y - O U T P U T S U M M A R Y (A U T O O R P S D F)

PLOT TYPE	CURVE TYPE	FRAME NO.	CURVE ID.	RMS VALUE	NO. POSITIVE CROSSINGS	XMIN FOR ALL DATA	XMAX FOR ALL DATA	YMIN FOR ALL DATA	X FOR YMIN	YMAX FOR ALL DATA	X FOR* YMAX
PSDF	EL STR	171	21672(7)	8.915469E+01	4.276516E+02	1.000E+01	2.000E+03	0.000E+00	1.000E+01	1.848E+02	3.560E+02
PSDF	EL STR	171	21742(3)	2.617824E+02	2.374786E+02	1.000E+01	2.000E+03	0.000E+00	1.000E+01	2.760E+03	1.940E+02
PSDF	EL STR	171	21742(5)	1.974213E+02	2.941800E+02	1.000E+01	2.000E+03	0.000E+00	1.000E+01	2.555E+03	2.240E+02
PSDF	EL STR	171	21742(7)	1.191126E+02	2.534319E+02	1.000E+01	2.000E+03	0.000E+00	1.000E+01	5.674E+02	1.940E+02
PSDF	EL STR	171	21783(3)	2.315031E+02	1.867131E+02	1.000E+01	2.000E+03	0.000E+00	1.000E+01	4.277E+03	1.520E+02
PSDF	EL STR	171	21783(5)	1.779998E+02	2.165810E+02	1.000E+01	2.000E+03	0.000E+00	1.000E+01	1.672E+03	1.520E+02
PSDF	EL STR	171	21783(7)	7.642973E+01	2.467242E+02	1.000E+01	2.000E+03	0.000E+00	1.000E+01	2.596E+02	2.260E+02
PSDF	EL STR	171	21713(3)	2.152004E+02	2.071226E+02	1.000E+01	2.000E+03	0.000E+00	1.000E+01	3.035E+03	1.520E+02
PSDF	EL STR	171	21713(5)	1.777052E+02	2.348538E+02	1.000E+01	2.000E+03	0.000E+00	1.000E+01	1.239E+03	1.520E+02
PSDF	EL STR	171	21713(7)	4.713601E+01	4.099308E+02	1.000E+01	2.000E+03	0.000E+00	1.000E+01	4.079E+01	1.410E+02
PSDF	EL STR	171	21041(3)	1.338269E+03	2.907883E+02	1.000E+01	2.000E+03	0.000E+00	1.000E+01	9.897E+04	1.410E+02
PSDF	EL STR	171	21041(5)	1.176672E+03	2.290830E+02	1.000E+01	2.000E+03	0.000E+00	1.000E+01	1.033E+05	1.410E+02
PSDF	EL STR	171	21041(7)	1.924259E+02	3.961532E+02	1.000E+01	2.000E+03	0.000E+00	1.000E+01	5.708E+02	1.410E+02
PSDF	EL STR	171	21042(3)	1.785508E+03	2.932347E+02	1.000E+01	2.000E+03	0.000E+00	1.000E+01	1.768E+05	1.410E+02
PSDF	EL STR	171	21042(5)	1.940679E+02	4.823031E+02	1.000E+01	2.000E+03	0.000E+00	1.000E+01	8.342E+02	1.410E+02
PSDF	EL STR	171	21042(7)	7.424619E+02	1.987935E+02	1.000E+01	2.000E+03	0.000E+00	1.000E+01	5.332E+04	1.410E+02
PSDF	EL STR	171	21043(3)	5.465853E+02	2.716136E+02	1.000E+01	2.000E+03	0.000E+00	1.000E+01	1.883E+04	1.410E+02
PSDF	EL STR	171	21043(5)	2.026621E+02	3.260796E+02	1.000E+01	2.000E+03	0.000E+00	1.000E+01	1.526E+03	1.410E+02
PSDF	EL STR	171	21043(7)	3.956844E+02	2.134474E+02	1.000E+01	2.000E+03	0.000E+00	1.000E+01	1.420E+04	1.410E+02
PSDF	EL STR	171	21044(3)	2.113764E+02	1.927125E+02	1.000E+01	2.000E+03	0.000E+00	1.000E+01	4.389E+03	1.410E+02
PSDF	EL STR	171	21044(5)	9.989800E+01	3.573644E+02	1.000E+01	2.000E+03	0.000E+00	1.000E+01	5.963E+02	1.410E+02
PSDF	EL STR	171	21044(7)	4.440423E+02	1.805227E+02	1.000E+01	2.000E+03	0.000E+00	1.000E+01	2.003E+04	1.410E+02
PSDF	EL STR	171	21045(3)	1.518578E+02	4.310049E+02	1.000E+01	2.000E+03	0.000E+00	1.000E+01	6.021E+02	1.400E+02
PSDF	EL STR	171	21045(5)	3.792835E+02	2.896991E+02	1.000E+01	2.000E+03	0.000E+00	1.000E+01	1.105E+04	1.410E+02

Z AXIS PSD RESPONSE

X Y - O U T P U T S U M M A R Y (A U T O O R P S D F)

PLOT TYPE	CURVE TYPE	FRAME NO.	CURVE ID.	RMS VALUE	NO. POSITIVE CROSSINGS	XMIN FOR ALL DATA	XMAX FOR ALL DATA	YMIN FOR ALL DATA	X FOR YMIN	YMAX FOR ALL DATA	X FOR* YMAX
PSDF	EL STR	171	21045(7)	7.566807E+02	1.839818E+02	1.000E+01	2.000E+03	0.000E+00	1.000E+01	5.936E+04	1.410E+02
PSDF	EL STR	171	21046(3)	2.455129E+02	4.106357E+02	1.000E+01	2.000E+03	0.000E+00	1.000E+01	1.192E+03	1.820E+02
PSDF	EL STR	171	21046(5)	4.622483E+02	2.353994E+02	1.000E+01	2.000E+03	0.000E+00	1.000E+01	1.830E+04	1.410E+02
PSDF	EL STR	171	21046(7)	4.614777E+02	2.458711E+02	1.000E+01	2.000E+03	0.000E+00	1.000E+01	1.809E+04	1.410E+02
PSDF	EL STR	171	21047(3)	1.138874E+02	2.970197E+02	1.000E+01	2.000E+03	0.000E+00	1.000E+01	1.079E+03	1.410E+02
PSDF	EL STR	171	21047(5)	5.239166E+02	1.904562E+02	1.000E+01	2.000E+03	0.000E+00	1.000E+01	2.808E+04	1.410E+02
PSDF	EL STR	171	21047(7)	2.591838E+02	2.351292E+02	1.000E+01	2.000E+03	0.000E+00	1.000E+01	6.424E+03	1.410E+02
PSDF	EL STR	171	21048(3)	1.075469E+03	1.610020E+02	1.000E+01	2.000E+03	0.000E+00	1.000E+01	1.212E+05	1.410E+02
PSDF	EL STR	171	21048(5)	5.352218E+02	1.830486E+02	1.000E+01	2.000E+03	0.000E+00	1.000E+01	2.584E+04	1.410E+02
PSDF	EL STR	171	21048(7)	5.224085E+02	1.632492E+02	1.000E+01	2.000E+03	0.000E+00	1.000E+01	2.737E+04	1.410E+02
PSDF	EL STR	171	21049(3)	3.120028E+03	1.631015E+02	1.000E+01	2.000E+03	0.000E+00	1.000E+01	1.018E+06	1.410E+02
PSDF	EL STR	171	21049(5)	6.869028E+02	1.959589E+02	1.000E+01	2.000E+03	0.000E+00	1.000E+01	4.539E+04	1.410E+02
PSDF	EL STR	171	21049(7)	9.456722E+02	1.620138E+02	1.000E+01	2.000E+03	0.000E+00	1.000E+01	9.152E+04	1.410E+02
PSDF	EL STR	171	21050(3)	1.626659E+03	1.676323E+02	1.000E+01	2.000E+03	0.000E+00	1.000E+01	2.660E+05	1.410E+02
PSDF	EL STR	171	21050(5)	1.879899E+03	1.602722E+02	1.000E+01	2.000E+03	0.000E+00	1.000E+01	3.700E+05	1.410E+02
PSDF	EL STR	171	21050(7)	5.545728E+02	1.989965E+02	1.000E+01	2.000E+03	0.000E+00	1.000E+01	3.135E+04	1.410E+02
PSDF	EL STR	171	21410(3)	2.250795E+02	3.311749E+02	1.000E+01	2.000E+03	0.000E+00	1.000E+01	3.226E+03	1.410E+02
PSDF	EL STR	171	21410(5)	4.979154E+02	4.427209E+02	1.000E+01	2.000E+03	0.000E+00	1.000E+01	9.287E+03	3.900E+02
PSDF	EL STR	171	21410(7)	2.162923E+02	2.773910E+02	1.000E+01	2.000E+03	0.000E+00	1.000E+01	3.458E+03	1.410E+02
PSDF	EL STR	171	21409(3)	3.268942E+02	2.484119E+02	1.000E+01	2.000E+03	0.000E+00	1.000E+01	7.874E+03	1.410E+02
PSDF	EL STR	171	21409(5)	4.104434E+02	1.639686E+02	1.000E+01	2.000E+03	0.000E+00	1.000E+01	1.831E+04	1.410E+02
PSDF	EL STR	171	21409(7)	2.332638E+02	2.451102E+02	1.000E+01	2.000E+03	0.000E+00	1.000E+01	4.811E+03	1.410E+02
PSDF	EL STR	171	21425(3)	5.333974E+02	1.947723E+02	1.000E+01	2.000E+03	0.000E+00	1.000E+01	2.860E+04	1.410E+02
PSDF	EL STR	171	21425(5)	4.584647E+02	1.739289E+02	1.000E+01	2.000E+03	0.000E+00	1.000E+01	2.188E+04	1.410E+02

Z AXIS PSD RESPONSE

X Y - O U T P U T S U M M A R Y (A U T O O R P S D F)

PLOT TYPE	CURVE TYPE	FRAME NO.	CURVE ID.	RMS VALUE	NO. POSITIVE CROSSINGS	XMIN FOR ALL DATA	XMAX FOR ALL DATA	YMIN FOR ALL DATA	X FOR YMIN	YMAX FOR ALL DATA	X FOR* YMAX
PSDF	EL STR	171	21425(7)	4.801022E+02	1.951330E+02	1.000E+01	2.000E+03	0.000E+00	1.000E+01	2.097E+04	1.410E+02
PSDF	EL STR	171	21426(3)	3.936771E+02	2.833111E+02	1.000E+01	2.000E+03	0.000E+00	1.000E+01	1.299E+04	1.410E+02
PSDF	EL STR	171	21426(5)	1.630240E+02	2.010708E+02	1.000E+01	2.000E+03	0.000E+00	1.000E+01	2.635E+03	1.410E+02
PSDF	EL STR	171	21426(7)	9.834083E+01	3.629620E+02	1.000E+01	2.000E+03	0.000E+00	1.000E+01	3.136E+02	1.410E+02
PSDF	EL STR	171	21427(3)	4.110876E+02	3.462622E+02	1.000E+01	2.000E+03	0.000E+00	1.000E+01	1.072E+04	1.410E+02
PSDF	EL STR	171	21427(5)	1.632794E+02	2.478766E+02	1.000E+01	2.000E+03	0.000E+00	1.000E+01	2.429E+03	1.410E+02
PSDF	EL STR	171	21427(7)	6.790915E+01	3.904993E+02	1.000E+01	2.000E+03	0.000E+00	1.000E+01	5.050E+01	3.920E+02
PSDF	EL STR	171	21428(3)	5.701801E+02	3.151689E+02	1.000E+01	2.000E+03	0.000E+00	1.000E+01	2.337E+04	1.410E+02
PSDF	EL STR	171	21428(5)	2.590912E+02	2.519825E+02	1.000E+01	2.000E+03	0.000E+00	1.000E+01	5.956E+03	1.410E+02
PSDF	EL STR	171	21428(7)	1.444541E+02	2.615562E+02	1.000E+01	2.000E+03	0.000E+00	1.000E+01	1.801E+03	1.410E+02
PSDF	EL STR	171	21429(3)	5.510793E+02	3.169447E+02	1.000E+01	2.000E+03	0.000E+00	1.000E+01	2.098E+04	1.410E+02
PSDF	EL STR	171	21429(5)	1.944262E+02	2.756811E+02	1.000E+01	2.000E+03	0.000E+00	1.000E+01	2.996E+03	1.410E+02
PSDF	EL STR	171	21429(7)	9.021340E+01	3.469443E+02	1.000E+01	2.000E+03	0.000E+00	1.000E+01	4.896E+02	1.410E+02
PSDF	EL STR	171	21430(3)	3.817683E+02	3.721204E+02	1.000E+01	2.000E+03	0.000E+00	1.000E+01	6.337E+03	1.410E+02
PSDF	EL STR	171	21430(5)	9.493569E+01	4.203940E+02	1.000E+01	2.000E+03	0.000E+00	1.000E+01	2.296E+02	3.900E+02
PSDF	EL STR	171	21430(7)	1.112162E+02	3.046732E+02	1.000E+01	2.000E+03	0.000E+00	1.000E+01	9.629E+02	1.410E+02
PSDF	EL STR	171	21431(3)	3.316292E+02	3.993332E+02	1.000E+01	2.000E+03	0.000E+00	1.000E+01	3.854E+03	3.900E+02
PSDF	EL STR	171	21431(5)	1.415042E+02	2.958792E+02	1.000E+01	2.000E+03	0.000E+00	1.000E+01	1.044E+03	1.410E+02
PSDF	EL STR	171	21431(7)	8.318561E+01	4.082875E+02	1.000E+01	2.000E+03	0.000E+00	1.000E+01	2.607E+02	1.400E+02
PSDF	EL STR	171	21432(3)	1.694471E+02	4.240549E+02	1.000E+01	2.000E+03	0.000E+00	1.000E+01	1.069E+03	3.900E+02
PSDF	EL STR	171	21432(5)	4.365834E+02	3.978706E+02	1.000E+01	2.000E+03	0.000E+00	1.000E+01	7.146E+03	3.900E+02
PSDF	EL STR	171	21432(7)	2.328267E+02	3.165728E+02	1.000E+01	2.000E+03	0.000E+00	1.000E+01	2.428E+03	1.410E+02
PSDF	EL STR	171	21241(3)	1.150692E+03	1.607519E+02	1.000E+01	2.000E+03	0.000E+00	1.000E+01	1.435E+05	1.410E+02
PSDF	EL STR	171	21241(5)	1.371537E+03	1.656367E+02	1.000E+01	2.000E+03	0.000E+00	1.000E+01	1.972E+05	1.410E+02

Z AXIS PSD RESPONSE

X Y - O U T P U T S U M M A R Y (A U T O O R P S D F)

PLOT TYPE	CURVE TYPE	FRAME NO.	CURVE ID.	RMS VALUE	NO. POSITIVE CROSSINGS	XMIN FOR ALL DATA	XMAX FOR ALL DATA	YMIN FOR ALL DATA	X FOR YMIN	YMAX FOR ALL DATA	X FOR* YMAX
PSDF	EL STR	171	21241(7)	1.028022E+03	1.625946E+02	1.000E+01	2.000E+03	0.000E-00	1.000E+01	1.127E+05	1.410E+02
PSDF	EL STR	171	21242(3)	1.947249E+03	1.626155E+02	1.000E+01	2.000E+03	0.000E+00	1.000E+01	4.091E+05	1.410E+02
PSDF	EL STR	171	21242(5)	3.110801E+02	3.726039E+02	1.000E+01	2.000E+03	0.000E+00	1.000E+01	1.435E+03	1.028E+02
PSDF	EL STR	171	21242(7)	1.463019E+03	1.565282E+02	1.000E+01	2.000E+03	0.000E+00	1.000E+01	2.270E+05	1.410E+02
PSDF	EL STR	171	21243(3)	9.293835E+02	1.541772E+02	1.000E+01	2.000E+03	0.000E+00	1.000E+01	9.404E+04	1.410E+02
PSDF	EL STR	171	21243(5)	7.771605E+02	1.588508E+02	1.000E+01	2.000E+03	0.000E+00	1.000E+01	6.429E+04	1.410E+02
PSDF	EL STR	171	21243(7)	6.810185E+02	1.545192E+02	1.000E+01	2.000E+03	0.000E+00	1.000E+01	4.975E+04	1.410E+02
PSDF	EL STR	171	21244(3)	1.686223E+02	2.800394E+02	1.000E+01	2.000E+03	0.000E+00	1.000E+01	2.185E+03	1.410E+02
PSDF	EL STR	171	21244(5)	6.470137E+02	1.804090E+02	1.000E+01	2.000E+03	0.000E+00	1.000E+01	4.292E+04	1.410E+02
PSDF	EL STR	171	21244(7)	2.528209E+02	2.664464E+02	1.000E+01	2.000E+03	0.000E+00	1.000E+01	5.260E+03	1.410E+02
PSDF	EL STR	171	21245(3)	3.073163E+02	3.131619E+02	1.000E+01	2.000E+03	0.000E+00	1.000E+01	7.228E+03	1.410E+02
PSDF	EL STR	171	21245(5)	5.747545E+02	2.354049E+02	1.000E+01	2.000E+03	0.000E+00	1.000E+01	2.892E+04	1.410E+02
PSDF	EL STR	171	21245(7)	2.894496E+02	3.251028E+02	1.000E+01	2.000E+03	0.000E+00	1.000E+01	3.663E+03	1.400E+02
PSDF	EL STR	171	21246(3)	1.767618E+02	3.684978E+02	1.000E+01	2.000E+03	0.000E+00	1.000E+01	1.437E+03	1.410E+02
PSDF	EL STR	171	21246(5)	4.934382E+02	1.829818E+02	1.000E+01	2.000E+03	0.000E+00	1.000E+01	2.362E+04	1.410E+02
PSDF	EL STR	171	21246(7)	7.163441E+02	1.719002E+02	1.000E+01	2.000E+03	0.000E+00	1.000E+01	5.333E+04	1.410E+02
PSDF	EL STR	171	21247(3)	1.287590E+02	2.644142E+02	1.000E+01	2.000E+03	0.000E+00	1.000E+01	1.241E+03	1.410E+02
PSDF	EL STR	171	21247(5)	1.057418E+02	3.280551E+02	1.000E+01	2.000E+03	0.000E+00	1.000E+01	3.900E+02	1.400E+02
PSDF	EL STR	171	21247(7)	3.834199E+02	1.864359E+02	1.000E+01	2.000E+03	0.000E+00	1.000E+01	1.498E+04	1.410E+02
PSDF	EL STR	171	21248(3)	5.066817E+02	2.719898E+02	1.000E+01	2.000E+03	0.000E+00	1.000E+01	1.474E+04	1.410E+02
PSDF	EL STR	171	21248(5)	2.480490E+02	2.693323E+02	1.000E+01	2.000E+03	0.000E+00	1.000E+01	2.887E+03	1.410E+02
PSDF	EL STR	171	21248(7)	4.382604E+02	2.127886E+02	1.000E+01	2.000E+03	0.000E+00	1.000E+01	1.685E+04	1.410E+02
PSDF	EL STR	171	21249(3)	1.470497E+03	3.104680E+02	1.000E+01	2.000E+03	0.000E+00	1.000E+01	8.961E+04	1.410E+02
PSDF	EL STR	171	21249(5)	3.329165E+02	2.683550E+02	1.000E+01	2.000E+03	0.000E+00	1.000E+01	9.179E+03	1.410E+02

Z AXIS PSD RESPONSE

X Y - O U T P U T S U M M A R Y (A U T O O R P S D F)

PLOT TYPE	CURVE TYPE	FRAME NO.	CURVE ID.	RMS VALUE	NO. POSITIVE CROSSINGS	XMIN FOR ALL DATA	XMAX FOR ALL DATA	YMIN FOR ALL DATA	X FOR YMIN	YMAX FOR ALL DATA	X FOR* YMAX
PSDF	EL STR	171	21249(7)	9.624688E+02	1.809358E+02	1.000E+01	2.000E+03	0.000E+00	1.000E+01	9.158E+04	1.410E+02
PSDF	EL STR	171	21250(3)	1.118633E+03	2.208841E+02	1.000E+01	2.000E+03	0.000E+00	1.000E+01	9.983E+04	1.410E+02
PSDF	EL STR	171	21250(5)	1.184672E+03	2.932876E+02	1.000E+01	2.000E+03	0.000E+00	1.000E+01	6.688E+04	1.410E+02
PSDF	EL STR	171	21250(7)	2.451426E+02	4.383310E+02	1.000E+01	2.000E+03	0.000E+00	1.000E+01	8.935E+02	3.920E+02
PSDF	EL STR	171	21339(3)	2.942552E+03	1.516361E+02	1.000E+01	2.000E+03	0.000E+00	1.000E+01	9.439E+05	1.410E+02
PSDF	EL STR	171	21339(5)	5.288419E+02	1.584248E+02	1.000E+01	2.000E+03	0.000E+00	1.000E+01	3.018E+04	1.410E+02
PSDF	EL STR	171	21339(7)	7.069794E+02	1.856768E+02	1.000E+01	2.000E+03	0.000E+00	1.000E+01	5.127E+04	1.410E+02
PSDF	EL STR	171	21340(3)	3.098271E+02	2.835489E+02	1.000E+01	2.000E+03	0.000E+00	1.000E+01	6.312E+03	1.410E+02
PSDF	EL STR	171	21340(5)	9.777401E+02	3.235855E+02	1.000E+01	2.000E+03	0.000E+00	1.000E+01	5.042E+04	1.410E+02
PSDF	EL STR	171	21340(7)	9.212582E+01	4.441781E+02	1.000E+01	2.000E+03	0.000E+00	1.000E+01	2.697E+02	1.410E+02
PSDF	EL STR	171	21355(3)	3.366228E+03	1.556265E+02	1.000E+01	2.000E+03	0.000E+00	1.000E+01	1.227E+06	1.410E+02
PSDF	EL STR	171	21355(5)	1.599692E+03	1.548631E+02	1.000E+01	2.000E+03	0.000E+00	1.000E+01	2.763E+05	1.410E+02
PSDF	EL STR	171	21355(7)	7.042491E+02	1.605686E+02	1.000E+01	2.000E+03	0.000E+00	1.000E+01	5.207E+04	1.410E+02
PSDF	EL STR	171	21356(3)	4.436910E+02	2.448176E+02	1.000E+01	2.000E+03	0.000E+00	1.000E+01	1.827E+04	1.410E+02
PSDF	EL STR	171	21356(5)	3.127610E+02	1.814133E+02	1.000E+01	2.000E+03	0.000E+00	1.000E+01	9.707E+03	1.410E+02
PSDF	EL STR	171	21356(7)	3.133368E+02	1.910165E+02	1.000E+01	2.000E+03	0.000E+00	1.000E+01	9.075E+03	1.410E+02
PSDF	EL STR	171	21357(3)	5.582067E+02	2.647777E+02	1.000E+01	2.000E+03	0.000E+00	1.000E+01	2.675E+04	1.410E+02
PSDF	EL STR	171	21357(5)	3.550498E+02	1.867761E+02	1.000E+01	2.000E+03	0.000E+00	1.000E+01	1.257E+04	1.410E+02
PSDF	EL STR	171	21357(7)	1.248581E+02	3.779509E+02	1.000E+01	2.000E+03	0.000E+00	1.000E+01	1.564E+02	3.560E+02
PSDF	EL STR	171	21358(3)	1.099679E+03	2.472050E+02	1.000E+01	2.000E+03	0.000E+00	1.000E+01	1.084E+05	1.410E+02
PSDF	EL STR	171	21358(5)	5.246469E+02	2.027575E+02	1.000E+01	2.000E+03	0.000E+00	1.000E+01	2.717E+04	1.410E+02
PSDF	EL STR	171	21358(7)	1.389470E+02	3.990119E+02	1.000E+01	2.000E+03	0.000E+00	1.000E+01	1.996E+02	3.560E+02
PSDF	EL STR	171	21359(3)	9.434153E+02	2.688235E+02	1.000E+01	2.000E+03	0.000E+00	1.000E+01	7.437E+04	1.410E+02
PSDF	EL STR	171	21359(5)	4.377570E+02	2.258068E+02	1.000E+01	2.000E+03	0.000E+00	1.000E+01	1.790E+04	1.410E+02

Z AXIS PSD RESPONSE

X Y - O U T P U T S U M M A R Y (A U T O O R P S D F)

PLOT TYPE	CURVE TYPE	FRAME NO.	CURVE ID.	RMS VALUE	NO. POSITIVE CROSSINGS	XMIN FOR ALL DATA	XMAX FOR ALL DATA	YMIN FOR ALL DATA	X FOR YMIN	YMAX FOR ALL DATA	X FOR* YMAX
PSDF	EL STR	171	21359(7)	3.077770E+02	1.991432E+02	1.000E+01	2.000E+03	0.000E+00	1.000E+01	8.812E+03	1.410E+02
PSDF	EL STR	171	21360(3)	4.197975E+02	3.842790E+02	1.000E+01	2.000E+03	0.000E+00	1.000E+01	6.705E+03	1.410E+02
PSDF	EL STR	171	21360(5)	1.837873E+02	3.179330E+02	1.000E+01	2.000E+03	0.000E+00	1.000E+01	2.142E+03	1.410E+02
PSDF	EL STR	171	21360(7)	2.558090E+02	2.228490E+02	1.000E+01	2.000E+03	0.000E+00	1.000E+01	5.420E+03	1.410E+02
PSDF	EL STR	171	21361(3)	4.432627E+02	3.738047E+02	1.000E+01	2.000E+03	0.000E+00	1.000E+01	6.347E+03	1.410E+02
PSDF	EL STR	171	21361(5)	1.500651E+02	3.549150E+02	1.000E+01	2.000E+03	0.000E+00	1.000E+01	7.805E+02	1.400E+02
PSDF	EL STR	171	21361(7)	3.294328E+02	2.362905E+02	1.000E+01	2.000E+03	0.000E+00	1.000E+01	8.275E+03	1.410E+02
PSDF	EL STR	171	21362(3)	4.055163E+02	3.281199E+02	1.000E+01	2.000E+03	0.000E+00	1.000E+01	8.001E+03	1.410E+02
PSDF	EL STR	171	21362(5)	1.096032E+03	3.240350E+02	1.000E+01	2.000E+03	0.000E+00	1.000E+01	6.101E+04	1.410E+02
PSDF	EL STR	171	21362(7)	6.273117E+02	2.471406E+02	1.000E+01	2.000E+03	0.000E+00	1.000E+01	2.814E+04	1.410E+02
PSDF	EL STR	171	22742(3)	1.539771E+02	4.145412E+02	1.000E+01	2.000E+03	0.000E+00	1.000E+01	2.609E+02	4.980E+02
PSDF	EL STR	171	22742(5)	5.129334E+01	4.625627E+02	1.000E+01	2.000E+03	0.000E+00	1.000E+01	3.592E+01	4.980E+02
PSDF	EL STR	171	22742(7)	2.608961E+02	4.147112E+02	1.000E+01	2.000E+03	0.000E+00	1.000E+01	6.885E+02	2.660E+02
PSDF	EL STR	171	22743(3)	5.401828E+01	4.714485E+02	1.000E+01	2.000E+03	0.000E+00	1.000E+01	3.389E+01	4.980E+02
PSDF	EL STR	171	22743(5)	7.704379E+01	4.400597E+02	1.000E+01	2.000E+03	0.000E+00	1.000E+01	5.694E+01	2.820E+02
PSDF	EL STR	171	22743(7)	1.472966E+02	3.713602E+02	1.000E+01	2.000E+03	0.000E+00	1.000E+01	2.772E+02	3.900E+02
PSDF	EL STR	171	22744(3)	4.750068E+01	4.531181E+02	1.000E+01	2.000E+03	0.000E+00	1.000E+01	5.142E+01	2.720E+02
PSDF	EL STR	171	22744(5)	6.907960E+01	4.063279E+02	1.000E+01	2.000E+03	0.000E+00	1.000E+01	8.126E+01	2.800E+02
PSDF	EL STR	171	22744(7)	1.266633E+02	3.758909E+02	1.000E+01	2.000E+03	0.000E+00	1.000E+01	2.666E+02	3.900E+02
PSDF	EL STR	171	22745(3)	1.554403E+02	4.118067E+02	1.000E+01	2.000E+03	0.000E+00	1.000E+01	2.818E+02	3.900E+02
PSDF	EL STR	171	22745(5)	2.912731E+01	4.508601E+02	1.000E+01	2.000E+03	0.000E+00	1.000E+01	1.026E+01	4.740E+02
PSDF	EL STR	171	22745(7)	1.243944E+02	3.268550E+02	1.000E+01	2.000E+03	0.000E+00	1.000E+01	3.500E+02	2.820E+02
PSDF	EL STR	171	22840(3)	7.890916E+02	4.265228E+02	1.000E+01	2.000E+03	0.000E+00	1.000E+01	9.455E+03	4.960E+02
PSDF	EL STR	171	22840(5)	9.594922E+02	4.830670E+02	1.000E+01	2.000E+03	0.000E+00	1.000E+01	2.310E+04	4.920E+02

Z AXIS PSD RESPONSE

X Y - O U T P U T S U M M A R Y (A U T O O R P S D F)

PLOT TYPE	CURVE TYPE	FRAME NO.	CURVE ID.	RMS VALUE	NO. POSITIVE CROSSINGS	XMIN FOR ALL DATA	XMAX FOR ALL DATA	YMIN FOR ALL DATA	X FOR YMIN	YMAX FOR ALL DATA	X FOR* YMAX
PSDF	EL STR	171	22840(7)	6.661251E+02	4.001477E+02	1.000E+01	2.000E+03	0.000E+00	1.000E+01	5.092E+03	3.900E+02
PSDF	EL STR	171	22801(3)	5.587471E+02	3.940672E+02	1.000E+01	2.000E+03	0.000E+00	1.000E+01	7.201E+03	4.140E+02
PSDF	EL STR	171	22801(5)	9.145090E+02	3.493552E+02	1.000E+01	2.000E+03	0.000E+00	1.000E+01	1.403E+04	2.820E+02
PSDF	EL STR	171	22801(7)	1.188149E+03	4.072111E+02	1.000E+01	2.000E+03	0.000E+00	1.000E+01	1.631E+04	2.820E+02
PSDF	EL STR	171	2541(2)	1.199154E+03	4.129521E+02	1.000E+01	2.000E+03	0.000E+00	1.000E+01	5.298E+04	1.480E+02
PSDF	EL STR	171	2541(6)	3.491645E+01	4.889830E+02	1.000E+01	2.000E+03	0.000E+00	1.000E+01	1.657E+01	2.720E+02
PSDF	EL STR	171	2541(12)	1.183846E+03	4.070056E+02	1.000E+01	2.000E+03	0.000E+00	1.000E+01	5.287E+04	1.480E+02
PSDF	EL STR	171	2597(2)	3.258261E+03	3.438271E+02	1.000E+01	2.000E+03	0.000E+00	1.000E+01	3.381E+05	2.780E+02
PSDF	EL STR	171	2597(6)	4.747613E+01	3.713024E+02	1.000E+01	2.000E+03	0.000E+00	1.000E+01	7.065E+01	2.780E+02
PSDF	EL STR	171	2597(12)	2.771644E+03	4.031543E+02	1.000E+01	2.000E+03	0.000E+00	1.000E+01	1.948E+05	2.780E+02

*** USER WARNING MESSAGE 979, AN XY-OUTPUT REQUEST FOR POINT OR ELEMENT ID 2558
-STRE- CURVE IS BEING PASSED OVER. THE ID COULD NOT BE FOUND IN DATA BLOCK 102

*** USER WARNING MESSAGE 979, AN XY-OUTPUT REQUEST FOR POINT OR ELEMENT ID 2558
-STRE- CURVE IS BEING PASSED OVER. THE ID COULD NOT BE FOUND IN DATA BLOCK 102

*** USER WARNING MESSAGE 979, AN XY-OUTPUT REQUEST FOR POINT OR ELEMENT ID 2558
-STRE- CURVE IS BEING PASSED OVER. THE ID COULD NOT BE FOUND IN DATA BLOCK 102

PSDF	EL STR	171	2700(2)	3.642566E+03	3.325953E+02	1.000E+01	2.000E+03	0.000E+00	1.000E+01	3.848E+05	2.780E+02
PSDF	EL STR	171	2700(6)	2.538529E+01	3.812175E+02	1.000E+01	2.000E+03	0.000E+00	1.000E+01	1.338E+01	2.780E+02
PSDF	EL STR	171	2700(12)	5.945271E+02	2.640009E+02	1.000E+01	2.000E+03	0.000E+00	1.000E+01	9.872E+03	2.780E+02
PSDF	EL STR	171	2713(2)	1.122649E+03	3.348256E+02	1.000E+01	2.000E+03	0.000E+00	1.000E+01	5.047E+04	2.780E+02
PSDF	EL STR	171	2713(6)	4.703355E+01	3.443913E+02	1.000E+01	2.000E+03	0.000E+00	1.000E+01	7.203E+01	2.780E+02
PSDF	EL STR	171	2713(12)	5.532689E+02	4.362614E+02	1.000E+01	2.000E+03	0.000E+00	1.000E+01	8.111E+03	2.780E+02
PSDF	EL STR	171	2716(2)	5.344700E+02	3.475173E+02	1.000E+01	2.000E+03	0.000E+00	1.000E+01	5.591E+03	2.980E+02
PSDF	EL STR	171	2716(6)	1.067210E+02	3.631595E+02	1.000E+01	2.000E+03	0.000E+00	1.000E+01	2.267E+02	3.920E+02
PSDF	EL STR	171	2716(12)	2.976617E+02	2.693094E+02	1.000E+01	2.000E+03	0.000E+00	1.000E+01	5.128E+03	1.400E+02
PSDF	EL STR	171	2819(2)	8.105195E+01	3.894250E+02	1.000E+01	2.000E+03	0.000E+00	1.000E+01	7.497E+01	3.920E+02
PSDF	EL STR	171	2819(6)	8.673657E+01	3.635366E+02	1.000E+01	2.000E+03	0.000E+00	1.000E+01	1.105E+02	3.920E+02
PSDF	EL STR	171	2819(12)	7.351843E+01	4.089613E+02	1.000E+01	2.000E+03	0.000E+00	1.000E+01	7.249E+01	3.920E+02
PSDF	EL STR	171	3302(2)	3.709934E+03	3.289966E+02	1.000E+01	2.000E+03	0.000E+00	1.000E+01	7.184E+05	1.820E+02
PSDF	EL STR	171	3302(6)	1.521396E+01	3.849046E+02	1.000E+01	2.000E+03	0.000E+00	1.000E+01	5.950E+00	2.780E+02

Z AXIS PSD RESPONSE

X Y - O U T P U T S U M M A R Y (A U T O O R P S D F)

PLOT TYPE	CURVE TYPE	FRAME NO.	CURVE ID.	RMS VALUE	NO. POSITIVE CROSSINGS	XMIN FOR ALL DATA	XMAX FOR ALL DATA	YMIN FOR ALL DATA	X FOR YMIN	YMAX FOR ALL DATA	X FOR* YMAX
PSDF	EL STR	171	3302(12)	1.097656E+03	6.147193E+02	1.000E+01	2.000E+03	0.000E+00	1.000E+01	2.351E+04	2.780E+02
PSDF	EL STR	171	3304(2)	2.570467E+03	3.067993E+02	1.000E+01	2.000E+03	0.000E+00	1.000E+01	3.728E+05	1.820E+02
PSDF	EL STR	171	3304(6)	6.836449E+01	4.234624E+02	1.000E+01	2.000E+03	0.000E+00	1.000E+01	8.162E+01	3.920E+02
PSDF	EL STR	171	3304(12)	2.389921E+03	3.134751E+02	1.000E+01	2.000E+03	0.000E+00	1.000E+01	2.608E+05	1.820E+02
PSDF	EL STR	171	3307(2)	4.045071E+02	3.996806E+02	1.000E+01	2.000E+03	0.000E+00	1.000E+01	3.124E+03	2.800E+02
PSDF	EL STR	171	3307(6)	3.672374E+01	5.609781E+02	1.000E+01	2.000E+03	0.000E+00	1.000E+01	1.216E+01	2.680E+02
PSDF	EL STR	171	3307(12)	7.123081E+01	4.589716E+02	1.000E+01	2.000E+03	0.000E+00	1.000E+01	9.572E+01	2.740E+02
PSDF	EL STR	171	9980(2)	1.258348E+03	2.753072E+02	1.000E+01	2.000E+03	0.000E+00	1.000E+01	4.070E+04	2.260E+02
PSDF	EL STR	171	9980(6)	2.295268E+01	3.882860E+02	1.000E+01	2.000E+03	0.000E+00	1.000E+01	1.175E+01	2.620E+02
PSDF	EL STR	171	9980(12)	5.323157E+02	3.215829E+02	1.000E+01	2.000E+03	0.000E+00	1.000E+01	7.007E+03	2.260E+02
PSDF	EL STR	171	9982(2)	7.286155E+02	3.135273E+02	1.000E+01	2.000E+03	0.000E+00	1.000E+01	1.210E+04	2.260E+02
PSDF	EL STR	171	9982(6)	8.596632E+01	4.357574E+02	1.000E+01	2.000E+03	0.000E+00	1.000E+01	1.026E+02	3.940E+02
PSDF	EL STR	171	9982(12)	9.722182E+02	3.591614E+02	1.000E+01	2.000E+03	0.000E+00	1.000E+01	1.899E+04	2.660E+02
PSDF	EL STR	171	9999(2)	1.596216E+03	3.461356E+02	1.000E+01	2.000E+03	0.000E+00	1.000E+01	4.266E+04	2.660E+02
PSDF	EL STR	171	9999(6)	1.149867E+02	4.726248E+02	1.000E+01	2.000E+03	0.000E+00	1.000E+01	2.962E+02	2.700E+02
PSDF	EL STR	171	9999(12)	9.294036E+02	2.922675E+02	1.000E+01	2.000E+03	0.000E+00	1.000E+01	2.510E+04	2.660E+02
PSDF	EL STR	171	23180(2)	9.543395E+02	3.652129E+02	1.000E+01	2.000E+03	0.000E+00	1.000E+01	1.189E+04	3.920E+02
PSDF	EL STR	171	23180(6)	2.820234E+02	2.420963E+02	1.000E+01	2.000E+03	0.000E+00	1.000E+01	2.969E+03	1.480E+02
PSDF	EL STR	171	23180(12)	4.760420E+02	3.450925E+02	1.000E+01	2.000E+03	0.000E+00	1.000E+01	5.130E+03	1.021E+02
PSDF	EL STR	171	23181(2)	1.190643E+03	3.450923E+02	1.000E+01	2.000E+03	0.000E+00	1.000E+01	3.209E+04	1.021E+02
PSDF	EL STR	171	23181(6)	2.598859E+02	2.416410E+02	1.000E+01	2.000E+03	0.000E+00	1.000E+01	2.538E+03	1.480E+02
PSDF	EL STR	171	23181(12)	3.620613E-05	3.005563E+02	1.000E+01	2.000E+03	0.000E+00	1.000E+01	4.240E-11	1.028E+02
PSDF	EL FOR	171	22813(2)	1.414113E+01	3.389359E+02	1.000E+01	2.000E+03	0.000E+00	1.000E+01	5.098E+00	2.680E+02
PSDF	EL FOR	171	22813(3)	6.268123E+01	2.832650E+02	1.000E+01	2.000E+03	0.000E+00	1.000E+01	1.710E+02	2.680E+02

Z AXIS PSD RESPONSE

X Y - O U T P U T S U M M A R Y (A U T O O R P S D F)

PLOT TYPE	CURVE TYPE	FRAME NO.	CURVE ID.	RMS VALUE	NO. POSITIVE CROSSINGS	XMIN FOR ALL DATA	XMAX FOR ALL DATA	YMIN FOR ALL DATA	X FOR YMIN	YMAX FOR ALL DATA	X FOR* YMAX
PSDF	EL FOR	171	22813(5)	1.318408E-02	3.186373E+02	1.000E+01	2.000E+03	0.000E+00	1.000E+01	2.062E-06	2.840E+02
PSDF	EL FOR	171	22813(6)	2.645728E-02	3.260259E+02	1.000E+01	2.000E+03	0.000E+00	1.000E+01	1.172E-05	1.028E+02
PSDF	EL FOR	171	22813(8)	4.717284E-03	4.092509E+02	1.000E+01	2.000E+03	0.000E+00	1.000E+01	3.959E-07	4.140E+02
PSDF	EL FOR	171	22813(9)	2.137002E-01	3.032243E+02	1.000E+01	2.000E+03	0.000E+00	1.000E+01	9.848E-04	2.680E+02
PSDF	EL FOR	171	22815(2)	7.388985E+00	4.399979E+02	1.000E+01	2.000E+03	0.000E+00	1.000E+01	6.780E-01	4.980E+02
PSDF	EL FOR	171	22815(3)	3.729884E+01	3.232108E+02	1.000E+01	2.000E+03	0.000E+00	1.000E+01	4.930E+01	2.680E+02
PSDF	EL FOR	171	22815(5)	4.814611E-02	4.114085E+02	1.000E+01	2.000E+03	0.000E+00	1.000E+01	4.345E-05	4.140E+02
PSDF	EL FOR	171	22815(6)	6.864861E-02	3.529135E+02	1.000E+01	2.000E+03	0.000E+00	1.000E+01	6.939E-05	2.840E+02
PSDF	EL FOR	171	22815(8)	4.709767E-02	5.895291E+02	1.000E+01	2.000E+03	0.000E+00	1.000E+01	3.153E-05	6.900E+02
PSDF	EL FOR	171	22815(9)	1.298592E-01	3.729421E+02	1.000E+01	2.000E+03	0.000E+00	1.000E+01	2.388E-04	2.680E+02
PSDF	EL FOR	171	22806(2)	1.376132E+01	4.183011E+02	1.000E+01	2.000E+03	0.000E+00	1.000E+01	2.091E+00	4.980E+02
PSDF	EL FOR	171	22806(3)	3.065012E+01	3.618034E+02	1.000E+01	2.000E+03	0.000E+00	1.000E+01	1.674E+01	2.680E+02
PSDF	EL FOR	171	22806(5)	2.739143E-02	3.583469E+02	1.000E+01	2.000E+03	0.000E+00	1.000E+01	1.378E-05	2.840E+02
PSDF	EL FOR	171	22806(6)	9.330676E-02	3.220972E+02	1.000E+01	2.000E+03	0.000E+00	1.000E+01	2.130E-04	2.840E+02
PSDF	EL FOR	171	22806(8)	1.280531E-02	4.569460E+02	1.000E+01	2.000E+03	0.000E+00	1.000E+01	3.352E-06	2.680E+02
PSDF	EL FOR	171	22806(9)	2.513419E-01	4.202376E+02	1.000E+01	2.000E+03	0.000E+00	1.000E+01	1.283E-03	4.140E+02
PSDF	EL FOR	171	22805(2)	7.295987E+00	4.701111E+02	1.000E+01	2.000E+03	0.000E+00	1.000E+01	8.344E-01	4.980E+02
PSDF	EL FOR	171	22805(3)	7.298618E+01	3.426473E+02	1.000E+01	2.000E+03	0.000E+00	1.000E+01	9.730E+01	2.820E+02
PSDF	EL FOR	171	22805(5)	8.206797E-02	4.335878E+02	1.000E+01	2.000E+03	0.000E+00	1.000E+01	1.635E-04	4.140E+02
PSDF	EL FOR	171	22805(6)	4.025239E-02	3.002243E+02	1.000E+01	2.000E+03	0.000E+00	1.000E+01	4.807E-05	2.840E+02
PSDF	EL FOR	171	22805(8)	9.182667E-02	3.610203E+02	1.000E+01	2.000E+03	0.000E+00	1.000E+01	1.701E-04	2.840E+02
PSDF	EL FOR	171	22805(9)	2.341270E-01	4.195812E+02	1.000E+01	2.000E+03	0.000E+00	1.000E+01	1.238E-03	4.140E+02
PSDF	EL FOR	171	22801(2)	4.606850E+00	4.351480E+02	1.000E+01	2.000E+03	0.000E+00	1.000E+01	1.952E-01	4.980E+02
PSDF	EL FOR	171	22801(3)	4.853333E+01	3.470770E+02	1.000E+01	2.000E+03	0.000E+00	1.000E+01	4.367E+01	2.820E+02

Z AXIS PSD RESPONSE

X Y - O U T P U T S U M M A R Y (A U T O O R P S D F)

PLOT TYPE	CURVE TYPE	FRAME NO.	CURVE ID.	RMS VALUE	NO. POSITIVE CROSSINGS	XMIN FOR ALL DATA	XMAX FOR ALL DATA	YMIN FOR ALL DATA	X FOR YMIN	YMAX FOR ALL DATA	X FOR* YMAX
PSDF	EL FOR	171	22801(5)	2.225391E-01	4.045309E+02	1.000E+01	2.000E+03	0.000E+00	1.000E+01	1.142E-03	4.140E+02
PSDF	EL FOR	171	22801(6)	6.876526E-02	4.030911E+02	1.000E+01	2.000E+03	0.000E+00	1.000E+01	1.033E-04	4.140E+02
PSDF	EL FOR	171	22801(8)	2.324374E-01	3.160799E+02	1.000E+01	2.000E+03	0.000E+00	1.000E+01	1.552E-03	2.840E+02
PSDF	EL FOR	171	22801(9)	5.578731E-02	4.145760E+02	1.000E+01	2.000E+03	0.000E+00	1.000E+01	7.414E-05	4.140E+02
PSDF	EL FOR	171	22742(2)	1.951222E+01	3.975061E+02	1.000E+01	2.000E+03	0.000E+00	1.000E+01	4.452E+00	2.820E+02
PSDF	EL FOR	171	22742(3)	3.651627E+00	4.589057E+02	1.000E+01	2.000E+03	0.000E+00	1.000E+01	1.865E-01	4.980E+02
PSDF	EL FOR	171	22742(5)	7.605172E-02	3.432806E+02	1.000E+01	2.000E+03	0.000E+00	1.000E+01	1.314E-04	2.820E+02
PSDF	EL FOR	171	22742(6)	3.845133E-02	3.900501E+02	1.000E+01	2.000E+03	0.000E+00	1.000E+01	2.498E-05	2.820E+02
PSDF	EL FOR	171	22742(8)	4.369845E-02	4.613215E+02	1.000E+01	2.000E+03	0.000E+00	1.000E+01	3.018E-05	4.980E+02
PSDF	EL FOR	171	22742(9)	7.097524E-02	4.346143E+02	1.000E+01	2.000E+03	0.000E+00	1.000E+01	5.776E-05	2.680E+02
PSDF	EL FOR	171	22743(2)	4.254448E+00	4.457430E+02	1.000E+01	2.000E+03	0.000E+00	1.000E+01	1.627E-01	4.980E+02
PSDF	EL FOR	171	22743(3)	8.373091E+00	4.247249E+02	1.000E+01	2.000E+03	0.000E+00	1.000E+01	7.278E-01	2.820E+02
PSDF	EL FOR	171	22743(5)	6.172101E-02	3.804059E+02	1.000E+01	2.000E+03	0.000E+00	1.000E+01	1.070E-04	2.680E+02
PSDF	EL FOR	171	22743(6)	2.564862E-02	4.883698E+02	1.000E+01	2.000E+03	0.000E+00	1.000E+01	5.374E-06	4.140E+02
PSDF	EL FOR	171	22743(8)	8.103350E-02	4.881342E+02	1.000E+01	2.000E+03	0.000E+00	1.000E+01	8.655E-05	4.980E+02
PSDF	EL FOR	171	22743(9)	4.997897E-02	5.157408E+02	1.000E+01	2.000E+03	0.000E+00	1.000E+01	2.206E-05	3.020E+02
PSDF	EL FOR	171	22744(2)	3.816341E+00	3.820501E+02	1.000E+01	2.000E+03	0.000E+00	1.000E+01	2.885E-01	2.820E+02
PSDF	EL FOR	171	22744(3)	6.955401E+00	4.118819E+02	1.000E+01	2.000E+03	0.000E+00	1.000E+01	6.129E-01	2.820E+02
PSDF	EL FOR	171	22744(5)	6.933475E-02	3.745269E+02	1.000E+01	2.000E+03	0.000E+00	1.000E+01	1.412E-04	2.680E+02
PSDF	EL FOR	171	22744(6)	3.612442E-02	4.431490E+02	1.000E+01	2.000E+03	0.000E+00	1.000E+01	2.143E-05	2.700E+02
PSDF	EL FOR	171	22744(8)	8.780193E-02	4.721860E+02	1.000E+01	2.000E+03	0.000E+00	1.000E+01	1.041E-04	4.980E+02
PSDF	EL FOR	171	22744(9)	1.673324E-01	4.080088E+02	1.000E+01	2.000E+03	0.000E+00	1.000E+01	3.053E-04	3.560E+02
PSDF	EL FOR	171	22745(2)	1.556468E+01	4.061677E+02	1.000E+01	2.000E+03	0.000E+00	1.000E+01	2.880E+00	3.900E+02
PSDF	EL FOR	171	22745(3)	3.637441E+00	4.488646E+02	1.000E+01	2.000E+03	0.000E+00	1.000E+01	2.071E-01	4.740E+02

Z AXIS PSD RESPONSE

X Y - O U T P U T S U M M A R Y (A U T O O R P S D F)

PLOT TYPE	CURVE TYPE	FRAME NO.	CURVE ID.	RMS VALUE	NO. POSITIVE CROSSINGS	XMIN FOR ALL DATA	XMAX FOR ALL DATA	YMIN FOR ALL DATA	X FOR YMIN	YMAX FOR ALL DATA	X FOR* YMAX
PSDF	EL FOR	171	22745(5)	2.118465E-02	3.731359E+02	1.000E+01	2.000E+03	0.000E+00	1.000E+01	1.284E-05	2.820E+02
PSDF	EL FOR	171	22745(6)	2.102274E-02	4.144803E+02	1.000E+01	2.000E+03	0.000E+00	1.000E+01	6.456E-06	4.780E+02
PSDF	EL FOR	171	22745(8)	6.442417E-02	4.301117E+02	1.000E+01	2.000E+03	0.000E+00	1.000E+01	4.898E-05	4.980E+02
PSDF	EL FOR	171	22745(9)	1.888498E-02	4.614811E+02	1.000E+01	2.000E+03	0.000E+00	1.000E+01	7.586E-06	4.960E+02
PSDF	EL FOR	171	22840(2)	3.674500E+01	3.939037E+02	1.000E+01	2.000E+03	0.000E+00	1.000E+01	1.495E+01	3.900E+02
PSDF	EL FOR	171	22840(3)	1.102407E+01	3.384240E+02	1.000E+01	2.000E+03	0.000E+00	1.000E+01	3.498E+00	2.800E+02
PSDF	EL FOR	171	22840(5)	1.283427E-01	4.896602E+02	1.000E+01	2.000E+03	0.000E+00	1.000E+01	4.313E-04	4.900E+02
PSDF	EL FOR	171	22840(6)	3.762407E-01	4.944200E+02	1.000E+01	2.000E+03	0.000E+00	1.000E+01	3.697E-03	4.900E+02
PSDF	EL FOR	171	22840(8)	4.262702E-01	5.194510E+02	1.000E+01	2.000E+03	0.000E+00	1.000E+01	4.273E-03	4.920E+02
PSDF	EL FOR	171	22840(9)	1.097973E-01	5.634738E+02	1.000E+01	2.000E+03	0.000E+00	1.000E+01	8.942E-05	4.780E+02
PSDF	EL FOR	171	22842(2)	4.108799E+01	3.880179E+02	1.000E+01	2.000E+03	0.000E+00	1.000E+01	1.715E+01	3.900E+02
PSDF	EL FOR	171	22842(3)	7.508237E+00	3.456652E+02	1.000E+01	2.000E+03	0.000E+00	1.000E+01	1.588E+00	2.800E+02
PSDF	EL FOR	171	22842(5)	7.570316E-02	5.128676E+02	1.000E+01	2.000E+03	0.000E+00	1.000E+01	1.363E-04	4.920E+02
PSDF	EL FOR	171	22842(6)	2.635560E-01	4.942097E+02	1.000E+01	2.000E+03	0.000E+00	1.000E+01	1.805E-03	4.900E+02
PSDF	EL FOR	171	22842(8)	4.648242E-01	5.143832E+02	1.000E+01	2.000E+03	0.000E+00	1.000E+01	5.057E-03	4.920E+02
PSDF	EL FOR	171	22842(9)	4.068579E-02	5.293085E+02	1.000E+01	2.000E+03	0.000E+00	1.000E+01	3.709E-05	5.780E+02
PSDF	EL FOR	171	22844(2)	2.999138E+01	3.690223E+02	1.000E+01	2.000E+03	0.000E+00	1.000E+01	1.330E+01	2.660E+02
PSDF	EL FOR	171	22844(3)	1.033120E+01	3.892352E+02	1.000E+01	2.000E+03	0.000E+00	1.000E+01	1.666E+00	2.680E+02
PSDF	EL FOR	171	22844(5)	2.584178E-02	4.470350E+02	1.000E+01	2.000E+03	0.000E+00	1.000E+01	1.335E-05	4.820E+02
PSDF	EL FOR	171	22844(6)	3.848975E-02	4.777288E+02	1.000E+01	2.000E+03	0.000E+00	1.000E+01	3.843E-05	4.840E+02
PSDF	EL FOR	171	22844(8)	7.027779E-02	4.857736E+02	1.000E+01	2.000E+03	0.000E+00	1.000E+01	1.230E-04	4.840E+02
PSDF	EL FOR	171	22844(9)	7.595842E-02	4.992438E+02	1.000E+01	2.000E+03	0.000E+00	1.000E+01	1.499E-04	4.920E+02
PSDF	EL FOR	171	22838(2)	3.175653E+01	3.465233E+02	1.000E+01	2.000E+03	0.000E+00	1.000E+01	2.373E+01	2.680E+02
PSDF	EL FOR	171	22838(3)	4.268297E+00	3.482088E+02	1.000E+01	2.000E+03	0.000E+00	1.000E+01	3.580E-01	1.400E+02

Z AXIS PSD RESPONSE

X Y - O U T P U T S U M M A R Y (A U T O O R P S D F)

PLOT TYPE	CURVE TYPE	FRAME NO.	CURVE ID.	RMS VALUE	NO. POSITIVE CROSSINGS	XMIN FOR ALL DATA	XMAX FOR ALL DATA	YMIN FOR ALL DATA	X FOR YMIN	YMAX FOR ALL DATA	X FOR* YMAX
PSDF	EL FOR	171	22838(5)	9.920737E-03	3.619908E+02	1.000E+01	2.000E+03	0.000E+00	1.000E+01	1.528E-06	4.000E+02
PSDF	EL FOR	171	22838(6)	5.161363E-03	4.636484E+02	1.000E+01	2.000E+03	0.000E+00	1.000E+01	5.504E-07	4.780E+02
PSDF	EL FOR	171	22838(8)	1.612656E-01	4.082065E+02	1.000E+01	2.000E+03	0.000E+00	1.000E+01	4.254E-04	2.680E+02
PSDF	EL FOR	171	22838(9)	5.183411E-02	4.139955E+02	1.000E+01	2.000E+03	0.000E+00	1.000E+01	3.569E-05	4.840E+02
PSDF	EL FOR	171	22832(2)	5.187828E+01	3.355988E+02	1.000E+01	2.000E+03	0.000E+00	1.000E+01	7.852E+01	2.680E+02
PSDF	EL FOR	171	22832(3)	7.882481E+00	2.403955E+02	1.000E+01	2.000E+03	0.000E+00	1.000E+01	4.505E+00	1.400E+02
PSDF	EL FOR	171	22832(5)	1.061254E-02	3.718194E+02	1.000E+01	2.000E+03	0.000E+00	1.000E+01	1.559E-06	4.000E+02
PSDF	EL FOR	171	22832(6)	6.096401E-03	3.343247E+02	1.000E+01	2.000E+03	0.000E+00	1.000E+01	9.481E-07	1.400E+02
PSDF	EL FOR	171	22832(8)	1.550953E-01	3.611715E+02	1.000E+01	2.000E+03	0.000E+00	1.000E+01	6.553E-04	2.680E+02
PSDF	EL FOR	171	22832(9)	1.006853E-02	4.572280E+02	1.000E+01	2.000E+03	0.000E+00	1.000E+01	2.198E-06	4.820E+02
PSDF	EL FOR	171	22774(2)	9.888794E+00	3.763775E+02	1.000E+01	2.000E+03	0.000E+00	1.000E+01	9.769E-01	2.660E+02
PSDF	EL FOR	171	22774(3)	6.371149E+00	3.003911E+02	1.000E+01	2.000E+03	0.000E+00	1.000E+01	9.534E-01	1.410E+02
PSDF	EL FOR	171	22774(5)	6.780761E-02	2.612459E+02	1.000E+01	2.000E+03	0.000E+00	1.000E+01	1.778E-04	1.470E+02
PSDF	EL FOR	171	22774(6)	2.595960E-02	2.595815E+02	1.000E+01	2.000E+03	0.000E+00	1.000E+01	2.592E-05	1.470E+02
PSDF	EL FOR	171	22774(8)	1.185294E-01	3.511475E+02	1.000E+01	2.000E+03	0.000E+00	1.000E+01	3.037E-04	2.680E+02
PSDF	EL FOR	171	22774(9)	2.348542E-01	3.139810E+02	1.000E+01	2.000E+03	0.000E+00	1.000E+01	1.704E-03	2.680E+02
PSDF	EL FOR	171	20021(2)	1.726182E+01	3.558554E+02	1.000E+01	2.000E+03	0.000E+00	1.000E+01	7.655E+00	2.680E+02
PSDF	EL FOR	171	20021(3)	4.860324E+00	2.557478E+02	1.000E+01	2.000E+03	0.000E+00	1.000E+01	1.387E+00	1.400E+02
PSDF	EL FOR	171	20021(5)	1.103415E-02	2.639501E+02	1.000E+01	2.000E+03	0.000E+00	1.000E+01	6.623E-06	1.410E+02
PSDF	EL FOR	171	20021(6)	9.514838E-03	4.375520E+02	1.000E+01	2.000E+03	0.000E+00	1.000E+01	2.316E-06	4.400E+02
PSDF	EL FOR	171	20021(8)	1.405081E-02	3.357517E+02	1.000E+01	2.000E+03	0.000E+00	1.000E+01	1.171E-05	1.410E+02
PSDF	EL FOR	171	20021(9)	3.196114E-02	4.274522E+02	1.000E+01	2.000E+03	0.000E+00	1.000E+01	2.750E-05	1.410E+02
PSDF	EL FOR	171	20020(2)	2.378140E+01	3.526292E+02	1.000E+01	2.000E+03	0.000E+00	1.000E+01	1.672E+01	2.680E+02
PSDF	EL FOR	171	20020(3)	8.877562E+00	3.842885E+02	1.000E+01	2.000E+03	0.000E+00	1.000E+01	2.630E+00	1.410E+02

Z AXIS PSD RESPONSE

X Y - O U T P U T S U M M A R Y (A U T O O R P S D F)

PLOT TYPE	CURVE TYPE	FRAME NO.	CURVE ID.	RMS VALUE	NO. POSITIVE CROSSINGS	XMIN FOR ALL DATA	XMAX FOR ALL DATA	YMIN FOR ALL DATA	X FOR YMIN	YMAX FOR ALL DATA	X FOR* YMAX
PSDF	EL FOR	171	20020(5)	1.116673E-02	2.448771E+02	1.000E+01	2.000E+03	0.000E+00	1.000E+01	7.029E-06	1.410E+02
PSDF	EL FOR	171	20020(6)	6.992523E-03	4.401328E+02	1.000E+01	2.000E+03	0.000E+00	1.000E+01	5.108E-07	1.400E+02
PSDF	EL FOR	171	20020(8)	1.322224E-02	3.616588E+02	1.000E+01	2.000E+03	0.000E+00	1.000E+01	9.300E-06	1.410E+02
PSDF	EL FOR	171	20020(9)	2.578572E-02	2.194074E+02	1.000E+01	2.000E+03	0.000E+00	1.000E+01	5.962E-05	1.410E+02
PSDF	EL FOR	171	2071(2)	3.421224E+00	3.283477E+02	1.000E+01	2.000E+03	0.000E+00	1.000E+01	2.841E-01	2.680E+02
PSDF	EL FOR	171	2071(3)	5.973066E+00	3.539258E+02	1.000E+01	2.000E+03	0.000E+00	1.000E+01	9.180E-01	2.680E+02
PSDF	EL FOR	171	2071(5)	1.024623E-02	3.692887E+02	1.000E+01	2.000E+03	0.000E+00	1.000E+01	1.450E-06	1.820E+02
PSDF	EL FOR	171	2071(6)	8.954899E-03	4.158984E+02	1.000E+01	2.000E+03	0.000E+00	1.000E+01	2.866E-06	1.410E+02
PSDF	EL FOR	171	2071(8)	1.069232E-02	3.796572E+02	1.000E+01	2.000E+03	0.000E+00	1.000E+01	2.821E-06	2.800E+02
PSDF	EL FOR	171	2071(9)	5.656785E-03	4.789198E+02	1.000E+01	2.000E+03	0.000E+00	1.000E+01	3.707E-07	5.380E+02
PSDF	EL FOR	171	2070(2)	3.033200E+00	2.628777E+02	1.000E+01	2.000E+03	0.000E+00	1.000E+01	3.434E-01	1.410E+02
PSDF	EL FOR	171	2070(3)	2.957638E+00	2.972175E+02	1.000E+01	2.000E+03	0.000E+00	1.000E+01	2.422E-01	2.780E+02
PSDF	EL FOR	171	2070(5)	1.412713E-02	3.403640E+02	1.000E+01	2.000E+03	0.000E+00	1.000E+01	5.451E-06	2.980E+02
PSDF	EL FOR	171	2070(6)	8.008170E-03	3.253243E+02	1.000E+01	2.000E+03	0.000E+00	1.000E+01	4.107E-06	1.410E+02
PSDF	EL FOR	171	2070(8)	5.669487E-03	6.654233E+02	1.000E+01	2.000E+03	0.000E+00	1.000E+01	3.000E-07	5.060E+02
PSDF	EL FOR	171	2070(9)	3.854595E-03	4.224544E+02	1.000E+01	2.000E+03	0.000E+00	1.000E+01	3.563E-07	1.410E+02
PSDF	EL FOR	171	20018(2)	2.160896E+01	3.312959E+02	1.000E+01	2.000E+03	0.000E+00	1.000E+01	1.654E+01	2.680E+02
PSDF	EL FOR	171	20018(3)	2.779977E+00	3.338258E+02	1.000E+01	2.000E+03	0.000E+00	1.000E+01	2.459E-01	2.680E+02
PSDF	EL FOR	171	20018(5)	1.502829E-02	1.980089E+02	1.000E+01	2.000E+03	0.000E+00	1.000E+01	2.300E-05	1.410E+02
PSDF	EL FOR	171	20018(6)	9.963350E-03	4.571497E+02	1.000E+01	2.000E+03	0.000E+00	1.000E+01	2.615E-06	1.410E+02
PSDF	EL FOR	171	20018(8)	7.505751E-03	2.620618E+02	1.000E+01	2.000E+03	0.000E+00	1.000E+01	4.527E-06	1.410E+02
PSDF	EL FOR	171	20018(9)	1.159230E-02	3.637928E+02	1.000E+01	2.000E+03	0.000E+00	1.000E+01	8.122E-06	1.410E+02
PSDF	EL FOR	171	20019(2)	3.721613E+01	3.294117E+02	1.000E+01	2.000E+03	0.000E+00	1.000E+01	4.854E+01	2.680E+02
PSDF	EL FOR	171	20019(3)	3.076965E+00	3.391116E+02	1.000E+01	2.000E+03	0.000E+00	1.000E+01	3.373E-01	2.680E+02

Z AXIS PSD RESPONSE

X Y - O U T P U T S U M M A R Y (A U T O O R P S D F)

PLOT TYPE	CURVE TYPE	FRAME NO.	CURVE ID.	RMS VALUE	NO. POSITIVE CROSSINGS	XMIN FOR ALL DATA	XMAX FOR ALL DATA	YMIN FOR ALL DATA	X FOR YMIN	YMAX FOR ALL DATA	X FOR* YMAX
PSDF	EL FOR	171	20019(5)	1.922510E-02	1.682716E+02	1.000E+01	2.000E+03	0.000E+00	1.000E+01	3.903E-05	1.410E+02
PSDF	EL FOR	171	20019(6)	1.066032E-03	3.609858E+02	1.000E+01	2.000E+03	0.000E+00	1.000E+01	6.109E-08	1.410E+02
PSDF	EL FOR	171	20019(8)	1.170391E-02	2.468310E+02	1.000E+01	2.000E+03	0.000E+00	1.000E+01	1.031E-05	1.410E+02
PSDF	EL FOR	171	20019(9)	9.258028E-02	3.215873E+02	1.000E+01	2.000E+03	0.000E+00	1.000E+01	2.502E-04	2.780E+02
PSDF	EL FOR	171	2049(2)	6.311849E+00	2.218093E+02	1.000E+01	2.000E+03	0.000E+00	1.000E+01	3.630E+00	1.410E+02
PSDF	EL FOR	171	2049(3)	1.691306E+01	3.306006E+02	1.000E+01	2.000E+03	0.000E+00	1.000E+01	8.841E+00	2.680E+02
PSDF	EL FOR	171	2049(5)	1.796796E-02	4.565902E+02	1.000E+01	2.000E+03	0.000E+00	1.000E+01	6.791E-06	2.980E+02
PSDF	EL FOR	171	2049(6)	1.600537E-02	2.553886E+02	1.000E+01	2.000E+03	0.000E+00	1.000E+01	1.976E-05	1.410E+02
PSDF	EL FOR	171	2049(8)	4.051490E-02	5.704711E+02	1.000E+01	2.000E+03	0.000E+00	1.000E+01	2.302E-05	5.720E+02
PSDF	EL FOR	171	2049(9)	8.309380E-03	4.119632E+02	1.000E+01	2.000E+03	0.000E+00	1.000E+01	2.085E-06	1.410E+02
PSDF	EL FOR	171	2050(2)	5.377839E+00	2.139795E+02	1.000E+01	2.000E+03	0.000E+00	1.000E+01	2.144E+00	1.410E+02
PSDF	EL FOR	171	2050(3)	1.436330E+01	1.661647E+02	1.000E+01	2.000E+03	0.000E+00	1.000E+01	2.151E+01	1.410E+02
PSDF	EL FOR	171	2050(5)	2.031996E-02	4.037931E+02	1.000E+01	2.000E+03	0.000E+00	1.000E+01	2.481E-05	1.410E+02
PSDF	EL FOR	171	2050(6)	2.286151E-02	2.433720E+02	1.000E+01	2.000E+03	0.000E+00	1.000E+01	4.031E-05	1.410E+02
PSDF	EL FOR	171	2050(8)	1.659025E-01	4.831228E+02	1.000E+01	2.000E+03	0.000E+00	1.000E+01	1.158E-03	1.410E+02
PSDF	EL FOR	171	2050(9)	9.959818E-03	5.485921E+02	1.000E+01	2.000E+03	0.000E+00	1.000E+01	1.509E-06	5.740E+02
PSDF	EL FOR	171	2051(2)	3.310696E+00	2.625527E+02	1.000E+01	2.000E+03	0.000E+00	1.000E+01	8.508E-01	1.410E+02
PSDF	EL FOR	171	2051(3)	3.670818E+00	4.099648E+02	1.000E+01	2.000E+03	0.000E+00	1.000E+01	3.234E-01	1.410E+02
PSDF	EL FOR	171	2051(5)	1.958916E-02	4.432662E+02	1.000E+01	2.000E+03	0.000E+00	1.000E+01	8.075E-06	1.410E+02
PSDF	EL FOR	171	2051(6)	1.088126E-02	4.113864E+02	1.000E+01	2.000E+03	0.000E+00	1.000E+01	2.087E-06	1.820E+02
PSDF	EL FOR	171	2051(8)	4.103073E-02	8.292549E+02	1.000E+01	2.000E+03	0.000E+00	1.000E+01	1.521E-05	1.410E+02
PSDF	EL FOR	171	2051(9)	3.933778E-03	5.332043E+02	1.000E+01	2.000E+03	0.000E+00	1.000E+01	1.997E-07	5.740E+02
PSDF	EL FOR	171	2052(2)	3.818024E+00	3.936478E+02	1.000E+01	2.000E+03	0.000E+00	1.000E+01	3.278E-01	2.760E+02
PSDF	EL FOR	171	2052(3)	1.259294E+01	4.029265E+02	1.000E+01	2.000E+03	0.000E+00	1.000E+01	3.613E+00	1.400E+02

Z AXIS PSD RESPONSE

X Y - O U T P U T S U M M A R Y (A U T O O R P S D F)

PLOT TYPE	CURVE TYPE	FRAME NO.	CURVE ID.	RMS VALUE	NO. POSITIVE CROSSINGS	XMIN FOR ALL DATA	XMAX FOR ALL DATA	YMIN FOR ALL DATA	X FOR YMIN	YMAX FOR ALL DATA	X FOR* YMAX
PSDF	EL FOR	171	2052(5)	5.438204E-02	3.381453E+02	1.000E+01	2.000E+03	0.000E+00	1.000E+01	2.431E-04	1.410E+02
PSDF	EL FOR	171	2052(6)	2.101085E-02	3.312410E+02	1.000E+01	2.000E+03	0.000E+00	1.000E+01	3.596E-05	1.410E+02
PSDF	EL FOR	171	2052(8)	7.570519E-02	6.581492E+02	1.000E+01	2.000E+03	0.000E+00	1.000E+01	1.185E-04	1.410E+02
PSDF	EL FOR	171	2052(9)	3.212413E-03	6.587537E+02	1.000E+01	2.000E+03	0.000E+00	1.000E+01	1.228E-07	1.410E+02
PSDF	EL FOR	171	20024(2)	2.159556E+01	4.046234E+02	1.000E+01	2.000E+03	0.000E+00	1.000E+01	8.745E+00	1.400E+02
PSDF	EL FOR	171	20024(3)	2.903558E+00	3.102230E+02	1.000E+01	2.000E+03	0.000E+00	1.000E+01	5.581E-01	1.400E+02
PSDF	EL FOR	171	20024(5)	8.967881E-03	3.499715E+02	1.000E+01	2.000E+03	0.000E+00	1.000E+01	1.454E-06	1.940E+02
PSDF	EL FOR	171	20024(6)	4.381578E-03	1.890599E+02	1.000E+01	2.000E+03	0.000E+00	1.000E+01	1.777E-06	1.410E+02
PSDF	EL FOR	171	20024(8)	6.760631E-03	4.317444E+02	1.000E+01	2.000E+03	0.000E+00	1.000E+01	7.216E-07	1.400E+02
PSDF	EL FOR	171	20024(9)	1.404412E-01	4.462220E+02	1.000E+01	2.000E+03	0.000E+00	1.000E+01	3.906E-04	1.940E+02
PSDF	EL FOR	171	20025(2)	1.345412E+01	4.000845E+02	1.000E+01	2.000E+03	0.000E+00	1.000E+01	3.923E+00	1.400E+02
PSDF	EL FOR	171	20025(3)	2.733689E+00	3.918672E+02	1.000E+01	2.000E+03	0.000E+00	1.000E+01	1.457E-01	1.410E+02
PSDF	EL FOR	171	20025(5)	2.388379E-02	2.480564E+02	1.000E+01	2.000E+03	0.000E+00	1.000E+01	3.932E-05	1.410E+02
PSDF	EL FOR	171	20025(6)	1.889102E-02	3.666635E+02	1.000E+01	2.000E+03	0.000E+00	1.000E+01	2.433E-05	1.410E+02
PSDF	EL FOR	171	20025(8)	1.568983E-02	3.137643E+02	1.000E+01	2.000E+03	0.000E+00	1.000E+01	8.350E-06	1.940E+02
PSDF	EL FOR	171	20025(9)	3.199662E-02	3.796085E+02	1.000E+01	2.000E+03	0.000E+00	1.000E+01	5.485E-05	1.410E+02
PSDF	EL FOR	171	2226(2)	2.370759E+00	2.761492E+02	1.000E+01	2.000E+03	0.000E+00	1.000E+01	3.098E-01	1.410E+02
PSDF	EL FOR	171	2226(3)	1.010451E+00	4.205417E+02	1.000E+01	2.000E+03	0.000E+00	1.000E+01	1.982E-02	1.410E+02
PSDF	EL FOR	171	2226(5)	1.331150E-02	2.574988E+02	1.000E+01	2.000E+03	0.000E+00	1.000E+01	9.437E-06	1.410E+02
PSDF	EL FOR	171	2226(6)	4.373617E-02	2.138667E+02	1.000E+01	2.000E+03	0.000E+00	1.000E+01	1.153E-04	1.410E+02
PSDF	EL FOR	171	2226(8)	1.507886E-02	1.968984E+02	1.000E+01	2.000E+03	0.000E+00	1.000E+01	9.561E-06	1.940E+02
PSDF	EL FOR	171	2226(9)	1.819341E-02	2.799747E+02	1.000E+01	2.000E+03	0.000E+00	1.000E+01	1.352E-05	1.940E+02
PSDF	EL FOR	171	2227(2)	3.957332E+00	3.540753E+02	1.000E+01	2.000E+03	0.000E+00	1.000E+01	3.305E-01	2.660E+02
PSDF	EL FOR	171	2227(3)	7.611309E+00	3.961578E+02	1.000E+01	2.000E+03	0.000E+00	1.000E+01	8.556E-01	1.480E+02

Z AXIS PSD RESPONSE

X Y - O U T P U T S U M M A R Y (A U T O O R P S D F)

PLOT TYPE	CURVE TYPE	FRAME NO.	CURVE ID.	RMS VALUE	NO. POSITIVE CROSSINGS	XMIN FOR ALL DATA	XMAX FOR ALL DATA	YMIN FOR ALL DATA	X FOR YMIN	YMAX FOR ALL DATA	X FOR* YMAX
PSDF	EL FOR	171	2227(5)	1.841046E-02	1.907723E+02	1.000E+01	2.000E+03	0.000E+00	1.000E+01	2.576E-05	1.410E+02
PSDF	EL FOR	171	2227(6)	3.896386E-02	2.202360E+02	1.000E+01	2.000E+03	0.000E+00	1.000E+01	8.614E-05	1.410E+02
PSDF	EL FOR	171	2227(8)	1.237658E-02	2.254777E+02	1.000E+01	2.000E+03	0.000E+00	1.000E+01	4.882E-06	1.410E+02
PSDF	EL FOR	171	2227(9)	1.850621E-02	2.621357E+02	1.000E+01	2.000E+03	0.000E+00	1.000E+01	1.221E-05	1.410E+02
PSDF	EL FOR	171	20023(2)	1.391000E+01	3.909614E+02	1.000E+01	2.000E+03	0.000E+00	1.000E+01	2.991E+00	1.480E+02
PSDF	EL FOR	171	20023(3)	6.705657E+00	2.737964E+02	1.000E+01	2.000E+03	0.000E+00	1.000E+01	1.296E+00	1.410E+02
PSDF	EL FOR	171	20023(5)	2.920801E-02	2.521027E+02	1.000E+01	2.000E+03	0.000E+00	1.000E+01	4.102E-05	1.410E+02
PSDF	EL FOR	171	20023(6)	7.861548E-03	2.721437E+02	1.000E+01	2.000E+03	0.000E+00	1.000E+01	2.026E-06	1.410E+02
PSDF	EL FOR	171	20023(8)	1.479806E-02	3.004591E+02	1.000E+01	2.000E+03	0.000E+00	1.000E+01	4.015E-06	2.800E+02
PSDF	EL FOR	171	20023(9)	2.190820E-01	1.784449E+02	1.000E+01	2.000E+03	0.000E+00	1.000E+01	4.518E-03	1.410E+02
PSDF	EL FOR	171	20022(2)	1.385285E+01	3.956289E+02	1.000E+01	2.000E+03	0.000E+00	1.000E+01	3.290E+00	1.480E+02
PSDF	EL FOR	171	20022(3)	2.252587E+00	3.385603E+02	1.000E+01	2.000E+03	0.000E+00	1.000E+01	6.168E-02	2.300E+02
PSDF	EL FOR	171	20022(5)	2.039635E-02	3.084423E+02	1.000E+01	2.000E+03	0.000E+00	1.000E+01	1.193E-05	2.780E+02
PSDF	EL FOR	171	20022(6)	2.240522E-02	4.250021E+02	1.000E+01	2.000E+03	0.000E+00	1.000E+01	6.408E-06	2.780E+02
PSDF	EL FOR	171	20022(8)	2.836373E-02	2.479202E+02	1.000E+01	2.000E+03	0.000E+00	1.000E+01	5.472E-05	1.410E+02
PSDF	EL FOR	171	20022(9)	2.224975E-01	2.305901E+02	1.000E+01	2.000E+03	0.000E+00	1.000E+01	4.156E-03	1.410E+02
PSDF	EL FOR	171	2092(2)	1.773286E+00	3.039822E+02	1.000E+01	2.000E+03	0.000E+00	1.000E+01	6.663E-02	2.680E+02
PSDF	EL FOR	171	2092(3)	5.019722E+00	3.533727E+02	1.000E+01	2.000E+03	0.000E+00	1.000E+01	5.640E-01	1.400E+02
PSDF	EL FOR	171	2092(5)	1.260965E-02	3.059786E+02	1.000E+01	2.000E+03	0.000E+00	1.000E+01	3.234E-06	1.820E+02
PSDF	EL FOR	171	2092(6)	4.358292E-02	2.446779E+02	1.000E+01	2.000E+03	0.000E+00	1.000E+01	5.997E-05	1.820E+02
PSDF	EL FOR	171	2092(8)	1.814048E-02	3.712969E+02	1.000E+01	2.000E+03	0.000E+00	1.000E+01	5.874E-06	1.410E+02
PSDF	EL FOR	171	2092(9)	1.671400E-02	2.959431E+02	1.000E+01	2.000E+03	0.000E+00	1.000E+01	8.909E-06	1.820E+02
PSDF	EL FOR	171	2091(2)	3.808527E+00	3.418697E+02	1.000E+01	2.000E+03	0.000E+00	1.000E+01	2.956E-01	1.410E+02
PSDF	EL FOR	171	2091(3)	4.038050E+00	4.474059E+02	1.000E+01	2.000E+03	0.000E+00	1.000E+01	1.409E-01	4.740E+02

Z AXIS PSD RESPONSE

X Y - O U T P U T S U M M A R Y (A U T O O R P S D F)

PLOT TYPE	CURVE TYPE	FRAME NO.	CURVE ID.	RMS VALUE	NO. POSITIVE CROSSINGS	XMIN FOR ALL DATA	XMAX FOR ALL DATA	YMIN FOR ALL DATA	X FOR YMIN	YMAX FOR ALL DATA	X FOR* YMAX
PSDF	EL FOR	171	2091(5)	2.222815E-02	4.152011E+02	1.000E+01	2.000E+03	0.000E+00	1.000E+01	6.912E-06	1.410E+02
PSDF	EL FOR	171	2091(6)	5.340554E-02	2.391336E+02	1.000E+01	2.000E+03	0.000E+00	1.000E+01	1.026E-04	1.410E+02
PSDF	EL FOR	171	2091(8)	6.976682E-03	4.160599E+02	1.000E+01	2.000E+03	0.000E+00	1.000E+01	1.703E-06	1.410E+02
PSDF	EL FOR	171	2091(9)	1.964950E-02	3.149054E+02	1.000E+01	2.000E+03	0.000E+00	1.000E+01	1.548E-05	1.410E+02
PSDF	EL FOR	171	2090(2)	4.468294E+00	3.061423E+02	1.000E+01	2.000E+03	0.000E+00	1.000E+01	9.581E-01	1.410E+02
PSDF	EL FOR	171	2090(3)	1.104718E+01	2.052368E+02	1.000E+01	2.000E+03	0.000E+00	1.000E+01	1.207E+01	1.410E+02
PSDF	EL FOR	171	2090(5)	2.799352E-02	3.242384E+02	1.000E+01	2.000E+03	0.000E+00	1.000E+01	5.027E-05	1.410E+02
PSDF	EL FOR	171	2090(6)	5.456730E-02	1.903840E+02	1.000E+01	2.000E+03	0.000E+00	1.000E+01	2.984E-04	1.410E+02
PSDF	EL FOR	171	2090(8)	1.233654E-02	3.302997E+02	1.000E+01	2.000E+03	0.000E+00	1.000E+01	9.906E-06	1.410E+02
PSDF	EL FOR	171	2090(9)	2.336816E-02	2.631349E+02	1.000E+01	2.000E+03	0.000E+00	1.000E+01	4.450E-05	1.410E+02
PSDF	EL FOR	171	2089(2)	5.023332E+00	3.716273E+02	1.000E+01	2.000E+03	0.000E+00	1.000E+01	3.708E-01	1.028E+02
PSDF	EL FOR	171	2089(3)	9.912620E+00	1.807759E+02	1.000E+01	2.000E+03	0.000E+00	1.000E+01	9.455E+00	1.410E+02
PSDF	EL FOR	171	2089(5)	1.355325E-02	3.181892E+02	1.000E+01	2.000E+03	0.000E+00	1.000E+01	8.509E-06	1.410E+02
PSDF	EL FOR	171	2089(6)	3.015823E-02	1.681799E+02	1.000E+01	2.000E+03	0.000E+00	1.000E+01	9.178E-05	1.410E+02
PSDF	EL FOR	171	2089(8)	1.293953E-02	4.779990E+02	1.000E+01	2.000E+03	0.000E+00	1.000E+01	2.541E-06	1.410E+02
PSDF	EL FOR	171	2089(9)	1.375950E-02	2.336812E+02	1.000E+01	2.000E+03	0.000E+00	1.000E+01	1.665E-05	1.410E+02
PSDF	EL FOR	171	3266(2)	1.230973E+01	2.840966E+02	1.000E+01	2.000E+03	0.000E+00	1.000E+01	7.352E+00	2.680E+02
PSDF	EL FOR	171	3266(3)	7.951948E+00	3.099983E+02	1.000E+01	2.000E+03	0.000E+00	1.000E+01	1.730E+00	2.700E+02
PSDF	EL FOR	171	3266(5)	1.338812E-02	2.655329E+02	1.000E+01	2.000E+03	0.000E+00	1.000E+01	5.292E-06	1.470E+02
PSDF	EL FOR	171	3266(6)	6.183688E-02	2.511431E+02	1.000E+01	2.000E+03	0.000E+00	1.000E+01	1.386E-04	2.700E+02
PSDF	EL FOR	171	3266(8)	2.328251E-02	3.141058E+02	1.000E+01	2.000E+03	0.000E+00	1.000E+01	1.217E-05	2.300E+02
PSDF	EL FOR	171	3266(9)	7.337502E-02	2.888644E+02	1.000E+01	2.000E+03	0.000E+00	1.000E+01	1.226E-04	1.470E+02
PSDF	EL FOR	171	3268(2)	2.817436E+00	3.760221E+02	1.000E+01	2.000E+03	0.000E+00	1.000E+01	9.626E-02	1.400E+02
PSDF	EL FOR	171	3268(3)	4.326465E+00	3.484528E+02	1.000E+01	2.000E+03	0.000E+00	1.000E+01	3.387E-01	1.460E+02

Z AXIS PSD RESPONSE

X Y - O U T P U T S U M M A R Y (A U T O O R P S D F)

PLOT TYPE	CURVE TYPE	FRAME NO.	CURVE ID.	RMS VALUE	NO. POSITIVE CROSSINGS	XMIN FOR ALL DATA	XMAX FOR ALL DATA	YMIN FOR ALL DATA	X FOR YMIN	YMAX FOR ALL DATA	X FOR* YMAX
PSDF	EL FOR	171	3268(5)	1.062699E-01	2.547109E+02	1.000E+01	2.000E+03	0.000E+00	1.000E+01	3.379E-04	2.700E+02
PSDF	EL FOR	171	3268(6)	1.326792E-01	2.472865E+02	1.000E+01	2.000E+03	0.000E+00	1.000E+01	6.703E-04	2.700E+02
PSDF	EL FOR	171	3268(8)	4.431241E-01	2.747937E+02	1.000E+01	2.000E+03	0.000E+00	1.000E+01	5.929E-03	1.470E+02
PSDF	EL FOR	171	3268(9)	8.126599E-02	2.637940E+02	1.000E+01	2.000E+03	0.000E+00	1.000E+01	2.280E-04	1.470E+02
PSDF	EL FOR	171	3271(2)	4.579967E+00	3.027364E+02	1.000E+01	2.000E+03	0.000E+00	1.000E+01	4.310E-01	2.700E+02
PSDF	EL FOR	171	3271(3)	1.000262E+01	3.106584E+02	1.000E+01	2.000E+03	0.000E+00	1.000E+01	1.722E+00	2.660E+02
PSDF	EL FOR	171	3271(5)	2.792237E-02	2.884768E+02	1.000E+01	2.000E+03	0.000E+00	1.000E+01	2.230E-05	2.700E+02
PSDF	EL FOR	171	3271(6)	4.960852E-02	3.506541E+02	1.000E+01	2.000E+03	0.000E+00	1.000E+01	4.640E-05	2.700E+02
PSDF	EL FOR	171	3271(8)	4.855276E-02	2.978603E+02	1.000E+01	2.000E+03	0.000E+00	1.000E+01	7.166E-05	1.470E+02
PSDF	EL FOR	171	3271(9)	4.696843E-01	2.664480E+02	1.000E+01	2.000E+03	0.000E+00	1.000E+01	7.495E-03	2.700E+02
PSDF	EL FOR	171	3273(2)	1.410902E+01	2.711913E+02	1.000E+01	2.000E+03	0.000E+00	1.000E+01	1.035E+01	2.680E+02
PSDF	EL FOR	171	3273(3)	2.115080E+01	2.799857E+02	1.000E+01	2.000E+03	0.000E+00	1.000E+01	2.195E+01	2.680E+02
PSDF	EL FOR	171	3273(5)	8.517212E-02	2.530053E+02	1.000E+01	2.000E+03	0.000E+00	1.000E+01	2.917E-04	2.700E+02
PSDF	EL FOR	171	3273(6)	2.592104E-02	2.462734E+02	1.000E+01	2.000E+03	0.000E+00	1.000E+01	2.686E-05	1.470E+02
PSDF	EL FOR	171	3273(8)	4.412660E-02	3.408248E+02	1.000E+01	2.000E+03	0.000E+00	1.000E+01	4.783E-05	1.480E+02
PSDF	EL FOR	171	3273(9)	6.649300E-02	2.649081E+02	1.000E+01	2.000E+03	0.000E+00	1.000E+01	1.515E-04	1.470E+02

Z AXIS PSD RESPONSE

X Y - O U T P U T S U M M A R Y (A U T O O R P S D F)

PLOT TYPE	CURVE TYPE	FRAME NO.	CURVE ID.	RMS VALUE	NO. POSITIVE CROSSINGS	XMIN FOR ALL DATA	XMAX FOR ALL DATA	YMIN FOR ALL DATA	X FOR YMIN	YMAX FOR ALL DATA	X FOR* YMAX
PSDF	EL STR	0	23538(3)	5.857879E+02	3.218589E+02	1.000E+01	2.000E+03	0.000E+00	1.000E+01	1.085E+04	2.980E+02
PSDF	EL STR	0	23538(5)	6.553087E+02	2.931593E+02	1.000E+01	2.000E+03	0.000E+00	1.000E+01	1.409E+04	2.980E+02
PSDF	EL STR	0	23538(7)	1.844692E+02	3.842443E+02	1.000E+01	2.000E+03	0.000E+00	1.000E+01	9.302E+02	2.980E+02
PSDF	EL STR	0	23539(3)	1.077134E+03	2.541048E+02	1.000E+01	2.000E+03	0.000E+00	1.000E+01	3.021E+04	2.780E+02
PSDF	EL STR	0	23539(5)	3.730287E+02	4.258160E+02	1.000E+01	2.000E+03	0.000E+00	1.000E+01	2.647E+03	5.040E+02
PSDF	EL STR	0	23539(7)	3.868461E+02	2.969713E+02	1.000E+01	2.000E+03	0.000E+00	1.000E+01	4.532E+03	2.800E+02
PSDF	EL STR	0	23540(3)	6.133988E+02	2.844673E+02	1.000E+01	2.000E+03	0.000E+00	1.000E+01	6.727E+03	2.800E+02
PSDF	EL STR	0	23540(5)	4.908906E+02	3.509817E+02	1.000E+01	2.000E+03	0.000E+00	1.000E+01	4.424E+03	1.480E+02
PSDF	EL STR	0	23540(7)	1.138714E+02	4.236064E+02	1.000E+01	2.000E+03	0.000E+00	1.000E+01	1.669E+02	3.000E+02
PSDF	EL STR	0	23541(3)	4.960703E+02	3.111813E+02	1.000E+01	2.000E+03	0.000E+00	1.000E+01	8.075E+03	2.980E+02
PSDF	EL STR	0	23541(5)	4.406075E+02	3.137933E+02	1.000E+01	2.000E+03	0.000E+00	1.000E+01	8.070E+03	2.980E+02
PSDF	EL STR	0	23541(7)	2.156665E+02	3.102283E+02	1.000E+01	2.000E+03	0.000E+00	1.000E+01	1.375E+03	2.980E+02
PSDF	EL STR	0	23542(3)	8.596105E+02	4.195249E+02	1.000E+01	2.000E+03	0.000E+00	1.000E+01	1.505E+04	2.980E+02
PSDF	EL STR	0	23542(5)	5.582108E+02	4.399481E+02	1.000E+01	2.000E+03	0.000E+00	1.000E+01	5.987E+03	2.980E+02
PSDF	EL STR	0	23542(7)	2.158727E+02	4.927419E+02	1.000E+01	2.000E+03	0.000E+00	1.000E+01	1.289E+03	5.060E+02
PSDF	EL STR	0	23543(3)	3.785855E+02	3.402474E+02	1.000E+01	2.000E+03	0.000E+00	1.000E+01	1.917E+03	1.480E+02
PSDF	EL STR	0	23543(5)	1.233730E+03	3.271941E+02	1.000E+01	2.000E+03	0.000E+00	1.000E+01	4.478E+04	2.980E+02
PSDF	EL STR	0	23543(7)	1.880564E+02	3.211170E+02	1.000E+01	2.000E+03	0.000E+00	1.000E+01	6.125E+02	1.480E+02
PSDF	EL STR	0	23544(3)	3.944001E+02	2.912171E+02	1.000E+01	2.000E+03	0.000E+00	1.000E+01	2.729E+03	1.480E+02
PSDF	EL STR	0	23544(5)	1.223939E+03	2.877641E+02	1.000E+01	2.000E+03	0.000E+00	1.000E+01	2.753E+04	1.480E+02
PSDF	EL STR	0	23544(7)	3.413421E+02	3.074907E+02	1.000E+01	2.000E+03	0.000E+00	1.000E+01	3.569E+03	2.800E+02
PSDF	EL STR	0	23545(3)	6.692641E+02	3.312860E+02	1.000E+01	2.000E+03	0.000E+00	1.000E+01	1.614E+04	2.980E+02
PSDF	EL STR	0	23545(5)	2.370530E+03	3.241865E+02	1.000E+01	2.000E+03	0.000E+00	1.000E+01	1.892E+05	2.980E+02
PSDF	EL STR	0	23545(7)	5.174985E+02	3.268238E+02	1.000E+01	2.000E+03	0.000E+00	1.000E+01	8.799E+03	2.980E+02

Z AXIS PSD RESPONSE

X Y - O U T P U T S U M M A R Y (A U T O O R P S D F)

PLOT TYPE	CURVE TYPE	FRAME NO.	CURVE ID.	RMS VALUE	NO. POSITIVE CROSSINGS	XMIN FOR ALL DATA	XMAX FOR ALL DATA	YMIN FOR ALL DATA	X FOR YMIN	YMAX FOR ALL DATA	X FOR* YMAX
PSDF	EL STR	0	23546(3)	1.441940E+02	3.528205E+02	1.000E+01	2.000E+03	0.000E+00	1.000E+01	7.696E+02	2.760E+02
PSDF	EL STR	0	23546(5)	1.907375E+02	6.986486E+02	1.000E+01	2.000E+03	0.000E+00	1.000E+01	2.139E+02	6.100E+02
PSDF	EL STR	0	23546(7)	9.206620E+01	3.439085E+02	1.000E+01	2.000E+03	0.000E+00	1.000E+01	2.595E+02	2.680E+02
PSDF	EL STR	0	23547(3)	6.917126E+01	4.153022E+02	1.000E+01	2.000E+03	0.000E+00	1.000E+01	1.639E+02	2.760E+02
PSDF	EL STR	0	23547(5)	7.875447E+01	4.174373E+02	1.000E+01	2.000E+03	0.000E+00	1.000E+01	1.838E+02	2.760E+02
PSDF	EL STR	0	23547(7)	8.040023E+01	4.360546E+02	1.000E+01	2.000E+03	0.000E+00	1.000E+01	1.291E+02	2.680E+02
PSDF	EL STR	0	23548(3)	2.425589E+02	5.337827E+02	1.000E+01	2.000E+03	0.000E+00	1.000E+01	1.291E+03	2.780E+02
PSDF	EL STR	0	23548(5)	1.326095E+02	6.555876E+02	1.000E+01	2.000E+03	0.000E+00	1.000E+01	1.129E+02	6.120E+02
PSDF	EL STR	0	23548(7)	5.799468E+01	4.510081E+02	1.000E+01	2.000E+03	0.000E+00	1.000E+01	5.927E+01	2.700E+02
PSDF	EL STR	0	23549(3)	5.908323E+01	4.277534E+02	1.000E+01	2.000E+03	0.000E+00	1.000E+01	6.299E+01	2.960E+02
PSDF	EL STR	0	23549(5)	1.025704E+02	4.544261E+02	1.000E+01	2.000E+03	0.000E+00	1.000E+01	2.178E+02	2.780E+02
PSDF	EL STR	0	23549(7)	5.374570E+01	4.635904E+02	1.000E+01	2.000E+03	0.000E+00	1.000E+01	4.565E+01	2.740E+02
PSDF	EL STR	0	23550(3)	4.750103E+01	5.379366E+02	1.000E+01	2.000E+03	0.000E+00	1.000E+01	2.754E+01	2.980E+02
PSDF	EL STR	0	23550(5)	1.895839E+02	3.939749E+02	1.000E+01	2.000E+03	0.000E+00	1.000E+01	1.040E+03	2.780E+02
PSDF	EL STR	0	23550(7)	7.105542E+01	5.130298E+02	1.000E+01	2.000E+03	0.000E+00	1.000E+01	5.449E+01	2.700E+02
PSDF	EL STR	0	23551(3)	3.293671E+01	6.996597E+02	1.000E+01	2.000E+03	0.000E+00	1.000E+01	1.692E+01	2.980E+02
PSDF	EL STR	0	23551(5)	9.874814E+01	3.792459E+02	1.000E+01	2.000E+03	0.000E+00	1.000E+01	2.912E+02	2.780E+02
PSDF	EL STR	0	23551(7)	6.534486E+01	3.631110E+02	1.000E+01	2.000E+03	0.000E+00	1.000E+01	9.514E+01	2.700E+02
PSDF	EL STR	0	23552(3)	5.909610E+01	5.489825E+02	1.000E+01	2.000E+03	0.000E+00	1.000E+01	4.016E+01	2.780E+02
PSDF	EL STR	0	23552(5)	8.237978E+01	4.939043E+02	1.000E+01	2.000E+03	0.000E+00	1.000E+01	1.492E+02	2.780E+02
PSDF	EL STR	0	23552(7)	7.892812E+01	4.311785E+02	1.000E+01	2.000E+03	0.000E+00	1.000E+01	1.356E+02	2.680E+02
PSDF	EL STR	0	23553(3)	2.161968E+01	3.621630E+02	1.000E+01	2.000E+03	0.000E+00	1.000E+01	1.646E+01	2.780E+02
PSDF	EL STR	0	23553(5)	1.859308E+02	3.195434E+02	1.000E+01	2.000E+03	0.000E+00	1.000E+01	1.260E+03	2.780E+02
PSDF	EL STR	0	23553(7)	6.585287E+01	3.939251E+02	1.000E+01	2.000E+03	0.000E+00	1.000E+01	1.178E+02	2.680E+02

Z AXIS PSD RESPONSE

X Y - O U T P U T S U M M A R Y (A U T O O R P S D F)

PLOT TYPE	CURVE TYPE	FRAME NO.	CURVE ID.	RMS VALUE	NO. POSITIVE CROSSINGS	XMIN FOR ALL DATA	XMAX FOR ALL DATA	YMIN FOR ALL DATA	X FOR YMIN	YMAX FOR ALL DATA	X FOR* YMAX
PSDF	EL STR	0	23554(3)	9.555708E+02	2.918724E+02	1.000E+01	2.000E+03	0.000E+00	1.000E+01	2.799E+04	2.980E+02
PSDF	EL STR	0	23554(5)	1.559974E+03	3.367901E+02	1.000E+01	2.000E+03	0.000E+00	1.000E+01	8.361E+04	2.980E+02
PSDF	EL STR	0	23554(7)	2.651814E+02	3.662892E+02	1.000E+01	2.000E+03	0.000E+00	1.000E+01	1.359E+03	1.480E+02
PSDF	EL STR	0	23555(3)	1.475805E+03	3.046456E+02	1.000E+01	2.000E+03	0.000E+00	1.000E+01	6.690E+04	2.800E+02
PSDF	EL STR	0	23555(5)	7.826250E+02	3.483738E+02	1.000E+01	2.000E+03	0.000E+00	1.000E+01	1.800E+04	2.780E+02
PSDF	EL STR	0	23555(7)	3.721312E+02	3.063805E+02	1.000E+01	2.000E+03	0.000E+00	1.000E+01	3.969E+03	2.800E+02
PSDF	EL STR	0	23556(3)	1.446941E+02	6.626599E+02	1.000E+01	2.000E+03	0.000E+00	1.000E+01	2.146E+02	2.980E+02
PSDF	EL STR	0	23556(5)	1.880380E+02	3.795968E+02	1.000E+01	2.000E+03	0.000E+00	1.000E+01	1.037E+03	2.780E+02
PSDF	EL STR	0	23556(7)	6.159963E+01	4.063990E+02	1.000E+01	2.000E+03	0.000E+00	1.000E+01	8.230E+01	2.700E+02
PSDF	EL STR	0	23557(3)	1.865575E+02	3.270857E+02	1.000E+01	2.000E+03	0.000E+00	1.000E+01	1.222E+03	2.780E+02
PSDF	EL STR	0	23557(5)	2.144004E+01	3.788773E+02	1.000E+01	2.000E+03	0.000E+00	1.000E+01	1.518E+01	2.780E+02
PSDF	EL STR	0	23557(7)	7.975350E+01	3.552144E+02	1.000E+01	2.000E+03	0.000E+00	1.000E+01	1.685E+02	2.680E+02
PSDF	EL STR	0	23558(3)	9.748650E+01	3.261988E+02	1.000E+01	2.000E+03	0.000E+00	1.000E+01	2.244E+02	2.680E+02
PSDF	EL STR	0	23558(5)	1.027391E+02	4.037549E+02	1.000E+01	2.000E+03	0.000E+00	1.000E+01	2.813E+02	2.980E+02
PSDF	EL STR	0	23558(7)	7.438629E+01	3.350807E+02	1.000E+01	2.000E+03	0.000E+00	1.000E+01	2.318E+02	2.780E+02
PSDF	EL STR	0	23559(3)	5.351707E+01	3.445981E+02	1.000E+01	2.000E+03	0.000E+00	1.000E+01	8.389E+01	2.780E+02
PSDF	EL STR	0	23559(5)	1.333102E+02	3.479352E+02	1.000E+01	2.000E+03	0.000E+00	1.000E+01	5.491E+02	2.780E+02
PSDF	EL STR	0	23559(7)	5.650827E+01	3.435263E+02	1.000E+01	2.000E-03	0.000E+00	1.000E+01	7.360E+01	2.680E+02
PSDF	EL STR	0	23560(3)	6.450574E+02	3.065217E+02	1.000E+01	2.000E+03	0.000E+00	1.000E+01	1.214E+04	2.980E+02
PSDF	EL STR	0	23560(5)	2.050502E+03	2.930367E+02	1.000E+01	2.000E+03	0.000E+00	1.000E+01	1.350E+05	2.800E+02
PSDF	EL STR	0	23560(7)	3.207447E+02	3.158531E+02	1.000E+01	2.000E+03	0.000E+00	1.000E+01	3.255E+03	2.800E+02
PSDF	EL STR	0	23561(3)	9.889211E+02	2.945564E+02	1.000E+01	2.000E+03	0.000E+00	1.000E+01	3.201E+04	2.800E+02
PSDF	EL STR	0	23561(5)	3.589795E+02	3.586171E+02	1.000E+01	2.000E+03	0.000E+00	1.000E+01	3.684E+03	2.980E+02
PSDF	EL STR	0	23561(7)	3.677079E+02	3.106969E+02	1.000E+01	2.000E+03	0.000E+00	1.000E+01	3.817E+03	2.800E+02

Z AXIS PSD RESPONSE

X Y - O U T P U T S U M M A R Y (A U T O O R P S D F)

PLOT TYPE	CURVE TYPE	FRAME NO.	CURVE ID.	RMS VALUE	NO. POSITIVE CROSSINGS	XMIN FOR ALL DATA	XMAX FOR ALL DATA	YMIN FOR ALL DATA	X FOR YMIN	YMAX FOR ALL DATA	X FOR* YMAX
PSDF	EL STR	0	23562(3)	3.935996E+02	2.968095E+02	1.000E+01	2.000E+03	0.000E+00	1.000E+01	4.739E+03	2.800E+02
PSDF	EL STR	0	23562(5)	1.342808E+02	4.470161E+02	1.000E+01	2.000E+03	0.000E+00	1.000E+01	4.232E+02	2.780E+02
PSDF	EL STR	0	23562(7)	1.007261E+02	3.261344E+02	1.000E+01	2.000E+03	0.000E+00	1.000E+01	3.429E+02	3.000E+02
PSDF	EL STR	0	23563(3)	3.121520E+02	3.395155E+02	1.000E+01	2.000E+03	0.000E+00	1.000E+01	2.645E+03	2.800E+02
PSDF	EL STR	0	23563(5)	1.544395E+02	3.951186E+02	1.000E+01	2.000E+03	0.000E+00	1.000E+01	6.436E+02	2.980E+02
PSDF	EL STR	0	23563(7)	2.236798E+02	3.033589E+02	1.000E+01	2.000E+03	0.000E+00	1.000E+01	1.808E+03	2.780E+02
PSDF	EL STR	0	23564(3)	4.835970E+02	2.888518E+02	1.000E+01	2.000E+03	0.000E+00	1.000E+01	7.666E+03	2.800E+02
PSDF	EL STR	0	23564(5)	3.630781E+02	2.933719E+02	1.000E+01	2.000E+03	0.000E+00	1.000E+01	4.963E+03	2.780E+02
PSDF	EL STR	0	23564(7)	7.463855E+01	3.458318E+02	1.000E+01	2.000E+03	0.000E+00	1.000E+01	1.170E+02	2.680E+02
PSDF	EL STR	0	23565(3)	2.026912E+03	2.910400E+02	1.000E+01	2.000E+03	0.000E+00	1.000E+01	1.335E+05	2.800E+02
PSDF	EL STR	0	23565(5)	5.085101E+02	3.057003E+02	1.000E+01	2.000E+03	0.000E+00	1.000E+01	9.386E+03	2.980E+02
PSDF	EL STR	0	23565(7)	3.122266E+02	3.034767E+02	1.000E+01	2.000E+03	0.000E+00	1.000E+01	2.942E+03	2.800E+02
PSDF	EL STR	0	23566(3)	7.076129E+01	3.274016E+02	1.000E+01	2.000E+03	0.000E+00	1.000E+01	1.590E+02	2.980E+02
PSDF	EL STR	0	23566(5)	1.657790E+02	3.346617E+02	1.000E+01	2.000E+03	0.000E+00	1.000E+01	7.991E+02	2.680E+02
PSDF	EL STR	0	23566(7)	6.099136E+01	4.208522E+02	1.000E+01	2.000E+03	0.000E+00	1.000E+01	5.678E+01	2.720E+02
PSDF	EL STR	0	23567(3)	1.253557E+02	4.275931E+02	1.000E+01	2.000E+03	0.000E+00	1.000E+01	2.236E+02	3.000E+02
PSDF	EL STR	0	23567(5)	1.745659E+02	3.409481E+02	1.000E+01	2.000E+03	0.000E+00	1.000E+01	9.701E+02	2.680E+02
PSDF	EL STR	0	23567(7)	8.775896E+01	3.864412E+02	1.000E+01	2.000E+03	0.000E+00	1.000E+01	2.579E+02	2.760E+02
PSDF	EL STR	0	23568(3)	2.794071E+01	4.750774E+02	1.000E+01	2.000E+03	0.000E+00	1.000E+01	2.377E+01	2.680E+02
PSDF	EL STR	0	23568(5)	1.860463E+02	3.409023E+02	1.000E+01	2.000E+03	0.000E+00	1.000E+01	1.080E+03	2.780E+02
PSDF	EL STR	0	23568(7)	9.182465E+01	3.230790E+02	1.000E+01	2.000E+03	0.000E+00	1.000E+01	3.206E+02	2.680E+02
PSDF	EL STR	0	22917(3)	1.098949E+02	3.798923E+02	1.000E+01	2.000E+03	0.000E+00	1.000E+01	3.552E+02	2.680E+02
PSDF	EL STR	0	22917(5)	5.003496E+02	2.781555E+02	1.000E+01	2.000E+03	0.000E+00	1.000E+01	1.206E+04	2.680E+02
PSDF	EL STR	0	22917(7)	2.248296E+02	3.471857E+02	1.000E+01	2.000E+03	0.000E+00	1.000E+01	9.491E+02	2.700E+02

Z AXIS PSD RESPONSE

X Y - O U T P U T S U M M A R Y (A U T O O R P S D F)

PLOT TYPE	CURVE TYPE	FRAME NO.	CURVE ID.	RMS VALUE	NO. POSITIVE CROSSINGS	XMIN FOR ALL DATA	XMAX FOR ALL DATA	YMIN FOR ALL DATA	X FOR YMIN	YMAX FOR ALL DATA	X FOR* YMAX
PSDF	EL STR	0	22918(3)	1.007395E+02	3.662318E+02	1.000E+01	2.000E+03	0.000E+00	1.000E+01	2.818E+02	2.700E+02
PSDF	EL STR	0	22918(5)	5.079034E+02	2.801454E+02	1.000E+01	2.000E+03	0.000E+00	1.000E+01	1.218E+04	2.680E+02
PSDF	EL STR	0	22918(7)	2.396260E+02	3.499823E+02	1.000E+01	2.000E+03	0.000E+00	1.000E+01	1.539E+03	2.680E+02
PSDF	EL STR	0	22919(3)	1.328802E+02	3.934194E+02	1.000E+01	2.000E+03	0.000E+00	1.000E+01	7.316E+02	1.470E+02
PSDF	EL STR	0	22919(5)	4.251959E+02	2.889145E+02	1.000E+01	2.000E+03	0.000E+00	1.000E+01	7.596E+03	2.680E+02
PSDF	EL STR	0	22919(7)	4.799875E+02	2.936574E+02	1.000E+01	2.000E+03	0.000E+00	1.000E+01	1.181E+04	2.680E+02
PSDF	EL STR	0	22920(3)	1.812112E+02	3.977736E+02	1.000E+01	2.000E+03	0.000E+00	1.000E+01	1.203E+03	1.470E+02
PSDF	EL STR	0	22920(5)	2.514031E+02	3.380458E+02	1.000E+01	2.000E+03	0.000E+00	1.000E+01	1.743E+03	1.470E+02
PSDF	EL STR	0	22920(7)	7.507489E+02	2.762316E+02	1.000E+01	2.000E+03	0.000E+00	1.000E+01	3.081E+04	2.680E+02
PSDF	EL STR	0	22921(3)	8.049677E+01	3.747934E+02	1.000E+01	2.000E+03	0.000E+00	1.000E+01	3.104E+02	2.700E+02
PSDF	EL STR	0	22921(5)	3.533821E+02	3.109151E+02	1.000E+01	2.000E+03	0.000E+00	1.000E+01	4.704E+03	2.680E+02
PSDF	EL STR	0	22921(7)	7.509474E+02	2.806548E+02	1.000E+01	2.000E+03	0.000E+00	1.000E+01	2.943E+04	2.680E+02
PSDF	EL STR	0	22922(3)	3.877933E+01	4.608153E+02	1.000E+01	2.000E+03	0.000E+00	1.000E+01	5.809E+01	1.480E+02
PSDF	EL STR	0	22922(5)	6.546449E+02	2.812029E+02	1.000E+01	2.000E+03	0.000E+00	1.000E+01	2.266E+04	2.680E+02
PSDF	EL STR	0	22922(7)	5.308569E+02	2.896865E+02	1.000E+01	2.000E+03	0.000E+00	1.000E+01	1.331E+04	2.680E+02
PSDF	EL STR	0	22923(3)	6.035631E+01	3.634957E+02	1.000E+01	2.000E+03	0.000E+00	1.000E+01	3.274E+02	1.480E+02
PSDF	EL STR	0	22923(5)	8.387481E+02	2.756660E+02	1.000E+01	2.000E+03	0.000E+00	1.000E+01	3.845E+04	2.680E+02
PSDF	EL STR	0	22923(7)	2.613722E+02	3.305633E+02	1.000E+01	2.000E+03	0.000E+00	1.000E+01	1.569E+03	2.680E+02
PSDF	EL STR	0	22924(3)	6.980614E+01	3.589913E+02	1.000E+01	2.000E+03	0.000E+00	1.000E+01	4.111E+02	1.480E+02
PSDF	EL STR	0	22924(5)	8.394294E+02	2.759439E+02	1.000E+01	2.000E+03	0.000E+00	1.000E+01	3.768E+04	2.680E+02
PSDF	EL STR	0	22924(7)	2.669077E+02	3.287459E+02	1.000E+01	2.000E+03	0.000E+00	1.000E+01	2.062E+03	2.680E+02
PSDF	EL STR	0	22925(3)	4.530081E+01	4.597718E+02	1.000E+01	2.000E+03	0.000E+00	1.000E+01	9.984E+01	1.480E+02
PSDF	EL STR	0	22925(5)	6.510952E+02	2.824078E+02	1.000E+01	2.000E+03	0.000E+00	1.000E+01	2.053E+04	2.680E+02
PSDF	EL STR	0	22925(7)	5.175058E+02	2.886118E+02	1.000E+01	2.000E+03	0.000E+00	1.000E+01	1.330E+04	2.680E+02

Z AXIS PSD RESPONSE

X Y - O U T P U T S U M M A R Y (A U T O O R P S D F)

PLOT TYPE	CURVE TYPE	FRAME NO.	CURVE ID.	RMS VALUE	NO. POSITIVE CROSSINGS	XMIN FOR ALL DATA	XMAX FOR ALL DATA	YMIN FOR ALL DATA	X FOR YMIN	YMAX FOR ALL DATA	X FOR* YMAX
PSDF	EL STR	0	22926(3)	6.691018E+01	3.985093E+02	1.000E+01	2.000E+03	0.000E+00	1.000E+01	1.850E+02	2.700E+02
PSDF	EL STR	0	22926(5)	3.667575E+02	3.119311E+02	1.000E+01	2.000E+03	0.000E+00	1.000E+01	3.794E+03	2.700E+02
PSDF	EL STR	0	22926(7)	7.256989E+02	2.797961E+02	1.000E+01	2.000E+03	0.000E+00	1.000E+01	2.778E+04	2.680E+02
PSDF	EL STR	0	22927(3)	1.485661E+02	3.648505E+02	1.000E+01	2.000E+03	0.000E+00	1.000E+01	8.672E+02	1.470E+02
PSDF	EL STR	0	22927(5)	2.799887E+02	3.270529E+02	1.000E+01	2.000E+03	0.000E+00	1.000E+01	1.567E+03	1.470E+02
PSDF	EL STR	0	22927(7)	7.104645E+02	2.775317E+02	1.000E+01	2.000E+03	0.000E+00	1.000E+01	2.665E+04	2.680E+02
PSDF	EL STR	0	22928(3)	1.356294E+02	3.607530E+02	1.000E+01	2.000E+03	0.000E+00	1.000E+01	7.885E+02	1.470E+02
PSDF	EL STR	0	22928(5)	4.418114E+02	2.849905E+02	1.000E+01	2.000E+03	0.000E+00	1.000E+01	8.666E+03	2.680E+02
PSDF	EL STR	0	22928(7)	4.728911E+02	2.910379E+02	1.000E+01	2.000E+03	0.000E+00	1.000E+01	1.038E+04	2.700E+02
PSDF	EL STR	0	22954(3)	1.726506E+02	2.791243E+02	1.000E+01	2.000E+03	0.000E+00	1.000E+01	1.466E+03	2.680E+02
PSDF	EL STR	0	22954(5)	5.596834E+02	2.781944E+02	1.000E+01	2.000E+03	0.000E+00	1.000E+01	1.553E+04	2.680E+02
PSDF	EL STR	0	22954(7)	4.660903E+02	3.372218E+02	1.000E+01	2.000E+03	0.000E+00	1.000E+01	4.885E+03	2.680E+02
PSDF	EL STR	0	22955(3)	1.107957E+02	2.865663E+02	1.000E+01	2.000E+03	0.000E+00	1.000E+01	5.209E+02	2.680E+02
PSDF	EL STR	0	22955(5)	3.784102E+02	2.873005E+02	1.000E+01	2.000E+03	0.000E+00	1.000E+01	5.999E+03	2.680E+02
PSDF	EL STR	0	22955(7)	8.724839E+02	2.873276E+02	1.000E+01	2.000E+03	0.000E+00	1.000E+01	3.743E+04	2.680E+02
PSDF	EL STR	0	22956(3)	5.502163E+01	3.373357E+02	1.000E+01	2.000E+03	0.000E+00	1.000E+01	6.621E+01	1.480E+02
PSDF	EL STR	0	22956(5)	1.836989E+02	3.400406E+02	1.000E+01	2.000E+03	0.000E+00	1.000E+01	7.979E+02	1.480E+02
PSDF	EL STR	0	22956(7)	1.147320E+03	2.783064E+02	1.000E+01	2.000E+03	0.000E+00	1.000E+01	6.952E+04	2.680E+02
PSDF	EL STR	0	22957(3)	8.627864E+01	3.088230E+02	1.000E+01	2.000E+03	0.000E+00	1.000E+01	2.779E+02	2.680E+02
PSDF	EL STR	0	22957(5)	2.922694E+02	3.035623E+02	1.000E+01	2.000E+03	0.000E+00	1.000E+01	3.491E+03	2.680E+02
PSDF	EL STR	0	22957(7)	1.139395E+03	2.783870E+02	1.000E+01	2.000E+03	0.000E+00	1.000E+01	6.758E+04	2.680E+02
PSDF	EL STR	0	22958(3)	1.546773E+02	2.821818E+02	1.000E+01	2.000E+03	0.000E+00	1.000E+01	1.265E+03	2.680E+02
PSDF	EL STR	0	22958(5)	4.988863E+02	2.818280E+02	1.000E+01	2.000E+03	0.000E+00	1.000E+01	1.320E+04	2.680E+02
PSDF	EL STR	0	22958(7)	8.505063E+02	2.874419E+02	1.000E+01	2.000E+03	0.000E+00	1.000E+01	3.403E+04	2.700E+02

Z AXIS PSD RESPONSE

X Y - O U T P U T S U M M A R Y (A U T O O R P S D F)

PLOT TYPE	CURVE TYPE	FRAME NO.	CURVE ID.	RMS VALUE	NO. POSITIVE CROSSINGS	XMIN FOR ALL DATA	XMAX FOR ALL DATA	YMIN FOR ALL DATA	X FOR YMIN	YMAX FOR ALL DATA	X FOR* YMAX
PSDF	EL STR	0	22959(3)	1.968745E+02	2.762700E+02	1.000E+01	2.000E+03	0.000E+00	1.000E+01	2.132E+03	2.680E+02
PSDF	EL STR	0	22959(5)	6.383062E+02	2.763725E+02	1.000E+01	2.000E+03	0.000E+00	1.000E+01	2.237E+04	2.680E+02
PSDF	EL STR	0	22959(7)	4.275933E+02	3.405688E+02	1.000E+01	2.000E+03	0.000E+00	1.000E+01	3.556E+03	2.680E+02
PSDF	EL STR	0	22960(3)	1.990493E+02	2.770366E+02	1.000E+01	2.000E+03	0.000E+00	1.000E+01	2.133E+03	2.680E+02
PSDF	EL STR	0	22960(5)	6.403749E+02	2.771587E+02	1.000E+01	2.000E+03	0.000E+00	1.000E+01	2.203E+04	2.680E+02
PSDF	EL STR	0	22960(7)	5.010210E+02	3.205228E+02	1.000E+01	2.000E+03	0.000E+00	1.000E+01	9.454E+03	2.680E+02
PSDF	EL STR	0	22961(3)	1.553971E+02	2.850356E+02	1.000E+01	2.000E+03	0.000E+00	1.000E+01	1.177E+03	2.680E+02
PSDF	EL STR	0	22961(5)	5.057958E+02	2.847287E+02	1.000E+01	2.000E+03	0.000E+00	1.000E+01	1.252E+04	2.680E+02
PSDF	EL STR	0	22961(7)	9.502922E+02	2.824240E+02	1.000E+01	2.000E+03	0.000E+00	1.000E+01	4.852E+04	2.680E+02
PSDF	EL STR	0	22962(3)	8.989153E+01	3.151331E+02	1.000E+01	2.000E+03	0.000E+00	1.000E+01	2.342E+02	2.680E+02
PSDF	EL STR	0	22962(5)	3.003275E+02	3.115464E+02	1.000E+01	2.000E+03	0.000E+00	1.000E+01	2.840E+03	2.680E+02
PSDF	EL STR	0	22962(7)	1.236474E+03	2.764281E+02	1.000E+01	2.000E+03	0.000E+00	1.000E+01	8.421E+04	2.680E+02
PSDF	EL STR	0	22963(3)	6.308502E+01	3.375302E+02	1.000E+01	2.000E+03	0.000E+00	1.000E+01	5.975E+01	1.470E+02
PSDF	EL STR	0	22963(5)	2.089061E+02	3.398011E+02	1.000E+01	2.000E+03	0.000E+00	1.000E+01	6.720E+02	1.470E+02
PSDF	EL STR	0	22963(7)	1.236471E+03	2.771939E+02	1.000E+01	2.000E+03	0.000E+00	1.000E+01	8.218E+04	2.680E+02
PSDF	EL STR	0	22964(3)	1.194077E+02	2.874446E+02	1.000E+01	2.000E+03	0.000E+00	1.000E+01	6.444E+02	2.680E+02
PSDF	EL STR	0	22964(5)	3.968694E+02	2.876837E+02	1.000E+01	2.000E+03	0.000E+00	1.000E+01	7.069E+03	2.680E+02
PSDF	EL STR	0	22964(7)	9.523047E+02	2.854048E+02	1.000E+01	2.000E+03	0.000E+00	1.000E+01	4.425E+04	2.680E+02
PSDF	EL STR	0	22965(3)	3.345024E+01	3.719432E+02	1.000E+01	2.000E+03	0.000E+00	1.000E+01	2.321E+01	2.680E+02
PSDF	EL STR	0	22965(5)	5.863796E+02	3.384767E+02	1.000E+01	2.000E+03	0.000E+00	1.000E+01	1.154E+04	2.680E+02
PSDF	EL STR	0	22965(7)	1.202894E+02	3.591146E+02	1.000E+01	2.000E+03	0.000E+00	1.000E+01	2.445E+02	2.680E+02
PSDF	EL STR	0	23372(3)	5.597342E+03	2.614894E+02	1.000E+01	2.000E+03	0.000E+00	1.000E+01	1.286E+06	2.680E+02
PSDF	EL STR	0	23372(5)	7.905501E+03	2.615410E+02	1.000E+01	2.000E+03	0.000E+00	1.000E+01	2.529E+06	2.680E+02
PSDF	EL STR	0	23372(7)	3.513200E+02	3.501053E+02	1.000E+01	2.000E+03	0.000E+00	1.000E+01	2.071E+03	2.680E+02

Z AXIS PSD RESPONSE

X Y - O U T P U T S U M M A R Y (A U T O O R P S D F)

PLOT TYPE	CURVE TYPE	FRAME NO.	CURVE ID.	RMS VALUE	NO. POSITIVE CROSSINGS	XMIN FOR ALL DATA	XMAX FOR ALL DATA	YMIN FOR ALL DATA	X FOR YMIN	YMAX FOR ALL DATA	X FOR* YMAX
PSDF	EL STR	0	23373(3)	5.575500E+03	2.598336E+02	1.000E+01	2.000E+03	0.000E+00	1.000E+01	1.300E+06	2.680E+02
PSDF	EL STR	0	23373(5)	7.872894E+03	2.597445E+02	1.000E+01	2.000E+03	0.000E+00	1.000E+01	2.562E+06	2.680E+02
PSDF	EL STR	0	23373(7)	3.236238E+02	3.720875E+02	1.000E+01	2.000E+03	0.000E+00	1.000E+01	1.164E+03	3.940E+02
PSDF	EL STR	0	23374(3)	5.413029E+03	2.580777E+02	1.000E+01	2.000E+03	0.000E+00	1.000E+01	1.236E+06	2.680E+02
PSDF	EL STR	0	23374(5)	7.626896E+03	2.579449E+02	1.000E+01	2.000E+03	0.000E+00	1.000E+01	2.431E+06	2.680E+02
PSDF	EL STR	0	23374(7)	3.899617E+02	3.462606E+02	1.000E+01	2.000E+03	0.000E+00	1.000E+01	1.603E+03	2.680E+02
PSDF	EL STR	0	23375(3)	5.119642E+03	2.561281E+02	1.000E+01	2.000E-03	0.000E+00	1.000E+01	1.102E+06	2.680E+02
PSDF	EL STR	0	23375(5)	7.183152E+03	2.560609E+02	1.000E+01	2.000E+03	0.000E+00	1.000E+01	2.156E+06	2.680E+02
PSDF	EL STR	0	23375(7)	4.991604E+02	3.172512E+02	1.000E+01	2.000E+03	0.000E+00	1.000E+01	5.710E+03	2.680E+02
PSDF	EL STR	0	23376(3)	4.718114E+03	2.538892E+02	1.000E+01	2.000E+03	0.000E+00	1.000E+01	9.204E+05	2.680E+02
PSDF	EL STR	0	23376(5)	6.574113E+03	2.540225E+02	1.000E+01	2.000E+03	0.000E+00	1.000E+01	1.782E+06	2.680E+02
PSDF	EL STR	0	23376(7)	6.067344E+02	2.998717E+02	1.000E+01	2.000E+03	0.000E+00	1.000E+01	1.125E+04	2.680E+02
PSDF	EL STR	0	23377(3)	4.238055E+03	2.512526E+02	1.000E+01	2.000E+03	0.000E+00	1.000E+01	7.188E+05	2.700E+02
PSDF	EL STR	0	23377(5)	5.846411E+03	2.517880E+02	1.000E+01	2.000E+03	0.000E+00	1.000E+01	1.365E+06	2.700E+02
PSDF	EL STR	0	23377(7)	6.885330E+02	2.903339E+02	1.000E+01	2.000E+03	0.000E+00	1.000E+01	1.654E+04	2.680E+02
PSDF	EL STR	0	23378(3)	3.719939E+03	2.481668E+02	1.000E+01	2.000E+03	0.000E+00	1.000E+01	5.229E+05	2.700E+02
PSDF	EL STR	0	23378(5)	5.060922E+03	2.494305E+02	1.000E+01	2.000E+03	0.000E+00	1.000E+01	9.692E+05	2.700E+02
PSDF	EL STR	0	23378(7)	7.334564E+02	2.853559E+02	1.000E+01	2.000E+03	0.000E+00	1.000E+01	2.007E+04	2.680E+02
PSDF	EL STR	0	23379(3)	3.209770E+03	2.447881E+02	1.000E+01	2.000E+03	0.000E+00	1.000E+01	3.878E+05	1.480E+02
PSDF	EL STR	0	23379(5)	4.289403E+03	2.473441E+02	1.000E+01	2.000E+03	0.000E+00	1.000E+01	6.712E+05	1.480E+02
PSDF	EL STR	0	23379(7)	7.362277E+02	2.835661E+02	1.000E+01	2.000E+03	0.000E+00	1.000E+01	2.081E+04	2.680E+02
PSDF	EL STR	0	23380(3)	2.757010E+03	2.418222E+02	1.000E+01	2.000E+03	0.000E+00	1.000E+01	3.385E+05	1.480E+02
PSDF	EL STR	0	23380(5)	3.611204E+03	2.466387E+02	1.000E+01	2.000E+03	0.000E+00	1.000E+01	5.547E+05	1.480E+02
PSDF	EL STR	0	23380(7)	6.970909E+02	2.848904E+02	1.000E+01	2.000E+03	0.000E+00	1.000E+01	1.855E+04	2.680E+02

Z AXIS PSD RESPONSE

X Y - O U T P U T S U M M A R Y (A U T O O R P S D F)

PLOT TYPE	CURVE TYPE	FRAME NO.	CURVE ID.	RMS VALUE	NO. POSITIVE CROSSINGS	XMIN FOR ALL DATA	XMAX FOR ALL DATA	YMIN FOR ALL DATA	X FOR YMIN	YMAX FOR ALL DATA	X FOR* YMAX
PSDF	EL STR	0	23381(3)	2.407418E+03	2.408578E+02	1.000E+01	2.000E+03	0.000E+00	1.000E+01	2.977E+05	1.480E+02
PSDF	EL STR	0	23381(5)	3.101848E+03	2.492510E+02	1.000E+01	2.000E+03	0.000E+00	1.000E+01	4.612E+05	1.480E+02
PSDF	EL STR	0	23381(7)	6.213198E+02	2.906028E+02	1.000E+01	2.000E+03	0.000E+00	1.000E+01	1.393E+04	2.680E+02
PSDF	EL STR	0	23382(3)	2.188640E+03	2.436332E+02	1.000E+01	2.000E+03	0.000E+00	1.000E+01	2.671E+05	1.480E+02
PSDF	EL STR	0	23382(5)	2.806114E+03	2.562792E+02	1.000E+01	2.000E+03	0.000E+00	1.000E+01	3.928E+05	1.480E+02
PSDF	EL STR	0	23382(7)	5.209808E+02	3.039807E+02	1.000E+01	2.000E+03	0.000E+00	1.000E+01	8.290E+03	2.680E+02
PSDF	EL STR	0	23383(3)	2.096933E+03	2.499876E+02	1.000E+01	2.000E+03	0.000E+00	1.000E+01	2.471E+05	1.480E+02
PSDF	EL STR	0	23383(5)	2.708430E+03	2.656210E+02	1.000E+01	2.000E+03	0.000E+00	1.000E+01	3.494E+05	1.480E+02
PSDF	EL STR	0	23383(7)	4.189997E+02	3.298686E+02	1.000E+01	2.000E+03	0.000E+00	1.000E+01	3.275E+03	2.680E+02
PSDF	EL STR	0	23384(3)	2.102012E+03	2.576616E+02	1.000E+01	2.000E+03	0.000E+00	1.000E+01	2.380E+05	1.480E+02
PSDF	EL STR	0	23384(5)	2.744483E+03	2.740268E+02	1.000E+01	2.000E+03	0.000E+00	1.000E+01	3.311E+05	1.470E+02
PSDF	EL STR	0	23384(7)	3.570245E+02	3.598947E+02	1.000E+01	2.000E+03	0.000E+00	1.000E+01	1.725E+03	3.920E+02
PSDF	EL STR	0	23385(3)	2.172558E+03	2.646098E+02	1.000E+01	2.000E+03	0.000E+00	1.000E+01	2.399E+05	1.480E+02
PSDF	EL STR	0	23385(5)	2.854873E+03	2.802004E+02	1.000E+01	2.000E+03	0.000E+00	1.000E+01	3.348E+05	1.470E+02
PSDF	EL STR	0	23385(7)	3.788335E+02	3.565015E+02	1.000E+01	2.000E+03	0.000E+00	1.000E+01	1.703E+03	3.940E+02
PSDF	EL STR	0	23386(3)	2.296790E+03	2.699152E+02	1.000E+01	2.000E+03	0.000E+00	1.000E+01	2.526E+05	1.480E+02
PSDF	EL STR	0	23386(5)	3.022805E+03	2.840583E+02	1.000E+01	2.000E+03	0.000E+00	1.000E+01	3.620E+05	1.480E+02
PSDF	EL STR	0	23386(7)	4.721089E+02	3.285884E+02	1.000E+01	2.000E+03	0.000E+00	1.000E+01	4.162E+03	2.680E+02
PSDF	EL STR	0	23387(3)	2.483835E+03	2.732137E+02	1.000E+01	2.000E+03	0.000E+00	1.000E+01	2.762E+05	1.480E+02
PSDF	EL STR	0	23387(5)	3.272388E+03	2.854445E+02	1.000E+01	2.000E+03	0.000E+00	1.000E+01	4.142E+05	1.480E+02
PSDF	EL STR	0	23387(7)	5.895096E+02	3.064432E+02	1.000E+01	2.000E+03	0.000E+00	1.000E+01	1.020E+04	2.680E+02
PSDF	EL STR	0	23389(3)	2.749673E+03	2.744372E+02	1.000E+01	2.000E+03	0.000E+00	1.000E+01	3.103E+05	1.480E+02
PSDF	EL STR	0	23389(5)	3.640902E+03	2.843095E+02	1.000E+01	2.000E+03	0.000E+00	1.000E+01	4.917E+05	1.480E+02
PSDF	EL STR	0	23389(7)	6.976569E+02	2.931283E+02	1.000E+01	2.000E+03	0.000E+00	1.000E+01	1.735E+04	2.680E+02

Z AXIS PSD RESPONSE

X Y - O U T P U T S U M M A R Y (A U T O O R P S D F)

PLOT TYPE	CURVE TYPE	FRAME NO.	CURVE ID.	RMS VALUE	NO. POSITIVE CROSSINGS	XMIN FOR ALL DATA	XMAX FOR ALL DATA	YMIN FOR ALL DATA	X FOR YMIN	YMAX FOR ALL DATA	X FOR* YMAX
PSDF	EL STR	0	23390(3)	3.100005E+03	2.739488E+02	1.000E+01	2.000E+03	0.000E+00	1.000E+01	3.542E+05	1.480E+02
PSDF	EL STR	0	23390(5)	4.146011E+03	2.813065E+02	1.000E+01	2.000E+03	0.000E+00	1.000E+01	5.938E+05	1.480E+02
PSDF	EL STR	0	23390(7)	7.780309E+02	2.853459E+02	1.000E+01	2.000E+03	0.000E+00	1.000E+01	2.385E+04	2.680E+02
PSDF	EL STR	0	23391(3)	3.521757E+03	2.724182E+02	1.000E+01	2.000E+03	0.000E+00	1.000E+01	4.059E+05	1.480E+02
PSDF	EL STR	0	23391(5)	4.769739E+03	2.775324E+02	1.000E+01	2.000E+03	0.000E+00	1.000E+01	7.175E+05	1.480E+02
PSDF	EL STR	0	23391(7)	8.201960E+02	2.809127E+02	1.000E+01	2.000E+03	0.000E+00	1.000E+01	2.808E+04	2.680E+02
PSDF	EL STR	0	23392(3)	3.985101E+03	2.704640E+02	1.000E+01	2.000E+03	0.000E+00	1.000E+01	4.625E+05	1.480E+02
PSDF	EL STR	0	23392(5)	5.464435E+03	2.738372E+02	1.000E+01	2.000E+03	0.000E+00	1.000E+01	8.562E+05	1.480E+02
PSDF	EL STR	0	23392(7)	8.192965E+02	2.788595E+02	1.000E+01	2.000E+03	0.000E+00	1.000E+01	2.898E+04	2.680E+02
PSDF	EL STR	0	23393(3)	4.451299E+03	2.684604E+02	1.000E+01	2.000E+03	0.000E+00	1.000E+01	6.458E+05	2.680E+02
PSDF	EL STR	0	23393(5)	6.168034E+03	2.705891E+02	1.000E+01	2.000E+03	0.000E+00	1.000E+01	1.206E+06	2.680E+02
PSDF	EL STR	0	23393(7)	7.750729E+02	2.790978E+02	1.000E+01	2.000E+03	0.000E+00	1.000E+01	2.632E+04	2.680E+02
PSDF	EL STR	0	23394(3)	4.879459E+03	2.665591E+02	1.000E+01	2.000E+03	0.000E+00	1.000E+01	8.499E+05	2.680E+02
PSDF	EL STR	0	23394(5)	6.816429E+03	2.678318E+02	1.000E+01	2.000E+03	0.000E+00	1.000E+01	1.623E+06	2.680E+02
PSDF	EL STR	0	23394(7)	6.918184E+02	2.824965E+02	1.000E+01	2.000E+03	0.000E+00	1.000E+01	2.078E+04	2.680E+02
PSDF	EL STR	0	23395(3)	5.232438E+03	2.647903E+02	1.000E+01	2.000E+03	0.000E+00	1.000E+01	1.042E+06	2.680E+02
PSDF	EL STR	0	23395(5)	7.351494E+03	2.654815E+02	1.000E+01	2.000E+03	0.000E+00	1.000E+01	2.019E+06	2.680E+02
PSDF	EL STR	0	23395(7)	5.790952E+02	2.916617E+02	1.000E+01	2.000E+03	0.000E+00	1.000E+01	1.374E+04	2.680E+02
PSDF	EL STR	0	23396(3)	5.479014E+03	2.631180E+02	1.000E+01	2.000E+03	0.000E+00	1.000E+01	1.195E+06	2.680E+02
PSDF	EL STR	0	23396(5)	7.725753E+03	2.634212E+02	1.000E+01	2.000E+03	0.000E+00	1.000E+01	2.338E+06	2.680E+02
PSDF	EL STR	0	23396(7)	4.545536E+02	3.124816E+02	1.000E+01	2.000E+03	0.000E+00	1.000E+01	6.961E+03	2.680E+02
PSDF	EL STR	0	22530(3)	7.766529E+02	3.770301E+02	1.000E+01	2.000E+03	0.000E+00	1.000E+01	1.089E+04	2.700E+02
PSDF	EL STR	0	22530(5)	2.982149E+02	4.355927E+02	1.000E+01	2.000E+03	0.000E+00	1.000E+01	1.046E+03	4.740E+02
PSDF	EL STR	0	22530(7)	3.939085E+02	4.449400E+02	1.000E+01	2.000E+03	0.000E+00	1.000E+01	1.896E+03	4.980E+02

Z AXIS PSD RESPONSE

X Y - O U T P U T S U M M A R Y (A U T O O R P S D F)

PLOT TYPE	CURVE TYPE	FRAME NO.	CURVE ID.	RMS VALUE	NO. POSITIVE CROSSINGS	XMIN FOR ALL DATA	XMAX FOR ALL DATA	YMIN FOR ALL DATA	X FOR YMIN	YMAX FOR ALL DATA	X FOR* YMAX
PSDF	EL STR	0	22581(3)	3.043445E+02	3.782523E+02	1.000E+01	2.000E+03	0.000E+00	1.000E+01	1.652E+03	2.680E+02
PSDF	EL STR	0	22581(5)	1.195880E+02	3.437901E+02	1.000E+01	2.000E+03	0.000E+00	1.000E+01	4.498E+02	2.680E+02
PSDF	EL STR	0	22581(7)	1.122200E+02	3.630271E+02	1.000E+01	2.000E+03	0.000E+00	1.000E+01	1.335E+02	1.028E+02
PSDF	EL STR	0	22535(3)	4.215575E+02	3.636851E+02	1.000E+01	2.000E+03	0.000E+00	1.000E+01	2.859E+03	3.920E+02
PSDF	EL STR	0	22535(5)	2.324859E+02	4.256222E+02	1.000E+01	2.000E+03	0.000E+00	1.000E+01	1.181E+03	4.060E+02
PSDF	EL STR	0	22535(7)	3.989055E+02	3.903064E+02	1.000E+01	2.000E+03	0.000E+00	1.000E+01	1.536E+03	3.140E+02
PSDF	EL STR	0	22536(3)	7.992012E+02	3.741868E+02	1.000E+01	2.000E+03	0.000E+00	1.000E+01	9.943E+03	4.080E+02
PSDF	EL STR	0	22536(5)	3.646313E+02	3.922134E+02	1.000E+01	2.000E+03	0.000E+00	1.000E+01	1.860E+03	4.060E+02
PSDF	EL STR	0	22536(7)	3.908807E+02	4.407272E+02	1.000E+01	2.000E+03	0.000E+00	1.000E+01	1.578E+03	4.980E+02
PSDF	EL STR	0	22580(3)	7.367564E+02	4.348143E+02	1.000E+01	2.000E+03	0.000E+00	1.000E+01	8.472E+03	1.028E+02
PSDF	EL STR	0	22580(5)	1.312700E+02	4.562714E+02	1.000E+01	2.000E+03	0.000E+00	1.000E+01	2.215E+02	4.740E+02
PSDF	EL STR	0	22580(7)	1.950077E+02	3.259933E+02	1.000E+01	2.000E+03	0.000E+00	1.000E+01	5.601E+02	1.028E+02
PSDF	EL STR	0	22541(3)	3.074286E+02	3.697535E+02	1.000E+01	2.000E+03	0.000E+00	1.000E+01	1.583E+03	1.028E+02
PSDF	EL STR	0	22541(5)	2.946238E+02	4.195872E+02	1.000E+01	2.000E+03	0.000E+00	1.000E+01	2.802E+03	4.080E+02
PSDF	EL STR	0	22541(7)	4.556171E+02	3.598858E+02	1.000E+01	2.000E+03	0.000E+00	1.000E+01	2.448E+03	3.140E+02
PSDF	EL STR	0	22542(3)	4.271888E+02	3.635379E+02	1.000E+01	2.000E+03	0.000E+00	1.000E+01	3.322E+03	1.028E+02
PSDF	EL STR	0	22542(5)	2.759105E+02	3.150742E+02	1.000E+01	2.000E+03	0.000E+00	1.000E+01	2.210E+03	2.680E+02
PSDF	EL STR	0	22542(7)	3.714773E+02	3.531546E+02	1.000E+01	2.000E+03	0.000E+00	1.000E+01	1.937E+03	3.900E+02
PSDF	EL STR	0	22579(3)	5.980604E+02	3.701817E+02	1.000E+01	2.000E+03	0.000E+00	1.000E+01	2.766E+03	2.840E+02
PSDF	EL STR	0	22579(5)	7.944603E+01	4.646856E+02	1.000E+01	2.000E+03	0.000E+00	1.000E+01	9.239E+01	4.980E+02
PSDF	EL STR	0	22579(7)	1.554200E+02	4.099842E+02	1.000E+01	2.000E+03	0.000E+00	1.000E+01	3.256E+02	1.028E+02
PSDF	EL STR	0	22593(3)	7.665728E+02	3.614485E+02	1.000E+01	2.000E+03	0.000E+00	1.000E+01	9.019E+03	1.028E+02
PSDF	EL STR	0	22593(5)	3.020719E+01	4.216726E+02	1.000E+01	2.000E+03	0.000E+00	1.000E+01	1.172E+01	4.120E+02
PSDF	EL STR	0	22593(7)	1.737824E+02	4.194130E+02	1.000E+01	2.000E+03	0.000E+00	1.000E+01	8.300E+02	3.920E+02

Z AXIS PSD RESPONSE

X Y - O U T P U T S U M M A R Y (A U T O O R P S D F)

PLOT TYPE	CURVE TYPE	FRAME NO.	CURVE ID.	RMS VALUE	NO. POSITIVE CROSSINGS	XMIN FOR ALL DATA	XMAX FOR ALL DATA	YMIN FOR ALL DATA	X FOR YMIN	YMAX FOR ALL DATA	X FOR* YMAX
PSDF	EL STR	0	22594(3)	9.719345E+02	3.776933E+02	1.000E+01	2.000E+03	0.000E+00	1.000E+01	1.103E+04	1.028E+02
PSDF	EL STR	0	22594(5)	1.805357E+02	4.193577E+02	1.000E+01	2.000E+03	0.000E+00	1.000E+01	3.394E+02	4.120E+02
PSDF	EL STR	0	22594(7)	1.615537E+02	4.348907E+02	1.000E+01	2.000E+03	0.000E+00	1.000E+01	4.637E+02	3.920E+02
PSDF	EL STR	0	22547(3)	1.827928E+02	3.747637E+02	1.000E+01	2.000E+03	0.000E+00	1.000E+01	7.785E+02	4.080E+02
PSDF	EL STR	0	22547(5)	3.267216E+02	3.991662E+02	1.000E+01	2.000E+03	0.000E+00	1.000E+01	3.102E+03	4.080E+02
PSDF	EL STR	0	22547(7)	3.752422E+02	3.705169E+02	1.000E+01	2.000E+03	0.000E+00	1.000E+01	1.923E+03	3.900E+02
PSDF	EL STR	0	22548(3)	1.567285E+02	4.038386E+02	1.000E+01	2.000E+03	0.000E+00	1.000E+01	3.970E+02	4.100E+02
PSDF	EL STR	0	22548(5)	2.474066E+02	3.811844E+02	1.000E+01	2.000E+03	0.000E+00	1.000E+01	9.173E+02	2.680E+02
PSDF	EL STR	0	22548(7)	3.919494E+02	3.461987E+02	1.000E+01	2.000E+03	0.000E+00	1.000E+01	1.819E+03	2.820E+02
PSDF	EL STR	0	22584(3)	5.584262E+01	3.879226E+02	1.000E+01	2.000E+03	0.000E+00	1.000E+01	4.307E+01	2.820E+02
PSDF	EL STR	0	22584(5)	4.696516E+02	4.473601E+02	1.000E+01	2.000E+03	0.000E+00	1.000E+01	3.190E+03	4.980E+02
PSDF	EL STR	0	22584(7)	1.257356E+02	2.933513E+02	1.000E+01	2.000E+03	0.000E+00	1.000E+01	2.166E+02	2.840E+02
PSDF	EL STR	0	22587(3)	1.026046E+02	3.578295E+02	1.000E+01	2.000E+03	0.000E+00	1.000E+01	1.820E+02	2.820E+02
PSDF	EL STR	0	22587(5)	1.992095E+02	4.177775E+02	1.000E+01	2.000E+03	0.000E+00	1.000E+01	4.378E+02	4.980E+02
PSDF	EL STR	0	22587(7)	1.101690E+02	3.381947E+02	1.000E+01	2.000E+03	0.000E+00	1.000E+01	2.522E+02	2.820E+02
PSDF	EL STR	0	22588(3)	2.167759E+02	3.611574E+02	1.000E+01	2.000E+03	0.000E+00	1.000E+01	7.743E+02	2.820E+02
PSDF	EL STR	0	22588(5)	1.231457E+02	3.880654E+02	1.000E+01	2.000E+03	0.000E+00	1.000E+01	2.180E+02	3.920E+02
PSDF	EL STR	0	22588(7)	3.424908E+02	3.710369E+02	1.000E+01	2.000E+03	0.000E+00	1.000E+01	1.779E+03	2.820E+02
PSDF	EL STR	0	22605(3)	2.227831E+02	3.847314E+02	1.000E+01	2.000E+03	0.000E+00	1.000E+01	7.502E+02	2.680E+02
PSDF	EL STR	0	22605(5)	1.100582E+01	4.114109E+02	1.000E+01	2.000E+03	0.000E+00	1.000E+01	2.128E+00	2.840E+02
PSDF	EL STR	0	22605(7)	3.810025E+01	3.686052E+02	1.000E+01	2.000E+03	0.000E+00	1.000E+01	3.433E+01	2.680E+02
PSDF	EL STR	0	22628(3)	2.349034E+02	3.973724E+02	1.000E+01	2.000E+03	0.000E+00	1.000E+01	7.178E+02	2.680E+02
PSDF	EL STR	0	22628(5)	1.507956E+01	4.355168E+02	1.000E+01	2.000E+03	0.000E+00	1.000E+01	3.658E+00	2.700E+02
PSDF	EL STR	0	22628(7)	6.466762E+01	3.562579E+02	1.000E+01	2.000E+03	0.000E+00	1.000E+01	7.920E+01	2.680E+02

Z AXIS PSD RESPONSE

X Y - O U T P U T S U M M A R Y (A U T O O R P S D F)

PLOT TYPE	CURVE TYPE	FRAME NO.	CURVE ID.	RMS VALUE	NO. POSITIVE CROSSINGS	XMIN FOR ALL DATA	XMAX FOR ALL DATA	YMIN FOR ALL DATA	X FOR YMIN	YMAX FOR ALL DATA	X FOR* YMAX
PSDF	EL STR	0	22637(3)	1.921864E+02	3.849778E+02	1.000E+01	2.000E+03	0.000E+00	1.000E+01	3.720E+02	2.660E+02
PSDF	EL STR	0	22637(5)	1.133410E+02	3.792359E+02	1.000E+01	2.000E+03	0.000E+00	1.000E+01	1.339E+02	2.660E+02
PSDF	EL STR	0	22637(7)	7.791490E+01	4.153513E+02	1.000E+01	2.000E+03	0.000E+00	1.000E+01	8.593E+01	4.760E+02
PSDF	EL STR	0	22638(3)	1.200987E+02	4.107668E+02	1.000E+01	2.000E+03	0.000E+00	1.000E+01	1.819E+02	3.900E+02
PSDF	EL STR	0	22638(5)	1.251798E+02	4.006447E+02	1.000E+01	2.000E+03	0.000E+00	1.000E+01	1.669E+02	3.920E+02
PSDF	EL STR	0	22638(7)	2.898542E+02	3.898074E+02	1.000E+01	2.000E+03	0.000E+00	1.000E+01	8.337E+02	3.920E+02
PSDF	EL STR	0	22705(3)	1.537889E+02	2.806941E+02	1.000E+01	2.000E+03	0.000E+00	1.000E+01	4.374E+02	2.660E+02
PSDF	EL STR	0	22705(5)	5.963635E+01	3.836047E+02	1.000E+01	2.000E+03	0.000E+00	1.000E+01	6.753E+01	1.480E+02
PSDF	EL STR	0	22705(7)	7.894337E+01	2.248921E+02	1.000E+01	2.000E+03	0.000E+00	1.000E+01	4.508E+02	1.410E+02
PSDF	EL STR	0	22706(3)	1.764590E+02	3.874964E+02	1.000E+01	2.000E+03	0.000E+00	1.000E+01	4.882E+02	2.660E+02
PSDF	EL STR	0	22706(5)	1.024869E+02	3.757645E+02	1.000E+01	2.000E+03	0.000E+00	1.000E+01	3.192E+02	1.420E+02
PSDF	EL STR	0	22706(7)	3.468461E+02	2.120271E+02	1.000E+01	2.000E+03	0.000E+00	1.000E+01	1.096E+04	1.410E+02
PSDF	EL STR	0	22654(3)	3.499516E+02	2.897905E+02	1.000E+01	2.000E+03	0.000E+00	1.000E+01	3.651E+03	1.400E+02
PSDF	EL STR	0	22654(5)	1.067506E+02	3.163773E+02	1.000E+01	2.000E+03	0.000E+00	1.000E+01	2.900E+02	1.400E+02
PSDF	EL STR	0	22654(7)	1.062055E+02	2.920263E+02	1.000E+01	2.000E+03	0.000E+00	1.000E+01	8.149E+02	1.410E+02
PSDF	EL STR	0	22655(3)	2.360706E+02	3.356407E+02	1.000E+01	2.000E+03	0.000E+00	1.000E+01	1.438E+03	2.680E+02
PSDF	EL STR	0	22655(5)	7.123541E+01	3.705857E+02	1.000E+01	2.000E+03	0.000E+00	1.000E+01	1.245E+02	2.680E+02
PSDF	EL STR	0	22655(7)	8.657279E+01	2.169255E+02	1.000E+01	2.000E+03	0.000E+00	1.000E+01	6.561E+02	1.410E+02
PSDF	EL STR	0	22658(3)	5.672017E+01	3.465607E+02	1.000E+01	2.000E+03	0.000E+00	1.000E+01	1.048E+02	1.410E+02
PSDF	EL STR	0	22658(5)	5.238358E+01	3.393072E+02	1.000E+01	2.000E+03	0.000E+00	1.000E+01	9.842E+01	2.680E+02
PSDF	EL STR	0	22658(7)	4.629791E+01	2.934384E+02	1.000E+01	2.000E+03	0.000E+00	1.000E+01	1.088E+02	1.410E+02
PSDF	EL STR	0	22689(3)	5.504255E+02	3.223988E+02	1.000E+01	2.000E+03	0.000E+00	1.000E+01	1.221E+04	1.400E+02
PSDF	EL STR	0	22689(5)	1.309157E+02	3.687941E+02	1.000E+01	2.000E+03	0.000E+00	1.000E+01	3.173E+02	1.820E+02
PSDF	EL STR	0	22689(7)	4.279186E+02	1.748870E+02	1.000E+01	2.000E+03	0.000E+00	1.000E+01	1.939E+04	1.410E+02

Z AXIS PSD RESPONSE

X Y - O U T P U T S U M M A R Y (A U T O O R P S D F)

PLOT TYPE	CURVE TYPE	FRAME NO.	CURVE ID.	RMS VALUE	NO. POSITIVE CROSSINGS	XMIN FOR ALL DATA	XMAX FOR ALL DATA	YMIN FOR ALL DATA	X FOR YMIN	YMAX FOR ALL DATA	X FOR* YMAX
PSDF	EL STR	0	22688(3)	3.685534E+02	3.192971E+02	1.000E+01	2.000E+03	0.000E+00	1.000E+01	6.617E+03	1.410E+02
PSDF	EL STR	0	22688(5)	1.527302E+02	3.591485E+02	1.000E+01	2.000E+03	0.000E+00	1.000E+01	3.624E+02	1.820E+02
PSDF	EL STR	0	22688(7)	2.105220E+02	3.909664E+02	1.000E+01	2.000E+03	0.000E+00	1.000E+01	2.467E+03	1.410E+02
PSDF	EL STR	0	22687(3)	4.903646E+02	2.976911E+02	1.000E+01	2.000E+03	0.000E+00	1.000E+01	1.176E+04	1.410E+02
PSDF	EL STR	0	22687(5)	6.925457E+01	3.354492E+02	1.000E+01	2.000E+03	0.000E+00	1.000E+01	2.512E+02	1.400E+02
PSDF	EL STR	0	22687(7)	1.894538E+02	2.092948E+02	1.000E+01	2.000E+03	0.000E+00	1.000E+01	3.512E+03	1.410E+02
PSDF	EL STR	0	22702(3)	1.369599E+02	2.774846E+02	1.000E+01	2.000E+03	0.000E+00	1.000E+01	7.864E+02	1.410E+02
PSDF	EL STR	0	22702(5)	3.743061E+01	3.982751E+02	1.000E+01	2.000E+03	0.000E+00	1.000E+01	3.190E+01	1.400E+02
PSDF	EL STR	0	22702(7)	1.207702E+02	2.199025E+02	1.000E+01	2.000E+03	0.000E+00	1.000E+01	9.723E+02	1.410E+02
PSDF	EL STR	0	22407(3)	6.995103E+02	2.751921E+02	1.000E+01	2.000E+03	0.000E+00	1.000E+01	3.816E+04	1.410E+02
PSDF	EL STR	0	22407(5)	2.454128E+02	4.231918E+02	1.000E+01	2.000E+03	0.000E+00	1.000E+01	2.394E+03	1.410E+02
PSDF	EL STR	0	22407(7)	1.838675E+02	4.385027E+02	1.000E+01	2.000E+03	0.000E+00	1.000E+01	3.850E+02	3.840E+02
PSDF	EL STR	0	22686(3)	6.933492E+02	3.743391E+02	1.000E+01	2.000E+03	0.000E+00	1.000E+01	1.024E+04	1.820E+02
PSDF	EL STR	0	22686(5)	1.757247E+02	4.818788E+02	1.000E+01	2.000E+03	0.000E+00	1.000E+01	3.805E+02	5.340E+02
PSDF	EL STR	0	22686(7)	3.215511E+02	5.132075E+02	1.000E+01	2.000E+03	0.000E+00	1.000E+01	1.638E+03	5.320E+02
PSDF	EL STR	0	22372(3)	2.999276E+02	2.166939E+02	1.000E+01	2.000E+03	0.000E+00	1.000E+01	8.083E+03	1.410E+02
PSDF	EL STR	0	22372(5)	2.666497E+02	3.692621E+02	1.000E+01	2.000E+03	0.000E+00	1.000E+01	3.814E+03	1.410E+02
PSDF	EL STR	0	22372(7)	3.007853E+02	4.126302E+02	1.000E+01	2.000E+03	0.000E+00	1.000E+01	1.798E+03	1.410E+02
PSDF	EL STR	0	22371(3)	4.872704E+02	2.665053E+02	1.000E+01	2.000E+03	0.000E+00	1.000E+01	1.924E+04	1.410E+02
PSDF	EL STR	0	22371(5)	2.698044E+02	3.525749E+02	1.000E+01	2.000E+03	0.000E+00	1.000E+01	2.554E+03	1.410E+02
PSDF	EL STR	0	22371(7)	2.172394E+02	4.126129E+02	1.000E+01	2.000E+03	0.000E+00	1.000E+01	5.592E+02	1.800E+02
PSDF	EL STR	0	22351(3)	2.207322E+02	5.200250E+02	1.000E+01	2.000E+03	0.000E+00	1.000E+01	6.675E+02	5.340E+02
PSDF	EL STR	0	22351(5)	2.699284E+02	5.357992E+02	1.000E+01	2.000E+03	0.000E+00	1.000E+01	1.204E+03	5.340E+02
PSDF	EL STR	0	22351(7)	1.552486E+02	4.509170E+02	1.000E+01	2.000E+03	0.000E+00	1.000E+01	2.274E+02	5.340E+02

Z AXIS PSD RESPONSE

X Y - O U T P U T S U M M A R Y (A U T O O R P S D F)

PLOT TYPE	CURVE TYPE	FRAME NO.	CURVE ID.	RMS VALUE	NO. POSITIVE CROSSINGS	XMIN FOR ALL DATA	XMAX FOR ALL DATA	YMIN FOR ALL DATA	X FOR YMIN	YMAX FOR ALL DATA	X FOR* YMAX
PSDF	EL STR	0	22379(3)	2.858902E+02	3.298094E+02	1.000E+01	2.000E+03	0.000E+00	1.000E+01	2.505E+03	2.680E+02
PSDF	EL STR	0	22379(5)	1.848599E+02	3.556458E+02	1.000E+01	2.000E+03	0.000E+00	1.000E+01	7.161E+02	1.400E+02
PSDF	EL STR	0	22379(7)	1.085558E+02	3.951233E+02	1.000E+01	2.000E+03	0.000E+00	1.000E+01	2.134E+02	1.028E+02

Z AXIS PSD RESPONSE
* * * * D B D I C T P R I N T * * * * SUBDMAP = PRTSUM , DMAP STATEMENT NO. 5

* * * * A N A L Y S I S S U M M A R Y T A B L E * * * *

SEID	PEID	PROJ	VERS	APRCH	SEMG	SEMR	SEKR	SELG	SELR	MODES	DYNRED	SOLLIN	PVALID	SOLNL	LOOPID	DESIGN CYCLE	SENSITIVITY
0	0	1	6	' '	T	T	T	T	T	T	F	T	0	F	-1	0	F

SEID = SUPERELEMENT ID.
PEID = PRIMARY SUPERELEMENT ID OF IMAGE SUPERELEMENT.
PROJ = PROJECT ID NUMBER.
VERS = VERSION ID.
APRCH = BLANK FOR STRUCTURAL ANALYSIS. HEAT FOR HEAT TRANSFER ANALYSIS.
SEMG = STIFFNESS AND MASS MATRIX GENERATION STEP.
SEMR = MASS MATRIX REDUCTION STEP (INCLUDES EIGENVALUE SOLUTION FOR MODES).
SEKR = STIFFNESS MATRIX REDUCTION STEP.
SELG = LOAD MATRIX GENERATION STEP.
SELR = LOAD MATRIX REDUCTION STEP.
MODES = T (TRUE) IF NORMAL MODES OR BUCKLING MODES CALCULATED.
DYNRED = T (TRUE) MEANS GENERALIZED DYNAMIC AND/OR COMPONENT MODE REDUCTION PERFORMED.
SOLLIN = T (TRUE) IF LINEAR SOLUTION EXISTS IN DATABASE.
PVALID = P-DISTRIBUTION ID OF P-VALUE FOR P-ELEMENTS
LOOPID = THE LAST LOOPID VALUE USED IN THE NONLINEAR ANALYSIS. USEFUL FOR RESTARTS.
SOLNL = T (TRUE) IF NONLINEAR SOLUTION EXISTS IN DATABASE.
DESIGN CYCLE = THE LAST DESIGN CYCLE (ONLY VALID IN OPTIMIZATION).
SENSITIVITY = SENSITIVITY MATRIX GENERATION FLAG.

Z AXIS PSD RESPONSE

X Y - O U T P U T S U M M A R Y (A U T O O R P S D F)

PLOT TYPE	CURVE TYPE	FRAME NO.	CURVE ID.	RMS VALUE	NO. POSITIVE CROSSINGS	XMIN FOR ALL DATA	XMAX FOR ALL DATA	YMIN FOR ALL DATA	X FOR YMIN	YMAX FOR ALL DATA	X FOR* YMAX
PSDF	EL FOR	0	22894(2)	2.135753E+02	3.358331E+02	1.000E+01	2.000E+03	0.000E+00	1.000E+01	1.565E+03	2.680E+02
PSDF	EL FOR	0	22895(2)	1.347813E+02	3.281137E+02	1.000E+01	2.000E+03	0.000E+00	1.000E+01	3.949E+02	2.680E+02
PSDF	EL FOR	0	22896(2)	3.124487E+02	3.561459E+02	1.000E+01	2.000E+03	0.000E+00	1.000E+01	1.715E+03	2.820E+02
PSDF	EL FOR	0	22897(2)	2.165643E+02	3.869915E+02	1.000E+01	2.000E+03	0.000E+00	1.000E+01	4.685E+02	3.900E+02
PSDF	EL FOR	0	22898(2)	8.640390E+01	3.779646E+02	1.000E+01	2.000E+03	0.000E+00	1.000E+01	9.900E+01	2.660E+02
PSDF	EL FOR	0	22899(2)	8.681789E+01	3.547558E+02	1.000E+01	2.000E+03	0.000E+00	1.000E+01	1.594E+02	2.680E+02
PSDF	EL FOR	0	22900(2)	1.067917E+02	3.393521E+02	1.000E+01	2.000E+03	0.000E+00	1.000E+01	3.216E+02	2.680E+02
PSDF	EL FOR	0	22901(2)	1.437983E+02	3.341535E+02	1.000E+01	2.000E+03	0.000E+00	1.000E+01	4.544E+02	2.680E+02
PSDF	EL FOR	0	22902(2)	1.509745E+02	3.242984E+02	1.000E+01	2.000E+03	0.000E+00	1.000E+01	7.231E+02	2.680E+02
PSDF	EL FOR	0	22903(2)	1.004306E+02	4.186601E+02	1.000E+01	2.000E+03	0.000E+00	1.000E+01	2.066E+02	2.760E+02
PSDF	EL FOR	0	22904(2)	1.098612E+02	4.052613E+02	1.000E+01	2.000E+03	0.000E+00	1.000E+01	2.197E+02	1.470E+02

Z AXIS PSD RESPONSE
* * * * D B D I C T P R I N T * * * * SUBDMAP = PRTSUM , DMAP STATEMENT NO. 5

* * * * A N A L Y S I S S U M M A R Y T A B L E * * * *

SEID	PEID	PROJ	VERS	APRCH	SEMG	SEMR	SEKR	SELG	SELR	MODES	DYNRED	SOLLIN	PVALID	SOLNL	LOOPID	DESIGN CYCLE	SENSITIVITY
0	0	1	9	' '	T	T	T	T	T	T	F	T	0	F	-1	0	F

SEID = SUPERELEMENT ID.
PEID = PRIMARY SUPERELEMENT ID OF IMAGE SUPERELEMENT.
PROJ = PROJECT ID NUMBER.
VERS = VERSION ID.
APRCH = BLANK FOR STRUCTURAL ANALYSIS. HEAT FOR HEAT TRANSFER ANALYSIS.
SEMG = STIFFNESS AND MASS MATRIX GENERATION STEP.
SEMR = MASS MATRIX REDUCTION STEP (INCLUDES EIGENVALUE SOLUTION FOR MODES).
SEKR = STIFFNESS MATRIX REDUCTION STEP.
SELG = LOAD MATRIX GENERATION STEP.
SELR = LOAD MATRIX REDUCTION STEP.
MODES = T (TRUE) IF NORMAL MODES OR BUCKLING MODES CALCULATED.
DYNRED = T (TRUE) MEANS GENERALIZED DYNAMIC AND/OR COMPONENT MODE REDUCTION PERFORMED.
SOLLIN = T (TRUE) IF LINEAR SOLUTION EXISTS IN DATABASE.
PVALID = P-DISTRIBUTION ID OF P-VALUE FOR P-ELEMENTS
LOOPID = THE LAST LOOPID VALUE USED IN THE NONLINEAR ANALYSIS. USEFUL FOR RESTARTS.
SOLNL = T (TRUE) IF NONLINEAR SOLUTION EXISTS IN DATABASE.
DESIGN CYCLE = THE LAST DESIGN CYCLE (ONLY VALID IN OPTIMIZATION).
SENSITIVITY = SENSITIVITY MATRIX GENERATION FLAG.

RF SHELF SUPPORT, SIDE PANEL (DWG 1333379)

A peak stress of 34,752 psi (Table VII) was found at element 23544 for the X axis random vibration direction. This stress level results in a negative yield margin of safety of 0.17. The stress is caused by the lump masses that represent the power control/monitor assembly. The peak acceleration experience at grid point 23617 is 221 g.

The position of the assembly assumed for the analysis is shown in Figure C1. The current position selected by Design Engineering is shown in Figure C2. To analyze this new position, a refined model of the panel was created. Figure C3 shows element mesh generated. The locations of the new mounting holes are shown in Figure C4.

To analyze this new model, the peak accelerations and lump mass values were used to calculate grid point forces at the new mounting locations. The resulting forces are shown in Figure C5. The analysis was performed using the MSC/NASTRAN static solution.

The resulting stress contour plots for the maximum principal stress are shown in Figures C6 and C7. The wall thickness in the pockets was the original 0.050 inch. A peak stress of 29,592 psi is shown at the left-hand pocket. The yield margin of safety is a negative 0.03. This is smaller than the random vibration result, but still is negative. The wall thickness at the three pockets which show peak stresses was increased 0.060 inch. The resulting stress contour plots for this change are shown in Figures C8 and C9. The maximum principal stress decreased to 21,225 psi. The yield margin of safety is a positive 0.36. This result is posted in Table II of the results section of the report.

This panel will be manufactured with all four lower pocket wall thicknesses increased to 0.060 inch.

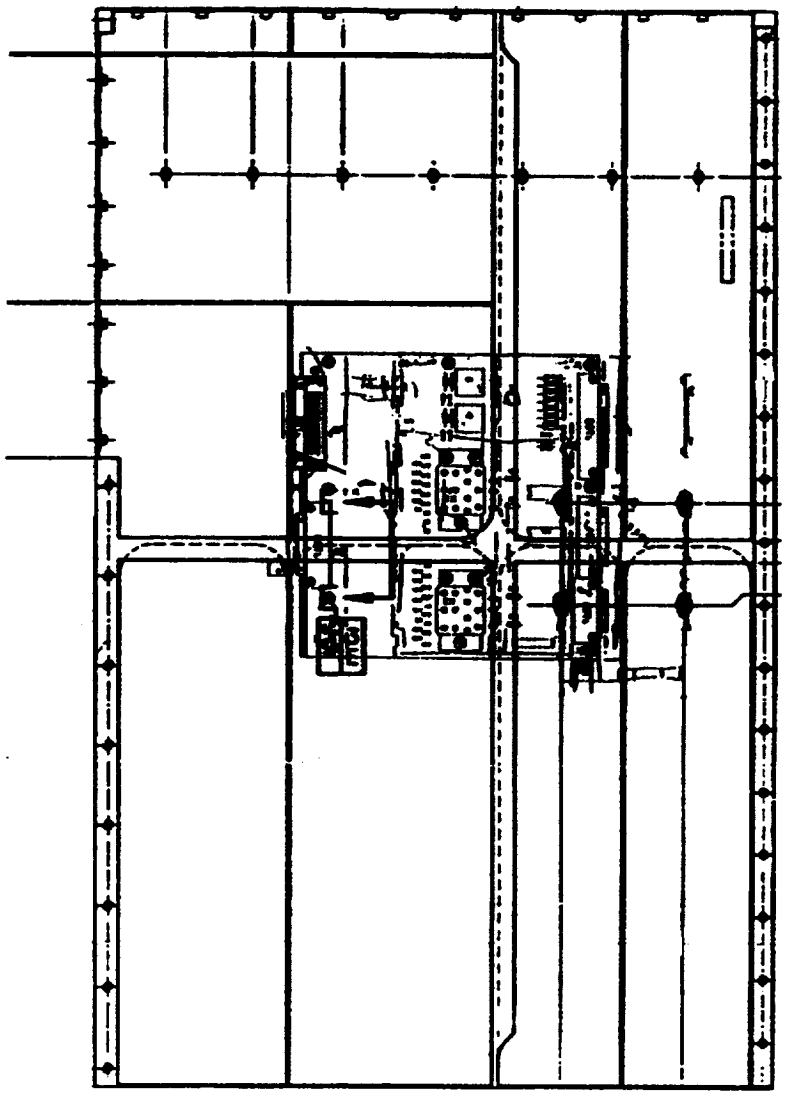

296-1136M

Figure C1 Power Control/Monitor Assembly Position Used in Analysis

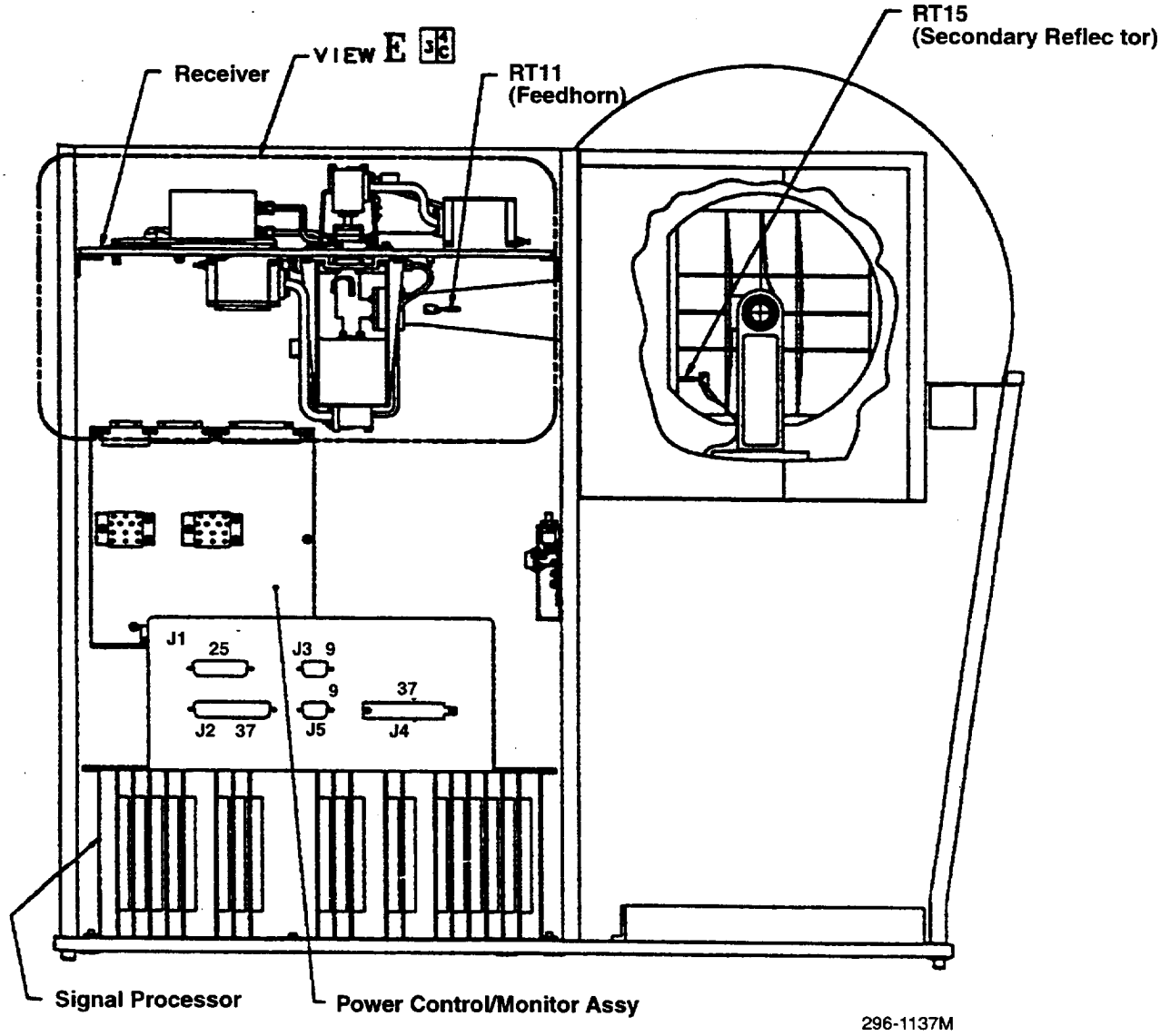

Figure C2 Actual Position, Power C/M Assembly

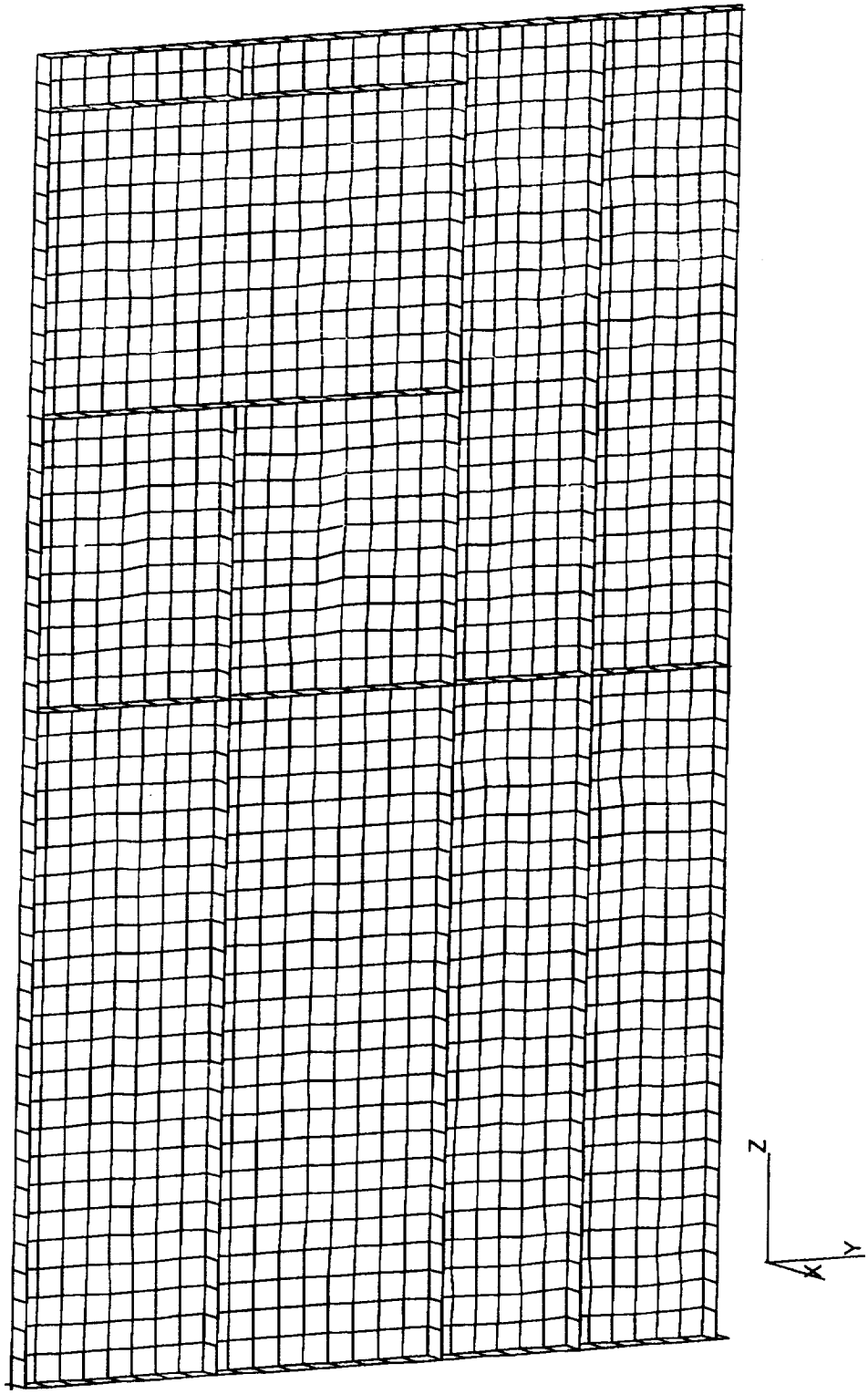

Figure C3 Side Panel Refined Model

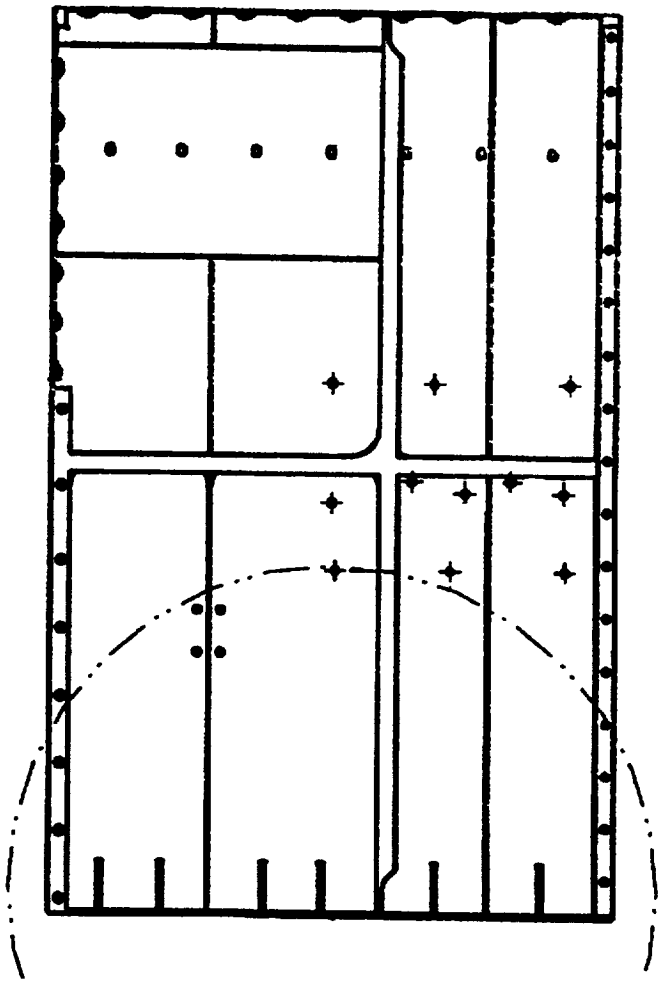

296-1138M

Figure C4 Power Control/Monitor Assembly Mounting Holes

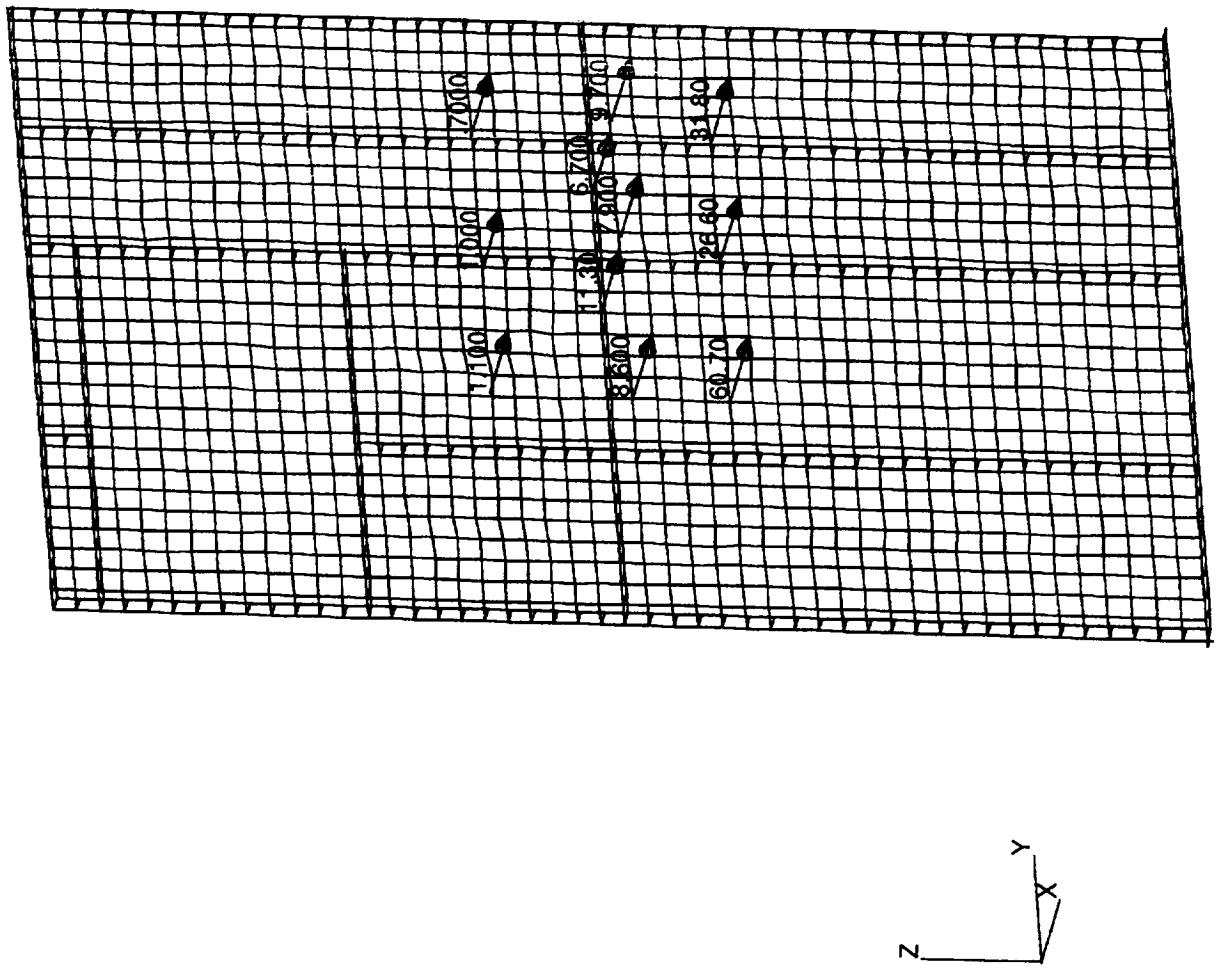

Figure C5 Grid Point Forces

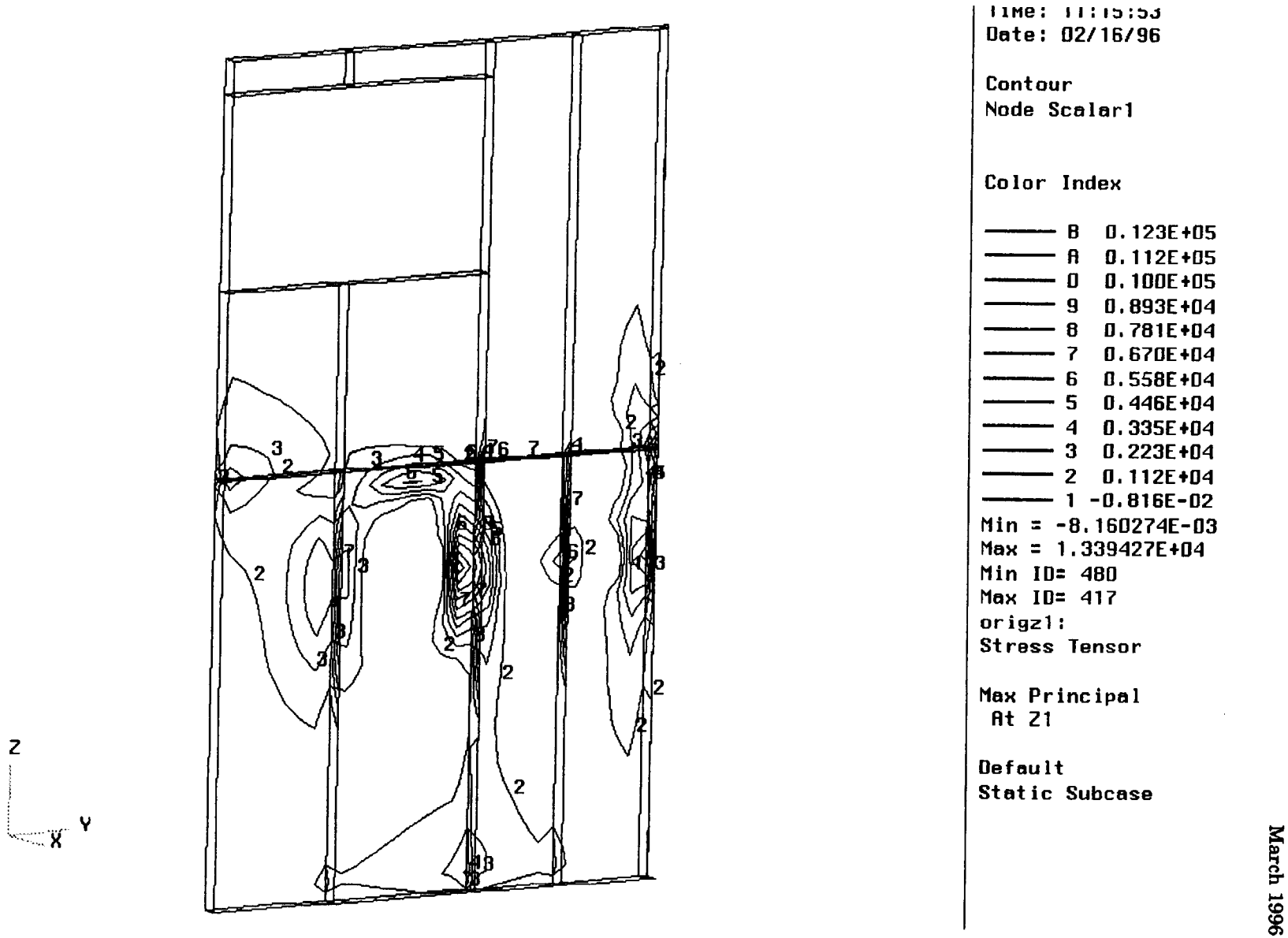

Figure C6 Max Principal Stress Surface Z1

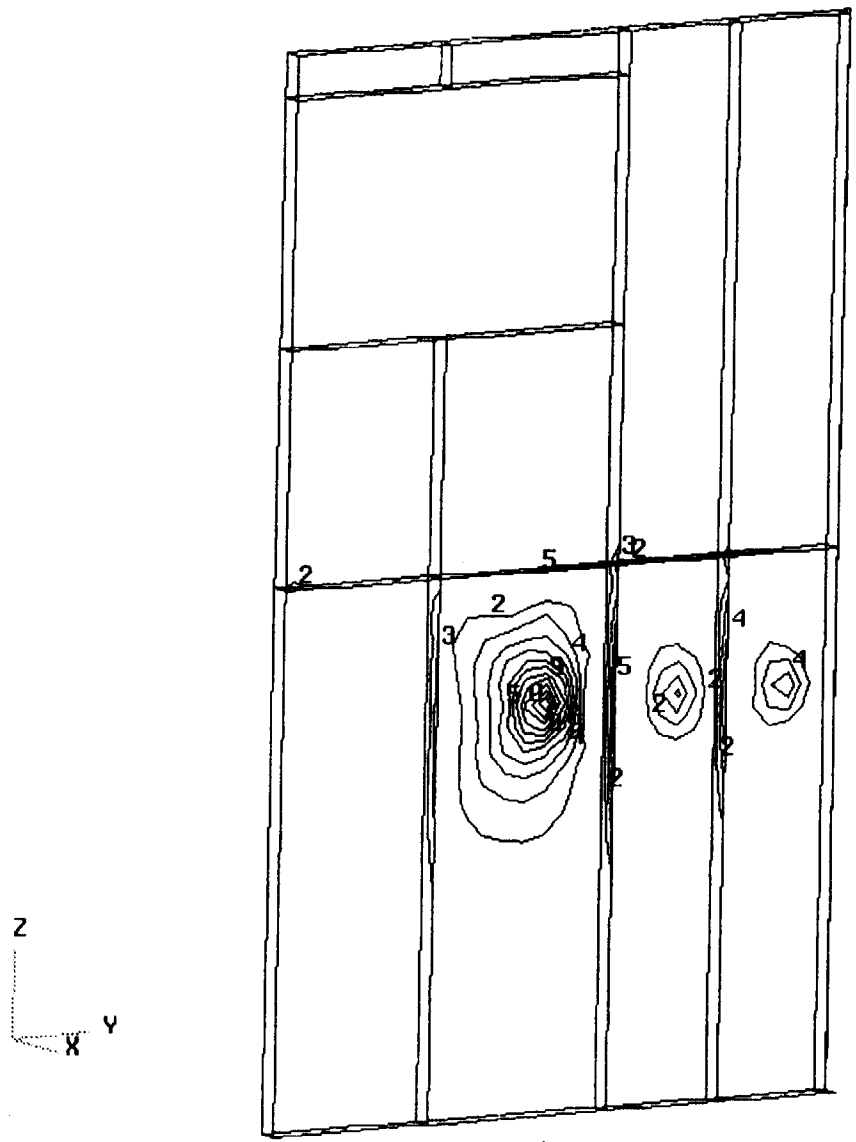

Time: 11:19:13
Date: 02/16/96

Contour
Node Scalar1

Color Index

B 0.271E+05
A 0.247E+05
0 0.222E+05
9 0.197E+05
8 0.173E+05
7 0.148E+05
6 0.123E+05
5 0.986E+04
4 0.740E+04
3 0.493E+04
2 0.247E+04
1 -0.198E-01
Min = -1.980214E-02
Max = 2.959186E+04
Min ID= 317
Max ID= 500
origz2:
Stress Tensor

Max Principal
At Z2

Default
Static Subcase

Figure C7 Max Principal Stress Surface Z2

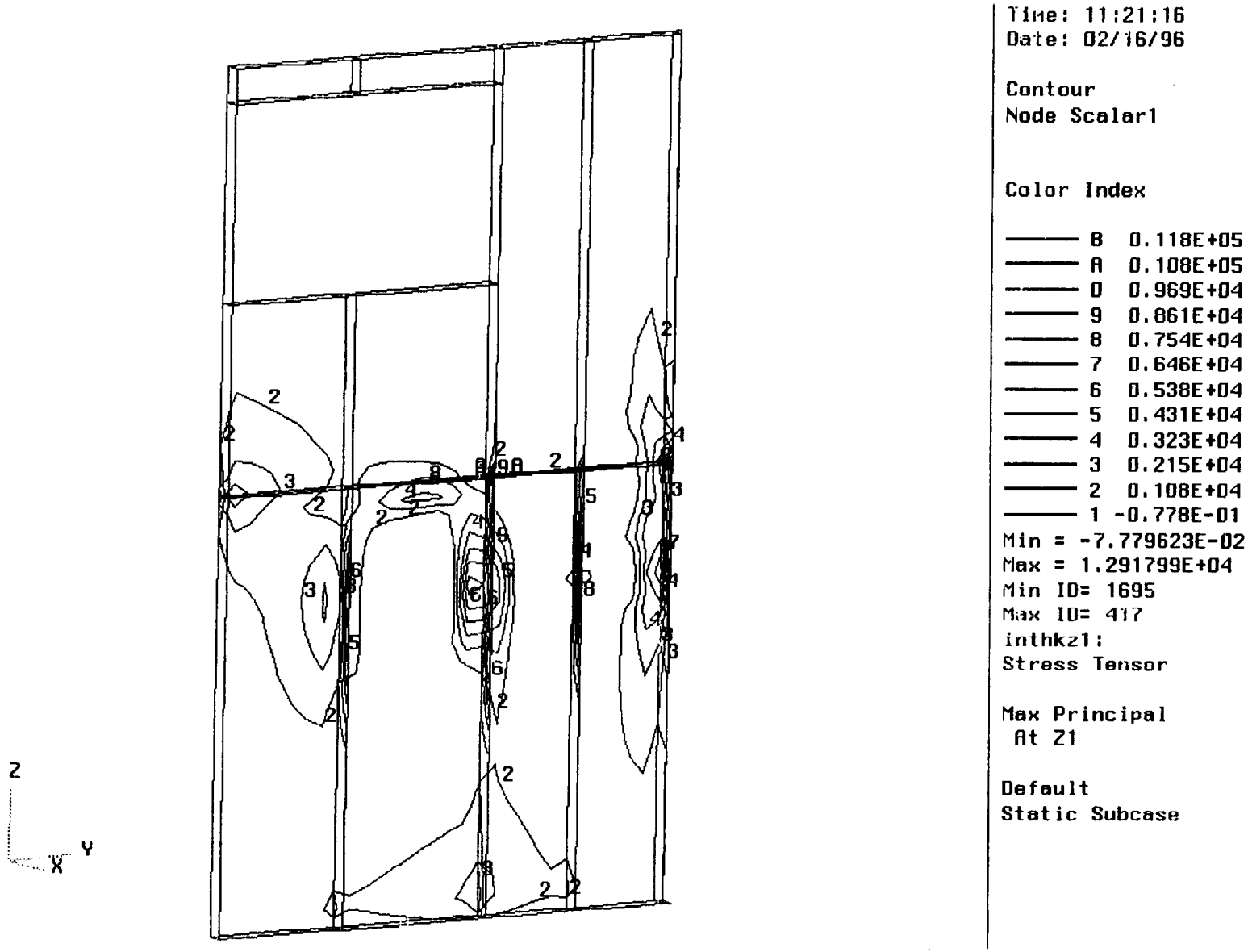

Figure C8 Max Principal Stress Surface Z1

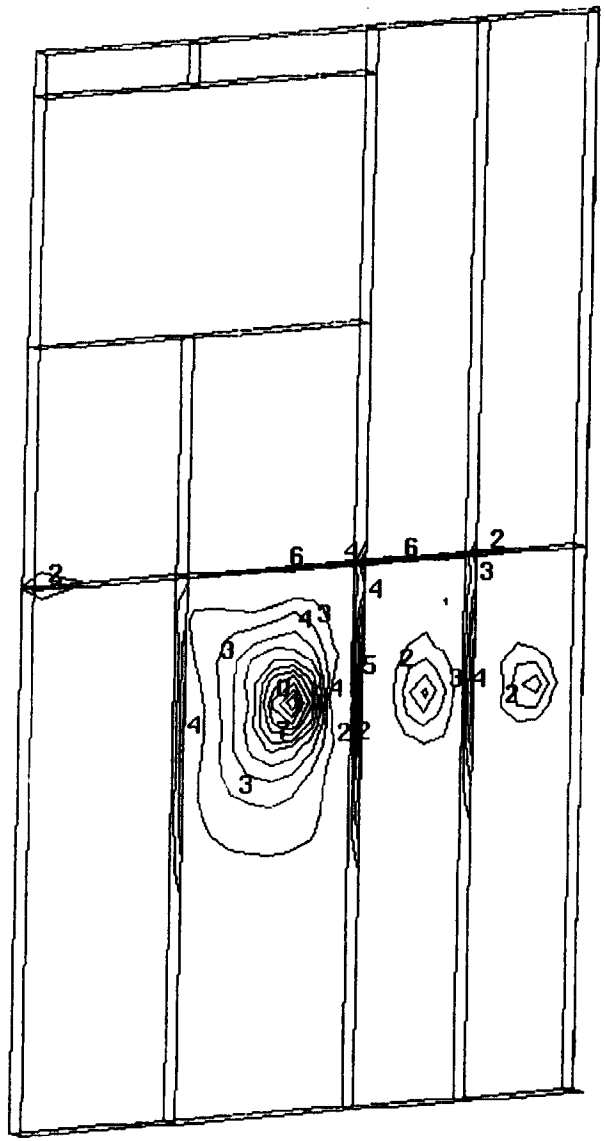

Time: 11:24:41
Date: 02/16/96

Contour
Node Scalar1

Color Index

B	0.195E+05
A	0.177E+05
0	0.159E+05
9	0.142E+05
8	0.124E+05
7	0.106E+05
6	0.884E+04
5	0.708E+04
4	0.531E+04
3	0.354E+04
2	0.177E+04
1	-0.219E-01

Min = -2.193690E-02
Max = 2.122529E+04
Min ID= 1544
Max ID= 500
inthkz2:
Stress Tensor

Max Principal
At Z2

Default
Static Subcase

Z
Y
X

Figure C9 Max Principal Stress Surface Z2

NASA
National Aeronautics and Space Administration

Report Documentation Page

1. Report No. ---	2. Government Accession No. ---	3. Recipient's Catalog No. ---
4. Title and Subtitle: Integrated Advanced Microwave Sounding Unit-A (AMSU-A), METSAT Stress Analysis Report, A2 Module		5. Report Date: March 1996
		6. Performing Organization Code: ---
7. Author(s): B. Morris		8. Performing Organization Report No. 10787
		10. Work Unit No. ---
9. Performing Organization Name and Address: Aerojet, 1100 W. Hollyvale, Azusa, CA 91702		11. Contract or Grant No. NAS 5-32314
12. Sponsoring Agency Name and Address: NASA, Goddard Space Flight Center, Greenbelt, Maryland 20771		13. Type of Report and Period Covered: Final
		14. Sponsoring Agency Code: ---
15. Supplementary Notes: ---		

16. ABSTRACT (*Maximum 200 words*)

This is the Stress Analysis Report for the METSAT/Advanced Microwave Sounding Unit-A (AMSU-A), A2 Module.

17. Key Words (Suggested by Author(s)): EOS, Microwave System	18. Distribution Statement: Unclassified — Unlimited

19. Security Classif. (of this report)	20. Security Classif. (of this page)	21. No. of pages	22. Price
Unclassified	Unclassified	418	---

NASA FORM 1626 OCT 86

PREPARATION OF THE REPORT DOCUMENTATION PAGE

The last page of a report facing the third cover is the Report Documentation Page, RDP. Information presented on this page is used in announcing and cataloging reports as well as preparing the cover and title page. Thus, it is important that the information be correct. Instructions for filing in each block of the form are as follows:

Block 1. Report No. NASA report series number, if preassigned.

Block 2. Government Accession No. Leave blank.

Block 3. Recipient's Catalog No.. Reserved for use by each report recipient.

Block 4. Title and Subtitle. Typed in caps and lower case with dash or period separating subtitle from title.

Block 5. Report Date. Approximate month and year the report will be published.

Block 6. Performing Organization Code. Leave blank.

Block 7. Authors. Provide full names exactly as they are to appear on the title page. If applicable, the word editor should follow a name.

Block 8. Performing Organization Report No. NASA installation report control number and, if desired, the non-NASA performing organization report control number.

Block 9. Performing Organization Name and Address. Provide affiliation (NASA program office, NASA installation, or contractor name) of authors.

Block 10. Work Unit No. Provide Research and Technology Objectives and Plants (RTOP) number.

Block 11. Contract or Grant No. Provide when applicable.

Block 12. Sponsoring Agency Name and Address. National Aeronautics and Space Administration, Washington, D.C. 20546-0001. If contractor report, add NASA installation or HQ program office.

Block 13. Type of Report and Period Covered. NASA formal report series; for Contractor Report also list type (interim, final) and period covered when applicable.

Block 14. Sponsoring Agency Code. Leave blank.

Block 15. Supplementary Notes. Information not included elsewhere: affiliation of authors if additional space is required for Block 9, notice of work sponsored by another agency, monitor of contract, information about supplements (file, data tapes, etc.) meeting site and date for presented papers, journal to which an article has been submitted, note of a report made from a thesis, appendix by author other than shown in Block 7.

Block 16. Abstract. The abstract should be informative rather than descriptive and should state the objectives of the investigation, the methods employed (e.g., simulation, experiment, or remote sensing), the results obtained, and the conclusions reached.

Block 17. Key Words. Identifying words or phrases to be used in cataloging the report.

Block 18. Distribution Statement. Indicate whether report is available to public or not. If not to be controlled, use "Unclassified-Unlimited." If controlled availability is required, list the category approved on the Document Availability Authorization Form (see NHB 2200.2, Form FF427). Also specify subject category (see "Table of Contents" in a current issue of STAR) in which report is to be distributed.

Block 19. Security Classification (of the report). Self-explanatory.

Block 20. Security Classification (of this page). Self-explanatory.

Block 21. No. of Pages. Count front matter pages beginning with iii, text pages including internal blank pages, and the RDP, but not the title page or the back of the title page.

Block 22. Price Code. If Block 18 shows "Unclassified-Unlimited," provide the NTIS price code (see "NTIS Price Schedules" in a current issue of STAR) and at the bottom of the form add either "For sale by the National Technical Information Service, Springfield, VA 22161-2171" or "For sale by the Superintendent of Documents, U.S. Government Printing Office, Washington, D.C. 20402-0001," whichever is appropriate.

REPORT DOCUMENTATION PAGE

Form Approved OMB No. 0704-0188

Public reporting burden for this collection of information is estimated to average 1 hour per response, including the time for reviewing instructions, searching existing data sources, gathering and maintaining the data needed, and completing and reviewing the collection information. Send comments regarding this burden estimate or any other aspect of this collection of information, including suggestions for reducing this burden, to Washington Headquarters Services, Directorate for Information Operations and Reports, 1215 Jefferson Davis Highway, Suite 1204, Arlington, VA 22202-4302, and to the Office of Management and Budget, Paperwork Reduction Project (0704-0188). Washington, DC 20503.

1. AGENCY USE ONLY (*Leave blank*)

2. REPORT DATE

3. REPORT TYPE AND DATES COVERED

4. TITLE AND SUBTITLE
Integrated Advanced Microwave Sounding Unit -A (AMSU-A), METSAT Stress Analysis Report, A2 Module

5. FUNDING NUMBERS
NAS 5-32314

6. AUTHOR(S)
B. Morris

7. PERFORMING ORGANIZATION NAME(S) AND ADDRESS(ES)
Aerojet
1100 W. Hollyvale
Azusa, CA 91702

8. PERFORMING ORGANIZATION REPORT NUMBER
CDRL 113
10787
March 1966

9. SPONSORING/MONITORING AGENCY NAME(S) AND ADDRESS(ES)
NASA
Goddard Space Flight Center
Greenbelt, Maryland 20771

10. SPONSORING/MONITORING AGENCY REPORT NUMBER
---

11. SUPPLEMENTARY NOTES

12a. DISTRIBUTION/AVAILABILITY STATEMENT

12b. DISTRIBUTION CODE
---

13. ABSTRACT (*Maximum 200 words*)

This is the Stress Analysis Report for the METSAT/Advanced Microwave Sounding Unit-A (AMSU-A), A2 Module.

14. SUBJECT TERMS
EOS
Microwave System

15. NUMBER OF PAGES
418

16. PRICE CODE
---

17. SECURITY CLASSIFICATION OF REPORT	18. SECURITY CLASSIFICATION OF THIS PAGE	19. SECURITY CLASSIFICATION OF ABSTRACT	20. LIMITATION OF ABSTRACT
Unclassified	Unclassified	Unclassified	SAR

NSN 7540-01-280-5500

Standard Form 298 (Rev. 2-89)
Prescribed by ANSI Std 239-18
298-102

GENERAL INSTRUCTIONS FOR COMPLETING SF 298

The Report Documentation Page (RDP) is used in announcing and cataloging reports. It is important that this information be consistent with the rest of the report, particularly the cover and title page. Instructions for filing in each block of the form follow. It is important to stay within the lines to meet optical scanning requirements.

Block 1. Agency Use Only *(Leave blank)*

Block 2. Report Date. Full publication date including day, month, and year, if available (e.g., 1 Jan 88). Must cite at least the year.

Block 3. Type of Report and Dates Covered. State whether report is interim, final, etc. If applicable, enter inclusive report dates (e.g., 10 Jun 87 - 30 Jun 88).

Block 4. Title and Subtitle. A title is taken from the part of the report that provides the most meaningful and complete information. When a report is prepared in more than one volume, report the primary title, add volume number, and include subtitle for the specific volume. On classified documents enter the title classification in parentheses.

Block 5. Funding Numbers. To include contract and grant numbers; may include program element number(s), project number(s), tasks number(s), and work unit number(s). Use the following labels:

C	-	Contract	PR	-	Project
G	-	Grant	TA	-	Task
PE	-	Program Element	WU	-	Work Unit Accession No.

Block 6. Author(s). Name(s) of person(s) responsible for writing the report, performing the research, or credited with the content of the report. If editor or compiler, this should follow the name(s).

Block 7. Performing Organization Name(s) and Address(es). Self-explanatory.

Block 8. Performing Organization Report Number. Enter the unique alphanumeric report number(s) assigned by the organization performing the report.

Block 9. Sponsoring/Monitoring Agency Name(s) and Address(es) Self-explanatory.

Block 10. Sponsoring/Monitoring Agency Reports Number. (*if known*).

Block 11. Supplementary Notes. Enter information not included elsewhere such as: Prepared in cooperation with ...; Trans. of ...; To be published in ... When a report is revised, include a statement whether the new report supersedes or supplements the older report.

Block 12.a Distribution/Availability Statement. Denotes public availability or limitations. Cite any availability to the public. Enter additional limitations or special markings in all capitals (e.g., NOFORN, REL, ITAR).

DOD - See DoDD 5230.24 "*Distribution Statement on Technical Documents*
DOE - See authorities.
NASA - See Handbook NHB 2200.2.
NTIS - Leave blank.

Block 12.b Distribution Code.

DOD - Leave blank.
DOE - Enter DOE distribution categories from the standard Distribution for Unclassified Scientific and Technical Reports.
NASA - Leave blank.
NTIS - Leave blank.

Block 13. Abstract. Include a brief (*Maximum 200 words*) factual summary of the most significant information contained in the report.

Block 14. Subject Terms. Keywords or phases identifying major subjects in the report.

Block 15. Number of Pages. Enter the total number of pages.

Block 16. Price Code. Enter appropriate price code (*NTIS only*).

Block 17 - 19. Security Classifications. Self-explanatory. Enter U.S. Security Classification in accordance with U.S. Security Regulations (i.e., UNCLASSIFIED). If form contains classified information, stamp classification on the top and bottom of the page.

Block 20. Limitation of Abstract. This block must be completed to assign a limitation to the abstract. Enter either UL (unlimited) or SAR (same as report). An entry in this block is necessary if the abstract is to be limited. If blank, the abstract is assumed to be unlimited.

Standard Form 298 Back (Rev. 2-89)

GENCORP
AEROJET

DOCUMENT APPROVAL SHEET

TITLE	DOCUMENT NUMBER
Integrated Advanced Microwave Sounding Unit-A (AMSU-A) METSAT Stress Analysis Report	Report 10787 March 1996

INPUT FROM:	DATE	CDRL:	SPECIFICATION ENGINEER:	DATE
		113	R. Regehr	13 Mar 96

CHECKED BY:	DATE	JOB NUMBER:	DATE
J. Kirk	13 Mar 96		

APPROVAL SIGNATURES	DEPT. NO.	DATE
Responsible Engineer (B. Morris) B. Morris	8611	3/13/96
Technical Director (R. Hauerwaas) RV Hauerwaas	4001	3/13/96
Performance Assurance (R. Taylor) R M Taylor	5331	3-13-96
Program Manager (W. Mullooly) RV Hauerwaas	4001	3/13/96
Configuration Management (J. Cavanaugh) J. Cavanaugh	8611	3-13-96

By my signature, I certify the above document has been reviewed by me and concurs with the technical requirements related to my area of responsibility.

RELEASE (Data Center) FINAL

Please return this sheet and the reproducible master to the Data Center (119/8651), ext. 2231.

Electronic Systems Plant

P.O. Box 296
Azusa, California 91702
CAGE/Facility Ident: 70143