NASA/CR-97- 205757

INTERIM
IN-33-CR
OCIT-
CGR 44

NASA CONTRACT NASW-96019

A VERSATILE PLANETARY RADIO SCIENCE MICRORECEIVER

ANNUAL PROGRESS REPORT
FOR THE PERIOD
OCTOBER 8, 1996 TO OCTOBER 7, 1997

P.I.: DR. C. D. FRY
Exploration Physics International, Inc.

CO-I.: PROF. T. J. ROSENBERG
University of Maryland at College Park

A VERSATILE PLANETARY RADIO SCIENCE MICRORECEIVER
ANNUAL PROGRESS REPORT

TABLE OF CONTENTS

1.0 PROJECT OVERVIEW 1
1.1 Background 1
1.2 Riometer. 2
1.3 Broadband Receiver. 2
1.4 Ionosonde Receiver. 3
2.0 TASKS ACCOMPLISHED IN FIRST YEAR 4
2.1 Meetings. 4
2.2 Receiver Design. 4
2.3 Environment Definition. 5
3.0 ANALYSIS AND DISCUSSION 7
3.1 Receiver Design and Construction. 7
3.2 Mars HF Propagation Simulations. 8
4.0 NEXT YEAR'S EFFORTS 8
5.0 SUMMARY 9
6.0 REFERENCES 10
ATTACHMENTS 12
Gate Array Receiver Detailed Block Diagram 13
Riometer Front End Schematic 14
Gate Array Detector Schematic 15
Revised Task List 16
Revised Schedule 17

586-3 Nashua Street, Suite 222, Milford, NH 03055-4992
Phone: (603) 673-3022 • Fax: (603) 673-1775 • Email: solar@expi.com • http://www.expi.com/space

1.0 PROJECT OVERVIEW

This is the first annual progress report of the work carried out by Exploration Physics International, Inc. (EXPI) on NASA Contract NASW-96019, "A Versatile Planetary Radio Science Micro-Receiver," under NASA's Planetary Instruments Definition and Development Program. The purpose of this 3-year effort is to define, design, develop and demonstrate a multi-function, high-frequency radio receiver system for planetary science investigations. We have teamed with Prof. T. J. Rosenberg, University of Maryland at College Park, Maryland (UMCP) as subcontractor to accomplish these tasks. As originally planned, this system would incorporate the functionality of two instruments: 1) a fixed-frequency Relative Ionospheric Opacity Meter (Riometer); and 2) a variable-frequency broadband receiver (BBR). The scope of the project has recently been modified to incorporate newly defined improvements into the microreceiver that, if successful, will enable it to operate in an additional, third mode - as the receiver portion of an ionosonde. These instrument modes are described in Sectiopns 1.2, 1.3, and 1.4.

Our approach is to first design the micro-receiver for terrestrial operation, and then, develop and demonstrate it in field conditions. We are seeking to achieve a greater than ten-fold reduction in size, mass and power consumption over currently operating terrestrial systems. At the same time, we will define the RF propagation and noise environment the sensor must operate in when deployed *on the surface of Mars*. The environmental definition will be used to design an instrument suitable for a Discovery-class, Mars Surveyor or New Millennium Mars mission.

Our original proposed tasks called for defining, designing, and developing a dual-function miniature radio science receiver. The microreceiver was to be built at the breadboard level, using traditional discrete components, with plans to implement the design on a multi-chip module (MCM) to achieve significant reductions in size and mass over currently operating Riometer and BBR instruments.

In the design phase, we found we could utilize an Altera programmable gate array device to immediately implement some of the functionality of the breadboard components onto a single integrated circuit. By eliminating the multi-chip module implementation and testing tasks in Years 2 and 3, we can instead apply labor hours to ionosonde receiver design and implementation. The majority of the necessary modifications, approved by NASA (described in Section 4), will be made to the programmed logic (i.e., software) in the detector gate array. This increased capability won't come at a significant cost in terms of increased mass or size of the instrument, and it should significantly improve the science return from this microreceiver project.

In this first year, work focused on designing and building a breadboard receiver that implements the Riometer design. In Years 2 and 3, we will include the functionality of the BBR and ionosonde into the prototype instrument, and test and evaluate instrument performance in the lab and at field sites.

1.1 Background

The Planetary Surface Instruments Workshop (Meyer *et al.,* 1995) identified radio sounding as a practical technique for observing the Martian ionosphere and middle atmosphere. The Martian ionosphere is fairly substantial during the day, with electron densities peaking around

586-3 Nashua Street, Suite 222, Milford, NH 03055-4992
Phone: (603) 673-3022 • Fax: (603) 673-1775 • Email: solar@expi.com • http://www.expi.com/space

1 to 2 x $10^5 cm^{-3}$ at an altitude of ~135 km, giving ionospheric critical frequencies of ~3 - 4 MHz. Maximum electron densities drop to ~10^3 cm^{-3} at night. Long-wave (frequencies below 30 MHz) radio science instruments have flown on many interplanetary missions and have provided new understanding of interplanetary and planetary plasma processes (Kaiser, 1977; Bougeret *et al.,* 1995; Nielsen *et al.,* 1995). However, in spite of the potentially rich return in data, these instruments have never been deployed on the surface of Mars. *Surface-based* remote sensing of the Martian ionosphere, by means of HF radio, has only recently received attention (Parrot *et al.,* 1996; Detrick *et al.*, 1997). This is in part because of the previously prohibitive size of the radio instruments and required antennas. The necessary studies of the effects of the Martian ionosphere on HF propagation are either preliminary (Fry and Yowell, 1993; 1994), or very recent (Yowell, 1996; Detrick *et al.*, 1997).

1.2 Riometer.

The Riometer measures radio wave absorption in the ionosphere of cosmic radio noise (RF energy emitted from stars in the galaxy) as it passes through the atmosphere. It is used to study phenomena in the lower ionosphere (in the D and E regions) and also at higher altitudes in auroral latitudes (Little and Leinbach, 1959, Rosenberg and Dudeney, 1986). The Riometer consists of an antenna connected to a self-calibrating receiver, and it is generally operated at a fixed frequency in the high-HF or low-VHF range, above the maximum expected ionospheric critical frequency. A signal is measured as the Earth's rotation sweeps the antenna across the radio sky. At a given local time, decreases in noise from the average or "quiet day" values indicate absorption of the signal by the ionosphere.

Our group recently evaluated radio frequency propagation through the Martian CO_2 atmosphere in terms of riometry (Detrick *et al.,* 1997). We looked at the effects of enhanced ionization by precipitating electrons on absorption efficiency, and found the Martian atmosphere appears more suitable for riometry than the Earth's. A Riometer on a Mars lander (operating in the 20 to 30 MHz range) could be used to characterize the energy deposition due to solar energetic particles and energetic electrons impinging into the atmosphere from above.

1.3 Broadband Receiver.

Atmospheric and exo-atmospheric radio noise covers a broad spectrum (kHz to hundreds of MHz). For example, at Earth, whistlers (dispersive radio signals which travel along the Earth's magnetic field lines) are generated by lightning and can be detected on the ground by VLF receivers. Plasma processes in the terrestrial magnetosphere also generate other signals. Recently, broadband HF radio receivers have demonstrated their utility for sensing of the terrestrial ionosphere-magnetosphere and have been used to detect and study natural plasma emissions originating or passing through the bottomside ionosphere (La Belle and Weatherwax, 1992; Weatherwax *et al.,* 1994).

We know little about the natural radio emissions in the lower atmosphere of Mars. As mentioned, radio frequency receivers and electric field probes have flown on a number space missions, but none have been operated from the surface of Mars. However, this configuration is needed to characterize the in-situ radio frequency environment. This is because signals generated in the lower atmosphere and at frequencies below the local plasma critical frequency cannot

586-3 Nashua Street, Suite 222, Milford, NH 03055-4992
Phone: (603) 673-3022 • Fax: (603) 673-1775 • Email: solar@expi.com • http://www.expi.com/space

penetrate through the ionosphere, and therefore are not detected by orbiting sensors. The amplitude and spectra of the noise environment would provide new information, as identified in the Planetary Surface Instruments Workshop Report (Meyer *et al.,* 1995).

1.4 Ionosonde Receiver.

The region below the electron density peak (the bottomside Martian ionosphere) is not accessible by radar sounding from orbiting spacecraft (topside sounding). Several concept papers concerning Mars surface-based ionosondes have appeared (Parrot *et al.,* 1996; Klimov *et al.,* 1993; Fry and Yowell, 1993; Yowell, 1996), but to our knowledge, no other US team is *actively* developing these radio instruments.

An ionospheric sounder is a radar used to measure the vertical distribution of ionospheric electrons in the bottomside ionosphere. Until recently, ionosondes required large antenna structures and kilowatts of transmitted power. However, modern electronics and signal processing techniques have considerably reduced the size, mass and power requirements (Barry, 1971; Poole, 1985; Reinisch *et al.*, 1992).

Ionosondes operate in several modes. In the monostatic mode, the transmitter and receiver are collocated. A pulse is transmitted vertically and received after being refracted back to the ground by the ionosphere. The time delay between transmitted and received signals gives the apparent, or "virtual" height of the reflecting ionospheric layer. In the bistatic mode of operation, the ionosonde transmitter and receivers are separated from each other by some distance. The obliquely propagated signal (at RF frequencies up to several times the critical frequency) is refracted back to the surface beyond the horizon. The measured ionospheric information is assumed to be applicable at the mid point of the ray path. Our analyses indicate that, for the typical daytime Martian ionosphere, oblique sounders will work out to several thousand kilometers at frequencies up to 13 MHz (Fry and Yowell, 1993, 1994).

By varying the frequency of the pulse, a virtual height-versus-frequency chart, or "ionogram" is obtained. The electron density profile can be derived from the ionogram in a straightforward manner. Successive ionograms allow measurements of the time variations of the electron density profiles. The layer shapes and other properties of the derived profiles give an understanding of the plasma scale heights, and the constituents in each layer. Estimates of the time constants for growth and decay of ionization provide additional information about each layer and the chemistry that dominates each region. Fluctuations in heights of ionospheric layers are related to standing or traveling waves which are driven by the underlying neutral gas motion. By monitoring the distribution of fluctuation periodicity, it is possible to estimate the Brunt-Vaissala frequency of the atmosphere. This indicates the natural oscillation period of the atmosphere and leads to a measure of fundamental atmospheric properties. The radio wave attenuation as a function of frequency provides another method (in addition to the Riometer) to measure radio-wave absorption in the atmosphere.

Although the ionosonde has seen long service on Earth, *its application to science investigations from the surface of another planet is totally new.* In addition, cooperative operation of a topside sounder with an ionosonde receiver on a lander, would effectively extend the topside sounder measurements. Topside sounder instruments will fly on the Planet-B Mars

586-3 Nashua Street, Suite 222, Milford, NH 03055-4992
Phone: (603) 673-3022 • Fax: (603) 673-1775 • Email: solar@expi.com • http://www.expi.com/space

probe, to be launched next year, and a Mars topside sounder is in NASA's plans for the 2010 time frame.

2.0 TASKS ACCOMPLISHED IN FIRST YEAR

2.1 Meetings.

We held an initial project meeting on December 4, 1996, at the University of Maryland at College Park (UMCP), with the key participants attending. Dr. Fry, the Principal Investigator, led the meeting, with inputs from Prof. Rosenberg and staff. The group reviewed the schedule, deliverables, and task list. Although the subcontract with the University of Maryland was not signed until early November, Prof. Rosenberg agreed to submit the first quarterly progress report in mid-January to put UMCP in sync with the EXPI reporting schedule. Mr. John Giganti (UMCP Physics Department Electronic Development Group) presented recommendations for improving the receiver design using gate-array logic devices in lieu of the Digital Signal Processor (DSP) detector. We discussed the relative merits of this approach and decided to actively pursue this avenue early in the project. Prof. Rosenberg recommended we expand the timeline chart to clarify that the Riometer development would proceed before the BBR portion of the effort.

Prof. Rosenberg, Dr. Weatherwax and Dr. Fry met in May to discuss progress on the receiver. We presented a poster paper related to this project *(HF radio propagation in the Martian ionosphere)* at the Spring American Geophysical Union meeting in Baltimore on May 29, 1997. Dr. Fry attended the Planetary Instruments Definition and Development Program Workshop in Pasadena, June 10-12, 1997 and presented a poster on our microreceiver project. He also presented a talk on this project to about 50 ham radio operators at the Fresno Amateur Radio Club meeting on June 13, 1997. We met on July 15, 1997 at UMCP to review the status of design and breadboarding the receiver, as discussed below.

2.2 Receiver Design.

Efforts during the first quarter were directed toward receiver definition, focusing on two areas, environmental simulations and receiver definition/design. Work began on *Task 1*, Evaluate Riometer/BBR for Mars surface-based atmospheric science, *Task 2*, Define Riometer/BBR requirements and *Task 3*, Micro-instrument design. The modifications to the receiver design proposed by UMCP to incorporate a gate-array detector offered several benefits. The original receiver design concept was based upon using a high-speed DSP to detect and process the baseband received signal. However, recent advances in gate array technology allow the signal processing algorithm to be implemented in hardware. This offered potential improvements over our original approach .

During the second quarter, work focused on the gate array detector for the Riometer portion of the microreceiver. We made significant progress on the Gate Array Receiver System (GARS). Dr. Rosenberg's staff focused on developing the detector subsystem in order to evaluate its performance. They modeled the detector functions using MathCad to optimize the circuit design board and designed a signal simulator that produces quad-phase IF baseband signals. They completed the detector circuit design and built the detector board and simulator assemblies. The gate array was mated to a computer interface connector for easy design modifications.

586-3 Nashua Street, Suite 222, Milford, NH 03055-4992
Phone: (603) 673-3022 • Fax: (603) 673-1775 • Email: solar@expi.com • http://www.expi.com/space

In the third quarter, we implemented the detector DSP algorithms on an Altera gate array, finalized the Riometer block diagram and developed the breadboard schematic. The clock frequency was increased to allow DSP sampling at the gate array's maximum rate. UMCP built an evaluation board to test other key receiver components, and software was developed for a PC to accept the data from the GARS through the PC serial port. Efforts continued to: 1) verify the performance of the gate array detector using the computer serial interface connector, 2) verify the detector using an existing Riometer connection; and 3) complete the mechanical and electrical design of the RF front end and of the GARS. We made a direct digital connection of the detector to the computer and evaluated its performance through the serial interface. The detector was mated to an existing Riometer front end and evaluated following a test plan.

During the fourth quarter, the DSP algorithm in the GARS was further developed to permit it to operate in the Altera 10K series device. Extensions were added to the design permitting uplink control of the receiver functions, such as changing the filter time constants and operating mode: 1) adjust gain, 2) noise source calibration, 3) normal acquire mode. The design of the mechanical housing for the prototype receiver was completed. We made additional breadboards containing candidate receiver design blocks and evaluated. Receiver pc board layout was completed to fit within the constraints of the housing, and to also have a high degree of isolation between the receiver sections. The finished pc board was constructed in sections, which were tested individually.

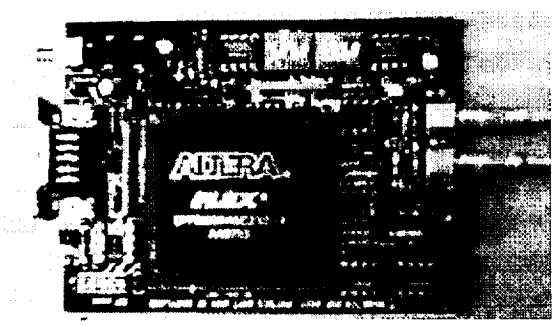

Figure 1. Detector subsystem breadboard showing the Altera gate array.

2.3 Environment Definition.

We are developing a Mars HF radio propagation model for evaluating the RF environment expected on Mars. Analyses of the environmental simulations will help in the design of the optimum receiver parameters for the Mars scenario. The propagation model includes an atmosphere/thermosphere model for neutral densities and temperatures, an ionospheric model, and an RF ray-tracing algorithm. Figure 2 is a block diagram showing the components of the propagation model.

Neutral Atmosphere/Thermosphere Model. Mars-GRAM (Mars Global Reference Atmosphere Model) is the definitive *engineering* model for the Martian neutral atmosphere. Justus *et al.* (1996a; 1996b) described a revised Mars-GRAM with an improved thermospheric model. We contacted Mr. Dale Johnson and Ms. Bonnie James at Marshall Space Flight Center's Systems Analysis and Integration Laboratory to obtain the most current version of this model. Dr. Jere Justus provided Version 3.6 of the Mars-GRAM source code from the NASA MSFC FTP site. We have implemented this new version at EXPI.

586-3 Nashua Street, Suite 222, Milford, NH 03055-4992
Phone: (603) 673-3022 • Fax: (603) 673-1775 • Email: solar@expi.com • http://www.expi.com/space

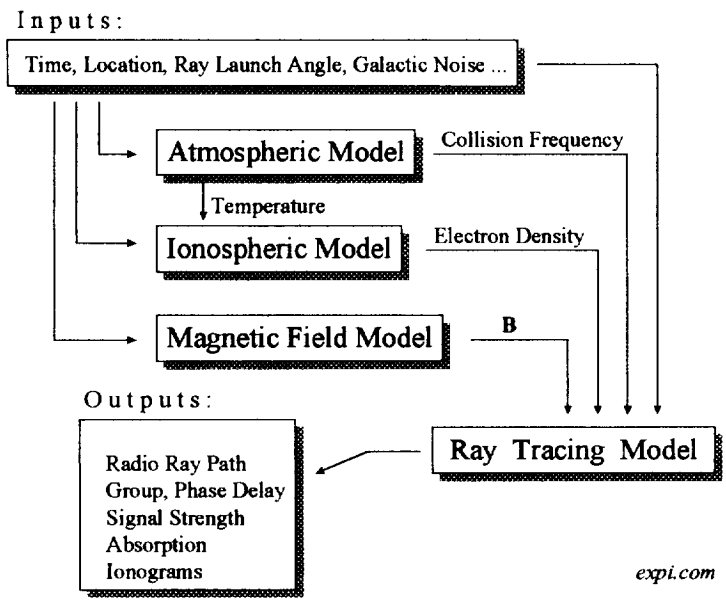

Figure 2. Block diagram of the RF Propagation Model design for the Mars environmental simulations. Inputs (top of chart) provide initial conditions for model components, and specify scenario parameters and desired outputs and output formats (bottom of chart). The (neutral) atmospheric model and ionospheric model define the propagation medium for the RF ray tracing algorithm. The system is designed to provide inputs necessary to tailor instruments (Riometer, broadband receiver and ionosonde) for radio science investigations in the Martian environment.

Martian Ionosphere Model. The background ionospheric model for the RF propagation analyses uses an empirical Chapman profile based upon the re-analysis of radio occultation data by Zhang, *et al* (1990a, b). An enhanced D-region algorithm is based upon the work by Detrick *et al.* (1997). The ionospheric model provides the electron density profiles (EDPs) as a function of solar cycle ($F_{10.7}$ flux), solar zenith angle and height. The EDPs are used to determine the refractive index and its first derivative, needed in the ray-tracing algorithm. Key inputs are solar zenith angle, height, and neutral atmosphere temperature, as calculated by Mars-GRAM. The calculated electron density is used by the ray tracing algorithm to compute local refractive index required to determine output parameters such as the path the radio ray takes through the ionosphere, group and phase delay and integrated absorption. We incorporated this ionospheric model into the ray-tracing routine as a subroutine.

HF radio propagation modeling. Since the collision frequency in CO_2 is nearly constant at temperatures characteristic on Mars, the Sen-Wyller absorption formula reduces to the Appleton-Hartree form, as discussed by Detrick *et al.* (1977). Also, Mars has a weak or non-existent intrinsic magnetic field. Therefore, we implemented a ray-tracing code (Jones and Stephenson, 1975) with the following characteristics: Appleton-Hartree formula, no magnetic field, with collisions. We obtained the source from the National Geophysical Data Center web site, as implemented by McNamara (1992). The code compiled successfully using the Microsoft Powerstation 4.0 Fortran compiler on an EXPI Pentium system. We made significant modifications to the Jones-Stephenson ray-tracing code in order to get the routines to run without error on our computer system. These changes included standardizing the initialization statements and I/O calls between the various subroutines. Work proceeded on implementing and coupling the neutral atmosphere and ionospheric models into the Mars RF propagation model. We became familiar with the neutral atmosphere model (Mars-GRAM) and the ray-tracing algorithms.

586-3 Nashua Street, Suite 222, Milford, NH 03055-4992
Phone: (603) 673-3022 • Fax: (603) 673-1775 • Email: solar@expi.com • http://www.expi.com/space

3.0 ANALYSIS AND DISCUSSION

3.1 Receiver Design and Construction.

There are several advantages of the gate-array detector approach over using an embedded DSP system. There is a higher confidence that locally generated interference (due to self-emission of RF) should be minimized. Software design, development and debugging chores are reduced. Also, the pipeline design provides an opportunity for further reducing the system power consumption beyond our original proposal. We undertook the following design tasks for the Gate-array receiver:

1) Develop signal processing algorithm
2) Design detector test circuit
3) Construct prototype detector and interface to PC
4) Measure detector function performance parameters
5) Interface gate-array detector to an existing receiver system
6) Design receiver by mating the RF front end to the gate-array detector

MathCad simulations permitted rapid testing of the detector algorithm in the actual gate array hardware. The MathCad results closely matched the actual data obtained from the sinusoidal and noise inputs to the gate array. The high correlation between the MathCad results and actual data was encouraging. Results suggest we have met all design requirements for the detector. Although the gate array detector consumes more power than we would like, through judicious design of the GARS, we hope to meet the overall power goals identified in the proposal.

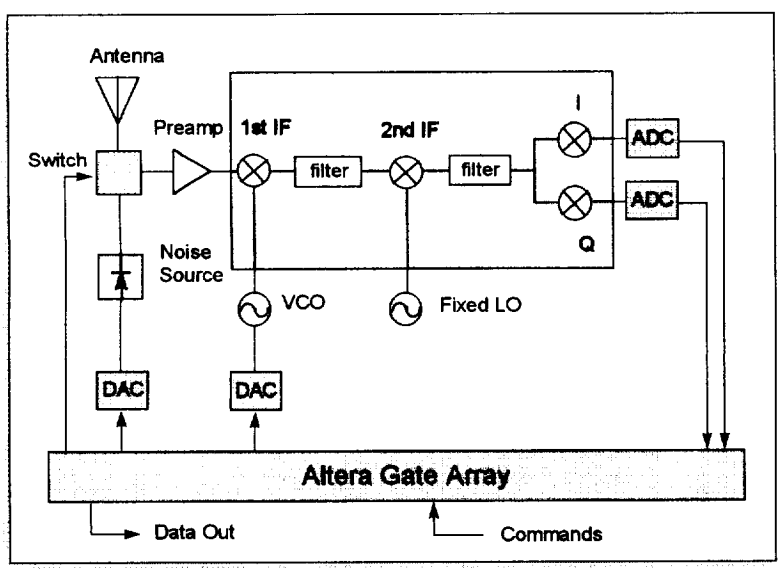

Figure 3. Block diagram of key components of the Altera Gate Array Receiver System. A more detailed block diagram and schematics are attached.

Significant changes to the design of the GARS allowed us to use a smaller, lower power Altera gate array, without impacting detector performance. Linearity problems in the detector related to numerical truncation errors have been addressed by increasing the arithmetic accuracy in the macro-functions to 32 bits.

A key aim was to evaluate the design at low values of circuit current, to determine if the gain or intermodulation characteristics were degraded to unacceptable levels. We found that the preamplifier functioned well at operating currents as low as 2 ma (at 3V), and exhibited gains of

586-3 Nashua Street, Suite 222, Milford, NH 03055-4992
Phone: (603) 673-3022 • Fax: (603) 673-1775 • Email: solar@expi.com • http://www.expi.com/space

up to 20 dBm, with 3rd order intercept of -8 dBm. The DSP was the first section populated on the pc board. This was done to confirm the change in design from the Altera 8K pin grid to the 10K quad flat pack unit worked as we expected. We were able to download our design file for the DSP gate array using the PC and the Altera configuration table.

Other sections of the receiver were constructed, including the preamplifier, first and second mixers, and local oscillators (LO). A problem was discovered with the second LO having insufficient drive for the second mixer. A circuit change increased the second LO drive level to solve this problem. We were able to apply an RF signal to the antenna input and trace the signal all the way to the I (in phase) and Q (quadrature) outputs of the receiver. However, there remains a problem with the first LO not properly locking to its crystal.

3.2 Mars HF Propagation Simulations.

Although Mars-GRAM compiled and ran without a hitch, getting the Jones-Stephenson ray-tracing algorithm to run consistently presented us with a considerable challenge. We evaluated our implementation of the ray-tracing code by comparing modeled ray paths with exact results provided by a reference quasi-parabolic electron density profile (Croft and Hoogasian, 1968).

The code performed as expected for ray paths near the horizon, but we experienced problems for runs at higher take-off angles, which we suspected were related to the handling by the compiler we were using (Microsoft Powerstation 32-Bit Fortran) of complex variables. We were able to debug the code, and have confirmed it performs satisfactorily at all takeoff angles. This took longer than anticipated. However, it was important that it be done properly so that it can be used to accurately pin down the final (Mars version) receiver design parameters. Microsoft announced they would no longer support that product, so we are also transitioning to another Fortran compiler.

4.0 NEXT YEAR'S EFFORTS

Work will continue on the task list, including the problem with the first LO not properly locking to its crystal frequency. All receiver sections must be completed and demonstrated to operate as a unit. The DSP algorithm must operate with actual inputs to evaluate the overall linearity of the receiver. The receiver must be calibrated and its stability measured. We will proceed on implementing the variable frequency mode (the BBR) of the receiver.

Instead of the Multi-chip module work originally proposed, we will seek to improve the frequency agility of the BBR mode of the microreceiver according to the modified task list approved by NASA. The greatest amount of progress can be achieved by working on rapid tuning of the microreceiver under computer control. Not only would the BBR be more versatile, but if synchronized to a transmitter, it would also function as the receiver portion of an ionospheric sounder. This would add a third capability to our microreceiver in addition to the dual Riometer and BBR modes. This innovation would enable a significant miniaturization of the ionosonde, which as yet has not been practical for a Mars lander mission.

586-3 Nashua Street, Suite 222, Milford, NH 03055-4992
Phone: (603) 673-3022 • Fax: (603) 673-1775 • Email: solar@expi.com • http://www.expi.com/space

The following summarizes changes to the original task list associated with incorporating the ionosonde receiver capability:

1. Eliminate Task 6 (Multi-Chip Module Design) and Task 7 (Multi-Chip Module Construction and Analysis).
2. Add the following to Task 1 (Evaluate Applicability of Microreceiver for Mars):
   - Conduct ionospheric ray tracing study to evaluate ionosonde operation parameters in the Martian atmosphere. EXPI
3. Add the following to Task 2 (Define Sensor Requirements):
   - Define ionosonde receiver requirements. EXPI, UMCP.
4. Add the following to Task 4 (Prototype Instrument Construction):
   - Attempt to incorporate ionosonde receiver functionality into the microreceiver. UMCP.
5. Add the following to Task 5 (Demonstration):
   - Conduct test to acquire and track an oblique or vertical incidence ionosonde signal, and evaluate performance. EXPI

We will implement the galactic radio noise model into the propagation simulator. We will determine output parameters as a function of latitude, longitude, height, local time, level of solar activity ($F_{10.7}$), etc. The RF ray-tracing algorithm will be used to evaluate environmental effects on signal propagation, and allow us to pin down the microreceiver parameters for the Mars version, such as operating radio frequency and frequency ranges, sensitivity, and dynamic range. We will continue to validate our implementation of the ray-tracing code by continued comparisons with exact results provided by the (quasi-parabolic ionospheric electron density profile) analytical solutions.

The revised Task List and Task Schedule are attached.

5.0 SUMMARY

Definition, design, construction and lab testing of the breadboard Riometer receiver functions are on schedule and nearly completed. We have successfully implemented the microreceiver detector section on an Altera gate array device. This has allowed us to approach design goals for mass and size without implementing the receiver on a multi-chip module. By eliminating the MCM implementation tasks in Years 2 and 3, we can shift resources into increasing the functionality of the receiver. We will seek to incorporate the BBR and ionosonde receiver modes into the system, and finalize the test and demonstration plan. The problems with a key RF ray-tracing algorithm have been overcome. We will proceed to conduct the RF propagation simulations necessary to complete the design of a radio instrument suitable for deploying on a Mars lander.

586-3 Nashua Street, Suite 222, Milford, NH 03055-4992
Phone: (603) 673-3022 • Fax: (603) 673-1775 • Email: solar@expi.com • http://www.expi.com/space

6.0 REFERENCES

Barry, G. H., "A Low Power Vertical-Incidence Ionosonde," *IEEE Trans. Geosci. Electron., GE-9(2)*, pp. 86-89, 1971.

Bougeret, J.-L., M. L. Kaiser, P. J. Kellogg, R. Manning, K. Goetz, S. J. Monson, N. Monge, L. Friel, C. A. Meetre, C. Perche, L. Sitruk and S. Hoang, "WAVES: The Radio and Plasma Wave Investigation on the Wind Spacecraft," *Space Sci. Rev., 71*, pp. 231, 1995.

Croft, T. A. and H. Hoogasian, "Exact Ray Calculations in a Quasi-Parabolic Ionosphere with no Magnetic Field," *Radio Science, 3*, 69-84, 1968.

Detrick, D. L., T. J. Rosenberg, and C. D. Fry, "Analysis of the Martian Atmosphere for Riometry," *Planet. Space Sci., 45*, 289-94, 1997.

Fry, C. D. and R. J. Yowell, "Over-the-Horizon Communications on Mars via HF Radio Propagation," *Case for Mars V*, Boulder, Colorado, June, 1993.

Fry, C. D. and R. J. Yowell, "HF Radio on Mars," *Communications Quarterly*, pp. 13-23, Spring, 1994.

Jones, R. M. and J. J. Stephenson, *A Versatile Three-Dimensional Ray Tracing Computer Program for Radio Waves in the Ionosphere*, Office of Telecommunications Report 75-76, Department of Commerce, Washington, DC, October 1975.

Justus, C. G., B. F. James, and D. L. Johnson, "Mars Global Reference Atmospheric Model (Mars-GRAM 3.34): Programmer's Guide," *NASA Tech. Memo 108509*, May, 1996.

Justus, C. G., D. L. Johnson, and B. F. James, "A Revised Thermosphere for the Mars Global Reference Atmospheric Model (Mars-GRAM Version 3.4)," *NASA Tech. Memo 108513*, July, 1996.

Kaiser, M. L., "A Low-Frequency Radio Survey of the Planets with RAE 2," *J. Geophys. Res., 82*, pp. 1256-1260, 1977.

Klimov, S. I., V. V. Kopeikin, V. V. Krasnosel'skikh, A. M. Natanzon, A. E. Reznikov, "On the Use of a Mobile Surface Radar to Study the Atmosphere and Ionosphere of Mars," *Adv. Space Res., 10*, pp. 35-38, 1990.

La Belle, J. and A. T. Weatherwax, "Ground-based Observations of LF/MF/HF Radio Waves of Auroral Origin," in Physics of Space Plasmas, (T. Chang, ed.), Scientific Publishers, Cambridge, pp. 223- 236, 1992.

Little, C. G. and H. Leinbach, "The Riometer - A Device for the Continuous Measurement of Ionospheric Absorption," *Proc. IRE, 46*, 315, 1959.

McNamara, L., Jones-Stephenson Ray Tracing Source Code, ftp://ftp.ngdc.noaa.gov, 1992.

Meyer C., A. H. Treiman and T. Kostiuk, eds., *Planetary Surface Instrument Workshop, LPI Tech. Rpt. 95-05*, Lunar and Planetary Institute, Houston, *Part 6. Atmospheres from Within*, 1995.

586-3 Nashua Street, Suite 222, Milford, NH 03055-4992
Phone: (603) 673-3022 • Fax: (603) 673-1775 • Email: solar@expi.com • http://www.expi.com/space

Nielsen, E., W. I. Axford, T. Hagfors, H. Kopka, N. A. Armand, V. A. Andrianov, D. Ja. Shtern and T. Breus, "The 'Long Wavelength Radar' on the Mars-94 Orbiter," *Adv. Space Res., 15*, pp. 163-178, 1995.

Parrot, M., J. G. Trotignon, J. L. Rauch, L. J. C. Woolliscroft, S. P. Kingsley, J. C. Cerisier, E. Blanc, C. D. Fry and R. J. Yowell, "An Ionospheric Sounder for the Mars Landers," *Planet. Space Sci.*, pp. 1451-1455, 1996.

Poole, A. W. V., "Advanced Sounding 1. The FMCW Alternative, *Radio Science, 20*, pp. 1609-1616, 1985.

Reinisch, B. W., D. M. Haines and W. S. Kuklinski, "The New Portable Digisonde for Vertical and Oblique Sounding," in *AGARD, Remote Sensing of the Propagation Environment*, pp. 13-46, 1992.

Rosenberg, T. J. and J. R. Dudeney, "The Local Time, Substorm, and Seasonal Dependence of Electron Precipitation at L Approximately = 4 Inferred from Riometer Measurements," *J. Geophys. Res., 91*, pp. 12,032-12,040, 1986.

Stoker, P. H., "Riometer Absorption and Spectral Index for Precipitating Electrons with Exponential Spectra," *J. Geophys. Res., 92*, 5961, 1987.

Weatherwax, A. T., J. La Belle and M. L. Trimpi, "A New Type of Auroral Radio Emission Observed at Medium Frequencies (~1350-3700 kHz) Using Ground-Based Receivers," *Geophys. Res. Lett., 21*, pp. 2753-56, 1994.

Yowell, R. J., *Investigation of Radio Wave Propagation in the Martian Ionosphere Utilizing HF Sounding Techniques*, Masters Thesis, Air Force Institute of Technology, Wright-Patterson AFB, Ohio, June, 1996.

Zhang, M. H. G., J. G. Luhmann, A. J. Kliore and J. Kim, "A Post-Pioneer Reassessment of the Martian Dayside Ionosphere as Observed by Radio Occultation Methods," *J. Geophys. Res., 95*, 14,829, 1990.

Zhang, M. H. G., J. G. Luhmann and A. J. Kliore, "An Observational Study of the Nightside Ionospheres of Mars and Venus with Radio Occultation Methods," *J. Geophys. Res., 95*, 17,095, 1990.

586-3 Nashua Street, Suite 222, Milford, NH 03055-4992
Phone: (603) 673-3022 • Fax: (603) 673-1775 • Email: solar@expi.com • http://www.expi.com/space

ATTACHMENTS

Gate Array Receiver Detailed Block Diagram

Riometer Front End Schematic

Gate Array Detector Schematic

Revised Task List

Revised Schedule

586-3 Nashua Street, Suite 222, Milford, NH 03055-4992
Phone: (603) 673-3022 • Fax: (603) 673-1775 • Email: solar@expi.com • http://www.expi.com/space

GATE ARRAY RECEIVER IMPLEMENTATION

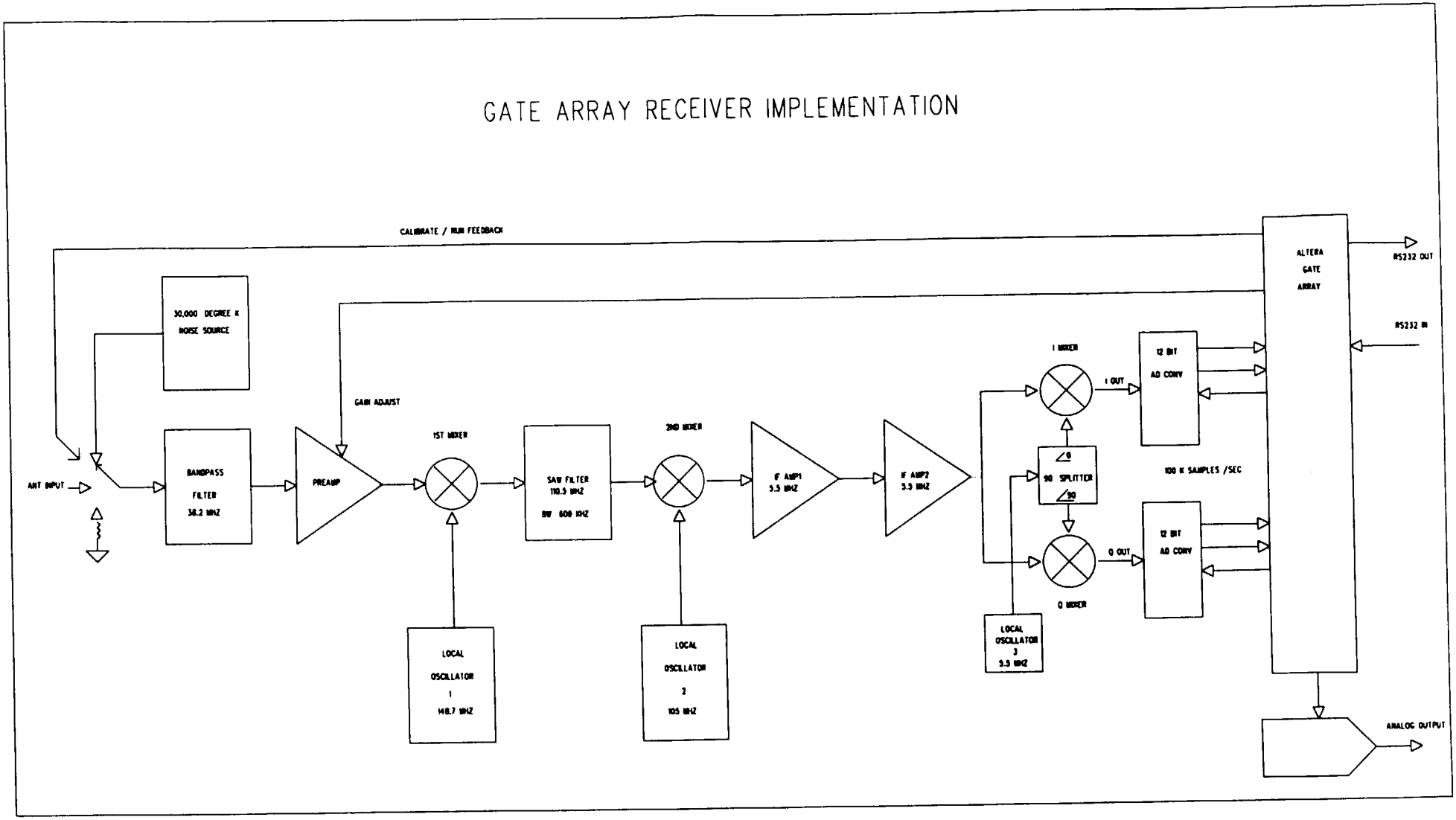

mars_rio.sch-1 - Tue Jul 15 14:31:25 1997

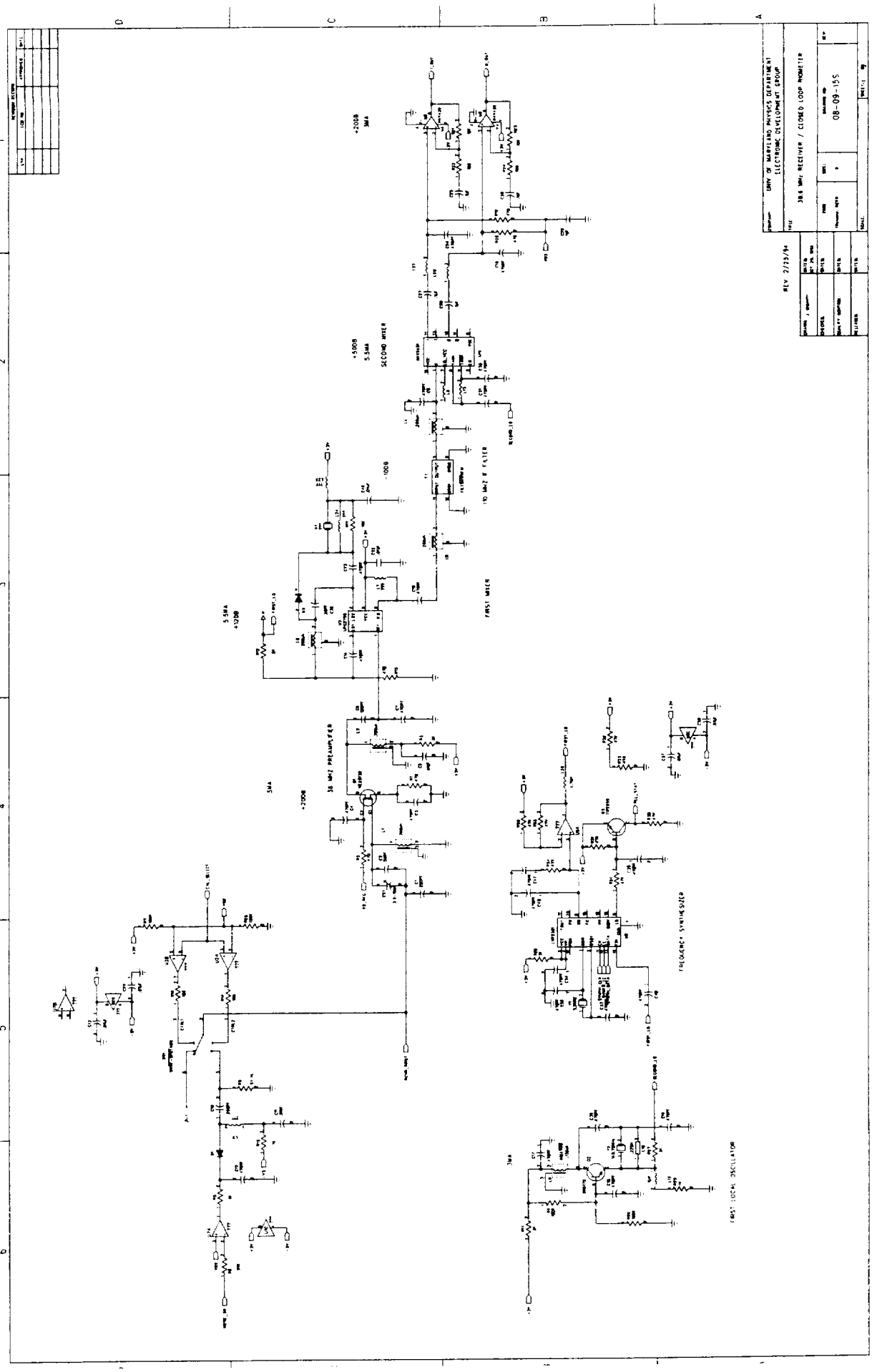

mars_rio.sch-2 - Tue Jul 15 14:37:49 1997

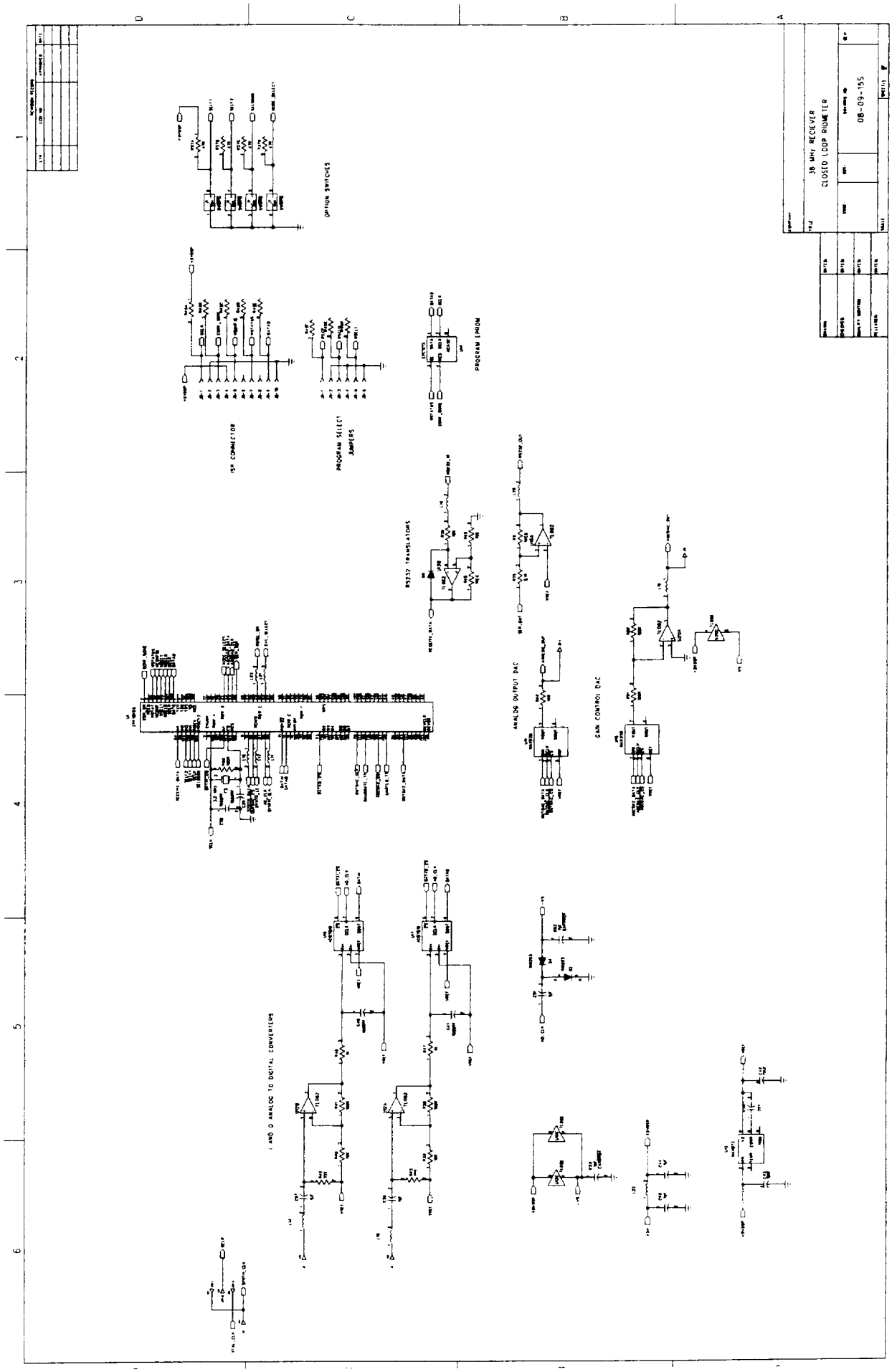

A VERSATILE PLANETARY RADIO SCIENCE MICRO-RECEIVER

TASK LIST - October 1997

Task 1. Evaluate applicability of BBR/Riometer to non-terrestrial (i.e., Martian) surface-based atmospheric science. Year 1.

Establish the feasibility of radio techniques for planetary science and simulate the expected operating environment.

- Define the Martian neutral atmosphere and ionosphere models for subsequent radio propagation evaluations. EXPI.
- Calculate radio-wave absorption efficiency along the vertical ray-path for several candidate operating frequencies. EXPI, UMCP.
- Calculate integrated ray-path absorption for a set of modeled electron density profiles. EXPI, UMCP.
- Build the sky map(s) of cosmic radio noise at the candidate operating frequencies. UMCP.
- Conduct ionospheric ray tracing study to evaluate ionosonde operation parameters in the Martian atmosphere. EXPI

Task 2. Define Riometer and Broad-Band Receiver Sensor Requirements. Year 1.

We will evaluate dynamics and variability of the Martian atmosphere and ionosphere. Characterize local radio signal absorption environment. Consider natural and artificial emission and noise environments.

- Characterize solar and galactic radio noise levels. UMCP.
- Simulate Riometer operation at candidate operating frequencies and select best. EXPI, UMCP.
- Characterize potential spurious instrument emissions that might degrade instrument or other lander systems' performance. EXPI, UMCP.
- Evaluate expected variations in signal levels and absorption (from Task 1) to finalize the required receiver bandwidth, dynamic range and sensitivity. EXPI, UMCP.
- Characterize the desired temporal resolution of the data to determine optimum system sample rate, integration time, and sample resolution. UMCP.
- Coordinate with NASA for possible conflicts between the instrument and other flight systems. EXPI.
- Define ionosonde receiver requirements. EXPI, UMCP.

Task 3. Micro-instrument Design. Year 1 and 2.

Seek a significant reduction in required power and mass through modern design techniques, minimized component count, and low-power architecture.

- Determine the minimum necessary set of instrument subsystems and select preliminary component suite. UMCP.
- Determine specifications for selected component count (concentrating on minimizing power consumption). UMCP.
- Simulate receiver performance in software. EXPI, UMCP.
- Determine average electrical power required, duty cycle, instrument mass, and dimensions. UMCP.

Task 4. Prototype Instrument Construction. Year 1 and 2.

Construct a breadboard prototype instrument based upon detailed design resulting from Task 3.

- Begin construct Riometer section of breadboard circuit in Year 1. UMCP.
- Complete Riometer section and BBR section in Year 2. UMCP.
- Attempt to incorporate ionosonde receiver functionality into the microreceiver. UMCP.

Task 5. Demonstration. Year 2.

The Phase I prototype instrument will be deployed, operated and evaluated.

- Design a detailed Development Plan. EXPI.
- Build a demonstration script, including site location. EXPI. UMCP.
- Develop measures of merit to be used for instrument performance evaluation. EXPI, UMCP
- Deploy and operate the instrument. EXPI, UMCP.
- Conduct test to acquire and track an oblique or vertical incidence ionosonde signal, and evaluate performance. EXPI
- Evaluate Phase-I system performance, recommend improvements in system design, and incorporate in breadboard system if possible. EXPI, UMCP.

Task 6. Reporting. Annual.

- Submit annual progress reports at the end of each year. EXPI.
- Write final report at the completion of the project in Year 3 covering all work. EXPI.

Exploration Physics International, Inc.
586-3 Nashua Street, Suite 222, Milford, NH 03055-4992

NASW-96019 "A Versatile Planetary Radio Science Micro-Receiver"
Task Schedule

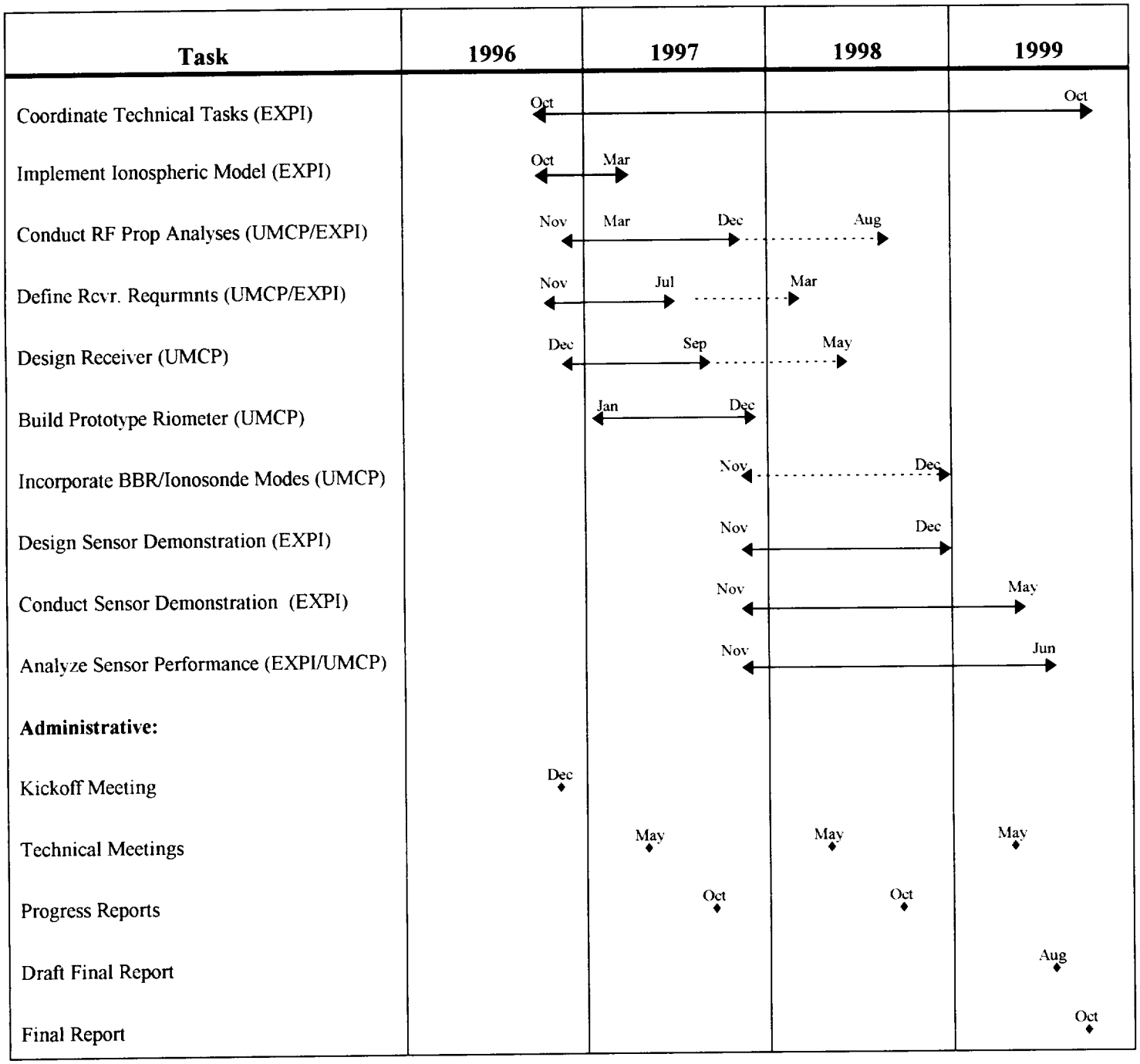

Riometer Mode = Solid line
BBR/Ionosonde Mode = Dashed line

Revised October 15, 1997

EXPI • Tel: (603) 673-3022 • Fax: (603) 673-1775 • E-mail: solar@expi.com

REPORT DOCUMENTATION PAGE

Form Approved
OMB No. 0704-0188

Public reporting burden for this collection of information is estimated to average 1 hour per response, including the time for reviewing instructions, searching existing data sources, gathering and maintaining the data needed, and completing and reviewing the collection of information. Send comments regarding this burden estimate or any other aspect of this collection of information, including suggestions for reducing this burden, to Washington Headquarters Services, Directorate for Information Operations and Reports, 1215 Jefferson Davis Highway, Suite 1204, Arlington, VA 22202-4302, and to the Office of Management and Budget, Paperwork Reduction Project (0704-0188), Washington, DC 20503.

1. AGENCY USE ONLY *(Leave blank)*	2. REPORT DATE	3. REPORT TYPE AND DATES COVERED
	October 16, 1997	Annual Report, 10/8/96 - 10/7/97

4. TITLE AND SUBTITLE
A Versatile Planetary Radio Science Micro-Receiver, Contract NASW-96019, Milestone Progress Report

5. FUNDING NUMBERS

6. AUTHORS
C. D. Fry, T. J. Rosenberg*

7. PERFORMING ORGANIZATION NAME(S) AND ADDRESS(ES)
Exploration Physics International, Inc. (EXPI)
586-3 Nashua Street, Suite 222
Milford, NH 03055-4992

8. PERFORMING ORGANIZATION REPORT NUMBER
C96-01AR1

9. SPONSORING/MONITORING AGENCY NAME(S) AND ADDRESS(ES)
National Aeronautics and Space Administration
Washington, DC 20546

10. SPONSORING/MONITORING AGENCY REPORT NUMBER

11. SUPPLEMENTARY NOTES
Prepared by EXPI.
*Institute for Physical Science and Technology, Univ. Maryland at College Park, MD

12a. DISTRIBUTION/AVAILABILITY STATEMENT
Unclassified - Unlimited

12b. DISTRIBUTION CODE

13. ABSTRACT *(Maximum 200 words)*

This report describes progress made during the first year, including fourth quarter, of Contract NASW-96019, under NASA's Planetary Instruments Definition and Development Program. This 3-year effort will define, design, develop (at the breadboard level) and demonstrate a multi-function, radio receiver system for planetary science investigations. Definition, design, construction and lab testing of the breadboard Riometer receiver functions are on schedule and nearly completed. Problems with a key RF ray-tracing algorithm, to be used to tailor final receiver design parameters for the Mars scenario, have been overcome. We have successfully implemented the microreceiver detector section on an Altera gate array device. This has allowed us to approach design goals for mass and size without implementing the receiver on a multi-chip module. By eliminating the MCM implementation tasks in Years 2 and 3, we can shift resources into increasing the functionality of the receiver. We will seek to incorporate the BBR and ionosonde receiver modes into the system, and finalize the test and demonstration plan.

14. SUBJECT TERMS
Riometer, Broadband Receiver, Remote Sensing, Mars Atmosphere, Planetary Instruments, Martian ionosphere, Mars-GRAM, HF radio

15. NUMBER OF PAGES

16. PRICE CODE

17. SECURITY CLASSIFICATION OF REPORT	18. SECURITY CLASSIFICATION OF THIS PAGE	19. SECURITY CLASSIFICATION OF ABSTRACT	20. LIMITATION OF ABSTRACT
Unclassified	Unclassified	Unclassified	Unlimited