TECHNICAL REPORT R-88

THEORETICAL PRESSURE DISTRIBUTIONS ON WINGS OF FINITE SPAN AT ZERO INCIDENCE FOR MACH NUMBERS NEAR 1

By ALBERTA Y. ALKSNE and JOHN R. SPREITER

Ames Research Center
Moffett Field, Calif.

TECHNICAL REPORT R-88

THEORETICAL PRESSURE DISTRIBUTIONS ON WINGS OF FINITE SPAN AT ZERO INCIDENCE FOR MACH NUMBERS NEAR 1

By Alberta Y. Alksne and John R. Spreiter

SUMMARY

The method employed heretofore to obtain approximate solutions of the transonic flow equation for plane and axisymmetric flow is extended to give reasonable results for wings of finite span, consistent with the known properties of transonic flows. In this method the partial differential equation appropriate to the study of transonic flow is replaced by a nonlinear ordinary differential equation, which can be solved by numericzl methods. Asymptotic forms of this differential equation are given for very high and very low aspect ratios, and analytic results are obtained for certain special cases. From the asymptotic form for low aspect ratio, analytic expressions are derived for the pressure distribution on a number of interesting shapes, including rectangular wings having wedge or circular-arc profiles and also thin elliptic cone-cylinders. For the thin elliptic cone-cylinders comparisons are made with previous theoretical results and with experimental data.

Numerical results, calculated by use of electronic computing machines, are given in the form of pressure distributions and pressure drag for two profile shapes, wedge and circular arc, for wings of rectangular plan form. The range of aspect ratios covered extends effectively from zero to infinity and agreement with the asymptotic results is shown at both limits.

INTRODUCTION

This paper is concerned with the theoretical prediction of the pressure distribution on thin, nonlifting wings of finite span at Mach numbers near 1. It is assumed that the wings are sufficiently thin that the small-disturbance theory of transonic flow can be used. Attention is further restricted to wings whose plan form and profile are such that at all points the flow accelerates along the chord. This makes it possible to extend the "parabolic" method described in reference 1 for two-dimensional flow, and in reference 2 for axisymmetric flow, to permit determination of an approximate solution for a wide class of wings of finite span. The general properties of this solution are examined and compared with known properties of transonic flow. The case of wings of rectangular plan form having wedge or symmetrical circular-arc profiles is considered in detail. Results are given in the form of pressure distributions, and for each case the section and total pressure drag coefficients are also evaluated. The number of wings included is sufficinet to cover effectively the entire range of aspect ratios from zero to infinity. Simple analytic solutions are given for various limiting cases of the rectangular wings and also for certain other plan forms.

Difficulties associated with the nonlinearity and mixed type of the governing equation of transonic flow theory are such that no previous solutions, exact or approximate, have been given for wings of moderate aspect ratio at Mach number 1. These difficulties have not, however, prevented the determination of several important relations between solutions (see ref. 3). These are: (a) the similarity rule, which relates the solutions for a family of affinely related wings, (b) the equivalence rule, which relates the solution for a slender, low-aspect-ratio wing to that around an equivalent nonlifting body of revolution having the same longitudinal distribution of cross-sectional area, and (c) the Mach number freeze, which

relates the solutions for various Mach numbers near 1 for any given wing.

Many investigators seeking solutions to the problem of two-dimensional transonic flow around thin airfoils have employed the hodograph transformation, by means of which the governing equation is linearized without approximation. In reference 4 Guderley discusses the extension of the hodograph method to the problem of three-dimensional transonic flow around finite-span wings. The advantage of linearization is lost in the extension to three dimensions, however, and his results are limited to certain trends for the influence of aspect ratio for a special type of finite-span wing. Guderley concludes that to find a complete solution of the nonlinear equation for transonic flow around a wing of moderate aspect ratio would prove extremely cumbersome if not impossible.

The approximate method presented in references 1 and 2 does not employ the hodograph transformation and no essential difficulty is encountered in the extension to three-dimensional problems. Application of this method leads, as before, to a nonlinear ordinary differential equation for the longitudinal perturbation velocity on the wing surface. However, for wings of finite span the resulting equation is considerably more complicated than in the two-dimensional case and it is necessary to resort to numerical methods in order to determine a solution. The equation is in a form suitable for hand computation by the method of isoclines and this method was used in preliminary calculations to explore the nature of the solutions for the two profile shapes considered. However, the volume of work required in the computation of pressure distributions at several spanwise stations on a number of wings of different aspect ratios is sufficiently great that the results tabulated in the present report were obtained by use of electronic computing machines.

PRINCIPAL SYMBOLS

A	aspect ratio, $\frac{(\text{span})^2}{\text{area of plan form}}$
$\bar{A}$	$[M_\infty^2(\gamma+1)\tau]^{1/3}A$
C	Euler's constant $\approx 0.577215665\ldots$
C_D	pressure drag coefficient
$\bar{C}_D$	$\frac{[M_\infty^2(\gamma+1)]^{1/3}C_D}{\tau^{5/3}}$
C_p	pressure coefficient, $\frac{p-p_\infty}{q_\infty}$
$\bar{C}_p$	$\frac{[M_\infty^2(\gamma+1)]^{1/3}C_p}{\tau^{2/3}}$
c	maximum chord
c_d	section pressure drag coefficient
$\bar{c}_d$	$\frac{[M_\infty^2(\gamma+1)]^{1/3}c_d}{\tau^{5/3}}$
D	pressure drag
k	$\frac{M_\infty^2(\gamma+1)}{U_\infty}$
M_∞	free-stream Mach number
p	static pressure
p_∞	free-stream static pressure
q_∞	$\frac{\rho_\infty U_\infty^2}{2}$
$S(x)$	cross-sectional area
$s(x)$	value of y at the edge of a wing
$\bar{s}$	$\frac{[M_\infty^2(\gamma+1)\tau]^{1/3}s}{c}$
t	maximum thickness of wing
U_∞	free-stream velocity
u	perturbation velocity component parallel to x axis
$\bar{u}$	$\frac{[M_\infty^2(\gamma+1)]^{1/3}}{\tau^{2/3}}\frac{u}{U_\infty}$
x,y,z	Cartesian coordinates where x extends in the direction of the free stream
$\bar{x}$	$\frac{x}{c}$
$\bar{y}$	$\frac{[M_\infty^2(\gamma+1)\tau]^{1/3}y}{c}$
$Z(x,y)$	ordinates of surface of wing
γ	ratio of specific heats (1.4 for air)
λ	$k\frac{\partial u}{\partial x}$
ρ_∞	free-stream density
τ	$\frac{t}{c}$
φ	perturbation velocity potential
ξ_∞	$\frac{M_\infty^2-1}{[M_\infty^2(\gamma+1)\tau]^{2/3}}$
θ	half apex angle of circular cone

SUBSCRIPTS

B	body
FH	front half
W	wing
e	edge
o	singular point

SUPERSCRIPT

*	sonic point

FUNDAMENTAL EQUATIONS AND BOUNDARY CONDITIONS

A thin wing of symmetrical profile at zero angle of attack is assumed to be immersed in a steady flow of an inviscid compressible gas with free-stream Mach number near 1. The axis system, as shown in figure 1, consists of Cartesian coordinates with the x axis parallel to the free stream and with the origin at the most forward point of the wing. The wing plan form is described by $y=-s_1(x)$ and $y=s_2(x)$ as indicated in figure 1.

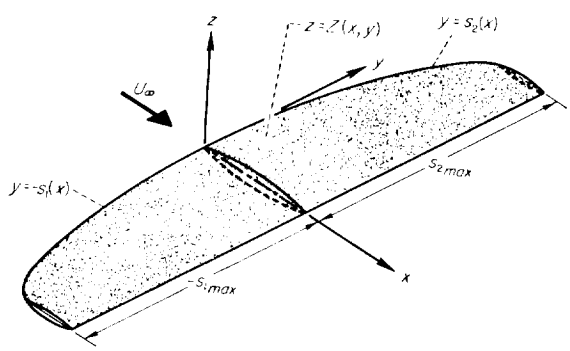

FIGURE 1.—View of wing and coordinate system.

Problems of transonic flow around thin wings can be studied by use of the following equation, where U_∞ and M_∞ are the velocity and Mach number in the free stream, γ is the ratio of specific heats ($\gamma=1.4$ for air), $k=M_\infty^2(\gamma+1)/U_\infty$ and the subscripts indicate differentiation:

$$(1-M_\infty^2)\varphi_{xx}+\varphi_{yy}+\varphi_{zz}=\frac{M_\infty^2(\gamma+1)}{U_\infty}\varphi_x\varphi_{xx}$$

$$\equiv k\varphi_x\varphi_{xx} \tag{1}$$

In this equation φ is the perturbation velocity potential, whose gradient yields the perturbation velocity components u, v, and w, parallel to the x, y, and z axes. The appropriate boundary conditions are that the gradient of φ vanish far ahead of the wing and that the flow be tangential to the wing surface. For thin wings the latter condition is satisfied if

$$(\varphi_z)_{z=0}=U_\infty\frac{\partial Z(x,y)}{\partial x} \tag{2}$$

where $Z(x,y)$ represents the ordinates of the surface. The pressure coefficient is approximated as in linear theory, that is

$$C_p=\frac{p-p_\infty}{(\rho_\infty U_\infty^2)/2}=-\frac{2\varphi_x}{U_\infty}=-\frac{2u}{U_\infty} \tag{3}$$

where ρ_∞ is the density in the free stream.

In addition to satisfying the above equations, it is also necessary to take proper account of the difference in regions of influence and dependence in the subsonic and supersonic portions of the flow field.

In general, shock waves occur in transonic flows and when they appear, additional equations are needed for the associated discontinuous changes in velocity. For the purposes of this paper, however, the shock relations are not required. In the first place, attention is restricted to Mach numbers sufficiently near 1 that the flow in the vicinity of the wing is essentially the same, by virtue of the Mach number freeze, as at free-stream Mach number 1. Second, the shapes considered are confined to those for which, at Mach number 1, the shock stands at the rear of the wing where its influence can not extend onto the wing surface.

APPROXIMATE SOLUTION

The techniques used in references 1 and 2 can be applied to determine an approximate solution of equation (1) for a finite span wing at Mach numbers near 1. First, the coefficient of φ_x is replaced by the symbol λ as follows:

$$\lambda=[M_\infty^2(\gamma+1)/U_\infty]\varphi_{xx}\equiv k\partial u/\partial x>0 \tag{4}$$

$$\varphi_{yy}+\varphi_{zz}-\lambda\varphi_x=-(1-M_\infty^2)\varphi_{xx}\equiv f_P \tag{5}$$

Attention is restricted to cases for which λ is positive and it is assumed, as was also done in references 1 and 2, that λ varies sufficiently slowly that it can be considered constant in the initial stages of the analysis. The resulting equation is

linear for λ=constant and is of elliptic, hyperbolic, or parabolic type depending on whether the free-stream Mach number is less than, greater than, or equal to 1. Use of the boundary conditions given with equation (1) and the form of Green's theorem appropriate for the left side of equation (5) leads to the following equation for u if no account need be taken of shock waves:

$$u_P(x,y,z)=-\frac{U_\infty}{2\pi}\frac{\partial}{\partial x}\int_0^x d\xi\int_{-s_1(\xi)}^{s_2(\xi)}\frac{\partial Z/\partial\xi}{x-\xi}e^{\frac{-\lambda[(y-\eta)^2+z^2]}{4(x-\xi)}}d\eta$$
$$-\frac{1}{\lambda}\frac{\partial}{\partial x}\int_{-\infty}^{\infty}d\eta\int_{-\infty}^{\infty}d\zeta\int_{-\infty}^{x}\frac{f_P}{x-\xi}e^{\frac{-\lambda[(y-\eta)^2+(z-\zeta)^2]}{4(x-\xi)}}d\xi \tag{6}$$

where

$$f_P=-(1-M_\infty^2)\varphi_{\xi\xi}$$

The subscript P on u serves as a reminder that λ is considered constant at this stage of the analysis. At Mach number 1, f_P is zero and u_P can be calculated for any given value of λ for a known profile and plan form. At other Mach numbers equation (6) is an integral equation whose solution remains to be found. For Mach numbers near 1, however, f_P is very small and $\varphi_{\xi\xi}$ can safely be replaced by λ/k. The triple integral can then be evaluated with the following result:

$$\frac{u_P(x,y,z)}{U_\infty}=\frac{(1-M_\infty^2)}{M_\infty^2(\gamma+1)}$$
$$-\frac{1}{2\pi}\frac{\partial}{\partial x}\int_0^x d\xi\int_{-s_1(\xi)}^{s_2(\xi)}\frac{\partial Z/\partial\xi}{x-\xi}e^{\frac{-\lambda[(y-\eta)^2+z^2]}{4(x-\xi)}}d\eta \tag{7}$$

Next, the value of $k\varphi_{xx}$ at the point x,y,z is restored in place of λ in equation (7). For each value of y and z the result is a first-order, nonlinear, ordinary differential equation for u as a function of x. The subscript P is now dropped, and $k\varphi_{xx}$ is written as ku'. It is important that the order in which the operations have been performed be retained, and this is indicated in the following equation by a notation designed to show that the derivative with respect to x is to be taken holding u' constant.

$$\frac{u(x,y,z)}{U_\infty}=\frac{(1-M_\infty^2)}{M_\infty^2(\gamma+1)}-\frac{1}{2\pi}\frac{\partial}{\partial x}\Big)_{u'=\text{const}}$$
$$\int_0^x d\xi\int_{-s_1(\xi)}^{s_2(\xi)}\frac{\partial Z/\partial\xi}{x-\xi}e^{\frac{-ku'[(y-\eta)^2+z^2]}{4(x-\xi)}}d\eta \tag{8}$$

In cases where attention is confined to conditions on the wing surface, u can be evaluated on the x,y plane and equation (8) can be simplified by letting $z=0$ in the integral.

It is convenient to express equation (8) in terms of reduced variables indicated by the transonic similarity rule and defined as follows:

$$\left.\begin{aligned}
&\bar{x}=x/c,\qquad dZ/dx=\tau d(Z/t)/d\bar{x}\\
&\tau=t/c=(\text{maximum thickness})/(\text{maximum chord})\\
&\bar{y}=[M_\infty^2(\gamma+1)\tau]^{1/3}y/c,\qquad \bar{s}=[M_\infty^2(\gamma+1)\tau]^{1/3}s/c\\
&\xi_\infty=(M_\infty^2-1)/[M_\infty^2(\gamma+1)\tau]^{2/3}\\
&\bar{u}=\{[M_\infty^2(\gamma+1)]^{1/3}/\tau^{2/3}\}(u/U_\infty)=-C_p/2
\end{aligned}\right\} \tag{9}$$

Equation (8) thus becomes

$$\bar{u}(\bar{x},\bar{y},0)=-\xi_\infty-\frac{1}{2\pi}\frac{\partial}{\partial\bar{x}}\Big)_{\bar{u}'=\text{const}}$$
$$\int_0^{\bar{x}}d\xi\int_{-\bar{s}_1(\xi)}^{\bar{s}_2(\xi)}\frac{\partial(Z/t)/\partial\xi}{\bar{x}-\xi}e^{\frac{-\bar{u}'(\bar{y}-\eta)^2}{4(\bar{x}-\xi)}}d\eta \tag{10}$$

PROPERTIES OF TRANSONIC FLOW

From equation (10) it can be seen that for affinely related plan forms (fixed $\bar{s}(\bar{x})$), and affinely related profiles (fixed $\partial(Z/t)/\partial\bar{x}$), $\bar{u}$ at a given $\bar{x}$ and $\bar{y}$ varies only with ξ_∞. Thus the present results follow the transonic similarity rule. Note that $\bar{s}$ has the same parametric form as the aspect ratio parameter customarily used in the statement of the similarity rule, that is, $\bar{A}=[M_\infty^2(\gamma+1)\tau]^{1/3}A$, where A is the aspect ratio. For a rectangular wing $\bar{s}$ is independent of $\bar{x}$ and the aspect ratio parameter, $\bar{A}$, is $(\bar{s}_1+\bar{s}_2)$. For other plan forms

$$\bar{A}=(\bar{s}_{1\max}+\bar{s}_{2\max})^2\Big/\left(\int_0^1 d\bar{x}\int_{-\bar{s}_1(\bar{x})}^{\bar{s}_2(\bar{x})}d\bar{y}\right)$$

Furthermore $\bar{u}'$ in the exponent in equation (10) can be replaced by $d(\bar{u}+\xi_\infty)/d\bar{x}$ for a given value of $\bar{y}$ and it follows for wings of affinely related geometry that $\bar{u}+\xi_\infty$ at a given $\bar{x}$ and $\bar{y}$ does not vary with ξ_∞. Thus the present results contain the Mach number freeze. Notice that there is a coupling of aspect ratio, thickness ratio, and Mach number in $\bar{A}$, such that in order to maintain a fixed $\bar{A}$ for a wing of given thickness ratio as the Mach number varies it is necessary to vary the aspect ratio likewise. The variation of aspect

ratio with Mach number is not great in the range for which the freeze can be expected to apply, and would disappear altogether if k in equation (1) were defined as $(\gamma+1)/U_\infty$ as is often done in the study of transonic flows. This definition of k is not recommended, however, since it results in considerable loss of accuracy at Mach numbers removed from unity (see ref. 5).

INITIAL CONDITIONS

For each value of $\bar{y}$ equation (10) is a first-order ordinary differential equation and its solution requires the specification of one auxiliary condition. The simplest case is one for which a value of $\bar{u}$ is known at some value of $\bar{x}$ for every spanwise station. This is the case for a wing of wedge profile, for which it is required that the velocity be sonic at the shoulder. In general, however, there is no point at which $\bar{u}$ is known a priori and some alternative condition must be imposed in order to determine a solution. Under similar circumstances in references 1 and 2, the assumption was made that the desired solution for an analytic shape was itself analytic. It happens in all the cases considered, that is, two-dimensional flow around an airfoil, axisymmetric flow around a body of revolution, and now three-dimensional flow past a wing, that the equation contains a singular point through which pass an infinity of integral curves. In each case only one is analytic. Thus the requirement of analyticity is sufficient to determine a unique solution.

In order to show mathematically what has been stated above, equation (10) can be written

$$\overline{U}=F(\bar{x},\overline{U}';\bar{y}) \tag{11}$$

where

$$\overline{U}=\bar{u}+\xi_\infty$$

and

$$\overline{U}'=\bar{u}'=d(\bar{u}+\xi_\infty)/d\bar{x}$$

The equation will be investigated for a fixed value of $\bar{y}$. A derivative with respect to $\bar{x}$ can be taken as follows:

$$\overline{U}'=\partial F/\partial\bar{x}+\overline{U}''\partial F/\partial\overline{U}' \tag{12}$$

where it should be noted that both $\partial F/\partial\bar{x}$ and $\partial F/\partial\overline{U}'$ are, in general, functions of $\bar{x}$ and $\overline{U}'$.

At a point where $\partial F/\partial\overline{U}'=0$ it is possible to evaluate $\overline{U}'$ providing only that $\overline{U}''$ is finite, but this is assured if the solution is analytic. With $\overline{U}'$ known at a point, it is possible to calculate $\overline{U}$ at that point by use of equation (11). This is not enough to determine a unique solution because $\overline{U}''$ can have any finite value. However, additional derivatives can be taken and in each case the unknown, but finite, higher derivative of $\overline{U}$ will be multiplied by $\partial F/\partial\overline{U}'=0$ and can be disregarded. Thus all derivatives can be determined in principle at the singular point. Since each one is finite and uniquely determined, it follows that the assumption of analyticity is sufficient to determine a unique solution in the neighborhood of the singular point.

It is interesting to note that in both the two-dimensional and the axisymmetric cases $\partial F/\partial\overline{U}'$ is a product of a function of $\bar{x}$ and a function of $\overline{U}'$, that is, $\partial F/\partial\overline{U}'=f_1(\bar{x})f_2(\overline{U}')$. Thus when $\partial F/\partial\overline{U}'$ is set equal to zero, the location of the singular point is given by $f_1(\bar{x})=0$ providing $f_2(\overline{U}')$ is not zero, and this latter condition was assured in both of the above-mentioned cases by the requirement that $\overline{U}'$ be finite. In the present case $\partial F/\partial\overline{U}'$ does not have this convenient property and the two equations, $\partial F/\partial\overline{U}'=0$ and $\overline{U}'-\partial F/\partial\bar{x}=0$, are solved simultaneously for the location of the singular point and the velocity gradient at that point.

ASYMPTOTIC FORM OF APPROXIMATE SOLUTION FOR LARGE ASPECT RATIO

Before proceeding to calculate pressure distributions for a particular plan form and profile shape, it is well to consider what general results can be found from equations (8) or (10) for various limiting cases, and whether the associated simplifications of the equation may make it possible to obtain analytic results. It will be shown that under certain circumstances analytic results can be obtained for wings of very large and very small aspect ratio.

For an unyawed wing of very high aspect ratio with an extensive region of constant chord and airfoil section, advantage can be taken of the presence of the exponential function, which tends to diminish the importance of distant regions relative to those nearby and thus permits simplification of the equation. Two possibilities will be considered, one for which such a region of constant geometry occurs near the center of the wing and one for which it occurs near the tip.

CENTRAL REGION OF HIGH ASPECT RATIO WING

Place the origin in a region of constant geometry near the center of a very high aspect ratio wing and make use of the nature of the exponential function to justify disregarding small variations at distant points. This permits equation (10) to be simplified by letting $\bar{s}_1(\bar{x})=\bar{s}_2(\bar{x})=\infty$ and considering Z a function of $\bar{x}$ alone across the entire span. The following asymptotic form results:

$$\left.\begin{aligned}
&\bar{u}=-\xi_\infty-\frac{1}{2\pi}\frac{\partial}{\partial\bar{x}}\Big)_{\bar{u}'=\text{const}}\int_0^{\bar{x}}\frac{d(Z/t)/d\xi}{\bar{x}-\xi}\,d\xi\\
&\int_{-\infty}^{\infty}e^{\frac{-\bar{u}'\eta^2}{4(\bar{x}-\xi)}}d\eta=-\xi_\infty-\frac{1}{\sqrt{\pi\bar{u}'}}\frac{d}{d\bar{x}}\int_0^{\bar{x}}\frac{d(Z/t)/d\xi}{(\bar{x}-\xi)^{1/2}}d\xi\\
&\text{or}\\
&(\bar{u}+\xi_\infty)\sqrt{\bar{u}'}=-\frac{1}{\sqrt{\pi}}\int_0^{\bar{x}}\frac{d(Z/t)/d\xi}{(\bar{x}-\xi)^{1/2}}\,d\xi
\end{aligned}\right\}\tag{13}$$

This is the counterpart in reduced variables of the result given in equation (42) of reference 1 for two-dimensional flow past an airfoil. The solution can be found in analytic form for an airfoil having ordinates given by an analytic function provided that $\bar{u}+\xi_\infty$ is known at one point. If this point is the sonic point, $\bar{x}^*$, where $\bar{u}+\xi_\infty=0$, the general solution is the same as that given in equation (47) of reference 1, namely

$$\bar{C}_p=-2\bar{u}-2\xi_\infty=-2\left\{\frac{3}{\pi}\int_{\bar{x}^*}^{\bar{x}}\left[\frac{d}{d\bar{x}_1}\int_0^{\bar{x}_1}\frac{d(Z/t)/d\xi}{(\bar{x}-\xi)^{1/2}}\,d\xi\right]^2 d\bar{x}_1\right\}^{1/3}-2\xi_\infty+\bar{C}_{p_{\xi_\infty=0}}\tag{14}$$

As a simple example, consider a wedge profile for which the ordinates of the surface are defined by $Z/t=x/c=\bar{x}$ for $0\leq x\leq c/2$ and $Z/t=\frac{1}{2}$ for $x>c/2$. Thus the shoulder, and therefore the sonic point, is at $\bar{x}=\frac{1}{2}$. For this case, equation (14) becomes, for $\bar{x}\leq\frac{1}{2}$,

$$\bar{C}_p=2\xi_\infty-2\left(\frac{3}{\pi}\ln 2\bar{x}\right)^{1/3}\tag{15}$$

This result, which is the same as that given in equation (50) of reference 1, is shown in figure 2 for $M_\infty=1$, together with the corresponding theoretical result given by Guderley and Yoshihara

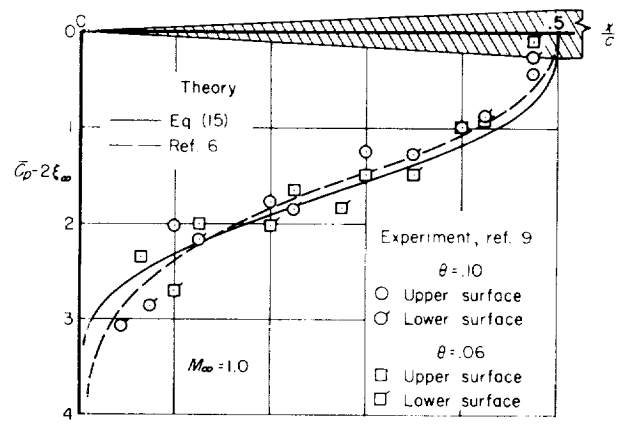

FIGURE 2.—Theoretical and experimental pressure distributions at $M_\infty=1$ within a region of constant geometry on a very high aspect ratio wing having a wedge profile (two-dimensional flow).

in reference 6, and with experimental data obtained in the Langley annular transonic wind tunnel and reported by Habel, Henderson, and Miller in reference 7. It should be observed that the pressure gradient at the shoulder is infinite in the theoretical results. It can be seen in equation (13) that an infinite pressure gradient is the inevitable consequence of requiring $\bar{u}+\xi_\infty$ to be zero at a point, such as the shoulder, where the derivative of the integral is not zero.

Next, consider a smooth profile for which $\bar{u}+\xi_\infty$ is not known a priori at any point. Equation (14) has the same form as equation (11), that is $\bar{U}=F(\bar{x},\bar{U}';0)$. If a derivative is taken with respect to $\bar{x}$ and the coefficient of $\bar{U}''$ set equal to zero, the singular point is found to be at the value of $\bar{x}$ for which

$$\frac{d}{d\bar{x}}\int_0^{\bar{x}}\frac{d(Z/t)/d\xi}{(\bar{x}-\xi)^{1/2}}\,d\xi=0\tag{16}$$

It can be seen from equation (13) that the singular point is also the sonic point, since $u+\xi_\infty$ is zero there for any finite value of $\bar{u}'$. Thus equations (14) and (16), which are identical with equations (47) and (45) of reference 1, are sufficient to determine a unique solution. Furthermore, at the singular point, the analytic solution automatically satisfies the remaining relation obtained from equation (12), that is, $\bar{U}'=\partial F/\partial\bar{x}$.

Theoretical pressure distributions computed for several airfoils by use of the above equations are given in reference 1 and are shown there to be in good agreement with experimental pressure distri-

butions at $M_\infty=1$. Of these airfoils, the most pertinent for the present discussion is the circular arc, defined by $Z/t=2(\bar{x}-\bar{x}^2)$ for $0\leq\bar{x}\leq 1$. For this profile shape, equation (16) yields $\bar{x}_0=\bar{x}^*=\frac{1}{4}$ and equation (14) becomes

$$\bar{C}_p=2\xi_\infty-2\left\{\frac{12}{\pi}\left[(\ln 4\bar{x})-8\bar{x}+8\bar{x}^2+\frac{3}{2}\right]\right\}^{1/3} \quad (17)$$

This result, which is the same as that given in equation (53) of reference 1, is illustrated for $M_\infty=1$ in figure 3 together with experimental data from reference 8.

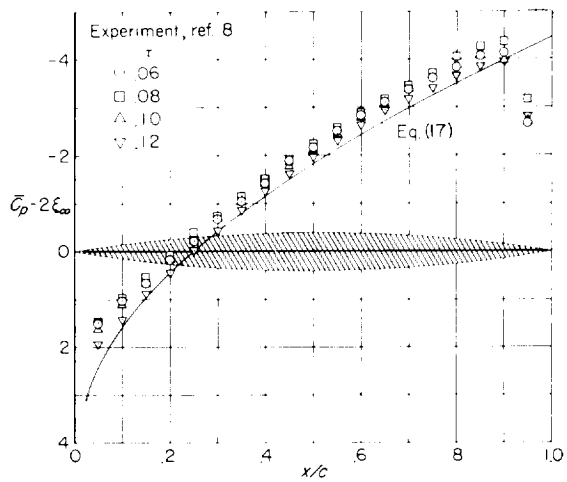

FIGURE 3.—Theoretical and experimental pressure distributions at $M_\infty=1$ within a region of constant geometry on a very high aspect ratio wing having a circular-arc profile (two-dimensional flow).

Attention should be called to the fact that one of the several airfoils considered in reference 1 is cusped in the rear and thus does not meet the requirement of positive λ along the chord as specified in equation (4). It is necessary in this case to use the closely related hyperbolic method in order to obtain an approximate solution for the rear portion, and a similar procedure would undoubtedly be required also for a finite-span wing having such a profile shape.

TIP OF HIGH ASPECT RATIO WING

Consider a wing having a constant geometry region at one tip and place the origin at the tip so that $\bar{y}=\bar{s}_1=0$. Again the influence of the exponential function is such that $\bar{s}_2(\bar{x})$ can be set equal to infinity and Z can be considered a function of $\bar{x}$ alone across the entire span. Equation (10) then becomes

$$\bar{u}+\xi_\infty=-\frac{1}{2}\left[\frac{1}{\sqrt{\pi\bar{u}'}}\frac{d}{d\bar{x}}\int_0^{\bar{x}}\frac{d(Z/t)/d\xi}{(\bar{x}-\xi)^{1/2}}d\xi\right] \quad (18)$$

Inasmuch as this result only differs from that given in equation (13) by a factor of ½, which cannot affect the position of the singular point, it follows that there is a very simple relation between the solution for the pressure distribution at the tip of a constant geometry region of a very high aspect ratio wing and that for a two-dimensional airfoil having the same profile shape, namely

$$\bar{C}_{p_{\text{tip}}}=2\xi_\infty+\left(\frac{1}{2}\right)^{2/3}(\bar{C}_{p\xi_{\infty=0}})_{2-\text{dimen}} \quad (19)$$

ASYMPTOTIC FORM OF APPROXIMATE SOLUTION FOR SMALL ASPECT RATIO

For a very low aspect ratio wing, simplifications can be introduced which make it possible to derive an asymptotic form of equation (8). From this, analytic solutions can be found for a number of interesting shapes.

Let the integration be performed in two steps: 0 to $x-\epsilon$ and $x-\epsilon$ to x, where ϵ is a small quantity.

$$\frac{u}{U_\infty}=-\frac{1}{2\pi}\frac{\partial}{\partial x}\Bigg)_{u'=\text{const}}\left\{\int_0^{x-\epsilon}d\xi\int_{-s_1(\xi)}^{s_2(\xi)}\frac{\partial Z/\partial\xi}{x-\xi}e^{\frac{-ku'[(y-\eta)^2+z^2]}{4(x-\xi)}}d\eta+\int_{x-\epsilon}^{x}d\xi\int_{-s_1(\xi)}^{s_2(\xi)}\frac{\partial Z/\partial\xi}{x-\xi}e^{\frac{-ku'[(y-\eta)^2+z^2]}{4(x-\xi)}}d\eta\right\}+\frac{(1-M_\infty^2)}{M_\infty^2(\gamma+1)} \quad (20)$$

Since the point $\xi=x$ is excluded from the first term on the right and the exponent of e in that term is, consequently, always small for vanishing aspect ratio, the exponential function can be replaced by the first term of the expansion, $e^x=1+\ldots$. Since the x-wise variation of the surface slope and of the wing tips in the small region between $x-\epsilon$ and x is very small, the values appropriate to x can be used in the second term on the right.

$$\frac{u}{U_\infty}=-\frac{1}{2\pi}\frac{\partial}{\partial x}\Big)_{u'=\text{const}}\left\{\int_0^{x-\epsilon}\frac{d\xi}{x-\xi}\int_{-s_1(\xi)}^{s_2(\xi)}\frac{\partial Z}{\partial \xi}d\eta\right.$$
$$\left.+\int_{-s_1(x)}^{s_2(x)}\frac{\partial Z}{\partial x}d\eta\int_{x-\epsilon}^{x}e^{\frac{-ku'[(y-\eta)^2+z^2]}{4(x-\xi)}}\frac{d\xi}{x-\xi}\right\}$$
$$+\frac{(1-M_\infty^2)}{M_\infty^2(\gamma+1)} \qquad (21)$$

The η integration of the first term on the right can be performed symbolically since the integral of $2\partial Z/\partial x$ across the span is equivalent to the longitudinal gradient of cross-sectional area, $S'(x)$, providing only that the wing ordinates, Z, are zero at leading edges and swept trailing edges. The ξ integration of the second term on the right can be performed approximately by introducing a new variable for the exponent of e and retaining only the first, or logarithmic, term in the expansion of the resulting exponential integral.

$$\frac{u}{U_\infty}-\frac{(1-M_\infty^2)}{M_\infty^2(\gamma+1)}=-\frac{1}{2\pi}\frac{\partial}{\partial x}\Big)_{u'=\text{const}}\left\{\frac{1}{2}\int_0^{x-\epsilon}\frac{S'(\xi)}{x-\xi}d\xi\right.$$
$$-\frac{S'(x)}{2}\ln\left(\frac{ku'e^C}{4\epsilon}\right)$$
$$\left.-\int_{-s_1(x)}^{s_2(x)}\frac{\partial Z}{\partial x}\ln[(y-\eta)^2+z^2]d\eta\right\} \qquad (22)$$

where C is Euler's constant $\approx 0.577215665\ldots$ After the indicated derivative is taken, the first term on the right can be integrated by parts and rearranged so that the terms containing ϵ cancel exactly. The desired asymptotic form for a wing of vanishing aspect ratio becomes

$$\frac{u}{U_\infty}-\frac{(1-M_\infty^2)}{M_\infty^2(\gamma+1)}=-\frac{S'(0)}{4\pi x}+\frac{S''(x)}{4\pi}\ln\left[\frac{M_\infty^2(\gamma+1)e^C}{4x}\right]$$
$$+\frac{S''(x)}{4\pi}\ln\left(\frac{u'}{U_\infty}\right)+\frac{1}{4\pi}\int_0^x\frac{S''(x)-S''(\xi)}{x-\xi}d\xi$$
$$+\frac{1}{2\pi}\frac{\partial}{\partial x}\int_{-s_1(x)}^{s_2(x)}\frac{\partial Z}{\partial x}\ln[(y-\eta)^2+z^2]d\eta \qquad (23)$$

If attention is confined to the surface of the wing, it is sufficient to set $z=0$ in the last term and thereby evaluate u/U_∞ on the xy plane.

As discussed previously in connection with equations (10) through (12), the initial condition required for the solution of equation (23) can be fixed by the presence of a shoulder at which the velocity is assumed to be sonic, or it can be determined for a smooth shape in accordance with the requirement that the solution be analytic at the singular point. In the latter case it follows from equation (23) that for vanishing aspect ratio the singular point occurs where $S''(x)=0$.

It should be noted that the assumptions used in deriving equation (23) break down if the wing is not essentially slender. Thus use of equation (23) may lead to equivocal results near a shoulder or leading edge where the flow is locally two-dimensional in character. It is to be hoped, however, that such a local failure will not invalidate the results on the remainder of the wing.

As an example of a case that violates the condition of slenderness near the leading edge, consider an unyawed rectangular wing having a finite leading-edge angle. In this case, as in any other for which $S'(0)$ is not zero, the first term on the right causes C_p to vary as $1/x$ near $x=0$. Such a behavior near the leading edge is not as acceptable as the usual logarithmic infinity indicated by subsonic linear theory, because it leads to a logarithmically infinite value for the drag. However, as will be shown later in this report, the pressure distributions obtained from equation (23) agree very well over most of the wing with those calculated numerically by use of equation (10), and the agreement improves as the aspect ratio is decreased.

The failure of equation (23) to yield sonic velocity at a shoulder in some cases will be pointed out whenever it occurs, but it appears to be highly localized and should cause no difficulty in the interpretation of the results.

Provided that z, instead of η, is retained in the last term, equation (23) can be recognized as that given in reference 2 for a slender pointed body of revolution plus the additional term, $S'(0)/4\pi x$, which is zero for a pointed body. The initial condition is determined in the same manner for wings as for bodies and the methods of solution used in reference 2 can be applied for wings. In general it is necessary to resort to numerical methods, but there are special cases for which the equation simplifies and analytic solutions can be found. For instance, if $S''(x)$ is identically zero, the resulting equation is algebraic, and if $S''(x)$ is a constant, the resulting differential equation can be solved by separation of variables as in the case of the circular cone-cylinder in reference 2. Although at first glance these appear to be trivial

solutions, it will be shown on the following pages that both have interesting applications.

SOLUTION OF EQUATION (23) FOR $S''(x)=0$

If $S''(x)$ is identically zero, all terms on the right in equation (23) drop out except the term containing $S'(0)$ and the final integral term. Thus, for a thin wing

$$\frac{u}{U_\infty}-\frac{(1-M_\infty^2)}{M_\infty^2(\gamma+1)}=-\frac{S'(0)}{4\pi x}+I \tag{24}$$

where

$$I=\frac{1}{2\pi}\frac{\partial}{\partial x}\int_{-s_1(x)}^{s_2(x)}(dZ/dx)\ln(y-\eta)^2d\eta$$

and

$$S'(0)=S'(x)=\text{constant}$$

Application to a wing of rectangular plan form having a wedge profile.—Consider a thin, low-aspect-ratio wing having rectangular plan form and cross section and a wedge profile, as in figure

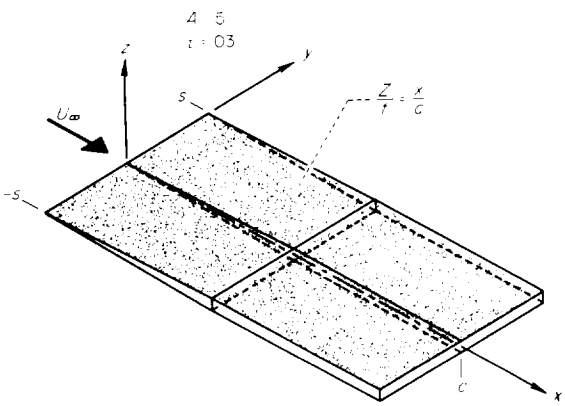

FIGURE 4.—Low-aspect-ratio wing having rectangular plan form and cross section, and a wedge profile with a shoulder at $x=c/2$.

4. Let the plan form and the surface ordinates be described as follows:

$$\left.\begin{aligned} &s_1(x)=s_2(x)=s=mc=\text{constant} \\ &Z(x,y)/t=x/c \qquad \text{for} \quad 0\leq x\leq c/2 \\ &Z(x,y)/t=1/2 \qquad \text{for} \quad x>c/2 \end{aligned}\right\} \tag{25}$$

Thus there is a shoulder at $x=c/2$, forward of which $S'(x)=4tm$ and both $S''(x)$ and I are identically zero. Substitution into equation (24) yields, for $x\leq c/2$,

$$C_p+\frac{2(1-M_\infty^2)}{M_\infty^2(\gamma+1)}=\frac{A\tau}{\pi(x/c)} \tag{26}$$

where the aspect ratio, $A=2m$, is based on the entire wing area to $x=c$. Figure 5 shows the

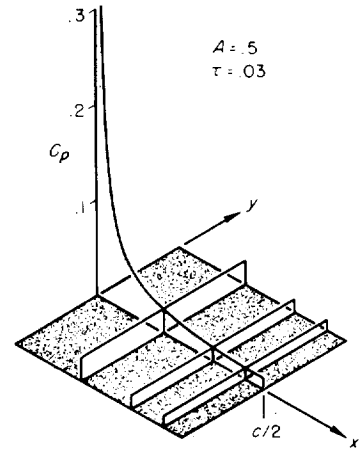

FIGURE 5.—Pressure distribution at $M_\infty=1$ on wing shown in figure 4; $A=1/2$, $\tau=0.03$.

pressure distribution at $M_\infty=1$, computed by use of equation (26), on a wing for which $A=1/2$ and $\tau=0.03$. In terms of the reduced variables defined in equation (9), equation (26) becomes

$$\bar{C}_p-2\xi_\infty=\bar{A}/\pi\bar{x} \tag{27}$$

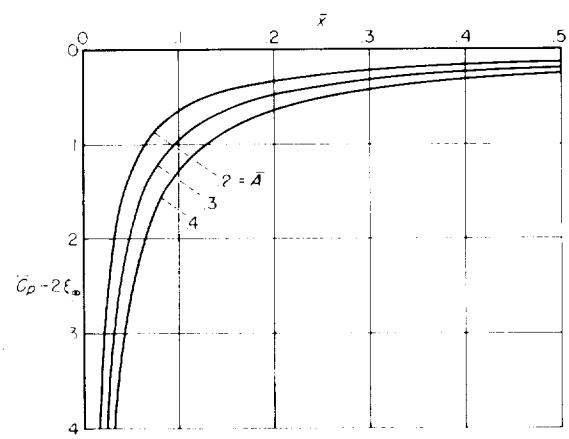

FIGURE 6.—Pressure distributions near $M_\infty=1$ for several low-aspect-ratio rectangular wings having wedge profiles.

Figure 6 shows results computed by use of equation (27) for several values of $\bar{A}$. Note that the requirement of sonic velocity at the shoulder cannot be met by equations (26) and (27) for a nonvanishing wing of finite length. However, it will be seen later, in the comparisons with the results obtained by numerical methods from equation

(10), that this failure at the shoulder affects only a very small region. It can be seen by reference to equation (23) that sonic velocity can be achieved at the shoulder if the term $[S''(x)/4\pi][\ln(u'/U_\infty)]$ is restored there by an infinite value of u'. Note also the $1/x$ infinity in C_p at $x=0$ leading, as discussed following equation (23), to logarithmically infinite drag.

Application to wing of parabolic plan form having a diamond cross section.—Consider a thin, low-aspect-ratio wing having parabolic plan form

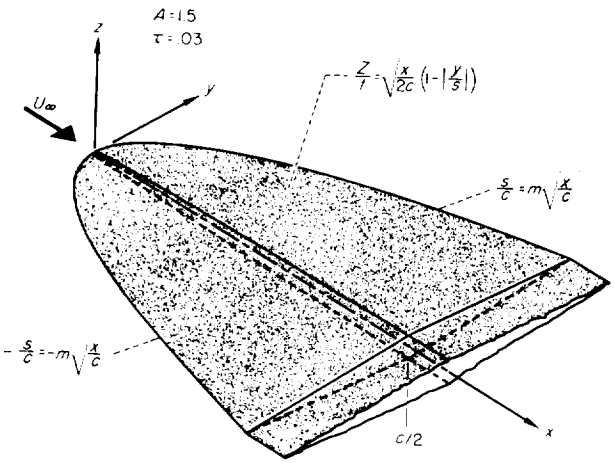

FIGURE 7.—Low-aspect-ratio wing having parabolic plan form, diamond cross section, a parabolic profile along the center line, and a shoulder at $x=c/2$.

and profile and a diamond cross section, as in figure 7. Let the plan form be described by

$$\left.\begin{aligned} s_1(x)=s_2(x)&=mc(x/c)^{1/2} && \text{for } 0\leq x\leq c/2\\ s_1(x)=s_2(x)&=mc(1/2)^{1/2} && \text{for } x>c/2\end{aligned}\right\} \tag{28}$$

and let the ordinates of the surface be described by

$$\left.\begin{aligned} Z(x,y)/t&=(x/2c)^{1/2}(1-|y/s|) && \text{for } 0\leq x\leq c/2\\ Z(x,y)/t&=(1/2)(1-|y/s|) && \text{for } x>c/2\end{aligned}\right\} \tag{29}$$

Thus there is a shoulder at $x=c/2$, and forward of the shoulder $S'(x)=\sqrt{2}tm$. Substitution into equation (24) yields, for $x\leq c/2$,

$$C_p+\frac{2(1-M_\infty^2)}{M_\infty^2(\gamma+1)}=-\frac{A\tau}{6\pi(x/c)}\left(\frac{y}{s}\right)\ln\left(\frac{1-y/s}{1+y/s}\right) \tag{30}$$

where the aspect ratio, $A=3\sqrt{2}m$, is based on the area of the wing ahead of the shoulder, but τ is based on the full chord. Figure 8 shows the

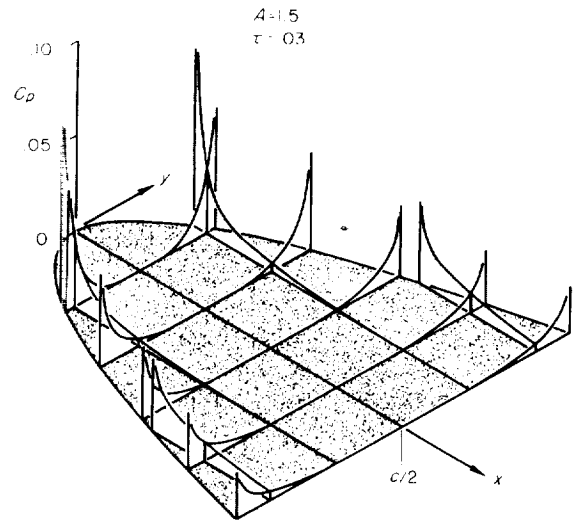

FIGURE 8.—Pressure distribution at $M_\infty=1$ on wing shown in figure 7; $A=3/2$; $\tau=0.03$.

pressure distribution at $M_\infty=1$, computed by use of equation (30), on a wing for which $A=3/2$ and $\tau=0.03$. As can be seen in the equation, $C_p+2(1-M_\infty^2)/M_\infty^2(\gamma+1)$ is proportional to $1/x$ for a fixed value of y/s and there is no mechanism for specifying sonic velocity at the shoulder; $C_p+2(1-M_\infty^2)/M_\infty^2(\gamma+1)$ is zero on the center line, logarithmically infinite at $|y/s|=1$ and becomes indeterminate as $x\rightarrow 0$. As discussed following equation (23), integration yields logarithmically infinite drag. No experimental or other theoretical evidence is available on which to base an evaluation of the pressures calculated by use of equation (30).

Application to wing of parabolic plan form having a circular-arc cross section.—Consider a thin, low-aspect-ratio wing having parabolic plan form and profile and a circular-arc cross section, as in figure 9. For this wing the plan form is described by equation (28), but the ordinates of the surface are specified as follows:

$$\left.\begin{aligned} Z(x,y)/t&=(x/2c)^{1/2}(1-y^2/s^2) && \text{for } 0\leq x\leq c/2\\ Z(x,y)/t&=(1/2)(1-y^2/s^2) && \text{for } x>c/2\end{aligned}\right\} \tag{31}$$

Again there is a shoulder at $x=c/2$, but forward

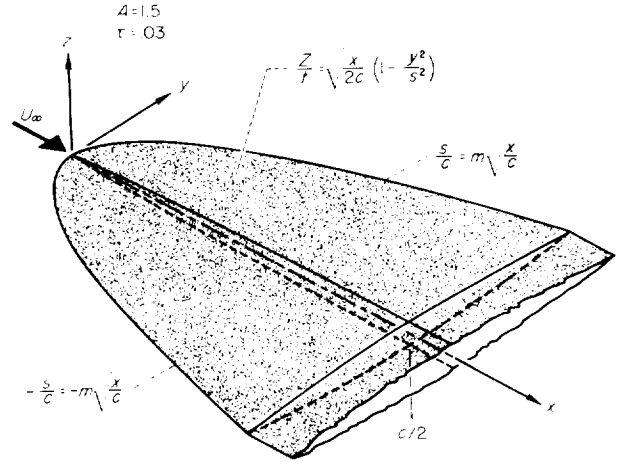

FIGURE 9.—Low-aspect-ratio wing having parabolic plan form, circular-arc cross section, a parabolic profile along the center line, and a shoulder at $x=c/2$.

of the shoulder $S'(x)=(4\sqrt{2}/3)tm$. Substitution into equation (24) yields, for $x\leq c/2$,

$$C_p+\frac{2(1-M_\infty^2)}{M_\infty^2(\gamma+1)}=-\frac{A\tau}{6\pi(x/c)}\left(\frac{y}{s}\right)^2 -\frac{A\tau}{12\pi(x/c)}\left(\frac{y}{s}\right)\left(1+\frac{y^2}{s^2}\right)\ln\left(\frac{1-y/s}{1+y/s}\right) \quad (32)$$

where the aspect ratio, $A=3\sqrt{2}m$, is based on the area of the wing ahead of the shoulder, but τ is based on the full chord. Figure 10 shows the

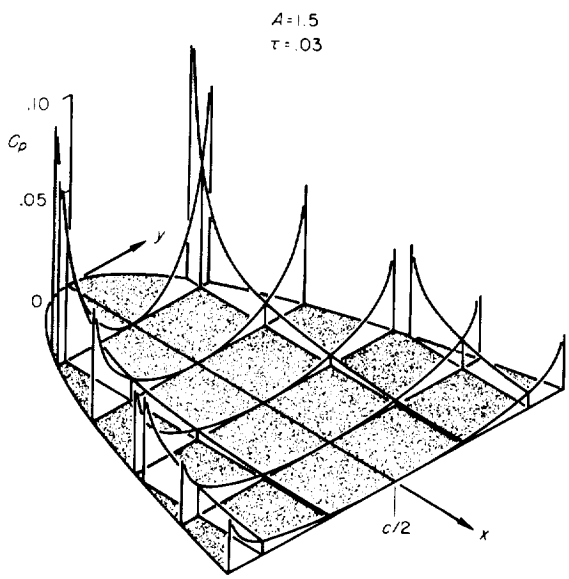

FIGURE 10.—Pressure distribution at $M_\infty=1$ on wing shown in figure 9; $A=3/2$; $\tau=0.03$.

pressure distribution at $M_\infty=1$, computed by use of equation (32), on a wing for which $A=3/2$ and $\tau=0.03$. The result is very similar to that seen in figure 8 for the wing of diamond cross section and the same remarks are appropriate.

SOLUTION OF EQUATION (23) FOR $S''(x)$=CONSTANT

If $S''(x)$ is a constant the following substitution results in a simplified form of equation (23). Let

$$G=\frac{u}{U_\infty}-\frac{(1-M_\infty^2)}{M_\infty^2(\gamma+1)}-\frac{S''}{4\pi}\ln\frac{M_\infty^2(\gamma+1)e^C}{4} \quad (33)$$

This yields the equivalent differential equation

$$\left.\begin{aligned}\ln\left(\frac{dG}{dx}\right)&=\frac{4\pi}{S''}\left[G+\frac{S'(0)}{4\pi x}+\frac{S''}{4\pi}\ln x -\frac{1}{2\pi}\frac{\partial}{\partial x}\int_{-s_1(x)}^{s_2(x)}\frac{\partial Z}{\partial x}\ln(y-\eta)^2\,d\eta\right]\\ \text{or}\quad \frac{dG}{dx}&=xe^{\left[\frac{4\pi G}{S''}+\frac{S'(0)}{xS''}-\frac{4\pi}{S''}I\right]}\end{aligned}\right\} \quad (34)$$

This can be solved by separation of variables, yielding

$$G=-\frac{S''}{4\pi}\ln\left\{-\frac{4\pi}{S''}\int_{x_0}^{x}x_1e^{\left[\frac{S'(0)}{x_1S''}-\frac{4\pi}{S''}I\right]}dx_1\right\} \quad (35)$$

where x_0 is determined in accordance with the rules previously stated in the section on initial conditions. The desired equation for u/U_∞ is obtained by combining equations (35) and (33).

$$\frac{u}{U_\infty}-\frac{(1-M_\infty^2)}{M_\infty^2(\gamma+1)}-\frac{S''}{4\pi}\ln\frac{M_\infty^2(\gamma+1)e^C}{4} =-\frac{S''}{4\pi}\ln\left\{-\frac{4\pi}{S''}\int_{x_0}^{x}x_1e^{\left[\frac{S'(0)}{x_1S''}-\frac{4\pi}{S''}I\right]}dx_1\right\} \quad (36)$$

Application to a wing of rectangular plan form having a circular-arc profile.—Consider a thin, low-aspect-ratio wing having a rectangular plan form and cross section and a circular-arc profile as in figure 11. Let the plan form and surface ordinates be described as follows:

$$\left.\begin{aligned}&s_1(x)=s_2(x)=s=mc=\text{constant}\\ &Z(x,y)/t=2[x/c-(x/c)^2] \qquad \text{for } 0\leq x\leq c\end{aligned}\right\} \quad (37)$$

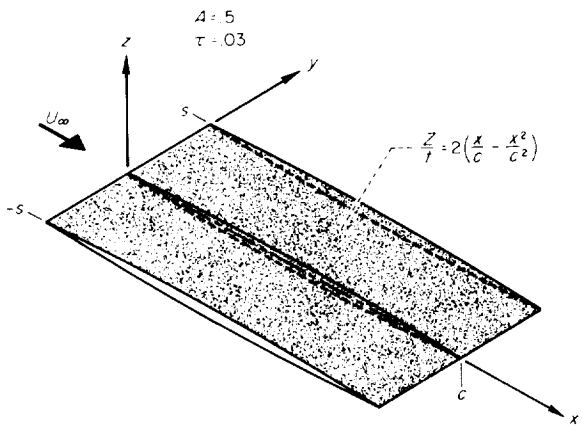

FIGURE 11.—Low-aspect-ratio wing having rectangular plan form and cross section, and a circular-arc profile.

For this wing

$$\left.\begin{aligned} &S'(x)=8tm(1-2x/c), \qquad S'(0)=8tm \\ &S''(x)=-16\tau m \\ &I=\frac{1}{2\pi}\left(\frac{d^2Z}{dx^2}\right)\int_{-mc}^{mc}\ln(y-\eta)^2\,d\eta \end{aligned}\right\} \quad (38)$$

Substitution in equation (36) yields

$$\begin{aligned} \frac{u}{U_\infty}-\frac{(1-M_\infty^2)}{M_\infty^2(\gamma+1)}=&-\frac{4m\tau}{\pi}\ln\frac{M_\infty^2(\gamma+1)e^C}{4} \\ &-\frac{4m\tau}{\pi}\ln\frac{4m^3\tau}{\pi}-\frac{4m\tau}{\pi}\int_{-1}^{1}\ln\left|\frac{y}{mc}-\eta_1\right|d\eta_1 \\ &+\frac{4m\tau}{\pi}\ln\left(\int_0^{x/c}x_1e^{-1/2x_1}\,dx_1\right) \end{aligned} \quad (39)$$

where the integration with respect to x_1 is carried rearward from the leading edge. The resulting expression for the pressure coefficient is

$$\begin{aligned} C_p+\frac{2(1-M_\infty^2)}{M_\infty^2(\gamma+1)}=&\frac{4A\tau}{\pi}\ln\left[\frac{M_\infty^2(\gamma+1)e^CA^3\tau}{2\pi}\right]-\frac{8A\tau}{\pi} \\ &+\frac{4A\tau}{\pi}\left[\left(1+\frac{y}{s}\right)\ln\left(1+\frac{y}{s}\right)+\left(1-\frac{y}{s}\right)\ln\left(1-\frac{y}{s}\right)\right] \\ &-\frac{4A\tau}{\pi}\ln\left[\bar{x}(2\bar{x}-1)e^{-1/2\bar{x}}-\frac{1}{2}Ei\left(-\frac{1}{2\bar{x}}\right)\right] \end{aligned} \quad (40)$$

where

$$-Ei(-x)=\int_x^\infty\frac{e^{-x_1}}{x_1}\,dx_1>0 \qquad \text{for} \quad 0<x<\infty$$

and $\bar{x}=x/c$ and where the aspect ratio, $A=2m$, is based on the entire wing area to $x=c$. Figure 12 shows the pressure distribution on a wing for which $A=1/2$ and $\tau=0.03$. In terms of the reduced variables defined in equation (9), equation (40) becomes

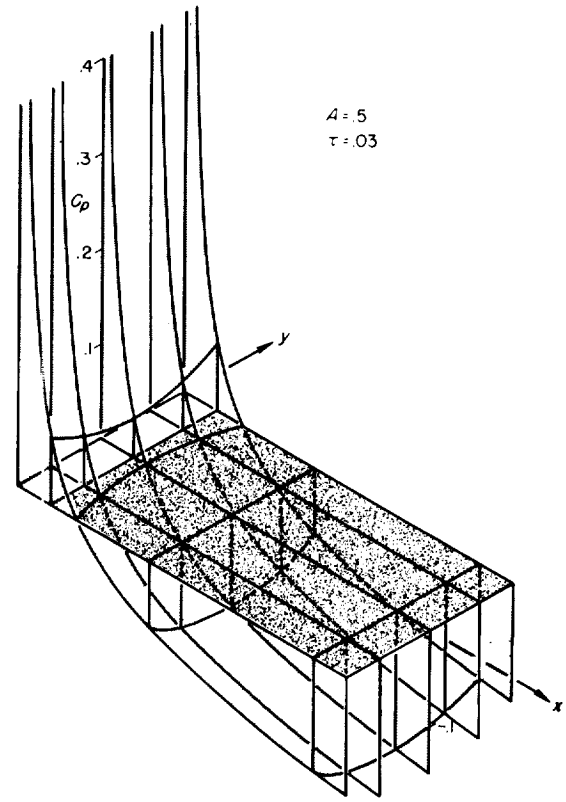

FIGURE 12.—Pressure distribution at $M_\infty=1$ on wing shown in figure 11; $A=1/2$; $\tau=0.03$.

$$\begin{aligned} \bar{C}_p-2\xi_\infty=&\frac{4\bar{A}}{\pi}\ln\left(\frac{e^C}{2\pi}\right)+\frac{12\bar{A}}{\pi}\ln\bar{A}-\frac{8\bar{A}}{\pi} \\ &+\frac{4\bar{A}}{\pi}\left[\left(1+\frac{y}{s}\right)\ln\left(1+\frac{y}{s}\right)+\left(1-\frac{y}{s}\right)\ln\left(1-\frac{y}{s}\right)\right] \\ &-\frac{4\bar{A}}{\pi}\ln\left[\bar{x}(2\bar{x}-1)e^{-1/2\bar{x}}-\frac{1}{2}Ei\left(-\frac{1}{2\bar{x}}\right)\right] \end{aligned} \quad (41)$$

Figure 13 shows results computed by use of equation (41) for a number of spanwise positions for several values of $\bar{A}$. Later in the report these will be compared with the results obtained numerically from equation (10).

For very small $\bar{x}$ equation (41) can be simplified by the use of the first few terms of the series for $-Ei(-1/2\bar{x})$.

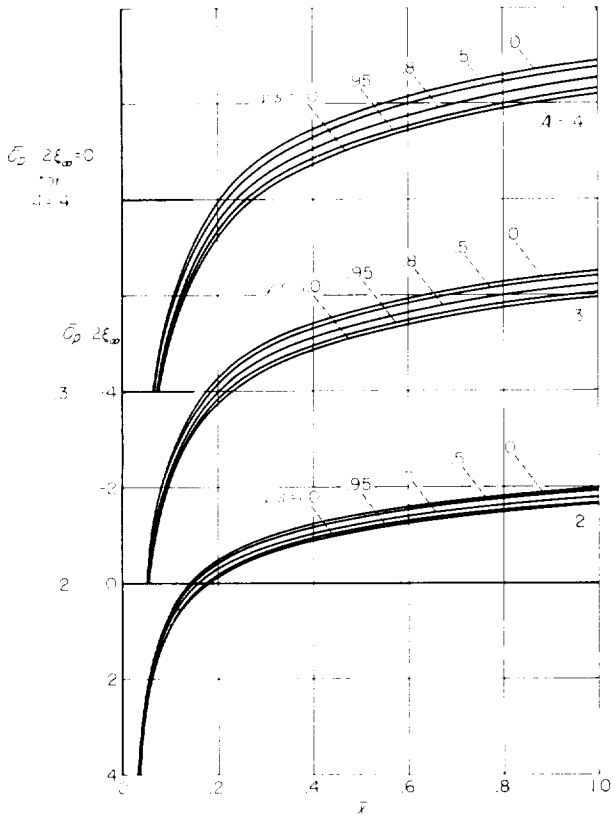

FIGURE 13.—Pressure distributions near $M_\infty=1$ for several low-aspect-ratio rectangular wings having circular-arc profiles.

$$(\bar{C}_p-2\xi_\infty)_{\bar{x}\to 0}=\frac{2\bar{A}}{\pi\bar{x}}-\frac{4\bar{A}}{\pi}\ln\left[8\bar{x}^3(1-\ .\ .\ .)\right]$$
$$+\frac{4\bar{A}}{\pi}\left[\ln\left(\frac{\bar{A}^3e^C}{2\pi}\right)-2+\left(1+\frac{y}{s}\right)\ln\left(1+\frac{y}{s}\right)\right.$$
$$\left.+\left(1-\frac{y}{s}\right)\ln\left(1-\frac{y}{s}\right)\right] \quad (42)$$

from which it can be seen that there is a $1/x$ singularity at the leading edge. Thus, in this case also, the pressure drag is logarithmically infinite.

Application to thin elliptic cone-cylinders.—Consider a delta wing of elliptic cross section as in figure 14. Let the plan form and the surface ordinates be described as follows:

$$\left.\begin{aligned} &s_1(x)=s_2(x)=s=mx\\ &Z(x,y)/t=(x/c)[1-(y/s)^2]^{1/2} \quad \text{for } 0\le x\le c/2\\ &Z(x,y)/t=(1/2)[1-(y/s)^2]^{1/2} \quad \text{for } x>c/2 \end{aligned}\right\} \quad (43)$$

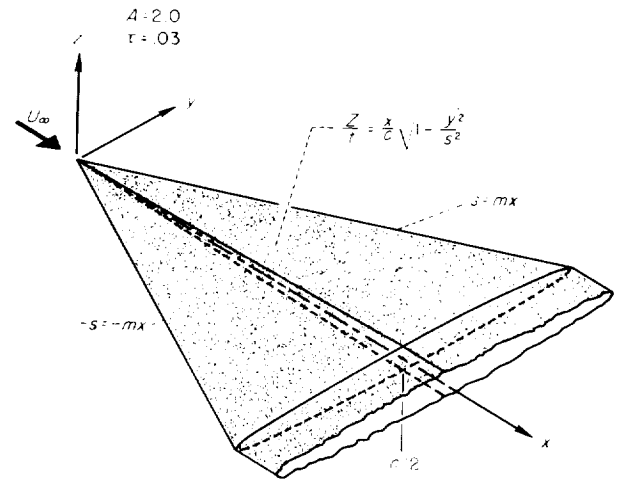

FIGURE 14.—Thin elliptic cone-cylinder with a shoulder at $x=c/2$.

Thus there is a shoulder at $x=c/2$ and forward of the shoulder

$$\left.\begin{aligned} &S'(x)=2\pi mt(x/c), \quad S'(0)=0\\ &S''(x)=2\pi m\tau\\ &I=(S''/2\pi)[1+\ln\,(mx/2)] \end{aligned}\right\} \quad (44)$$

Substitution in equation (36) yields, for $x\le c/2$,

$$\frac{u}{U_\infty}-\frac{(1-M_\infty^2)}{M_\infty^2(\gamma+1)}=\frac{m\tau}{2}\ln\frac{M_\infty^2(\gamma+1)e^C}{4}$$
$$-\frac{m\tau}{2}\ln\left\{\frac{-2}{m\tau}\int_{x_0}^{x}x_1e^{-2[1+\ln\,(mx_1/2)]}\,dx_1\right\} \quad (45)$$

With the requirement that $(u/U_\infty)-(1-M_\infty^2)/M_\infty^2(\gamma+1)$ is zero at the shoulder, the resulting expression for the pressure coefficient is

$$C_p+\frac{2(1-M_\infty^2)}{M_\infty^2(\gamma+1)}$$
$$=-2m\tau+m\tau\ln\left[e^2-\frac{32\ln\,(2x/c)}{M_\infty^2(\gamma+1)e^Cm^3\tau}\right]$$
$$=-\frac{A\tau}{2}+\frac{A\tau}{4}\ln\left[e^2-\frac{(2)^{11}\ln\,(2x/c)}{M_\infty^2(\gamma+1)e^CA^3\tau}\right] \quad (46)$$

where the aspect ratio, $A=4m$, is based on the area of the wing ahead of the shoulder, but τ is based on the full chord. Figure 15 shows the pressure distribution, computed by use of equation (46), on a wing for which $A=2$ and $\tau=0.03$. On the same figure is shown experimental data obtained by Page from a test in the Ames 2- by

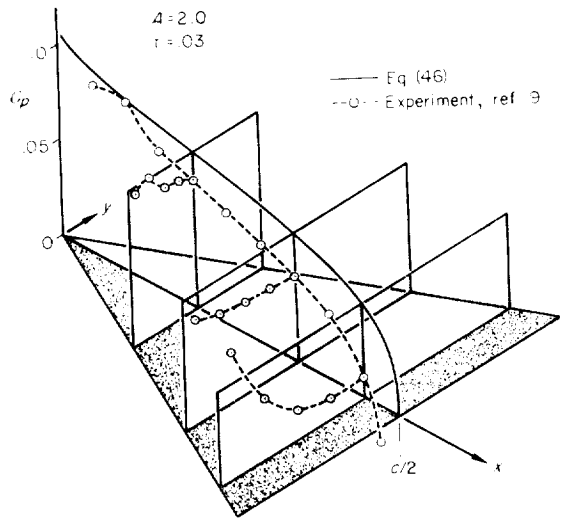

FIGURE 15. Theoretical and experimental pressure distribution at $M_\infty = 1$ on wing shown in figure 14; $A = 2$, $\tau = 0.03$.

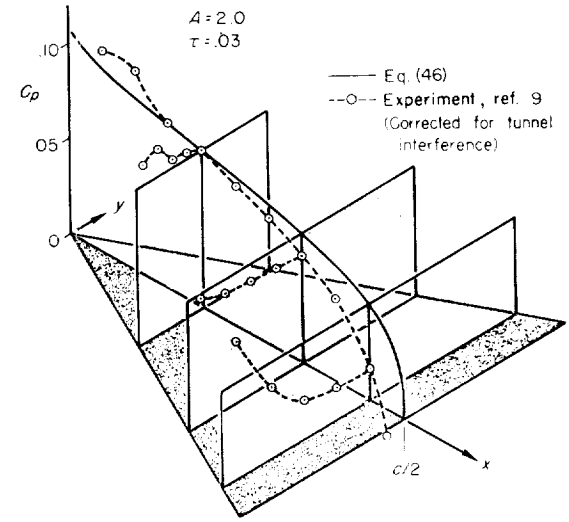

FIGURE 16.—Theoretical and corrected experimental pressure distribution at $M_\infty = 1$ on wing shown in figure 14; $A = 2$, $\tau = 0.03$.

2-Foot Transonic Tunnel (see ref. 9). The agreement is not very good. However, Page calls attention to the fact that significant tunnel wall interference was present in the tests in the 2- by 2-foot tunnel even though the model used was quite small, 5.5 inches from apex to shoulder. Although the tunnel interference effects on the thin elliptic cone were not evaluated directly, Page tested the equivalent body of revolution, a 7° circular cone-cylinder, in the Ames 14-Foot Transonic Tunnel as well as in the 2- by 2-foot tunnel and he argues from the principle of transonic equivalence that the interference effects should be the same on the wing. This is further substantiated by the fact that the differences between his experimental results for the thin wing and the circular cone-cylinder in the 2- by 2-foot tunnel are in agreement with the equivalence rule. Since additional tests of the circular cone-cylinder, reported in reference 10, indicate that the results obtained in the 14-foot tunnel correspond very closely to free air conditions, the corrections derived from comparison of the tests of the circular cone-cylinder in the 2- by 2-foot and 14-foot tunnels are applied here to Page's data for the thin elliptic wing. The resulting corrected pressure distribution is shown in figure 16 in comparison with the same theoretical pressure as in figure 15. The agreement is somewhat better although a marked discrepancy remains near the shoulder. In considering this discrepancy, it should be remembered that experimental results customarily show sonic velocity occurring somewhat forward of the shoulder for circular cone-cylinders and two-dimensional wedge airfoils as well as for the elliptic cone-cylinder shown here.

The transonic equivalence rule gives the following relation between the pressure coefficient on the thin elliptic cone wing and that on the surface of the equivalent circular cone-cylinder. (See ref. 11.)

$$C_{p_W} - C_{p_B} = m\tau[1 + \ln(m/4\tau)] \tag{47}$$

where the subscript W indicates the wing and the subscript B indicates the body. Note that τ in the present report is the same as $t/2l$ in reference 11.

A corresponding expression in the present approximation can be obtained by subtracting from the solution for the wing, as given in equation (46), the solution for the equivalent circular cone-cylinder as given in reference 2. There are two parts to this cone-cylinder solution. The expression applied to the part of the cone from $2x/c = \frac{1}{3}$ to $2x/c = 1$ is the result of solving equation (23) for the circular cone in much the same way as it is solved here for the wing. The result is

$$C_p + \frac{2(1-M_\infty^2)}{M_\infty^2(\gamma+1)} = -2\theta^2 \ln\left(\frac{2x\theta}{c}\right) + \theta^2 \ln\left\{\theta^2 - \frac{4[1-(2x/c)^2]}{M_\infty^2(\gamma+1)e^C\theta^2}\right\} - \theta^2 \tag{48}$$

where θ is the half apex angle. Since investigation of this expression indicates $u' \to 0$ at the apex, which probably means that the results obtained from it deteriorate as $x \to 0$, it is recommended in reference 2 that a solution based on the closely related "elliptic" method be used instead for the forward part of the cone. It is possible to join the two solutions at $2x/c = 1/3$, matching both the value and the slope of C_p at that point. The expression given in reference 2 for the pressure distribution on the circular cone-cylinder from $2x/c = 0$ to $2x/c = 1/3$ is

$$C_p + \frac{2(1-M_\infty^2)}{M_\infty^2(\gamma+1)} = -2\theta^2 \ln\left(\frac{2x\theta}{c}\right) + \theta^2 \ln\left[\frac{16(2x/c)(1-2x/c)}{M_\infty^2(\gamma+1)e^C\theta^2}\right] + \frac{\theta^2}{2}\left(\frac{1-6x/c}{1-2x/c}\right) - \theta^2 \tag{49}$$

A relation between C_{p_W} and C_{p_B} in the present approximation can now be written as follows, since for an equivalent wing and body $\theta^2 = m\tau$: $0 < 2x/c \leq 1/3$

$$C_{p_W} - C_{p_B} = -m\tau\left[1 + \ln\left(\frac{m}{4\tau}\right)\right] - \frac{m\tau}{2}\left(\frac{1-6x/c}{1-2x/c}\right) + m\tau \ln\left\{\left(\frac{2x}{c}\right)\left[\frac{M_\infty^2(\gamma+1)e^C e^2 m^3\tau - 32\ln(2x/c)}{64(1-2x/c)}\right]\right\} \tag{50a}$$

$1/3 \leq 2x/c \leq 1$

$$C_{p_W} - C_{p_B} = -m\tau\left[1 + \ln\left(\frac{m}{4\tau}\right)\right] + m\tau \ln \left\{\left(\frac{2x}{c}\right)^2\left[\frac{M_\infty^2(\gamma+1)e^C e^2 m^3\tau - 32\ln(2x/c)}{4M_\infty^2(\gamma+1)e^C m^2\tau^2 + 16(1-4x^2/c^2)}\right]\right\} \tag{50b}$$

In figure 17 the result of computations in which these two equations were used is shown together with that obtained by use of equation (47) and with experimental data from reference 9. Equation (50b) is theoretically correct at the shoulder since it results in sonic velocity there which equation (47) does not do. The present results agree reasonably well with equation (47) for a little distance forward of the shoulder, but the difference increases with the approach to the apex where equation (50a) shows a logarithmic infinity. The advantage gained by use of equation (50a) instead of equation (50b) for $2x/c \leq 1/3$ is small but not negligible, amounting to one fourth of the difference between equation (50a) and equation (47) at $2x/c = 1/10$ for this wing. It can be seen from the equations that decreasing the thickness ratio of the wing results in extending farther forward the region of agreement. This is illustrated in figure 18 which shows theoretical results for a wing of the same plan form but of one third the thickness ratio.

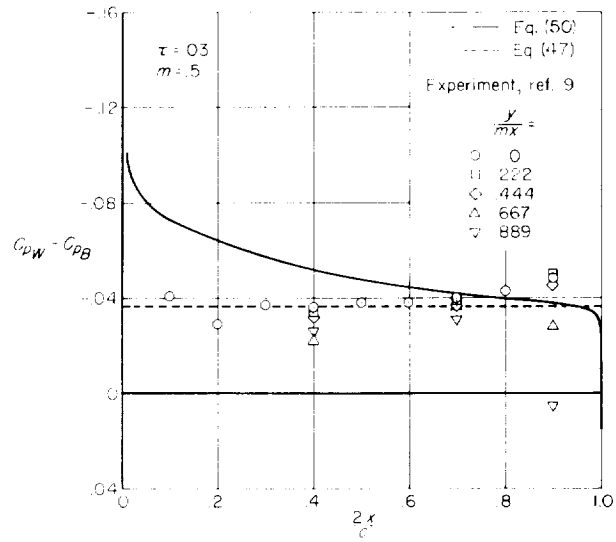

FIGURE 17.—Theoretical and experimental differences between the pressures at $M_\infty = 1$ on a thin elliptic cone-cylinder ($A = 2$ and $\tau = 0.03$), and on its equivalent circular cone-cylinder ($\theta = 7°$).

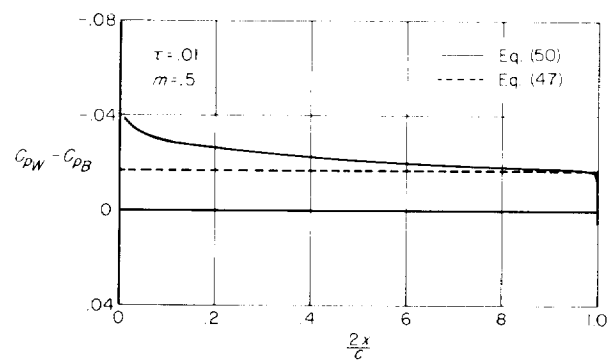

FIGURE 18.—Theoretical differences between the pressures at $M_\infty = 1$ on a thin elliptic cone-cylinder ($A = 2$ and $\tau = 0.01$), and on its equivalent circular cone-cylinder ($\theta = 4.05°$).

The pressure drag, D_W, of the thin elliptic cone wing at $M_\infty = 1$, obtained by integrating over the plan form the product of pressure coefficient given

by equation (46) and surface slope derived from equation (43), can be expressed as follows:

$$D_W=D_e+\frac{\rho_\infty U_\infty^2}{2}\iint_W 2C_{p_W}\frac{\partial Z}{\partial x}\,dx\,dy$$

$$=D_e+q_\infty\pi m^2\tau^2\left(\frac{c}{2}\right)^2 e^{(\gamma+1)eCe^2m^3\tau/16}$$

$$\left\{-Ei\left[-\frac{(\gamma+1)eCe^2m^3\tau}{16}\right]\right\} \quad (51)$$

where D_e is the contribution to the drag that results from the finite radius of curvature of the leading edge. In reference 11 an expression is given for the difference in drag between the thin elliptic cone wing and the equivalent body of revolution

$$D_W-D_B=D_e-q_\infty\pi m^2\tau^2\left(\frac{c}{2}\right)^2\left(1+\ln\frac{m}{4\tau}\right) \quad (52)$$

The corresponding equation in the present approximation is

$$D_W-D_B=D_e-q_\infty\pi m^2\tau^2\left(\frac{c}{2}\right)^2\left(\ln\left(\frac{m}{4\tau}\right)\right.$$

$$-\frac{1}{2}-\ln\frac{27}{16}-\ln\left[\frac{(\gamma+1)eCm^3\tau}{16}\right]-e^{(\gamma+1)eCe^2m^3\tau/16}$$

$$\left.\left\{-Ei\left[-\frac{(\gamma+1)eCe^2m^3\tau}{16}\right]\right\}\right) \quad (53)$$

If $m^3\tau$ is very small, this can be approximated as follows:

$$D_W-D_B\approx D_e-q_\infty\pi m^2\tau^2\left(\frac{c}{2}\right)^2\left(1.554+\ln\frac{m}{4\tau}\right) \quad (54)$$

Figure 19 shows $(D_W-D_B-D_e)/q_\infty(c/2)^2$ plotted against m/τ for $m\tau=0.015$. Note that the curve computed by use of equation (52) and that computed by use of equation (53) differ by very nearly a constant amount as should be expected from comparison of equation (54) with equation (52). It is possible that some of the difference noted in figure 19 may have a counterpart in a difference in D_e as arrived at by the two approximations. In reference 11, D_e is evaluated as in linear theory and is equal to $\pi q_\infty m^2\tau^2(c/2)^2$. The value of D_e appropriate to the present approximation has not been determined. The curves in figure 19 are terminated at the left in accordance

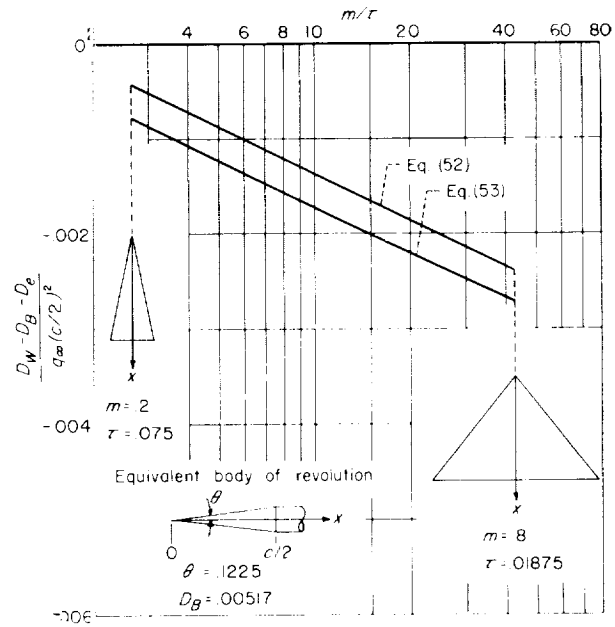

FIGURE 19. Variation with plan form and thickness ratio of the pressure drag, not including edge effects, for elliptic cone-cylinder wings that all have the same equivalent body of revolution.

with the assumption of a thin wing. At the other end, the curves are terminated because they were computed for fixed $m\tau$ and the assumptions made in arriving at either equation (52) or equation (53) require the aspect ratio of the wing to be small.

NUMERICAL SOLUTIONS FOR RECTANGULAR WINGS

For a rectangular wing with no spanwise variation of Z equation (10) becomes

$$\bar{u}+\xi_\infty=-\frac{1}{2\pi}\left(\frac{\partial}{\partial\bar{x}}\right)_{\bar{u}'=\text{const}}\int_0^{\bar{x}}\frac{d(Z/t)}{d\xi}\,d\xi\int_{-\bar{s}_1}^{\bar{s}_2}\frac{e^{-\frac{\bar{u}'(\bar{y}-\eta)^2}{4(\bar{x}-\xi)}}}{\bar{x}-\xi}\,d\eta$$

$$=\frac{1}{2\pi}\int_{-\bar{s}_1}^{\bar{s}_2}d\eta\int_0^{\bar{x}}\frac{d(Z/t)}{d\xi}\frac{d}{d\xi}\left[\frac{e^{-\frac{\bar{u}'(\bar{y}-\eta)^2}{4(\bar{x}-\xi)}}}{\bar{x}-\xi}\right]d\xi \quad (55)$$

Integration by parts followed by the substitution of a new variable for the exponent of e results in

$$\bar{u}+\xi_\infty=-\frac{1}{2\pi}\left\{\frac{d(Z/t)}{d\bar{x}_{LE}}\left(\frac{2}{\sqrt{\bar{u}'\bar{x}}}\right)\left[\frac{\sqrt{\pi}}{2}\operatorname{erf}\left(\frac{\bar{s}_1+\bar{y}}{2}\sqrt{\frac{\bar{u}'}{\bar{x}}}\right)+\frac{\sqrt{\pi}}{2}\operatorname{erf}\left(\frac{\bar{s}_2-\bar{y}}{2}\sqrt{\frac{\bar{u}'}{\bar{x}}}\right)\right]\right.$$
$$+\frac{2}{\sqrt{\bar{u}'}}\int_0^{\bar{x}}\frac{d^2(Z/t)}{d\xi^2}\left(\frac{1}{\sqrt{\bar{x}-\xi}}\right)\left[\frac{\sqrt{\pi}}{2}\operatorname{erf}\left(\frac{\bar{s}_1+\bar{y}}{2}\sqrt{\frac{\bar{u}'}{\bar{x}-\xi}}\right)\right.$$
$$\left.\left.+\frac{\sqrt{\pi}}{2}\operatorname{erf}\left(\frac{\bar{s}_2-\bar{y}}{2}\sqrt{\frac{\bar{u}'}{\bar{x}-\xi}}\right)\right]d\xi\right\} \tag{56}$$

where

$$\operatorname{erf}(x)=\frac{2}{\sqrt{\pi}}\int_0^x e^{-x_1^2}dx_1$$

APPLICATION TO WEDGE PROFILE

Consider a rectangular wing of wedge profile for which the plan form and the ordinates of the surface are defined as follows:

$$\left.\begin{array}{ll} s_1(\bar{x})=\bar{s}_1, \quad \bar{s}_2(\bar{x})=\bar{s}_2 & \\ Z/t=\bar{x} \text{ and } d(Z/t)/d\bar{x}=1 & \text{for } 0\leq\bar{x}\leq 1/2 \\ Z/t=1/2 \text{ and } d(Z/t)/d\bar{x}=0 & \text{for } 1/2<\bar{x} \end{array}\right\} \tag{57}$$

Thus the wing has a shoulder at $\bar{x}=1/2$. Substitution in equation (56) yields

$$u+\xi_\infty=-\frac{1}{\pi\sqrt{\bar{x}\bar{u}'}}\left[\frac{\sqrt{\pi}}{2}\operatorname{erf}\left(\frac{\bar{s}_1+\bar{y}}{2}\sqrt{\frac{\bar{u}'}{\bar{x}}}\right)\right.$$
$$\left.+\frac{\sqrt{\pi}}{2}\operatorname{erf}\left(\frac{\bar{s}_2-\bar{y}}{2}\sqrt{\frac{\bar{u}'}{\bar{x}}}\right)\right] \tag{58}$$

where the sonic point is assumed to occur at $\bar{x}=1/2$.

It follows that for a finite value of $\bar{y}$ the two-dimensional result given in equation (15) is obtained if $\bar{s}_1=\bar{s}_2=\infty$. It also follows that the result for the tip of a semi-infinite wing, given in equation (19), is obtained if $\bar{y}=\bar{s}_1=0$ and $\bar{s}_2=\infty$. Furthermore, for low aspect ratio the result approaches that given in equation (27).

For other cases a numerical solution is required and it is convenient for the purposes of calculation to make the following substitutions:

$$\left.\begin{array}{l} \text{Let } Y_1=(\bar{s}_1+\bar{y})/2, \quad Y_2=(\bar{s}_2-\bar{y})/2 \\ \text{Let } L=(\bar{u}'/\bar{x})^{1/2} \text{ so that } \bar{u}'=L^2\bar{x} \\ \text{Let } W_i=\operatorname{erf}(Y_iL), \quad i=1,2 \end{array}\right\} \tag{59}$$

thus

$$dW_i/d\bar{x}=(2/\sqrt{\pi})Y_ie^{-(Y_iL)^2}(dL/d\bar{x})$$

Equation (58) thus becomes

$$\bar{u}+\xi_\infty=-(W_1+W_2)/2\bar{x}L\sqrt{\pi} \tag{60}$$

From this can be obtained a differential equation for L in a form suitable for conventional methods of numerical solution

$$\frac{dL}{d\bar{x}}=\frac{L\sqrt{\pi}(2\sqrt{\pi}L^3\bar{x}^3-W_1-W_2)}{\bar{x}\{\sqrt{\pi}(W_1+W_2)-2L[Y_1e^{-(Y_1L)^2}+Y_2e^{-(Y_2L)^2}]\}} \tag{61}$$

This is to be integrated forward from the shoulder where $\bar{x}=\frac{1}{2}$ and $\bar{u}+\xi_\infty=0$. However, at that point $L=\infty$, so an analytic start is required. This can be obtained from equation (60) on the assumption that $W_i=W_{i\bar{x}=1/2}$ near $\bar{x}=\frac{1}{2}$. Equation (60) can thus be integrated to give a result usable very near $\bar{x}=\frac{1}{2}$:

$$\bar{u}+\xi_\infty=\left[\frac{3(W_1+W_2)^2}{4\pi}\ln(2\bar{x})\right]^{1/3} \tag{62}$$

This equation combined with equation (60) enables calculation of L near $\bar{x}=\frac{1}{2}$ for use in equation (61).

For the purpose of machine computing, the semi-infinite wing is made into a special case of the preceding by letting $Y_2=1000$ and letting $\bar{s}_1=0$ so that $Y_1=\bar{y}/2<<1000$. This has the effect of making $W_2=1$ and $Y_2e^{-(Y_2L)^2}=0$, thus simplifying the equation but permitting the problem to be solved in the same way as before.

Preliminary calculations of $\bar{u}+\xi_\infty$ were made by the method of isoclines for the two cases shown in figures 20 and 21. Equation (58) was used, together with the analytic start given by equation (62). The method of isoclines is very useful for obtaining qualitative information on the nature of the solution and is, moreover, entirely practical for obtaining quantitative results provided that only a limited number of cases is required. As can be seen from either the equation or the figures,

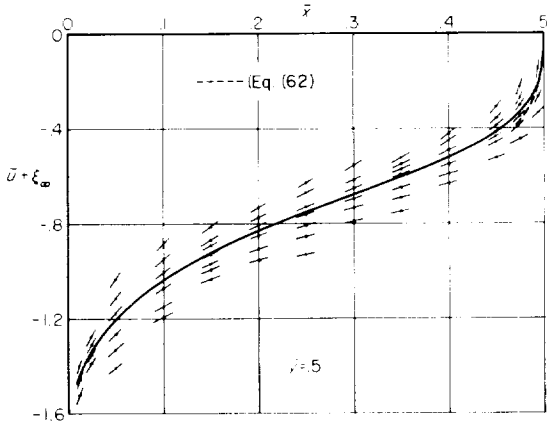

FIGURE 20. Illustration of graphical technique for solution of equation (58) for one station on a semi-infinite wing having a wedge profile.

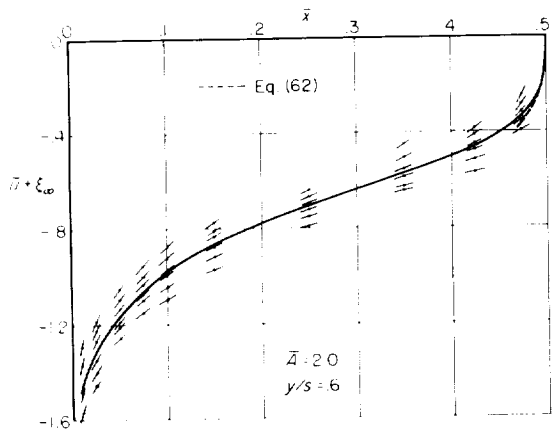

FIGURE 21. Illustration of graphical technique for solution of equation (58) for one station on a wing of finite span having a rectangular plan form and a wedge profile.

the relation between $\bar{u}$ and $\bar{u}'$, namely $\partial\bar{u}/\partial\bar{u}'>0$, is such that when the integration is carried forward from the shoulder a small error at one point leads to a smaller error at a more forward point, the error decreasing as the integration progresses. The resulting curves are the same to three significant figures as those calculated for the same cases by use of the electronic computing machines.

Pressure distributions at various spanwise positions on a semi-infinite wing and on finite-span wings of several different aspect ratios were calculated on the electronic computing machines for rectangular wings having wedge profiles. The results are listed in tables I and II and illustrated in figures 22 through 24. The asymptotic values for large and small aspect ratios are shown on the

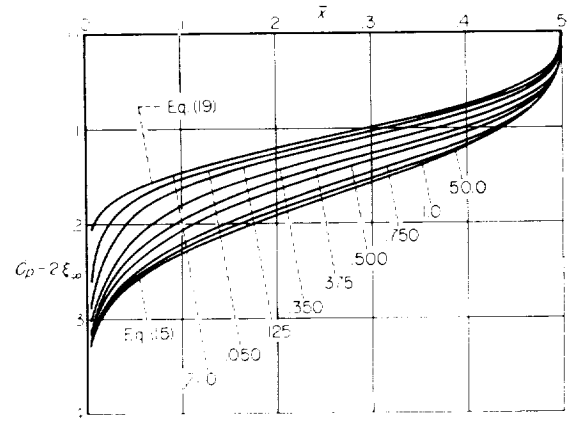

FIGURE 22. Pressure distributions at various distances from the tip of a semi-infinite wing having a wedge profile.

figures where appropriate. It can be seen that the agreement is very good at both limits. Notice that the errors introduced in the low-aspect-ratio approximation by the not-so-slender regions of leading edge and shoulder are limited to the immediate neighborhood of these regions and that the error at the shoulder is particularly small in extent.

APPLICATION TO CIRCULAR-ARC PROFILE

Consider a rectangular wing of circular-arc profile for which the plan form and the ordinates of the surface are defined by

$$\left.\begin{aligned}
&\bar{s}_1(\bar{x})=\bar{s}_1, \qquad \bar{s}_2(\bar{x})=\bar{s}_2\\
&Z/t=-2(\bar{x}-\bar{x}^2)\\
&d(Z/t)/d\bar{x}=2(1-2\bar{x}), \qquad d(Z/t)/d\bar{x}_{\bar{x}=0}=2\\
&d^2(Z/t)/d\bar{x}^2=-4
\end{aligned}\right\} \tag{63}$$

Substitution in equation (56) followed by an integration by parts yields

$$\begin{aligned}
\bar{u}+\xi_\infty=-\frac{2}{\pi\sqrt{\bar{x}}\bar{u}'}\Bigg(&(1-4\bar{x})\left[\frac{\sqrt{\pi}}{2}\operatorname{erf}\left(\frac{\bar{s}_1+\bar{y}}{2}\sqrt{\frac{\bar{u}'}{\bar{x}}}\right)\right.\\
&\left.+\frac{\sqrt{\pi}}{2}\operatorname{erf}\left(\frac{\bar{s}_2-\bar{y}}{2}\sqrt{\frac{\bar{u}'}{\bar{x}}}\right)\right]-2\sqrt{\bar{x}}\bar{u}'\\
&\left\{-\left(\frac{\bar{s}_1+\bar{y}}{2}\right)Ei\left[-\left(\frac{\bar{u}'}{\bar{x}}\right)\left(\frac{\bar{s}_1+\bar{y}}{2}\right)^2\right]\right.\\
&\left.\left.-\left(\frac{\bar{s}_2-\bar{y}}{2}\right)Ei\left[-\left(\frac{\bar{u}'}{\bar{x}}\right)\left(\frac{\bar{s}_2-\bar{y}}{2}\right)^2\right]\right\}\Bigg)
\end{aligned} \tag{64}$$

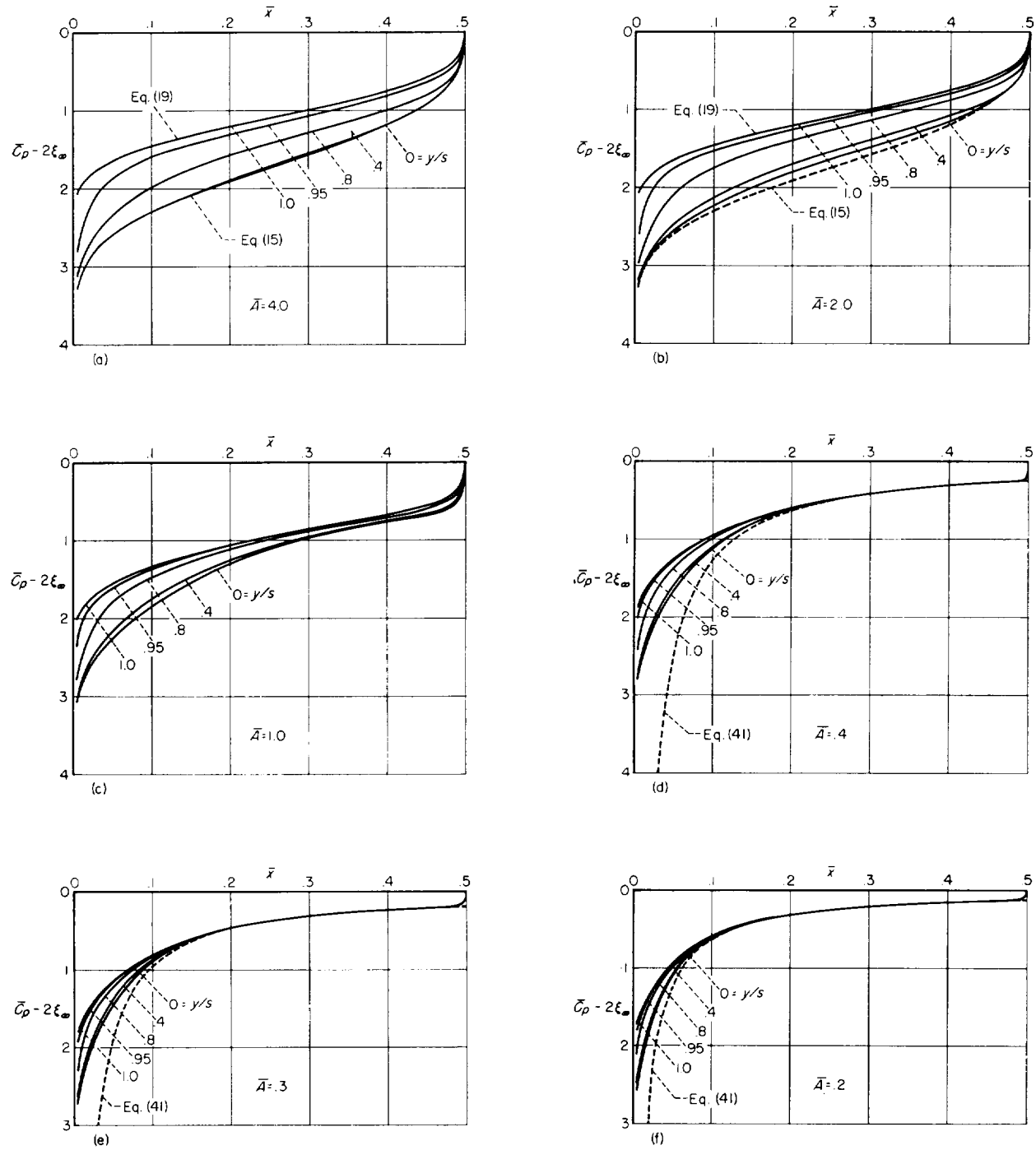

FIGURE 23.—Pressure distributions for finite-span wings of various aspect ratios having rectangular plan forms and wedge profiles.

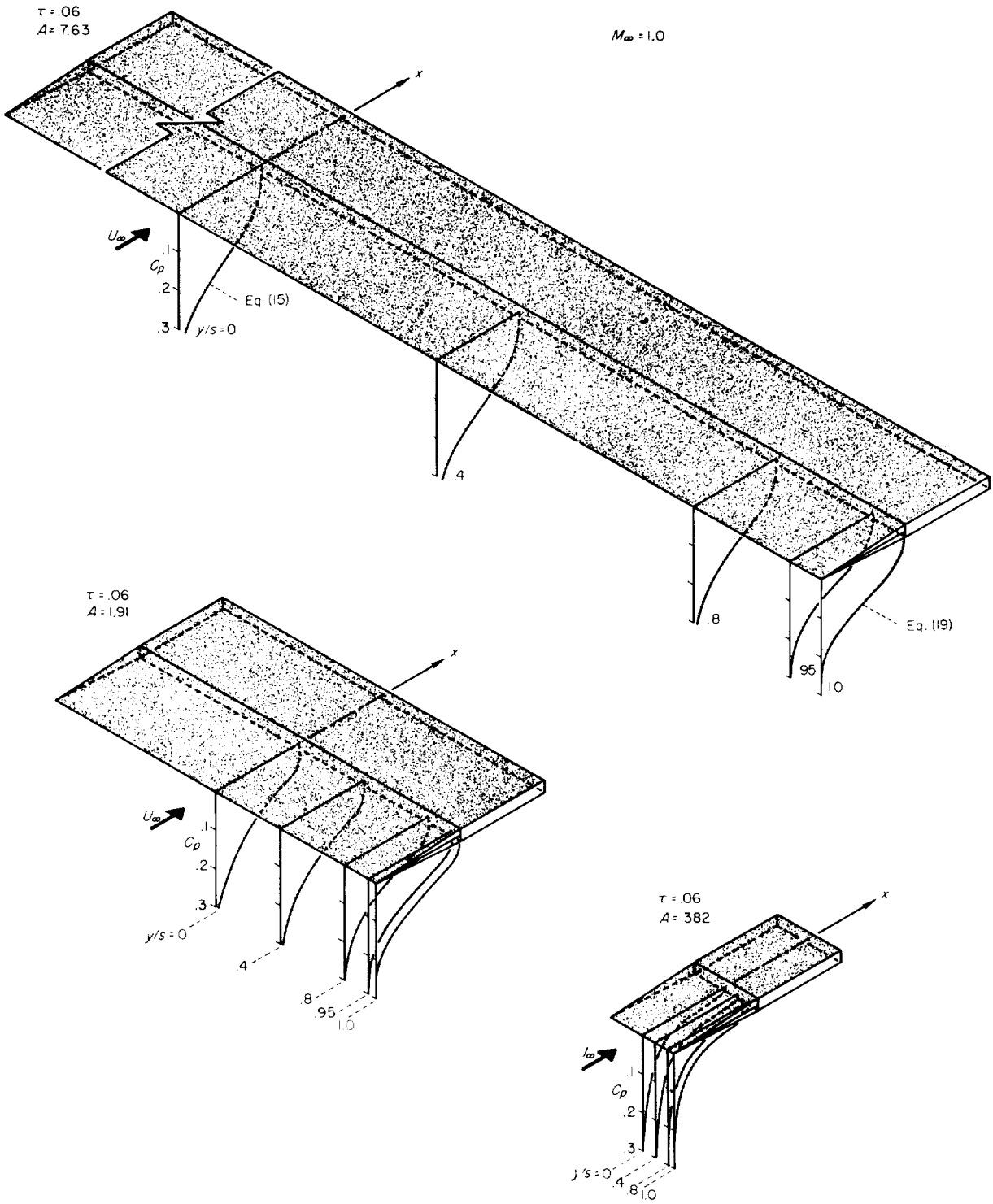

FIGURE 24.—Pressure distributions for finite-span wings of three different aspect ratios having rectangular plan forms and wedge profiles; $\tau=0.06$, $M_\infty=1$.

where

$$-Ei(-x)=\int_x^\infty \frac{e^{-x_1}}{x_1}\,dx_1>0 \qquad 0<x<\infty$$

This is a case for which the necessary initial condition is to be determined by the requirement of analyticity. For a finite value of $\bar{y}$ and for $\bar{s}_1=\bar{s}_2=\infty$ the two-dimensional result given in equation (17) is obtained and $\bar{x}_o=\bar{x}^*=1/4$. If $\bar{y}=\bar{s}_1=0$ and $\bar{s}_2=\infty$ the result given in equation (19) is obtained and again $\bar{x}_o=\bar{x}^*=1/4$. Furthermore, for low-aspect-ratio wings the result given in equation (47) is applicable.

For other cases a numerical solution is required and it is convenient to use the same substitutions given in equation (59) with the addition of

$$V_i=-Ei(-Y_i^2L^2)_i \qquad i=1,2 \tag{65}$$

Equation (64) thus becomes

$$\bar{u}+\xi_\infty=\frac{4\bar{x}-1}{L\bar{x}\sqrt{\pi}}(W_1+W_2)+\frac{4}{\pi}(Y_1V_1+Y_2V_2) \tag{66}$$

Hence

$$\frac{dL}{d\bar{x}}=\frac{L\sqrt{\pi}(L^3\bar{x}^3\pi^{1/2}-W_1-W_2)}{\bar{x}\{(1-4\bar{x}\sqrt{\pi}(W_1+W_2)-2L[Y_1e^{-(Y_1L)^2}+Y_2e^{-(Y_2L)^2}]\}} \tag{67}$$

Integration is to be carried forward and back from the singular point determined as discussed in connection with equations (11) and (12). This leads to the following set of simultaneous equations in which the subscript o indicates values at the singular point.

$$\left.\begin{aligned} L_o&=(W_{1_o}+W_{2_o})^{1/3}/\bar{x}_o(\pi)^{1/6}\\ \bar{x}_o&=1/4-L_o[Y_{1_o}e^{-(Y_{1_o}L_o)^2}\\ &\qquad +Y_{2_o}e^{-(Y_{2_o}L_o)^2}]/2\sqrt{\pi}(W_{1_o}+W_{2_o})\end{aligned}\right\} \tag{68}$$

where

$$W_{i_o}=\mathrm{erf}\,(Y_{i_o}L_o), \quad i=1,2$$

These can be solved numerically by iteration.

As discussed previously following equation (12), equation (67) is indeterminate at the singular point, $\bar{x}_o$, and in order to start a numerical integration using equation (67) it is necessary to evaluate $(dL/d\bar{x})_{\bar{x}=\bar{x}_o}=L_o'$. This can be done by taking a derivative with respect to $\bar{x}$ and making use of the assumption that the next higher derivative, L_o'', is finite. This results in the following quadratic equation for L_o':

$$a(L_o')^2+b(L_o')+c=0 \tag{69}$$

where

$$a=4[Y_{1_o}^3e^{-(Y_{1_o}L_o)^2}+Y_{2_o}^3e^{-(Y_{2_o}L_o)^2}-\pi\bar{x}_o^4(1-4\bar{x}_o)]$$

$$b=-2\pi L_o(\bar{x}_o)^2(1+4\bar{x}_o)$$

$$c=-3\pi\bar{x}_o(L_o)^2$$

If additional derivatives are desired they can be found by repeating this process.

For the computing machines, the semi-infinite wing is made into a special case of the preceding by letting $Y_2=1000$ and $\bar{s}_1=0$ so that $Y_1=y/2<<1000$, as was done for the wedge profile. This has the effect of making $V_2=0$ and $V_1=-Ei(-\bar{y}^2L^2/4)$, and with this notation equation (66) becomes

$$\bar{u}+\xi_\infty=[(4\bar{x}-1)(W_1+1)/L\bar{x}\sqrt{\pi}]+(4)Y_1V_1/\pi) \tag{70}$$

The remainder of the problem is handled in the same way as above. However, for the purpose of hand computations for a semi-infinite wing, equation (68) can be written in parametric form, as follows, by letting $Y_1L=\bar{y}L/2=Q$:

$$\left.\begin{aligned} Y_{1_o}&=\bar{y}_o/2=Q_o\bar{x}_o(\pi)^{1/6}/(W_{1_o}+1)^{1/3}\\ \bar{x}_o&=1/4-[Q_oe^{-Q_o^2}/2\sqrt{\pi}(W_{1_o}+1)]\end{aligned}\right\} \tag{71}$$

Again as in the case of the wedge profile, preliminary calculations of $\bar{u}+\xi_\infty$ were made by the method of isoclines. For the semi-infinite wing, equation (64) becomes equation (70) and the singular point is determined by use of equation (71). For the finite-span wing, the appropriate equations are equation (64) or (66) and equation (68). The results, shown in figures 25 and 26, illustrate graphically the advantages of starting an integration at the singular point. A slight error introduced thereafter diminishes as the integration progresses away from the singular point. It can be seen that this behavior is inherent in equations

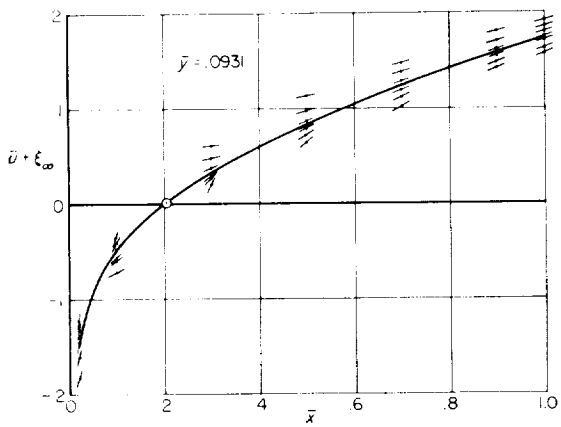

FIGURE 25. Illustration of graphical technique for solution of equation (64) for one station on a semi-infinite wing having a circular-arc profile.

(64) and (70) since $\partial\bar{u}/\partial\bar{u}'$ is positive forward of the singular point and negative behind it. That the change in the sign of $\partial\bar{u}/\partial\bar{u}'$ at the singular point is a property of equation (10) is shown in equation (12) where the singular point is identified by $\partial\bar{\Gamma}/\partial\bar{\Gamma}'=0$.

Pressure distributions at various spanwise positions on a semi-infinite wing and on finite-span wings of several different aspect ratios were calculated on the electronic computing machines for rectangular wings having circular-arc profiles. The results are listed in tables III and IV and illustrated in figures 27 through 30. The asymptotic values for high aspect ratio are shown in these figures, but in order to demonstrate the degree of agreement for low aspect ratios the results are shown separately in expanded form in figure 31.

For these wings it is interesting to see how the sonic point and singular point vary with spanwise position and with aspect ratio. Figure 32 shows the variation of the two with distance from the tip for the case of the semi-infinite wing. The singular point in this case was computed by use of equation (71). Note that at the tip and very far from the tip $\bar{x}^*=\bar{x}_o=1/4$ and that $\bar{x}^*$ and $\bar{x}_o$ also coincide for one intermediate value of $\bar{y}$. It can be shown for the semi-infinite wing having circular-arc profile that this occurs at the value of $\bar{y}$ for which $\bar{x}^*=\bar{x}^*_{min}$.

Figure 33 shows the variation of $\bar{x}^*$ and $\bar{x}_o$ with spanwise station for two finite-span wings. In one case $\bar{A}=4$ and the curves are nearly the same

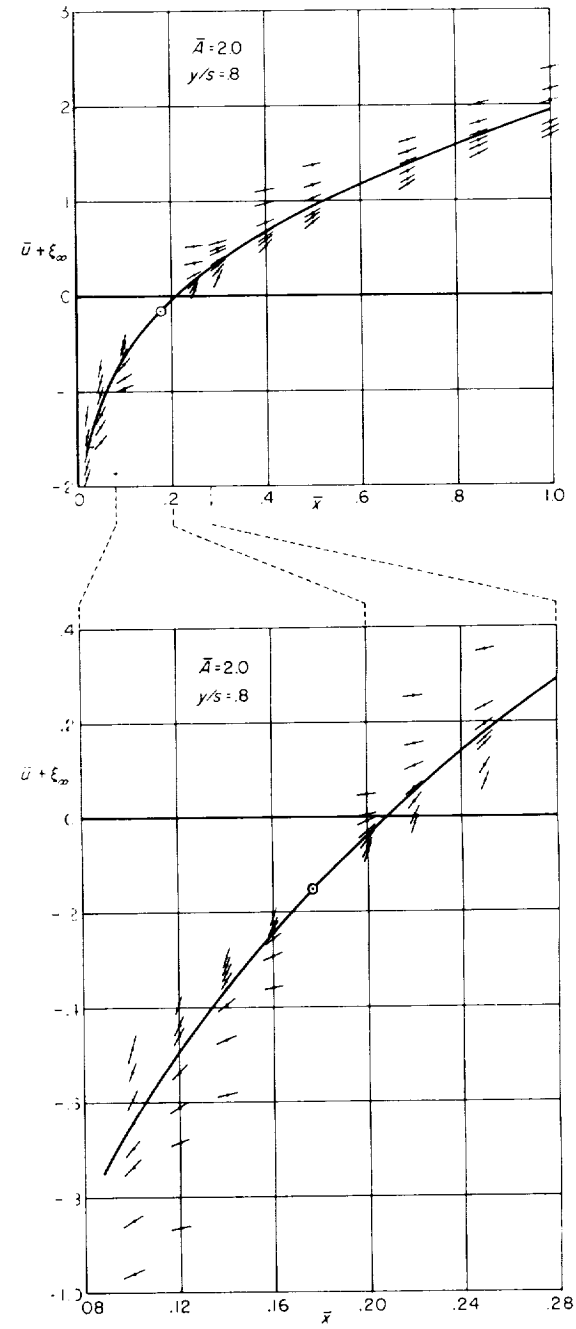

FIGURE 26.—Illustration of graphical technique for solution of equation (64) for one station on a finite-span wing having a circular-arc profile, showing an expanded scale drawing near the singular point.

as for the semi-infinite wing. In the other case $\bar{A}=0.1$ and there is little variation with spanwise station. Intermediate aspect ratios are shown in figure 34. It can be seen that as the aspect

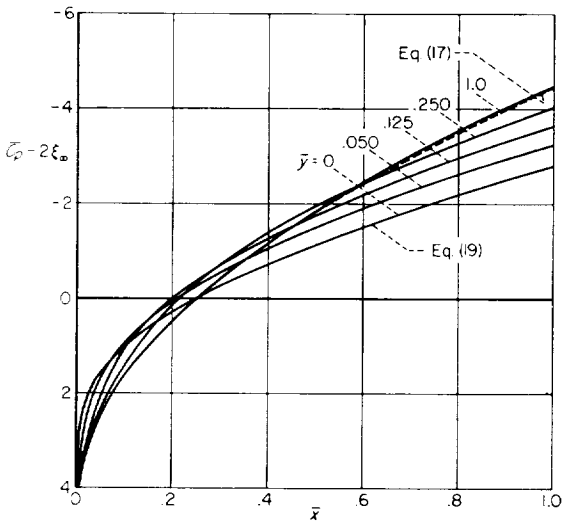

FIGURE 27.—Pressure distributions at various distances from the tip of a semi-infinite wing having a circular-arc profile.

ratio is decreased, both the singular point and the sonic point move forward. At the limit of vanishing aspect ratio, as in equation (39), the singular point reaches the leading edge for all spanwise stations.

The singular points shown for the finite-span wings are those found by the electronic computing machines as the first step in performing the calculations, and they are listed in the tables of results. The sonic points, on the other hand, do not appear specifically in the calculations and are read from plots of $\bar{C}_p$ versus $\bar{x}$. In figure 34 two additional curves are shown for the sonic point as obtained from pressure distributions computed by use of equation (41).

PRESSURE DRAG OF FINITE-SPAN RECTANGULAR WINGS HAVING WEDGE OR CIRCULAR-ARC PROFILES

Section pressure drag coefficients were computed by the electronic computing machines for every spanwise station on the finite-span rectangular wings for which the pressure coefficients were computed, and these results are listed in the tables. The section drag coefficient is defined as

$$\bar{c}_d \equiv \frac{[M_\infty^2(\gamma+1)]^{1/3}}{\tau^{5/3}} c_d = 2\int_0^1 \bar{C}_p \frac{d(Z/t)}{d\bar{x}}\, d\bar{x}$$

The integrations were carried forward to a distance of 0.0001 c from the leading edge. For the wings having circular-arc profiles the section pressure drag coefficient is given for the front half followed by a straight section as well as for the complete circular arc. In both of these cases, and also for the wedge profile, τ is based on the full chord.

The values of $\bar{c}_d$ were integrated spanwise to obtain the pressure drag coefficients for the finite-span wings. The results are plotted against aspect ratio in figure 35 in the form of $\bar{C}_D$ against $\bar{A}$ where

$$\bar{C}_D \equiv \frac{[M_\infty^2(\gamma+1)]^{1/3}}{\tau^{5/3}} C_D, \quad \bar{A} \equiv [M_\infty^2(\gamma+1)]^{1/3}\tau^{1/3}A$$

For each case the two-dimensional value (as given in ref. 1), which is approached as $\bar{A}$ becomes large, is indicated at the right. The curves in figure 35 have the qualitative behavior that is to be expected from past experience of the variation of drag with aspect ratio. (See, e.g., ref. 12.)

CONCLUDING REMARKS

It has been demonstrated in this report that the method employed heretofore to obtain approximate solutions of the transonic flow equation for plane and axisymmetric flow can be extended to give reasonable results for wings of finite span, consistent with the known properties of transonic flows. In this method the partial differential equation appropriate to the study of transonic flow is replaced by a nonlinear ordinary differential equation, which can be solved by numerical methods. Asymptotic forms of this differential equation are given for very high and very low aspect ratios, and analytic results are obtained for certain special cases. From the asymptotic form for low aspect ratio, analytic expressions are derived for the pressure distribution on a number of interesting shapes, including rectangular wings having wedge or circular-arc profiles and also thin elliptic cone-cylinders. For the thin elliptic cone-cylinders, comparisons are made with previous theoretical results and with experimental data.

Numerical results, calculated by use of electronic computing machines, are given in the form of pressure distributions and pressure drag for two profile shapes, wedge and circular arc, for wings of rectangular plan form. The range of aspect

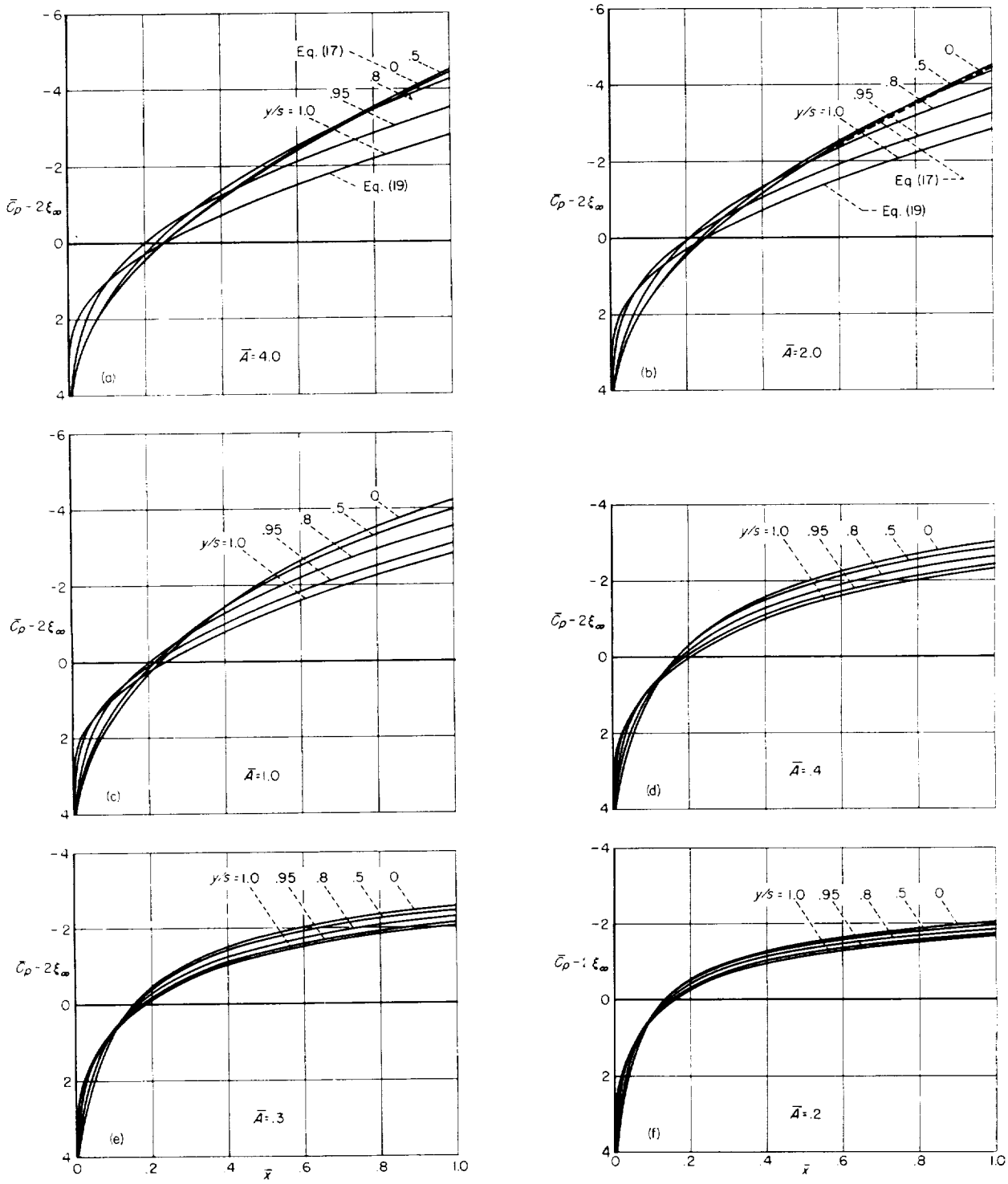

FIGURE 28.—Pressure distributions for finite-span wings of various aspect ratios having rectangular plan forms and circular-arc profiles.

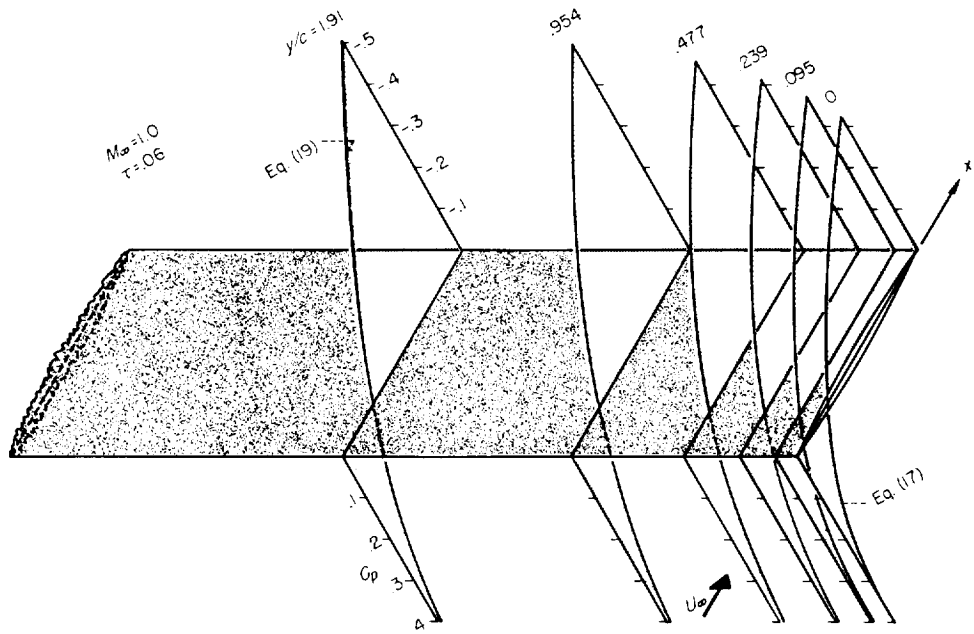

FIGURE 29.—Pressure distributions at various distances from the tip of a semi-infinite wing having a circular-arc profile $\tau = 0.06$, $M_\infty = 1$.

ratios covered extends effectively from zero to infinity and agreement with the asymptotic results is shown at both limits.

The present report is one of a series of studies of flow near Mach number 1 about thin wings and slender bodies. These studies have been confined to zero incidence and, except for minor instances, to wings with sharp leading edges and bodies with pointed noses, however, and the important problem of extension to the lifting case and to rounded leading edges remains. A start on this extension has been made by Randall, who shows in reference 13 that under certain circumstances the method of reference 1 can be applied without modification to determine useful results for pressure distributions on round nosed airfoil sections at angle of attack. In the same report, however, attention is called to the fact that there are severe limitations on the cases for which this direct application is possible. It remains to be seen how effectively these limitations can be overcome and to what extent more general bodies and wings can be analyzed.

AMES RESEARCH CENTER
NATIONAL AERONAUTICS AND SPACE ADMINISTRATION
MOFFETT FIELD, CALIF., *Oct. 12, 1960*

REFERENCES

1. Spreiter, John R., and Alksne, Alberta Y.: Thin Airfoil Theory Based on Approximate Solution of the Transonic Flow Equation. NACA Rep. 1359, 1958.
2. Spreiter, John R., and Alksne, Alberta Y.: Slender-Body Theory Based on Approximate Solution of the Transonic Flow Equation. NASA TR R-2, 1959.
3. Spreiter, John R.: Aerodynamics of Wings and Bodies at Transonic Speeds. Jour. of Aero/Space Sci., vol. 26, no. 8, Aug. 1959, pp. 465–487.
4. Guderley, Gottfried: On Transonic Airfoil Theory. Jour. Aero. Sci., vol. 23, no. 10, Oct. 1956, pp. 961–969.
5. Spreiter, John R., and Alksne, Alberta Y.: Theoretical Predictions of Pressure Distributions on Nonlifting Airfoils at High Subsonic Speeds. NACA Rep 1217, 1955. (Formerly NACA TN 3096)
6. Guderley, Gottfried, and Yoshihara, Hideo: The Flow Over a Wedge Profile at Mach Number 1. Jour. Aero. Sci., vol. 17, no. 11, Nov. 1950, pp. 723–735.
7. Habel, Louis W., Henderson, James H., and Miller, Mason F.: The Langley Annular Transonic Tunnel. NACA Rep. 1106, 1952.
8. Michel, R., Marchand, F., and LeGallo, J.: Étude des écoulements transsoniques autour des profils lenticulaires, à incidence nulle. O.N.E.R.A. Pub. No. 65, 1953.
9. Page, William A.: Experimental Study of the Equivalence of Transonic Flow About Slender Cone-Cylinders of Circular and Elliptic Cross Section. NACA TN 4233, 1958.

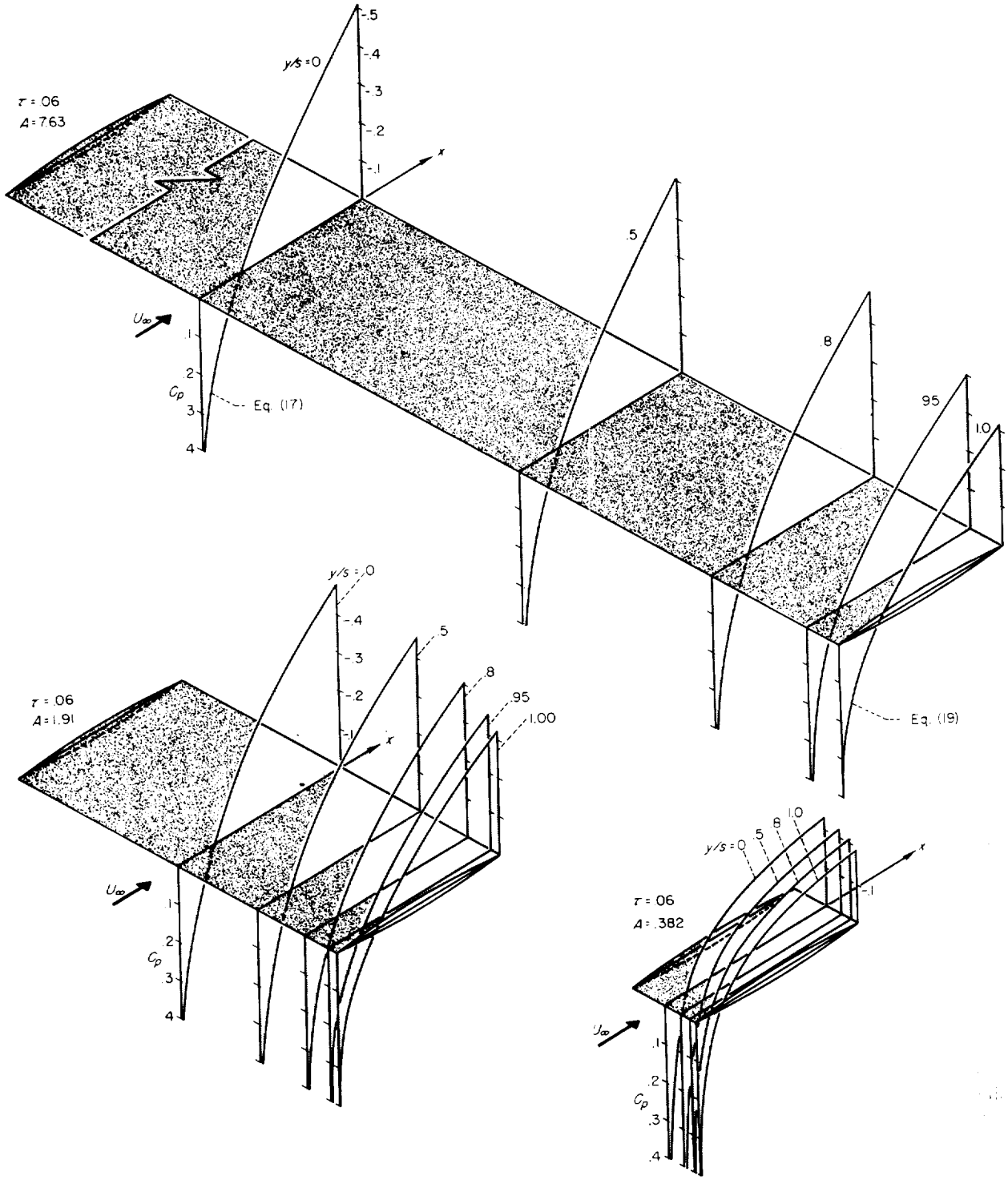

FIGURE 30.—Pressure distributions for finite-span wings of three different aspect ratios having rectangular plan forms and circular-arc profiles; $\tau=0.06$, $M_\infty=1$.

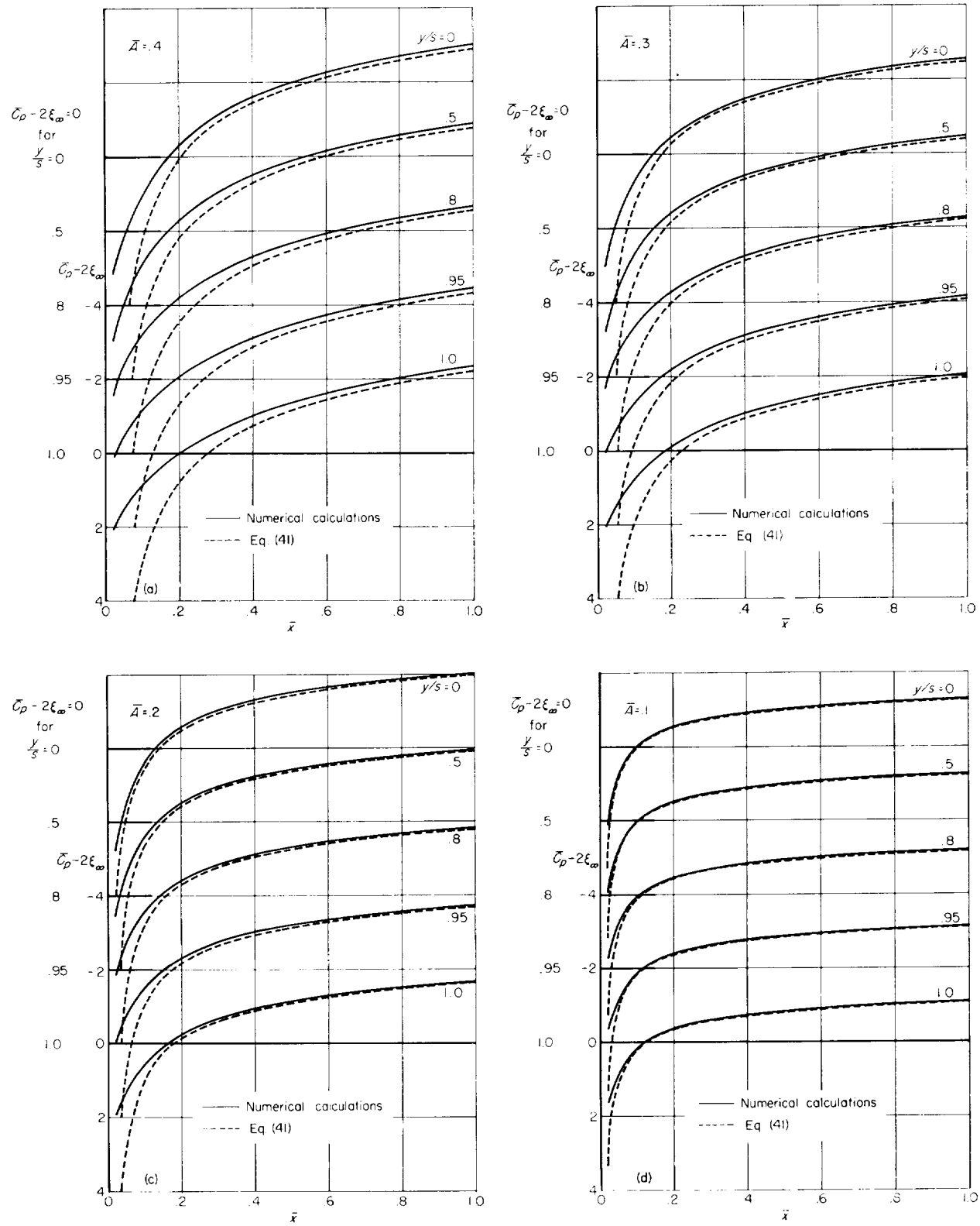

FIGURE 31.—Pressure distributions for low-aspect-ratio rectangular wings having circular-arc profiles. Comparison of results obtained by electronic computing machines from equation (67) with results from the low-aspect-ratio approximation, equation (41).

10. Spreiter, John R., Smith, Donald W., and Hyett, B. Jeanne: A Study of the Simulation of Flow With Free-Stream Mach Number 1 in a Choked Wind Tunnel. NASA TR R-73, 1960.
11. Heaslet, Max. A., and Spreiter, John R.: Three-Dimensional Transonic Flow Theory Applied to Slender Wings and Bodies. NACA Rep. 1318, 1957. (Supersedes NACA TN 3717)
12. McDevitt, John B.: A Correlation by Means of Transonic Similarity Rules of Experimentally Determined Characteristics of a Series of Symmetrical and Cambered Wings of Rectangular Plan Form. NACA Rep. 1253, 1955. (Supersedes NACA RM's A51L17b and A53G31)

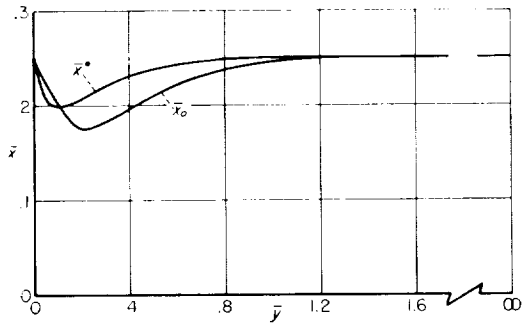

FIGURE 32.—Variation of starting point, $\bar{x}_o$, and sonic point, $\bar{x}^*$, with distance from the tip of a semi-infinite wing having circular-arc profile.

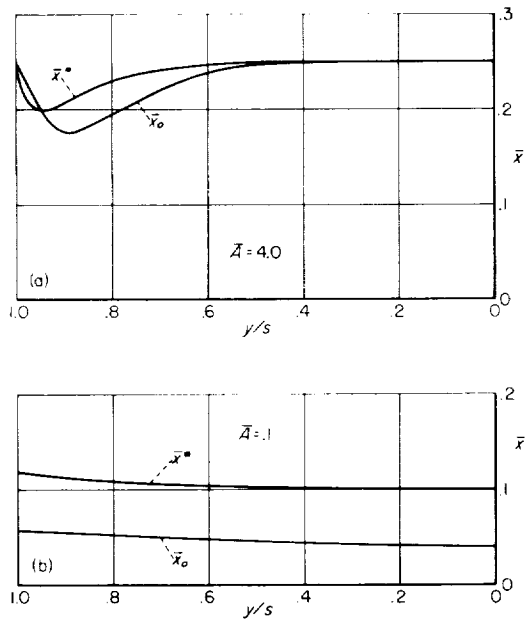

FIGURE 33.—Spanwise variation of starting point, $\bar{x}_o$, and sonic point, $\bar{x}^*$, for a high and a low aspect ratio rectangular wing having circular-arc profile.

13. Randall, D. G.: Transonic Flow Over Two-Dimensional Round-Nosed Aerofoils. C.P. No. 456, A.R.C. Tech. Rep., 1959.

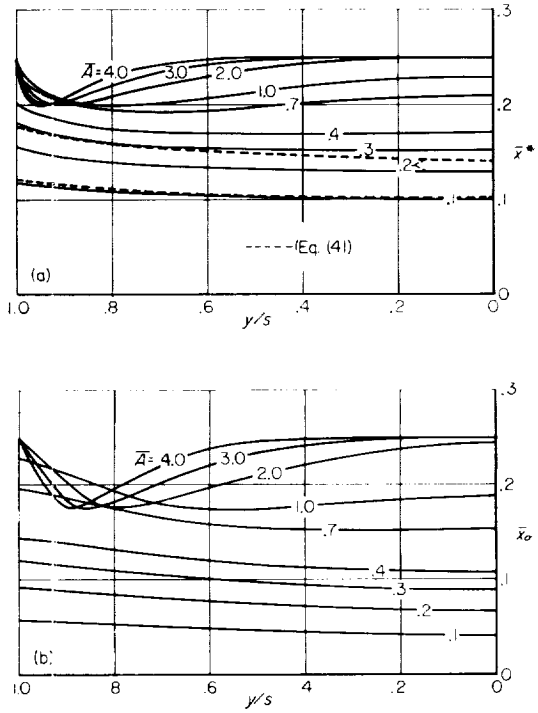

FIGURE 34. Spanwise variation of starting point, $\bar{x}_o$, and sonic point, $\bar{x}^*$, for a series of rectangular wings of different aspect ratios having circular-arc profiles.

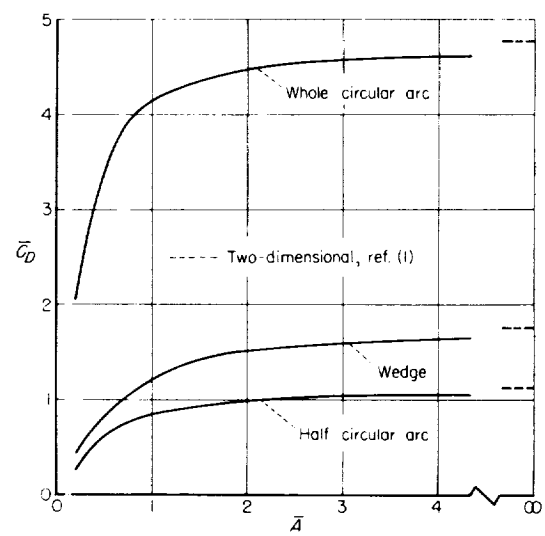

FIGURE 35. Variation with aspect ratio of the pressure drag coefficient for rectangular wings having wedge, half-circular-arc, or circular-arc profiles.

TABLE I.—CHORDWISE PRESSURE DISTRIBUTIONS FOR MACH NUMBERS NEAR 1 AT VARIOUS SPANWISE STATIONS ON A SEMI-INFINITE WING HAVING A WEDGE PROFILE

	$\bar{C}_p - 2\xi_\infty$									
$\bar{x}$ \ $\bar{y}$	.000	.050	.125	.250	.375	.500	.750	1.000	2.500	50.000
0.0001	2.53376	3.62332	3.76231	3.86021	3.91406	3.94882	3.99043	4.01012	4.02208	4.02208
.0005	2.36293	3.27968	3.44703	3.56307	3.62564	3.66642	3.71423	3.73683	3.75091	3.75091
.0010	2.28109	3.10660	3.29157	3.41822	3.48611	3.53011	3.58168	3.60591	3.62098	3.62098
.0050	2.06419	2.60551	2.85892	3.02367	3.10969	3.16471	3.22854	3.25827	3.27669	3.27669
.0100	1.95495	2.32506	2.62423	2.81678	2.91527	2.97763	3.04944	3.08272	3.10328	3.10328
.0200	1.83190	2.04682	2.34073	2.57399	2.69073	2.76352	2.84642	2.88450	2.90796	2.90796
.0300	1.75151	1.90732	2.15369	2.40793	2.53981	2.62112	2.71280	2.75465	2.78034	2.78034
.0400	1.68965	1.81557	2.02054	2.27655	2.42084	2.50983	2.60937	2.65451	2.68214	2.68215
.0500	1.63835	1.74610	1.92100	2.16734	2.32027	2.41621	2.52309	2.57129	2.60071	2.60071
.0600	1.59391	1.68933	1.84267	2.07462	2.23227	2.33411	2.44795	2.49905	2.53017	2.53017
.0700	1.55431	1.64074	1.77819	1.99487	2.15386	2.26032	2.38061	2.43455	2.46730	2.46731
.0800	1.51829	1.59736	1.72318	1.92545	2.08322	2.19296	2.31908	2.37577	2.41013	2.41014
.0900	1.48504	1.55914	1.67494	1.86427	2.01911	2.13087	2.26204	2.32140	2.35735	2.35736
.1000	1.45398	1.52362	1.63173	1.80969	1.96056	2.07325	2.20862	2.27052	2.30804	2.30805
.1100	1.42469	1.49062	1.59237	1.76041	1.90677	2.01948	2.15818	2.22247	2.26155	2.26156
.1200	1.39686	1.45963	1.55605	1.71544	1.85709	1.96909	2.11030	2.17675	2.21737	2.21738
.1300	1.37024	1.43029	1.52215	1.67398	1.81091	1.92168	2.06461	2.13299	2.17512	2.17513
.1400	1.34464	1.40231	1.49023	1.63540	1.76777	1.87691	2.02086	2.09090	2.13448	2.13449
.1500	1.31990	1.37547	1.45994	1.59923	1.72724	1.83449	1.97882	2.05026	2.09519	2.09520
.1600	1.29588	1.34959	1.43101	1.56505	1.68896	1.79414	1.93831	2.01087	2.05707	2.05708
.1700	1.27247	1.32452	1.40322	1.53256	1.65262	1.75562	1.89917	1.97257	2.01992	2.01993
.1800	1.24959	1.30013	1.37639	1.50150	1.61796	1.71874	1.86126	1.93524	1.98359	1.98360
.1900	1.22715	1.27632	1.35037	1.47164	1.58473	1.68329	1.82446	1.89876	1.94797	1.94798
.2000	1.20507	1.25299	1.32503	1.44281	1.55275	1.64910	1.78864	1.86302	1.91292	1.91293
.2100	1.18329	1.23007	1.30027	1.41484	1.52185	1.61602	1.75371	1.82794	1.87834	1.87835
.2200	1.16175	1.20747	1.27599	1.38761	1.49186	1.58390	1.71955	1.79342	1.84415	1.84416
.2300	1.14039	1.18513	1.25210	1.36100	1.46265	1.55262	1.68608	1.75938	1.81024	1.81026
.2400	1.11916	1.16300	1.22853	1.33499	1.43411	1.52206	1.65319	1.72575	1.77655	1.77656
.2500	1.09802	1.14101	1.20520	1.30921	1.40612	1.49210	1.62082	1.69245	1.74298	1.74299
.2600	1.07690	1.11911	1.18205	1.28385	1.37858	1.46265	1.58885	1.65940	1.70947	1.70948
.2700	1.05578	1.09724	1.15901	1.25874	1.35140	1.43361	1.55722	1.62653	1.67593	1.67594
.2800	1.03458	1.07535	1.13603	1.23381	1.32449	1.40488	1.52584	1.59376	1.64228	1.64230
.2900	1.01327	1.05339	1.11303	1.20897	1.29776	1.37638	1.49461	1.56100	1.60846	1.60847
.3000	.99180	1.03130	1.08996	1.18415	1.27112	1.34800	1.46346	1.52819	1.57437	1.57439
.3100	.97011	1.00902	1.06676	1.15929	1.24451	1.31967	1.43228	1.49522	1.53994	1.53995
.3200	.94814	.98650	1.04336	1.13429	1.21782	1.29129	1.40098	1.46200	1.50507	1.50508
.3300	.92583	.96366	1.01969	1.10909	1.19096	1.26276	1.36946	1.42843	1.46965	1.46966
.3400	.90310	.94044	.99567	1.08360	1.16385	1.23397	1.33760	1.39439	1.43357	1.43358
.3500	.87988	.91674	.97121	1.05772	1.13638	1.20482	1.30528	1.35974	1.39672	1.39673
.3600	.85609	.89249	.94622	1.03135	1.10844	1.17518	1.27234	1.32434	1.35893	1.35894
.3700	.83159	.86756	.92059	1.00437	1.07988	1.14490	1.23862	1.28800	1.32005	1.32006
.3800	.80627	.84183	.89419	.97663	1.05056	1.11380	1.20392	1.25051	1.27987	1.27988
.3900	.77999	.81514	.86694	.94796	1.02029	1.08170	1.16800	1.21163	1.23815	1.23815
.4000	.75254	.78731	.83837	.91817	.98884	1.04832	1.13056	1.17102	1.19458	1.19458
.4100	.72369	.75809	.80852	.88699	.95594	1.01337	1.09123	1.12828	1.14878	1.14878
.4200	.69312	.72717	.77698	.85408	.92119	.97640	1.04949	1.08290	1.10026	1.10027
.4300	.66042	.69413	.74332	.81898	.88411	.93687	1.00467	1.03416	1.04836	1.04836
.4400	.62500	.65837	.70693	.78106	.84398	.89396	.95583	.98108	.99213	.99213
.4500	.58599	.61904	.66695	.73937	.79973	.84647	.90152	.92219	.93021	.93021
.4600	.54203	.57475	.62196	.69239	.74964	.79241	.83946	.85523	.86042	.86042
.4700	.49073	.52312	.56954	.63744	.69062	.72824	.76562	.77622	.77898	.77898
.4800	.42720	.45925	.50464	.56890	.61605	.64635	.67173	.67717	.67814	.67814
.4900	.33791	.36955	.41317	.47040	.50628	.52454	.53510	.53631	.53640	.53640
.5000	.00000	.00000	.00000	.00000	.00000	.00000	.00000	.00000	.00000	.00000

TABLE II.—CHORDWISE PRESSURE DISTRIBUTIONS FOR MACH NUMBERS NEAR 1 AT VARIOUS SPANWISE STATIONS ON FINITE-SPAN WINGS HAVING WEDGE PROFILES

(a) $\overline{M} = 1$

	$\bar{c}_p - 2\xi_\infty$								
$\bar{x}$ \ y/s	.000	.200	.400	.600	.800	.850	.900	.950	1.000
0.0001	4.02193	4.02135	4.01686	3.99546	3.92210	3.88505	3.82965	3.72934	2.53379
.0005	3.75074	3.75007	3.74489	3.72037	3.63515	3.59194	3.52678	3.40771	2.36290
.0010	3.62081	3.62009	3.61460	3.58820	3.49634	3.44944	3.37874	3.24840	2.28106
.0050	3.27648	3.27560	3.26891	3.23653	3.12255	3.06340	2.97296	2.80127	2.06419
.0100	3.10304	3.10206	3.09460	3.05843	2.92987	2.86242	2.75809	2.55545	1.95495
.0200	2.90768	2.90657	2.89807	2.85671	2.70785	2.62837	2.50329	2.26026	1.83190
.0300	2.78004	2.77882	2.76951	2.72412	2.55901	2.46955	2.32803	2.07693	1.75151
.0400	2.68183	2.68051	2.67050	2.62159	2.44190	2.34371	2.19147	1.95312	1.68965
.0500	2.60037	2.59897	2.58833	2.53616	2.34296	2.23778	2.08109	1.86236	1.63835
.0600	2.52981	2.52834	2.51708	2.46182	2.25624	2.14621	1.99008	1.79096	1.59391
.0700	2.46692	2.46537	2.45353	2.39527	2.17872	2.06596	1.91363	1.73180	1.55431
.0800	2.40973	2.40811	2.39569	2.33450	2.10861	1.99494	1.84816	1.68091	1.51829
.0900	2.35693	2.35524	2.34225	2.27818	2.04470	1.93155	1.79102	1.63594	1.48504
.1000	2.30761	2.30584	2.29229	2.22542	1.98610	1.87448	1.74028	1.59538	1.45398
.1100	2.26110	2.25926	2.24514	2.17560	1.93206	1.82266	1.69454	1.55821	1.42469
.1200	2.21691	2.21499	2.20030	2.12824	1.88198	1.77520	1.65275	1.52372	1.39686
.1300	2.17463	2.17264	2.15739	2.08301	1.83533	1.73139	1.61414	1.49138	1.37024
.1400	2.13397	2.13190	2.11609	2.03963	1.79165	1.69062	1.57811	1.46082	1.34464
.1500	2.09467	2.09252	2.07617	1.99789	1.75056	1.65242	1.54422	1.43171	1.31990
.1600	2.05652	2.05430	2.03743	1.95759	1.71170	1.61639	1.51209	1.40382	1.29588
.1700	2.01935	2.01705	1.99970	1.91860	1.67478	1.58219	1.48146	1.37696	1.27247
.1800	1.98301	1.98062	1.96284	1.88076	1.63955	1.54955	1.45207	1.35097	1.24959
.1900	1.94736	1.94491	1.92673	1.84396	1.60578	1.51824	1.42374	1.32570	1.22715
.2000	1.91229	1.90977	1.89127	1.80810	1.57328	1.48807	1.39630	1.30105	1.20507
.2100	1.87770	1.87512	1.85635	1.77306	1.54186	1.45886	1.36962	1.27692	1.18329
.2200	1.84348	1.84085	1.82190	1.73875	1.51139	1.43048	1.34357	1.25321	1.16175
.2300	1.80956	1.80689	1.78783	1.70508	1.48172	1.40279	1.31805	1.22985	1.14039
.2400	1.77585	1.77315	1.75406	1.67196	1.45273	1.37568	1.29297	1.20676	1.11916
.2500	1.74227	1.73955	1.72052	1.63931	1.42431	1.34904	1.26824	1.18389	1.09802
.2600	1.70875	1.70603	1.68714	1.60704	1.39636	1.32280	1.24377	1.16116	1.07690
.2700	1.67520	1.67250	1.65385	1.57507	1.36878	1.29685	1.21950	1.13852	1.05578
.2800	1.64156	1.63889	1.62056	1.54332	1.34149	1.27111	1.19536	1.11591	1.03458
.2900	1.60775	1.60513	1.58720	1.51170	1.31439	1.24552	1.17127	1.09327	1.01327
.3000	1.57368	1.57113	1.55369	1.48013	1.28739	1.21997	1.14717	1.07053	.99180
.3100	1.53927	1.53681	1.51994	1.44851	1.26042	1.19441	1.12299	1.04765	.97011
.3200	1.50442	1.50207	1.48587	1.41675	1.23339	1.16875	1.09865	1.02455	.94814
.3300	1.46904	1.46681	1.45135	1.38473	1.20620	1.14290	1.07408	1.00116	.92583
.3400	1.43301	1.43092	1.41628	1.35235	1.17876	1.11677	1.04920	.97741	.90310
.3500	1.39621	1.39427	1.38052	1.31948	1.15096	1.09027	1.02391	.95322	.87988
.3600	1.35848	1.35671	1.34393	1.28596	1.12268	1.06329	.99812	.92848	.85608
.3700	1.31966	1.31807	1.30632	1.25163	1.09378	1.03570	.97170	.90309	.83159
.3800	1.27954	1.27814	1.26748	1.21628	1.06412	1.00736	.94453	.87692	.80627
.3900	1.23787	1.23667	1.22716	1.17967	1.03350	.97808	.91643	.84980	.77999
.4000	1.19436	1.19336	1.18503	1.14149	1.00168	.94767	.88720	.82155	.75254
.4100	1.14862	1.14781	1.14071	1.10135	.96839	.91584	.85660	.79193	.72369
.4200	1.10016	1.09953	1.09366	1.05875	.93323	.88225	.82429	.76061	.69312
.4300	1.04829	1.04784	1.04319	1.01299	.89569	.84643	.78984	.72717	.66042
.4400	.99209	.99180	.98833	.96311	.85504	.80770	.75261	.69102	.62500
.4500	.93019	.93002	.92765	.90765	.81019	.76508	.71170	.65127	.58599
.4600	.86042	.86034	.85893	.84431	.75936	.71699	.66566	.60656	.54203
.4700	.77898	.77896	.77831	.76906	.69937	.66059	.61191	.55445	.49073
.4800	.67814	.67814	.67796	.67365	.62339	.58988	.54514	.48999	.42720
.4900	.53640	.53640	.53639	.53560	.51113	.48724	.45007	.39930	.33791
.5000	.00000	.00000	.00000	.00000	.00000	.00000	.00000	.00000	.00000
$\bar{c}_d$	1.75816	1.75649	1.74412	1.68639	1.50616	1.43160	1.34240	1.23661	1.10781

TABLE II.—CHORDWISE PRESSURE DISTRIBUTIONS FOR MACH NUMBERS NEAR 1 AT VARIOUS SPANWISE STATIONS ON FINITE-SPAN WINGS HAVING WEDGE PROFILES—Continued

(b) $\overline{A} = 3$

	$\bar{c}_p - 2t_\infty$								
$\bar{x}$ \ y/s	.000	.200	.400	.600	.800	.850	.900	.950	1.000
0.0001	4.01960	4.01671	4.00382	3.96909	3.88505	3.84598	3.78860	3.68600	2.53375
.0005	3.74806	3.74471	3.72985	3.68978	3.59193	3.54602	3.47840	3.35568	2.36292
.0010	3.61793	3.61426	3.59848	3.55522	3.44943	3.39978	3.32600	3.19099	2.28108
.0050	3.27296	3.26850	3.24911	3.19588	3.06339	2.99999	2.90432	2.72328	2.06418
.0100	3.00912	3.00413	3.07249	3.01276	2.86241	2.78944	2.67786	2.46173	1.95493
.0200	2.90322	2.89754	2.87281	2.80420	2.62836	2.54116	2.40564	2.16113	1.83189
.0300	2.77516	2.76893	2.74182	2.66672	2.46954	2.37072	2.22042	1.99295	1.75149
.0400	2.67657	2.66988	2.64069	2.55890	2.34370	2.23658	2.08348	1.88380	1.68963
.0500	2.59478	2.58767	2.55655	2.46900	2.23776	2.12633	1.97783	1.80356	1.63833
.0600	2.52391	2.51638	2.48344	2.39040	2.14619	2.03396	1.89372	1.73957	1.59389
.0700	2.46071	2.45280	2.41809	2.31976	2.06594	1.95543	1.82439	1.68581	1.55429
.0800	2.40323	2.39493	2.35848	2.25513	1.99492	1.88765	1.76543	1.63901	1.51827
.0900	2.35013	2.34145	2.30330	2.19528	1.93152	1.82825	1.71398	1.59725	1.48502
.1000	2.30051	2.29145	2.25162	2.13939	1.87445	1.77543	1.66814	1.55927	1.45396
.1100	2.25371	2.24426	2.20290	2.08685	1.82263	1.72781	1.62658	1.52422	1.42467
.1200	2.20921	2.19939	2.15636	2.03726	1.77517	1.68435	1.58840	1.49152	1.39684
.1300	2.16663	2.15644	2.11194	1.99025	1.73135	1.64426	1.55291	1.46071	1.37022
.1400	2.12567	2.11511	2.06925	1.94554	1.69059	1.60693	1.51961	1.43146	1.34462
.1500	2.08606	2.07515	2.02808	1.90288	1.65238	1.57186	1.48812	1.40350	1.31987
.1600	2.04760	2.03637	1.98824	1.86206	1.61635	1.53870	1.45812	1.37664	1.29585
.1700	2.01012	1.99860	1.94958	1.82289	1.58214	1.50712	1.42939	1.35068	1.27245
.1800	1.97348	1.96169	1.91197	1.78519	1.54950	1.47688	1.40171	1.32550	1.24956
.1900	1.93755	1.92554	1.87529	1.74880	1.51819	1.44778	1.37492	1.30097	1.22712
.2000	1.90221	1.89004	1.83943	1.71359	1.48801	1.41964	1.34889	1.27699	1.20504
.2100	1.86738	1.85500	1.80430	1.67942	1.45880	1.39231	1.32349	1.25346	1.18326
.2200	1.83296	1.82059	1.76981	1.64617	1.43042	1.36567	1.29863	1.23032	1.16171
.2300	1.79887	1.78645	1.73588	1.61371	1.40272	1.33960	1.27420	1.20747	1.14035
.2400	1.76505	1.75262	1.70242	1.58195	1.37561	1.31400	1.25012	1.18487	1.11913
.2500	1.73140	1.71911	1.66936	1.55079	1.34898	1.28879	1.22633	1.16244	1.09798
.2600	1.69780	1.68571	1.63661	1.52011	1.32273	1.26388	1.20275	1.14013	1.07687
.2700	1.66439	1.65241	1.60411	1.48983	1.29677	1.23919	1.17930	1.11788	1.05574
.2800	1.63088	1.61912	1.57176	1.45987	1.27104	1.21465	1.15592	1.09563	1.03454
.2900	1.59726	1.58578	1.53949	1.43012	1.24544	1.19018	1.13258	1.07333	1.01324
.3000	1.56346	1.55229	1.50722	1.40050	1.21990	1.16573	1.10918	1.05092	.99176
.3100	1.52940	1.51859	1.47485	1.37091	1.19433	1.14121	1.08566	1.02835	.97007
.3200	1.49496	1.48456	1.44229	1.34126	1.16867	1.11654	1.06195	1.00554	.94810
.3300	1.46007	1.45011	1.40943	1.31145	1.14282	1.09167	1.03799	.98243	.92579
.3400	1.42459	1.41512	1.37616	1.28137	1.11670	1.06648	1.01369	.95895	.90307
.3500	1.38840	1.37946	1.34233	1.25090	1.09021	1.04091	.98897	.93501	.87986
.3600	1.35134	1.34297	1.30782	1.21990	1.06323	1.01484	.96372	.91052	.85606
.3700	1.31324	1.30548	1.27242	1.18822	1.03565	.98819	.93785	.88537	.83157
.3800	1.27387	1.26676	1.23594	1.15566	1.00731	.96070	.91120	.85943	.80626
.3900	1.23299	1.22659	1.19812	1.12202	.97805	.93233	.88362	.83254	.77997
.4000	1.19026	1.18455	1.15865	1.08702	.94764	.90284	.85492	.80451	.75253
.4100	1.14530	1.14034	1.11712	1.05030	.91582	.87196	.82484	.77510	.72368
.4200	1.09759	1.09340	1.07301	1.01142	.88224	.83937	.79306	.74399	.69312
.4300	1.04642	1.04302	1.02562	.96975	.84642	.80460	.75916	.71076	.66042
.4400	.99084	.98822	.97396	.92442	.80770	.76705	.72252	.67481	.62500
.4500	.92945	.92761	.91656	.87410	.76508	.72577	.68226	.63529	.58599
.4600	.86006	.85892	.85113	.81665	.71699	.67928	.63697	.59080	.54203
.4700	.77886	.77831	.77365	.74823	.66059	.62497	.58417	.53896	.49073
.4800	.67812	.67796	.67600	.66074	.58988	.55736	.51875	.47484	.42720
.4900	.53640	.53639	.53612	.53124	.48724	.46067	.42629	.38473	.33791
.5000	.00000	.00000	.00000	.00000	.00000	.00000	.00000	.00000	.00000
$\bar{c}_d$	1.75146	1.74326	1.70853	1.61721	1.43156	1.36615	1.29176	1.20704	1.10782

TABLE II. CHORDWISE PRESSURE DISTRIBUTIONS FOR MACH NUMBERS NEAR 1 AT VARIOUS SPANWISE STATIONS ON FINITE-SPAN WINGS HAVING WEDGE PROFILES—Continued

(c) $\overline{A}=2$

	$\bar{c}_p - 2\xi_\infty$								
$\bar{x}$ \ y/s	.000	.200	.400	.600	.800	.850	.900	.950	1.000
0.0001	3.99648	3.98936	3.96625	3.92082	3.82895	3.78821	3.72887	3.62288	2.53280
.0005	3.72156	3.71329	3.68650	3.63366	3.52604	3.47792	3.40715	3.27915	2.36177
.0010	3.58948	3.58058	3.55177	3.49473	3.37796	3.32532	3.24778	3.10602	2.27984
.0050	3.23812	3.22717	3.19159	3.12054	2.97193	2.90342	2.80044	2.60468	2.06270
.0100	3.06018	3.04791	3.00795	2.92758	2.75689	2.67680	2.55445	2.32398	1.95329
.0200	2.85872	2.84467	2.79863	2.70517	2.50184	2.40433	2.25896	2.04530	1.83002
.0300	2.72635	2.71087	2.66006	2.55601	2.32634	2.21924	2.07531	1.90548	1.74944
.0400	2.62400	2.60727	2.55222	2.43860	2.18954	2.08163	1.95119	1.81348	1.68743
.0500	2.53873	2.52085	2.46183	2.33937	2.07889	1.97570	1.86016	1.74380	1.63599
.0600	2.46455	2.44556	2.38273	2.25226	1.98759	1.89131	1.78351	1.68684	1.59142
.0700	2.39815	2.37809	2.31161	2.17453	1.91086	1.82171	1.72911	1.63807	1.55169
.0800	2.33750	2.31640	2.24650	2.10410	1.84510	1.76250	1.67801	1.59501	1.51555
.0900	2.26127	2.25915	2.18614	2.03985	1.78768	1.71080	1.63283	1.55614	1.48217
.1000	2.22853	2.20546	2.12972	1.98088	1.73666	1.66470	1.59207	1.52046	1.45099
.1100	2.17861	2.15467	2.07665	1.92646	1.69064	1.62291	1.55470	1.48730	1.42157
.1200	2.13102	2.10633	2.02648	1.87597	1.64857	1.58449	1.52001	1.45615	1.39362
.1300	2.08539	2.06005	1.97387	1.82890	1.60967	1.54877	1.48748	1.42665	1.36687
.1400	2.04145	2.01565	1.93352	1.78478	1.57336	1.51523	1.45672	1.39852	1.34114
.1500	1.99899	1.97283	1.89019	1.74322	1.53919	1.48350	1.42742	1.37152	1.31626
.1600	1.95784	1.93144	1.84868	1.70389	1.50678	1.45327	1.39933	1.34547	1.29211
.1700	1.91787	1.89134	1.80878	1.66648	1.47585	1.42429	1.37227	1.32024	1.26857
.1800	1.87895	1.85241	1.77034	1.63075	1.44618	1.39637	1.34608	1.29569	1.24556
.1900	1.84101	1.81455	1.73321	1.59647	1.41756	1.36925	1.32062	1.27172	1.22299
.2000	1.80396	1.77766	1.69727	1.56347	1.38985	1.34303	1.29578	1.24824	1.20079
.2100	1.76772	1.74166	1.66238	1.53156	1.36290	1.31748	1.27147	1.22517	1.17890
.2200	1.73224	1.70648	1.62845	1.50062	1.33661	1.29241	1.24759	1.20244	1.15726
.2300	1.69744	1.67204	1.59537	1.47052	1.31086	1.26781	1.22409	1.18000	1.13582
.2400	1.66328	1.63828	1.56305	1.44115	1.28559	1.24358	1.20089	1.15778	1.11453
.2500	1.62970	1.60514	1.53141	1.41240	1.26070	1.21967	1.17793	1.13573	1.09334
.2600	1.59663	1.57254	1.50037	1.38418	1.23612	1.19600	1.15515	1.11379	1.07222
.2700	1.56402	1.54043	1.46985	1.35642	1.21178	1.17252	1.13249	1.09193	1.05111
.2800	1.53180	1.50873	1.43977	1.32903	1.18763	1.14916	1.10990	1.07008	1.02996
.2900	1.49991	1.47737	1.41004	1.30192	1.16359	1.12587	1.08733	1.04819	1.00873
.3000	1.46827	1.44629	1.38060	1.27502	1.13959	1.10257	1.06471	1.02622	.98737
.3100	1.43679	1.41538	1.35134	1.24825	1.11558	1.07922	1.04198	1.00409	.96583
.3200	1.40540	1.38457	1.32220	1.22153	1.09147	1.05573	1.01909	.98177	.94404
.3300	1.37398	1.35375	1.29305	1.19475	1.06720	1.03204	.99595	.95916	.92195
.3400	1.34242	1.32281	1.26380	1.16783	1.04267	1.00807	.97250	.93621	.89947
.3500	1.31058	1.29160	1.23432	1.14066	1.01781	.98372	.94865	.91283	.87653
.3600	1.27829	1.25998	1.20446	1.11311	.99249	.95890	.92430	.88891	.85304
.3700	1.24537	1.22775	1.17406	1.08504	.96659	.93348	.89932	.86435	.82887
.3800	1.21157	1.19470	1.14292	1.05627	.93998	.90732	.87359	.83901	.80390
.3900	1.17662	1.16054	1.11080	1.02661	.91247	.88026	.84693	.81273	.77796
.4000	1.14015	1.12493	1.07739	.99581	.88386	.85205	.81915	.78530	.75087
.4100	1.10170	1.08743	1.04231	.96354	.85387	.82254	.78999	.75648	.72236
.4200	1.06069	1.04749	1.00507	.92940	.82216	.79127	.75911	.72594	.69212
.4300	1.01632	1.00432	.96498	.89284	.78827	.75785	.72609	.69325	.65971
.4400	.96749	.95688	.92112	.85309	.75155	.72165	.69030	.65779	.62454
.4500	.91262	.90360	.87207	.80901	.71107	.68174	.65085	.61870	.58574
.4600	.84922	.84206	.81562	.75877	.66535	.63672	.60636	.57460	.54191
.4700	.77315	.76811	.74786	.69917	.61181	.58408	.55439	.52307	.49069
.4800	.67614	.67342	.66068	.62336	.54512	.51873	.48998	.45925	.42720
.4900	.53621	.53560	.53124	.51113	.45007	.42629	.39930	.36955	.33791
.5000	.00000	.00000	.00000	.00000	.00000	.00000	.00000	.00000	.00000
$\bar{c}_d$	1.68408	1.66517	1.60563	1.49930	1.33809	1.28790	1.23314	1.17302	1.10499

TABLE II.—CHORDWISE PRESSURE DISTRIBUTIONS FOR MACH NUMBERS NEAR 1 AT VARIOUS SPANWISE STATIONS ON FINITE-SPAN WINGS HAVING WEDGE PROFILES—Continued

(d) $\overline{A}=1$

	$\bar{c}_p - 2\xi_\infty$								
$\bar{x}$ \ y/s	.000	.200	.400	.600	.800	.850	.900	.950	1.000
0.0001	3.89159	3.88407	3.85860	3.81088	3.71463	3.67140	3.60932	3.49665	2.49909
.0005	3.59970	3.59041	3.56104	3.50431	3.38960	3.33805	3.26201	3.12301	2.32272
.0010	3.45799	3.44793	3.41604	3.35426	3.22845	3.17144	3.08691	2.93039	2.23787
.0050	3.07424	3.06148	3.02089	2.94122	2.77435	2.69635	2.57739	2.35478	2.01107
.0100	2.87481	2.86021	2.81356	2.72112	2.52300	2.42856	2.28879	2.08842	1.89544
.0200	2.64305	2.62576	2.57013	2.45819	2.21762	2.11548	1.99493	1.87211	1.76366
.0300	2.43611	2.46655	2.40325	2.27538	2.02338	1.93508	1.84355	1.75600	1.67643
.0400	2.36144	2.33976	2.26959	2.13082	1.88883	1.81535	1.74243	1.67302	1.60856
.0500	2.25483	2.23121	2.15553	2.01172	1.78811	1.72587	1.66489	1.60659	1.55167
.0600	2.15976	2.13460	2.05525	1.91137	1.70751	1.65351	1.60077	1.55009	1.50188
.0700	2.07281	2.04664	1.96556	1.82513	1.63967	1.59191	1.54525	1.50021	1.45705
.0800	1.99207	1.96544	1.88437	1.74957	1.58046	1.53759	1.49567	1.45503	1.41587
.0900	1.91641	1.88981	1.81012	1.68215	1.52740	1.48851	1.45041	1.41336	1.37750
.1000	1.84510	1.81892	1.74164	1.62103	1.47891	1.44336	1.40347	1.37443	1.34136
.1100	1.77766	1.75220	1.67802	1.56482	1.43299	1.40129	1.36915	1.33770	1.30705
.1200	1.71370	1.68920	1.61858	1.51281	1.39192	1.36173	1.33199	1.30283	1.27431
.1300	1.65305	1.62964	1.56278	1.46411	1.35225	1.32428	1.29668	1.26954	1.24293
.1400	1.59541	1.57313	1.51021	1.41829	1.31463	1.28866	1.26297	1.23765	1.21276
.1500	1.54060	1.51961	1.46053	1.37501	1.27881	1.25464	1.23069	1.20702	1.18369
.1600	1.48848	1.46874	1.41348	1.33397	1.24460	1.22206	1.19970	1.17754	1.15563
.1700	1.43889	1.42040	1.36883	1.29496	1.21186	1.19083	1.16990	1.14912	1.12852
.1800	1.39171	1.37443	1.32640	1.25780	1.18046	1.16081	1.14120	1.12168	1.10228
.1900	1.34679	1.33069	1.28604	1.22234	1.15030	1.13192	1.11353	1.09517	1.07687
.2000	1.30402	1.28909	1.24759	1.18846	1.12131	1.10409	1.08682	1.06953	1.05225
.2100	1.26330	1.24940	1.21093	1.15604	1.09341	1.07726	1.06102	1.04472	1.02838
.2200	1.22451	1.21162	1.17597	1.12501	1.06654	1.05138	1.03609	1.02069	1.00521
.2300	1.18755	1.17561	1.14258	1.09527	1.04064	1.02639	1.01197	.99741	.98272
.2400	1.15233	1.14128	1.11069	1.06676	1.01567	1.00224	.98863	.97483	.96087
.2500	1.11875	1.10853	1.08021	1.03940	.99156	.97890	.96602	.95293	.93964
.2600	1.08672	1.07727	1.05106	1.01313	.96829	.95633	.94412	.93166	.91898
.2700	1.05616	1.04743	1.02317	.98789	.94578	.93447	.92287	.91100	.89886
.2800	1.02700	1.01893	.99647	.96364	.92403	.91329	.90224	.89089	.87925
.2900	.99916	.99170	.97080	.94030	.90297	.89275	.88220	.87132	.86011
.3000	.97256	.96567	.94639	.91785	.88256	.87281	.86270	.85223	.84141
.3100	.94714	.94077	.92290	.89622	.86277	.85343	.84370	.83359	.82309
.3200	.92283	.91694	.90035	.87537	.84354	.83456	.82516	.81534	.80512
.3300	.89958	.89413	.87871	.85525	.82483	.81614	.80701	.79744	.78744
.3400	.87733	.87227	.85792	.83580	.80657	.79812	.78920	.77982	.76998
.3500	.85601	.85132	.83793	.81698	.78871	.78043	.77167	.76241	.75268
.3600	.83559	.83123	.81868	.79872	.77116	.76300	.75433	.74513	.73545
.3700	.81600	.81193	.80012	.78095	.75385	.74573	.73707	.72788	.71817
.3800	.79719	.79338	.78218	.76357	.73665	.72850	.71979	.71052	.70073
.3900	.77911	.77551	.76479	.74649	.71942	.71116	.70232	.69291	.68295
.4000	.76169	.75826	.74783	.72955	.70197	.69352	.68446	.67482	.66462
.4100	.74485	.74151	.73117	.71255	.68406	.67532	.66595	.65598	.64546
.4200	.72846	.72513	.71459	.69519	.66534	.65620	.64642	.63604	.62511
.4300	.71231	.70886	.69774	.67706	.64533	.63567	.62538	.61448	.60305
.4400	.69601	.69226	.68008	.65748	.62331	.61302	.60209	.59057	.57854
.4500	.67879	.67450	.66062	.63540	.59820	.58715	.57548	.56324	.55052
.4600	.65903	.65387	.63759	.60903	.56826	.55634	.54383	.53078	.51729
.4700	.63308	.62676	.60751	.57513	.53045	.51759	.50417	.49025	.47594
.4800	.59186	.58451	.56265	.52694	.47869	.46494	.45064	.43586	.42075
.4900	.50767	.50115	.48091	.44506	.39701	.38279	.36793	.35254	.33681
.5000	.00000	.00000	.00000	.00000	.00000	.00000	.00000	.00000	.00000
$\bar{c}_d$	1.30411	1.29154	1.25450	1.19415	1.11103	1.08643	1.06015	1.03182	1.00019

TABLE II.—CHORDWISE PRESSURE DISTRIBUTIONS FOR MACH NUMBERS NEAR 1 AT VARIOUS SPANWISE STATIONS ON FINITE-SPAN WINGS HAVING WEDGE PROFILES—Continued

(e) $\overline{A} = 0.4$

	$\bar{C}_p - 2\bar{t}_\alpha$								
$\bar{x}$ \ y/s	.000	.200	.400	.600	.800	.850	.900	.950	1.000
0.0001	3.73098	3.72274	3.69531	3.64244	3.53705	3.48955	3.42025	3.29461	2.40238
.0005	3.40980	3.39946	3.36664	3.30299	3.17305	3.11403	3.02625	2.86295	2.20999
.0010	3.25067	3.23928	3.20310	3.13255	2.98704	2.92020	2.81976	2.62910	2.11567
.0050	2.80433	2.78900	2.73987	2.64212	2.43092	2.33119	2.19110	2.01499	1.85626
.0100	2.55907	2.54062	2.48107	2.36068	2.11092	2.01488	1.91040	1.80889	1.71818
.0200	2.25483	2.23122	2.15553	2.01175	1.78839	1.72633	1.66564	1.60775	1.55340
.0300	2.03175	2.00529	1.92402	1.73624	1.60954	1.56459	1.52077	1.47852	1.43810
.0400	1.84510	1.81892	1.74165	1.62108	1.47938	1.44409	1.40957	1.37606	1.34369
.0500	1.68300	1.65902	1.59026	1.48814	1.37237	1.34363	1.31543	1.28789	1.26112
.0600	1.54061	1.51961	1.46054	1.37510	1.27949	1.25568	1.23223	1.20923	1.18676
.0700	1.41501	1.39713	1.34736	1.27628	1.19683	1.17693	1.15725	1.13787	1.11885
.0800	1.30403	1.28905	1.24760	1.18861	1.12235	1.10563	1.08903	1.07261	1.05644
.0900	1.20581	1.19340	1.15910	1.11020	1.05479	1.04069	1.02664	1.01270	.99891
.1000	1.11875	1.10853	1.08025	1.03970	.99327	.98135	.96944	.95756	.94577
.1100	1.04142	1.03303	1.00973	.97608	.93710	.92701	.91688	.90675	.89666
.1200	.97257	.96568	.94649	.91852	.88573	.87716	.86854	.85988	.85123
.1300	.91109	.90544	.88960	.86631	.83866	.83138	.82402	.81661	.80918
.1400	.85605	.85140	.83829	.81885	.79548	.78928	.78299	.77663	.77024
.1500	.80660	.80276	.79189	.77560	.75580	.75051	.74512	.73966	.73415
.1600	.76204	.75885	.74980	.73612	.71930	.71477	.71015	.70545	.70069
.1700	.72174	.71909	.71152	.69999	.68566	.68177	.67780	.67374	.66963
.1800	.68519	.68297	.67662	.66686	.65462	.65127	.64785	.64434	.64077
.1900	.65192	.65006	.64470	.63641	.62592	.62304	.62007	.61704	.61394
.2000	.62155	.61998	.61544	.60837	.59935	.59686	.59429	.59165	.58896
.2100	.59373	.59240	.58854	.58249	.57471	.57255	.57032	.56802	.56567
.2200	.56818	.56705	.56375	.55855	.55182	.54994	.54800	.54599	.54394
.2300	.54465	.54368	.54085	.53637	.53052	.52889	.52719	.52543	.52363
.2400	.52292	.52209	.51965	.51576	.51067	.50924	.50775	.50622	.50463
.2500	.50280	.50208	.49996	.49659	.49214	.49089	.48958	.48823	.48683
.2600	.48412	.48349	.48166	.47871	.47482	.47371	.47256	.47137	.47014
.2700	.46674	.46619	.46459	.46202	.45859	.45762	.45660	.45555	.45445
.2800	.45053	.45006	.44865	.44639	.44337	.44251	.44161	.44067	.43970
.2900	.43538	.43497	.43373	.43174	.42907	.42831	.42751	.42668	.42581
.3000	.42120	.42084	.41975	.41799	.41562	.41494	.41423	.41349	.41272
.3100	.40790	.40757	.40661	.40505	.40294	.40234	.40170	.40104	.40035
.3200	.39539	.39511	.39425	.39286	.39098	.39044	.38987	.38928	.38867
.3300	.38362	.38336	.38260	.38136	.37969	.37920	.37869	.37816	.37761
.3400	.37252	.37229	.37161	.37050	.36899	.36856	.36810	.36762	.36713
.3500	.36203	.36183	.36122	.36022	.35889	.35848	.35806	.35763	.35719
.3600	.35211	.35193	.35138	.35048	.34928	.34891	.34854	.34815	.34775
.3700	.34271	.34255	.34205	.34125	.34018	.33983	.33949	.33914	.33877
.3800	.33380	.33365	.33320	.33248	.33144	.33119	.33088	.33056	.33023
.3900	.32533	.32520	.32479	.32413	.32321	.32297	.32269	.32240	.32210
.4000	.31728	.31716	.31679	.31619	.31537	.31513	.31488	.31461	.31434
.4100	.30961	.30950	.30917	.30862	.30787	.30766	.30743	.30719	.30693
.4200	.30230	.30220	.30190	.30140	.30071	.30052	.30031	.30009	.29986
.4300	.29533	.29524	.29496	.29451	.29389	.29370	.29351	.29331	.29310
.4400	.28867	.28858	.28833	.28792	.28735	.28718	.28700	.28682	.28662
.4500	.28230	.28222	.28199	.28161	.28109	.28093	.28077	.28060	.28042
.4600	.27620	.27613	.27592	.27557	.27509	.27495	.27480	.27464	.27448
.4700	.27036	.27030	.27010	.26978	.26936	.26920	.26906	.26891	.26875
.4800	.26476	.26470	.26452	.26422	.26383	.26363	.26346	.26325	.26300
.4900	.25938	.25933	.25913	.25860	.25695	.25623	.25533	.25425	.25298
.5000	.00000	.00000	.00000	.00000	.00000	.00000	.00000	.00000	.00000
$\bar{c}_d$	.75587	.75079	.73594	.71211	.67993	.67055	.66057	.64991	.63804

TABLE II. CHORDWISE PRESSURE DISTRIBUTIONS FOR MACH NUMBERS NEAR 1 AT VARIOUS SPANWISE STATIONS ON FINITE-SPAN WINGS HAVING WEDGE PROFILES—Continued

(f) $\overline{\Lambda}=-0.3$

	$\bar{c}_p - 2\xi_\infty$								
$\bar{x}$ \ y/s	.000	.200	.400	.600	.800	.850	.900	.950	1.000
0.0001	3.67782	3.66891	3.64075	3.58637	3.47745	3.42839	3.35656	3.22570	2.37038
.0005	3.34572	3.33483	3.30079	3.23444	3.09856	3.03658	2.94406	2.77064	2.17191
.0010	3.17982	3.16790	3.13003	3.05605	2.90258	2.83163	2.72445	2.51952	2.07394
.0050	2.70791	2.69145	2.63859	2.53272	2.30312	2.19981	2.06873	1.92642	1.80151
.0100	2.44193	2.42164	2.35595	2.22382	1.97372	1.89034	1.80678	1.72682	1.65375
.0200	2.10103	2.07514	1.99443	1.85258	1.66151	1.61205	1.56387	1.51756	1.47347
.0300	1.84510	1.81892	1.74165	1.62108	1.47938	1.44409	1.40957	1.37606	1.34369
.0400	1.63351	1.61048	1.54493	1.44861	1.34009	1.31314	1.28665	1.26075	1.23554
.0500	1.45515	1.43624	1.38347	1.30786	1.22340	1.20229	1.18143	1.16093	1.14084
.0600	1.30403	1.28905	1.24760	1.18861	1.12235	1.10563	1.08903	1.07262	1.05645
.0700	1.17562	1.16399	1.13182	1.08587	1.03365	1.02032	1.00703	.99381	.98073
.0800	1.06619	1.05723	1.03238	.99658	.95527	.94460	.93391	.92323	.91261
.0900	.97257	.96568	.94649	.91852	.88573	.87716	.86854	.85988	.85123
.1000	.89208	.88673	.87192	.84999	.82385	.81695	.80997	.80293	.79586
.1100	.82251	.81842	.80685	.78958	.76866	.76308	.75741	.75167	.74588
.1200	.76204	.75883	.74930	.73612	.71930	.71477	.71015	.70545	.70069
.1300	.70916	.70667	.69953	.68863	.67504	.67134	.66756	.66370	.65978
.1400	.66267	.66070	.65503	.64620	.63524	.63221	.62910	.62592	.62267
.1500	.62155	.61998	.61544	.60837	.59935	.59686	.59429	.59165	.58896
.1600	.58498	.58372	.58005	.57430	.56689	.56483	.56270	.56051	.55826
.1700	.55229	.55127	.54829	.54353	.53745	.53574	.53397	.53213	.53025
.1800	.52292	.52209	.51965	.51576	.51067	.50924	.50775	.50622	.50463
.1900	.49642	.49573	.49372	.49049	.48624	.48504	.48379	.48249	.48115
.2000	.47239	.47183	.47015	.46746	.46388	.46287	.46181	.46071	.45957
.2100	.45053	.45006	.44865	.44639	.44337	.44251	.44161	.44067	.43970
.2200	.43055	.43016	.42897	.42706	.42449	.42376	.42299	.42219	.42136
.2300	.41224	.41190	.41090	.40927	.40708	.40646	.40580	.40511	.40440
.2400	.39539	.39511	.39425	.39298	.39093	.39044	.38987	.38928	.38867
.2500	.37985	.37960	.37887	.37767	.37605	.37559	.37510	.37458	.37405
.2600	.36546	.36525	.36462	.36359	.36218	.36178	.36135	.36091	.36044
.2700	.35211	.35193	.35130	.35048	.34926	.34891	.34854	.34815	.34775
.2800	.33969	.33953	.33905	.33827	.33721	.33690	.33657	.33623	.33588
.2900	.32810	.32797	.32755	.32687	.32593	.32566	.32538	.32508	.32476
.3000	.31728	.31716	.31679	.31619	.31537	.31513	.31488	.31461	.31434
.3100	.30714	.30703	.30671	.30618	.30545	.30524	.30502	.30478	.30454
.3200	.29762	.29752	.29724	.29677	.29613	.29594	.29574	.29553	.29532
.3300	.28867	.28858	.28833	.28792	.28734	.28718	.28700	.28682	.28662
.3400	.28023	.28016	.27994	.27957	.27906	.27891	.27875	.27858	.27841
.3500	.27228	.27221	.27201	.27168	.27123	.27109	.27095	.27080	.27065
.3600	.26476	.26470	.26452	.26423	.26382	.26370	.26357	.26344	.26330
.3700	.25764	.25759	.25743	.25716	.25679	.25669	.25657	.25645	.25633
.3800	.25090	.25085	.25070	.25046	.25013	.25003	.24993	.24982	.24971
.3900	.24449	.24445	.24432	.24410	.24380	.24371	.24362	.24352	.24342
.4000	.23841	.23837	.23825	.23805	.23778	.23770	.23762	.23753	.23744
.4100	.23262	.23258	.23247	.23229	.23205	.23197	.23190	.23182	.23173
.4200	.22710	.22707	.22697	.22681	.22658	.22651	.22644	.22637	.22629
.4300	.22183	.22181	.22172	.22157	.22136	.22130	.22124	.22117	.22110
.4400	.21681	.21678	.21670	.21657	.21638	.21632	.21626	.21620	.21614
.4500	.21201	.21198	.21191	.21178	.21161	.21156	.21151	.21145	.21139
.4600	.20741	.20739	.20732	.20721	.20705	.20700	.20695	.20690	.20685
.4700	.20301	.20299	.20293	.20282	.20268	.20263	.20259	.20254	.20249
.4800	.19879	.19877	.19871	.19862	.19848	.19844	.19840	.19836	.19831
.4900	.19474	.19473	.19467	.19458	.19445	.19441	.19436	.19430	.19423
.5000	.00000	.00000	.00000	.00000	.00000	.00000	.00000	.00000	.00000
$\bar{c}_d$	.62182	.61803	.60689	.58898	.56492	.55790	.55044	.54242	.53355

TABLE II.—CHORDWISE PRESSURE DISTRIBUTIONS FOR MACH NUMBERS NEAR 1 AT VARIOUS SPANWISE STATIONS ON FINITE-SPAN WINGS HAVING WEDGE PROFILES Concluded

(g) $\overline{A}=0.2$

	$\bar{c}_p - 2i_\infty$								
$\bar{x}$ \ y/s	.000	.200	.400	.600	.800	.850	.900	.950	1.000
0.0001	3.59995	3.59028	3.56110	3.50424	3.38968	3.33809	3.26216	3.12323	2.32368
.0005	3.25068	3.23928	3.20310	3.13255	2.98704	2.92020	2.81976	2.62910	2.11568
.0010	3.07423	3.06147	3.02088	2.94122	2.77445	2.69651	2.57763	2.35522	2.01210
.0050	2.55907	2.54062	2.48107	2.36068	2.11092	2.01488	1.91040	1.80889	1.71817
.0100	2.25484	2.23122	2.15553	2.01175	1.78839	1.72633	1.66564	1.60775	1.55340
.0200	1.84510	1.81892	1.74165	1.62108	1.47938	1.44409	1.40957	1.37606	1.34369
.0300	1.54061	1.51961	1.46054	1.37510	1.27949	1.25568	1.23223	1.20923	1.18676
.0400	1.30403	1.28905	1.24760	1.18861	1.12235	1.10563	1.08903	1.07261	1.05644
.0500	1.11875	1.10853	1.08025	1.03970	.99327	.98135	.96944	.95756	.94577
.0600	.97257	.96568	.94649	.91852	.88573	.87716	.86854	.85988	.85123
.0700	.85605	.85140	.83830	.81885	.79548	.78928	.78299	.77663	.77024
.0800	.76204	.75885	.74980	.73612	.71930	.71477	.71015	.70545	.70069
.0900	.68519	.68297	.67662	.66686	.65462	.65127	.64785	.64434	.64077
.1000	.62155	.61998	.61544	.60837	.59905	.59686	.59429	.59165	.58896
.1100	.56818	.56705	.56375	.55855	.55182	.54994	.54800	.54599	.54394
.1200	.52292	.52209	.51965	.51576	.51067	.50924	.50776	.50622	.50463
.1300	.48412	.48349	.48166	.47871	.47482	.47371	.47256	.47137	.47014
.1400	.45053	.45006	.44865	.44639	.44337	.44251	.44161	.44067	.43970
.1500	.42120	.42084	.41975	.41799	.41562	.41494	.41423	.41349	.41272
.1600	.39539	.39511	.39425	.39286	.39098	.39044	.38987	.38928	.38867
.1700	.37252	.37229	.37161	.37050	.36899	.36856	.36810	.36762	.36713
.1800	.35211	.35193	.35138	.35049	.34926	.34891	.34854	.34815	.34775
.1900	.33380	.33365	.33320	.33248	.33148	.33119	.33088	.33056	.33023
.2000	.31728	.31716	.31679	.31619	.31537	.31513	.31488	.31461	.31434
.2100	.30230	.30220	.30190	.30140	.30072	.30052	.30031	.30009	.29986
.2200	.28867	.28858	.28833	.28792	.28734	.28718	.28700	.28682	.28662
.2300	.27620	.27613	.27592	.27557	.27509	.27495	.27480	.27464	.27448
.2400	.26476	.26470	.26450	.26423	.26372	.26370	.26357	.26344	.26330
.2500	.25423	.25418	.25402	.25377	.25342	.25332	.25321	.25310	.25298
.2600	.24449	.24445	.24432	.24410	.24380	.24371	.24362	.24352	.24342
.2700	.23548	.23544	.23533	.23514	.23488	.23480	.23472	.23464	.23455
.2800	.22710	.22707	.22697	.22681	.22658	.22651	.22644	.22637	.22629
.2900	.21929	.21927	.21918	.21904	.21884	.21878	.21872	.21866	.21859
.3000	.21201	.21198	.21191	.21178	.21161	.21156	.21151	.21145	.21139
.3100	.20519	.20517	.20510	.20499	.20484	.20479	.20475	.20470	.20465
.3200	.19879	.19877	.19871	.19862	.19848	.19844	.19840	.19836	.19831
.3300	.19278	.19277	.19271	.19263	.19251	.19247	.19244	.19240	.19236
.3400	.18712	.18711	.18706	.18698	.18688	.18685	.18682	.18678	.18675
.3500	.18179	.18177	.18173	.18167	.18157	.18154	.18151	.18148	.18145
.3600	.17675	.17674	.17670	.17664	.17655	.17653	.17650	.17647	.17645
.3700	.17198	.17197	.17193	.17188	.17180	.17178	.17176	.17173	.17171
.3800	.16746	.16745	.16742	.16737	.16730	.16728	.16726	.16724	.16722
.3900	.16317	.16316	.16314	.16309	.16303	.16301	.16299	.16297	.16295
.4000	.15910	.15909	.15907	.15903	.15897	.15895	.15894	.15892	.15890
.4100	.15522	.15522	.15519	.15516	.15511	.15509	.15507	.15506	.15504
.4200	.15153	.15153	.15150	.15147	.15142	.15141	.15140	.15138	.15137
.4300	.14801	.14801	.14799	.14796	.14791	.14790	.14789	.14787	.14786
.4400	.14465	.14465	.14463	.14460	.14456	.14455	.14454	.14452	.14451
.4500	.14144	.14144	.14142	.14139	.14136	.14135	.14134	.14132	.14131
.4600	.13837	.13836	.13835	.13832	.13829	.13828	.13827	.13826	.13825
.4700	.13543	.13542	.13541	.13539	.13536	.13535	.13534	.13533	.13532
.4800	.13261	.13260	.13259	.13257	.13254	.13253	.13253	.13252	.13251
.4900	.12990	.12990	.12989	.12987	.12984	.12984	.12983	.12982	.12981
.5000	.00000	.00000	.00000	.00000	.00000	.00000	.00000	.00000	.00000
$\bar{c}_d$	.46612	.46362	.45617	.44428	.42619	.42351	.41858	.41323	.40733

TABLE III.—CHORDWISE PRESSURE DISTRIBUTIONS FOR MACH NUMBERS NEAR 1 AT VARIOUS SPANWISE STATIONS ON A SEMI-INFINITE WING HAVING A CIRCULAR-ARC PROFILE

	$C_p - 2\xi_\infty$								
$\bar{x}$ \ $\bar{y}$	.000	.010	.025	.050	.075	.100	.125	.150	.200
0.0001	3.64225	5.19276	5.42427	5.56770	5.63643	5.67739	5.70435	5.72315	5.74679
.0005	3.30337	4.49692	4.79886	4.98009	5.06554	5.11612	5.14927	5.17229	5.20122
.0010	3.13402	4.11894	4.47233	4.67922	4.77571	4.83253	4.86961	4.89534	4.92764
.0050	2.65572	2.98763	3.45863	3.78543	3.93032	4.01345	4.06692	4.10365	4.14938
.0100	2.39491	2.54447	2.86828	3.25094	3.44087	3.54815	3.61620	3.66252	3.71961
.0200	2.08268	2.13026	2.28523	2.58668	2.81354	2.95939	3.05410	3.11829	3.19632
.0400	1.69706	1.68333	1.73099	1.87618	2.04568	2.19704	2.31682	2.40720	2.52497
.0600	1.42441	1.38536	1.39082	1.46109	1.56885	1.68662	1.79662	1.89075	2.02952
.0800	1.20361	1.14967	1.13104	1.15804	1.22403	1.30897	1.39877	1.48386	1.62413
.1000	1.01354	.94950	.91466	.91275	.94951	1.00831	1.07780	1.14958	1.28032
.1200	.84426	.77264	.72594	.70284	.71792	.75611	.80797	.86618	.98217
.1400	.69008	.61259	.55655	.51710	.51527	.53697	.57383	.61948	.71898
.1600	.54753	.46519	.40163	.34900	.33346	.34160	.36571	.40013	.48315
.1800	.41423	.32782	.25797	.19435	.16743	.16419	.17738	.20183	.26913
.2000	.28851	.19861	.12337	.05039	.01380	.00082	.00454	.02014	.07276
.2200	.16914	.07620	-.00372	-.08483	-.12980	-.15125	-.15583	-.14811	-.10908
.2400	.05518	-.04044	-.12451	-.21275	-.26510	-.29399	-.30594	-.30529	-.27878
.2600	-.05409	-.15211	-.23987	-.33448	-.39338	-.42892	-.44745	-.45310	-.43823
.2800	-.15925	-.25945	-.35054	-.45087	-.51566	-.55717	-.58164	-.59317	-.58887
.3000	-.26078	-.36295	-.45707	-.56260	-.63272	-.67964	-.70952	-.72635	-.73193
.3200	-.35907	-.46305	-.55994	-.67021	-.74521	-.79707	-.83190	-.85359	-.86823
.3400	-.45444	-.56009	-.65953	-.77417	-.85364	-.91004	-.94942	-.97561	-.99887
.3600	-.54716	-.65436	-.75616	-.87484	-.95845	-1.01905	-1.06264	-1.09299	-1.12422
.3800	-.63748	-.74612	-.85012	-.97255	-1.06000	-1.12449	-1.17199	-1.20622	-1.24492
.4000	-.72558	-.83557	-.94163	-1.06756	-1.15859	-1.22672	-1.27787	-1.31572	-1.36143
.4200	-.81166	-.92291	-1.03089	-1.16011	-1.25449	-1.32602	-1.38059	-1.42184	-1.47415
.4400	-.89586	-1.00830	-1.11810	-1.25039	-1.34792	-1.42266	-1.48043	-1.52489	-1.58342
.4600	-.97831	-1.09187	-1.20338	-1.33860	-1.43910	-1.51683	-1.57764	-1.62512	-1.68956
.4800	-1.05914	-1.17377	-1.28690	-1.42487	-1.52819	-1.60875	-1.67242	-1.72275	-1.79280
.5000	-1.13846	-1.25410	-1.36876	-1.50933	-1.61531	-1.69858	-1.76496	-1.81801	-1.89338
.5200	-1.21635	-1.33296	-1.44909	-1.59214	-1.70063	-1.78647	-1.85543	-1.91105	-1.99149
.5400	-1.29291	-1.41044	-1.52796	-1.67337	-1.78428	-1.87254	-1.94396	-2.00204	-2.08730
.5600	-1.36822	-1.48662	-1.60546	-1.75314	-1.86634	-1.95693	-2.03069	-2.09111	-2.18099
.5800	-1.44233	-1.56157	-1.68170	-1.83152	-1.94692	-2.03974	-2.11572	-2.17838	-2.27270
.6000	-1.51533	-1.63537	-1.75672	-1.90861	-2.02610	-2.12105	-2.19918	-2.26398	-2.36254
.6200	-1.58726	-1.70808	-1.83059	-1.98447	-2.10398	-2.20096	-2.28114	-2.34800	-2.45063
.6400	-1.65818	-1.77974	-1.90338	-2.05917	-2.18061	-2.27954	-2.36170	-2.43054	-2.53709
.6600	-1.72814	-1.85042	-1.97514	-2.13276	-2.25606	-2.35688	-2.44093	-2.51166	-2.62199
.6800	-1.79719	-1.92015	-2.04592	-2.20530	-2.33040	-2.43303	-2.51891	-2.59147	-2.70543
.7000	-1.86536	-1.98899	-2.11577	-2.27685	-2.40367	-2.50806	-2.59569	-2.67002	-2.78749
.7200	-1.93269	-2.05697	-2.18472	-2.34745	-2.47594	-2.58200	-2.67134	-2.74737	-2.86823
.7400	-1.99923	-2.12413	-2.25282	-2.41714	-2.54724	-2.65494	-2.74592	-2.82359	-2.94772
.7600	-2.06500	-2.19050	-2.32010	-2.48596	-2.61763	-2.72690	-2.81946	-2.89873	-3.02604
.7800	-2.13004	-2.25612	-2.38661	-2.55395	-2.68713	-2.79793	-2.89203	-2.97284	-3.10322
.8000	-2.19437	-2.32102	-2.45236	-2.62115	-2.75579	-2.86807	-2.96366	-3.04596	-3.17932
.8200	-2.25802	-2.38523	-2.51740	-2.68759	-2.82365	-2.93736	-3.03440	-3.11815	-3.25439
.8400	-2.32103	-2.44876	-2.58174	-2.75329	-2.89073	-3.00584	-3.10427	-3.18943	-3.32848
.8600	-2.38340	-2.51165	-2.64542	-2.81830	-2.95707	-3.07352	-3.17332	-3.25985	-3.40163
.8800	-2.44517	-2.57392	-2.70845	-2.88261	-3.02270	-3.14047	-3.24159	-3.32944	-3.47387
.9000	-2.50635	-2.63559	-2.77086	-2.94628	-3.08763	-3.20666	-3.30909	-3.39823	-3.54526
.9200	-2.56696	-2.69670	-2.83269	-3.00932	-3.15190	-3.27221	-3.37586	-3.46627	-3.61580
.9400	-2.62704	-2.75723	-2.89393	-3.07175	-3.21553	-3.33704	-3.44193	-3.53356	-3.68553
.9600	-2.68658	-2.81722	-2.95461	-3.13359	-3.27855	-3.40124	-3.50732	-3.60014	-3.75451
.9800	-2.74561	-2.87670	-3.01476	-3.19487	-3.34098	-3.46482	-3.57205	-3.66604	-3.82274
1.0000	-2.80415	-2.93567	-3.07439	-3.25560	-3.40282	-3.52779	-3.63615	-3.73128	-3.89025

TABLE III.—CHORDWISE PRESSURE DISTRIBUTIONS FOR MACH NUMBERS NEAR 1 AT VARIOUS SPANWISE STATIONS ON A SEMI-INFINITE WING HAVING A CIRCULAR-ARC PROFILE—Concluded

	η								
ξ	.250	.300	.400	.500	.750	1.000	1.500	2.500	50.000
0.0001	5.76024	5.76829	5.77637	5.77959	5.78153	5.78171	5.78171	5.78171	5.78171
.0005	5.21762	5.22746	5.23725	5.24121	5.24357	5.24377	5.24377	5.24377	5.24377
.0010	4.94590	4.95676	4.96773	4.97210	4.97472	4.97492	4.97495	4.97495	4.97495
.0050	4.17505	4.19033	4.20562	4.21170	4.21537	4.21567	4.21569	4.21569	4.21569
.0100	3.75158	3.77044	3.78926	3.79678	3.80128	3.80167	3.80169	3.80169	3.80169
.0200	3.23927	3.26460	3.28967	3.29958	3.30553	3.30602	3.30604	3.30604	3.30604
.0400	2.59173	2.63083	2.66909	2.68415	2.69312	2.69389	2.69391	2.69392	2.69392
.0600	2.11687	2.17107	2.22571	2.24720	2.25994	2.26108	2.26112	2.26112	2.26112
.0800	1.72302	1.78935	1.86122	1.89104	1.90898	1.91049	1.91061	1.91061	1.91061
.1000	1.38222	1.45601	1.54270	1.58184	1.60662	1.60874	1.60890	1.60890	1.60890
.1200	1.08111	1.15794	1.25542	1.30355	1.33684	1.33996	1.34018	1.34018	1.34018
.1400	.81136	.88777	.99189	1.04780	1.09070	1.09513	1.09544	1.09544	1.09544
.1600	.56693	.64049	.74755	.80962	.86229	.86868	.86915	.86915	.86915
.1800	.34333	.41238	.51935	.58586	.64794	.65685	.65755	.65755	.65755
.2000	.13705	.20055	.30503	.37436	.44498	.45686	.45798	.45798	.45798
.2200	-.05464	.00268	.10285	.17351	.25155	.26675	.26849	.26849	.26849
.2400	-.23394	-.18312	-.08862	-.01790	.06627	.08500	.08759	.08759	.08759
.2600	-.40260	-.35841	-.27056	-.20087	-.11188	-.09955	-.08587	-.08586	-.08586
.2800	-.56206	-.52447	-.44397	-.37622	-.28371	-.25784	-.25282	-.25280	-.25280
.3000	-.71346	-.68241	-.60970	-.54465	-.44986	-.42060	-.41409	-.41397	-.41397
.3200	-.85780	-.83311	-.76850	-.70675	-.61084	-.57843	-.57010	-.56999	-.56999
.3400	-.99586	-.97736	-.92101	-.86304	-.76707	-.73182	-.72156	-.72138	-.72138
.3600	-1.12833	-1.11582	-1.06779	-1.01399	-.91893	-.88116	-.86856	-.86857	-.86857
.3800	-1.25578	-1.24905	-1.20933	-1.16001	-1.06673	-1.02679	-1.01237	-1.01193	-1.01193
.4000	-1.37870	-1.37754	-1.34606	-1.30147	-1.21074	-1.16809	-1.15242	-1.15170	-1.15170
.4200	-1.49752	-1.50172	-1.47837	-1.43869	-1.35119	-1.30802	-1.28930	-1.28843	-1.28843
.4400	-1.61259	-1.62196	-1.60663	-1.57194	-1.48831	-1.44408	-1.42225	-1.42208	-1.42208
.4600	-1.72425	-1.73859	-1.73112	-1.70153	-1.62229	-1.57736	-1.55448	-1.55297	-1.55297
.4800	-1.83276	-1.85186	-1.85211	-1.82768	-1.75330	-1.70302	-1.68218	-1.68128	-1.68128
.5000	-1.93838	-1.96208	-1.96983	-1.95061	-1.88148	-1.83620	-1.80954	-1.80719	-1.80719
.5200	-2.04131	-2.06945	-2.08455	-2.07052	-2.00701	-1.96203	-1.93369	-1.93084	-1.93084
.5400	-2.14174	-2.17416	-2.19644	-2.18757	-2.13000	-2.08563	-2.05577	-2.05238	-2.05237
.5600	-2.23987	-2.27640	-2.30568	-2.30197	-2.25058	-2.20712	-2.17590	-2.17192	-2.17191
.5800	-2.33583	-2.37634	-2.41244	-2.41334	-2.36886	-2.32657	-2.29417	-2.28956	-2.28956
.6000	-2.42977	-2.47412	-2.51686	-2.52334	-2.48496	-2.44409	-2.41070	-2.40543	-2.40543
.6200	-2.52181	-2.56987	-2.61909	-2.63057	-2.59896	-2.55975	-2.52557	-2.51964	-2.51962
.6400	-2.61205	-2.66371	-2.71925	-2.73568	-2.71096	-2.67264	-2.63286	-2.63223	-2.63220
.6600	-2.70062	-2.75575	-2.81745	-2.83077	-2.82105	-2.78581	-2.75063	-2.74020	-2.74023
.6800	-2.78760	-2.84610	-2.91380	-2.93995	-2.92929	-2.89635	-2.86096	-2.85291	-2.85285
.7000	-2.87308	-2.93485	-3.00839	-3.03929	-3.03579	-3.00520	-2.96991	-2.96115	-2.96107
.7200	-2.95713	-3.02207	-3.10132	-3.13689	-3.14059	-3.11272	-3.07753	-3.06906	-3.06796
.7400	-3.03983	-3.10784	-3.19267	-3.23285	-3.24378	-3.21968	-3.18297	-3.17371	-3.17255
.7600	-3.12125	-3.19224	-3.28251	-3.32732	-3.34540	-3.32323	-3.28809	-3.27816	-3.27700
.7800	-3.20144	-3.27534	-3.37091	-3.42008	-3.44552	-3.42638	-3.39001	-3.38140	-3.38123
.8000	-3.28047	-3.35720	-3.45704	-3.51149	-3.54401	-3.52620	-3.49570	-3.49288	-3.49235
.8200	-3.35839	-3.43786	-3.54366	-3.60153	-3.64150	-3.62877	-3.59738	-3.58468	-3.58440
.8400	-3.43524	-3.51738	-3.62813	-3.69035	-3.73747	-3.72810	-3.69709	-3.68472	-3.68440
.8600	-3.51108	-3.59582	-3.71141	-3.77769	-3.83213	-3.82601	-3.79757	-3.78291	-3.78242
.8800	-3.58593	-3.67221	-3.79252	-3.86390	-3.92556	-3.92317	-3.89613	-3.88102	-3.88146
.9000	-3.65987	-3.74860	-3.87487	-3.94497	-4.01776	-4.01322	-3.99372	-3.97910	-3.97858
.9200	-3.73288	-3.82500	-3.95452	-4.03292	-4.10981	-4.11370	-4.09038	-4.07541	-4.07481
.9400	-3.80504	-3.90063	-4.03346	-4.11878	-4.19875	-4.20736	-4.18611	-4.17084	-4.17016
.9600	-3.87630	-3.97520	-4.11143	-4.19755	-4.28759	-4.29899	-4.28034	-4.26584	-4.26468
.9800	-3.94691	-4.04601	-4.18947	-4.27837	-4.37536	-4.39162	-4.37401	-4.35924	-4.35839
1.0000	-4.01668	-4.11790	-4.26453	-4.35830	-4.46213	-4.48026	-4.46803	-4.45225	-4.45131

TABLE IV.—CHORDWISE PRESSURE DISTRIBUTIONS FOR MACH NUMBERS NEAR 1 AT VARIOUS SPANWISE STATIONS ON FINITE-SPAN RECTANGULAR WINGS HAVING CIRCULAR-ARC PROFILES

(a) $\overline{A} = 4$

	$\bar{c}_p - 2\bar{t}_\infty$										
$\bar{x}$ \ y/s	.000	.250	.500	.700	.800	.850	.900	.950	.975	.990	1.000
0.0001	5.78171	5.78171	5.78171	5.78089	5.77637	5.76829	5.74679	5.67739	5.56770	5.37199	3.64225
.0005	5.24377	5.24377	5.24378	5.24279	5.23725	5.22746	5.20122	5.11612	4.98009	4.73177	3.30337
.0010	4.97495	4.97495	4.97493	4.97384	4.96773	4.95676	4.92764	4.83253	4.67922	4.39482	3.13402
.0050	4.21569	4.21569	4.21567	4.21418	4.20562	4.19033	4.14938	4.01345	3.78543	3.33585	2.65572
.0100	3.80169	3.80169	3.80167	3.79979	3.78926	3.77044	3.71961	3.54815	3.25094	2.76011	2.39491
.0200	3.30604	3.30604	3.30602	3.30354	3.28967	3.26460	3.19632	2.95939	2.58668	2.22753	2.08268
.0400	2.69391	2.69391	2.69389	2.69017	2.66909	2.63083	2.52497	2.19704	1.87618	1.71033	1.69706
.0600	2.26112	2.26112	2.26108	2.25576	2.22571	2.17107	2.02952	1.68662	1.46109	1.38472	1.42441
.0800	1.91061	1.91061	1.91049	1.90308	1.86122	1.78935	1.62413	1.30897	1.15804	1.13319	1.20361
.1000	1.60890	1.60890	1.60874	1.59835	1.54270	1.45601	1.28032	1.00831	.91275	.92231	1.01354
.1200	1.34018	1.34018	1.33996	1.32545	1.25542	1.15794	.98217	.75611	.70284	.73764	.84426
.1400	1.09544	1.09544	1.09513	1.07524	.99189	.88777	.71898	.53697	.51710	.57139	.69008
.1600	.86915	.86915	.86868	.84232	.74755	.64049	.48315	.34160	.34000	.41902	.54753
.1800	.65755	.65755	.65685	.62325	.51935	.41238	.26913	.16419	.19435	.27748	.41423
.2000	.45798	.45798	.45686	.41568	.30503	.20055	.07276	.00082	.05039	.14470	.28851
.2200	.26849	.26849	.26675	.21793	.10285	.00268	-.10908	-.15125	-.08483	.01918	.16914
.2400	.08759	.08759	.08500	.02880	-.08862	-.18312	-.27978	-.29309	-.21275	-.10020	.05518
.2600	-.08586	-.08587	-.08955	-.15267	-.27056	-.35941	-.43823	-.42892	-.33448	-.21433	-.05409
.2800	-.25280	-.25283	-.25784	-.37724	-.44397	-.52447	-.58887	-.55717	-.45087	-.32387	-.15925
.3000	-.41397	-.41403	-.42060	-.49554	-.60970	-.68241	-.73193	-.67964	-.56260	-.42939	-.26078
.3200	-.56999	-.57010	-.57843	-.65810	-.76850	-.83311	-.86833	-.79707	-.67021	-.53133	-.35907
.3400	-.72138	-.72156	-.73182	-.81537	-.92101	-.97736	-.99887	-.91004	-.77417	-.63006	-.45444
.3600	-.86857	-.86886	-.88116	-.96774	-1.06779	-1.11582	-1.10422	-1.01905	-.87484	-.72590	-.54716
.3800	-1.01194	-1.01237	-1.02679	-1.11556	-1.20933	-1.24905	-1.24492	-1.12449	-.97255	-.81912	-.63748
.4000	-1.15181	-1.15242	-1.16899	-1.25915	-1.34606	-1.37754	-1.36143	-1.22672	-1.06756	-.90994	-.72559
.4200	-1.28846	-1.28930	-1.30802	-1.39878	-1.47839	-1.50172	-1.47415	-1.32602	-1.16011	-.99856	-.81166
.4400	-1.42212	-1.42324	-1.44408	-1.53471	-1.60664	-1.62196	-1.58343	-1.42266	-1.25039	-1.08515	-.89586
.4600	-1.55305	-1.55447	-1.57736	-1.66715	-1.73111	-1.73859	-1.68957	-1.51683	-1.33860	-1.16987	-.97831
.4800	-1.68140	-1.68319	-1.70802	-1.79632	-1.85310	-1.85186	-1.79279	-1.60875	-1.42487	-1.25284	-1.05914
.5000	-1.80737	-1.80955	-1.83620	-1.92242	-1.96904	-1.96208	-1.89337	-1.69858	-1.50933	-1.33419	-1.13846
.5200	-1.93109	-1.93370	-1.96202	-2.04562	-2.08456	-2.06945	-1.99148	-1.78647	-1.59214	-1.41402	-1.21635
.5400	-2.05271	-2.05577	-2.08503	-2.16606	-2.19645	-2.17416	-2.08730	-1.87254	-1.67337	-1.49243	-1.29291
.5600	-2.17237	-2.17590	-2.20712	-2.28390	-2.30568	-2.27640	-2.18100	-1.95692	-1.75314	-1.56949	-1.36922
.5800	-2.29017	-2.29418	-2.32657	-2.39926	-2.41244	-2.37634	-2.27269	-2.03974	-1.83152	-1.64530	-1.44233
.6000	-2.40622	-2.41072	-2.44409	-2.51232	-2.51686	-2.47412	-2.36254	-2.12105	-1.90861	-1.71991	-1.51533
.6200	-2.52060	-2.52559	-2.55975	-2.62315	-2.61910	-2.56987	-2.45064	-2.20006	-1.98447	-1.79339	-1.58726
.6400	-2.63341	-2.63889	-2.67364	-2.73185	-2.71025	-2.66371	-2.53709	-2.27955	-2.05917	-1.86580	-1.65818
.6600	-2.74473	-2.75067	-2.78581	-2.83855	-2.81745	-2.75575	-2.62199	-2.35688	-2.13276	-1.93720	-1.72914
.6800	-2.85462	-2.86102	-2.89635	-2.94334	-2.91380	-2.83610	-2.70543	-2.43303	-2.20530	-2.00763	-1.79719
.7000	-2.96316	-2.96998	-3.00530	-3.04629	-3.00840	-2.93435	-2.78749	-2.50806	-2.27685	-2.07714	-1.86536
.7200	-3.07040	-3.07762	-3.11272	-3.14750	-3.10132	-3.00207	-2.86823	-2.58201	-2.34745	-2.14576	-1.93270
.7400	-3.17641	-3.18399	-3.21868	-3.24703	-3.19267	-3.10784	-2.94773	-2.65494	-2.41714	-2.21355	-1.99924
.7600	-3.28123	-3.28913	-3.32322	-3.34497	-3.28251	-3.19225	-3.02604	-2.72690	-2.48596	-2.28053	-2.06501
.7800	-3.38490	-3.39310	-3.42639	-3.44137	-3.37091	-3.27535	-3.10322	-2.79793	-2.55396	-2.34675	-2.13005
.8000	-3.48748	-3.49592	-3.52824	-3.53631	-3.45794	-3.35720	-3.17932	-2.86908	-2.62116	-2.41221	-2.19438
.8200	-3.58901	-3.59765	-3.62879	-3.62984	-3.54367	-3.43786	-3.25440	-2.93737	-2.68760	-2.47697	-2.25804
.8400	-3.68952	-3.69831	-3.72813	-3.72201	-3.62814	-3.51739	-3.32849	-3.00585	-2.75330	-2.54104	-2.32104
.8600	-3.78903	-3.79793	-3.82624	-3.81290	-3.71140	-3.59584	-3.40165	-3.07353	-2.81832	-2.60447	-2.38343
.8800	-3.88762	-3.89657	-3.92322	-3.90252	-3.79355	-3.67324	-3.47389	-3.14049	-2.88264	-2.66725	-2.44519
.9000	-3.98527	-3.99423	-4.01904	-3.99093	-3.87456	-3.74963	-3.54526	-3.20670	-2.94630	-2.72943	-2.50638
.9200	-4.08205	-4.09096	-4.11378	-4.07821	-3.95455	-3.82510	-3.61583	-3.27224	-3.00936	-2.79101	-2.56701
.9400	-4.17795	-4.18676	-4.20746	-4.16434	-4.03349	-3.89962	-3.68557	-3.33708	-3.07179	-2.85202	-2.62708
.9600	-4.27301	-4.28167	-4.30010	-4.24941	-4.11146	-3.97326	-3.75454	-3.40129	-3.13365	-2.91249	-2.68664
.9800	-4.36727	-4.37574	-4.39176	-4.33344	-4.18851	-4.04606	-3.82279	-3.46488	-3.19494	-2.97243	-2.74568
1.0000	-4.46072	-4.46894	-4.48242	-4.41647	-4.26464	-4.11804	-3.89031	-3.52786	-3.25568	-3.03185	-2.80423
$\bar{x}_o$	.25000	.24997	.24653	.22145	.19616	.18259	.17679	.20259	.22612	.24057	.25000
$\bar{c}_{d_{FH}}$	1.11648	1.11641	1.11363	1.07978	1.00754	.93696	.83181	.69790	.64445	.64318	.70332
$\bar{c}_{d_W}$	4.75395	4.76187	4.78621	4.74691	4.58495	4.40717	4.11751	3.66605	3.36244	3.15034	2.99151

TABLE IV.—CHORDWISE PRESSURE DISTRIBUTIONS FOR MACH NUMBERS NEAR 1 AT VARIOUS SPANWISE STATIONS ON FINITE-SPAN RECTANGULAR WINGS HAVING CIRCULAR-ARC PROFILES—Continued

(b) $\overline{A}=3$

	$\bar{C}_p - 2\beta_\infty$										
$\bar{x}$ \ y/s	.000	.250	.500	.700	.800	.850	.900	.950	.975	.990	1.000
0.0001	5.78171	5.78172	5.78153	5.77834	5.76829	5.75442	5.72315	5.63643	5.51187	5.30060	3.64225
.0005	5.24377	5.24378	5.24357	5.23969	5.22746	5.21054	5.17229	5.06554	4.91001	4.63917	3.30337
.0010	4.97495	4.97494	4.97472	4.97038	4.95676	4.93794	4.89534	4.77571	4.59964	4.28697	3.13402
.0050	4.21569	4.21571	4.21537	4.20934	4.19033	4.16399	4.10365	3.93032	3.66201	3.17787	2.65572
.0100	3.80169	3.80167	3.80128	3.79389	3.77044	3.73775	3.66252	3.44087	3.09348	2.64917	2.39491
.0200	3.30604	3.30607	3.30553	3.29570	3.26460	3.22082	3.11829	2.81354	2.43946	2.17522	2.08268
.0400	2.69391	2.69389	2.69312	2.67831	2.63083	2.56293	2.40720	2.04568	1.79692	1.69400	1.69706
.0600	2.26112	2.26109	2.25994	2.23889	2.17107	2.07838	1.89075	1.56885	1.41914	1.38248	1.42441
.0800	1.91061	1.91058	1.90898	1.87940	1.78935	1.67830	1.48386	1.22402	1.13799	1.13903	1.20361
.1000	1.60890	1.60886	1.60662	1.56623	1.45601	1.33505	1.14958	.94952	.90737	.93356	1.01354
.1200	1.34018	1.34013	1.33684	1.28391	1.15724	1.03436	.86618	.71791	.72826	.75285	.84426
.1400	1.09544	1.09537	1.09070	1.02450	.88777	.76688	.61948	.51527	.53081	.58973	.69008
.1600	.86914	.86905	.86229	.78321	.64049	.52588	.40013	.33246	.36935	.43984	.54753
.1800	.65755	.65740	.64794	.55702	.41238	.30633	.20183	.16743	.22026	.30039	.41423
.2000	.45798	.45772	.44498	.34379	.20055	.10441	.02014	.01380	.08103	.16941	.28851
.2200	.26848	.26805	.25155	.14187	.00268	-.08284	-.14811	-.12980	-.05008	.04546	.16914
.2400	.08758	.08687	.06627	-.05002	-.18312	-.25774	-.30529	-.26510	-.17640	-.07255	.05518
.2600	-.08589	-.08700	-.11188	-.23295	-.35841	-.42212	-.45318	-.39338	-.29292	-.18545	-.05408
.2800	-.25286	-.25450	-.28371	-.40782	-.52447	-.57743	-.59217	-.51566	-.40642	-.29389	-.15925
.3000	-.41409	-.41640	-.44986	-.57538	-.68241	-.72436	-.72635	-.63272	-.51553	-.39939	-.26078
.3200	-.57021	-.57320	-.61084	-.73630	-.83311	-.86542	-.85350	-.74521	-.62075	-.49940	-.35907
.3400	-.72175	-.72575	-.76707	-.89115	-.97736	-.99988	-.97561	-.85364	-.72251	-.59728	-.45444
.3600	-.86915	-.87414	-.91893	-1.04045	-1.11582	-1.12892	-1.09299	-.95845	-.82115	-.69234	-.54716
.3800	-1.01281	-1.01885	-1.06673	-1.18464	-1.24905	-1.25310	-1.20622	-1.06000	-.91697	-.78482	-.63748
.4000	-1.15305	-1.16018	-1.21074	-1.32413	-1.37754	-1.37291	-1.31572	-1.15859	-1.01022	-.87496	-.72558
.4200	-1.29015	-1.29838	-1.35119	-1.45925	-1.50172	-1.48876	-1.42184	-1.25449	-1.10111	-.96294	-.81166
.4400	-1.42439	-1.43368	-1.48931	-1.59036	-1.62196	-1.60100	-1.52489	-1.34792	-1.18985	-1.04892	-.89595
.4600	-1.55596	-1.56629	-1.62229	-1.71772	-1.73853	-1.70996	-1.62512	-1.43910	-1.27650	-1.13307	-.97831
.4800	-1.68505	-1.69637	-1.75530	-1.84159	-1.85186	-1.81589	-1.72275	-1.52818	-1.36147	-1.21551	-1.05915
.5000	-1.81184	-1.82407	-1.88149	-1.96219	-1.96208	-1.91003	-1.81901	-1.61532	-1.44464	-1.29637	-1.13846
.5200	-1.93647	-1.94952	-2.00702	-2.07076	-2.06045	-2.01060	-1.91105	-1.70064	-1.52610	-1.37569	-1.21636
.5400	-2.05908	-2.07285	-2.13003	-2.19449	-2.17417	-2.11776	-2.00704	-1.78428	-1.60625	-1.45363	-1.29293
.5600	-2.17977	-2.19416	-2.25062	-2.30654	-2.27640	-2.21370	-2.09112	-1.86635	-1.68498	-1.53027	-1.36824
.5800	-2.29865	-2.31356	-2.36892	-2.41607	-2.37635	-2.30757	-2.17640	-1.94694	-1.76220	-1.60566	-1.44227
.6000	-2.41582	-2.43112	-2.48503	-2.52324	-2.47414	-2.39949	-2.26400	-2.02614	-1.83826	-1.67987	-1.51538
.6200	-2.53135	-2.54693	-2.59906	-2.62817	-2.56990	-2.48950	-2.34804	-2.10403	-1.91314	-1.75298	-1.58732
.6400	-2.64531	-2.66107	-2.71110	-2.73100	-2.66276	-2.57797	-2.43059	-2.18067	-1.99690	-1.82504	-1.65927
.6600	-2.75778	-2.77361	-2.82124	-2.83183	-2.75581	-2.66475	-2.51174	-2.25615	-2.05959	-1.89611	-1.72826
.6800	-2.86882	-2.88460	-2.92954	-2.93076	-2.84618	-2.75000	-2.59157	-2.33052	-2.13128	-1.96622	-1.79734
.7000	-2.97848	-2.99410	-3.03610	-3.02791	-2.93495	-2.83381	-2.67015	-2.40283	-2.20201	-2.03543	-1.86555
.7200	-3.08681	-3.10217	-3.14098	-3.12235	-3.02221	-2.91625	-2.74754	-2.47614	-2.27183	-2.10378	-1.93293
.7400	-3.19386	-3.20886	-3.24425	-3.21717	-3.10802	-2.99741	-2.82381	-2.54749	-2.34078	-2.17131	-1.99953
.7600	-3.29966	-3.31421	-3.34598	-3.30045	-3.19248	-3.07734	-2.89900	-2.61793	-2.40889	-2.23805	-2.06526
.7800	-3.40426	-3.41827	-3.44622	-3.40026	-3.27564	-3.15602	-2.97317	-2.68750	-2.47620	-2.30403	-2.13047
.8000	-3.50770	-3.52108	-3.54504	-3.48966	-3.35756	-3.23373	-3.04636	-2.75624	-2.54276	-2.36929	-2.19488
.8200	-3.61001	-3.62268	-3.64247	-3.57773	-3.43830	-3.31032	-3.11862	-2.82418	-2.60858	-2.43387	-2.25863
.8400	-3.71121	-3.72310	-3.73857	-3.66451	-3.51791	-3.38588	-3.19000	-2.89136	-2.67369	-2.49776	-2.32173
.8600	-3.81136	-3.82237	-3.83341	-3.75000	-3.59645	-3.46040	-3.26051	-2.95779	-2.73814	-2.56102	-2.38421
.8800	-3.91044	-3.92054	-3.92699	-3.83445	-3.67395	-3.53414	-3.33023	-3.02354	-2.80192	-2.62267	-2.44610
.9000	-4.00851	-4.01762	-4.01939	-3.91758	-3.75046	-3.60692	-3.39913	-3.08850	-2.86500	-2.68571	-2.50740
.9200	-4.10560	-4.11366	-4.11065	-3.99983	-3.82604	-3.67883	-3.46728	-3.15202	-2.92765	-2.74718	-2.56816
.9400	-4.20171	-4.20866	-4.20077	-4.08097	-3.90069	-3.74992	-3.53472	-3.21676	-2.98962	-2.80809	-2.62837
.9600	-4.29687	-4.30266	-4.28982	-4.16107	-3.97447	-3.82022	-3.60144	-3.27992	-3.05103	-2.86846	-2.68805
.9800	-4.39111	-4.39570	-4.37794	-4.24021	-4.04741	-3.88976	-3.66748	-3.34250	-3.11189	-2.92832	-2.74725
1.0000	-4.48443	-4.48778	-4.46483	-4.31843	-4.11954	-3.95856	-3.73288	-3.40450	-3.17223	-2.98767	-2.80594
$\bar{x}_c$	.24995	.24870	.23485	.20310	.18259	.17646	.18443	.21409	.23217	.24294	.25000
$\bar{c}_{d_{PH}}$	1.11630	1.11526	1.10166	1.03311	.93696	.86153	.76622	.66738	.63858	.64878	.70334
$\bar{c}_{d_W}$	4.77396	4.78360	4.78417	4.64516	4.40780	4.20355	3.91605	3.52220	3.27779	3.11309	2.99230

TABLE IV.—CHORDWISE PRESSURE DISTRIBUTIONS FOR MACH NUMBERS NEAR 1 AT VARIOUS SPANWISE STATIONS ON FINITE-SPAN RECTANGULAR WINGS HAVING CIRCULAR-ARC PROFILES—Continued

(c) $\overline{A}=2$

	$\bar{c}_p - 2\xi_\infty$										
$\bar{x}$ \ y/s	.000	.250	.500	.700	.800	.850	.900	.950	.975	.990	1.000
0.0001	5.78168	5.78153	5.77959	5.76829	5.74679	5.72315	5.67738	5.56771	5.42427	5.19276	3.64225
.0005	5.24375	5.24356	5.24122	5.22746	5.20122	5.17229	5.11615	4.98009	4.79886	4.49693	3.30337
.0010	4.97491	4.97471	4.97211	4.95676	4.92764	4.89534	4.83250	4.67922	4.47233	4.11895	3.13403
.0050	4.21565	4.21537	4.21170	4.19033	4.14938	4.10365	4.01341	3.78543	3.45863	2.98763	2.65572
.0100	3.80165	3.80128	3.79678	3.77044	3.71961	3.66252	3.54819	3.25094	2.86828	2.54447	2.39491
.0200	3.30601	3.30553	3.29958	3.26460	3.19632	3.11829	2.95935	2.58668	2.28523	2.13026	2.08268
.0400	2.69382	2.69311	2.68415	2.63083	2.52497	2.40720	2.19708	1.87618	1.73098	1.68333	1.69706
.0600	2.26099	2.25994	2.24720	2.17107	2.02952	1.89075	1.68670	1.46109	1.39082	1.38536	1.42441
.0800	1.91038	1.90898	1.89109	1.78935	1.62413	1.48386	1.30905	1.15804	1.13104	1.14967	1.20361
.1000	1.60865	1.60661	1.58184	1.45601	1.28032	1.14958	1.00820	.91275	.91466	.94950	1.01354
.1200	1.33976	1.33684	1.30355	1.15794	.98217	.86618	.75612	.70284	.72594	.77264	.84426
.1400	1.09490	1.09069	1.04780	.88777	.71898	.61948	.53697	.51710	.55655	.61259	.69008
.1600	.86830	.86228	.80962	.64049	.48315	.40013	.34160	.34900	.40163	.46519	.54753
.1800	.65617	.64792	.58586	.41238	.26913	.20183	.16419	.19435	.25797	.32782	.41423
.2000	.45578	.44495	.37436	.20055	.07276	.02014	.00082	.05039	.12337	.19861	.28851
.2200	.26510	.25149	.17351	.00268	-.10908	-.14811	-.15125	-.08483	-.00373	.07620	.16914
.2400	.08256	.06616	-.01790	-.18312	-.27878	-.30529	-.29399	-.21275	-.12451	-.04044	.05518
.2600	-.09301	-.11209	-.20088	-.35841	-.43823	-.45319	-.42892	-.33448	-.23988	-.15212	-.05409
.2800	-.26254	-.28406	-.37623	-.52447	-.58888	-.59317	-.55717	-.45087	-.35055	-.25946	-.15927
.3000	-.42676	-.45041	-.54467	-.68241	-.73193	-.72636	-.67965	-.56261	-.45709	-.36298	-.26081
.3200	-.58625	-.61167	-.70680	-.83312	-.86834	-.85360	-.79709	-.67025	-.55998	-.46310	-.35912
.3400	-.74145	-.76828	-.86314	-.97739	-.99890	-.97564	-.91009	-.77423	-.65961	-.56018	-.45454
.3600	-.89275	-.92062	-1.01418	-1.11587	-1.12428	-1.09305	-1.01913	-.87496	-.75630	-.65452	-.54723
.3800	-1.04045	-1.06899	-1.16032	-1.24915	-1.24502	-1.20634	-1.12464	-.97274	-.85034	-.74636	-.63774
.4000	-1.18481	-1.21368	-1.30194	-1.37772	-1.36161	-1.31592	-1.22696	-1.06786	-.94197	-.83595	-.72598
.4200	-1.32605	-1.35491	-1.43938	-1.50201	-1.47444	-1.42216	-1.32639	-1.16056	-1.03140	-.92345	-.81223
.4400	-1.46435	-1.49292	-1.57291	-1.62241	-1.58386	-1.52536	-1.42320	-1.25104	-1.11881	-1.00905	-.89664
.4600	-1.59985	-1.62788	-1.70286	-1.73924	-1.69019	-1.62580	-1.51759	-1.33948	-1.20435	-1.09290	-.97937
.4800	-1.73273	-1.75994	-1.82943	-1.85278	-1.79369	-1.72369	-1.60979	-1.42605	-1.28817	-1.17511	-1.06052
.5000	-1.86308	-1.88926	-1.95286	-1.96332	-1.89457	-1.81926	-1.69995	-1.51086	-1.37040	-1.25580	-1.14021
.5200	-1.99101	-2.01599	-2.07334	-2.07108	-1.99305	-1.91268	-1.78822	-1.59407	-1.45113	-1.33508	-1.21853
.5400	-2.11663	-2.14023	-2.19104	-2.17624	-2.08929	-2.00409	-1.87473	-1.67576	-1.53047	-1.41303	-1.29556
.5600	-2.24003	-2.26210	-2.30614	-2.27899	-2.18347	-2.09365	-1.95961	-1.75603	-1.60849	-1.48973	-1.37138
.5800	-2.36128	-2.38169	-2.41879	-2.37950	-2.27571	-2.18146	-2.04298	-1.83497	-1.68528	-1.56525	-1.44607
.6000	-2.48046	-2.49911	-2.52911	-2.47790	-2.36615	-2.26765	-2.12487	-1.91265	-1.76090	-1.63965	-1.51967
.6200	-2.59764	-2.61443	-2.63721	-2.57433	-2.45488	-2.35230	-2.20541	-1.98915	-1.83542	-1.71300	-1.59225
.6400	-2.71288	-2.72773	-2.74323	-2.66989	-2.54202	-2.43551	-2.28467	-2.06452	-1.90888	-1.78534	-1.66385
.6600	-2.82625	-2.83909	-2.84726	-2.76169	-2.62764	-2.51735	-2.36271	-2.13882	-1.98135	-1.85672	-1.73451
.6800	-2.93780	-2.94857	-2.94939	-2.85283	-2.71183	-2.59789	-2.43959	-2.21209	-2.05285	-1.92718	-1.80429
.7000	-3.04758	-3.05625	-3.04970	-2.94239	-2.79466	-2.67720	-2.51537	-2.28438	-2.12344	-1.99676	-1.87320
.7200	-3.15563	-3.16217	-3.14827	-3.03044	-2.87619	-2.75534	-2.59008	-2.35574	-2.19315	-2.06550	-1.94129
.7400	-3.26203	-3.26640	-3.24517	-3.11705	-2.95649	-2.83234	-2.66379	-2.42620	-2.26201	-2.13342	-2.00859
.7600	-3.36680	-3.36898	-3.34048	-3.20229	-3.03560	-2.90827	-2.73653	-2.49579	-2.33006	-2.20055	-2.07512
.7800	-3.46999	-3.46998	-3.43425	-3.28622	-3.11358	-2.98316	-2.80833	-2.56454	-2.39732	-2.26692	-2.14090
.8000	-3.57164	-3.56943	-3.52654	-3.36989	-3.19047	-3.05706	-2.87923	-2.63249	-2.46382	-2.33256	-2.20598
.8200	-3.67179	-3.66737	-3.61740	-3.45034	-3.26631	-3.13000	-2.94927	-2.69966	-2.52958	-2.39749	-2.27035
.8400	-3.77049	-3.76387	-3.70689	-3.53063	-3.34114	-3.20201	-3.01847	-2.76608	-2.59464	-2.46173	-2.33405
.8600	-3.86775	-3.85894	-3.79504	-3.60980	-3.41500	-3.27314	-3.08684	-2.83176	-2.65899	-2.52530	-2.39710
.8800	-3.96362	-3.95265	-3.88192	-3.68787	-3.48792	-3.34339	-3.15445	-2.89674	-2.72266	-2.58821	-2.45951
.9000	-4.05816	-4.04500	-3.96754	-3.76492	-3.55994	-3.41281	-3.22128	-2.96101	-2.78570	-2.65050	-2.52130
.9200	-4.15136	-4.13604	-4.05197	-3.84093	-3.63106	-3.48143	-3.28739	-3.02462	-2.84808	-2.71215	-2.58247
.9400	-4.24326	-4.22584	-4.13521	-3.91598	-3.70133	-3.54925	-3.35276	-3.08758	-2.90985	-2.77321	-2.64306
.9600	-4.33392	-4.31437	-4.21732	-3.99007	-3.77077	-3.61631	-3.41743	-3.14990	-2.97100	-2.83368	-2.70307
.9800	-4.42334	-4.40171	-4.29834	-4.06323	-3.83941	-3.68263	-3.48143	-3.21159	-3.03156	-2.89357	-2.76252
1.0000	-4.51156	-4.48787	-4.37827	-4.13550	-3.90727	-3.74822	-3.54475	-3.27268	-3.09155	-2.95290	-2.82142
$\bar{x}_o$	.24366	.23470	.20970	.18259	.17679	.18443	.20259	.22612	.23817	.24530	.24998
$\bar{c}d_{FH}$	1.11059	1.10128	1.05259	.93693	.83176	.76620	.69795	.64442	.63957	.65797	.70330
$\bar{c}d_W$	4.82225	4.80685	4.70476	4.41969	4.12953	3.92734	3.67815	3.37460	3.19980	3.08569	3.00390

TABLE IV. CHORDWISE PRESSURE DISTRIBUTIONS FOR MACH NUMBERS NEAR 1 AT VARIOUS SPANWISE STATIONS ON FINITE-SPAN RECTANGULAR WINGS HAVING CIRCULAR-ARC PROFILES—Continued

(d) $\bar{M}=1$

$\bar{x}$ \ y/s	.000	.250	.500	.700	.800	.850	.900	.950	.975	.990	1.000
	$\bar{c}_p - 2\xi_\alpha$										
0.0001	5.77808	5.77479	5.76023	5.72314	5.67738	5.63642	5.56769	5.42426	5.25311	4.98953	3.64212
.0005	5.23935	5.23537	5.21764	5.17228	5.11614	5.06555	4.98008	4.79886	4.57690	4.21966	3.30321
.0010	4.97003	4.96556	4.94585	4.89536	4.83252	4.77574	4.67924	4.47231	4.21377	3.78637	3.13384
.0050	4.20891	4.20262	4.17503	4.10371	4.01342	3.93036	3.78541	3.45859	3.08550	2.79776	2.65547
.0100	3.79333	3.78561	3.75157	3.66251	3.54814	3.44088	3.25089	2.86819	2.59527	2.45488	2.39460
.0200	3.29492	3.28480	3.23927	3.11830	2.95940	2.81352	2.58658	2.28516	2.15148	2.09535	2.08229
.0400	2.67711	2.66173	2.59161	2.40713	2.19710	2.04558	1.87606	1.73076	1.68746	1.68016	1.69647
.0600	2.23722	2.21507	2.11687	1.89079	1.68674	1.56871	1.46095	1.39040	1.38261	1.39490	1.42355
.0800	1.87693	1.84668	1.72291	1.48375	1.30893	1.22387	1.15768	1.13042	1.14278	1.16645	1.20237
.1000	1.56210	1.52393	1.38201	1.14954	1.00820	.94927	.91226	.91371	.93956	.97098	1.01182
.1200	1.27660	1.23233	1.08071	.86606	.75587	.71745	.70202	.72447	.76011	.79723	.84180
.1400	1.01229	.96426	.81046	.61909	.53632	.51430	.51559	.55417	.59748	.63903	.68650
.1600	.76460	.71503	.56499	.39909	.34014	.33149	.34625	.39779	.44734	.49248	.54229
.1800	.53075	.48149	.33955	.19946	.16122	.16378	.18971	.25204	.30675	.35491	.40670
.2000	.30891	.26137	.13047	.01560	-.00448	.00768	.04313	.11466	.17380	.22456	.27804
.2200	.09779	.05299	-.06502	-.15574	-.15970	-.13917	-.09544	-.01589	.04712	.10015	.15513
.2400	-.10359	-.14495	-.24902	-.31688	-.30638	-.27843	-.22737	-.14072	-.07427	-.01921	.03710
.2600	-.29602	-.33347	-.42313	-.46945	-.44589	-.41128	-.35365	-.26061	-.19107	-.13419	-.07667
.2800	-.48018	-.51343	-.58861	-.61471	-.57923	-.53851	-.47300	-.37610	-.30382	-.24528	-.18667
.3000	-.65662	-.68553	-.74643	-.75355	-.70715	-.66093	-.59193	-.48787	-.41293	-.35286	-.29325
.3200	-.82587	-.85039	-.89735	-.88671	-.83024	-.77901	-.70502	-.59603	-.51872	-.45725	-.39671
.3400	-.98836	-1.00854	-1.04203	-1.01475	-.94896	-.89307	-.81445	-.70096	-.62144	-.55867	-.49727
.3600	-1.14453	-1.16044	-1.18100	-1.13812	-1.06368	-1.00345	-.92056	-.80289	-.72133	-.65734	-.59514
.3800	-1.29475	-1.30651	-1.31472	-1.25720	-1.17472	-1.11045	-1.02358	-.90201	-.81854	-.75342	-.69047
.4000	-1.43938	-1.44712	-1.44356	-1.37232	-1.28233	-1.21433	-1.12371	-.99849	-.91323	-.84706	-.78340
.4200	-1.57870	-1.58261	-1.56797	-1.49374	-1.38673	-1.31519	-1.22112	-1.09249	-1.00555	-.93837	-.87406
.4400	-1.71307	-1.71329	-1.68795	-1.59171	-1.48813	-1.41323	-1.31595	-1.18412	-1.09559	-1.02749	-.96256
.4600	-1.84274	-1.83944	-1.80405	-1.69644	-1.58669	-1.50871	-1.40834	-1.27249	-1.18349	-1.11451	-1.04899
.4800	-1.96797	-1.96130	-1.91641	-1.79812	-1.68256	-1.60171	-1.49842	-1.36072	-1.26933	-1.19951	-1.13344
.5000	-2.08898	-2.07914	-2.02527	-1.89609	-1.77588	-1.69229	-1.58628	-1.44591	-1.35319	-1.28258	-1.21599
.5200	-2.20603	-2.19317	-2.13080	-1.99293	-1.86678	-1.78061	-1.67204	-1.52912	-1.43515	-1.36300	-1.29672
.5400	-2.31932	-2.30359	-2.23320	-2.08637	-1.95527	-1.86677	-1.75576	-1.61045	-1.51530	-1.44324	-1.37569
.5600	-2.42904	-2.41058	-2.33260	-2.17734	-2.04177	-1.95081	-1.83755	-1.68997	-1.59369	-1.52097	-1.45298
.5800	-2.53536	-2.51433	-2.42910	-2.26595	-2.12605	-2.03295	-1.91748	-1.76775	-1.67041	-1.59705	-1.52864
.6000	-2.63847	-2.61501	-2.52307	-2.35230	-2.20832	-2.11315	-1.99563	-1.84335	-1.74550	-1.67154	-1.60272
.6200	-2.73853	-2.71276	-2.61441	-2.43651	-2.28866	-2.19154	-2.07205	-1.91834	-1.81902	-1.74449	-1.67530
.6400	-2.83568	-2.80773	-2.70330	-2.51867	-2.36714	-2.23817	-2.14682	-1.99127	-1.89104	-1.81596	-1.74640
.6600	-2.93007	-2.90004	-2.78987	-2.59886	-2.44385	-2.3431	-2.22001	-2.06270	-1.96160	-1.88600	-1.81610
.6800	-3.02181	-2.98984	-2.87422	-2.67715	-2.51885	-2.41643	-2.29165	-2.13267	-2.03074	-1.95465	-1.88442
.7000	-3.11106	-3.07722	-2.95645	-2.75365	-2.59220	-2.48820	-2.36182	-2.20125	-2.09853	-2.02196	-1.95141
.7200	-3.19791	-3.16231	-3.03665	-2.82841	-2.66398	-2.55845	-2.43056	-2.26847	-2.16500	-2.08798	-2.01713
.7400	-3.28247	-3.24520	-3.11490	-2.90149	-2.73423	-2.62727	-2.49792	-2.33438	-2.23019	-2.15274	-2.08161
.7600	-3.36486	-3.32600	-3.19130	-2.97298	-2.80302	-2.69463	-2.56395	-2.39903	-2.29415	-2.21629	-2.14438
.7800	-3.44515	-3.40479	-3.26591	-3.04292	-2.87039	-2.76074	-2.62869	-2.46245	-2.35691	-2.27865	-2.20679
.8000	-3.52345	-3.48167	-3.33802	-3.11138	-2.93640	-2.82549	-2.69219	-2.52469	-2.41852	-2.33909	-2.26737
.8200	-3.59985	-3.55671	-3.41008	-3.17841	-3.00109	-2.88893	-2.75448	-2.58577	-2.47900	-2.40001	-2.32785
.8400	-3.67441	-3.62997	-3.47976	-3.24406	-3.06450	-2.95127	-2.81560	-2.64576	-2.53839	-2.45905	-2.38666
.8600	-3.74721	-3.70157	-3.54792	-3.30837	-3.12671	-3.01235	-2.87559	-2.70464	-2.59674	-2.51708	-2.44446
.8800	-3.81837	-3.77152	-3.61461	-3.37143	-3.18770	-3.07234	-2.93451	-2.76248	-2.65405	-2.57407	-2.50125
.9000	-3.88787	-3.83991	-3.67993	-3.43322	-3.24755	-3.13119	-2.99235	-2.81933	-2.71039	-2.63008	-2.55708
.9200	-3.95582	-3.90684	-3.74387	-3.49302	-3.30631	-3.18897	-3.04919	-2.87517	-2.76575	-2.68516	-2.61194
.9400	-4.02232	-3.97230	-3.80654	-3.55329	-3.36398	-3.24574	-3.10501	-2.93008	-2.82017	-2.73930	-2.66590
.9600	-4.08736	-4.03638	-3.86792	-3.61162	-3.42061	-3.30143	-3.15987	-2.98404	-2.87369	-2.79255	-2.71897
.9800	-4.15103	-4.09915	-3.92809	-3.66838	-3.47624	-3.35623	-3.21380	-3.03710	-2.92633	-2.84493	-2.77117
1.0000	-4.21339	-4.16062	-3.98711	-3.72510	-3.53089	-3.41011	-3.26682	-3.08930	-2.97811	-2.89646	-2.82254
$\bar{x}_o$	.18705	.18282	.17393	.17995	.19433	.20310	.21207	.22092	.22525	.22700	.22949
$\bar{c}_{d_{FH}}$	1.00027	.96961	.87621	.75593	.68748	.65631	.63272	.62712	.64009	.65951	.68997
$\bar{c}_{d_W}$	4.61658	4.54341	4.30442	3.95312	3.70789	3.56484	3.40724	3.23318	3.13921	3.07965	3.03798

TABLE IV.- CHORDWISE PRESSURE DISTRIBUTIONS FOR MACH NUMBERS NEAR 1 AT VARIOUS SPANWISE STATIONS ON FINITE-SPAN RECTANGULAR WINGS HAVING CIRCULAR-ARC PROFILES--Continued

(e) $\overline{A} = 0.7$

	$\bar{c}_p - 2\xi_\infty$										
$\bar{x}$ \ y/s	.000	.250	.500	.700	.800	.850	.900	.950	.975	.990	1.000
0.0001	5.76805	5.76153	5.73657	5.68359	5.62552	5.57651	5.49753	5.33915	5.15510	4.87513	3.64088
.0005	5.22717	5.21915	5.18876	5.12375	5.05205	4.99104	4.89190	4.68929	4.44651	4.05759	3.30170
.0010	4.95644	4.94763	4.91366	4.84106	4.76049	4.69168	4.57899	4.34547	4.05863	3.60676	3.13215
.0050	4.18986	4.17753	4.12965	4.02576	3.90787	3.80445	3.62935	3.26085	2.93676	2.74609	2.65315
.0100	3.76978	3.75452	3.69514	3.56394	3.41152	3.27572	3.05380	2.70315	2.51836	2.42987	2.39173
.0200	3.26378	3.24339	3.16289	2.98131	2.77529	2.61311	2.40743	2.19837	2.11743	2.08447	2.07846
.0400	2.62944	2.59790	2.47375	2.22322	2.01145	1.89168	1.78008	1.69759	1.67665	1.67643	1.69072
.0600	2.16845	2.12461	1.96633	1.70878	1.54393	1.46794	1.40805	1.37668	1.37948	1.39259	1.41541
.0800	1.78194	1.72925	1.55657	1.32473	1.20508	1.15818	1.12840	1.12601	1.14220	1.16306	1.19089
.1000	1.43874	1.38264	1.21228	1.01674	.93285	.90604	.89628	.91305	.93838	.96449	.99574
.1200	1.12650	1.07133	.91390	.75555	.69984	.68790	.69282	.72366	.75572	.78574	.81955
.1400	.83911	.78767	.64867	.52522	.49231	.49210	.50851	.55044	.58783	.62098	.65684
.1600	.57289	.52680	.40845	.31670	.30290	.31233	.33821	.38927	.43109	.46683	.50440
.1800	.32532	.28534	.18800	.12479	.12734	.14496	.17887	.23772	.28330	.32127	.36031
.2000	.09439	.06079	-.01618	-.05378	-.03699	-.01228	.02860	.09421	.14309	.18300	.22332
.2200	-.12153	-.14882	-.20655	-.22115	-.19182	-.16087	-.11387	-.04231	.00948	.05111	.09256
.2400	-.32385	-.34507	-.38492	-.37885	-.33839	-.30191	-.24946	-.17259	-.11822	-.07505	-.03259
.2600	-.51382	-.52932	-.55269	-.52803	-.47762	-.43619	-.37888	-.29724	-.24054	-.19590	-.15261
.2800	-.69255	-.70271	-.71100	-.66957	-.61022	-.56434	-.50265	-.41672	-.35790	-.31211	-.26790
.3000	-.86099	-.86625	-.86076	-.80420	-.73679	-.68689	-.62123	-.53141	-.47068	-.42375	-.37879
.3200	-1.02006	-1.02080	-1.00277	-.93250	-.85780	-.80427	-.73500	-.64164	-.57917	-.53120	-.48556
.3400	-1.17052	-1.16713	-1.13769	-1.05501	-.97369	-.91685	-.84430	-.74771	-.68365	-.63473	-.58846
.3600	-1.31311	-1.30594	-1.26612	-1.17215	-1.08482	-1.02496	-.94942	-.84988	-.78436	-.73457	-.68772
.3800	-1.44844	-1.43783	-1.38856	-1.28434	-1.19152	-1.12890	-1.05062	-.94837	-.88151	-.83092	-.78354
.4000	-1.57711	-1.56335	-1.50549	-1.39191	-1.29408	-1.22894	-1.14815	-1.04340	-.97530	-.92398	-.87612
.4200	-1.69962	-1.68300	-1.61730	-1.49520	-1.39276	-1.32530	-1.24219	-1.13516	-1.06593	-1.01393	-.96560
.4400	-1.81646	-1.79723	-1.72437	-1.59444	-1.48780	-1.41821	-1.33298	-1.22382	-1.15355	-1.10092	-1.05218
.4600	-1.92805	-1.90643	-1.82701	-1.68995	-1.57944	-1.50788	-1.42069	-1.30957	-1.23831	-1.18511	-1.13599
.4800	-2.03476	-2.01094	-1.92555	-1.78193	-1.66784	-1.59449	-1.50548	-1.39255	-1.32039	-1.26664	-1.21717
.5000	-2.13693	-2.11114	-2.02026	-1.87060	-1.75322	-1.67819	-1.58750	-1.47290	-1.39991	-1.34566	-1.29585
.5200	-2.23492	-2.20729	-2.11138	-1.95615	-1.83574	-1.75916	-1.66691	-1.55075	-1.47699	-1.42227	-1.37215
.5400	-2.32899	-2.29968	-2.19912	-2.03878	-1.91556	-1.83754	-1.74385	-1.62624	-1.55174	-1.49660	-1.44619
.5600	-2.41941	-2.38855	-2.28372	-2.11865	-1.99282	-1.91347	-1.81843	-1.69947	-1.62420	-1.56875	-1.51808
.5800	-2.50639	-2.47411	-2.36536	-2.19591	-2.06765	-1.98707	-1.89078	-1.77057	-1.69477	-1.63884	-1.58792
.6000	-2.59019	-2.55659	-2.44422	-2.27071	-2.14020	-2.05845	-1.96100	-1.83962	-1.76323	-1.70695	-1.65570
.6200	-2.67099	-2.63619	-2.52044	-2.34316	-2.21057	-2.12775	-2.02921	-1.90672	-1.82979	-1.77318	-1.72179
.6400	-2.74898	-2.71305	-2.59419	-2.41341	-2.27887	-2.19505	-2.09549	-1.97197	-1.89453	-1.83761	-1.78602
.6600	-2.82433	-2.78736	-2.66560	-2.48157	-2.34520	-2.26045	-2.15993	-2.03546	-1.95753	-1.90032	-1.84854
.6800	-2.89717	-2.85924	-2.73481	-2.54774	-2.40967	-2.32404	-2.22263	-2.09726	-2.01887	-1.96139	-1.90943
.7000	-2.96768	-2.92886	-2.80192	-2.61201	-2.47236	-2.38590	-2.28366	-2.15744	-2.07863	-2.02089	-1.96875
.7200	-3.03598	-2.99632	-2.86705	-2.67450	-2.53336	-2.44612	-2.34309	-2.21608	-2.13687	-2.07889	-2.02659
.7400	-3.10218	-3.06174	-2.93030	-2.73527	-2.59273	-2.50477	-2.40101	-2.27324	-2.19365	-2.13545	-2.08300
.7600	-3.16639	-3.12523	-2.99177	-2.79442	-2.65056	-2.56192	-2.45746	-2.32899	-2.24905	-2.19063	-2.13804
.7800	-3.22874	-3.18690	-3.05154	-2.85201	-2.70692	-2.61763	-2.51252	-2.38339	-2.30311	-2.24449	-2.19176
.8000	-3.28931	-3.24684	-3.10969	-2.90812	-2.76187	-2.67198	-2.56625	-2.43649	-2.35590	-2.29709	-2.24423
.8200	-3.34819	-3.30512	-3.16630	-2.96281	-2.81548	-2.72501	-2.61870	-2.48835	-2.40745	-2.34846	-2.29549
.8400	-3.40546	-3.36184	-3.22145	-3.01616	-2.86778	-2.77679	-2.66993	-2.53900	-2.45784	-2.39858	-2.34557
.8600	-3.46120	-3.41706	-3.27521	-3.06821	-2.91887	-2.82734	-2.71996	-2.58853	-2.50708	-2.44776	-2.39457
.8800	-3.51550	-3.47087	-3.32763	-3.11901	-2.96875	-2.87677	-2.76890	-2.63693	-2.55523	-2.49575	-2.44246
.9000	-3.56841	-3.52331	-3.37875	-3.16865	-3.01749	-2.92506	-2.81672	-2.68431	-2.60236	-2.54274	-2.48935
.9200	-3.61999	-3.57445	-3.42869	-3.21712	-3.06517	-2.97228	-2.86350	-2.73063	-2.64846	-2.58870	-2.53522
.9400	-3.67031	-3.62439	-3.47743	-3.26451	-3.11178	-3.01849	-2.90930	-2.77598	-2.69361	-2.63372	-2.58043
.9600	-3.71942	-3.67310	-3.52505	-3.31086	-3.15738	-3.06371	-2.95411	-2.82040	-2.73781	-2.67779	-2.62413
.9800	-3.76739	-3.72070	-3.57162	-3.35621	-3.20203	-3.10800	-2.99800	-2.86391	-2.78112	-2.72098	-2.66724
1.0000	-3.81425	-3.76722	-3.61715	-3.40058	-3.24574	-3.15135	-3.04100	-2.90654	-2.82356	-2.76331	-2.70950
$\bar{x}_o$	.15306	.15230	.15425	.16625	.17597	.18125	.18662	.19200	.19468	.19628	.19735
$\bar{c}_{d_{FH}}$	.86025	.83117	.74868	.65802	.61443	.59780	.58851	.59390	.60806	.62514	.64937
$\bar{c}_{d_W}$	4.21709	4.14533	3.92516	3.63166	3.44136	3.33438	3.21907	3.09439	3.02793	2.98621	2.95720

TABLE IV.—CHORDWISE PRESSURE DISTRIBUTIONS FOR MACH NUMBERS NEAR 1 AT VARIOUS SPANWISE STATIONS ON FINITE-SPAN RECTANGULAR WINGS HAVING CIRCULAR-ARC PROFILES—Continued

(f) $\overline{A} = 0.4$

	$\bar{C}_p - 2\bar{t}_{oc}$										
$\bar{x}$ \ y/s	.000	.250	.500	.700	.800	.850	.900	.950	.975	.990	1.000
0.0001	5.72854	5.71665	5.67503	5.59844	5.52302	5.46281	5.36949	5.18947	4.98548	4.67788	3.63070
.0005	5.17891	5.16437	5.11323	5.01840	4.92404	4.84795	4.72856	4.49256	4.21399	3.78090	3.28942
.0010	4.90276	4.88648	4.82927	4.72259	4.61564	4.52871	4.39111	4.11372	3.77929	3.37558	3.11850
.0050	4.11420	4.09106	4.00872	3.85118	3.68708	3.54910	3.32924	2.97627	2.78189	2.68400	2.63403
.0100	3.67572	3.64665	3.54211	3.33711	3.12397	2.95966	2.74916	2.52685	2.43310	2.38804	2.36814
.0200	3.13638	3.09630	2.95061	2.68112	2.45920	2.33158	2.20746	2.10302	2.06437	2.04886	2.04706
.0400	2.42777	2.36909	2.17907	1.92433	1.78492	1.72269	1.67122	1.63685	1.63027	1.63286	1.64261
.0600	1.88533	1.82429	1.64801	1.45909	1.37523	1.34295	1.32087	1.31438	1.32099	1.33122	1.34597
.0800	1.42945	1.37651	1.23538	1.10492	1.05682	1.04245	1.03791	1.04820	1.06286	1.07782	1.09566
.1000	1.03740	.99574	.89164	.80813	.78584	.78424	.79211	.81442	.83489	.85327	.87337
.1200	.69689	.66641	.59528	.54925	.54681	.55498	.57240	.60397	.62895	.64998	.67184
.1400	.39899	.37844	.33506	.31912	.33241	.34832	.37335	.41233	.44092	.46410	.48738
.1600	.13661	.12443	.10394	.11229	.13826	.16045	.19165	.23667	.26822	.29317	.31761
.1800	-.09603	-.10128	-.10308	-.07498	-.03867	-.01134	.02494	.07496	.10898	.13537	.16078
.2000	-.30366	-.30323	-.28977	-.24553	-.20071	-.16912	-.12862	-.07444	-.03837	-.01075	.01547
.2200	-.49016	-.48506	-.45912	-.40160	-.34972	-.31459	-.27056	-.21208	-.17509	-.14643	-.11955
.2400	-.65866	-.64978	-.61357	-.54505	-.48728	-.44917	-.40217	-.34154	-.30227	-.27273	-.24525
.2600	-.81181	-.79980	-.75509	-.67741	-.61469	-.57407	-.52455	-.46141	-.42089	-.39061	-.36263
.2800	-.95172	-.93711	-.88538	-.80001	-.72309	-.69034	-.63868	-.57339	-.53179	-.50087	-.47246
.3000	-1.08020	-1.06343	-1.00578	-.91392	-.84345	-.79088	-.74530	-.67825	-.63573	-.60423	-.57547
.3200	-1.19870	-1.18011	-1.11750	-1.02014	-.94662	-.90048	-.84540	-.77667	-.73336	-.70140	-.67231
.3400	-1.30846	-1.28835	-1.22152	-1.11945	-1.04332	-.99583	-.93938	-.86928	-.82527	-.79290	-.76352
.3600	-1.41053	-1.38912	-1.31870	-1.21260	-1.13420	-1.08554	-1.02790	-.95659	-.91197	-.87924	-.84962
.3800	-1.50579	-1.48327	-1.40977	-1.30017	-1.21981	-1.17013	-1.11145	-1.03909	-.99394	-.96039	-.93103
.4000	-1.59498	-1.57151	-1.49535	-1.38272	-1.30064	-1.25007	-1.19048	-1.11719	-1.07150	-1.03324	-1.00322
.4200	-1.67875	-1.65446	-1.57599	-1.46072	-1.37714	-1.32578	-1.26539	-1.19127	-1.14526	-1.11167	-1.08149
.4400	-1.75766	-1.73265	-1.65217	-1.53458	-1.44968	-1.39762	-1.33653	-1.26168	-1.21529	-1.18149	-1.15114
.4600	-1.83217	-1.80653	-1.72428	-1.60465	-1.51857	-1.46592	-1.40418	-1.32871	-1.28199	-1.24800	-1.21752
.4800	-1.90271	-1.87653	-1.79272	-1.67129	-1.58417	-1.53097	-1.46867	-1.39263	-1.34562	-1.31143	-1.28085
.5000	-1.96964	-1.94297	-1.85780	-1.73476	-1.64671	-1.59301	-1.53022	-1.45367	-1.40639	-1.37205	-1.34136
.5200	-2.03327	-2.00616	-1.91978	-1.79532	-1.70644	-1.65230	-1.58906	-1.51203	-1.46453	-1.43005	-1.39927
.5400	-2.09388	-2.06640	-1.97894	-1.85317	-1.76357	-1.70904	-1.64538	-1.56795	-1.52023	-1.48563	-1.45475
.5600	-2.15173	-2.12392	-2.03547	-1.90857	-1.81828	-1.76341	-1.69939	-1.62158	-1.57367	-1.53895	-1.50799
.5800	-2.20705	-2.17892	-2.08960	-1.96167	-1.87078	-1.81558	-1.75123	-1.67308	-1.62500	-1.59016	-1.55914
.6000	-2.26001	-2.23161	-2.14150	-2.01264	-1.92120	-1.86570	-1.80106	-1.72259	-1.67436	-1.63942	-1.60834
.6200	-2.31079	-2.28214	-2.19133	-2.06162	-1.96968	-1.91392	-1.84901	-1.77025	-1.72187	-1.68686	-1.65571
.6400	-2.35957	-2.33070	-2.23923	-2.10875	-2.01636	-1.96036	-1.89519	-1.81619	-1.76767	-1.73258	-1.70138
.6600	-2.40647	-2.37740	-2.28534	-2.15416	-2.06135	-2.00514	-1.93974	-1.86050	-1.81136	-1.77669	-1.74545
.6800	-2.45163	-2.42237	-2.32978	-2.19795	-2.10477	-2.04835	-1.98274	-1.90329	-1.85454	-1.81930	-1.78802
.7000	-2.49516	-2.46572	-2.37265	-2.24024	-2.14671	-2.09010	-2.02430	-1.94464	-1.89579	-1.86050	-1.82917
.7200	-2.53716	-2.50757	-2.41405	-2.28109	-2.18725	-2.13047	-2.06449	-1.98465	-1.93571	-1.90036	-1.86899
.7400	-2.57773	-2.54801	-2.45407	-2.32062	-2.22648	-2.16955	-2.10340	-2.02340	-1.97437	-1.93897	-1.90756
.7600	-2.61697	-2.58711	-2.49280	-2.35889	-2.26448	-2.20740	-2.14111	-2.06094	-2.01183	-1.97638	-1.94494
.7800	-2.65495	-2.62497	-2.53031	-2.39598	-2.30131	-2.24410	-2.17767	-2.09736	-2.04817	-2.01267	-1.98120
.8000	-2.69174	-2.66164	-2.56666	-2.43194	-2.33704	-2.27970	-2.21314	-2.13269	-2.08344	-2.04790	-2.01643
.8200	-2.72741	-2.69721	-2.60193	-2.46684	-2.37173	-2.31428	-2.24759	-2.16702	-2.11770	-2.08213	-2.05060
.8400	-2.76202	-2.73173	-2.63617	-2.50075	-2.40543	-2.34787	-2.28107	-2.20039	-2.15101	-2.11540	-2.08384
.8600	-2.79564	-2.76526	-2.66943	-2.53370	-2.43820	-2.38059	-2.31363	-2.23284	-2.18341	-2.14775	-2.11618
.8800	-2.82830	-2.79784	-2.70178	-2.56575	-2.47007	-2.41233	-2.34532	-2.26442	-2.21494	-2.17925	-2.14766
.9000	-2.86007	-2.82953	-2.73325	-2.59695	-2.50110	-2.44328	-2.37617	-2.29517	-2.24564	-2.20993	-2.17831
.9200	-2.89098	-2.86037	-2.76388	-2.62732	-2.53133	-2.47345	-2.40623	-2.32513	-2.27557	-2.23983	-2.20820
.9400	-2.92109	-2.89041	-2.79372	-2.65693	-2.56079	-2.50273	-2.43553	-2.35436	-2.30473	-2.26897	-2.23732
.9600	-2.95041	-2.91967	-2.82280	-2.68579	-2.58951	-2.53144	-2.46410	-2.38286	-2.33319	-2.29740	-2.26573
.9800	-2.97901	-2.94821	-2.85117	-2.71394	-2.61754	-2.55943	-2.49200	-2.41068	-2.36098	-2.32516	-2.29348
1.0000	-3.00691	-2.97605	-2.87885	-2.74143	-2.64491	-2.58671	-2.51923	-2.43784	-2.38810	-2.35227	-2.32057
$\bar{x}_o$	.10760	.10913	.11567	.12569	.13172	.13484	.13800	.14117	.14275	.14370	.14433
$\bar{c}_{d_{FH}}$	.57915	.56193	.51581	.47376	.45897	.45645	.45866	.47094	.48401	.49691	.51290
$\bar{c}_{d_W}$	3.30997	3.26250	3.12174	2.94481	2.83519	2.77492	2.71080	2.64237	2.60622	2.58361	2.56813

TABLE IV.—CHORDWISE PRESSURE DISTRIBUTIONS FOR MACH NUMBERS NEAR 1 AT VARIOUS SPANWISE STATIONS ON FINITE-SPAN RECTANGULAR WINGS HAVING CIRCULAR-ARC PROFILES Continued

(g) $\overline{A} = 0.3$

	$\bar{C}_p - 2\bar{\epsilon}_\infty$										
$\bar{x}$ \ y/s	.000	.250	.500	.700	.800	.850	.900	.950	.975	.990	1.000
0.0001	5.69440	5.68004	5.63073	5.54339	5.46006	5.39465	5.29455	5.10376	4.88908	4.56546	3.61880
.0005	5.13705	5.11937	5.05851	4.94962	4.84448	4.76093	4.63126	4.37711	4.07747	3.64381	3.27480
.0010	4.85598	4.83617	4.76779	4.64469	4.52472	4.42859	4.27769	3.97508	3.62421	3.28885	3.10223
.0050	4.04728	4.01874	3.91861	3.73235	3.54258	3.38769	3.16002	2.86127	2.72000	2.64863	2.61116
.0100	3.59138	3.55499	3.42563	3.18107	2.94972	2.79305	2.61906	2.45572	2.38794	2.35476	2.33977
.0200	3.01883	2.96763	2.78994	2.50488	2.31193	2.21403	2.12390	2.04924	2.02139	2.01013	2.00888
.0400	2.23928	2.17598	1.98922	1.77872	1.67740	1.63407	1.59885	1.57598	1.57222	1.57477	1.58245
.0600	1.64422	1.59150	1.45126	1.31867	1.26493	1.24548	1.23353	1.23285	1.23973	1.24849	1.26026
.0800	1.16307	1.12576	1.03333	.95768	.93443	.92995	.93256	.94597	.95965	.97243	.98684
.1000	.76762	.74404	.69005	.65588	.65417	.66027	.67323	.69670	.71529	.73097	.74729
.1200	.43856	.42576	.40091	.39728	.41141	.42532	.44597	.47696	.49924	.51711	.53488
.1400	.16130	.15665	.15353	.17263	.19864	.21847	.24496	.28170	.30681	.32636	.34525
.1600	-.07522	-.07278	-.06068	-.02448	.01058	.03494	.06594	.10715	.13447	.15534	.17510
.1800	-.27938	-.27339	-.24809	-.19887	-.15684	-.12896	-.09443	-.04973	-.02066	.00125	.02170
.2000	-.45758	-.44816	-.41360	-.35434	-.30687	-.27622	-.23891	-.19142	-.16097	-.13824	-.11723
.2200	-.61470	-.60267	-.56097	-.49391	-.44213	-.40928	-.36977	-.32005	-.28848	-.26506	-.24361
.2400	-.75455	-.74049	-.69223	-.61997	-.56477	-.53016	-.48885	-.43734	-.40487	-.38092	-.35911
.2600	-.88002	-.86436	-.81271	-.73453	-.67658	-.64053	-.59778	-.54479	-.51159	-.48718	-.46507
.2800	-.99343	-.97652	-.92136	-.83920	-.77899	-.74179	-.69784	-.64364	-.60983	-.58506	-.56271
.3000	-1.09663	-1.07870	-1.02071	-.93531	-.87326	-.83509	-.79016	-.73496	-.70064	-.67557	-.65300
.3200	-1.19110	-1.17235	-1.11205	-1.02397	-.96089	-.92142	-.87567	-.81962	-.78487	-.75955	-.73682
.3400	-1.27804	-1.25862	-1.19640	-1.10611	-1.04125	-1.00160	-.95516	-.89841	-.86330	-.83776	-.81488
.3600	-1.35844	-1.33846	-1.27465	-1.18249	-1.11656	-1.07635	-1.02932	-.97197	-.93656	-.91083	-.88782
.3800	-1.43312	-1.41267	-1.34752	-1.25379	-1.18694	-1.14624	-1.09872	-1.04086	-1.00518	-.97930	-.95619
.4000	-1.50276	-1.48190	-1.41563	-1.32056	-1.25293	-1.21182	-1.16386	-1.10556	-1.06966	-1.04364	-1.02044
.4200	-1.56792	-1.54674	-1.47950	-1.38328	-1.31497	-1.27351	-1.22518	-1.16650	-1.13040	-1.10426	-1.08099
.4400	-1.62911	-1.60763	-1.53956	-1.44236	-1.37347	-1.33169	-1.28305	-1.22403	-1.18777	-1.16153	-1.13818
.4600	-1.68673	-1.66501	-1.59622	-1.49816	-1.42877	-1.38671	-1.33778	-1.27848	-1.24207	-1.21574	-1.19234
.4800	-1.74115	-1.71921	-1.64980	-1.55099	-1.48114	-1.43886	-1.38969	-1.33013	-1.29359	-1.26718	-1.24371
.5000	-1.79267	-1.77054	-1.70057	-1.60112	-1.53088	-1.48839	-1.43900	-1.37922	-1.34256	-1.31608	-1.29257
.5200	-1.84155	-1.81926	-1.74882	-1.64877	-1.57820	-1.53553	-1.48594	-1.42595	-1.38921	-1.36265	-1.33911
.5400	-1.88804	-1.86561	-1.79475	-1.69418	-1.62331	-1.58045	-1.53070	-1.47055	-1.43370	-1.40710	-1.38352
.5600	-1.93235	-1.90977	-1.83855	-1.73752	-1.66638	-1.62338	-1.57347	-1.51316	-1.47623	-1.44958	-1.42596
.5800	-1.97465	-1.95196	-1.88039	-1.77896	-1.70756	-1.66444	-1.61440	-1.55395	-1.51694	-1.49025	-1.46660
.6000	-2.01510	-1.99231	-1.92043	-1.81865	-1.74702	-1.70379	-1.65363	-1.59304	-1.55597	-1.52923	-1.50556
.6200	-2.05384	-2.03096	-1.95882	-1.85669	-1.78488	-1.74154	-1.69126	-1.63056	-1.59343	-1.56666	-1.54297
.6400	-2.09101	-2.06804	-1.99566	-1.89324	-1.82125	-1.77701	-1.72743	-1.66663	-1.62945	-1.60265	-1.57893
.6600	-2.12672	-2.10368	-2.03108	-1.92839	-1.85623	-1.81271	-1.76224	-1.70134	-1.66411	-1.63728	-1.61354
.6800	-2.16107	-2.13796	-2.06516	-1.96223	-1.88993	-1.84632	-1.79577	-1.73479	-1.69751	-1.67065	-1.64689
.7000	-2.19415	-2.17099	-2.09800	-1.99485	-1.92241	-1.87874	-1.82811	-1.76704	-1.72973	-1.70284	-1.67907
.7200	-2.22606	-2.20284	-2.12969	-2.02633	-1.95377	-1.91002	-1.85933	-1.79819	-1.76084	-1.73393	-1.71014
.7400	-2.25686	-2.23358	-2.16028	-2.05674	-1.98407	-1.94026	-1.88950	-1.82830	-1.79091	-1.76399	-1.74018
.7600	-2.28662	-2.26330	-2.18986	-2.08615	-2.01337	-1.96951	-1.91869	-1.85743	-1.82001	-1.79307	-1.76925
.7800	-2.31542	-2.29205	-2.21848	-2.11461	-2.04174	-1.99783	-1.94696	-1.88564	-1.84819	-1.82122	-1.79740
.8000	-2.34329	-2.31988	-2.24620	-2.14219	-2.06920	-2.02527	-1.97435	-1.91297	-1.87550	-1.84852	-1.82468
.8200	-2.37031	-2.34686	-2.27307	-2.16892	-2.09589	-2.05188	-2.00091	-1.93949	-1.90199	-1.87500	-1.85115
.8400	-2.39651	-2.37303	-2.29914	-2.19487	-2.12175	-2.07771	-2.02670	-1.96524	-1.92771	-1.90071	-1.87684
.8600	-2.42195	-2.39844	-2.32445	-2.22007	-2.14688	-2.10280	-2.05175	-1.99024	-1.95270	-1.92568	-1.90181
.8800	-2.44666	-2.42312	-2.34905	-2.24455	-2.17130	-2.12719	-2.07610	-2.01455	-1.97699	-1.94996	-1.92608
.9000	-2.47068	-2.44711	-2.37296	-2.26837	-2.19506	-2.15090	-2.09978	-2.03820	-2.00062	-1.97358	-1.94969
.9200	-2.49404	-2.47045	-2.39623	-2.29154	-2.21818	-2.17399	-2.12284	-2.06123	-2.02363	-1.99657	-1.97269
.9400	-2.51679	-2.49317	-2.41888	-2.31410	-2.24069	-2.19648	-2.14529	-2.08364	-2.04603	-2.01897	-1.99507
.9600	-2.53894	-2.51530	-2.44095	-2.33609	-2.26263	-2.21839	-2.16718	-2.10550	-2.06787	-2.04080	-2.01689
.9800	-2.56055	-2.53689	-2.46246	-2.35754	-2.28400	-2.23976	-2.18852	-2.12682	-2.08917	-2.06209	-2.03819
1.0000	-2.58161	-2.55793	-2.48345	-2.37845	-2.30489	-2.26061	-2.20934	-2.14762	-2.10996	-2.08287	-2.05895
$\bar{x}_0$	.08878	.09063	.09712	.10563	.11049	.11298	.11549	.11801	.11927	.12002	.12052
$\bar{c}_{d_{FH}}$	.43927	.42707	.39800	.37356	.36762	.36816	.37343	.38597	.39768	.40855	.42124
$\bar{c}_{d_w}$	2.81172	2.77652	2.67334	2.54494	2.46612	2.42280	2.37705	2.32815	2.30245	2.28624	2.27533

TABLE IV. CHORDWISE PRESSURE DISTRIBUTIONS FOR MACH NUMBERS NEAR 1 AT VARIOUS SPANWISE STATIONS ON FINITE-SPAN RECTANGULAR WINGS HAVING CIRCULAR-ARC PROFILES—Continued

(h) $\overline{A} = 0.2$

$\bar{x}$ \ $\bar{y}$	.000	.250	.500	.700	.800	.850	.900	.950	.975	.990	1.000
0.0001	5.62966	5.61223	5.55347	5.45259	5.35906	5.28679	5.17746	4.97126	4.74034	4.39080	3.59198
.0005	5.05719	5.03557	4.96220	4.83497	4.71511	4.62114	4.47647	4.19409	3.86351	3.48036	3.24197
.0010	4.76630	4.74195	4.65907	4.51385	4.37547	4.26578	4.09455	3.75424	3.41752	3.18768	3.06558
.0050	3.91639	3.88018	3.75442	3.52476	3.30135	3.13685	2.93407	2.72437	2.63265	2.58496	2.55899
.0100	3.42262	3.37500	3.20847	2.92240	2.70227	2.57956	2.45958	2.35275	2.30757	2.28492	2.27422
.0200	2.77436	2.71075	2.51127	2.25668	2.11811	2.05327	1.99468	1.94587	1.92726	1.91949	1.91842
.0400	1.87081	1.81876	1.68032	1.54572	1.48612	1.46141	1.44185	1.43005	1.42905	1.43154	1.43718
.0600	1.22963	1.20013	1.12758	1.06671	1.04563	1.03974	1.03852	1.04441	1.05199	1.05957	1.06855
.0800	.75796	.74457	.71510	.69889	.70080	.70624	.71612	.73287	.74576	.75650	.76756
.1000	.40092	.39759	.39471	.40616	.42254	.43519	.45223	.47604	.49241	.50522	.51765
.1200	.12253	.12538	.13904	.16803	.19382	.21121	.23299	.26151	.28023	.29444	.30781
.1400	-.10061	-.09388	-.06973	-.02927	.00277	.02337	.04838	.08013	.10047	.11566	.12967
.1600	-.28302	-.27468	-.24362	-.19546	-.15913	-.13632	-.10908	-.07505	-.05357	-.03771	-.02323
.1800	-.43770	-.42677	-.39103	-.33755	-.29821	-.27384	-.24500	-.20935	-.18705	-.17069	-.15589
.2000	-.56902	-.55693	-.51791	-.46065	-.41915	-.39365	-.36365	-.32681	-.30391	-.28719	-.27215
.2200	-.68288	-.66996	-.62858	-.56856	-.52549	-.49914	-.46828	-.43056	-.40721	-.39021	-.37499
.2400	-.78287	-.76934	-.72624	-.66410	-.61990	-.59292	-.56141	-.52300	-.49931	-.48212	-.46675
.2600	-.87166	-.85767	-.81325	-.74965	-.70445	-.67698	-.64497	-.60606	-.58210	-.56473	-.54927
.2800	-.95124	-.93690	-.89149	-.82668	-.78077	-.75293	-.72052	-.68119	-.65703	-.63954	-.62399
.3000	-1.02317	-1.00856	-.96236	-.89660	-.85013	-.82199	-.78926	-.74962	-.72529	-.70770	-.69207
.3200	-1.08864	-1.07362	-1.02700	-.96049	-.91356	-.88518	-.85220	-.81229	-.78783	-.77016	-.75448
.3400	-1.14862	-1.13363	-1.08630	-1.01918	-.97189	-.94331	-.91012	-.87001	-.84543	-.82770	-.81197
.3600	-1.20367	-1.18874	-1.14101	-1.07338	-1.02579	-.99705	-.96370	-.92340	-.89874	-.88095	-.86518
.3800	-1.25[illegible]	-1.23677	-1.19170	-1.12367	-1.07582	-1.04695	-1.01345	-.97301	-.94827	-.93044	-.91464
.4000	-1.[illegible]	-1.28725	-1.23889	-1.17051	-1.12246	-1.09347	-1.05986	-1.01929	-.99449	-.97661	-.96079
.4200	-1.34700	-1.33157	-1.28299	-1.21431	-1.16600	-1.13700	-1.10328	-1.06261	-1.03776	-1.01985	-1.00401
.4400	-1.38861	-1.37312	-1.32433	-1.25540	-1.20702	-1.17786	-1.14406	-1.10330	-1.07840	-1.06046	-1.04460
.4600	-1.42773	-1.41217	-1.36321	-1.29408	-1.24557	-1.21633	-1.18246	-1.14162	-1.11668	-1.09872	-1.08285
.4800	-1.46461	-1.44901	-1.39990	-1.33058	-1.28196	-1.25266	-1.21872	-1.17782	-1.15285	-1.13487	-1.11898
.5000	-1.49940	-1.48383	-1.43460	-1.36512	-1.31640	-1.28705	-1.25306	-1.21211	-1.18710	-1.16910	-1.15320
.5200	-1.53250	-1.51685	-1.46750	-1.39788	-1.34908	-1.31968	-1.28565	-1.24464	-1.21961	-1.20158	-1.18568
.5400	-1.56390	-1.54822	-1.49876	-1.42902	-1.38014	-1.35072	-1.31663	-1.27557	-1.25052	-1.23249	-1.21656
.5600	-1.59382	-1.57801	-1.52854	-1.45859	-1.40975	-1.38027	-1.34616	-1.30506	-1.27999	-1.26195	-1.24601
.5800	-1.62234	-1.60651	-1.55699	-1.48701	-1.43801	-1.40850	-1.37435	-1.33322	-1.30813	-1.29008	-1.27414
.6000	-1.64959	-1.63379	-1.58411	-1.51408	-1.46503	-1.43549	-1.40131	-1.36015	-1.33504	-1.31697	-1.30103
.6200	-1.67567	-1.65989	-1.61011	-1.54001	-1.49000	-1.46135	-1.42714	-1.38594	-1.36082	-1.34275	-1.32680
.6400	-1.70067	-1.68494	-1.63504	-1.56487	-1.51572	-1.48614	-1.45191	-1.41070	-1.38556	-1.36748	-1.35152
.6600	-1.72469	-1.70903	-1.65899	-1.58875	-1.53957	-1.50997	-1.47571	-1.43448	-1.40933	-1.39124	-1.37528
.6800	-1.74777	-1.73190	-1.68201	-1.61172	-1.56250	-1.53288	-1.49861	-1.45735	-1.43219	-1.41410	-1.39813
.7000	-1.76993	-1.75411	-1.70418	-1.63384	-1.58459	-1.55496	-1.52066	-1.47939	-1.45422	-1.43612	-1.42015
.7200	-1.79141	-1.77552	-1.72555	-1.65517	-1.60589	-1.57624	-1.54193	-1.50064	-1.47546	-1.45735	-1.44138
.7400	-1.81209	-1.79618	-1.74619	-1.67575	-1.62645	-1.59678	-1.56246	-1.52115	-1.49597	-1.47786	-1.46188
.7600	-1.83206	-1.81614	-1.76611	-1.69554	-1.64632	-1.61664	-1.58230	-1.54098	-1.51578	-1.49767	-1.48169
.7800	-1.85137	-1.83544	-1.78530	-1.71480	-1.66553	-1.63584	-1.60149	-1.56016	-1.53496	-1.51684	-1.50085
.8000	-1.87006	-1.85413	-1.80404	-1.73350	-1.68414	-1.65444	-1.62008	-1.57873	-1.55352	-1.53540	-1.51941
.8200	-1.88817	-1.87223	-1.82212	-1.75155	-1.70217	-1.67245	-1.63808	-1.59672	-1.57151	-1.55339	-1.53740
.8400	-1.90573	-1.88978	-1.83965	-1.76905	-1.71965	-1.68993	-1.65555	-1.61418	-1.58896	-1.57084	-1.55484
.8600	-1.92277	-1.90681	-1.85666	-1.78604	-1.73663	-1.70690	-1.67251	-1.63113	-1.60591	-1.58777	-1.57178
.8800	-1.93932	-1.92336	-1.87319	-1.80254	-1.75311	-1.72338	-1.68898	-1.64759	-1.62236	-1.60423	-1.58823
.9000	-1.95540	-1.93944	-1.88925	-1.81859	-1.76914	-1.73940	-1.70499	-1.66359	-1.63836	-1.62022	-1.60423
.9200	-1.97105	-1.95508	-1.90488	-1.83419	-1.78473	-1.75498	-1.72057	-1.67917	-1.65393	-1.63578	-1.61979
.9400	-1.98627	-1.97030	-1.92008	-1.84938	-1.79991	-1.77015	-1.73573	-1.69432	-1.66908	-1.65093	-1.63494
.9600	-2.00111	-1.98512	-1.93489	-1.86417	-1.81469	-1.78492	-1.75050	-1.70908	-1.68384	-1.66569	-1.64969
.9800	-2.01556	-1.99957	-1.94933	-1.87859	-1.82910	-1.79933	-1.76490	-1.72347	-1.69823	-1.68008	-1.66408
1.0000	-2.02965	-2.01366	-1.96340	-1.89265	-1.84315	-1.81337	-1.77893	-1.73751	-1.71226	-1.69411	-1.67811
$\bar{x}_L$	.06714	.06809	.07464	.08122	.08486	.08670	.08855	.09040	.09132	.09187	.09224
$\bar{c}_{d_{FB}}$	.27358	.26734	.25320	.24421	.24514	.24841	.25473	.26631	.27559	.28396	.29318
$\bar{c}_{d_W}$	2.16305	2.14111	2.07686	1.99736	1.94889	1.92255	1.89440	1.86452	1.84864	1.83878	1.83217

TABLE IV. CHORDWISE PRESSURE DISTRIBUTIONS FOR MACH NUMBERS NEAR 1 AT VARIOUS SPANWISE STATIONS ON FINITE-SPAN RECTANGULAR WINGS HAVING CIRCULAR-ARC PROFILES—Concluded

(i) $\bar{\lambda}=0.1$

	$\bar{C}_p - 2\xi_\infty$										
$\bar{x}$ \ y/s	.000	.250	.500	.700	.800	.850	.900	.950	.975	.990	1.000
0.0001	5.47692	5.45527	5.38313	5.26235	5.15286	5.06931	4.94397	4.70887	4.44443	4.04223	3.51793
.0005	4.86586	4.83833	4.74611	4.58908	4.44347	4.33009	4.15560	3.81551	3.48766	3.26845	3.15035
.0010	4.54923	4.51768	4.41145	4.22808	4.05498	3.91783	3.70566	3.35123	3.13885	3.02672	2.96256
.0050	3.58147	3.53033	3.35438	3.06194	2.84403	2.72389	2.60589	2.49741	2.44886	2.42241	2.40726
.0100	2.96453	2.89920	2.69735	2.44470	2.30653	2.23998	2.17759	2.12112	2.09628	2.08324	2.07665
.0200	2.11210	2.06128	1.92566	1.78927	1.72369	1.69358	1.66629	1.64320	1.63424	1.63047	1.62997
.0400	1.10006	1.08602	1.05160	1.02218	1.01146	1.00820	1.00711	1.00941	1.01281	1.01635	1.02066
.0600	.55467	.55405	.55507	.56277	.57170	.57830	.58703	.59907	.60730	.61372	.61995
.0800	.22271	.22675	.24054	.26242	.27922	.28989	.30273	.31894	.32926	.33693	.34400
.1000	-.00110	.00481	.02387	.05186	.07219	.08471	.09945	.11760	.12891	.13718	.14464
.1200	-.16371	-.15694	-.13539	-.10443	-.08235	-.06891	-.05320	-.03406	-.02224	-.01367	-.00599
.1400	-.28842	-.28119	-.25834	-.22578	-.20275	-.18880	-.17256	-.15287	-.14078	-.13203	-.12425
.1600	-.38795	-.38047	-.35686	-.32338	-.29980	-.28554	-.26899	-.24897	-.23671	-.22786	-.22001
.1800	-.46984	-.46220	-.43813	-.40408	-.38014	-.36570	-.34895	-.32873	-.31636	-.30744	-.29955
.2000	-.53882	-.53108	-.50671	-.47229	-.44813	-.43356	-.41668	-.39632	-.38388	-.37492	-.36700
.2200	-.59805	-.59024	-.56567	-.53099	-.50667	-.49202	-.47505	-.45460	-.44211	-.43312	-.42517
.2400	-.64969	-.64183	-.61712	-.58226	-.55783	-.54312	-.52608	-.50556	-.49304	-.48403	-.47607
.2600	-.69529	-.68740	-.66258	-.62758	-.60307	-.58832	-.57124	-.55067	-.53813	-.52910	-.52113
.2800	-.73600	-.72808	-.70318	-.66809	-.64352	-.62872	-.61161	-.59100	-.57844	-.56940	-.56142
.3000	-.77266	-.76473	-.73976	-.70459	-.67998	-.66516	-.64802	-.62739	-.61481	-.60576	-.59777
.3200	-.80595	-.79800	-.77299	-.73776	-.71311	-.69827	-.68111	-.66046	-.64786	-.63880	-.63081
.3400	-.83638	-.82841	-.80337	-.76810	-.74341	-.72856	-.71138	-.69071	-.67810	-.66904	-.66105
.3600	-.86436	-.85638	-.83131	-.79600	-.77129	-.75643	-.73923	-.71855	-.70593	-.69687	-.68887
.3800	-.89023	-.88224	-.85714	-.82180	-.79708	-.78220	-.76500	-.74430	-.73168	-.72261	-.71461
.4000	-.91425	-.90626	-.88114	-.84577	-.82103	-.80615	-.78893	-.76822	-.75560	-.74653	-.73853
.4200	-.93666	-.92866	-.90352	-.86813	-.84338	-.82849	-.81127	-.79055	-.77792	-.76885	-.76085
.4400	-.95763	-.94963	-.92448	-.88907	-.86431	-.84941	-.83218	-.81146	-.79883	-.78975	-.78175
.4600	-.97733	-.96933	-.94417	-.90875	-.88397	-.86907	-.85183	-.83110	-.81847	-.80939	-.80139
.4800	-.99590	-.98789	-.96272	-.92728	-.90250	-.88759	-.87036	-.84962	-.83699	-.82791	-.81990
.5000	-1.01344	-1.00543	-.98025	-.94480	-.92001	-.90510	-.88786	-.86712	-.85448	-.84540	-.83740
.5200	-1.03006	-1.02205	-.99686	-.96140	-.93661	-.92170	-.90445	-.88371	-.87107	-.86198	-.85397
.5400	-1.04585	-1.03783	-1.01263	-.97717	-.95237	-.93745	-.92020	-.89945	-.88681	-.87773	-.86972
.5600	-1.06086	-1.05284	-1.02764	-.99217	-.96736	-.95244	-.93519	-.91444	-.90180	-.89271	-.88470
.5800	-1.07518	-1.06716	-1.04195	-1.00647	-.98166	-.96674	-.94949	-.92874	-.91609	-.90701	-.89900
.6000	-1.08886	-1.08084	-1.05563	-1.02014	-.99533	-.98041	-.96315	-.94240	-.92975	-.92067	-.91265
.6200	-1.10195	-1.09393	-1.06871	-1.03322	-1.00841	-.99348	-.97622	-.95546	-.94282	-.93373	-.92572
.6400	-1.11450	-1.10648	-1.08125	-1.04576	-1.02094	-1.00601	-.98875	-.96800	-.95535	-.94626	-.93825
.6600	-1.12654	-1.11852	-1.09329	-1.05780	-1.03297	-1.01805	-1.00078	-.99003	-.96738	-.95829	-.95028
.6800	-1.13812	-1.13010	-1.10487	-1.06937	-1.04454	-1.02961	-1.01235	-.99159	-.97894	-.96985	-.96184
.7000	-1.14927	-1.14124	-1.11601	-1.08051	-1.05568	-1.04075	-1.02348	-1.00272	-.99007	-.98098	-.97297
.7200	-1.16001	-1.15198	-1.12675	-1.09124	-1.06641	-1.05148	-1.03421	-1.01345	-1.00080	-.99171	-.98370
.7400	-1.17037	-1.16234	-1.13711	-1.10160	-1.07677	-1.06183	-1.04457	-1.02380	-1.01115	-1.00206	-.99405
.7600	-1.18038	-1.17235	-1.14712	-1.11160	-1.08677	-1.07184	-1.05457	-1.03380	-1.02115	-1.01206	-1.00405
.7800	-1.19006	-1.18203	-1.15679	-1.12128	-1.09644	-1.08151	-1.06424	-1.04347	-1.03082	-1.02173	-1.01372
.8000	-1.19943	-1.19140	-1.16616	-1.13064	-1.10580	-1.09087	-1.07360	-1.05283	-1.04018	-1.03109	-1.02308
.8200	-1.20850	-1.20047	-1.17523	-1.13971	-1.11487	-1.09993	-1.08267	-1.06190	-1.04925	-1.04016	-1.03214
.8400	-1.21730	-1.20926	-1.18402	-1.14850	-1.12366	-1.10873	-1.09146	-1.07069	-1.05804	-1.04895	-1.04093
.8600	-1.22584	-1.21780	-1.19256	-1.15704	-1.13220	-1.11726	-1.09999	-1.07922	-1.06657	-1.05748	-1.04946
.8800	-1.23413	-1.22609	-1.20085	-1.16532	-1.14048	-1.12555	-1.10827	-1.08750	-1.07485	-1.06576	-1.05774
.9000	-1.24218	-1.23415	-1.20890	-1.17337	-1.14853	-1.13360	-1.11632	-1.09555	-1.08290	-1.07381	-1.06580
.9200	-1.25002	-1.24199	-1.21674	-1.18121	-1.15637	-1.14143	-1.12416	-1.10339	-1.09073	-1.08164	-1.07363
.9400	-1.25765	-1.24961	-1.22436	-1.18883	-1.16399	-1.14905	-1.13178	-1.11101	-1.09835	-1.08926	-1.08125
.9600	-1.26507	-1.25703	-1.23179	-1.19626	-1.17141	-1.15647	-1.13920	-1.11843	-1.10577	-1.09668	-1.08867
.9800	-1.27231	-1.26427	-1.23902	-1.20349	-1.17865	-1.16371	-1.14643	-1.12566	-1.11301	-1.10392	-1.09590
1.0000	-1.27936	-1.27133	-1.24608	-1.21055	-1.18570	-1.17076	-1.15349	-1.13271	-1.12006	-1.11097	-1.10295
$\bar{x}_o$	.04104	.04246	.04633	.05045	.05265	.05376	.05487	.05598	.05653	.05686	.05708
$\bar{c}d_{PH}$	.09370	.09207	.08903	.08993	.09361	.09724	.10201	.10986	.11552	.12062	.12561
$\bar{c}d_W$	1.30299	1.29330	1.26497	1.23044	1.20925	1.19780	1.18542	1.17240	1.16553	1.16139	1.15851

U.S. GOVERNMENT PRINTING OFFICE: 1961