NASA/CR—2001-210563/PART2

Satellite Communications Technology Database

Science Applications International Corporation
Schaumburg, Illinois

Prepared under Contract NAS3–26565

National Aeronautics and
Space Administration

Glenn Research Center

March 2001

Trade names or manufacturers' names are used in this report for identification only. This usage does not constitute an official endorsement, either expressed or implied, by the National Aeronautics and Space Administration.

Available from

NASA Center for Aerospace Information
7121 Standard Drive
Hanover, MD 21076
Price Code: A04

National Technical Information Service
5285 Port Royal Road
Springfield, VA 22100
Price Code: A04

Available electronically at http://gltrs.grc.nasa.gov/GLTRS

TABLE OF CONTENTS

ABSTRACT OF KA-BAND TECHNOLOGY STATE-OF-THE-ART v

A. Antenna v
B. High Power Amplifiers vi
C. Low Noise Amplifiers vi
D. MMIC vii
E. Microwave/IF Switch Matrices vii
F. SAW Devices vii
G. Power Storage viii
H. Data Storage viii
I. ASIC viii
J. Others viii
K. Issues ix
References x

LIST OF TABLES

Table A. Antenna State-of-the-Art 1
Table B. HPA/B State-of-the-Art 15
Table C. LNA/B State-of-the-Art 21
Table D. MMIC State-of-the-Art 26
Table E. Microwave/IF Switch Matrices State-of-the-Art 30
Table F. SAW Devices 34
Table G. Power Storage 35
Table H. Data Storage 38
Table I. ASIC State-of-the-Art 43
Table J. Others 46
Table K. Issues 57

ABSTRACT OF Ka-BAND TECHNOLOGY STATE-OF-THE-ART

The following is a brief summary of the Ka-Band technology State-of-the-Art (SOA) detailed in the following tables and diagrams. This Satellite Communications Technology Database was created in conjunction with the Integrated Operations Architecture Technology Assessment Study, NASA publication NASA/CR-2001-210563/PART1. It should be noted that the advanced Ka-Band technologies have not been released by most U.S. organizations. Therefore, most of the data presented in the tables has been taken from Japanese, European, and Canadian publications.

Attention is drawn to the great potential of high-altitude stratospheric platforms and airplanes in providing the last mile connectivity from space to NASA ground infrastructure, expected to be available possibly in the next decade. Although this falls outside the satellite Ka-Band technology, it is important enough for NASA to consider these platforms in its future planning.

A. Antenna

For space Ka-Band and higher applications, several antenna technologies have been developed:

- A 3.6m cassegrain shaped main reflector antenna, using orthogonal RHCP-LHCP polarizations and a 1.5 dB axial ratio, with 55 dBi gain and side lobes better than 20 dB.
- A 2.2m Ka-Band multibeam CP antenna, providing two fixed beams and three scanning spot beams, with a 50.5 dBi gain. It uses Multi Port Amplifiers, MPA, with on-board RF hybrid splitters and 16 x 6 IF switch for SS – TDMA. Eight beams are generated for the uplink.
- An experimental 2.1m Scanning Spot Beam Antenna, SSBA.
- A 2m Reflector Antenna for Ka and millimeter wave bands (21 & 43 GHz), with 2 Ka beams and one MMW beam.
- A LEO Phased Array transmit antenna with 60º scan angle.
- An In-Orbit reconfigurable active contoured steerable spot beam antenna product.
- An intersatellite link 65 GHz antenna product.
- Direct rod radiator feeds for Ka-Band antennas.

For stratospheric platform applications:

- A 736 beam antenna at 47 GHz, for hemispheric spot coverage. On average, a dielectric lens antenna with 7 feeds provides 7 beams; 130 transmit 47 GHz antennas are needed.

For ground Ka-Band applications:

- A waveguide slot array antenna.
- A ground mobile microstrip active phased array.
- A ground mobile vehicular active phased array.
- A multimedia briefcase Ka terminal cassegrain and flat plate antennas.

B. High Power Amplifiers

TWTA:

For space applications:

- To date, the best Ka-Band TWTA performance has been achieved with 140W RF output with 60% efficiency in one case, and 100W with 72% in the other.
- A Multiport power amplifier has been developed with a switchable distributed multibeam Butler matrix. It uses an 8 x 8 input/output amplifier matrix. The output is an 8 x 120W TWTA system, for an 8 fold frequency re-use.

For ground applications:

- A 30W TWTA was developed at 21 GHz.

SSPA:

For space applications:

- To date, a 10W and 20W Ka-Band SSPA has been developed at 21GHz.
- A 1W SSPA using MMIC HEMT was developed at 27 to 31 GHz.

For ground applications:

- Between 28 and 31 GHz, several SSPAs were developed using .15 to .25 micron pHEMT and provided 1 to 2W output power.

C. Low Noise Amplifiers

For space applications:

- A pHEMT LNA was developed at 26 GHz with a 2 GHz bandwidth, 1.6 dB noise figure, and 19 dB gain.
- A cooled Ka-Band LNA uses MMIC and provides 35 dB gain.
- U-Bands, 46 to 54 GHz, are hermetically sealed in a 4-stage MMIC amplifier with 30 dB gain and 4dB noise figure at 50 GHz.
- Best performance for millimeter wave InP HEMT for low noise MMIC amplifiers is:
  - 2 dB noise figure and 8 dB gain at 27 to 39 GHz.
  - 2 dB noise figure and 5 dB gain at 43 to 46 GHz
  - 2.6 dB noise figure and 6 dB gain at 58 to 64 GHz
  - 4 dB noise figure and 6 dB gain for 88 to 96 GHz

For ground applications:

- Millimeter wave mixers:

  They use balanced diodes for up and down converters, with 12.4 dBm, an IF of 3 GHz, and a conversion loss of 18 dB.

- Balanced HEMT mixer down converters:

  They can provide 12.4 dBm, an IF of 1 GHz, and a conversion loss of 10 dB.

- Other millimeter wave HEMT products:

  Such as frequency triplers have been developed between 19 and 56 GHz with powers of 16.5 and 2.3 dBm.

D. MMIC

For space applications:

The following SSPA use pHEMT MMIC:

- 28 to 35 GHz, for variable gain amplifiers
- 19 to 25 GHz , for hybrid – MMIC linearized channel amplifiers
- 20 GHz SSPA with 2W output power
- 1 to 100 GHz MMIC products for low noise receivers, power amplifiers, variable gain amplifiers, mixers, and attenuators.

E. Microwave/IF Switch Matrices

RF switch matrices:

Over the past 20 years, no major technology breakthroughs have been achieved for RF switch matrices beyond a 10 x 10 matrix for space applications. The most recent achievement was an 8 x 8 Butler matrix at 17.7 to 20.2 GHz for multibeam multimedia traffic and frequency reconfiguration.

IF switch matrices:

A 16 x 16 channel analogue IF Switch matrix uses .8 micron junction, isolated by BiCMOS monolithic IC process. The IF is at 160 MHz and a bandwidth of 30 MHz.

F. SAW Devices

SAW IF Processor Product, first used for Inmarsat Third Generation, later by MSAT and AMSC and Developed by Comdev Canada, was proposed by CAL Corp for the Inmarsat Third Generation System Study. The concept is still the SOA for Multibeam Communications Satellite control of IF center frequency and downlink channel bandwidth-on-demand. It uses sub-bands channelization to reconfigure multibeam frequency reuse mobile and fixed satellites.

The key issues in SAW are the sharp filter response resulting in bandwidth saving and SAW bandwidth limitations. SAW is ideal for large numbers of narrowband spot beams but is better suited for mobile. However, for FSS, where the FSS market is toward reduced bandwidth/beam and greater connectivity, there is a promise that FSS SAW processors may compete with digital processors. Starting with the 70 MHz IF SAW Processor, SAW filter R&D is heading for 400 MHz and possibly higher in the long term.

There is a need to reduce the high insertion loss and hence power consumption of SAW filters for the digital processing of broadband signals, such as multimedia. In a regenerative OBP architecture, SAW filters are used in the downconverters prior to digitization and in the upconverters to remove image products generated by the D/A converter, which are very close to the LO, thus requiring a sharp slope filter like SAW.

G. Power Storage

- **NiCd**, for LEO and GEO, small to medium telecom and earth observation satellites has a specific energy of 50 Wh/Kg and 80% efficiency.
- **NiH2**, for LEO and GEO, for medium and large spacecraft is at 60 Wh/Kg and 85% efficiency.
- **LiSOCL2,** for launchers and space vehicles, is at 200 Wh/Kg and 60% efficiency.
- **AgZn**, is used for launchers such as Ariane.

H. Data Storage

- Solid-state space qualified recorders:
  - At 1 MHz bit rate input, the SSR with 224 Mbyte memory can store 30 minutes of data.
- Rotating memory:
  - This is the future of data storage technologies. These technologies are optical storage, magnetic disk technologies, and magnetic tape storage.

I. ASIC

There is insufficient information in the public domain on the details of ASIC design and where it is heading. Two ASIC products are briefly described in the literature. These are:

- Programmable ASIC for universal modulator:
  - It is used for regenerative satellites and for alternative routing methods in mobile and fixed multimedia networks. It is programmable for different standards such as DVB, CCSDS, ATM, etc. The 155 Mbps modulator includes a scrambler, interleaver, encoders, frame inserter, symbol mapper, digital filter, clock generation, and control module.
- ASIC digital processor product for communication satellites:
  - It uses 3500 ASICs for 1.2 KW, 130 Kg, 34 MHz/channel with 2000 carrier routing capacity for 200 beams.

J. Others

A number of Ka-Band related technologies are highlighted in the main tables and illustrations. These are:

- IOL—With 10W at 23 to 27 GHz.
- IOL—Steerable for data relay satellites at 23 GHz.
- Microwave versus optical Inter-Satellite Links—These are discussed and analyzed to provide direction.
- ATM switch-over satellites—These can achieve 156 Mbs at Ka-Band.
- Modulators—These vary between 20 and 280 Mbps.
- 90 Mbps direct receivers—They use 5 port junctions for QPSK.

K. Issues

Several important Ka-Band related technology issues are analyzed and some misconceptions are outlined in the main report. For example:

- Low power high temperature 77 Kelvin superconductivity SOA is feasible and beneficial to the transponder low power input sections, such as the input receiver, mixer local oscillator, and input multiplexer only. CSAT Inc. believes that there is an inaccurate common belief that high temperature superconductivity, HTS, SOA is applicable to high power sections of transponders and thus could reduce significantly the power and mass of future spacecraft. This is not feasible in the foreseeable future. It may be decades away, The reasons, explained below, show that the SOA of space qualified cryocoolers and their excessive mass and power demands nullify any miniaturization benefit from HTS.

  In HTS, the heat dissipation has to be removed by the cryocooler to such a level not attainable by today's cooling technology or in the foreseeable future for a few KW output per power transponder. Even as little as a 50 W channel transponder with an HTS absorption loss of 0.2 db 14 watts will be dissipated in a 6-channel multiplexer. For today's achievable cryocooler efficiency, dc power of 400 watts is required for a 14 W cryocooler. The mass of such a large cryocooler and the additional mass required for the DC power would not offset any reduction in mass gained by using the HTS technology. In addition, no such cryocooler technology is reliable or has been space qualified for more than a fraction of the 10- to 15-year expected satellite lifetime.

- There is a need to develop architectures for cost-effective new Ka-Band ground terminals, IDU and ODU, and indoor and outdoor units and for new Ka broadband satellites with advanced techniques: OBP, ATM-like protocols, OB switching, fast hopping beams, and advanced TDMA access methods.

  - High data rate systems under development:

    -- NASA ACTS: demonstrated 622 Mbps with QPSK.

    -- MPT/NASDA gigabit communications technology satellite program in 2003 with a 1.2 Gbps using 700 MHz.

- -- PT Telecom Indonesia Asia Skylink with convoluted coded 16 QAM scheme for HDR terminals in Asia.
- -- COMETS, the Communications and Broadcast Engineering Test Satellite, is testing rates up to 155 Mbps using 8 PSK TCM.
- -- Lockheed Martin Astrolink.
- -- Loral Cyberstar.
- -- Hughes Galaxy/Spaceway.
- -- Teledesic.

– Other Filings, FSS V-Band, 36.1 to 54.4 GHz:

- -- Denali
- -- OSC
- -- TRW
- -- Lockheed Martin for 1.25 to 3.875 Gbps.

References

1. Proceedings of the Fifth Ka-Band Utilization Conference, 18–20 October 1999, Taormina, Italy.
2. Proceedings of the Fourth Ka-Band Utilization Conference, 2–4 November 1998, Venice, Italy.
3. Bhasin, K. et al, "Internet Technologies for Space-based Communications: State-of-the-Art and Challenges," 18th IAAA International Communications Satellite Systems Conference and Exhibit, 10–14 April 2000, Oakland, California.
4. Sultan, N. et al, "Inmarsat 3rd Generation Satellites with Spot-Beam Frequency Re-use Antenna," Vols. I–III, Final Report, Canadian Astronautics Limited, July 1986.
5. Proceedings of the 17th IAAA International Communications Satellite Systems Conference and Exhibit, 23–27 February 1998, Yokohama, Japan.
6. Proceedings of the IEEE Communications Magazine, Volume 35, No.7, July 1997.
7. WTEC Panel Report on Global Satellite Communications Technology and Systems, 1998.
8. ITRI Panel Report on the Future of Data Storage Technology, 1999.

Item	Up/Down-Forward	Frequency, GHz	Space/Ground	Applications	Direct/Relay	GEO/MEO/LEO	A-Antenna State-of-the-Art	Study/COTS/Development	Program	Spacecraft	Company/Country/Space Agency	Year Reported
A1	F R	23.2–23.5 25.5–27.5	S	IOL G=55dB G=56dB	R	G	**3.6m Cassegrain** (low Side Lobe), Shaped Main reflector Carbon Fiber Reinforced Plastic honeycomb sandwich, Shaped Frequency Selective SubReflector of .27m, copper ring patch element, dielectric round support struts, .0.22 HPBW, 20db SL, CP: Axial Ratio=1.5, Power Handling 10W-EIRP 62dbw & G/T 27db/k-Ka-Band FEED: Dual-Mode Single Horn Polarizer, OrthoMode trnasducers & Band Split Filters for Sum signal, and TM01-mode coupler & magic-Tee for difference signal: higher-Order-Mode Monopulse RF Tracking of LEO satellites.	D (EM)	Japan 2sat: DRTS-E & DRTS-W	Data Relay Test Satellite	Mitsubishi-NASDA-Japan	1998
A2	U D	27.5–31.0 17.7–21.2	S	Ka-Band MBA with OB RF Hybrid Splitters & IF Switch, for Remote Islands Emergency	D	G	**2.2m Ka-band MultiBeam Antenna: NSTAR**: EIRP=51, G/T=14 uses MultiPort Amplifier, MPA with On-Board RF Hybrid Splitters & IF Switch, 8 uplink beams x 2 frequencies and 3 downlink x 2 frequency, then converted to IF, fed to a 16x6 IF Switch to enable Satellite switched SS-TDMA, GaAs-FET Monolithic Microwave IC, MMIC Switch **same 2.2m Ka-band Shaped Beam Antenna: NSTAR** EIRP=44, G/T=3.0-interchannel connectivity amongst 3 frequency bands in the shaped beam payloads-Beacon tracking automatic antenna point system	D Flight	NSTAR a & b already in service	Communi-cations Payload Technol-ogy	NTT-Japan	1998
A3	U D	30.1–30.9 20.4–21.2	S	Ka FSS: (OC3) D	G		**Gregorian Antenna**: CP feed-85W TWTA, 32.db gain-EIRP=55, G/T=9.4-for Ka FSS: 3x200 MHz BB Digital Carrier up to 155 Mbs (OC3)	D	Korea Sat 3	Korean Telecom		1998
A4	U D	47.9–48.2 47.2–47.5	Stratosphere	Helium-Filled Airship at 23 km above urban centers	D	Stratosphere	**MultiBeam Antenna on Skystation Strat5ospheric Platform**: antenna farm <300 kg, 736 hemispheric Spot Coverage, of semi-aperture of 75 degrees, minimum Gain 27.5 dBi-Need a cluster of radiating elements magnified by a focusing system like a lens, or Reflector or Direct Radiating array, DRA. Total number of antennas- 130 Receive & 130 transmit, with a dielectric lens antenna with 7 feeds, providing 7 beams, but with an irregular number of feeds per antenna at the periphery. The lens antenna geometry is a dual-mode feed horn, excited with a patch EMC coupled to a microstrip directly connected to the MMIC (minimize losses): **130 RX Units**, each 7 spot beam antenna, with 7 LNA, @ & 2x12 GHz and 150 MHz down converters. **736 Demodulators**: SAW multicarrier Demodulators, with ATM compatible output. **ATM**: Total throughput=11 Gbs: 736 full duplex at 10 Mbs & 120 Standard OC-12 34 Mgs port. **Modulator**: 10 Mbs QPSK/TDM	S			Skystation Stratospheric Platform	1998

Table A. Antenna State-of-the-Art

Item	Up/Down-Forward	Frequency, GHz	Space/Ground	Applications	Direct/Relay	GEO/MEO/LEO	A-Antenna State-of-the-Art	Study/COTS/Development	Program	Spacecraft	Company/Country/Space Agency	Year Reported
A5	U D	27.6–28.6 17.7–18.8	S	GII Experimental High Data Rate Communications	D	G	**Gigabit Comsat Reflector SSBA**: 5x 1 GHz Scanning Spot beams, Uplink reflector: 4% BW, 2.1m reflector, 50.5dbi, 21.7 G/T, .34deg CP, NF3.5 dB- Downlink: 5% BW 3.15m 72.5 dBW, 50.5 dBi, P/beam=200W, Total P=500W, .34 degree CP- Scanning angles: ±7 degrees (Az, El)- Candidates: **DRAPA**, Direct Radiating Active Phased Array Antenna, or **PFSRA**: Phased Array Single Reflector Antenna, or **PFIRA**: Phased Fed Imaging Reflector Antenna.	S		Gigabit Satellite	Mitsubishi & CRL-Japan	1998
A6	U D	27.6–28.6 17.7–18.8	S	Experimental High Data Rate Communications	D	G	**Ka-Band Scanning Spot Beam Antenna, SSBA**, over 1 GHz, Gigabit Communications Satellite for GII Experimental High Data Rate Communications	S		Gigabit Satellite	Mitsubishi & CRL-Japan	1998
A7	U D	27.6–28.6 17.7–18.8	S	Experimental High Data Rate Communications	D	G	**Active Phased Array Antenna, APAA+ Multiple Beams**: 2 fixed Beams, 3 Scan Beams- 55 dbi- 40W/beam<300W/beam- Single vs. Dual Refl Tra.off p 283.Dual Excellent Wide scanning & Variable beam-to-beam for GII Experimental High Data Rate Communications	S		Gigabit Satellite	Mitsubishi & CRL-Japan	1998
A8	U D	27.6–28.6 17.7–18.8		Experimental High Data Rate Communications	D	G	**Important Trade-Off of Feed System and Antenna System, for Ka-Band Active Phased Array-Fed Reflector Antenna** (Single & Double Reflectors) for GII Experimental High Data Rate Communications	S		Gigabit Satellite	Mitsubishi & CRL-Japan	1998
A9	U D U D	30.7–30.8 21.0–21.1 46.8–46.9 43.7–43.8	S	Experimental Communications & Broadcast Ka & mmw	D	G	**2m Reflector Antenna for both Ka & MMW**: 2 Ka beams (20W & 10W SSPA) & one MMW beam (20W TWTA + HEMT 2.4 dB LNA)	D	COMETS	COMETS	CRL & NASDA-Japan	1998
A10	U D	30.8 21.0	G	Experimental Coms & Broadcast	D	G	**Waveguide-Slot-Array Antenna**, developed for Ground Mobile Terminal, for COMETS: TX 16 leaky waveguides with 192 cross slots CP , RX 12 l. WG with 142 cross slots	D	COMETS	COMETS	CRL& NASDA Japan	1998
A11	D	21 G	Experimental Coms & Broadcast		D	G	**Active Phased Array** (receive only) developed for Ground Mobile Terminal, for COMETS : 168 rectangular microstrip patch, with Teflon dielectric: Ka	D	COMETS	COMETS	CRL& NASDA Japan	1998
A12	U D	46.9 43.7	G	Experimental Coms & Broadcast	D	G	**Torus Reflector Antenna** developed for Ground Mobile Terminal, for COMETS: MMW Dual reflector: Main Reflector is parabolic, SubReflector is Ellipsoid Uses Rotary Joint to rotate subReflector for tracking	D	COMETS	COMETS	CRL& NASDA Japan	1998

Table A. Antenna State-of-the-Art

Item	Up/Down-Forward	Frequency, GHz	Space/Ground	Applications	Direct/Relay	GEO/MEO/LEO	A-Antenna State-of-the-Art	Study/COTS/Development	Program	Spacecraft	Company/Country/Space Agency	Year Reported
A13	D	21 G	Experimental	Coms & Broadcast	D	G	**Mobile Vehicular Active Phased Array** (receive only) developed for Ground Mobile Terminal, for COMETS: 92 MHz BW, 168 Microstrip patches, .6 lamda spacing, each antenna element has a 3-stage MMIC 1.6 dB NF & 28 dB gain LNA and a 4-bit MMIC phase shifter	D	COMETS	COMETS	CRL& NASDA Japan	1998
A14	D	25.2–27.5	S	Phased Array for LEO SC to transmit high data rate signals for Space-Space & Space-Ground Links	S R D		**LEO Phased Array Transmit Antenna**: A nine tray 2.25 MHz bandwidth antenna, each with four transmit modules per side: 240 (+16) circularly Polarized quadrature fed elements, with 33 dBWic EIRP at maximum 60 degrees scan angle, controlled by 68 4-channel transmit AIL Systems MMIC modules, with amplification and a 3-bit phase control, using Litton's Solid-State .25 micron gate length single & double heterojunction PHEMT process and Low Temperature Cofired Ceramic-Metal LTCC-M packaging technologies. Antenna control by an OB Processor assembly with interface with Command & Data Handling system. status: now an Engineering Model.	D	GSFC Ka-Band Phased Array Antenna	TDRS H, I, & J	NASA with Harris & AIL Systems Government Aerospace Systems Division	1999
A15	U D	28.9–29.5 19.2–20.2	G	New Technologies for Low Cost Multimedia Ka Terminal			**29/19 GHz Briefcase joint Canadian/NASA-GRC Satellite Terminal**, demonstrated 500 kbps desktop videoconferencing and Internet access over the ACTS. It uses direct Ka I&Q frequency conversion and an I&Q baseband processor. A 44cm Cassegrain and flat plate reflector antennas with F/D 0.25 and 0.5. Ka Modulator with BER=10^{-6} @ Eb/N0= 6.0 dB	D	Canadian CRC & NASA ACTS GRC Program	ACTS		1999
A16			S	Reduce illovsp and increase Edge of Coverage gain	D		**High Efficiency DDR, Direct Rod Radiator Feeds for Ka-Band Multibeam antennas**: DRR is used as reflector for flat beams or lens elements for 100% Gaussian beams.The respective improvements over Potter radiators are 2.0 and 0.5 dB respectively.	C		Canadian Advanced Satcom	Spar Aerospace	1998
A17	U D	29.0–30.0 19.2–20.2	G	Portable Ground Terminal			**Compact Cassegrain Ka-Band Antennas for Briefcase Terminal:**	C			IMT Industry Canada	1998
A18	U D	43.5–45.5 20.2–21.2	S		D	G	**Ka-Band Active Contoured Steerable Spot Beam Antenna Product**: In-orbit reconfigurable, it provides contoured for receive and/or zoomable beams for transmit, with a high degree of flexibility, with option for circular polarization, combines mechanical steering and active electrical beamforming. It uses two feeds via dichroic subreflector. Phase & amplitude control is in the active receive feed system and allows by command the contouring of the spot beam coverages.	C			Dornier/ESA	1999

Table A. Antenna State-of-the-Art

Item	Up/Down-Forward	Frequency, GHz	Space/Ground	Applications	Direct/Relay	GEO/MEO/LEO	A-Antenna State-of-the-Art	Study/COTS/Development	Program	Spacecraft	Company/Country/Space Agency	Year Reported
A19	IS L	65	S	Microwave ISL	R	L G	**InterSatellite link Antenna products**: with fixed feed, folded optics configuration and no rotary joints. It can be used with a single feed closed loop tracking system. Its material has excellent thermal distortion and RF performances, without the need for thermal blankets or special coating. It is adaptable to various frequency & polarization plans: ± 100° Azimuth and 0 to –40° elevation scan range, 282 mm diameter, 44.5 dBi directivity, <0.5 dB RF loss, volume 444x 282x 404 mm volume, (254 mm stowed), >110 Hz first natural frequency, 2.5 Kg mass & .8 Kg moving mass.	C			Spar Aerospace-ESA	1999

Table A. Antenna State-of-the-Art

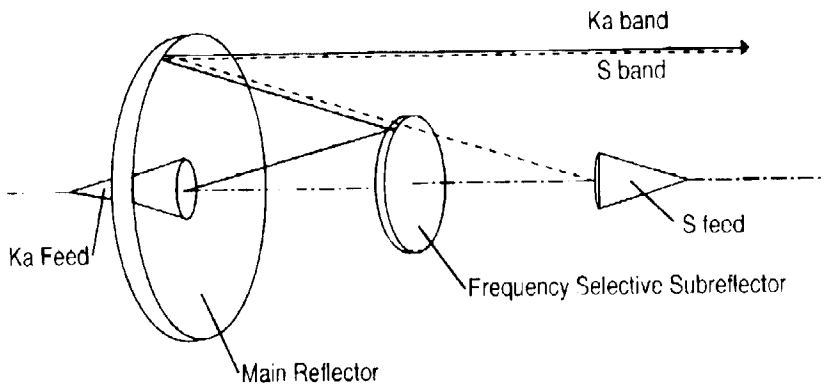

Figure 2 Antenna Functional Feature

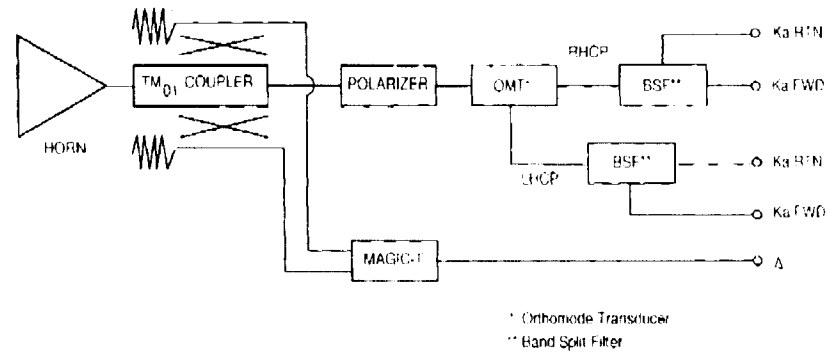

Figure 4 Blockdiagram of Ka-Band Feed

Table 2 Performance of IOL Antenna for DRTS

	Ka-Band		S-Band	
	KSA-FWD	KSA-RTN	SSA-FWD	SSA-RTN
Antenna Diameter (mm)	3600			
Antenna Type	Cassegrain		Parabola	
Frequency Band (GHz)	23.175 - 23.545	25.450 - 27.500	2.025 - 2.110	2.200 - 2.290
Polarization	RHCP / LHCP (Orthogonal pol between FWD & RTN)		RHCP / LHCP (Same pol. as FWD & RTN)	
Gain (dBi)	> 55	> 56	> 34	> 35
3 dB Beamwidth (deg)	0.23 (Nominal)	0.21 (Nominal)	2.8 (Nominal)	2.6 (Nominal)
Sidelobe Level (dB)	< -20	< -20	< -20	< -20
Axial Ratio (dB)	< 1.5	< 1.5	< 1.5	< 1.5
VSWR	< 1.3	< 1.3	< 1.5	< 1.5
Power Handling (W)	10 (CW)	N/A	30 (CW)	N/A

Item A1

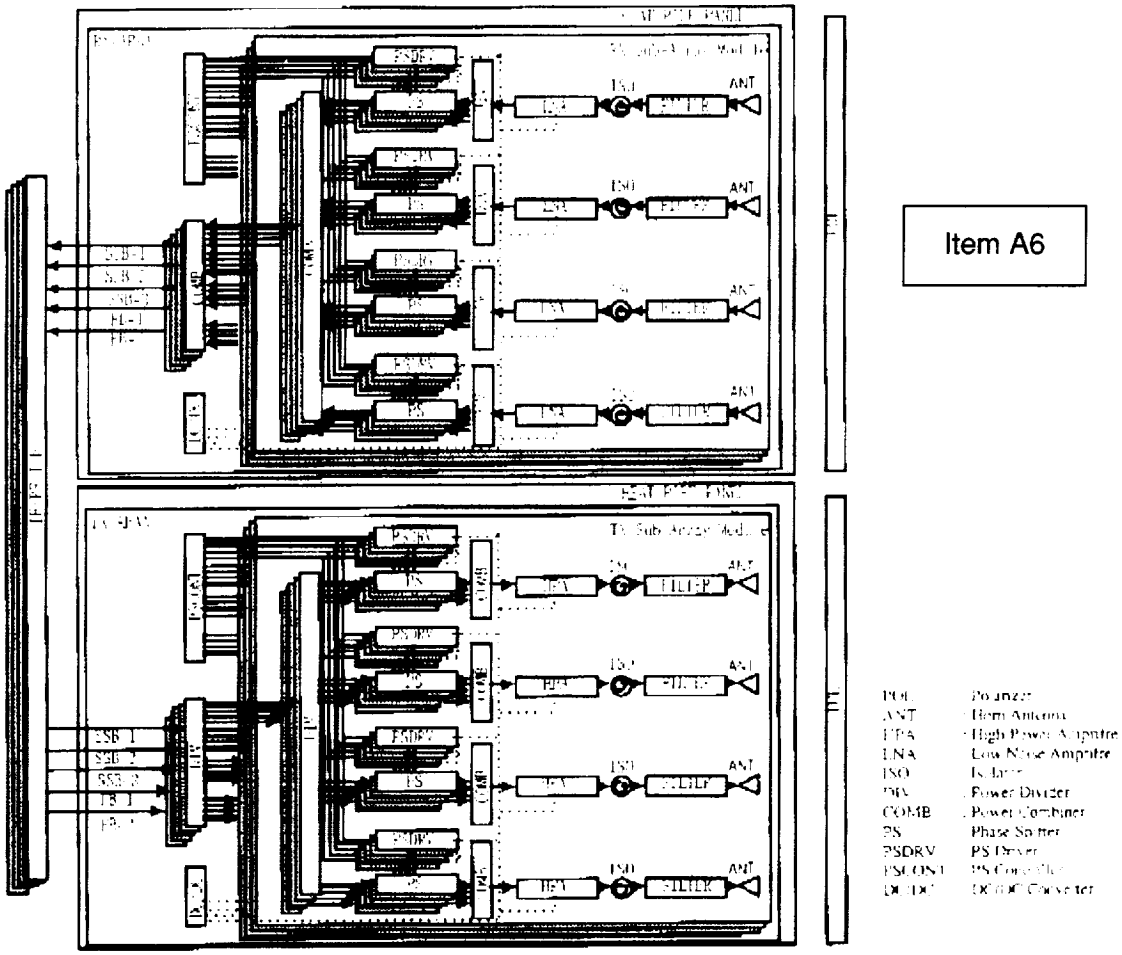

Figure 4 Functional Block Diagram of SSBA

Table 1 Performance Summary of SSBA

Item	Up-Link	Down Link
Frequency	27.5 - 28.6 GHz	17.7 18.8 GHz
Number of Beams	Fixed beam:2, Scanning Spot Beam:3	
Antenna Diameter	2.1 m	3.15 m
E.I.R.P		72.5 dBw
G/T	21.7 dB/K	
Directive Gain	50.5 dBi	50.5 dBi
Feed Loss	1 dB	1 dB
Polarization	Circular pol.	Circular pol.
Output Power beam	N/A	50 200 W
Total Output Power	N/A	500 W
System Noise Figure	3.5 dB	N/A

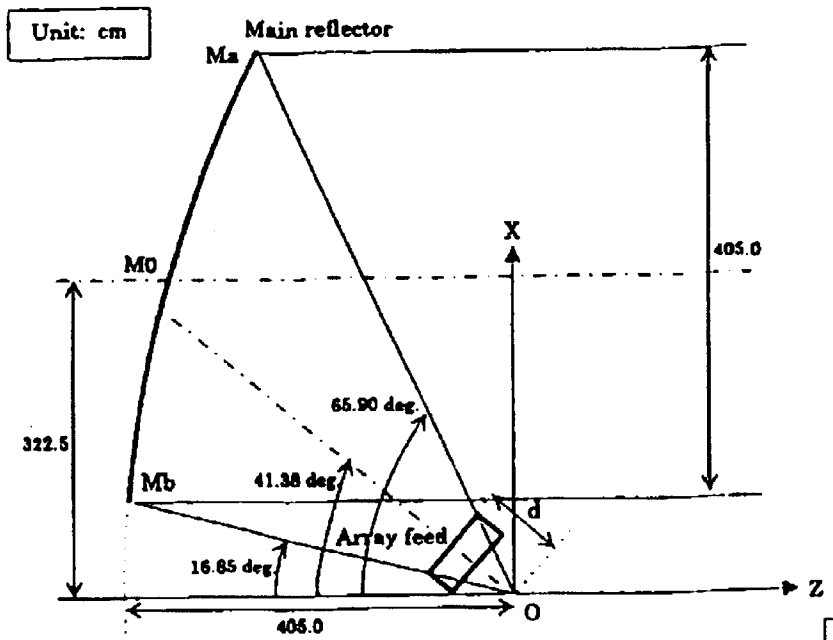

Fig. 3.2-1 Active Phased Array-Fed Reflector Antenna (Single Reflector System)

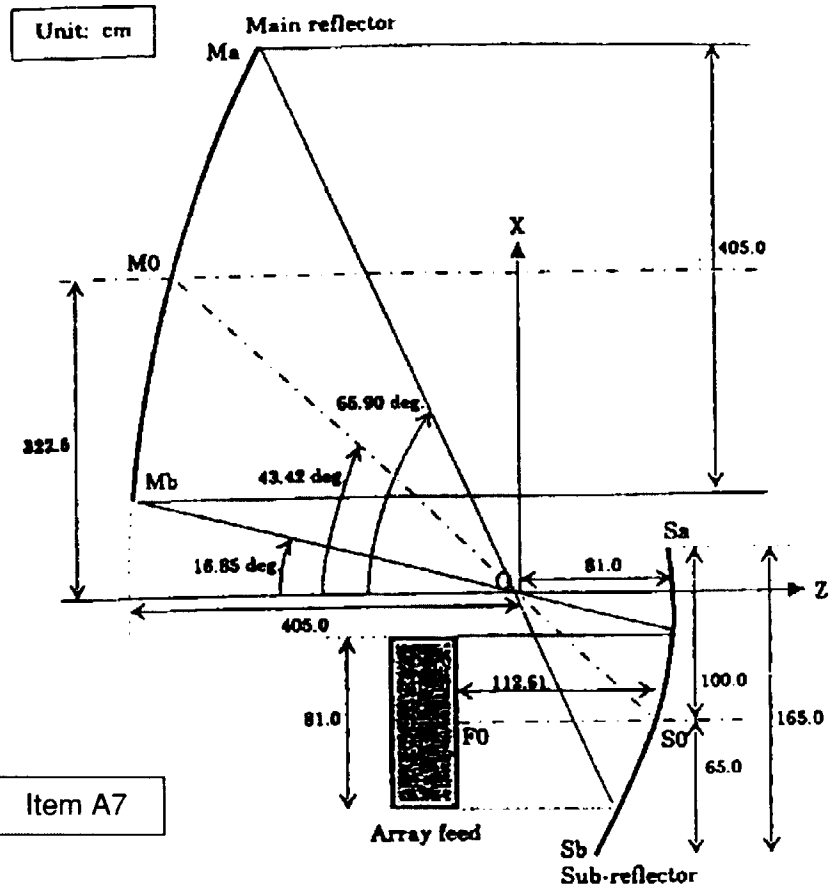

Item A7

Fig. 3.2-2 Active Phased Array-Fed Reflector Antenna (Dual Reflector System)

Table 3.1-1 Feed System Trade-off

Trade-off item	Cluster horn	Active phased array
Power efficiency	Good power efficiency because of TWTA used	Poor power efficiency because of SSPA (Effect of not only SSPA final stage but also pre-stage should be taken into consideration.) However, there is the possibility of improvement.
Number of antenna elements	Increases in proportion to the nuber of beam spots.	Ramains constant irrespective of the number of spot beams.
Feed loss	Loss increases due to increased size of a switching circuit when t he number of beams increase	Remains constant due to spatial beam combine. Loss becomes negligible when t his system is direct ly connected with antennal elements.
Flexibilit y as to rain attenuation	Power for the maximum precipitation is required for each beam.	Much power must be distributed to rainfall areas.
Flexibility as to traffic variations	Variations can be coped with by changing beam residence time. Power distribution between beams is impossible.	Variat ions can be coped with by changing beam residence time. Power distribution toward areas with heavy traffic is possible.
Beam control	With switch selection only.	Many phase shifters must be controlled.
System reliability	Failure of TWTA affects the enitre system.	Failure of one SSPA does not critically affect the entire system
Typical applicable system	ACTS	Teledesic (planned)
Overall evaluation	Fair	Good

Item A7 cont.

Table 3 2-1 Antenna System Trade-off

Item	Single reflector system	Dual reflector system
Installation on board the satellite	Good ·Feed array detaches itself from bus structure.	Fair ·Subreflector is required. ·Tower that holds the subreflector is required.
Antenna weight	Excellent	Fair ·Heavier by the weight of the subreflector.
·Beam gain	Fair	Excellent
·Wide-angle scanning characteristic	Fair	Excellent ·Wide-angle characteristic can be improved by enlarging the subreflector
Amplifier's service efficiency (with variable beam-to-beam power levels)	Fair ·Electrical characteristics deteriorate since excitation distribution is made uniform to stabilize the amplifier's operation	Exellent ·Electrical characteristics are kept good even when excitation distribution is made uniform to stabilize the amplifier's operation

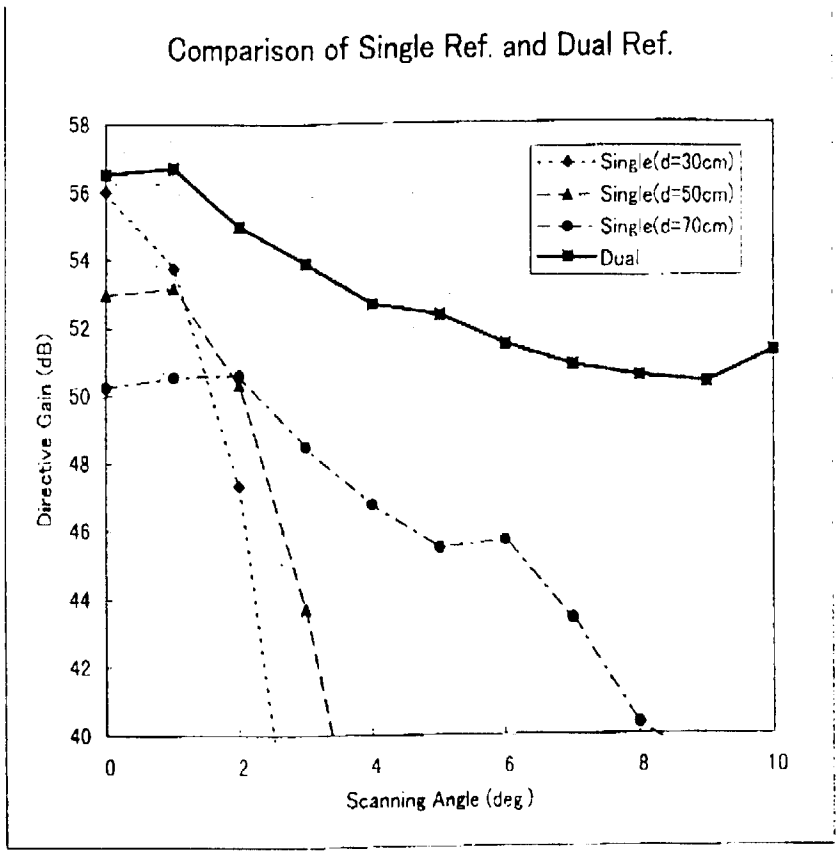

Fig. 3.2-3 Comparison of Beam Scanning Characteristics

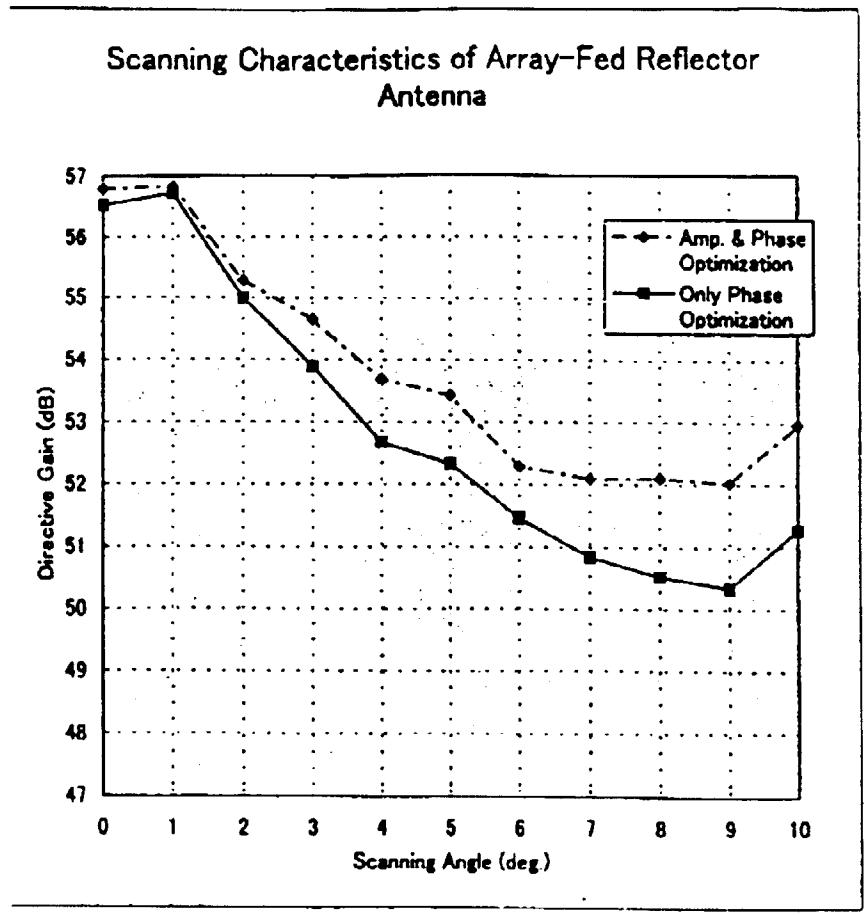

Fig. 4-1 Comparison of Beam Scanning Characteristics by Excitation Distribution Method

Item A7 cont.

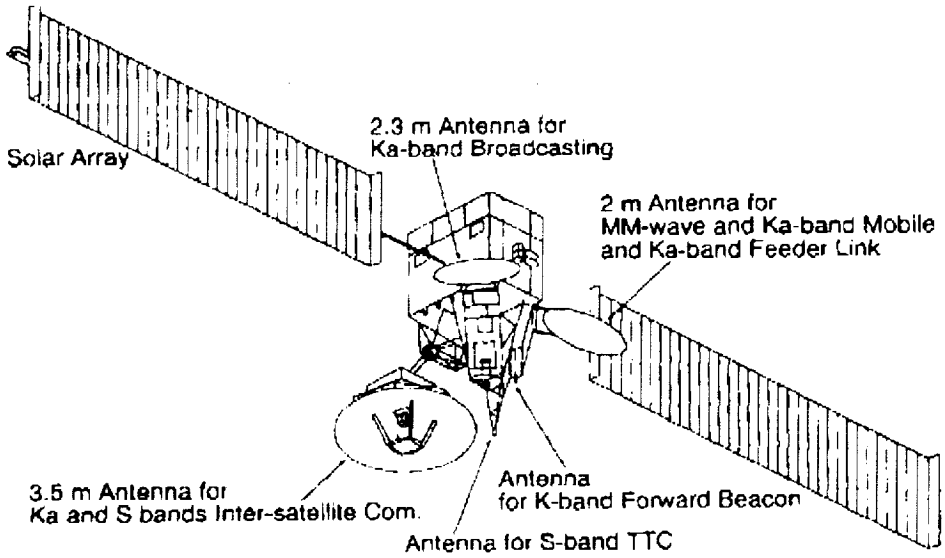

Fig.1 Conceptual sketch of COMETS

Item A9

Table1 Outline of mission payload

Antenna	Diameter 2m, Circular polarization, Antenna pointing system Spot beam antenna shared by MM-wave and Ka-band (shared with feeder link antenna for inter-orbit communication)	
Beam	Two Ka-band beams (Kanto and Tokai beams) One MM-wave beam (Kanto beam)	
Frequency	Ka-band	30.75-30.85 GHz (uplink) 20.98-21.07 GHz (downlink)
	MM-wave	46.87-46.90 GHz (uplink) 43.75-43.78 GHz (downlink)
Number of transponders	Ka-band	2 (20 W and 10 W SSPA)
	MM-wave	1 (20 W TWTA)
Operation mode	IF repeater	2×2 matrix beam interconnecting by IF filter bank Wide band filter (6 MHz) and narrow band filter (500 kHz)
	Regenerative transponder	8 ch SCPC (uplink)/TDM (downlink) Beam interconnection by baseband switching

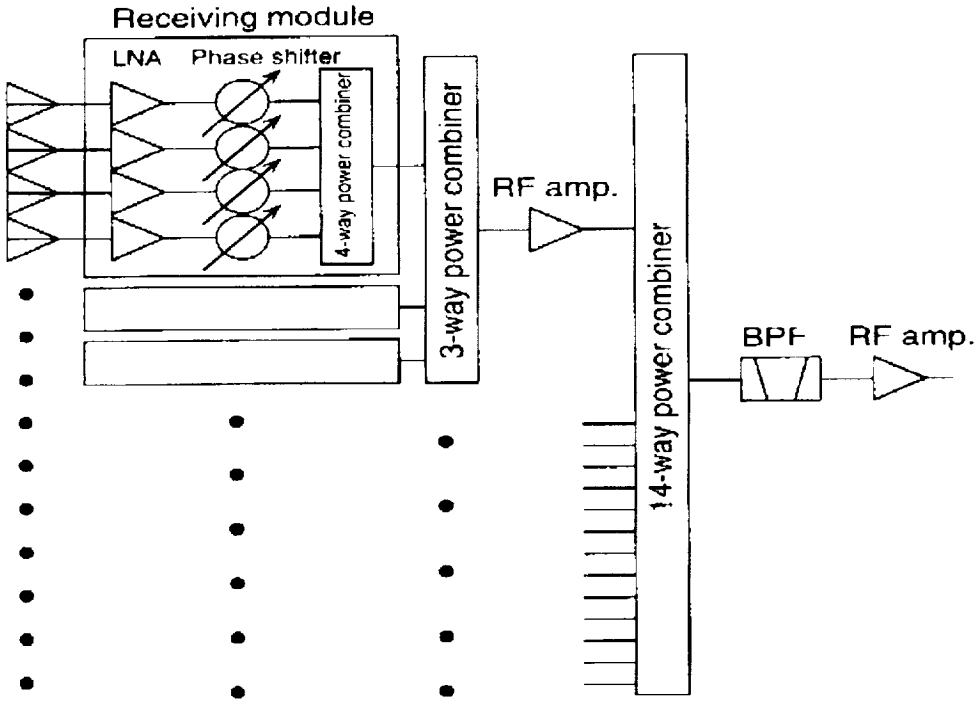

Figure 1. Block diagram of the Ka-band active phased array

Item A13

Table 1. Characteristics of the Ka-band active phased array system

Frequency	21.028 GHz ±46 MHz (only receiving)
G/T	> -6.8 dB/K
Beam scan range	El: > 42° Az: 0° to 360°
Pointing accuracy	1° rms
Polarization	LHCP
Axial ratio	< 6 dB
Number of elements	168
Element allocation	Triangular form
Element spacing	0.6 λ
Radiating element	Rectangular microstrip antenna
Phase shifter	4-bit MMIC
LNA	3-stage MMIC
Array size	110 mm × 120 mm
System dimensions	L 390 mm × W 410 mm × H 230 mm
Weight	< 30 kg
Temperature range	-5° C to 50° C

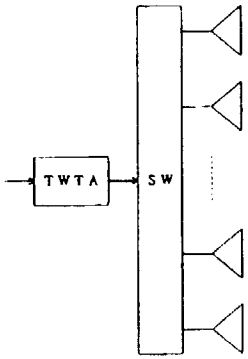

Fig. 3.1-1 Cluster Horn Feed System

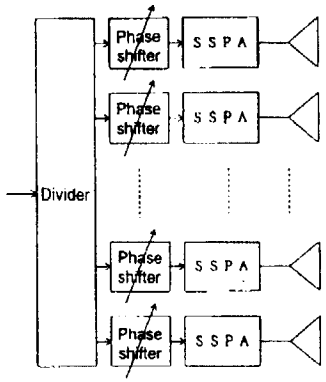

Fig 3.1-2 Active Phased Array Feed System

Item A8

Table 5. GSFC Ka-Band Phased Array Antenna Performance

Parameter	Value
Frequency	25.25 GHz - 27.5 GHz
RF Bandwidth	2.25 GHz
Data Bandwidth	> 350 Mbps, dependent on ISI
EIRP	> 33dBW (at max scan)
Angular Coverage	Electronic steering, 60 degrees from boresight
Sidelobes	≥ 12 dB below peak
Polarization	Left-hand circular
System Compression	< 2 dB
Electrical Interfaces:	
RF	0 dBm input drive, 'K' coaxial connector
DC Power	72 Watts
Command & Control	Mil-Std-1773
Operational Life	5 years on orbit

Item A14

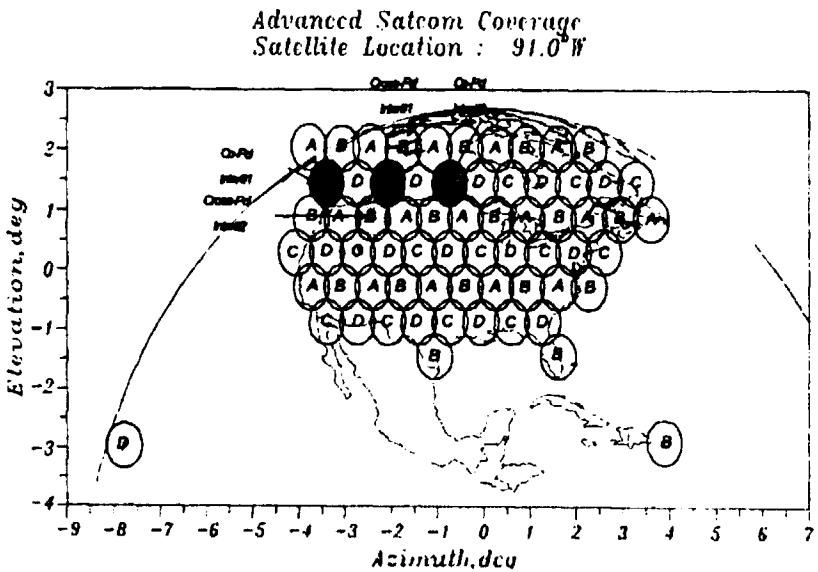

Figure 8 Advanced Satcom Coverage Area

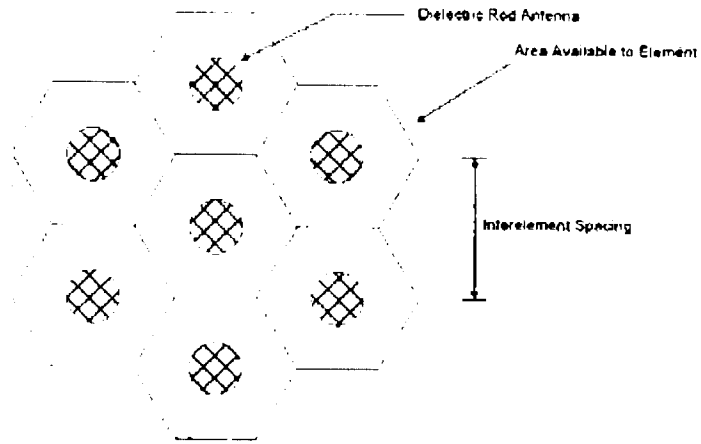

Figure 2 Geometry of DRR array

Item A16

Table 3 Rx Antenna Specifications

PARAMETER	SPECIFICATION
Frequency Range	28.35-30.00 GHz
Number of Beams	4
Antenna & Spacecraft Pointing Error	±0.1°
EOC Antenna Directivity (W/ P.E.)	>41.7 dB
Polarization	LHCP & RHCP
Beamwidth	.75°
Beam Spacing	.65 °
EOC Min. Isolations	25 dB XPOL Isolation 15 dB COPOL Isolation

Symmetrical Cassegrain Parabolic Reflector		44	cm (diameter)
Cassegrain Flat Plate Reflector		44	cm (square)
Frequency Range	Tx Rx	29.0–30.0 19.2–20.2	GHz GHz
Mid-band Gain (η=50%) Parabolic Flat Plate	Tx/Rx	 39.7 / 36.2 40.7 / 37.2	 dBi dBi
Polarization		Linear	Tx/Rx orthogonal
Parabolic Antenna Depth F/D = 0.50 / 0.25		19 / 11	cm
Sidelode levels (max)		–22	dB
Tx to Rx isolation (min)		30	dB
Return Loss (min)		15	dB
RF Interface	Tx/Rx	WR28 / WR42	

Table1. Antenna Design Objectives

Item A.17

Item	Up/Down-Forward	Frequency, GHz	Space/Ground	Applications	Direct/Relay	GEO/MEO/LEO	B-HPA/B State-of-the-Art	Study/COTS/Development	Program	Spacecraft	Company/Country/Space Agency	Year Reported
B1		Ka to V-Bands	S	Communications	D R	L M G	**Progress in TWTs and EPCs, by ITRI**: See Attached Tables 3.3 to 3.6 and fig 3.2, for NEC Tubes, trends in TWT efficiency to 2004, Hughes TWT Status, Thompson/AERG TWT, and NEC TWT performance.	S			ITRI	1999
B2	D	17–23	S	Communications	D R	G	**TWTA: 2 Kg., 140 W,** 0.5 GHz BW, 17–23 GHz, 63% Eff., MBA w Distrib Ampli. as Butler Matrix Amplifier BMA or Multiport Power Amplifier MPA for Max. Freq. Reuse- Direct, Space, Downlink	D			Thompson Tubes Electroniques	1998
B3	D	27–31	S	Communications	D R	G	SSPA- MMIC (HEMT), 1 W, 15 db gain 27 –31 GHz- Direct & Relay, Ground	D				1998
B4	D	1.3–20.0	S	Communications	D R	G	**TWT 72W**, 60%, @20GHz & 60W@27GHz.Thompson Tubes Electroniques. Under development 125W, 3GHz BW 17.3–20.3 GHz 60–63%- Also, predistortion linearizers started at Ka	D				1998
B5	D	43.7	S	Communications	D R	G	**SSPA 20 & 10 W Ka @** 21GHz & **20 TWTA mmw @** 43.7 GHz for Japanese COMETS					1998
B6	U	44 & 47	G	Ground	Ground	Main	Station on COMETS: 1.8 m ka 31 & 21, 30 W TWTA + NF 1.5 db- 1.2m mmw 44 & 47: COMETs 10W TWTA NF 4.0	D				1998
B7	U	27.5–31.	G	Small VSAT	SSPA	SOA:	Northrop 31.3 Ghz, 30 dBm @ 2 dB CP, using .25 Micron pHEMT Raytheon: 27.7-31 GHz, 30 dBm @1 dB. 0.15 Micron Mitsubishi: 27.5- 30 GHz, 31 dBm @ 1dB NA Sanders: 27.5-30 GHz, 29, 32 & 34dBm, @1dB.15 Micron Toshiba: 28.3-30 GHz, 32 dBm @ 1 dB NA	D				1998

Table B. HPA/B State-of-the-Art

Item	Up/Down-Forward	Frequency, GHz	Space/Ground	Applications	Direct/Relay	GEO/MEO/LEO	B-HPA/B State-of-the-Art	Study/COTS/Development	Program	Spacecraft	Company/Country/Space Agency	Year Reported
B8	D	17.7–20.2	S	Ka-Band Multimedia with Multibeam Traffic Reconfiguration and Frequency Reuse	D	G	**Switchable Multibeam Butler Marix Distributed or Multiport Power Amplifier**: An 8x8 input/output amplifier matrix is being developed , using Butler Matrix Amplification, BMA: using 8x 120W TWTA, for EuroSkyWay 8 fold frequency reuse. Therefore, four 8x8 BMA are required. The MNA is based on arrays of equal amplifiers boosting the power of a combination of all transponder signals, in between input and output hybrid networks, ultimately connecting the reflector antenna feed elements to generate multiple beams. The advantage over the bent pipe approach is that a signal entering any input port is equally shared amongst all amplifiers and is recombined to exit from a single port. Major development issues are still to be resolved: understanding Ka-Band HPA active components in terms of amplitude and phase tracking characteristics amongst different amplifiers with aging, temperature, voltage variations, as well as the intermodulation products control for multi carrier transmission developing a 20 GHz linerizer to compensate for TWT compression.	D		EuroSky Way	Alenia/ESA TWTA by FIAR (Italy)	1998
B9	D		S		D R	G	**Dornier Ka-Band TWTA Product (Tubes from AEG, Hughes, NEC, TTE)**: <140W, EPC efficiency 93%, Mass 2.3 Kg for 140W.	C			Dornier/ESA	1999
B10	D	19–22	S		D R	G	**FIAR Ka-Band TWTA Product, single & multi-carrier modes, space qualified**: <40W, 50 dB Gain, 51% efficiency, 15 years lifetime, 2.45 Kg.	C			FIAR/ESA	1999
B11	D	19.2–20.2%	S		D R	G	**Italtel Ka-Band Artemis SSPA Product**: 36.9 dBm power, 50.7 dB Gain, 41.5 W Power Consumption, 1.73 Kg.			Artemis	Italtel/ESA	1999
B12	U D	18–50	G	Not Space Qualified			**Millimeter Wave Power Amplifiers Products**: 18–26 GHz: max Gain 7.5 dB, 1dB Compression max. 22 dBm, 26–40 GHz: max Gain 16 dB, 1 dB Compression max 17.5 dBm 33–50 GHz: max Gain 9.5dB, 1 dB Compression max 9.5 dBm 40–50 GHz: max Gain 9.5 dB, 1 dB Compression max 9.5 dBm	C			Farran Technology	1999

Table B. HPA/B State-of-the-Art

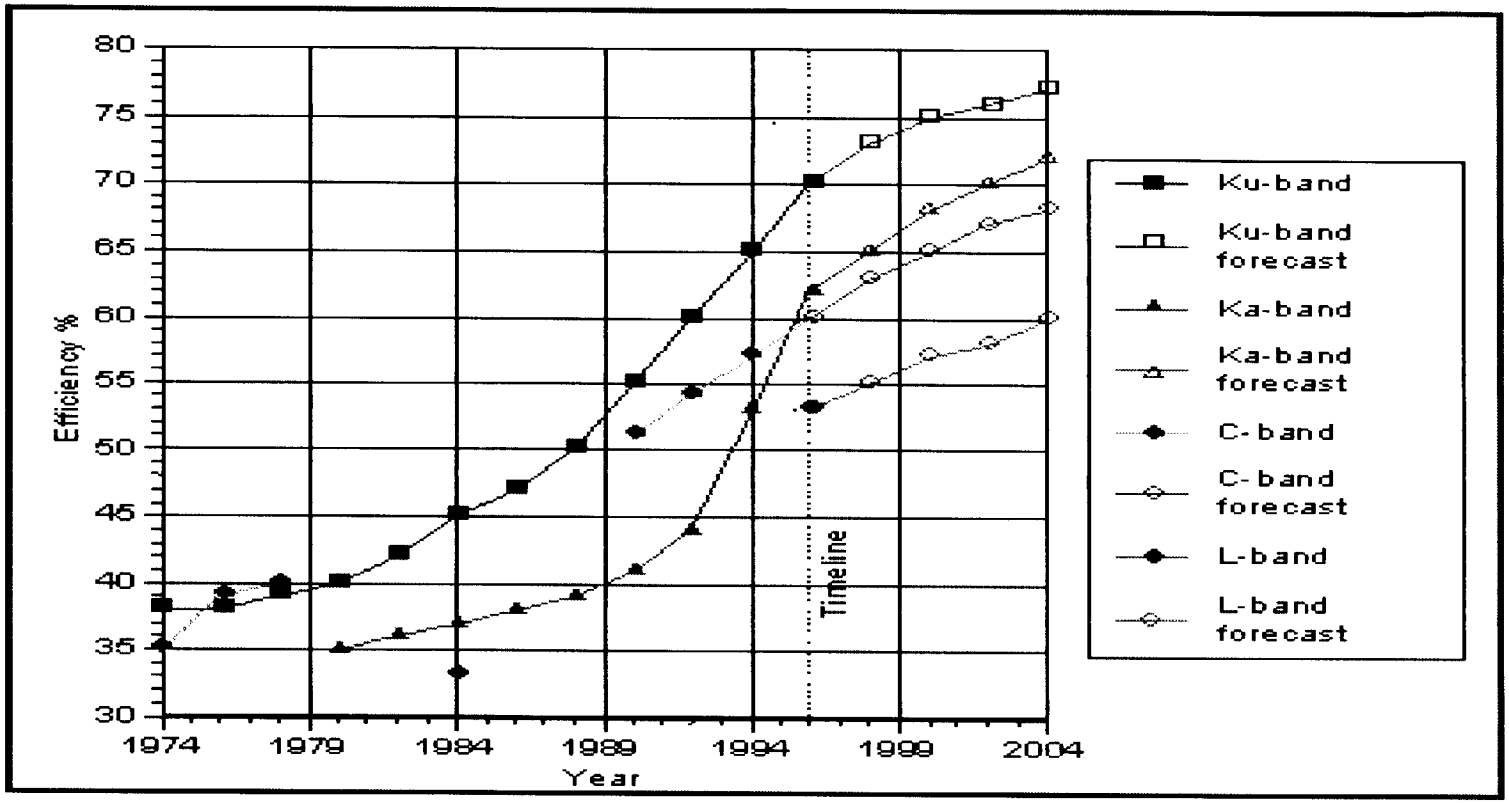

Fig. 3.8. TWT efficiency vs. time (Thompson).

Item B-1 (Cont.)

Table 3.3
NEC TWT Product Line

Frequency (GHz)	2.5	4	12	20	22	26	30	44
Rf - Power (W)	120	5	20-170*	2-30	80-230	20	20	20

* >250 W under development

Item B-1 (Cont.)

Table 3.4- Current Status of Thompson TWT			Table 3.5- Current Status of NEC TWT			Table 3.6- Current Status of HAC TWT		
Frequency Band	Current Status	Demonstrated	Frequency Band	Current Status	Demonstrated	Frequency Band	Current Status	Demonstrated
	Ka-band		V-band 44 GHz		NA		Ka-band	
RF output (W)	75	100	RF output (W)	35		RF output (W)	70	140
Efficiency (%)	63	72	Efficiency (%)	41		Efficiency (%)	55	60
						Mass (g)*	850	TBD
						Model #	966H	9130H
	Ku-band		Ka-band 21 GHz		NA		Ku-band	
RF output (W)	140	220	RF output (W)	230		RF output (W)	135	170
Efficiency (%)	72	78	Efficiency (%)	55		Efficiency (%)	65	70
						Mass (g)*	850	700
Model #			Model #			Model #	8898	8815
	C-band			Ku-band	NA		C-band	
RF output (W)	60	120	RF output (W)	170		RF output (W)	120	140
Efficiency (%)	60	67	Efficiency (%)	66		Efficiency (%)	59	62
						Mass (g)*	800	800
						Model #	8556	8556#50
	S-Band			S-Band	NA		S-Band	
RF output (W)			RF output (W)	120		RF output (W)	120	150
Efficiency (%)	52	62	Efficiency (%)	52		Efficiency (%)	62	64
						Mass (g)*	1200	1200

The efficiency of an S-band TWT falls Between L-band & C-band. Ka-band TWT's have 3 GHz bandwidth*
Add 350 g. for radiation cooled option.

Fig.4 : Testresults Ka-band TWT: Variable Output Power

Item B.2

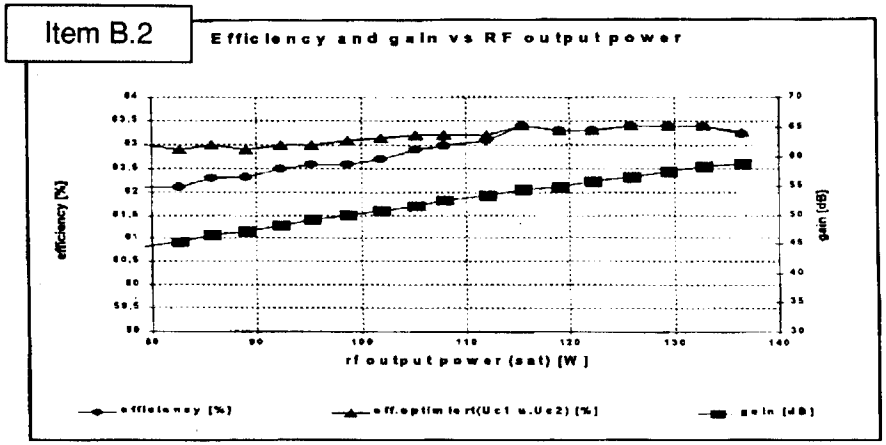

Item B7

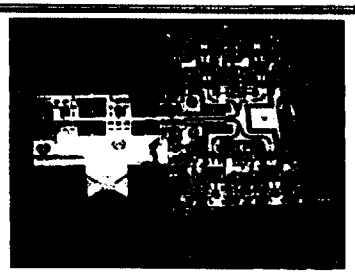

Norsat's 4 Device Ka-Band SSPA

A prototype of the final stage of a Ka-Band SSPA built in spring 1998, shown above, uses Northrop devices available at the time. Two pairs of power stages at +28 dBm each, were combined using low-loss waveguide parts (Magic Tees) to obtain the desired 32 dBm at the 1 dB Compression Point

The single most important factor in the SSPA and indeed in the whole transmitter is the output stage. During the last 4 years, Norsat contacted various manufacturers of FETs, PHEMTs etc. to find a device that would provide 0.5 W, preferably 1W at the 1 dB compression point. Of these devices, 28 dBm or so was typical. Recently, higher power devices are being advertised. The table below shows data from spec sheets from several manufacturers for available and planned devices as of fall 1998.

Available or Planned Ka-Band Power Devices (Fall '98)

Company	Freq.[GHz]	Pout [dBm]	Comments
Northrop Grumman	31.3	30 @ 2 dBCP	0.25μm pHEMT
Raytheon	27.75 to 31	30 @ 1 dBCP	0.15μm pHEMT
Mitsubishi	27.5 to 30.0	31 @ 1 dBCP	N/A
Sanders	27.5 to 30	34 @ 1 dBCP	0.15μm pHEMT
Sanders	27.5 to 30	32 @ 1 dBCP	0.15μm pHEMT
Sanders	27.5 to 30	29 @ 1 dBCP	0.15μm pHEMT
Toshiba	28.3 to 30.0	32 @ 1 dBCP	N/A

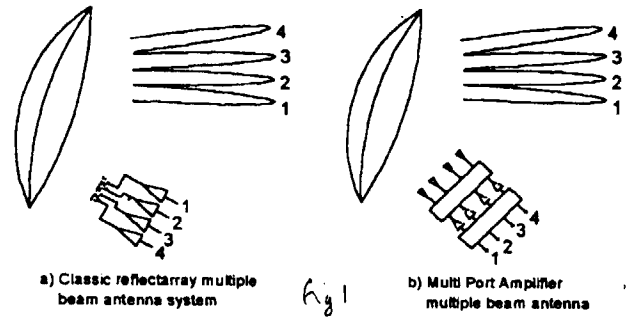

Fig 1

Item B8.1

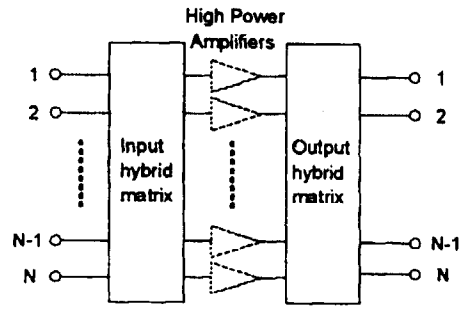

Fig 2

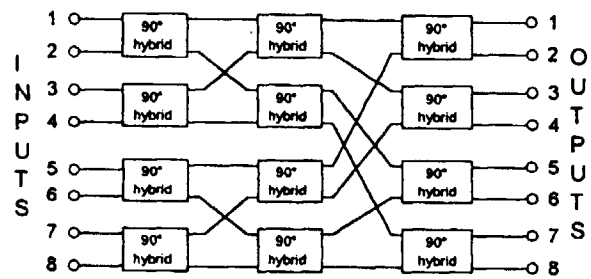

Fig 3

Item B.8.2

Frequency Range	19.5 ÷ 21.5 GHz
Operating Frequency	500 MHz
RF Pout	40 W
ΔPout vs. Operating Frequency	1.5 W
ΔPout vs. Temperature	0.1 dBpp
Gain Sat	53 dB
ΔGsat vs. Operating Frequency	0.3 dBpp
Noise figure	33 dB
Overdrive	+15 dBm
Efficiency	53,5 %
Main Bus Voltage	42 V Regulated
Mass	2,450 grams excl. HV cable
Operational Life	12 years
Reliability	< 500 FIT
Telecommands	TWTA ON/OFF ARU ON/OFF
Telemetries	I Helix I Main Bus V Anode TWTA Status ARU Status
EPC I/Fs	37-pin connector
RF Input/Output	Waveguide WR 42

Table 1. Ka-band TWTA Main characteristics and performances.

Item	Up/Down-Forward	Frequency, GHz	Space/Ground	Applications	Direct/Relay	GEO/MEO/LEO	C-LNA/B State-of-the-Art	Study/COTS/Development	Program	Spacecraft	Company/Country/Space Agency	Year Reported
C1	U D	25.0–27.5 2GHz BW Receive	S	Auto Tracking of Ka-Band Antenna	D R	L	**Tracking Receiver** for 3.6 m antenna with .22 degrees HPBW- receives signal from LEO a)- performs low noise amplification- b)- dpown-convert com signal to IFof 4.8 GHz, then to 140 MHz in a BW limited filter: .5 to 4 MHz BW. controlled by AGC., c)- detects 2axis Az & El error signals generated by TM01 mode coupler & generates AGC control signals to Antenna Pointing Electronics APE. LNA is PHEMT, pseudomorphic High Electron Mobility Transistor, 1.6 db NF, 19 db gain, across 2 GHz BW.	D (EM)	Japan 2sat: DRTS-E & DRTS-W	Data Relay Test Satellite	Mitsubishi-NASDA	1998
C2	U D	20.–30.	S	MMIC	D R	L M G	**MMIC Modules for Phased Array Antennas**: GaAs pHEMT : gain/ module 60dB, Pout= 3-15W, Phase control within +-6deg, Amplitude Matching to few 0.1 dB, Adjustable Pout 10% to 100%- Linearity 15 dB NPR-20 GHz LNA mounted on DBIT substrate: Direct Backside Interconnect Technology: (see gain performance vs frequency curve)	C			Raytheon, USA	1998
C3	U	46.–54.	S		D R	L M G	**U-Band 46-54 GHz MMIC LNA**: Hermetically sealed, 4-stage MMIC amplifierG34dB, NF 4 dB at 50 GHz	C			Mitsubishi-Japan	1998
C4	D	31.8–32.3	S		D	G	**Cooled Ka-Band LNA ESA 1999 Design, Development and Test: device vs MMIC**, 20 K max at nominal -258 Degrees C, size 7x4x2 cm., Gain >35 dB, G flatness 1 dB, G stability .2 dB, 1 dB compression point + 0 dBm, IP3 output >15 dBm,	S			ESA RFP	1998
C5			G	Not Space Qualified			**Millimeter Wave Mixers Products**: **Balanced Diode Up & Down converters Products**: LO 56.2 GHz, Power 12.4 dBm, IF 3 GHz Typical, Conversion Loss 18 dB. **Balanced HEMT Mixer Down Converter Product**: LO 56.2 GHz, Power 12.4 dBm, IF 1 GHz Typical, Conversion Loss 10 dB.	C			Farran Technology	1999
C6		18.7–56.2	G	Not Space Qualified			**Millimeter HEMT Frequency Tripler Product**: Input frequency & Power 18.75 GHz & 16.5 dBm, Output frequency & Power 56.25 GHz & 2.34 dBm, Conversion Loss 14 dB.	C			Farran Technology	1999

Table C. LNA/B State-of-the-Art

Millimeter Wave InP HEMT Low-Noise MMICs:

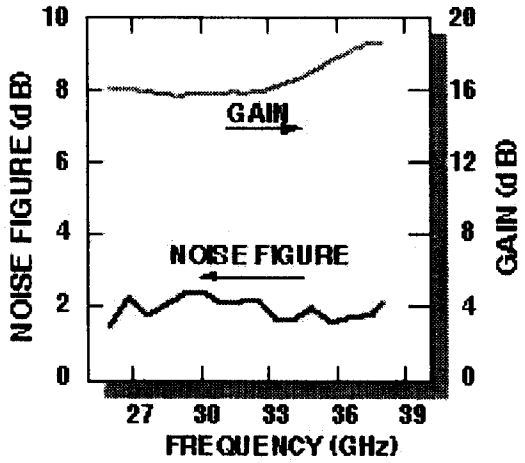

Ka-band 2-Stage LNA

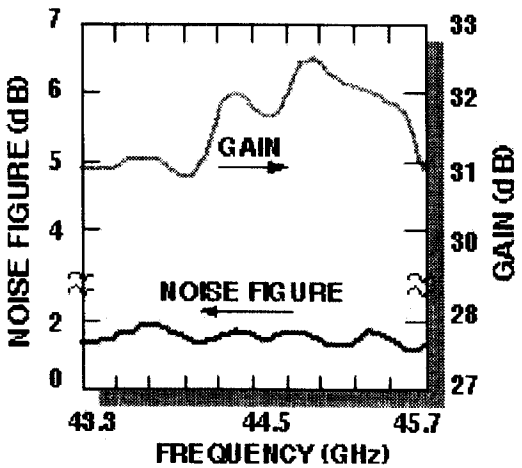

Q-band 3-stage LNA

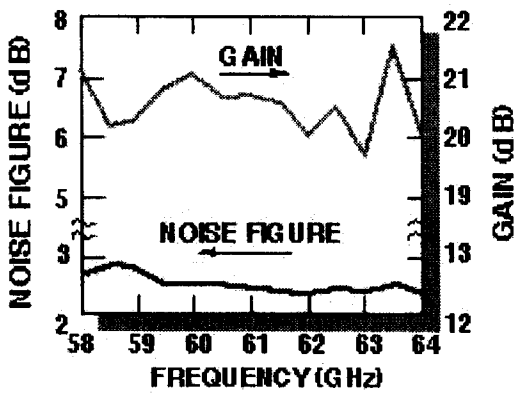

V-band 3-stage LNA

Item C.2.1

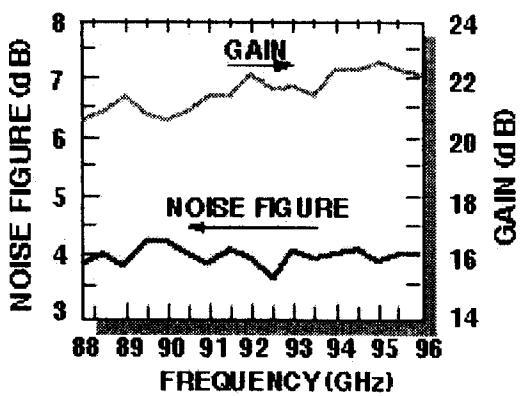

W-band 3-stage LNA

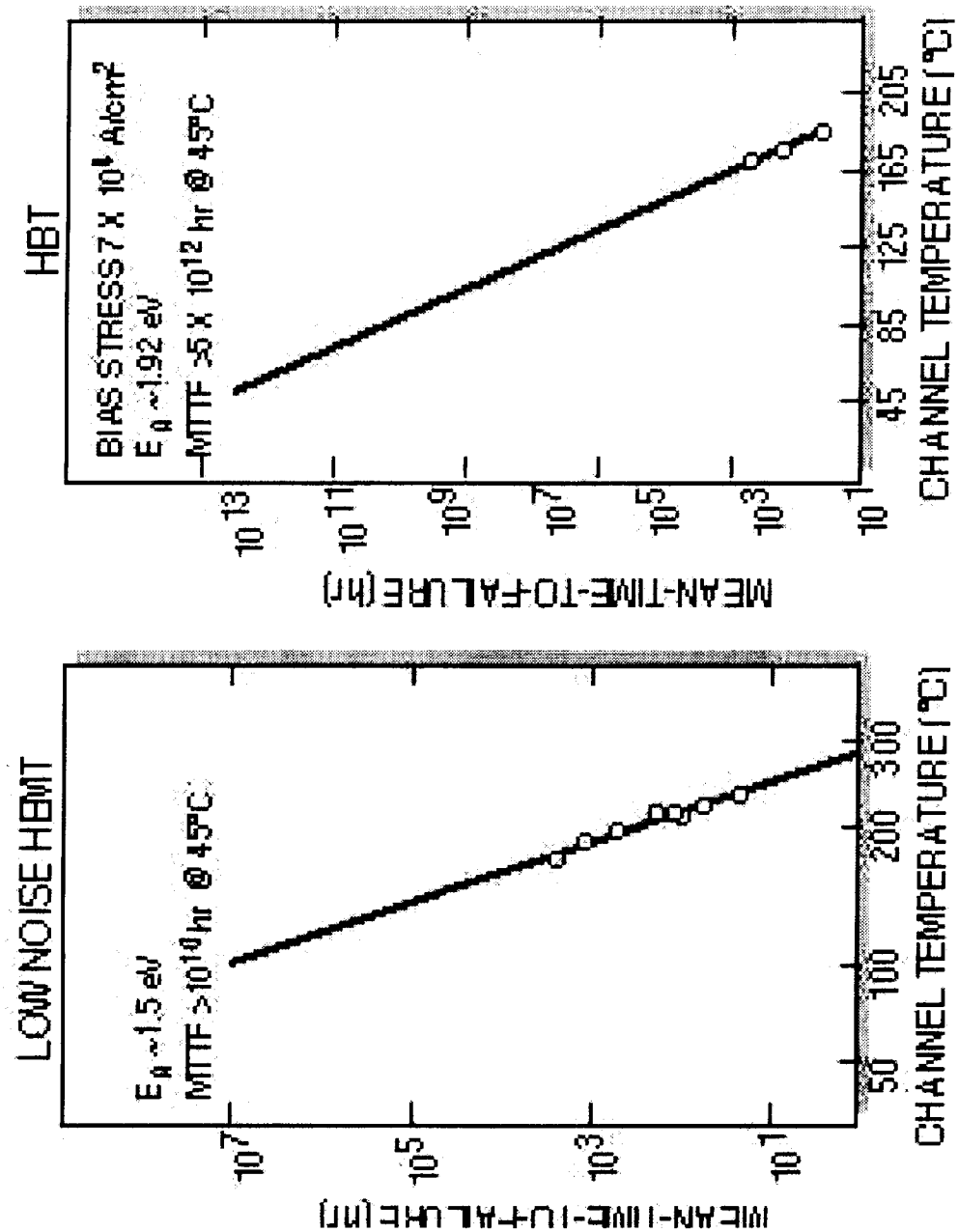

InP-based Device Reliability

Item C.2.2

Switch/LNA Gain - 8 Carriers

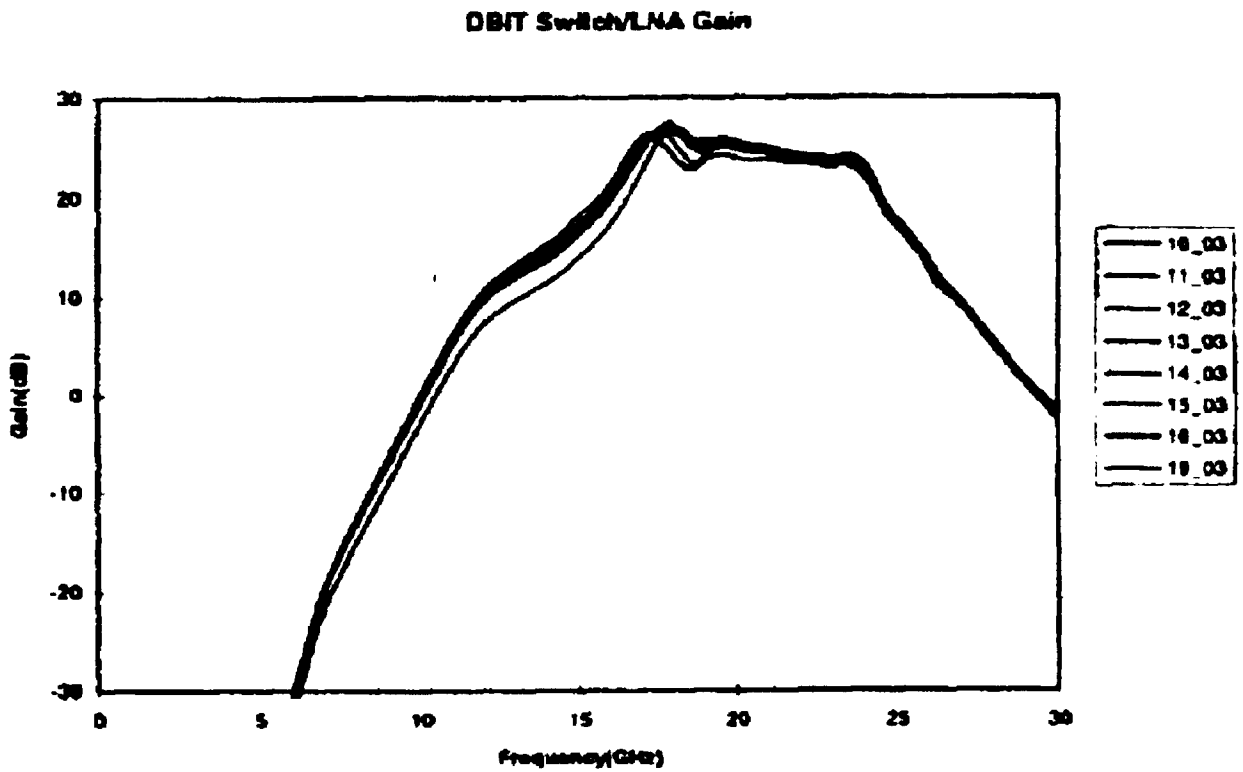

Item C.2.3. Measured results on 20 GHz LNAs measured in DBIT substrates.

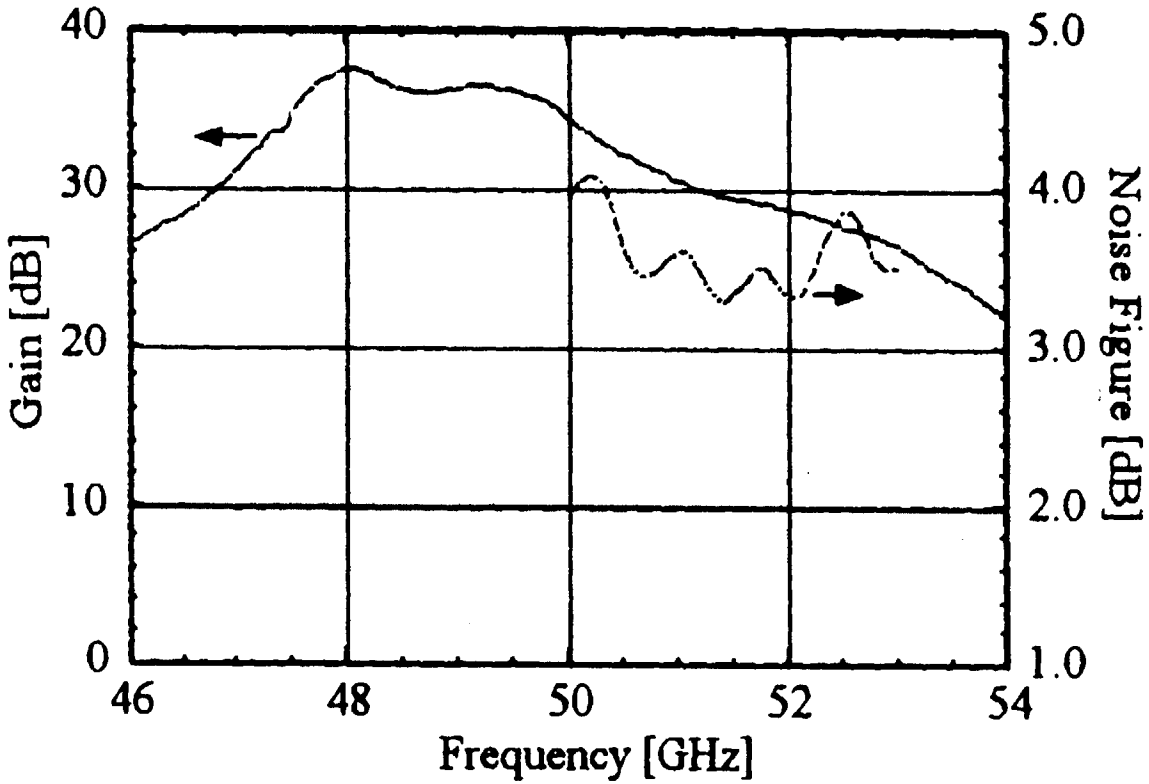

Item C.3 **Measured gain and noise figure of the 4-stage LNA module**

Item	Up/Down-Forward	Frequency, GHz	Space/Ground	Applications	Direct/Relay	GEO/MEO/LEO	D-MMIC State-of-the-Art	Study/COTS/Development	Program	Spacecraft	Company/Country/Space Agency	Year Reported
D1		28.5–35.0	S	Communications	D		**MMIC VGA Variable Gain Amplifier: MPA, Medium Power Amplifier & HPA High Power Amplifier**: VGA NF= 2dB, G= 29 dB, Variable G = 50 dB MPA P=25.8 dBm at 19 GHz & 15 dB linear gain 17-20GHz- PHEMT HPA 31 dBm & power added efficiency of 55.6%m + 9.2 dB gain at 18 GHz.	D	R&D		Mitsubishi-Japan	1998
D2		19.–25.	S	Communications	D		**Hybrid -MMIC Module for Linearized Channel Amplifiers**: two PHEMT, 3 buffering attenuator 3/25/00 25 dB gain 17-21 GHz. + Diode Linearizer Bridge Module: phase shift of 650 deg & gain expansion of 4 dB at 20 GHz. Ring Modulator Isolation 25dB at 20 GHz.	D	R&D		Bosch-Germany	1998
D3		27.5–31.	G	Ka-Band Terminals <1 m Multimedia up to 2 Mbps & 2W HPA	D R		**Ka-Band MMIC SSPA SOA is to-day limited at 28 dBm at 25o C & 1dB compression, while a 2 Mbps cost effective terminal requires 33 dBm**: Hard Compression may help by using existing SSPA at the 0.2 dB compression. But this increases spectral regrowth and Intersymbol interference ISI. Conclusion: the 1 dB gain compression commonly used to specify transmitter power. But performance can differ significantly with different compression characteristics. The solution is to specify adjacent channel and ISI in the SSPA performance & system trade-offs. Problem of temperature compensation for OutDoor units, ODU, is still an issue.		R&D		Canadian Norsat	1999
D4		20	S		D R		**20 GHz, 2W MMIC SSPA:** Output Power 32.8 dBm, gain 43 dB, an all MMIC chip, 4 mils thick GaAs substrate using .15 Micron InGaAS/GaAs Pseudomorphic HEMT, using a .8 dB insertion loss Wilkinson combiner on 15 mil Alumina substrate. The SSPA P1dB is 30 dBm, with Power adding Efficiency of 12.6%. This 2W SSPA will be used to build a 10W MMIC SSPA at @) GHz-Band satellite test bed.	D	R&D		ETRI, Korea	1999
D5		1–100	S	LNA, HPA, mixers, attenuators			**1–100 GHz MMIC Products**, for low noise receivers, power amplifiers, variable gain amplifiers, mixers, phase amplifiers & attenuators. Key features: **a- Power MESPHET technologies**, .5 micron gate length for up to 20 GHz, power 0.5 W/mm **b- PHEMT technology**: 0.25 micron for up to 60 GHz, 1.5 dB noise at 40 GHz	C			UMS-ESA-CNES-DARA	1999

Table D. MMIC State-of-the-Art

PROPOSED USER TERMINAL PARAMETERS FOR KA-BAND SATELLITE SYSTEMS

(References [3] to [8], Applications to FCC - unless otherwise noted)

System	Data Rate (kbps)	Antenna Diameter	Transmit Power	Max EIRP (dBW)
ASTRA[1]	144 to 2048	0.6 to 1.2 m	0.5 to 2 W	40 to 50
Astrolink	16 - 384	65 cm	0 - 2 W	47
	2048	75 - 85 cm	0 - 2 W	48.3 - 49.3
Cyberstar	16 - 384	70 cm-1.5 m	up to 1.0 W	44.6 - 51.2
	15444	1.5 - 3.0 m	up to 1.0 W	51.2 - 57.3
KaStar	≥ 384	66 cm - 2 m	0.5 - 2 W	47.0 - 56.7
Galaxy / Spaceway	16	66 cm	up to 2 W	up to 47.0
	1544	up to 1.8 m	up to 2 W	up to 55.8
Millennium	384 / 786	≥ 70 cm	0 - 2 W	47.6
GE*Star	384 / 1544	75 cm	1 W	45.3

Item D.3

Item D.3 (Cont.)

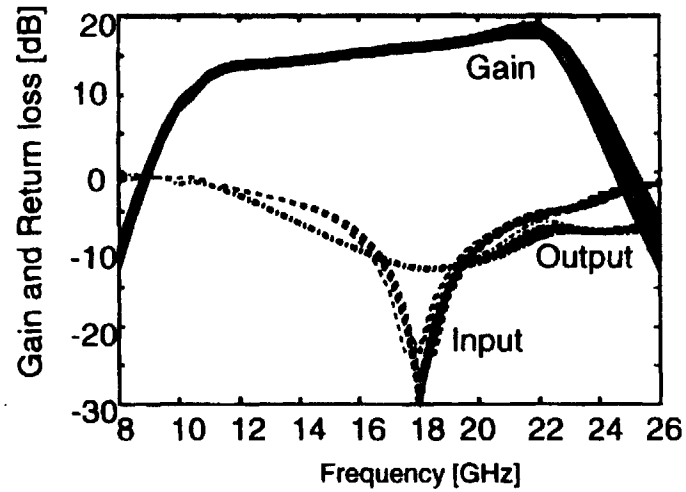

Figure 7. Measured frequency performances of the MPA MMIC fabricated in a wafer.

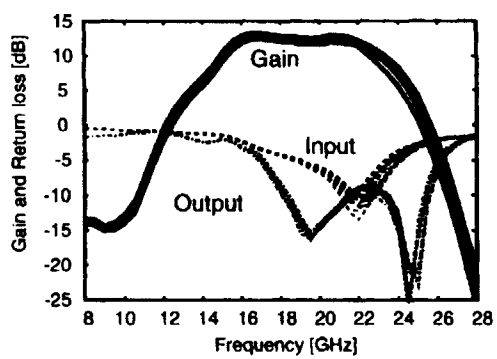

Figure 9. Power characteristics of the HPA MMIC.

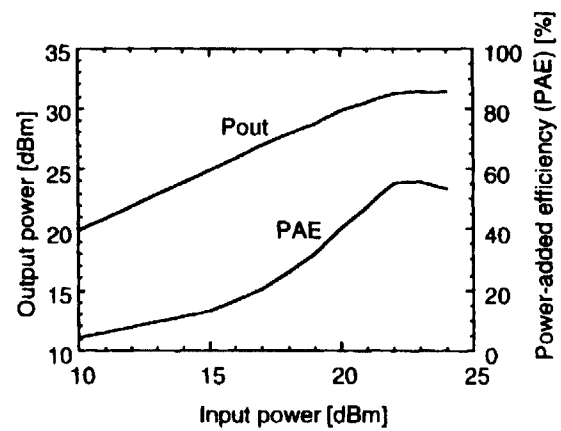

Figure 12. Output performance of the power PHEMT.

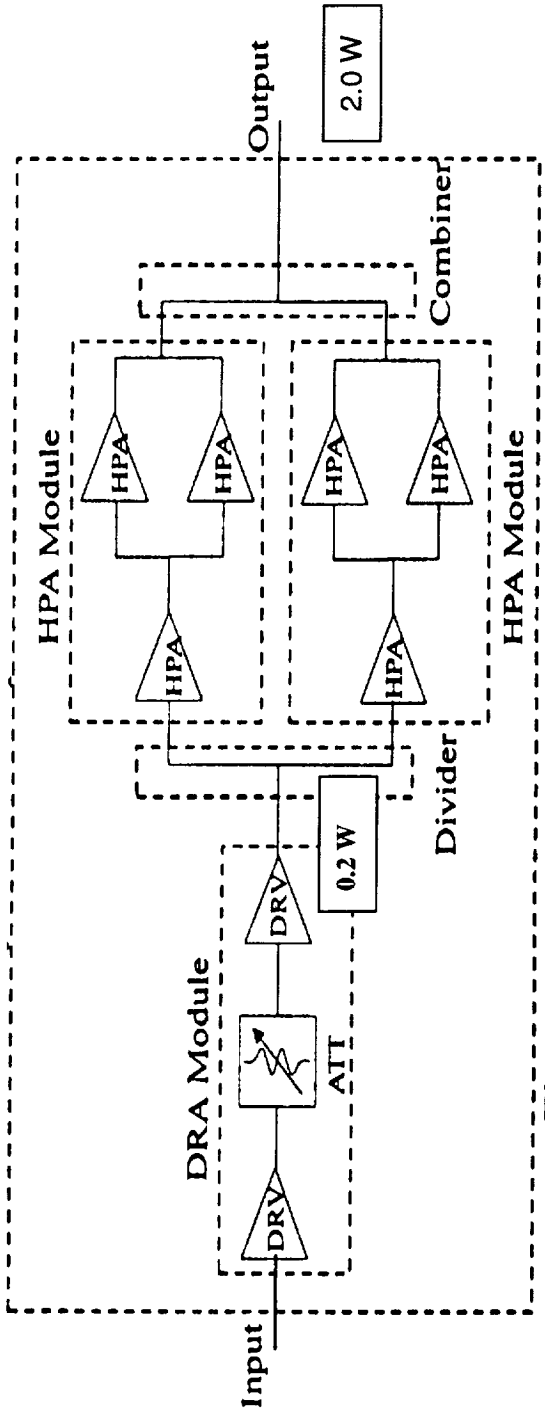

Figure 1. Block diagram of 2W SSPA

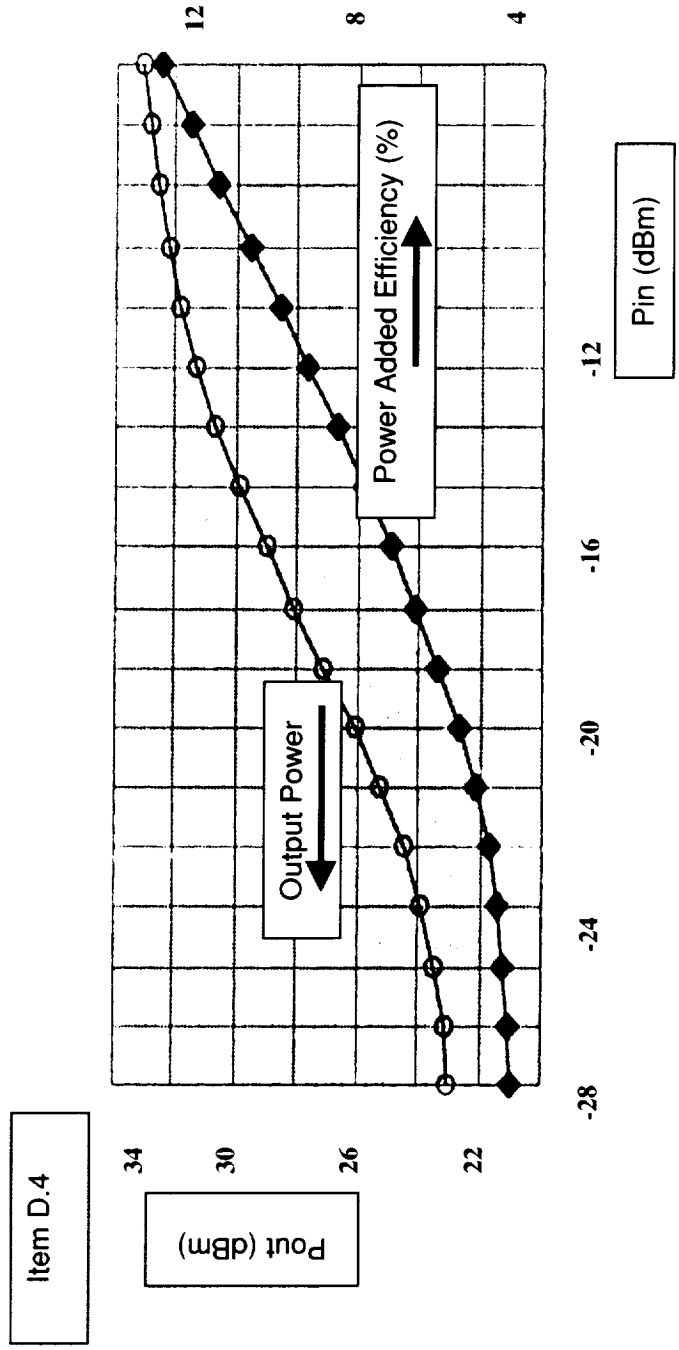

Item	Up/Down-Forward	Frequency, GHz	Space/Ground	Applications	Direct/Relay	GEO/MEO/LEO	E-MICROWAVE/IF SWITCH MATRICES State-of-the-Art	Study/COTS/Development	Program	Spacecraft	Company/Country/Space Agency	Year Reported
E1	D	17.7–20.2	S	Ka-Band Multimedia with Multibeam Traffic Reconfiguration and frequency reuse		G	**Switchable Multibeam Butler Marix Distributed or Multiport Power Amplifier**: An 8x8 input/output amplifier matrix is being developed , using Butler Matrix Amplification, BMA: using 8x 120W TWTA, for EuroSkyWay 8 fold frequency reuse. Therefore, four 8x8 BMA are required. The MNA is based on arrays of equal amplifiers boosting the power of a combination of all transponder signals, in between input and output hybrid networks, ultimately connecting the reflector antenna feed elements to generate multiple beams. The advantage over the bent pipe approach is that a signal entering any input port is equally shared amongst all amplifiers and is recombined to exit from a single port.	D	ARTES	Euro SkyWay	Alenia/ESA TWTA by FIAR (Italy)	1998
E2	U D	27.5–31.0 17.7–21.2	S	Ka-Band MBA with OB RF Hybrid Splitters & IF Switch	D	G	**On-Board RF Hybrid Splitters** & IF Switch, 8 uplink beams x2frequencies and 3 downlink beams x 2 frequency, then converted to IF, fed to a 16x6 IF Switch2.2m Ka-band MultiBeam Antenna: NSTAR: EIRP=51, G/T=14 uses MultiPort Ampl, MPA with to enable Satellite switched SS-TDMA. GaAs-FET Monolithic Microwave IC, MMIC Switch stem.	D Flight	NSTAR a & b already in service	Communica-tions Payload Technology	NTT-Japan	1998
E3				ATM Switch, as well as IF Switch			**On-Board ATM Switch**: Gigabit Satellite: SDH based Format applied to the Interface of the OB ATM Switch, for a maximum of 156 Mbps using high speed LSI for space use. This is in addition to a bent-pipe IF Switch.	D		Gigabit Satellite	Mitsubishi & NASDA	1998
E4		IF		IF Switch for analog repeaters & analog video signal processing			**Analog IF Switch Matrix Product, 16x16 channels switch matrix & 12x12 channel vector modulator**: using 0.8 Micron junction isolated BiCMOS monolithic IC process. With this technology, it has the largest commercially available circuits: m4x8 or 8x8. Its median frequency is 160 MHz and bandwidth is 30 MHz. It has <3dB insertion loss, >45 dB isolation, <40dB crosstalk pin to pin.. The vector modulator features are: 4-bit, 0-3600 phase control, 4-bit amplitude control, 8x8 mm2 chip.	C			VTT Electronis/MIK, Finland ESA	1999

Table E. Microwave/IF Switch Matrices State-of-the-Art

Item E.2

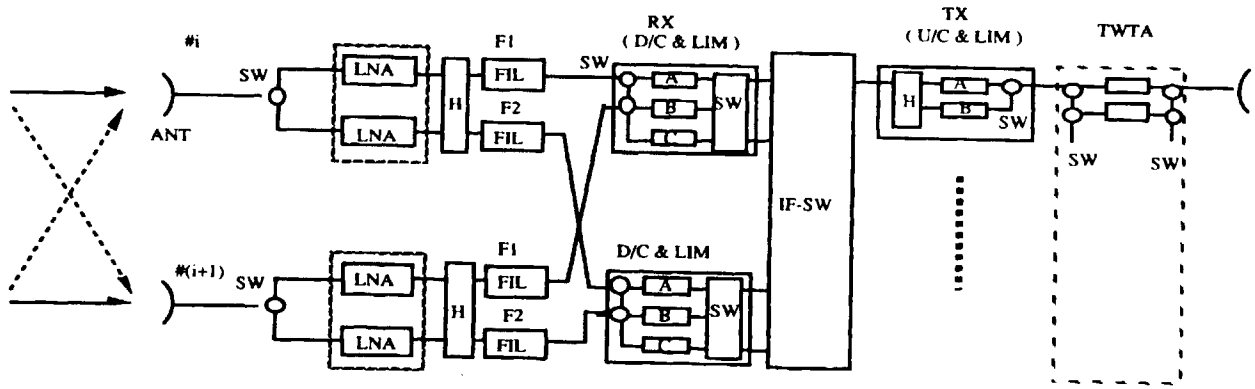

Fig. 4 Configuration of Ka-band multi-beam payload

Item E.3.1

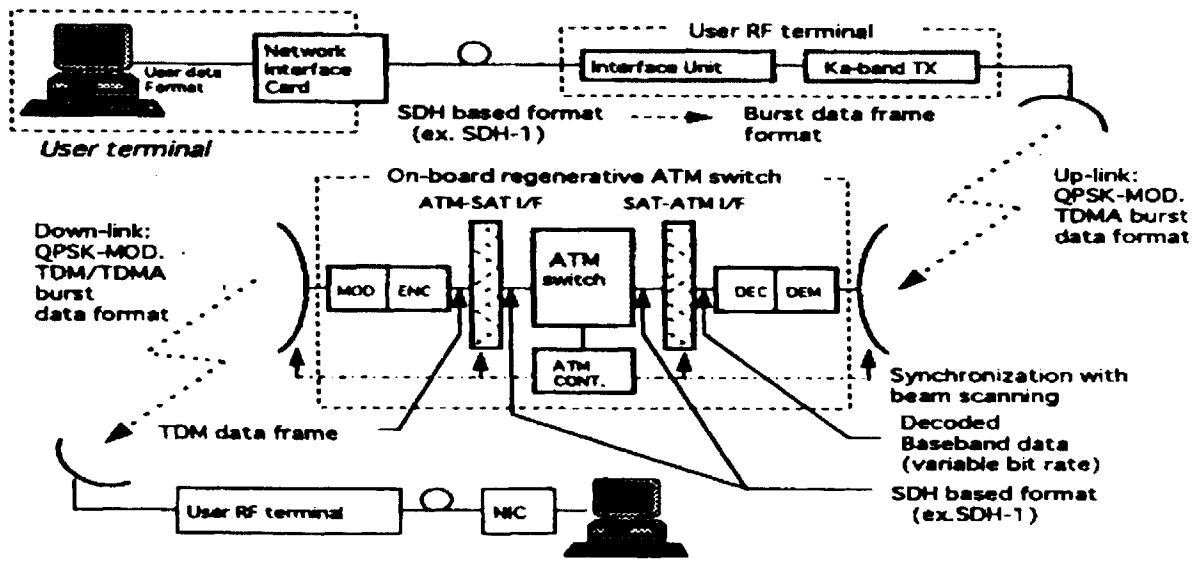

Fig.-6 Concept of the on-board ATM switch system

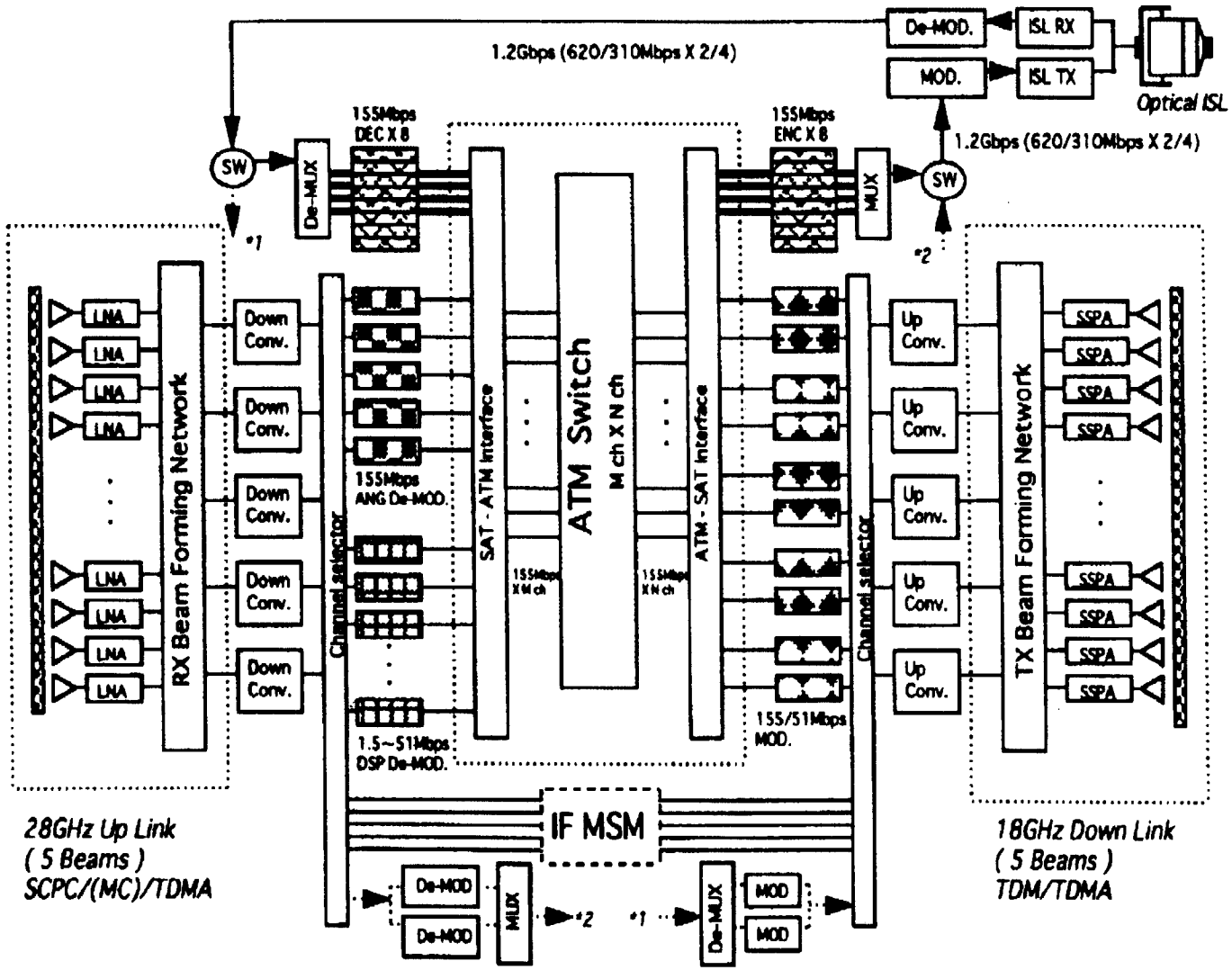

Item E.3.2 Schematic Diagrams of the Experimental Gigabit Communications Mission Payload

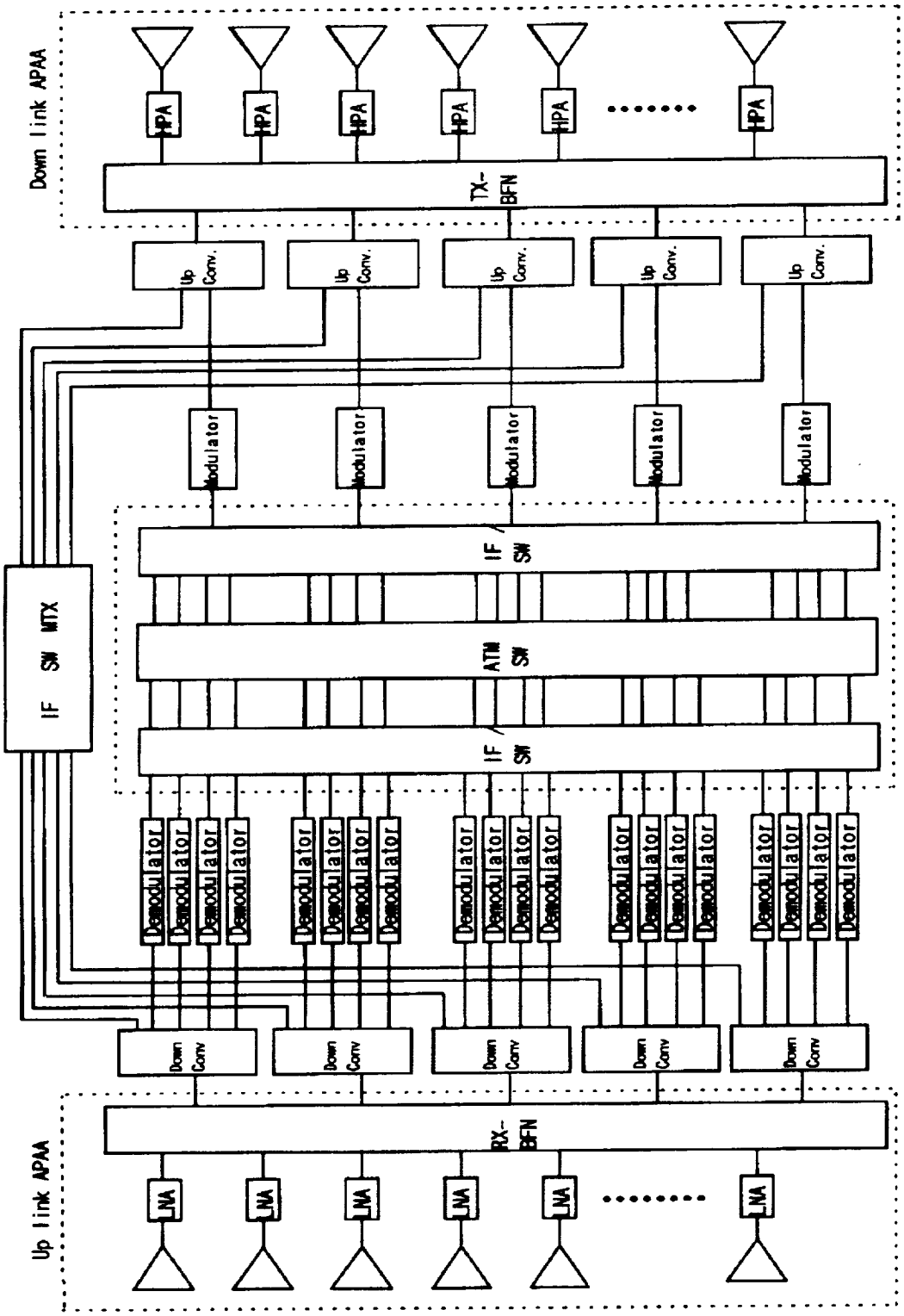

Configuration of Gigabit Communications Technology Satellite

Item E.3.3

Item	Up/Down-Forward	Frequency, GHz	Space/Ground	Applications	Direct/Relay	GEO/MEO/LEO	F-SAW Devices	Study/COTS/Development	Program	Spacecraft	Company/Country/Space Agency	Year Reported
F1	D F	IF	S				**SAW IF Processor Product**, first used for Inmarsat Third Generation, later by MSAT and AMSC and Developed by Comdev Canada, was Proposed by N. Sultan at CAL Corp, for Inmarsat Third Generation System Study. The concept is still the SOA for Multibeam Communications Satellites control of IF centre frequency and downlink channel bandwidth-on-demand. t uses Sub-Bands channelization to reconfigure Multibeam frequency reuse mobile and fixed satellites. **Key Issues** in SAW is the sharp filter response resulting in bandwidth saving, but also SAW has bandwidth limitations. SAW are ideal for large number of narrowband spot beams, better suited for mobile. However, for FSS, where the FSS market is towards reduced bandwidth/beam and greater connectivity, there is a promise that FSS SAW Processors may compete with digital processors. Starting with 70 MHz IF SAW Processor, SAW filters R&D is heading for four hundreds of MHz and possibly higher in the long term.	C		Inmar sat3, Canadian MSAT and US AMSC-EMS and Artemis	CAL Corporation now EMS Technologies	Reference: Sultan N, "Adaptive Sub-Bands Channelization." AIAA 12th International Communications Satellite Systems Conference, Va, 1988.
F2							**There is a need to reduce the high insertion loss and hence power consumption of SAW filters, for the digital processing of broadband signals, such as multimedia. In a regenerative OBP architecture.** SAW filters are used in the downconverters prior to digitization and in the upconverters to remove image products generated by the D/A converter and which are very close to the LO, thus requiring a sharp slope filter like SAW.				CSAT Private Communication	2000

Table F. SAW Devices

Item	Up/Down-Forward	Frequency, GHz	Space/Ground	Applications	Direct/Relay	GEO/MEO/LEO	G-POWER STORAGE	Study/COTS/Development	Program	Spacecraft	Company/Country/Space Agency	Year Reported
G1			S	LEO Multimedia Broadband satellites		L	**Power Management of LEOs Under Bursty Broadband Traffic:** In Varying Communication traffic, the On-Board processor and router act as a varying load on the battery, thus subjecting it to many thermal and power cycles. This affects the the charging and discharging regimes. The amount of traffic determines the battery Depth-Of-Discharge, DOD. It affects battery lifetime, mass and cost, as well as the cost of operations. Several suggestions are given for different approaches to power management strategies to increase battery lifetime and reliability, AND reduce the operation cost	S			Columbia University	1998
G2			S	LEO & GEO spacecraft, and Launchers		G L	**Rechargeable Space Cells & Batteries Products, Nickel Cadmium & Advanced Nickel Hydrogen:** **NiCd** : LEO & GEO, qualified for 20 years **NiH2** : LEO & GEO, qualified for 11 years **LiSOCl2** (200 Ah cell capacity)launchers, qualified since 11 years **AgZn** : launchers, qualified since 20 years	C			SAFT-France & ESA	1999
G3			S	LEO & GEO spacecraft, and Launchers		G L	**Power Sources Space Products:** **1- NiCd: LEO & GEO**, small to medium Telecom & Earth Observation Satellites, for 25 years **2- NiH2: LEO & GEO**, Medium to Large Spacecraft, for 11 years **3- LiSOCl2**: Launchers & Space vehicles, for 11 years **4- AgZn**: Launchers: Ariane 3, 4 & 5, for 25 years	C		1- Helios, Spot, Eutelsat, Radarsat, Metwosat, TV-Sat 2- Arabsat, Omegasat, Goes, Thaicom, Sinosat, Sirius, Msat, Artemis	SAFT-France & ESA	1999
G4							**Considerations in the choice of Power Storage technology**: 1- **NiCd**: 50 Wh/kg: **Advantages**: a- high efficiency 80% b- high current load c- high charge/discharge cycling, but limited to low DOD, d- low temperature sensitivity e- space proven technology- **Disadvantages**: a- low DOD b- high self discharge, c- over-charge sensitive , d- needs special electronics to maintain discharge status, e- toxic cadmium- **2- NiH2**: 60 Wh/kg: **Advantages**: a- high storage density, b- high DOD, c- high cycling, d- high current load, e- over-charge insensitive, f- high efficiency 85%, low temperature sensitivity	S				
G5							**3- LiSOCl2**: 200 Wh/kg: Advantages: a- high storage density, b- low self discharge 1%/year, c- high output voltage, d- operates at wide temperature. Disadvantages: a- poor performance below 50 C, low current load, c- low cycling, d- medium efficiency 60%, e- high charge time & f- danger of explosion (see attached tables)					

Table G. Power Storage

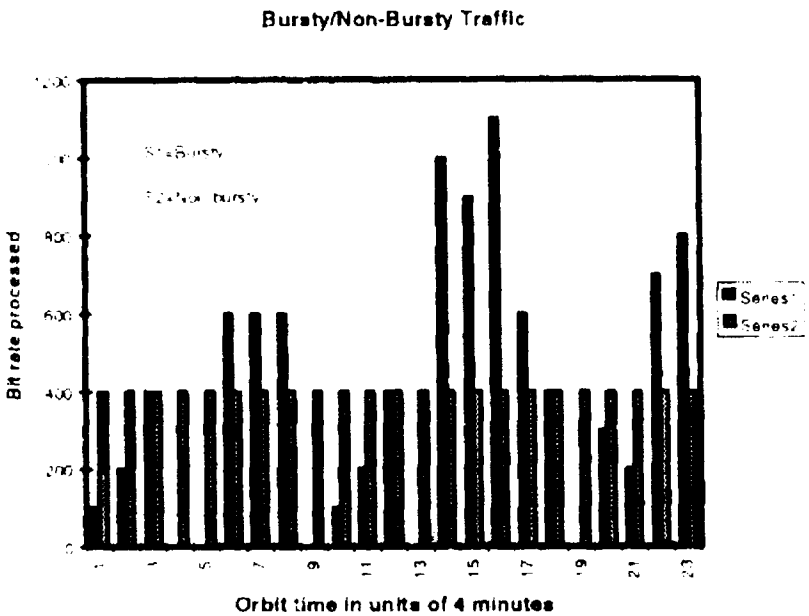

Bursty/Non-bursty traffic for the same amount of cumulative

Item G.1

System	Energy Density
AgO/Fe	60 - 110
Advanced Ni/H2	60 - 80
U.P. LiAl-FeS2	75 - 188
Be-NiF2	95 - 185
LiAl-NiS2	75 - 184
Na/BASE/S	80 - 220
Na/BASE/C12	100 - 350
Na/BASE/TCNE	70 - 100
Na/BASE/CuCl2	80 - 160
Na/BASE/FeCl2	80 - 150
Na/BASE/NiCL2	80 - 160
Li/Solid Ion Conductor/S	100 - 510
Lithium/Polymer Electrolyte	50 - 250
Li/Cl2	80 - 500
Li/Br2	70 - 250
Li/TiS2	73 - 130
Li/NbSe3	80 - 150
Li/Mo6S8	50 - 180
Li/V2O5	75 - 200
Li/a-Cr3O8	75 - 200
LN/O2	60 - 140

Item G.4.1 Estimates of Achievable Specific Energy for Advanced Batteries

Power Storage Type	Specific Energy (Wh/kg)	Energy Density (Wh/l)	Efficiency %	Cycling Capability DOD	Application Limits
Ni-Cd	35 - 50	80	60 - 80	21.000/25 % 3.000/50 % 800/75 %	high degree of self discharge
Ni-H2	50 - 60	80	up to 85	32.900/15 % 23.000/30 % 10.000/80 %	
Na-S	120 - 140	280	> 85	not enough life testing data available	• high operating temperature
Na-NiCl2	100 - 120	200	> 85	greater than for Na-S, not enough life testing data available	• risk • high operating temperature
AgO-Cd	55	110	70 - 75	6500/20 % 1200/50 %	High energy density, low self discharge
AgO-Zu	90	180	70 - 75	500/20 % 120/50 %	Highest energy density, high discharge rate, low self discharge

Item G.4.2 Characteristics of Secondary Batteries for Use in Space T

Item	Up/Down-Forward	Frequency, GHz	Space/Ground	Applications	Direct/Relay	GEO/MEO/LEO	H-DATA STORAGE	Study/COTS/Development	Program	Spacecraft	Company/Country/Space Agency	Year Reported
H1			S	Typically, recording of PCM Encoder/ Telemetry data		G M L	**SOLID STATE Space Qualified Recorder SSR Product (data up to 224 Mbytes):** Real-Time storage or serial digital data. Data is stored in flash memory modules. At 1 MHz Bit Rate input, the SSR with 224 Mbyte memory can store 30 minutes of Data. Systems may be daisy-chained for extended storage. It can be operated stand alone by the termination of a few external control lines, allowing basic operation in fixed installations or control by a computer. The SSR may be powered off after data storage without loss of information, as there is no internal battery. It can resume recording by appending new data. It has input data buffer for burst data, extended storage by daisy chaining any number of recorders, set and read memory address, a configurable PCM Encoder module for analog and digital data collection and is shock/vibration resistant.	C		Ariane 502: MASQAT mission & Ariane 503	Eidel-ESA	1999
H2							**ROTATING MEMORY: Future of Data storage Technologies: 1-OPTICAL STORAGE, 2-MAGNETIC DISK TECHNOLOGIES, 3- MAGNETIC TAPE STORAGE** (see projections in attached charts) **Advantages of Rotating Memories**: 1- very high radiation tolerance 2- non-volatility 3- high integration capability **Disadvantages of Rotating Memories**: 1- sensitivity to mechanical vibrations, shock & acceleration 2- low temperature range Specific Limitations to use in space: a- Magnetic Optical Memory: very low temperature range, b - Magnetic Disk Memory: sensitive to vacuum environment, c- CD-ROM: very low temperature range, d- Magnetic Tapes: sequential data access, sensitive to vacuum environment, very low temperature range and low MTBF. **Holography Memory** is very promising in memory capability , but space qualification to be established	C			ITRI Panel June 1999	1999
H3							**CONSIDERATIONS in CHOOSING MEMORY & CONFIGURATIONS for SPACE:** 1- MTBF reliability, 2-user capacity, 3- operational temperature, radiation, mechanical & vacuum, 4- data error rate, 5- data access time, 6- data transfer rate, 7- rewrite access capability, 8- cost, 9- mass & volume, 10- power, 11- risk & 12- schedule	S				1999

Table H. Data Storage

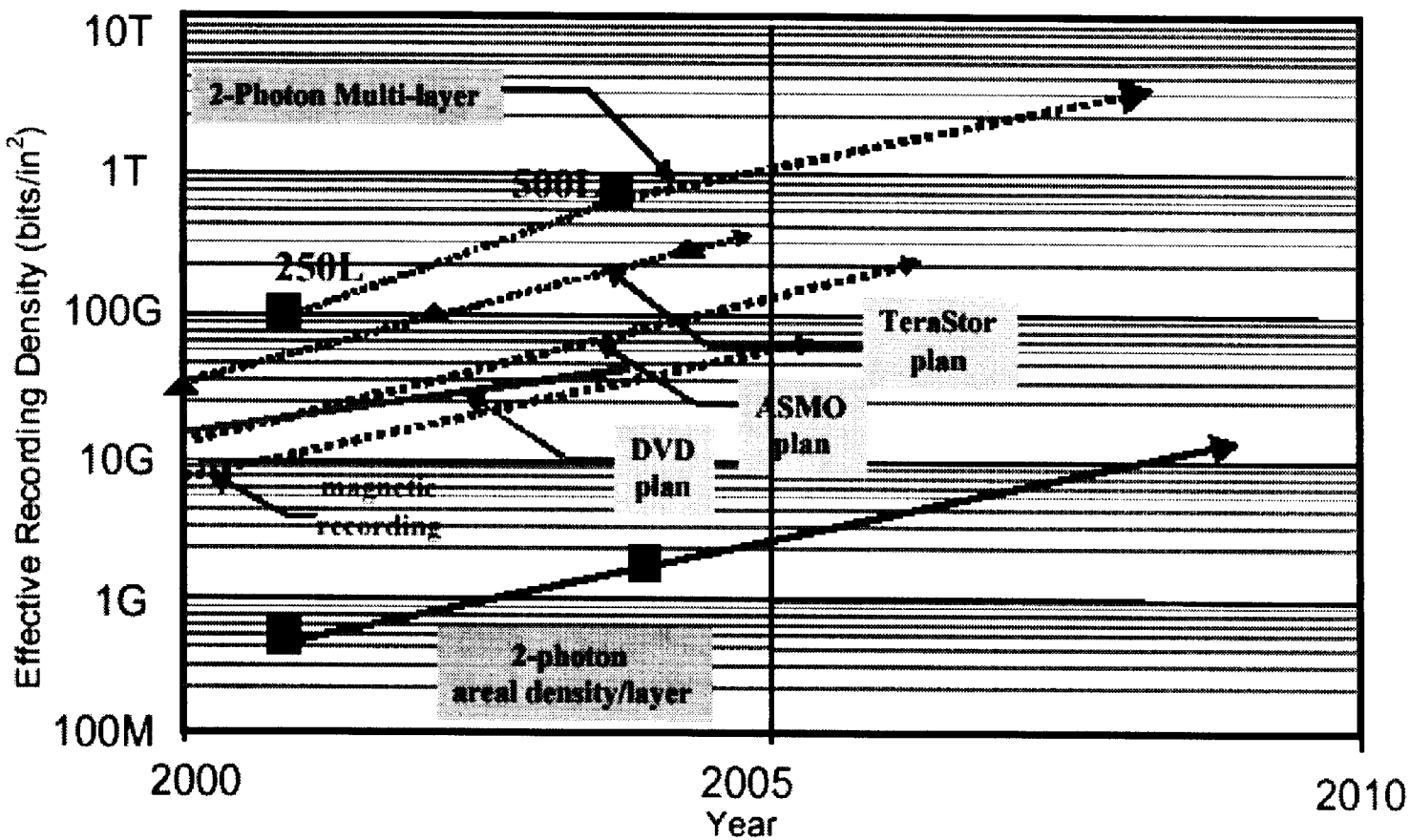

Fig. 7.15. Potential impact of 3D multi-layer optical storage and its comparison with conventional data storage and new emerging techniques such as SIL (compiled from data obtained from Terastor Web site, OITDA storage roadmap and Call/Recall, Inc. internal reports).

Item H.2.1

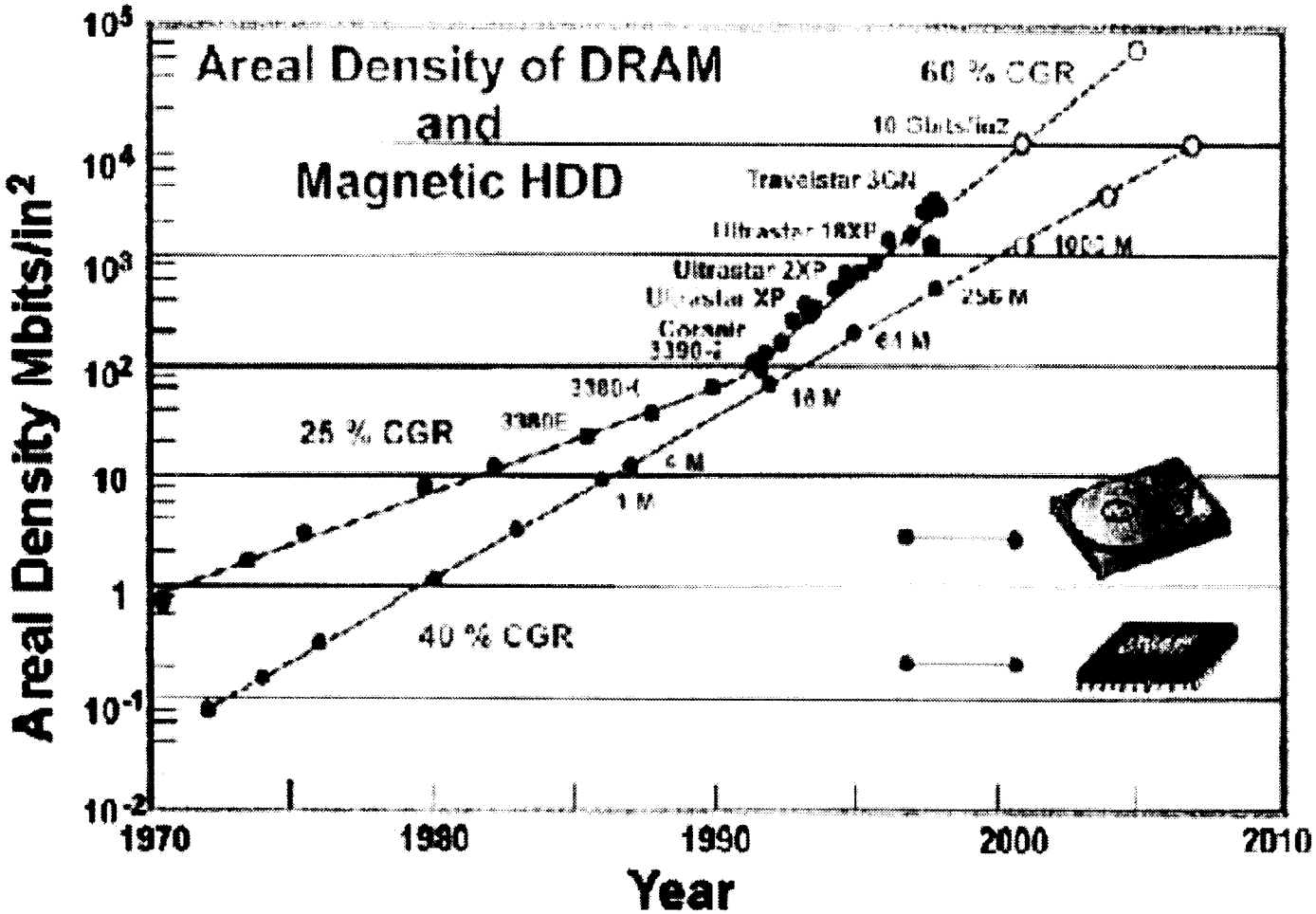

25% = 2X per 3yrs.	
40	2
60	1.5

ITEM H.2.2

Fig. 2.3 Areal density of magnetic hard disk drives and of dynamic random access memories as a function of the year of shipment (IBM)

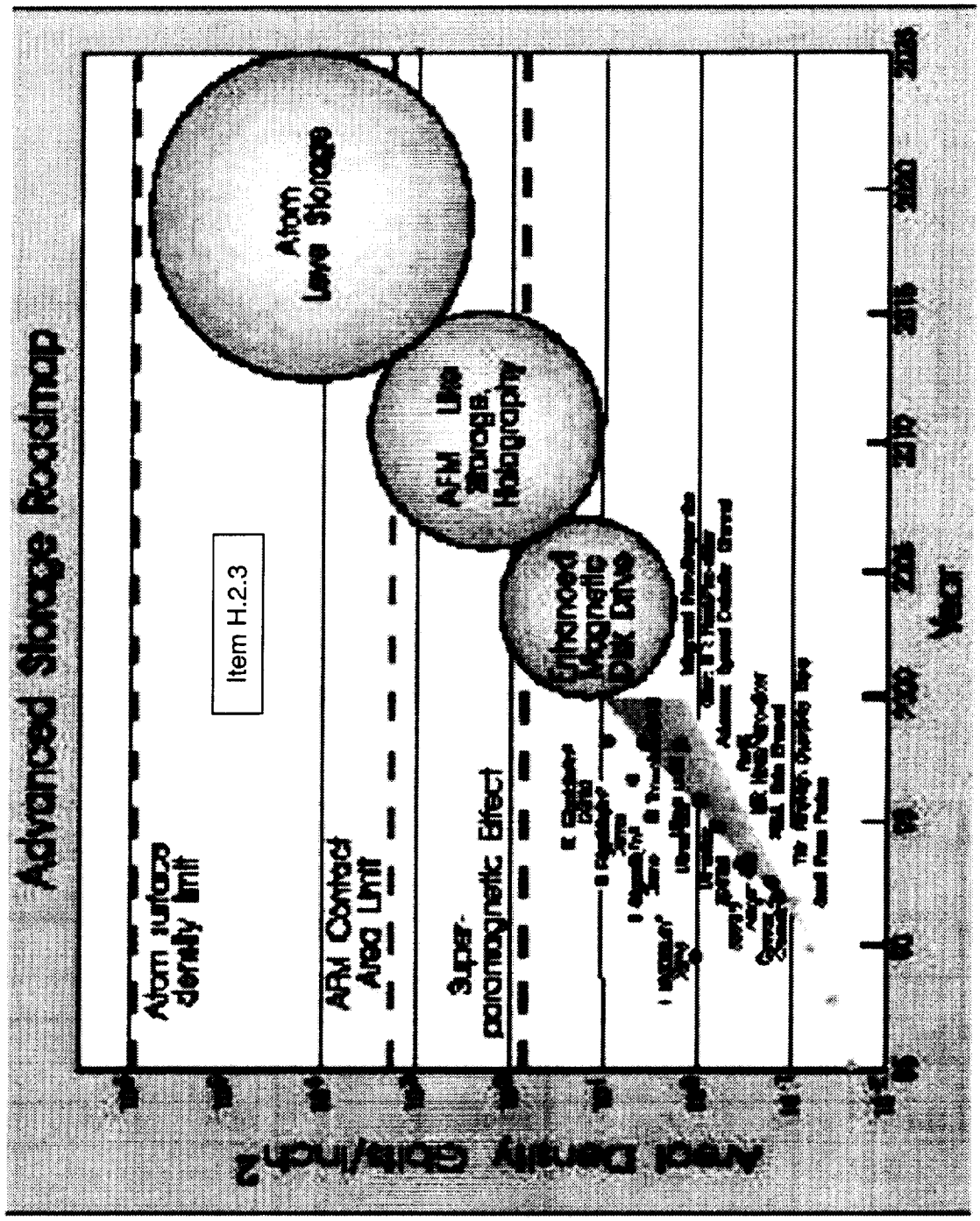
Advanced Storage Roadmap
Item H.2.3
Atom surface density limit
AFM Contact Area Limit
Super-paramagnetic Effect
Atom Level Storage
AFM Line Storage, Holography
Enhanced Magnetic Disk Drive
Year
Areal Density Gb/in^2

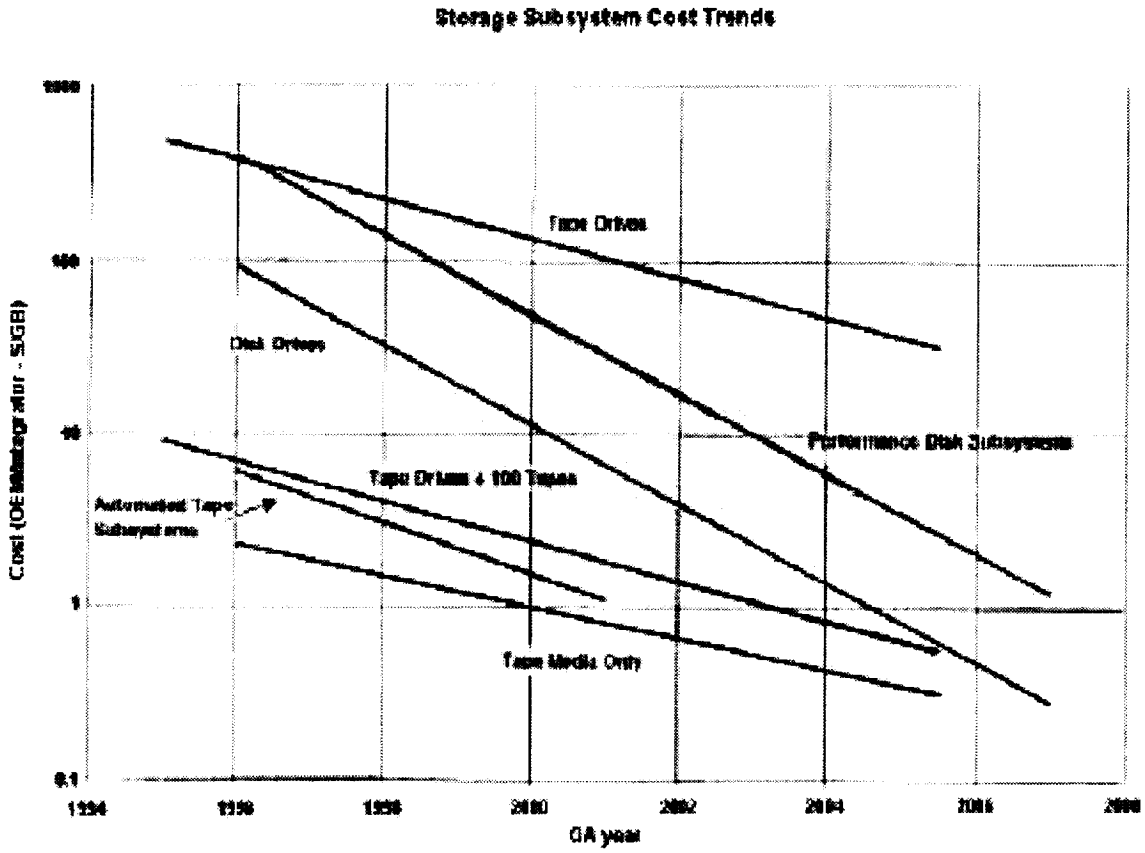

Fig. 4.1. Storage subsystem cost trends.

Table 4.1
Tape Density Projections

Year	Linear Bit Density (kbpi)		Track Density (tpi)			Volumetric Density Terabytes/in^3
	Linear	Helical	Linear	Helical	Helical	
1997	100.00	120.00	750	2,800	-	<0.2
2002	200.00	200.00	6,000	6,000	6,000	0.9
	(25 dB @ 100 kcfi)					
2007	300.00	300.00	20,000	--	20,000	4.7

Source: NSIC, May 1998. Used by permission.

Item H.2.4

Item	Up/Down-Forward	Frequency, GHz	Space/Ground	Applications	Direct/Relay	GEO/MEO/LEO	I-ASIC State-of-the-Art	Study/COTS/Development	Program	Spacecraft	Company/Country/Space Agency	Year Reported
I1			S	Communications Broadband Remote Sensing		G L	**COMDEV Programmable ASIC for Universal Modulator, for e.g. single-hop, multiple-ISL regenerative satellites, for alternative routing methods for new mobile and fixed multimedia networks**: OC3 155 Mbps, includes scrambler, interleaver, Reed-Solomon encoder, convolutional encoder, differential encoder, frame inserter, symbol mapper, digital filter, clock generation & control module. ASIC supports a variety of modulation & coding schemes. It is programmable for different standards: DVB, CCSDS, ATM, etc. requirements in rate structure, frame structure, encoding formats, operational modes, power control etc.	C			COMDEV-CSA-ESA	1999
I2							**COMDEV Digital Filter**: Radiation hardened, high speed OC3 155 Mbps, digital pulse shaping filter (SRRC: Square Root Raised Cosine) for use on COMDEV Universal Modulator.	C			COMDEV	1999
I3			S	Mobile personal, FSS, Multimedia & Digital Broadcast		G M L	**A 3500 ASICs Digital Processor Product for Communications Satellites**: Typical processing functions: frequency multi//demultiplexing, carrier mod/demodulation, frequency mapping of carriers to & from beam ports or feed ports, with digital beam forming: 3500 ASICs, 1.2 KW, 130 Kg, 34 MHz/channel, 50 KHz spacing, 2000 carriers routing capacity, 200 beams, 110 (90 active) feed paths, 25–30 dB carrier SNR.	C			Matra Marconi-ESA	1999

Table I. ASIC State-of-the-Art

Table 8: ASIC features and programmability (summary)

Feature	Programmability	
Scrambler	Any polynomial up to 15th order	
R-S Encoders	Based on 2^8 Galois field implementation	Based on 2^4 Galois field implementation
	Supports the following family of codes: R-S(255-i, K-i, t) for 0<i<K	Supports the following family of codes: R-S(N-i, K-i) for N=15, K=11, i=0, 1, or 2
Interleaver	Interleaving depth range 1 – 16 Unit delay 1 - 25	
Convolutional Encoder	½ rate 64 state (max) programmable polynomial 2/3 rate 64 state programmable polynomial 3/4 rate 64 state programmable polynomial 2/3, ¾, 5/6, and 7/8 punctured encoding	
Symbol Mapper	Arbitrary input bits-to-output symbol mappings	
FIR Filter	Digital FIR Filter	
Filter Design	♦ Programmable (waveform) coefficients ♦ 'roll-off' 0.2 to 0.6 Bandwidth (cut-off frequency) ♦ Number of Taps (24, 48) ♦ Number of samples per symbol	
Filter Modes	♦ Normal Mode ♦ Double Span Mode ♦ FourSPS Mode ♦ Complex Mode ♦ Bypass Mode	Item I.1
Modulation Format	BPSK, QPSK, 8PSK, 16 QAM, OQPSK, PTCM	
Input Frame Structure	♦ Unformatted input data ♦ Formatted input data – packet length ≠ programmed R-S block length ♦ Formatted input data – packet length = R-S block length	
Marker Insertion	Length (bits)	Insertion interval
Packet	8 - 32	every packet
Frame	8 - 32	8 – 2048 packets
Superframe	8 - 32	8 – 256 frames
Preamble	Length (bits)	Repetition
Carrier recovery	2 – 48	0 – 26 times
Symbol timing	2 – 48	0 – 26 times
Unique Word	8 - 96	none
Postamble	48 – 132 bits	
Data Rate	1.5Mb/s – 155.52Mb/s	
Power Control	Output power 20dB adjustable in 0.1dB steps	
Modes of Operation	Standby Mode, Continuous Mode, Burst Mode, Beam-hopping Mode	
Control	Transmitter on/off, Gain control, Channel selection, Manual override and many more features	

Table 1: Power/Bandwidth Efficiency Schemes

ID	Modulation/Coding Item I.1 (Cont.)	Min. Eb/No	Bandwidth Efficiency (40% roll-off)
		(dB)	(bps/Hz)
MC1	QPSK, conv. 1/2, RS(204,188)	3.4	0.66
MC2	QPSK, conv. 2/3, RS(204,188)	3.9	0.88
MC3	QPSK, conv. 3/4, RS(204,188)	4.4	0.99
MC4	QPSK, conv. 5/6, RS(204,188)	4.9	1.10
MC5	QPSK, conv. 7/8, RS(204,188)	5.3	1.15
MC6	T8PSK, RS(204,188)	5.9	1.32
MC7	QPSK, conv. 1/2	6.7	0.71
MC8	T16QAM, RS(204,188)	6.9	1.97
MC9	QPSK, conv. 2/3	7.2	0.95
MC10	QPSK, conv. 3/4	8.0	1.07
MC11	QPSK, RS(71,53)	8.0	1.07
MC12	QPSK, conv. 7/8	8.7	1.25
MC13	T16QAM (3/4)	10.3	2.14
MC14	T8PSK (2/3)	10.4	1.43
MC15	QPSK	12.0	1.43
MC16	QPSK, conv. 3/4, RS(80,64)	TBD	1.14
MC17	QPSK, RS(236,212)	TBD	1.59
MC18	QPSK conv. 4/5, RS(236,212)	TBD	1.99
MC19	QPSK conv. 3/4, RS(236,212)	TBD	2.12

Table 2: Code sets for considered applications

#	Standard	Code Set	K	i	t
1	General	RS(255-i, K-i, t)	K	i	t
2	DVB	RS(204, 188, 8)	239	51	8
3	CCSDS	RS(255, 223, 16)	239	16	16
4	Euro-skyway	RS(80, 64, 8)	239	175	8

Item	Up/Down-Forward	Frequency, GHz	Space/Ground	Applications	Direct/Relay	GEO/MEO/LEO	J-OTHERS	Study/COTS/Development	Program	Spacecraft	Company/Country/Space Agency	Year Reported
J1	F R	23.2–23.5 25.5–27.5	S	IOL G=55dB G=56dB	R R	G G	**IOL** 3.6m Cassegrain (low Side Lobe) ,, .0.22 HPBW, 20db SL, CP: Axial Ratio =1.5, Power Handle 10W- EIRP 62dbw & G/T 27db/k-	D (EM)	Japan 2sat; DRTS-E&W	Data Relay Test Satellite	Mitsubishi-NASDA	1998
J2	F R	23.1–23.5 25.2–27.5	S	SC to LEO LEO to SC	R R	G G	**IOL** for Data Relay Satellite for LEO's- steerable via 2.85m Reflector Antenna.- Forward: 1 kbs to 10 Mbs Return: 1 Kbs to 150 Mbs- Forward upconverted to 5x 60 MHz channels at 23.2-23.5, 30 TWTA to IOL antenna: EIRP 45-61 dBW 230 MHz BW Return Forward: Receives 30 GHz from feeder (ground) + LNA+ downconvert to 12x 100MHz channels 28.6-29.7	C	ARTEMIS	Data Relay Satellite	ALENIA ESA	1998
J3			S				**Laser Com on SS : Japan Experimental Module**: 2-way High Data Rate com.	D			1998	
J4			S				**ATM over Sat: can achieve 156 Mbs on Ka Band 20 MHz: N-STAR-**	C				1998
J5		BES (or NCS) to GEO: 30 GHz GEO to LEO: 60 GHz LEO to SES: 30 BES to GEO: 30 GEO to?	S				**GEO-LEO high dr 156 Mbs or 1.2 Gbs: Communications Procedures:** 1- Small ES requests Netw Ctl St, which allocates Big ES, BES + allocate a GEO channel- 2- NCS establishes link GEO-LEO to serve SES. 3- NCS selects & tells LEO which SES to be served & order LEO to point its Ant to SES. 4- NCS aims the SES antenna to LEO & orders SES to track LEO.- 5- After NCS receives from SES that RF signal received, NCS orders SES start data TX.- 6- NCS repeats by switching LEO's one by one until all data completely Transmitted.	C				1998
J6			S				**Modulators SOA: mostly 155 Mbps**, all below 1 Gbps: 1- NASA GRC Digital Equipment Modulator: up tp 280 Mbps **2- Canadian COMDEV Wireless Modem**: up to 155 Mbps QPSK/8 PSK/16 QAM/Spectrum Shaped QPSK/Pragmatic TCM with Convolutional coding **3- Bitflow SMC-960A**: up to 155 Mbps QPSK/8PSK/16 QAM/8 PSK TCM/Spectrum Shaped QPSK with convolutional coding **4- CommQuest CQM2000**: up to 20 Mbps QPSK/8 PSK/8 PSK TCM with convolutional coding	C				1999
J7		20	S	Low 20 GHz Receiver	cost		**A Canadian 20GHz 90 Mbps Direct Receiver to Eliminate IF, for Low Cost Earth Terminal**: using five-port junction, for DEQPSK, differentially encoded coherent QPSK, Simulation and measurements of dynamic range and BER as function of Eb /No, with adjacent and co-channel interference, with 1 db agreement achieved	C			Canadian CRC & Ecole Polytechnique de Montreal	1998

Table J. Others

Item	Up/Down-Forward	Frequency, GHz	Space/Ground	Applications	Direct/Relay	GEO/MEO/LEO	J-OTHERS	Study/COTS/Development	Program	Spacecraft	Company/Country/Space Agency	Year Reported
J8			S	Data Relay satellite transmis-sion to LEO & to ground		G L	**Ka-Band Transponders, fully redundants for Data relay test satellite:** **A-Feeder Link Communication Equipment FLCE**: De-multiplexer, Ka switch, receivers (2.5 dB LNA) Ka/C bands, channel filters, pilot receivers, synthesizers & local divider. **B- Ka-Band Forward Beacon Equipment KFB**: C-band hybrid, Local hybrid, C/Ka) converters with ALC controllable over 28 dB range, , Ka-band hybrid, Ka-band TWTA with 41 to 15 dBm output levels and 3 dB back off & Ka-band switch	EM & PFM	DRTS	DRTS	NEC & NASDA	1998
J9			S				**Comparison of Microwave versus Optical Inter-Satellite Links**: Results are given in two pages of attached table summary.	S			CAL Corp. Study initiated by Canadian Space Agency & CSAT	1998
J10			S				**Solar Cells Efficiency Trends:** See Attached Table 3.1	S			ITRI Study	1999
J11			S				**Characteristics of Planned Commercial Ka-Band Communications Systems:** See Attached ITRI Table 3.2	S			ITRI Study	1999
J12			S				**On-Board Processing System Design:** See Attached ITRI Fig. 3.7	S			ITRI Study	1999
J13			G				**Ground Segment Trends to 2007, by ITRI:** See Attached fig. 4.1 (Note Consensus that Ka-Band user VSAT Terminal of max 155 Mbps must be < $1000 and Ka-Band Business Terminal must be < $10,000)	S			ITRI Study	1999
J14			S				**ISL: MW vs Optical**	S				1998
J15							**MPEG & ATM**	S				1998

Table J. Others

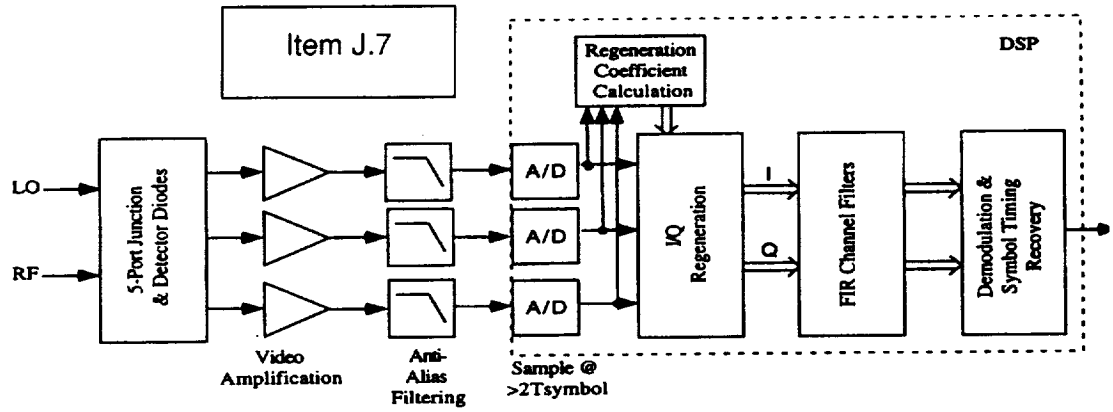

Figure 2
Direct Receiver Architecture Utilizing Digital Channel Filters and Digital Symbol Timing Recovery

Table 2.1-1 Design Target and Performance of the FLCE EM

Item	Design Target	EM Performance	Remark
1 Input Center Frequency	30.12GHz	same as left	SSA
	30.595GHz	same as left	KSA
	30.19GHz	same as left	Ka FWD BCN
	30.36GHz	same as left	PLT
2 Output Frequency	4.38GHz	same as left	SSA
	4.855GHz	same as left	KSA
	4.45GHz	same as left	Ka FWD BCN
3 3dB Band Width	within 22MHz +/-2MHz	21.8MHz	SSA
	within 55MHz +/-5MHz	57.9MHz	KSA
	within 11MHz +/-1MHz	11.3MHz	Ka FWD BCN
4 Local Frequency	20MHz	same as left	Internal Ref.
5 Noise Figure	less than 4.25dB	3.85dB max	SSA
(including Input MUX,SW	less than 4.21dB	3.82dB max	KSA
and WG LOSS	less than 4.16dB	3.8dB max	Ka FWD BCN
	less than 4.24dB	3.76dB max	PLT
6 Gain Variation	within +/-0.8dB	+/-0.15dB	SSA
	within +/-0.4dB	+/-0.14dB	KSA
	within +/-1.2dB	+/-0.03dB	Ka FWD BCN
7 Gain Slope	less than 0.295dB/MHz	0.11dB/MHz max	SSA
	less than 0.1dB/MHz	0.05dB/MHz max	KSA
	less than 0.8dB/MHz	0.06dB/MHz max	Ka FWD BCN
8 Phase Linearity	less than 0.075rado-p	0.041rado-p	SSA
	less than 0.082rado-p	0.056rado-p	KSA
	less than 0.082rado-p	0.014rado-p	Ka FWD BCN
9 Spurious PM	less than 0.57deg rms	0.16deg rms max	SSA/KSA/Ka FWD BCN

Item J.8.1

Item J.8.2

Table 2.2-1 Design Target and Performance of the KFDE EM

Item	Design Target	EM Performance
1 Input Center Frequency	4.855GHz	same as left
2 Output Frequency	23.175GHz ~ 23.545GHz(KF3) 23.175GHz ~ 23.470GHz(KF4) (1MHz step tunable)	same as left same as left
3 Band Width	100MHz max	84.6MHz
4 Local Frequency	1.832GHz ~ 1.869GHz (100kHz step)	same as left
5 Input Power	-61.1dBm ~ -14.5dBm	same as left
6 Output Power	> +38.1dBm(KF3) > +36.1dBm(KF4) Minimum:within +6.4dBm ~ +14.3dBm (1dB step variable)	+37.07dBm(KF3)[+55°C] +36.96dBm(KF4) Minimum:+8.33dBm ~ +13.5dBm (1dB step variable)
7 Gain Variation	within +/-0.35dB	+/-0.59dB(KF3) +/-0.46dB(KF4)
8 Gain Slope	less than 0.05dB/MHz	0.11dB/MHz max(KF3) 0.08dB/MHz max(KF4)
9 Phase Linearity	less than 0.06rado-p(KF3) less than 0.194rado-p(KF4)	0.05rado-p(KF3) 0.05rado-p(KF4)
10 AM/PM Conversion	less than 3deg/dB	1.36deg/dB max
11 Spurious PM	less than 0.56deg rms	0.122deg rms max
12 Residual AM	less than 1.4%	0.92% max

Table 2-33 Performance Comparison Between Optical and Microwave Terminals for a Number of Typical Applications

Item J.9.1

CASE	CASE 1				
Type	GEO-GEO				
Application	Fixed Satellite Services - Trans GEO ARC				
Optical/Microwave	Optical			Microwave	
Version	Baseline	1st Alternative	2nd Alternative	Baseline	Alternative
Range	80,000 - 20,000 km				
Data Rate/No. of Channels	4 x 125 Mbps	3 x 167 Mbps	1 x 500 Mbps	4 x 125 Mbps	4 x 125 Mbps
Tx. Source Power/Channel	200 mW/Ch.	200 mW/Ch.	500 mW/Ch.	40 Watts/Ch.	15 Watts/Ch.
Antenna Size	25 cm	25 cm	25 cm	183 cm	185 cm
Link Margin (dB) (Min)	3	1.75	2.12	2.61	2.75
Wavelength/Frequency	830 nm	830 nm	830 nm	23 GHz	60 GHz
Transmitter Type	DIODE	DIODE	MOPA	TWTA	TWTA
Receiver Type	APD/ 4 PPM	APD/ 4 PPM	APD/ 4 PPM	BPSK	BPSK
Mass	39 kg			75 kg	58 kg
DC Power	67 Watts			543 Watts	320 Watts
Performance Factor	15,244			990	2,170
Pointing Requirements					
Azimuth, Range (Total)	0.16°				
Azimuth, Rate of Change (max)	8.49 E-06°/sec				
Elevation, Range (Total)	4.13°				
Elevation, Rate of Change (max)	1.51 E-06°/sec				

CASE	CASE 2			
Type	GEO-GEO			
Application	Co-Located Stack			
Optical/Microwave	Optical		Microwave	
Version	Baseline	Alternative	Baseline	Alternative
Range	80 km - 4,000 km			
Data Rate/No. of Channels	4 x 750 Mbps	1 x 3 Gbps	4 x 750 Mbps	1 x 3 Gbps
Tx. Source Power/Channel	200 mW/Ch.	500 mW	8 Watts/Ch.	15 Watts
Antenna Size	7.2 cm	7.2 cm	914 cm	100 cm
Link Margin (dB) (Min)	1.48	2.00	2.52	2.56
Wavelength/Frequency	830 nm	1550 nm	23 GHz	60 GHz
Transmitter Type	DIODE	MOPA	TWTA	TWTA
Receiver Type	APD / 4 PPM	PIN	BPSK	QPSK
Mass	26 kg		29 kg	20 kg
DC Power	63 Watts		164 Watts	113 Watts
Performance Factor	7,289		2,523	5,333
Pointing Requirements				
Azimuth, Range (Total)	360°			
Azimuth, Rate of Change (max)	23.1°/sec (Out of Phase Scenario)			
Elevation, Range (Total)	± 90°			
Elevation, Rate of Change (max)	24.0°/sec (Out of Phase Scenario)			

Table 2-33 Performance Comparison Between Optical and Microwave Terminals for a Number of Typical Applications (Continued).

Type	GEO-LEO		LEO-LEO	
Application	SILEX Type		TELEDESIC Type	
Optical/Microwave	Optical	Microwave	Optical	Microwave
Range	40,574 km		1,100 km	
Data Rate/No. of Channels	1 x 1.6 Gbps	4 x 400 Mbps	1 x 10 Gbps	1 x 10 Gbps
Tx. Source Power/Channel	500 mW	40 Watts/Ch.	300 mW	40 Watts
Antenna Size	25 cm	134 cm	7.2 cm	550 cm
Link Margin (dB) (Min)	2.97	2.64	3.21	2.77
Wavelength/Frequency	830 nm	60 GHz	830 nm	60 GHz
Transmitter Type	MOPA	TWTA	DIODE	TWTA
Receiver Type	APD/ 4 PPM	BPSK	APD/ 4 PPM	QPSK
Mass	39 kg	59 kg	26 kg	20 kg
DC Power	67 Watts	716 Watts	63 Watts	207 Watts
Performance Factor	24,740	1,542	6,681	2,657
Pointing Requirements				
Azimuth, Range (Total)	360°		157° (Cross-plane)	
Azimuth, Rate of Change (max)	2.753°/sec		0.379°/sec	
Elevation, Range (Total)	80°		6.33°	
Elevation, Rate of Change (max)	0.075°/sec		0.007°/sec	

Item J.9.2

Table 2-34 Evaluation of a Performance Factor for Microwave and Optical ISL's

Crosslink Type	Data Rate	Distance	Mass	Power	Mbps.km/ kg.Watts
microwave	500	80000	74.5	543	989
microwave	1600	40574	58.8	716	1542
microwave	500	80000	57.6	320	2170
microwave	3000	4000	29	164	2523
microwave	10000	1100	20	207	2657
microwave	3000	4000	20	112.5	5333
optical	10000	1100	26.3	62.6	6681
optical	3000	4000	26.3	62.6	7289
optical	500	80000	39.4	66.6	15244
optical	1600	40574	39.4	66.6	24740

Item J10

Table 3.1
Solar Cell Efficiency vs. Time

Year	Organization	Efficiency (%)	Material	Comments
1962	ATT Bell Labs	8 - 10	Si	Basic design, trendsetter
1970	COMSAT Labs	13.5	Si	Violet cell
1973	COMSAT Labs	15.5	Si	Non reflecting cell (black cell)
1976	COMSAT Labs	16.1	Si	Black cell, sawtooth cover slide
1993	Sharp	17 - 18	Si	Black cell, improved materials
1997	Spectrolab and Techstar	25.5	GaAs/Ge	Dual junction
2000	Spectrolab and Techstar	35	III-V comp'ds	Cascade cells

Item J11

Table 3.2
Characteristics of Planned Commercial Ka-Band Communications Systems

System	Astrolink	Cyberstar	Euroskyway	East	West	Spaceway	Celestri	Teledesic
Sat orbit	GEO	GEO	GEO	GEO	GEO/MEO	GEO	LEO	LEO
Number	5	3	5		12.9	20	63	288
Coverage*	Pop. Centers	N.A. Eur., Asia	Eur., Afr., midEst.	Eur., Afr.	Eur., Afr., midEst	Pop. Centers	Global	Global
Beamwidth/pot	0.8°	~1°	~1°		0.6°	~1°		
No. Beams	96	72	32		64	24	432u, 260dn	64
Type Sat Antenna	Horn fed	Horn fed	Horn fed	Horn fed	Horn fed	Horn fed	Array	Array
Market	Multimedia	Multimedia	Multimedia	Infrastructure	Multimedia	Infrastructure	Infrastructure	Infrastructure
On Board Proc.	Full	Baseband	Baseband	Baseband		Baseband	Full	Full
Through-put	7.7 Gb/s	4.9 Gb/s			6Gb/s	4.4 Gb/s	1.8Gb/s	13.3 Gb/s
ISL	V Band	Potentially V	V Band		Optical	V Band	6 optical	V Band
Terminals	Fixed	Fixed	Fixed	Fixed, mobile	Fixed	0.66m		Fixed
Smallest size	Not given	0.7 m		0.7 m, HH	0.7 m typ.			0.15

OBP

Item J.12

Classes

- Baseband processing and switching (demod/remod)
- IF or RF switching
- Support processing (onboard control, phase-array antennas, etc.)

Issues

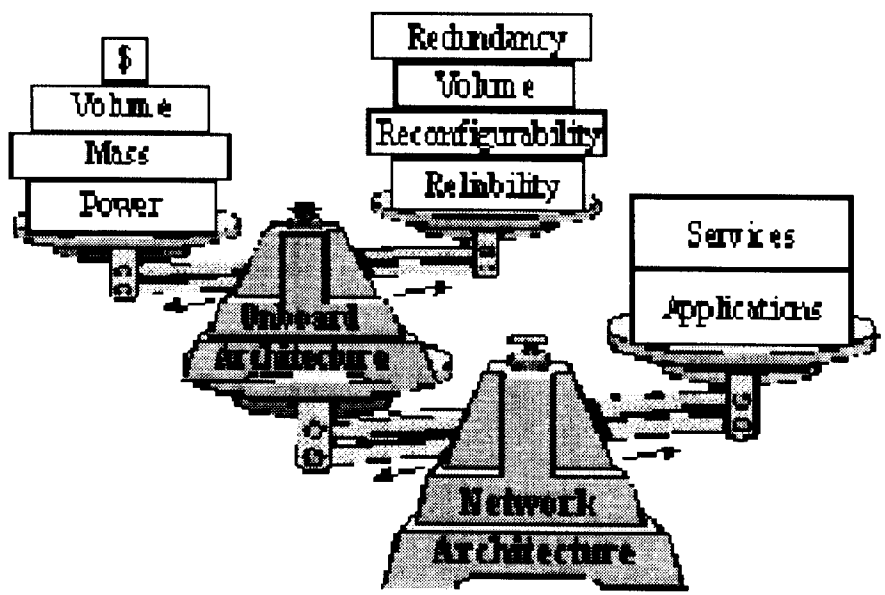

Fig. 3.7. Onboard processing system design.

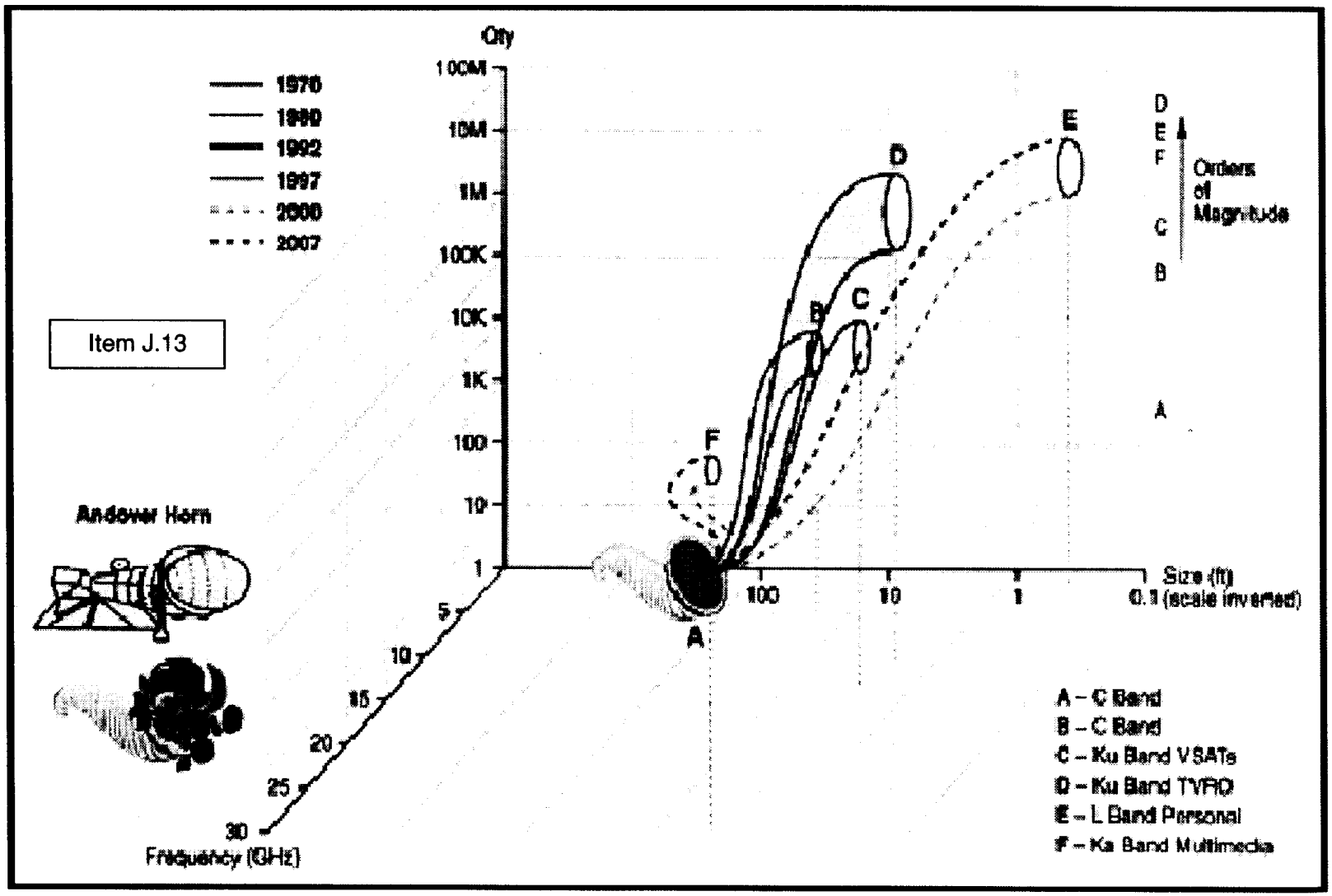

4.1. Evolution of satellite terminals in number of terminals, frequency and size (1965-200

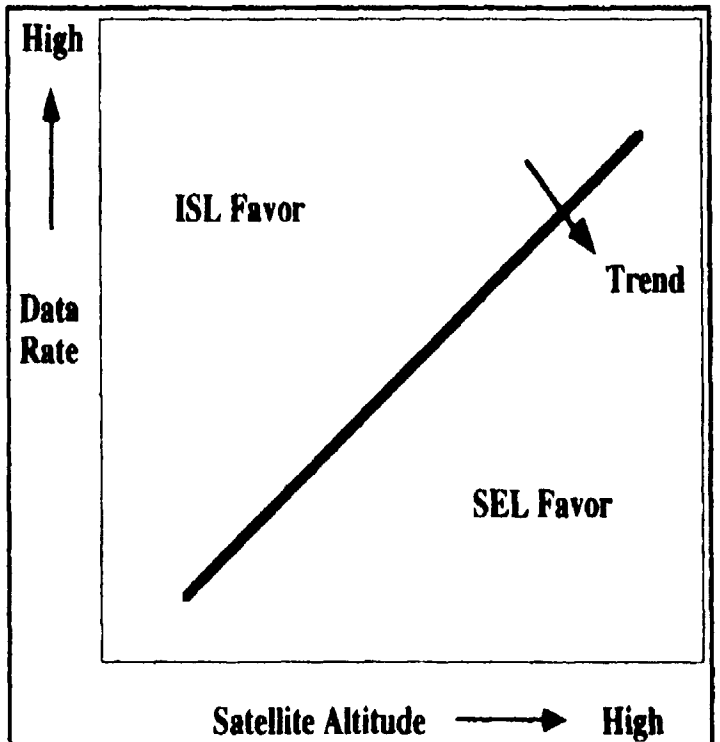

Fig. 3 ISL vs. SEL.

J.14.1

Antenna gain	58.7 dB
Distance	65,000 km
Space loss	-224.3 dB
Receiver noise figure	8 dB
G/T	25.6 dBK
Required E_b/N_0	9.5 dB
Required EIRP	69.3 dBW
Required transmit power	13 W

Table 1. *50/60-GHz ISL link budget.*

J.14.2

Operating wavelength	1064 nm (Nd:YAG laser)
Telescope diameter	10 cm
Receiver type	Homodyne detection
Modulation	Binary phase shift keying with sync bits [6]
Coding	Single parity check with soft decision
Distance	65,000 km
Antenna gain	109 dB for 10 cm telescope
Space loss	–297.7 dB
Total transmission	–8 dB
Receiver sensitivity	–55 dBm (12 photons/bit) [7]
Required transmit power	2 W

Table 2. *Parameters of the link budget.*

Mass	Optical head	9 kg
	Electronics box	7 kg
Power consumption	40 W average	
Fixation area	Optical head	230 mm * 190 mm Six bolts M 5
Item J.14.3	Electronics box	280 mm * 250 mm Six bolts M 5

Table 3. *Terminal layout.*

Item	Up/Down-Forward	Frequency, GHz	Space/Ground	Applications	Direct/Relay	GEO/MEO/LEO	K-ISSUES	Study/COTS/Development	Program	Spacecraft	Company/Country/Space Agency	Year Reported
K1			S				**Low Power High Temperature 77 kelvin Superconductivity SOA is feasible and beneficial to the Transponder Low Power Input Sections:** such as the input receiver, mixer Local Oscillator and input multiplexer only.	D		Technology Demonstration on two U.S. military satellites	COMDEV & DARPA (HTSSE I & II)	1999
K2			S				**CSAT Inc. believes that there is an Inaccurate Common Belief that High Temperature Superconductivity, HTS, SOA is applicable to High Power sections of Transponders and thus could reduce significantly the power and mass of future spacecraft: This is not Feasible in the foreseeable Future:** It may be decades away, barring a major discovery. The reasons, explained below, show that the SOA of space qualified cryocoolers and their excessive mass and power demands nullify any miniaturization benefit from HTS technology. We are to-day far from the cross- over point , for the reasons given below:	S			Canadian Space and Telecom Inc. Internal Report (N. Sultan)	1999
K3			S				**EXPLANATION**: For a well matched device, most of the insertion loss translates into heat dissipation. The higher the power level, the greater is this heat dissipation. Therefore, in HTS, to keep the device temperature at 77 kelvin, this heat dissipation has to be removed by the cryocooler, to such a level not attainable by to-day's cooling technology, nor in the foreseeable future for a few KW output power transponder distributed in a dozen or two paths for HPA, output multiplexer or beam forming networks. Even , as little as a 50 W/channel transponder with an HTS absorption loss of 0.2 db, 14 watts will be dissipated in a 6-channel multiplexer. For to-day's achievable cryocooler efficiency, a dc power of some 400 watts are required for a 14w cryocooler. The mass of such a large cryocooler and the additional mass required for the DC power would not offset any reduction in mass gained by using the HTS technology. In addition, no such cryocooler technology is reliable or has been space qualified for more than a fraction of the 10 to 15 year expected satellite lifetime.	S			Canadian Space and Telecom Inc. Internal Report (N. Sultan)	2000
K4			S				**ITRI 's Panel believes that there is no evidence that a thorough examination of the trade-offs between Bit Error rate, operating temperature , choice of Cryocooler technology and superconducting materials, so far predominantly YBCO.** The attached two tables from ITRI sum up the microwave HTS development in Japan, the US and Canada.	S			1999	
K5			S				**Burst TDM- FDMA/TDMA: Share a wide BW with several narrow BW signals, for multiple uplink OBP & single high speed Downlink**	S			1998	

Table K. Issues

Item	Up/Down-Forward	Frequency, GHz	Space/Ground	Applications	Direct/Relay	GEO/MEO/LEO	K-ISSUES	Study/COTS/Development	Program	Spacecraft	Company/Country/Space Agency	Year Reported
K6			S				Develop New Architectures for Cost-Effective New Ka-Band Ground Terminals, IDU & ODU, Indoor & Outdoor Units, for new Ka Broadband Satellites with advanced techniques: OBP, ATM-like protocols, OB switching, fast hopping beams & advanced TDMA access methods	C			Raytheon	1999
K7					D&R		**Efficient Modulation & Coding Schemes for Future NASA TDRS Ka-Band Space Communications**: Simulation results identified three schemes: 8 PSK TCM, GMSK & QPSK with Spectrum Shaping, all recommended for use in future NASA missions. Conclusion: Baseband equipment for up to 155 Mbps are available.	D		TDRS H,I,J	Hughes & NASA GSFC	1999
K8			S				**High Data Rates Systems:Under Development:** **1- NASA ACTS**: demonstrated 622 Mbps with QPSK, 2- MPT/NASDA Gigabit Communications technology Satellite Program in 2003 with a 1.2 Gbps using 700 MHz, **3- PT Telecom Indonesia Asia Skylink** with convoluted coded 16 QAM scheme for HDR terminals in Asia, **4- COMETS, the Communications and Broadcast Engineering Test Satellite** is testing rates up to 155 Mbps using 8 PSK TCM. **5- Lockheed Martin Astrolink.** **6- Loral Cyberstar.** **7- Hughes Galaxy/Spaceway.** **8- Teledesic** **Other Filings: FSS V-Band: 36.1- 54.4 GHz: 1- Denali, 2- OSC 3- TRW, 4- Lockheed Martin** for 1.25 Gbps to 3.875 Gbps	D				1999

Table K. Issues

REPORT DOCUMENTATION PAGE

Form Approved
OMB No. 0704-0188

Public reporting burden for this collection of information is estimated to average 1 hour per response, including the time for reviewing instructions, searching existing data sources, gathering and maintaining the data needed, and completing and reviewing the collection of information. Send comments regarding this burden estimate or any other aspect of this collection of information, including suggestions for reducing this burden, to Washington Headquarters Services, Directorate for Information Operations and Reports, 1215 Jefferson Davis Highway, Suite 1204, Arlington, VA 22202-4302, and to the Office of Management and Budget, Paperwork Reduction Project (0704-0188), Washington, DC 20503.

1. AGENCY USE ONLY (*Leave blank*)

2. REPORT DATE
March 2001

3. REPORT TYPE AND DATES COVERED
Final Contractor Report

4. TITLE AND SUBTITLE
Satellite Communications Technology Database

5. FUNDING NUMBERS
WU–322–10–0H–00
NAS3–26565

6. AUTHOR(S)
Science Applications International Corporation

7. PERFORMING ORGANIZATION NAME(S) AND ADDRESS(ES)
Science Applications International Corporation
1501 Woodfield Road
Suite 202N
Schaumburg, Illinois 60173

8. PERFORMING ORGANIZATION REPORT NUMBER
E–12522-2

9. SPONSORING/MONITORING AGENCY NAME(S) AND ADDRESS(ES)
National Aeronautics and Space Administration
Washington, DC 20546–0001

10. SPONSORING/MONITORING AGENCY REPORT NUMBER
NASA CR—2001-210563-PART2

11. SUPPLEMENTARY NOTES
Project Manager, Israel Greenfield, Space Communications Office, NASA Glenn Research Center, organization code 6150, 216–433–6150.

12a. DISTRIBUTION/AVAILABILITY STATEMENT
Unclassified - Unlimited
Subject Categories: 17 and 32 Distribution: Nonstandard
Available electronically at http://gltrs.grc.nasa.gov/GLTRS
This publication is available from the NASA Center for AeroSpace Information, 301–621–0390.

12b. DISTRIBUTION CODE

13. ABSTRACT ***(Maximum 200 words)***

The Satellite Communications Technology Database is a compilation of data on state-of-the-art Ka-band technologies current as of January 2000. Most U.S. organizations have not published much of their Ka-band technology data, and so the great majority of this data is drawn largely from Japanese, European, and Canadian publications and Web sites. The data covers antennas, high power amplifiers, low noise amplifiers, MMIC devices, microwave/IF switch matrices, SAW devices, ASIC devices, power and data storage. The data herein is raw, and is often presented simply as the download of a table or figure from a site, showing specified technical characteristics, with no further explanation.

14. SUBJECT TERMS
Ground stations; Space communications; Internet; Ka-band technologies; High power amplifiers; Low noise amplifiers; MMIC devices; Microwave/IF switch matrices; SAW devices; ASIC devices

15. NUMBER OF PAGES
71

16. PRICE CODE
A04

17. SECURITY CLASSIFICATION OF REPORT	18. SECURITY CLASSIFICATION OF THIS PAGE	19. SECURITY CLASSIFICATION OF ABSTRACT	20. LIMITATION OF ABSTRACT
Unclassified	Unclassified	Unclassified	