NASA/TM—2002-211868

Burst Testing of a Superalloy Disk With a Dual Grain Structure

John Gayda
Glenn Research Center, Cleveland, Ohio

Pete Kantzos
Ohio Aerospace Institute, Brook Park, Ohio

August 2002

The NASA STI Program Office . . . in Profile

Since its founding, NASA has been dedicated to the advancement of aeronautics and space science. The NASA Scientific and Technical Information (STI) Program Office plays a key part in helping NASA maintain this important role.

The NASA STI Program Office is operated by Langley Research Center, the Lead Center for NASA's scientific and technical information. The NASA STI Program Office provides access to the NASA STI Database, the largest collection of aeronautical and space science STI in the world. The Program Office is also NASA's institutional mechanism for disseminating the results of its research and development activities. These results are published by NASA in the NASA STI Report Series, which includes the following report types:

- TECHNICAL PUBLICATION. Reports of completed research or a major significant phase of research that present the results of NASA programs and include extensive data or theoretical analysis. Includes compilations of significant scientific and technical data and information deemed to be of continuing reference value. NASA's counterpart of peer-reviewed formal professional papers but has less stringent limitations on manuscript length and extent of graphic presentations.

- TECHNICAL MEMORANDUM. Scientific and technical findings that are preliminary or of specialized interest, e.g., quick release reports, working papers, and bibliographies that contain minimal annotation. Does not contain extensive analysis.

- CONTRACTOR REPORT. Scientific and technical findings by NASA-sponsored contractors and grantees.

- CONFERENCE PUBLICATION. Collected papers from scientific and technical conferences, symposia, seminars, or other meetings sponsored or cosponsored by NASA.

- SPECIAL PUBLICATION. Scientific, technical, or historical information from NASA programs, projects, and missions, often concerned with subjects having substantial public interest.

- TECHNICAL TRANSLATION. English-language translations of foreign scientific and technical material pertinent to NASA's mission.

Specialized services that complement the STI Program Office's diverse offerings include creating custom thesauri, building customized data bases, organizing and publishing research results . . . even providing videos.

For more information about the NASA STI Program Office, see the following:

- Access the NASA STI Program Home Page at ***http://www.sti.nasa.gov***

- E-mail your question via the Internet to help@sti.nasa.gov

- Fax your question to the NASA Access Help Desk at 301–621–0134

- Telephone the NASA Access Help Desk at 301–621–0390

- Write to:
  NASA Access Help Desk
  NASA Center for AeroSpace Information
  7121 Standard Drive
  Hanover, MD 21076

NASA/TM—2002-211868

Burst Testing of a Superalloy Disk With a Dual Grain Structure

John Gayda
Glenn Research Center, Cleveland, Ohio

Pete Kantzos
Ohio Aerospace Institute, Brook Park, Ohio

National Aeronautics and
Space Administration

Glenn Research Center

August 2002

The Aerospace Propulsion and Power Program at
NASA Glenn Research Center sponsored this work.

Available from

NASA Center for Aerospace Information
7121 Standard Drive
Hanover, MD 21076

National Technical Information Service
5285 Port Royal Road
Springfield, VA 22100

Available electronically at http://gltrs.grc.nasa.gov

Burst Testing of a Superalloy Disk With a Dual Grain Structure

John Gayda
National Aeronautics and Space Administration
Glenn Research Center
Cleveland, Ohio 44135

Pete Kantzos
Ohio Aerospace Institute
Brook Park, Ohio 44142

Introduction

Gas turbine engines for future subsonic aircraft will probably have higher pressure ratios. This will require nickel-base disk alloys with temperature capability in excess of 1300 °F. NASA's Advanced Subsonic Technology Program initiated a task to develop manufacturing technologies for advanced disk alloys in the 1990's. Under this program, Honeywell and Allison focused their attention on Alloy 10, a high strength nickel-based disk alloy, developed by Honeywell for application in regional gas turbine engines. Since tensile, creep, and fatigue are strongly influenced by grain size, the effect of heat treatment on grain size and the attendant properties were studied in detail (refs. 1 and 2). It was observed that a fine grained material offered the best tensile and fatigue properties while a coarse grained material offered the best creep and crack growth properties. Therefore a disk with a dual microstructure, fine grain bore and coarse grain rim, should have a high potential for optimal performance.

Additional disk work, funded by NASA's Ultrasafe and Ultra Efficient Engine Technology Programs, was initiated to assess the feasibility of producing a disk from Alloy 10 with a dual grain structure. The objectives of these programs were twofold. First, existing Dual Microstructure Heat Treatment (DMHT) technology was refined and subsequently employed to produce a dual grain structure in full scale disks of Alloy 10 (ref. 3). Second, key mechanical properties from specimens machined from the bore and rim of the DMHT Alloy 10 disk were measured and compared to "traditional" solution heat treatments to assess the benefits of DMHT technology (ref. 4). The results of these tests showed the DMHT disk had a fine grain, high strength bore similar to that found in subsolvus heat treated disks, and a coarse grain, creep resistant rim similar to that found in supersolvus heat treated disks.

While test data on small coupons machined from DMHT disks was encouraging, the benefit of the dual grain structure on the entire disk needed to be demonstrated. To address this issue spin testing of Alloy 10 disks with a dual grain structure was required. Previous work (ref. 5) has demonstrated the advantage of a DMHT disk, with a fine grain bore and coarse grain rim, under creep loading versus a traditional subsolvus disk, with a fine grain structure in the bore and rim. The results of these tests showed that the DMHT disk exhibited significantly lower growth at 1500 °F compared to a subsolvus disk.

In this paper the results of a room temperature burst test run on the DMHT Alloy 10 disk, which was previously spun at 1500 °F, will be examined. The burst data will be analyzed using finite element methods to obtain a better understanding of the deformation characteristics of the DMHT disk during the burst event.

Materials and Procedures

Material Processing

While a complete description of the processing history of the forgings used in this study can be found elsewhere (refs. 1 and 3), a brief description is presented here for the convenience of the reader. Alloy 10 powder of the composition shown in table 1 was produced by argon atomization. The powder was screened, canned, HIPed, and extruded to billet. The billet was subsequently cut to mults and isoforged as "pancake" shapes 14 in. in diameter and 2 in. thick. These forgings were then machined to the shape shown in figure 1 for heat treatment.

An existing DMHT process was applied to two forgings, one for spin testing and one for coupon testing. The DMHT process was refined for Alloy 10 by Wyman-Gordon based on earlier work described in U. S. Patent 5,527,020 (ref. 6). It consists of a thermally insulated box that encloses the bore of the disk but allows the rim to be exposed. The assembly is placed in a furnace at a temperature above the solvus of Alloy 10. Prior to insertion into the furnace an air flow is begun. This air flow is maintained at a rate which keeps that portion of the disk inside the insulated box below the solvus. The temperature differential between the bore and rim produces a dual grain structure in the disk. Removal of the disk is a rather slow process, which necessitated a subsolvus resolution step. Two DMHT forgings were solution heat treated at 2125 °F for 2 hr, followed by fan cooling and aging at 1400 °F for 16 hr to obtain the high strength required for disk applications. Visual inspection of the disks revealed no evidence of quench cracking or other abnormalities after heat treatment. One of the forgings was used to obtain creep and tensile data while the other was used for spin/burst testing.

Test Procedure

In order to test the entire disk in a spin pit the DMHT forging was machined to the configuration shown in figure 2. The design was developed to produce a uniformly high stress region in the web of the disk while minimizing stress in the bore. This philosophy maximizes the deformation in the web, which encompasses the grain size transition zone of the DMHT disk.

All spin testing was performed utilizing facilities of the Balancing Company located in Dayton, Ohio. As previously stated, the DMHT disk, which was burst at room temperature, was the same disk tested in reference 5. The disk was spun at 20 000 rpm and 1500 °F for 24 hr before burst testing at room temperature. As a result of the previous spin testing at 1500 °F, creep deformation caused the diameter of the disk to grow by about 0.025 in. and produced the residual stress distribution shown in figure 3.

Spin pit facilities used for this program employed "off-the-shelf" technology with the exception of the arbor. The arbor used in this test program utilized the design shown in figure 4. Two clamping mechanisms were employed in this design to hold the disk. The primary clamping mechanism was provided by a 9 in. stretch bolt, while a secondary clamping mechanism was provided by capture flanges. In this design, the clamping force exerted by the capture flanges increases as the disk grows and therefore tends to counteract any decrease in clamping force provided by the stretch bolt. As with any spin test, the disk and arbor were balanced before testing.

Burst testing at room temperature was conducted by increasing the speed of the drive turbine until the disk failed. Rotational speed was increased at a rate of about 5000 rpm every minute. Disk growth was monitored with a single proximity gage positioned at the outer diameter of the disk with a 0.1 in. standoff.

Finite Element Analysis

Analysis of the burst trial was performed with Algor's finite element package using the 2–D axisymmetric finite element model shown in figure 5. Also shown in that figure is the grain size distribution used in the analysis. As the stresses exceed the yield strength of Alloy 10 in the burst test an elastic-plastic material response with a bilinear stress-strain curve was employed for both fine and coarse grain sections of the disk with an elastic and plastic moduli of 30 000 ksi and 1000 ksi respectively. For the fine grain section, at the center of the disk, a yield strength of 180 ksi was used. For the coarse grain section, at the periphery of the disk, a yield strength of 160 ksi was used. Theses values were picked based on room temperature tensile data obtained from the companion disk, table 2. As previously stated, an initial residual stress distribution shown in figure 3 was also employed in this analysis. This residual stress distribution is based on the analysis of prior creep deformation more fully described in reference 5.

Results and Discussion

DMHT Microstructure

A dual grain structure was successfully produced in two Alloy 10 disks used in this study. The bore of each disk has a fine grain size, about ASTM 12, while the rim has a coarse grain size, about ASTM 6 to 7. Both grain sizes are typical of subsolvus and supersolvus heat treatments respectively. The transition region is located about 4 in. from the center of the disk and is remarkably symmetric. This structural transition is fully documented in figure 6 and was used to determine the boundary location between the fine grain region and the coarse grain region in the finite element model, figure 5.

Burst Testing

After initial balancing, the DMHT disk was successfully burst on the first attempt. Output from the proximity gage, which provided a measure of disk growth, was steady except for the critical speed, between 15 000 and 20 000 rpm, where significant vibration of the disk/arbor assembly was recorded. Above 30 000 rpm growth of the disk increased dramatically, as seen in figure 7, saturating the output from the proximity gage around 38 000 rpm. At 39 190 rpm the disk burst in the web as seen in figure 8. Additional fragmentation of the rim occurred upon impact with the steel liner in the spin pit. Photographic documentation of the disk at burst was attempted, but revealed no useful information as "flashing" obscured the image.

Finite element analysis of the burst trial was performed to understand the deformation behavior of the DMHT disk. As previously stated, an initial residual stress distribution shown in figure 3 was the starting point for the analysis. As the disk exhibits a complex multiaxial stress pattern, the Von Mises stress was employed to provide an overview of the stress distribution within the disk in a single plot. The stress distribution shown in figure 3 is a result of prior creep deformation associated with spin testing of the DMHT disk at 1500 °F and was obtained from a 2–D viscoelastic finite element analysis described in reference 5. Starting with the initial residual stress distribution, the analysis of the burst trial proceeds by increasing the centrifugal speed of the disk until the ultimate strength of Alloy 10 is exceeded at any given location within the disk. This occurred at approximately 38 000 rpm in the model as seen in figure 9. At this speed the stress in the web approaches 250 ksi, which is representative of ultimate strength values for Alloy 10 as measured in room temperature tensile tests. It is interesting to note the reversal of the peak stress location in the web, from the coarse grain region at the start of the test to the

fine grain region at the end of the test. This reflects the enhanced creep resistance of the coarse grain microstructure at elevated temperatures, and the enhanced strength of the fine grain microstructure at lower temperatures. Disk growth during the burst trial can also be obtained analytically and appeared to verify the measured data as shown in figure 7.

Finally, examination of the disk fragments revealed the fracture process started in the web at a small indentation, as shown in figure 10. Several indentations were intentionally made using a hardness tester at various locations on the face of the disk and were used as additional "markers" to assess disk growth in previous spin testing of this disk. Nevertheless, the fracture origin was relatively close to the high stress location shown in figure 9. This fact coupled with the good agreement between measured and predicted values of burst speed and disk growth indicated the DMHT process did not compromise the durability or reliability of the disk.

Summary and Conclusions

Room temperature burst testing of an advanced nickel-base superalloy disk with a dual grain structure was conducted. The disk had a fine grain bore and a coarse grain rim. The results of this test showed that the disk burst at 39 100 rpm in line with predictions based on a 2–D finite element analysis. Further, significant growth of the disk was observed before failure which was also in line with predictions.

The burst results and previous work documenting the growth of the disk at elevated temperature have demonstrated the benefits and reliability of DMHT technology for superalloy disks under monotonic loading, however, additional work is needed to assess the cyclic durability of this materials technology.

References

1. S. K. Jain, "High OPR Core Materials, AOI 4.2.4, Regional Engine Disk Development", Final Report NAS3-27720, November 1999.
2. J. Gayda, P. Kantzos and J. Telesman, "The Effect of Heat Treatment on the Fatigue Behavior of Alloy 10", NASA AST Report 32, February 2000.
3. A. S. Watwe and H. F. Merrick, "Dual Microstructure Heat Treat Technology", Honeywell Report 21-11619A, May 2001.
4. J. Gayda, "Dual Microstructure Heat Treatment of a Nickel-Base Disk Alloy", NASA/TM—2001-211168, November 2001.
5. J. Gayda and P Kantzos, "High Temperature Spin Testing of a Superalloy Disk with a Dual Grain Structure", NASA/TM—2002-211684, June 2002.
6. S. Ganesh and R. C. Tolbert, "Differentially Heat Treated Article and Apparatus and Process for the Manufacture Thereof", U. S. Patent 5,527,020, June 18, 1996.

TABLE 1.—COMPOSITION OF ALLOY 10 IN WEIGHT PERCENT

Cr	Co	Mo	W	Al	Ti	Nb	Ta	C	B	Zr	Ni
10.2	15	2.8	6.2	3.7	3.8	1.9	0.9	0.03	0.03	0.1	BAL

TABLE 2.—ROOM TEMPERATURE TENSILE PROPERTIES OF ALLOY 10

Heat treat	Yield, ksi	Ultimate, ksi	Elongation, percent
Subsolvus	193	257	18
DMHT bore	186	256	20
Transition	176	245	17
DMHT rim	163	231	19
Supersolvus	165	227	18

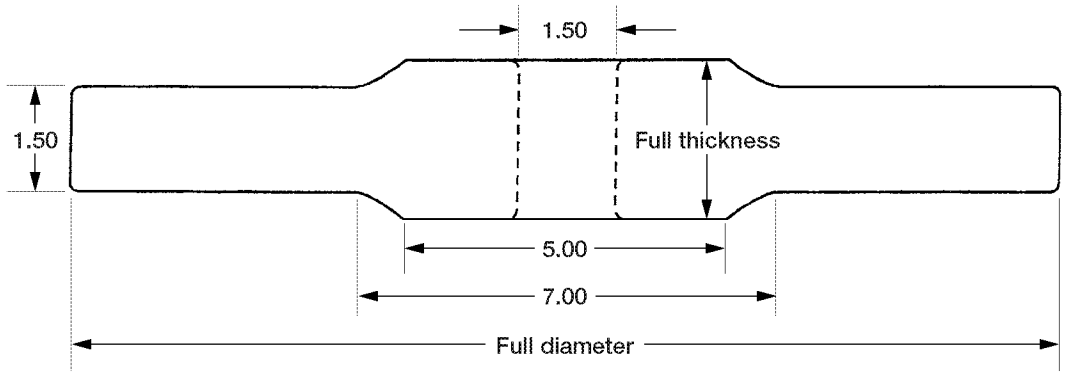

Figure 1.—Machining plan for heat treat shape of Alloy 10 forgings. All dimensions in inches.

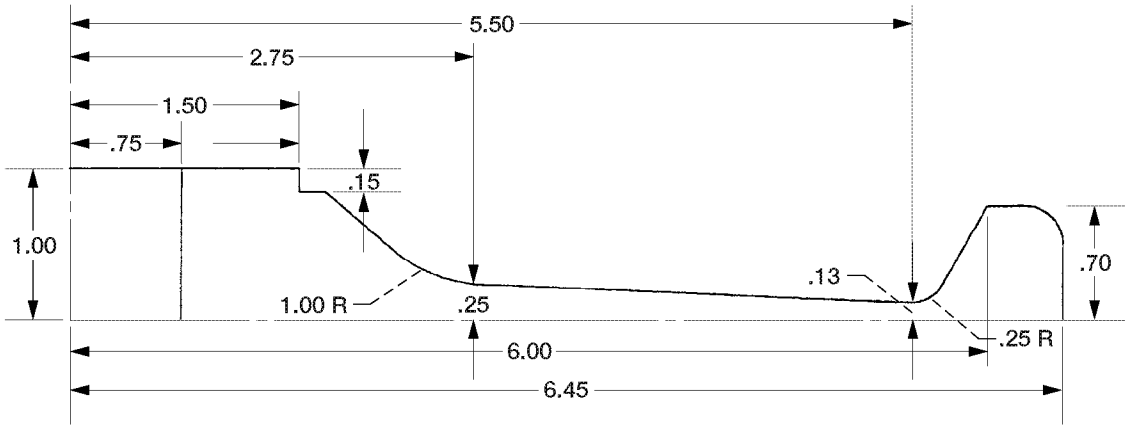

Figure 2.—Machining plan for finished disk used in spin testing. All dimensions in inches.

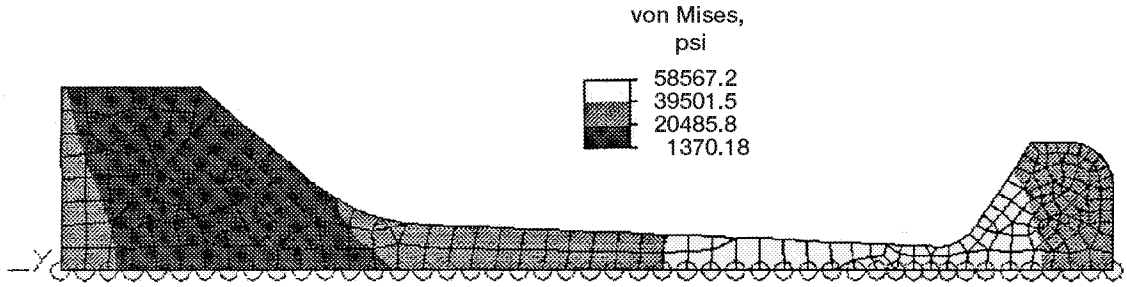

Figure 3.—Initial residual stress distribution in the DMHT disk.

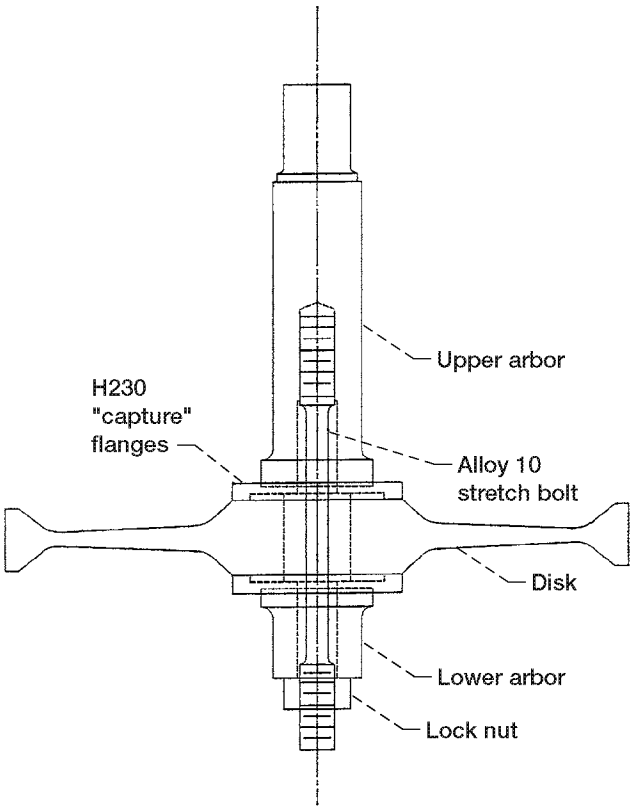

Figure 4.—Design of the arbor used for spin testing.

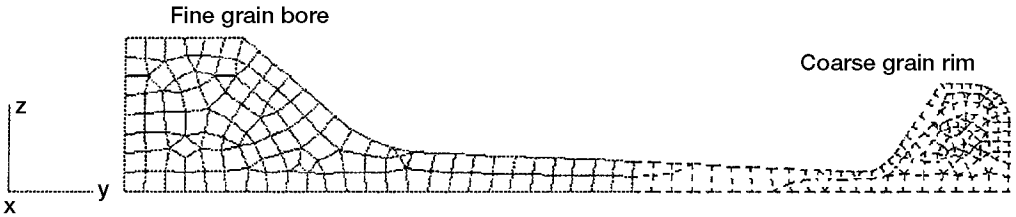

Figure 5.—Assumed distribution of grain size used for modeling the DMHT disk.

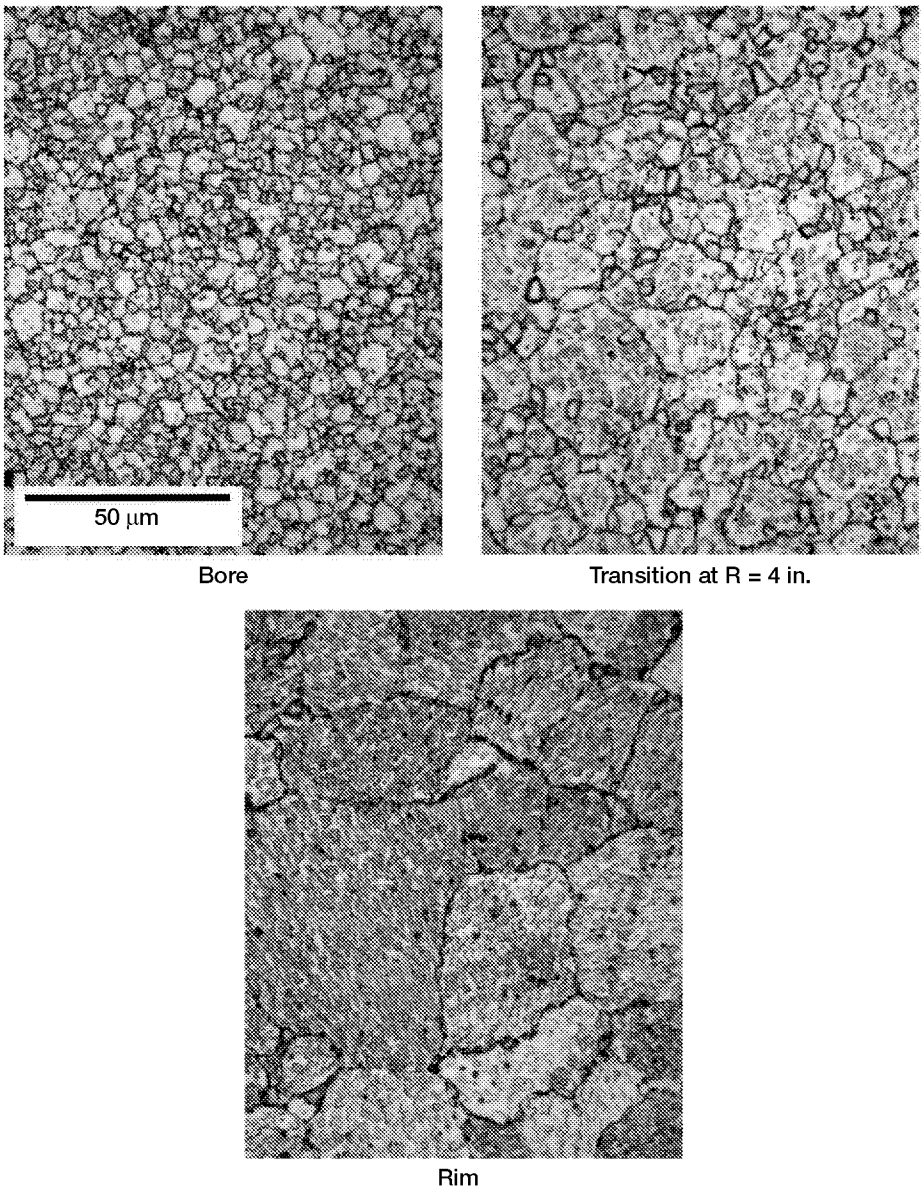

Figure 6.—Actual grain size in DMHT disk.

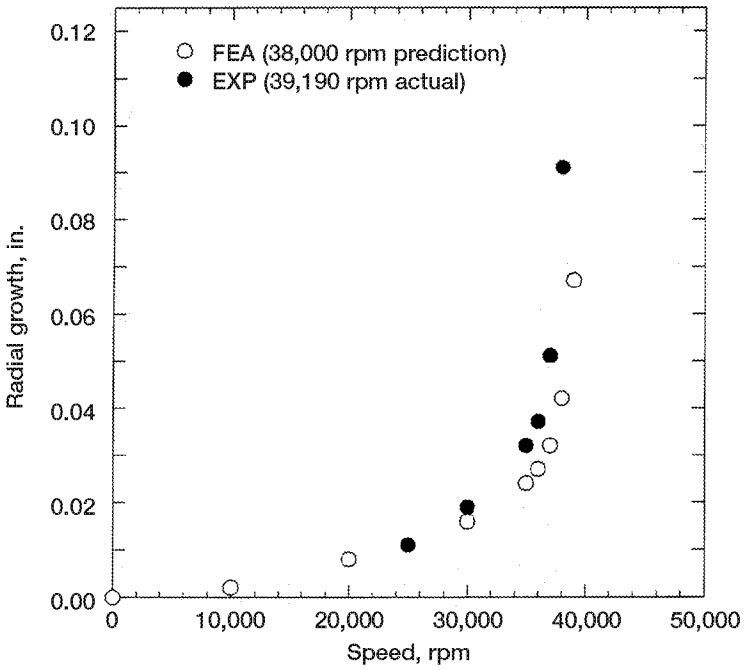

Figure 7.—Growth of the DMHT disk during the room temperature burst trial.

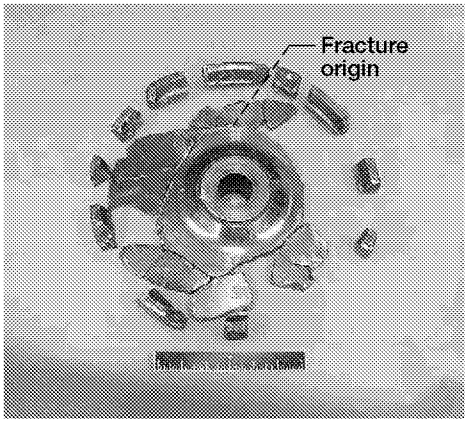

Figure 8.—Major disk fragments after room temperature burst test.

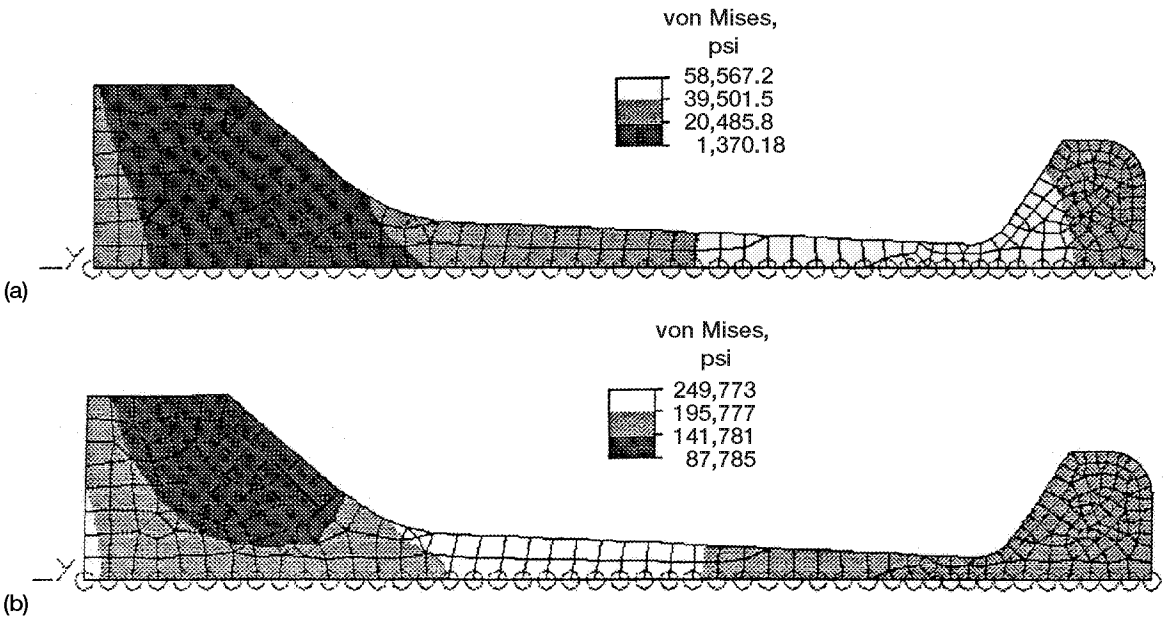

Figure 9.—Calculated stress distribution in the DMHT disk at the start of the test (a) 0 rpm, and the end of the test (b) 38,000 rpm.

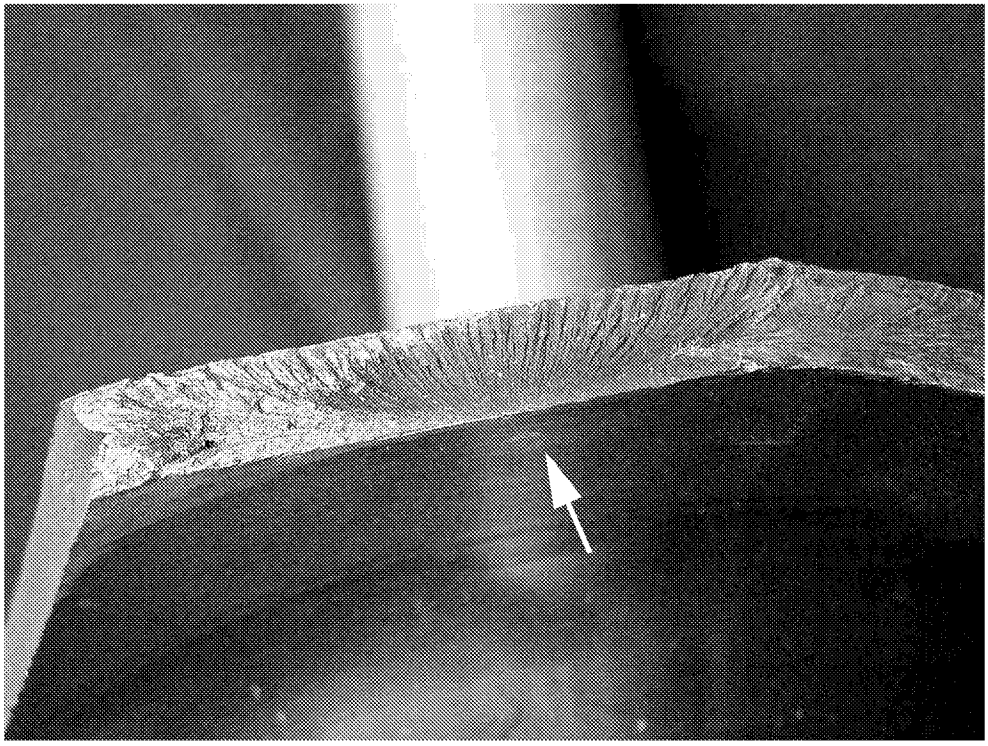

Figure 10.—Fracture surface showing initiation site in burst test.

REPORT DOCUMENTATION PAGE

Form Approved
OMB No. 0704-0188

Public reporting burden for this collection of information is estimated to average 1 hour per response, including the time for reviewing instructions, searching existing data sources, gathering and maintaining the data needed, and completing and reviewing the collection of information. Send comments regarding this burden estimate or any other aspect of this collection of information, including suggestions for reducing this burden, to Washington Headquarters Services, Directorate for Information Operations and Reports, 1215 Jefferson Davis Highway, Suite 1204, Arlington, VA 22202-4302, and to the Office of Management and Budget, Paperwork Reduction Project (0704-0188), Washington, DC 20503.

1. AGENCY USE ONLY (*Leave blank*)

2. REPORT DATE
August 2002

3. REPORT TYPE AND DATES COVERED
Technical Memorandum

4. TITLE AND SUBTITLE
Burst Testing of a Superalloy Disk With a Dual Grain Structure

5. FUNDING NUMBERS
WU–708–24–13–00

6. AUTHOR(S)
John Gayda and Pete Kantzos

7. PERFORMING ORGANIZATION NAME(S) AND ADDRESS(ES)
National Aeronautics and Space Administration
John H. Glenn Research Center at Lewis Field
Cleveland, Ohio 44135–3191

8. PERFORMING ORGANIZATION REPORT NUMBER
E–13550

9. SPONSORING/MONITORING AGENCY NAME(S) AND ADDRESS(ES)
National Aeronautics and Space Administration
Washington, DC 20546–0001

10. SPONSORING/MONITORING AGENCY REPORT NUMBER
NASA TM—2002-211868

11. SUPPLEMENTARY NOTES
John Gayda, NASA Glenn Research Center, and Pete Kantzos, Ohio Aerospace Institute, Brook Park, Ohio 44142. Responsible person, John Gayda, organization code 5120, 216–433–3273.

12a. DISTRIBUTION/AVAILABILITY STATEMENT
Unclassified - Unlimited
Subject Category: 26 Distribution: Nonstandard
Available electronically at http://gltrs.grc.nasa.gov
This publication is available from the NASA Center for AeroSpace Information, 301–621–0390.

12b. DISTRIBUTION CODE

13. ABSTRACT ***(Maximum 200 words)***

Room temperature burst testing of an advanced nickel-base superalloy disk with a dual grain structure was conducted. The disk had a fine grain bore and a coarse grain rim. The results of this test showed that the disk burst at 39 100 rpm in line with predictions based on a 2–D finite element analysis. Further, significant growth of the disk was observed before failure which was also in line with predictions.

14. SUBJECT TERMS
Superalloy disk

15. NUMBER OF PAGES
15

16. PRICE CODE

17. SECURITY CLASSIFICATION OF REPORT	18. SECURITY CLASSIFICATION OF THIS PAGE	19. SECURITY CLASSIFICATION OF ABSTRACT	20. LIMITATION OF ABSTRACT
Unclassified	Unclassified	Unclassified	