REMOTE MANUPILATOR SYSTEM (RMS) AUTOMATION

RMS Expert System - Background

This is a joint project between Johnson Space Center (JSC) and Ames Research Center (ARC) to extend OAST-sponsored Procedural Reasoning effort to the orbiter subsystem diagnosis and control problems. A Reaction Control System (RCS) procedural expert system was developed and demonstrated to ARC and JSC representatives in 1987. The emphasis of the RMS Expert System project is to demonstrate a dynamic, real-time procedural reasoning expert system integrated with the Systems Engineering Simulator (SES).

BACKGROUND

- JOINT PROJECT BETWEEN JOHNSON SPACE CENTER AND AMES RESEARCH CENTER TO EXTEND PROCEDURAL REASONING RESEARCH TO ORBITER SUBSYSTEMS DIAGNOSE/CONTROL PROBLEMS
- FUNDED BY THE NASA STRATEGIC PLANS & PROGRAMS DIVISION OF SPACE STATION (CODE ST)
- PROCEDURAL REASONING SYSTEM WAS DEVELOPED AT SRI INTERNATIONAL

RMS Expert System - Objectives

The objectives of the project are to be accomplished over a three-year period. The first year will be devoted to the acquisition of the PRS tool, and the development of a prototype RMS expert system including the knowledge base, a Crew Interface, a RMS software simulator, and defined malfunction scenarios. In the second year, the interface to the SES and the Data Acquisition and Monitoring Module will be built, and the RMS Expert System will be integrated with the SES for evaluation and demonstration to RMS experts. Recommended changes will be incorporated, and the system re-evaluated in preparation for the development of the specifications for an ADA-based procedural reasoning shell in the space station SSE environment.

OBJECTIVES

- EVALUATE THE PROCEDURAL REASONING SYSTEM BY DEVELOPING A RMS DIAGNOSTIC EXPERT SYSTEM TO BE INTEGRATED WITH THE REAL-TIME SYSTEMS ENGINEERING SIMULATOR (SES) AT JSC

- DEVELOP SPECIFICATIONS FOR AN ADA-BASED PROCEDURAL REASONING TOOL FOR EMBEDDED REAL-TIME APPLICATIONS IN THE SOFTWARE SUPPORT ENVIRONMENT OF SPACE STATION

RMS Expert System - Approach

The Shuttle Remote Manipulator System was selected as the domain in which to assess the capability of the PRS shell for real-time fault diagnosis. Because of the time constraint, many tasks were performed concurrently, e.g. knowledge acquisition and encoding, development of a user-friendly color interface, and development of a miniature RMS simulator for testing and debugging. Selected malfunction scenarios defined the scope of the initial integrated prototype.

With technical support from SRI, and through the help of a domain expert, RMS operational and malfunction procedures were implemented as PRS KAs. These procedures were taken directly from the RMS malfunction procedures document, and represent the core declarative knowledge of the expert system. A RMS database was implemented to represent the current beliefs or facts about the domain, and a RMS software simulator was developed for systems testing and debugging.

APPROACH

- WORK WITH RMS DOMAIN EXPERTS FOR KNOWLEDGE ACQUISITION AND PROBLEMS DEFINITION
- PRS TRAINING AND ENCODING OF RMS PROCEDURES FROM FLIGHT DATA FILE
- DEVELOP RMS SIMULATOR AND CREW INTERFACE PROTOTYPES

RMS Expert System - First year achievements

The RMS expert system was prototyped and demonstrated to RMS experts and sponsors. The Crew Interface and the PRS shell hosting the RMS KB and database were integrated. About 22 percent of the applicable RMS malfunction procedures and their associated nominal procedures were implemented. RMS domain experts contributed significantly in defining malfunction scenarios, identifying areas of interest to the RMS astronauts, and evaluating the crew interface. The RMS simulator was completed and tested, but has not been integrated with the expert system. Intended for initial testing and evaluation, the RMS simulator will eventually be replaced by the real-time high-fidelity JSC SES.

FIRST YEAR ACHIEVEMENTS

- PRS TRAINING BY SRI INTERNATIONAL
- KNOWLEDGE ACQUISTION AND ENCODING
- RMS SIMULATOR DEVELOPED
- RMS CREW INTERFACE DEVELOPED
- SYSTEMS INTEGRATION AND DEMONSTRATION

BACKGROUND

- The RMS was selected as the initial candidate for the application of the Procedural Reasoning System (PRS)
- Specifically, PRS is evaluated with the End Effector (EE) Malfunction Procedures
- The main focus is on the interpretation of the EE status indicators which are located on the RMS Displays and Controls panel

Shuttle RMS

This slide shows the configuration of the aft cockpit RMS controls. The hand controllers, THC (Translational Hand Controller) and RHC (Rotational Hand Controller), and the display and control panel are used to control and monitor the RMS, while the MCIU (Manipulator Controller Interface Unit) provides communication of the GPC (General Purpose Computer) computer with the RMS, informing the computer of all sensor data and relaying all control information to the arm. Visual contact of the payload and the RMS is imperative, so windows and two black and white closed circuit TV (CCTV) monitors are available in the area where the RMS controls are located to allow the user to have greater control of the RMS operations. Each monitor is capable of having a split screen and has zoom capabilities.

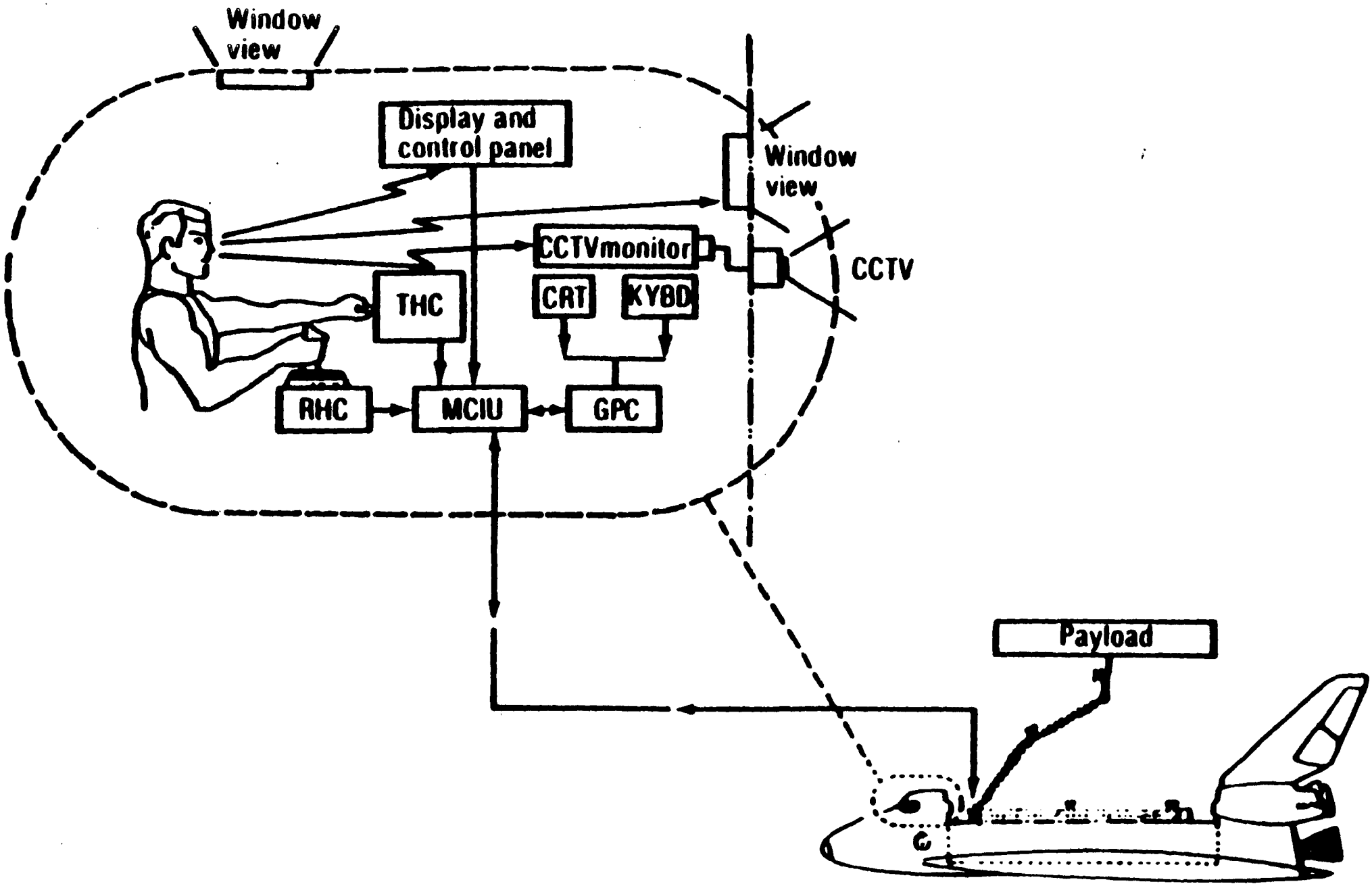
Window view
Display and control panel
Window view
CCTV monitor
CCTV
THC
CRT
KYBD
RHC
MCIU
GPC
Payload

Shuttle RMS

RMS displays and controls, aft station

The RMS astronaut operates the RMS from the orbiter aft-cockpit where the RMS controls, viewports, and monitors for are located. The two hand controllers and the main display and control panels, A8U and A8L, are located in the vicinity of the aft-cockpit port window and the CCTV monitor to facilitate the use of the port RMS. In addition the CCTV can be controlled to show one of the 7 possible views using the CCTV controls.

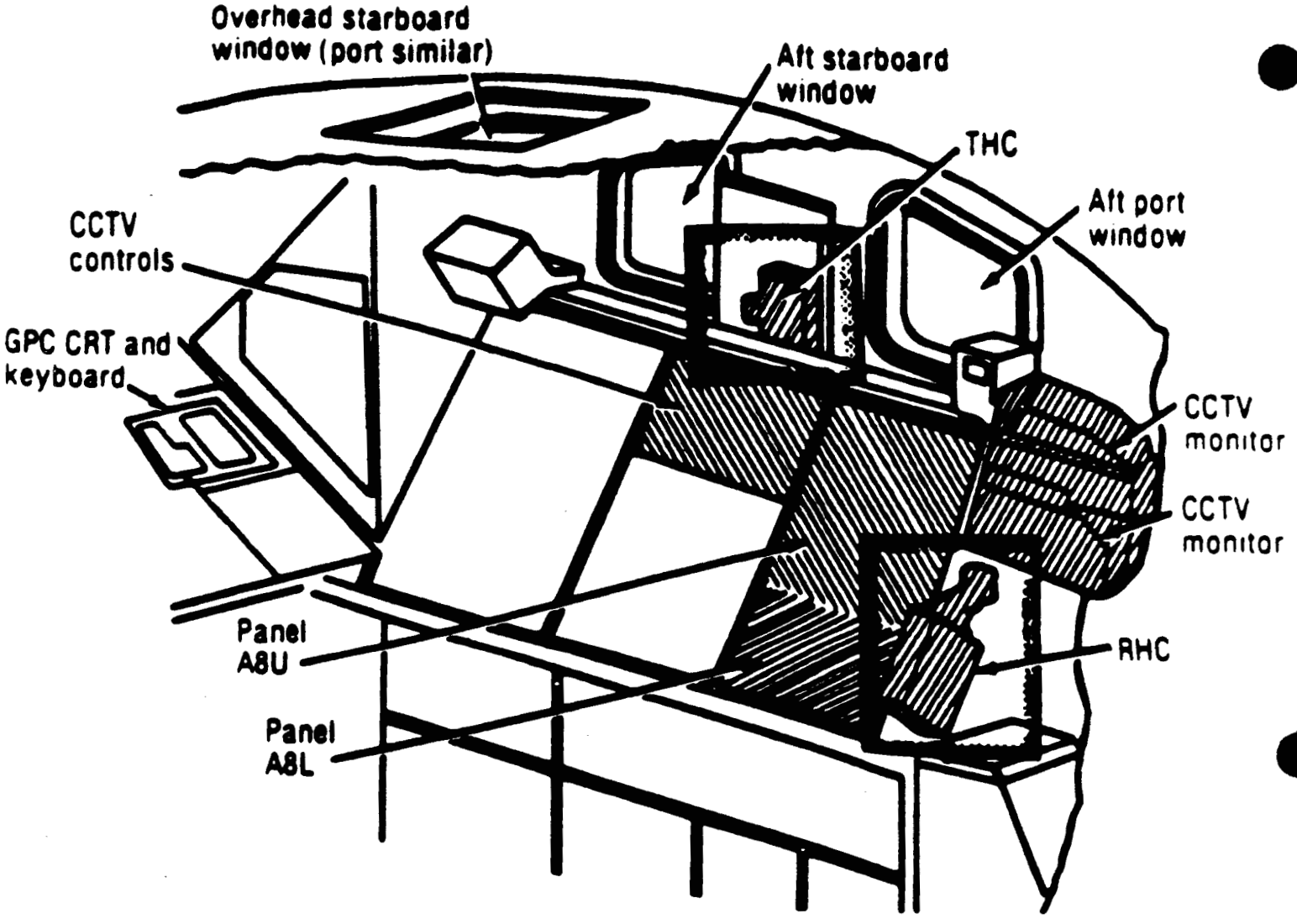

RMS displays and controls, aft station.

Panel A8U

The A8U panel is one of the primary display and control panels of the RMS in the aft cockpit. In the upper left is the mode controller which controls the operating mode of the RMS. To the right is the RATE indicators which indicates the rate of the of the speed of the point of resolution translation. Below this is the end effector switches and talkbacks which indicate the status of the end effector and allow the user to switch between manual and auto control. In the upper center of the screen, the RMS light matrix indicates any problems with the RMS as they occur. The lower portion of the panel is used to transfer control to the various joints of the RMS.

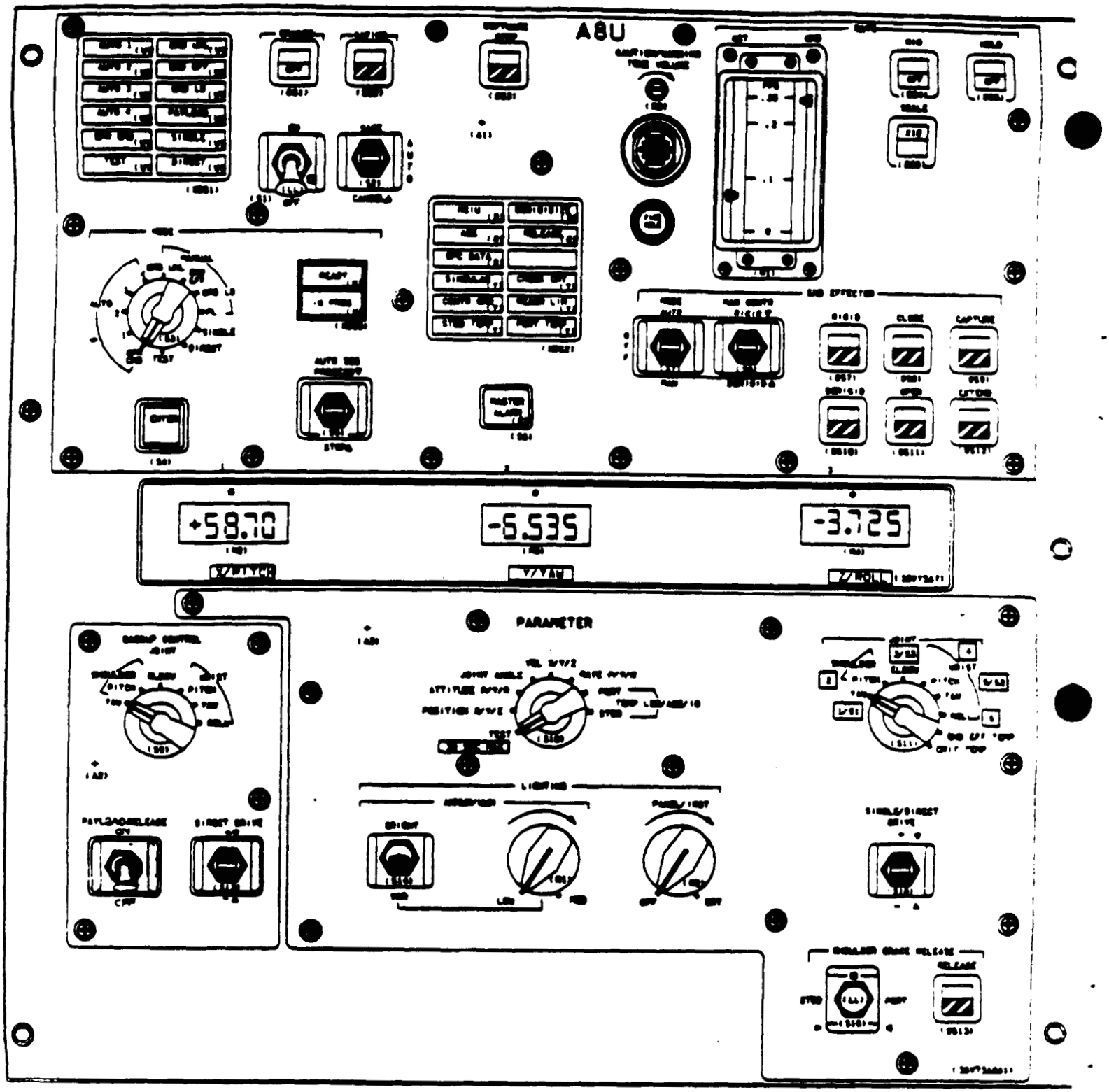

Panel A8U.

PDRS

13.3a EE FAILS TO CAPTURE/RIGIDIZE IN AUTO

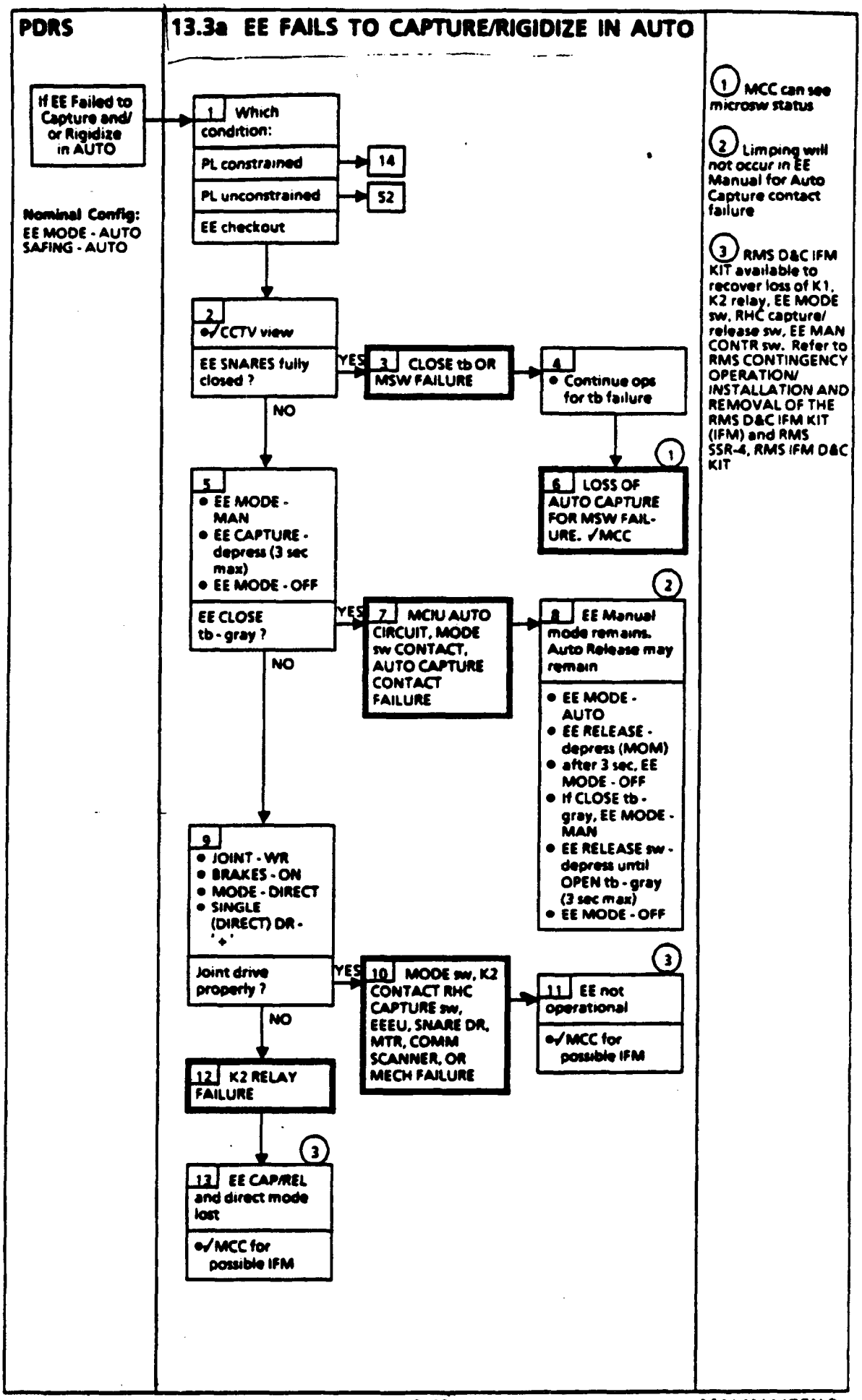

EE MALFUNCTION PROCEDURES EXECUTION

- **Failure detection:** noting abnormal EE status indicator(s), caution & warning light
- **Quick response:** immediate safing of the RMS
- **Procedure selection:** searching for the appropriate procedure in the Malfunction book
- **Procedure execution:** performing block by block until a terminal block in the flow chart is reached
- **Further assistance:** contacting MCC as necessary

NEEDS FOR AUTOMATION

- Failure detection - saves the crew from constantly monitoring multiple systems
- Quick response selection - supports the crew in evaluating the immediate condition
- Quick response recommendation - provides the crew with a response to the immediate condition
- Quick response execution - offers the crew an option to perform the response automatically
- Response playback - allows the crew to review data for analytical or training purposes
- Response reasoning - benefits the crew with detailed explanations of the quick response taken

NEEDS FOR AUTOMATION (CONTINUED)

- Procedure selection - supports the crew in evaluating the failure after the system is safed
- Procedure recommendation - provides the crew with the steps to diagnose the problem
- Procedure execution - offers the crew an option for an automatic diagnosis
- Procedure playback - allows the crew to review the diagnosis for analytical or training purposes
- Procedure reasoning - benefits the crew with detailed explanations of the steps taken in the diagnostic procedure
- Failure documentation - assists the crew in tracking failures accurately

NEEDS FOR AUTOMATION (CONTINUED)

- Failure simulation - accommodates the crew during training in real-time
- Procedure upgrade - permits the crew to modify the procedures, the logic, and the commands in real-time
- Procedure verification - presents the crew with a systematic method to validate the procedures in real-time

RMS Expert System - software

The RMS Expert System is being developed incrementally, and involves the implementation of many software modules residing on the color Symbolics Lisp machine. The Lisp environment coupled with the PRS shell provides for a rich development environment that is ideal for the selected problem domain. The goal is to integrate the RMS expert system with the on-orbit simulation test-bed, the real-time high-fidelity JSC Systems Engineering Simulator hosted by the Gould computers. The Data Acquisition & Filtering Module (DAFM) will read real-time RMS telemetry data from the SES, and deliver them to the PRS shell which hosts the RMS KAs (procedures) and database. Concurrently, the crew interface module will interact with the RMS crew interface via communication messages.

ARCHITECTURE

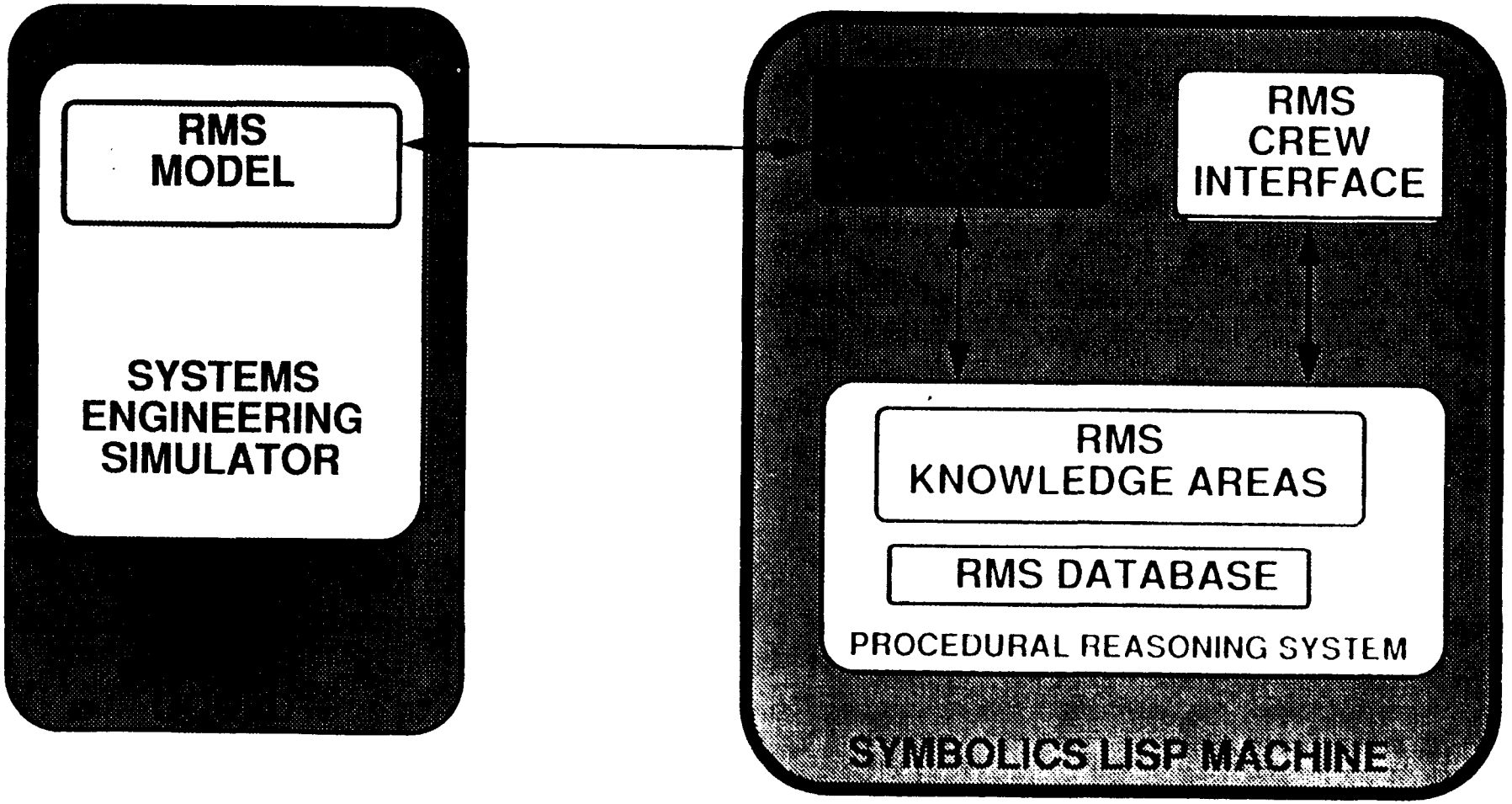

PRS ARCHITECTURE

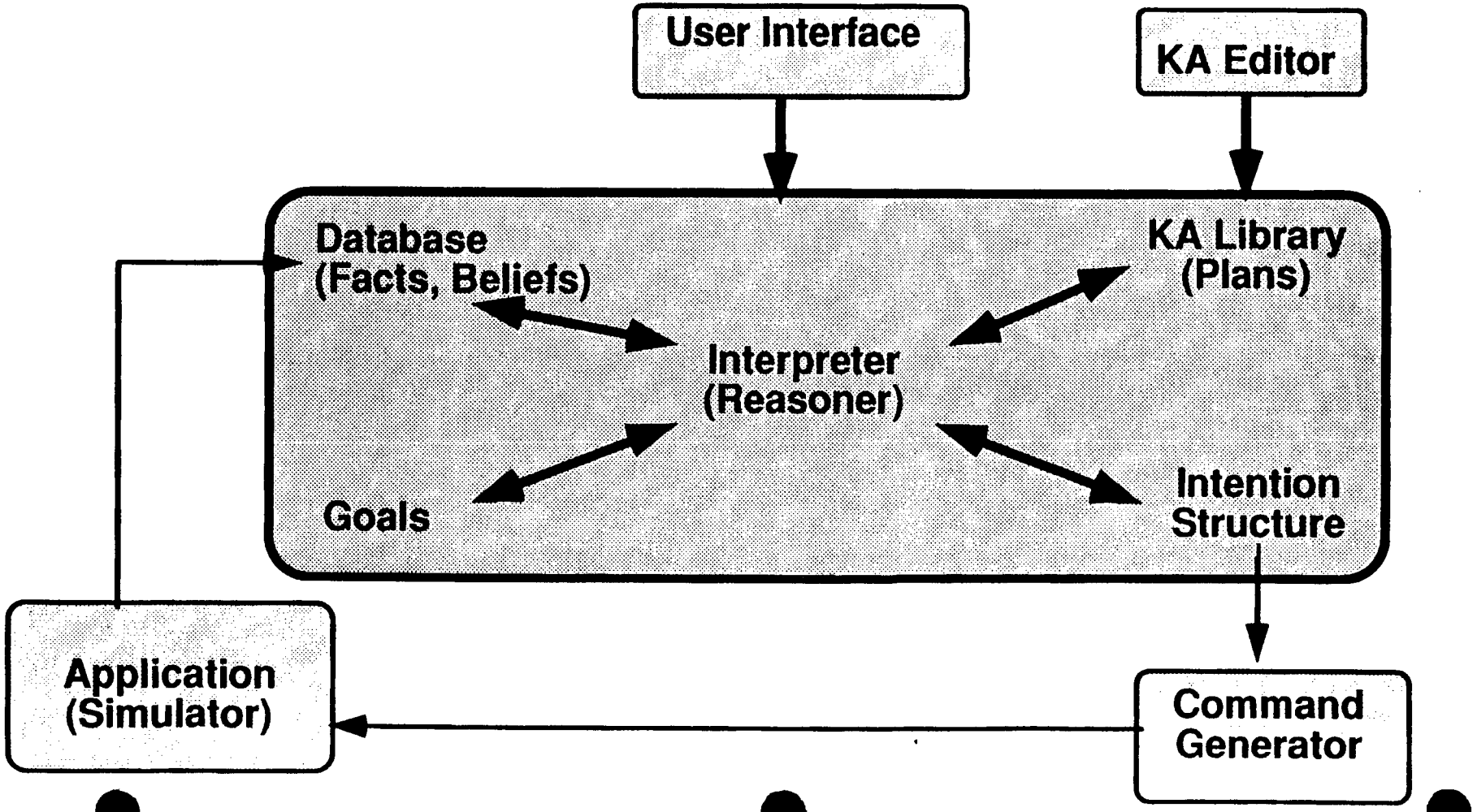

PRS KA Editor

The PRS KA editor supports inputs of procedural information as a set of KAs. Each KA description includes a network of labeled nodes and edges, as well as an invocation condition that describes the situations in which that KA is applicable and useful.

WINDOW
GRAPH
KA
[illegible]

CREATE
DESTROY

CONVERT END
RENAME
COPY
FORK

EXAMINE

[illegible]
ALIGN

13.3a.14 EE-fails to capture/rigidize (Payload Constrained)

INVOCATION:
(*GOAL (! (DIAGNOSE CAPTURE/RIGIDIZE-FAILURE)))

CONTEXT:
(AND (*FACT (POSITION EE-MODE AUTO))
(*FACT (STATUS PAYLOAD CONSTRAINED))
(*FACT (POSITION SAFING-SWITCH AUTO)))

GOAL ACHIEVER?:
T

EFFECTS:
(~ (DIAGNOSIS MODE))

PROPERTIES:
NIL

DOCUMENTATION:
"Capture/Rigidize failure in Auto node.
Payload is Constrained"

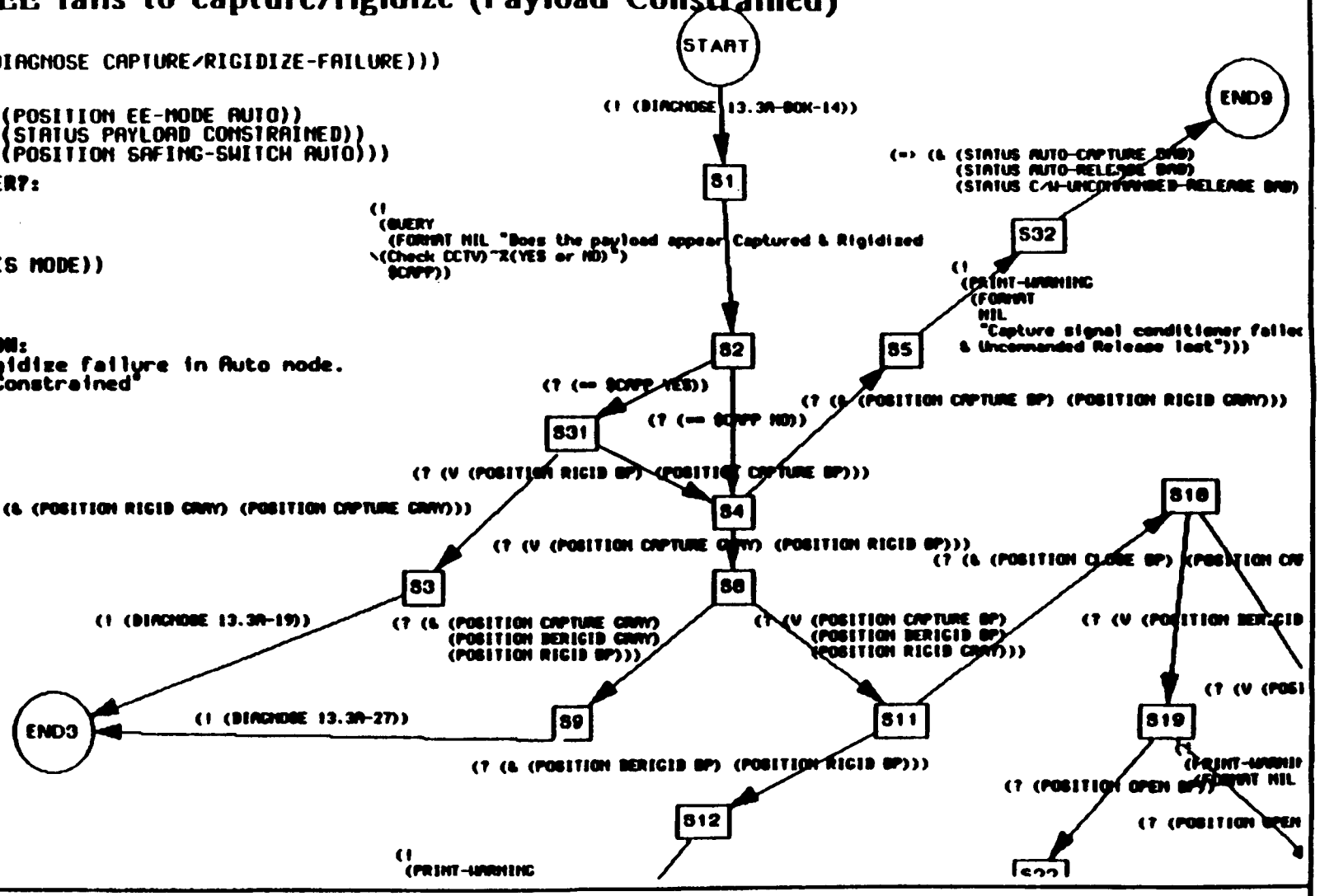

PRS Interface

The PRS interface is designed to manipulate data and to provide information about the various PRS agents (systems) the user has set up. The PRS interface can be used to create or delete PRS agents, load KA files, trace specific KAs, establish goals, query the database, and in general, perform the operations necessary to deal with the construction and operation of PRS agents.

Procedural Reasoning System — SRI International

Menu
PRS Menu
Mode Menu
Auxiliary Menu

Control Panel
Step
Halt

Status
Run

```
ES) YES

set switch EE-MODE to position OFF OF
F

Does the payload appear Captured & Ri
gidized
(Check CCTV)
(YES or NO) YES

Warning from UNNAMED: EE Auto Logic C
KT, EE Auto Capture Contact or
Close sw contact failure. EE Auto Los
t
```

Input/Output Pane

```
(Check CCTV)~%(YES or NO)
          )
  (:$VAR: . :UNBOUND:)))
(? (== (:$VAR: . YES) YES))
(?
 (& (POSITION RIGID GRAY) (POSITION CAPTURE GRAY)))
(! (DIAGNOSE 13.3A-19))
End processing KA:  13.3a.14 EE-fails to capture/ri
gidize (Payload Constrained) -- Success
```

Text Trace Pane

Intention Trace Pane

```
PRS:
```

```
CONTEXT:
(AND (:FACT (POSITION EE-MODE AUTO))
     (:FACT (STATUS PAYLOAD CONSTRAINED))
     (:FACT (POSITION SAFING-SWITCH AUTO)))

GOAL ACHIEVER?:
T

EFFECTS:
(~ (DIAGNOSIS MODE))

PROPERTIES:
NIL

DOCUMENTATION:
"Capture/Rigidize failure in Auto node.
Payload is Constrained"
```

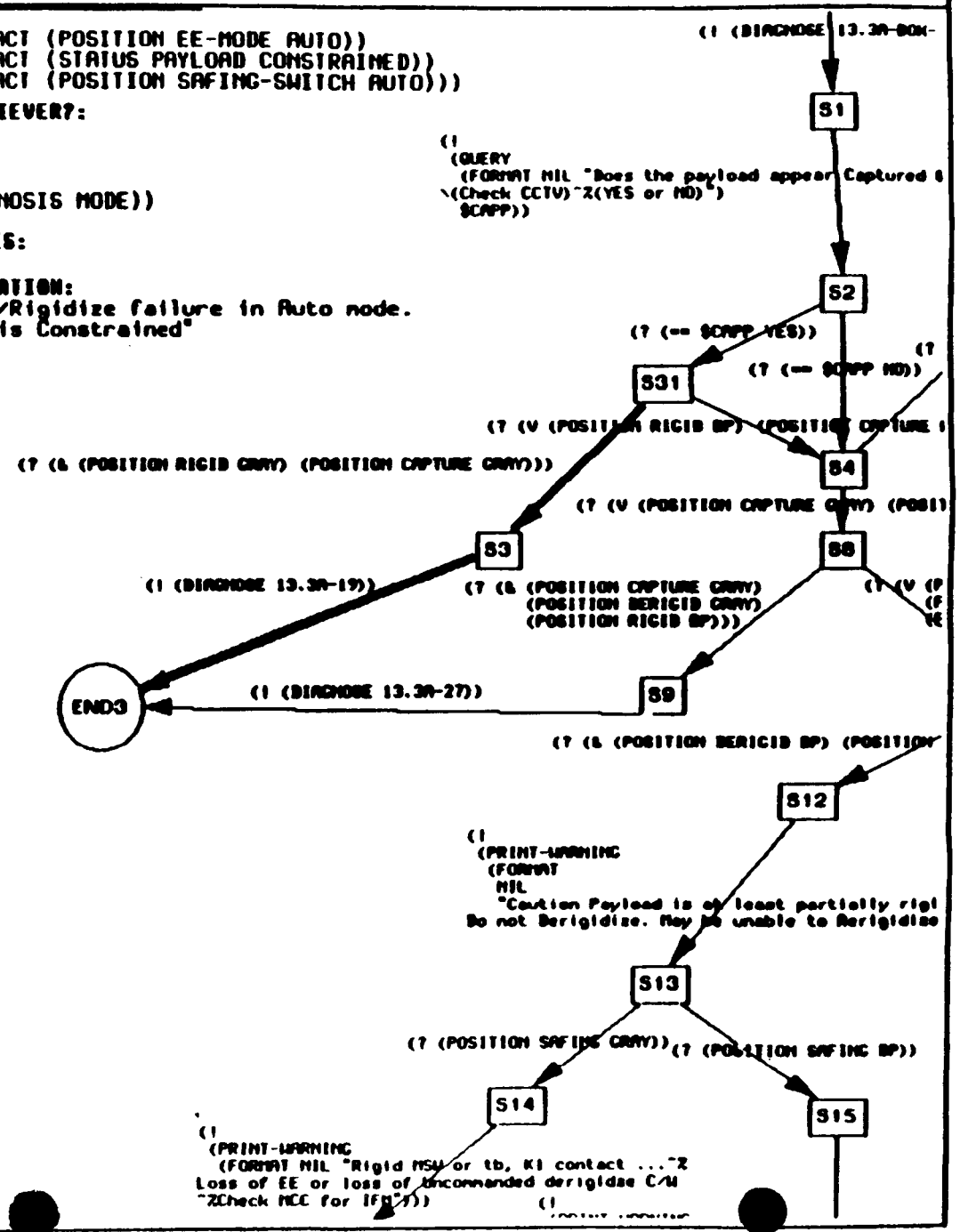

Unpublished ©1985-1989, SRI Internation

RMS Crew Interface - Initial State

The RMS Crew Interface is designed to present a simple and friendly environment for the crew to interact with the RMS expert system. It displays information vital to the orbiter RMS operation, and accepts commands from the RMS crew though mouse inputs. The initialized state of the interface shows 4 main windows and a menu pane in the middle.

The top left window provides a quick reference of the state of each component of the RMS, including a status arrow and a brief remark explaining its status. The right top window displays the mouse-sensitive RMS switches, talkbacks, and dials from the A8U and A8L panels, which allows the user to set switches or dials as prompted by the expert system. The center menu gives the user a means of controlling the interface and the PRS shell, including loading of the PRS database and initializing and running a procedure. The lower left and right windows display the results of the execution of RMS operational and malfunction procedures in format familiar to the RMS crew, e.g. type of malfunction, diagnosis, quick action, and status of the RMS capabilities.

When the RMS expert system has determined the diagnosis and recommendation of a malfunction, this information along with the status of the component's capabilities will be immediately displayed. All of this information will then be stored for future reference or until the component's status has changed.

If multiple malfunctions occur, the user can click the mouse on one of the problem components located in the status window to display its diagnosis information.

RMS EXPERT SYSTEM

SYSTEM	STATUS	REMARK
MCIU	↑	
D&C-PANEL	↑	
D&C-ELECTRONICS	↑	
END-EFFECTOR	↑	
EE-ELECTRONICS	↑	
SHOULDER-YAW	↑	
SHOULDER-PITCH	↑	
ELBOW-PITCH	↑	
WRIST-YAW	↑	
WRIST-PITCH	↑	
WRIST-ROLL	↑	

CONTROL AND DISPLAY

PRIMARY
OFF
BACKUP

STBD
OFF
PORT

HCIU
ABE
GPC
SINGULAR
CONTR-ERR
STBD-TEMP

DERIGID
RELEASE

CHECK-CRT
REACH-LIM
PORT-TEMP

BRAKES
OFF
ON

OFF

SAFING
SAFE

AUTO
CANCEL
AUTO

SW-STOP

MASTER ALARM

RIGID
OFF
DERIGID

OFF
MAN
RIGID

END-EFF

WR-ROLL

ENTER

ON
OFF

BU+
OFF
BU-

DO+
OFF
DO-

CAPTURE
OFF
RELEASE

VERN
COARSE

CLOSE
DERIGIDOPEN

CAPTUR
EXTEND

ADVISOR HELP VIEWPORT

DIAGNOSTIC WINDOW

<MALFUNCTION>

EE is currently functional

DIAGNOSIS

RECOMMENDATION

CAPABILITIES WINDOW

CAPABILITIES

REMAINING	LOST	SUSPECT
DRIVE-MODE DIRECT		
DRIVE-MODE BU		
RELEASE AUTO		
RELEASE MANUAL		
RELEASE BU		
CAPTURE AUTO		
CAPTURE MANUAL		
RIGID AUTO		
RIGID MANUAL		
DERIGID AUTO		
DERIGID MANUAL		
CW DERIGID		
CW RELEASE		

Interaction Window

[Fri 12 Jan 36:30] Janes Tran CL PRS: User Inp Daffy Duck

RMS Crew interface - final state

This slide shows the RMS Crew Interface after a RMS malfunction has been successfully diagnosed by the expert system. The malfunction, diagnosis, and recommendation has been displayed and the status of the End Effector has become questionable. The remark notifies the user that the manual mode is bad. The simulated display and control panel shows the current setting reflecting the current state of the database. The RMS capabilities that have been lost due to the malfunction as well as the capabilities that still remain are listed in the lower right window. The lower left window displays the malfunction nature, the relevant diagnosis and the recommendation for actions.

RMS EXPERT SYSTEM

SYSTEM	STATUS	REMARK
MCIU	↑	
D&C-PANEL	↑	
D&C-ELECTRONICS	↑	
END-EFFECTOR	↔	Malfunction
EE-ELECTRONICS	↑	
SHOULDER-YAW	↑	
SHOULDER-PITCH	↑	
ELBOW-PITCH	↑	
WRIST-YAW	↑	
WRIST-PITCH	↑	
WRIST-ROLL	↑	

CONTROL AND DISPLAY

PRIMARY
OFF
BACKUP

STBD
OFF
PORT

HCIU
ABE
GPC
SINGULAR
CONTR-ERR
STBD-TEMP

DERIGID
RELEASE

CHECK-CRT
REACH-LIM
PORT-TEMP

BRAKES
ON
OFF

SAFING
SAFE

SW-STOP

AUTO
CANCEL
AUTO

MASTER ALARM
RIGID

OFF
MAN
RIGID

OFF
DERIGID

END-EFF

WR-ROLL

ENTER

ON
OFF

BU+
OFF
BU-

DD+
OFF
DD-

CAPTURE
OFF
RELEASE

VERN
COARSE

CLOSE
CAPTUR
DERIGIDOPEN
EXTEND

ADVISOR HELP VIEWPORT

DIAGNOSTIC WINDOW

<MALFUNCTION>

13.3A [41] EE FAILS TO RIGIDIZE IN AUTO
CONSTRAINED PAYLOAD

DIAGNOSIS

-> MTR, COMM SCAN, MODE sw, EEEU or Mech Failure.
Total EE failure

RECOMMENDATION

-> Release in B/U
Check MCC for possible IFM

CAPABILITIES WINDOW

CAPABILITIES

REMAINING	LOST	SUSPECT
	CW RELEASE	
	CW DERIGID	
	DERIGID MANUAL	
	DERIGID AUTO	
	RIGID MANUAL	
	RIGID AUTO	
	CAPTURE MANUAL	
	CAPTURE AUTO	
	RELEASE BU	
	RELEASE MANUAL	
	RELEASE AUTO	
	DRIVE-MODE BU	
	DRIVE-MODE DIRECT	

Set Switch EE-MODE To MAN

Interaction Window

[Tue 16 Jan 10:20:47] Keyboard CL PRS: User Input Daffy Duck

RMS AUTOMATION POTENTIAL

	RMS ASTRONAUT	RMS AUTOMATION
Data Monitoring	YES	YES
Fault Detection	YES	YES
Select Applicable Procedures	YES	YES
Execute Procedures	YES	YES
Malfunction Diagnosis	YES	YES
Keep Track of Reasoning Path	YES	YES
Visual Contact	YES	NO
Ultimate Control	YES	NO
Consistency	NA	YES
Less Expensive	NA	YES
Require Flight Data File	YES	NO

FUTURE WORK

- INTEGRATION WITH JSC/SYSTEMS ENGINEERING SIMULATOR FOR REAL-TIME EVALUATION
- EXPAND SYSTEM CAPACITY TO COVER OTHER SUB-COMPONENTS OF THE RMS
- DEVELOP SPECIFICATIONS FOR SSE ADA PROCEDURAL REASONING TOOL

ADVANTAGES

- Reduce crew fatigue by advancing the decision making process to a higher level
- Result in a quicker response to an immediate condition
- Still allow for detailed analysis if necessary
- Provide real-time simulations
- Provide real-time modifications
- Provide real-time validations
- Compile a precise database of failures encountered and procedures taken in real-time
- Benefit ground crew as well in developing, verifying, and training with the procedures
- Facilitate multiple-failure analysis
- Reduce Flight Data File hardcopies

CONCERNS

- CPU time may not be available
- Expert system needs to be redundant in performance
- Manual override must be incorporated
- Expert system self-check may be required
- Expert system must be as least fail-safed by design