Marshall Space Flight Center
Jet Propulsion Laboratory

Hardware Evolution of Analog Speed Controllers for a DC Motor

D. A. Gwaltney, NASA Marshall Space Flight Center
M. I. Ferguson, Jet Propulsion Laboratory

2003 GECCO Conference
July 12-17, 2003

Outline

- ⇨ Hardware Evolution of Electronic Circuitry
- ⇨ Evolution of Controllers
- ⇨ Motivation for This Work
- ⇨ Approach
- ⇨ Baseline Analog Controller Design
- ⇨ Evolution of Analog Controllers
- ⇨ Experimental Results
- ⇨ Summary

Hardware Evolution of Electronic Circuitry

- Two "basic" approaches
  - Intrinsic
    - Commercial FPGAs and FPAA
    - Field Programmable Transistor Arrays (FPTA)
    - Multiplexed Components
  - Extrinsic
    - SPICE Simulation for circuitry
    - Device specific simulations (Virtex DS)
- Hybrid simulation/hardware
    - Compute intensive analysis in software combined with configuration of reconfigurable hardware
      - Evolution in simulation, then implemented
      - Evolution in hardware controlling simulated system

Evolution of Closed-loop Controllers

- Many evolved controllers suitable only for implementation in software
  - Control law synthesis and tuning
    - Conventional transfer function or state space designs
    - Combination of Neural Networks and/or Fuzzy Logic and Evolution
  - Evolution performed using simulation of controlled dynamics and controller
- Analog controller evolution using plant simulation and electronics simulation using SPICE
- Robot control using extrinsic and hybrid approach

Marshall Space Flight Center
Jet Propulsion Laboratory

Motivation for This Work

- ⇨ Development of an autonomous, self-configurable controller for use on a remotely located platform
  - → Adaptation of controller to environmental changes that would otherwise degrade performance
    - Temperature extremes
    - Ionizing radiation
    - Variation in the controlled dynamic system
  - → Reconfiguration of controller structure
    - Use of degraded components: electronic and mechanical
    - Exclusion of failed components: sensor failures
  - → Response to changing mission requirements
- ⇨ Applicable to platforms for exploration of space or extreme terrestrial environments

Motivation for This Work

- Motor driven systems are ubiquitous in commercial, industrial, military and aerospace applications
- By-wire technology relies extensively on electromechanical actuators
  - Aircraft, fly-by-wire
  - Automobiles, drive-by-wire
  - Recent space transportation vehicle concepts
- Availability of programmable analog or mixed-signal devices makes the implementation of analog control loops attractive at the actuator and subsystem level
  - Can be as easily modified as software

Approach

- Use of JPL developed Stand Alone Board Level Evolvable (SABLE) System as platform for controller evolution
  - Employs the JPL second generation Field Programmable Transistor Array (FPTA2)
  - GA implemented in firmware and executed on a Digital Signal Processor (DSP) single board computer (SBC)
  - FPTA2 configuration through digital interface on SBC
  - 16 bit DAC provides stimulus of the FPTA2
  - 16-bit , multi-channel ADC module captures FPTA2 output and other analog signals for fitness evaluation

Marshall Space Flight Center
Jet Propulsion Laboratory

SABLES

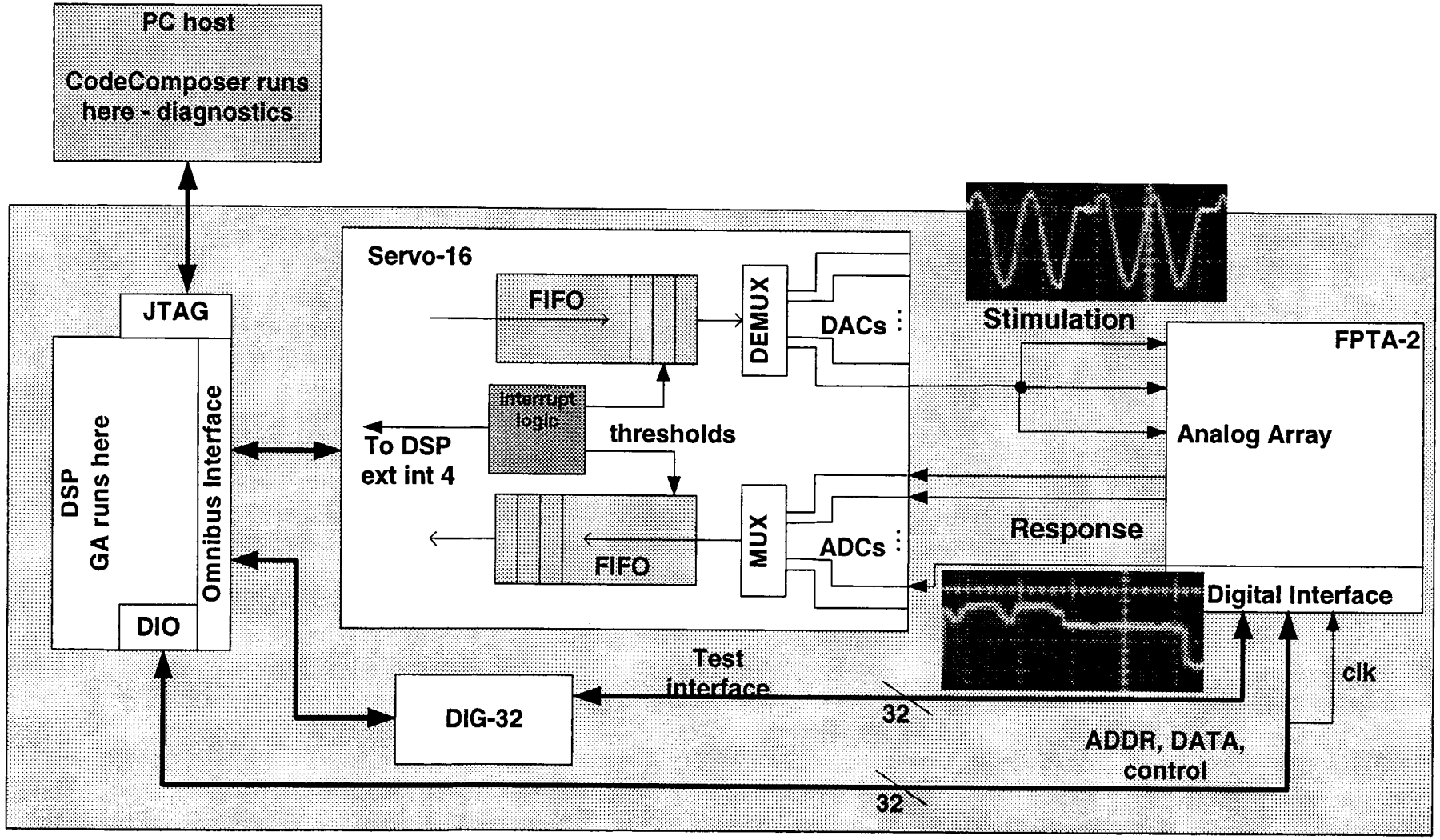

Marshall Space Flight Center
Jet Propulsion Laboratory

JPL FPTA2 Cell Layout

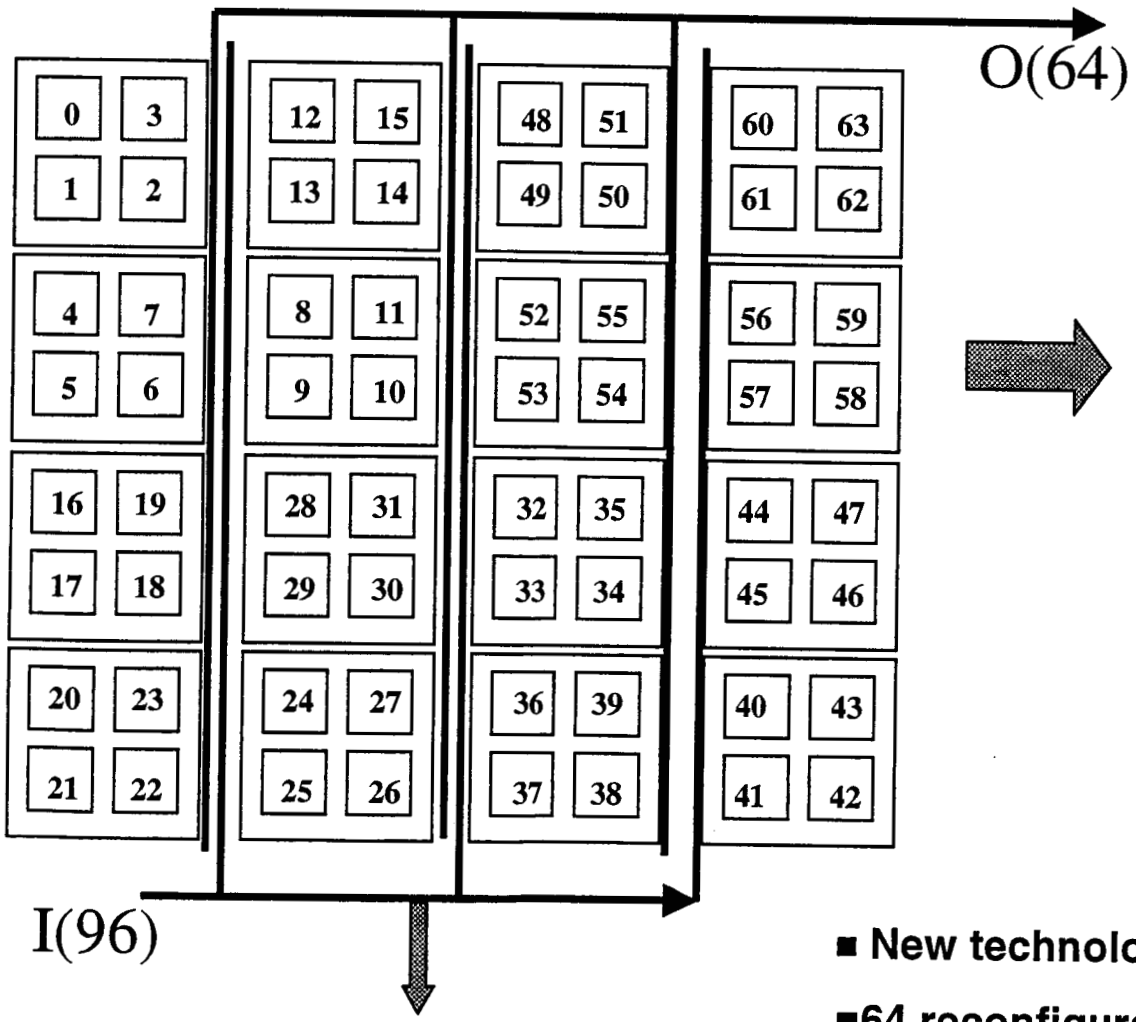

96 analog inputs
64 analog outputs

Interconnection between cells

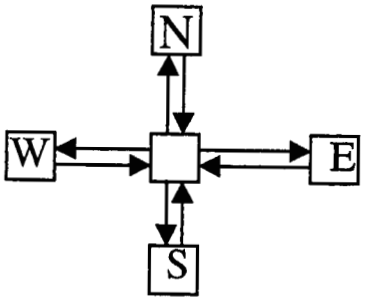

- **New technology: TSMC 0.18 – 1.8v;**
- **64 reconfigurable cells;**

Marshall Space Flight Center
Jet Propulsion Laboratory

JPL FPTA2 Cell Schematic

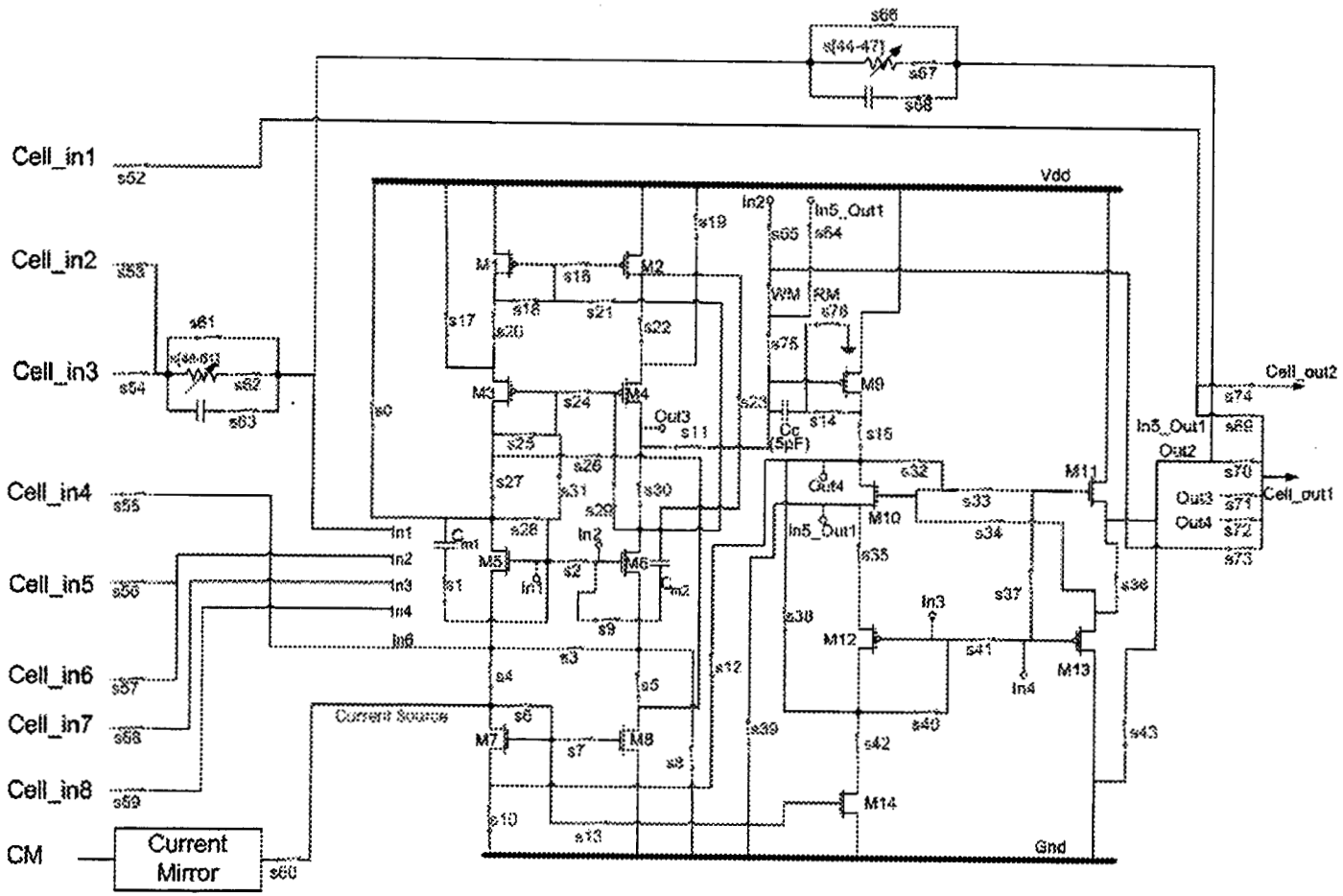

Evolvable Controller Configuration

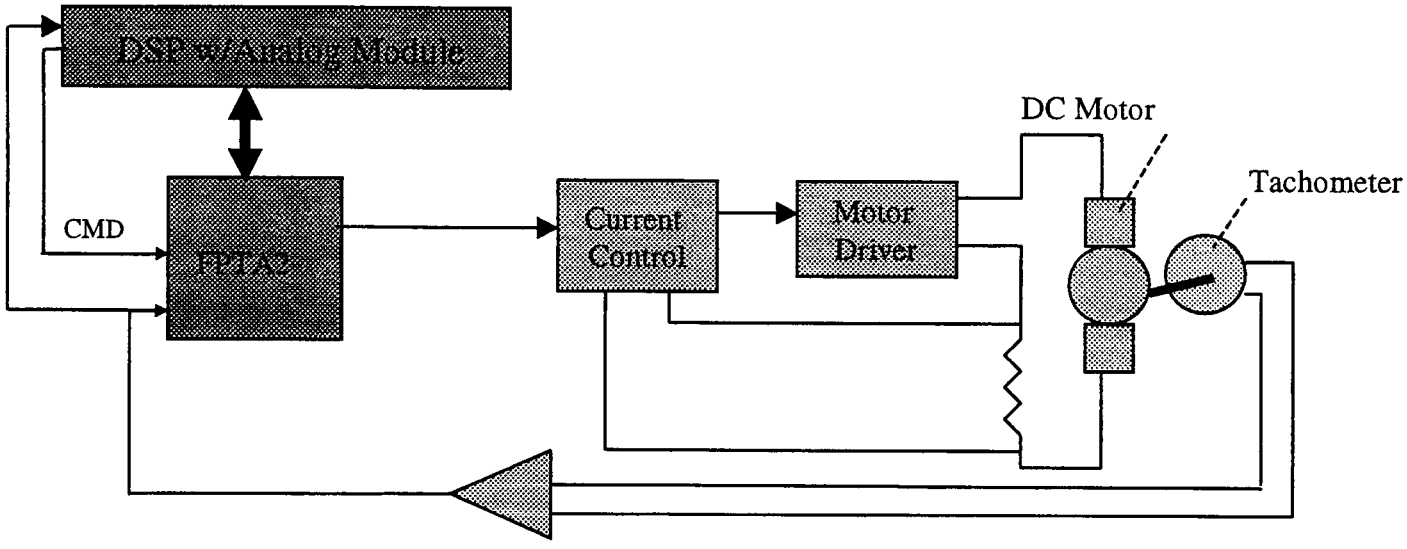

Error = CMD - Feedback

Diagram of the experimental configuration for hardware evolution of analog motor speed controllers

Evolvable Controller Configuration

Marshall Space Flight Center
Jet Propulsion Laboratory

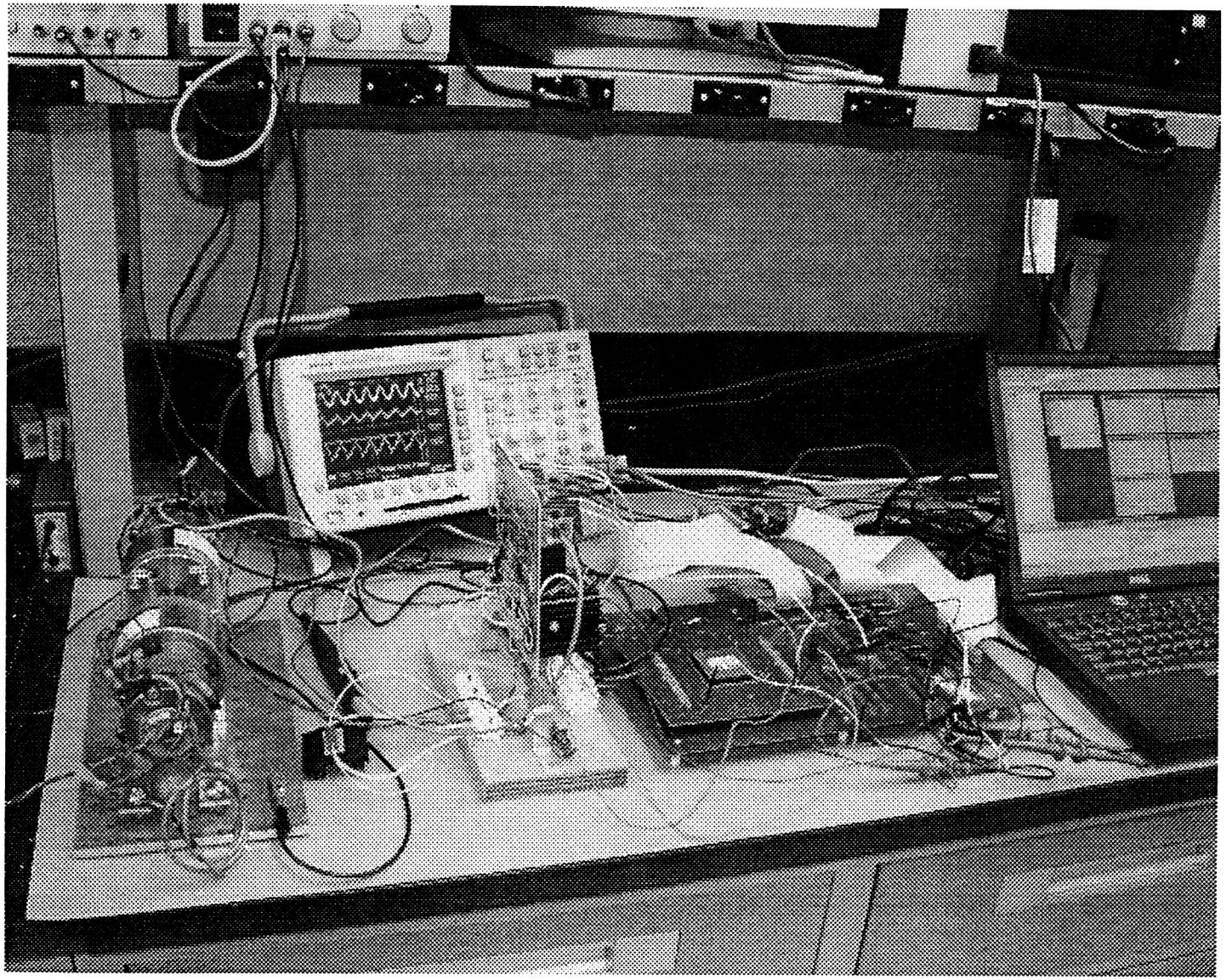

Baseline Analog Controller Design

- Most widely used form of analog controller is the Proportional-Integral (PI) Controller
  - → Used for motor current control and speed control

PI control law is represented by

$$u(t) = K_P e(t) + \frac{1}{(K_I)} \int e(t)dt + K_D \frac{de(t)}{dt}$$

Where *e(t)* is error between desired plant response and measured plant response,
K_P is proportional gain,
K_I is integral gain or time constant,
K_D is derivative gain

Baseline Analog PI Controller

Marshall Space Flight Center
Jet Propulsion Laboratory

PI Controller for 1.8V supply and 1.8V unipolar signal range

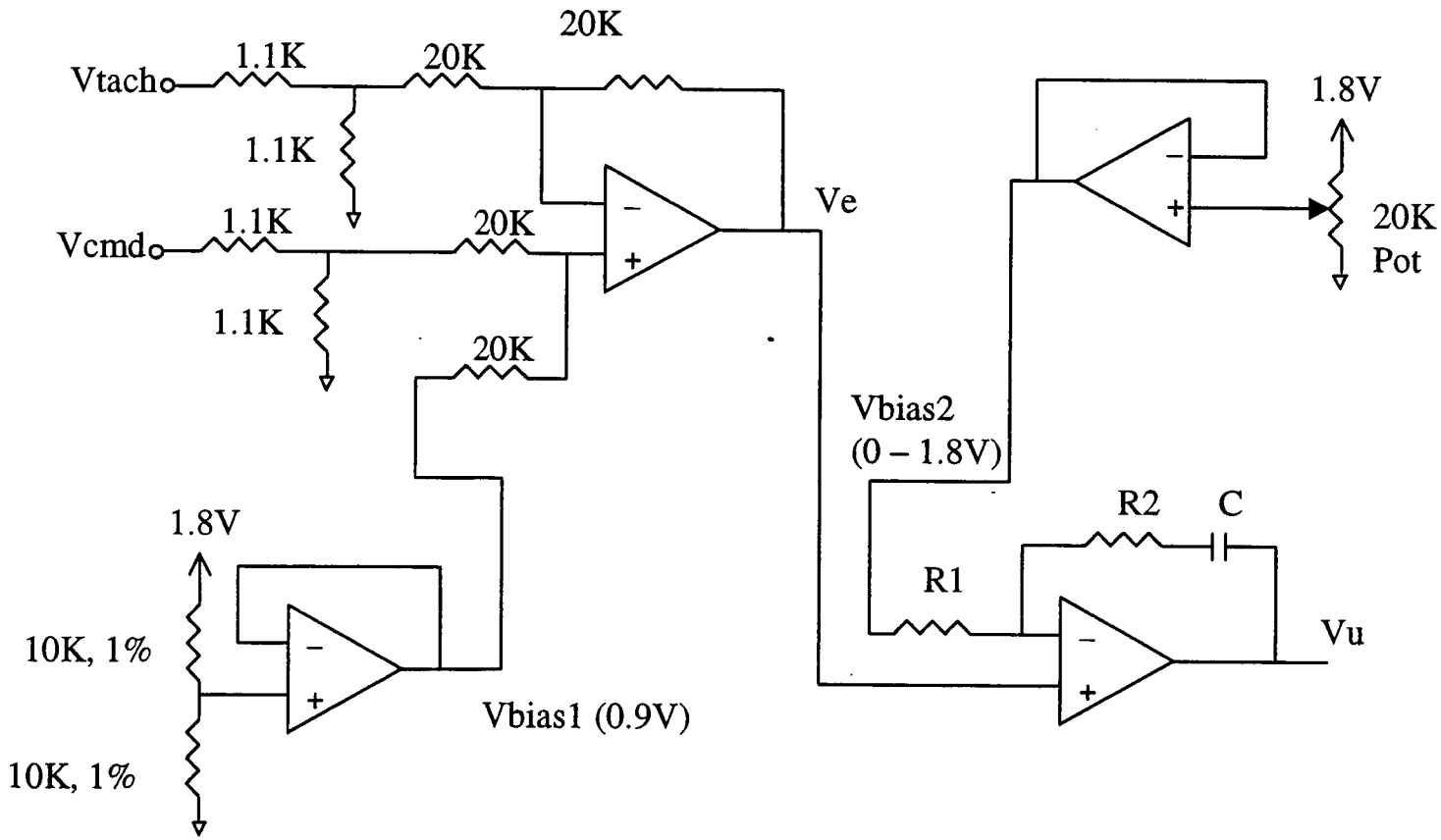

$Vu = (Ve - Vbias2)(R2/R1 + 1/R1Cs) + Ve$

$Ve = Vcmd/2 + 0.9 - Vtach/2$

$R1 = 10K$, $R2 = 200K$, $C = 0.47uF$, $Vbias2 = 0.865$

Vcmd and Vtach, Ve and Vu are 0 – 1.8V signals

Response Using PI Controller

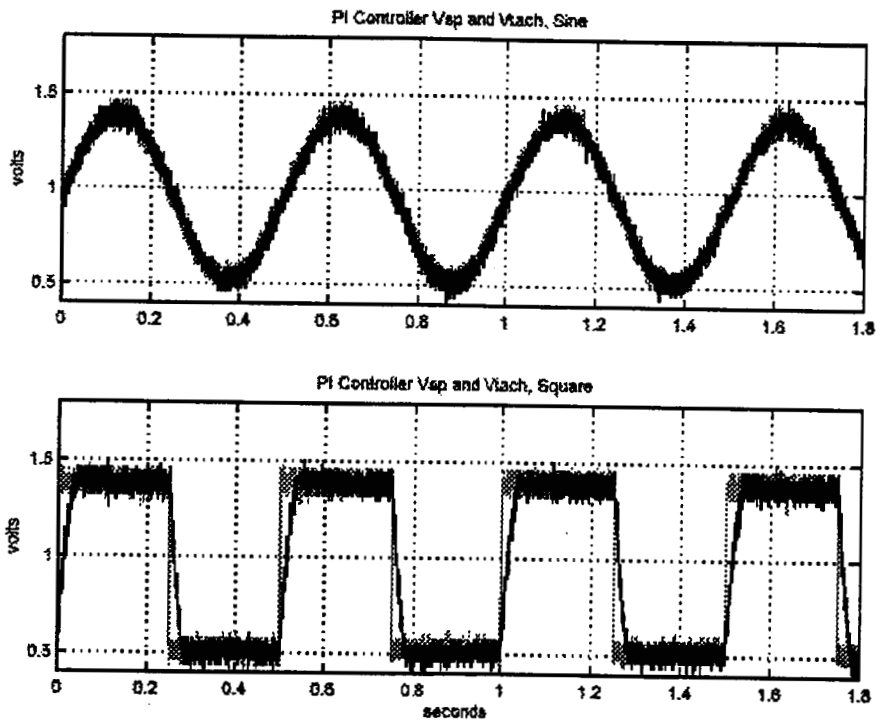

Response with no offset between command and tachometer feedback is achieved by adjusting Vbias2

Motor speed response obtained using PI controller. Vsp is gray, Vtach is black

Evolution of Analog Controllers

- Two FPTA cells used
  - Cell 1 provided with motor speed command and tachometer feedback. Responsible for producing current command to motor driver.
  - Cell 0 used to provide support electronics for cell 1
- Evolutionary Algorithm
  - Standard GA
  - Population initially seeded with randomly generated FPTA2 configurations
  - Population constrained to force the cell 1 switches closed that connect the speed command and tachometer feedback to the cell
    - All closed-loop controllers must use a command and feedback to produce an error signal
- DAC module generates sinusoid for motor speed command
- ADC module simultaneously records command and feedback signals for fitness evaluation

Evolution of Analog Controllers

- Many Controllers were evolved using varying fitness functions and conditions
- Experimental results for two evolved controllers will be presented. The fitness functions and conditions for the evolution of the two cases given differ as shown below

Case 1

$$F = 0.04 * \sum_{i=1}^{n} e_i^2 + \left| \frac{100}{n} \sum_{i=1}^{n} e_i \right| + 100000 * not(S_{57} \vee S_{53})$$

- Penalty for not connecting speed command or feedback signal to cell 1
- 100 individuals in the population
- 2 Hz sinusoid for speed command

Case 2

$$F = 0.04 * \sum_{i=1}^{n} e_i^2 + \left| \frac{100}{n} \sum_{i=1}^{n} e_i \right|$$

- Forced closure of switches connecting speed command and feedback signal to cell 1
- 200 individuals in the population
- 3 Hz sinusoid for speed command

Marshall Space Flight Center
Jet Propulsion Laboratory

Experimental Results

Case 1 Evolved Controller

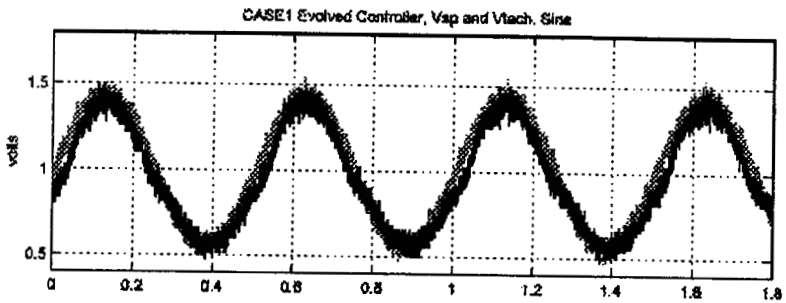

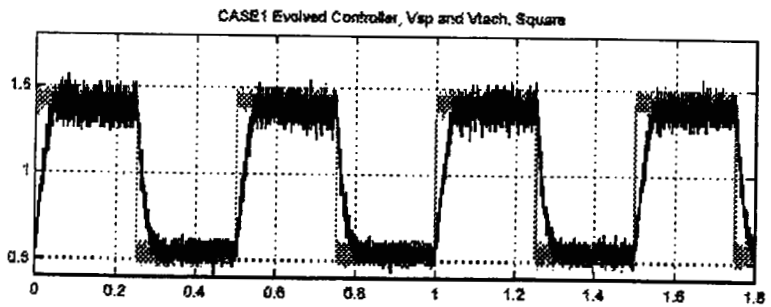

Case 2 Evolved Controller

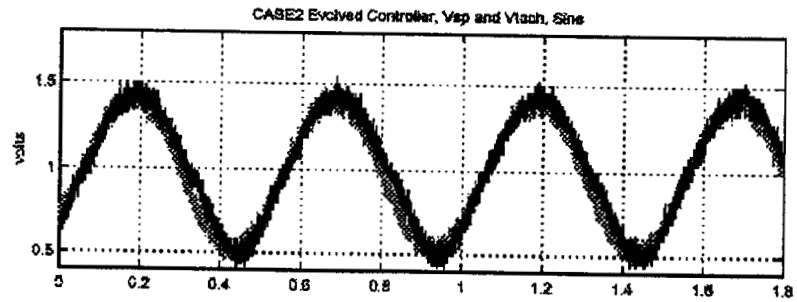

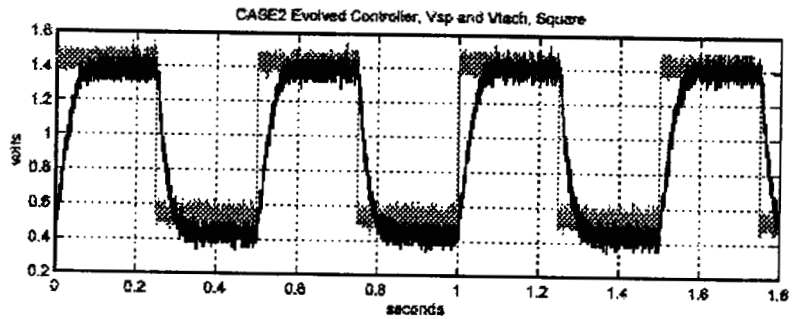

Motor speed response obtained using evolved controllers.
Vsp is gray, Vtach is black

Experimental Results

The Case 1 response is compared to the baseline response obtained using the PI controller in the tables below

Table 1. Error metrics for sinusoidal response

Controller	Max Error	Mean Error	Std Dev Error	RMS Error
PI	0.16 V	0.0028 V	0.0430 V	0.0431 V
CASE1	0.28 V	0.0469 V	0.0661 V	0.0810 V

Table 2. Response and error metrics for square wave. First full positive transition only

Controller	Rise Time	Mean Error	Std Dev Error	RMS Error
PI	0.0358 sec	0.0626 V	0.1816 V	0.1920 V
CASE1	0.0394 sec	0.1217 V	0.2026 V	0.2362 V

- The increase in mean error indicates higher constant offset error in the response. In PI controller this offset is removed via adjustment of Vbias2. FPTA is given no such bias input.
- Experiments show the cell 0 is providing a biasing action for cell 1

Experimental Results

- Case 2 is interesting in that the switches (S54, S61, S62, S63) that route the tachometer feedback to the interior of the reconfigurable cell are all open.
  - → Removal of the feedback signal causes the controller to malfunction
  - → This implies an unanticipated pathway exists in the cell that is being exploited by the evolution
  - → This is the only example obtained to date that uses this exploit.

JPL FPTA2 Cell Schematic

Marshall Space Flight Center
Jet Propulsion Laboratory

In Case 2, Switches 54, 61, 62 and 63 are open in Cell 1

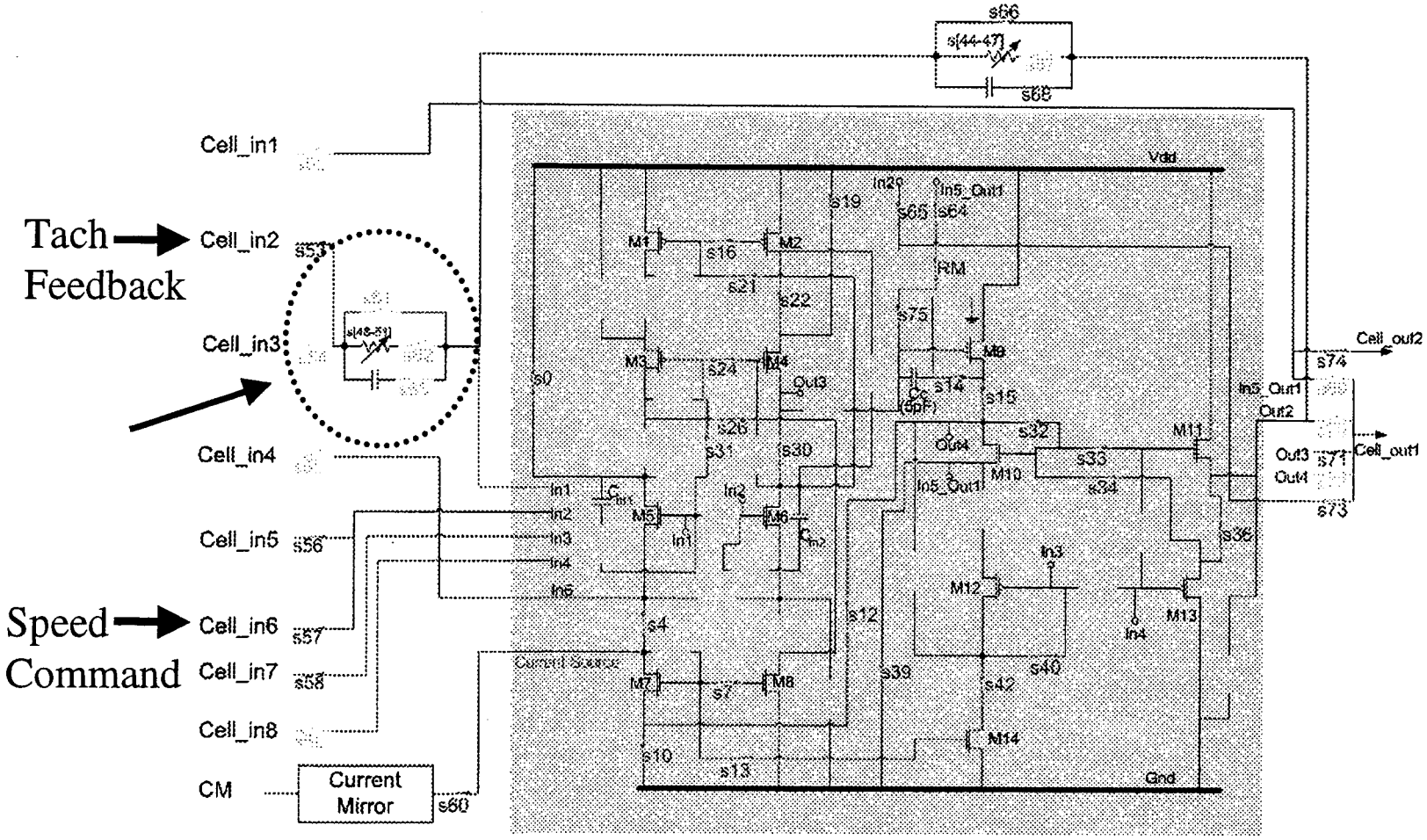

Experimental Results

- The evolved controllers are providing a good response using two adjacent cells in the FPTA to perform a similar function to four op-amps, a collection of 12 resistors and one capacitor.
  - The FPTA switches have inherent resistance on the order of KOhms
  - Each cell has 14 transistors to be used as functional components
  - Cells can be used to implement op-amps by using external passive components and bias voltages
    - No external components or bias provided
- The capability of the controller to respond to inputs of varying amplitude and frequency and varying load are presented on subsequent slides

Response to Speed Command Changes

Marshall Space Flight Center
Jet Propulsion Laboratory

Case 1 Evolved Controller

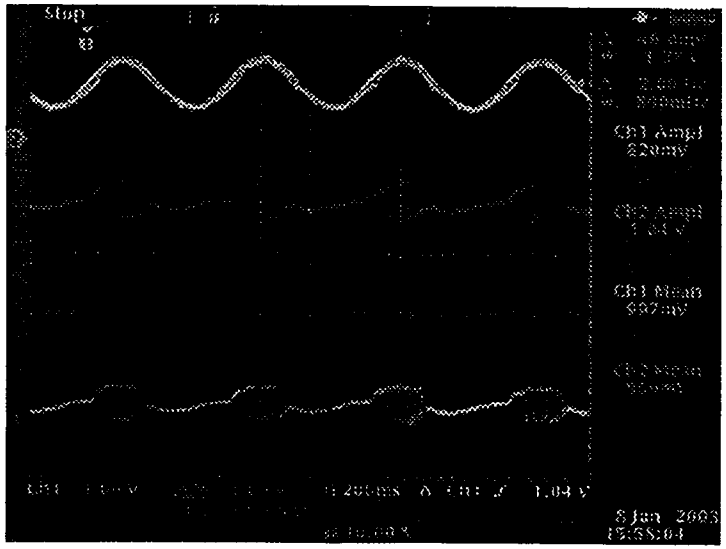

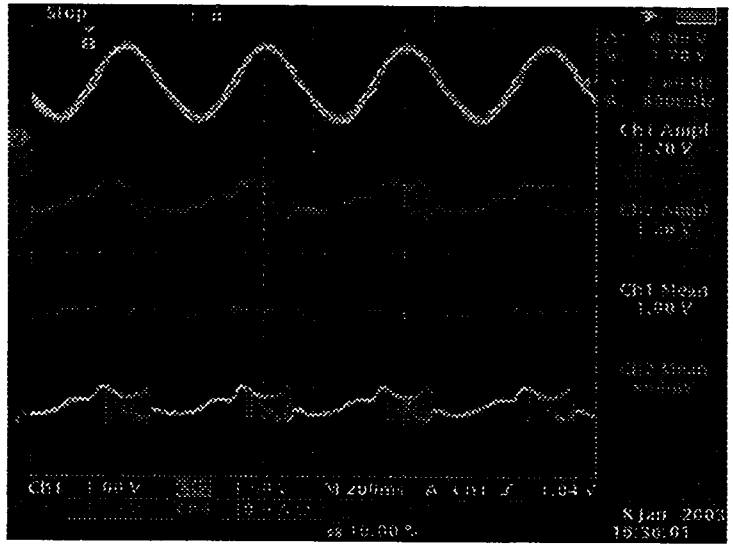

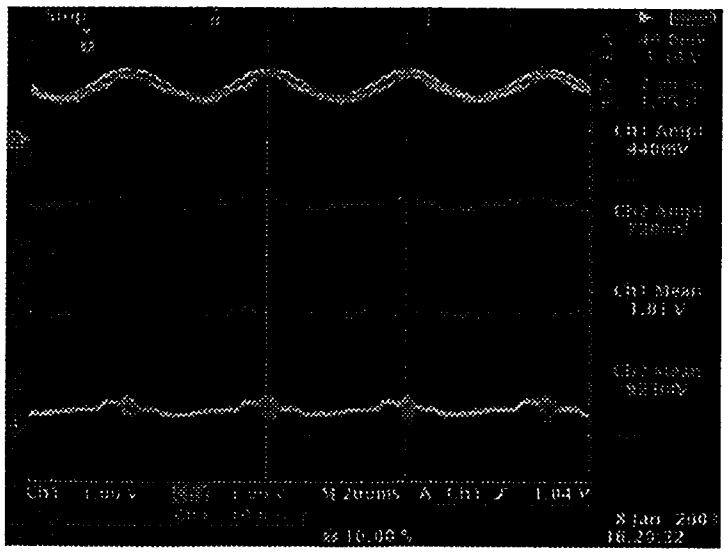

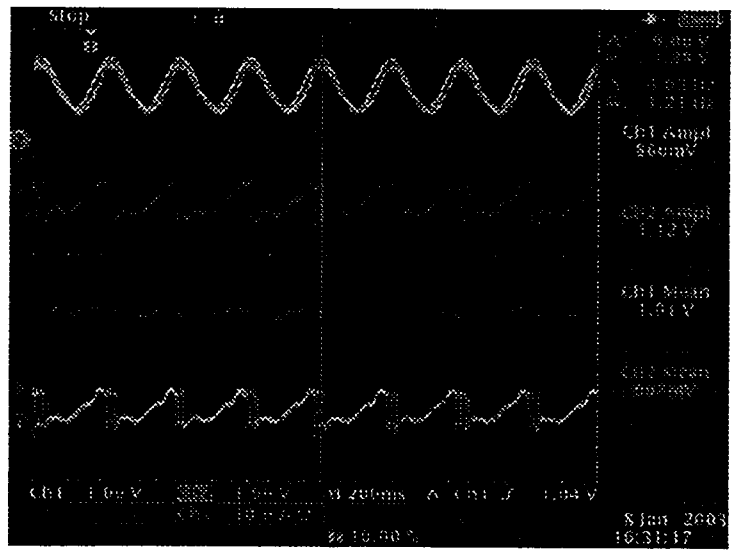

Marshall Space Flight Center
Jet Propulsion Laboratory

Response to Load Changes

Case 1 Evolved Controller

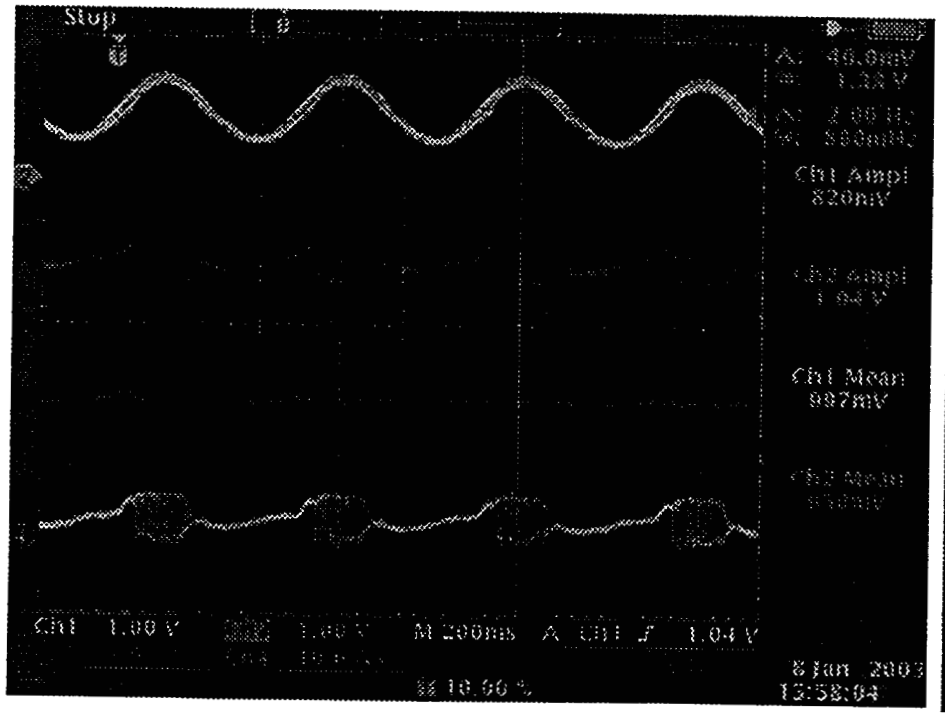

No Load

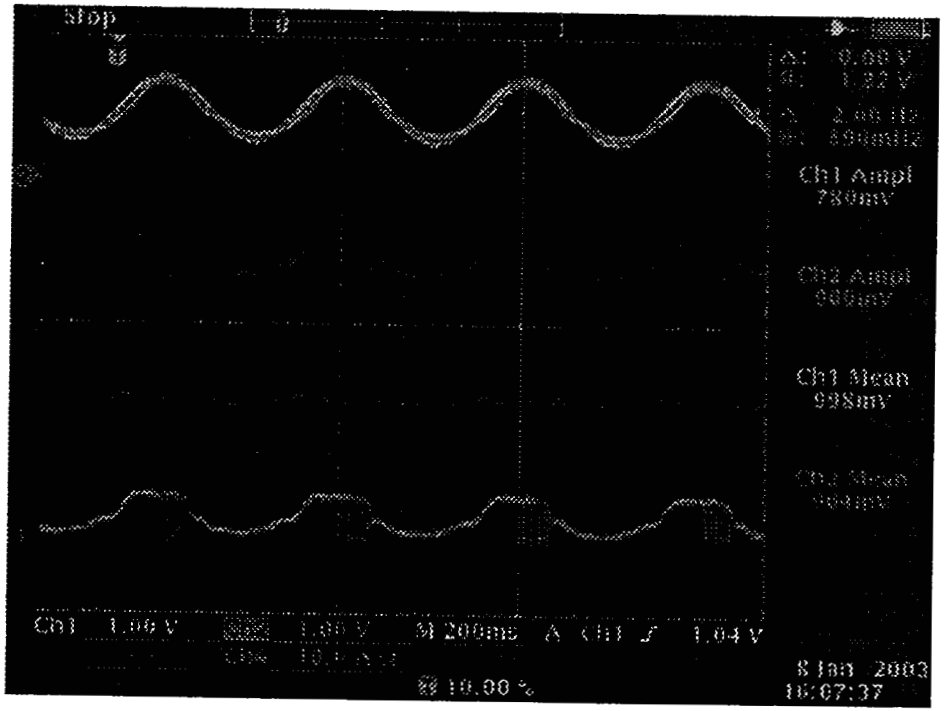

Full Load

Marshall Space Flight Center
Jet Propulsion Laboratory

Response to Load Changes

Case 1 Evolved Controller

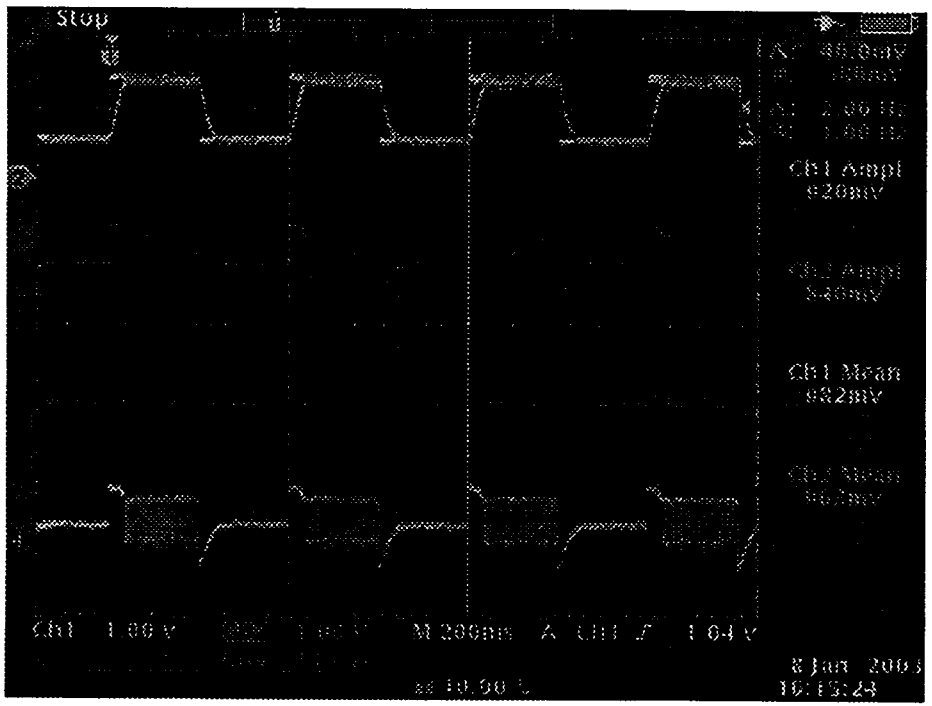

No Load

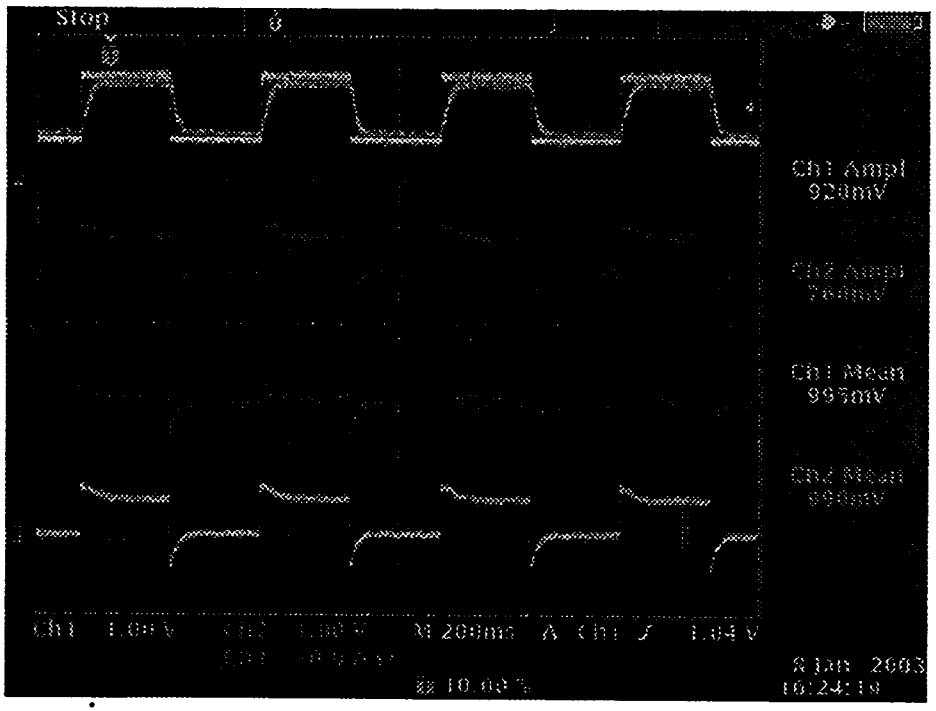

Full Load

Summary

- The results presented show the FPTA2 can be used to evolve simple analog closed-loop controllers that provide good response in comparison with a PI controller
- Evolved design uses less transistors than the conventional design, and no external components.
  - Neglecting programmable overhead, considering functional components only
- Relatively slow response of many practical servomotor-driven systems is a time bottleneck that increases time to convergence
  - Can be addressed through novel controller configurations and approach to evolution
- Future work will include approaches for rapid and competent convergence to controller designs and more complex cascaded or multi-loop controllers