NASA TN D-641

TECHNICAL NOTE

D-641

A THREE-DIMENSIONAL TRAJECTORY SIMULATION USING SIX DEGREES OF FREEDOM WITH ARBITRARY WIND

By Robert L. James, Jr.

Langley Research Center
Langley Field, Va.

NATIONAL AERONAUTICS AND SPACE ADMINISTRATION

WASHINGTON March 1961

1R

NATIONAL AERONAUTICS AND SPACE ADMINISTRATION

TECHNICAL NOTE D-641

A THREE-DIMENSIONAL TRAJECTORY SIMULATION USING SIX DEGREES OF FREEDOM WITH ARBITRARY WIND

By Robert L. James, Jr.

L
1
2
5
2

SUMMARY

Equations are presented for a three-dimensional trajectory simulation. A rigid airframe with aerodynamic symmetry in roll is treated and the pitch plane is assumed to be a plane of mass symmetry. The six degrees of freedom of the missile are considered and the position of the missile is defined relative to a flat nonrotating earth with constant acceleration of gravity. The effect of arbitrary wind velocity and azimuth is included in the equations and the aerodynamic coefficients are nonlinear with respect to Mach number and flow incidence angle.

A derivation of jet damping in pitch and yaw for radial burning solid-propellant rockets is presented as an appendix.

INTRODUCTION

The use of unguided booster systems in high-altitude research, reentry studies, and suborbital tests has been practiced considerably in the past few years and is continuing at a rapid rate. The purpose of this report is to present a trajectory simulation that can be used to study the various problems that occur in the design of unguided boosters. The trajectory is solved in three dimensions with the missile's six degrees of freedom and the effect of varying wind velocity and azimuth.

The unguided vehicle is very attractive since it is usually less complex, and therefore more reliable, and also is less expensive than one with guidance. There are disadvantages, however; performance is usually sacrificed by launching at a lower elevation angle and the dispersion problems become severe when there is no guidance.

The loss in performance due to launching at a lower elevation angle can be compensated for somewhat by increasing the booster impulses and

by spinning the various stages to keep the thrust vector at a higher angle than the flight path during and after exit from the atmosphere.

The main contributors to dispersion are manufacturing or assembly misalinements and the wind. Manufacturing and assembly tolerances create thrust misalinements and aerodynamic asymmetries but the dispersion caused by these effects can be greatly reduced by using a properly designed spin program. Wind dispersion can be made less significant by use of a wind-compensation procedure which gives the launch azimuth and elevation angles necessary to achieve the desired trajectory.

The trajectory-simulation equations presented in this report were programed for the IBM 704 electronic data processing machine at the Langley Research Center. The results of the simulation have been used in the design and analysis of several NASA booster vehicles, such as Little Joe, Scout-SX-1, and Shotput (a two-stage solid-propellant rocket vehicle used to test the inflation techniques for the 100-foot-diameter balloon satellite). A wind-compensation procedure was developed with the aid of this trajectory simulation and is described in reference 1. The application of the technique to the Shotput and Scout-SX-1 vehicles is also included in this reference. The application of another wind-compensation analysis to the Little Joe vehicle is discussed in reference 2.

L
1
2
5
2

DEVELOPMENT OF TRAJECTORY-SIMULATION EQUATIONS

Assumptions and Limitations

Airframe assumed to be rigid body.- Aeroelastic effects are not included in the equations. This assumption eliminates the consideration of forces acting between individual elements of mass, and it allows the airframe motion to be described completely by a translation of the center of gravity and by a rotation about this point.

Airframe assumed to have plane of symmetry coinciding with vertical plane of reference.- The vertical plane of reference is the plane defined by the missile X- and Z-axes as shown in figure 1. (A complete symbol list is presented as appendix A.) The Y-axis, perpendicular to this plane of symmetry, is therefore a principal axis and the products of inertia I_{XY} and I_{YZ} vanish. Thus, if mass asymmetries are to be simulated, the XZ-plane is chosen so that this is the case.

Vehicle assumed to have aerodynamic symmetry in roll.- The aerodynamic forces and moments are assumed invariant with the roll position

of the missile relative to the free-stream velocity vector. This assumption greatly simplifies the equations of motion by eliminating the aerodynamic cross-coupling terms between the roll motion and the pitch and yaw motions. Also, a different set of aerodynamic characteristics for the pitch and yaw planes is not required.

Flat nonrotating earth assumed with constant acceleration of gravity.- A flat nonrotating earth is sufficient because the main purpose of this analysis is to simulate the effects of wind and other factors which occur early in flight where the altitude and range changes are relatively small. The acceleration of gravity is assumed to be constant but is not necessarily the sea-level value so that simulation of portions of the trajectory at high altitude is possible.

L
1
2
5
2

Airframe assumed to have six degrees of freedom.- The six degrees of freedom of the airframe consist of three translations and three rotations along and about the missile X-, Y-, and Z-axes. These motions are shown in figure 2, the translations being u, v, and w and the rotations being p, q, and r.

Aerodynamic forces and moments assumed to be functions of Mach number and nonlinear with flow incidence angle.- The introduction of surface winds in a trajectory during launch can create flow incidence angles that are very large, in some cases larger than 90°. Nonlinear aerodynamic characteristics with respect to flow incidence angle must be assumed to simulate the launch motion under the effect of wind. Since Mach number varies considerably in a missile trajectory, it is necessary to assume that the aerodynamic characteristics vary with Mach number.

Axis Systems and Nomenclature

Two orthogonal coordinate systems are used to define the missile's position and angular orientation in space. (See fig. 1.) The axis system which is denoted by X_E, Y_E, and Z_E is fixed with respect to the earth. This is a right-hand coordinate system with the Z_E-axis vertical and pointed downward in the direction of gravity. The X_E- and Y_E-axes lie in the horizontal plane. The position of the missile's center of gravity at any time is given in this coordinate system.

The second axis system, denoted by X, Y, and Z, is fixed with respect to the missile and is also a right-hand coordinate system. The X-axis is coincident with the missile center line and is positive in a forward direction. The positions of the Y- and Z-axes are arbitrary in the roll sense; however, the launch position of the Y-axis is usually taken to be horizontal.

The Eulerian angles ψ, θ, and ϕ are used to define the missile's attitude with respect to the earth-fixed axes. Figure 1 shows the Euler angles, where the order of rotation of the missile axes is yaw, pitch, and roll or ψ, θ, and ϕ, respectively. Also shown in this figure are the angular rates $\dot{\psi}$, $\dot{\theta}$, and $\dot{\phi}$.

The linear velocity of the missile V can be broken up into components u, v, and w along the missile X-, Y-, and Z-axis, respectively, as shown in figure 2. Similarly, the missile's angular velocity Ω can be divided into components p, q, and r about the X-, Y-, and Z-axis, respectively. These linear and rotational velocity components comprise the six degrees of freedom of the missile.

Equations can be written for the angular velocities $\dot{\psi}$, $\dot{\phi}$, and $\dot{\theta}$ in terms of ψ, ϕ, and θ and r, p, and q as follows:

$$\dot{\psi} = \frac{q \sin \phi + r \cos \phi}{\cos \theta} \tag{1}$$

$$\dot{\phi} = p + \dot{\psi} \sin \theta \tag{2}$$

$$\dot{\theta} = q \cos \phi - r \sin \phi \tag{3}$$

These equations are based on equations derived in reference 3. The following equations for ψ, ϕ, and θ are obtained by integrating equations (1), (2), and (3), respectively,

$$\psi = \int_t \dot{\psi}\, dt + \psi_o \tag{4}$$

$$\phi = \int_t \dot{\phi}\, dt + \phi_o \tag{5}$$

$$\theta = \int_t \dot{\theta}\, dt + \theta_o \tag{6}$$

The components of the missile velocity in the earth-fixed coordinate system are $\dot{x}_E$, $\dot{y}_E$, and $\dot{z}_E$. These velocity components can be expressed in terms of u, v, and w and ϕ, θ, and ψ as follows (see ref. 3):

$$\dot{x}_E = u(\cos\theta\cos\psi) + v(\cos\psi\sin\phi\sin\theta - \sin\psi\cos\phi) + w(\cos\psi\cos\phi\sin\theta + \sin\psi\sin\phi) \tag{7}$$

L
1
2
5
2

$$\dot{y}_E = u(\cos\theta\sin\psi) + v(\sin\psi\sin\phi\sin\theta + \cos\psi\cos\phi) + w(\sin\psi\cos\phi\sin\theta - \cos\psi\sin\phi) \tag{8}$$

$$\dot{z}_E = -u(\sin\theta) + v(\sin\phi\cos\theta) + w(\cos\theta\cos\phi) \tag{9}$$

The equations for x_E, y_E, and z_E are

$$x_E = \int_t \dot{x}_E\,dt + x_{E,o} \tag{10}$$

$$y_E = \int_t \dot{y}_E\,dt + y_{E,o} \tag{11}$$

$$z_E = \int_t \dot{z}_E\,dt + z_{E,o} \tag{12}$$

Note that altitude h is equivalent to $-z_E$.

In the foregoing paragraphs, only the missile velocities relative to the ground or inertial velocities have been mentioned. If wind is being considered, the missile velocities relative to the wind must be computed since these velocities are needed in computing the aerodynamic forces and moments.

A diagram of the wind resolution in the plane of the earth is shown in figure 3. The horizontal wind velocity component is expressed as a velocity $V_{w,h}$ and the direction from which it is blowing; this direction is indicated by θ_w which is measured relative to true north. Hence, the horizontal wind velocity component is completely defined if

$V_{w,h}$ and θ_w are given as variations with altitude. The vertical component of wind is called $V_{w,ZE}$ and is also given as a variation with altitude. It should be pointed out that $V_{w,ZE}$ is very rarely measured but is included in the equations of this analysis to make it possible to study the effects of vertical gusts. The $V_{w,ZE}$ vector would appear as a point at the origin in figure 3 and would be directed into the page if $V_{w,ZE}$ were a positive value. The earth-fixed axes X_E and Y_E are shown in figure 3 in an arbitrary direction from north. The angle Λ denotes the direction of the X_E-axis relative to true north. It can be seen in figure 3 that

$$\psi_w = \Lambda - \theta_w \tag{13}$$

and that the horizontal wind components along the earth-fixed axes are

$$V_{w,XE} = -V_{w,h} \cos \psi_w \tag{14}$$

$$V_{w,YE} = V_{w,h} \sin \psi_w \tag{15}$$

By using the transformation matrix of reference 3, the velocity components of the missile relative to the wind can be written as

$$u' = u - V_{w,XE}(\cos \theta \cos \psi) - V_{w,YE}(\cos \theta \sin \psi) + V_{w,ZE}(\sin \theta) \tag{16}$$

$$\begin{aligned} v' = v &- V_{w,XE}(\cos \psi \sin \theta \sin \phi - \sin \psi \cos \phi) \\ &- V_{w,YE}(\cos \psi \cos \phi + \sin \psi \sin \theta \sin \phi) - V_{w,ZE}(\cos \theta \sin \phi) \end{aligned} \tag{17}$$

$$\begin{aligned} w' = w &- V_{w,XE}(\cos \psi \sin \theta \cos \phi + \sin \psi \sin \phi) \\ &- V_{w,YE}(\sin \psi \sin \theta \cos \phi - \cos \psi \sin \phi) - V_{w,ZE}(\cos \theta \cos \phi) \end{aligned} \tag{18}$$

It follows that the total missile velocity relative to the wind is

$$V' = \sqrt{(u')^2 + (v')^2 + (w')^2} \tag{19}$$

Speed of sound V_s and free-stream static pressure p_∞ vary with altitude. Hence, if any altitude and the total missile velocity at that

L
1
2
5
2

altitude are given, the Mach number and dynamic pressure can be computed from the following equations:

$$M = \frac{V'}{V_s} \tag{20}$$

$$q' = 0.7p_\infty M^2 \tag{21}$$

There are several angles which are used to compute the aerodynamic forces and moments on the missile. These aerodynamic angles, as they are called, are shown in figure 4. The missile X-, Y-, and Z-axes are shown with velocity components relative to the wind u', v', and w'. The total missile velocity V' is also shown in this figure.

The angles can be expressed in terms of the velocity components as follows:

$$\eta = \tan^{-1} \frac{\sqrt{(v')^2 + (w')^2}}{u'} \tag{22}$$

$$\alpha = \tan^{-1} \frac{w'}{u'} \tag{23}$$

$$\beta = \tan^{-1} \frac{v'}{u'} \tag{24}$$

$$\phi' = \cos^{-1} \frac{w'}{\sqrt{(v')^2 + (w')^2}} = \sin^{-1} \frac{v'}{\sqrt{(v')^2 + (w')^2}} \tag{25}$$

Only the angles η and ϕ' are used in the equations of motion to compute the aerodynamic forces and moments but the equations for α and β are given herein since they are conventional and are used in analyzing the computed results.

Missile Equations of Motion

There are six equations of motion which represent the summations of forces and moments along and about the missile X-, Y-, and Z-axes. It is convenient to introduce the following table in which some of the notations that apply to each axis are listed:

Axis	Linear velocity along axis	Angular velocity about axis	Summation of forces along axis	Summation of moments about axis	Moment of inertia	Positive direction
X	u	p	$\sum F_X$	$\sum M_X$	I_X	Forward
Y	v	q	$\sum F_Y$	$\sum M_Y$	I_Y	Right
Z	w	r	$\sum F_Z$	$\sum M_Z$	I_Z	Down

L
1
2
5
2

The six equations of motion are derived in reference 4 and are as follows:

$$\sum F_X = m(\dot{u} - vr + wq) \tag{26}$$

$$\sum F_Y = m(\dot{v} - wp + ur) \tag{27}$$

$$\sum F_Z = m(\dot{w} - uq + vp) \tag{28}$$

$$\sum M_X = \dot{p}I_X - \dot{r}I_{XZ} + \left(I_Z - I_Y\right)qr - pqI_{XZ} \tag{29}$$

$$\sum M_Y = \dot{q}I_Y + rp\left(I_X - I_Z\right) + \left(p^2 - r^2\right)I_{XZ} \tag{30}$$

$$\sum M_Z = \dot{r}I_Z - \dot{p}I_{XZ} + \left(I_Y - I_X\right)pq + I_{XZ}qr \tag{31}$$

The right-hand sides of these equations were derived under the assumptions mentioned earlier in this report and are complete in this sense. It should be noted that the jet-damping terms are included in the forcing sides of the equations and are now discussed.

The left-hand or forcing side of the equations of motion includes (1) auxiliary forces and moments, (2) thrust, (3) weight, (4) aerodynamic forces and moments, and (5) jet-damping terms. These expressions are as follows:

$$F_X = \overset{(1)}{F_X(t)} + \overset{(2)}{Ta} - \overset{(3)}{mg \sin \theta} - \overset{(4)}{\left\{C_{A,0} + \Delta C_A\right\} q'A} \tag{32}$$

L
1
2
5
2

$$F_Y = \overset{(1)}{F_Y(t)} + \overset{(2)}{Tb} + \overset{(3)}{mg \sin \phi \cos \theta} + \overset{(4)}{\left\{-C_N \sin \phi' + C_{N_\delta}\delta_r\right\} q'A} \tag{33}$$

$$F_Z = \overset{(1)}{F_Z(t)} + \overset{(2)}{Tc} + \overset{(3)}{mg \cos \phi \cos \theta} - \overset{(4)}{\left\{C_N \cos \phi' + C_{N_\delta}\delta_q\right\} q'A} \tag{34}$$

$$M_X = \overset{(1)}{M_X(t)} + \overset{(2)}{Td} + \overset{(5)}{M_{X_p}p} + \overset{(4)}{\left\{C_{l_p}\left(\frac{pD}{2V'}\right) + C_{l_\delta}\delta_p\right\} q'AD} \tag{35}$$

$$M_Y = \overset{(1)}{M_Y(t)} + \overset{(2)}{Te} + \overset{(5)}{M_{Y_q}q}$$

$$+ \overset{(4)}{\left\{\left[C_N\left(\frac{x_{cg}}{D} - \frac{x_{cp}}{D}\right) + C_{m_{\dot{\eta}}}\left(\frac{\dot{\eta}D}{2V'}\right)\right]\cos \phi' + C_{N_\delta}\left(\frac{x_{cg}}{D} - \frac{x_{cp,tail}}{D}\right)\delta_q + C_{m_q}\left(\frac{qD}{2V'}\right)\right\} q'AD} \tag{36}$$

$$M_Z = \overset{(1)}{M_Z(t)} + \overset{(2)}{Tf} + \overset{(5)}{M_{Z_r}r}$$

$$+ \overset{(4)}{\left\{-\left[C_N\left(\frac{x_{cg}}{D} - \frac{x_{cp}}{D}\right) + C_{m_{\dot{\eta}}}\left(\frac{\dot{\eta}D}{2V'}\right)\right]\sin \phi' + C_{N_\delta}\left(\frac{x_{cg}}{D} - \frac{x_{cp,tail}}{D}\right)\delta_r + C_{n_r}\left(\frac{rD}{2V'}\right)\right\} q'AD} \tag{37}$$

To assist in explaining equations (32) to (37), the terms are broken up into five categories which are indicated. The terms in each category are explained in the following paragraphs.

Auxiliary forces and moments.- The terms labeled (1) are the auxiliary forces and moments which are time variables. These terms may be used to simulate the effects of separation devices, such as retro-rockets, springs, and others, or moments imparted by spin rockets, pulse jets, or any other external forces and moments which warrant consideration.

Forces and moments due to rocket-motor thrust.- The terms labeled (2) are the forces and moments due to rocket-motor thrust. The thrust is computed by using the following subsidiary equation which was derived from a thrust equation given in reference 5:

$$T = T(t) + \left(p_{\infty,T} - p_{\infty}\right)A_e \tag{38}$$

where $T(t)$ is the basic time variation of thrust for a particular altitude or pressure condition ($T(t)$ is measured at or derived for one altitude). The second term in equation (38) corrects the thrust for altitude conditions where $p_{\infty,T}$ is the ambient pressure for the altitude on which $T(t)$ is based. The ambient pressure at flight altitude is p_{∞} and A_e is the nozzle exit area. It should be pointed out that this equation is only an approximation to the rigorous one which includes several other rocket-motor terms.

The thrust is multiplied by a, b, or c in the force equations (32) to (34) to give the thrust component along the X-, Y-, and Z-axis, respectively. These values are the direction cosines between the thrust vector and the body axes.

In the moment equations (35) to (37), T is multiplied by d, e, or f, which are the thrust vector moment arms for computing the thrust moment about the X-, Y-, and Z-axis, respectively.

By selecting the proper values for a, b, c, d, e, and f, it is possible to simulate any conceivable thrust misalinement. These factors are time variables so that the effect of center-of-gravity travel and resulting geometry changes can be taken into account.

Weight.- The weight vector components along the body axes are labeled (3) in the force equations. The weight mg is a time variable and it is multiplied by the proper Eulerian functions to obtain the components along the body axes. Derivation of the gravity vector resolution may be found in reference 3.

Aerodynamic forces and moments.- The aerodynamic forces and moments are labeled (4) in the equations. The aerodynamic force along the X-axis in equation (32) consists of two parts $C_{A,0}$ and ΔC_A which are the axial-force coefficient at zero flow incidence angle and the change in axial-force coefficient due to flow incidence angle. The coefficient

$C_{A,0}$ is a function of Mach number only, whereas ΔC_A is a function of both Mach number and flow incidence angle η. These values are multiplied by the dynamic pressure q' and reference area A to give pounds of force.

The aerodynamic forces along the Y- and Z-axes are produced by C_N and C_{N_δ} which are the normal-force coefficients due to the flow incidence angle and to fin deflection. The coefficient C_N is assumed to be invariant with the roll attitude of the missile and to be confined always to the plane made by the X-axis and the total velocity vector V'. The components of this force along the Y- and Z-axes are obtained by multiplying C_N by $\sin \phi'$ and $\cos \phi'$, respectively. The angle ϕ' defines the position of the total velocity vector in a roll sense as shown in figure 4. The coefficient C_{N_δ} is assumed to be the same in pitch as in yaw; however, the net effect in pitch and yaw can be different by varying the value of pitch fin deflection δ_q or yaw fin deflection δ_r. The coefficients are functions of Mach number and η and the fin deflections are time variables.

L
1
2
5
2

The values C_{l_p} and C_{l_δ} in equation (35) are the aerodynamic damping in roll and rolling-moment coefficient due to fin deflection. Each is a function of Mach number and η. The value C_{l_p} is multiplied by $\left(\frac{pD}{2V'}\right)q'AD$ and C_{l_δ} is multiplied by $\delta_p q'AD$ to give the rolling moment in foot-pounds.

In equations (36) and (37) the aerodynamic pitching and yawing moments are obtained by multiplying the normal force by a moment arm. The moment arm for the C_N component is $x_{cg} - x_{cp}$ and the moment arm for C_{N_δ} is $x_{cg} - x_{cp,tail}$. The distance x_{cg} is a time variable and x_{cp} and $x_{cp,tail}$ are functions of Mach number and η. The aerodynamic damping terms are $C_{m_{\dot{\eta}}}$ and C_{m_q} $\left(C_{n_r} = C_{m_q}\right.$ because of symmetry$\left.\right)$ which are also functions of Mach number and η. Note that C_N and $C_{m_{\dot{\eta}}}$ lie in the plane of V' and the X-axis and are multiplied by $\cos \phi'$ and $\sin \phi'$ to give the moment component about the Y-axis and Z-axis, respectively. As was done previously, the coefficients are multiplied by the proper dimensional quantities to give foot-pounds of moment.

<u>Jet damping</u>.- The jet-damping terms consist of M_{X_p}, M_{Y_q}, and M_{Z_r} (labeled (5)) in equations (35) to (37), respectively. The values

of M_{Y_q} and M_{Z_r} are equal because of symmetry. Each damping term is considered to be a time variable. In appendix B a derivation for the jet damping in pitch and yaw is presented; this appendix was prepared by Norman L. Crabill of the Langley Research Center. The roll damping or driving moment (depending on sign) is treated in reference 6.

DISCUSSION

L
1
2
5
2

Significance of Limitations Imposed on Trajectory-Simulation Equations

The limitations imposed on the equations were listed in a previous section of this report and are repeated for reference as follows:

1. Rigid body

2. Vehicle has mass symmetry about pitch plane

3. Aerodynamic symmetry in roll

4. Flat nonrotating earth with constant acceleration of gravity

The first limitation greatly simplifies the equations of motion by eliminating the aeroelastic functions. Usually, the aeroelastic problem is investigated by using analyses which do not determine the trajectory. The trajectory data are given as inputs in these analyses and are usually obtained with the rigid-body equations of motion.

The assumption of a plane of mass symmetry through the body does not restrict the solution significantly but it does simplify the equations as shown in reference 4. Most missiles have roll symmetry and are designed to have no product of inertia; however, manufacturing tolerances create mass unbalance, the effect of which must be determined. This limitation restricts the principal axis to one plane; however, the location of this plane through the body can be changed by reorienting the body axes in a roll sense.

The limitation of aerodynamic symmetry is justified because of the large percentage of vehicles that fall into this category. The number of aerodynamic force and moment terms is reduced by more than one-half by this limitation. Additional aerodynamic terms could be included in the forcing side of the equations of motion to remove this restriction if it were desired.

A flat nonrotating earth with constant acceleration of gravity is usually sufficient for study of rocket performance in the atmosphere where the altitude and range values are small. Again, the compromise was between simplicity and completeness. By using the proper subsidiary equations either of these limitations could be removed.

Use of Trajectory Simulation in Studying Performance and Stability of Missiles

L
1
2
5
2

It was pointed out in the Introduction that the trajectory program described has been used to develop the wind-compensation procedures of references 1 and 2. The wind analyses were made to determine a procedure to use in making launch-angle settings (azimuth and elevation) to compensate for the wind existing at launch. The analyses consisted of making several trajectory computations with various wind conditions and launch angles.

Application of one of these wind-compensation methods to a different missile would require several trajectory computations for that missile. The conditions to be considered and method of analyzing the trajectory results are described in references 1 and 2.

There are many other types of problems that can be studied by using this trajectory simulation. One of these is the obtainment of optimum performance by varying such things as launch elevation angle, staging sequence, thrust, weight, and the aerodynamic configuration. Also, the design of a spin program that best satisfies the performance, stability, and range safety requirements can be accomplished. Consideration of aerodynamic and thrust misalinements and the uncorrected wind in predicting the probable impact area is another application.

The trajectory analysis can also be used in determining the spin requirements for second-stage vehicles operating both in a vacuum and in the region of low air density. The vacuum case does not require the aerodynamic forces and moments that the equations provide but does require the thrust-misalinement, external-force, and mass-unbalance terms. It is possible to determine the spin rate necessary to keep the precession and nutation (wobble) amplitudes within desired limits for varying values of tipoff (initial conditions) and thrust misalinement. The performance degradation due to these effects may be another consideration if this stage is used for orbit injection.

In the second case, where the stage is burning in the presence of air and there is dynamic pressure, the problem may be aggravated because of the vehicle aerodynamic characteristics. For instance, the body may

be inherently unstable in a static sense so that spinning also is required to stabilize it. This problem requires the aerodynamic forces and moments in addition to the other capabilities which the trajectory analysis provides.

CONCLUDING REMARKS

Equations have been presented for a three-dimensional trajectory simulation. A rigid airframe with aerodynamic symmetry in roll was treated and the pitch plane was assumed to be a plane of mass symmetry. The six degrees of freedom of the missile were considered and the missile position was defined relative to a flat nonrotating earth with constant acceleration of gravity. The equations include the effect of arbitrary wind velocity and azimuth and the aerodynamic coefficients are nonlinear with respect to flow incidence angle and Mach number.

L
1
2
5
2

A derivation of the jet damping in pitch and yaw for radial burning solid-propellant rocket motors is presented in an appendix.

The trajectory analysis is particularly adaptable to the solution of missile launch problems where consideration of winds and thrust misalinement makes it necessary to use the six-degrees-of-freedom equations. It is also adaptable to stability analysis where the vehicle is spinning. The limitations imposed on the equations greatly simplify them and the resulting machine computations; yet, a large portion of problems can be solved where these limitations do not affect the results significantly.

Langley Research Center,
National Aeronautics and Space Administration,
Langley Field, Va., October 4, 1960.

APPENDIX A

SYMBOLS

In the present paper, distances are measured in the U.S. foot. (One U.S. foot = 0.3048006 meter.)

A	cross-sectional area of body, sq ft
A_e	rocket-motor exit area, sq ft
A_n	cross-sectional area of nozzle, sq ft
a,b,c	direction cosine used in computing thrust component along missile X-, Y-, and Z-axis, respectively, dimensionless
$C_{A,0}$	axial-force coefficient at zero flow incidence angle, dimensionless
ΔC_A	increment of axial-force coefficient due to flow incidence angle, dimensionless
C_l	rolling-moment coefficient, dimensionless
C_{l_p}	rate of change of rolling-moment coefficient with rolling velocity, $\dfrac{\partial C_l}{\partial\left(\dfrac{pD}{2V'}\right)}$, 1/radian
C_{l_δ}	rate of change of rolling-moment coefficient with fin deflection, $\dfrac{\partial C_l}{\partial \delta}$, 1/radian
C_m	pitching-moment coefficient, dimensionless
C_{m_q}	rate of change of pitching-moment coefficient with pitching velocity, $\dfrac{\partial C_m}{\partial\left(\dfrac{qD}{2V'}\right)}$, 1/radian
$C_{m_{\dot{\eta}}}$	rate of change of pitching-moment coefficient with rate of change of flow incidence angle, $\dfrac{\partial C_m}{\partial\left(\dfrac{\dot{\eta}D}{2V'}\right)}$, 1/radian

C_N normal-force coefficient, dimensionless

C_{N_δ} rate of change of normal-force coefficient with fin deflection, $\frac{\partial C_N}{\partial \delta}$, 1/radian

C_n yawing-moment coefficient, dimensionless

C_{n_r} rate of change of yawing-moment coefficient with yawing velocity, $\frac{\partial C_n}{\partial\left(\frac{rD}{2V'}\right)}$, 1/radian

L
1
2
5
2

D body diameter, ft

d,e,f moment arm for thrust moment about missile X-, Y-, and Z-axis, respectively, ft

F_X, F_Y, F_Z force along X-, Y-, and Z-axis, respectively, lb

$F_X(t), F_Y(t), F_Z(t)$ force along X-, Y-, and Z-axis, respectively, as a function of time

g acceleration due to force of gravity, ft/sec^2

h altitude above flat earth, ft

I_X, I_Y, I_Z mass moment of inertia about X-, Y-, and Z-axis, respectively, slug-ft^2

I_{XY}, I_{XZ}, I_{YZ} products of inertia, slug-ft^2

l_g grain length, $s_2 - s_1$, ft

l_n nozzle length, ft

l_1 distance between grain center of gravity and nozzle exit plane, $\frac{l_g}{2} + l_n$, ft

l_2 term in equation (B13), $\left(\frac{l_g}{2} + l_n\right)^2 - \frac{l_g^2}{12}$, ft^2

M	Mach number, dimensionless
M_X	rolling moment, ft-lb
$M_X(t), M_Y(t), M_Z(t)$	rolling moment, pitching moment, and yawing moment, respectively, as a function of time
M_{X_p}	rate of change of rolling moment with rolling velocity, $\frac{\partial M_X}{\partial p}, \frac{\text{ft-lb}}{\text{radians/sec}}$
M_Y	pitching moment, ft-lb
M_{Y_q}	rate of change of pitching moment with pitching velocity, $\frac{\partial M_Y}{\partial q}, \frac{\text{ft-lb}}{\text{radians/sec}}$
M_Z	yawing moment, ft-lb
M_{Z_r}	rate of change of yawing moment with yawing velocity, $\frac{\partial M_Z}{\partial r}, \frac{\text{ft-lb}}{\text{radians/sec}}$
m	mass, slugs
p	rolling velocity, radians/sec
p_∞	free-stream static pressure, lb/sq ft
$p_{\infty,T}$	free-stream static pressure on which $T(t)$ is based, lb/sq ft
q	pitching velocity, radians/sec
q'	dynamic pressure, lb/sq ft
r	yawing velocity, radians/sec
s	distance aft of vehicle center of gravity, ft
s_1	distance from vehicle center of gravity to beginning of grain, ft
s_2	distance from vehicle center of gravity to end of grain, ft

L
1
2
5
2

s_3 distance from vehicle center of gravity to nozzle exit plane, ft

$\bar{s}$ distance from vehicle center of gravity to grain center of gravity, $\frac{s_1 + s_2}{2}$, ft

T thrust, lb

T(t) thrust as a function of time

t time, sec

u,v,w component of missile linear velocity relative to earth along X-, Y-, and Z-axis, respectively, ft/sec

u',v',w' component of missile linear velocity relative to wind along X-, Y-, and Z-axis, respectively, ft/sec

V missile linear velocity relative to earth, ft/sec

V_i internal-flow velocity through nozzle, ft/sec

V_s velocity of sound, ft/sec

$V_{w,h}$ horizontal wind velocity component relative to earth, ft/sec

$V_{w,XE}, V_{w,YE}, V_{w,ZE}$ wind velocity component along X_E-, Y_E-, and Z_E-axis, respectively

V' total missile linear velocity relative to wind, ft/sec

w mass flow through nozzle, slugs/sec

X,Y,Z body axes of missile, dimensionless

X_E, Y_E, Z_E earth-fixed axes, dimensionless

x_E, y_E, z_E component of distance between missile center of gravity and earth-fixed axis along X_E-, Y_E-, and Z_E-axis, respectively, ft

x_{cg} center-of-gravity distance from nose, ft

x_{cp} center-of-pressure distance from nose with zero fin deflection, ft

L
1
2
5
2

$x_{cp,tail}$	tail center-of-pressure distance from nose with fins deflected, ft
α	angle of attack, radians
β	angle of sideslip, radians
δ	fin deflection, radians
δ_p	roll fin deflection, radians
δ_q	pitch fin deflection, radians
δ_r	yaw fin deflection, radians
η	flow incidence angle, radians
θ	pitch angle of missile relative to earth-fixed axes, radians
θ_w	azimuth from which horizontal wind component is blowing, deg
Λ	azimuth of X_E-axis relative to true north, deg
ρ	mass density of flow through nozzle, slugs/cu ft
ϕ	roll angle of missile relative to earth-fixed axes, radians
ϕ'	roll angle of missile relative to plane defined by V' and X-axis, radians
ψ	yaw angle of missile relative to earth-fixed axes, radians
ψ_w	angle between horizontal wind component and X_E-axis, deg
Ω	total angular velocity of missile, radians/sec

Subscript:

o	initial value

Dots over symbols denote differentiation with respect to time.

L
1
2
5
2

APPENDIX B

DAMPING IN PITCH AND YAW FOR RADIAL BURNING SOLID-PROPELLANT ROCKETS

By Norman L. Crabill

L
1
2
5
2

The geometry of the model and the symbols used in this analysis are shown in sketch 1.

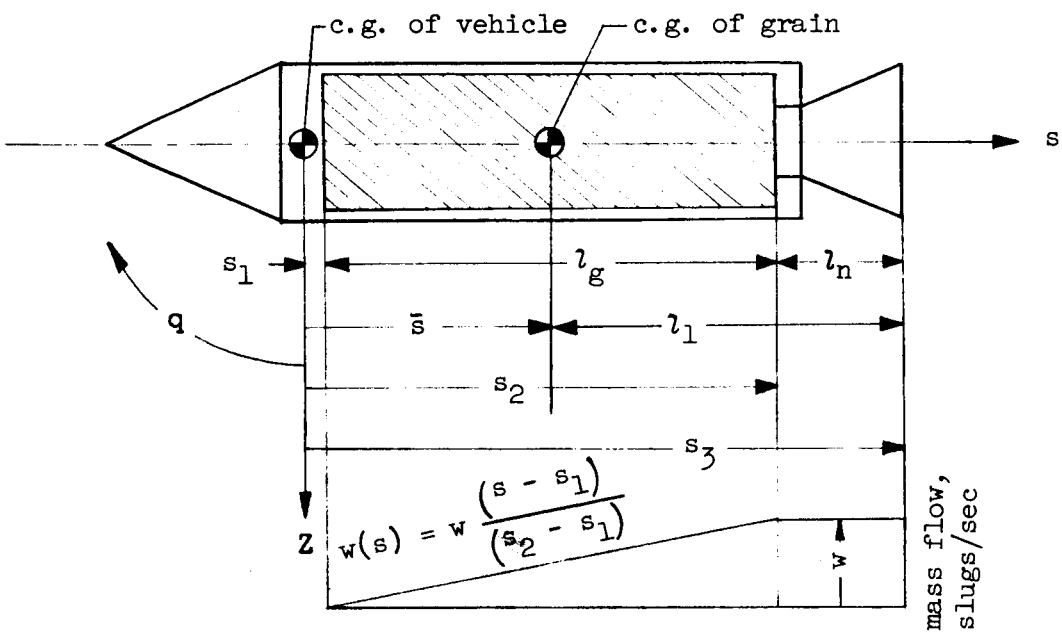

Sketch 1

This analysis is patterned after the analysis of M. V. Barton for liquid-propellant rockets. (See ref. 7.)

Let the missile rotate about its instantaneous center of gravity with angular velocity of q, radians per second. Also, let the internal-flow velocity of a particle dm be denoted by V_i, relative to the instantaneous center of gravity of the entire vehicle. Then, the Coriolis acceleration of the particle is $2V_i q$ downward, and the element of Coriolis force is $2V_i q\ dm$ in an upward sense. The element of pitching moment about the vehicle center of gravity is

$$dM_Y = -2V_i qs\ dm \tag{B1}$$

The total moment is

$$\frac{M_Y}{q} = -2 \int_{s_1}^{s_3} V_i s\ dm = -2 \int_{s_1}^{s_3} \left(\rho A_n V_i\right) s\ ds \tag{B2}$$

since

$$\rho A_n\ ds = dm \tag{B3}$$

In a radial burning solid-propellant rocket, the mass flow $\rho A_n V_i$ is a linear function of length from one end of the rocket grain to the other and is constant in the nozzle. (See sketch 1.) For $s_1 < s < s_2$,

$$\rho A_n V_i = w\left(\frac{s - s_1}{s_2 - s_1}\right) \tag{B4}$$

and for $s_2 < s < s_3$,

$$\rho A_n V_i = w \tag{B5}$$

Substituting equations (B4) and (B5) into equation (B2) results in

$$-\frac{M_Y}{q} = 2w \int_{s_1}^{s_2} \left(\frac{s - s_1}{s_2 - s_1}\right) s\ ds + 2w \int_{s_2}^{s_3} s\ ds \tag{B6}$$

and carrying out the indicated integration gives

$$-\frac{M_Y}{q} = w\left(\frac{3s_3^{\ 2} - s_2^{\ 2} - s_2 s_1 - s_1^{\ 2}}{3}\right) \tag{B7}$$

Equation (B7) can be simplified by rewriting in terms of $\bar{s}$, l_g, and s_3, noting that $\bar{s} = \frac{s_1 + s_2}{2}$ and $l_g = s_2 - s_1$. The result is

$$-\frac{M_Y}{wq} = \left(s_3{}^2 - \bar{s}^2\right) - \frac{l_g{}^2}{12} \tag{B8}$$

which compares with Barton's results (ref. 7) for liquid-propellant rockets

$$-\frac{M_Y}{wq} = \left(s_3{}^2 - \bar{s}^2\right) \tag{B9}$$

Another interesting form of equation (B8) can be obtained by rewriting in terms of $\bar{s}$, l_g, and l_n. This result is, with $l_n = s_3 - s_2$,

$$-\frac{M_Y}{wq} = 2\left(\frac{l_g}{2} + l_n\right)\bar{s} + \left(\frac{l_g}{2} + l_n\right)^2 - \frac{l_g{}^2}{12} \tag{B10}$$

Let

$$l_1 = \frac{l_g}{2} + l_n \tag{B11}$$

and

$$l_2 = \left(\frac{l_g}{2} + l_n\right)^2 - \frac{l_g{}^2}{12} \tag{B12}$$

Substituting equations (B11) and (B12) into equation (B10) gives

$$-\frac{M_Y}{wq} = 2l_1\bar{s} + l_2 \tag{B13}$$

Note here that $l_2 \approx l_1{}^2$ since $\frac{l_g{}^2}{12}$ is small.

Equation (B13) indicates that rocket pitch damping is a linear function of the distance of the grain center of gravity from the vehicle center of gravity and that for

$$\bar{s} = -\frac{l_2}{2l_1} \approx -\frac{l_1{}^2}{2l_1} = -\frac{l_1}{2} \tag{B14}$$

the damping is zero. In some instances, rocket motors may be located sufficiently far ahead of the vehicle center of gravity to contribute an unstable damping moment - that is, $\frac{M_Y}{wq} > 0$ or is a positive value.

The foregoing derivation applies also for the jet damping in yaw, since vehicle symmetry is assumed. The yaw equations can be developed by replacing M_Y by M_Z and q by r.

L
1
2
5
2

REFERENCES

1. James, Robert L., Jr., and Harris, Ronald J.: Calculation of Wind Compensation for Launching of Unguided Rockets. NASA TN D-645, 1961.

2. Rose, James T., and Rose, Rodney G.: A Rapid Method of Estimating Launcher Setting To Correct for the Effects of Wind on the Trajectory of an Unguided Fin-Stabilized Rocket Vehicle. NASA TM X-492, 1961.

3. Anon.: Fundamentals of Design of Piloted Aircraft Flight Control Systems. Vol. II - Dynamics of the Airframe. Rep. AE-61-4, Bur. Aero., Feb. 1953.

4. Perkins, Courtland D., and Hage, Robert E.: Airplane Performance Stability and Control. John Wiley & Sons, Inc., c.1949, pp. 374-380.

5. Sutton, George P.: Rocket Propulsion Elements. Second ed., John Wiley & Sons, Inc., c.1956, p. 65.

6. Martz, C. William, and Swain, Robert L.: Experimental and Analytical Study of Rolling-Velocity Amplification During the Thrusting Process for Two 10-Inch-Diameter Spherical Rocket Motors in Free Flight. NASA TM X-75, 1959.

7. Barton, M. V.: The Effect of Variation of Mass on the Dynamic Stability of Jet-Propelled Missiles. Jour. Aero. Sci., vol. 17, no. 4, Apr. 1950, pp. 197-203.

L
1
2
5
2

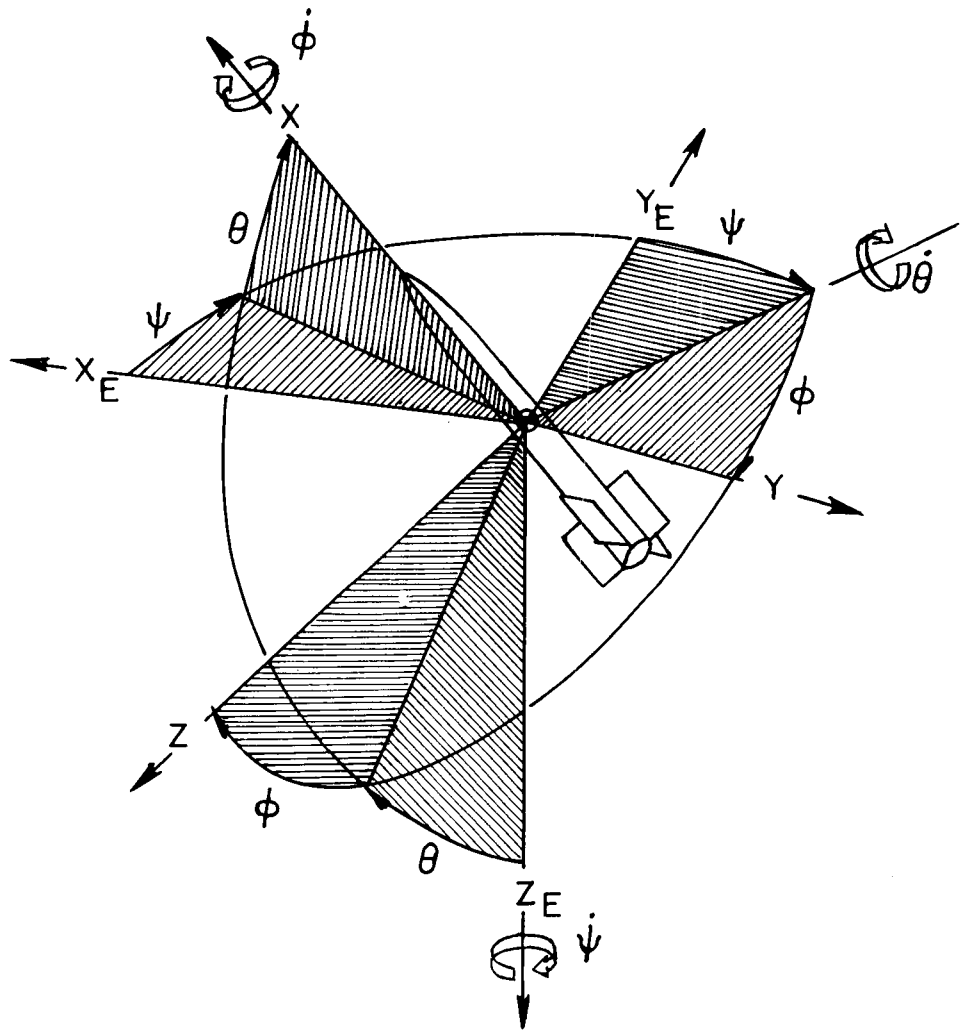

Figure 1.- Angular orientation of missile axes with respect to earth-fixed axes.

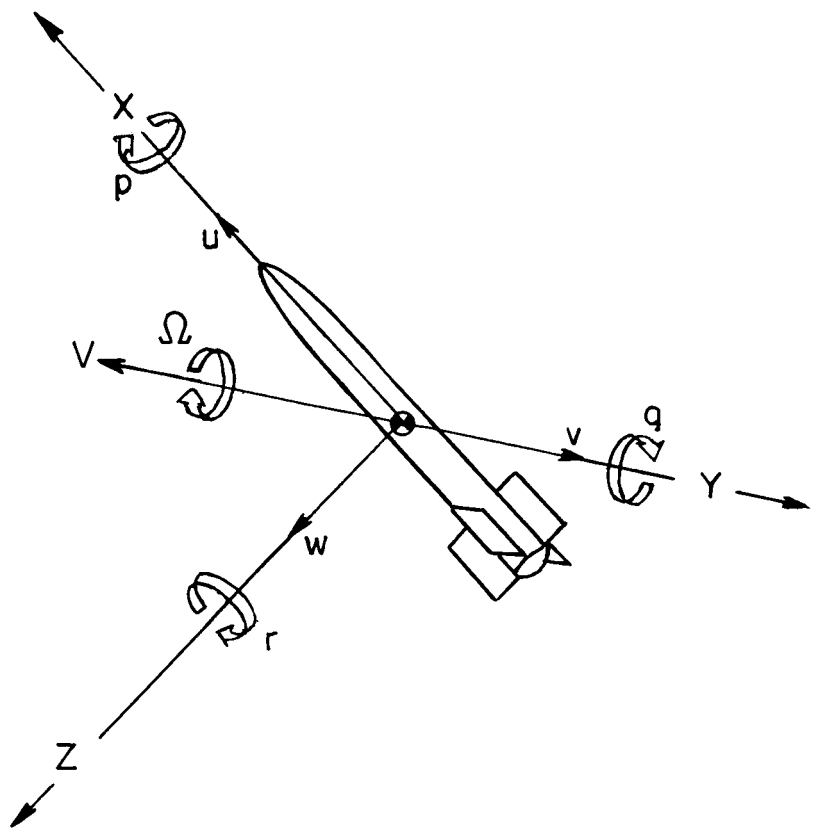

Figure 2.- The missile's six degrees of freedom.

L-1252

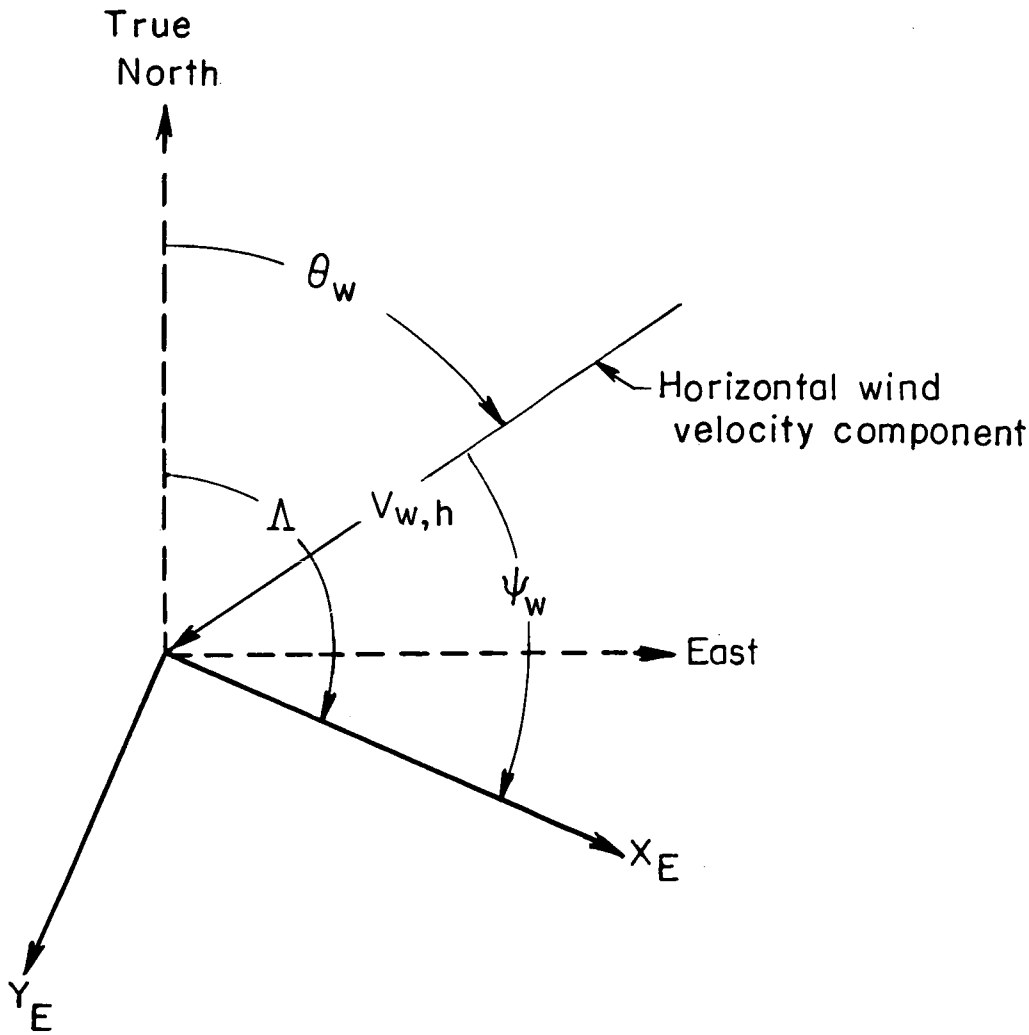

Figure 3.- Diagram of wind resolution in horizontal plane.

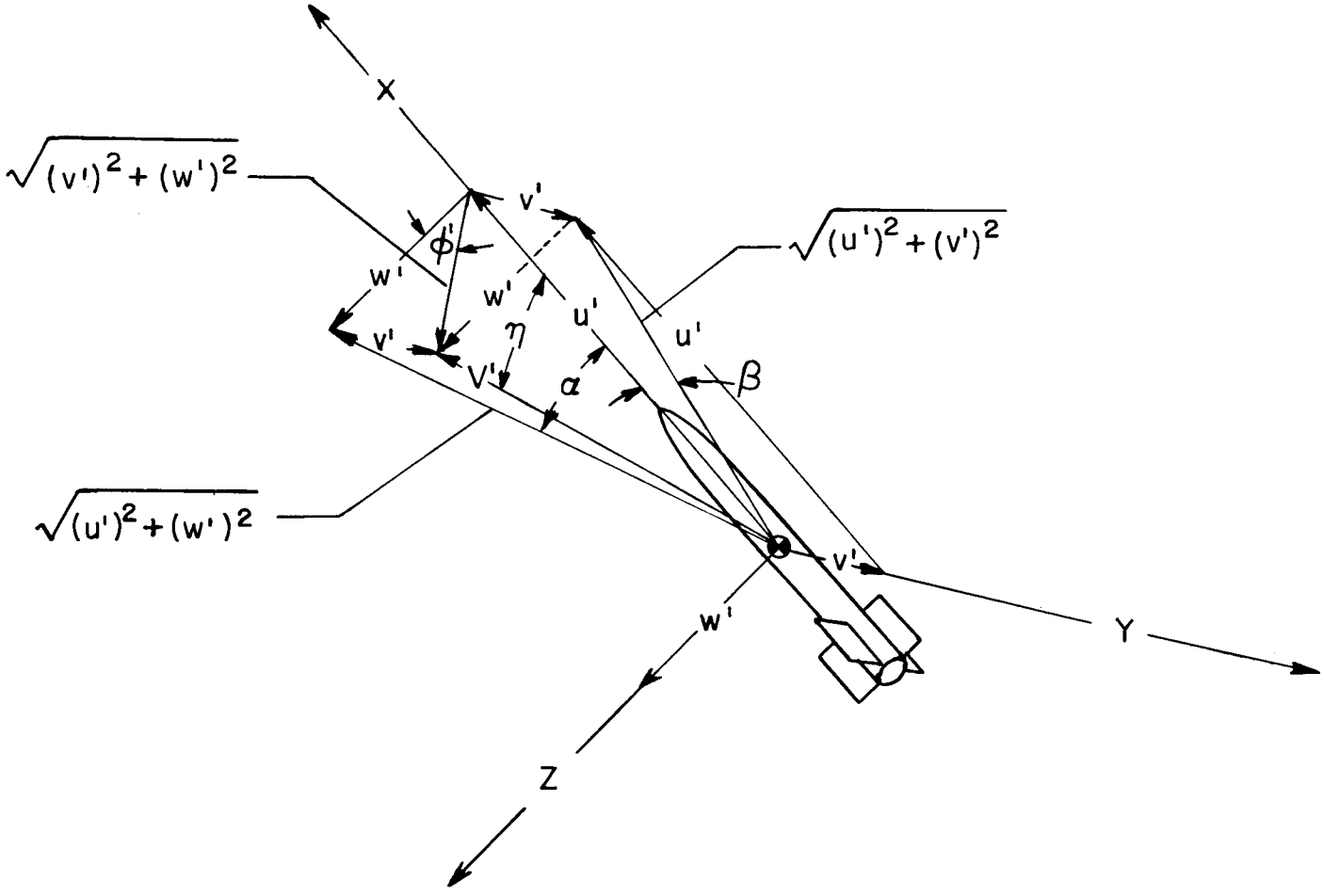

Figure 4.- Diagram showing the aerodynamic angles α, β, η, and ϕ' and the missile velocity relative to the wind.

NASA - Langley Field, Va. L-1256