https://ntrs.nasa.gov/search.jsp?R=20040201530 2017-08-15T04:42:27+00:00Z

Section 6

Assessment of Human Factors

EXTENDED DURATION ORBITER MEDICAL PROJECT

6

Assessment of Human Factors

Frances E. Mount and Tico Foley
Johnson Space Center, Houston, TX

INTRODUCTION

Human Factors Engineering, often referred to as Ergonomics, is a science that applies a detailed understanding of human characteristics, capabilities, and limitations to the design, evaluation, and operation of environments, tools, and systems for work and daily living. Human Factors is the investigation, design, and evaluation of equipment, techniques, procedures, facilities, and human interfaces, and encompasses all aspects of human activity from manual labor to mental processing and leisure time enjoyments. In spaceflight applications, human factors engineering seeks to: (1) ensure that a task can be accomplished, (2) maintain productivity during spaceflight, and (3) ensure the habitability of the pressurized living areas.

DSO 904 served as a vehicle for the verification and elucidation of human factors principles and tools in the microgravity environment. Over six flights, twelve topics were investigated (Table 6-1). This study documented the strengths and limitations of human operators in a complex, multifaceted, and unique environment. By focusing on the man-machine interface in space flight activities, it was determined which designs allow astronauts to be optimally productive during valuable and costly space flights. Among the most promising areas of inquiry were procedures, tools, habitat, environmental conditions, tasking, work load, flexibility, and individual control over work.

Table 6-1. EDOMP Human Factors Engineering Detailed Supplementary Objective (904) Topics

Topic	*Description*	*STS Flight*
1.	Comfort and accessibility of the glovebox at the general purpose workstation	50, 58, 73
2.	Procedures and operation of the Lower Body Negative Pressure Device	50, 58
3.	Management, stowage, deployment, and restraint of electric power and data cables	40
4.	Obstacles and facilitators for task procedures and timelines baselined on Earth	40
5.	Advantages and difficulties using a computer touchscreen in microgravity	70
6.	Electronic and paper procedures in microgravity	57
7.	Perceptions and effects of mechanical vibration on task performance in flight	40
8.	The noise environment	40, 50, 57
9.	The lighting environment	57
10.	Crew member translation and equipment manipulation through the tunnel joining the Shuttle middeck and the pressurized SpaceHab or Spacelab	40, 47, 57
11.	Assessment of crew neutral body posture	47, 57
12.	Questionnaire responses	57

SPACE HUMAN FACTORS TOPICS

Ergonomic Evaluations of Microgravity Gloveboxes

Confined work stations, where the operator has limited visibility and access to the work area, may cause prolonged periods of unnatural posture. The confined work stations may have a significant impact on posture, fatigue level, and performance, especially if the task is tedious and repetitive or requires static muscle loading [1]. Although task performance at gloveboxes, which is a good example of the confined work station concept, is

affected by such factors as constrained arm movements, postural limitations, and visual constraints, human factors guidelines have not been well established [1].

Various gloveboxes have been designed for use aboard the Space Shuttle and the International Space Station (ISS). Although the overall technical specifications are similar, the crew interfaces, such as shape and location of glove ports, are unique for each. The design of these gloveboxes was primarily driven by task requirements with minimal or no consideration of the human interface. Three glovebox designs were flown on various Spacelab missions: (1) the Material Sciences Glovebox (GBX), supporting crystal growth and other material science experiments, (2) the biorack (BR), a facility to support investigations on cells, tissues, plants, bacteria, small animals, and other biological samples, and (3) the General Purpose Work Station (GPWS), a multi-functional facility that supported animal experimentation and microscope use. Three different glovebox designs are planned for the ISS in microgravity sciences, life sciences, and the maintenance work area.

Because the human factors requirements of gloveboxes for microgravity use had not been well documented, a goal of DSO 904 was to assess the GBX during STS-50 [United States Microgravity Laboratory-1 (USML-1)]. Both crew questionnaire data and objective postural data from video downlinks were collected. Seven crew members performed various science experiments using the GBX, and rated it as not acceptable, based on the following: (1) it was found to be too small for moving around inside, (2) range of motion was limited, (3) hand positioning was sometimes difficult, (4) mounting hardware inside was hard to do, (5) neck and shoulder pain often occurred, and (6) the viewing window would have been more efficient if larger and slanted forward slightly [2].

The General Purpose Work Station (GPWS), a multi-functional facility accommodating two operators, was evaluated during STS-58 via questionnaires and postural analyses of video downlinks [3]. The GPWS, primarily used to support biological experiments involving animals [4, 5, 6], was larger than the GBX, its gauntlet interface was much more flexible than the snug glove ports of the GBX, and it was less likely to restrain the user from performing natural upper body movements. No neck or shoulder discomfort was reported by any of the crew members, even though they worked in a hunched shoulder posture 47% of the time. Although all aspects of the GPWS design were rated acceptable, reaching for loose items was difficult at times because the interior volume was too crowded [3, 7].

After modifications resulting from data gathered on STS-50, the glovebox work station was redesigned and flown on STS-73 (USML-2). This flight also provided the opportunity to evaluate the Advanced Lower Body Extremities Restraint Test (ALBERT) as a possible aid to combat poor posture and the resultant discomfort. Four crew members, two males and two females, participated in the study and represented diverse anthropometric percentiles. A Posture Video Analysis Tool (PVAT) [8], was used to identify posture categories and to determine, using the available video footage, the mean percentage of time the crew spent in each of seven posture categories (Figure 6-1). The modified GBX design received more positive comments than the original design.

The results of this study indicated that future gloveboxes should: (1) provide flexible arm holes to allow a maximum range of arm movements for repetitive fine motor tasks, (2) have a height appropriate for a 95th percentile U. S. male, and (3) provide height adjustable foot restraints to accommodate a wide range of users. Future foot restraints should (1) provide knee support for tasks requiring force applications, (2) provide two mechanical modes, loose for adjustment without removing hands from the work area, and lock down to keep the restraint position fixed and rigid, (3) not exceed five operations for adjustments to height, in-out distance, and orientation, (4) provide simple adjustment mechanism operation to encourage the user to find a best fit, and (5) provide scales or markings to facilitate readjustment to a previously determined configuration.

Glovebox design should be further evaluated to determine the best orientation of the viewing window relative to the arm holes, minimum work volume in an enclosed work area, and appropriate arm hole designs for force and torque tasks. Foot restraint design should be further evaluated to determine the best knee support designs to accommodate each of a variety of directions and magnitudes of force and the best method to accommodate a 95th percentile U. S. male.

Lower Body Negative Pressure (LBNP) System

The LBNP human factors and interfaces under investigation in DSO 904 included stowage and assembly, ease and comfort, and operation of the controls and displays. Although the LBNP system had previously undergone many usability analyses [9], fundamental human machine design issues had not been systematically investigated. The goal of this human factors evaluation of the LBNP was to identify human machine design and operational procedure improvements.

Seven Shuttle astronauts participated in the investigation. Data collection methods included: (1) examination of still photographs, (2) administration of questionnaires during and after flight, (3) participation in structured debriefings, (4) application of human factors design principles, and (5) analysis of mission video. Data from in-flight questionnaires enabled the crew to record comments and evaluations while the experience was still in progress. Postflight questionnaires, subtask rating scales, and structured debriefs provided additional information for

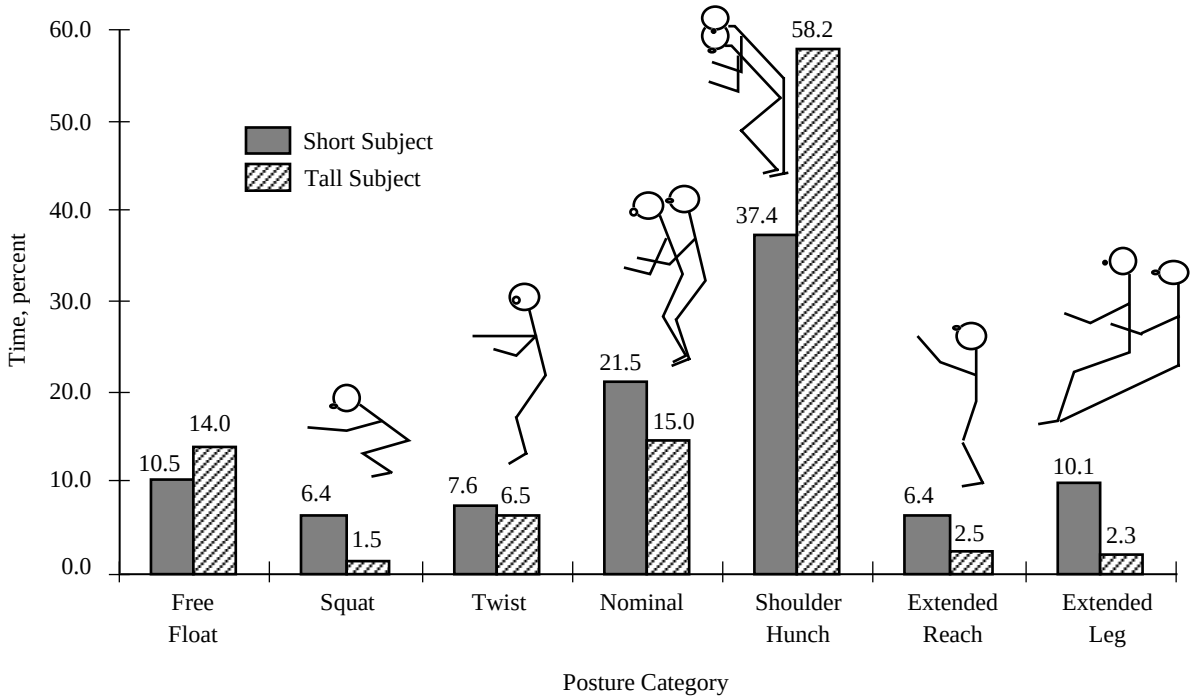

Figure 6-1. Percentage of time primary crewmembers spent in each posture category.

comparative summary analyses. Analysis of the video images provided information about procedures, training, and operations.

There were no appreciable problems during the performance of timelined activities on STS-58. This was attributed to the numerous opportunities the crew members had to work with the equipment and to the effectiveness of the training program. The following observations concerning crew patterns of performance during LBNP operations were noted from observation and video analysis: (1) in microgravity, procedures requiring crew coordination took longer than those that required only one crew member, (2) in microgravity, gross motor movements took longer than fine motor movements, (3) LBNP egress/ingress abilities increased from flight day 1 through flight day 4 and then stabilized, (4) there was no evidence of performance degradation that could be specifically attributed to microgravity, (5) performance of LBNP protocols did not change during the mission, and (6) crew proficiency was impeded by malfunctions, waist seal configuration, and interruptions by the ground control.

Review of preflight training video and mission video, and discussions with crew members indicate that there was an effective preflight training of LBNP set up, stowage and operation. No problems affecting the timeline or completion of the LBNP objectives were noted. Because the LBNP design did not meet all applicable human engineering standards, the following minor changes are recommended: (1) provide color-coded knee pad and foot rest buckles to minimize installation errors, (2) increase strap lengths to facilitate positioning of struts in bag, (3) provide instructions on the LBNP checklist for rewinding data tapes to minimize destruction of the tapes by the Analog Data Recorder, (4) provide adjustment capability for the waist seal, and (5) provide restraints to secure the floating cables and other equipment.

Stowage, Restraints, Deployment and Cables

Human factors studies were conducted during the three Skylab missions [10-13], on STS-9 [14], and on STS-51B (Spacelab-3) [15]. However, the problems of stowage, restraints, deployment, and cables were not fully understood or resolved. Accordingly, a primary objective of DSO 904 was to understand the effects of microgravity on stowage systems, on restraints for equipment and crew members, and on cable management. A secondary objective was to determine if any increased task completion times resulted from problems in these areas.

These objectives were first implemented on STS-40 [Space & Life Sciences-1 (SLS-1)], with all seven crew members serving as subjects. Of the four males and three females, three subjects had previous Shuttle flight experience. A questionnaire with both closed-ended and open-ended questions was administered on day 2 or day 8 during, or within 3 weeks after, flight. The questionnaires covered medical experiments E022 (Influence of Weightlessness Upon Human Autonomic Cardiovascular

Table 6-2. Approximations of Microgravity Experiment Crew Time Usage (STS-40/SLS-1)

Experiment	*Crew Member Minutes*				
	1-g Time	*Microgravity Estimate*	*FD-2 Actual Time*	*FD-5 Actual Time*	*FD-9 Actual Time*
E198+setup	140	222	200		210
E198	140	168		155	
E294	192	384	330	370	370
E066 Calibration	25	27	25	30	30

Control), E066 (In-flight Study of Cardiovascular Deconditioning), and E072 (Vestibular Experiments in Spacelab) that had been independently planned as part of the crew members' flight activities. Crew members were monitored during waking hours via video downlink as well as crew and ground audio. Several problems were identified with stowage, ranging from locker design to practices associated with stowing individual items. Stowage planning and training were not always adequate. Crew members reported that they would prefer to train with stowage in the flight configuration, using the actual foam for stowage. Lost time also resulted from equipment for a given experiment not being stowed together. Crew members recommended adding more Velcro to loose items, as well as to rack faces and the work bench, and removable Velcro to replace areas soaked with spilled liquids. Access to some lockers in the floor and ceiling was difficult, partly due to the lack of nearby hand holds. Crew members generally agreed that loose cables did not interfere with translation or other procedures.

The results of this study indicated that: (1) Restraints should vary according to task requirements; when the task involves exerting significant forces or torques, more robust restraints are needed than for tasks generating less reaction forces. (2) Rigid devices should be available for both foot restraints and three point restraints. (3) Stowage lockers should be designed to be opened with one hand. (4) Equipment in stowage lockers should be restrained so that it neither jams the locker nor drifts out when the locker is opened and another item removed. (5) Quick, simple methods for restraining small items should be supplied; these could include Velcro, adhesive surfaces, vacuum, or elastic bands. (6) Cables should be sized to minimize extra length. And, (7) easy to use techniques and equipment should be provided to restrain cables.

Crew Productivity — Task and Timeline Analysis

Prior to EDOMP there were some attempts to quantify human performance, productivity, and adherence to mission timelines [16-20]. DSO 904 described variations in tasks performed in microgravity from an integrated mission operations perspective, and derived adaptive strategies and a preliminary set of guidelines for optimizing crew productivity on future spaceflight missions.

Experiments E066 (In-flight Study of Cardiovascular Deconditioning), E198 (Pulmonary Function During Weightlessness), and E294 (Cardiovascular Adaptation to Zero Gravity) involving medical procedures [21] that were part of the planned schedule for the SLS-1 mission were selected for evaluation because they were of particular relevance to crew member ability to adhere to the timeline. Five Shuttle astronauts served either as subject, investigator, or both. Information was obtained from preflight crew interviews, mission monitoring, mission video, postflight questionnaires, and postflight debriefs. Response variables included preflight and postflight Procedures Completion Times, task performance correlates, and task interruptions. Although the experiments took approximately the amount of time budgeted, malfunction procedures took longer in microgravity than estimated beforehand (Table 6-2). Interruptions were caused by malfunctions or other problems with the Gas Analyzer Mass Spectrometer (GAMS II) (which necessitated a repeat of E198), the Orbiter refrigerator/freezer, the indicators on E066, the electromyogram (EMG) amplifier for the rotating dome, the operation of temperature strips, experiment E022 calibration, unclear intravenous (IV) pump procedures, incorrect E066/E294 measurement procedures, high noise levels caused by some experiment-specific equipment, the text and graphics system (TAGS), and reconfiguration of the communications loop.

Questionnaire responses indicate that a more thorough preflight training regimen might have eliminated confusing procedural steps containing prompts and values that were not always accurate. Additionally, communication problems often necessitated repetition of the procedure, important blocks of information were not distinguishable from other information, and steps that had to be completed were embedded in text that did not require action. Flight experiment E294 was a difficult procedure that never worked as planned. The cuff could not find

pressures, the batteries often failed, and switch guards were never used. To some extent, frustration was also experienced due to the requirements for complete exhalation and the need to crane the neck to see the screen.

Touchscreen Usability in Microgravity

Prior to EDOMP, the usability of touchscreens had not been tested in the microgravity environment. DSO 904 was designed to identify touchscreen requirements, develop display guidelines, and compare performance with input devices currently used in spaceflight. Five STS-70 crew members performed two ground baseline and two in-flight data collection sessions with the touchscreen and the standard portable onboard input device, the IBM Thinkpad Trackpoint II™ (Figure 6-2). The touchscreen was an Elo TouchSystems AccuTouch®(model E274) resistive membrane touchscreen integrated with a 9.4 inch (24 cm) active matrix color thin film transistor (TFT) liquid crystal display (LCD) monitor (model LMT 5020).

Most of the subjects preferred the touchscreen on the ground and the Trackpoint in flight. Hand fatigue was almost immediately experienced when using the touchscreen in flight, although none of the subjects had complained of hand fatigue during the two sessions of baseline data collection. Subjects also reported wrist fatigue while using the Trackpoint in flight. Analysis of variance (ANOVA) indicated that: (1) there was no reaction time difference between the two ground sessions nor between the two flight sessions, (2) subjects produced fewer errors with each successive session in each environment, (3) the touchscreen was faster than the Trackpoint, (4) the Trackpoint was more accurate than the touchscreen, and (5) touchscreens performed better for those tasks with larger touch areas, but not for precise positioning (Figure 6-3).

The following recommendations derive from the DSO 904 results: (1) A touchscreen interface could be used for displays containing medium to large objects and simple actions, such as single and double click pointing. (2) For fine positioning or text editing, a touchscreen interface should be avoided, or at least supplemented with another input device. (3) Crew restraints should be provided, especially for dragging and drawing tasks. (4) Rest periods should be provided for touch-intensive tasks, since users may tend to exert more pressure than necessary. And, (5) The minimum object size for touchscreen interfaces should be 10 mm × 10 mm.

Electronic Procedures

Prior to EDOMP, all Shuttle onboard tasks were performed using hard copy procedures, resulting in the use of considerable launch weight and valuable stowage space [22], and causing unique problems during flight. A goal of DSO 904 was to determine human factors requirements

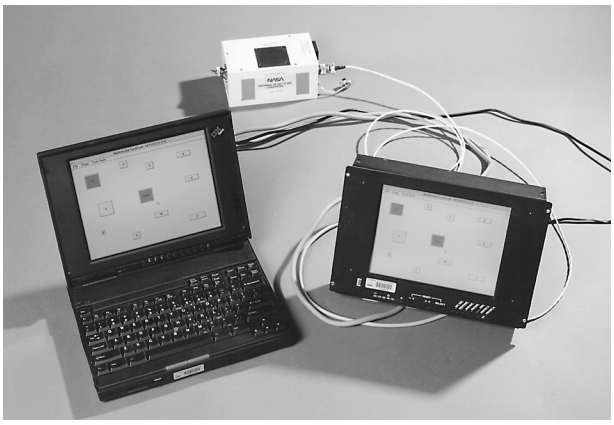

Figure 6-2. Laptop computer and touchscreen.

for electronic procedures systems in spaceflight environments. Building on the results of previous studies [23-27], performance measures were taken for the same task using both computer and paper procedures, with advantages and disadvantages of each being noted. One STS-57 (Space-Hab 1) crew member participated in a propulsion task and one crew member participated in a soldering task. After each task session, subjective data were gathered through the use of a computer-based questionnaire program, providing information on what to include and what to avoid in the design of future electronic procedures systems.

Computer procedures were very favorably rated in the questionnaire. The format was considered to be very user friendly and resulted in the task being easily performed, with the primary advantage of computer procedures being that the current step was highlighted automatically, releasing the crew member from the burden of place-keeping in the procedures. This investigation was the first step in confirming that electronic procedures are a feasible alternative and can offer many benefits over paper presentation.

Vibration Evaluation in Microgravity

For several years, the major concern about vibration in the Shuttle while in orbit was its effect on experiments, particularly materials science studies [28]. A survey of 33 astronauts demonstrated that although more than half reported vibration in flight, they did not consider it to be a problem [29]. However, general concern about vibration led to the development of a Space Acceleration Measurement System (SAMS) that could measure and store acceleration data during spaceflight. A goal of DSO 904 was to determine the effect of vibration on crew comfort and task performance. This was accomplished by postflight crew questionnaires, by ground personnel monitoring the mission during crew waking hours, by analysis of videotape, and by correlation with quantitative acceleration data from SAMS [30].

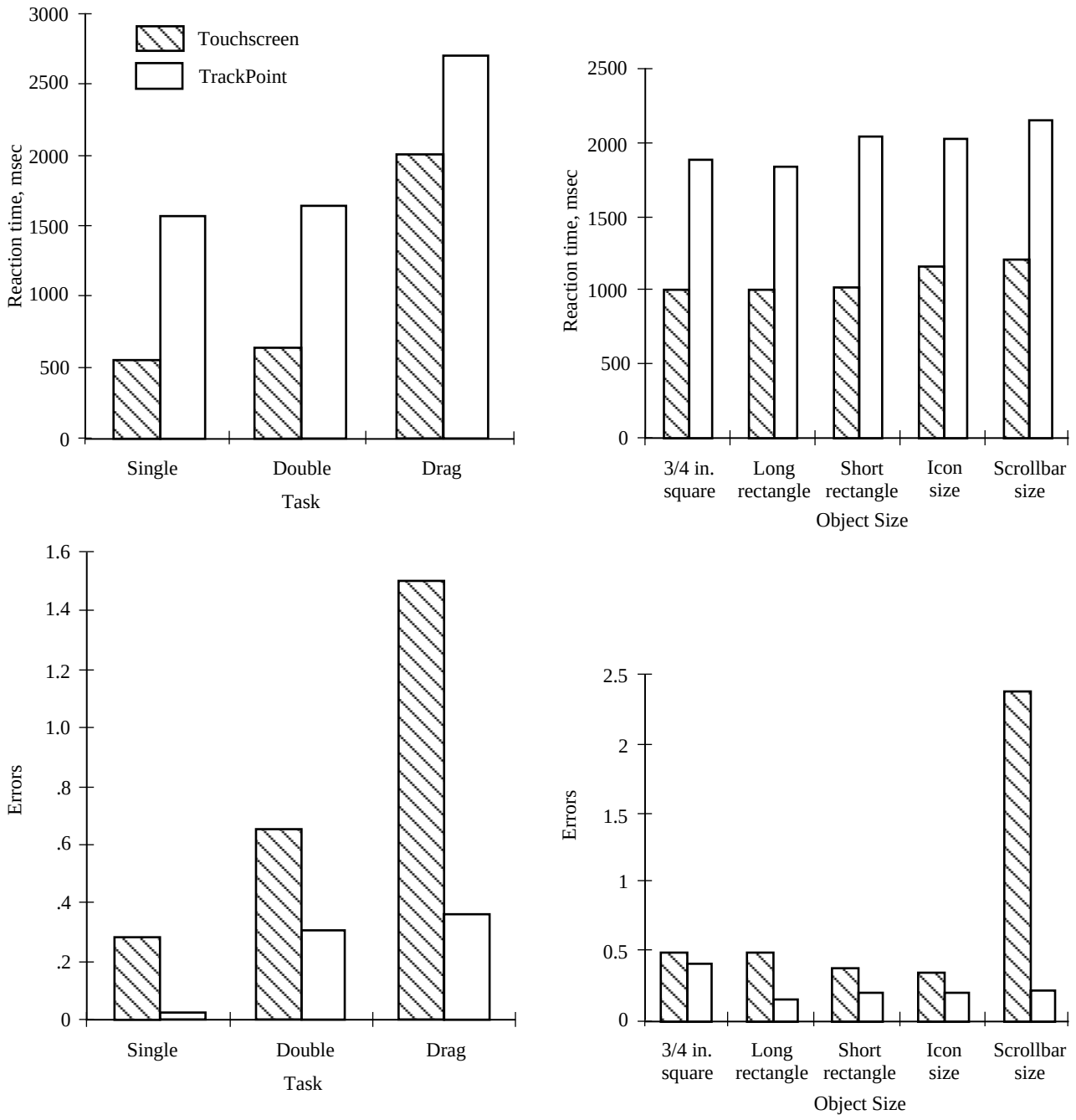

Figure 6-3. Comparison of touchscreen to trackpoint with respect to reaction time and error rate, versus task type and object site.

All seven crew members of STS-40/SLS-1 (four male, and three female) participated in the study. Vibration was perceptible by all, and sometimes annoying to five of the seven subjects during flight. Vibrations occurred at times when primary jets were firing, or when the treadmill or ergometer were in use. Treadmill and ergometer use was accompanied by significant noise, which could have interacted with vibration to be perceived as an annoyance, a stressor, or even pain. Crew members did not report vibration interfering with any task, but did recommend that some of the more sensitive tasks, such as inserting a venous catheter, not be performed when high levels of vibration were present.

Acoustic Noise Environment

U. S. and Russian crew members have often complained about in-flight noise levels that regularly disrupt

Table 6-3. Comparison of Measured Sound Levels for STS-40, STS-50 and STS-57

FLIGHT DECK			
Flight	*Source Location*	*Conditions*	*dB(A)*
	Design Limit		63
STS-40	Flight Deck (Center)	nominal systems (ECLSS)	61.8
STS-50	Flight Deck (Center)	nominal systems (ECLSS)	64.0
STS-57	Flight Deck (Center)	ECLSS + SAREX	72
		ECLSS + A/G	62
MIDDECK			
Flight	*Source Location*	*Conditions*	*dB(A)*
	Design Limit		68
STS-40	Middeck (Center)	nominal systems (ECLSS)	63
		ECLSS + AEM	64.7
	Middeck (1 foot from AEM)	ECLSS + AEM + OR/F	67.6
STS-50	Middeck (Center)	nominal systems (ECLSS)	59.9
		ECLSS + EVIS + Bike	67.9
		ECLSS + Vacuum Cleaner	79.9
STS-57	Middeck (Center)	nominal systems (ECLSS)	63
		nominal systems (ECLSS)	62
SPACELAB/SPACEHAB			
Flight	*Source Location*	*Conditions*	*dB(A)*
	Design Limit		68
STS-40	Spacelab (Center)	SR/F—one compressor on	69.7
	Spacelab (4 feet from SR/F)	SR/F—both compressors on	72.6
STS-50	Spacelab (Center)	nominal systems (ECLSS)	61.6
	Spacelab (Center)	nominal systems (ECLSS)	61.2
	Spacelab (operator)	ECLSS + DPM	64.7
	Spacelab (operator)	ECLSS + GBX on	61.0
	Spacelab (operator)	ECLSS + STDCE	63.8
STS-57	SpaceHab (Center)	ECLSS, fans off	63
	SpaceHab (Center)	ECLSS, fans on	66

sleep, make communication difficult, and increase tension in an already demanding environment [29]. Some crew members have worn ear plugs, which may have protected against hearing loss, but was not an acceptable solution to the overall problems of noise. An objective of DSO 904 was to assess acoustic noise levels in order to document impacts on crew performance, collect in-flight sound level measurements, compare noise levels across missions, obtain preflight and postflight audiometry measures from crew members, and evaluate Shuttle acoustic criteria [31].

Twenty astronauts (4 males and 3 females on STS-40/SLS-1, 5 males and 2 females on STS-50/USML-1, and 4 males and 2 females on STS-57/SH-1) participated in this study. A questionnaire, consisting of forced choice questions with prompts and spaces for further comments, was administered during the flight and again within a month after landing. Crew members subjectively evaluated the overall noise environment and the noise in the flight deck, middeck, and Spacelab or SpaceHab under nominal background noise conditions and with selected noisy equipment operating. Audiometric data acquired 10 days prior to launch were compared with audiograms obtained within 2 hours after landing [32, 33].

Crew member perceptions of noise on board the Shuttle and within the laboratories differed from one mission to the next (Table 6-3). In all cases the major noise source was from the Environmental Control and

Life Support System (ECLSS). All seven crew members on board STS-40 rated the Spacelab noise environment in need of mandatory improvements. Three of the STS-40 crew members found that the noise became more bothersome as the flight progressed, and all STS-40 crew members predicted that this noise level would be unacceptable for 30-day or 6-month missions. On the other hand the STS-50 crew members did not find the noise levels to have gotten worse during their flight and only one thought the noise might be unacceptable for a 6-month mission. Astronauts also noticed that the in-flight noise levels interfered with communication. About half of them reported occasional or frequent difficulty hearing their crew mates within the same module, and that it was almost impossible to hear someone in another module. Figure 6-4 depicts a computer simulation graphic illustrating that, even at only the background noise level, a crew member cannot communicate effectively with someone at the other end of the Spacelab.

Payload operations exceeded the acoustic design limit on each of the flights and in each of the modules (Table 6-3). On STS-40 the Spacelab refrigerator/freezers (SR/F) emitted excessive noise: 69.7 decibels (A) [dB(A)] when one compressor was operating, and 72.6 dB(A) for both compressors operating. On STS-50 the vacuum cleaner contributed significantly to a noise environment of almost 80 dB(A), a difference of 20 dB over the background sound level. Operation of the short wave amateur radio (SAREX) resulted in sound level readings of 72 dB(A). In comparison, the air-to-ground (A/G) communications loop measured 10 dB quieter than SAREX. In every case where comparisons were available on the same flight in the same module, it was shown that payload operation added 3 to 4 dB to the background noise. An analysis of variance comparing individual crew member hearing levels before and after STS-40 indicated that hearing thresholds were significantly higher following flight ($p < 0.025$).

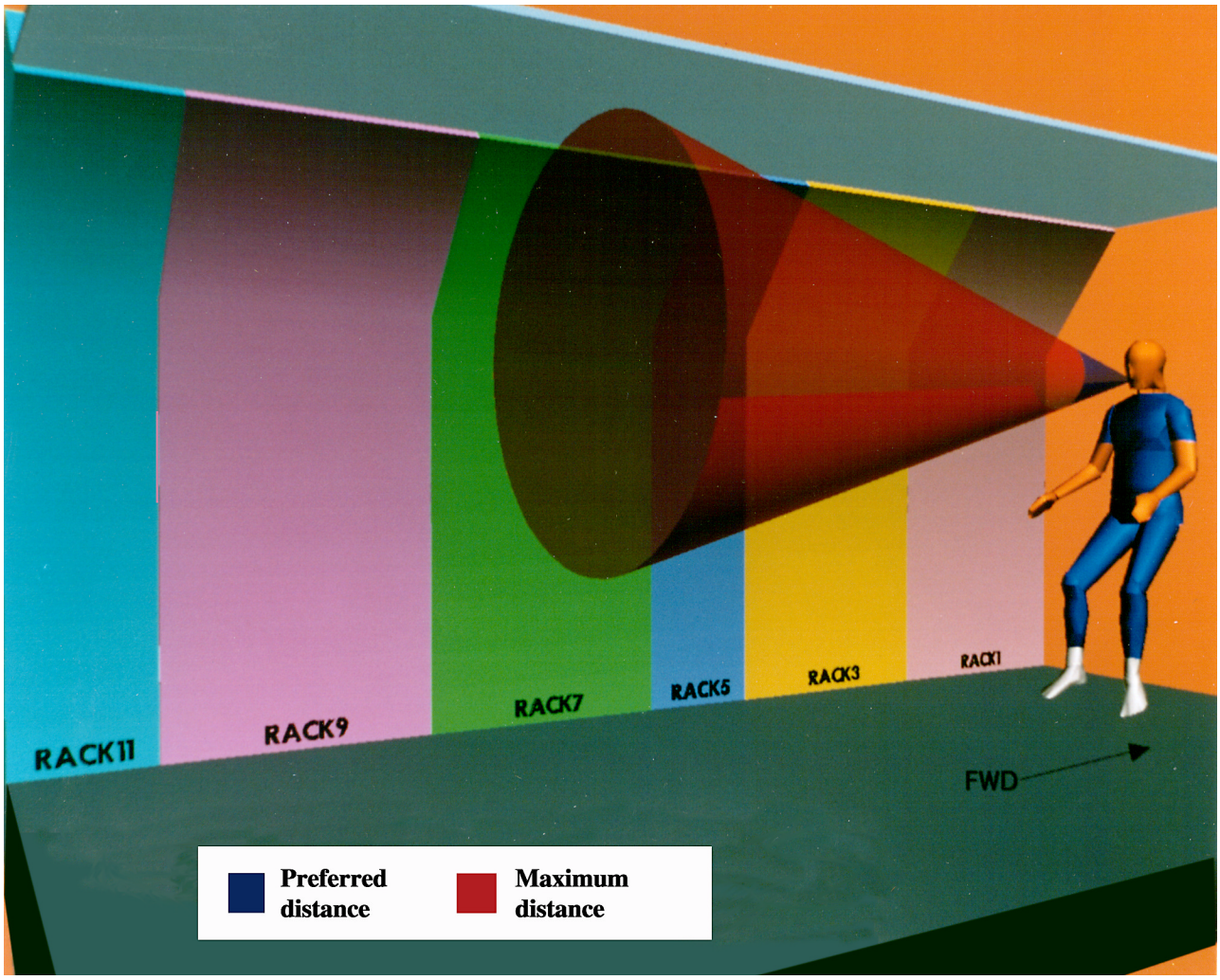

Figure 6-4. Simulation of crew member preferred and maximum communication distances in the Spacelab under typical background noise conditions.

Lighting Assessment

The objective of this study was to determine if required lighting levels within the Orbiter and SpaceHab had been maintained in compliance with NASA-STD-3000 for performing IVA tasks and other crew operations [34]. To accomplish this objective, crew members measured the luminance levels of surfaces within the Orbiter middeck, Orbiter flight deck, and SpaceHab with a hand-held Minolta Spotmeter M. Luminance levels were measured and recorded in units of exposure values (EV) which were translated into both English and SI units. The results (calculated luminance values in footlamberts and candela/square meter) from specific locations, along with crew notes regarding measurement conditions, are shown in Figures 6-5 and 6-6. All reflected light levels measured across the work surfaces in the middeck, flight deck, and SpaceHab were within the required brightness ratio and were rated reasonably acceptable or completely acceptable by crew members.

Translation Through a Transfer Tunnel

This study was designed to evaluate translation times and techniques used by astronauts to move themselves and equipment through a transfer tunnel (STS-40 and 47) or a shorter SpaceHab tunnel (STS-57) connecting the middeck and a pressurized module in the payload bay [33, 35, 36]. The tunnel presented the opportunity to study translation in a unique sense. There was a beginning and an end, making it easier to investigate translation times and techniques (Figure 6-7). Since the tunnel had a minimal and narrow passageway, crew members had to hold equipment they were moving either in front or behind during transit, thus limiting field of view and impeding the use of both hands and feet for translation mobility and stability.

Crew members found the design of the tunnel and the placement of hand holds to be acceptable, and perceived that it did take longer to move through the tunnel

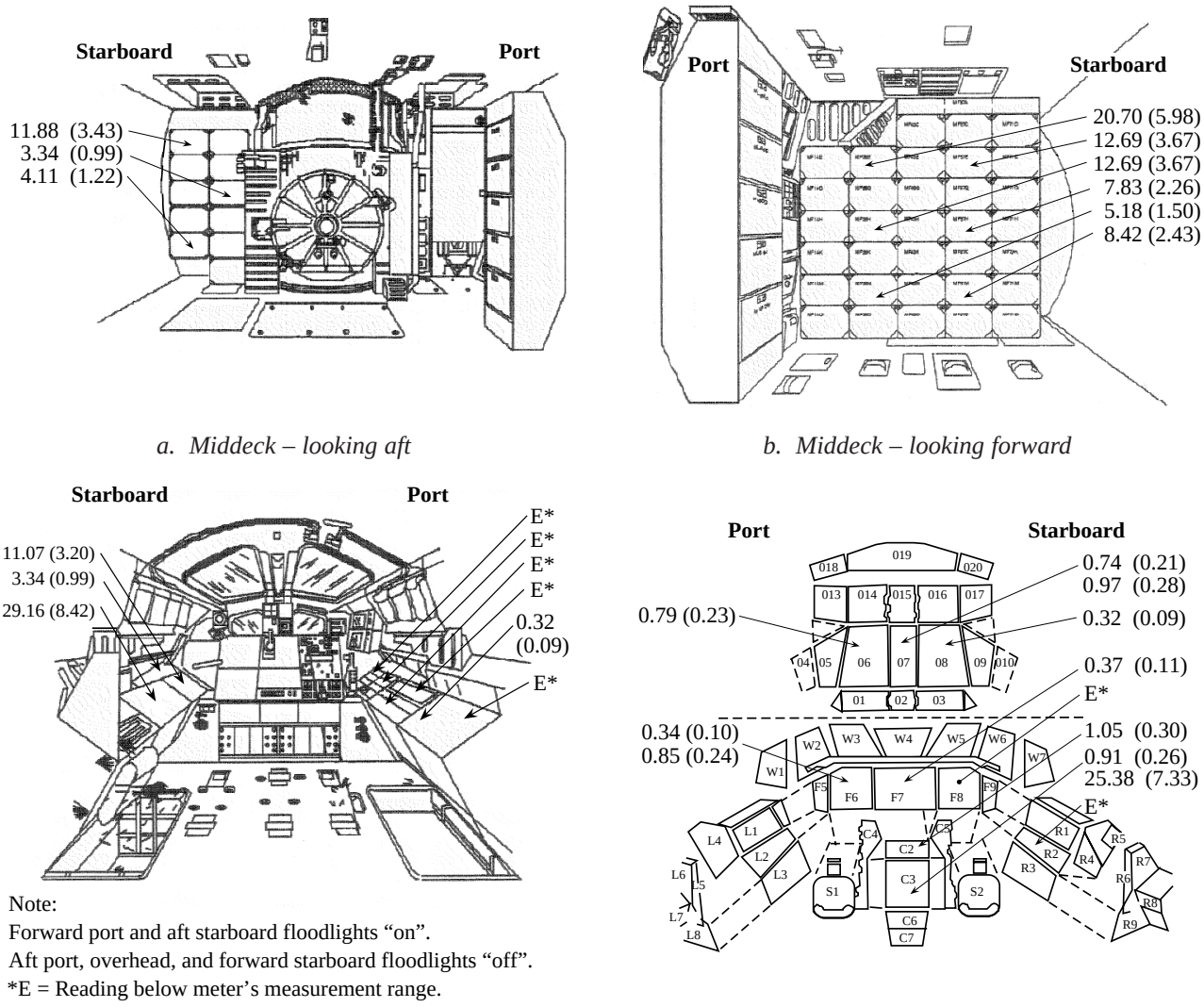

Note:
Forward port and aft starboard floodlights "on".
Aft port, overhead, and forward starboard floodlights "off".
*E = Reading below meter's measurement range.

a. Middeck – looking aft

b. Middeck – looking forward

c. Flightdeck – looking aft

d. Flightdeck – looking forward

Figure 6-5. Luminance measurements in the Orbiter.

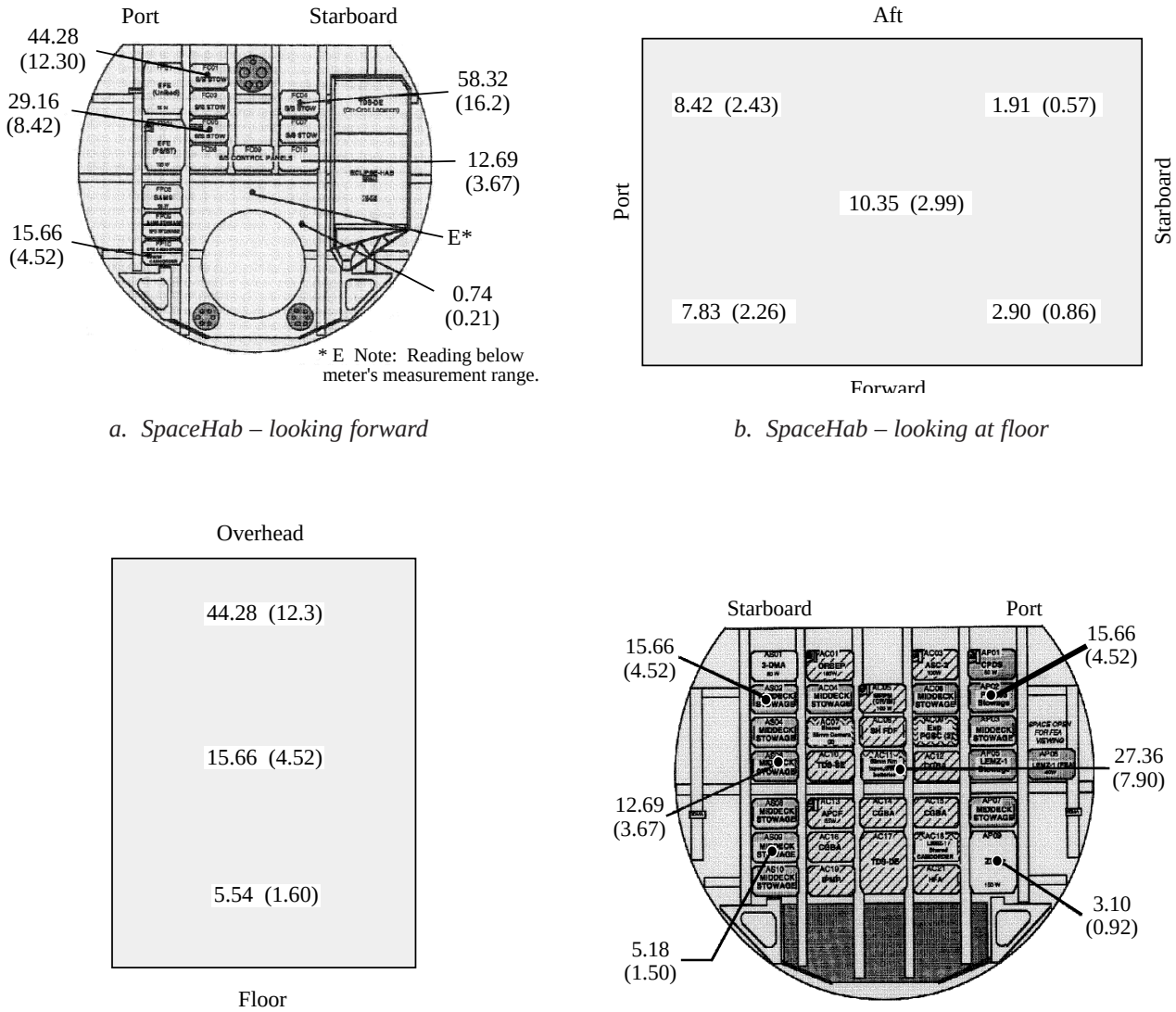

a. SpaceHab – looking forward

b. SpaceHab – looking at floor

c. SpaceHab – rack surfaces

d. SpaceHab – aft lockers

Note: Units are in candela/square meter (foot lamberts).

Figure 6-6. Luminance measurements in the SpaceHab.

with equipment than without. Most of the astronauts did not notice any difference in the time it took to travel one way through the tunnel compared with traveling the other way. On the last mission day there was little overall difference in the time it took to translate to the Spacelab compared with how long it took to travel back to the middeck without equipment. However, traveling to the Spacelab with equipment took longer than any of the other trips. The overall average translation time was about 14.8 seconds (s) for the 8.25 meter (m) tunnel length. The average translation rate was calculated to be about 0.56 m/s (1.81 ft/s), with a range of 0.33 m/s (1.06 ft/s) to 0.80 m/s (2.57 ft/s). These rates were comparable to those reported for Skylab for ordinary translations.

At the beginning of the mission, crew members took longer to move through the SpaceHab tunnel than later in the mission. There was a larger decrease in the times for translation with equipment and for the translations from the SpaceHab to the middeck. On both days it took longer to go to the middeck with the airlock obstructions at the end of the travel than it did to go to the SpaceHab. The obvious differences in tunnel sections, like the packed air lock and the 90-degree jog, affected translation ease and translation techniques. It was noted that the

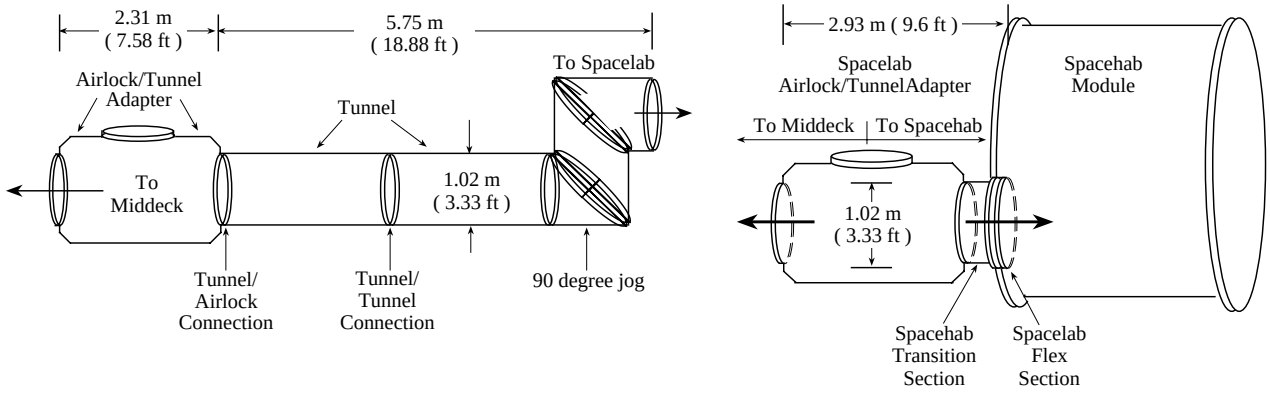

a. The Spacelab Transfer Tunnel *b. The SpaceHab Transfer Tunnel*

Figure 6-7. Transfer Tunnels and their interior dimensions.

smoother parts of the tunnel were easier to navigate. Also, the jog was seen as beneficial by some crew members because it prevented them from entering the Spacelab too fast. Other crew members saw the jog as an impediment. Crew members suggested improved mobility aids. Padding and an additional center handrail within the tunnel would reduce bumps and bruises. Footloops and handholds at and beyond the exits of the transfer tunnel would facilitate stopping after translation.

Neutral Body Posture (NBP)

Physiological effects of the microgravity space environment have been of particular interest for posture studies, and have been known to affect the body's center of gravity, reach, flexibility, and dexterity in conducting work activities [36]. Possible factors influencing posture include body size, physical condition, previous injury, and mission duration [37, 38]. The European Space Agency (ESA) [38] has raised some questions about the appropriateness of the NASA microgravity neutral body posture model [34] (Figure 6-8). ESA researchers, after investigating photographs and video taken during Skylab missions, concluded that only 36% of the data they reviewed matched this model. ESA suggested that discrepancies may be due to variations among subjects, and predisposed postures due to orientation of the subjects to a work area or task. Therefore, a goal of DSO 904 was to collect additional data on body posture under microgravity conditions [39, 40].

Six crew members from each of two Shuttle flights (STS-47 and 57) participated in this evaluation. Each subject was instructed to don shorts and a tank top, to be blindfolded, and to assume a relaxed posture that was not oriented to any work area or task, while data were being taken. A blindfold facilitated acquiring a relaxed and non-oriented posture, while the clothing allowed good visibility of the body segments, body joints, and limb angles. Responses during the STS-47 flight indicated that each crew member observed a microgravity neutral body posture in themselves that was quite comfortable and consistent throughout the mission. In general, most crew members indicated that posture did not change over the course of the mission. However, one crew member felt that the body adapted over time to the microgravity environment, resulting in a gradual attainment of the microgravity posture for that person. Data were acquired on day 6 of STS-57 after crew members became fully adapted to the microgravity environment, having recovered from any effects that motion sickness may have induced. No crew member exhibited a neutral body posture predicted by the model. Rather, arm and shoulder positions were less bent, and there were straighter leg positions at the hip and knee than expected. Also, the arms were closer to the torso sides and generally held lower toward the waist than predicted by the model (Figure 6-9).

Crew members indicated that they had difficulty relaxing, particularly in the lower back area, in the microgravity environment. This may have been due in part to a difficulty in straightening the back in microgravity because of the lack of gravity to push against. Crew member responses identified the need to design specifically for microgravity and to pay particular attention to the tasks being performed in designing foot restraints and handholds at workstations.

These studies suggest that the NASA NBP model was too generalized, and should be modified with additional data to provide more representative spaceflight crew postures. This would also tend to indicate that ESA's concerns with the original determination were well-founded and that further study should be made of microgravity posture as manifested by a more normally distributed participant population.

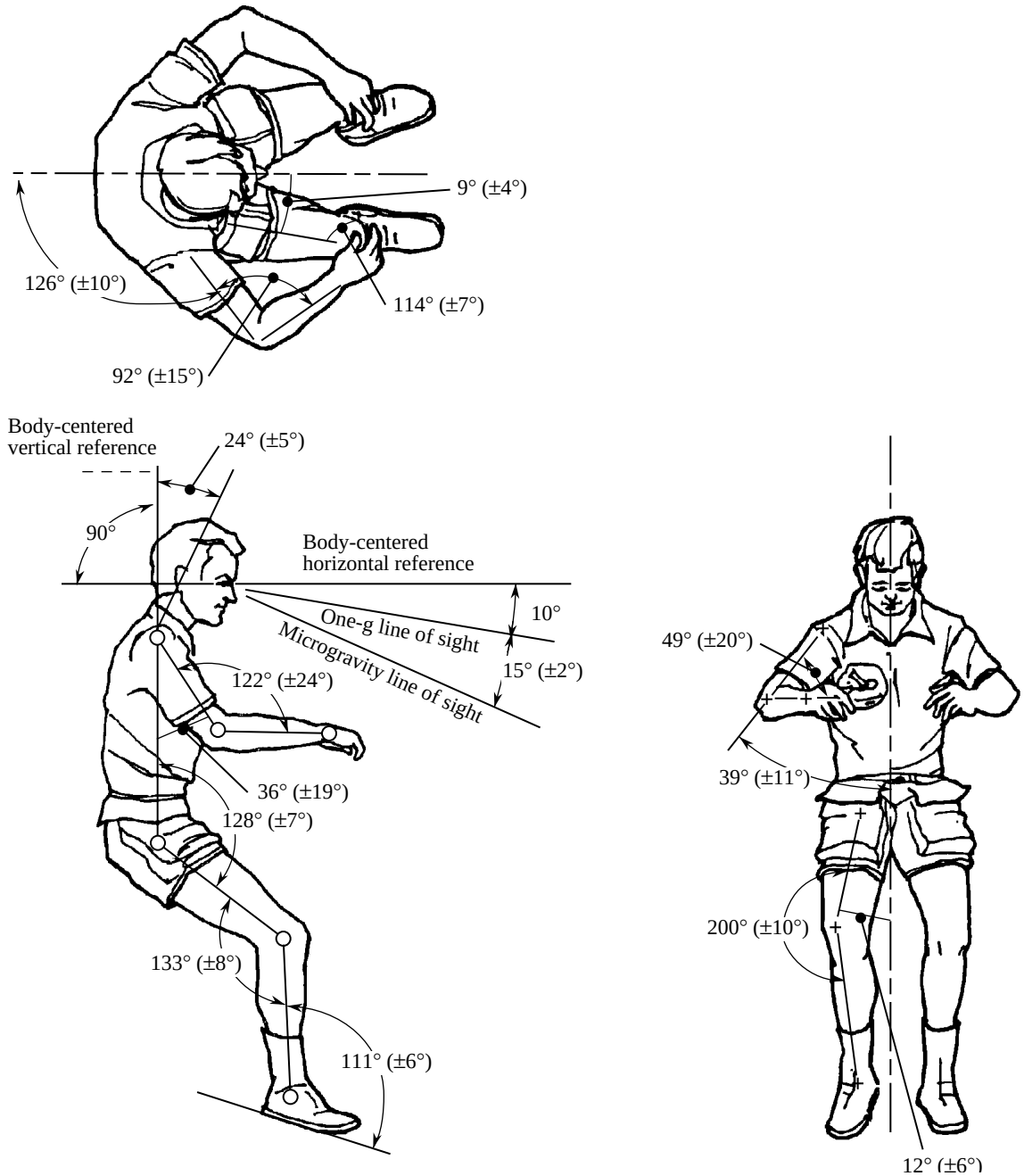

Figure 6-8. The Neutral Body Posture model. [34]

Questionnaires

An important element of spaceflight human factors assessment (HFA) is data collection methodology. Computer-based HFA questionnaires were evaluated on SpaceHab-1 (STS-57). These questionnaires were compared with data collection using written paper formats or voice recordings. The concept of an electronic questionnaire was explored as a possible means of eliciting and acquiring more explicit comments from the crew. In addition to entering comments, crew members were asked to make one of the following inputs: 7-point scale rating, percentage estimate, or yes/no response.

The SpaceHab crew debriefing helped to identify areas in which the HFA questionnaire could be improved. For example, the crew members suggested including more specific questions. The use of a computer did not appear to elicit more crew comments than did written responses. Furthermore, it appears that using a computer may have introduced additional overhead, both in terms of timeline and required work volume. Using a computer-based questionnaire may have resulted in a

Figure 6-9. Female crew member with leg and foot posture deviating from the MSIS model.

competition for resources, such as electrical power, a place to attach the computer and foot restraints, or the availability of the computer itself. When the computer and the crew members were not available at the same time, data collection opportunities were lost.

On orbit, an electronic questionnaire offered advantages over traditional hard copy questionnaires in reduced weight, fewer free floating objects to keep track of, and greater ease in uploading changes and downloading results.

Based on findings from the HFA questionnaire and other evaluations, it is clear that questionnaires do provide a means of obtaining useful data for the evaluation of crew interface and design issues. However, as would be expected, the utility of the data collected is highly dependent upon the ability to gain access to the user of the system (in this case the SpaceHab crew). While the implementation of a questionnaire through electronic means proved to be a viable alternative, its use must be carefully examined since its operation requires additional timeline, power, and working volume requirements.

SUMMARY

Building on the experiences of Skylab, the DSO 904 studies contained herein report the first systematic formal inquiries made regarding the workplace and habitation environments aboard the Space Shuttle. The cases extending Skylab studies represented a tripling of the sample size available for guiding design of microgravity work places, tools, and tasks. The addition of female subjects added important data to the Man-Systems Integration Standards (MSIS) database, providing a basis for greater variety in representative crew members for designing microgravity equipment and tools. In studying the human-machine interface, an emphasis was placed on crew member productivity and comfort. Hardware and software designs influence ability to perform tasks and minimize errors.

Following the summary of the data collection and results for each area of inquiry, there is a list of recommendations and countermeasures that will allow designers of future spacecraft hardware and developers of spaceflight procedures to better meet the goals of human factors engineering applied to the microgravity environment of space.

The expansion of the database to document the variability among individuals, a larger sample size, and a variety of tasks will permit better design of the workplace, tools, and recreational and daily living areas for long duration spaceflights. With motivation and endurance, crew members can withstand or ignore slight discomforts and overcome task inefficiencies for short periods of time. However, as spaceflight missions get longer, it is more important to design for continued high levels of performance.

Information collected from these studies, and from Earth-based evaluations of the Shuttle and SpaceHab, will be incorporated into a database of space and life sciences research and used in the development of human factors standards for spaceflight. Additionally, the information will be used to update the *Man-Systems Integration Standards (MSIS)*, NASA-STD-3000 [34] and to suggest improvements in Orbiter hardware design, training requirements, procedure definition, and timeline development, as well as for design of the International Space Station and other space vehicles.

An assumption that no software or hardware countermeasures or enhancements are necessary can only be substantiated if both the environment and the human response are better known. Specific studies of these areas will be recommended for future flights.

REFERENCES

1. Eastman Kodak. Ergonomics Design for People at Work. Volume 1. New York: Van Nostrand Reinhold Company; 1983.

2. Whitmore M, McKay TD, Mount FE. Evaluations of a microgravity workstation design: Spacelab glovebox. In: Aghazadeh F, editor. Advances in industrial ergonomics and safety VI, proceeding of the Industrial Ergonomics and Safety Conference ’94. Bristol, PA: Taylor & Francis; 1994.
3. Whitmore M, Mount FE. Microgravity maintenance workstation development. International Journal of Industrial Ergonomics 1995; 15:189-97.
4. Dalton BP, Jahns G, Hogan R. Space life sciences development towards successive life sciences flights. Technical Paper #IAF/IAA-92-0280. Paris, France: International Astronautical Federation; 1992.
5. Dalton BP, Schmidt GK, Savage PD. The general purpose work station, a spacious microgravity workbench. SAE Technical Paper Series No. 921394; 1992.
6. Wagner PA. The Development of a Space Shuttle General Purpose Workstation (GPWS). SAE Technical Paper Series No. 831090; 1992.
7. Pandya A, Hancock L. GPWS ergonomic evaluations. GRAF White Paper; 1995.
8. Whitmore M, McKay TD. PVAT: development of a video analysis tool. Poster presented at the Association for Computing Machinery’s Computer Human Interaction ’94 Conference; 1994.
9. Diaz MF. Human factors assessment of the STS-50 lower body negative pressure system. JSC Technical Report #26517. Houston, TX: National Aeronautics and Space Administration; 1993.
10. Dalton M. Skylab experience bulletin no. 7: an overview of IVA personal restraint systems. #JSC-09541. Houston, TX: National Aeronautics and Space Administration; 1974.
11. Dalton M. Skylab experience bulletin no. 12: temporary equipment restraints. #JSC-09546. Houston, TX: National Aeronautics and Space Administration; 1975.
12. Dalton M. Skylab experience bulletin no. 18: evaluation of Skylab IVA architecture. #JSC-09552. Houston, TX: National Aeronautics and Space Administration; 1975.
13. Sova V. Skylab experience bulletin no. 15: cable management in zero-g. #JSC-09549. Houston, TX: National Aeronautics and Space Administration; 1974.
14. STS-9 flight crew report: Columbia Spacelab 1. Houston, TX: National Aeronautics and Space Administration; 1984.
15. Wichman H, Donaldson SI. Crew performance in Spacelab. Proceedings of the Human Factors Society 35th annual meeting. Santa Monica, CA; Human Factors Society; 1991. p 571-4.
16. Compton WD, Benson CD. Living and working in space: a history of Skylab. Washington, DC: National Aeronautics and Space Administration; 1983.
17. Johnston RS, Dietlein LF, Berry CA, editors. Biomedical results of Apollo, NASA SP-368. Washington, DC: U.S. Government Printing Office; 1975.
18. Johnston RS, Dietlein LF, editors. Biomedical results from Skylab. NASA SP-377. Washington, DC: National Aeronautics and Space Administration; 1977.
19. Nicogossian AE, Parker JF Jr. Space physiology and medicine. NASA SP-447. Washington, DC: National Aeronautics and Space Administration; 1982.
20. Kubis JF, McLaughlin EJ, Jackson JM, Rusnak RR, McBride TR, Saxon SV. Biomedical results from Skylab. NASA SP-377. Washington, DC: National Aeronautics and Space Administration; 1977.
21. National Aeronautics and Space Administration. Spacelab Life Sciences 1, first space laboratory dedicated to life sciences research. NP 120. Houston, TX: National Aeronautics and Space Administration; 1989.
22. Mount FE. Elaborated and concise hypertext: effects on comprehension. Unpublished thesis, University of Houston; 1993.
23. Desaulniers DR, Gillan DJ, Rudisill M. The effects of context in computer based procedure displays. NASA Technical Report. Houston, TX: Lockheed Engineering and Sciences Company; 1989.
24. Johns GJ. Dynamic Display of crew procedures for Space Station, volume I, baseline definition, and volume II, functional requirements. MITRE Report No. MTR-88D033. McLean, Virginia: The MITRE Corporation; 1988.
25. Kelly CM. Conceptual definition for a flight data file automated control and tracking system. MITRE Report No. MTR-88D0017. McLean, Virginia: The MITRE Corporation; 1988.
26. O’Neal MR. The effects of format and contingency on procedure reading time. NASA Technical Report #25705. Houston, Texas: Lockheed Engineering and Sciences; 1992.
27. O’Neal MR, Manahan M. Spacecraft crew procedures: from paper to computers. Published in Proceedings: Fourth Annual Workshop on Space Operations, Applications, and Research (SOAR ’90). NASA Conference Publication 3103; 1990. p 595-600.
28. Regel LL. Materials processing in space: theory, experiments, and technology. Bradley JES, translator; Sagdeev RZ, editor. New York: Consultants Bureau; 1990 (Original work published 1987).

29. Willshire KF, Leatherwood JD. Shuttle astronaut survey. Langley, VA: Langley Research Center; 1985.

30. Koros AS. Crewmember evaluation of vibration on STS-40/SLS-1. Houston, TX.: National Aeronautics and Space Administration; 1991.

31. Koros AS. Objective and subjective measures of noise on STS-40/SLS-1. Houston, TX: National Aeronautics and Space Administration; 1991.

32. Koros AS, Adam SC, Wheelwright CD. A human factors evaluation: noise and its effects on Shuttle crewmembers during STS-50/USML-1. NASA Technical Memorandum 104775. Houston, TX: National Aeronautics and Space Administration; 1993.

33. Mount FE, Adam SC, McKay T, Whitmore M, Merced-Moore D, Holden T, Wheelwright CD, Koros A Sr., O'Neal M, Toole J, Wolf S. Human factors assessment of the STS-57 SpaceHab-1 mission. NASA Technical Memorandum 104802. Houston, TX: National Aeronautics and Space Administration; 1994.

34. National Aeronautics and Space Administration. Man-systems integration standards, rev. B, vol. 1. NASA-STD-3000. Houston, TX.: National Aeronautics and Space Administration; 1995.

35. Callaghan TF. Human factors investigation of translation through the STS-40/SLS-1 Spacelab transfer tunnel. Houston, TX: National Aeronautics and Space Administration; 1991.

36. Adam S, Callaghan T. Human factors investigation of translation through the STS-47/Spacelab-Japan transfer tunnel. Houston, TX: National Aeronautics and Space Administration; 1992.

37. Nicogossian AE, editor. Space physiology and medicine, 2nd edition. Philadelphia: Lea & Febiger; 1989.

38. Tafforin C. Analysé Éthologique de l'adaptation du comportement moteur de l'homme a la microgravité [Ethological analysis of the adaptation of the astronaut's motor behavior in microgravity]. Unpublished doctoral dissertation, Université Paul Sabatier, Toulouse, France; 1990.

39. Wilson GF, Stealey SL, Mount FE. Neutral body posture (NBP) evaluation from Space Transportation System (STS)-47/Spacelab-Japan (SLJ). Houston, TX: National Aeronautics and Space Administration; 1993.

40. Mount FE, Whitmore M, Stealey SL. Evaluation of neutral body posture (NBP) on Shuttle mission STS-57/SpaceHab-1. Houston, TX: National Aeronautics and Space Administration; 1994.