https://ntrs.nasa.gov/search.jsp?R=20060013198 2017-08-15T07:57:16+00:00Z

Source of Acquisition
NASA Goddard Space Flight Center

Feb. 24, 2006

# RIGID BODY RATE INFERENCE FROM ATTITUDE VARIATION

I.Y. Bar-Itzhack[†], Richard R. Harman[§] and Julie K. Thienel[#]

## Abstract

In this paper we research the extraction of the angular rate vector from attitude information without differentiation, in particular from quaternion measurements. We show that instead of using a Kalman filter of some kind, it is possible to obtain good rate estimates, suitable for spacecraft attitude control loop damping, using simple feedback loops, thereby eliminating the need for recurrent covariance computation performed when a Kalman filter is used. This considerably simplifies the computations required for rate estimation in gyro-less spacecraft. Some interesting qualities of the Kalman filter gain are explored, proven and utilized.

We examine two kinds of feedback loops, one with varying gain that is proportional to the well known Q matrix, which is computed using the measured quaternion, and the other type of feedback loop is one with constant coefficients. The latter type includes two kinds; namely, a proportional feedback loop, and a proportional-integral feedback loop. The various schemes are examined through simulations and their performance is compared. It is shown that all schemes are adequate for extracting the angular velocity at an accuracy suitable for control loop damping.

## INTRODUCTION

In most spacecraft (SC) there is a need to know the angular velocity. Angular velocity is needed for two major tasks; namely, attitude control, and attitude computation. When the attitude is given from an autonomous star tracker (AST) - for example[1], then, of course, the need for angular velocity exists only for attitude control. Traditionally, the SC angular rate vector is obtained from gyroscopes installed on board. In smaller, lighter and low-cost SC, there is often a desire to do away with gyros and use other means to determine the SC angular rate. Even in gyro-

[†] Prof. Emeritus. Faculty of Aerospace Engineering,
Technion-Israel Institute of Technology, Haifa 32000, Israel. Member Technion Asher Space Research Institute. AIAA Fellow, IEEE Fellow. Tel: +972-4-829-3196. Fax: +972-4-829-2030. ibaritz@tx.technion.ac.il

[§] Aerospace Engineer, NASA-Goddard Space Flight Center, Flight Analysis Branch, Code 595.
Tel: 301-286-5125. Fax: 301-286-0369. richard.r.harman@nasa.gov

[#] Aerospace Engineer, NASA-Goddard Space Flight Center, Flight Analysis Branch, Code 595.
Tel: 301-286-9033. Fax: 301-286-0369. julie.Thienel@nasa.gov

equipped satellites there is a need to determine the angular rate by other means when the angular rate is out of range of the SC gyros or when a total gyro failure occurs.

There are several ways to obtain the angular rate in a gyro-less SC. When the attitude is known, in whatever parameters it is given, one can differentiate it and use the kinematics equation that connects the derivative of the attitude with the satellite angular rate in order to compute the latter[2, 3]. However, since the attitude is obtained from sensor measurements, the differentiation of the attitude introduces a considerable noise component in the computed angular rate vector.

Another approach is that of using the attitude parameters, or the measured directions themselves, as measurements in some kind of a Kalman Filter (KF). In this case the kinematics equation that connects the attitude parameters, or the directions, with their derivatives, are included in the dynamics equation used by the filter, thereby the need for differentiation is eliminated[4, 5]. However, the use of a KF of some kind requires the computation of a covariance matrix. Not only is this process cumbersome, sometimes it may also pose an accuracy problem. These accuracy considerations led to the use of the more computationally intensive covariance measurement-update formula[6], square root filtering[7], and other sophisticated approaches.

In this work we investigate simple algorithms that do not require covariance computation. In particular we investigate the use of passive feedback loops for extracting the angular velocity from attitude information without differentiation. In our approach, the dominant factor is simplicity rather than accuracy, because for control loop damping, crude rate information is often sufficient. We start our investigation in the next section with an examination of the Pseudo-Linear Kalman (PSELIKA) filter for estimating angular rate when quaternion measurements are given. In particular, we consider the filter gain when the filter tracks the SC rates well. Some

particular characteristics of the gain are observed and analytically proven. In the section that follows we introduce a simple realization of the PSELIKA which is based on these particular gain characteristics. This leads to very simple passive feedback systems, which are introduced in the following section. All the systems are tested with continuous quaternion inputs. Discrete inputs, with and without measurement noise are presented in the next section. The tests prove that the systems are suitable for rate estimation for control loop damping. Finally, in the last section we present our conclusions.

## ANGULAR RATE DETERMINATION BY ESTIMATION

In this work, we consider the quaternion of rotation as the attitude measurement. The rate of change of the quaternion is described by the well-known equation [see e.g. Ref. 8, p.512]

$$\dot{\mathbf{q}} = \tfrac{1}{2}\Omega\mathbf{q} \tag{1.a}$$

where

$$\Omega = \begin{bmatrix} 0 & \omega_z & -\omega_y & \omega_x \\ -\omega_z & 0 & \omega_x & \omega_y \\ \omega_y & -\omega_x & 0 & \omega_z \\ -\omega_x & -\omega_y & -\omega_z & 0 \end{bmatrix} = \begin{bmatrix} [-\boldsymbol{\omega}\times] & \boldsymbol{\omega} \\ -\boldsymbol{\omega}^T & 0 \end{bmatrix} \tag{1.b}$$

and $\omega_x, \omega_y$, and $\omega_z$ are the components of the angular velocity vector, $\boldsymbol{\omega}$, T designates the matrix transpose and $[-\boldsymbol{\omega}\times]$ is the cross product matrix of the vector $-\boldsymbol{\omega}$. The cross product, $[\mathbf{a}\times]$, of the general vector $\mathbf{a}$ is given by

$$[\mathbf{a}\times] = \begin{bmatrix} 0 & -a_z & a_y \\ a_z & 0 & -a_x \\ -a_y & a_x & 0 \end{bmatrix} \tag{1.c}$$

where $a_x$, $a_y$, and $a_z$ are the components of $\mathbf{a}$. Equation (1.a) can also be written as

$$\dot{\mathbf{q}} = \tfrac{1}{2}Q\boldsymbol{\omega} \tag{2.a}$$

where

$$Q = \begin{bmatrix} qI_3 + [\mathbf{e}\times] \\ -\mathbf{e}^T \end{bmatrix} \tag{2.b}$$

The elements $q$ and $\mathbf{e}$ are respectively the scalar part and the vector part of the quaternion; that is, $\mathbf{q}^T = \begin{bmatrix} \mathbf{e}^T & q \end{bmatrix}$, and $I_n$ is the *n*-dimensional identity matrix.

The angular dynamics of a rigid body SC is given in the following equation [8, p. 523]

$$I\dot{\boldsymbol{\omega}} + \dot{\mathbf{h}} + \boldsymbol{\omega} \times (I\boldsymbol{\omega} + \mathbf{h}) = \mathbf{T} \tag{3}$$

where I is the SC inertia matrix, $\mathbf{h}$ is the angular momentum of the momentum wheels, and $\mathbf{T}$ is the external torque acting on the SC. Since the inertia matrix, I, is invertible we may write this equation as

$$\dot{\boldsymbol{\omega}} = I^{-1}[(I\boldsymbol{\omega} + \mathbf{h})\times]\boldsymbol{\omega} + I^{-1}(\mathbf{T} - \dot{\mathbf{h}}) \tag{4.a}$$

Define $\mathbf{f}(\boldsymbol{\omega})$ as follows

$$\mathbf{f}(\boldsymbol{\omega}) = I^{-1}[(I\boldsymbol{\omega} + \mathbf{h})\times]\boldsymbol{\omega} + I^{-1}(\mathbf{T} - \dot{\mathbf{h}}) \tag{4.b}$$

then we can augment Eqs. (2.a) and (4), and add to them white noise vectors to reflect modeling uncertainty. This yields the state space augmented equation

$$\begin{bmatrix} \dot{\mathbf{q}} \\ \dot{\boldsymbol{\omega}} \end{bmatrix} = \begin{bmatrix} \frac{1}{2}Q\boldsymbol{\omega} \\ \mathbf{f}(\boldsymbol{\omega}) \end{bmatrix} + \begin{bmatrix} \mathbf{v}_q \\ \mathbf{v}_\omega \end{bmatrix} \tag{5.a}$$

In the case considered where the measured entity is the quaternion itself, the measurement model is

$$\mathbf{q}_m = \begin{bmatrix} I_4 & 0 \end{bmatrix} \begin{bmatrix} \mathbf{q} \\ \boldsymbol{\omega} \end{bmatrix} + \mathbf{v}_q \tag{5.b}$$

where $\mathbf{q}_m$ is the measurement, and $\mathbf{v}_q$ is an appropriate measurement noise. Equations (5) have been used to estimate the angular rate with much success either after linearization, using an extended Kalman filter (EKF)[9,10] or, after a simple manipulation by a pseudo-linear Kalman filter

(PSELIKA)[11]. In fact, when the measurements come at a relatively fast rate, satisfactory rate estimate can be achieved when the nonlinear SC dynamics model of Eq. (4.a) is replaced by the following simple linear Markov model[12]

$$\dot{\boldsymbol{\omega}} = -N\boldsymbol{\omega} + \mathbf{v}_{\omega} \tag{6}$$

in which $N = -nI_3$ , n is an inverted time constant, and $\mathbf{v}_{\omega}$ is an appropriate noise vector[¶]. In this case we obtain the following model

$$\begin{bmatrix} \dot{\mathbf{q}} \\ \dot{\boldsymbol{\omega}} \end{bmatrix} = \begin{bmatrix} 0_{4\times4} & \frac{1}{2}Q \\ 0_{3\times4} & -nI_3 \end{bmatrix} \begin{bmatrix} \mathbf{q} \\ \boldsymbol{\omega} \end{bmatrix} + \begin{bmatrix} \mathbf{v}_q \\ \mathbf{v}_{\omega} \end{bmatrix} \tag{7}$$

The dynamics model of Eq. (7) and the associated measurement model of Eq. (5.b) were used successfully for estimating SC angular rates using PSELIKA[11]. PSELIKA is an ordinary linear Kalman filter (KF) where state-variables in the dynamics and the measurement matrices, are replaced by their current best estimate.

As seen in the following continuous general linear KF algorithm,

$$\dot{\hat{\mathbf{x}}} = F\hat{\mathbf{x}} + K[\mathbf{z} - H\hat{\mathbf{x}}] \tag{8}$$

a KF of any kind (or a Luenberger observer[13]) operates as a feedback system. The difference between measurement, $\mathbf{z}$, and its estimate, $H\hat{\mathbf{x}}$, is multiplied by the gain, and the product is used to correct the state estimate rate of change. In our case of rate estimation, when the continuous PSELIKA is applied to the dynamics and measurement models that are given, respectively, in Eqs. (7) and (5.b), Eq. (8) becomes

$$\begin{bmatrix} \dot{\hat{\mathbf{q}}} \\ \dot{\hat{\boldsymbol{\omega}}} \end{bmatrix} = \begin{bmatrix} 0_{4\times4} & \frac{1}{2}Q \\ 0_{3\times4} & -nI_3 \end{bmatrix} \begin{bmatrix} \hat{\mathbf{q}} \\ \hat{\boldsymbol{\omega}} \end{bmatrix} + \begin{bmatrix} K_q \\ K_{\omega} \end{bmatrix} (\mathbf{q}_m - \hat{\mathbf{q}}) \tag{9}$$

which can be written as

[¶] It should be noted that this is just a model and not the true description of the rate vector.

$$\begin{bmatrix} \dot{\hat{\mathbf{q}}} \\ \dot{\hat{\boldsymbol{\omega}}} \end{bmatrix} = \begin{bmatrix} -K_q & \frac{1}{2}Q \\ -K_\omega & -nI_3 \end{bmatrix} \begin{bmatrix} \hat{\mathbf{q}} \\ \hat{\boldsymbol{\omega}} \end{bmatrix} + \begin{bmatrix} K_q \\ K_\omega \end{bmatrix} \mathbf{q}_m \tag{10}$$

A block diagram realization of the last equation is shown in Fig. 1. Note that $Q$ is a function of $\hat{\mathbf{q}}$. In fact, since the AST yields very accurate quaternions, we can use $\mathbf{q}_m$ rather than $\hat{\mathbf{q}}$ to evaluate $Q$. The Kalman gain components $K_q$ and $K_\omega$ are, of course, computed as a part of the usual gain computation of the KF.

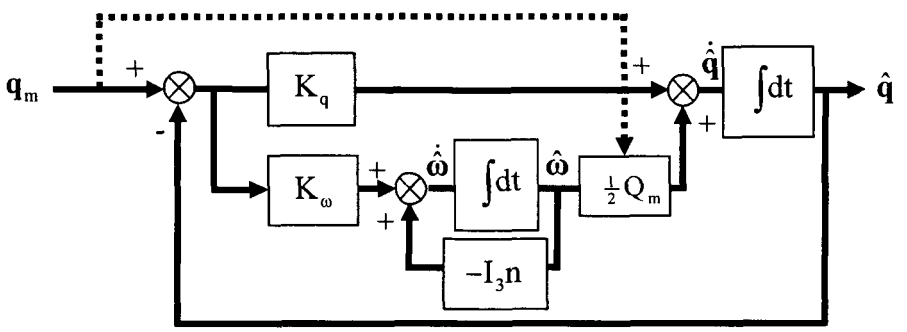


**Fig. 1:** Block Diagram Representation of the PSELIKA Filter Rate Estimator

Although in practice the discrete formulation of the filter algorithms are implemented, we interchangeably use the continuous formulation in order to investigate certain qualities of the filters. This is permissible because the effect of a continuous filter can be considered as that of a discrete filter running at extremely small step size between measurements.

**Qualities of $K_q$ and $K_\omega$**

In estimating the angular velocity using quaternion measurements and the PSELIKA filter, the gains $K_q$ and $K_\omega$ have special forms that could be used to our computational advantage. To explore these qualities, it is convenient to consider the continuous KF algorithm as a discrete

algorithm. Omitting, for convenience, time labeling, the formula for computing the discrete Kalman gain is

$$K = P(-)H^T\left[HP(-)H^T + R\right]^{-1} \tag{11.a}$$

where $P(-)$ is the a-priori covariance matrix, $H$ is the measurement matrix, and $R$ is the covariance matrix of the measurement noise, all at time $t_k$. From Eq. (5.b)

$$H = \begin{bmatrix} I_4 & 0 \end{bmatrix} \tag{11.b}$$

For this particular measurement matrix one obtains

$$K = \begin{bmatrix} P_{11}(-)\left[P_{11}(-) + R\right]^{-1} \\ P_{12}^T(-)\left[P_{11}(-) + R\right]^{-1} \end{bmatrix} \tag{11.c}$$

where $P_{11}(-)$ and $P_{12}(-)$ are sub-matrices of $P(-)$ as seen below.

$$P(-) = \begin{bmatrix} P_{11}(-) & P_{12}(-) \\ P_{12}^T(-) & P_{22}(-) \end{bmatrix} \tag{11.d}$$

From Eq. (11.c) we obtain

$$K_q = P_{11}(-)\left[P_{11}(-) + R\right]^{-1} \tag{11.e}$$

$$K_\omega = P_{12}^T(-)\left[P_{11}(-) + R\right]^{-1} \tag{11.f}$$

Since $P_{11}(-)$ and $R$ are symmetric, from Eq. (11.f), it is clear on the outset that $K_q$ *is symmetric too*. In order to examine the form that $K_\omega$ takes, and to further examine the form of $K_q$, consider the transition matrix from time $t_{k-1}$ to $t_k$. Let $\Delta = t_k - t_{k-1}$ then $A$, the transition matrix, is given by $A = \exp(F\Delta)$. For small $\Delta$ the first order approximation of the exponential function suffices. It is

$$A \approx I_7 + \begin{bmatrix} 0_{4\times4} & \frac{1}{2}Q \\ 0_{3\times4} & -I_3 n \end{bmatrix}\Delta = \begin{bmatrix} I_4 & \frac{1}{2}Q\Delta \\ 0_{3\times4} & I_3(1 - n\Delta) \end{bmatrix} \tag{12.a}$$

Assuming that the process noise is white, that the variance of each quaternion state is $\eta_q$ and each angular velocity state is $\eta_\omega$, the a-priori covariance matrix at time $t_1$ is computed as follows

$$P_1(-) = A_0 P_0(+) A_0^T + \begin{bmatrix} \eta_q I_4 & 0_{4,3} \\ 0_{3,4} & \eta_\omega I_3 \end{bmatrix} \tag{12.b}$$

where $P_0(+)$ is the initial covariance matrix and $P_1(-)$ is the a-priori covariance matrix at time $t_1$. Following the usual practice, we choose $P_0(+)$ as

$$P_0(+) = \begin{bmatrix} p_{q,0} I_4 & 0_{4,3} \\ 0_{3,4} & p_{\omega,0} I_3 \end{bmatrix} \tag{12.c}$$

Using Eqs. (12), one obtains

$$P_1(-) = \begin{bmatrix} (p_q + \eta_q) I_4 + \tfrac{1}{4} Q Q^T p_\omega \Delta^2 & \tfrac{1}{2} Q p_\omega \Delta (1 - n\Delta) \\ \tfrac{1}{2} Q^T p_\omega \Delta (1 - n\Delta) & I_3 [(1 - n\Delta)^2 p_\omega + \eta_\omega] \end{bmatrix} \tag{12.d}$$

Neglecting, where appropriate, terms containing $\Delta^2$ yields

$$P_1(-) \approx \begin{bmatrix} (p_q + \eta_q) I_4 & \tfrac{1}{2} Q p_\omega \Delta \\ \tfrac{1}{2} Q^T p_\omega \Delta & I_3 [(1 - 2n\Delta) p_\omega + \eta_\omega] \end{bmatrix} \tag{12.e}$$

Let $R = \xi I_4$, then using the last equation, $K_1$, the Kalman gain at time $t_1$, is computed as follows

$$K_1 = P_1(-) H^T \left[ H P_1(-) H^T + R \right]^{-1} = \begin{bmatrix} I_4 (p_q + \eta_q) / (p_q + \eta_q + \xi) \\ \tfrac{1}{2} Q^T p_\omega \Delta / (p_q + \eta_q + \xi) \end{bmatrix} \tag{12.f}$$

Define

$$\alpha = (p_q + \eta_q) / (p_q + \eta_q + \xi) \tag{12.g}$$

$$\beta = \tfrac{1}{2} p_\omega / (p_q + \eta_q + \xi) \tag{12.h}$$

then $K_1$ can be written as

$$K_1 = \begin{bmatrix} I_4 \alpha \\ Q^T \beta \Delta \end{bmatrix} \tag{12.i}$$

This gain matrix has a very peculiar form. The question is whether this peculiarity is a consequence of the fact that $P_0(+)$ is a diagonal matrix. To answer this, we go through one more iteration. To do that, we compute, $P_1(+)$, the updated covariance matrix as follows

$$
\begin{aligned}
P_1(+) &= (I - K_1H)P_1(-)(I - K_1H)^T + K_1 \cdot R \cdot K_1^T = \\
&= \begin{bmatrix} I_4[(1-\alpha)^2(p_q+\eta_q)_q + \xi\alpha^2] & Q\left([\tfrac{1}{2}p_\omega\Delta - \beta\Delta(p_q+\eta_q)](1-\alpha) + \alpha\xi\beta\Delta\right) \\ Q^T\left([\tfrac{1}{2}p_\omega\Delta - \beta\Delta(p_q+\eta_q)](1-\alpha) + \alpha\xi\beta\Delta\right) & I_3[(1-2n\Delta)p_\omega + \eta_\omega - \beta p_\omega\Delta^2 + \beta^2\Delta^2(p_q+\eta_q) + \xi\beta^2\Delta^2] \end{bmatrix}
\end{aligned}
\tag{12.j}
$$

Define the following constants

$$
\begin{aligned}
\gamma &= (1-\alpha)^2(p_q+\eta_q)_q + \xi\alpha^2 \\
\chi &= [\tfrac{1}{2}p_\omega\Delta - \beta\Delta(p_q+\eta_q)](1-\alpha) + \alpha\xi\beta\Delta \\
\delta &= (1-2n\Delta)p_\omega + \eta_\omega - \beta p_\omega\Delta^2 + \beta^2\Delta^2(p_q+\eta_q) + \xi\beta^2\Delta^2 \\
&\approx (1-2n\Delta)p_\omega + \eta_\omega
\end{aligned}
\tag{12.k}
$$

then Eq. (12.j) can be written as

$$
P_1(+) = \begin{bmatrix} I_4\gamma & Q\chi \\ Q^T\chi & I_3\delta \end{bmatrix}
\tag{12.$\ell$}
$$

Next we propagate this covariance matrix to time point $t_2$

$$
\begin{aligned}
P_2(-)P_2(-) &= A_1P_1(+)A_1^T + G \\
&= \begin{bmatrix} I_4 & \tfrac{1}{2}Q\Delta \\ 0_{3,4} & (1-n\Delta)I_3 \end{bmatrix}\begin{bmatrix} I_4\gamma & Q\chi \\ Q^T\chi & I_3\delta \end{bmatrix}\begin{bmatrix} I_4 & 0_{4,3} \\ \tfrac{1}{2}Q^T\Delta & (1-n\Delta)I_3 \end{bmatrix} + \begin{bmatrix} \eta_qI_4 & 0_{4,3} \\ 0_{3,4} & \eta_\omega I_3 \end{bmatrix}
\end{aligned}
\tag{13.a}
$$

This results in

$$
P_2(-) = \begin{bmatrix} I_4\gamma + QQ^T\Delta\chi + \tfrac{1}{4}QQ^T\Delta^2\delta + \eta_qI_4 & Q\chi + \tfrac{1}{2}Q\Delta\delta - Qn\Delta\chi - \tfrac{1}{2}Qn\Delta^2\delta \\ Q^T\chi + \tfrac{1}{2}Q^T\Delta\delta - Q^Tn\Delta\chi - \tfrac{1}{2}Q^Tn\Delta^2\delta & I_3(1-2n\Delta+n^2\Delta^2)\delta + \eta_\omega I_3 \end{bmatrix}
\tag{13.b}
$$

Examination of Eq. (12.k) reveals that $\chi = \chi'\Delta$; therefore, $\chi\Delta = \chi'\Delta^2$. Neglecting all expressions containing $\Delta^2$ in Eq. (13.b) yields

$$
P_2(-) \approx \begin{bmatrix} I_4(\gamma+\eta_q) & Q(\chi + \tfrac{1}{2}\Delta\delta) \\ Q^T(\chi + \tfrac{1}{2}\Delta\delta) & I_3[\delta(1-2n\Delta) + \eta_\omega] \end{bmatrix}
\tag{13.c}
$$

or

$$P_2(-) \approx \begin{bmatrix} I_4 a & Qb \\ Q^T b & I_3 c \end{bmatrix} \tag{13.d}$$

Since $P_2(-)$ and $P_1(-)$ (see Eq. 12.$\ell$) have the same form, and since H and R are constant matrices, $K_2$ has the same form as $K_1$ and $P_2(+)$ has the same form as $P_1(+)$. This rule prevails in all future gain and covariance matrices, consequently

$$K_n = \begin{bmatrix} \alpha_n I_4 \\ Q_n^T \beta_n \Delta \end{bmatrix} \tag{14.a}$$

The approximations made in deriving the expression for $K_n$ have been proven to be justified in the numerous runs that were made. As an example, in one run (the data of which will be presented in the ensuing) we obtained the following Kalman gain matrix at $t_{2300} = 23$ sec.

$$K_{2300} = \begin{bmatrix} \mathbf{0.9198} & -0.0003 & -0.0004 & -0.0010 \\ -0.0003 & \mathbf{0.9199} & -0.0004 & -0.0009 \\ -0.0004 & -0.0004 & \mathbf{0.9196} & -0.0012 \\ -0.0010 & -0.0009 & -0.0012 & \mathbf{0.9172} \\ \mathbf{7.5994} & \mathbf{3.1834} & \mathbf{-2.3294} & \mathbf{-2.4496} \\ \mathbf{-3.1834} & \mathbf{7.5994} & \mathbf{2.4496} & \mathbf{-2.3294} \\ \mathbf{2.3294} & \mathbf{-2.4496} & \mathbf{7.5994} & \mathbf{-3.1834} \end{bmatrix} = \begin{bmatrix} K_{q,2300} \\ K_{w,2300} \end{bmatrix} \tag{14.b}$$

In this work we consider the continuous time case. In practice, though, measurements are done in discrete time. The question is whether the assumption that the time interval, $\Delta$, is small, can be justified in the case where the time between measurements is large. The matrices $P_k(+)$ and $P_{k+1}(-)$ have the form presented in Eq. (13.d) where a, b, and c are scalars. Therefore, if one divides the time interval between two discrete measurements into sub-intervals, one can compute the propagation of the covariance matrix between the measurement time points as successive covariance propagation through the sub-intervals where the format of Eq. (13.d) is preserved. In

doing so, one can always choose $\Delta$, the sub-interval size, to be as small as desired. Thus it can be always chosen such that assumption $\Delta^2 \approx 0$ is certainly true. Hence the assumption, on which the form of Eq. (14.a) was obtained, is fully justified. In conclusion, even propagation over a large time interval results in a covariance matrix which has the format of Eq. (13.d). Therefore the Kalman gain matrix takes the form of Eq. (14.b) even when the time interval between two consecutive measurements is large.

*The realization that* $K_q$ *and* $K_\omega$ *take the special form discussed hitherto, has a far reaching consequence. Because of this special form, one needs to tune at most five scalars when running the filter of Eq. (9). One scalar has to be determined for each one of the gains. The other three are needed if the Markov process in Eq. (9) may have three different components. In such case the matrix* $nI_3$ *takes the form* $\mathrm{diag}(n_1 \quad n_2 \quad n_3)$ *and then the three* $n_i$ *rather than a single* n *have to be evaluated. In many cases though,* $K_q$ *is simply* $I_4$ *and* n *has indeed a single value, thus only two parameters have to be tuned, which makes the filter very attractive. Moreover, since the gain is computed directly, there is no need to compute the recursive covariance part of the Kalman Filter algorithm if the covariance is evaluated to solely compute the Kalman gain.*

The general results $K_q = \alpha I_4$ and $K_\omega = Q_n^T \beta_n \Delta$ can easily be reasoned as follows. Consider the upper part of Eq. (9); namely

$$\dot{\hat{\mathbf{q}}} = \tfrac{1}{2} Q \hat{\boldsymbol{\omega}} + K_q(\mathbf{q}_m - \hat{\mathbf{q}}) \tag{15}$$

When at some point $\hat{\boldsymbol{\omega}}$ and $\hat{\mathbf{q}}$ equal, respectively, $\boldsymbol{\omega}$ and $\mathbf{q}_m$, then the solution of the equation $\dot{\hat{\mathbf{q}}} = 1/2\, Q \hat{\boldsymbol{\omega}}$ settles on $\mathbf{q}_m$ (and it is assumed that the latter is very accurate). However, when this is not the case, the computation of $\hat{\mathbf{q}}$ is driven towards the correct value by the difference

$(\mathbf{q}_m - \hat{\mathbf{q}})$. Since this difference directly affects the computation of the estimated quaternion, it is logical that each one of the 4 components, and no other component of the difference, drive the corresponding component of $\dot{\hat{\mathbf{q}}}$; that is, $K_q$ is a diagonal matrix. Moreover, as there is no reason to prefer any component over the other 3, $K_q$ has to be of the form $K_q = \alpha I_4$ where $\alpha$ is some constant. In particular, $\alpha$ can be equal to 1; that is, $K_q = I_4$.

Let us consider now the lower part of Eq. (9); namely

$$\dot{\hat{\boldsymbol{\omega}}} = -N\hat{\boldsymbol{\omega}} + K_\omega(\mathbf{q}_m - \hat{\mathbf{q}}) \tag{16}$$

As will be shown later (Eq. 18.c), a least square estimate of $\hat{\boldsymbol{\omega}}$ is given by

$$\hat{\boldsymbol{\omega}} = 2Q^T\dot{\mathbf{q}} \tag{17}$$

When $\hat{\boldsymbol{\omega}}$ is equal to $\boldsymbol{\omega}$ and $\hat{\mathbf{q}} = \mathbf{q}_m$, $\hat{\mathbf{q}}$ will stay equal to $\mathbf{q}_m$ (see Eq. 15); however, as indicated in Eq. (16), when $\hat{\mathbf{q}} \neq \mathbf{q}_m$, the difference between the two serves as a signal for changing $\hat{\boldsymbol{\omega}}$ in the correct direction. According to Eq. (17) the rate of change of a quaternion influences the estimate of $\hat{\boldsymbol{\omega}}$ through $2Q^T$. This corresponds to the conclusion expressed in Eq. (14.a) that $K_\omega$ is proportional to $Q^T$.

In the next section, where we compute the angular rate using a simple feedback loop, we will take advantage of the approximations of $K_q$ and $K_\omega$.

## PSELIKA BASED RATE EXTRACTION FEEDBACK LOOP

Following the discussion on the form of the gains $K_q$ and $K_\omega$ in the preceding section, we use in the block diagram of Fig. 1 the appropriate gain forms. The resultant block diagram is shown in Fig. 2. Since $\hat{\mathbf{q}}$ is very accurate, we use $Q(\mathbf{q}_m)$ that we denote by $Q_m$ rather than

$Q(\hat{\mathbf{q}})$. Also note that $nI_3 = N$. Only two parameters; namely, $\upsilon$ and $n$ need to be determined by tuning.

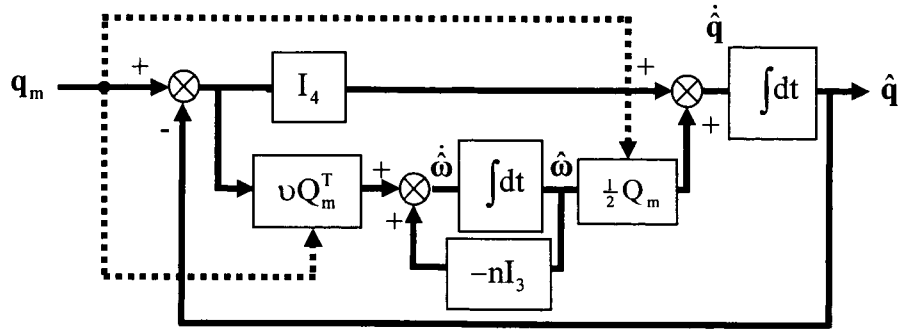


**Fig. 2:** Block Diagram Representation of the PSELIKA Filter Rate Estimator

We ran a simulation with $\upsilon = 5500$ and $n = 0.1$ 1/sec. We chose a baseline angular velocity pattern that was composed of various features. It included an oscillatory part, abrupt changes, ramps and a straight line, all at different levels. This angular velocity generated perfect $\mathbf{q}_m$.

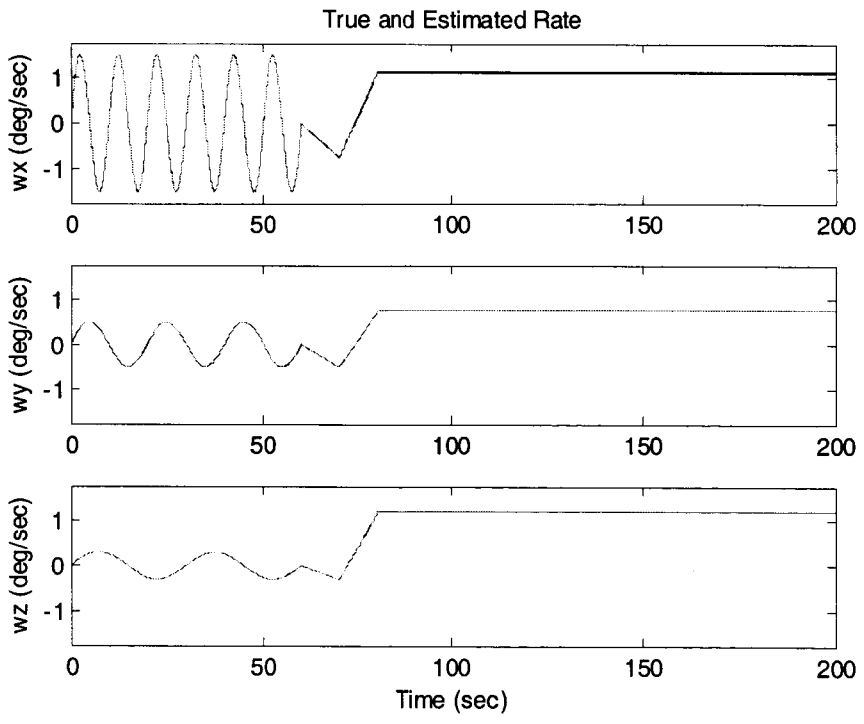


**Fig. 3:** True (red line) and Estimated Rate History for the PSELIKA Derived Loop

Fig. 3 (red line) [¶] presents the nominal baseline angular velocity components together with their estimates. The components of the rate estimation error are shown in Fig. 4. The difference between the measured and estimated quaternions is shown in Fig. 5.

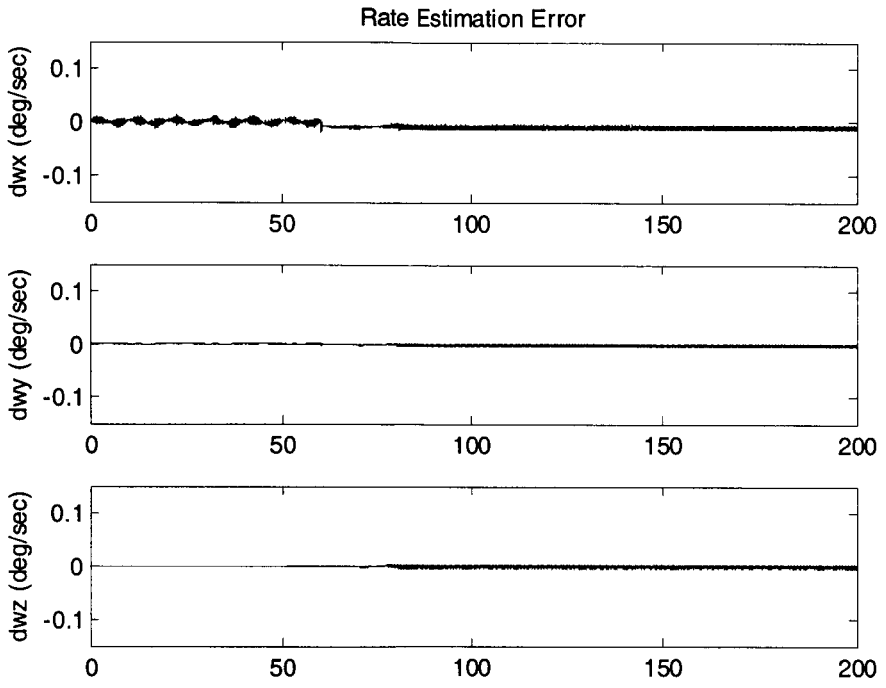


**Fig. 4:** Rate Estimation Error for the PSELIKA Derived Loop

## SIMPLE PASSIVE FEEDBACK SYSTEMS FOR ANGULAR RATE EXTRACTION

Borrowing the notion that the angular rate is estimated by a KF in a feedback manner, one can raise the question whether the rate can be estimated using a simple feedback loop when the attitude is available almost continuously. The logic behind this concept is as follows. If a feedback loop contains a node which is an input to an integrator, then the variable at the node is

[¶] This rate will serve as a baseline rate for all the tests that follow.

the derivative of the output of the integrator. If that output is subtracted from the measured quaternion, and the resulting difference is fed forward into the node in a way that drives the difference to zero, or almost zero, then the output of the node is approximately equal to the measured quaternion. Therefore the variable at the node is very close to the quaternion time derivative. When the latter is known, then a good estimate of the angular rate can be computed. Before proceeding with the exposition of the feedback control loop idea, we first show how the angular rate can be computed from the quaternion time derivative.

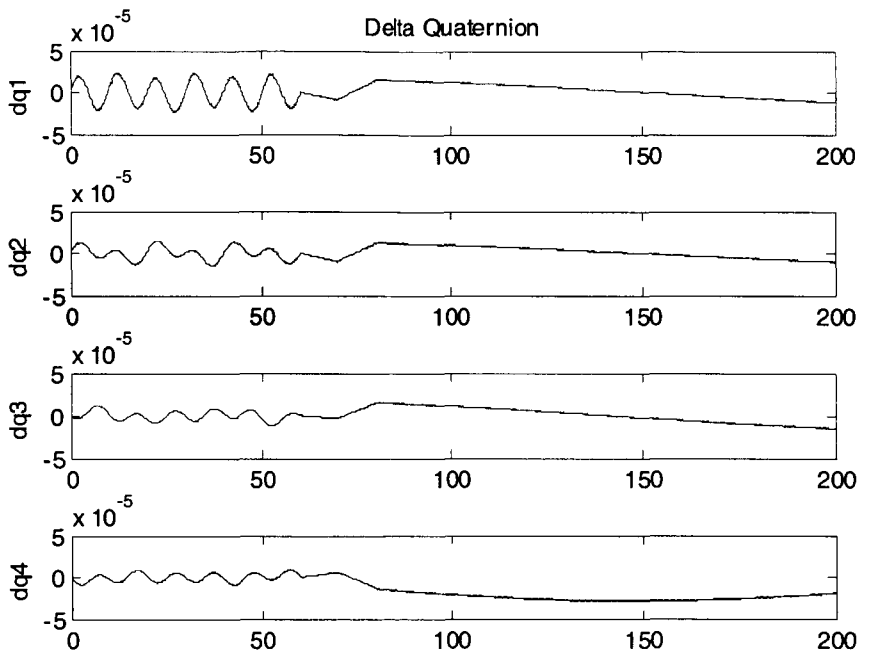


**Fig. 5:** Quaternion Estimation Error for the PSELIKA Derived Loop

**Angular Rate Determination from Quaternion Rate**

Eq. (2.a) is repeated here

$$\dot{\mathbf{q}} = \tfrac{1}{2} Q \boldsymbol{\omega} \tag{2.a}$$

where Q is as given in Eq. (2.b). If $\dot{\mathbf{q}}$ and $\mathbf{q}$ are known, then we can obtain the following least square estimate[14] of $\boldsymbol{\omega}$

$$\hat{\boldsymbol{\omega}} = 2Q^{\#}\dot{\mathbf{q}} \tag{18.a}$$

where $Q^{\#}$ is the pseudo-inverse of $Q$, given by

$$Q^{\#} = (Q^T Q)^{-1} Q^T \tag{18.b}$$

Using the fact that $Q^T Q = I_3$ and Eqs. (18), one obtains the following least square estimate of the rate vector

$$\hat{\boldsymbol{\omega}} = 2Q^T\dot{\mathbf{q}} \tag{18.c}$$

We note that this form corresponds to form of the $K_\omega$ gain of Eqs. (14).

The use of Eq. (18.c) requires the differentiation of $\mathbf{q}$. However, as mentioned in the Introduction section, this introduces unwarranted noise in the computed angular rate. However, when used in conjunction with the quaternion derived through feedback, the differentiation is eliminated. The elementary feedback method for estimating the angular rate is shown next.

**A Simple Gain Feedback Loop**

The ability to achieve satisfactory rate estimates using a relatively simple feedback loop with a time varying gain such as in Fig. 2, raises the question whether it is possible to perform the task with an even simpler feedback loop. The simplest control loop for deriving $\dot{\mathbf{q}}$ from the measured quaternion, $\mathbf{q}_m$, and computing $\hat{\boldsymbol{\omega}}$ from it, is depicted in Fig. 6. As mentioned

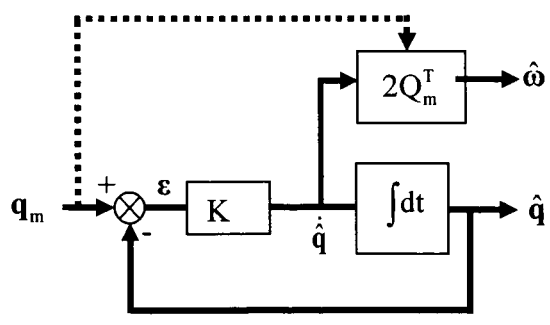


**Fig. 6:** A Simple Gain Feedback Loop for Computing a Rate Estimate.

earlier, when $\mathbf{q}$ follows $\mathbf{q}_m$, $\dot{\hat{\mathbf{q}}}$ follows $\dot{\mathbf{q}}$, thus the estimation of $\boldsymbol{\omega}$ is possible, as indicated in Eq. (18.c). When K is a diagonal matrix, the loop is stable for any positive values on the main diagonal of K. A simulation was run of the feedback loop in Fig. 6. The gain matrix, $K$, in this simulation was $7 \cdot I_4$. The components of the true and estimated rates are presented in Fig. 7 and the difference between them is shown in Fig. 8. Figure 9 presents the quaternion estimation error components.

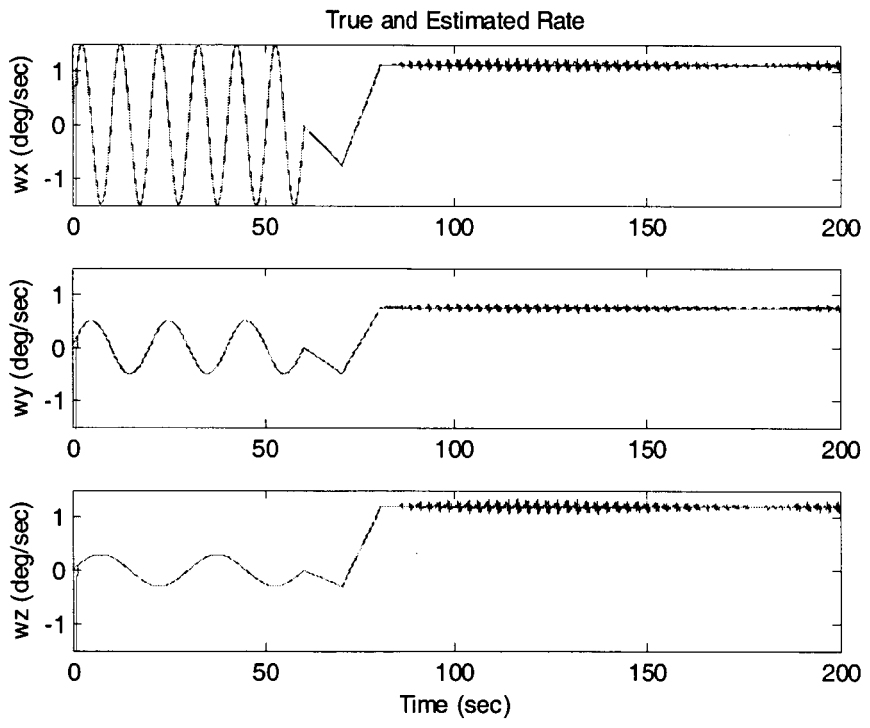


**Fig. 7:** True (red line) and Estimated Rate History When Using the Simple Feedback loop

**An Integral Feedback Loop**

The advantage of the previous scheme is its simplicity. Its disadvantage is its limited accuracy. This stems from the fact that for very high gains $\boldsymbol{\varepsilon}$ is a very small signal that contains digital and sensor noise. This noise is then multiplied by a large gain to produce a very noisy $\dot{\hat{\mathbf{q}}}$.

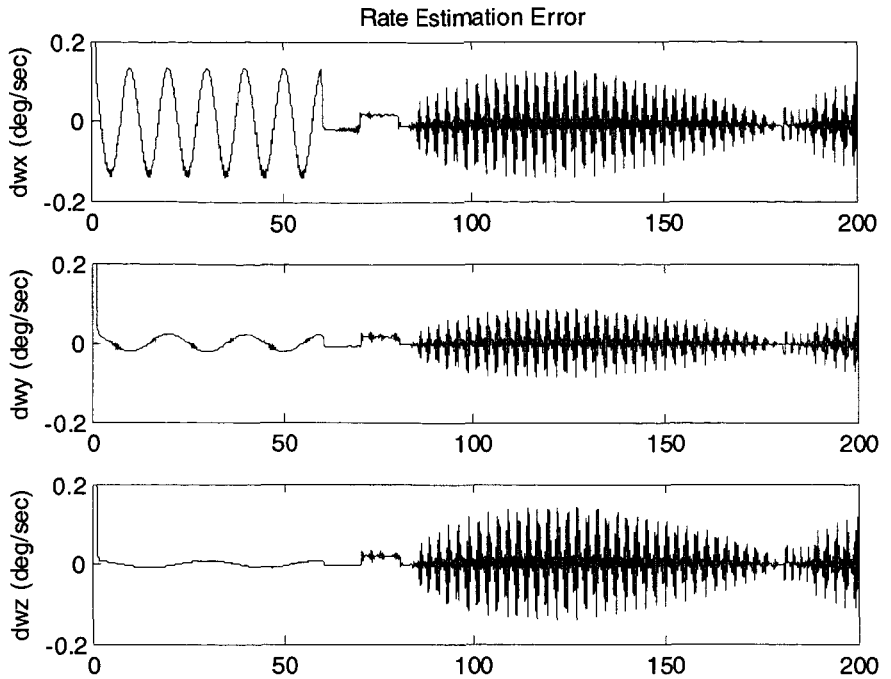


**Fig. 8:** Rate Estimation Error When Using the Simple Feedback loop

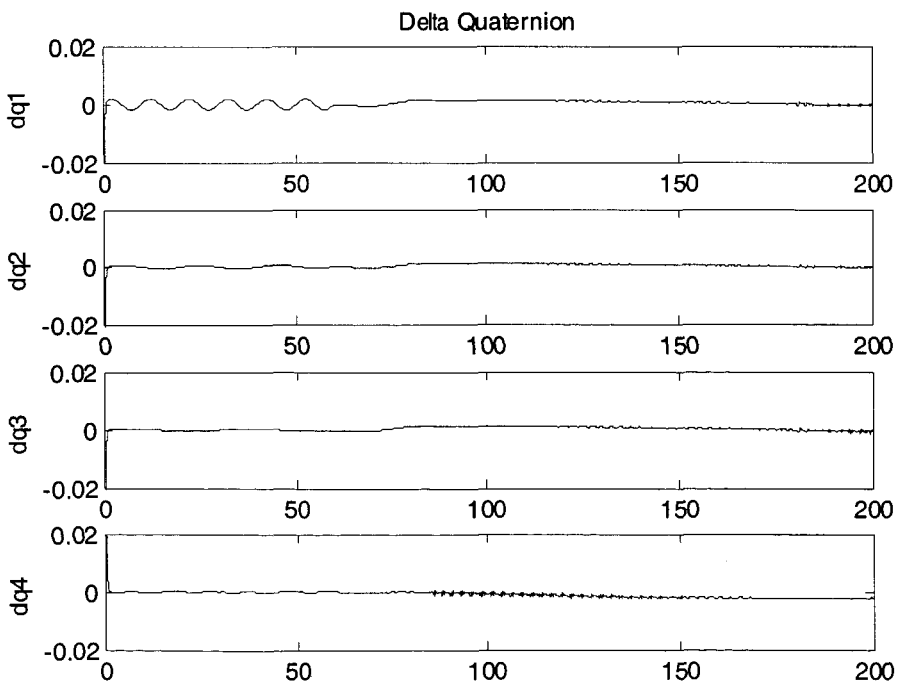


**Fig. 9:** Quaternion Estimation Error When Using the Simple Feedback loop

As a result, the estimated rate is of low fidelity and is very noisy too. On the other hand, for very low gains, $\varepsilon$ is not small; that is, $\hat{\mathbf{q}}$ does not follow $\mathbf{q}_m$ closely, hence $\dot{\hat{\mathbf{q}}}$ is not close enough to $\dot{\mathbf{q}}_m$; therefore, the estimate of the angular velocity is of low quality. If, however, we can isolate $\dot{\hat{\mathbf{q}}}$ from $\varepsilon$, then we can keep $\varepsilon$ very low, thereby force $\hat{\mathbf{q}}$ to follow $\mathbf{q}_m$ very closely, and yet maintain the closeness of $\dot{\hat{\mathbf{q}}}$ to $\dot{\mathbf{q}}_m$. This can be done by replacing the pure gain in the loop of Fig. 6 by a gain and an integrator; that is, replacing $K$ by $K/s$. This, however, will generate a marginally stable loop with poles on the imaginary axis. To stabilize this loop, we can shift the marginally stable poles to the left by changing $K/s$ to $K/(s+\alpha)$ which is, basically, a low-pass filter. This loop block diagram is shown in Fig. 10. One can tune $K$ and $\alpha$ to achieve the desirable performance. The components of the rate and quaternion estimation errors for $K = 10{,}000$ and $\alpha = 100$ are shown, respectively, in Figs. 11 and 12. A comparison between the results of Fig. 12 and the results presented in Fig. 8 indicates that the added low-pass filter reduces the rate estimation error and eliminates the numerical noise as well.

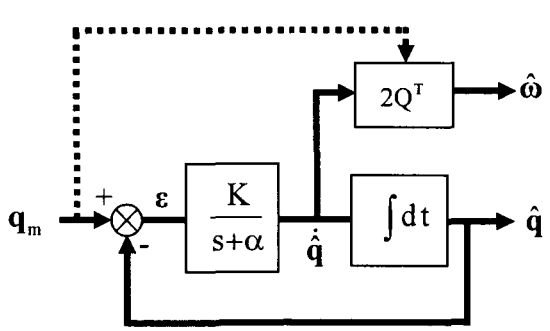


**Fig. 10:** A Stable 2nd Order Feedback Loop for Computing a Rate Estimate.

A comparison between Figs. 9 and 13 reveals that $\varepsilon$ is about two orders of magnitude smaller when applying the feedback integral-loop. Thus indeed, we succeeded in forcing $\hat{\mathbf{q}}$ to follow $\mathbf{q}_m$ very closely, while maintaining the closeness of $\dot{\hat{\mathbf{q}}}$ to $\dot{\mathbf{q}}_m$. As a consequence the rate estimation error is much smaller, as indicated by the comparison of Figs. 8 and 12.

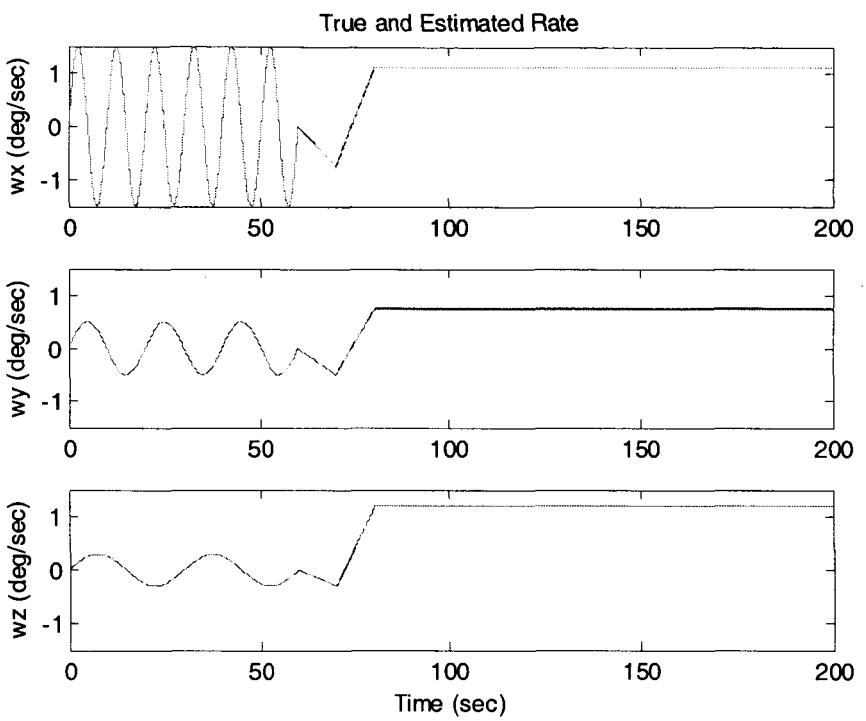


**Fig. 11:** True (red line) and Estimated Rate History When Using the Integrated Feedback

## RATE-ESTIMATION WITH NOISY QUATERNION MEASUREMENTS

In the previous sections we considered ideal quaternion measurements. It is interesting to examine realistic cases where the measurements include measurement errors and learn of their effects on the rate estimation techniques presented hitherto. A typical lateral measurement error of an AST is about 40 arcsec. This translates to about 0.0002 rad (see the Appendix). Such white-noise error at a rate of 1 sec translates to an equivalent white noise error of 0.00001 rad when the

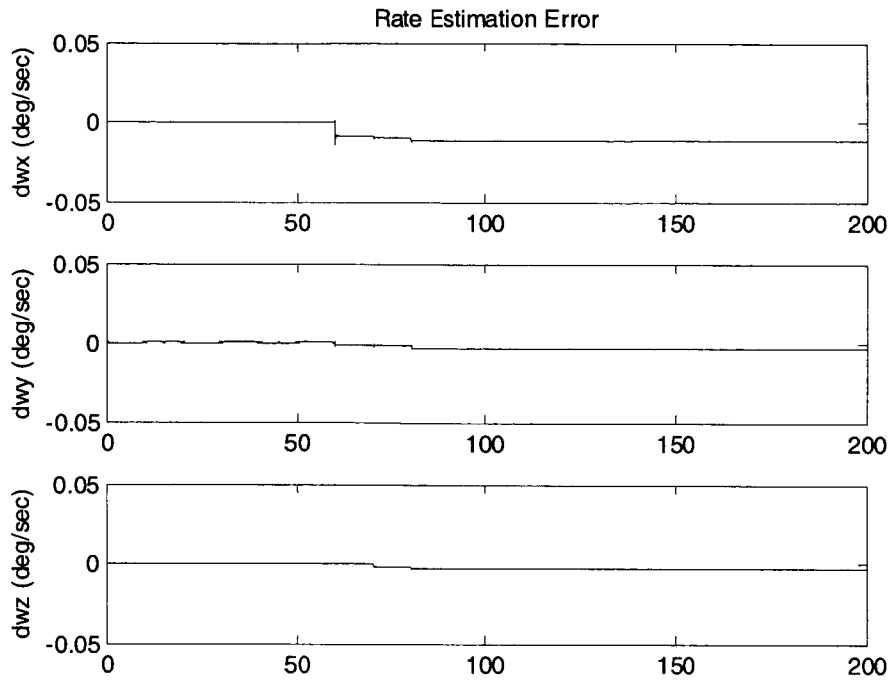


**Fig. 12:** Rate Estimation Error When Using the Integrated Feedback

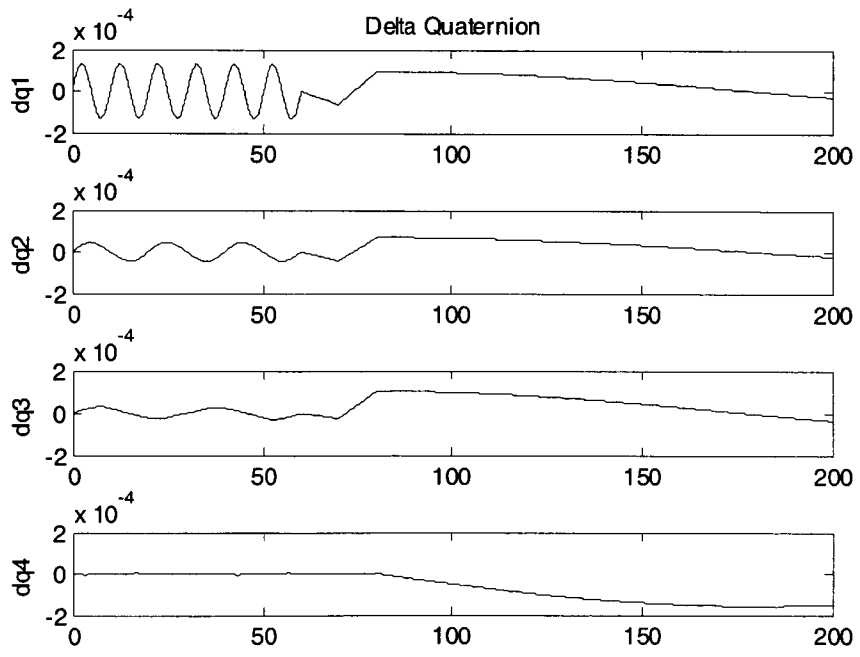


**Fig. 13:** Quaternion Estimation Error When Using the Integrated Feedback

measurements are taken every 0.01 sec, which is the step size of our simulation runs (see Eq. 8.3-24 in Ref. 14). Using this value as the standard deviation of numbers drawn from a Gaussian distributed random number generation; we reran the cases presented in the previous sections. In Figs. 14 and 15 we present the true and the estimated rates when we ran the PSELIKA rate estimation loop shown in Fig. 2. Similarly, Figs. 16 and 17 present the same for the simple gain feedback loop of fig. 6, and finally, the plots in Figs. 18 and 19 present the results for the stable second order feedback loop shown in Fig. 10.

Adding noise to the measurements induces noise in the estimated rates, but the estimated rate components closely follow the true rate components.

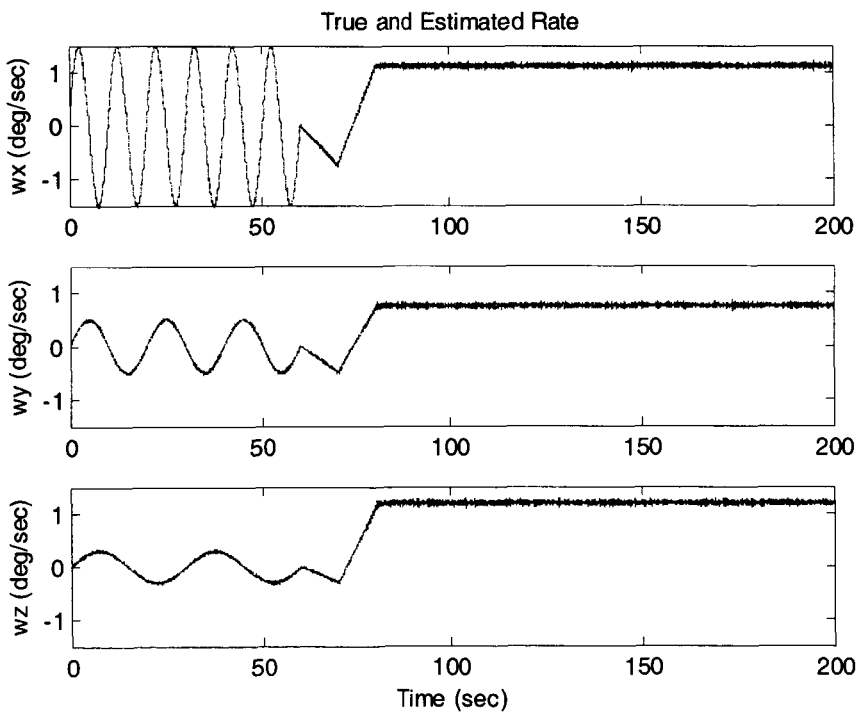


**Fig. 14:** True (red line) and Estimated Rate History for the PSELIKA Derived Loop

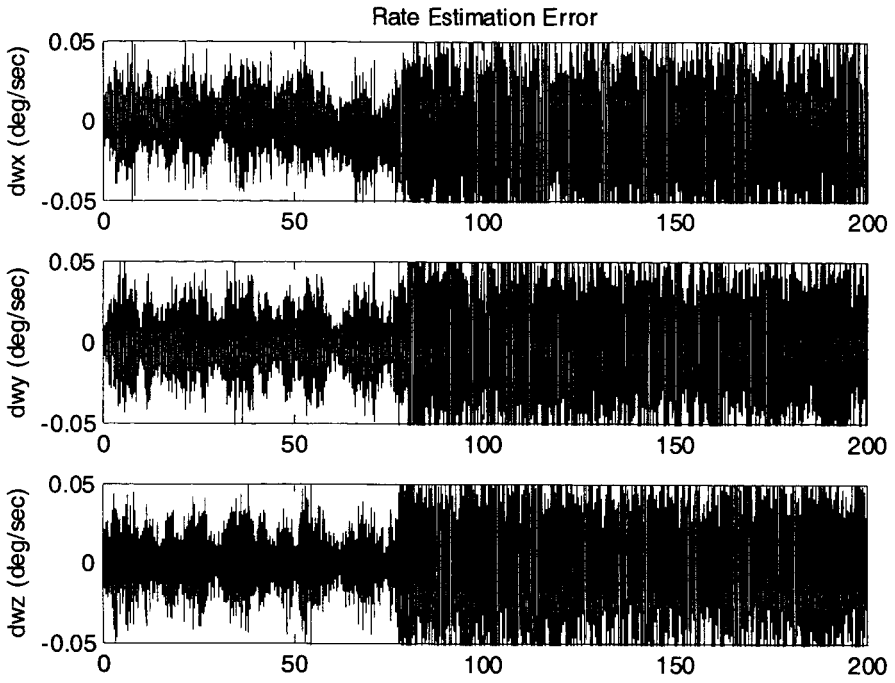


**Fig. 15:** Rate Estimation Error for the PSELIKA Derived Loop

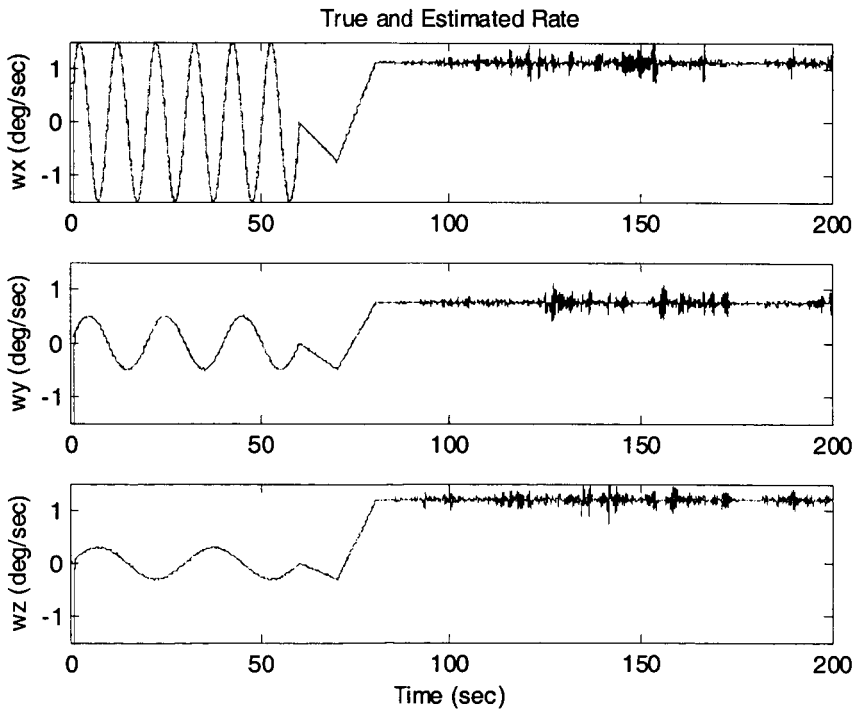


**Fig. 16:** True (red line) and Estimated Rate History When Using the Simple Feedback loop

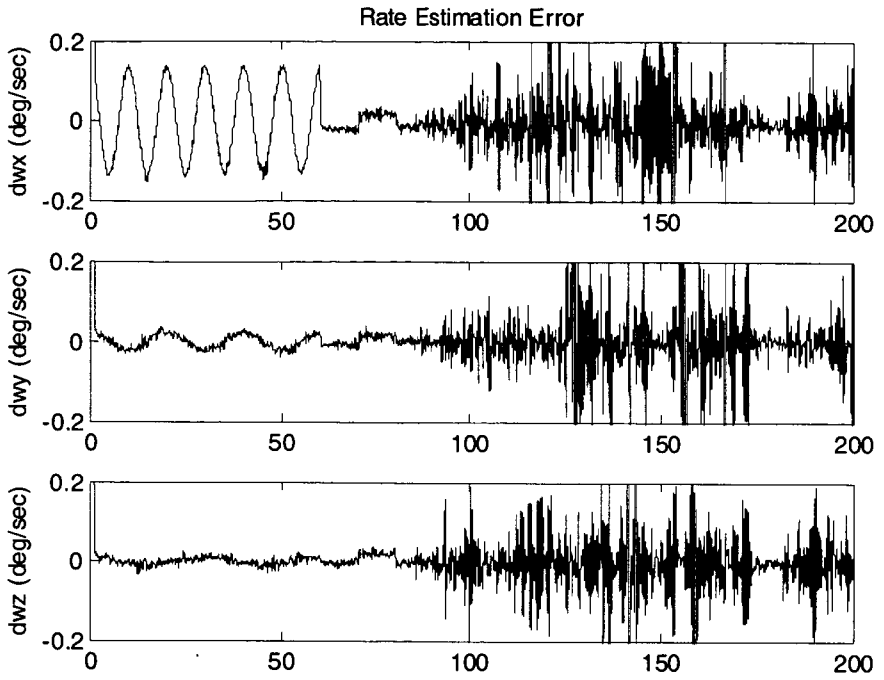


**Fig. 17:** Rate-Estimation Error When Using the Simple Feedback loop

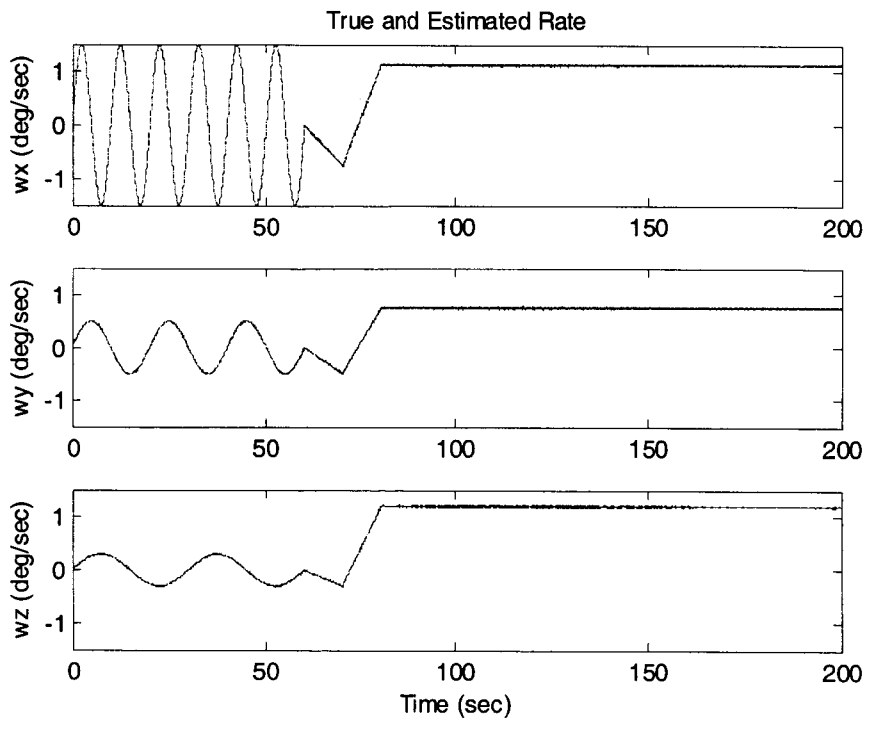


**Fig. 18:** True (red line) and Estimated Rate History When Using the Integrated Feedback

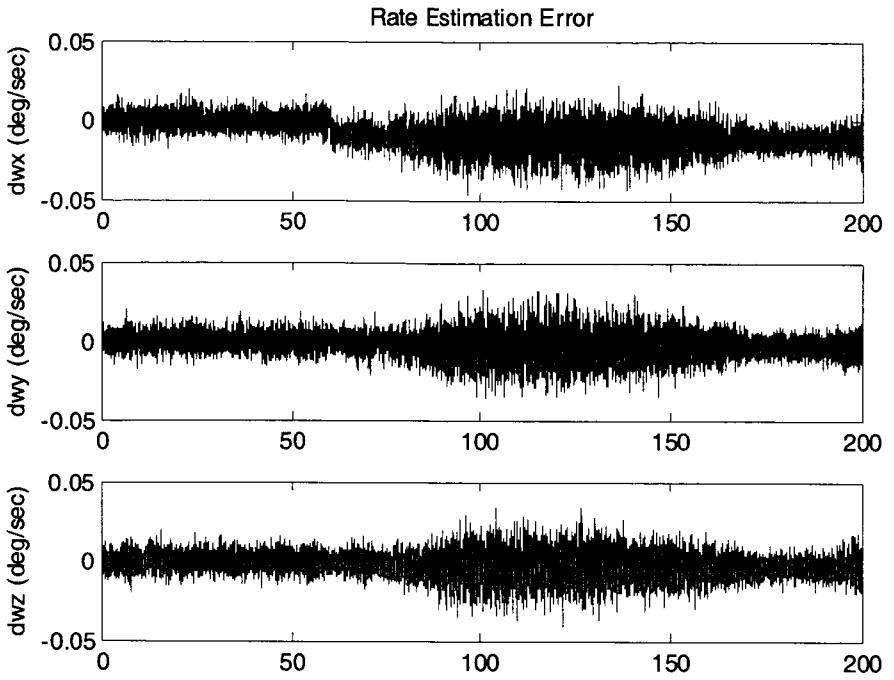


**Fig. 19:** Rate Estimation Error When Using the Integrated Feedback

## CONCLUSIONS

In this work we investigated the possibility of extracting the angular velocity vector from quaternion measurements without resorting to Kalman filtering. Avoiding Kalman filtering rids us of the cumbersome recursive computation of the covariance matrix. It was found experimentally, and then justified, that when estimating the angular velocity from quaternion measurements using the Pseudo-Linear Kalman filter and a simple dynamics model, the Kalman gain has a peculiar structure. The part of the gain which influences the quaternion estimate is proportional to, and usually very close to, the four dimensional identity matrix. The part that influences the rate estimate is proportional to the transpose of the Q matrix from the kinematics quaternion equation. Using this quality, a passive feedback loop was designed in which only two

scalar parameters had to be tuned in order to obtain good rate estimates. As mentioned, this feedback loop uses the Q matrix. Therefore, although it is a passive system, it has a time-varying gain, and thus it is a linear system which is time varying.

Two other feedback loops were also introduced which are passive, as well as constant parameter systems. The systems consist of four simple decoupled loops. The first feedback system employs a simple diagonal gain matrix which multiplies the four components of the difference between the estimated and measured quaternion. Each element of the amplified difference is fed into an integrator, the output of which is a component of the estimated quaternion. Therefore, the input to each integrator is the derivative of the estimated quaternion. With these derivatives on hand, the rate estimate is obtained by a known simple linear, time-varying transformation. The second feedback system constitutes an improvement on the first one. It contains an added pole that enables a more accurate estimation of the angular rate.

Simulation results indicate that all three feedback systems presented in this work are adequate for deriving the angular rate vector from frequent quaternion measurements for the purpose of attitude control loop damping.

Although we only considered quaternion measurements as input to the rate estimation feedback loops, vector measurements can be handled too. This is done by applying the method presented in reference 15 where a measured unit vector and its expression in the reference coordinate system are converted to a pseudo-measured quaternion.

**Acknowledgement**

A part of this work was supported by a National Research Council –NASA Goddard Space Flight Center Research Fellowship.

## Appendix

The purpose of this appendix is to show how we determined the standard deviation of the quaternion measurement error when given the AST angular error. Let the pointing error of its Euler vector be $d\varphi_x$, $d\varphi_y$, $d\varphi_z$ (note that these errors are not independent), and let the angular error about this vector be denoted by $d\varphi$. The equations relating the nominal quaternion components to the nominal components of the Euler vector are

$$\begin{aligned} q_1 &= \sin\frac{\varphi}{2}\cdot\cos\alpha_x \\ q_2 &= \sin\frac{\varphi}{2}\cdot\cos\alpha_y \\ q_3 &= \sin\frac{\varphi}{2}\cdot\cos\alpha_z \\ q_4 &= \cos\frac{\varphi}{2} \end{aligned} \tag{A.1}$$

where $\cos(\alpha_i) = d\varphi_i / \varphi \quad i = x, y, z$. Perturbation of the quaternion components yields

$$\begin{aligned} dq_1 &= \frac{1}{2}\cos\frac{\varphi}{2}\cdot\cos\alpha_x\cdot d\varphi - \sin\frac{\varphi}{2}\cdot\sin\alpha_x\cdot d\alpha_x \\ dq_2 &= \frac{1}{2}\cos\frac{\varphi}{2}\cdot\cos\alpha_y\cdot d\varphi - \sin\frac{\varphi}{2}\cdot\sin\alpha_y\cdot d\alpha_y \\ dq_3 &= \frac{1}{2}\cos\frac{\varphi}{2}\cdot\cos\alpha_z\cdot d\varphi - \sin\frac{\varphi}{2}\cdot\sin\alpha_z\cdot d\alpha_z \\ dq_4 &= -\frac{1}{2}\sin\frac{\varphi}{2}\cdot d\varphi \end{aligned} \tag{A.2}$$

Assuming worst case for each component (*sine* as well as *cosine* functions equal 1 and the negative term eliminated) we obtain:

$$
\begin{aligned}
dq_1 &= \frac{1}{2} d\varphi \\
dq_2 &= \frac{1}{2} d\varphi \\
dq_3 &= \frac{1}{2} d\varphi \\
dq_4 &= -\frac{1}{2} d\varphi
\end{aligned}
\tag{A.3}
$$

We were given the error value $d\varphi = 40$ arcsec which translates to about 2 e-4 rad. We conservatively choose the standard deviation of each one of the components to be equal to the differential of that component, hence

$$\sigma_{i,n} = \frac{1}{2} d\varphi = \frac{1}{2} 2 \text{ e-4 rad} = 1 \text{ e-4 rad} \quad i = 1, 2, 3, 4 \tag{A.4}$$

where n is the discrete time step, and, as before, i denotes the quaternion component number. Then

$$Q_{i,n} = \sigma_i^2 = 1 \text{ e-8 rad}^2 \quad i = 1, 2, 3, 4 \tag{A.6}$$

Using the approximate formula for transforming variance (discrete sequence) to power spectral density (continuous process) (Ref. 14, Eq. 8.3-24) we obtain

$$Q_{i,n} = Q_i \cdot \Delta t_n \tag{A.7}$$

For a time interval between two consecutive measurements of 1 sec we obtain

$$Q_i = \frac{Q_{i,n}}{\Delta t_n} = \frac{Q_{i,n}}{1} = Q_{i,n} = 1 \text{ e-8 rad}^2 \tag{A.8}$$

Using the same transformation formula as before, we find that for a measurement time interval of 0.01 sec, the equivalent variance is

$$Q_{i,n} = Q_i \cdot 0.01 = 1 \text{ e-10 rad}^2 \tag{A.9}$$

hence

$$\sigma_{i,n} = Q_{i,n}^{1/2} = 1 \text{ e-5 rad} \tag{A.10}$$

This is the standard deviation that we use to draw numbers for simulating the quaternion noise.

We draw the numbers from a Gaussian random number generator of zero mean.

## REFERENCES


[1]Van Bezooijen, R.W.H., "AST Capabilities," Lockheed Martin Advanced Technology Center, Palo Alto, CA 95304-1191. (Slide presentation).

[2]Harman, R.R. and Bar-Itzhack, I.Y., "Angular-rate Computation Using Attitude Differentiation," Technical Report No. TAE-881, Faculty of Aerospace Eng., Technion-Israel Institute of Technology, Haifa 32000, Israel, Dec. 97.

[3]Bar-Itzhack, I.Y., "Classification of Algorithms for Angular Velocity Estimation", *AIAA J. of Guidance, Control, and Dynamic*, Vol. 24, No. 2, March-April 2001, pp. 214-218.

[4]Oshman, Y. and Markley, F. L., "Sequential Attitude and Attitude-Rate Estimation Using Integrated-Rate Parameters," to be published in the *J. of Guidance, Control, and Dynamics*.

[5]Dellus, F., "Estimation of Satellite Angular Velocity Using Sequential Measurements of a Single Inertial Vector," M.Sc. Thesis, Faculty of Aerospace Eng., Technion-Israel Institute of Technology, June 1998. (In Hebrew).

[6]Bucy, R.S. and Joseph, P.D., *Filtering for Stochastic Processes with Applications to Guidance*, Inerscience Publishers, New-York, 1968.

[7]Bierman, G. J., *Factorization methods for discrete sequential estimation*, Academic press, New York, 1977.

[8]Wertz, J. R., (Ed.), *Spacecraft Attitude Dynamics and Control*, Reidel Publishing Co., Dordrecht, Holland, 1984.

[9]Lefferts, E.J., Markley, F.L., and Shuster, M.D., \Kalman Filtering for Spacecraft Attitude Estimation," *Journal of Guidance, Control, and Dynamics*, Vol. 5, Sept.-Oct. 1982, pp. 417-429.

[10]Bar-Itzhack, I.Y. and Oshman, Y., "Attitude Determination from Vector Observations: Quaternion Estimation," *IEEE Transactions on Aerospace and Electronic Systems*, Vol-AES-21, Jan. 1985, pp. 128-136.

[11]Harman, R.R. and Bar-Itzhack, I.Y., "Pseudolinear and State-Dependent Riccati Equation Filters for Angular Rate Estimation", AIAA J. of Guidance, Control, and Dynamics, Vol. 22, No. 5, Sept.-Oct. 1999, pp. 723-725. (Engineering Note).

[12]Oshman, Y. and Markley, F. L., "Sequential Attitude and Attitude-Rate Estimation Using Integrated-Rate Parameters," *Journal of Guidance, Control, and Dynamics*, Vol. 22, No. 3, 1999, pp. 385–394.

[13]Luenberger, D. G., "Observers for Multivariable Systems," *IEEE Transactions on Automatic Control*, Vol. AC-11, No. 2, April 1966, pp. 190-197.

[14]Gelb, A. (editor), *Applied Optimal Estimation*, MIT Press, Cambridge, MA, 1986, p. 103.

[15]Bar-Itzhack, I.Y. and Cohen, Y., "Geometry Based Euler-Vector and Quaternion Recursive-Estimators", Paper AIAA-2005-6398, AIAA Guidance, Navigation and Control Conference, San-Francisco, CA, USA, Aug. 15-18, 2005.