US007506497B2

(12) **United States Patent**
Roy

(10) **Patent No.: US 7,506,497 B2**
(45) **Date of Patent: Mar. 24, 2009**

(54) **ELECTRIC PROPULSION DEVICE FOR HIGH POWER APPLICATIONS**

(75) Inventor: **Subrata Roy**, Gainesville, FL (US)

(73) Assignee: **University of Florida Research Foundation, Inc.**, Gainesville, FL (US)

(*) Notice: Subject to any disclaimer, the term of this patent is extended or adjusted under 35 U.S.C. 154(b) by 714 days.

(21) Appl. No.: **11/096,069**

(22) Filed: **Mar. 31, 2005**

(65) **Prior Publication Data**

US 2006/0218891 A1 Oct. 5, 2006

(51) **Int. Cl.**
F03H 1/00 (2006.01)

(52) **U.S. Cl.** **60/202**; 60/203.1

(58) **Field of Classification Search** 60/204, 60/200.1, 202, 203.1
See application file for complete search history.

(56) **References Cited**

U.S. PATENT DOCUMENTS

2,992,177	A	7/1961	Morrisson	
3,119,233	A	1/1964	Wattendorf et al.	
3,217,488	A	11/1965	Von Ohain et al.	
3,500,077	A	3/1970	Post	
4,815,279	A	3/1989	Chang	
4,821,509	A *	4/1989	Burton et al.	60/203.1
4,866,929	A *	9/1989	Knowles et al.	60/202
4,893,470	A	1/1990	Chang	
4,995,231	A	2/1991	Smith et al.	
5,367,869	A *	11/1994	DeFreitas	60/776
6,334,302	B1	1/2002	Chang-Diaz	
6,449,941	B1 *	9/2002	Warboys et al.	60/202
6,619,028	B2 *	9/2003	Kreiner et al.	60/202
2002/0116915	A1 *	8/2002	Hruby et al.	60/202
2005/0086926	A1 *	4/2005	King	60/202

OTHER PUBLICATIONS

Roy S., P. Mikellides and D.R. Reddy, "Effective Conversion of Exit Enthalpy in a MPD Thruster," 40th *AIAA Aerospace Science Meetings*, Paper No. AIAA-2002-0917, Reno, NV, 10 pages (2002).
Pandey, B.P. and S. Roy, "An Explanation of the Sheath Instability," *Physics of Plasmas*, vol. 10, No. 1, pp. 5-9 (Jan. 2003).
Roy S., B.P. Pandey, J. Poggie and D. Gaitonde, "Modeling low pressure collisional plasma sheath with space-charge effect," *Physices of Plasmas*, vol. 10, No. 6, pp. 2578-2585 (Jun. 2003).
Roy S. and B.P. Pandey, "Development of a Finite Element Based Hall Thruster Model," *Journal of Propulsion and Power*, vol. 19, No. 5, pp. 964-971 (2003).
Roy S., "Self Consistent Electrode Model for Magnetoplasmadynamic Thrusters," 40th *AIAA/ASME.SAE/ASEE Joint Propulsion Conference*, Paper No. AIAA-2004-3469, Fort Lauderdale, Florida, 9 pages (Jul. 2004).

* cited by examiner

Primary Examiner—Michael Cuff
Assistant Examiner—Phutthiwat Wongwian
(74) *Attorney, Agent, or Firm*—Saliwanchik, Lloyd & Saliwanchik

(57) **ABSTRACT**

An electric propulsion device is disclosed having an anode and a cathode. The propulsion device includes a discharge annulus having the anode adjacent an end region thereof. At least one inlet aperture is adjacent the anode, the aperture(s) having propellant gas flow therethrough into the discharge annulus. The propellant gas has an ionization potential. Opposed, dielectric walls define the annulus, with at least one of the opposed dielectric walls having pores therein, the pores having cooling gas flow therethrough into the discharge annulus and substantially adjacent the opposed dielectric wall(s). The cooling gas has an ionization potential higher than the ionization energy of the propellant gas. The cooling gas is adapted to substantially prevent at least one of secondary electron emission and sputtering of the dielectric walls.

25 Claims, 3 Drawing Sheets

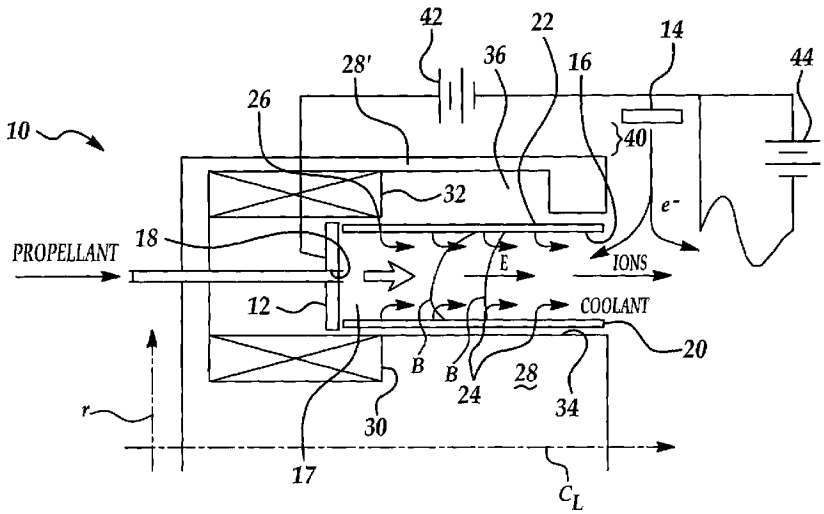

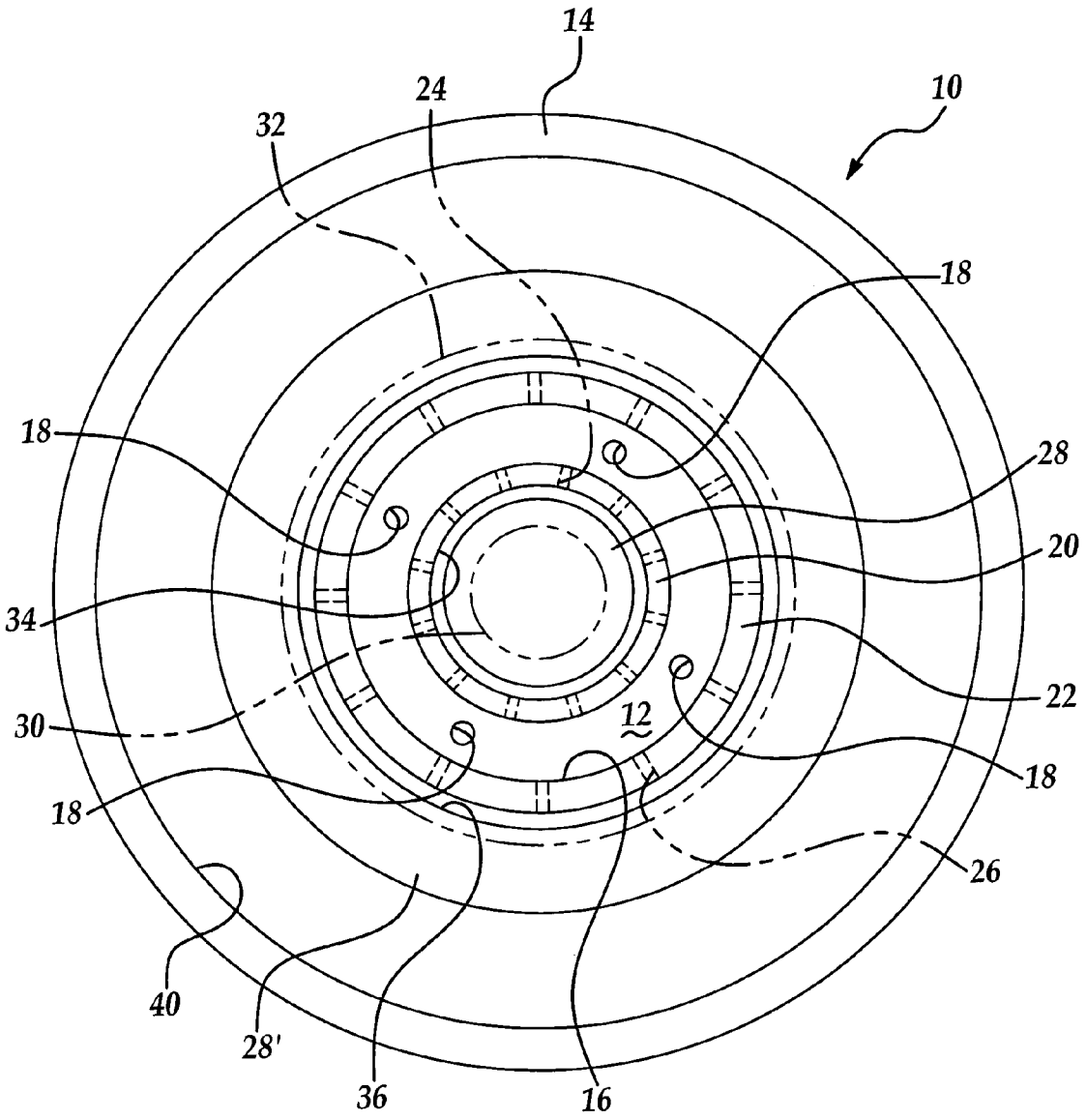

Figure 1

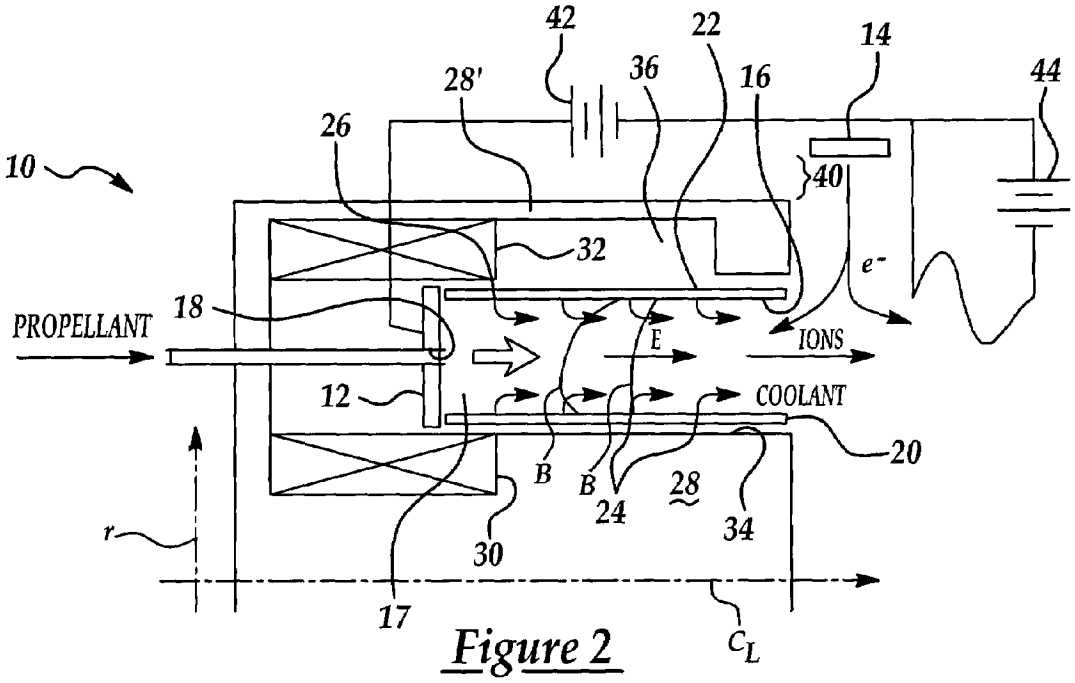

Figure 2

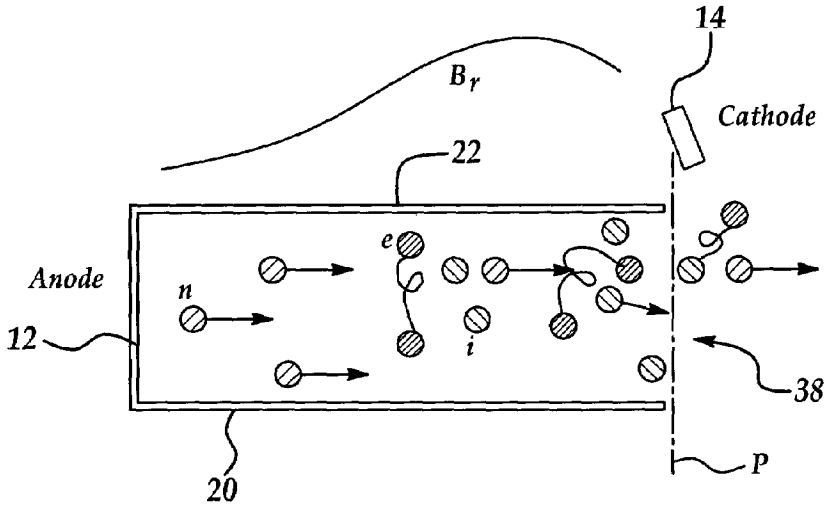

Figure 3

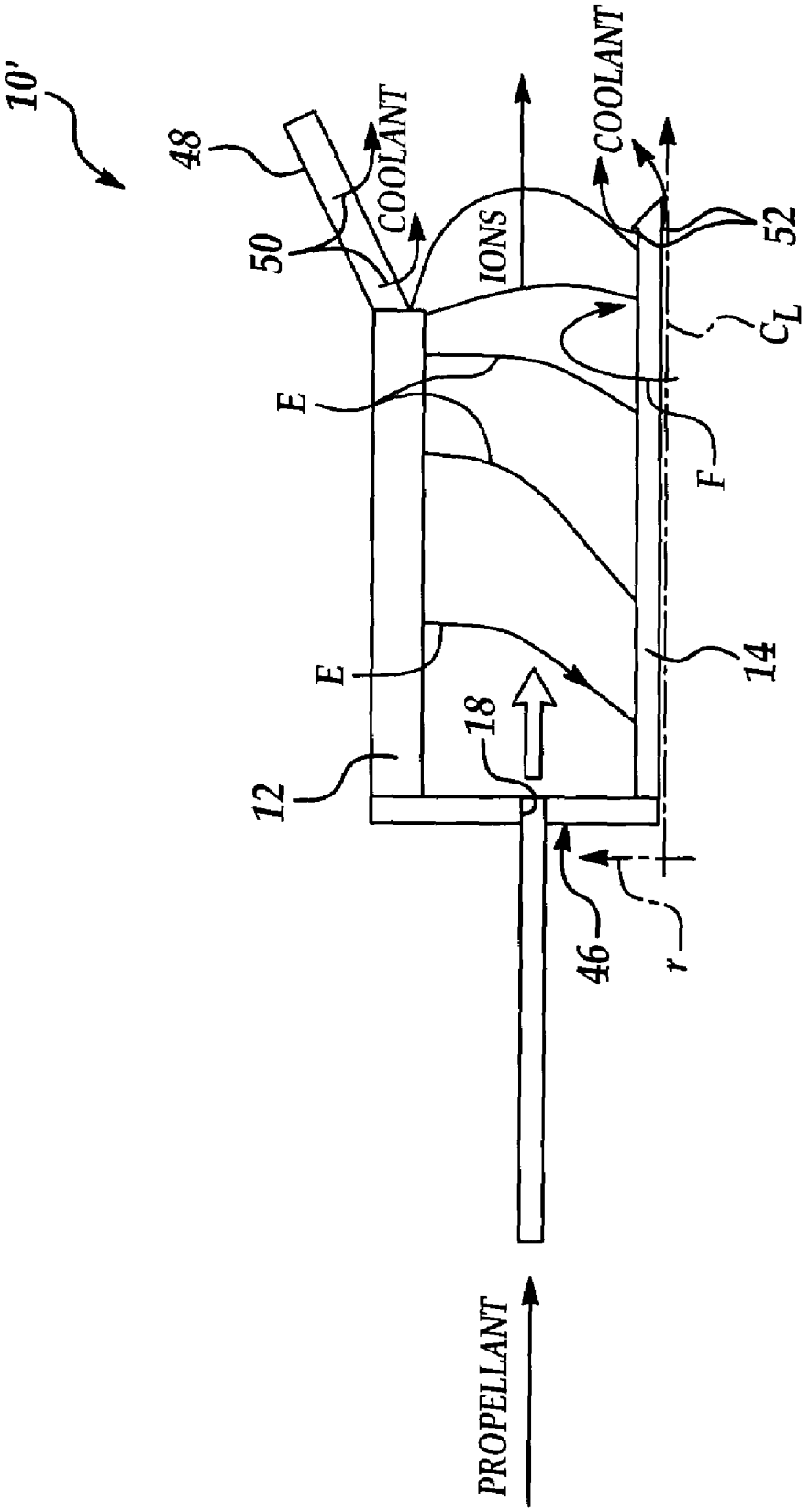
10'
48
50
COOLANT
IONS
COOLANT
52
C_L
E
E
F
12
18
14
46
r
PROPELLANT

Figure 4

ELECTRIC PROPULSION DEVICE FOR HIGH POWER APPLICATIONS

STATEMENT REGARDING FEDERALLY SPONSORED RESEARCH OR DEVELOPMENT

This invention was made in the course of research partially supported by a grant from the National Aeronautics and Space Administration (NASA), Grant Numbers NAG3-2520 and NAG3-2638. The U.S. government has certain rights in the invention.

BACKGROUND

The present disclosure relates generally to electric propulsion devices, and more particularly to such devices having improved efficiency and longer lifetimes.

There is an interest in efficient, high power space propulsion engines. Hall Effect Thrusters (HETs) produce thrust by ejecting ionized matter and are popular in orbit maneuvering and attitude control of many low earth orbit (LEO) and geosynchronous earth orbit (GEO) satellites.

Currently known HETs offer specific impulses over 2400 s, thrust over 1 N, and power exceeding 50 kW at efficiencies close to 60%. However, the commercial exploitation of Hall thrusters imposes a stringent constraint of trouble-free operation for more than 8000 hours.

The walls of the discharge chamber of a stationary plasma thruster (SPT) are commonly made of composite ceramic materials, for example, boron nitride, silicate oxide, and/or the like. Among many potential reasons limiting the efficiency and lifetime of a Hall thruster, an important reason is the wear of the surface layer of the discharge chamber walls. The wall erosion of the thruster occurs primarily due to plasma-wall interactions. If the ion impact energy is sufficiently large, the impact ions may cause relatively severe, undesirable sputtering of the discharge walls, the anode, and/or the hollow cathode walls. These surfaces may then develop non-uniformities (e.g. asperities) due to the sputtering, as well as to re-deposition, cracking, etc. Further, sputtered material may, in some instances, contaminate the plasma and potentially the spacecraft surface. This may significantly affect the performance of the HET, and may potentially affect the working parameter optimization.

Although the lifetime issues are important to its design and potentially critical for long duration mission applications, many physical aspects in thruster plasma are yet to be understood. The lifetime of an on-board Hall thruster is expected to exceed several thousand hours. This complicates the experimental investigation and numerical prediction of the wall wear as several parameters come into play during the operational lifetime of the thruster. This generally results in a lack of reliable data on the sputtering yield under operational conditions.

In choosing a thruster size, one generally balances efficiency against thruster lifetime. High-energy plasma in existing technology tends to adversely interact with the walls of the thruster, as stated above. Despite significant numerical and theoretical advances of the recent past, scientists lack an adequate design to operate the Hall thruster at high power for long duration missions.

Thus, it would be desirable to provide a high efficiency and long lifetime electric propulsion device which advantageously reduces the potential for device wall erosion.

SUMMARY

An electric propulsion device is disclosed having an anode and a cathode. The propulsion device includes a discharge annulus having the anode adjacent an end region thereof. At least one inlet aperture is adjacent the anode, the aperture(s) having propellant gas flow therethrough into the discharge annulus. The propellant gas has an ionization potential. Opposed, dielectric walls define the annulus, with at least one of the opposed dielectric walls having pores therein, the pores having cooling gas flow therethrough into the discharge annulus and substantially adjacent the opposed dielectric wall(s). The cooling gas has an ionization potential higher than the ionization energy of the propellant gas. The cooling gas is adapted to substantially prevent at least one of secondary electron emission and sputtering of the dielectric walls.

BRIEF DESCRIPTION OF THE DRAWINGS

Objects, features and advantages of embodiments of the present disclosure will become apparent by reference to the following detailed description and drawings, in which like reference numerals correspond to similar, though not necessarily identical components. For the sake of brevity, reference numerals having a previously described function may not necessarily be described in connection with subsequent drawings in which they appear.

FIG. **1** is a semi-schematic end view of an embodiment of the present disclosure for use in a Hall effect thruster (HET);

FIG. **2** is a semi-schematic, cross-sectional side view of the embodiment shown in FIG. **1**;

FIG. **3** is a schematic view showing a representation of the thruster plasma in the discharge annulus; and

FIG. **4** is a semi-schematic, cross-sectional side view of an alternate embodiment of the present disclosure for use in an arcjet thruster or magnetoplasmadynamic (MPD) thruster.

DETAILED DESCRIPTION

It has been unexpectedly and fortuitously discovered by the present inventor that cooling gas having a predetermined ionization potential and introduced through dielectric wall(s) of a HET; or cathode tip and dielectric casing of an MPD/arcjet electric propulsion device advantageously substantially thermally insulates the wall(s), thereby substantially preventing secondary electron emission (SEE) and/or shielding the wall(s) from undesirable sputtering losses. As such, embodiments of the present disclosure may substantially directly improve the efficiency and lifetime of an electric propulsion device for high power, high specific impulse applications.

Referring now to FIGS. **1** and **2** together, an electric propulsion device/thruster according to the present disclosure is designated generally as **10**. Propulsion device **10** has an anode **12** and a cathode **14**. The propulsion device **10** further includes a discharge annulus/closed drift **16** having the anode **12** adjacent an end/acceleration region **17** thereof. As shown in FIG. **3**, the cathode **14** may also be angularly offset from the discharge annulus **16**. Having cathode **14** angularly offset from annulus **16** may advantageously reduce electron path resistance; this may be quite useful at low voltages, and may also be beneficial at high voltages.

At least one inlet aperture **18** is adjacent the anode **12**. In an embodiment, aperture(s) **18** extend through the anode **12**. In a further embodiment, a plurality of apertures **18** extends through the anode **12**. Aperture(s) **18** are adapted to have propellant gas flow therethrough into the discharge annulus **16** (the propellant gas is schematically depicted in FIG. **2** at the large, hollow arrow inside annulus **16**), the propellant gas having an ionization potential (Ei, eV). Opposed, concentric dielectric walls **20**, **22** (e.g. inner dielectric wall **20** and outer dielectric wall **22**) define the annulus **16**. At least one of the opposed dielectric walls **20**, **22** has pores **24**, **26** therein. In an embodiment, and as shown in FIGS. **1** and **2**, both walls **20**, **22** are porous, with pores **24** defined in inner dielectric wall **20**, and pores **26** defined in outer dielectric wall **22**. The pores **24**, **26** may be of varying sizes depending on the desired design and/or particular application. When the dielectric wall(s) **20**, **22** are porous, the coolant gas may seep out from the plenums **34**, **36**. This may advantageously reduce the need for manufacturing of coolant throughbores in the walls **20**, **22**.

In an alternate embodiment, the pores **24**, **26** may be throughbores (as schematically represented in FIG. **1**) defined in one or both dielectric walls **20**, **22**. It is to be understood that the throughbores may be formed in any suitable manner (e.g. by drilling and/or the like) and have any suitable size, shape and/or configuration. In an embodiment, the throughbores/pores **24**, **26** may be angled (schematically shown in FIG. **2**) substantially toward an exit plane P of the discharge annulus **16** in a manner sufficient to direct the cooling gas substantially toward the exit plane P. In a further embodiment, the throughbores **24**, **26** may be sized such that the center-to-center spacing of the throughbores **24**, **26** is at least about ten times greater than the diameter of the throughbores.

Some of the throughbores **24**, **26** may be disposed in an acceleration region **17** of the discharge annulus **16** near the anode **12**, and some others of the throughbores **24**, **26** may be disposed from the acceleration region **17** toward the exit plane P of the discharge annulus **16**.

Plenums **34**, **36** (best seen in FIG. **1**), for example, may be adapted to transfer/temporarily contain coolant gas from a suitable storage reservoir (not shown) to pores/throughbores **24**, **26** in dielectric walls **20**, **22**, respectively. It is to be understood that other suitable mechanism(s) may be used to introduce the cooling gas into the desired area (i.e. adjacent the wall(s) **20**, **22** of annulus **16** or adjacent tip of cathode **14** and dielectric casing **48** (FIG. **4**)). One non-limitative example of such a mechanism includes a jetting device(s) (not shown) operatively disposed in one or more throughbores **24**, **26** or **50**, **52** for introducing cooling gas into the desired area.

It is to be understood that walls **20**, **22** (as well as guide cone/dielectric casing **48** discussed in reference to FIG. **4**, below) may be made of any suitable material; however, in an embodiment, walls **20**, **22** are formed from boron nitride, silicate oxide, alumina, silicon carbide, graphite, combinations thereof, and/or the like.

The pores **24**, **26** are adapted to have cooling gas flow therethrough into the discharge annulus **16** and substantially adjacent one or both of the opposed dielectric walls **20**, **22**. The cooling gas flow is shown schematically by the curved arrows in FIG. **2** inside annulus **16**. Without being bound to any theory, it is believed that the neutral cooling gas advantageously substantially prevents secondary electron emission and/or sputtering of the dielectric walls **20**, **22** by substantially isolating the ionized propellant gas from the opposed dielectric walls **20**, **22**.

In an embodiment, the cooling gas has a first ionization potential (Ei1) higher than the first ionization potential (Ei1) of the propellant gas. In an alternate embodiment, the first ionization potential (Ei1) of the cooling gas is much higher than the first ionization potential (Ei1) of the propellant gas. As defined herein, the term "higher" means the Ei1 of the cooling gas ranges from above the Ei1 of the propellant gas to about 60% of the energy between the first and second ionization potential of the propellant gas; and the term "much higher" means the Ei1 of the cooling gas is generally above about 60% of the energy between the first and second ionization potential of the propellant gas. In another alternate embodiment, the first ionization potential (Ei1) of the cooling gas is higher than the second ionization potential (Ei2) of the propellant gas. Without being bound to any theory, it is believed that having the first ionization potential of the cooling gas higher or much higher than the first (Ei1), or higher than the second ionization potential (Ei2) of the propellant gas aids in insuring substantially no significant change in the ionization characteristic of the thruster **10**. In some alternate embodiments, the first ionization potential of the cooling gas may in some instances be higher than the third ionization potential of the propellant gas.

As such, without being bound to any theory, it is believed that the use of cooling gas with a higher ionization threshold substantially avoids undesirable modification of the electromagnetic propulsion characteristics of the electric propulsion device **10**, **10'**, for example, a HET, while substantially reducing energy loss due to erosion of the walls **20**, **22** (or the tip of the cathode **14** and guide cone/dielectric casing **48** as in the embodiment of device **10'** in FIG. **4**). Further in the case of HET devices **10**, the cooling gas may thermally insulate the HET dielectric surface(s) **20**, **22** (but it does not insulate the cathode **14** in the case of HETs, as such insulation may undesirably affect the electrical performance of the HET **10**), and thus not substantially affect the electrical characteristics of the HET **10** while improving the lifetime of the thruster **10**.

It is to be understood that the cooling gas according to embodiment(s) herein does not manipulate ionization of the propellant gas, but rather isolates the hot propellant gas from the dielectric wall(s) **20**, **22**, or from the tip of cathode **14** and/or dielectric casing **48** (see FIG. **4**). It is not anticipated that a significant number of charged droplets (if any) of propellant gas will be formed.

Some suitable examples of propellant/coolant pairs according to the present disclosure are as follows. Some non-limitative suitable Propellant/Coolant pairs, such as H/He, H/Ne or B/He, have substantially similar molecular weights, and the coolant Ei1 is greater than the propellant Ei2. For other suitable Propellant/Coolant pairs listed in Table 1 below, the coolant Ei1 is much greater than the propellant Ei1.

TABLE 1

Material	Atomic weight kg/kmole	Ei1: First Ionization	Ei2: Second Ionization	Ei3: Third Ionization	Possible Coolants
Bismuth (Bi)	208.98038	7.3 eV	16.7 eV	25.6 eV	Rn, I, N, He, Ne

TABLE 1-continued

Material	Atomic weight kg/kmole	Ei1: First Ionization	Ei2: Second Ionization	Ei3: Third Ionization	Possible Coolants
Iodine (I)	126.90447	10.451 eV	19.131 eV	33 eV	He, Ne, F, Ar
Krypton (Kr)	83.8	13.999 eV	24.359 eV	36.95 eV	He, Ne
Neon (Ne)	20.1797	21.564 eV	40.962 eV	63.45 eV	He
Nitrogen (N)	28.0134	14.5 eV	29.6 eV	47.4 eV	He, Ne
Hydrogen (H)	1.00794	13.598 eV			He, F, Ne
Xenon (Xe)	131.29	12.1 eV	21.2 eV	32.1 eV	He, Ne, F
Helium (He)	4.002602	24.587 eV	54.416 eV		
Argon (Ar)	39.948	15.759 eV	27.629 eV	40.74 eV	He, Ne
Fluorine (F)	18.9984032	17.422 eV	34.97 eV	62.707 eV	He, Ne
Boron (B)	10.811	8.298 eV	25.154 eV	37.93 eV	N, He, Ne, F
Oxygen (O)	15.9994	13.618 eV	35.117 eV	54.934 eV	He, Ne
Radon (Rn)	222	10.748 eV			He, Ne, F

FIG. **3** is a schematic view showing a representation of the thruster plasma **38** in the discharge annulus **16**. The thruster plasma **38** may be partially ionized gas, including electrons (e), ions (i) and neutral propellant gas particles (n). In such partially ionized plasma **38**, elastic and inelastic processes may take place substantially simultaneously. The elastic collision involves exchange of momentum and energy between colliding particles; whereas inelastic processes like ionization, recombination, charge-exchange collision, plasma-wall interaction, secondary emission, sputtering, and the like may be responsible for redistributing the electron number density of the particles along with its momentum and energy. It is to be understood that not all of the above-mentioned processes are equally probable.

It is to be understood that the gases may be of any molecular weight; however, a higher molecular weight propellant gas results in higher thrust. It is to be understood that each of the molecular weights of the propellant gas and the cooling gas may range between about 2 kg/kmole and about 210 kg/kmole. In one embodiment, the cooling gas has a molecular weight substantially similar to the molecular weight of the propellant gas.

Upon exposure to the electric field in the discharge annulus **16**, the propellant gas becomes a hot, at least partially ionized propellant gas exhibiting a temperature ranging between about 6.6 electron volts (eV) and about 29.1 eV (1 eV=11,600K≈11,300 Celsius). The ions generally bend towards the wall(s) **20**, **22**, thereby causing erosion/sputtering. Such erosion/sputtering is substantially and advantageously prevented, if not eliminated with the present disclosure. Further, the temperature of the hot ionized propellant gas/electrons generally rises the closer the gas gets to one of the opposed dielectric wall(s) **20**, **22**. For example, at about 0.05 m from a wall **20**, **22**, the temperature of the ionized gas/electrons is generally at the upper range of the temperature range recited above, for example, between about 15 eV and about 29 eV.

In an embodiment, the cooling gas is a neutral cooling gas having a temperature lower than the propellant gas temperature at the inlet aperture(s) **18**. In an embodiment, the temperature of the cooling gas is less than about 200K. In an alternate embodiment, the temperature of the cooling gas may be up to about 500K. Without being bound to any theory, it is believed that the cooling gas forms a quasi-film to substantially protect the walls **20**, **22** from the high energy mentioned above (e.g. temperatures of the ionized gas/electrons ranging between about 15 eV and about 29 eV). As such, according to the embodiments of FIGS. **1-3**, hot, at least partially ionized gas flows through the discharge annulus **16** and is substantially enveloped by a substantially cold (as defined herein) neutral, cooling gas both at its outer **22** and inner **20** periphery.

It has been found that the erosion of the inner surfaces (forming annulus **16**) of wall(s) **20**, **22** may take place due to ion bombardment (classical erosion), as well as due to near wall electric fields (anomalous erosion). Whereas ion bombardment may give rise to small-scale prominences mostly across the incident ions, the "anomalous erosion" generally has a wavelike characteristic with a particular wavelength that shows the anomalous erosion is generally caused by sputtering due to electrons.

The wall temperature of Hall effect thruster (HET) **10** components during operation has been measured over about 1000 Kelvin. The ionized particles inside the thruster **10** may reach temperatures over tens of thousands Kelvin.

When electric propulsion device **10** is a Hall Effect Thruster (HET) or a magnetoplasmadynamic (MPD) thruster, the device **10** may further include an electromagnet (for example, inner magnet **28** and outer magnet **28'**) operatively disposed in the device **10** such that a magnetic field generated thereby is substantially normal to a center axis (for clarity, a line designating a center axis of annulus **16** is not shown; however, the arrow under "ions" in FIG. **2** may additionally be representative of such a center axis) of the discharge annulus **16**. Referring now to FIG. **3**, in an embodiment, the magnetic field has its peak magnitude substantially adjacent an exit plane P of the discharge annulus **16**. This is demonstrated with the line B_r designating the radial component of the magnetic field strength. The magnetic flux lines B are shown within annulus **16** in FIG. **2**.

Electromagnetic coils **30**, **32** are operatively disposed adjacent dielectric walls **20**, **22**, respectively. As best seen in FIG. **1**, a gap **40** may be defined between cathode **14** and electromagnet **28'**. As best seen in FIG. **2**, a power supply **42** is operatively connected to the electrodes **12**, **14**; and a power supply **44** is operatively connected to the electromagnets **28**, **28'** (specifically, to the coils **30**, **32** of the electromagnets **28**, **28'**) to maintain the magnetic field. In an embodiment, the magnetic field ranges from a few hundred Gauss to a fraction of a Tesla.

In an embodiment, the viscosity of the cooling gas is greater than or equal to the viscosity of the propellant gas. In another embodiment, the viscosity of the cooling gas may be less than the viscosity of the propellant gas. For higher viscosity coolants, more power may be lost to shear; while for lower viscosity coolants, more cooling gas may be needed to

13. The electric propulsion device according to claim **12**, wherein some of the throughbores are disposed in an acceleration region of the discharge annulus near the anode, and some others of the throughbores are disposed from the acceleration region toward the exit plane of the discharge annulus.

14. The electric propulsion device according to claim **1**, wherein the cooling gas substantially thermally insulates the at least one of the first and second, dielectric walls.

15. The electric propulsion device according to claim **1**, wherein the device has a power requirement ranging from about 1 kW to about 200 kW.

16. The electric propulsion device according to claim **1**, wherein the device has a specific impulse ranging from about 2000 seconds to about 10000 seconds.

17. The electric propulsion device according to claim **1**, wherein the at least one aperture extends through the anode.

18. The electric propulsion device according to claim **1**, wherein there is a plurality of apertures extending through the anode.

19. The electric propulsion device according to claim **1**, wherein the propellant gas has a temperature and becomes an ionized propellant gas in the discharge annulus; and wherein the cooling gas is a neutral cooling gas having a temperature lower than the propellant gas temperature at the at least one inlet aperture.

20. The electric propulsion device according to claim **19**, wherein the neutral cooling gas substantially isolates the ionized propellant gas from the first and second dielectric walls.

21. The electric propulsion device according to claim **1**, wherein the cooling gas has a substantially constant flow rate.

22. The electric propulsion device according to claim **1**, further comprising means, in communication with the pores in the at least one of the first and second dielectric walls, for metering cooling gas flow based upon ion current at the first and second dielectric walls.

23. A Hall Effect Thruster (HET) electric propulsion device comprising: an anode and a cathode; a discharge annulus having the anode adjacent an end region thereof; at least one inlet aperture adjacent the anode, the at least one inlet aperture having propellant gas flow therethrough into the discharge annulus, the propellant gas having a first ionization potential; an inner dielectric wall and an outer dielectric wall, wherein the inner and outer walls are concentric, wherein the discharge annulus is between the inner and outer walls, at least one of the first and second dielectric walls having pores therein, the pores having cooling gas flow therethrough into the discharge annulus and substantially adjacent the at least one of the first and second dielectric walls, the cooling gas having a first ionization potential higher than the first ionization potential of the propellant gas, the cooling gas adapted to substantially prevent at least one of secondary electron emission and sputtering of the dielectric walls, wherein the cooling gas substantially thermally insulates the at least one of the first and second dielectric walls; and an electromagnet operatively disposed in the device such that a magnetic field generated thereby is substantially normal to a center axis of the discharge annulus, the magnetic field having its peak magnitude substantially adjacent an exit plane of the discharge annulus.

24. An electric propulsion device comprising:

an anode and a cathode; a discharge annulus having the anode adjacent an end region thereof; at least one inlet aperture adjacent the anode, the at least one inlet aperture adapted to have propellant gas flow therethrough into the discharge annulus, the propellant gas having a first ionization potential; and an inner dielectric wall and an outer dielectric wall, wherein the inner and outer walls are concentric, wherein the discharge annulus is between the inner and outer walls, at least one of the first and second dielectric walls having pores therein, the pores adapted to have cooling gas flow therethrough into the discharge annulus and substantially adjacent the at least one of the first and second dielectric walls, the cooling gas having a first ionization potential higher than the first ionization potential of the propellant gas, the cooling gas adapted to substantially prevent at least one of secondary electron emission and sputtering of the at last one of the first and second dielectric walls.

25. The electric propulsion device according to claim **3**, wherein the device is a magnetoplasmadynamic (MPD) thruster.

* * * * *

UNITED STATES PATENT AND TRADEMARK OFFICE

CERTIFICATE OF CORRECTION

PATENT NO. : 7,506,497 B2
APPLICATION NO. : 11/096069
DATED : March 24, 2009
INVENTOR(S) : Subrata Roy

It is certified that error appears in the above-identified patent and that said Letters Patent is hereby corrected as shown below:

Column 10,
Lines 36-37, "of the at last one" should read --of the at least one--.

Signed and Sealed this

Second Day of June, 2009

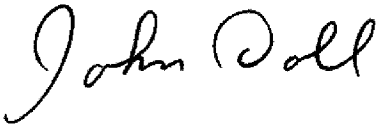

JOHN DOLL
Acting Director of the United States Patent and Trademark Office