US008299419B2

(12) **United States Patent**
Vestergaard Hau

(10) **Patent No.: US 8,299,419 B2**
(45) **Date of Patent: Oct. 30, 2012**

(54) **METHODS, SYSTEMS, AND APPARATUS FOR STORAGE, TRANSFER AND/OR CONTROL OF INFORMATION VIA MATTER WAVE DYNAMICS**

(75) Inventor: **Lene Vestergaard Hau**, Cambridge, MA (US)

(73) Assignee: **President and Fellows of Harvard College**, Cambridge, MA (US)

(*) Notice: Subject to any disclaimer, the term of this patent is extended or adjusted under 35 U.S.C. 154(b) by 288 days.

(21) Appl. No.: **12/449,141**

(22) PCT Filed: **Jan. 25, 2008**

(86) PCT No.: **PCT/US2008/000988**

§ 371 (c)(1),
(2), (4) Date: **Sep. 11, 2009**

(87) PCT Pub. No.: **WO2008/147477**

PCT Pub. Date: **Dec. 4, 2008**

(65) **Prior Publication Data**

US 2010/0012827 A1 Jan. 21, 2010

Related U.S. Application Data

(60) Provisional application No. 60/886,706, filed on Jan. 26, 2007, provisional application No. 60/887,878, filed on Feb. 2, 2007, provisional application No. 60/888,141, filed on Feb. 5, 2007, provisional application No. 60/895,249, filed on Mar. 16, 2007.

(51) **Int. Cl.**
H01S 1/00 (2006.01)

(52) **U.S. Cl.** **250/251**

(58) **Field of Classification Search** 250/251
See application file for complete search history.

(56) **References Cited**

PUBLICATIONS

Dutton, Z. et al., "Storing and processing optical information with ultraslow light in Bose-Einstein condensates," Physical Review A, vol. 70, 2004, pp. 53831-1-53831-19.
Dutton, Z. et al., "The art of taming light: ultra-slow and stopped light," Europhysics News, Eur. Phys. Soc., Switzerland, 2004, vol. 35 No. 2, online version pp. 1-16 retrieved Sep. 26, 2008.
Ginsberg, N..S., et al. "Coherent control of optical information with matter wave dynamics," Nature Letters, Nature Publishing Group, vol. 445, No. 7128, Feb. 8, 2007, pp. 623-625.
International Search Report (partial), Application Serial No. PCT/US2008/000988, May 11, 2008.
Partial Transcript of Lene Hau's Talk at JILA Workshop, Feb. 1999.
Slides and Recording of Lene Hau's Talk at JILA Workshop, Feb. 1999, available at http://fermion.colorado.edu/~chg/Talks/Hau/.
Slides Displayed at Lene Hau's Talk at JILA Workshop, Feb. 1999.

Primary Examiner — Michael Maskell
Assistant Examiner — Hanway Chang
(74) *Attorney, Agent, or Firm* — Foley and Lardner LLP

(57) **ABSTRACT**

Methods, systems and apparatus for generating atomic traps, and for storing, controlling and transferring information between first and second spatially separated phase-coherent objects, or using a single phase-coherent object. For plural objects, both phase-coherent objects have a macroscopic occupation of a particular quantum state by identical bosons or identical BCS-paired fermions. The information may be optical information, and the phase-coherent object(s) may be Bose-Einstein condensates, superfluids, or superconductors. The information is stored in the first phase-coherent object at a first storage time and recovered from the second phase-coherent object, or the same first phase-coherent object, at a second revival time. In one example, an integrated silicon wafer-based optical buffer includes an electrolytic atom source to provide the phase-coherent object(s), a nanoscale atomic trap for the phase-coherent object(s), and semiconductor-based optical sources to cool the phase-coherent object(s) and provide coupling fields for storage and transfer of optical information.

46 Claims, 15 Drawing Sheets

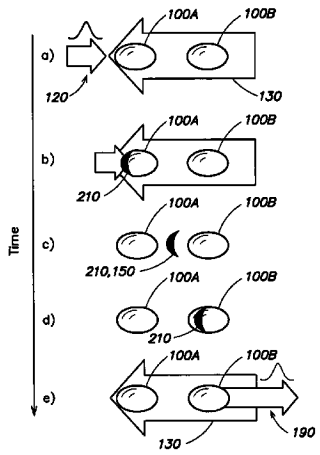

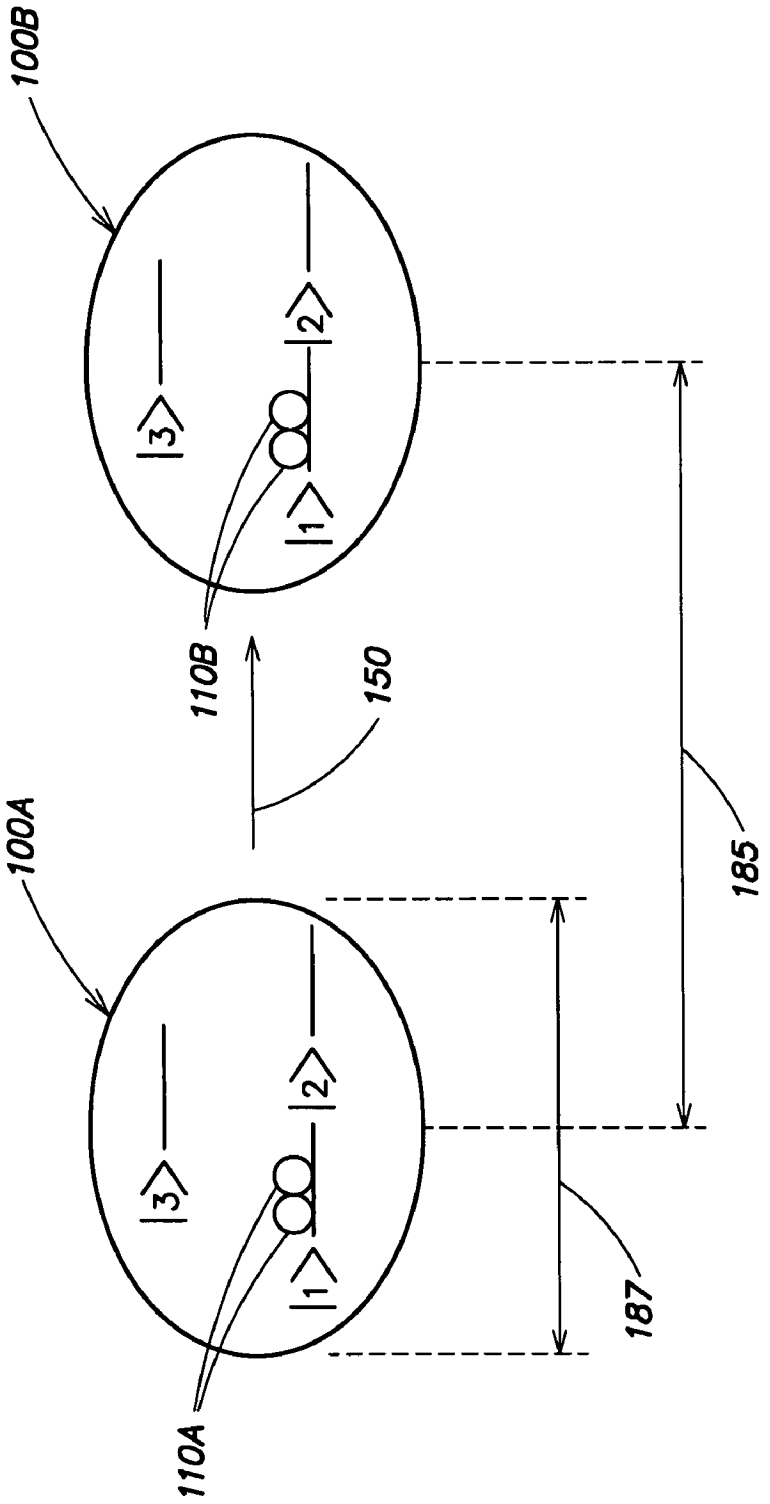

FIG. 1

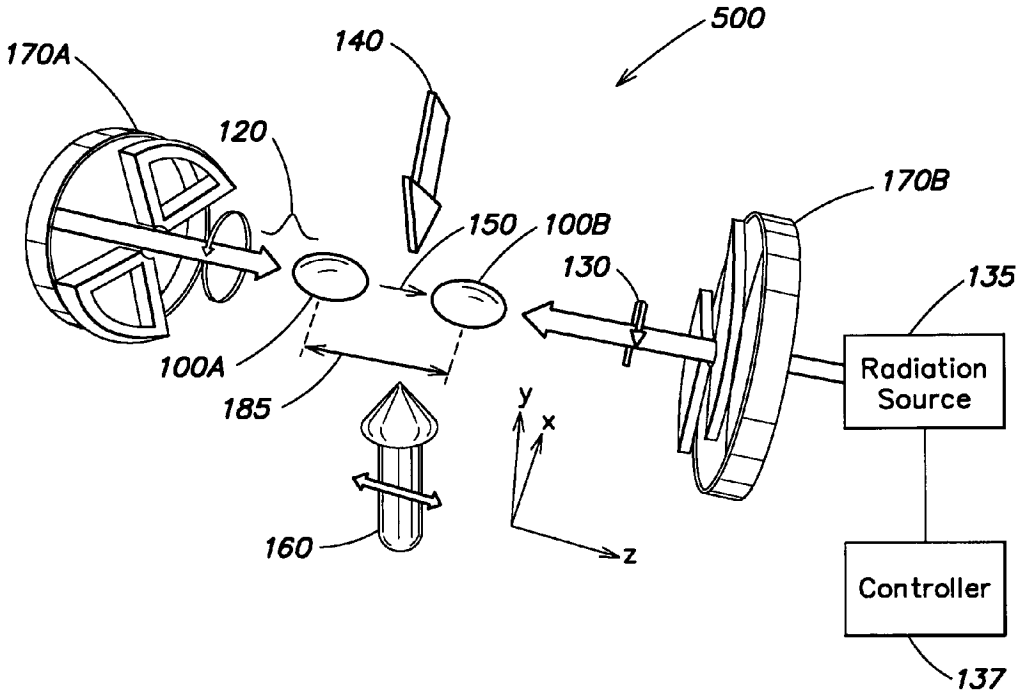
500
170A
140
120
150
100B
170B
130
135
100A
185
Radiation Source
y
x
z
160
Controller
137

FIG. 2

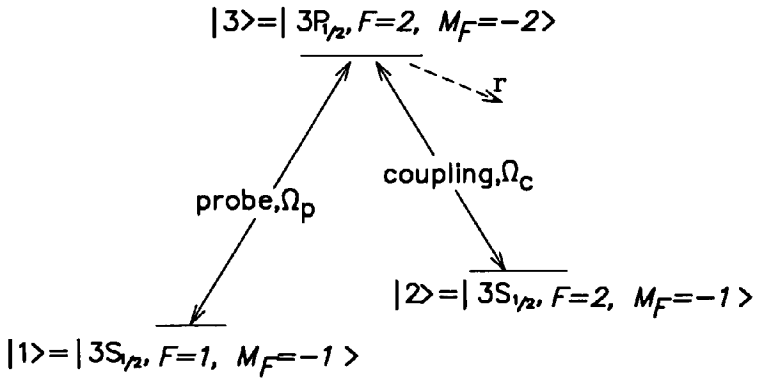
|3>=| 3P1/2, F=2, MF=-2>
r
probe,Ωp
coupling,Ωc
|2>=| 3S1/2, F=2, MF=-1 >
|1>=| 3S1/2, F=1, MF=-1 >

FIG. 3

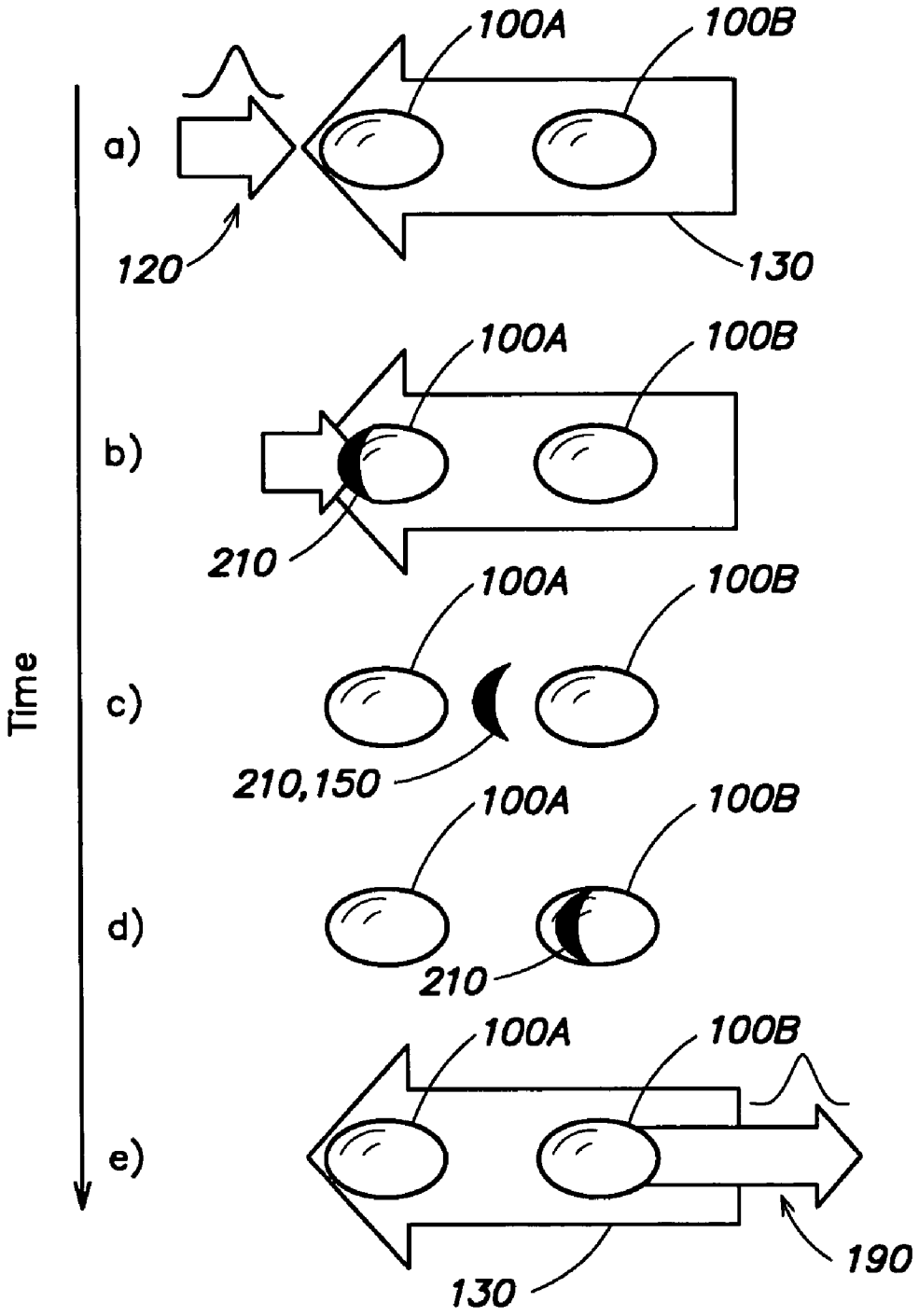
Time
a)
100A
100B
120
130
b)
100A
100B
210
c)
100A
100B
210,150
d)
100A
100B
210
e)
100A
100B
130
190

FIG. 4

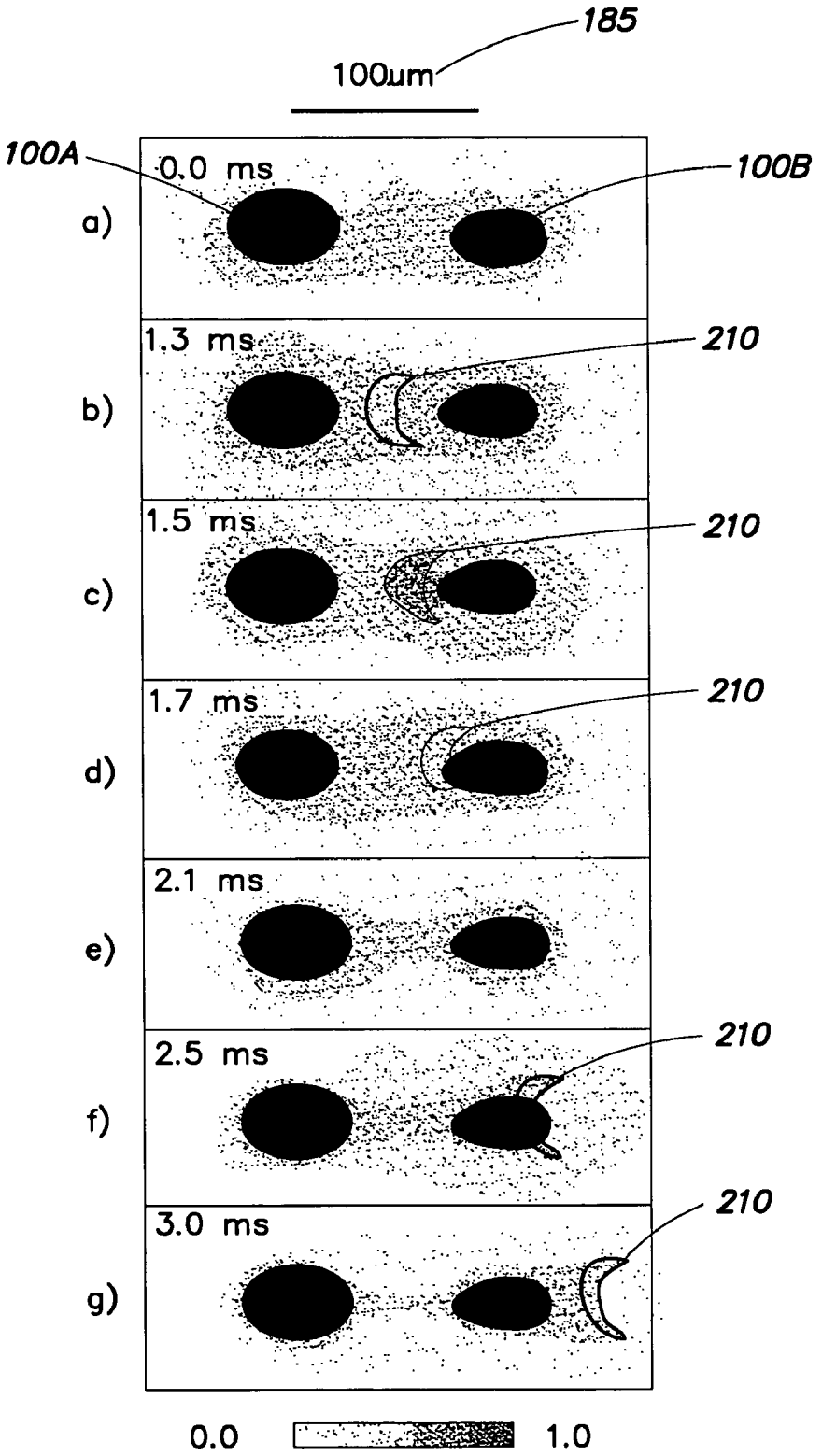
185
100μm
100A
100B
0.0 ms
a)
1.3 ms
210
b)
1.5 ms
210
c)
1.7 ms
210
d)
2.1 ms
e)
2.5 ms
210
f)
3.0 ms
210
g)
0.0
1.0

FIG. 5

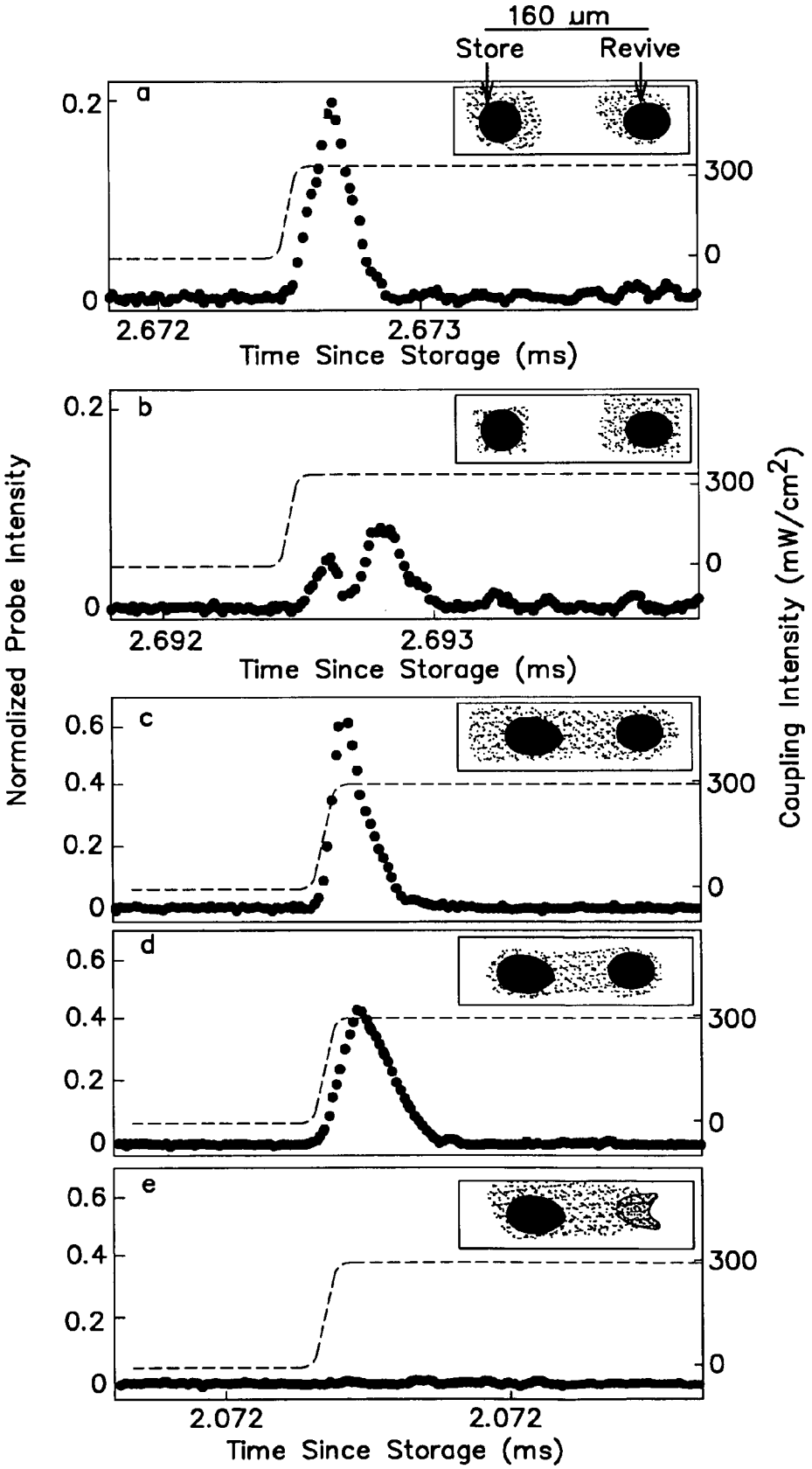
160 μm
Store
Revive
a
b
c
d
e
Normalized Probe Intensity
Coupling Intensity (mW/cm2)
Time Since Storage (ms)
2.672
2.673
2.692
2.693
2.072
2.072
0.2
0
0.6
0.4
300

FIG. 6

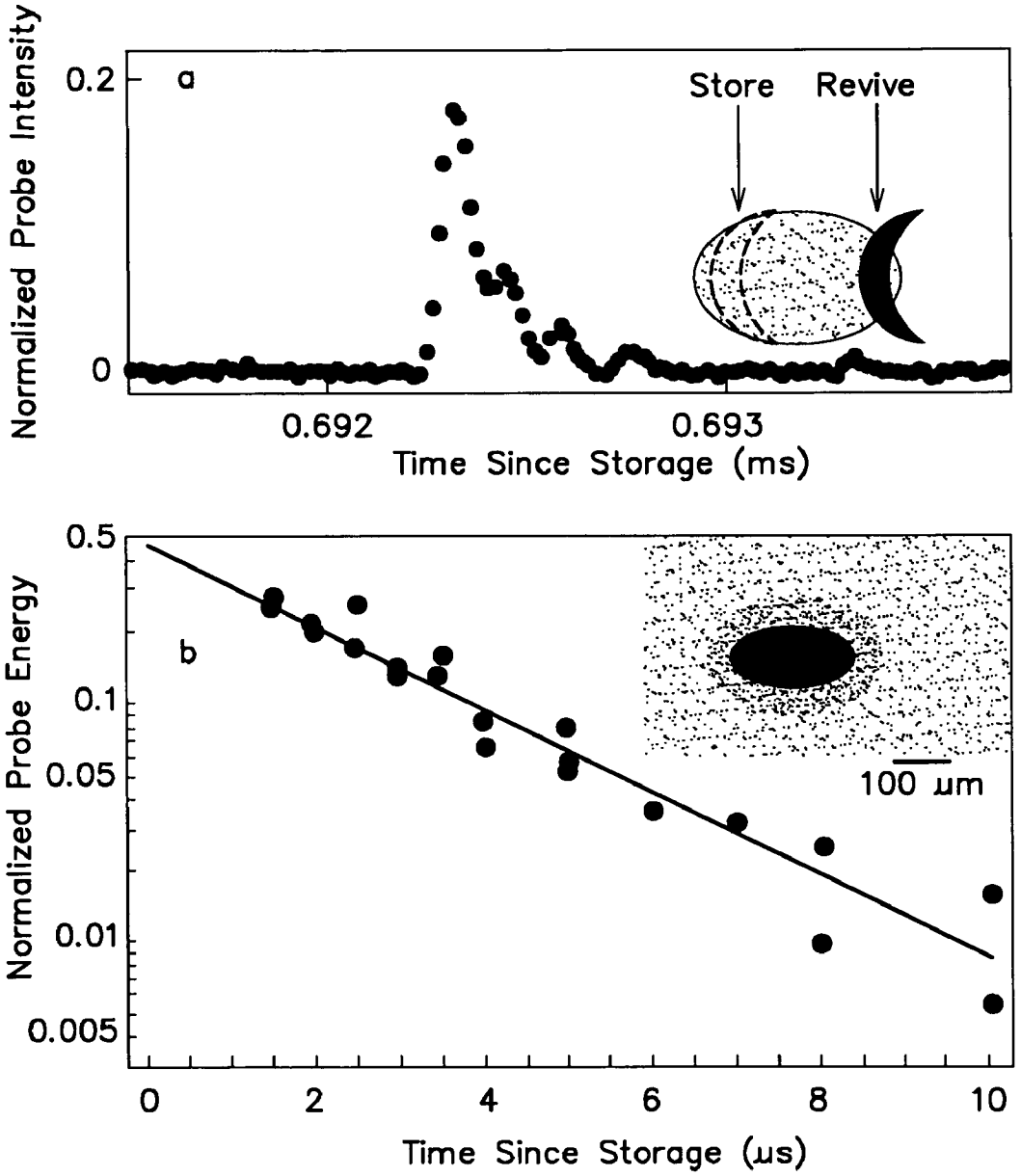
a
Store
Revive
Normalized Probe Intensity
0.2
0
0.692
0.693
Time Since Storage (ms)
b
100 µm
Normalized Probe Energy
0.5
0.1
0.05
0.01
0.005
0
2
4
6
8
10
Time Since Storage (µs)

FIG. 7

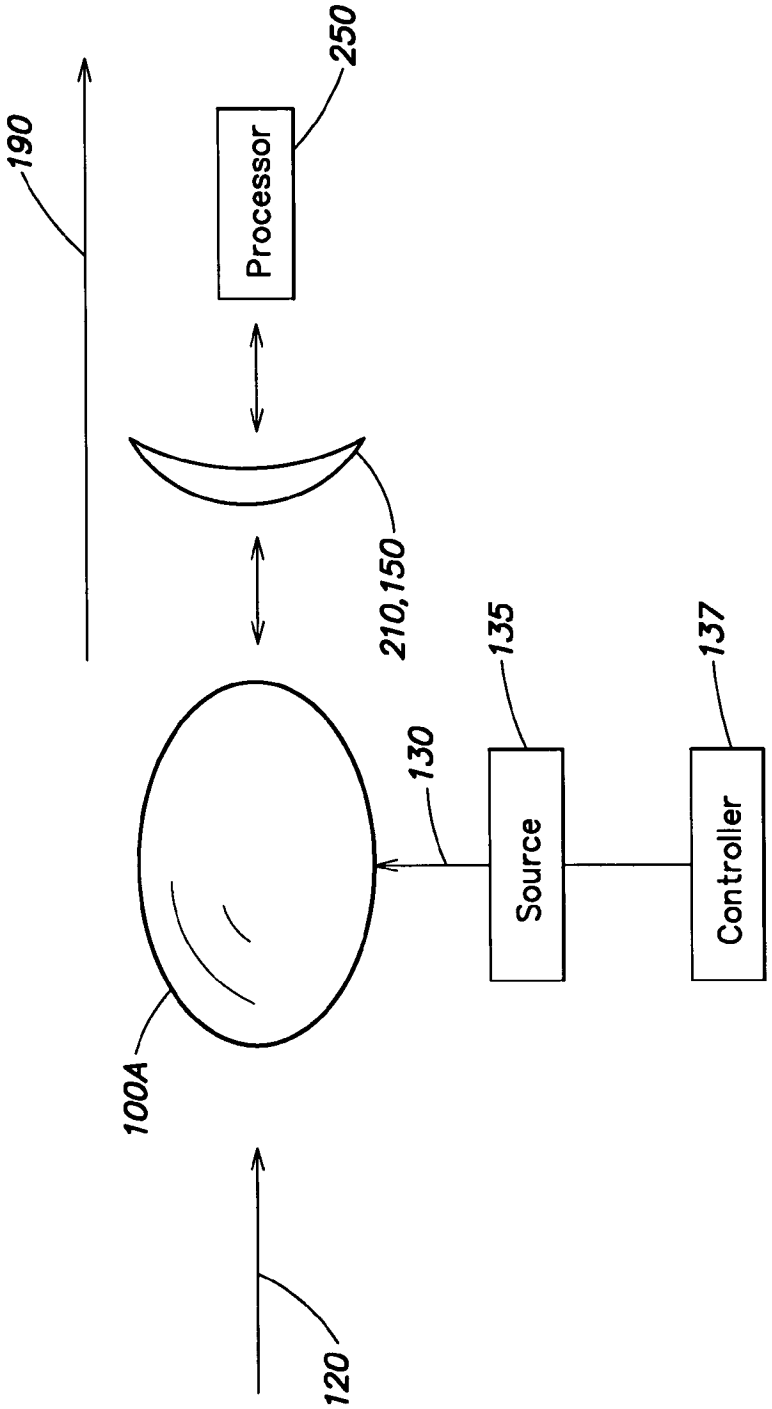
190
250
Processor
210,150
135
137
130
Source
Controller
100A
120

FIG. 8

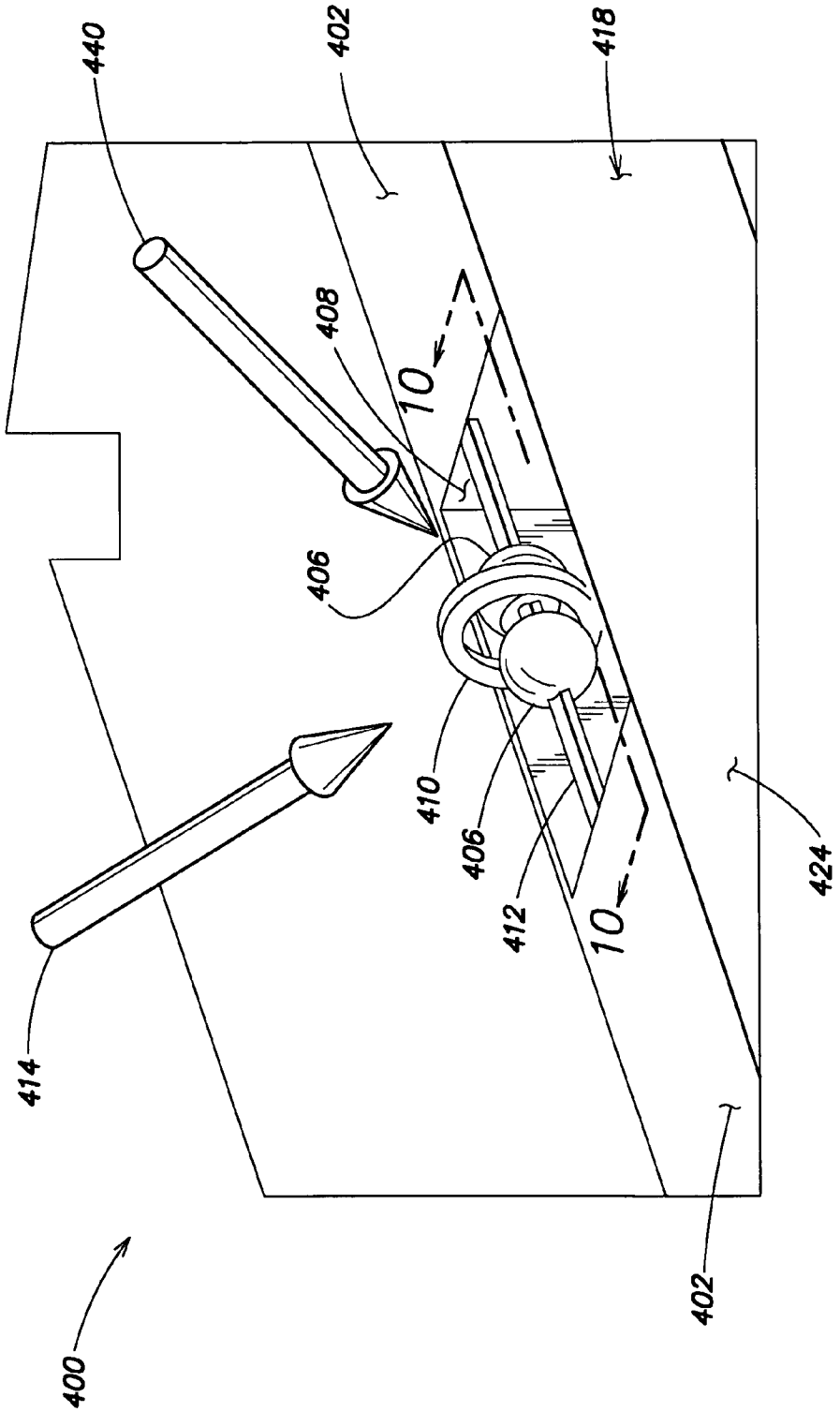

FIG. 9

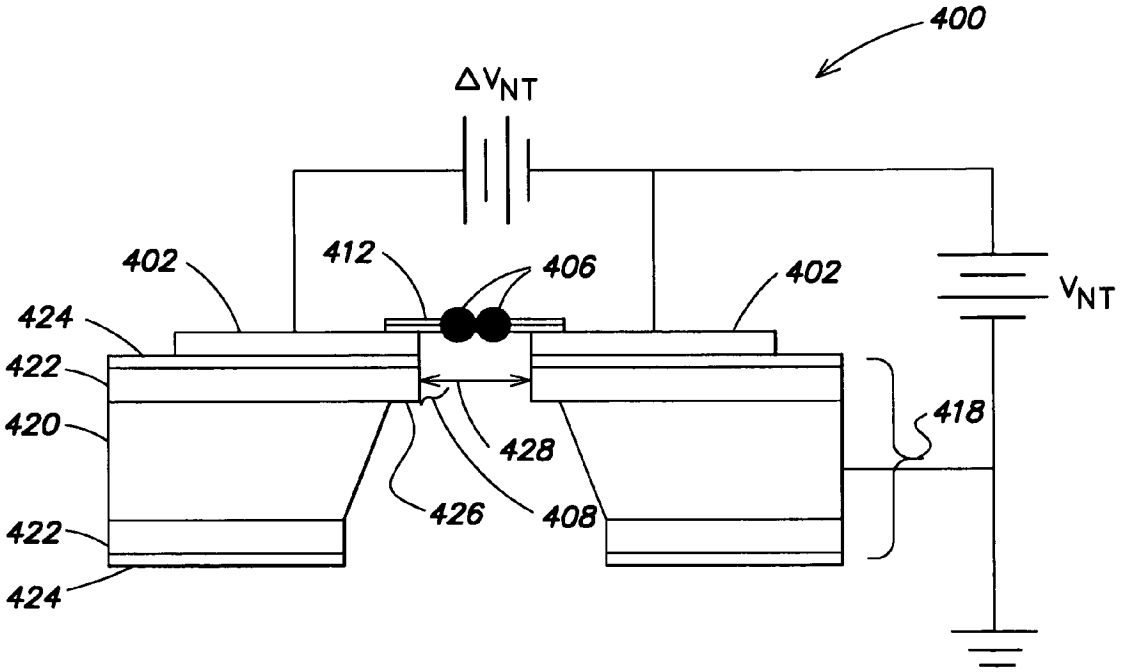

FIG. 10

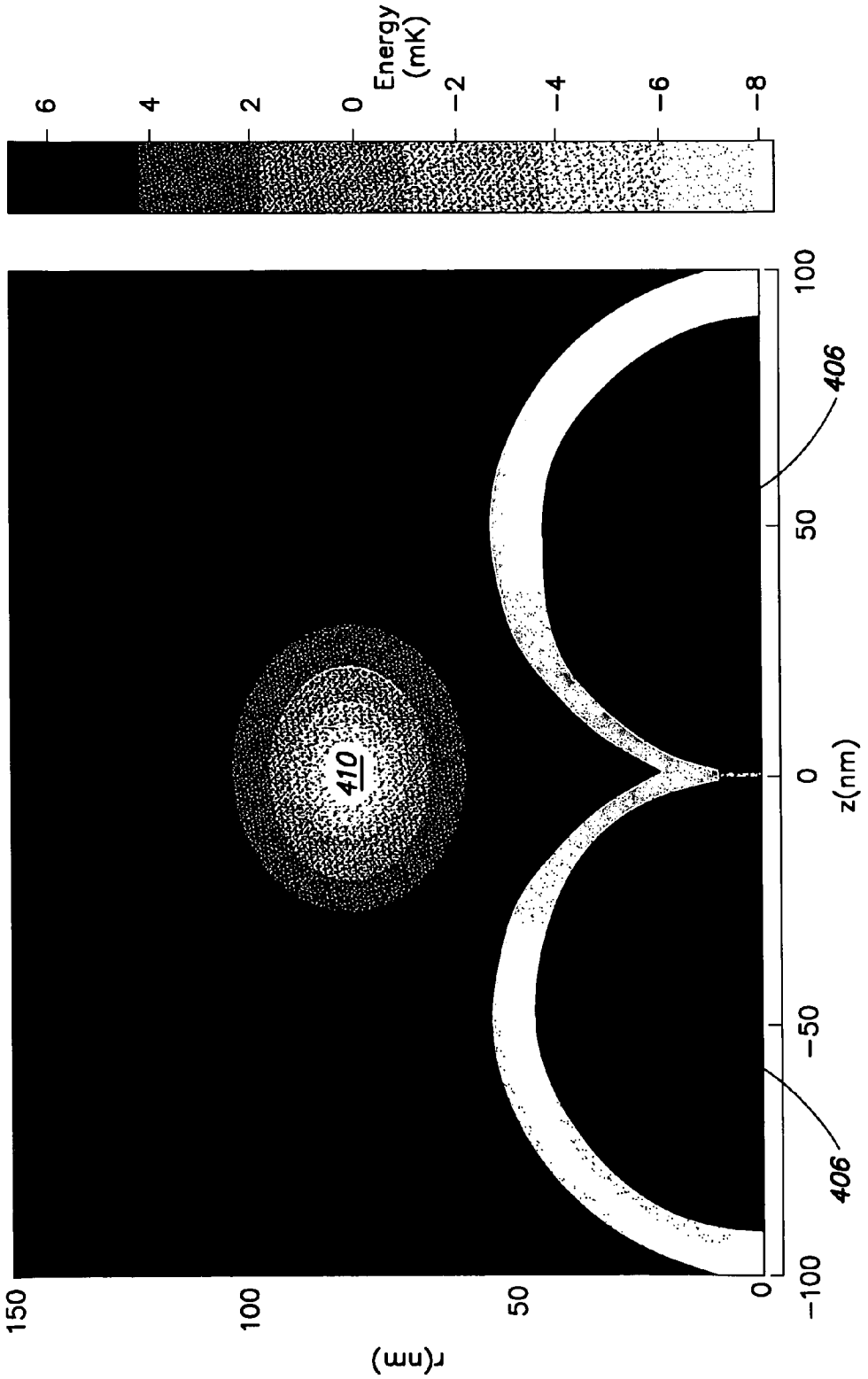
Energy (mK)
6
4
2
0
−2
−4
−6
−8
410
406
406
150
100
50
0
r(nm)
−100
−50
0
50
100
z(nm)

FIG. 11

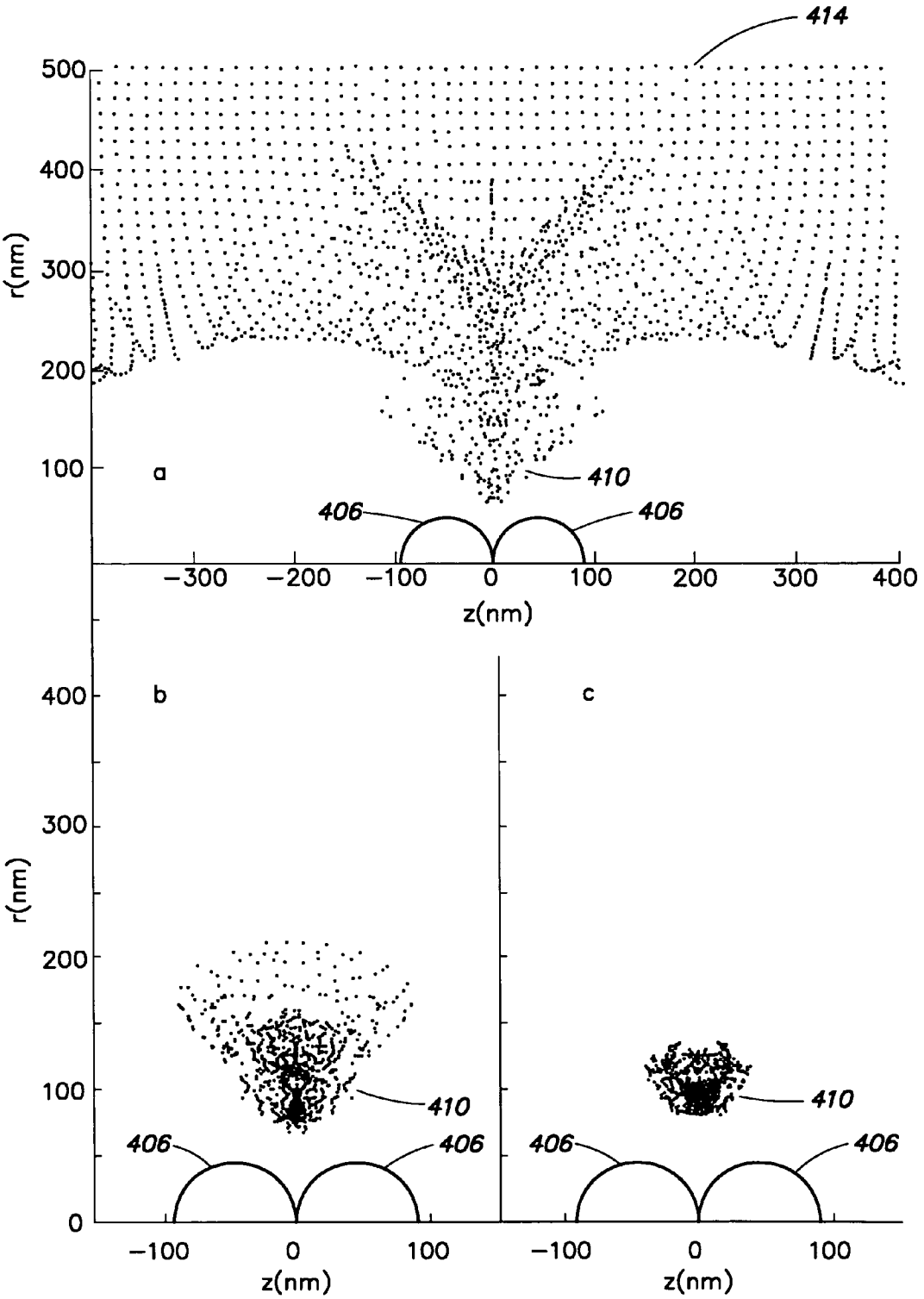
414
500
400
300
200
100
r(nm)
a
410
406
406
−300
−200
−100
0
100
200
300
400
z(nm)
b
c
400
300
200
100
0
r(nm)
410
406
406
−100
0
100
z(nm)
410
406
406
−100
0
100
z(nm)

FIG. 12

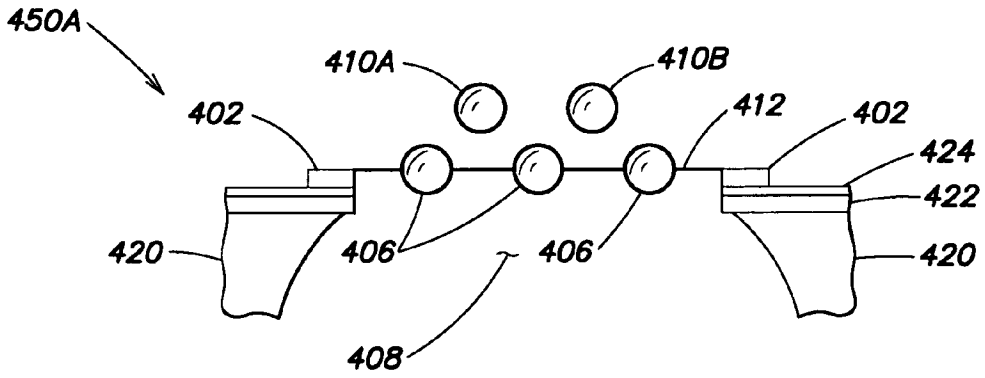

FIG. 13

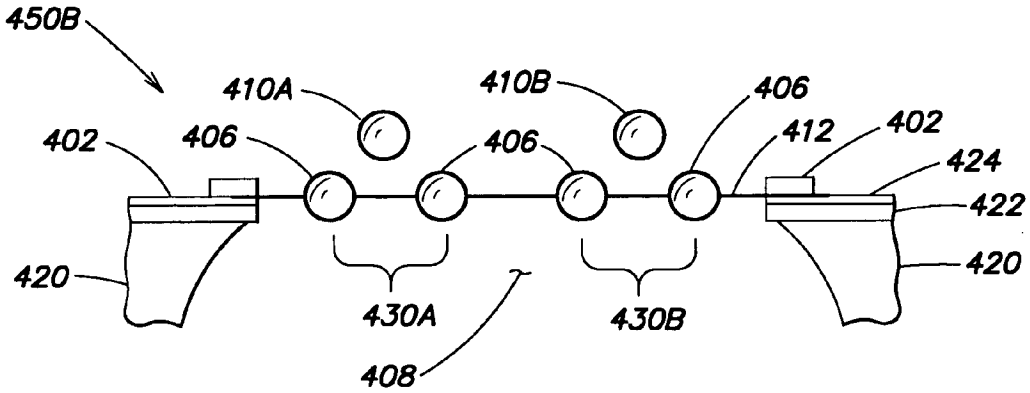

FIG. 14

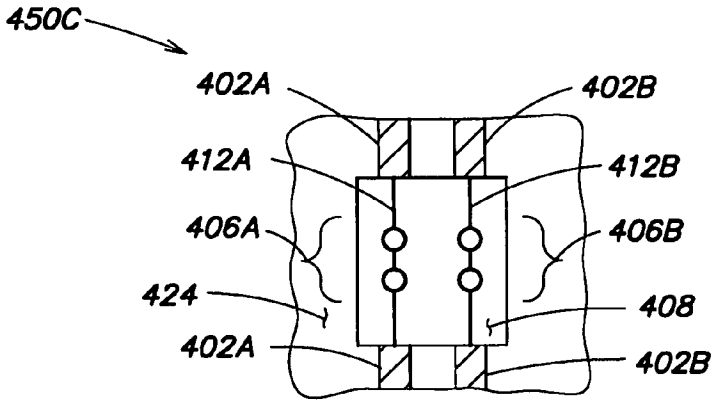

FIG. 15

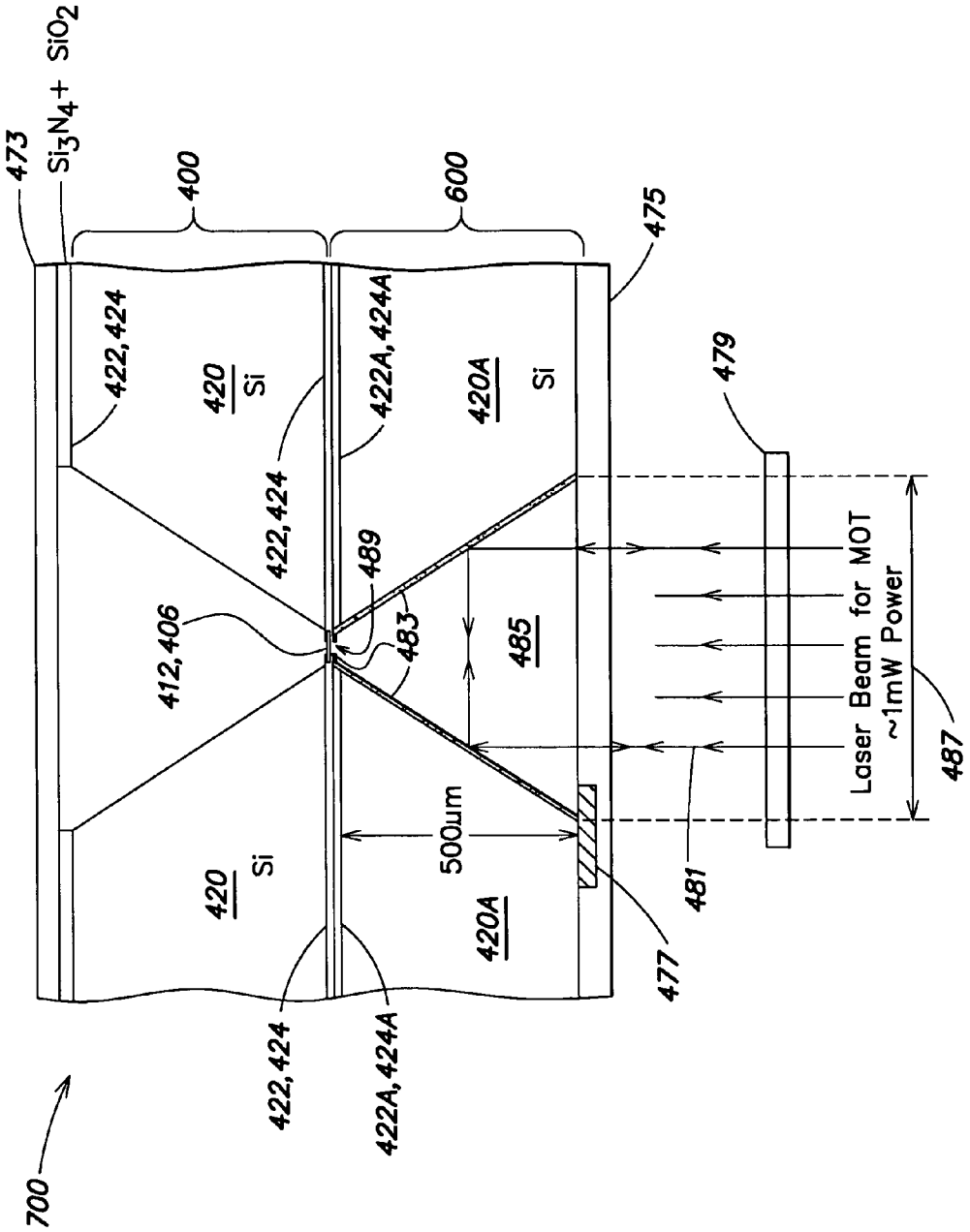
473
Si_3N_4+ SiO_2
400
600
475
422, 424
420
Si
422A, 424A
420A
Si
479
422, 424
489
412, 406
483
485
Laser Beam for MOT
~1mW Power
487
500μm
420
Si
420A
481
477
422, 424
422A, 424A
700

FIG. 16

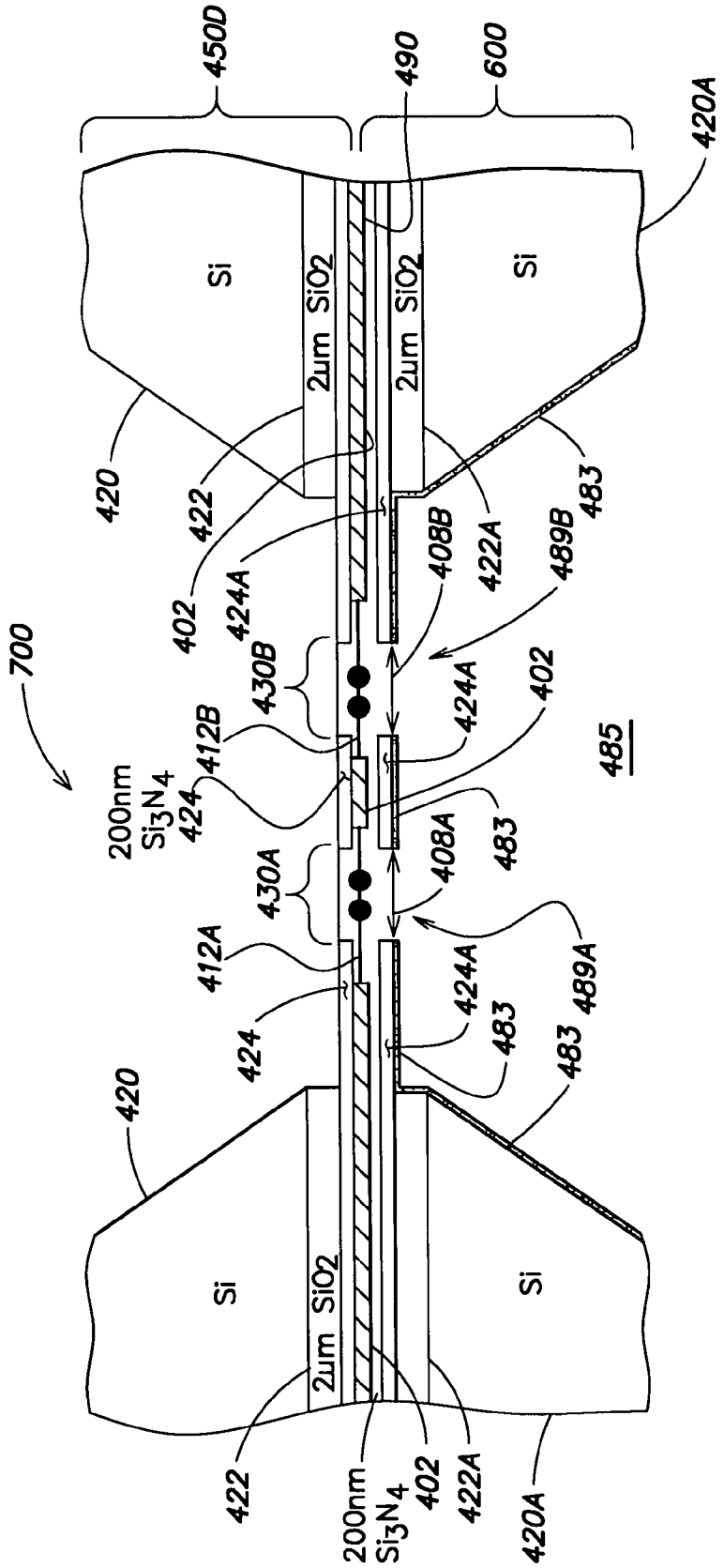
450D
490
600
420A
Si
2um SiO2
2um SiO2
Si
420
422
402
424A
408B
422A
489B
483
700
430B
412B
424
200nm
Si3N4
424A
402
485
483
408A
430A
412A
424
424A
489A
483
483
420
Si
2um SiO2
Si
422
200nm
Si3N4
402
422A
420A

FIG. 17

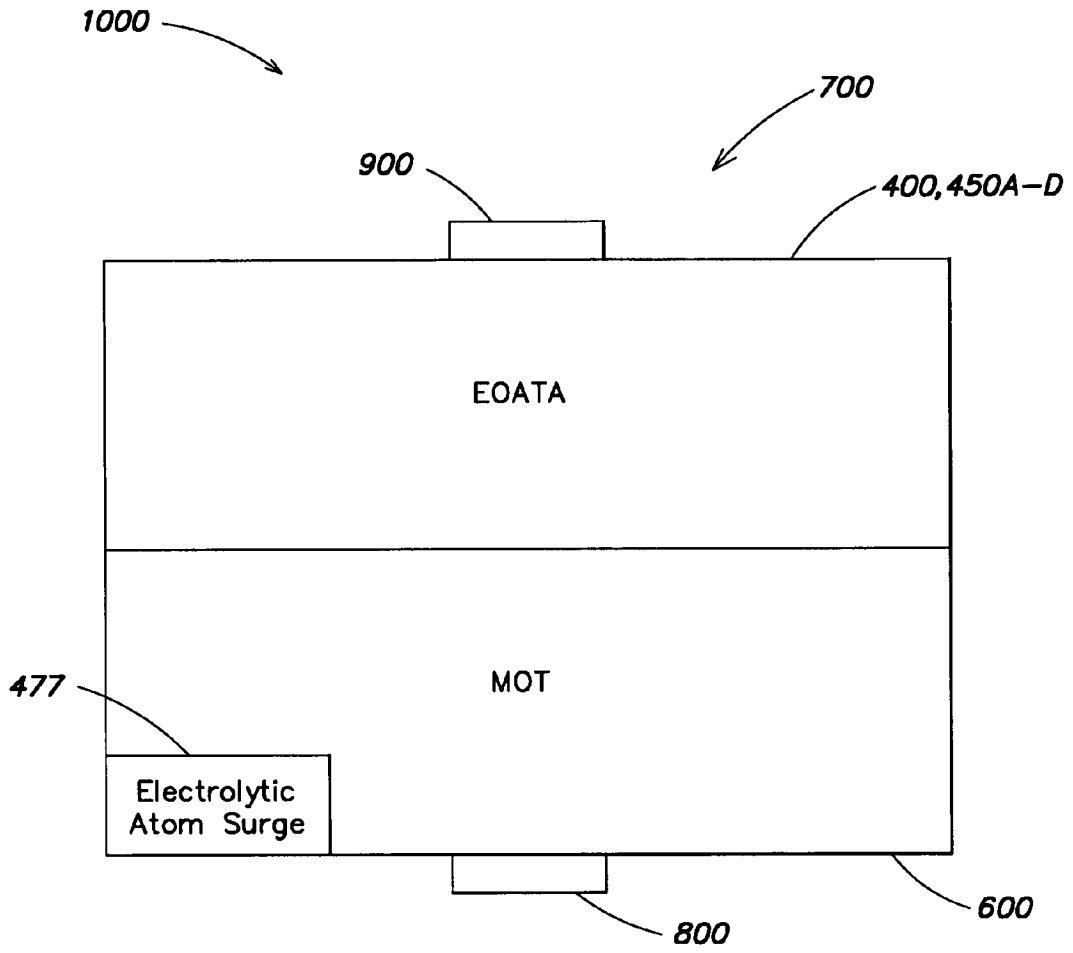
1000
700
900
400,450A–D
EOATA
MOT
477
Electrolytic
Atom Surge
600
800

FIG. 18

METHODS, SYSTEMS, AND APPARATUS FOR STORAGE, TRANSFER AND/OR CONTROL OF INFORMATION VIA MATTER WAVE DYNAMICS

CROSS-REFERENCE TO RELATED APPLICATIONS

The present application claims priority to, and incorporates by reference the entirety of, the following U.S. Provisional Applications:

Ser. No. 60/888,141, filed Feb. 5, 2007, entitled "Methods and Apparatus for Control and Transfer of Information via Matter Wave Dynamics;"

Ser. No. 60/886,706, filed Jan. 26, 2007, entitled "Coherent Control of Optical Information with Matter Wave Dynamics;"

Ser. No. 60/887,878, filed Feb. 2, 2007, entitled "Methods and Apparatus for Control and Transfer of Information via Matter Wave Dynamics;" and

Ser. No. 60/895,249, filed Mar. 16, 2007, entitled "Methods and Apparatus for Control and Transfer of Information via Matter Wave Dynamics."

GOVERNMENT SPONSORED RESEARCH

Some of the research relating to the subject matter disclosed herein was sponsored by the following United States government grants, and the United States government has certain rights to some disclosed subject matter: Air Force Office of Scientific Research (AFOSR), Grant #FA9550-05-1-0331; Air Force Office of Scientific Research (AFOSR)/Defense University Research Instrumentation Program (DURIP), Grant #FA9550-05-1-0333 and Grant #FA9550-07-1-0252; National Science Foundation (NSF), Grant #PHY-0456881; National Aeronautics and Space Administration (NASA), Grant #NAG3-2909.

FIELD OF THE DISCLOSURE

The present disclosure relates to inventive methods, systems and apparatus for generating atomic traps, and sculpting of atomic matter waves with coherent light, including storage, transfer, and/or control of information, such as optical information, via matter wave dynamics.

BACKGROUND

The behavior of atoms at very low temperatures approaching absolute zero (−273.15 degrees Celsius, or 0 degrees Kelvin) results in extraordinary physical phenomena. In a system of many identical atoms at absolute zero temperature, the atoms occupy the lowest possible energy state compatible with their spin. The associated quantum statistics for elementary and composite particles relating to atoms significantly govern their behavior at very low temperatures.

All elementary particles (a particle not known to be made up of smaller particles) and composite particles are categorized into two classes, respectively referred to as "bosons" and "fermions." Bosons and fermions are differentiated by their "spin" (the spin of a particle is its intrinsic angular momentum, and is either an integer or half-integer value, in multiples of Planck's constant); specifically, bosons have integer spin, and fermions have half-integer spin. According to the quantum mechanics "spin-statistics theorem," which relates the spin of a particle to the statistics obeyed by that particle, only one fermion can occupy a given quantum state

(the "Pauli exclusion principle"), while the number of bosons that can occupy a given quantum state is not restricted. Furthermore, bosons cause stimulated scattering of identical bosons into the same quantum state.

The basic building blocks of matter such as protons, neutrons and electrons are fermions, whereas particles such as photons and phonons, which mediate forces between matter particles, are bosons (the ability of multiple phonons to occupy a given quantum state is the principle by which a laser operates). Particles composed of a number of other particles can be either fermions or bosons, depending on their total spin. Hence, even though protons, neutrons and electrons are all fermions, it is possible for a single element (e.g., helium or He) to have some isotopes that are fermions (e.g. ^{3}He) and other isotopes that are bosons (e.g. ^{4}He). Sodium-23 is another example of a boson isotope. Many nuclei also are bosons; for example, the deuterium atom (an isotope of hydrogen) composed of three fermions (proton+neutron+electron) is a fermion, while its nucleus [NP] when separated from the electron is a boson. Accordingly, any nucleus with an integer spin likewise is a boson.

A Bose-Einstein condensate is a phase-coherent state of matter formed when a large number of identical bosons occupy the same quantum state. This occurs, for example, when a system of identical bosons are cooled to temperatures very near to absolute zero. Under such supercooled conditions, a large fraction of the bosons occupy the lowest quantum state (i.e., ground state). At this point, quantum effects become apparent on a macroscopic scale.

The formation of Bose-Einstein condensates is also responsible for the superfluid behavior of certain fluids. These "superfluids" are characterized by the complete absence of viscosity and quantized vorticity. Superfluidity was originally discovered in liquid helium-4 (^{4}He); the primary difference between superfluid helium and a Bose-Einstein condensate is that the former is condensed from a liquid while the latter is condensed from a gas.

Fermionic superfluids are known as well, but because fermions are prohibited from occupying the same quantum state, fermionic superfluids generally are harder to produce. Both fermionic superfluids (e.g., ^{3}He and cooled fermionic alkali gases such as ^{6}Li and ^{40}K) and "superconductors" (materials that when cooled to sufficiently low temperatures are characterized by exactly zero electrical resistance) may be described by the "BCS" theory (Bardeen, Cooper, and Schrieffer), which attributes the superconducting state and, by implication, the superfluid state of a fermionic fluid, to the formation of a Bose-Einstein condensate of "Cooper pairs." In superconductors, Cooper pairs consist of two electrons that interact (are attracted to each other) through the exchange of phonons, and the electron pairs flow without energy dissipation. For the fermionic superfluids like ^{3}He, the Cooper pairs consist of two fermionic helium atoms. In this manner, the behavior of the Cooper pairs may be viewed as similar to that of bosons. Under certain conditions, fermion pairs can also form diatomic molecules and undergo Bose-Einstein condensation.

In recent years, significant progress has been achieved in manipulating matter with light, and light with matter. Resonant laser fields interacting with cold, dense atom clouds provide a particularly rich system. Such light fields interact strongly with the internal electrons of the atoms, and couple directly to external atomic motion through recoil momenta imparted when photons are absorbed and emitted. Ultraslow light propagation in Bose-Einstein condensates represents an extreme example of resonant light manipulation using cold atoms. In particular, it has been shown that information relat-

ing to the phase and amplitude of an optical pulse incident on a Bose-Einstein condensate may be "stored" in the condensate in the form of an imprint on the external wavefunction components that correspond to condensate atoms in particular internal energy states. Subsequently, an optical pulse may be "revived" or regenerated from the condensate, based on the stored information relating to the incident optical pulse.

SUMMARY

The present disclosure is directed generally to inventive methods, systems and apparatus for generating atomic traps, and sculpting of atomic matter waves with coherent light, including storage, transfer, and/or control of information, such as optical information, via matter wave dynamics. In exemplary inventive embodiments described herein, information is either transferred over some distance between two separate "phase-coherent objects," or propagated from one phase-coherent object, processed or manipulated, and returned to the phase-coherent object for storage.

For purposes of the present disclosure, a "phase-coherent object" refers to a state of matter in which there is a macroscopic occupation by identical bosons, including identical BCS-paired fermions (e.g., Cooper electron pairs), of a particular quantum state. In another aspect, the internal structure of the bosons of a phase-coherent object includes a three-level system having two quantum states (e.g., first and second quantum states) that are relatively stable and can couple to a common third quantum state. In yet other aspects, the first state does not need to be ground state, and the second state does not need to be above the first state. In yet another aspect, a phase-coherent object includes a system with a number N of atoms, where N is larger than or equal to one, and wherein all N atoms occupy the same quantum state. In yet another aspect, to store some number n of photons, N must be larger than n, and for the case of two phase-coherent objects, N must be equal to or larger than n.

Two phase-coherent objects between which information is transferred both have a macroscopic occupation of a particular quantum state by identical types of particles. Accordingly, it should be appreciated that examples of phase-coherent objects contemplated by the present disclosure include Bose-Einstein condensates, bosonic and fermionic superfluids, and superconductors.

With respect to information storage, transfer and/or control, in one embodiment, a first optical pulse is stopped in a first phase-coherent object, and phase and amplitude information relating to the first optical pulse is "stored" in the first phase-coherent object. A second optical pulse subsequently is revived in a second phase-coherent object that is spatially separated from the first phase-coherent object, based on the information relating to the first optical pulse that is stored in the first phase-coherent object. In one aspect, the information is transferred between the first and second phase-coherent objects via a travelling matter wave.

More specifically, in the presence of an optical coupling field, the first optical pulse is injected into the first phase-coherent object, where it is spatially compressed to a length much shorter than the coherent extent of the object. The coupling field is then turned off, leaving the atoms in the first phase-coherent object in quantum superposition states that comprise a stationary component and a recoiling component in a different internal state. The amplitude and phase of the spatially localized first optical pulse are imprinted on the recoiling part of the first object's wavefunction, which serves as a "messenger" atom matter wave pulse that moves towards the second phase-coherent object. When this messenger atom wave pulse is embedded in the second phase-coherent object, the system is re-illuminated with the coupling laser. The messenger atom wave pulse is coherently added to the matter field of the second object by way of slow-light-mediated atomic matter-wave amplification, and by virtue of the coupling laser a second optical pulse is thusly generated from the second phase-coherent object. The second or "revived" optical pulse records the relative amplitude and phase between the recoiling atomic imprint due to the first optical pulse and the second phase-coherent object.

In yet another embodiment, using a single phase-coherent object, in the presence of an optical coupling field, a first optical pulse is injected into the phase-coherent object, where it is spatially compressed to a length much shorter than the coherent extent of the object. The coupling field is then turned off, leaving the atoms in the phase-coherent object in quantum superposition states that comprise a stationary component and a recoiling component in a different internal state. The amplitude and phase of the spatially localized first optical pulse are imprinted on the recoiling part of the object's wavefunction, which moves out of the phase-coherent object as a "matter imprint" or "messenger atom wave pulse." While this matter imprint is outside of the phase-coherent object (e.g., in free space), it can be held, or manipulated (e.g., processed) and then sent back to the object. When it arrives back to the phase-coherent object, the object is re-illuminated with the coupling laser. The returned messenger atom wave pulse is coherently added to the matter field of the phase-coherent object by way of slow-light-mediated atomic matter-wave amplification, and by virtue of the coupling laser a second optical pulse is thusly generated from the phase-coherent object. The second or "revived" optical pulse records the relative amplitude and phase between the recoiling atomic imprint (due to the first optical pulse) and its return to the phase-coherent object.

In some embodiments, trapping and cooling of the phase-coherent object(s) may be accomplished via an electro-optical technique employing nanoscale structures (structures having dimensions on the scale of nanometers, e.g., nanowires, nanocylinders, nanospheres, etc.). In particular, electro-optical atomic trapping methods and apparatus according to various embodiments of the present invention exploit the combination of an attractive potential of a static electric field generated by nanostructures, and a repulsive potential of an appropriately tuned optical (laser) field, to trap and cool atoms. In one aspect of this embodiment, the nanostructures are particularly configured to facilitate surface plasmon-enhanced laser field gradients proximate to the nanostructures, and in turn these plasmon-enhanced laser field gradients provide a viscous damping force that significantly facilitates loading and stabilizing of the trap.

In yet other embodiments, inventive electro-optical atomic trapping methods and apparatus according to the present disclosure, based on nanoscale structures, facilitate integrated (e.g., silicon wafer-based) realizations of inventive methods and systems for storing, transferring, and controlling optical information via one or more phase-coherent objects. For example, in one inventive embodiment disclosed herein, an integrated silicon wafer-based optical buffer is realized based on optical information storage and recovery in one or more phase-coherent objects. In various aspects, the integrated optical buffer includes an electrolytic atom source to provide the phase-coherent object(s), and a nanoscale electro-optical atomic trapping apparatus to trap and cool the phase-coherent object(s). The integrated optical buffer also includes at least one semiconductor-based optical source as part of the electro-optical atomic trapping apparatus to provide optical trapping

and damping fields, as well as at least one other semiconductor-based optical source to provide coupling fields for storage and transfer of optical information.

In sum, one embodiment of the present disclosure is directed to a method, comprising transferring information between first and second spatially separated phase-coherent objects, wherein both phase-coherent objects have a macroscopic occupation of a particular quantum state by identical bosons or identical BCS-paired fermions.

In various aspects of this embodiment, the information may be optical information, and the phase-coherent objects may be Bose-Einstein condensates, superfluids, or superconductors. In another aspect, the phase-coherent objects are spatially separated by a distance approximately equal to or greater than at least one dimension of one of the phase-coherent objects.

In yet other aspects of this embodiment, the method may further comprise storing the information in the first phase-coherent object at a first storage time, and recovering the information from the second phase-coherent object at a second revival time. Furthermore, the method may comprise controlling the second revival time so as to process the information recovered from the second phase-coherent object, and/or manipulating the information as it is transferred between the first and second phase-coherent objects.

Another embodiment is directed to a method of transferring optical information between first and second spatially separated atomically identical Bose-Einstein condensates. The method comprises: A) irradiating the first Bose-Einstein condensate with an optical beam resonant or near-resonant with a first transition between a second energy state and the third energy state of bosons of the Bose-Einstein condensates; B) irradiating the first Bose-Einstein condensate with a first optical pulse resonant or near-resonant with a second transition between a first energy state and a third energy state of the bosons of the Bose-Einstein condensates, the first optical pulse propagating counter to a propagation direction of the optical beam, wherein the transferred optical information relates at least in part to a phase and amplitude of the first optical pulse; C) extinguishing the optical beam at a first storage time at which the first optical pulse is contained completely within the first Bose-Einstein condensate, so as to eject from the first Bose-Einstein condensate a coherent matter wave pulse carrying the optical information from the first optical pulse; D) injecting the second Bose-Einstein condensate with the coherent matter wave pulse; and E) irradiating the second Bose-Einstein condensate with the optical beam at a second revival time at which the coherent matter wave pulse is embedded in the second Bose-Einstein condensate so as to generate a second optical pulse from the second Bose-Einstein condensate based on the optical information carried by the coherent matter wave pulse.

Another embodiment is directed to a system for transferring optical information. The system comprises a first phase-coherent object to receive a first optical pulse resonant or near-resonant with a first transition between a first energy state and a third energy state of bosons or BCS-paired fermions of the first phase-coherent object. The system further comprises a radiation source configured to generate an optical beam that irradiates at least the first phase-coherent object in a direction that is counter-propagating to or orthogonal to the first optical pulse, the optical beam being resonant or near-resonant with a second transition between a second energy state and the third energy state of the bosons or the BCS-paired fermions of the first phase-coherent object. The system further comprises a second phase-coherent object spatially separated from the first phase-coherent object, wherein the first and second phase-coherent objects have a macroscopic occupation of a particular quantum state by identical bosons or identical BCS-paired fermions, and a controller configured to control at least the radiation source to turn on and off the optical beam so as to transfer the optical information from the first phase-coherent object to the second phase-coherent object via a coherent matter wave pulse, wherein the transferred optical information relates at least in part to a phase and amplitude of the first optical pulse.

Another embodiment is directed to a method, comprising: A) storing information in a phase-coherent object at a first storage time; B) ejecting from the phase-coherent object a coherent matter wave pulse carrying the information; C) returning the coherent matter wave pulse to the phase-coherent object; and D) recovering the information from the first phase-coherent object at a second revival time.

Another embodiment is directed to a method of processing optical information using a Bose-Einstein condensate, the method comprising: A) irradiating the Bose-Einstein condensate with an optical beam resonant or near-resonant with a first transition between a second energy state and the third energy state of bosons of the Bose-Einstein condensate; B) irradiating the Bose-Einstein condensate with a first optical pulse resonant or near-resonant with a second transition between a first energy state and a third energy state of the bosons of the Bose-Einstein condensate, the first optical pulse propagating counter to a propagation direction of the optical beam, wherein the optical information relates at least in part to a phase and amplitude of the first optical pulse; C) extinguishing the optical beam at a first storage time at which the first optical pulse is contained completely within the Bose-Einstein condensate, so as to eject from the Bose-Einstein condensate a coherent matter wave pulse carrying the optical information from the first optical pulse; D) returning the coherent matter wave pulse to the Bose-Einstein condensate; and E) irradiating the Bose-Einstein condensate with the optical beam at a second revival time at which the coherent matter wave pulse is embedded in the Bose-Einstein condensate so as to generate a second optical pulse from the Bose-Einstein condensate based on the optical information carried by the coherent matter wave pulse.

Another embodiment is directed to an system for processing optical information. The system comprises: a phase-coherent object to receive a first optical pulse resonant or near-resonant with a first transition between a first energy state and a third energy state of bosons or BCS-paired fermions of the phase-coherent object; a radiation source configured to generate an optical beam that irradiates the phase-coherent object in a direction that is counter-propagating to or orthogonal to the first optical pulse, the optical beam being resonant or near-resonant with a second transition between a second energy state and the third energy state of bosons or BCS-paired fermions of the phase-coherent object; a controller configured to control at least the radiation source to turn on and off the optical beam so as to transfer the optical information from the phase-coherent object to a coherent matter wave pulse that propagates outside of the phase-coherent object, wherein the transferred optical information relates at least in part to a phase and amplitude of the first optical pulse; and at least one processor to process the optical information in the coherent matter wave pulse. Upon return of the coherent matter wave pulse to the phase-coherent object, the controller is further configured to control the radiation source to turn on and off the optical beam so as to generate from the phase-coherent object a second optical pulse based on the processed optical information.

Another embodiment is directed to an apparatus, comprising a support structure, and a well, trench or aperture formed at least partially through at least a portion of the support structure so as to provide a gap on at least one surface of the support structure. The apparatus further comprises at least one nanoscale wire coupled to the support structure and disposed across the gap, and at least one nanostructure formed on the at least one nanoscale wire.

Another embodiment is directed to an optical buffer apparatus, comprising an electrolytic atom source to generate a stream of atoms, and at least one electro-optical atomic trapping apparatus to provide at least one trapping region to trap and cool at least some atoms of the stream of atoms so as to form at least one phase-coherent object. In one aspect, the electro-optical atomic trapping apparatus comprises at least one nanoscale wire, and at least one three-dimensional nanostructure formed on the at least one nanoscale wire so as to generate an electrostatic potential proximate to the at least one three-dimensional nanostructure when a voltage is applied to the at least one nanoscale wire. The trapping apparatus further comprises a first semiconductor optical source that, when energized, provides a first optical field that generates an optical potential proximate to the at least one three-dimensional nanostructure, wherein a combination of the optical potential and the electrostatic potential forms the at least one trapping region. The optical buffer apparatus may further comprise at least one second semiconductor optical source that, when energized, provides an optical coupling field in the at least one trapping region to facilitate storage of optical information in the at least one phase-coherent object.

The concepts disclosed herein provide a dramatic demonstration of manipulation of matter on a scale of nanometers (e.g., atomic trapping), and coherent optical information processing with matter wave dynamics. Such quantum control facilitates application including, but not limited to, optical buffering and optical memory, quantum information processing and wavefunction sculpting.

It should be appreciated that all combinations of the foregoing concepts and additional concepts discussed in greater detail below (provided such concepts are not mutually inconsistent) are contemplated as being part of the inventive subject matter disclosed herein. In particular, all combinations of claimed subject matter appearing at the end of this disclosure are contemplated as being part of the inventive subject matter disclosed herein. It should also be appreciated that terminology explicitly employed herein that also may appear in any disclosure incorporated by reference or otherwise referred to herein should be accorded a meaning most consistent with the particular concepts disclosed herein.

BRIEF DESCRIPTION OF THE DRAWINGS

In the drawings, like reference characters generally refer to the same parts throughout the different views. Also, the drawings are not necessarily to scale, emphasis instead generally being placed upon illustrating the principles of inventive embodiments disclosed herein.

FIG. **1** illustrates some general concepts underlying a method for transferring information between two phase-coherent objects, according to one embodiment of the present invention.

FIG. **2** illustrates a system for transferring information between two phase-coherent objects, according to one embodiment of the present invention.

FIG. **3** is a diagram illustrating an example of appropriate quantum energy states to facilitate information transfer between two phase-coherent objects, according to one embodiment of the present invention.

FIGS. **4***a* through **4***e* provide an elapsed time illustration of information transfer between two phase-coherent objects in the method of FIG. **1** and the system of FIG. **2**, according to one embodiment of the present invention.

FIGS. **5***a* through **5***g* illustrate a timed-series of actual resonant absorption images of two phase-coherent objects and a "messenger" coherent matter wave pulse travelling between the two phase-coherent objects, according to one embodiment of the present invention.

FIGS. **6***a* through **6***e* comparatively illustrate some of the dynamics involved in information storage and transfer in the form of optical pulse storage and revival in two separate phase-coherent objects, according to various embodiments of the present invention.

FIGS. **7***a* and **7***b* illustrate comparative examples of optical pulse revival in a single condensate as opposed to two separate phase-coherent objects.

FIG. **8** schematically outlines a method and system for information processing using a single phase-coherent object, according to one embodiment of the present invention.

FIG. **9** illustrates a perspective view of an electro-optical atomic trapping apparatus according to one embodiment of the present invention.

FIG. **10** illustrates a more detailed side view of a portion of the electro-optical atomic trapping apparatus of FIG. **9**, according to one embodiment of the present invention.

FIG. **11** is a graphical representation of a cross-section of a trapping region of the electro-optical atomic trapping apparatus of FIGS. **9** and **10**, showing the trapping potential for an atom in the trapping region, according to one embodiment of the present invention.

FIGS. **12***a*, **12***b*, and **12***c* graphically illustrate a simulation of atom trapping based on an atomic beam launched towards the electro-optical atomic trapping apparatus of FIGS. **9** and **10**, according to one embodiment of the present invention.

FIGS. **13** and **14** illustrate respective side views of electro-optical trapping apparatus for creating a double potential well atomic trap, according to other embodiments of the present invention.

FIG. **15** illustrates a top view of a portion of an electro-optical trapping apparatus for creating a multiple potential well atomic trap, according to one embodiment of the present invention.

FIG. **16** illustrates a cross-sectional view of an electro-optical trapping apparatus that includes an electrolytic alkali atom source and a pyramidal magneto-optic trap for loading the electro-optical trapping apparatus with the alkali atoms, according to one embodiment of the present invention.

FIG. **17** is an expanded view of a middle portion of an electro-optical trapping apparatus similar to that shown in FIG. **16**, according to one embodiment of the present invention.

FIG. **18** provides a generalized block diagram of various elements constituting an optical buffer apparatus according to one embodiment of the present invention.

DETAILED DESCRIPTION

Following below are more detailed descriptions of various concepts related to, and embodiments of, inventive methods, systems, and apparatus according to the present disclosure for storage, transfer and/or control of information via matter wave dynamics, as well as generation of atomic traps. It should be appreciated that various aspects of the subject matter introduced above and discussed in greater detail below

may be implemented in any of numerous ways, as the subject matter is not limited to any particular manner of implementation. Examples of specific implementations and applications are provided primarily for illustrative purposes. In particular, it should be appreciated that while a specific example involving Bose-Einstein condensates of bosons is discussed in detail below, the concepts disclosed herein apply more generally to systems involving both bosons (including bosonic superfluids) as well as systems involving BCS-paired fermions (e.g., fermionic superfluids and superconductors).

FIG. **1** illustrates some general concepts underlying a method for storing and transferring information between two phase-coherent objects, according to one embodiment of the present invention. In FIG. **1**, information **150** is transferred between a first phase-coherent object **100**A and a second phase-coherent object **100**B. In one aspect, both phase-coherent objects **100**A and **100**B have a macroscopic occupation of a particular quantum state (e.g., quantum energy state |1>) by identical bosons or identical BCS-paired fermions **110**A, **110**B.

As discussed above, for purposes of the present disclosure, a "phase-coherent object" refers to a state of matter in which there is a macroscopic occupation by identical bosons, including identical BCS-paired fermions (e.g., Cooper electron pairs), of a particular quantum energy state. The internal structure of the bosons of the phase-coherent object includes a three-level system having two quantum energy states (e.g., first and second quantum states) that are relatively stable and can couple to a common third quantum energy state. In should be appreciated, however, that the first state is not required to be a ground state, and the second state is not required to be above the first state.

In various aspects of the embodiment of FIG. **1**, as discussed in greater detail below, the information **150** transferred between the first and second phase-coherent objects **100**A and **100**B may be optical information, and the phase-coherent objects **100**A and **100**B may be Bose-Einstein condensates, superfluids, or superconductors. In another aspect, the phase-coherent objects are spatially separated by a distance **185** approximately equal to or greater than the spatial extent of a coherent matter wave pulse propagating between the objects, as discussed further below in connection with FIG. **4**. In yet another aspect, the phase-coherent objects are spatially separated by a distance approximately equal to or greater the ant least one dimension of one of the phase-coherent objects (e.g., the dimension **187**). In various embodiments discussed further below, exemplary non-limiting values for the distance **185** may be on the order of from approximately 100 micrometers to 200 micrometers.

FIG. **2** illustrates additional details of a system **500** for transferring the information **150** between the two phase-coherent objects **100**A and **100**B shown in FIG. **1**, according to one embodiment of the present invention. In one aspect, the system **500** includes elements to facilitate trapping and cooling of the phase-coherent objects. In general, trapping and cooling of the phase-coherent objects involves creating an attractive magnetic or electric potential which is balanced by a repulsive potential provided by an optical field. In the exemplary implementation illustrated in FIG. **2**, an electro-magnetic trapping technique is employed in which magnetic trapping coils **170**A and **170**B are used together with an optical trapping field **140** to create a "double-well" potential in which the phase-coherent objects are trapped and cooled. In another embodiment of the system **500** discussed further below in connection with FIGS. **9-14**, trapping and cooling of the phase-coherent objects **100**A and **100**B may be accomplished via an electro-optical technique employing nanoscale structures (structures having dimensions on the scale of nanometers, e.g., nanowires and nanospheres) to create attractive potentials from static electric fields, which are balanced by a repulsive optical potential.

In one aspect, the system **500** of FIG. **2** is configured generally to store, transfer, and/or process information associated with an input optical pulse. In particular, as shown in FIG. **2**, the first phase-coherent object **100**A receives a first optical pulse **120** (also referred to herein as a "probe" pulse) resonant or near-resonant with a first transition between a first energy state and a third energy state of the bosons (or BCS-paired fermions) of the first phase-coherent object. A radiation source **135** of the system **500** is configured to generate an optical beam **130** (also referred to herein as a "coupling beam") that irradiates at least the first phase-coherent object **100**A in a direction that is counter-propagating to or orthogonal to the first optical pulse **120**. The optical beam **130** is resonant or near-resonant with a second transition between a second energy state and the third energy state of the bosons (or the BCS-paired fermions) of the first phase-coherent object **100**A. FIG. **3** is a diagram illustrating an example of appropriate quantum energy states to facilitate information transfer between two phase-coherent objects, and transitions between energy states associated with the first optical pulse **120** ("probe") and the optical beam **130** ("coupling"), according to one embodiment of the present invention.

In the system of FIG. **2**, a controller **137** controls the radiation source **135** to turn on and off the optical coupling beam **130**, according to a particular protocol as discussed further below in connection with FIGS. **4***a* through **4***e*, so as to transfer the information **150** from the first phase-coherent object **100**A to the second phase-coherent object **100**B via a coherent matter wave pulse, wherein the transferred information relates at least in part to a phase and amplitude of the first optical pulse **120**. Once the information is transferred via the coherent matter wave pulse, the controller **137** again controls the radiation source **135** to turn on and off the optical coupling beam **130** so as to generate from the second phase-coherent object **100**B a second optical pulse, based on the information transferred by the coherent matter wave pulse and relating to the first optical pulse.

FIGS. **4***a* through **4***e* provide an elapsed time illustration of information transfer between the two phase-coherent objects in the method of FIG. **1** and the system of FIG. **2**, according to one embodiment of the present invention. In FIG. **4***a*, as discussed above, at least the first phase-coherent object **100**A is irradiated with the optical coupling beam **130**, and the first optical pulse **120** is injected into the first phase-coherent object **100**A. As the propagating pulse **120** enters the first phase-coherent object, as shown in FIG. **4***b*, it creates a slight atomic polarization in the first phase-coherent object **100**A that slows and spatially compresses the pulse until the pulse is contained entirely within the first phase-coherent object. The variation of the probe pulse in space and time is imprinted on one of the quantum wavefunctions of the bosons of the first phase-coherent object, thereby constituting a coherent "matter wave" pulse **210** that accompanies the highly compressed, slowly moving first optical pulse **120** through the condensate.

Once the optical pulse **120** is contained completely within the first phase-coherent object **100**A, the controller **137** of FIG. **2** controls the radiation source **135** so as to turn off the optical coupling beam **130**. In turn, the bosons of the first phase-coherent object drive the first optical probe pulse to extinction; however, an imprint of the phase and amplitude of the first optical probe pulse **120** remains in the coherent matter wave pulse **210**. In this manner, the coherent matter wave pulse **210** serves as a carrier for information **150** (e.g.,

phase and amplitude) associated with the first optical pulse **120**. As shown in FIGS. **4***c* and **4***d*, the coherent matter wave pulse **210** carrying the information **150** is ejected from the phase-coherent object in the same direction as the incident optical probe pulse **120**, and travels towards and into the second phase-coherent object **100**B.

Although the coherent matter wave pulse **210** is foreign to the second phase-coherent object **100**B, once embedded in the second phase-coherent object it may be coherently added to one of the quantum wavefunctions of the bosons of the second phase-coherent object. This happens when, as shown in FIG. **4***e*, the controller **137** controls the radiation source **135** to turn on the optical coupling beam **130** so as to irradiate at least the second phase-coherent object **110**B. In the presence of the coupling beam **130**, the bosons of the second phase-coherent object **110**B cooperate to generate a second optical pulse **190**, which propagates out of the second phase-coherent object. This second optical pulse **190** is qualitatively similar to the first optical probe pulse **120**, and records the relative phase and amplitude between the coherent matter wave pulse **210** originating in the first phase-coherent object (once the coupling beam is extinguished, i.e., prior to the time corresponding to FIG. **4***c*), and propagating into the second phase-coherent object up to the time of irradiation of the second phase-coherent object by the re-energized optical coupling beam **130**.

In one exemplary implementation of the system **500** shown in FIG. **2**, the phase-coherent objects **100**A and **100**B may be Bose-Einstein condensates (BECs) of approximately 1.8×10^6 sodium-23 (^{23}Na) atoms each, wherein the BECs are separated by a distance (e.g., approximate center-to-center distance) **185** of more than 100 micrometers and created in a double-well trapping potential in internal energy state |1>. In one aspect, a 2.3-μK-deep double-well potential is formed by combining a harmonic magnetic trap provided by the magnetic trapping coils **170**A and **170**B, and a repulsive optical dipole barrier generated by the optical trapping field **140** (e.g., a focused 532 nm green laser beam **140** with elliptical Gaussian cross-section, blue-detuned from the atomic resonance of the BECs). The atoms are evaporatively cooled in the double-well potential (the Bose-condensation temperature is 660 nanoKelvin). After condensation, the magnetic potential is adiabatically softened to $\omega_z=2\pi\times20$ Hz and $\omega_r=2\pi\times40$ Hz. Subsequently, the repulsive optical dipole barrier is adiabatically lowered to 10μ, where μ is each well's resulting chemical potential. The trapping potential is then turned off in less than 200 microseconds.

In this exemplary implementation of the system **500** of FIG. **2**, once the trapping potential is turned off, and after approximately 1 millisecond, the BECs are illuminated with the optical coupling beam **130**, which is a laser beam resonant with the BECs' internal |2>→|3> quantum energy state transition and travelling in the −z direction (refer to the coordinate system axis shown in FIG. **2**). A counter-propagating, three microsecond Gaussian 'probe' laser pulse **120**, resonant with the BECs' internal |1>→|3> quantum energy state transition, is then injected into the first BEC **100**A. The input optical pulse **120** and the coupling beam **130** drive the sodium atoms (bosons) of the BECs into coherent superposition "dark" states with destructively interfering absorption amplitudes, such that neither the probe pulse **120** nor the coupling beam **130** is absorbed. The propagating probe pulse **120** creates a slight atomic polarization in the first BEC **100**A that slows and spatially compresses the pulse by a factor of approximately 5×10^7. Ultimately, the probe pulse **120** is completely contained within the first BEC **100**A. As also shown in FIG. **2**, in another aspect, the BECs **100**A and **100**B may be imaged with an imaging laser beam **160**, near resonance for the F=2→F=3 transition of the bosons of the BECs, after optical pumping to F=2.

The general theory underlying the concepts and processes discussed above in connection with FIGS. **1** through **4** is now presented, with specific non-limiting examples of some parameters drawn from the implementation example immediately above.

With $\psi_i(R, t)$, (i=1, 2, 3) representing the three components of an external wavefunction for bosons of the phase-coherent objects **100**A and **100**B (e.g., BECs) at time t and position R, the "dark state superposition" for a given phase-coherent object is given by $\Psi_D(R, t)=\psi_1(R, t)|1\rangle+\psi_2(R, t)|2\rangle$, where the amplitude and phase of the state |2> component relative to the state |1> component are determined by the amplitude and phase of the electric field of the optical probe pulse **120**,

$$E_p(R, t) = \frac{1}{2}E_p(R, t)e^{i(k_p\cdot R-\omega_p t)} + c.c.$$

(c.c. is the complex conjugate), relative to the electric field of the optical coupling beam **130**,

$$E_c(R, t) = \frac{1}{2}E_c(R, t)e^{i(k_c\cdot R-\omega_c t)} + c.c.,$$

according to:

$$\frac{\psi_2(R, t)}{\psi_1(R, t)} = -\frac{\Omega_p(R, t)}{\Omega_c(R, t)}e^{i(k_p-k_c)\cdot R-i(\omega_p-\omega_c)t} \tag{1}$$

In Eq. (1), $\Omega_p(R, t)=d_{31}\cdot E_p(R, t)/\hbar$ and $\Omega_c(R, t)=d_{32}\cdot E_c(R, t)/\hbar$ are the respective Rabi frequencies of the probe pulse **120** and coupling beam **130** (e.g., $\Omega_p=2\pi\times2.6$ MHz, $\Omega_c=2\pi\times2.6$ MHz), $d_{jk}=-e\langle j|r|k\rangle$ are electric dipole matrix elements, $E_{p,c}$ are the slowly varying envelopes of the optical laser fields, −e is the electron charge and, $\hbar$ is Planck's constant. In one aspect of this embodiment, the anti-parallel orientation of the respective wavevectors for the probe pulse **120** and the coupling beam **130**, k_p and k_c, (see FIG. **4***a*) produces phase variation in the dark state on optical length scales.

According to Eq. (1), the variation of ψ_2 in space and time mimics that of the probe pulse **120** such that a slowly varying envelope of ψ_2 accompanies that of the highly compressed, slowly moving optical pulse through the condensate. With the optical probe pulse **120** thus contained in the first phase-coherent object **100**A (see FIG. **4***b*), the coupling beam **120** is turned off (e.g., over 40 nanoseconds) leaving an imprint of the probe pulse's phase and amplitude in the form of atomic population amplitude in state |2>. More specifically, in order to preserve the dark state for the first phase-coherent object (Eq. (1)), the atoms coherently and adiabatically drive the probe pulse field to extinction, but the dark state imprint of the pulse remains in the first phase-coherent object. The spatial phase variation impressed on ψ_2 in this process corresponds to a two-photon recoil of $\hbar(k_p+k_c)/m$, where m is the atomic mass (for BECs of sodium-23 atoms, the two-photon recoil in the specific implementation example given above=59 $\mu m/ms^{-1}$). Hence a ψ_2 'messenger' matter wave pulse **210** is ejected from its initial position in the same direction as the incident probe pulse **120**, and ultimately leaves the first phase-coherent object **100**A and travels as a coherent matter

wave pulse towards, through and beyond the second phase-coherent object **100**B (see FIGS. **4***c* and **4***d*). In particular, each atom's |2> component has a momentum corresponding to two photon recoils, i.e., absorption from the probe pulse **120** and stimulated emission into the coupling beam **130**, and is ejected towards the second phase-coherent object.

When this messenger matter wave pulse is embedded in the second phase-coherent object **100**B (see FIG. **4***d*), the second phase-coherent object is illuminated with the coupling beam **130**. Even though the messenger matter wave pulse is alien to this second phase-coherent object, the atoms of the second phase-coherent object cooperatively generate a second "revived" optical pulse **190** that is qualitatively similar to the first probe pulse **120** (see FIG. **4***e*). The second revived optical pulse then propagates out of the second phase-coherent object under slow light conditions, with the propagation direction (+z) determined by the phase imprinted on the messenger atoms.

Before discussing the physics of optical pulse storage and revival (i.e., information storage and transfer) in separate phase-coherent objects, the process for a single phase-coherent object is considered. Optical pulses can be "revived" in a single phase-coherent object as long as the corresponding matter wave pulse carrying the imprint of the optical pulse remains within the phase-coherent object. In this case, the revival of an optical pulse can be described as resulting from an interference of each atom's wavefunction with itself. The ψ_2 imprint is much smaller than the extent of the ψ_1 wavefunction and has been translated (owing to two-photon recoil) from its original location. During revival, the coupling beam creates some ψ_3 amplitude sourced from the translated ψ_2 imprint, and hence a dipole moment, proportional to $\psi_1^{\bullet}(R)\psi_3(R)$, is generated in each atom, which regenerates or "revives" the optical probe pulse field.

As the system is driven into the dark state, described by Eq. (1), the ratio between the value of the initial ψ_1 at the storage location and of ψ_1 at the revival location is mapped onto the regenerated optical probe pulse. The ψ_2 imprint is coherently added to ψ_1 at the revival location as the optical pulse subsequently leaves the region under slow light conditions. This scenario shows that a direct measurement of the one-body density matrix of the phase-coherent object can be made by recording the revived optical pulse energy as a function of the distance between the storage and revival locations. That light pulse revival is possible over the full length of the phase-coherent object reflects the object's off-diagonal long-range order.

When optical pulse storage and revival occur in two different phase-coherent objects separated before condensation, each atom's wavefunction is initially localized to either but not both of the two isolated phase-coherent objects. Therefore, the dark state superposition imprinted during storage exists only for atoms of the first phase-coherent object. Nevertheless, a coherent optical pulse can still be revived from the second phase-coherent object through bosonic matter wave stimulation. The interaction between light and matter is governed by the Hamiltonian

$$\hat{H}_{int} = -\frac{1}{2}\int dR\begin{pmatrix} d_{31}^{*}\cdot\hat{E}_p^{(-)}(R)\hat{\psi}_1^{\dagger}(R)\hat{\psi}_3(R) + \\ d_{32}\cdot\hat{E}_c^{(+)}(R)\hat{\psi}_3^{\dagger}(R)\hat{\psi}_2(R) + h.c. \end{pmatrix} \tag{2}$$

where $\hat{\psi}_1^{\dagger}(R)$ and $\hat{\psi}_1(R)$ are creation and annihilation operators for an atom in internal state |i> at position R, and h.c. indicates the hermitian conjugate. Here, the laser fields also are expressed in second quantized form to stress the symmetry of the matter and light fields discussed below. During revival, when the coupling laser beam creates a population amplitude in |3> (second term in Eq. (2)), the presence of a phase-coherent object in |1> creates a large rate for bosonic stimulated scattering of atoms into the condensate mode (due to the presence of $\overline{\psi}_1^{\dagger}$ in the first term of Eq. (2)). This bosonic stimulation drives the probe pulse field on, and the four interaction terms of $\overline{H}_{int}$ in combination drive the system into a dark state. In this scenario, the field associated with the coupling beam and the matter field for atoms in |1> form a perfectly symmetric pair: bosonic stimulation into a macroscopically occupied photon field (the coupling beam) drives coherent dynamics during the initial optical probe pulse injection, whereas stimulation into a macroscopically occupied matter field (the second |1> phase-coherent object) secures coherence during generation of the second optical pulse (i.e., regeneration of the first optical probe pulse).

For optical pulse revival and optical information storage/transfer to succeed with two distinct objects, each object must have a macroscopic population of a given quantum state. Thus, in one embodiment as discussed above, the two phase-coherent objects between which information may be transferred may be two Bose-Einstein condensates (BECs) of identical bosons, each with a macroscopic number of bosons in the condensate phases. In another embodiment, the two phase-coherent objects may be two superfluids of the same kind (e.g., ^{4}He superfluids) with a macroscopic number of identical bosons that are Bose-condensed in each fluid. In yet another embodiment, the phase-coherent objects may be two superconductors, with the two superconductors being of the same or different materials. In yet another embodiment, the phase-coherent objects may include fermionic superfluids of the same kind (e.g., ^{3}He) with a macroscopic number of Cooper pairs that are Bose-condensed in each. As illustrative examples, the many-body system of bosons (including Cooper pairs) that form a phase-coherent object can be in a "number state" or a "coherent state."

In all of the foregoing examples, a Bose-Einstein condensate of bosons (including Cooper pairs of fermions) is present in the phase-coherent objects, and the rate of coherent emission events in the revival process is determined by the Bose stimulation factor, $\overline{\psi}_1^{\dagger}\overline{\psi}_1$, for scattering into the second phase-coherent object. For a macroscopic occupation of this object, the stimulated processes completely dominate the spontaneous ones. By contrast, if the atoms formed a degenerate Fermi gas, attempts at revival in the second phase-coherent object would lead to emission rates below even the spontaneous rate obtained from a non-condensed, bosonic cloud. It should also be noted that in embodiments in which the two phase-coherent objects are created independently, they have a completely random relative phase. Therefore, interference experiments in which the revived optical pulse interferes with a reference pulse would lead to high-contrast interference in each shot, but with random absolute fringe position.

FIGS. **5***a* through **5***g* illustrate a time-series of actual resonant absorption images of two phase-coherent objects **100**A and **100**B (e.g., BECs) and a "messenger" coherent matter wave pulse **210** travelling between them, pursuant to the present disclosure. The images in FIGS. **5***a* through **5***b* are based on a system **500** according to the exemplary implementation discussed immediately above (i.e., including BECs of sodium-23 atoms), and the indicated times in the respective images (e.g., 0.0 ms, 1.3 ms, 1.5 ms, 1.7 ms, 2.1 ms, 2.5 ms, and 3.0 ms) are given relative to storage of the optical probe pulse **120** in the first phase-coherent object **100**A (i.e., from

the moment at which the coupling beam **130** is turned off once the pulse **120** is completely embedded in the first phase-coherent object). In the demonstration depicted for the time-series of images shown in FIGS. **5***a* through **5***g*, the coupling beam **130** is not turned on again once the matter wave pulse **210** is embedded in the second phase-coherent object **100**B, so as to demonstrate the general nature of propagation of the matter wave pulse **210**. In particular, as shown in FIG. **5***g*, absent re-energizing the coupling beam **130**, the matter wave pulse **210** is observed to travel through and beyond the second phase-coherent object **100**B.

FIGS. **6***a* through **6***e* comparatively illustrate some of the dynamics involved in information storage and transfer in the form of optical pulse storage and revival in two separate phase-coherent objects. In these figures, revived probe pulses, normalized to input pulse intensity, are plotted against time since pulse storage (dots, left-hand axis), and simultaneously recorded coupling intensity (dashed line, right-hand axis). The insets are resonant absorption images of |1> BECs, 20 microseconds after revival. The revived optical pulses are detected on a photomultiplier tube by imaging the pulse onto a 50 μm pinhole to reject background light.

FIGS. **6***a* and **6***b* show optical pulses revived in the second of a pair of independently condensed BECs. In FIG. **6***a*, the optical pulse is revived in the second BEC after 2.67 ms during which time the |2> atom pulse travels 157 micrometers. In this instance, the Rabi frequency of the coupling beam during revival is $\Omega_{c,revival}=2\pi\times21.4$ MHz, resulting in a temporally narrowed output pulse. In FIG. **6***b*, the messenger |2> matter wave pulse travels to a different location in the second BEC, where differences in density and phase patterns between the two lead to a bimodal structure.

FIGS. **6***c* and **6***d* illustrate revived optical pulses from BECs formed by adiabatically splitting a single magnetically trapped BEC with a 1.5μ-tall light barrier, ramped up over 100 ms, and held constant for 1 s. In FIG. **6***c*, a typical pulse contains 6.9×10^3 photons, 2.2% of the input pulse energy. In FIG. **6***d*, a larger, denser second BEC yields a slower light propagation speed and a broader and less intense pulse, with similar energy to the pulse shown in FIG. **6***c*. Finally, FIG. **6***e* illustrates a control experiment in which experimental timing and conditions were exactly the same as in FIGS. **6***c* and **6***d*, but with no second BEC.

To illustrate a comparison between optical pulse revivals from two spatially separated phase-coherent objects and previous work relating to optical pulse revivals in single condensates, FIG. **7***a* shows a light pulse revived at the right end of a single BEC of 3.4×10^6 atoms, 0.69 ms after storage in the left end. The single BEC was prepared in a harmonic magnetic trap ($\omega_z=2\pi\times20$ Hz, $\psi_r=2\psi_z$). All light parameters are similar to those discussed above in connection with FIGS. **6***a* through **6***e*. FIG. **7***b* illustrates decay of the revival signal in a single thermal cloud. The energy of the revived light pulse is plotted as a function of time since pulse storage. The thermal cloud (inset) has 13.5×10^6 atoms at 470 nK, just above the critical temperature for BEC (340 nK) in the trap described in FIG. **7***a*. The input probe Rabi frequency is $2\pi\times3.2$ MHz; coupling storage and revival Rabi frequencies are $2\pi\times3.5$ and $2\pi\times17.5$ MHz, respectively.

Whereas the BECs in FIGS. **6***a* and **6***b* are condensed in separate potential wells, those in FIGS. **6***c* and **6***d* are formed by adiabatically separating an already-formed condensate. No qualitative difference is observed between revivals in a single condensate (FIG. **7***a*), in adiabatically formed condensate-pairs (FIGS. **6***c*, **6***d*), or in condensates that have always been separate (FIG. **6***a*). In all cases, no atoms are observed when state |1> is selectively imaged after the probe light pulse has been revived, indicating that the messenger matter wave pulse has been fully converted to light and state |1> atoms. Again, no revived optical pulse is observed when an isolated messenger matter wave pulse is illuminated with the coupling beam (FIG. **6***e*).

With reference again to FIG. **6***b*, this figure shows a bimodal revival pulse obtained under the same conditions as in FIG. **6***a*, except that the messenger matter wave pulse is allowed to propagate to a different location in the second |1> BEC before the second optical pulse is generated (i.e., the first optical pulse is revived as the second optical pulse). Between storage and revival times, coherent atom dynamics create phase gradient differences and a different position-dependent density ratio between the messenger matter wave pulse and the second |1> BEC. This determines the structure of the revived light pulse, as confirmed by numerical simulations.

These observations demonstrate coherent processing of optical information. In one aspect, expansion dynamics due to repulsive atom-atom interactions in the BECs after trap turn-off create ~0.5 rad μm^{-1} phase variations during the storage time. As controlling the revival time to within tens of microseconds controls the propagation depth of the messenger matter wave pulse to micrometer precision, the second optical pulse can be revived at locations where the phase patterns of the messenger matter wave pulse and second BEC match. This leads to revived optical pulses with the same shape as the incoming optical probe pulse (FIG. **6***a*). For other propagation distances of the messenger matter wave pulse, various phase patterns can be imprinted on the revived second optical pulse, and differently shaped revival pulses are recorded at the photomultiplier. In one embodiment, this coherent processing is controlled in trapped phase-coherent objects, for example, by way of manipulation of atomic scattering lengths with Feshbach resonances.

Thus, in some embodiments, methods, systems and apparatus for information storage, transfer and control (processing) according to the present disclosure include control of storage and revival times for optical information, in some cases so as to process, alter or otherwise manipulate one or more characteristics of the stored/transferred information. With reference again to the system **500** shown in FIG. **2**, it should be readily appreciated that in one embodiment, the controller **137** may be particularly configured to control at least the radiation source **135** to energize and extinguish the coupling beam **130** so as to control one or both of the storage time and revival time for the optical information.

Loss of |2> amplitude in the messenger matter wave pulse from atom-atom scattering, together with a roughly 50% loss from optical pulse propagation in the first phase-coherent object before storage, account for the difference in energy between the incident first optical probe pulse **120** and the "revived" second optical pulse **190**; there are no detectable losses from the storage and revival processes themselves. By careful selection of atomic species, magnetic sublevels, and manipulation of scattering lengths, both slow light and matter wave pulse propagation losses may be minimized. In another aspect, shaping the density profile of the |1> phase-coherent objects may increase the optical bandwidth of the process and further minimize losses.

The retrieval of optical information from a second phase-coherent object after optical storage in a completely separate first phase-coherent object is a result of slow-light-mediated atomic matter-wave amplification, which fully converts and coherently adds a messenger matter wave pulse of state |2> atomic amplitude to a receiving |1> phase-coherent object. In one exemplary implementation, coherent matter wave pulses may repeatedly be moved from one phase-coherent object to

another, which may be used as a replenishing scheme in a continuous-wave atom laser. In another exemplary implementation, the method and system described above may also form the basis for an interferometer in which spatially selected parts of an atomic wavefunction interfere. As demonstrated for bosons, such interferometry can be used for measurements of off-diagonal long-range order in spatially selected regions of degenerate gases of fermions and bosons.

In yet another embodiment, coherent optical information processing with matter wave dynamics may be accomplished with a single phase-coherent object according to the principles outlined above. For example, with reference to FIG. **8**, which schematically outlines a method and system for information processing using a single phase-coherent object, in the presence of an optical coupling beam **130** (generated by a radiation source **130** that is responsive to controller **137**), a first optical pulse **120** is injected into the phase-coherent object **100**A, where it is spatially compressed to a length much shorter than the coherent extent of the object. The coupling beam **130** is then turned off, leaving the atoms in the phase-coherent object **100**A in quantum superposition states that comprise a stationary component and a recoiling component in a different internal state. The amplitude and phase of the spatially localized first optical pulse are imprinted on the recoiling part of the object's wavefunction, which moves out of the phase-coherent object as a messenger matter wave pulse **210** that carries information **150** associated with the first optical pulse **120**. While this matter wave pulse **210** is outside of the phase-coherent object **100**A (e.g., in free space), it can be held, or manipulated/processed, by a processor **250**, and then sent back to the phase-coherent object **100**A. When the matter wave pulse **210** arrives back to and is embedded in the phase-coherent object **100**A, the object **100**A is re-illuminated with the coupling beam **130**. A second optical pulse **190** is thusly generated from the phase-coherent object **100**A, and the returned messenger matter wave pulse is coherently added to the matter field of the object by way of slow-light-mediated atomic matter-wave amplification. The revived second optical pulse **190** records the relative amplitude and phase between the original matter wave pulse at the storage time and the generation of the second optical pulse at revival time (upon return of the matter wave pulse **210** to the phase-coherent object).

More specifically, with reference to the discussion above in connection with BECs, in one embodiment the |2> component of the wavefunction of the bosons in the BEC (the 'messenger' matter wave pulse **210**) is brought out of the |1> BEC and thereby isolated from the |1> BEC during the storage or processing time. If the two condensate components (of |1> and |2> atoms) subsequently phase de-cohere (develop a non-deterministic relative phase, which occurs for long processing times), the optical information nonetheless can be "read out" when the |2> component returns into the |1> component. The absolute phase of the revived light is not known, but no information is carried in the absolute phase (which is just a reference). Accordingly, the matter imprint of the light pulse (i.e., the |2> component or matter wave pulse **210**) can be selectively manipulated by the processor **250** when it is isolated from the |1> component, without touching the "readout medium," i.e., the phase-coherent object **100**A. Also, according to another aspect, dephasing times can be significantly improved, thereby increasing the available time for processing, since the two components only co-exist when light is converted to matter or vice versa (i.e., they are separated during the actual processing).

In other aspects of information processing using a single phase-coherent object as shown in FIG. **8**, gravity may be employed to return the messenger matter wave pulse **210** back to the object; for example, while not explicitly shown in FIG. **8**, the messenger matter wave pulse **210** may be propagated up vertically, or almost vertically (to allow for read out in a different part of the phase-coherent object **100**A) and allowed to come back down (due to the gravitational force) to the object, in which case the generated optical pulse **190** would propagate in the opposite direction to the original propagation direction (coming in). In this example, the propagation direction for the coupling beam **130** should also be reversed. Moreover, the processor **250** may employ electric fields, magnetic fields, RF fields, or optical fields, or any combination thereof, to direct the messenger matter wave pulse **210** back into the phase-coherent object **100**A.

In yet another embodiment, the processing of information carried by the coherent matter wave pulse **210** (i.e., the imprint of the first optical pulse), as outlined in FIG. **8**, may be implemented for systems and methods involving two spatially-separated phase-coherent objects, as discussed above in connection with FIGS. **1** through **4**. In particular, as the matter wave pulse **210** travels between first and second phase-coherent objects, a processor **250** may alter at least one characteristic associated with the matter wave pulse **210** so as to manipulate the information carried by the matter wave pulse.

In sum, coherent optical information processing with matter wave dynamics is accomplished between two phase-coherent objects or using a single phase-coherent object. In exemplary embodiments, optical information is imprinted on a Bose-condensed atom cloud, quantum coherent atom dynamics alter the atomic imprint during the storage time, and finally the result is written back onto propagating optical fields. The methods, systems and apparatus discussed herein have significant utility for applications involving classical and quantum information processing. As the messenger matter wave pulse **210** travels between two phase-coherent objects, or outside of a single phase-coherent object (e.g., in free space), it can be independently trapped—potentially for minutes—and manipulated with external fields (e.g., via the processor **250**). In various examples, the optical probe pulse **120** may be in either a classical state or a quantum (e.g., squeezed) state, and the processor **250** may be configured so as to manipulate the matter wave pulse **210** to place it in a classical state or a quantum (e.g., squeezed) state. Resulting classical and quantum states of the processed matter wave pulse **210** can then be mapped onto revived/regenerated fields associated with the second optical pulse **190**. Various implementations of the inventive methods and systems disclosed herein are capable of appreciably large optical delay-bandwidth products (e.g., on the order of $\sim 10^3$-10^4), demonstrating the suitability of the methods and systems disclosed herein for implementations of dynamically controllable optical delay lines (or "optical buffers") as well as optical memory devices.

With reference again for the moment to FIG. **2**, in yet other embodiments, a system **500** for information storage and transfer between two phase-coherent objects **100**A and **100**B as shown in FIG. **1**, or for processing of information based on a single phase-coherent object as shown in FIG. **8**, may employ electro-optical trapping techniques (rather than the trapping techniques discussed above in connection with FIG. **2**) to facilitate trapping and cooling of the phase-coherent object(s). In general, as noted earlier, trapping and cooling of the phase-coherent object(s) in various embodiments involves creating an attractive magnetic or electric potential which is balanced by a repulsive potential provided by an optical field. In some embodiments discussed in further detail below, trapping and cooling of the phase-coherent object(s)

may be accomplished via an electro-optical technique employing nanoscale structures (structures having dimensions on the scale of nanometers, e.g., nanotubes, nanowires, nanocylinders, nanospheres, etc.) to create attractive potentials from static electric fields, which are balanced by a repulsive optical potential. In some exemplary implementations, inventive electro-optical atomic trapping methods and apparatus according to the present disclosure, based on nanoscale structures, facilitate integrated silicon wafer-based realizations of the inventive methods and systems discussed above in connection with FIGS. **1** through **8**.

The internal quantum states of neutral atoms couple to laser light via their electric dipole moment, and this coupling can in turn affect the center-of-mass motion of atoms. In this manner, laser light can be used to trap and cool neutral atoms. Compared to magnetic microtraps, optical traps on a nanoscale offer increased trap depth and cooling of the atomic motion. While some designs for atomic traps near nanostructures have been proposed in the academic literature, methods for dealing with the van der Waals forces near the material surface, as well as providing a viscous force to load and stabilize the trap, have not yet been proposed.

In view of the foregoing, Applicants have recognized and appreciated that surface plasmons may be significant in the context of electro-optical nanoscale traps to address the issues of van der Waals forces and loading and stabilizing of the trap. Metallic nanoparticles are known to exhibit optical resonances based on surface plasmons, at which nanometer-scale focusing and associated large enhancements of the electromagnetic field occur. Applicants have recognized and appreciated that a strong plasmon-enhanced laser field in proximity to a nanostructure may be employed not only to counter an attractive electrostatic potential generated by the nanostructure, but additionally to damp atomic motion, thereby enabling stable and truly nanoscale atomic traps.

Accordingly, some embodiments of the present invention are directed to nanoscale electro-optical atomic trapping methods and apparatus based at least in part on the combined attractive potential of a static electric field generated by nanostructures, and a repulsive potential of an appropriately tuned optical (laser) field. In one aspect of this embodiment, the nanostructures are particularly configured to facilitate surface plasmon-enhanced laser field gradients proximate to the nanostructures, and in turn these plasmon-enhanced laser field gradients provide a viscous damping force that significantly facilitates loading and stabilizing of the trap.

FIG. **9** illustrates a perspective view of an electro-optical atomic trapping apparatus **400** according to one embodiment of the present invention. For purposes of illustrating the various concepts germane to electro-optical trapping methods and apparatus according to the present disclosure, the trapping apparatus **400** of FIG. **9** is suitable for forming a "single potential well" trap, e.g., for one phase-coherent object. It should be appreciated, however, that the various concepts discussed in detail below in connection with FIG. **9** may be readily employed to realize "multiple potential well" electro-optical trapping methods and apparatus for trapping two or more phase-coherent objects (as discussed below in connection with FIGS. **13-15**). Accordingly, a "double potential well" electro-optical trapping apparatus may be employed in a system similar to that shown in FIG. **2** for storage, transfer and/or control of information via matter wave dynamics between two phase-coherent objects.

In the apparatus **400** of FIG. **9**, a nanoscale wire **412** (e.g., a single-walled carbon nanotube), is attached at each end to electrodes **402** and **404** and suspended above a gap **408** in a support structure **418**. As discussed further below, the support structure **418** may include a substrate such as glass or silicon, and the gap **408** may result from a well or trench formed in the support structure, or an aperture that passes completely through the support structure. As shown in FIG. **9**, the suspended nanoscale wire **412** supports two or more three-dimensional conductive (e.g., metallic or metal-coated dielectric) nanostructures **406** (e.g., nanocylinders or nanospheres) located along the nanoscale wire **412** within the area of the gap **408**. In various aspects, the nanoscale wire **412** provides both mechanical stability and an electric conduction path for charging the nanostructures **406**. While two nanostructures **406** are shown in FIG. **9**, it should be appreciated that the embodiment of FIG. **9** is not limited in this respect, as various numbers of nanostructures may be introduced along a length of the nanoscale wire **412** at various predetermined (e.g., controlled) locations, including a single nanostructure or a periodic array of more than two nanostructures. In one exemplary implementation, the nanostructures **406** may be silver or silver-coated aluminum oxide nanospheres having a diameter of approximately 90 nanometers and separated by approximately 2 nanometers.

In FIG. **9**, a voltage applied to the nanoscale wire **412** and in turn to the nanostructures **406**, via one or more of the electrodes **402** and **404**, provides an attractive electrostatic potential for atoms proximate to the nanostructures **406**. An optical trapping field **440** in the form of a laser beam (similar to the optical trapping field **140** shown in FIG. **2**) is directed at the region containing the nanostructures **406**. In one aspect, the optical trapping field is blue-detuned from the atomic resonance of the atoms to be trapped, so as to provide a repulsive optical potential that keeps atoms off of the surface of the nanostructures **406**. The combination of the attractive electrostatic potential from the nanostructures **406** and the plasmon-enhanced repulsive optical potential from the optical trapping field **440** form a cylindrically-symmetric toroidally-shaped potential minimum trapping region **410**. In particular, the blue-detuned optical trapping field **440** provides a barrier to overcome the attractive van der Waals potential near the surface of the nanostructures **406**. Furthermore, due to surface plasmon-based optical resonances of the conductive nanostructures **406**, the optical field **440** is significantly enhanced proximate to the nanostructures **406** so as to provide a viscous damping force for loading and stabilizing the trap. Atoms of an atom stream **414** (e.g., an atom beam) launched toward the nanostructures **406** rapidly lose kinetic energy due to the plasmon-enhanced field gradients of the optical trapping field **440**.

FIG. **10** illustrates a more detailed cross-sectional side view of a portion of the electro-optical atomic trapping apparatus **400**, taken along the line I'-I' in FIG. **9**, according to one embodiment of the present disclosure. It should be appreciated that the apparatus details shown in FIG. **10** provide merely one exemplary implementation, and that atomic trapping apparatus according to the present invention are not limited to the specific example shown in FIG. **10**. Exemplary techniques for fabricating at least some portions of the apparatus **400** shown in FIG. **10** are provided in International Publication Number WO 2005/000739 A1, published Jan. 6, 2005, entitled "Carbon Nanotube Device Fabrication," which publication is hereby incorporated by reference herein.

In the apparatus **400** shown in FIG. **10**, the nanoscale wire **412** (e.g., a single-walled carbon nanotube) extends across the support structure **418** constituted at least by a substrate **420**. Examples of suitable substrates **420** include, but are not limited to, silicon, glass, and sapphire. A well, trench or aperture is formed through at least a portion of the thickness of the support structure **418** so as to provide the gap **408** on at

least one surface of the support structure, which gap is traversed by the nanoscale wire **412**; in the example of FIG. **10**, an aperture extends completely through the support structure, such that the nanoscale wire **412** forms a bridge across the gap **408** and can be accessed essentially unobstructed from either above or below the support structure **418**. In one exemplary implementation, the substrate **420** may be a silicon substrate having a thickness of approximately 500 micrometers. A membrane including one or more layers may be disposed on a surface of the substrate **420** to provide support for the nanoscale wire **412** as well as electrical insulation between the wire and the substrate. For example, in one implementation, a first layer **422** of silicon dioxide (SiO_2) having a thickness of approximately 2 micrometers may be formed on the silicon substrate **420**, and a second layer **424** of silicon nitride (Si_3N_4) having a thickness of approximately 200 nanometers may be formed on the first layer **422** of silicon dioxide (these layers may be formed in a conventional manner, e.g., by low pressure chemical vapor deposition (LPCVD)). To provide for the gap **408**, and optionally a free-standing membrane of the one or more layers **422** and **424**, the substrate first may be etched in a conventional matter (e.g., for silicon substrates, anisotropic wet etching by potassium hydroxide (KOH) may be employed) through its thickness to the first layer **422** of the membrane.

Subsequently, one or more metal layers **402** (e.g., gold, chromium, platinum, palladium) may be deposited before or after nanotube growth for forming electrically conducting contact pads to provide electrical connection to the nanoscale wire **412** shown in FIG. **10**, with the one or more intervening layers **424** and **422** of the membrane providing electrical insulation from the substrate **420**. A layer of nanotube synthesis catalyst (not shown in FIG. **10**) is deposited on top of or below the metal layer(s) **402** in FIG. **10** to facilitate generation of the nanoscale wire **412**; examples of materials suitable for a nanotube synthesis catalyst include, but are not limited to, iron, cobalt, nickel, or alloys of these materials. In exemplary implementations, such a catalyst layer may be on the order of 2 nanometers to facilitate single-walled nanotube growth (catalyst layer thickness is related to nanotube diameter and generation of single-walled vs. multi-walled structures). Once the catalyst layers are formed at selected sites on the support structure, an aperture is formed through the metal layer(s) (if already present) and the membrane (including the one or more layers **424** and **422**), across which the nanoscale wire **412** is to be provided (various conventional methods, such as lithographic patterning/etching of the membrane layer(s), or focused ion beam milling, may be employed to form the aperture). In this manner, the aperture is completed through the substrate **420**, the membrane layer(s) **422**, **424**, and the metal layer(s) **402** (if already present), such that synthesis of the nanoscale wire **412** may take place across the gap **408**. In one exemplary implementation, a width **428** of the gap traversed by the nanoscale wire may be on the order of approximately 10 micrometers. Nanotube growth from the catalyst layer is carried out in a furnace at a temperature of between about 600 degrees C. to 1500 degrees C., and preferably about 900 degrees C.

With respect to formation of the nanostructures **406** in the apparatus **400** shown in FIGS. **9** and **10**, a single-walled carbon nanotube serving as the nanoscale wire **412** may be coated with various materials via chemical vapor deposition (CVD) or atomic layer deposition (ALD) so as to form one or more of the nanostructures **406**. Some exemplary coating techniques for carbon nanotubes suitable for purposes of the present disclosure are described in detail in International Publication Number WO 2005/124888 A1, Published Dec. 29, 2005, entitled "Suspended Carbon Nanotube Field Effect Transistor," which publication is hereby incorporated herein by reference. CVD techniques (particularly low pressure, i.e. LPCVD, techniques) can be employed to coat nanotubes with any of a wide range of materials including, but not limited to, nitrides, oxides (including metal oxides), polysilicon, metals, and semiconducting materials. Likewise, ALD techniques may be employed to deposit oxides, including metal oxides, and some metals. Particular techniques for gas-phase functionalization of single-walled carbon nanotubes to facilitate ALD of various materials on a nanotube is discussed in detail in U.S. Non-provisional utility application Ser. No. 11/703,375, filed Feb. 7, 2006, entitled "Gas-Phase Functionalization of Carbon Nanotubes," which application is hereby incorporated herein by reference. More specifically, ALD techniques for depositing metals and metal oxides based-on metal acetamidinate vapors, including metals such as manganese, iron, cobalt, nickel, copper, silver and lanthanum, are discussed in International Publication Number WO 2004/0046417 A2, published Jun. 3, 2004, entitled "Atomic Layer Deposition using Metal Amidinates," which publication is hereby incorporated herein by reference.

Using any one or more of the aforementioned material deposition techniques for nanotubes, metal or metal-coated (e.g., silver or silver-coated aluminum oxide) nanostructures **406** may be formed along the nanoscale wire **412** at predetermined (e.g., controlled) locations via an "ice lithography" patterning technique based on condensed vapors. Some examples of such patterning techniques are discussed in detail in International Publication Number WO 2007/044035 A2, published Apr. 19, 2007, entitled "Patterning by Energetically-stimulated Local Removal of Solid-condensed-gas Layers and Solid State Chemical Reactions Produced with Such Layers," which publication is hereby incorporated by reference herein. In "ice lithography," a vapor (e.g., water vapor) may be condensed to form a solid condensate layer on a surface of the nanotube; essentially, the nanotube is coated with ice. Subsequently, one or more selected regions of the condensate layer (e.g., where one or more nanostructures **406** are desired) may be removed in a highly localized manner by directing a beam of energy (e.g., an electron beam) at the selected region(s) to melt the solid condensate and expose the nanotube. Once the solid condensate is removed from one or more selected regions, any one or more of the various material deposition techniques discussed above may be employed to deposit material to form the nanostructure(s). Once one or more nanostructures are formed on the nanotube, the remaining condensate can then be removed from other regions of the nanotube (e.g., the ice may be allowed to sublime).

In one exemplary implementation, one or more silver nanostructures may be formed at predetermined selected regions on the nanoscale wire **412** via ice lithography and ALD, in which gas-phase functionalization is employed to facilitate ALD based on silver acetamidinate vapors. In another exemplary implementation, the nanostructures may be formed by first depositing a dielectric metal oxide "core" (e.g., aluminum oxide), followed by an outer metallic "shell" (e.g., silver). In one aspect discussed further below, varying the thickness of such a metal shell portion of a nanostructure having a dielectric core provides for tunability of resonance conditions for surface-plasmon enhanced optical fields employed in the electro-optical trapping apparatus. In yet another aspect, the actual shape of the nanostructures may be determined at least in part on the material forming the nanostructure; for example, some materials when deposited may tend to form a substantially spherical shape, while other mate-

rials when deposited may tend to form a substantially cylindrical or other three-dimensional shape.

With respect to the theory of operation of the two-nanostructure/single potential well electro-optical atomic trapping apparatus **400** shown in FIGS. **9** and **10**, a trapping device with spherical silver nanostructures **406** (nanospheres) having a diameter of 90 nanometers and separated by 2 nanometers, with an applied voltage V_{NT} across the nanoscale wire **412**, is considered for purposes of illustrating the salient concepts. The potential for an atom near the nanospheres is approximately a combination of an optical dipole potential due to the plasmon-enhanced laser field U_L, the DC Stark shift U_{DC} and the van der Waals energy of the ground state V_g:

$$U_{trap}=U_L+U_{DC}+V_g. \tag{3}$$

The optical dipole potential is given by

$$U_L = \frac{\hbar\delta}{2}\ln(1+s) \tag{4}$$

where s is the saturation parameter

$$s = \frac{\Omega^2/2}{\gamma^2/4+\delta^2}, \tag{5}$$

δ is the detuning between the laser and the atomic resonance including DC Stark shifts and van der Waals shifts, γ is the decay rate of the excited state modified by the presence of the nanostructure (discussed further below),

$$\Omega = \frac{\mu E_0^L}{\hbar}$$

is the Rabi frequency describing the coupling of the laser-induced electric field of amplitude E_0^L to the atomic dipole moment μ, and U_{DC} and V_g are derived below.

To solve for both the static and laser-induced electric fields in the near field, the quasi-static limit is considered. To handle the double-sphere geometry, contributions from each nanosphere's induced charge distribution to the electric potential Φ are expanded in spherical harmonics about each sphere center and boundary conditions are applied by translating between the two origins using addition theorems. In this manner, the electric field may be readily solved everywhere in space with external plane wave or dipole sources. In the case that the external source is an incident plane wave laser field E^{inc} at frequency ω, the total electric field is $E_j^L(r)=M^{ji}(r,\omega)E_i^{inc}$, where M is the matrix describing the plasmon-induced enhancement. In the case of an external dipole source p oscillating at frequency ω at location r', the induced charge distribution in the nanostructure creates a reflected electric field E^{ref} everywhere in space according to $E_j^{ref}(r)=G_{ji}(r,r';\omega)p_i$ where G is the matrix describing the Green's function for the given geometry. In the quasi-static calculations, we use the dielectric constant of silver corresponding to the relevant excitation frequency of the source. The static field E^{DC} is calculated with the spheres fixed to a particular voltage.

FIG. **11** is a graphical representation of a cross-section of the trapping region **410** of the electro-optical atomic trapping apparatus of FIGS. **9** and **10**, showing the trapping potential given by Eq. (3) for an atom in the trapping region, according to one exemplary implementation. For the exemplary potential depicted in FIG. **11**, the optical trapping field **440** includes laser light of wavelength λ=475 nm polarized along the axis connecting two silver nanospheres **406** of diameter 90 nm and separation 2 nm, which corresponds to a plasmon resonance of 457 nm. The detuning between the laser frequency ω and the bare atomic resonance ω_0 is picked to be Δ=500 Γ, where

$$\Gamma = \frac{q^2\omega_0^2}{6\pi\varepsilon_0 m_e c^3}$$

is the decay rate of the excited state in free space. The incident laser intensity is $I_0=4.6\times10^3$ W/cm^2, and the voltage of the nanospheres is V=3.5 Volts (V_{NT} as depicted in FIG. **10**). With these parameters, the saturation parameter given in Eq. (5) is 0.24 far from the trap and 0.09 at the trap center. For contrast, the graytone scale saturates at the minimum value of U_{trap} in the trapping region and has a range equal to the approximate equilibrium temperature. The low energy area near the surface of the nanospheres is the region where the attractive van der Waals energy dominates, and is not part of the trapping region. The trapping potential/region has cylindrical symmetry in the quasi-static limit.

The incident optical trapping field **440** causes Joule heating in the nanospheres according to

$$Q = \frac{\omega}{2}\mathrm{Im}(\varepsilon_{Ag})\int (E_0^L)^2 dV.$$

For the parameters in FIG. **11**, Q is estimated as Q=2 μW in each sphere. The suspended nanoscale wire **412** (e.g., carbon nanotube), due to its high thermal conductivity, conducts heat from the nanospheres **406** to a room-temperature substrate. To estimate the temperature distribution in the nanowire/nanosphere system, the heat diffusion equation is numerically solved in one dimension for a 5 μm half-length, 2 nm radius nanotube with a point heat source to represent a nanosphere on one end and the other end fixed at T=300K. The thermal conductivity of the nanotube is obtained from the relevant academic literature, and a maximum temperature of ≈640 K is found from the estimate. Since the thermal conductivity of the nanotube degrades as T increases, increasing the laser intensity beyond 4.6×10^3 W/cm^2 would cause the temperature to runaway (and potentially melt the nanostructure).

We consider the internal electron states of a trapped atom to be a single ground state |g> and three excited states $|e_r\rangle, |e_\phi\rangle$, and $|e_z\rangle$ which are degenerate for an atom in free space. The atom is symmetric in the sense that the dipole matrix element between the ground state and any excited state $\langle e_i|\vec{d}|g\rangle=\mu\vec{i}$ for i=r, ϕ, z where $\{\vec{i}\}_{i=r,\phi,z}$ form orthonormal basis vectors in a cylindrical coordinate system. The parameter μ is given by

$$\mu = \sqrt{\frac{\hbar q^2}{2m_e\omega_0}}$$

(the value for a two-level atom), q is the magnitude of the electron charge, m_e is the mass of the electron, and ω_0 is the resonance frequency of the atom. The static polarizability is given by

$$\alpha_0 = \frac{q^2}{m_e\omega_0^2}.$$