S-AK/RKT

JOHN F. KENNEDY
SPACE CENTER

May 15, 1964

N64-26368

Code-1 Cat. 10

Nasa TMX-51843

453 p.

Regular

ENGINEERING REPORT
APOLLO COMMAND MODULE ACCESS ARMS
SATURN IB
LAUNCH COMPLEXES 34 AND 37

OTS PRICE

XEROX $ 23.50 ph.

MICROFILM $ _____

KSC FORM 16-12 (1/64)

CASE FILE COPY

193821

ENGINEERING REPORT

APOLLO COMMAND MODULE ACCESS ARMS

SATURN IB

LAUNCH COMPLEXES 34 AND 37

May 15, 1964

K-DE2, Mr. E. E. Chapple

NOTES
UNLESS OTHERWISE SPECIFIED
1. INSTALL FITTINGS PER A75M 05875
2. FOR HYDRAULIC & PNEUMATIC SCHEMATIC SEE J75M 06282
3. SHEET 1 OF [illegible] ACCORDING TO [illegible] PER ATP [illegible]
4. [illegible]
5. [illegible]
6. APPROVED [illegible]
7. APPROVED [illegible]

148	AN960PD10		34	WASHER #10
141	MS35266-63		12	SCREW #10-32NF-2A
140	MS35266-64		12	SCREW #10-32NF-2A
139	D75M-06994		1	SPACER ASSY [illegible]
138	MS27650-102		12	NUT, HEX #10-32NF-2B
137	D75M-07288-6		1	CABLE ASSY MAIN [illegible]
136	D75M-07288-9		1	CABLE ASSY STATMAIN [illegible]
135	D75M-07288-8		1	CABLE ASSY MAIN [illegible]
134	D75M-07288-7		1	CABLE ASSY MAIN [illegible]
133	D75M-07288-6			CABLE ASSY [illegible]
132	D75M-07288-5			CABLE ASSY [illegible]
131	D75M-07288-4			CABLE ASSY STATMAIN [illegible]
130	D75M-07288-3		1	CABLE ASSY STATMAIN [illegible]
129	D75M-07288-2		1	CABLE ASSY [illegible]
128	D75M-07288-1			CABLE ASSY STATMAIN [illegible]
127	J75M-06901			[illegible]
126	J75M-06280-3	AS REQ'D	7	EPOXY ADHESIVE
125	B75M-00178			VALVE VENT PORT [illegible]
124	MS20995F38		3	WIRE LOCK
123	MS35224-81		18	SCREW
122	AN428-4A		2	BOLT EYE
121	MS35240-73		4	SCREW
120	MS35224-63		5	SCREW
119	AN4-6A		2	BOLT HEX
118	AN3-6A		2	BOLT HEX
117	AN4-34A		4	BOLT HEX
116	MS960-416		2	WASHER
115	AN960-10L		34	WASHER
114	MS20365-832		34	NUT
113	MS35224-78		5	SCREW
112	MS20365-428	4	3	NUT
111				
110				
109	MS35224-[illegible]		2	SCREW
108	AN4-C5A		4	BOLT HEX
107	AN565A428H4		2	SET SCREW
106	MS20365-832		2	NUT
105	AN960-[illegible]		2	WASHER
104	AN49-C11A		2	BOLT EYE
103	MS35224-64		4	SCREW
102	MS35234-[illegible]		6	SCREW
101	MS35650-44		6	NUT
100	MS35337-78		6	WASHER LOCK
[illegible]	MC176C6			COUPLING
98	MC235C7		2	REDUCER ADAPTER
97	MC206C6		1	TEE ASSY SWIVEL
96	J75M-06283-24		1	3/8 TUBING ASSY
95	MC206C6		2	TEE ASSY SWIVEL
94	MC166C16		6	UNION BHD
93	B75M-06871		1	VALVE, RELIEF
92	B75M-00177		6	VENT VALVE
91				
90	B10435670		1	FILTER, PNEUMATIC
89	B10425328-2		1	VALVE 3/8 CHECK
88	MC206C6-4		2	REDUCER
87	MS35206-[illegible]		3	SCREW
86	MC200C16		4	ELBOW ASSY SWIVEL
85	B75M-06302		1	VALVE PRESS REG
84	J75M-06283-[illegible]		2	3/8 TUBING ASSY
83	MC177C16		4	CAP ASSY
82	MC177C6		4	CAP ASSY
81	MC177C4		3	CAP ASSY
80	MC174C16		6	NUT BHD
79	MC174C6		4	NUT BHD
78	MC174C4		3	NUT BHD
77	MC166C6		1	UNION BHD
76	MC166C4		4	UNION BHD
75	MC163C6			CROSS FLARED
74	MC176C6		2	NUT COUPLING
73	MC162C6			TEE FLARE TUBE
72	MC235C3			REDUCER ADAPTER
71	MC420C7		4	EXPANDER ADAPTER
70	MC205C6		4	TEE ASSY SWIVEL
69				
68	MC206C6		2	TEE ASSY SWIVEL
67	MC237C6		2	ADAPTER
66	MC[illegible]		2	PLUG & SOCKET
65	MS28778-[illegible]		2	PACKING PREFORMED
64	MS28778-6		6	PACKING PREFORMED
63	MC[illegible]-6			ADAPTER
62	MS28778-4			PACKING PREFORMED
61	MC237-4		1	ADAPTER
60	MS[illegible]		2	PACKING PREFORMED
59	MC237-3			ADAPTER
58	[illegible]			[illegible]
57	[illegible]			[illegible]
56	MC242C13			[illegible]
55	[illegible]			[illegible]
54	[illegible]			[illegible]
53	[illegible]			[illegible]
52	[illegible]			[illegible]
51	J75M-06281-22			3/8 TUBING ASSY
50	[illegible]		1	3/8
49	[illegible]			1/4
48	[illegible]			3/8
47	J75M-06283-[illegible]			6" TUBING ASSY
46	NOT USED			
45	J75M-06283-16		2	1/4 TUBING ASSY
44	[illegible]			3/4
43	[illegible]		3	1/8
42	[illegible]			3/8
41	[illegible]			3/8
40	[illegible]			1/4
39	[illegible]			3/8
38	[illegible]			1/4
37	[illegible]		1	3/8
36	[illegible]			1/2
35	[illegible]			3/8
34	[illegible]			1/4
33	[illegible]			1/4
32	[illegible]			3/8
31	[illegible]			3/8
30	J75M-06283-[illegible]		3	3/8 TUBING ASSY
29	B10425701		1	VALVE 3 WAY 2 POSITION
28	C75M-06710		1	PANEL MTG WELDMENT
27	C75M-06366			FRONT PANEL CENTER SUB SCREEN
26	B75M-06047			PLATE CALIBRATED BLEED
25	B75M-06931			SWITCH
24	B75M-10442			VALVE BALL SHUTOFF
23	J75M-06280-[illegible]		18	NUT SPLINE
22	J75M-06280-[illegible]		1	GASKET
21	J75M-06686			SPACER
20	J75M-06689			SHAFT EXTENSION AND CAM
19	B75M-06691			BRACKET SWITCH MTG
18	B75M-07177			GASKET
17	B75M-07164			RETAINER
16	J75M-10316			ADMIT WELDMENT
15	D75M-06280-2			[illegible] PANEL
14	B75M-06650			BRACKET
13	D75M-07170			[illegible] PANEL LOWER
12	C75M-10[illegible]			BOTTOM PLATE
11	B75M-06686			VALVE 4 WAY
10	D75M-06280-[illegible]			[illegible] PANEL
9	[illegible]			[illegible]
8	B75M-50[illegible]			[illegible] 0-2000 PSI
7	[illegible]			[illegible] PANEL SEE
6	C75M-06[illegible]			[illegible]
5	C75M-6[illegible]		2	[illegible]
4	B75M-06[illegible]			[illegible]
3	[illegible]			[illegible]
2	D75M-[illegible]			[illegible] PANEL
1	N-434444-[illegible]			SWITCH PRESSURE
	D75M-[illegible]			[illegible]

[illegible]	[illegible]	CONTROL PANEL ASSEMBLY	GEORGE C. MARSHALL SPACE FLIGHT CENTER
[illegible]	[illegible]	[illegible]	75M-00280

Control Panel Assembly Parts List

ABSTRACT

Design studies beyond those documented in two publications so designated, a philosophy and criteria publication, two memoranda, and a preliminary engineering report have led to modifications and refinements shown in this engineering report. All prior reports (cited) are superseded by the present report.

The Basic Truss and the Spacer Trusses are made of aluminum and have the same cross section. The difference between the arm for Complex 34 and the arm for Complex 37 lies primarily in the difference in the Spacer Trusses.

Fiber glass, once proposed for the Environmental Chamber, has been rejected in favor of aluminum. Aluminum structural shapes, plate, and sheet were selected because they lend themselves to precise analysis and routine fabrication; other factors considered were the comparative weight and ease of modification of aluminum structures.

The hydraulic rotary actuator used on Complexes 34 and 37 is of the vane type, weighs approximately 600 pounds, and is mounted in pairs in tandem (shaft centerlines co-linear). There is no direct connection between the actuator shafts; however, spur gears on the shafts transfer torque to hinge gears which are mounted on a common framework.

The service structure for Complex 37 is equipped with silo gates and work platforms for the swing arms; the service structure for Complex 34 has no silo gates, but is furnished with enclosed adjustable work platforms. Both service structures are mobile.

Reasons for the sequence of operation are given in Section II of this report. The Access Platform, its purpose, construction, and its relationship with the Access Arm and the Umbilical Tower are presented is Section III. The Access Arm and its components, the Basic Truss and the Spacer Trusses are discussed in Sections V and VI. The Environmental Chamber, its components and equipment are described in Section VII. Handling and erection are presented in Section VIII. The Hydraulic-Pneumatic System is presented in Section XIII. Schedules are shown in Appendix A, and calculations are given in Appendix B.

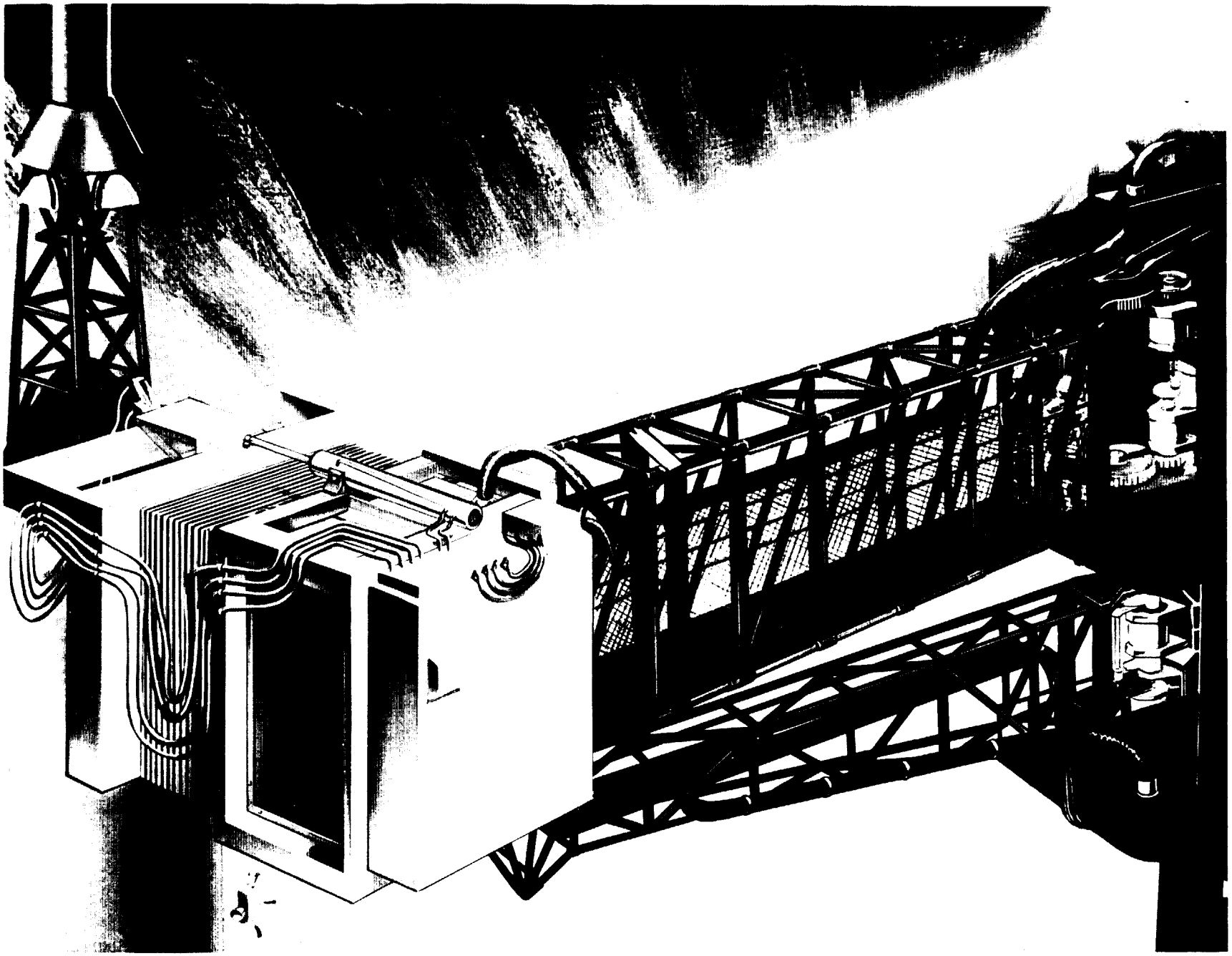

APOLLO ACCESS ARM

May 15, 1964

ENGINEERING REPORT
APOLLO COMMAND MODULE ACCESS ARMS
SATURN IB
LAUNCH COMPLEXES 34 and 37

APPROVAL:

E E Chapple

Mr. E. E. Chapple
Project Engineer
K-DE2

S D Stahley

Mr. S. D. Stahley
Chief, Mechanical Section
K-DE2

Curt P. Herold

Mr. C. P. Herold
Deputy Chief, Launch Equipment Branch
K-DE

CONCURRENCE:

Mr. H. E. McCoy
MSC-POD

Robert T. Moore Jr.

Mr. R. T. Moore, Jr.
Chief, Launch Equipment Branch
K-DE

TABLE OF CONTENTS

Section		Page
	SUMMARY	1
	INTRODUCTION	4
I.	OPERATING PHILOSOPHY AND CRITERIA	7
II.	SEQUENCE OF OPERATIONS - LC 34 and LC 37	15
III.	ACCESS PLATFORMS, SATURN IB, COMPLEXES 34 and 37	24
IV.	ACTUATING ASSEMBLY	27
V.	BASIC TRUSS	33
VI.	SPACER TRUSS	43
VII.	ENVIRONMENTAL CHAMBER	51
VIII.	HANDLING AND ERECTION	61
IX.	LATCH-BACK ASSEMBLY	73
X.	CONTROL CONSOLE AND LCC PANEL	75
XI.	ACCUMULATOR STAND	80
XII.	TOWER DISTRIBUTOR	83
XIII.	HYDRAULIC-PNEUMATIC SYSTEM	91
XIV.	GOX CONDITIONING MODULE	100
XV.	SERVICE LINES	102

* * * * *

Appendix A - - - - Schedules, Lists

Appendix B - - - - Calculations

LIST OF ILLUSTRATIONS

Figure	Title	Page
1.	Ingress Route of Astronauts and Vehicle Vehicle Flight Path (3 sheets)	8
2.	LES Tower Loading	14
3.	Spacecraft Configuration and Nomenclature (3 sheets)	21
4.	Apollo Access Platform	25
5.	Actuating Assembly	28
6.	Hydraulic Rotary Actuator Tubing	29
7.	Hydraulic Rotary Actuator	30
8.	Apollo Access Arm (7 sheets)	34
9.	Basic Truss Assembly (2 sheets)	41
10.	Spacer Truss Assembly, Complex 34 (3 sheets)	44
11.	Spacer Truss Assembly, Complex 37 (3 sheets)	47
12.	Environmental Chamber (4 sheets)	52
13.	Apollo Access Arm Lifting Sequence (4 sheets)	62
14.	Apollo Access Platform (2 sheets)	66
15.	Truss Positioning	69
16.	Control Panel Erection	71
17.	Accumulator Rack Erection	72
18.	Latch-back Assembly	74
19.	Control Panel Assembly and LCC Panel	76
20.	Accumulator Stand Assembly	81

LIST OF ILLUSTRATIONS (Cont'd)

Figure	Title	Page
21.	Accumulator Stand and Control Console	82
22.	Electrical Interconnect (2 sheets)	84
23.	Test Set (2 sheets)	86
24.	Hydraulic-Pneumatic Schematic	92
25.	GOX Module	101

SOURCES OF INFORMATION

The information used to develop the Apollo Access Arm design philosophy and criteria was obtained from several sources; the bulk of this information was derived from the preliminary design studies; from meetings within the Kennedy Space Center; from correspondence with KSC, Cape Kennedy; from the Manned Spacecraft Center, and from discussions with NASA contractors.

The engineering group which developed the philosophy and criteria for the Saturn V Access and Service arms provided information which was used in the preliminary design studies.

North American Aviation (NAA) furnished information and drawings on which the present documentation (Apollo Spacecraft Configuration and Nomenclature) was based. See Figure 3.

SUMMARY

Operating Philosophy and Criteria established for the Apollo Access Arm have led to six previous publications, including a progress report and two memoranda. These reports were the culmination of intensive design studies which were undertaken by the Launch Equipment Branch of Launch Support Equipment Engineering Division, Kennedy Space Center, Huntsville, Alabama.

This publication, the seventh of this series, is an Engineering Report entitled, "Apollo Command Module Access Arms, Saturn IB, Launch Complexes 34 and 37." Marked evolutionary changes can be seen in the design by comparing the documentation.

The Umbilical Tower provides access to the Arm, and accommodates the service lines, hydraulic control panel, accumulator stand, and associated equipment. The Tower also provides a mounting base for the tower crane which is used to erect the Access Platforms, the Arm, and related equipment. The Access Platform and the Arm are mounted on the tower corner column nearest the vehicle.

The Access Platform provides access from the Tower to the Access Arm. This platform level is between two tower floor levels, so an access stairway is incorporated to reach the nearer tower level which is approximately four feet above.

Final design calls for two hydraulic rotary actuators in tandem. These actuators drive spur gears which, in turn, drive hinge gears.

The hinge gears are connected through a hinge assembly structure. The space between the actuators is occupied by hydraulic tubing and a cam-plate, and a cam-operated valve.

Torque requirements for the Arm are being met through the use of hydraulic rotary actuators supplied with hydraulic fluid at a pressure of 1500 psi to produce a torque output of 210,000 lb-in each; this output is then multiplied by the gear ratio of 2.3 to 1 for a total torque output of 980,000 lb-in.

The Basic Arm Truss is constructed of tubular aluminum members connected at each joint by riveting to an aluminum casting. Two hinge plates in a hinge assembly at the tower end of the Basic Truss are bolted to the truss; each of these plates carries a gear which mates with the spur gear of each hydraulic rotary actuator.

The Spacer Truss is made of the same materials as the Basic Arm Truss, and its cross section is the same. The spacer trusses for Complex 34 and Complex 37 are not identical due to a difference in angular location of the umbilical tower relative to Fin I of the vehicle. The Spacer Truss is connected to both the Basic Arm Truss and the Environmental Chamber by bolting.

The Environmental Chamber consists of a structural aluminum framework and a double-wall sheet aluminum enclosure. A pneumatically operated Extension Platform, an extension platform bellows, and an Adapter Hood provide a pressurized access from the Environmental Chamber to the Command Module. The atmosphere within the Chamber

and Adapter is maintained at a positive pressure of 2 inches of water (0.075psi). This helps to maintain a clean environment inside the Command Module.

The Adapter Positioning Mechanism is a self-sensing device which seeks and latches onto the Launch Escape System Tower legs, and follows vehicle movement continuously in three dimensions while preserving the seal between the Command Module hatch perimeter area and the Adapter Hood of the Environmental Chamber.

INTRODUCTION

This engineering report presents the final design for the Apollo Access Arm for Saturn IB vehicles (Complexes 34 and 37), based on the preliminary design studies. The final design incorporates all of the approved design input as obtained from the sources listed under "Sources of Information."

The purpose of this report is to acquaint Kennedy Space Center (KSC) personnel, Manned Spacecraft Center (MSC) personnel, and the stage contractor with the final design; to serve as a guide to the over-all engineering effort, and to document the engineering proceedings.

The preliminary design study for the Apollo Access Arm was originated by KSC in May, 1962. On February 20, 1963, a criteria and philosophy text was published to serve as a progress report up to that time. On April 2, 1963, a revised edition (issue number 2) was released; on April 7, 1963 an informal memorandum was released to supplement issue number 2. On August 5, 1963 a Preliminary Engineering Report on the Apollo Command Module Access Arm was issued; this report contained information on the Apollo Access Arm for Saturn IB, Complexes 34 and 37. On October, 18, 1963 a formal memorandum incorporating information from the Minutes of Firing Accessories and Mechanical GSE Sub-panel Meeting, September 10, 1963 at Downey California was released.

The Access Arm provides ingress to and egress from the Command Module through an environmental enclosure which compensates for differential movement between the vehicle and the Umbilical Tower. This

function, the minimum requirement for the Access Arm, is accomplished without exerting excessive force on the Command Module.

This report includes final design criteria, documents design features, and furnishes engineering drawings in support of the text. The major arm components are discussed, and the erection and operation of the Arm are described.

All prior reports, cited above, are superseded by the present report.

The following divisions are made, by section, of the subject matter to facilitate treatment.

Section I contains operating philosophy and criteria.

Section II discusses sequence of operation.

Section III discusses the Access Platforms.

Section IV describes the Actuating Assembly

Section V describes the Access Arm Basic Truss.

Section VI describes the Access Arm Spacer Trusses.

Section VII describes the Environmental Chamber.

Section VIII discusses erection of major components.

Section IX describes the Latch-back Assembly

Section X describes the Control Console.

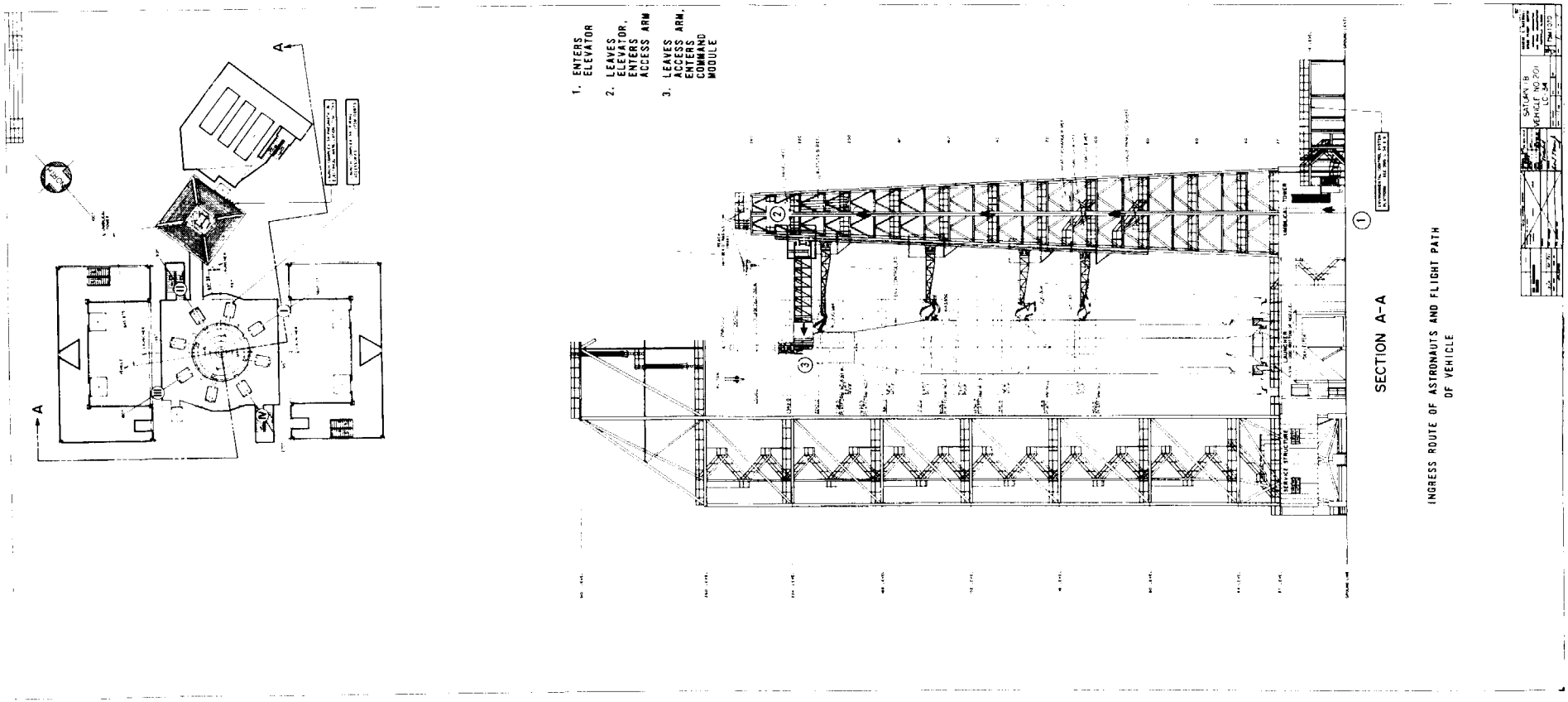

Figure 1
Ingress Route of Astronauts
and Vehicle Flight Path
1 of 3

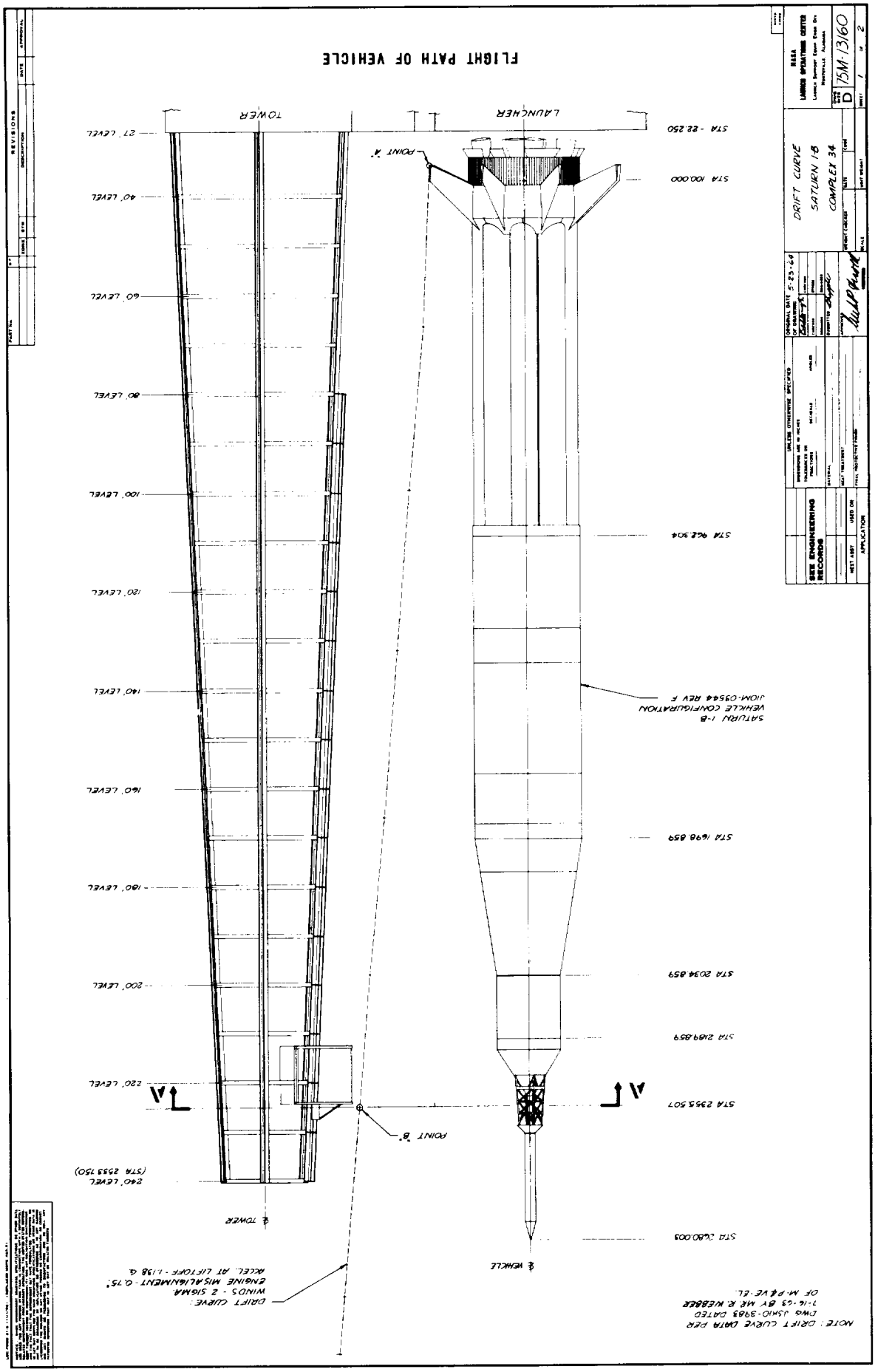

Figure 1
Ingress Route of Astronauts
and Vehicle Flight Path
2 of 3

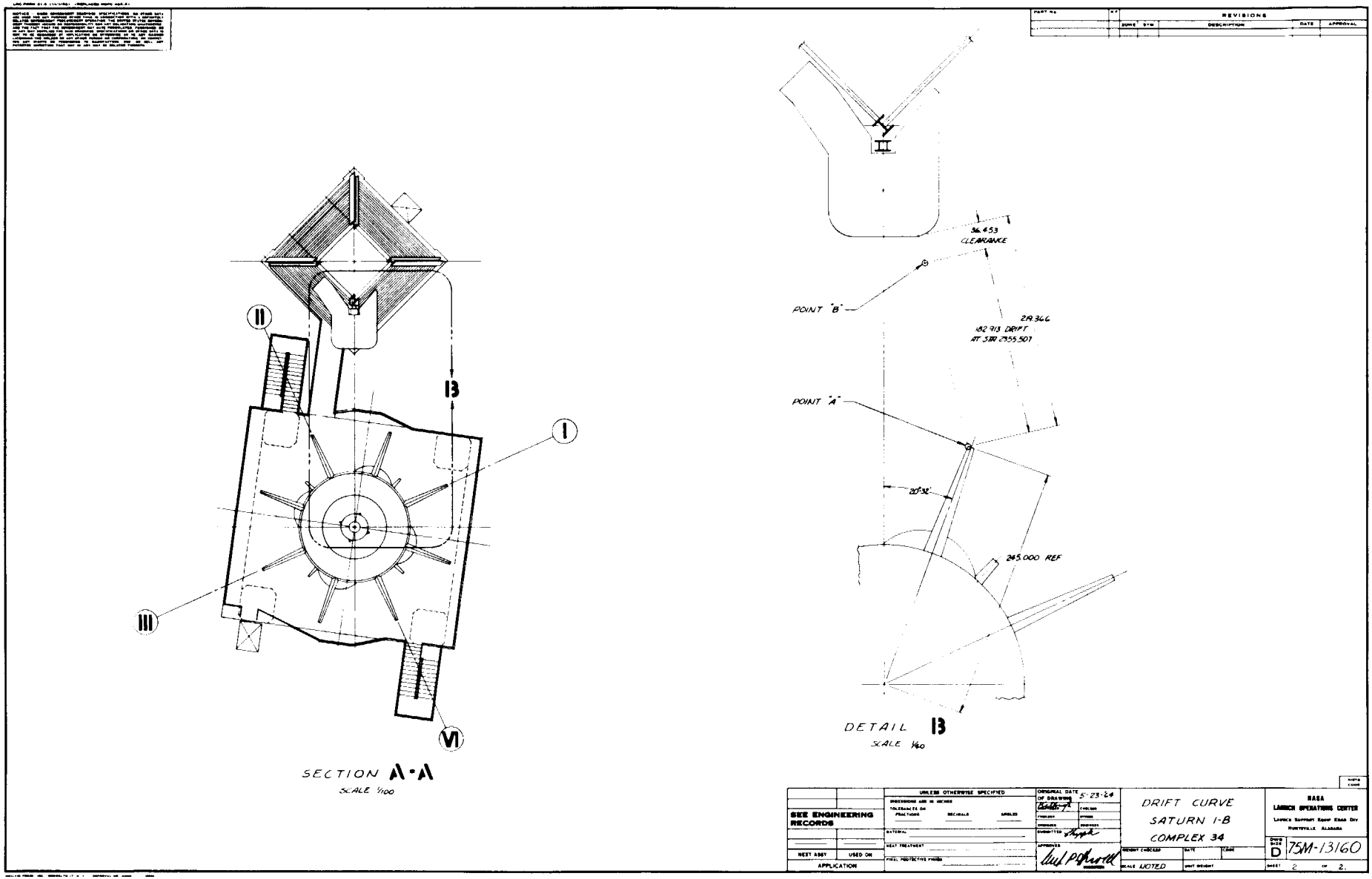

Figure 1
Ingress Route of Astronauts
and Vehicle Flight Path
3 of 3

HARDWARE DESIGN CRITERIA

STATIC AND DYNAMIC CONSIDERATIONS

HORIZONTAL MOTION

CONDITION	Total Time	Frequency	Excursion Limit	Max. Displ. Rad.
Dynamic	6 hrs.	0.8 cps	± 10"	
Static				± 40"

VERTICAL MOTION

CONDITION	Expansion	Contraction	Misalignment
Dynamic	1.10"	10.05"	
Static			± 3.00"

CLOCKING

Condition	Angular Displ.
Static	± 2.5°

Table 1

platform length) the data shown are for LC 39.

1-7. VEHICLE EXPANSION AND CONTRACTION, VERTICAL

1-8. The same table gives the hardware criteria for the elevation changes of the spacecraft in inches due to the temperature changes, propellant loading, and pressurization of the vehicle stages. Temperature changes are due to solar heating, and to cooling by cryogenic propellants; loading changes are caused by the weight of the propellants. Pressurization changes are due to the pressurization of the propellant tanks. Total vertical deflection is indicated for each condition.

1-9. DESIGN LOADING CRITERIA

1-10. The loading criteria for the Access Arm are based on the following assumptions: Five men are in the Environmental Chamber (EC); three of these men are on the extension platform; each man is assumed to weigh 250 pounds. See paragraph 1-13 for wind load criteria. Total live load is 1250 lbs.

1-11. LAUNCH PAD WIND ENVIRONMENT

1-12. Wind data used for the Saturn IB Block II vehicles, Launch Complexes 34 and 37, launch pad (ground) wind environment is as indicated in paragraph 1-14.

1-13. VEHICLE LAUNCH CONDITIONS

1-14. The following ground wind speed envelope values are to be used for the Saturn IB, Block II vehicles, under launch conditions:

Ground Wind Speed Envelope

95% Probability of Occurrence

Cape Kennedy, Florida

	Height Above Ground Level	Steady Wind*	Peak Wind**
	Feet	Knots	Knots
Complex 34	220	26.4	37.1
Complex 37	228	26.6	37.3

1-15. On LC 34, during a hurricane alert, the Access Arm must be retracted and secured to the umbilical tower. In order to prevent excessive loads being applied to the tower, the Environmental Chamber must also be removed from the Arm (Figure 2).

*Steady State Wind: Average wind speed over a period of one minute.

**Peak Wind: Wind speed based on a gust factor of 1.4 as applied to Steady State Wind magnitude.

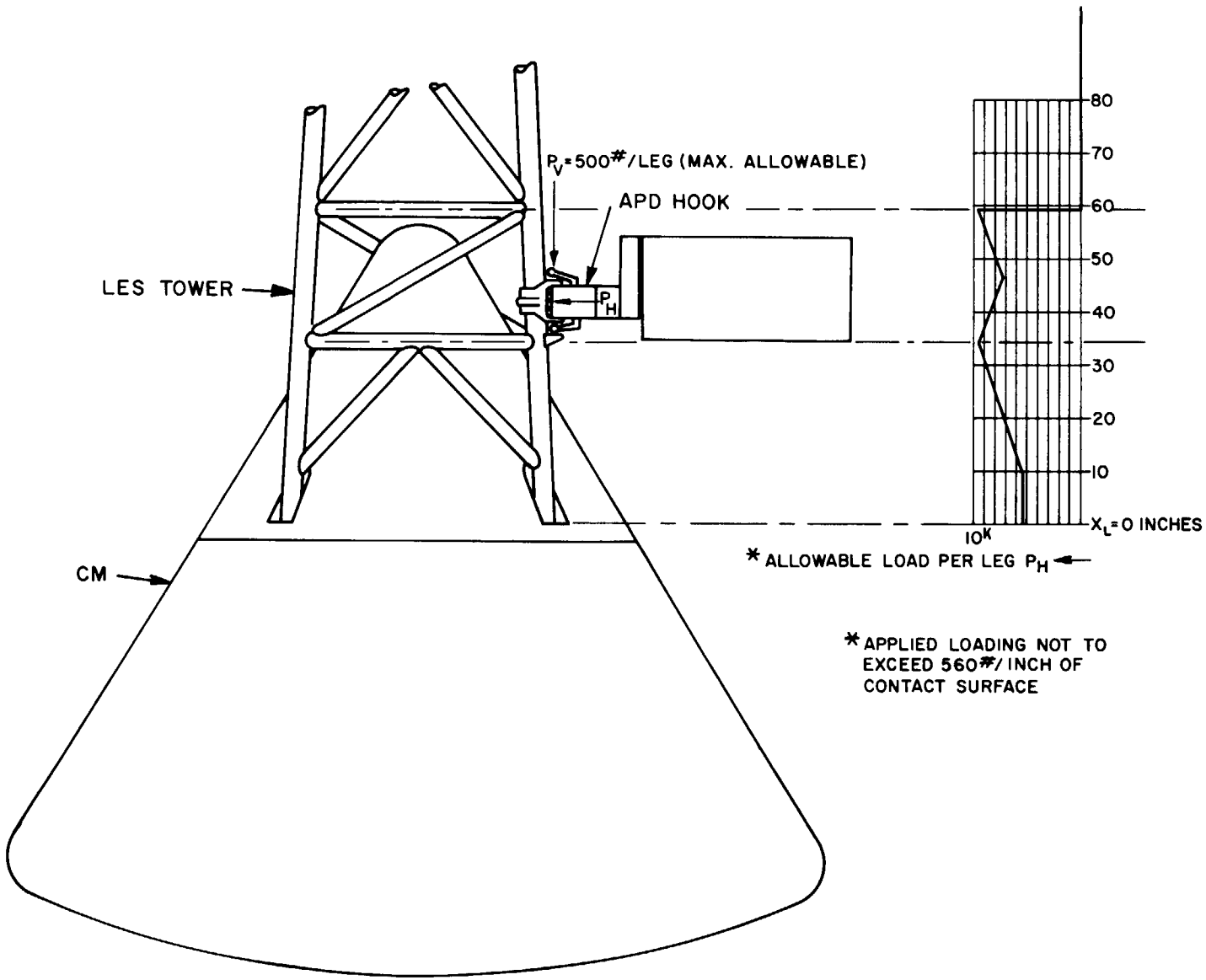

LES TOWER LOADING

NAA DWG NO V15930151 AND INTEROFFICE LETTER 411-110-63-162

Figure 2
LES Tower Loading

SECTION II

SEQUENCE OF OPERATIONS - LAUNCH COMPLEXES 34 AND 37

2-1. GENERAL

2-2. It was noted in Section I that entry to the Apollo Command Module must be made through an environmentally controlled atmosphere to maintain capsule (CM) cleanliness and to control temperature. Since the service structure does not contain a clean room, the services of the Access Arm and the service structure are required simultaneously. This factor influences the sequence of operations, which is presented along with pertinent explanations in the following paragraphs.

2-3. After erection of the Access Arm on LC 34, it will be extended from the tower, (with the extension platform retracted) approximating its nominal position before the service structure is moved into position at the pad. This positioning of the Arm is necessary to prevent interference between the service structure and the Arm during Arm extension. On LC 37, the silo gate may be opened to prevent interference with the Arm. After the Access Arm has been rotated into this position, the service structure is brought into a pre-determined location on the pad. The position of the Access Arm is adjusted to provide passing clearance if necessary. The crane on the service structure is now used to erect the lower vehicle stages. Next, the spacecraft (Command Module) is mounted on the vehicle along with the Service Module (SM) as a unit. The differencesas well as the similarities between the service structures for Complex 34 and Complex 37 are primarily in configuration rather than in function.

When erection of the spacecraft has been completed, the Access Arm is moved to its nominal position against the spacecraft. The service structure work platform at the CM level is then extended and locked. The Extension Platform is extended; the Adapter Positioning Device (APD) is latched onto the Launch Escape System (LES) tower legs, and the Adapter Hood seal is lowered to the skin of the CM. During this first mating of the Access Arm hardware to a particular vehicle, positioning adjustments are made as necessary to ensure satisfactory subsequent automatic connect-disconnect operations.

On Complex 37 it is necessary to rotate the arm beyond its nominal position toward the vehicle in order to close the silo gates and to position the work platform. Upon removal of the Complex 37 service structure, the Arm is adjusted back to its nominal position.

2-4. A smooth-surface frame is provided around the Spacer Truss near the end of the Basic Truss for both complexes. When the silo gates or work platforms are extended and locked, their rubber bumpers contact this surface on three sides of three sides of the Spacer Truss. The aperture through the work platform wall (or silo gate) on the fourth side of the Truss is closed by inserting removable panels into the opening. A removable mesh panel on the vehicle side of the Access Arm permits service personnel entry to the Arm from the service structure, thus providing a walkway from the service structure to the umbilical tower.

2-5. The shear panel covering the service door in the side of the EC opposite the Arm is removed only when the service structure is in place;

access to the CM for checkout purposes is available either from the umbilical tower or from the service structure. The CM hatch is removed for full access to the capsule, and the air conditioning (AC) flexible duct in the EC is inserted through the hatch opening. An in-line valve in the AC duct within the EC is used to adjust the quantity of flow to the spacecraft requirements. All other spacecraft checkout supply requirements are also provided from the Environmental Chamber via the hatch opening by temporary lines (lines not provided as part of the Access Arm hardware). These include electrical power service, monitoring equipment, etc. Before removal of the service structure, all personnel leave the EC; all dead loads are removed from the EC, and the extension platform is fully retracted. This procedure is followed because the shear panel (a structural element of the EC) covering the service door may not be installed until the loading on the Chamber is reduced to the conditions stipulated; after the EC loading conditions have been met, the panel is installed.

2-6. The service structure is now removed, and cryogenic propellants are loaded into the lower vehicle stages while the Access Arm is in position at the spacecraft; at approximately T-60 minutes the astronauts board the CM, the air conditioning duct is manually separated from the capsule, but air flow is not shut off, and the hatch is closed.

The internal hatch is closed by the on-board astronauts and the external hatch is secured by the two assisting ground personnel. CM leak-check and other checkout operations are performed by the ground personnel from the EC before closing the external hatch. These personnel

evacuate the area at approximately T-30 minutes.

A fabric door, or membrane, is installed prior to this time in the extremity of the Adapter Hood immediately adjacent to the CM outer hatch. Upon the installation of the door, the EC-mounted television monitor camera is deprived of its view of the CM hatch area (Figure 12).

2-7. The access Arm is disconnected and retracted from the spacecraft at approximately T-30 minutes. Rotation of the Arm away from the vehicle closes the abort circuit for the LES through the tower-hinge-mounted switches to give blockhouse control to the abort system , since the LES cannot be fired with the Arm attached to the vehicle. Rotation from the extended position to the retracted position, or subsequent emergency re-extension for astronaut egress will be accomplished in 30 seconds. A device actuated by vehicle lift-off signal will automatically lock the Access Arm in the retracted position against the umbilical tower. Emergency re-extension of the Arm will again open the abort firing circuit when the EC is positioned adjacent to the CM.

2-8. The abort firing circuit is designed to provide maximum safety to the astronauts and their capsule. During any period when the Arm is fully extended such that the Adapter or the Adapter Positioning Mechanism overhangs the CM, the two parallel open switches on the Arm hinge prevent firing of the LES rockets. As soon as the external hatch is closed and the assisting ground personnel have evacuated the area, the Arm is disconnected and retracted from the vehicle at blockhouse command. First rotation of the Arm from the vehicle closes the abort firing circuit for blockhouse control.

During any subsequent position of Arm retraction, or Arm extension up to the critical point of CM overhang, the blockhouse may abort at will. If the abort signal is given when the Arm is connected to the CM, the Arm will immediately begin its normal disconnect and rotation, and upon achievement of the minimum clearance, the abort system will fire. This sequence will take approximately five seconds. If the abort signal is given during a period when the Arm is rotating towards the vehicle during its last few degrees of movement such as to overhang the CM, or during a connect phase of operation, the signal will reverse operation, rotate the Arm clear, and fire the LES rockets immediately when clearance is obtained as indicated by closing of the hinge-mounted switches. Dependent upon time of initiation of the abort signal, this sequence will take up to five seconds. If the abort signal is given during an Arm disconnect operation, the sequence of disconnect and Arm retraction will continue until clearance is obtained at which time the LES rockets will fire automatically. This time lag may also approach five seconds. The hinge-mounted switches in the abort circuit are redundant in circuitry from the hinge area to the blockhouse control panels for additional reliability.

2-9. The sequences of operation of the SM umbilical arm and the Access Arm, and the fact that they rotate in opposite directions will eliminate any possible operational interference between them.

If safety measures do not require the abort circuitry discussed above, the over-all hardware mission will not be affected by the deletion of this portion of the design.

The Access Arm will be controlled from the blockhouse after service personnel descend the umbilical tower; however, provisions will be made on the umbilical tower for overriding blockhouse control manually.

Unless the astronauts are incapacitated, it is presumed that they could egress without assistance; in case of incapacitation of the astronauts, outside help is not immediately available.

See Figure 3 for Spacecraft Configuration and Nomenclature.

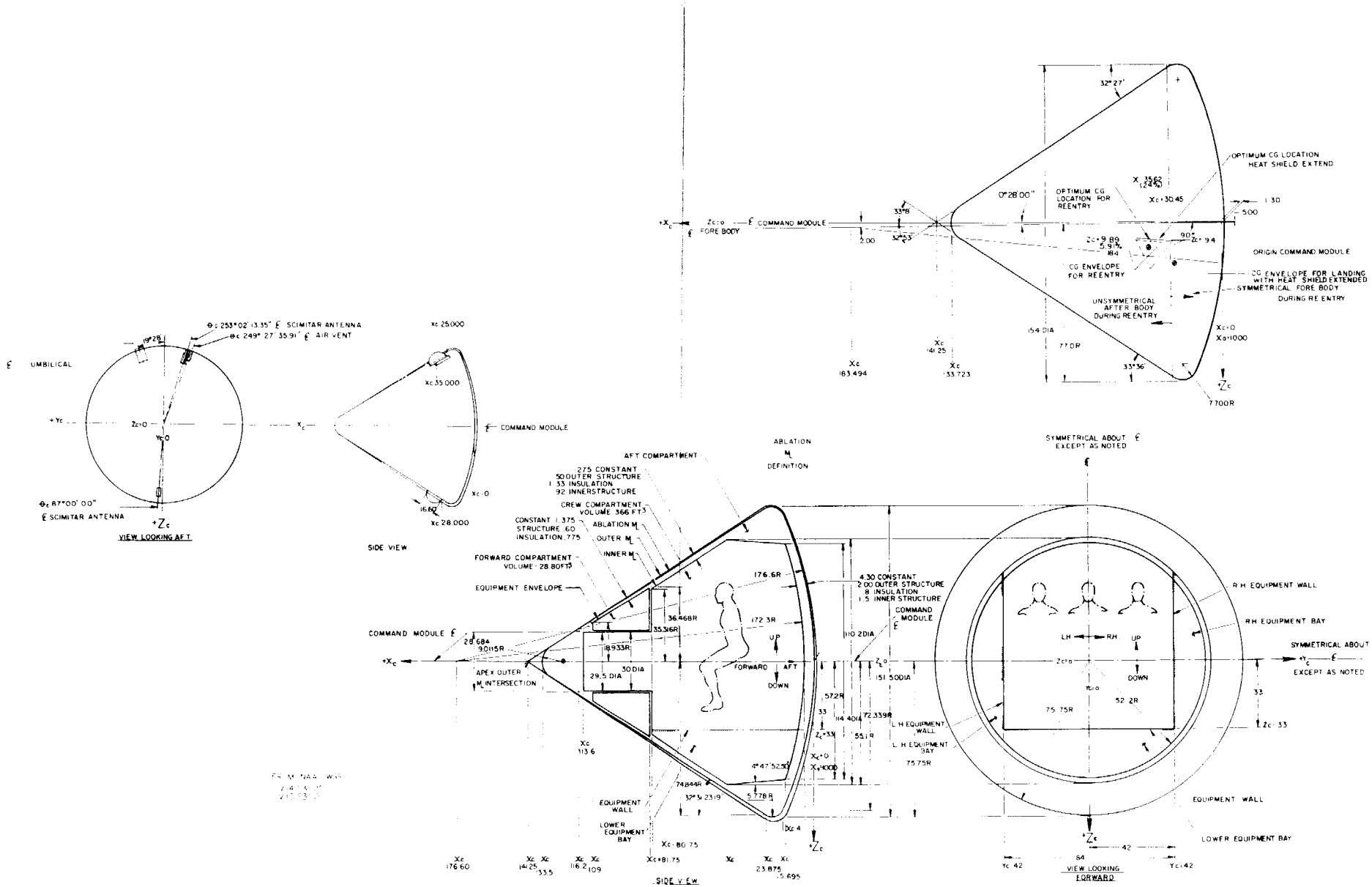

Figure 3
Space Craft Configuration and Nomenclature (1 of 3)

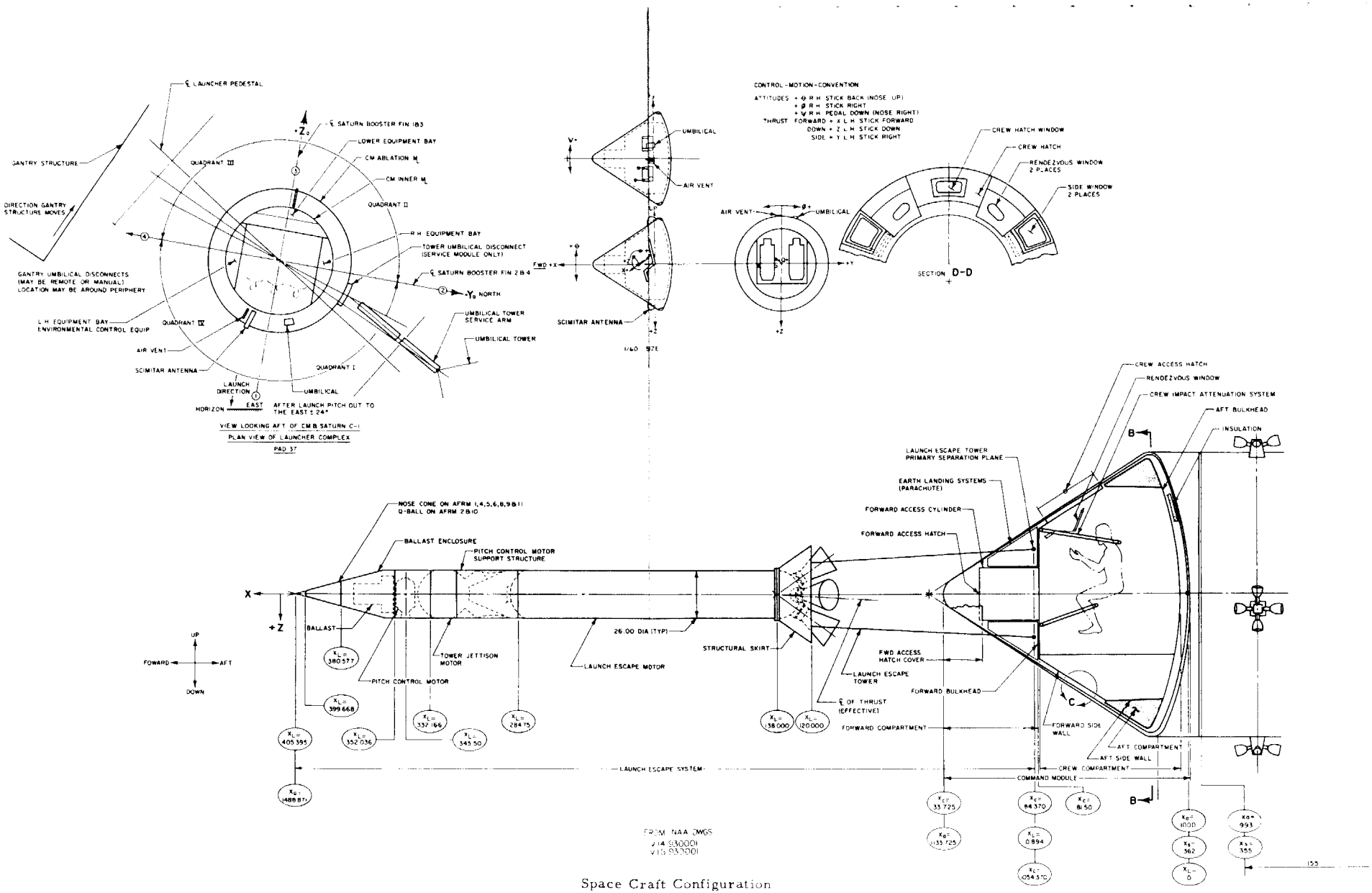

Space Craft Configuration and Nomenclature (2 of 3)

Figure 3

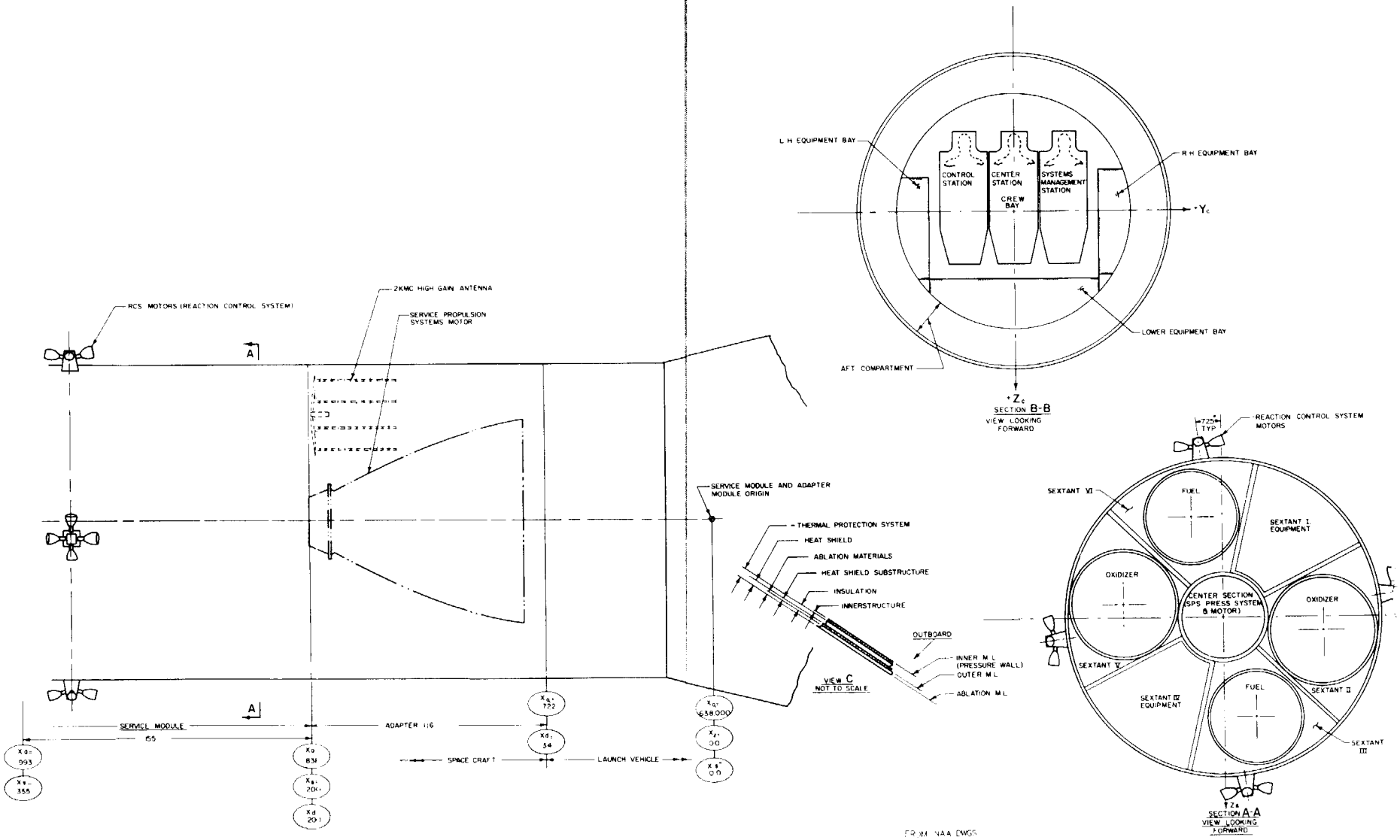

FROM NAA DWGS

Figure 3
Space Craft Configuration and Nomenclature (3 of 3)

SECTION III

ACCESS PLATFORMS

3-1. GENERAL

3-2. The purpose of the Complex 34 and Complex 37 Access Platforms (Refer to Figure 4) is to afford an access route from the umbilical tower to the Apollo Access Arm after arm erection as well as to provide a safe working area during the erection and installation of the arm. The Platforms are designed to facilitate the maintenance of the Arm and its related hardware. Each Platform is to be partially enclosed with permanent screens on the west side, and with removable, collapsible handrails on the south and east sides.

3-3. CONSTRUCTION

3-4. The Platforms are primarily of welded steel construction, with safety-tread steel floor plate and corrugated aluminum roof deck. The fixed safety screens are fabricated of steel wire mesh in a steel frame. The removable, collapsible handrails are tubular steel frame weldments which mate with stake sockets welded to the platform floor at intervals about the floor perimeter. The Platform for Arm 4 and the Platform for the Apollo Access Arm are designed as a structural unit; however, the Platform for Arm 4 can be erected and used independently of the Apollo Access Arm, and conversely. Support is given to the Access Platform by overhead tension ties which are fastened to the mounting column. A part of the platform roof deck is left open to provide clearance for the erection crane cables.

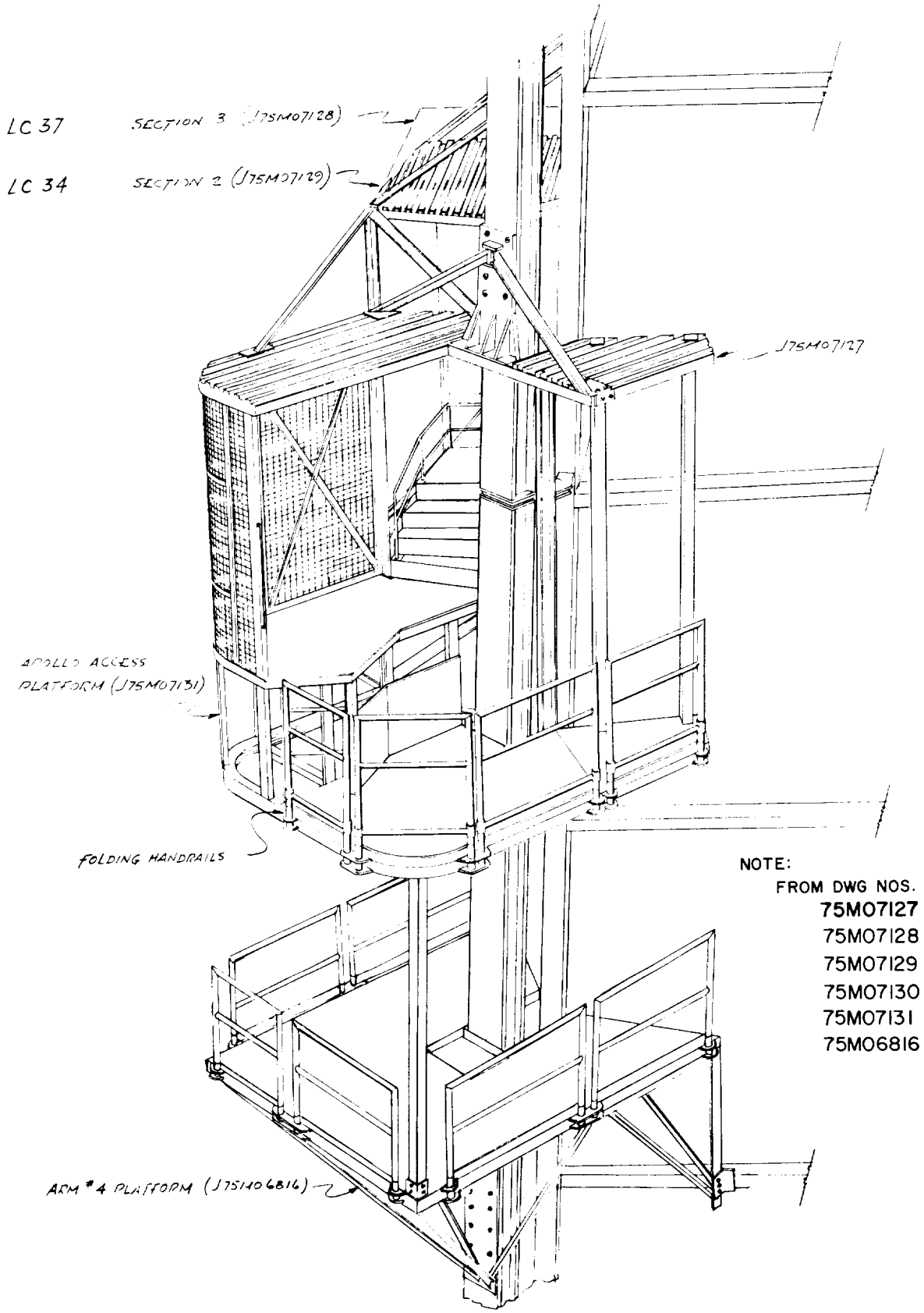

Figure 4
Apollo Access Platform

Figure 5

Actuating Assembly

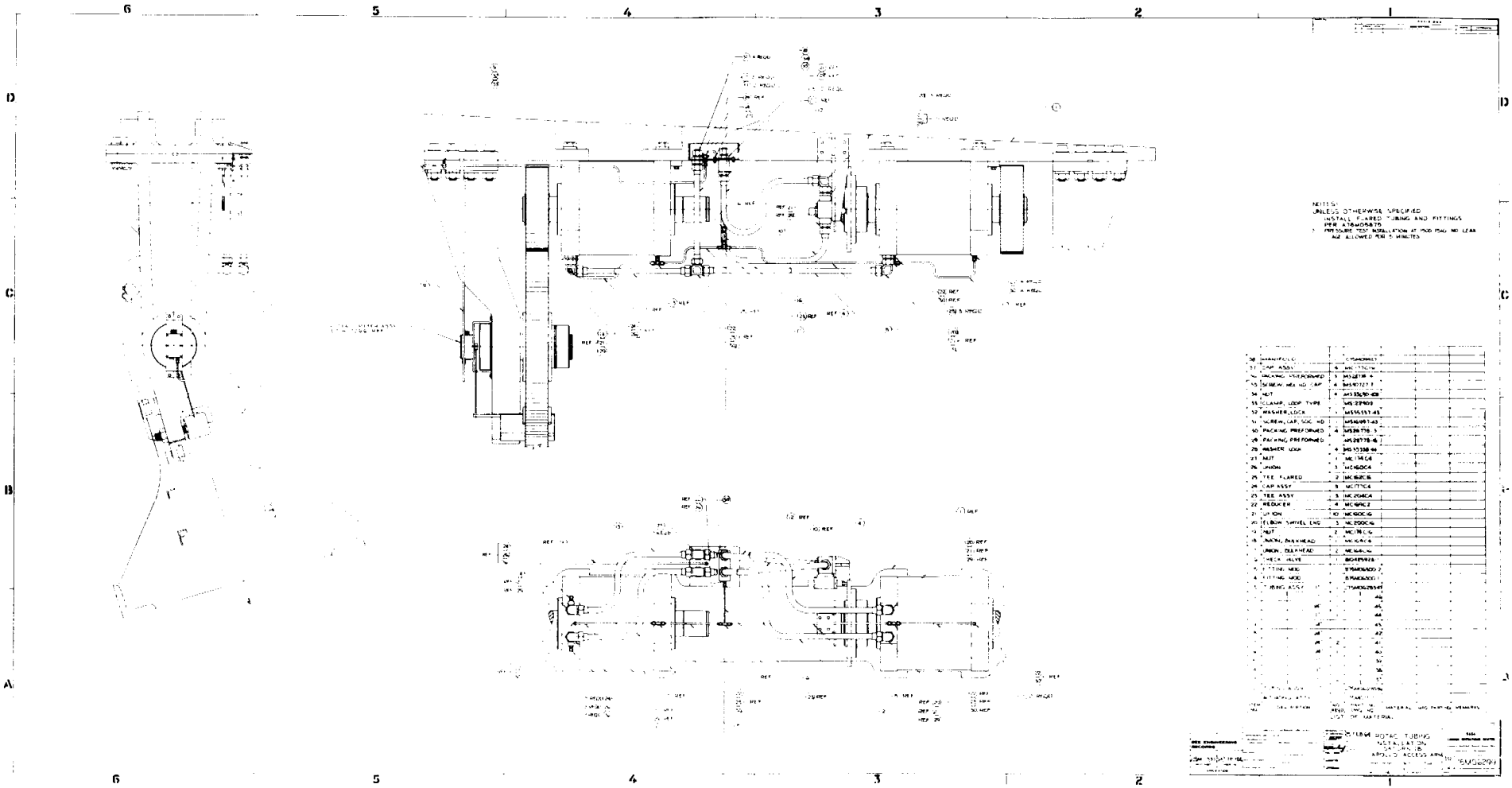

Figure 6

Hydraulic Rotary Actuator Tubing

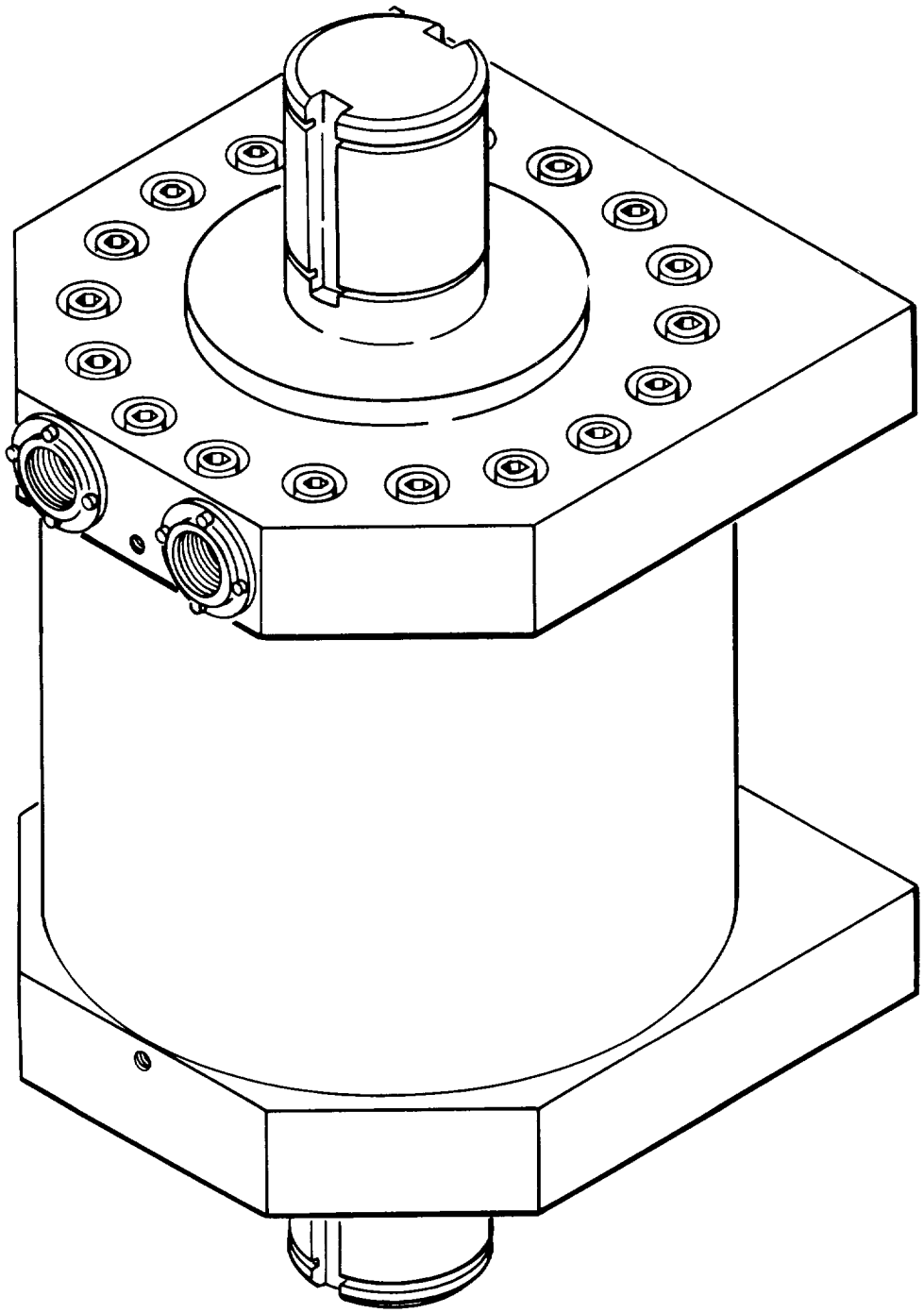

ABOUT 1/5 SIZE

(B10428419)

Figure 7

Hydraulic Rotary Actuator

pressure) past the vane in the locked position; the hydraulic leakage through the bearing is specified to be less than 5 cc per minute at 1500 psi. The proof pressure of the actuator is 4500 psi, and the burst pressure is 6000 psi. The actuator can be mounted in any position for efficient operation; the two Apollo Access Arm actuators are mounted with their shafts vertical and on a common center line. The recommended operating temperature range is from 0°F. to 160°F.

4-6. A cam-actuated valve is installed between the two actuators; this valve is in the hydraulic fluid return line and is actuated by the inclined-plane cam-plate when the Access Arm is rotated.

4-7. The inclined-plane cam-plate, made of stainless steel, is mounted at the access arm hinge assembly; this cam-plate controls the cam-actuated valve and provides smooth acceleration and deceleration of the Arm.

4-8. The steel backplate casting is attached to the umbilical tower corner column; the arm assembly and the hydraulic rotary actuators attach to the backplate. The umbilical tower corner column is inclined 2 degrees, 32 minutes from the vertical.

4-9. ELECTRIC LINES

4-10. The potentiometer is installed on top of the upper hinge pivot in a purged box which is approximately 2 inches by 4 inches by 2 inches. The function of the potentiometer is to provide a continuous readout of the arm position in degrees (or other suitable indices) at the blockhouse.

4-11. A fixed-focus, fixed-position television camera is installed inside the EC. The cables serving this camera are routed across the Arm in the cable tray.

4-12. A 60-pin electrical cable is provided to the EC, and is routed across the Arm in the cable tray. Provision has been made in the cable tray for the accommodation of six coaxial cables.

4-13. Two abort control switches on the arm hinge (paragraphs 2-7 and 2-8) are redundantly wired from the arm hinge to the blockhouse to provide a high degree of reliability.

4-14. Other electrical lines include an input-output signal line to the GOX Module, an AC power line to the GOX Module, and a lighting and receptacle line to the EC.

SECTION V

BASIC TRUSS

5-1. GENERAL

5-2. The Access Arm (Figure 8) is an open truss fabricated of tubular members; it will pivot on the corner of the umbilical tower nearest the vehicle. The Basic Truss is used in conjunction with an extension or spacer to adapt the basic design to various vehicle and Launch Complexes in the SAT-IB system. This Arm will provide a horizontal passageway from a tower platform to the Environmental Chamber; a removable panel on the vehicle side of the spacer will allow access from the service stucture work platform to the Access Arm.

5-3. The Basic Truss (Figure 9) for the Apollo Access Arm is constructed of 7075-T651 aluminum tubing members and is basically a riveted assembly. The truss is 30 inches wide and 78 inches high, inside clear dimensions. Woven aluminum mesh screening is installed on the sides of the access arm to a height of 48 inches above the walking surface. The floor of the Arm is constructed of aluminum open grating to reduce arm reaction to blast force, and coated with aluminum oxide to provide a nonslip surface. Hand-rails are provided 36 inches above the truss floor and welded to brackets which are bolted to the vertical arm members. The purpose of the truss is to provide structural support for the EC and a horizontal passageway from the Apollo Access Platform to the Environmental Chamber.

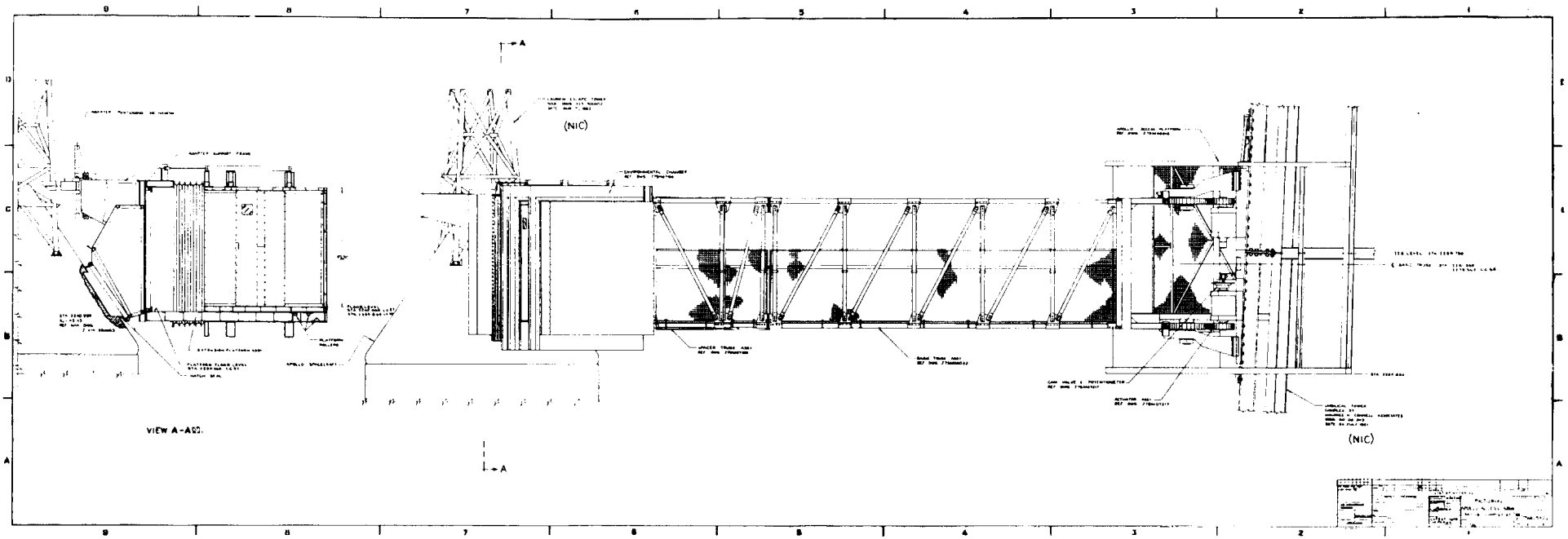

Figure 8
Apollo Access Arm (1 of 7)

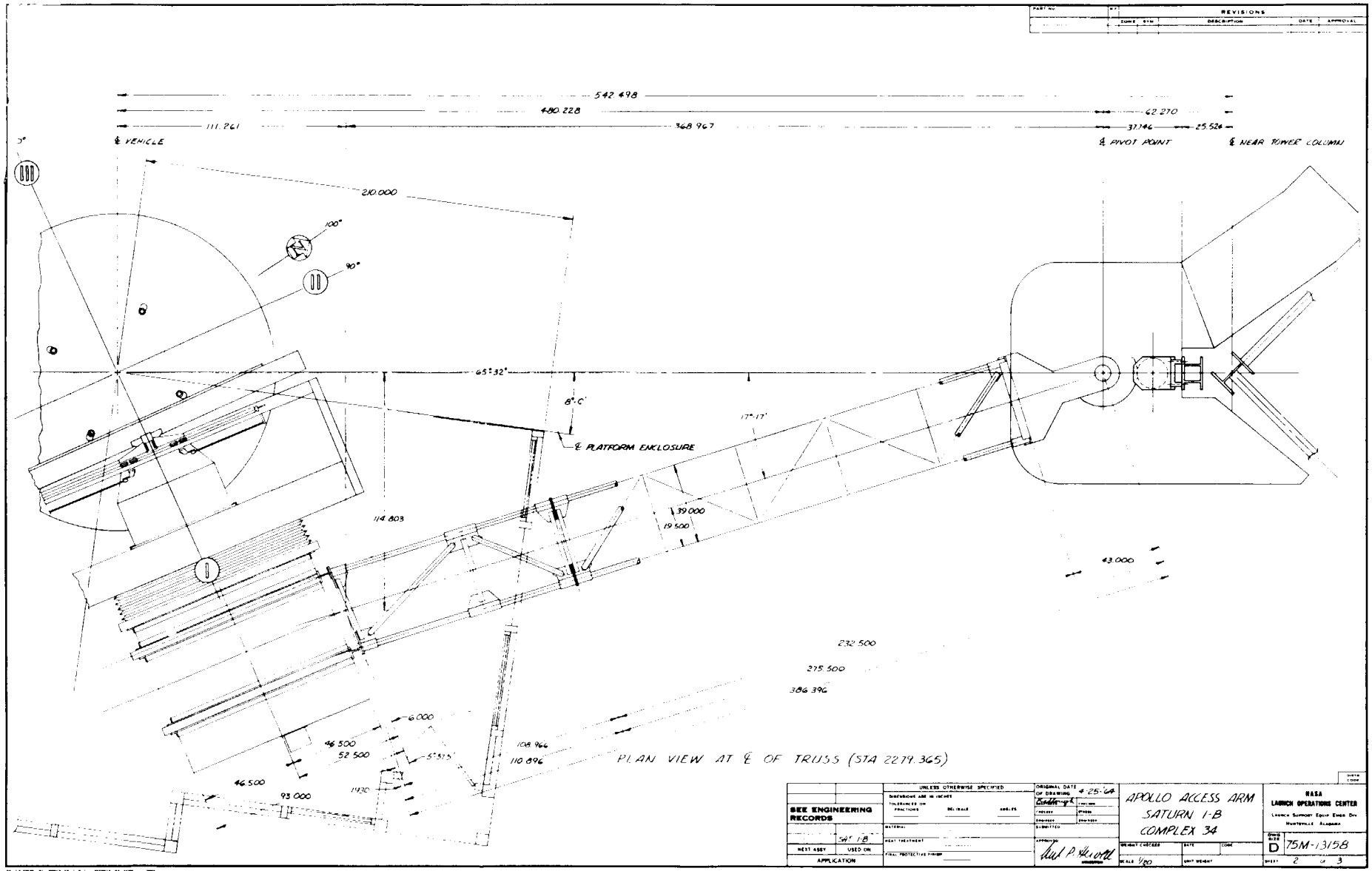

Figure 8
Apollo Access Arm (2 of 7)

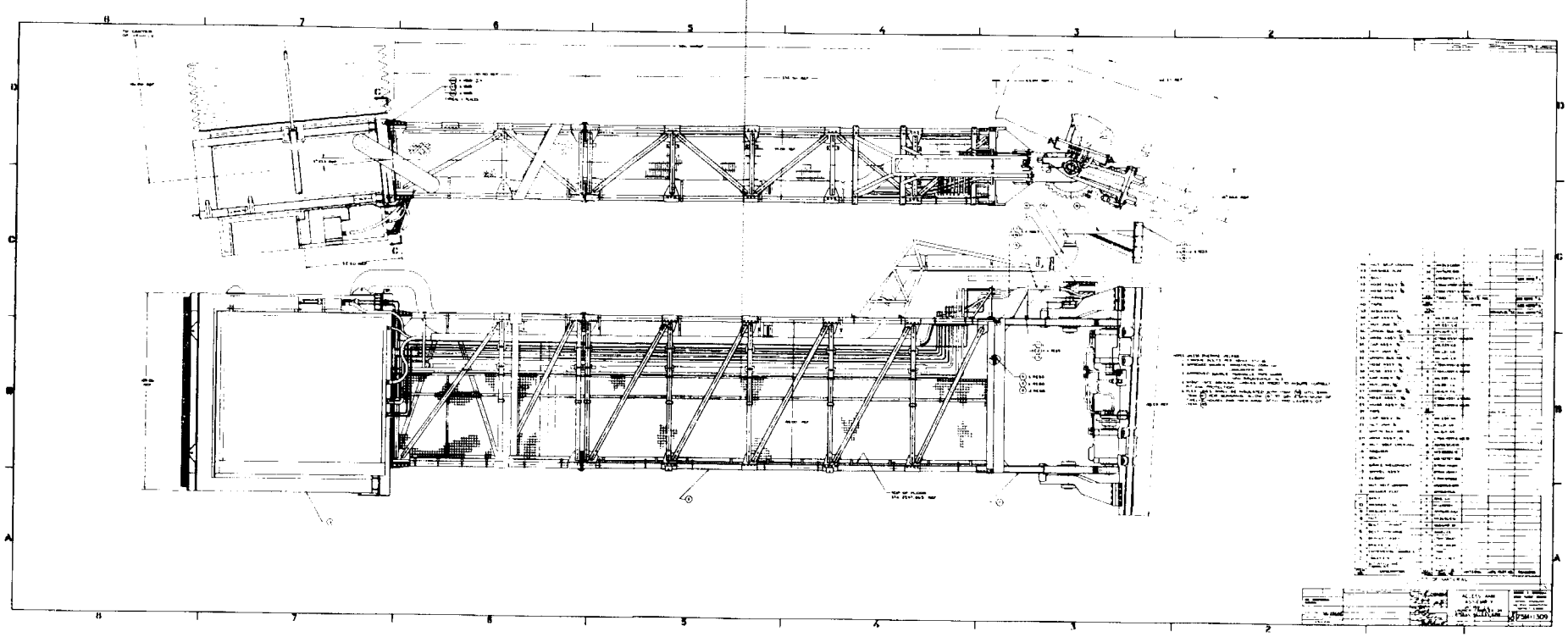

Figure 8
Apollo Access Arm(3 of 7)

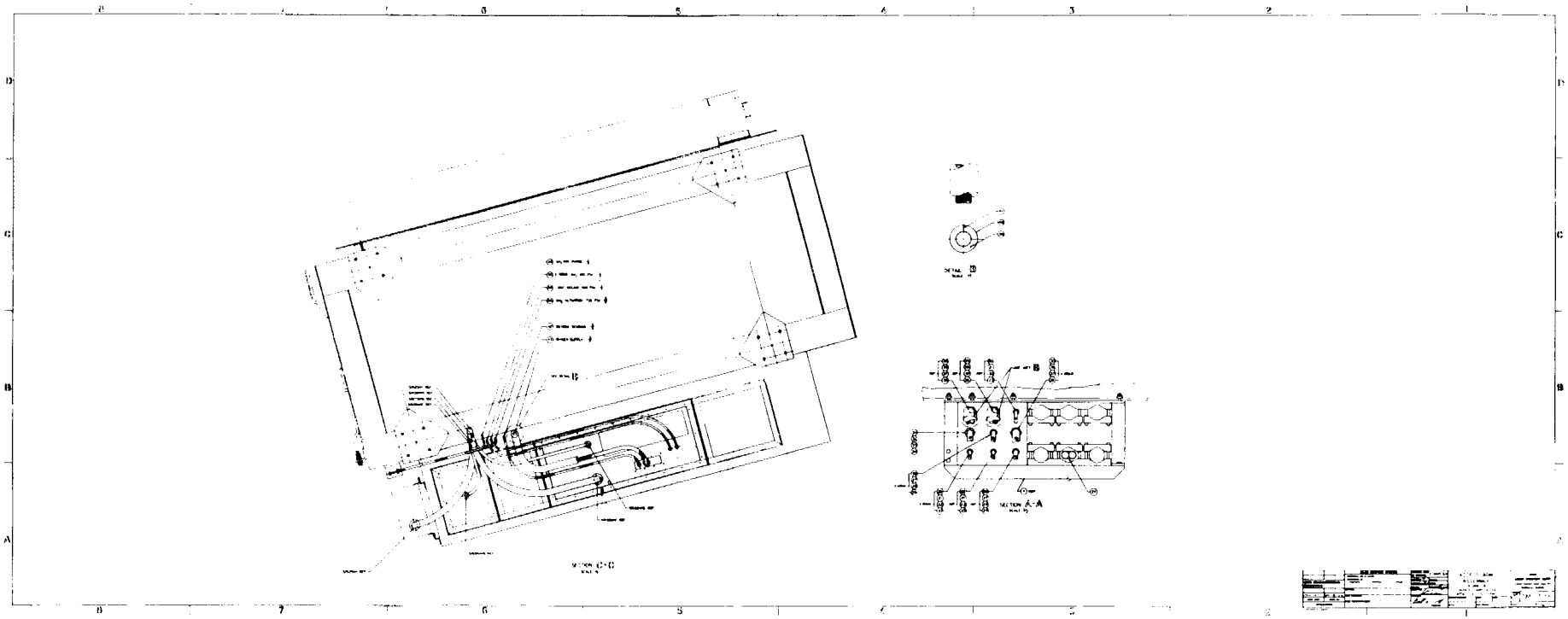

Figure 8
Apollo Access Arm(4 of 7)

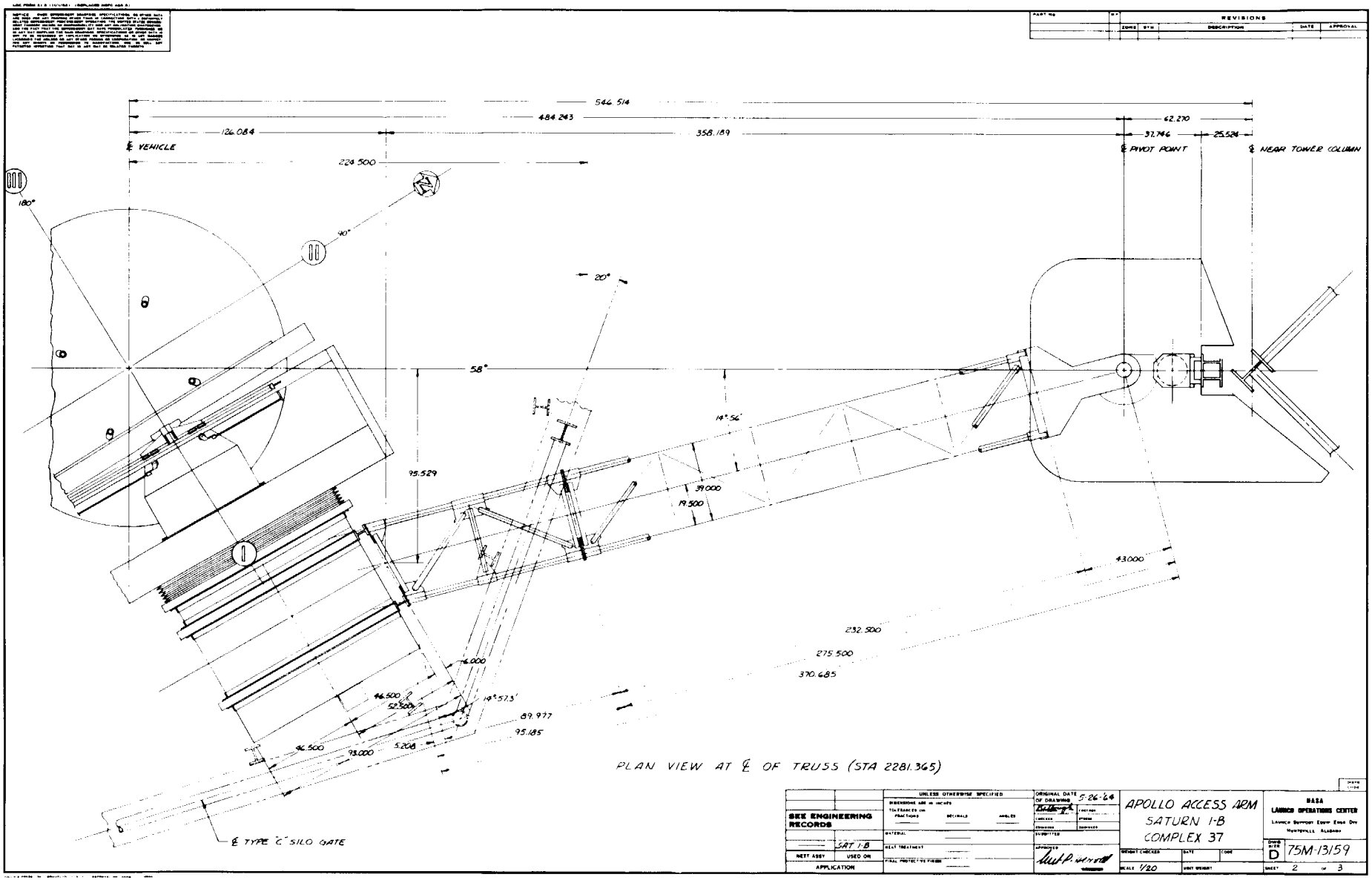

Figure 8
Apollo Access Arm(5 of 7)

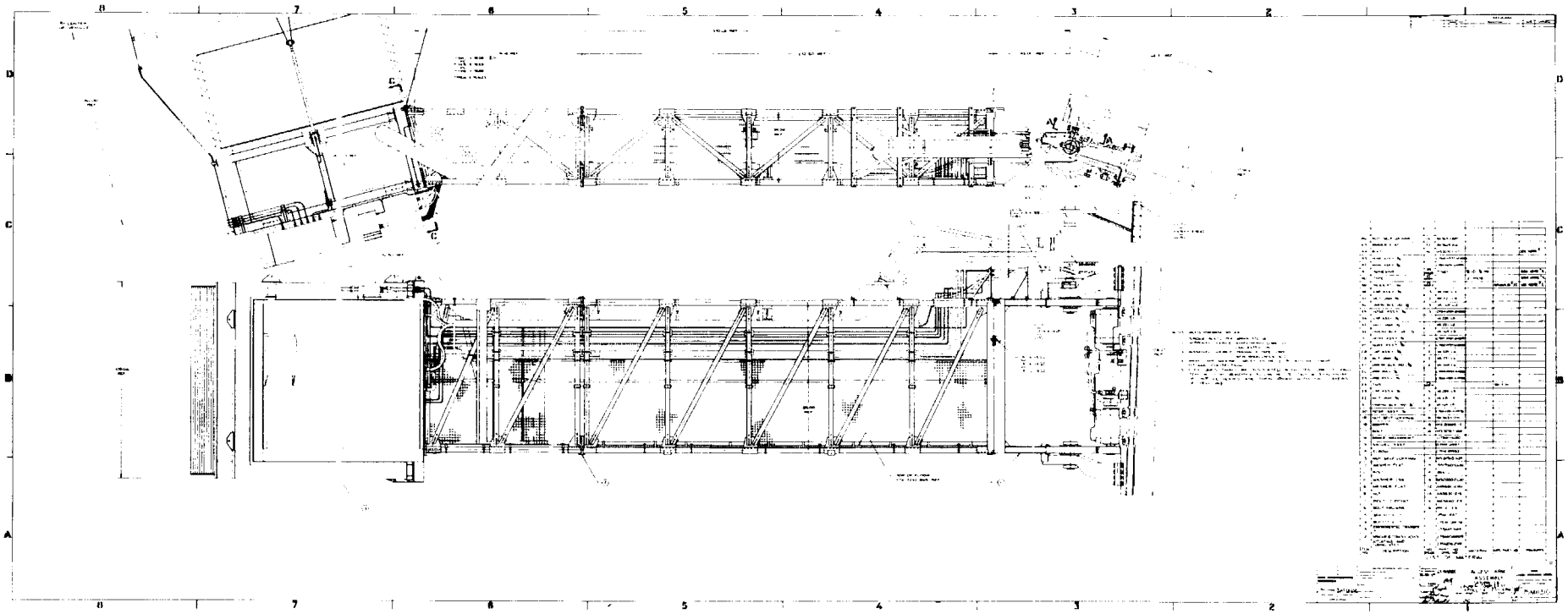

Figure 8
Apollo Access Arm (6 of 7)

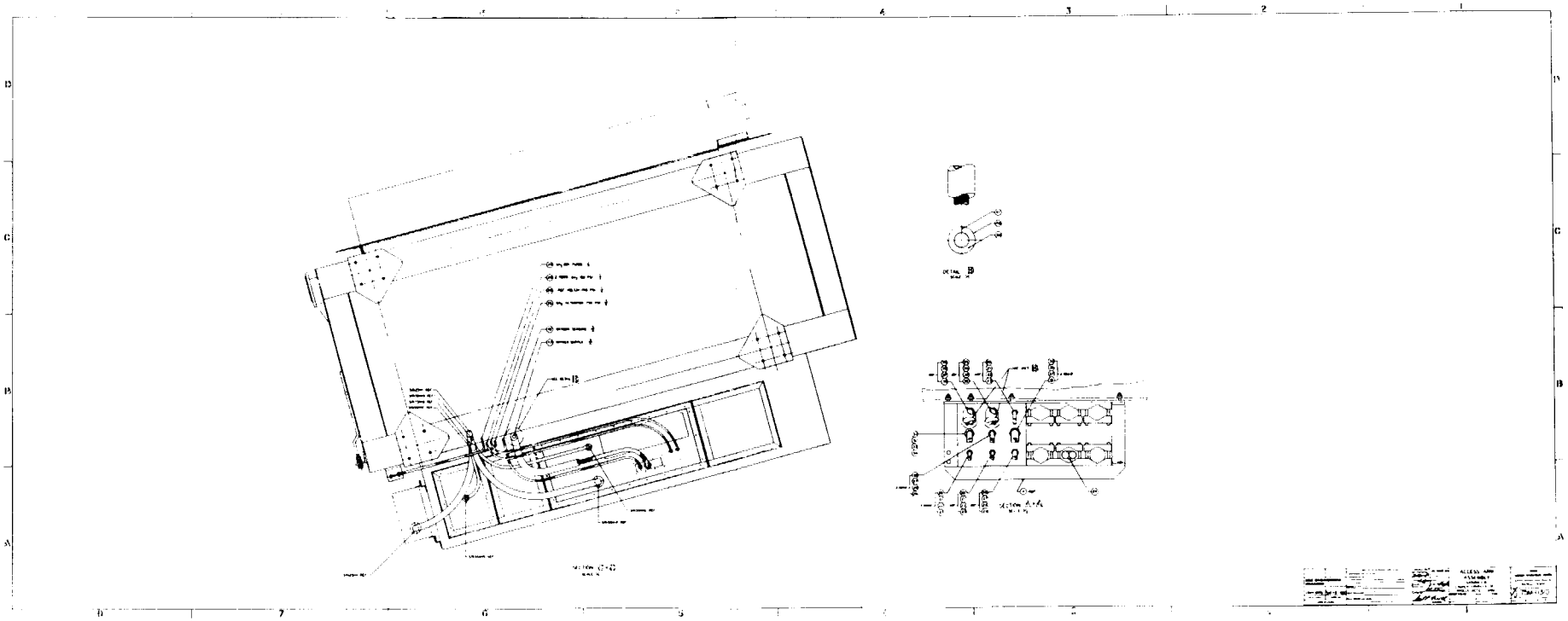

Figure 8
Apollo Access Arm (7 of 7)

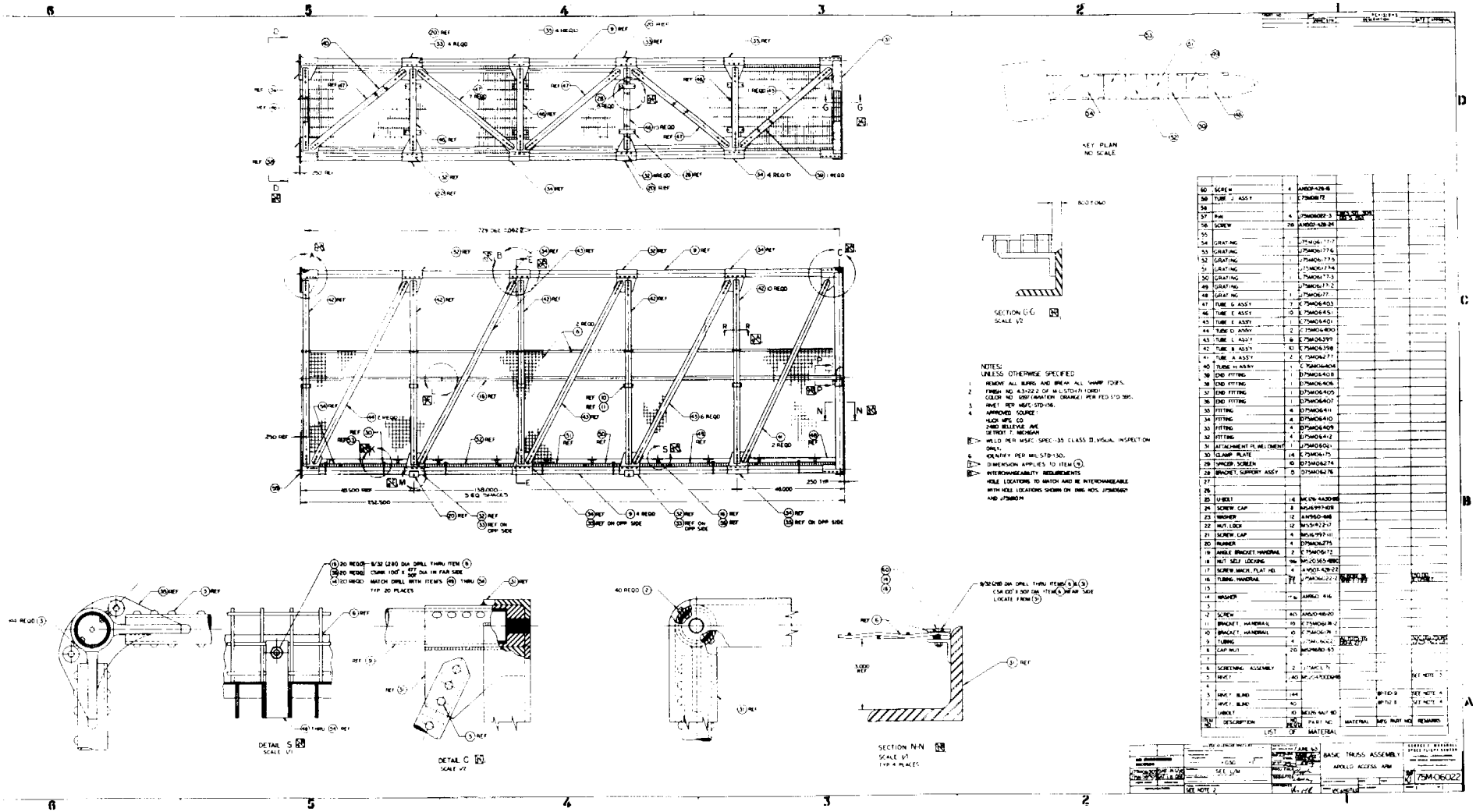

Figure 9
Basic Truss Assembly
1 of 2

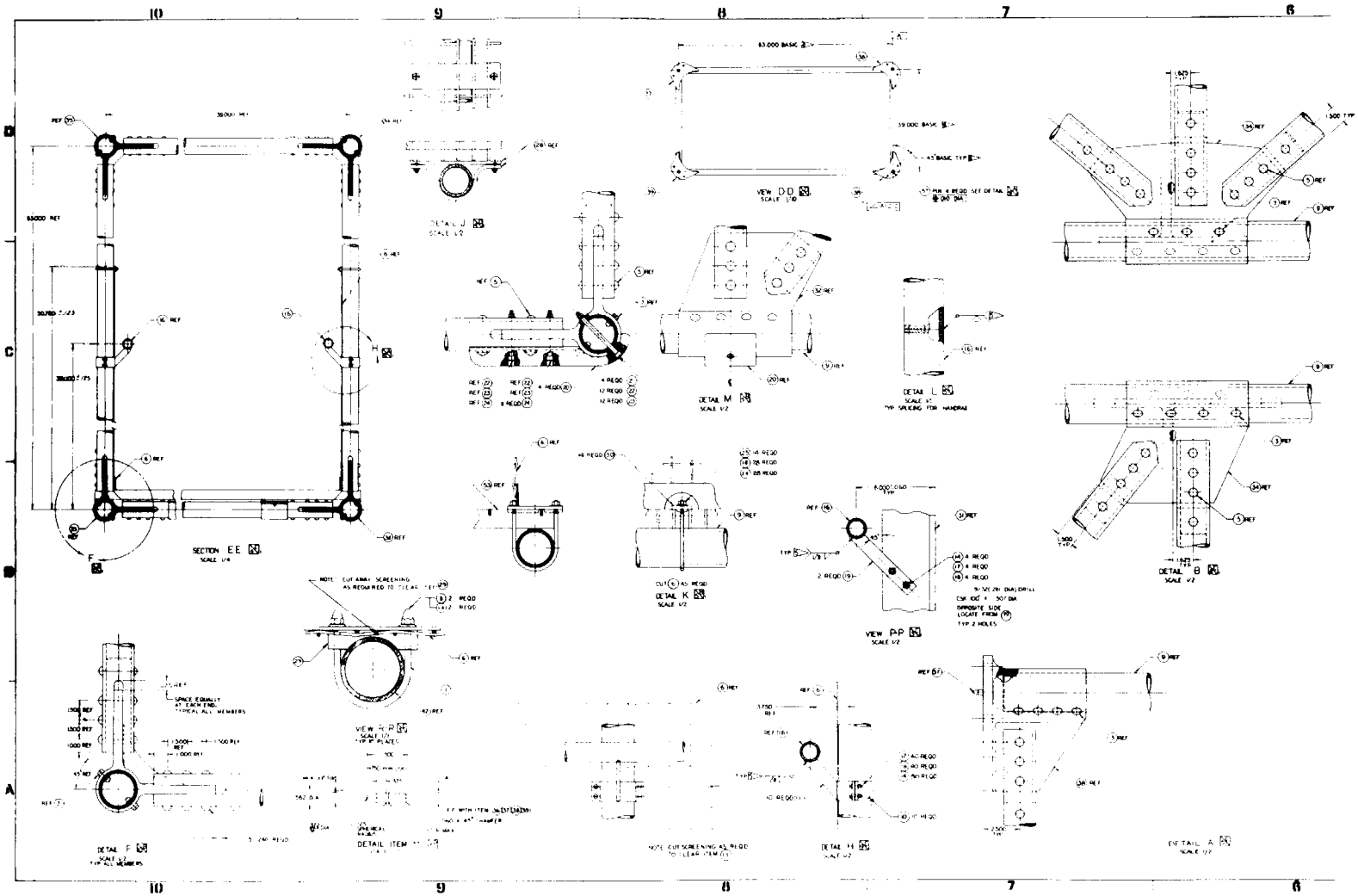

Figure 9
Basic Truss Assembly
2 of 2

SECTION VI

SPACER TRUSS

6-1. GENERAL

6-2. Basic design for the Spacer Truss is similar for Complex 34 (Figure 10) and Complex 37 (Figure 11). The Spacer Truss will be furnished with handrails and screening of the same kind as used for the Basic Arm Truss; the floor is fabricated of aluminum tread plate. The tubing sizes of the Spacer Truss are the same as those of the Basic Arm Truss; the material used is also the same as that used in the Basic Arm Truss (aluminum alloy). Each Spacer Truss will have four cast-aluminum adapter fittings machined to the proper angle to permit bolting of the Spacer Truss to the Environmental Chamber, and four fittings to attach to the Basic Truss. All cast fittings are of aluminum alloy, and will be riveted to the truss.

6-3. A service structure seal (Figure 10) is required on the Apollo Access Arm for Complex 34 and for Complex 37. As seen in plan, this seal crosses the longitudinal members of the trusses at a pronounced angle. For each complex, the seal is located near the connection between the Basic Truss and the Spacer Truss, on the Spacer Truss.

The purpose of the seal is to provide protection for the service structure platform from wind, dust, salt spray, rain, and other contamination. The service room formed by the elevator platforms on Complex 34 and by the silo gates on Complex 37 is air conditioned for personnel comfort; the air

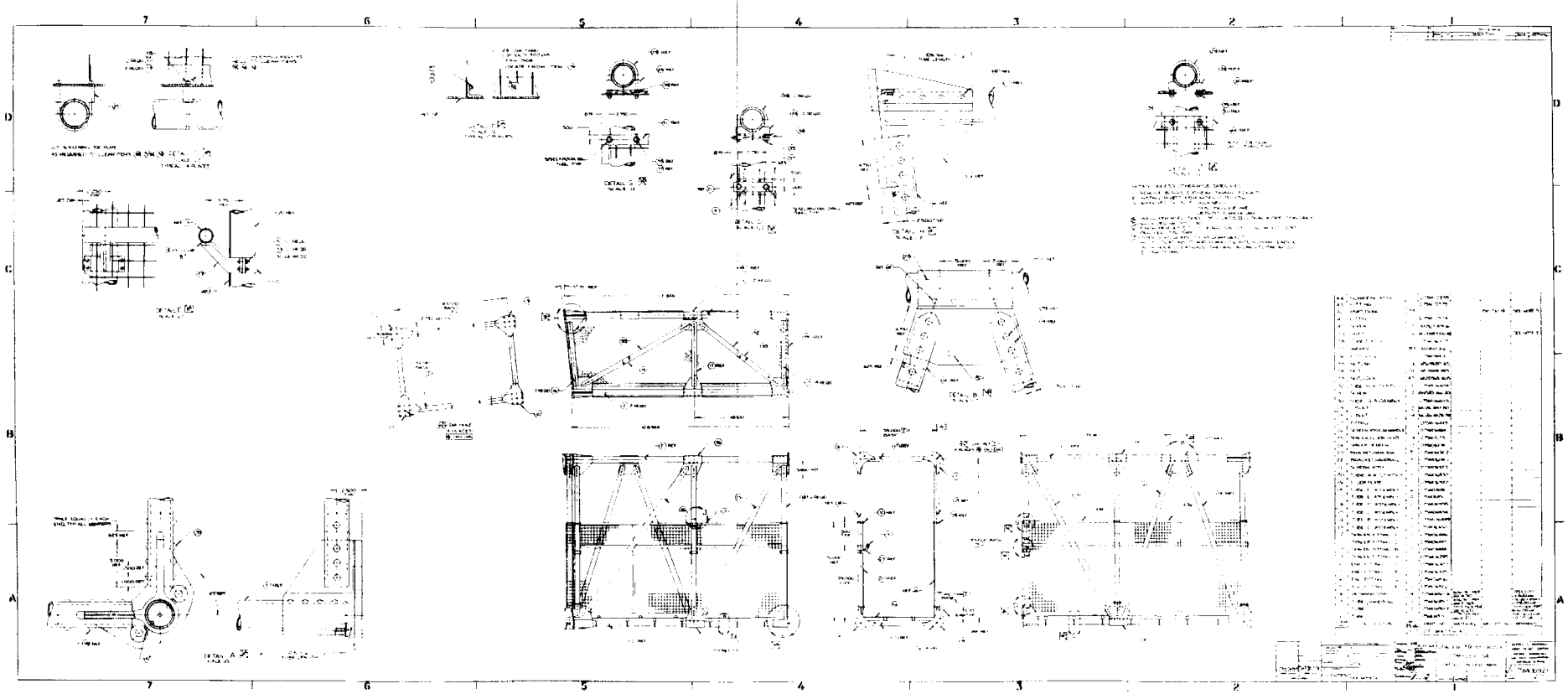

Figure 10
Spacer Truss Assembly,
Complex 34 (1 of 3)

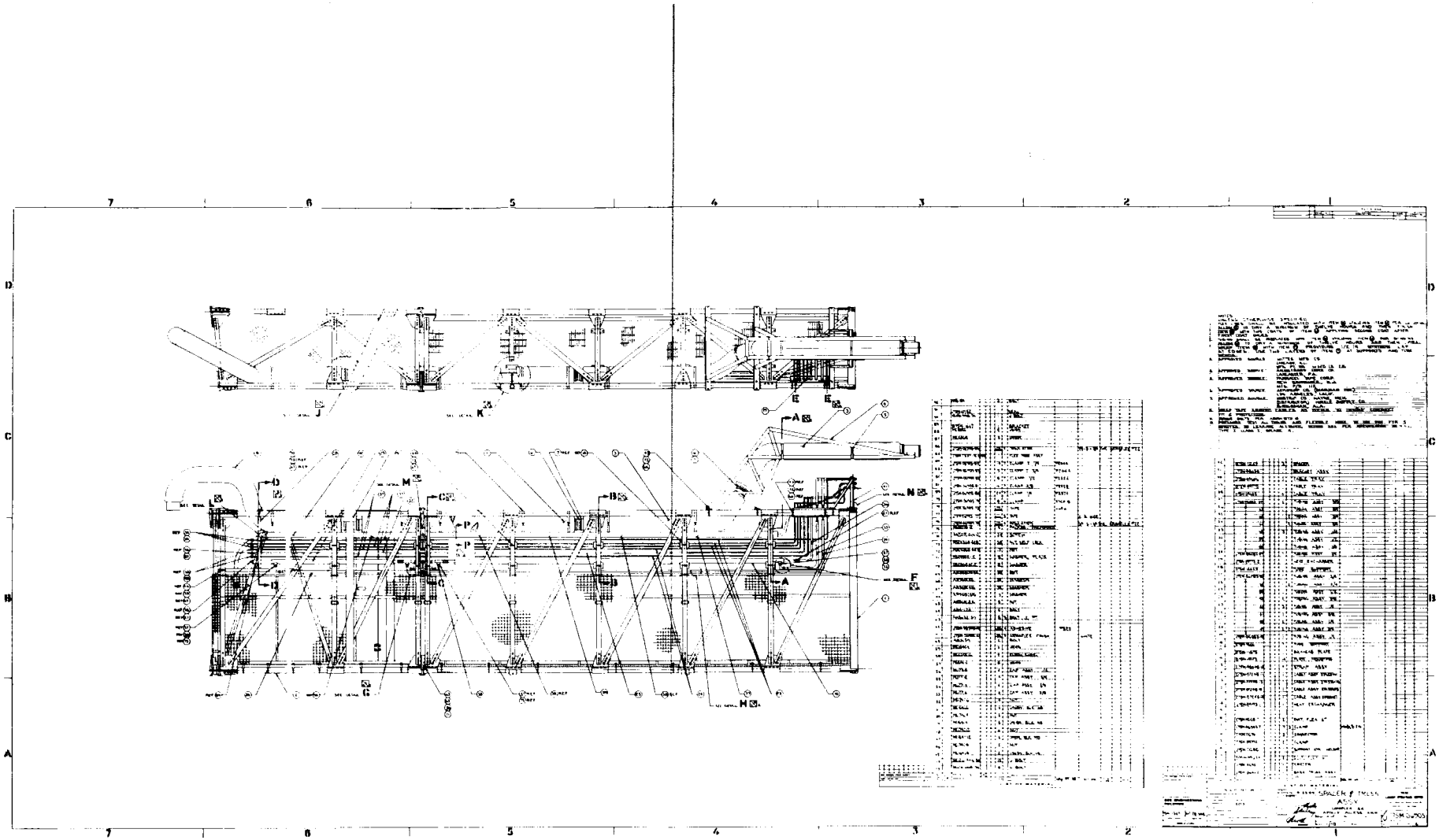

Figure 10
Spacer Truss Assembly,
Complex 34 (2 of 3)

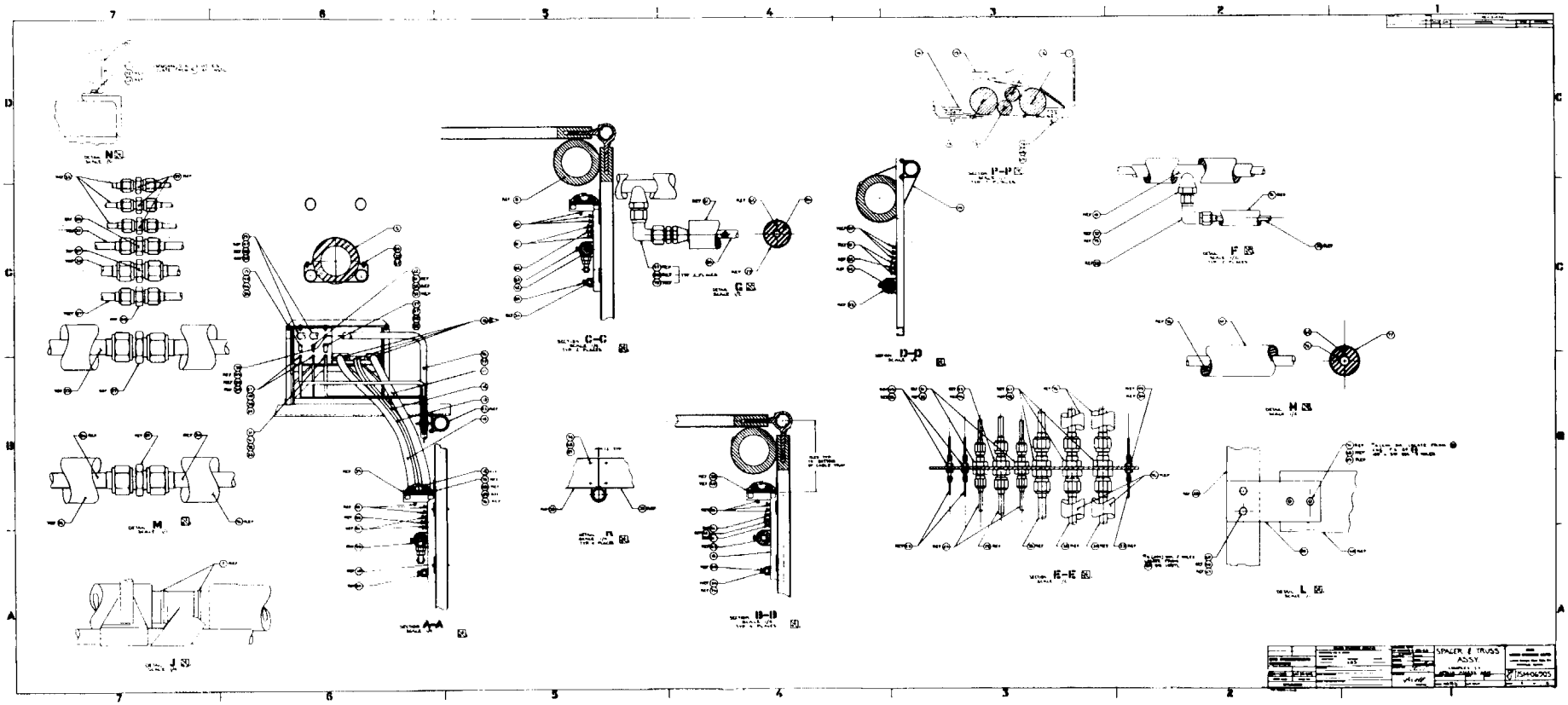

Figure 10
Spacer Truss Assembly,
Complex 34 (3 of 3)

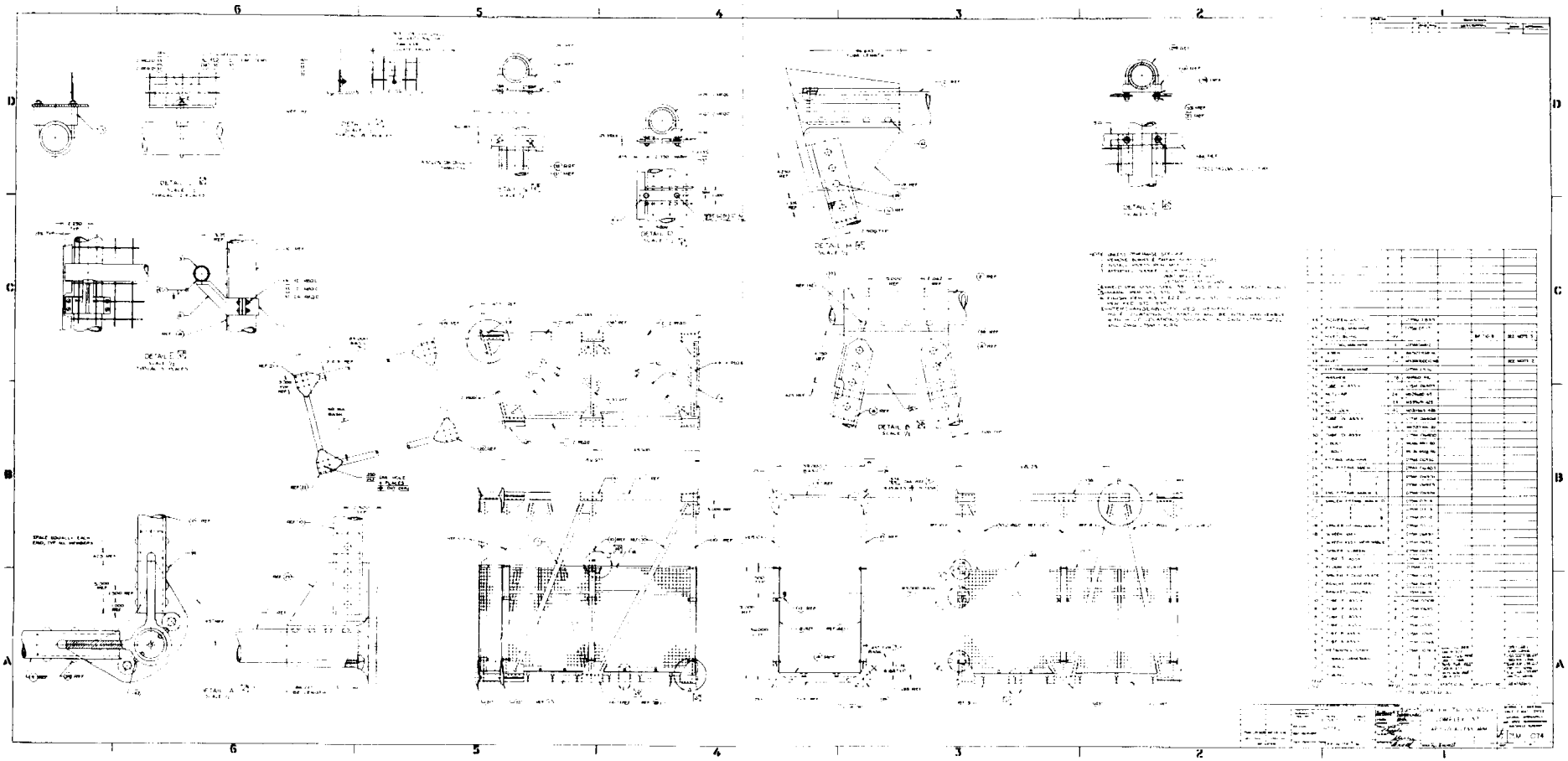

Figure 11
Spacer Truss Assembly,
Complex 37 (1 of 3)

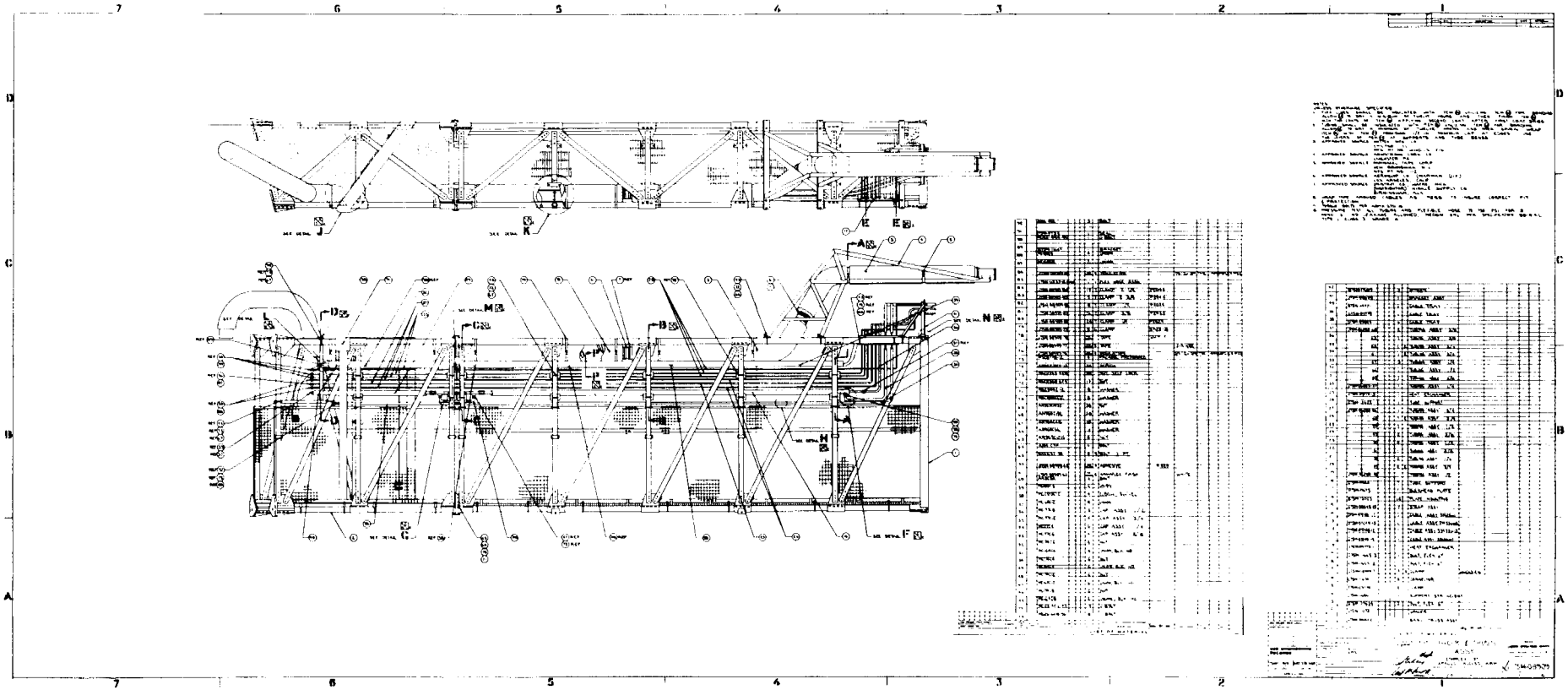

Figure 11
Spacer Truss Assembly,
Complex 37 (2 of 3)

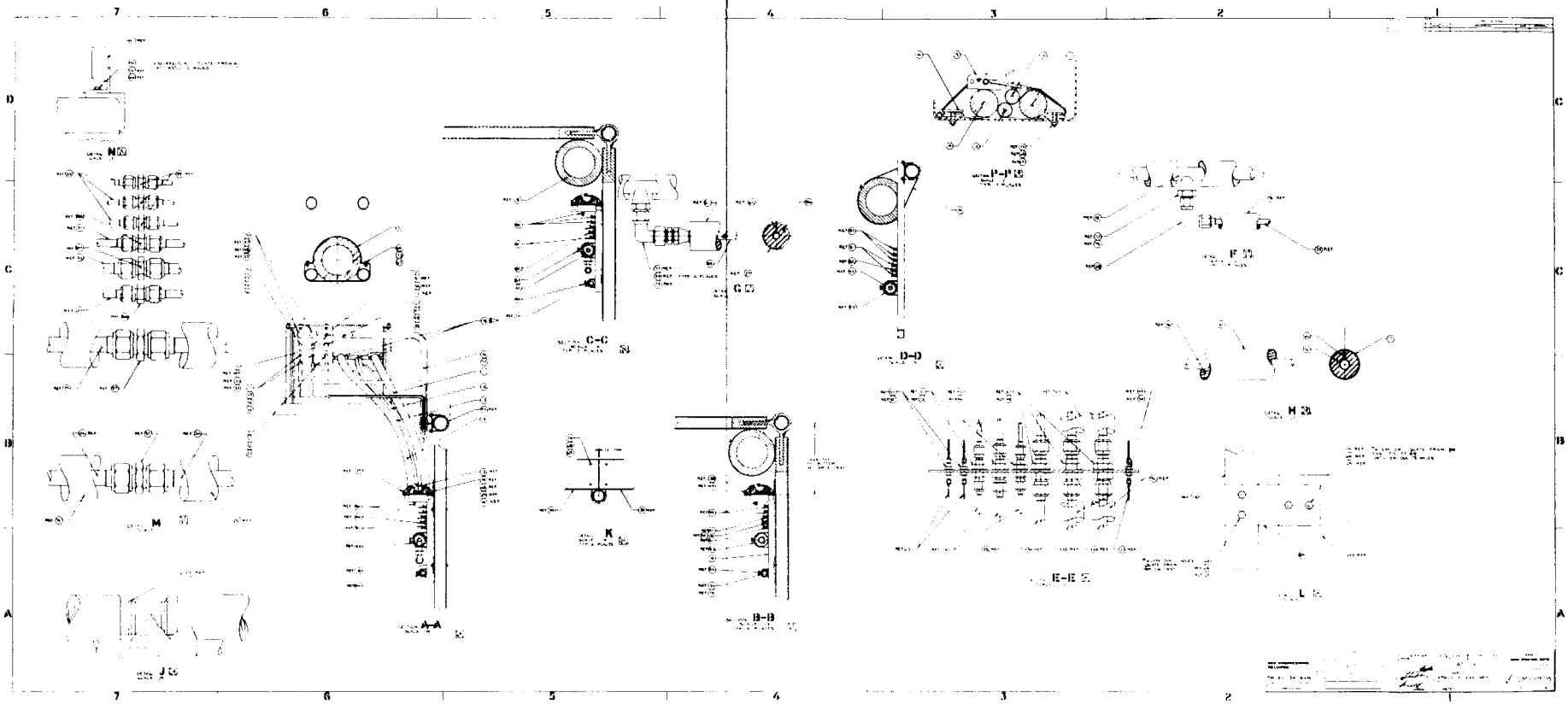

Figure 11
Spacer Truss Assembly,
Complex 37 (3 of 3)

furnished is clean, and dehumidified but not pressurized. The seal, therefore, is not required to maintain any pressure.

The Service Structure Seal frame is provided with openings for the electrical cable tray, for the A/C duct, and with junctions for the following lines: GN_2 (purge and actuation), GOX, and A/C. The line routing across the Basic Truss is through rigid tubing which is connected by flexible hose across the spacer to the Environmental Chamber. Flexible lines are also used across the arm hinge to the umbilical tower. Electrical cables are continuous and will not be in ducts or conduit since this arrangement would require purging. A plywood door equipped with a small window and fastened to the seal frame with two square-butt hinges is secured by a rotary hand-latch. If it is required to hold this door open, nylon cord or other tie-backs may be used.

SECTION VII

ENVIRONMENTAL CHAMBER

7-1. GENERAL

7-2. The Environmental Chamber (EC) Figure 12 , is a "clean room" at the vehicle end of the Apollo Access Arm. It is fabricated of aluminum structural shapes, plate, sheet, and other lightweight materials to reduce dead loads. The EC is of doublewall design with an external structural framework (Figure 12); this arrangement provides an unobstructed interior. The space between the EC double wall is insulated with rigid foam plastic which also imparts a degree of rigidity to the wall structure. The interior of the Environmental Chamber is painted with a non-flaking white enamel. The EC is considered to be an expendable item although the data obtained from the SA-4 and SA-5 launches do not indicate a severe blast pressure (or temperature) environment. The inside dimensions of the EC are: floor, 79 inches by 91 inches; ceiling height, 78 inches; it is mounted on the arm so that the 91-inch dimension is approximately parallel to the longitudinal axis of the arm. The EC is designed to support a maximum live load of 5 men (1250 pounds) or equivalent weight resulting from a combination of dead loads and live loads. Access Arm load factors used in conjunction with structural design are based on the yield point of the material as follows: live load, 3; dead load, 2; wind load, 2. The Access Arm lines to the EC and CM consist of one 6-inch I.D. air-conditioning line, one 0.75-inch diameter oxygen line with a 1.250-inch diameter jacket for water-glycol, one 0.75-inch-diameter water-glycol coolant line, one 0.250-inch, 50-psi

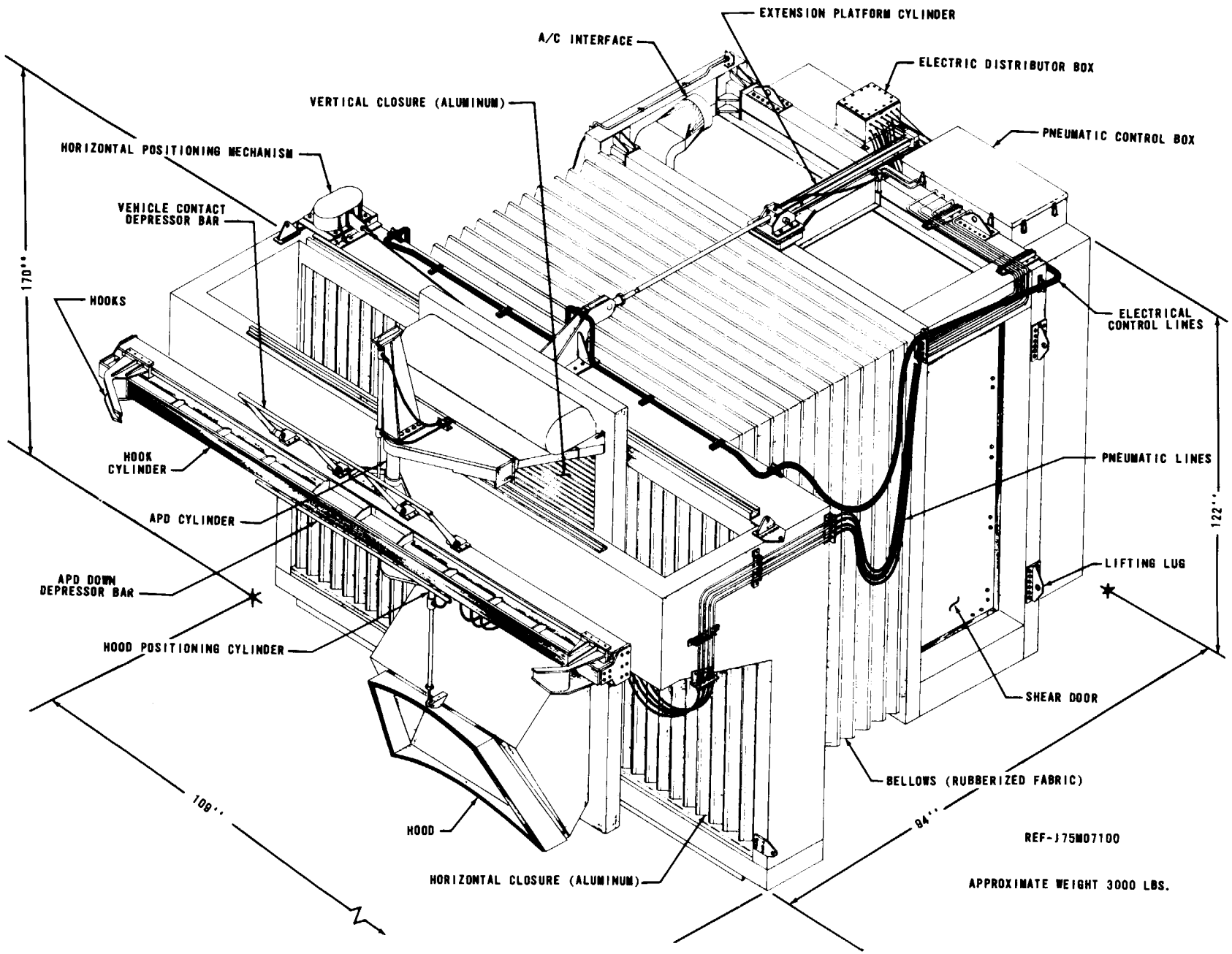

Figure 12
Environmental Chamber
(1 of 4)

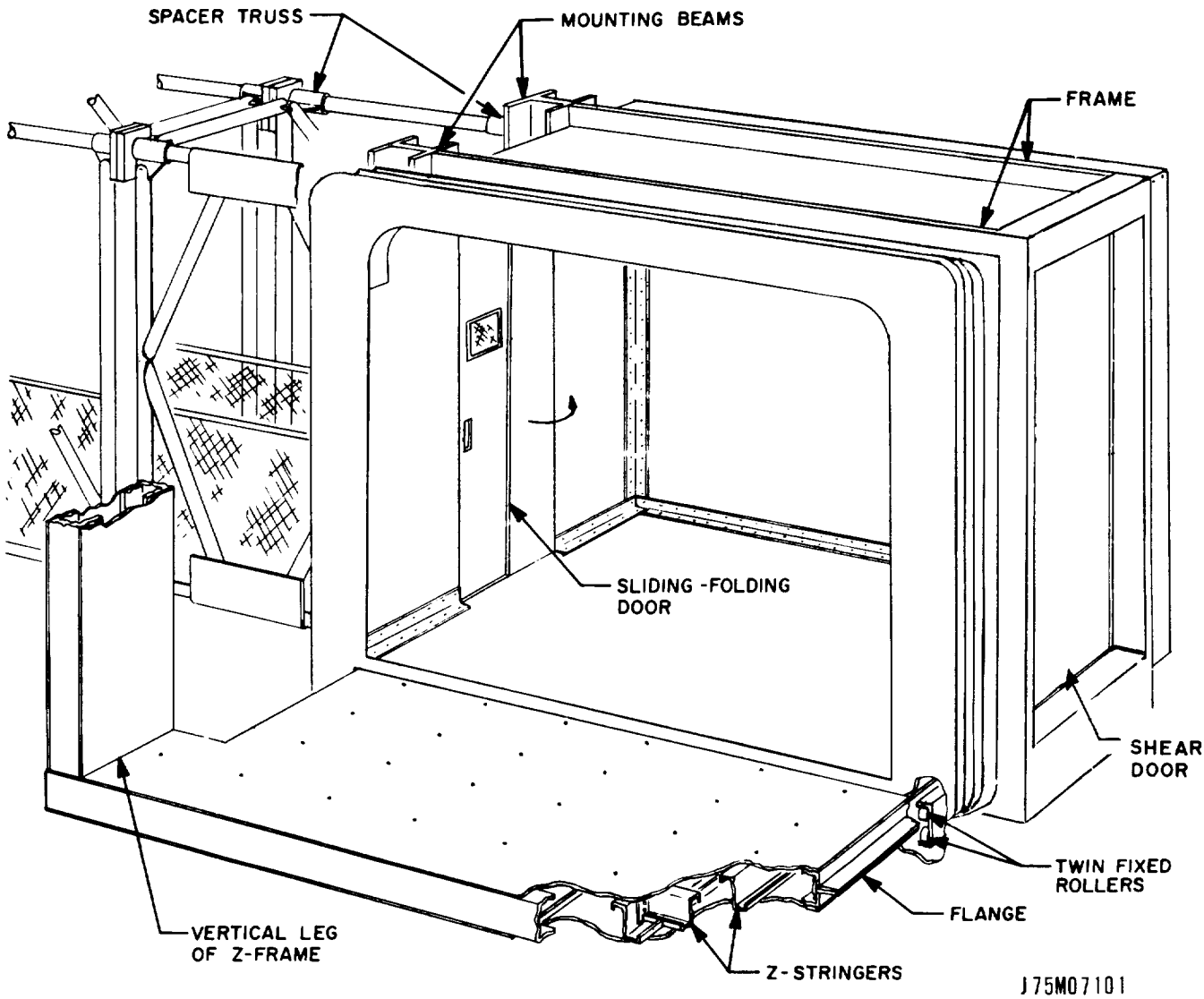

Figure 12
Environmental Chamber

(2 of 4)

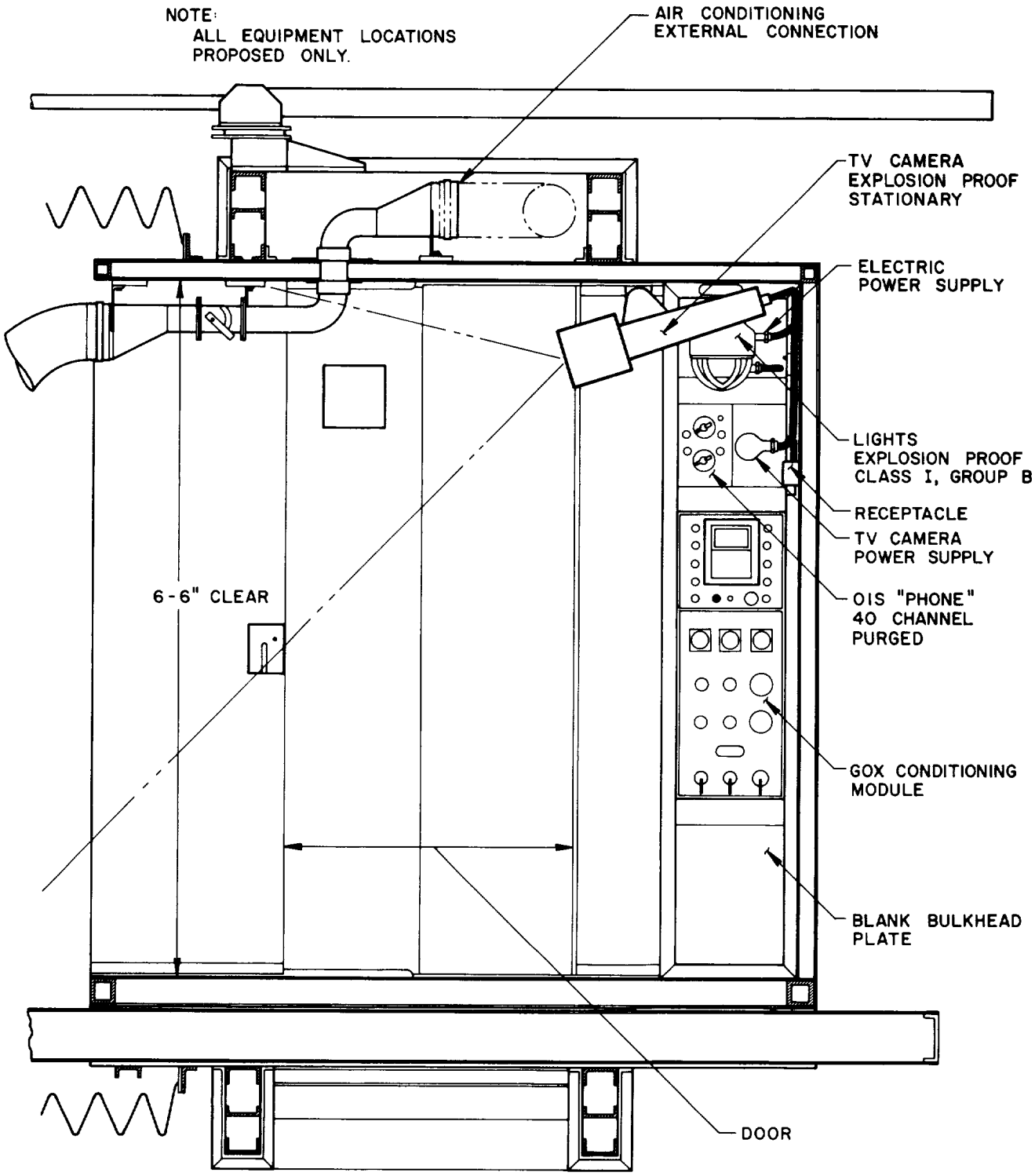

INTERIOR ELEVATION J75M07101

Figure 12
Environmental Chamber
(3 of 4)

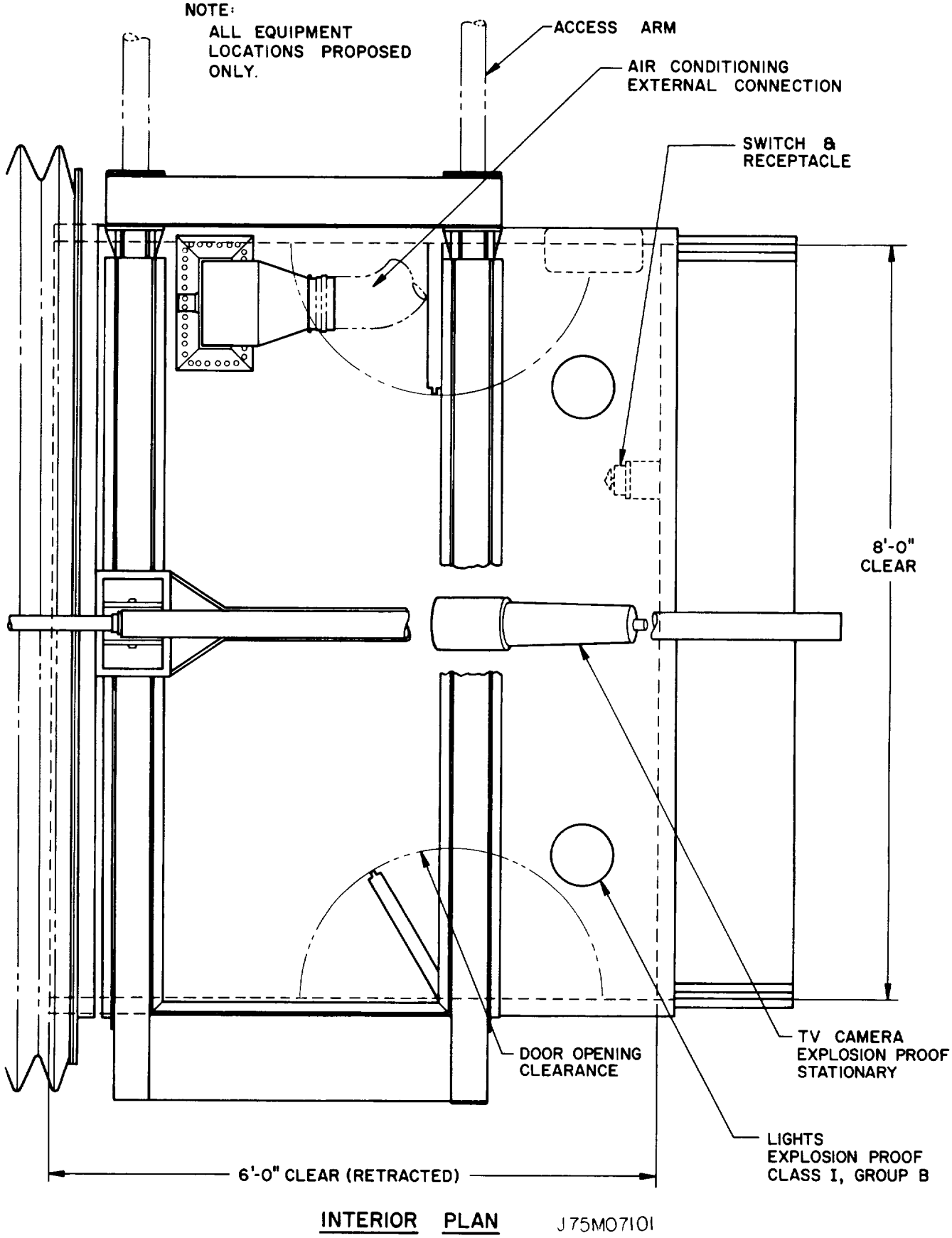

Figure 12
Environmental Chamber
(4 of 4)

purge line which terminates in two electrical boxes on the top and side of the EC, and may be "teed" for other purge requirements; one 0.375-inch-diameter, 750-psi GN_2 supply for actuators on the EC .(Note: the requirements for the Complex 39 EC are similar.)

In addition there will be a 0.25-inch, 150-psi, He leak-test line, and a 0.375-inch O_2 sensing line. The air-conditioning duct from the tower to the Command Module is carried through the EC on overhead suspension brackets mounted on the wall. Other lines will be mounted on top of the Environmental Chamber. See Section XV for a recapitulation of the lines.

7-3. A positive pressure of 2 inches of water (0.075 psi) is maintained inside the EC and the Extension-Platform Adapter-Hood passageway. This internal pressure is great enough to hinder the opening or closing of a conventionally hinged door; for this reason, the two-panel EC doors are designed with a sliding portion to reduce this force and to facilitate the operation of the hinged panel of the door; one panel of the doors is equipped with a small window. The EC door on the service structure side of the EC is covered externally by a shear door set into a frame and bolted into place while no dead load or live load is in the EC. This shear panel is removed for service access only, and is replaced when the EC is not enclosed in the service structure.

7-4. A bellows-enclosed Extension Platform and an Adapter Hood with a rubber contact seal complete the environmentally controlled passageway to the Command Module.

7-5. The Extension Platform consists of an extendable-retractable floor suspended between two channel tracks beneath the EC floor. A series of roller-bearing guide wheels mounted within the channel tracks permit free movement of the platform floor in a direction toward or away from (radial to) the vehicle, but no lateral movement. Some of the guide wheels are arranged with their diametral planes parallel to the plane of the floor; others are arranged with their diametral planes perpendicular to the plane of the floor. Refer to Figure 12 .

A box frame superstructure made integral with the Extension Platform floor carries the Adapter Positioning Mechanism and the Adapter Hood. The passageway from the EC to the CM, formed by the Extension Platform and Adapter Positioning Mechanism, maintains and extends the environmental atmosphere of the EC by means of bellows-type closures. The Adapter Hood has a soft rubber seal which makes contact with the CM and preserves the "clean room" atmosphere of the passageway.

7-6. The Adapter Positioning Mechanism is a pneumatic-mechanical device for seeking, contacting and coupling to the Launch Escape System tower legs. Refer to Figure 12 . It consists of a frame weldment supported on a roller system which rides on a flat track at the forward end, and on a channel track at the aft (EC) end of the extension platform superstructure. These horizontal tracks are elements of the extension platform superstructure, and are arranged to allow lateral motion of the Adapter Positioning Mechanism. Since this direction of motion is at right angles to the extend-retract direction of motion of the Extension Platform,

complete freedom of movement of the positioning mechanism in a horizontal plane is achieved. The flat track is designed to accommodate vertical loads only, whereas the channel track accommodates thrust loads (from vehicle to extension platform) as well as vertical loads. In addition to carrying the pneumatically operated coupling hooks, the adapter positioning mechanism frame also carries the Adapter Hood. The Adapter Hood is mounted to the Adapter Positioning Mechanism by vertical guide bars, and is maintained in contact with the vehicle by a force provided by a self-locking air cylinder.

7-7. The Adapter Hood (refer to Figure 12) consists of a framework of aluminum structural shapes enclosed in sheet aluminum; the Hood is connected to the Adapter Positioning Mechanism through a pair of vertical guide bars carrying two bushings each. The hood aperture is padded around its perimeter with a soft rubber seal; constant pressure of the seal against the CM is maintained by the 2-inch water head of the conditioned air supplied to the EC. An approximate total force of 100 pounds will be distributed over an access hatch peripheral area of 300 square inches, while maintaining a minimum 2-inch clearance from the edge of the hatch about the opening. This loading is well under the allowable 0.5 psi on the ablative material which coats the CM skin. The Adapter Hood is equipped with an internal folding door to maintain the pressure in the Environmental Chamber when the Adapter is withdrawn from the CM. This door can be opened either from the CM side or from the EC side. An additional door immediately adjacent to the seal is of the membrane type; this door is equipped with

a quick-release cord.

7-8. Conditioned air will be furnished to the Chamber at a rate of approximately 40 pounds per minute at 70 degrees F., to ensure a positive pressure in the Chamber and to condition the Command Module as well; the air conditioning (A/C) duct must pass through the CM access hatch to provide circulation and cooling for the CM. Air flow will be maintained by venting through a louvre in the end of the EC when air pressure in excess of 2 inches of water (0.075 psi) is reached. The space between the inner and outer skins of the CM at the access hatch must be sealed in the event that the GN_2 purge pressure required by North American Aviation (NAA) for the donut area is higher than the 0.075 psi inside the EC.

The above-atmospheric pressure in the Environmental Chamber is designed to maintain a clean atmosphere in the EC and the Adapter. A positive air pressure within the EC will cause an outward seepage of air and prevent the inhalation of contaminated outside air.

Prior to closing the CM hatch, the air conditioning duct will be withdrawn from the CM to the EC where it will continue to function. The A/C duct will be fitted with a manually operated butterfly valve; this valve will have a circular orifice in the center of its vane so that it may serve as a flow restrictor rather than as an absolute cut off. It may be used to adjust flow quantity to the CM and EC.

The air conditioning duct to the Environmental Chamber will be mounted on the Access Arm. Sufficient hazard-proof lighting for nighttime boarding by the astronauts will also be provided. (Lighting is required in

the EC at all times; two class I, group B, 150-watt light fixtures are provided. The same circuit supplies a hazard-proof wall plug in the EC. The Arm is to be lighted by floodlights or spotlights located on the tower column above the Arm).

SECTION VIII

HANDLING AND ERECTION

8-1. GENERAL

8-2. The Apollo Access Arm will be erected with the aid of the umbilical tower crane which is mounted on top of the tower. The capacity of the umbilical tower crane is 5000 pounds; since the weight of the Apollo Access Arm and its accessories exceeds 15,000 pounds, the arm must be raised in segments (Figure 13).

8-3. The Access Platform, previously raised in 4 sections (Sections 1 and 4 as one unit) and bolted into place, will be used as a base of operations for the erection of the Access Arm. Refer to Figure 14 for erection details of the basic platform module, Section Number 1. The actuating assembly (hinge plates, two actuators, and back plate) will be lifted as the first unit, and bolted to the tower mounting column. The second unit to be hoisted is the Basic Truss-Spacer Truss Assembly. The third, and final unit to be erected is the Environmental Chamber and its components. The weights of these units are as shown in the erection diagrams; the weight of each unit lifted is well within the limits of the tower crane capacity.

8-4. Spreader bars, strut bars, spacer bars, lifting lugs, are provided as required. A special lifting rig has been devised for the EC, and other special lifting rigs are in use for the hydraulic rotary actuators, trusses, and the hinge assembly.

8-5. Figure 13 shows the EC lifting rig. The same spreader beam is

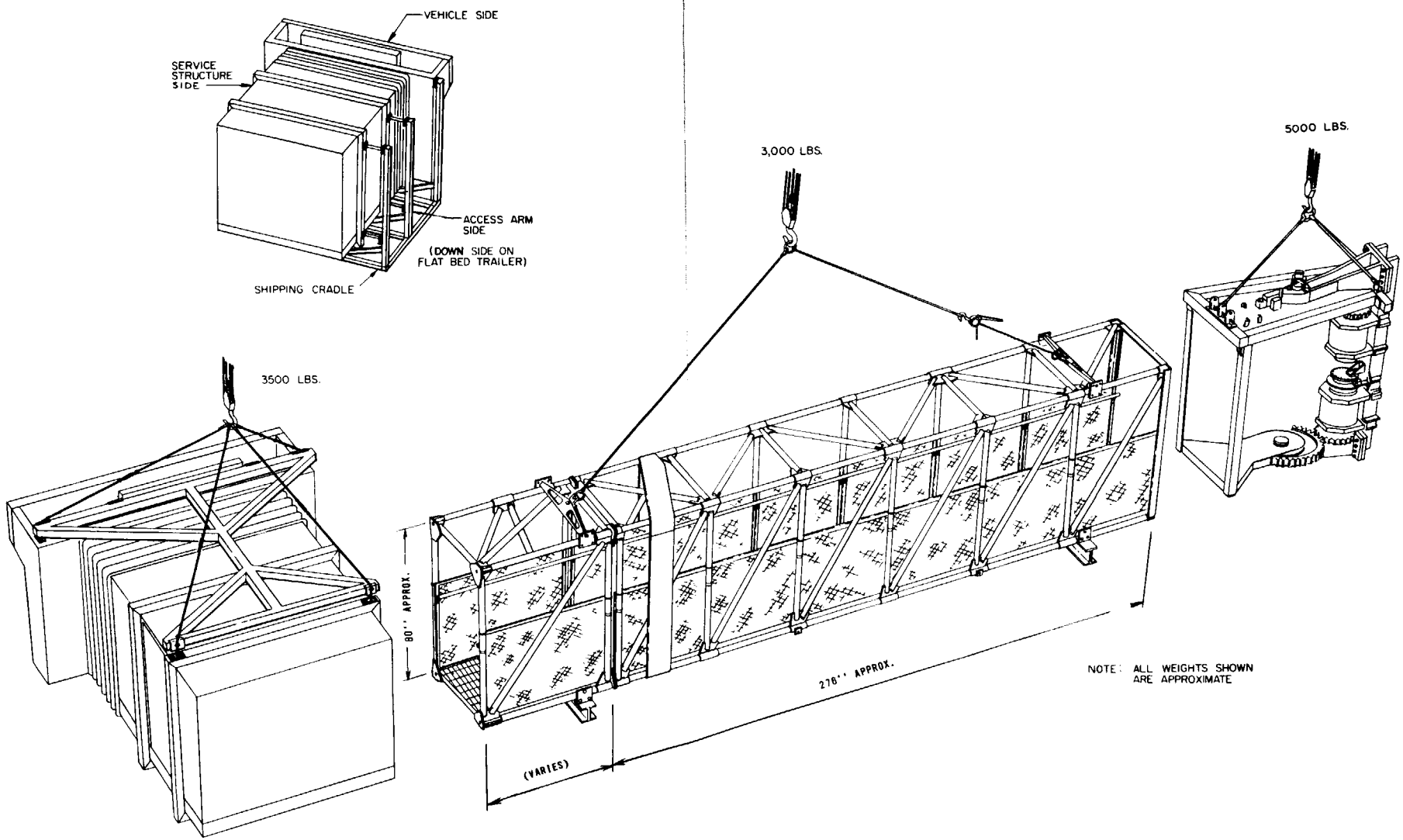

Figure 13
Apollo Access Arm Lifting Sequence
(1 of 4)

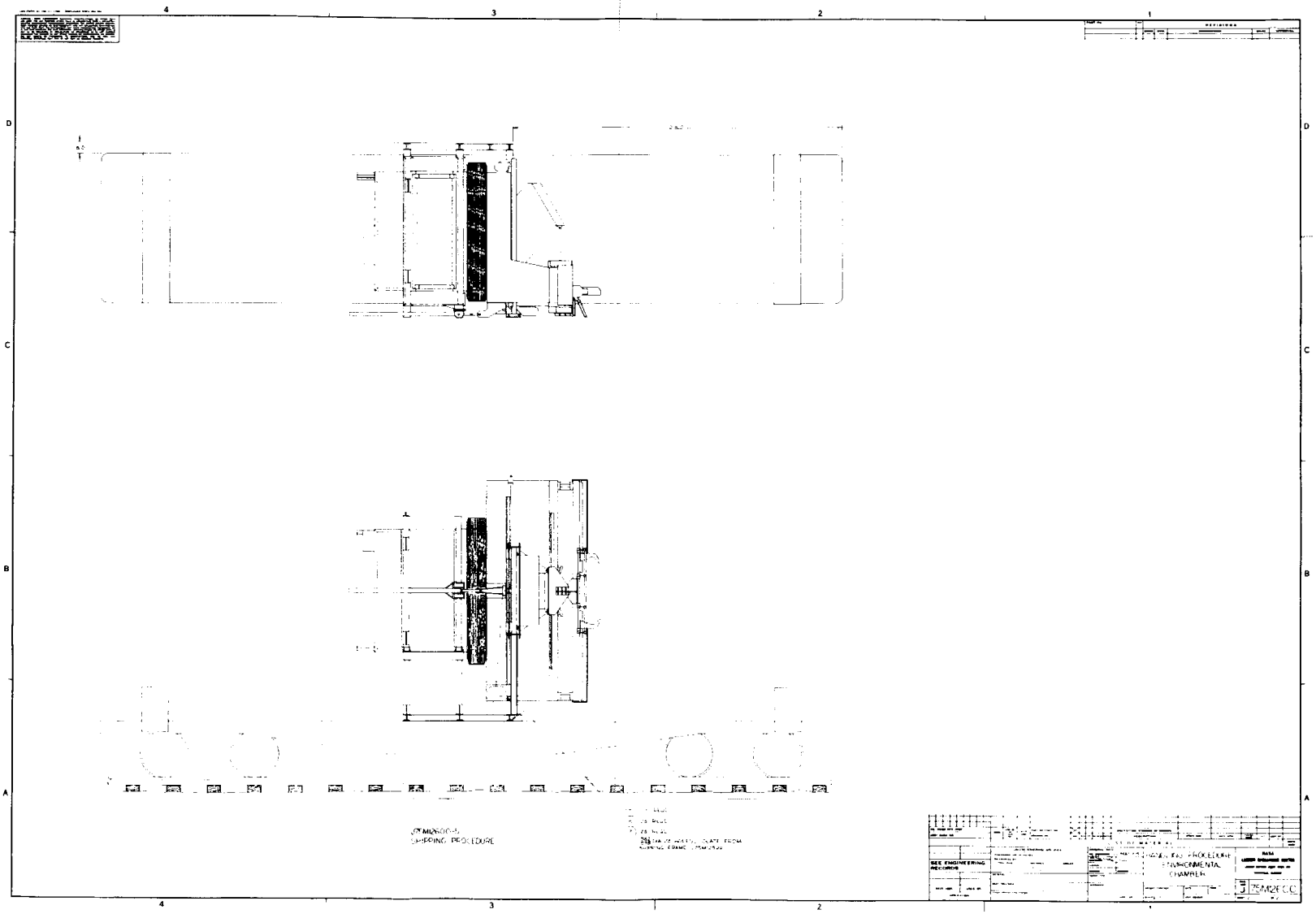

Figure 13
Apollo Access Arm Lifting Sequence
(2 of 4)

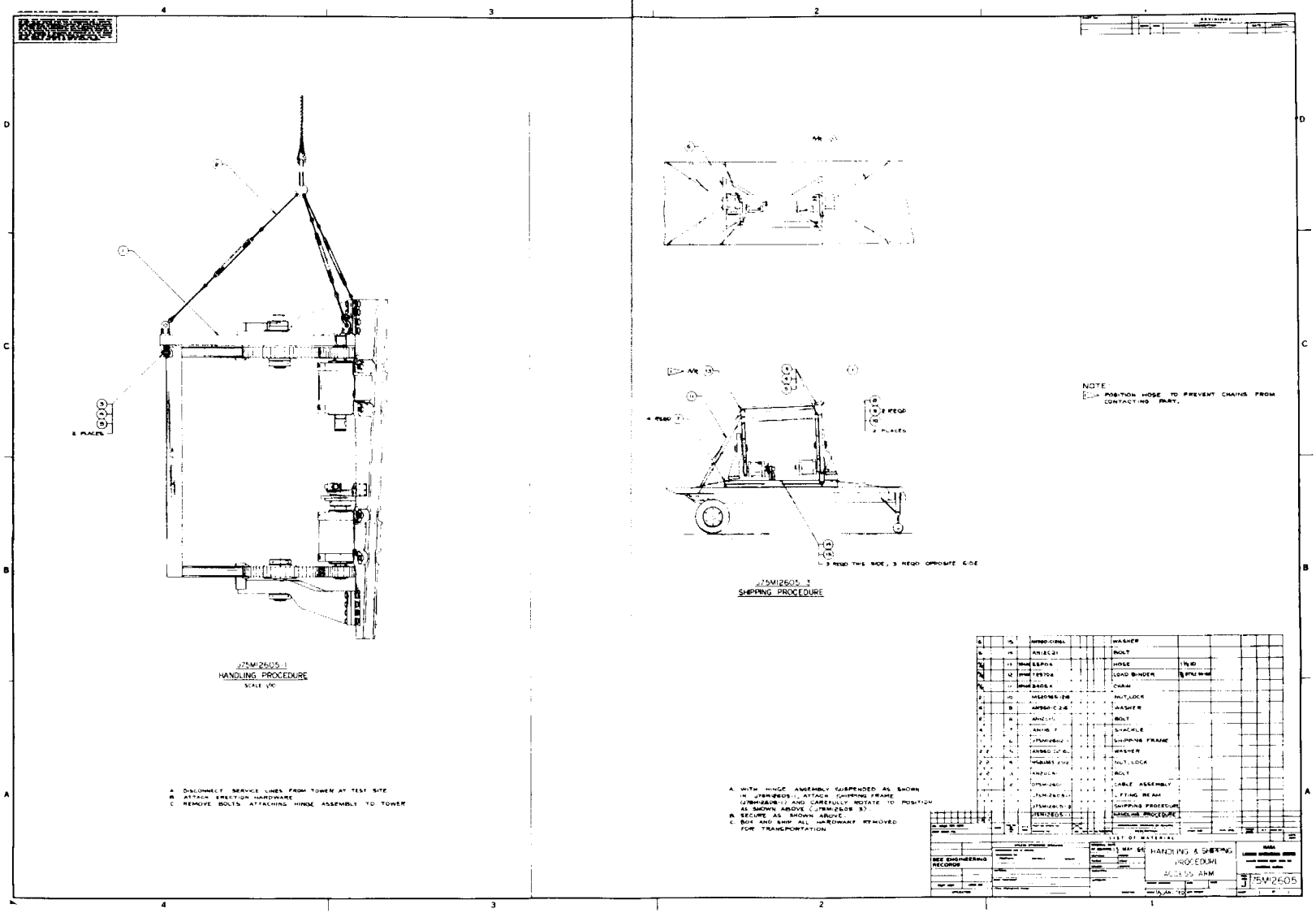

Figure 13
Apollo Access Arm Lifting Sequence
(3 of 4)

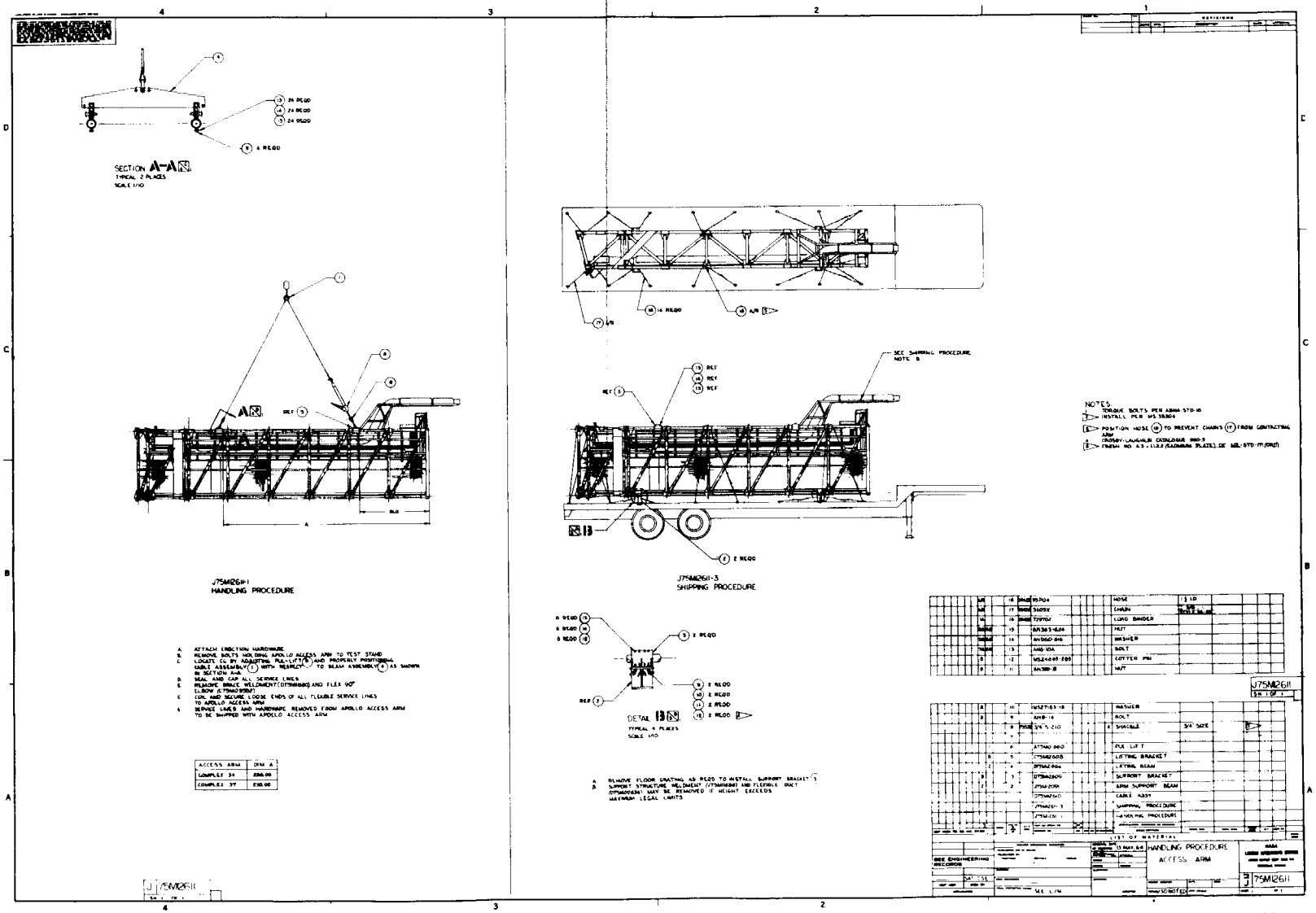

Figure 13
Apollo Access Arm Lifting Sequence
(4 of 4)

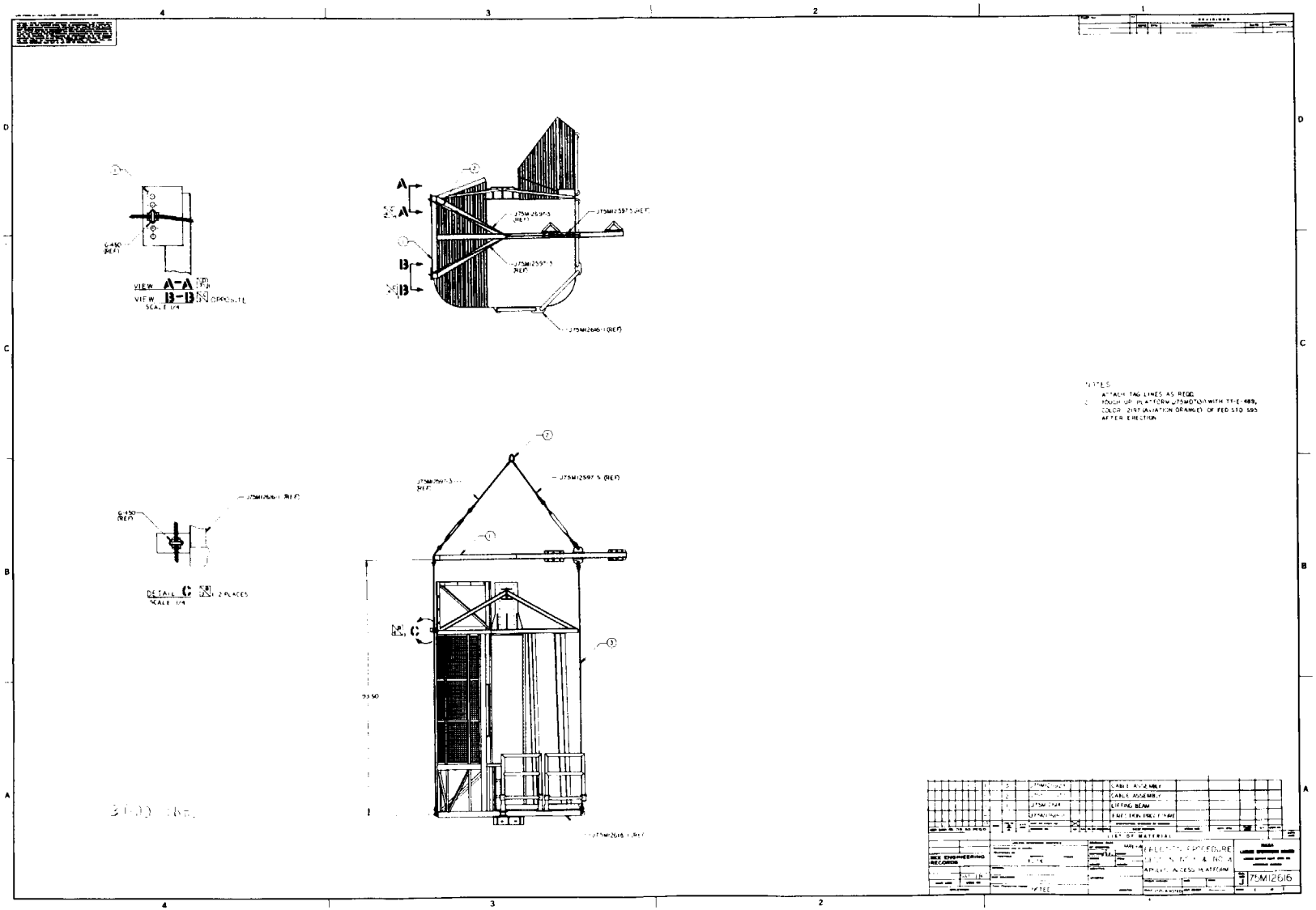

Figure 14
Apollo Access Platform
(1 of 2)

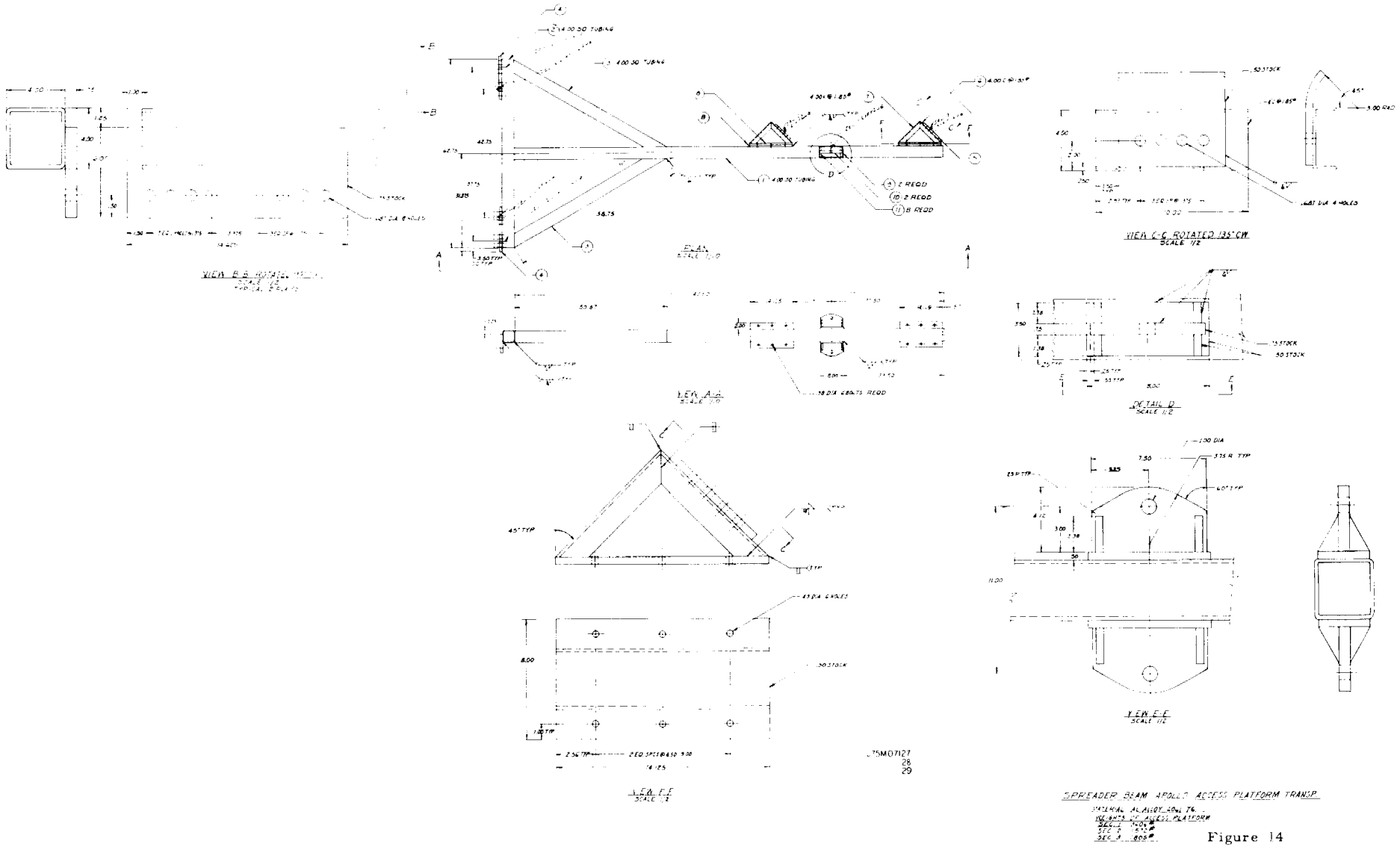

Figure 14
Apollo Access Platform
(2 of 2)

used for erection (lifting), and handling (lifting with the shipping cradle attached). The EC is shipped in the upright position when barge facilities are utilized; however, the EC must be turned on one side for shipment by rail. The shipping cradle (or transportation frame) is fabricated of 5-inch junior beams; energy absorption pads of special design (made of rubber) are provided at all mounting points.

8-6. The hydraulic rotary actuators (Rotacs), hinges and hinge gears (the Actuating Assembly) are shipped assembled, locked in the extended position, and mounted on a shipping pad. This assembly is lowered onto the highway trailer and hoisted from the trailer with the lift beam and cable sling. The shipping pad must be removed at Atlantic Missile Range (AMR) before the assembly can be mounted on the adapter J75M12586; the adapter is mounted on the arm transporter (J75M12588) which, in turn, is mounted on the handling dolly (MFR. NO. 5025-A, ELECTRIC WHEEL CO.). Alternately, the assembly on its pad may be shipped directly to the Umbilical Tower where the pad is removed prior to erection. The actuators and hinge gears are not removed from the hinge arm assembly, but are erected as a unit.

8-7. Figure 15 shows the Basic Truss and Spacer Truss being positioned on the tower. The Basic Truss is bolted to the Hinge Actuator Assembly; when attached, the basic arm may be swung into position for the mounting of the EC.

8-8. The Latch-back assembly is mounted on the southeast side of the

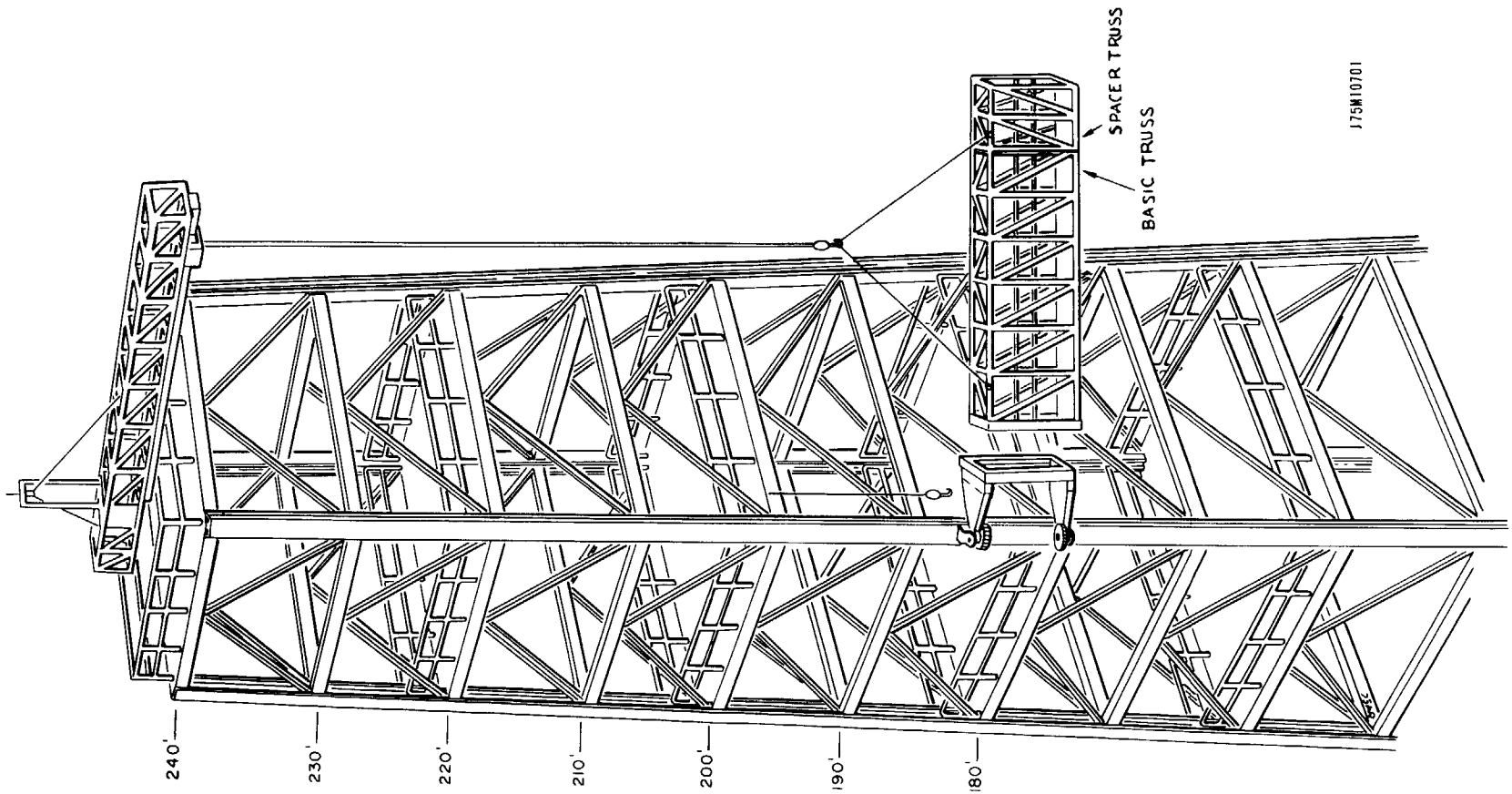

Figure 15
Truss Positioning

tower, and is adjusted by means of shim plates to its final position (Figure 18).

8-9. The Hydraulic Control Panel and the Accumulator Stand are shown in Figure 21 in their relative positions on the umbilical tower. Both include lifting lugs for ease of erection. See Figure 16 for Control Panel erection. Figure 17 shows Accumulator Rack erection.

When the Access Arm is completely assembled, it may be moved manually and checked by opening a manually controlled by-pass valve without applying any force to the arm.

To be supplied

Figure 16
Control Panel Erection

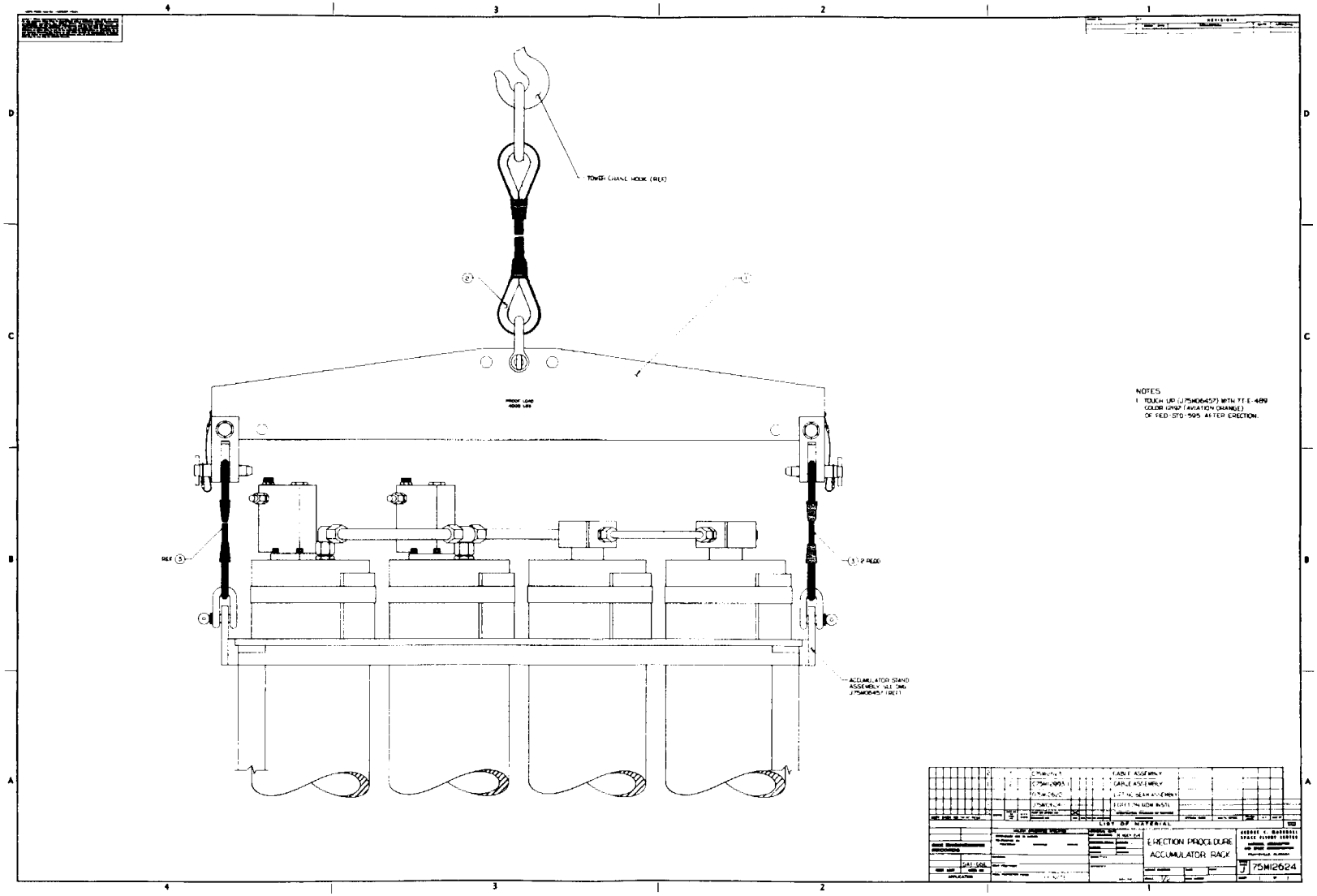

Figure 17
Accumulator Rack Erection

SECTION IX

LATCH-BACK ASSEMBLY

9-1. GENERAL

9-2. During normal operation the blast support (Figure 18) does not support the Access Arm; a clearance approaching 1/16 inch between the arm and the support has been provided by means of a shim adjustment. However, excessive blast loads resulting in an arm deflection of 1/16 inch will cause the Arm to rest on the blast support. The blast support also serves another function: it is used as a mounting for the Latch-back mechanism.

The Latch-back mechanism is a pneumatic-cylinder-operated hook. At vehicle launch the Lift-off Switch initiates a signal to operate a solenoid-controlled pneumatic valve. When the valve opens, the Latch-back cylinder is actuated, and the latch hook engages the lower longitudinal arm truss member, securing the Arm against the bumper.

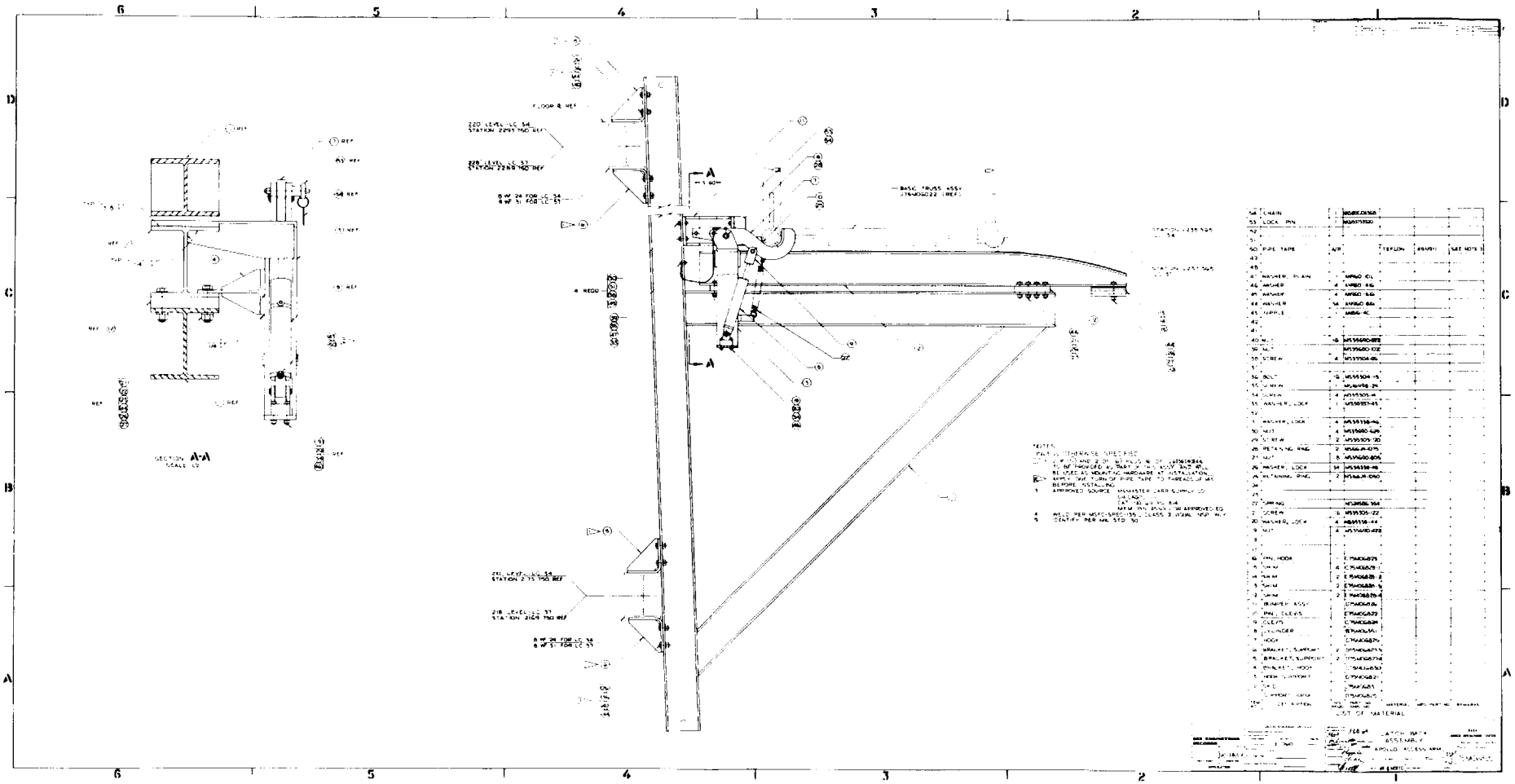

Figure 18
Latch-back Assembly

SECTION X

CONTROL CONSOLE

10-1. GENERAL

10-2. The Control Panel Assembly (Figure 19) has supply connections for 750 psi and 3000 psi pneumatic supply lines; for a 1500 psi hydraulic supply line, and for a 50 psi nitrogen purge line. The panel outlets are: a 750-psi pneumatic for the Latch-back Assembly; a 750-psi pneumatic to operate the Environmental-Chamber-mounted vehicle connect system; a 1500-psi pneumatic used in charging the Accumulator Assembly; a 1500-psi vent; a 1500-psi hydraulic connection for arm extension and retraction (one operates as a return); a hydraulic return, and a spare 750-psi pneumatic supply. Refer to Figure 24 . An internal junction box provides connections for the electrical cable assemblies and for associated electrical switches. The control panel cabinet is furnished with a vent diaphragm to bleed excessive purge pressure within the cabinet. The panel is equipped with access doors to facilitate servicing cabinet components.

The console is fitted with two external control handles, two pneumatic shut-off controls (750 psi and 3000 psi), and a pressure readout dial. Sheet 4 of 4, Figure 19, shows the Apollo Access Arm Blockhouse Panel (LCC Panel).

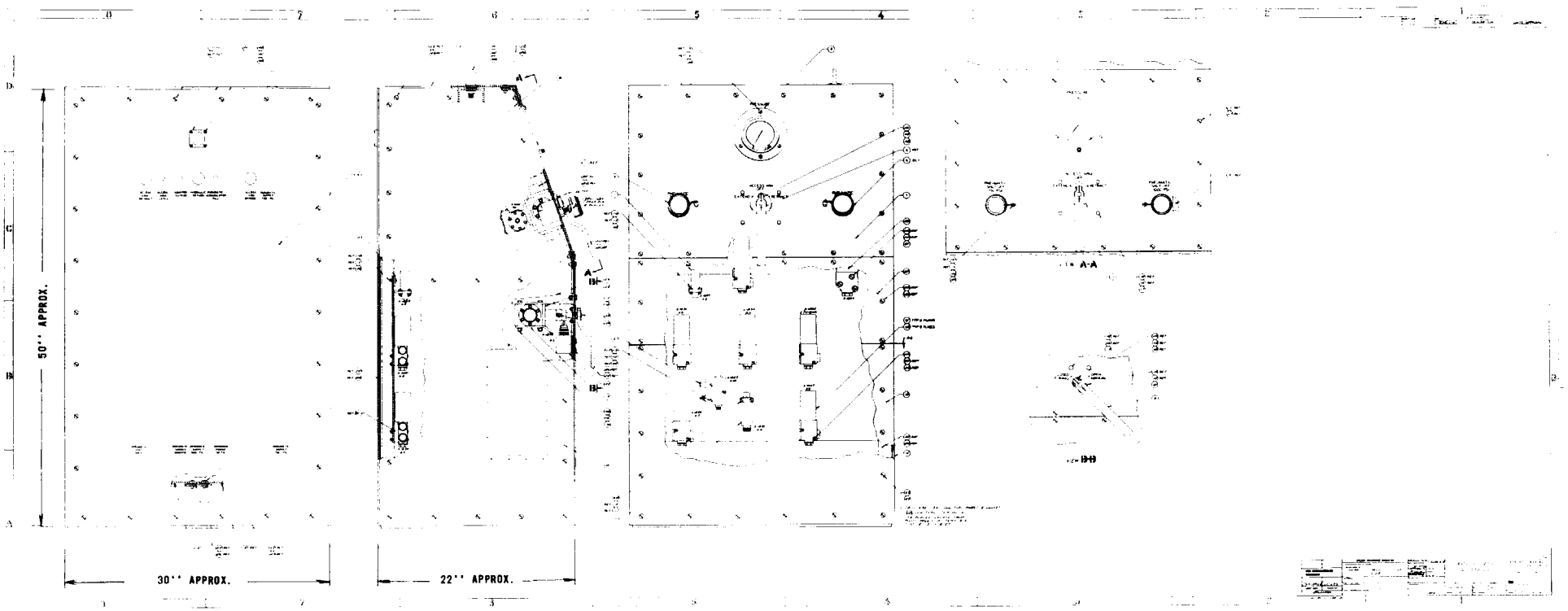

Figure 19
Control Panel Assembly
(1 of 4)

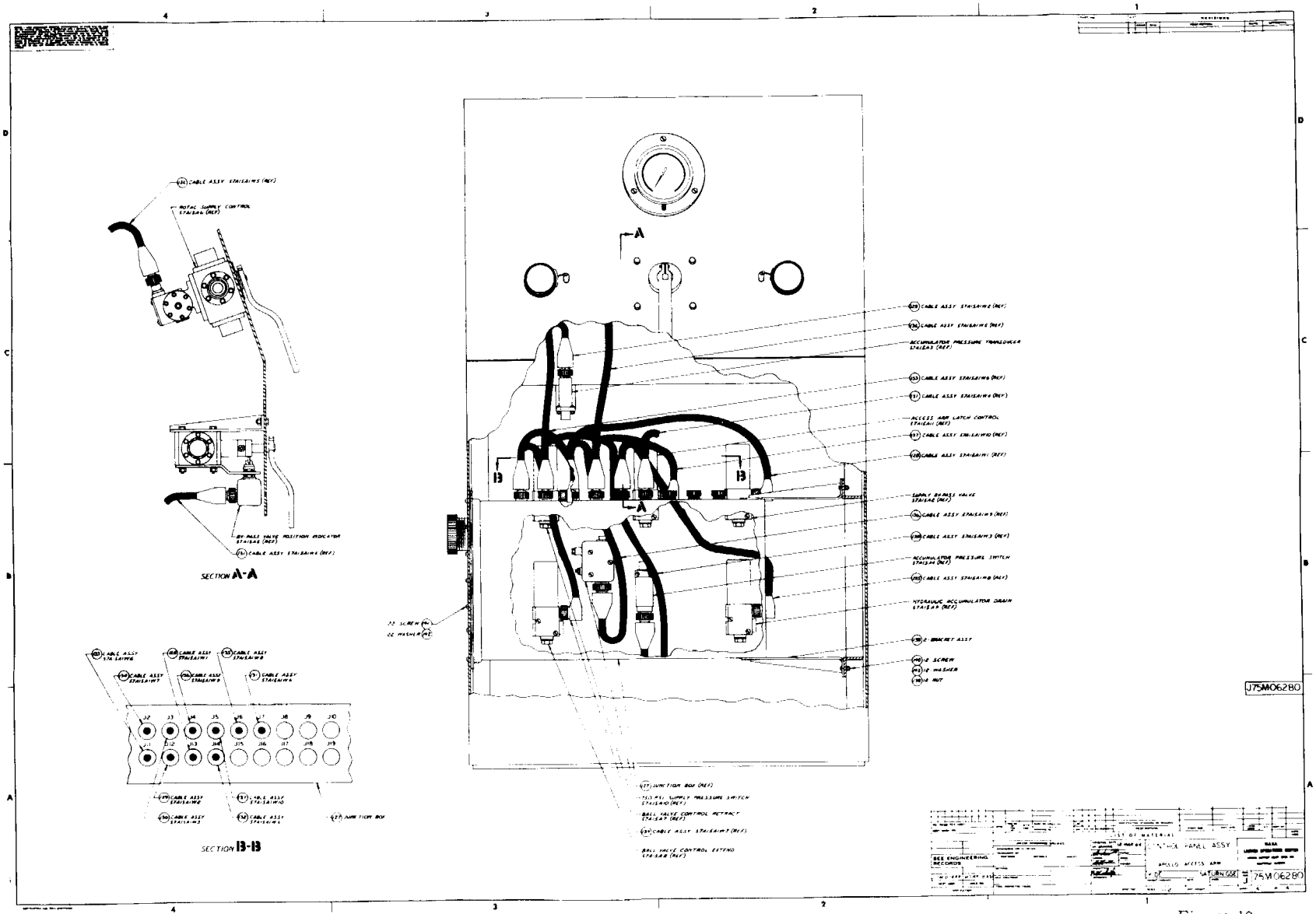

Figure 19
Control Panel Assembly
(2 of 4)

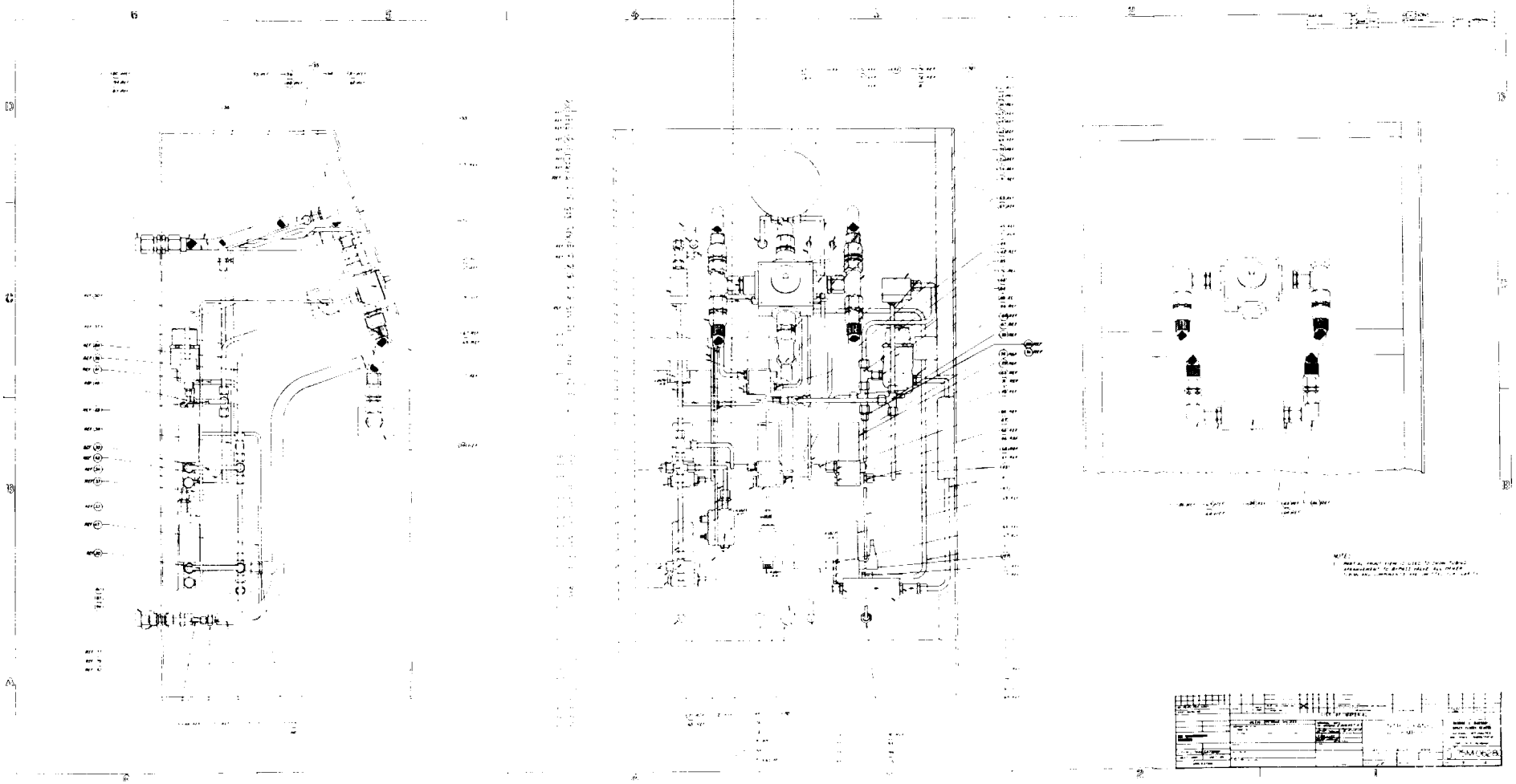

Figure 19
Control Panel Assembly
(3 of 4)

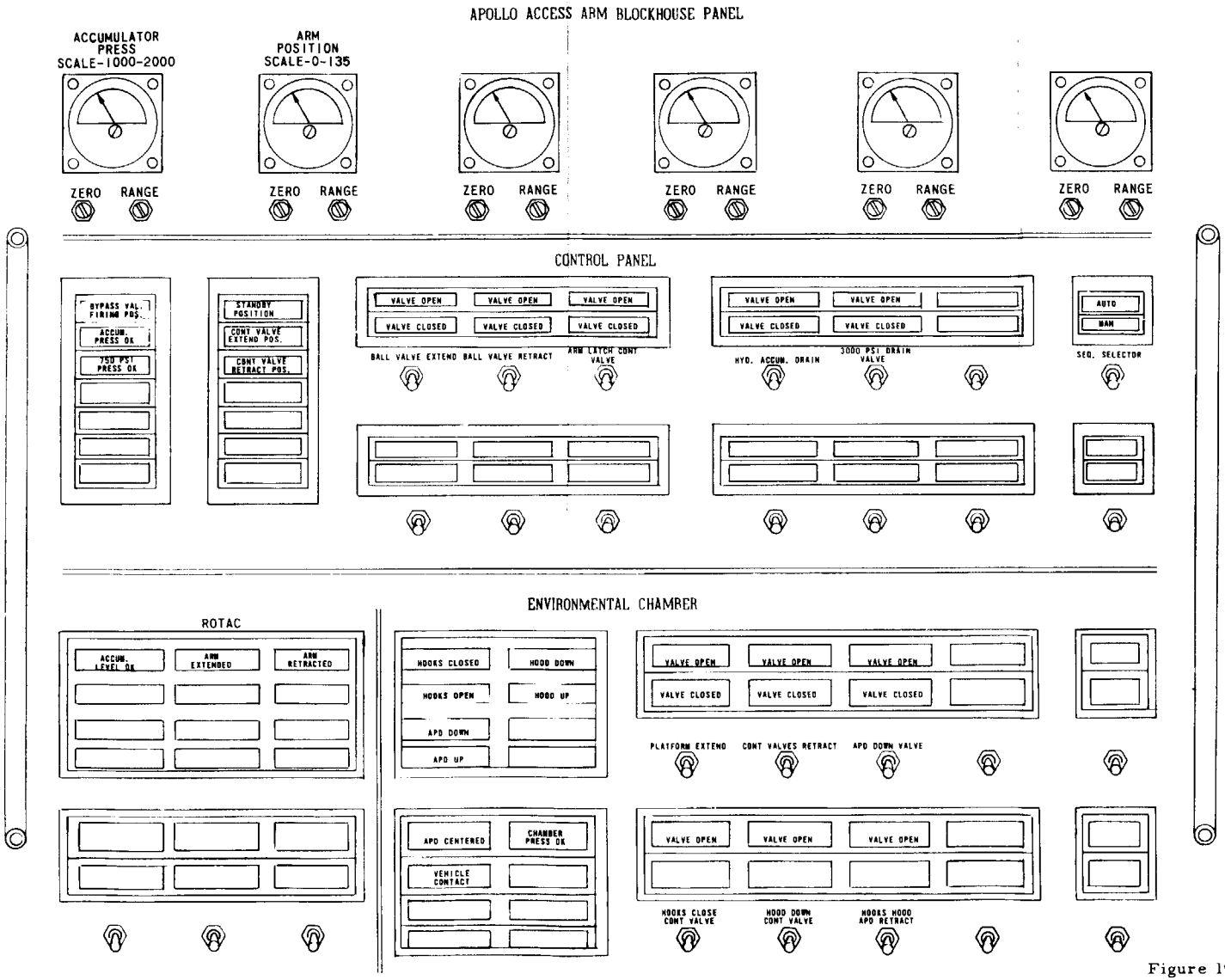

Figure 19
Control Panel Assembly
(4 of 4)

SECTION XI

ACCUMULATOR STAND

11-1. GENERAL

11-2. The Accumulator Stand (Figure 20) is arranged on the tower floor in relation to the Control Console as shown in Figure 21. The Accumulator Stand is equipped with two 10-gallon hydraulic fluid accumulator cylinders, and with two 2310-cubic-inch pneumatic accumulator cylinders. Through inter-connecting lines a pressure of 1500 psi is maintained in the hydraulic cylinders (for supply to the Control Panel) by the 1500 psi pneumatic pressure of the pneumatic cylinders (supplied from the Control Panel). The pressure in the pneumatic cylinders is controlled by a pressure regulator and a relief valve mounted in the Control Panel; these cylinders are furnished with a manually operated metering bleed (angle) valve.

The hydraulic cylinders are charged from a 1500 psi hydraulic supply line. A level-sensor switch, equipped with a 50-psi N_2 purge line, in the top of each hydraulic cylinder indicates when the cylinders are full by illuminating a lamp. Two lamps in parallel in the indicator circuit obviate the possibility of an "empty" reading should one lamp filament burn out.

Approximately 5.0 gallons of hydraulic fluid is used from the cylinders per one access arm extension or retraction (2.5 gallons per hydraulic actuator).

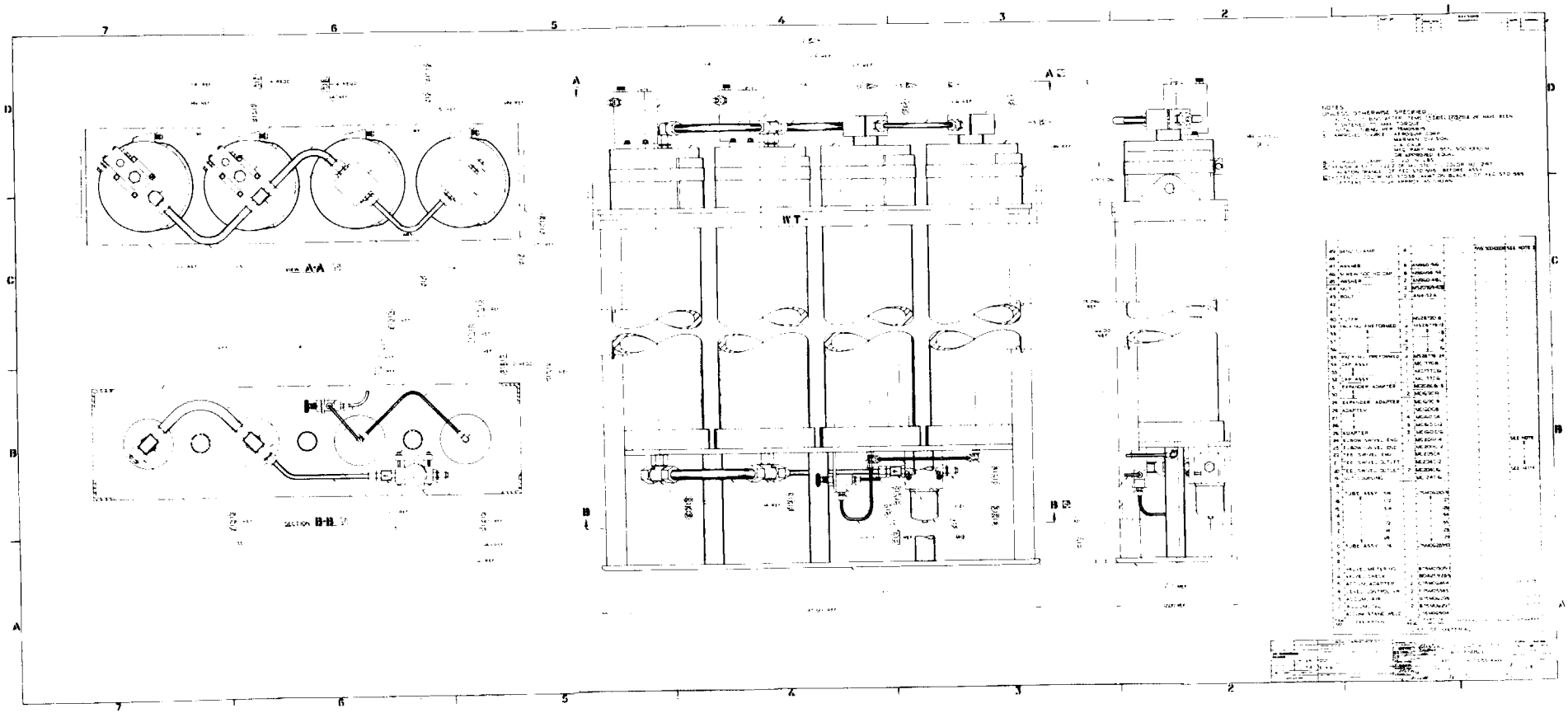

Figure 20
Accumulator Stand Assembly

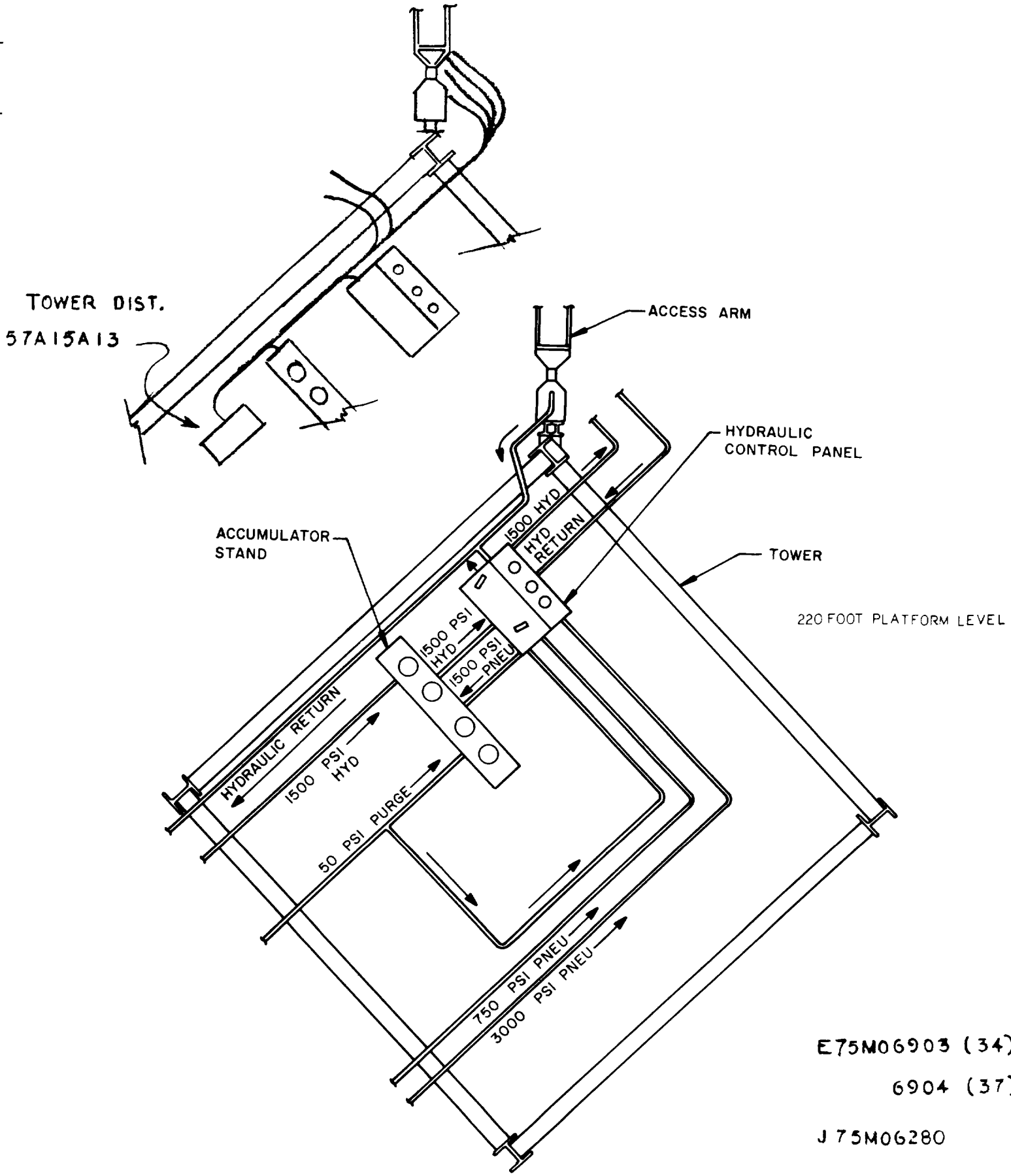

Figure 21
Accumulator Stand and
Control Console

SECTION XII

TOWER DISTRIBUTOR

12-1. GENERAL

12-2. The umbilical tower distributor box (57A25) is located 59 inches from the centerline of the tower corner column. Its approximate outside dimensions are: length, 100 inches; width, 18 inches; height, 90 inches. This distributor carries two electric lines and one pneumatic line to provide lighting, power, for the electrical equipment of the Apollo Access Arm, the EC and the CM.

Associated with the UB distributor box is a crossover distributor box whose approximate outside dimensions are: length, 72 inches; width, 24 inches, and height, 60 inches. One electric line goes from the crossover distributor box (57A15A13) to control panel (57A15) to provide signal energy to open and close six valves and to operate the switches and a transducer. See Figure 22 for electrical cable interconnect.

12-3. TEST SET

12-4. The Access Arm operational sequence can be controlled locally by use of the Test Set (Figure 23), or remotely.

The valve condition and operational sequence for the retract cycle and extend cycle are as follows:

RETRACT CYCLE

A. Valve condition prior to retract command :

(1) Hooks closing control valve N.C. deactuated

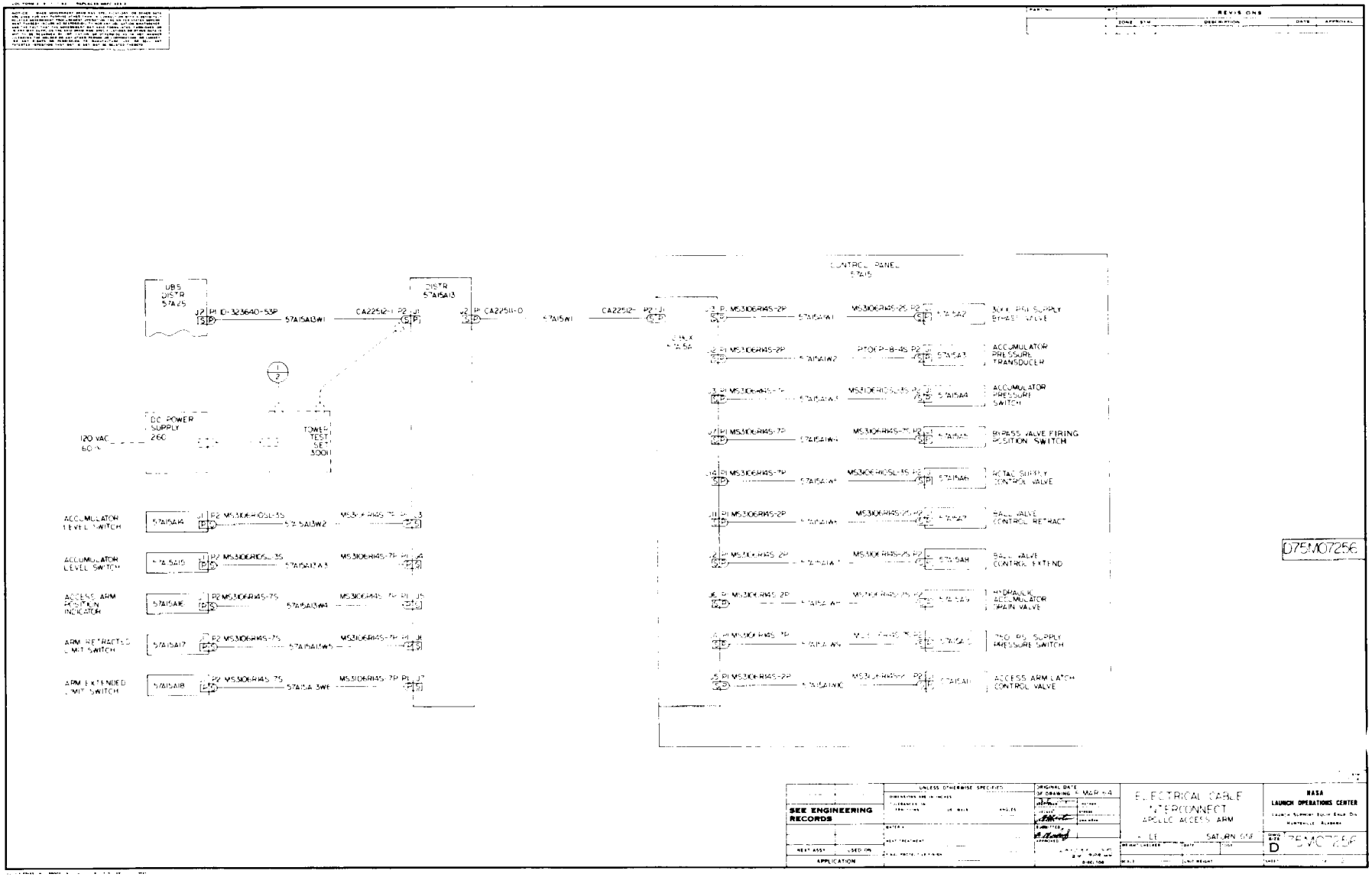

Figure 22
Electrical Interconnect
(1 of 2)

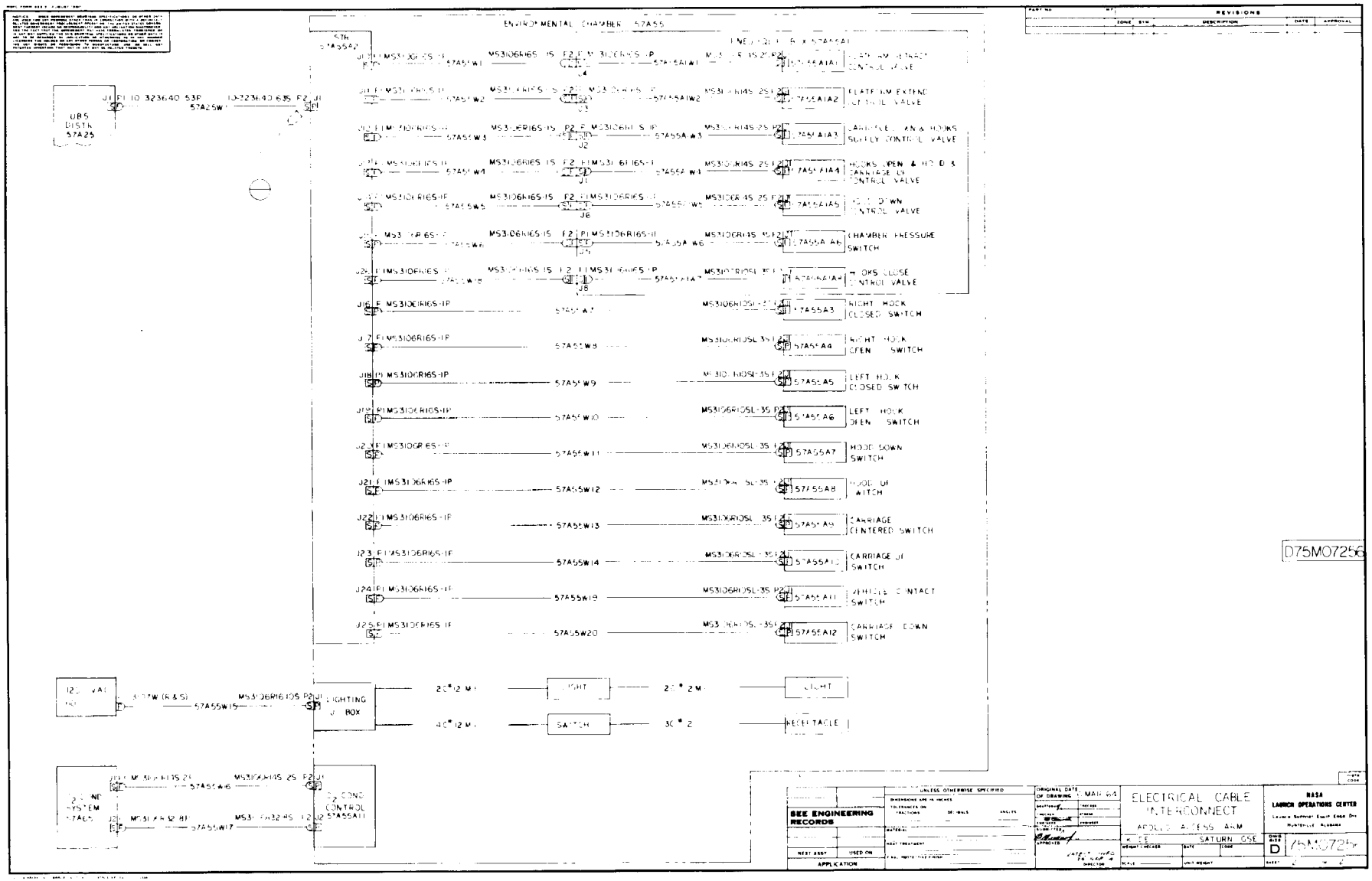

Figure 22
Electrical Interconnect
(2 of 2)

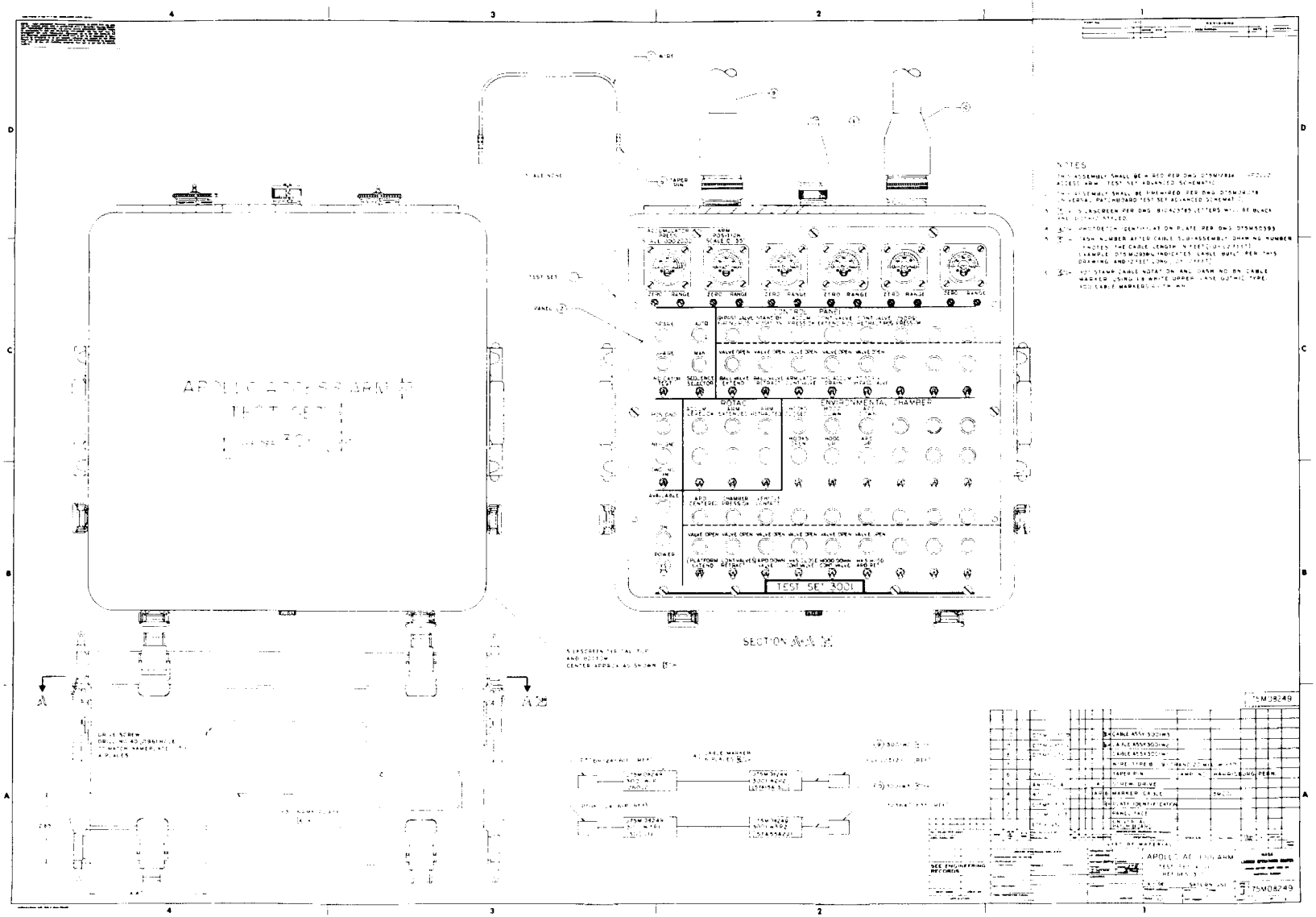

Figure 23
Test Set
(1 of 2)

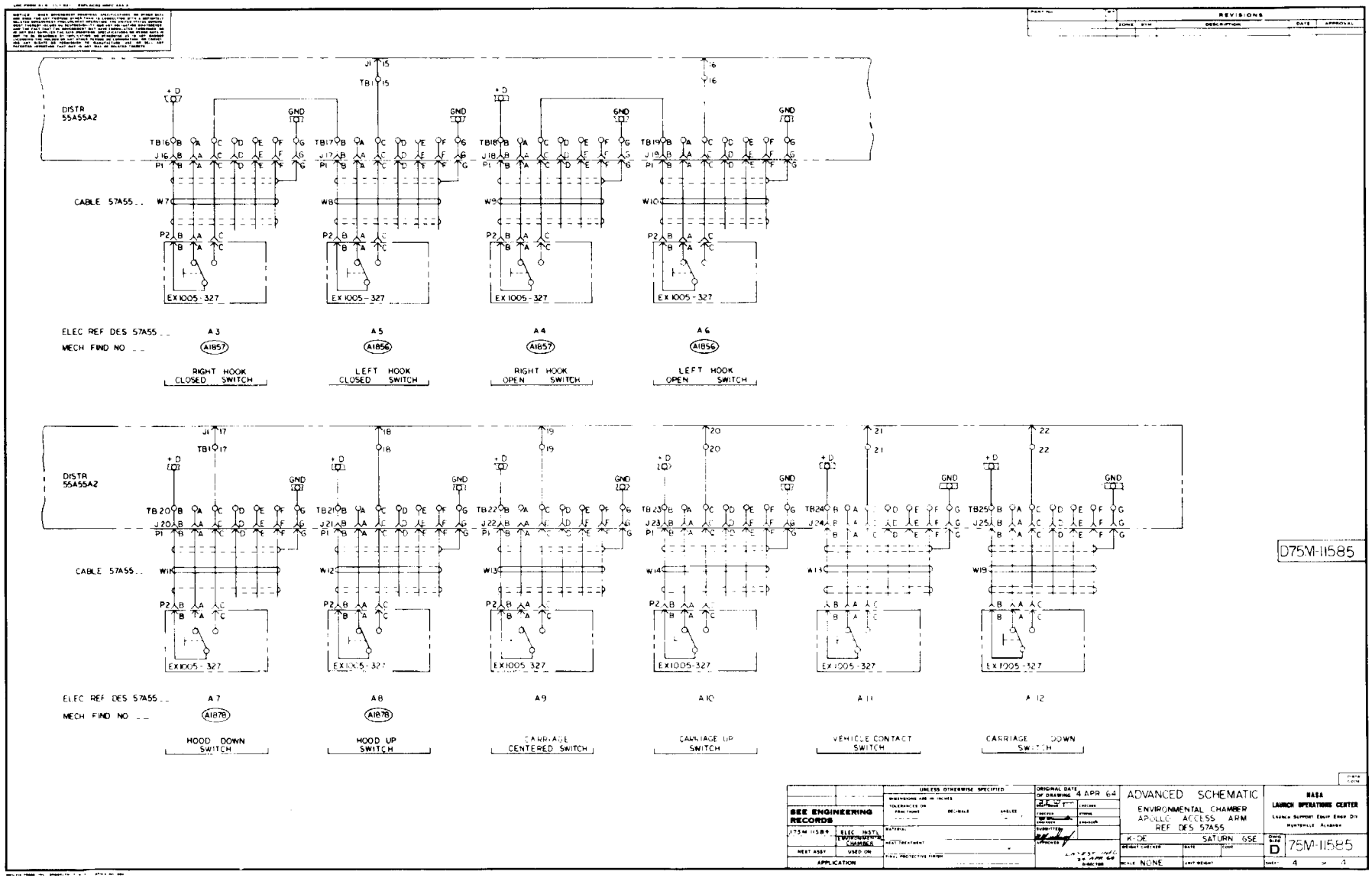

Figure 23
Test Set
(2 of 2)

(2)	Hood down control valve	N.C.	deactuated
(3)	Hooks open and APD and hood up valve	N.C.	deactuated
(4)	Platform extend control valve	N.C.	deactuated
(5)	Platform retract control valve	N.C.	deactuated
(6)	Ball valve retract control	N.C.	deactuated
(7)	Ball valve extend control	N.C.	deactuated
(8)	APD down	N.C.	deactuated

B. Operational Sequence:

(1) Retract signal is given from automatic sequence or from manual switch.

(2) Hooks open and APD and hood up control valve actuates to open position. (Orificing controls speed of operation of all four cylinders). Valve remains open until arm makes contact with arm retracted limit switch.

(3a) Platform retract control valve actuates to open position from hood up limit switch and hooks open limit switch. Valve remains open until power is off or extend command is given.

(3b) Ball valve retract control actuates to open position from hooks open limit switch. Valve remains open until arm makes contact with arm retracted limit switch.

(4) Arm retracted position leaves all valves in normal or deactuated position except the platform retract control valve which is in the open or actuated position until 30 seconds after vehicle lift-off.

EXTEND CYCLE

A. Valve condition prior to extend command

(1)	Hooks closing control valve	N.C.	deactuated
(2)	Hood down control valve	N.C.	deactuated
(3)	Hooks open and APD and hood up valve	N.C.	deactuated
(4)	Platform extend control valve	N.C.	deactuated
(5)	Platform retract control valve	N.C.	actuated to open
(6)	Ball valve retract control	N.C.	deactuated
(7)	Ball valve extend control	N.C.	deactuated
(8)	APD down and hooks closing supply valve	N.C.	deactuated

B. Operational Sequence

(1) Extend signal is given from manual switch.

(2) Ball valve extend control actuates to open position if hooks open, hood up and carriage up limit switches are actuated. Valve stays actuated until APD up limit switch deactuates.

(3) Platform retract control valve deactuates to closed position when the arm makes contact with arm extended limit switch, and when APD is centered.

(4) Platform extend control valve actuates to open position from the deactuation of the platform retract control valve. Valve stays actuated until the hooks are closed.

(5) APD down valve actuates to open position when vehicle contact is made. Valve stays actuated until the hooks are closed.

(6) Hooks closing control valve actuates when APD is in correct relation with the vehicle. Valve stays actuated until the hooks are fully closed and locked.

(7) Hood down control valve operates when the hooks are fully closed and locked. Valve stays open until hood is down and locked in correct position.

(8) Arm extended position leaves all valves in the normal or deactuated position.

SECTION XIII

HYDRAULIC-PNEUMATIC SYSTEM

13-1. GENERAL

13-2. The hydraulic-pneumatic system includes all the various pneumatic and hydraulic supply lines, manual valves and solenoid-controlled valves, pressure gauges, sintered restrictor orifices, conventional orifices, indicator switches, relief valves, accumulator cylinders, hydraulic actuators, pneumatic cylinders, and associated hardware (Figure 24).

13-3. HYDRAULIC ACCUMULATORS

13-4. A 1/2" hydraulic supply line under a pressure of 1500 psi is opened manually to allow hydraulic oil to enter a 1/2" OD stainless steel line leading to a 5-micron in-line filter located on the accumulator stand (Figure 20). The hydraulic oil passes through this filter and through a check valve beyond the filter. The 4-way, 3-position rotary hydraulic actuator supply valve (A-1835) is in the closed position, and the solenoid-operated hydraulic accumulator drain valve (A-1827) is also closed; this condition will permit the charging of the hydraulic accumulators. The hydraulic accumulators are fitted with two free pistons which serve to separate the hydraulic oil at the lower end of the cylinders from the 1500 psi GN_2 which is brought into the upper end of each hydraulic accumulator cylinder through a 3/4" OD stainless steel line.

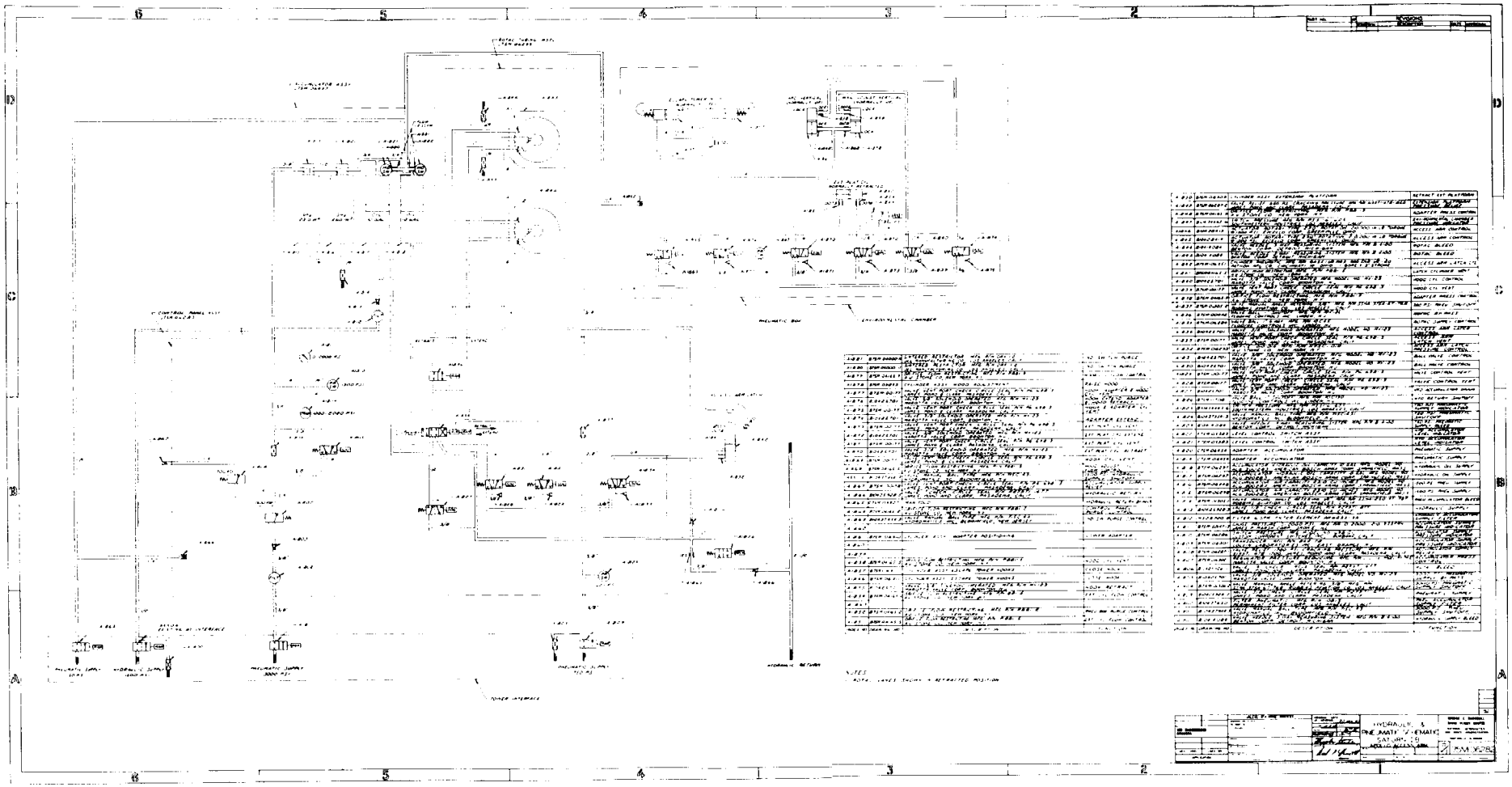

Figure 24
Hydraulic-Pneumatic
Schematic

13-5. INDICATOR SWITCHES

13-6. Each hydraulic accumulator is equipped with a level-control indicator switch which actuates a lamp circuit when the accumulator is full; this switch is mechanically operated by the accumulator piston. The indicator switches are purged by GN_2 from the 50 psi GN_2 supply.

To check the indicator switches, blockhouse personnel actuate a solenoid-operated valve which opens a 3/8" OD by-pass line (around the actuator valve) to the hydraulic return line which is furnished with a deceleration orifice and a cam-operated shut-off valve. When the solenoid-operated valve opens, the hydraulic oil level in the accumulators will lower. As the oil level in each accumulator drops to the limit level of its indicator switch, the indicator switch lights go out if they are functioning normally. The accumulators can now be refilled; the indicator lights will go on when the accumulators are full.

13-7. SYSTEM PRESSURIZATION

13-8. With the hydraulic oil accumulators filled, the system may now be pressurized. This is done by manually opening the 1/2" OD stainless steel line to the 3000 psi pneumatic supply. This GN_2 under pressure is admitted to a 10-micron in-line filter through a 3/8" OD stainless steel line in which a check valve is installed. After passing through the filter and the check valve, the GN_2 at 3000 psi is admitted to a dome-loaded high-flow pressure

regulator which is set to reduce the 3000 psi pressure to 1500 psi pressure; associated with this regulator is a relief valve set at 1700 psi. The GN_2 now passes through a manually operated valve; associated with this valve is a solenoid-operated by-pass valve in a 3/8" line.

13-9. PRESSURE INDICATORS

13-10. In a T-connection from the line immediately following the manually operated valve is a set of two pressure indicators; one of these, the pressure switch (A1810), indicates by lighting that pressure in the GN_2 accumulators has reached 1300 psi; the other indicator, a transducer (A1809), gives an exact and continuous readout of the accumulator pressure between 1000 psi and 2000 psi. In the line immediately following this T-connection is another T-connection carrying the pressure gauge, which shows the pressure in the GN_2 accumulators; when these accumulators are pressurized, the pneumatic side of the free pistons in the hydraulic accumulators is simultaneously pressurized, The line connecting the two GN_2 accumulators is 1/2" OD stainless steel; the line between the GN_2 accumulators and the hydraulic accumulators is 3/4" OD stainless steel as is the line connecting the pneumatic sides of the hydraulic accumulators.

13-11. ROTARY ACTUATOR CONTROL VALVE

13-12. One 1-inch four-way, three-position rotary hydraulic actuator valve (A1835) is opened manually (for testing) or by air-operated actuators which are solenoid-valve controlled. This valve has detents in three positions; flow from port number 1 to port number 2, and flow from port number 3

to port number 4; flow from port number 1 to port number 4, and flow from port number 2 to port number 3. These two positions are 90 degrees apart; a movement of the valve handle manually through 45 degrees will result in the closing of all ports.

An indicator window on the actuator cylinder body permits visual checking of the position of the valve piston; this observation reveals the position of the ball valve.

A shaft stud on the opposite side of the valve body is used for the attachment of a manual control handle.

13-13. SOLENOID VALVES

13-14. The 750 psi pneumatic supply to the solenoid valves is admitted to the system from a 1/2" OD stainless steel supply line through a manually operated valve (A1824). Associated with this manually operated valve is a manually operated bleed valve (A1823) taken off on a 1/4" OD stainless steel line. GN_2 under pressure leaving the manually operated admission valve is led through a 3/8" OD stainless steel line past a 625 psi pressure switch (indicating the minimum requirements for operating the air-actuated ball-valve).

13-15. ACTUATOR OPERATION

13-16. When the "extend" button is pressed to operate the solenoid valve (A1831), the air-operated ball valve (A1835) opens the 1" hydraulic supply

line to the 1" ports of the rotary hydraulic actuators. Note that the vanes of the actuator are shown in the retracted position (Figure 24), and that the actuator gearing results in the angular displacements of the vanes and of the arm being in opposite directions. Hydraulic oil is then admitted to the "B" side of the vanes under 1500 psi; this pressure, multiplied by the area of the vanes, produces an actuating force on the keyed shafts which are gear-connected to the arm. This action extends the arm. When the "retract" button is pressed, solenoid valve A1830 is actuated, the valve ports are reversed, and hydraulic oil is admitted to the "A" side of the vanes. This action causes a reverse flow in the lines so that the oil flows to the 1" return line through the same 1" line through which it was first admitted to the "B" side of the vanes.

As the arm is extended and retracted, air trapped in the actuators is bled out through bleed valves (A1843 and A1844) associated with the actuators and taken off on 1/4" OD stainless steel lines. Several extensions and retractions are made for the purpose of bleeding air from the system during the initial setup. The actuator bearing bleeds have 3/16" ports.

13-17. SHUT-OFF VALVE

13-18. A cam-operated hydraulic return line shut-off valve (A1826) creates a back-pressure in the return line; the backpressure is gradually applied, and is proportional to the rise of the cam profile. The purpose of this shut-off valve is to reduce the angular velocity of the access arm gradually as it is retracted to the tower. When the cam valve is closed, an in-line restrictor

(A1865) in a by-pass circuit allows very slight arm motion near the end of arm retraction travel. An indicator switch on the mechanical arm stop shows when retraction has been accomplished.

13-19. ACCESS ARM LATCH—PNEUMATIC SYSTEM

13-20. The GN_2 supply under a pressure of 750 psi is tapped at a 3/8" OD stainless steel 4-way-cross on the supply side of a manually operated valve (A1837) leading to the Environmental Chamber control system, and on the supply side of the solenoid valves (A1830 and A1831) controlling the hydraulic rotary actuator system. On a signal from the lift-off switch this pressurized GN_2 is admitted from the 3/8" supply line to the 1/4" access arm-latch line by solenoid valve A1834, which is normally closed. Prior to entering the arm-latch cylinder, the GN_2 passes through a 0.010-inch restrictor orifice (A1832). This pressure extends the piston rod which positions the latch to lock the previously retracted Access Arm. Locking the arm over the blast-support minimizes deflection and damps vibration which may be introduced as a result of blast effects and aspiration during vehicle flight. The Arm is not locked back prior to lift-off because emergency re-extension could be required.

The rod end of the arm-latch cylinder is equipped with a vent, A1841.

13-21. EXTENSION PLATFORM - PNEUMATIC SYSTEM

13-22. In the foregoing discussion reference was made to a 3/8" OD stainless steel cross on the supply side of a manually operated valve (A1837) in a 3/8" OD stainless steel line leading to the EC. One branch from a manifold connection in this 750-psi line leads to the adapter-positioning-mechanism cylinder, one branch to the hood-adjustment cylinder, and one branch to the tower-hooks cylinder. The other two branches from this manifold connection lead to the extension platform cylinder. The extension platform cylinder is a double-acting cylinder, solenoid controlled in both extension and retraction; the lines to the head end and the rod end of this cylinder are equipped with flow-restricting orifices A1854 and A1851 respectively. The solenoid-controlled "extend" valve (A1872) is equipped with a vent-port check valve (A1873). In the line between the "extend" valve and the cylinder is a pressure-relief valve (A1849) which is set at 850 psi. Extension is accomplished by energizing solenoid valve (A1872); vent port valve (A1871) vents the pressure in the "retract" line. Retraction is accomplished by energizing solenoid valve A1870 to pressurize the "retract" line; vent port valve A1873 vents the pressure in the "extend" line.

Another branch from the manifold contains a pressure switch (A1847) which indicates by lighting that the line pressure has reached 625 psi.

13-24. ADAPTER POSITIONING DEVICE (APD)

Prior to rotating the Apollo Access Arm out to the vehicle, solenoid valve A1876 will be actuated; this action will have two results: GN_2 under 750 psi pressure will pass through restriction orifice A1789 to the head ends

of the tower hook cylinders, forcing the pistons, rods, and tower leg hooks to the "normally open" position, and at the same time the GN_2 will pressurize the hood vertical-adjustment cylinder, causing the piston, rod and linkage to maintain the Adapter Hood in the "normally up" position.

As the Arm approaches the vehicle, the APD cam bar makes contact with a LES tower leg; this action will rotate the cam lever upward and energize switch A1A3 which will then actuate valve (A1874), admitting GN_2 under pressure to the head end of the (normally up) APD cylinder. This will result in a lowering of the APD until a second cam bar, below the first, contacts one or both of two LES leg brackets, rotating the second cam lever upward. This will energize switch (A1A8) which will then actuate valve (A1855), admitting GN_2 under pressure to the rod ends of the hook cylinders, causing the hooks to approach each other. When one hook engages a tower leg, the entire APD assembly and the second hook continue to move until the second hook engages the other tower leg. During this closing, the GN_2 pressurized in the head ends of the hook cylinders and rod ends of the APD and hood cylinders will be vented at vent port A1877. The hooks remain engaged with the tower legs, and the adapter hood seal is in contact with the CM around the hatch at a predetermined pressure which does not exceed 0.5 psi.

The hook cylinders and the hood cylinder are mechanically locked, and unpressurized; the APD and Adapter will now follow vehicle motion in three dimensions.

SECTION XIV

GOX CONDITIONING MODULE

14-1. GENERAL

14-2. The purpose of the GOX Conditioning Module (57A55A11) is to provide various pneumatic services to the Environmental Chamber and to the Apollo Command Module for leak-testing of the astronauts' suits and the CM. See Figure 25 .

14-3. Oxygen for human consumption is provided the EC and the CM at a controlled pressure of 125 psi and at a temperature of 45°F, ±5°F.

The GOX conditioning module system furnishes a pneumatic signal to the dome of regulator A16004 (located in O_2 conditioning unit 6326) to control pressure at the delivery point of the O_2 (A16041). Tie into bank supply, pump and condition unit for supply on Umbilical Tower. All supply terminates in the module in the EC; portable leak-check testers, connecting hoses, etc., are supplied by others for the use of the module.

14-4. The conditioning module also furnishes GN_2 and GH_e at a controlled pressure of 125 psi at the interface (reduced to approximately 5-10 psi beyond the interface). These two gases are used for leak checking the capsule prior to precount; a mass spectrometer is used to determine the rate of leakage.

After this leak check, and after precount, the O_2 supply is connected and all joints and fittings are leak checked.

14-5. The system has the capability to provide a cooling medium to "cold soak" the interior of the capsule to 55°F. for preflight conditioning.

To be supplied
(J75M12341)

Figure 25
GOX Module

SECTION XV
SERVICE LINES

15-1. GENERAL

15-2. Following is a listing of the Apollo Access Arm, Environmental Chamber, and Command Module service lines. A recapitulation is made of these lines by size, location, and function.

FLEX LINE (Or Cable)	LOCATION	FUNCTION
0.75-inch O_2 in jacketed line	To Gox Module (Box) in EC	leak check astronaut suits and CM
0.75-inch water-glycol	To tower end, jacketed O_2 line	conditioned O_2 (coolant return)
0.25-inch, 50 psi GN_2	To top of EC	purge valve box distributor in EC
0.375-inch, 750 psi GN_2	To top of EC	actuator supply
0.50-inch, 50 psi GN_2	To top of EC	spare
0.25-inch, 150 psi He	To GOX Module	leak check CM along with O_2
0.375-inch O_2	To GOX Module	sensing line, pressure
0.75-inch water-glycol	EC end of jacketed O_2 line	conditioned O_2 (coolant supply)
6.00-inch Air Duct	To EC	air conditioning(40#/min., 70°F.)
30-pin 32-8	To GOX Box in EC	input/output signals to GOX Box
4-pin 14 S-2	To GOX Box in EC	AC power to GOX Box (Temperature Sensing)
3 cond #12 MI	Mounted on Arm	Lights and Receptacle in EC (ac power)
harness	Mounted on Arm	to supply EC valves, switches, etc.

APPENDIX A

K-DE 4 SECTION — EQUIPMENT SCHEDULE

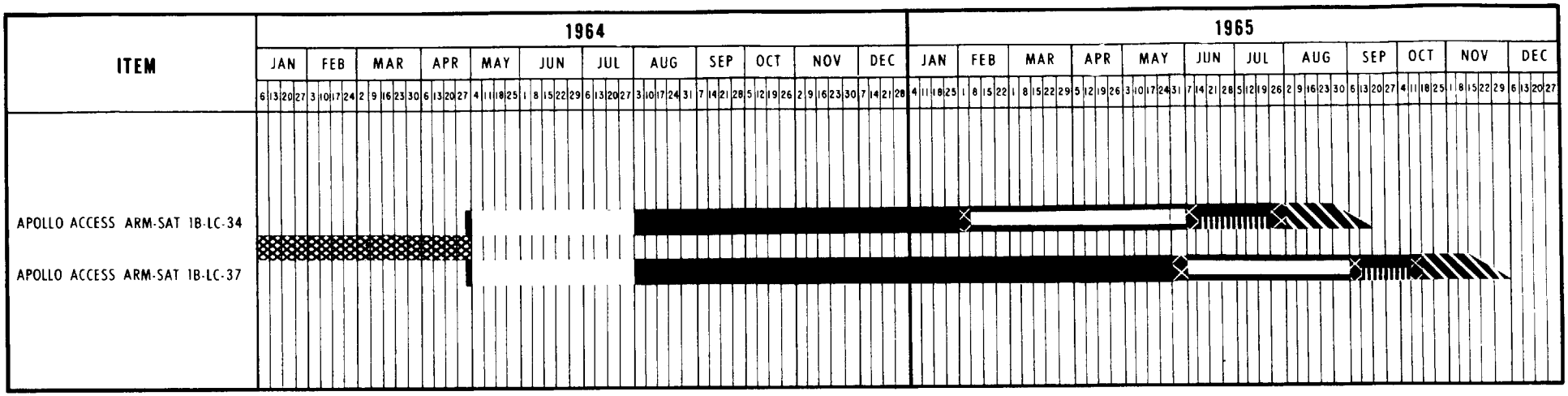

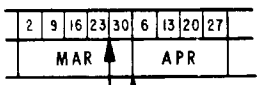

WEEK BEGINNING MONDAY-APR 6th

WEEK BEGINNING MONDAY-MAR 30th

NOTE:
DATES SHOWN ARE MONDAY

LEGEND:

- DESIGN
- ADVERTISE & AWARD
- FABRICATION
- SHIPPING
- TESTING
- CLEAN-UP
- INSTALLATION

SCHEDULE, SATURN IB

APPENDIX B

PREFACE

The calculations presented in this appendix were prepared during the design phase of the Apollo Access Arm and Environmental Chamber. All work is of a preliminary nature and has not been checked. Design loads changed numerous times due to weight changes. When one of these changes occured, an investigation of previous work was made to determine if the structure previously analyzed was still adequate. Unless changes were required in the structure due to this weight change, no effort was made to incorporate these changes in the calculations.

These calculations indicate that the Apollo Access Arm and Environmental Chamber meet the design criteria as set forth in the "Preliminary Engineering Report, Apollo Command Module Access Arm, Saturn I and IB" dated August 5, 1963, and the "Saturn V Service Arms, Preliminary Engineering Report, Complex 39" dated June 15, 1963.

INDEX

APOLLO ACCESS ARM

Title	Page
LOADS	3
Basic truss	13
Floor	23
Handrail	25
Hinge	30
Hinge frame	30
Hinge pivot	50
Mounting Plate	73
Unit deflection and rotation	78
LOADS	84
Spacer	100

APOLLO ACCESS CHAMBER

LOADS	109
Rollers	121
Roller Mounting Channel	134
Basic Frames	148
Shear Panels	169
Shear Door	177
Cylinder Bracket	185
Chamber Floor	190
Wall Panel	199

INDEX

APOLLO EXTENSION PLATFORM

Title	Page
LOADS	208
Platform Floor	217
Vertical Frame	261
Actuator Panel	272
Bracket Weldment	280
Folding Curtains	284
Curtain Track	295
Vertical Curtain and Housing	303
Adapter	311
Adapter Housing	334
APOLLO LES COUPLER	355
APOLLO LATCHBACK	415

PREPARED BY RLM
CHECKED BY
REVISED BY

PAGE 1
REPORT NO.
DATE 7-2-63

APOLLO ACCESS ARM

BASIC TRUSS

PIPE MATERIAL ~ 7075-T6

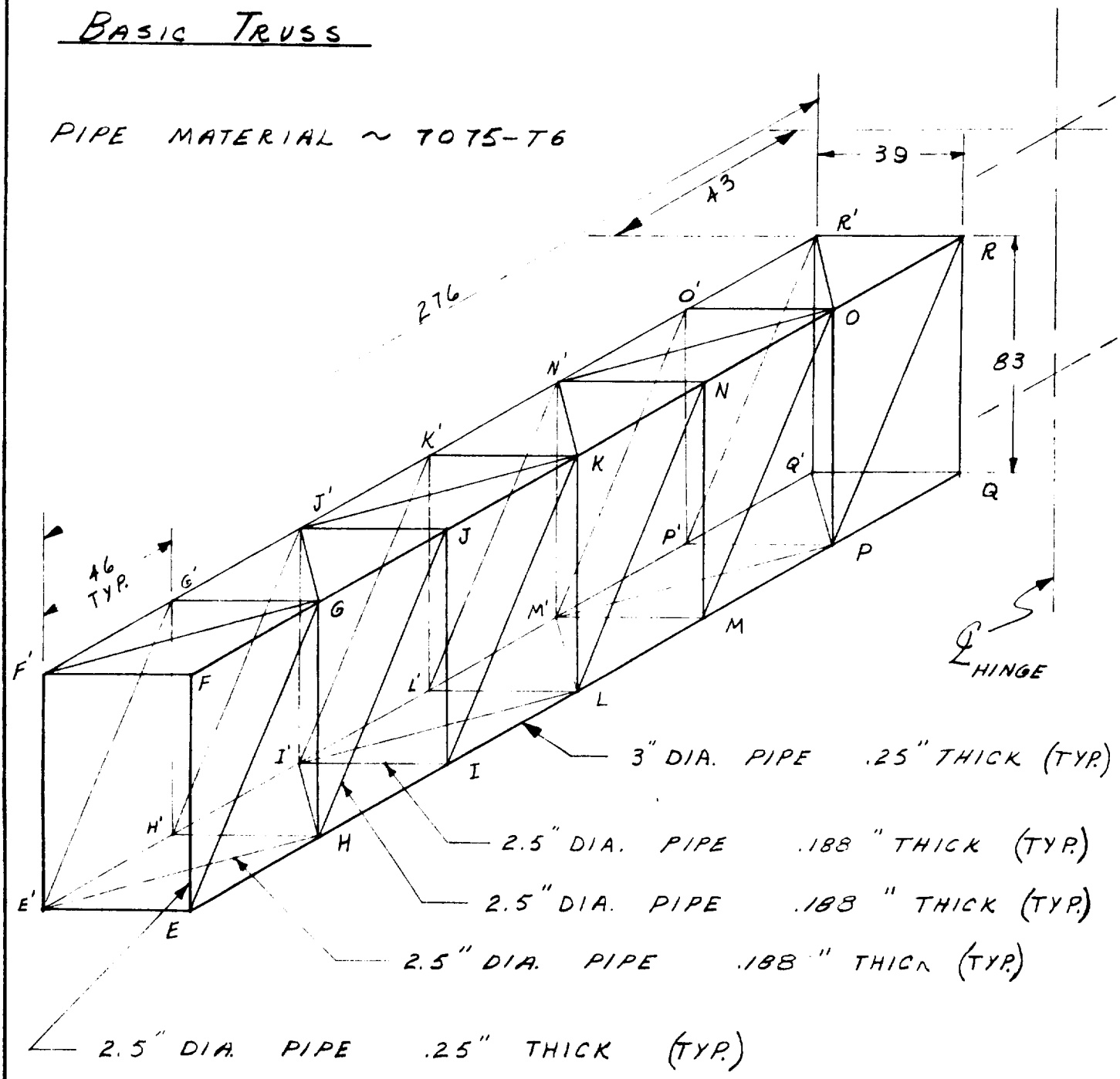

NOTE

THE TRUSS IS CONNECTED AT EACH JOINT BY AN ALMAG 35 CASTING.

2

PREPARED BY RLM
CHECKED BY
REVISED BY

PAGE 2
REPORT NO.
DATE 7-3-63

APOLLO ACCESS ARM

SPACER

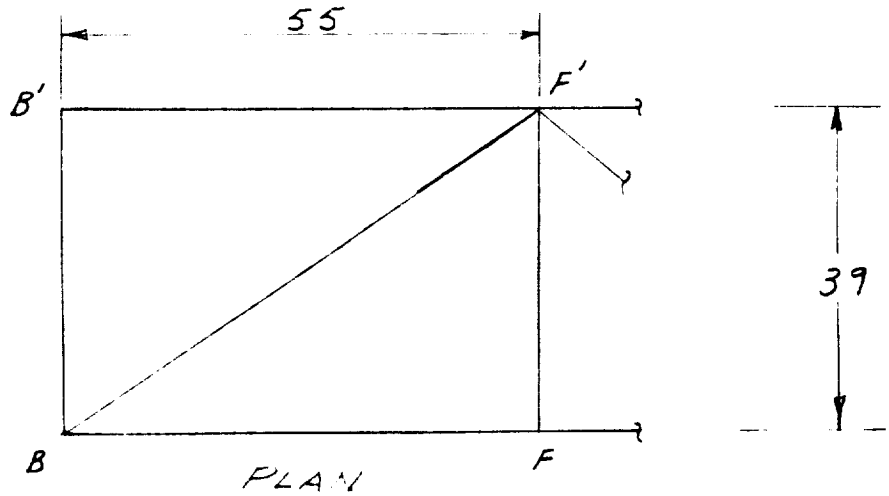

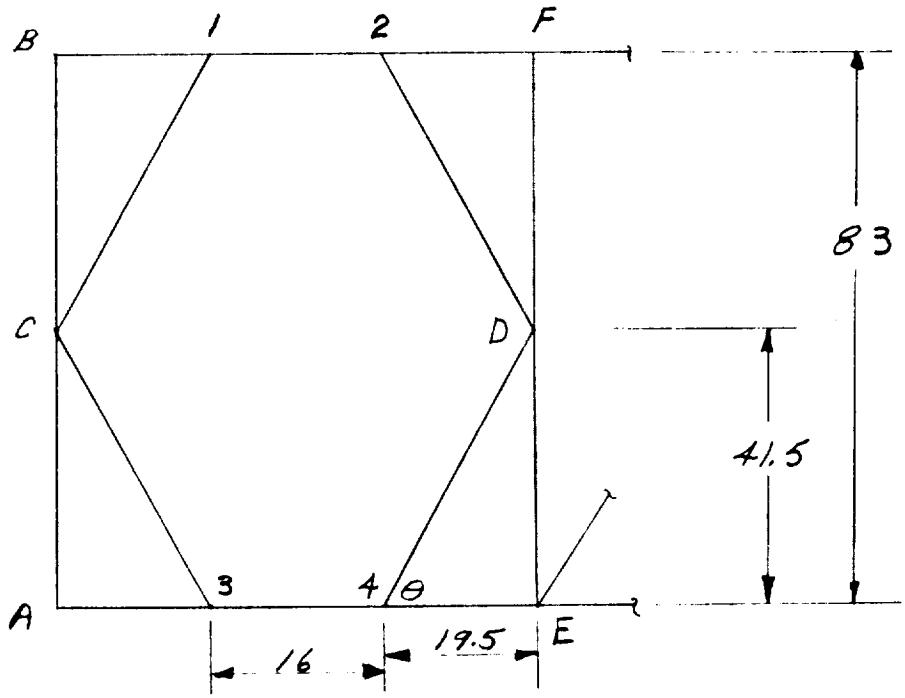

$\theta = 64.8^\circ$

$\sin \theta = .9045$

$\cos \theta = .4255$

ELEVATION

APOLLO ACCESS ARM

BASIC TRUSS ~ TYPICAL SECTION OF 46 INCHES

FRONTAL AREA $= A_F = 3,965$ IN.^{2}

SOLID AREA $= A_S = 1,606$ IN.^{2}

$$\text{SOLIDITY RATIO} = \phi = \frac{A_S}{A_F} = .405$$

$$\frac{\text{DEPTH}}{\text{HEIGHT}} = \frac{s}{h} = .49$$

$\therefore \; C_D' = 1.7$

BECAUSE OF THE % OF ROUND MEMBERS, USE 79% OF C_D'

$$C_D = .79\, C_D' = 1.35$$

DEAD WEIGHT OF TYPICAL SECTION

$W = 195$ lbs.

$w = 4.25$ lbs/IN.

APOLLO ACCESS ARM

SPACER

FRONTAL AREA $= A_F = 4750$ IN.^{2}

SOLID AREA $= A_S = 2220$ IN.^{2}

SOLIDITY RATIO $= \phi = \dfrac{A_S}{A_F} = .468$

$\dfrac{\text{DEPTH}}{\text{HEIGHT}} = s/h = .49$

$\therefore \quad C_D' = 1.63$

BECAUSE OF THE % OF ROUND MEMBERS, USE 86% OF C_D'

$$C_D = .86\ C_D' = 1.4$$

DEAD WEIGHT OF SPACER

$W = 546$ lbs.

$w = 9.93$ lbs/IN.

APOLLO ACCESS ARM

WHITE ROOM

FRONTAL AREA = A_F = 9,000 IN.^{2}

SOLID AREA = A_S = 9,000 IN.^{2}

SOLIDITY RATIO $= \frac{A_S}{A_F} = 1$

ASSUME

$C_D \cong C_D$ OF A SQUARE CYLINDER

$\therefore C_D = 2.0$

DEAD WEIGHT OF WHITE ROOM

$W = 1277 + 1913 = 3190$ lbs.

EQUIVALENT LOAD AT 47" FROM ATTACHMENT TO SPACER

$$P_e = \frac{1277(54) + 1913(47)}{47} = 3,380 \text{ lbs.}$$

APOLLO ACCESS ARM

PRESSURE FORCES ON ARM AT ELEVATION OF 180 FEET

$q = .002558\ V^2 \quad (\text{lb}/\text{ft}^2)$

$p = q\ C_D \quad (\text{lb}/\text{in}^2)$

$F = p\ A_F \quad (\text{lbs})$

@ 180 ft. $V = 49.3$ M.P.H. (99.9% PROBABILITY WIND)

USING A GUST FACTOR OF 1.4

$V = 49.3\,(1.4) = 69$ M.P.H.

$p = C_D\ .002558\ (V)^2$

$= 12.19\ C_D \quad \text{lb}/\text{in}^2$

$p = .0846\ C_D \quad \text{lb}/\text{in}^2$

WHITE ROOM

$F = .0846\ C_D\ A_F = .846\,(2.0)\,9{,}000$

$= 1525$ lbs.

SPACER

$F = .0846\,(1.4)(2220)$

$= 2[illegible]3$ lbs.

BASIC TRUSS

$F = .0846\,(1.35)\,1606\,(6)$

$= 1100$ lbs.

APOLLO ACCESS ARM

STATIC WIND MOMENT THE ROTACS MUST RESIST

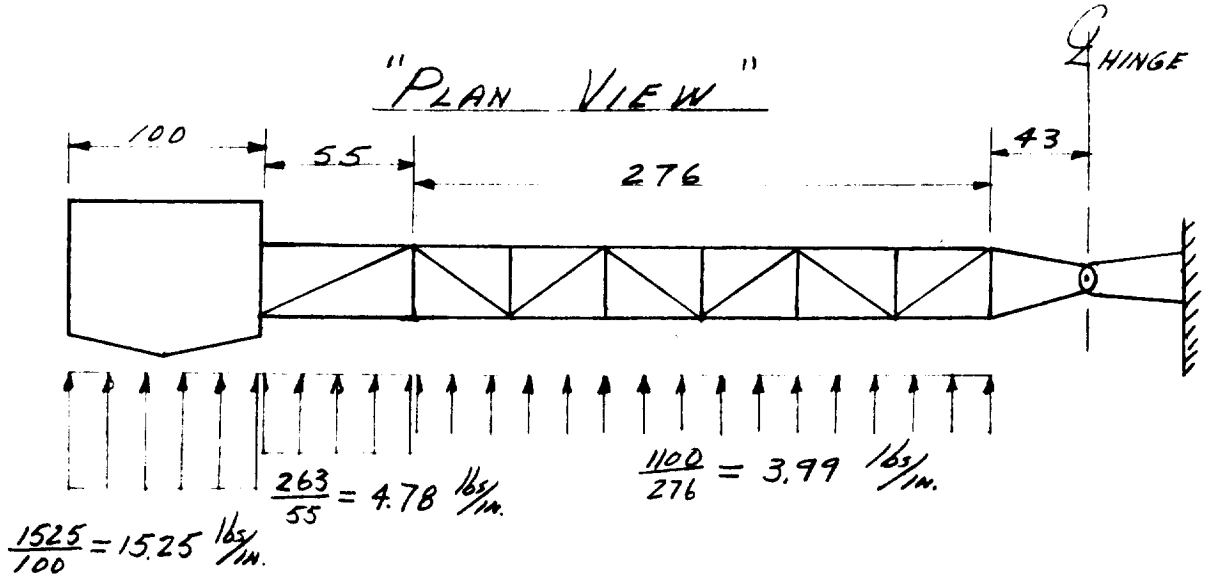

$$M_{℄\,HINGE} = 1100(181) + 263(346.5) + 1525(424)$$
$$= 936{,}000 \text{ in.-lbs.}$$

$$F_{WIND} = 1100 + 263 + 1525$$
$$= 2888 \text{ lbs.}$$

USING A WIND LOAD FACTOR OF 2

$$M = 2(936{,}000) = 1{,}872{,}000 \text{ in.-lbs.}$$

$$F = 2(2888) = 5{,}776 \text{ lbs.}$$

APOLLO ACCESS ARM

TORQUE AVAILIABLE FROM ROTACS

$T'/_{ROTAC} = 210,000$ IN.-lbs./EACH AT 1500 PSI

TOTAL TORQUE FROM ROTACS

$T' = 2(210,000) = 420,000$ IN.-lbs.

GEAR-RATIO BETWEEN ROTAC AND ARM

$R = 43/18 = 2.333$

TOTAL TORQUE ON ARM FROM ROTACS

$T = 420,000(2.333) = 980,000$ IN.-lbs.

$M.S. = \frac{980,000}{936,000} - 1 =$ +.046

APOLLO ACCESS ARM

LOAD

ASSUME

5 MEN ARE IN WHITE ROOM, 3 OF THE 5 ARE ON THE EXTENSION PLATFORM. EACH MAN WEIGHS 250 LBS.
THE WHITE ROOM, EXTENSION PLATFORM, BUMPER, AND ETC. WEIGHS 3190 LBS.

LOADS ON A PLAN VIEW OF ARM AND WHITE ROOM

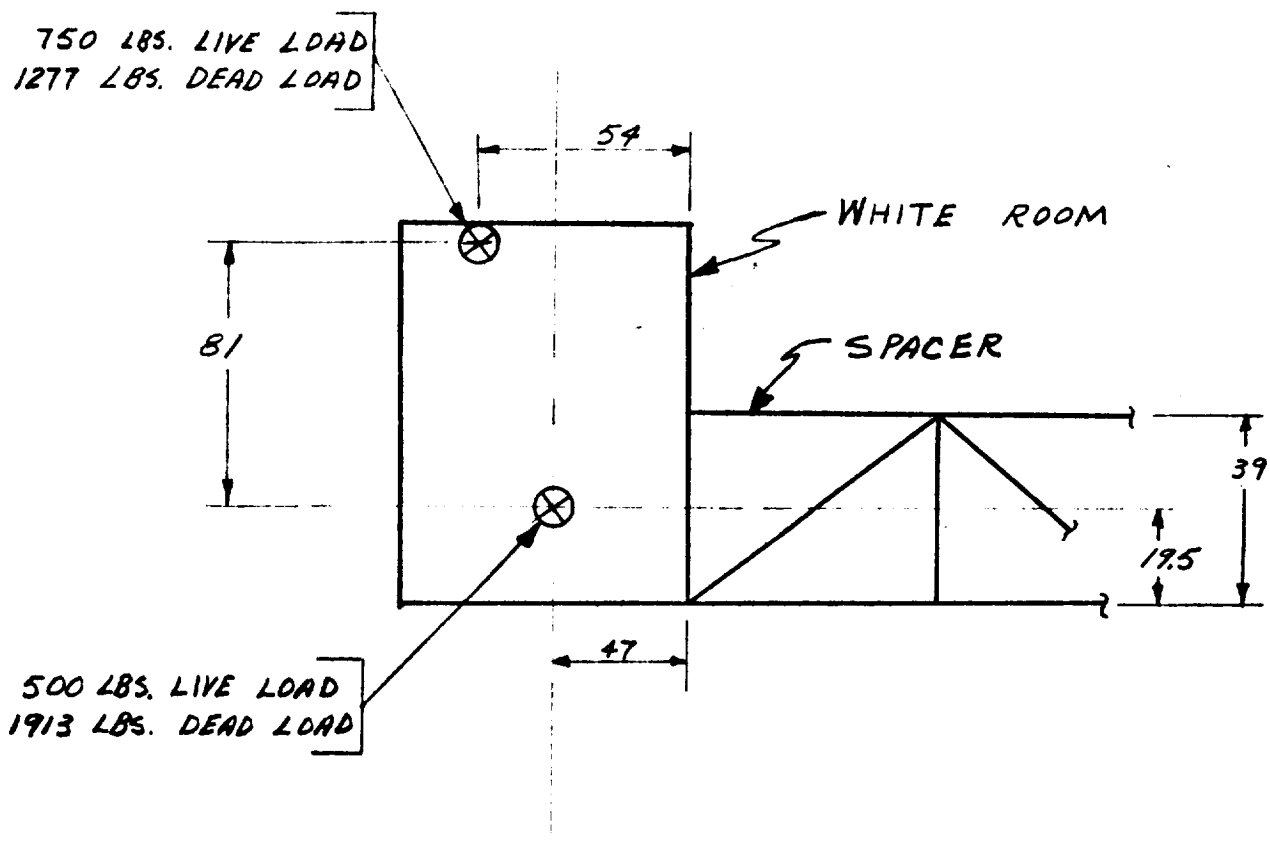

APOLLO ACCESS ARM

TORSION ON TRUSS

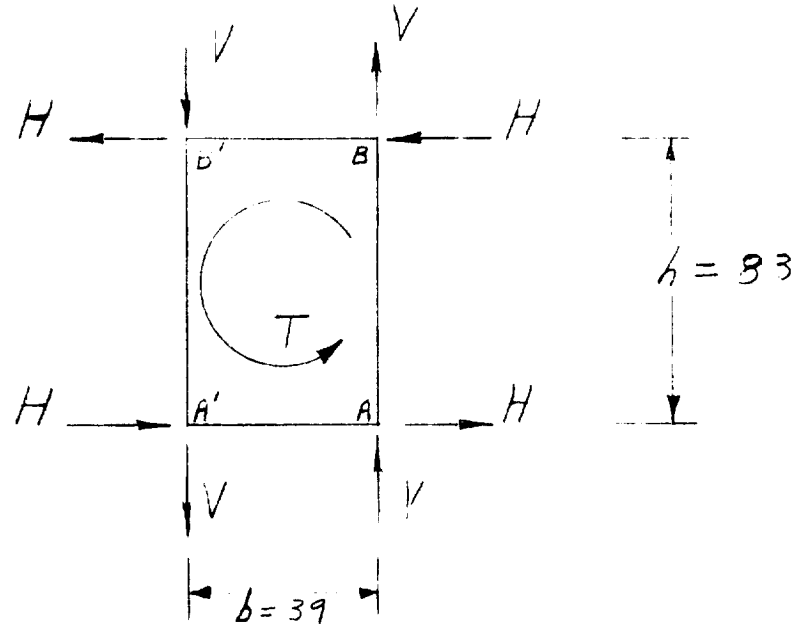

$$H = \frac{T}{4h} = \frac{T}{332}$$

$$V = \frac{T}{4b} = \frac{T}{156}$$

ASSUME A UNIT TORSION OF 1,000 IN.-lbs.

$T = 1{,}000$ IN.-lbs.

$H = 3.01$ lb.

$V = 6.41$ lb.

PREPARED BY RLH
CHECKED BY
REVISED BY

PAGE 11
REPORT NO.
DATE 10-17-65

APOLLO ACCESS ARM

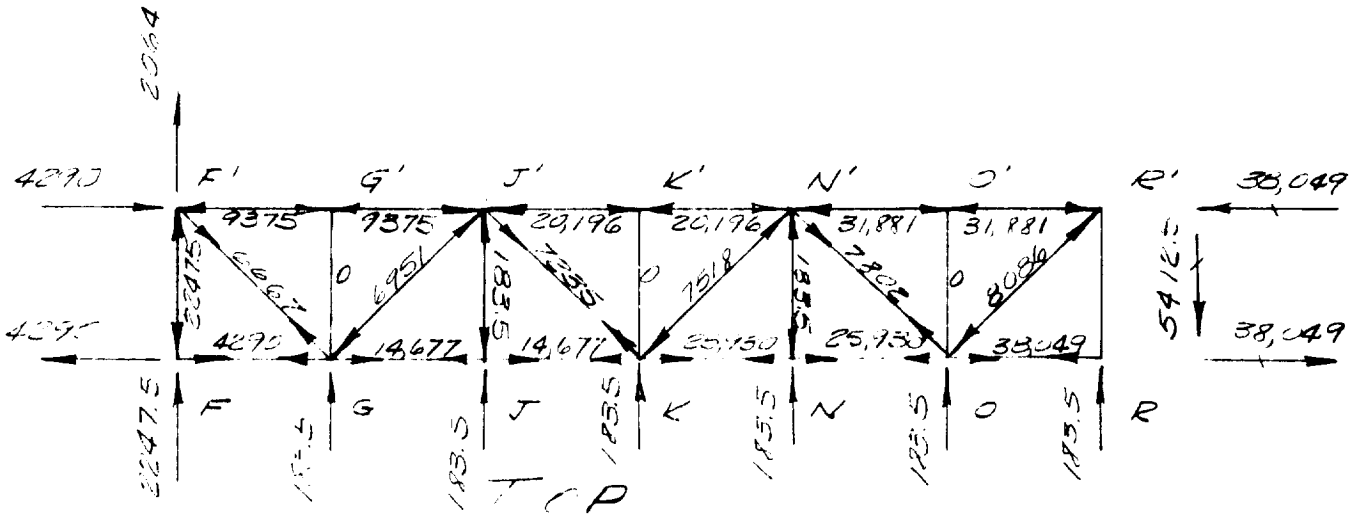

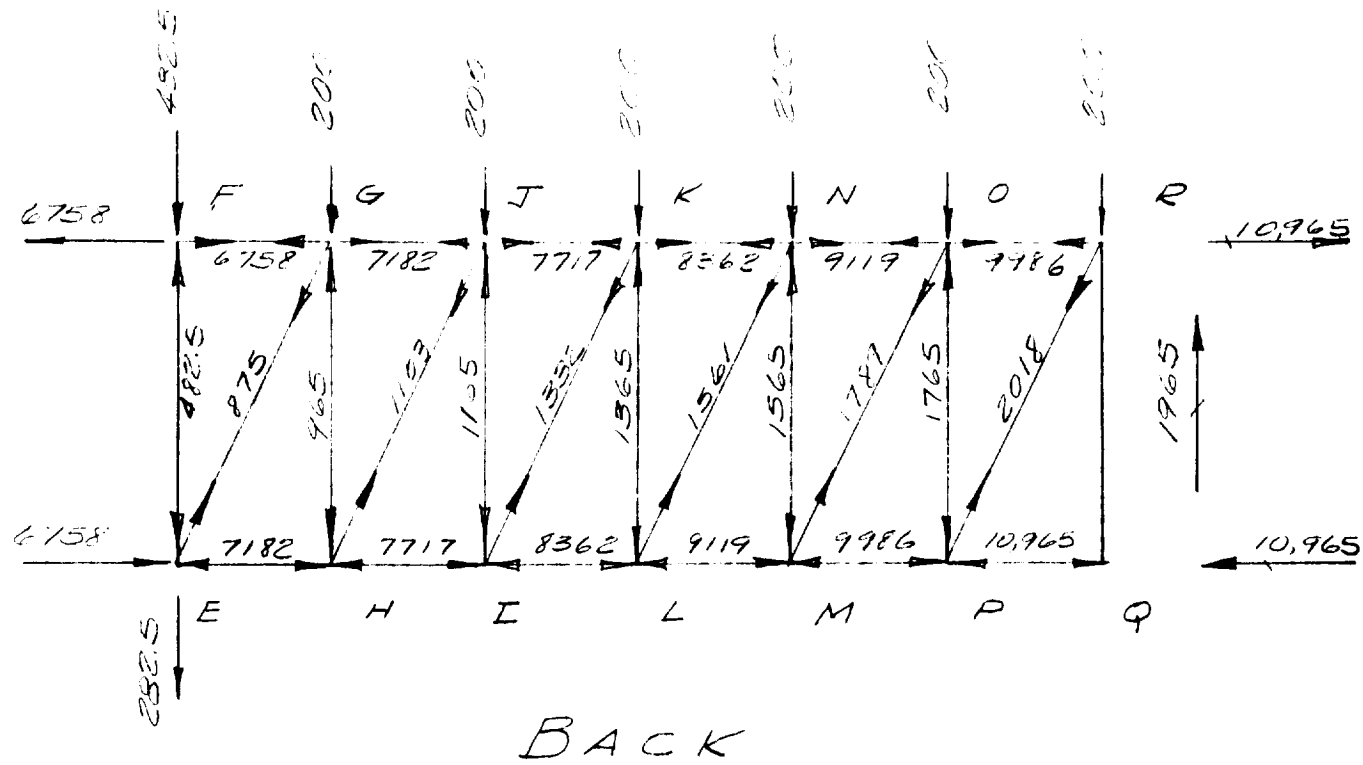

PREPARED BY RLH
CHECKED BY
REVISED BY

PAGE
REPORT NO.
DATE 10-16-63

APOLLO ACCESS ARM

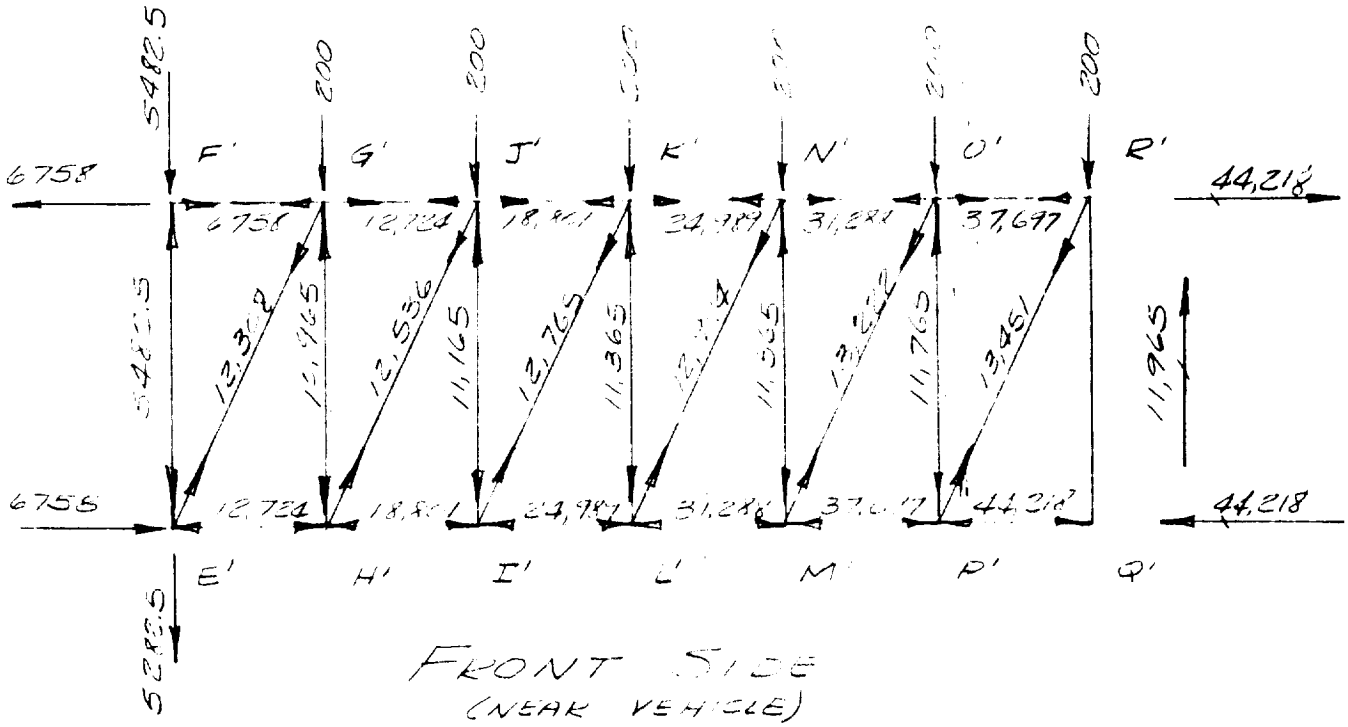

FRONT SIDE
(NEAR VEHICLE)

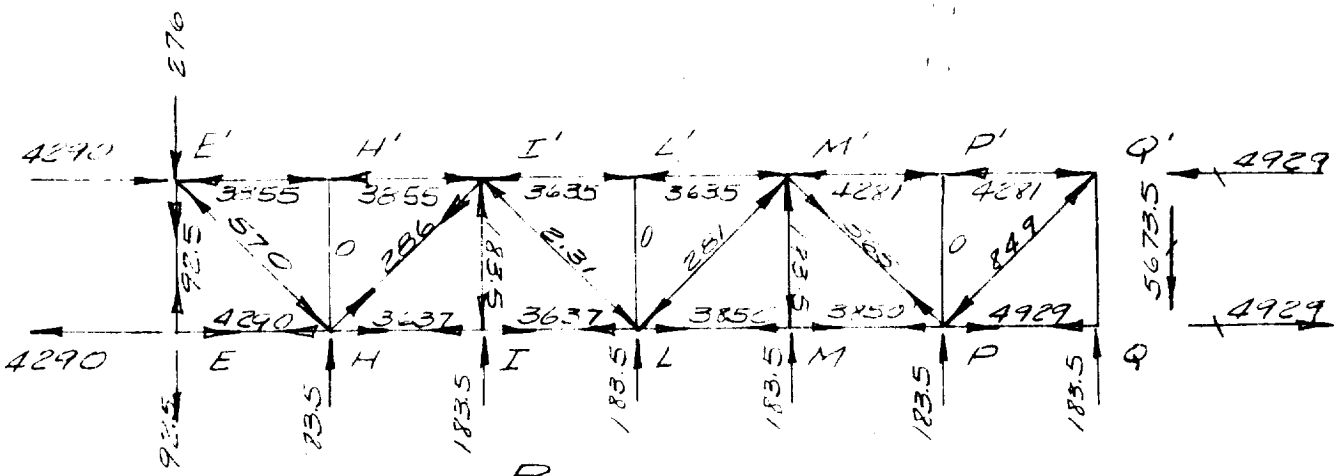

BOTTOM
(VIEWED FROM TOP)

APOLLO ACCESS ARM

BASIC TRUSS STRESSES

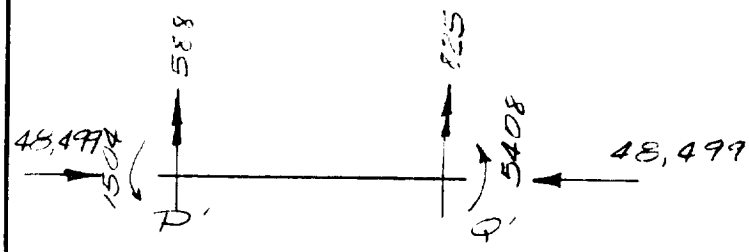

A_L - 7075-T6

$A = 2.159$ SQ. IN.

$S = 1.3724$ IN.^{3}

$\rho = .9763$

$K = 0.75$ FOR RIVET ENDS.

$F_{TY} = 72{,}000$ PSI.

$$\sigma_{CR} = \frac{\pi^2 E}{(KL/\rho)^2}$$

$$= \frac{\pi^2 (1.04)(10^7)}{\left[\frac{.75\,(46)}{.9763}\right]^2}$$

$$= 82{,}400 \text{ PSI}$$

$$\sigma = \frac{48{,}499}{2.159} + \frac{5408 + 825}{1.3724}$$

$$= 26{,}430 \text{ PSI.}$$

$$M.S. = \frac{72{,}000}{26430} - 1 = \boxed{+1.72}$$

PREPARED BY RLH
CHECKED BY
REVISED BY

PAGE
REPORT NO.
DATE 10-18-63

APOLLO ACCESS ARM

BASIC TRUSS STRESSES

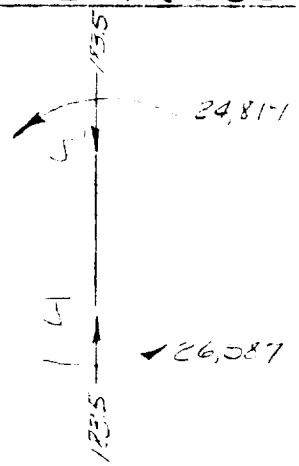

$L = 31$, $D = 2\frac{1}{2}$, $t = 3/16$

$r = .8202$, $A = 1.3622$

$K = 0.75$, $S = .7332$

$F_{ty} = 72{,}000$

$$\sigma_{CR} = \frac{\pi^2 E}{\left(\frac{KL}{r}\right)^2}$$

$$= \frac{\pi^2 (1.04)(10^7)}{\left[\frac{.75(31)}{.8202}\right]^2}$$

$$= 81{,}100 \text{ PSI.}$$

$$\sigma = \frac{183.5}{1.3622} + \frac{26{,}587}{.7332}$$

$$= 135 + 36{,}300$$

$$= 36{,}435 \text{ PSI.}$$

$$M.S. = \frac{72{,}000}{36{,}435} - 1 = \boxed{+0.97}$$

APOLLO ACCESS ARM

BASIC TRUSS STRESSES

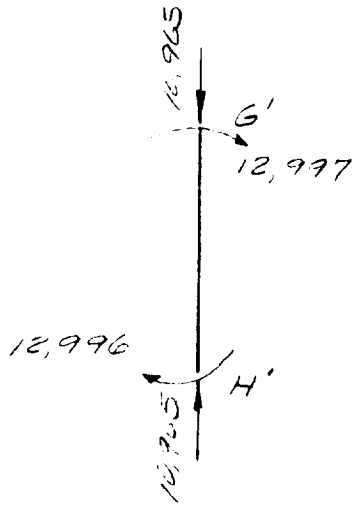

UNSUPPORTED $L = 68$
$K = 0.75$, $D = 2\frac{1}{2}$, $t = 0.25$,
$A = 1.767$, $\rho = 0.8$, $S = 0.905$

$$\sigma_{CR} = \frac{\pi^2 E}{(KL/\rho)^2}$$

$$= \frac{\pi^2 (1.04)(10^7)}{\left[\frac{(.75)(68)}{.8}\right]^2}$$

$$= 25{,}200 \text{ PSI.}$$

$$\sigma = \frac{10{,}965}{1.767} + \frac{12{,}997}{.905}$$

$$= 20{,}500 \text{ PSI.}$$

$$M.S. = \frac{25{,}200}{20{,}500} - 1 = \boxed{+0.23}$$

APOLLO ACCESS ARM

BASIC TRUSS STRESSES

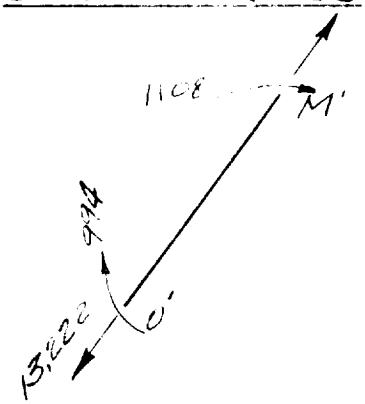

$D = 2\frac{1}{2}''$, $t = 5/16$,

$A = 1.362$, $S = 0.7382$

AL. 7075-T6

$F_{ty} = 72,000$

$$\sigma = \frac{13222}{1.362} + \frac{1108}{7382}$$

$$= 11,220 \text{ PSI.}$$

$$M.S. = \frac{72000}{11220} - 1 = \text{+ LARGE}$$

APOLLO ACCESS ARM

FITTINGS

JOINT P'

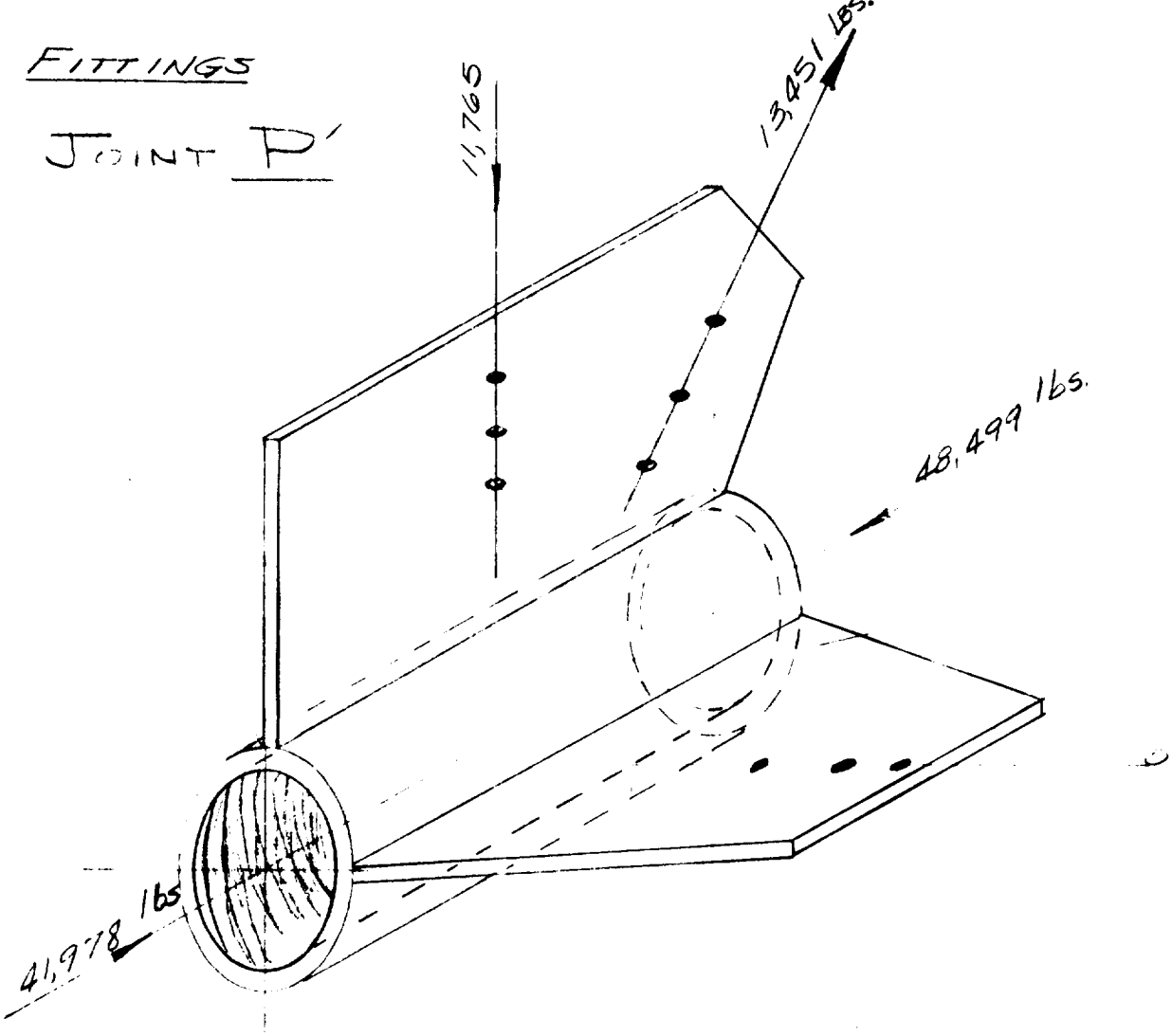

MATERIAL: ALMAG 35 PER QQ-A-601 TEMPER F.

CASTING: REFER TO DWG. 75M-06024.

MACHINING: (SHOWN) REFER TO DWG. 75M-06409.

PREPARED BY RLH
CHECKED BY
REVISED BY

PAGE
REPORT NO.
DATE 7-12-63

APOLLO ACCESS ARM

FITTINGS

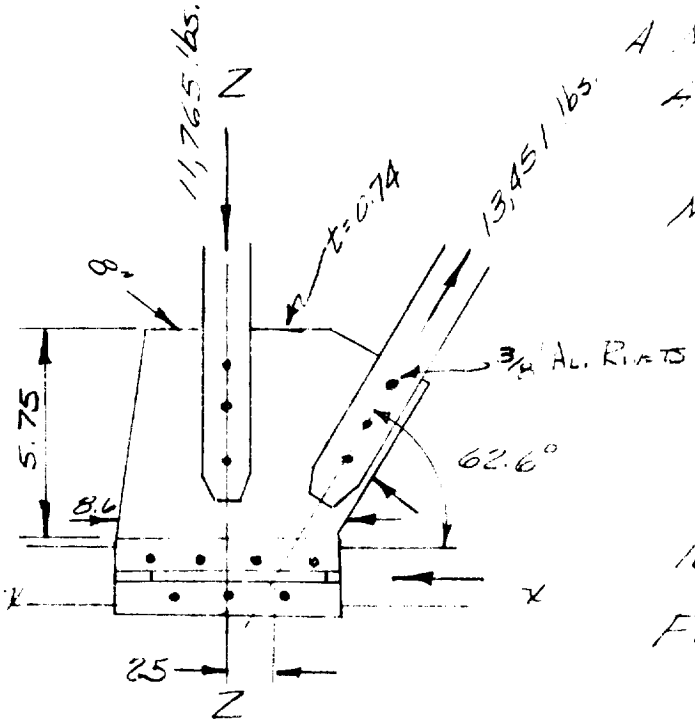

JOINT P'

DUE TO ECCENTRICITY, A MOMENT IS INDUCED ABOUT yy AXIS.

$M_{yy} = 2.5(13451)\sin 62.6°$
$= 29,800$ IN-LBS.

lbs.

FOR ALMAG 35,

$F_{sy} = 12,100$ PSI
$F_{ty} = 18,000$ PSI
$F_{BRy} = 31,000$ PSI

WITH CASTING FACTOR = 1.5

$F_{sy}' = 8060$ PSI
$F_{ty}' = 12,000$ PSI
$F_{BRy} = 20,650$ PSI

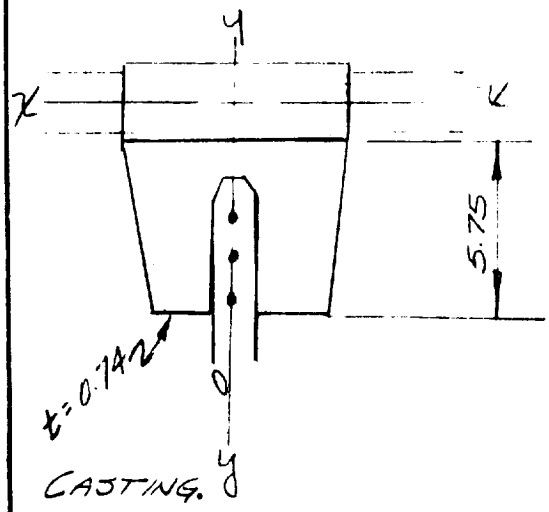

CASTING.

OUTSIDE DIAMETER = 3.600
INSIDE DIAMETER = 3.020

APOLLO ACCESS ARM

FITTINGS

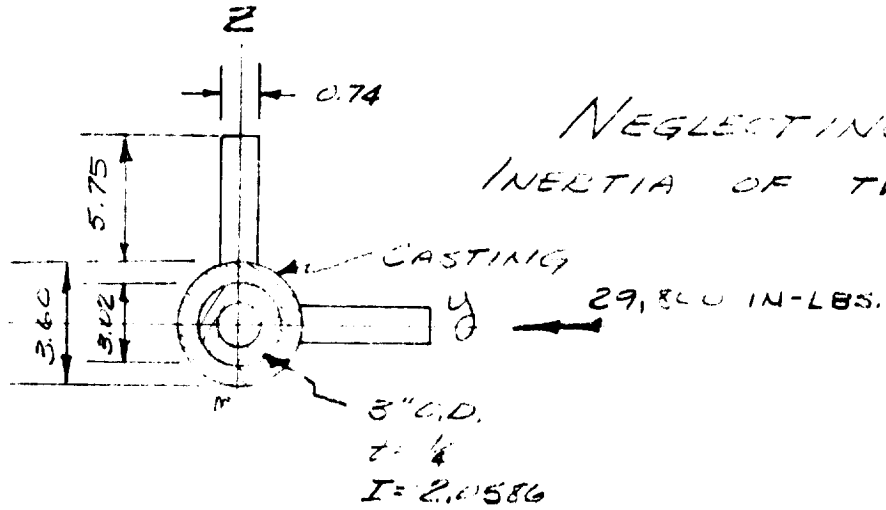

NEGLECTING MOMENT OF INERTIA OF TWO 5.75 X 0.74 PLATES.

$F_{ty}' = 12{,}000$ PSI.

Z

$$I_{yy} = 2.0586 + \frac{\pi}{64}\left[(3.60)^4 - (3.00)^4\right]$$

$$= 6.2186 \text{ IN}^4$$

$$\sigma = \frac{M_{yy}\, y}{I_{yy}}$$

$$= \frac{29\,800(1.80)}{6.2186}$$

$$= 8620 \text{ PSI}$$

$$M.S. = \frac{12{,}000}{8620} - 1 = +0.39$$

PREPARED BY RLH
CHECKED BY
REVISED BY

PAGE
REPORT NO.
DATE 7-12-63

APOLLO ACCESS ARM

FITTINGS

Key Page ___;

ALMAG 35

F_{sy} = 8,060 PSI

F_{ty} = 12,000 PSI

F_{Bry} = 20,650 PSI

$$\sigma_{BR} = \frac{13,451}{3(0.74)(3/8)}$$

$$= 10,250 \text{ PSI}$$

$$M.S. = \frac{20,650}{10250} - 1 = \quad +0.27$$

$$\sigma_S = \frac{13,451 \cos 63.6°}{(0.74)(1.5)}$$

$$= 973 \text{ PSI}$$

$$MS = \frac{[illegible]}{973} - 1 = \quad \text{LARGE}$$

$$\sigma_T = \frac{13,451}{[(8) - 2(3/8)](0.74)}$$

$$= 2,510 \text{ PSI}$$

$$M.S. = \frac{12000}{2510} - 1 = \quad +3.78$$

APOLLO ACCESS ARM

FITTINGS, RIVETS

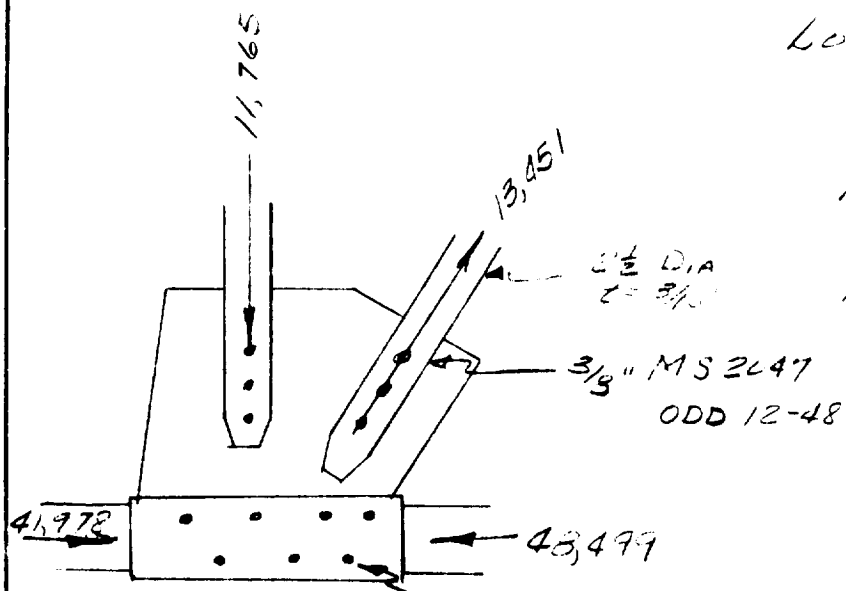

JOINT P'
(MAX LOADS ON ANY JOINT)

3- 3/8" MS 2470 DD 12-48

LOAD/RIVET = $\frac{13,451}{3}$

= 4384 lbs.

F_c = 5940 LBS.

$M.S. = \frac{5940}{4384} - 1 =$ **+0.36**

IN OSE-12F RIVETS,

$P_B = \frac{48,499 - 41,978}{7}$

$= \frac{6521}{7}$

= 931 lbs/RIV.

$M.S. = \frac{2720}{931} - 1 =$ **+1.92**

IN DIAGONAL, 7075-T6, F_{BRY} = 78,000 PSI

$\sigma_{BR} = \frac{13,451}{6(.375)(.1875)}$

= 31,900 PSI

$M.S. = \frac{98,000}{31,900} - 1 =$ **+2.07**

APOLLO ACCESS ARM

END FITTINGS

JOINT G' 10 5D-T12

$F_{su} = 10,600$ LBS/RIVET

$F_{sy} = (.6)(10,600) = 6360$ LBS/RIVET

$P_s = \frac{48,499}{10}$

$= 4,850$ LBS/RIVET

$M.S. = \frac{6360}{4850} - 1 =$ **+0.31**

BEARING IN 7075-T6 TUBING, $F_{bry} = 101000$

$\sigma_{BR} = \frac{48,499}{10(.375)(.250)}$

$= 51,600$ PSI

$M.S. = \frac{101,000}{51,600} - 1 =$ **+0.96**

APOLLO ACCESS ARM

FLOOR GRATING

MATERIAL: GRATING TYPE ALUMINUM 1R4
RELGRIT SURFACE
BEARING BARS, 1½ x 3/16, 6061-T6
CROSS BARS, ½ x 3/16, 6063-T5

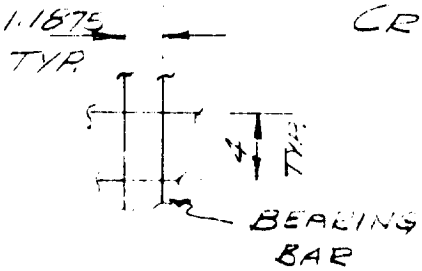

ASSUME

LOAD = 450 PSF = 3.125 PSI

$w = 3.125\,(1.1875)$

$= 3.71$ LBS/IN.

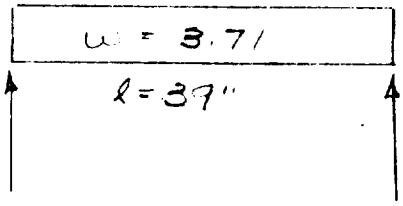

$R = \frac{wl}{2} = 72.4^{\#}$

$\sigma_s = \frac{3}{2}\frac{R}{A}$

$= \frac{3}{2}\frac{(72.4)}{(1.5)(.1875)}$

$= 385$ PSI NEGLIGIBLE

$\sigma = \frac{Mc}{I}$

$= 10{,}000$ PSI

$M.S. = \frac{35000}{10000} - 1 = 2.50$ +2.50

PREPARED BY RLH
CHECKED BY
REVISED BY

PAGE
REPORT NO.
DATE 7-11-63

APOLLO ACCESS ARM

FLOORING GRATING

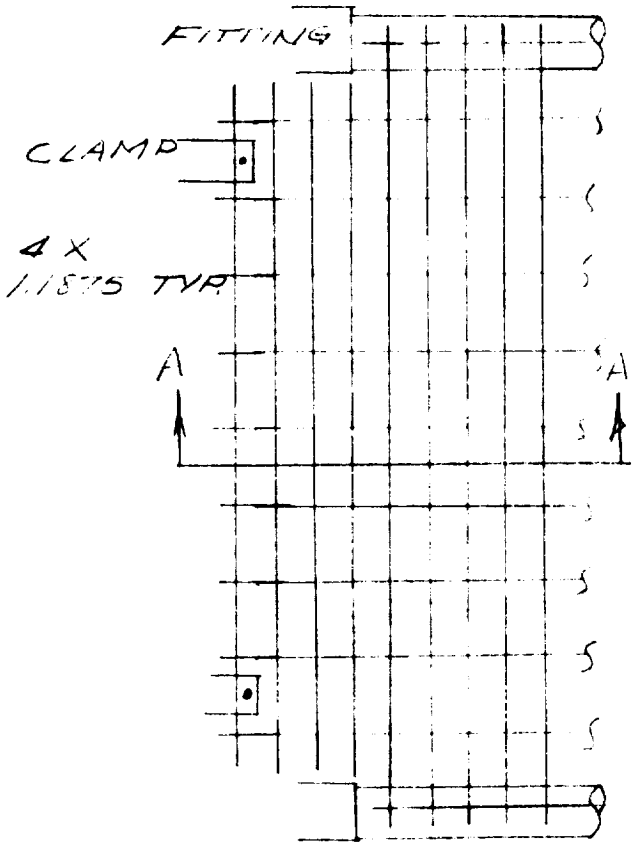

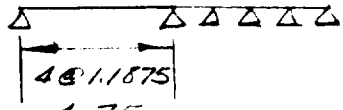

SEC. A-A

MAXIMUM OF 3
BEARING BARS UNSUPPORTED.

$P = 3.71(4) = 14.84$ lbs.

$w_2 = \frac{14.84}{1.1875} = 12.5$ lbs/IN

$R = \frac{wl}{2} = 29.7$ lbs.

$M = \frac{wl^2}{8}$

$= 35.3$ IN-lbs.

6163-T5, $F_{sy} = 9000$, $F_{cy} = 16000$

$\sigma_s = \frac{3}{2} V/A$

$= \frac{3}{2} \frac{29.7}{(.5)(.1875)}$

$= 459$ PSI NEGLIGIBLE

$\sigma = \frac{Mc}{I}$

$= \frac{35.3(.25)}{.001952} = 4510$ PSI

$M.S. = \frac{16000}{4510} - 1 = +2.54$

APOLLO ACCESS ARM

HANDRAIL

75M06172

6061-T6 OD = 1.50, t = 1/8

CASTING - ALMAG 35
PER QQ-A-601
TEMPER F

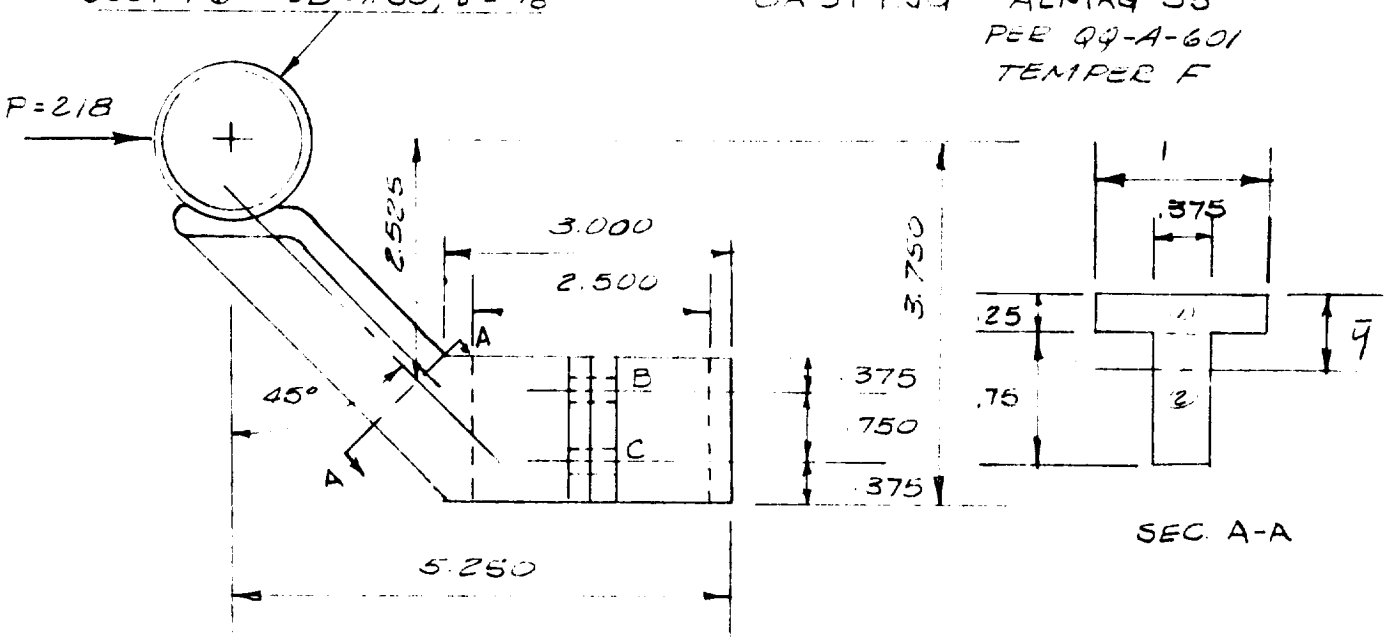

ELEMENT	A	y	Ay	Ay^2	I
1	.25	.125	.0313	.00391	.0013
2	.281	.625	.1756	.1098	.0132
	.531		.2069	.11371	.0145

$$\bar{y} = \frac{Ay}{A}$$

$$= \frac{.2069}{.531}$$

$$= .389 \text{ IN.}$$

$$A\bar{y}^2 = .0804 \text{ IN.}^4$$

$$I = .0145 + .11371 - .0804$$

$$= .04781 \text{ IN.}^4$$

PREPARED BY RLH
CHECKED BY
REVISED BY

PAGE
REPORT NO.
DATE 7-30-63

APOLLO ACCESS ARM

HANDRAIL

[illegible] LB/IN

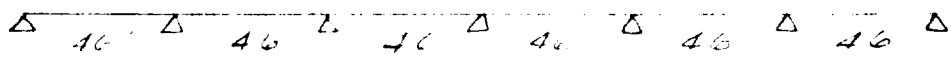

[illegible] LB/IN

MATL: 6061-T6
D = 1.500
t = 1/8
A = 0.54
I = .1287
F_{cy} = 35000
F_{sy} = [illegible]

$M_{MAX} = ([illegible])(4\frac{1}{6})(46)^2$

$= 732$ [illegible] LBS.

$= \frac{Mc}{I}$

$= \frac{(732)(.75)}{.1287}$

$= 544$ PSI

M.S. =

LARGE

$P = V_{MAX} = (1.1346)(4\frac{1}{6})(46)$

$= 218$ LBS.

$C_s = \frac{218}{0.54}$

$= 404$ PSI, NEGLIGIBLE

APOLLO ACCESS ARM

HANDRAIL

ALMAG 35 ; C.F. = 1.5

F_{ty} = 18,000 / 1.5 = 12,000

F_{sy} = 12.1 / 1.5 = 8,000

LOAD = 50 LB/FT., LOAD FACTORS INC.

P = 218 LBS.

$$\sigma = \frac{P}{A} + \frac{Mc}{I}$$

$$= \frac{218 \cos 45^\circ}{.531} + \frac{218\ (2.525)(.387)}{.04781}$$

$$= 4760 \text{ PSI.}$$

$$M.S. = \frac{12,000}{4760} - 1 = \quad \boxed{+1.52}$$

$\Sigma M_C = 0,$

$$.75\ B = 218\ (3.750 - .375)$$

$$B = 982 \text{ LBS.}$$

1/4" BOLTS MS 35265-66, F_{ty} = 36,000, A = .0491

$$\sigma_T = \frac{982}{2(.0491)}$$

$$= 10,000 \text{ PSI}$$

$$M.S. = \frac{36,000}{10,000} - 1 = \quad \boxed{+2.60}$$

PREPARED BY RLH
CHECKED BY
REVISED BY

PAGE
REPORT NO.
DATE 7-30-63

APOLLO ACCESS ARM

HANDRAIL

ANGLE BRACKET

BOLTS - 1/4 INCH
MATL: MS 35266-66
$F_{SY} = 22,900$
$F_{BR} = 57,600$
$A = 0.0491$

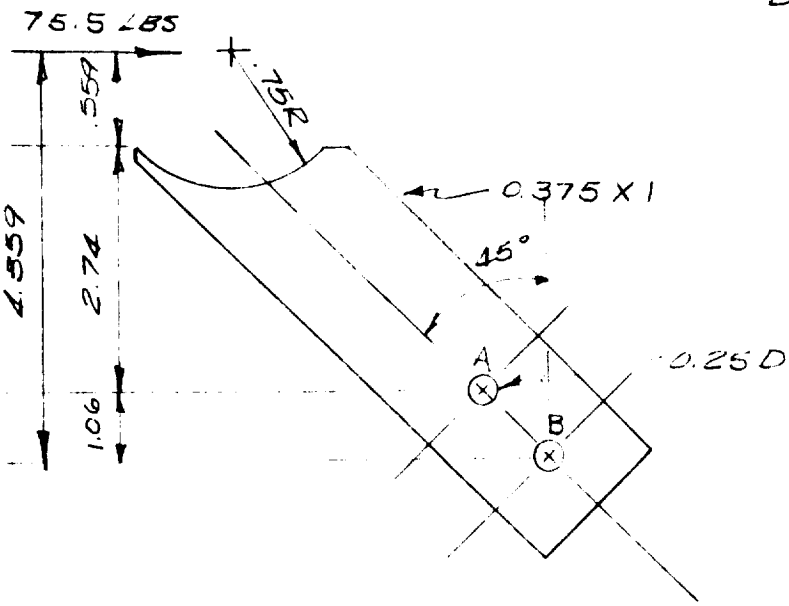

$P = .3942(4\frac{1}{2})(46)$
$= 75.5$ LBS.

$\Sigma M_B = 0,$

$1.06A = 4.359(75.5)$

$A = 314$ LBS

$\sigma_S = \frac{314}{.0491}$

$= 6,390$ PSI

$MS = \frac{22,900}{6,390} - 1 =$ +2.59

$\sigma_{BR} = \frac{314}{(.375)(.25)}$

$= 3,345$ PSI

M.S. = LARGE

APOLLO ACCESS ARM

HANDRAIL

ANGLE BRACKET

MATL: ALMAG 35

$F_{ty} = 12{,}000$ W. CAST. FAC.

$F_{BRy} = 31{,}000/1.5 = 20{,}700$

$$\sigma_{BR} = \frac{314}{(.375)(.25)}$$

$$= 3{,}345 \text{ PSI}$$

$$M.S. = \frac{20{,}700}{3{,}345} - 1 =$$

+ LARGE

$$\sigma = \frac{P}{A} + \frac{Mc}{I}$$

$$= \frac{75.5 \cos 45^\circ}{(.375)(1) - (.375)(.25)} + \frac{3.299(75.5)(.50)}{\frac{(.375)(1)^3}{12} - \frac{(.375)(.25)^3}{12}}$$

$$= 190 + 4040$$

$$= 4{,}230 \text{ PSI}$$

$$M.S. = \frac{12{,}000}{4{,}230} - 1 =$$

+ 1.84

PREPARED BY RLH
CHECKED BY
REVISED BY

PAGE
REPORT NO.
DATE 7-16-63

APOLLO ACCESS ARM

HINGE

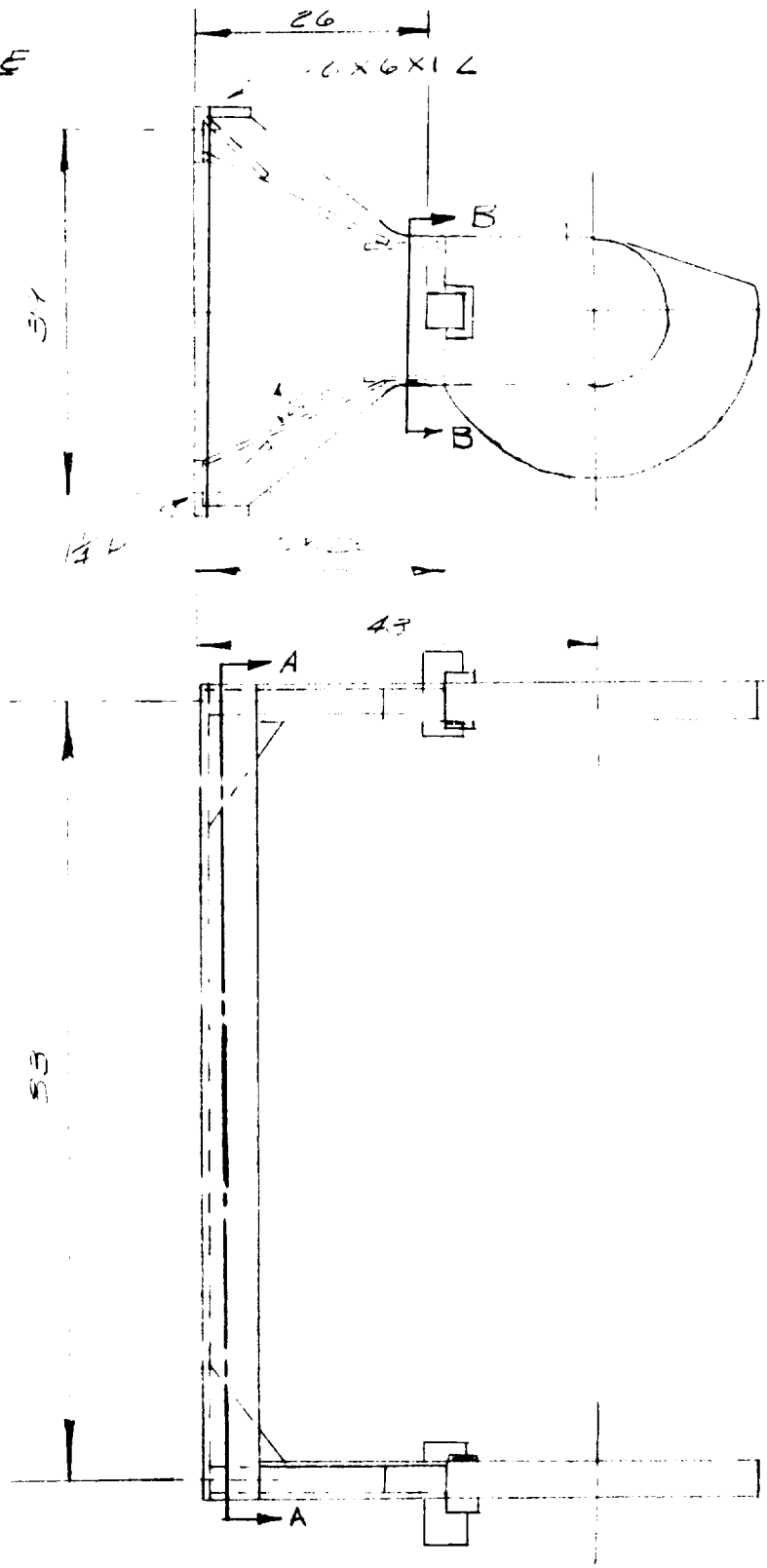

PREPARED BY ELH
CHECKED BY
REVISED BY

REPORT NO.
DATE 7-15-63

APOLLO ACCESS ARM

LOADS AT END OF TRUSS

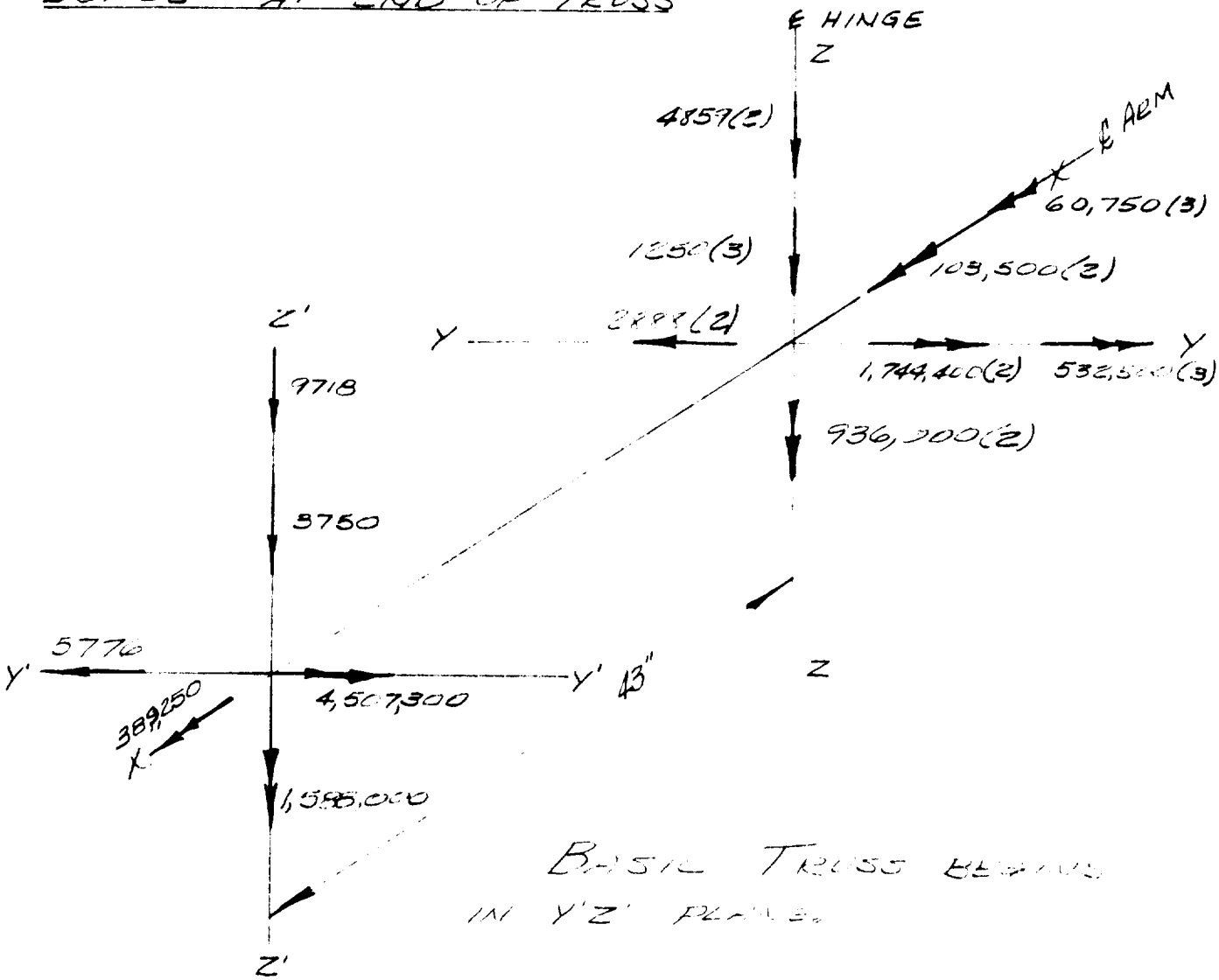

BASIC TRUSS BEAMS
IN Y'Z' PLANES

PREPARED BY RLH
CHECKED BY
REVISED BY

PAGE
REPORT NO.
DATE 7-15-63

APOLLO ACCESS ARM

HINGE, FRAME ANALYSIS

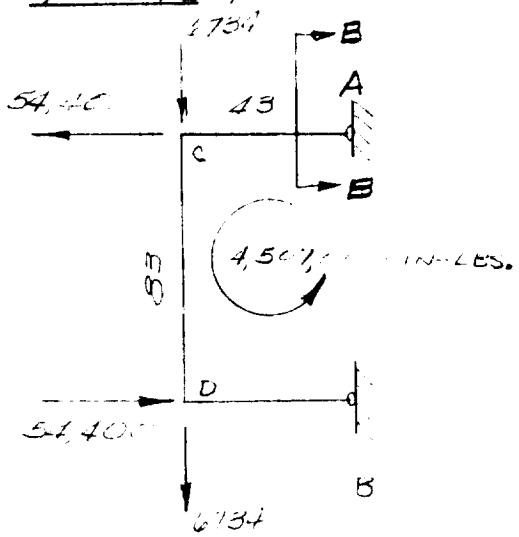

$83 H_B = 2(6734)43 + 54{,}400\ (83)$

$H_B = 61{,}360$ LBS. ←

$H_A = 61{,}360$ LBS. →

$V_A = V_B = 6734$ LBS. ↑

$M_C = M_D = 43(6734)$

$= 289{,}000$ IN-LBS.

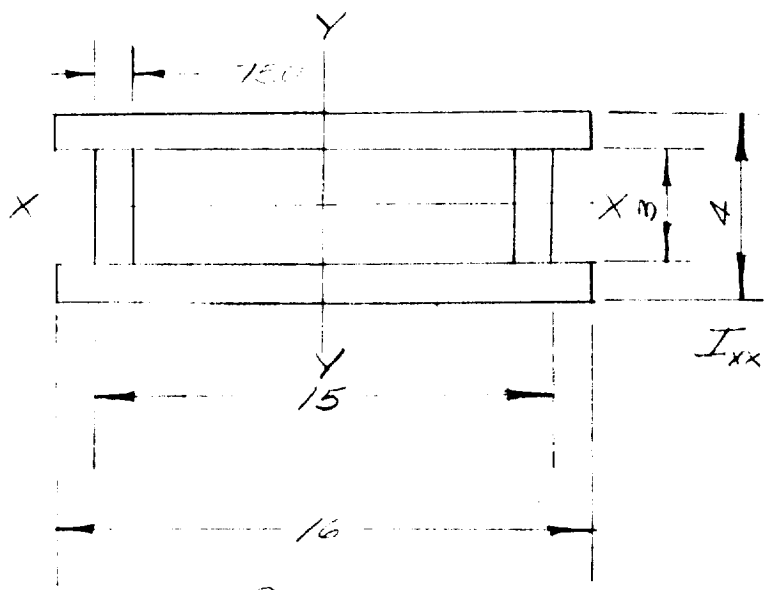

SEC. B-B

$$I_{xx} = 2\left[\frac{16(.5)^3}{12} + (16)(.5)(1.75)^2 + \frac{(.75)(3)^3}{12}\right] =$$

$= 56$ IN.^{4}

$$I_{yy} = 2\left[\frac{(.5)(16)^3}{12} + \frac{3(.75)^3}{12} + 3(.75)(7.125)^2\right]$$

$= 570$ IN.^{4}

APOLLO ACCESS ARM

HINGE

MATL: 4130 STEEL
F_{ty} = 70,000 PSI

AT C;

$$\sigma = \frac{Mc}{I} + \frac{P}{A}$$

$$\sigma = \frac{289,000(2)}{56} + \frac{54,400}{18+4.5}$$

$$= 10,300 + 2,650$$

$$= 12,950 \text{ PSI.}$$

$$M.S. = \frac{70,000}{12950} - 1 =$$

+4.40

PREPARED BY RLH
CHECKED BY
REVISED BY

PAGE
REPORT NO.
DATE 10-18-63

APOLLO ACCESS ARM

HINGE - SEC. B-B

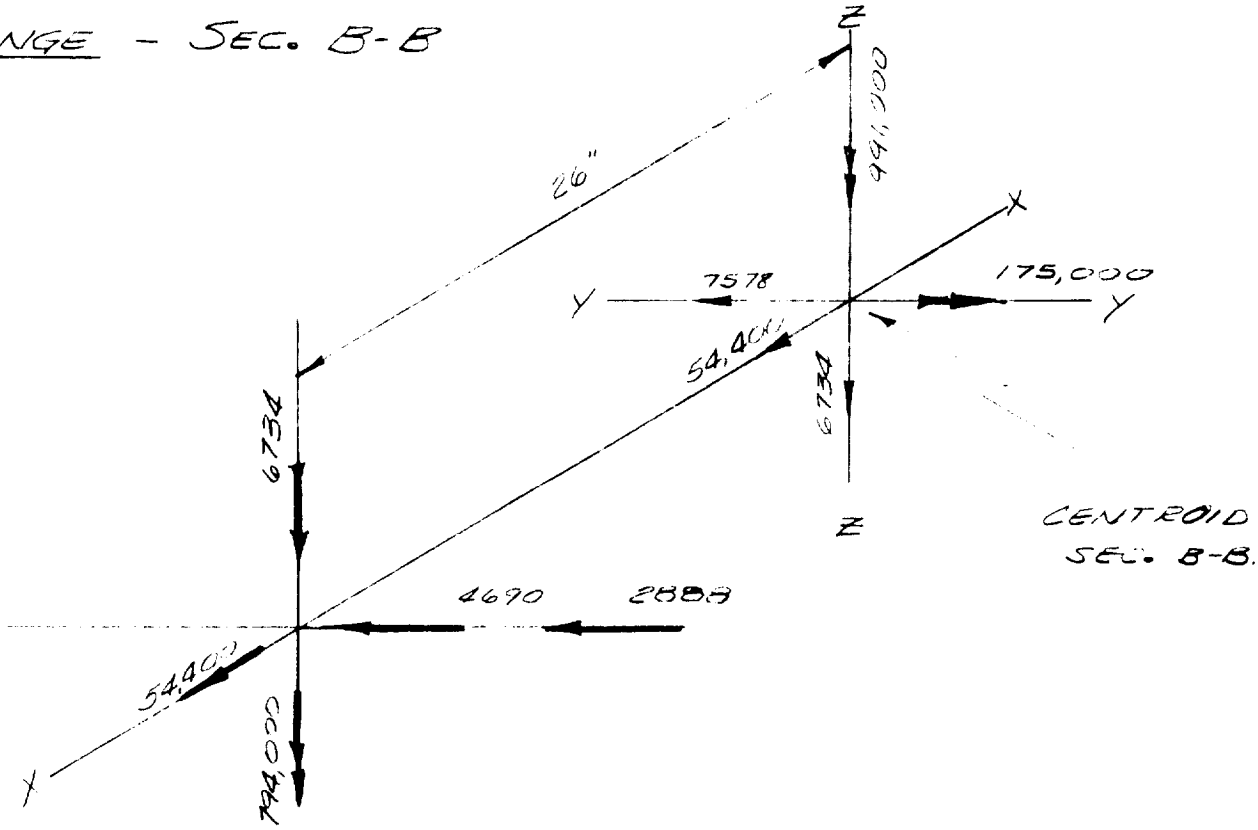

$M_{YY} = 6734(26) = 175,000$ IN-LBS.

$M_{XX} = 0$

$M_{ZZ} = 794,000 + 7578(26)$

$= 991,000$ IN-LBS.

APOLLO ACCESS ARM

HINGE

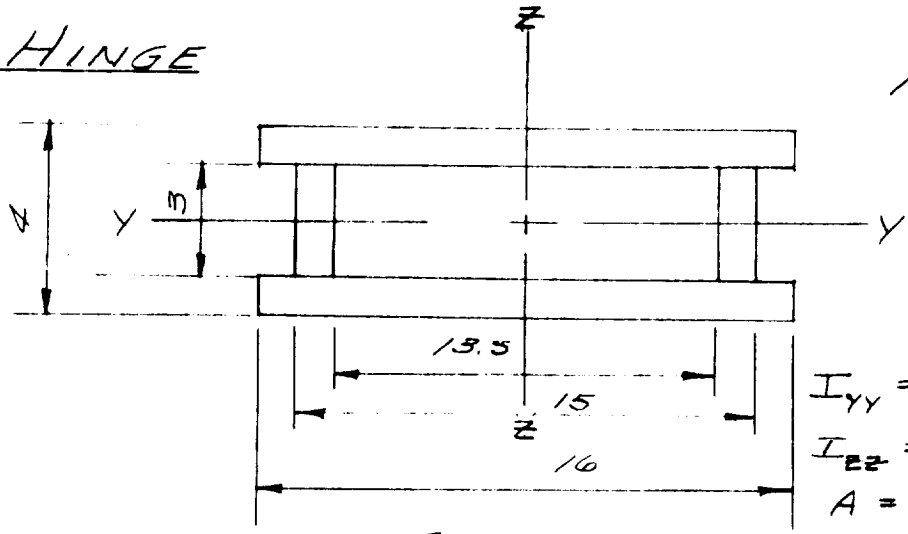

MATL: 4130 STL.

$F_{cy} = 70{,}000$

$F_{sy} = 42{,}000$

$I_{YY} = 56 \text{ IN}^4$

$I_{ZZ} = 570 \text{ IN}^4$

$A = 20.5 \text{ IN}^2$

SEC. B-B.

$$\sigma = \frac{M_{YY}\,C}{I_{YY}} + \frac{M_{ZZ}\,C}{I_{ZZ}} + \frac{P}{A}$$

$$= \frac{175{,}000(2)}{56} + \frac{991{,}000\,(8)}{570} + \frac{54{,}400}{20.5}$$

$$= 6250 + 13{,}900 + 2640$$

$$= 22{,}790 \text{ PSI.}$$

$$M.S. = \frac{70{,}000}{22{,}790} - 1 = \boxed{+2.07}$$

$$\tau = \frac{6734}{2(3)(\frac{3}{4})}$$

$$= 1495 \text{ PSI., NEGLIGIBLE}$$

PREPARED BY RLH
CHECKED BY
REVISED BY

PAGE
REPORT NO.
DATE 7-15-63

APOLLO ACCESS ARM

HINGE, COLUMN ANALYSIS

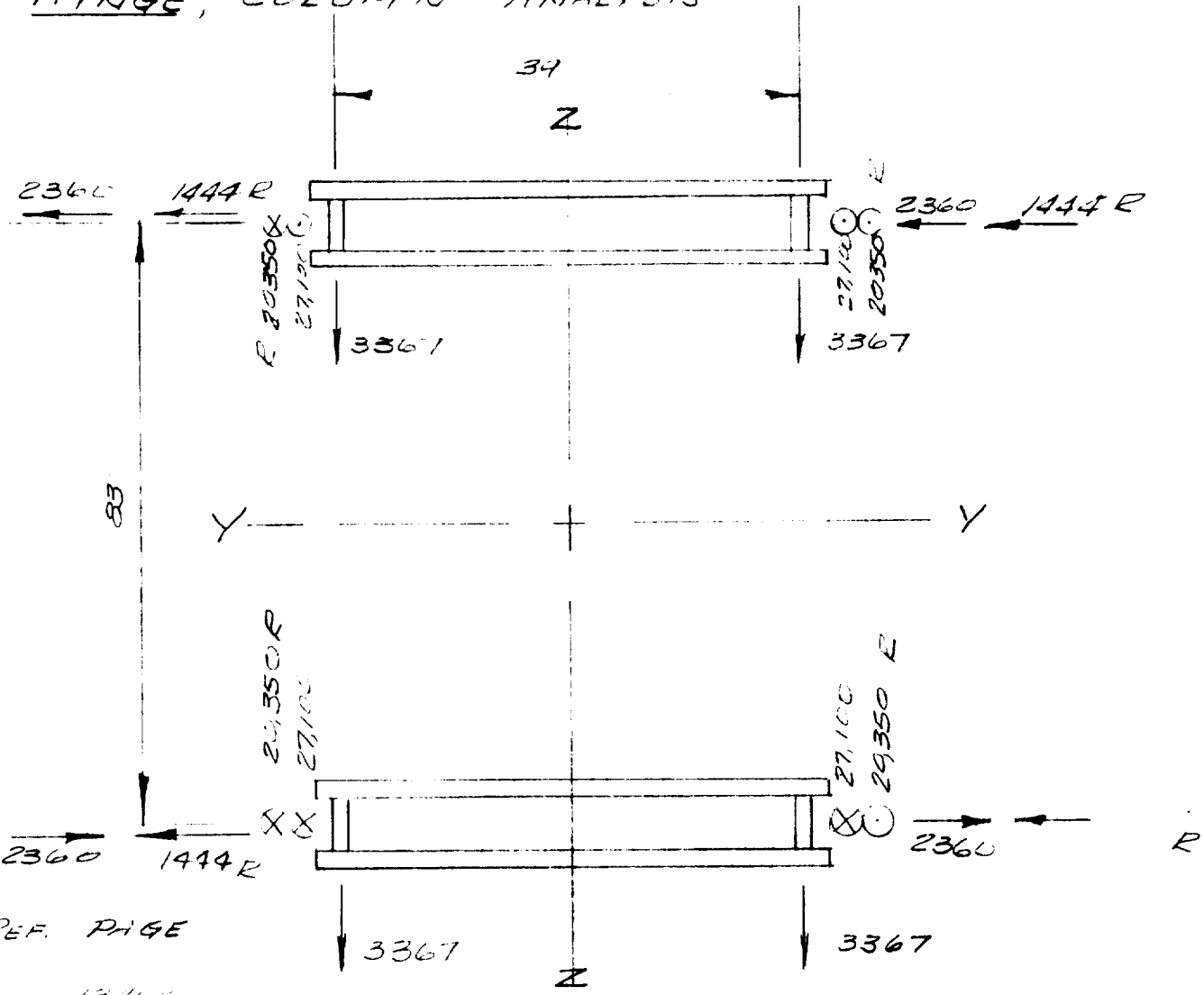

REF. PAGE

$\frac{13405}{4} = 3367$

$\frac{389250}{2(83)} = 2360$

$\frac{4[illegible]}{2(83)} = 27,1[illegible]$

$\frac{1,588,000}{2(39)} = 20,350$

$\frac{5776}{4} = 1444$

SEC. A-A
REF. PAGE —

R DENOTES REVERSIBLE FORCES

APOLLO ACCESS ARM

HINGE

4 - 1¼ DIAMETER BOLTS CONNECT BASIC TRUSS TO HINGE

MATL: MS 35303
F_{ty} = 103,000; F_{sy} = 67,500
1¼, A = 1.227

$$\sigma_S = \frac{2360 + 1444 + 5307}{1.227}$$

$$= 4,140 \text{ PSI}$$

M.S. = LARGE

$$\sigma_T = \frac{27,100 + 20350}{1.227}$$

$$= 38,700 \text{ PSI}$$

$$M.S. = \frac{103,000}{38,700} - 1 =$$

+1.66

PREPARED BY RLH
CHECKED BY
REVISED BY

PAGE
REPORT NO.
DATE 7-16-63

APOLLO ACCESS ARM

HINGE

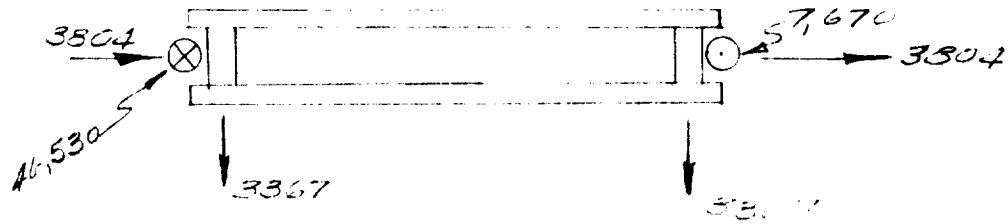

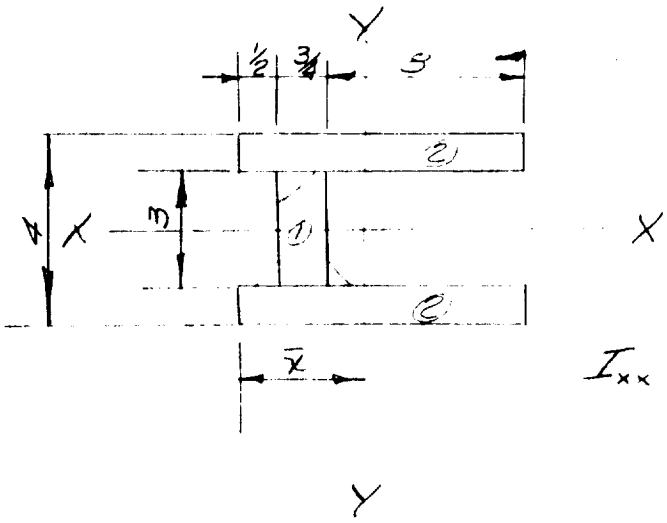

$16 \div = 16(.5) = 8$ IN.

$$I_{xx} = \frac{.75(3)^3}{12} + 2\left[\frac{9.25(0.5)^3}{12}\right] + 2\left[(9.25)(0.5)(1.75)^2\right]$$

$$= 30.2 \text{ IN}^4$$

ELEMENT	A	X	Ax	Ax^2	I_o
1	2.25	.875	1.9[illegible]5	1.72	.1055
2	9.25	4.125	38.2	157.2	63.4
Σ	11.5		40.165	158.92	63.5055

$$\bar{x} = \frac{40.165}{11.5} = 3.5 \text{ IN.} \qquad A\bar{x}^2 = 141$$

$$I_{yy} = 158.92 + 63.5055 - 141$$

$$= 81 \text{ IN}^4$$

APOLLO ACCESS ARM

HINGE

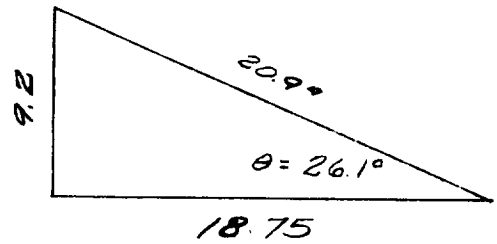

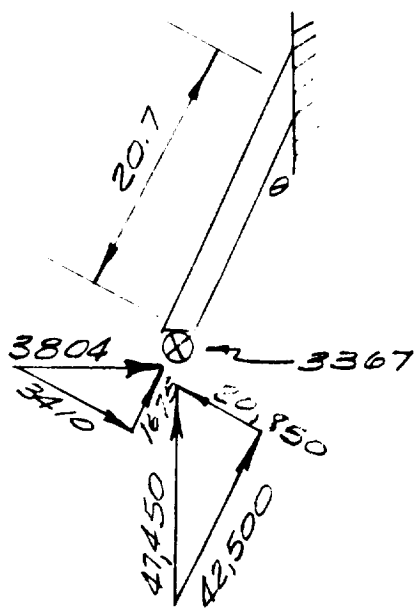

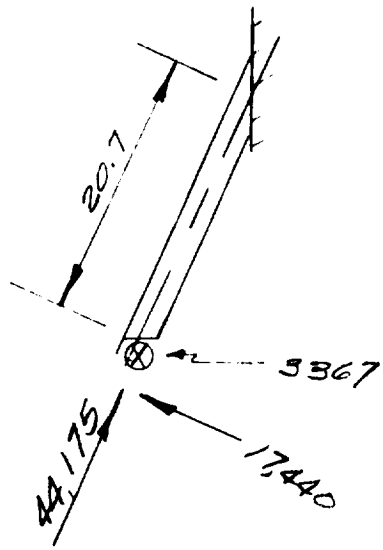

$$\rho = \sqrt{I/A}$$

$$= \sqrt{\frac{30.2}{11.5}}$$

$$= 1.62 \text{ IN.}$$

APOLLO ACCESS ARM

HINGE

t/r IS SMALL, THEREFORE $F_{cy} = 70{,}000$

$$M = FJ \tan u, \quad J = \sqrt{EI/P_c}, \quad u = L/J$$

$$M_{xx} = 3367 \sqrt{\frac{29(10^6)(30.2)}{44{,}175}} \tan \frac{20.7}{J}$$

$$= 3367\,(140.6) \tan \frac{20.7}{140.6}$$

$$= 70{,}000 \text{ IN-LBS.}$$

$$M_{yy} = 17440 \sqrt{\frac{29(10^6)(81)}{44{,}175}} \tan \frac{20.7}{J}$$

$$= 17440\,(231) \tan \frac{20.7}{231}$$

$$= 361{,}000 \text{ IN-LBS.}$$

APOLLO ACCESS ARM

HINGE

$$\sigma = \frac{M_{xx}\,C}{I_{xx}} + \frac{M_{yy}\,C}{I_{yy}} + \frac{P}{A}$$

$$= \frac{70{,}000(2)}{30.2} + \frac{361{,}000\,(3.5)}{81} + \frac{44175}{11.5}$$

$$= 4{,}640 + 15{,}600 + 3{,}840$$

$$= 24{,}080 \text{ PSI.}$$

MATL: 4130 STL., $F_{cy} = 70{,}000$ PSI.
$F_{sy} = 42{,}000$ PSI.

$$M.S. = \frac{70{,}000}{24{,}080} - 1 = \boxed{+1.91}$$

$$T = \tfrac{3}{2}\,V/A \quad ; \text{ NEGLECTING FLANGES.}$$

$$= \tfrac{3}{2}\,\frac{17{,}440 + 3367}{3(\tfrac{3}{4})}$$

$$= 12{,}030 \text{ PSI.}$$

$$M.S. = \frac{42{,}000}{12{,}030} - 1 = \boxed{+2.49}$$

PREPARED BY RLH
CHECKED BY
REVISED BY

PAGE
REPORT NO.
DATE 7-17-63

APOLLO ACCESS ARM

HINGE

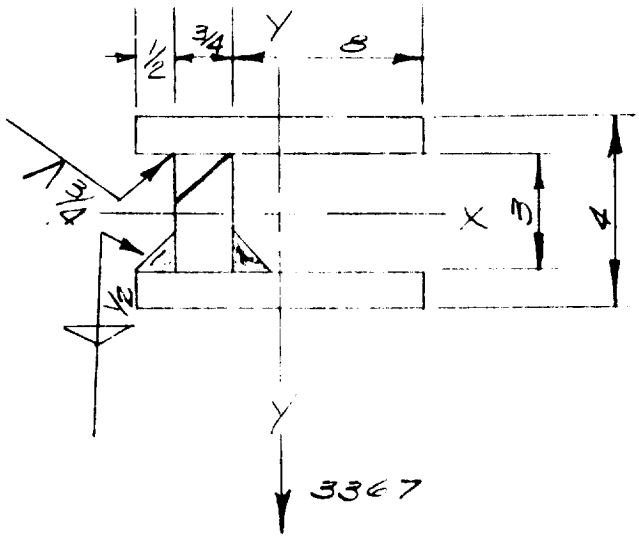

$I_{xx} = 30.2 \text{ IN}^4$

MATL: 4130 STL.
$F_{sy} = 42{,}000$ PSI

$F'_{sy} = 42{,}000(.85)$
$= 35{,}500$ IN WELD

$$\sigma_s = \frac{V A \bar{y}}{I b}$$

$$= \frac{3367[(9.25)(0.5)](1.75)}{(30.2)(.75)}$$

$$= 1070 \text{ PSI}$$

$$M.S. = \frac{35{,}500}{1070} - 1 =$$

LARGE

APOLLO ACCESS ARM

HINGE

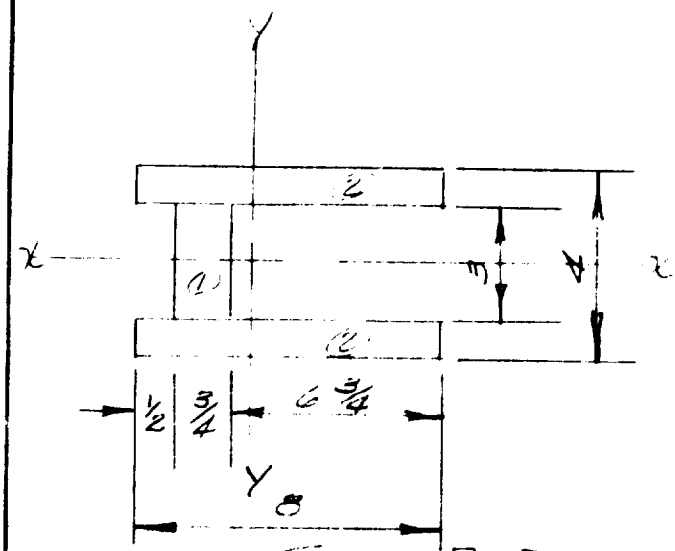

SEC. B-B
REF. PAGE ___.

$$I_{xx} = \frac{(.75)(3)^3}{12} + 2\left[\frac{8(0.5)^3}{12}\right] + 2\left[8(0.5)(1.75)^2\right]$$

$$= 26.4 \text{ IN}^4$$

ELEMENT	A	x	Ax	Ax²	I_o
1	2.25	.875	1.965	1.72	.1055
2	8.00	4.0	32.0	128.0	42.7
	10.25		33.95	129.72	42.8055

$$\bar{X} = \frac{33.95}{10.25} = 3.31 \text{ IN.} \qquad A\bar{x}^2 = 112.2 \text{ IN}^4$$

$$I_{yy} = 129.72 + 42.8055 - 112.2$$

$$= 60.3 \text{ IN}^4 \qquad 60.12$$

$$r = \sqrt{I/A}$$

$$= \sqrt{\frac{26.4}{10.25}} = 1.6 \text{ IN.}$$

PREPARED BY RLH
CHECKED BY
REVISED BY

PAGE
REPORT NO.
DATE 7-17-63

APOLLO ACCESS ARM

HINGE

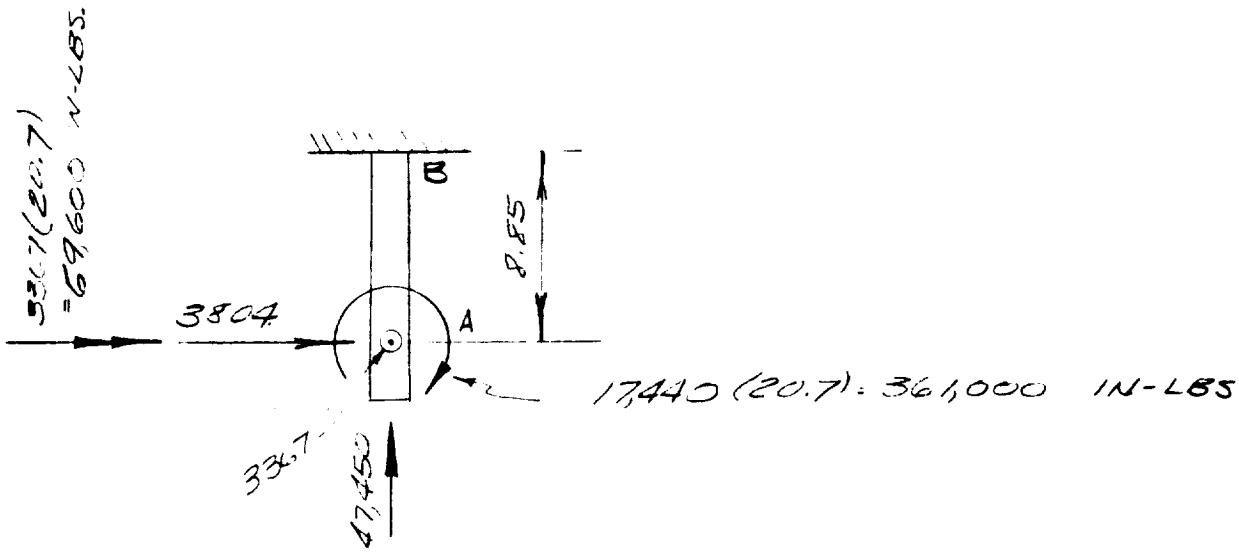

FOR 4130 STEEL F_{cy} = 70,000 PSI

AT A;

$$\sigma = \frac{M_{xx}c}{I_{xx}} + \frac{M_{yy}c}{I_{yy}} + \frac{P}{A}$$

$$= \frac{69,600(2)}{26.4} + \frac{361,000(3.31)}{60.3} + \frac{47,450}{10.25}$$

$$= 5280 + 19,800 + 4610$$

$$= 29,690 \text{ PSI.}$$

$$M.S. = \frac{70,000}{29,690} - 1 = \boxed{+1.36}$$

APOLLO ACCESS ARM

HINGE

AT B,

$$M_{xx} = 69{,}600 + 3367(8.85)$$

$$= 69{,}600 + 29{,}800$$

$$= 99{,}400 \text{ IN-LBS.}$$

$$M_{yy} = 361{,}000 + 3804(8.85)$$

$$= 361{,}000 + 33{,}650$$

$$= 394{,}650 \text{ IN-LB.}$$

$$\sigma = \frac{M_{xx}\,c}{I_{xx}} + \frac{M_{yy}\,c}{I_{yy}} + \frac{P}{A}$$

$$= \frac{99{,}400(2)}{26.4} + \frac{394{,}650(3.31)}{60.3} + \frac{47{,}450}{10.25}$$

$$= 7510 + 21{,}650 + 4610$$

$$= 33{,}770 \text{ PSI.}$$

$$M.S. = \frac{70{,}000}{33{,}770} - 1 = \boxed{+1.08}$$

PREPARED BY RLH
CHECKED BY
REVISED BY

PAGE
REPORT NO.
DATE 10-21-63

APOLLO ACCESS ARM

PINION

MATL 4130 STL N
F_{ty} = 70,000

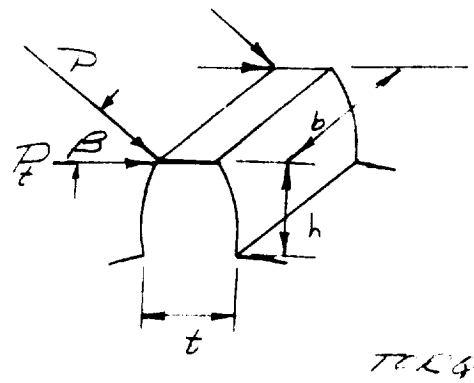

$\sigma = 20°$
$h = 1.44$
$t = 1.50$
$b = 4.00$
P.D. = 15.68
TORQUE AVAIL. = 210,000

$$P = \frac{210{,}000}{15.68/2}$$

$$= 26{,}850 \text{ LBS.}$$

$$\sigma = \frac{6 P_t h}{b t^2}$$

$$= \frac{6(26{,}850)(\cos 20)(1.44)}{4(1.5)^2}$$

$$= 23{,}300 \text{ PSI.}$$

$$M.S. = \frac{70{,}000}{23{,}300} - 1 = \boxed{+2.00}$$

PREPARED BY RLH
CHECKED BY
REVISED BY

PAGE 47
REPORT NO.
DATE 7-18-63

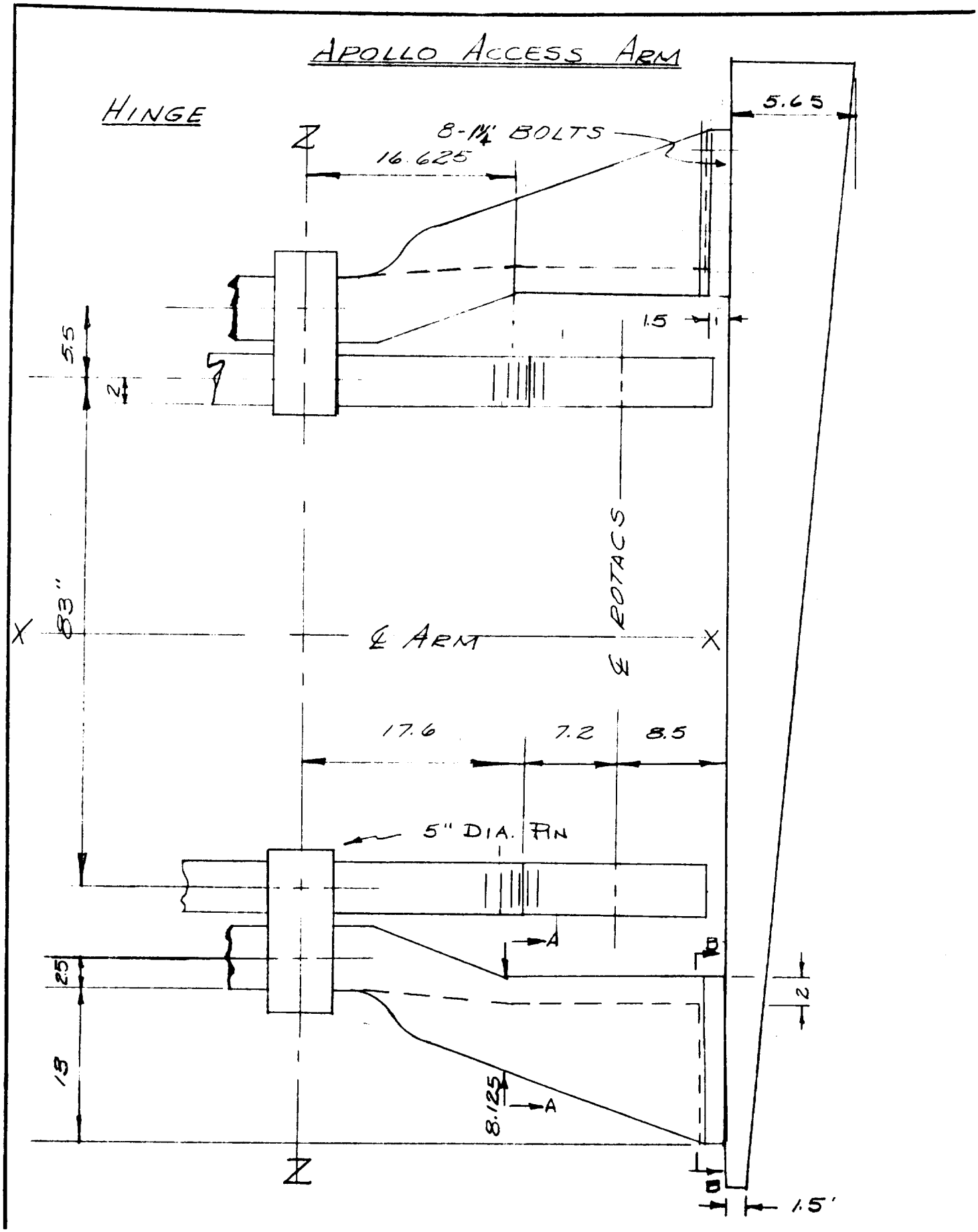

PREPARED BY RLH
CHECKED BY
REVISED BY

PAGE
REPORT NO.
DATE 7-18-63

APOLLO ACCESS ARM

HINGE

R NOTES REVERSAL POSSIBLE.

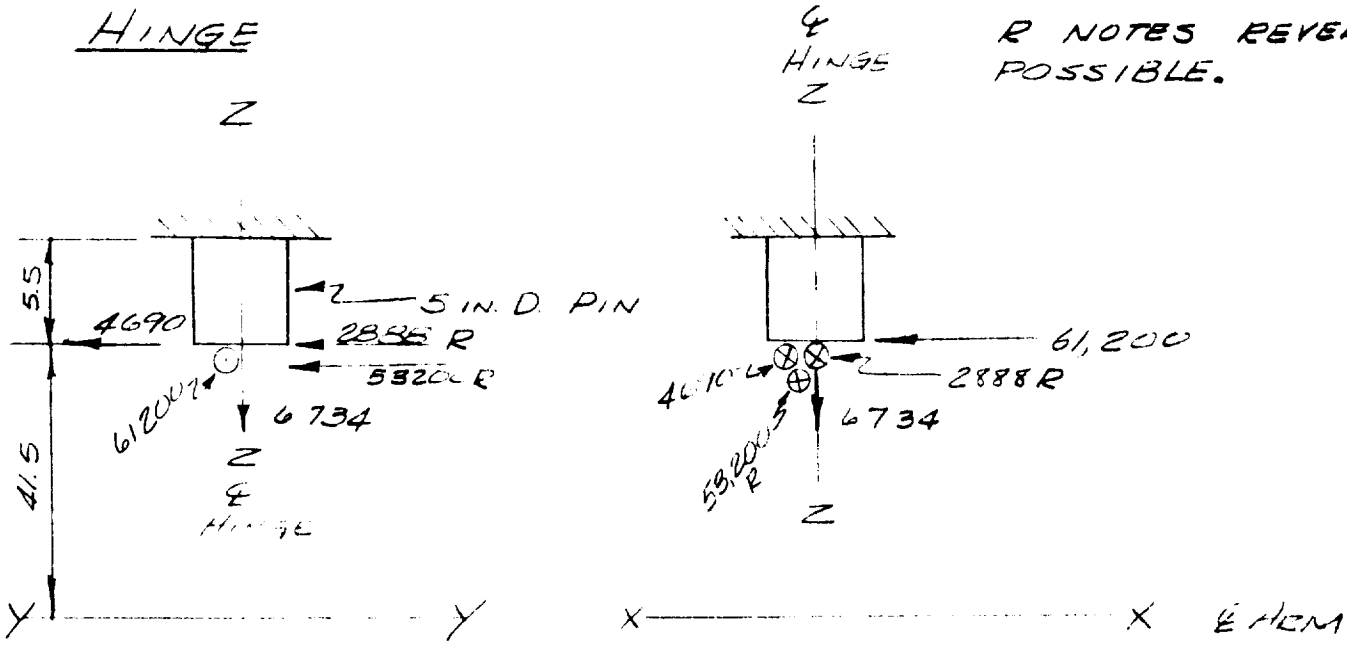

REF PAGE ____ FOL LOADS.

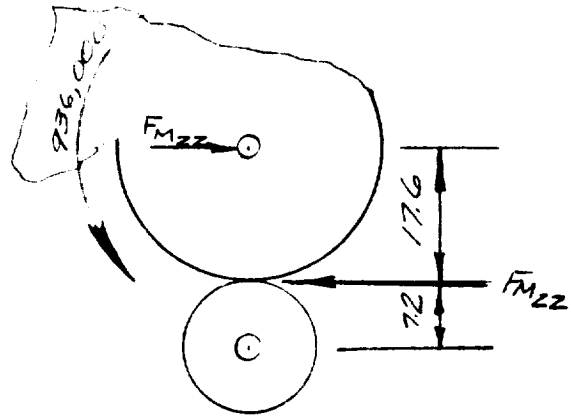

$$\frac{F_z}{2} = \frac{13468}{2} = 6734 \text{ LBS}$$

$$\frac{F_y}{2} = \frac{5776}{2} = 2888 \text{ LBS.}$$

$$F_{M_{xx}} = \frac{389250}{83} = 4,690 \text{ LBS.}$$

$$F_{M_{yy}} = \frac{5,086,300}{83} = 61,200 \text{ LBS}$$

$$F_{M_{zz}} = \frac{936,000}{17.6} = 53,200 \text{ LBS.}$$

APOLLO ACCESS ARM

HINGE - PIN

MATL: 4130 STL.
F_{ty} = 103,000 PSI.
F_{sy} = 61,800 PSI.

A = 19.64 SQ. IN.
I = 30.68 IN.^{4}

REF. PAGE

$V = 4{,}690 + 53{,}200 + 2{,}888 + \rightarrow 61{,}200$

$= 86{,}400$ LBS.

$M = 86{,}400 (5.5)$

$= 475{,}000$ IN-LBS.

$$\sigma_t = \frac{Mc}{I} + \frac{P}{A}$$

$$= \frac{475{,}000 (2.5)}{30.68} + \frac{6734}{19.64}$$

$= 39{,}043$ PSI.

$$M.S. = \frac{103{,}000}{39{,}043} - 1 =$$

+ 1.64

$$T = \frac{4}{3} \frac{V}{A}$$

$$= \frac{4}{3} \frac{86{,}400}{19{,}64} = 5{,}860 \text{ PSI}$$

M.S. =

LARGE

PREPARED BY RLH
CHECKED BY
REVISED BY

PAGE
REPORT NO.
DATE 10-21-63

APOLLO ACCESS ARM

HINGE PIVOT

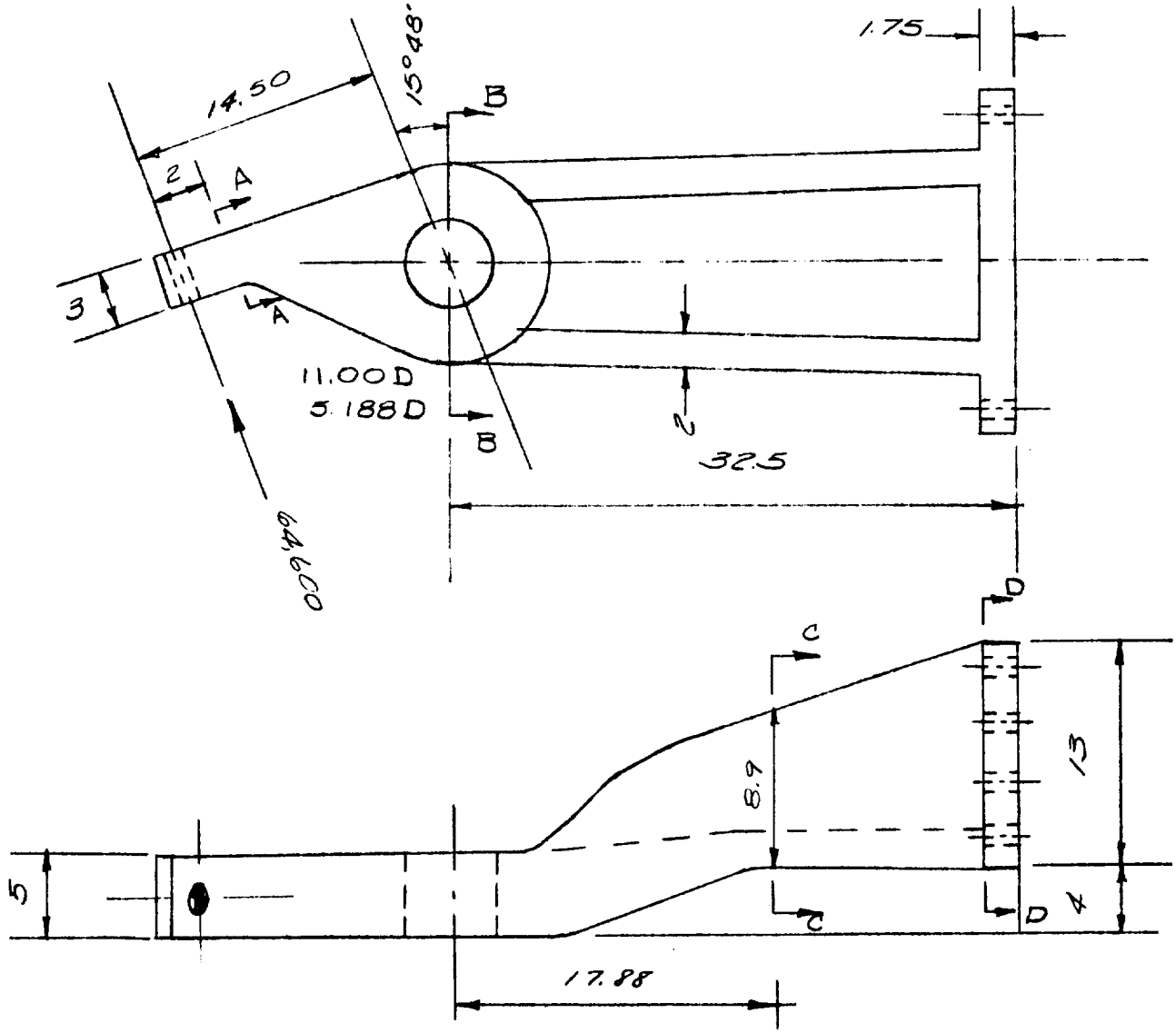

STATIC WIND MOMENT/HINGE = 936,000 IN-LBS.

14.5 P = 936,000

P = 64,600 LBS.

APOLLO ACCESS ARM

HINGE PIVOT

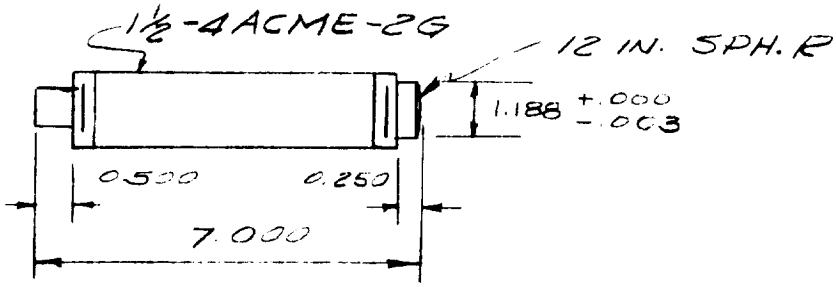

4130 STL.
HEAT-TREATED
TO 180,000 PSI.

$F_{BRY} = 256{,}000$

$P = 64{,}600$ LBS.

LINE OF CONTACT BEARING $\cong$ 1.185 IN.

$$p = \frac{64{,}600}{1.185}$$

$$= 54{,}600 \text{ LBS/IN.}$$

$$\sigma = 0.798\sqrt{\frac{p}{2D\left(\frac{1-\gamma^2}{E}\right)}} \; ; \; \gamma = 0.25,\ E = 3\times 0^7,$$

ROARK, P. 288, CASE 4.

$$= 0.798\sqrt{\frac{54{,}600}{2(24)\left[\frac{1-(.25)^2}{3\times 10^7}\right]}}$$

$$= 152{,}000 \text{ PSI.}$$

$$M.S. = \frac{256{,}000}{152{,}000} - 1 = \boxed{+0.68}$$

PREPARED BY RLH
CHECKED BY
REVISED BY

PAGE
REPORT NO.
DATE 10-21-63

APOLLO ACCESS ARM

HINGE PIVOT

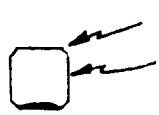

4130 STL

$F_{cy} = 70{,}000$

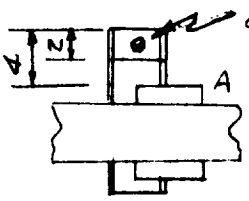

$$M_A = 64{,}600\,(3)$$

$$= 193{,}800 \text{ IN-LBS.}$$

$$\sigma = \frac{Mc}{I}$$

$$= \frac{193{,}800(2)}{\frac{4(4)^3}{12}}$$

$$= 18{,}180 \text{ PSI.}$$

$$M.S. = \frac{70{,}000}{18{,}180} - 1 = \boxed{+2.75}$$

PREPARED BY RLH
CHECKED BY
REVISED BY

PAGE 53
REPORT NO.
DATE 10-21-63

APOLLO ACCESS ARM

HINGE PIVOT

4130 STL. H.T.

$F_{ty} = 103,000$

$F_{sy} = 61,800$

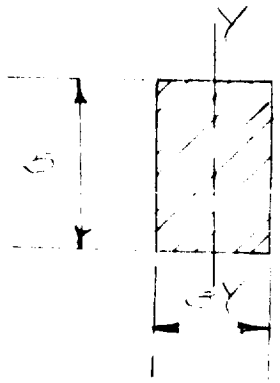

SEC. A-A

$$M_{YY} = 2(64,600)$$

$$= 129,200 \text{ IN-LBS.}$$

$$\frac{Mc}{I}$$

$$= \frac{129,200(5)}{\frac{5(3)^3}{12}}$$

$$= 17,220 \text{ PSI.}$$

$$M.S. = \frac{103,000}{17,220} - 1 = \quad \Big| \; +4.98$$

$$V = \frac{3}{2} \, V/A$$

$$= \frac{3}{2}\left[64,600/3(5)\right]$$

$$= 6460 \text{ PSI.}$$

$$M.S. = \frac{61,800}{6460} - 1 = \quad \Big| \; +\text{LARGE}$$

APOLLO ACCESS ARM

HINGE PIVOT

4130 STL. H.T TO 125-145 KSI.

F_{ty} = 103 KSI.

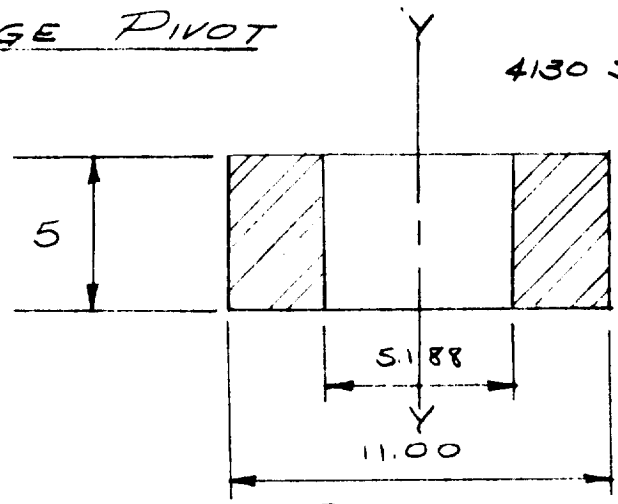

SEC. B-B.

$$M_{YY} = 14.5\,(64{,}600)$$

$$= 936000 \text{ PSI.}$$

$$\sigma = \frac{Mc}{I}$$

$$= \frac{936{,}000\,(5.5)}{\frac{5(11)^3}{12} - \frac{5(5.188)^3}{12}}$$

$$= 10{,}290 \text{ PSI}$$

$$M.S. = \frac{103{,}000}{10{,}290} - 1 =$$

+ LARGE

APOLLO ACCESS ARM

HINGE PIVOT

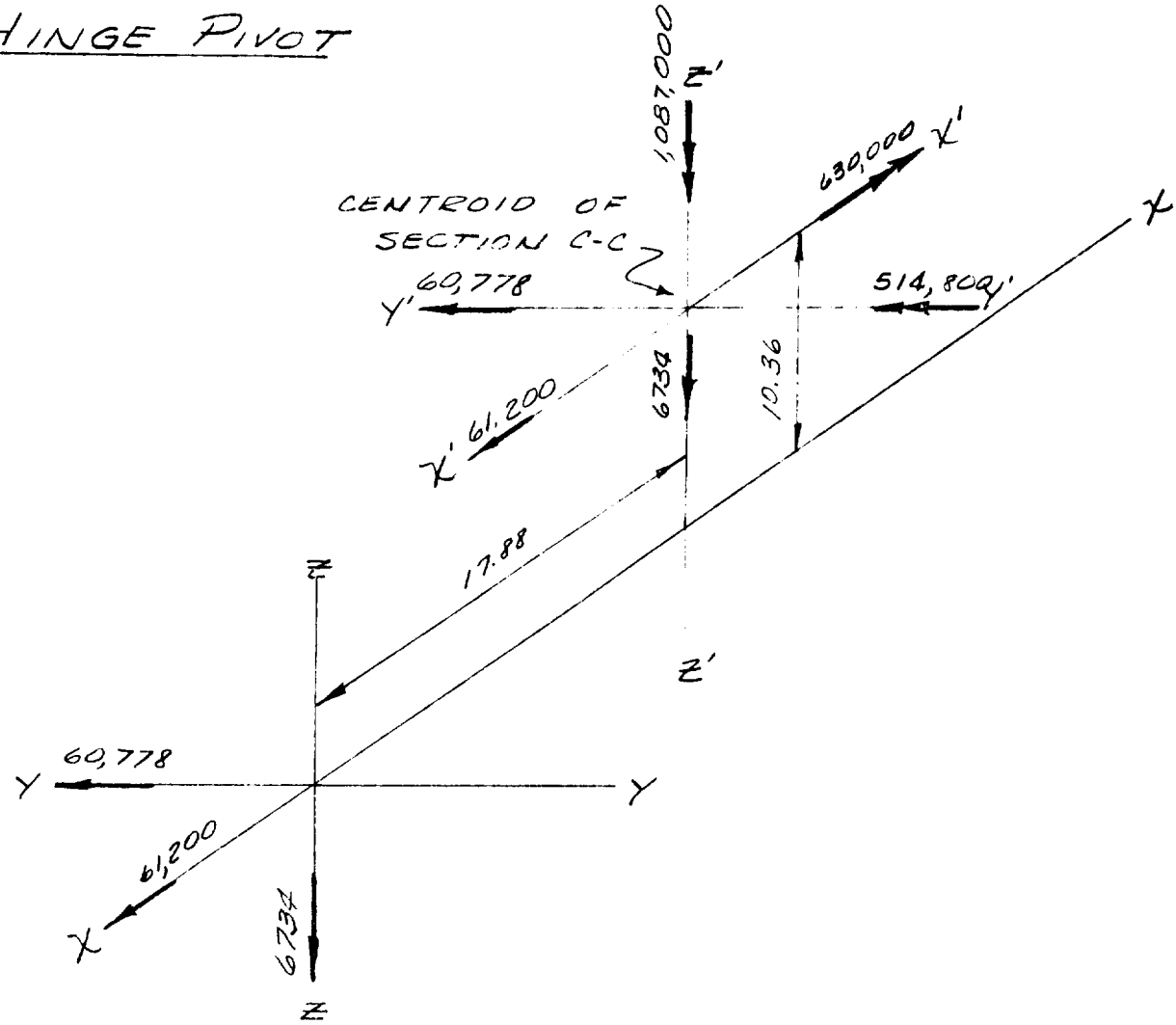

$$M_{Y'Y'} = 6734(17.88) - 61{,}200(10.36)$$

$$= 514{,}800 \text{ IN-LBS.}$$

$$M_{X'X'} = 60{,}778(10.36)$$

$$= 630{,}000 \text{ IN-LBS.}$$

$$M_{Z'Z'} = 60{,}778(17.88)$$

$$= 1{,}087{,}000 \text{ IN-LBS.}$$

PREPARED BY RLH
CHECKED BY
REVISED BY

PAGE
REPORT NO.
DATE 10-22-63

APOLLO ACCESS ARM

HINGE PIVOT

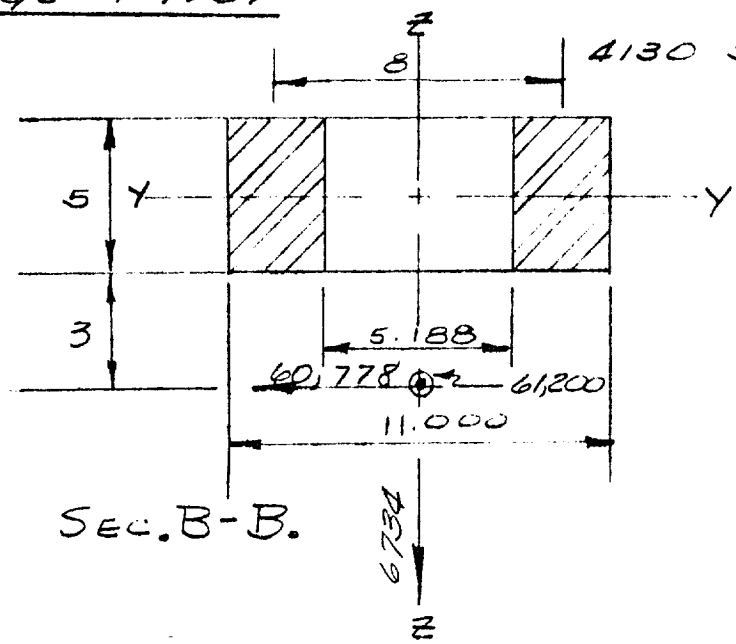

SEC. B-B.

4130 STL. HT 125-146 KSI

$F_{TY} = 103{,}000$

$F_{SY} = 61{,}800$

$I_{YY} = 62.5 \text{ IN}^4$

$I_{ZZ} = 502 \text{ IN}^4$

$$\tau = \frac{3}{2}\frac{V}{A}$$

$$= \frac{3}{2}\left[\frac{\frac{6734}{2} + \frac{60{,}778(5.5)}{8}}{15}\right]$$

$$= 4517 \text{ PSI, NEGLIGIBLE}$$

$$\sigma_T = \frac{M_{YY}C}{I_{YY}} + \frac{P}{A}$$

$$= \frac{[(61200)(5.5)]2.5}{62.5} + \frac{61{,}200}{30}$$

$$= 15{,}540 \text{ PSI}$$

$$M.S. = \frac{103{,}000}{15{,}540} - 1 =$$

+LARGE

APOLLO ACCESS ARM

HINGE PIVOT

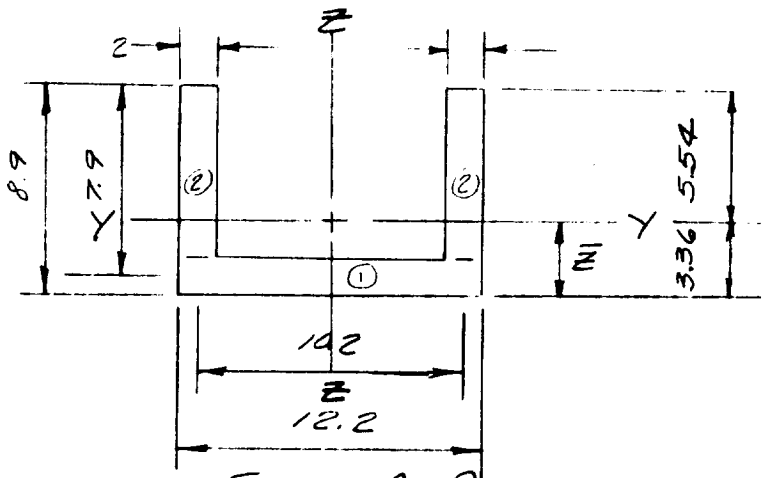

SEC. C-C.

$$I_{zz} = \frac{2(12.2)^3}{12} + 2\left[\frac{6.9(2)^3}{12}\right] + 2\left[(6.9)(2)(5.1)^2\right]$$

$$= 1030 \text{ IN}^4$$

ELEMENT	A	z	Az	Az^2	I_o
①	24.4	1	24.4	24.4	8.1
②	27.6	5.45	150.5	819	54.9
	52.0		174.9	843.4	63.0

$$\bar{z} = \frac{174.9}{52.0} = 3.36 \text{ IN.}$$

$$I_{yy} = 63 + 843.4 - 52(3.36)^2$$

$$= 319 \text{ IN}^4$$

APOLLO ACCESS ARM

HINGE PIVOT

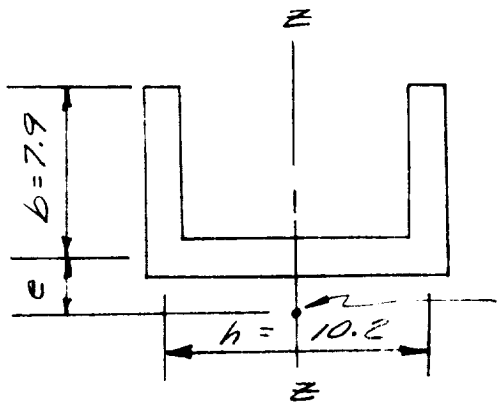

$t = 2$ IN.

$I_{zz} = 1030$ IN.^{4}

$I_{yy} = 319$ IN.^{4}

SHEAR CENTER

SEC. C-C.

$$e = \frac{b^2 h^2 t}{4 I_{zz}}$$

$$= \frac{(7.9)^2 (10.2)^2 (2)}{4(1030)}$$

$= 3.14$ IN. OR 2.14 FROM BOTTOM OF SEC.

$$a = \frac{h}{2}\sqrt{\frac{EI}{JG}}$$

$$= \frac{10.2}{2}\sqrt{\frac{29(319)}{1349(11)}}$$

$= 4.04$ IN.

APOLLO ACCESS ARM

HINGE PIVOT

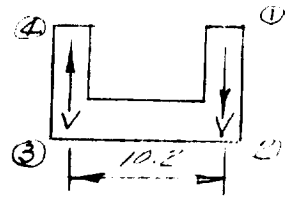

$$\sigma = \frac{P}{A} = \frac{61,200}{52} = 1178 \text{ PSI} \qquad T \quad 1,2,3,4$$

$$\sigma = \frac{M_{zz}\, c}{I_{zz}} = \frac{1087,000(6.1)}{1030} = 6440 \text{ PSI} \qquad T @ 1,2 \quad C @ 3,4$$

$$\sigma = \frac{M_{yy}\, c_1}{I_{yy}} = \frac{514,800(3.36)}{319} = 5,410 \text{ PSI} \qquad T @ 2,3$$

$$\sigma = \frac{M_{yy}\, c_2}{I_{yy}} = \frac{514,800(5.54)}{319} = 8750 \text{ PSI} \qquad C @ 1,4$$

$$V = -\frac{60778(3.36+2.14)}{10.2} + \frac{630,000}{10.2}$$

$$= 29,050 \text{ LBS.}$$

$$\sigma = \frac{V a\, b/2}{I_f}$$

$$= \frac{29,050(4.04)(3.95)}{\frac{2(8.9)^3}{12}}$$

$$= 3940 \text{ PSI} \qquad T @ 1,3 \quad C @ 2,4$$

PREPARED BY RLH
CHECKED BY
REVISED BY

PAGE
REPORT NO.
DATE 10-22-69

APOLLO ACCESS ARM

HINGE PIVOT

AT 1,

$\sigma = 1178 + 6440 - 8750 + 3940$

$= 2,708$ PSI.

AT 2,

$\sigma = 1178 + 6440 + 5410 - 3940$

$= 9,048$ PSI.

AT 3,

$\sigma = 1178 - 6440 + 5410 + 3940$

$= 4,088$ PSI.

AT 4,

$\sigma = 1178 - 6440 - 8750 - 3940$

$= -17,962$ PSI

FOR 4130 STL. H.T TO 125-145 KSI,
$F_{cy} = 113$ KSI

$M.S. = \frac{113,000}{17,962} - 1 =$ + LARGE

APOLLO ACCESS ARM

HINGE PIVOT

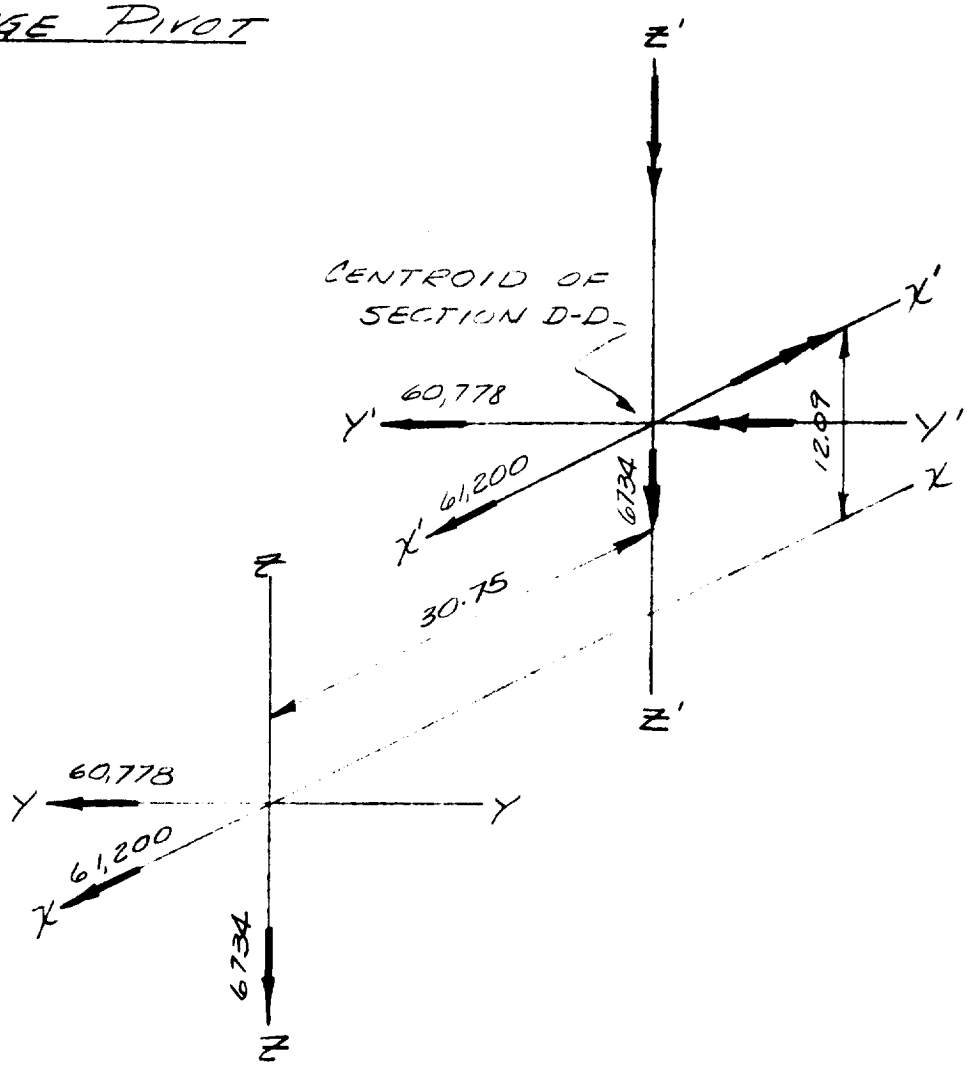

$$M_{x'x'} = 60,778(12.09)$$
$$= 734,000 \text{ IN-LBS.}$$

$$M_{y'y'} = 61,200(12.09) - 6734(30.75)$$
$$= 533,000 \text{ IN-LBS.}$$

$$M_{z'z'} = 60,778(30.75)$$
$$= 1,868,000 \text{ IN-LBS.}$$

APOLLO ACCESS ARM

HINGE PIVOT

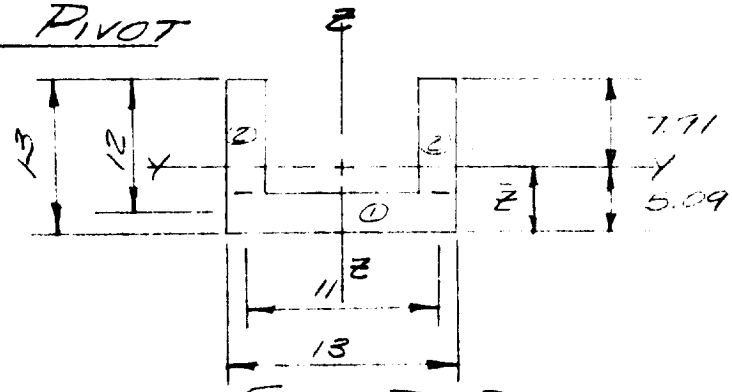

SEC. D-D.

$$I_{ZZ} = \frac{2(13)^3}{12} + 2\left[\frac{11(2)^3}{12} + 11(2)(5.5)^2\right]$$

$$= 1713 \text{ IN}^4$$

ELEMENT	A	Z	AZ	AZ^2	I_o
1	26	1	26	26	8.66
2	44	7.5	330	2465	222.34
	70		356	2491	231

$$\bar{Z} = \frac{\Sigma AZ}{\Sigma A}$$

$$= \frac{356}{70}$$

$$= 5.09 \text{ IN.}$$

$$I_{YY} = 2491 + 231 + (70)(5.09)^2$$

$$= 819 \text{ IN}^4$$

APOLLO ACCESS ARM

HINGE PIVOT

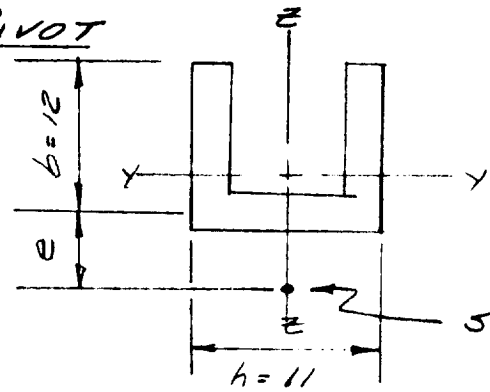

$t = 2$ IN.

$I_{YY} = 819$ IN.^{4}

$I_{zz} = 1713$ IN.^{4}

SHEAR CENTER

$$e = \frac{b^2 h^2 t}{4 I_{zz}}$$

$$= \frac{(12)^2(11)^2(2)}{4(1713)}$$

$= 5.09$ IN. OR 4.09 BELOW BOTTOM OF SEC.

$$a = \frac{h}{2}\sqrt{\frac{EI}{JG}}$$

$$= \frac{11}{2}\sqrt{\frac{(29)(819)}{(2532)(11)}}$$

$= 5.08$ IN.

PREPARED BY RLH
CHECKED BY
REVISED BY

PAGE
REPORT NO.
DATE 10-22-63

APOLLO ACCESS ARM

HINGE PIVOT

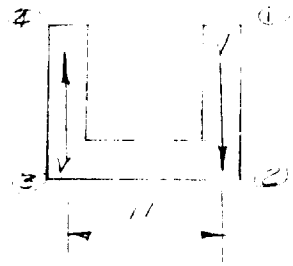

$$\sigma = \frac{P}{A} = \frac{61,200}{70} = 875 \text{ PSI} \quad T @ 1,2,3,4.$$

$$\sigma = \frac{M_{zz}\, c}{I_{zz}} = \frac{1,868,000(6.5)}{1713} = 7100 \text{ PSI} \quad T @ 1,2. \quad C @ 3,4.$$

$$\sigma = \frac{M_{yy}\, c_1}{I_{yy}} = \frac{533,000(5.01)}{819} = 3310 \text{ PSI}, T @ 2,3.$$

$$\sigma = \frac{M_{yy}\, c_2}{I_{yy}} = \frac{533,000(7.91)}{819} = 5150 \text{ PSI} \quad C @ 1,4.$$

$$V = \frac{734,000}{11} - \frac{60,778(4.09+5.09)}{11}$$

$$= 15,900 \text{ LBS.}$$

$$\sigma = \frac{V a\, b/2}{I_f}$$

$$= \frac{15,900(5.08)(6)}{367}$$

$$= 1320 \text{ PSI} \quad T @ 1,3 \quad C @ 2,4$$

APOLLO ACCESS ARM

HINGE PIVOT

AT 1,

$\sigma = 875 + 7100 - 5150 + 1320$

$= 4145$ PSI.

AT 2,

$\sigma = 875 + 7100 + 3130 - 1320$

$= 9985$ PSI.

AT 3,

$\sigma = 875 - 7100 + 3310 + 1320$

$= -1595$ PSI.

AT 4,

$\sigma = 875 - 7100 - 5150 - 1320$

$= -12,965$ PSI

FOR 4130 STEEL HEAT-TREATED TO 125,000 – 145,000 PSI, $F_{cy} = 113,000$ PSI.

$$M.S. = \frac{113000}{12965} - 1 = \quad + \text{LARGE}$$

APOLLO ACCESS ARM

HINGE PIVOT

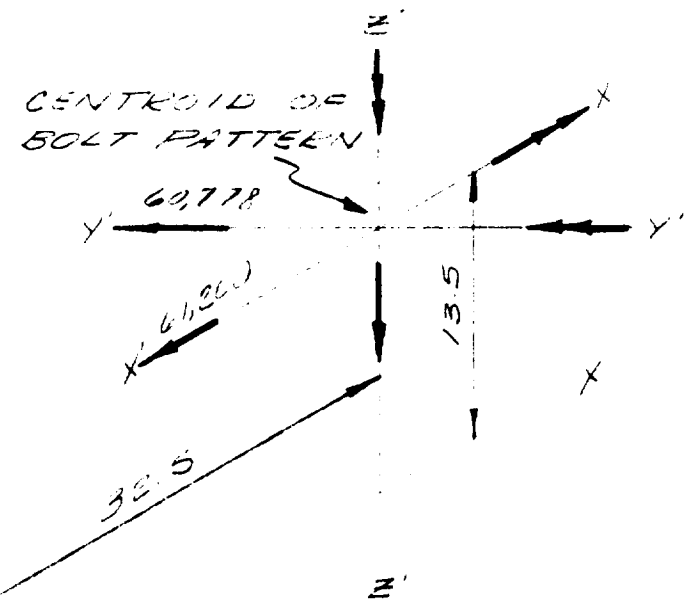

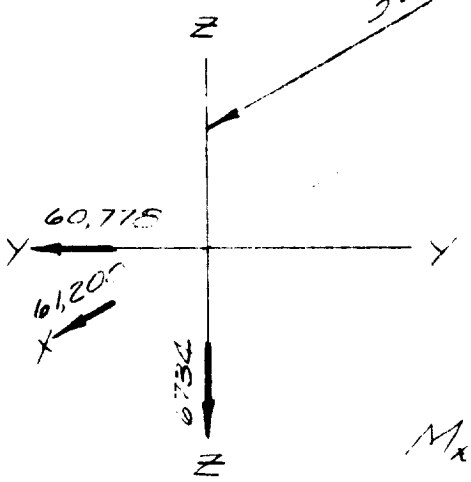

HINGE PIVOT WEIGHS 2(1670) = 3340

$F_{zz'} = 6734 + 3340$

$= 10,074$ LBS.

$M_{xx'} = 60,778(13.5)$

$= 820,000$ IN-LBS.

$M_{y'y'} = 61200(13.5) - 6734(32.5)$

$= 607,000$ IN-LBS.

$M_{z'z'} = 60,778(32.5)$

$= 1,975,000$ IN-LBS.

PREPARED BY RLH
CHECKED BY
REVISED BY

REPORT NO.
DATE 10-22-63

APOLLO ACCESS ARM

HINGE PIVOT

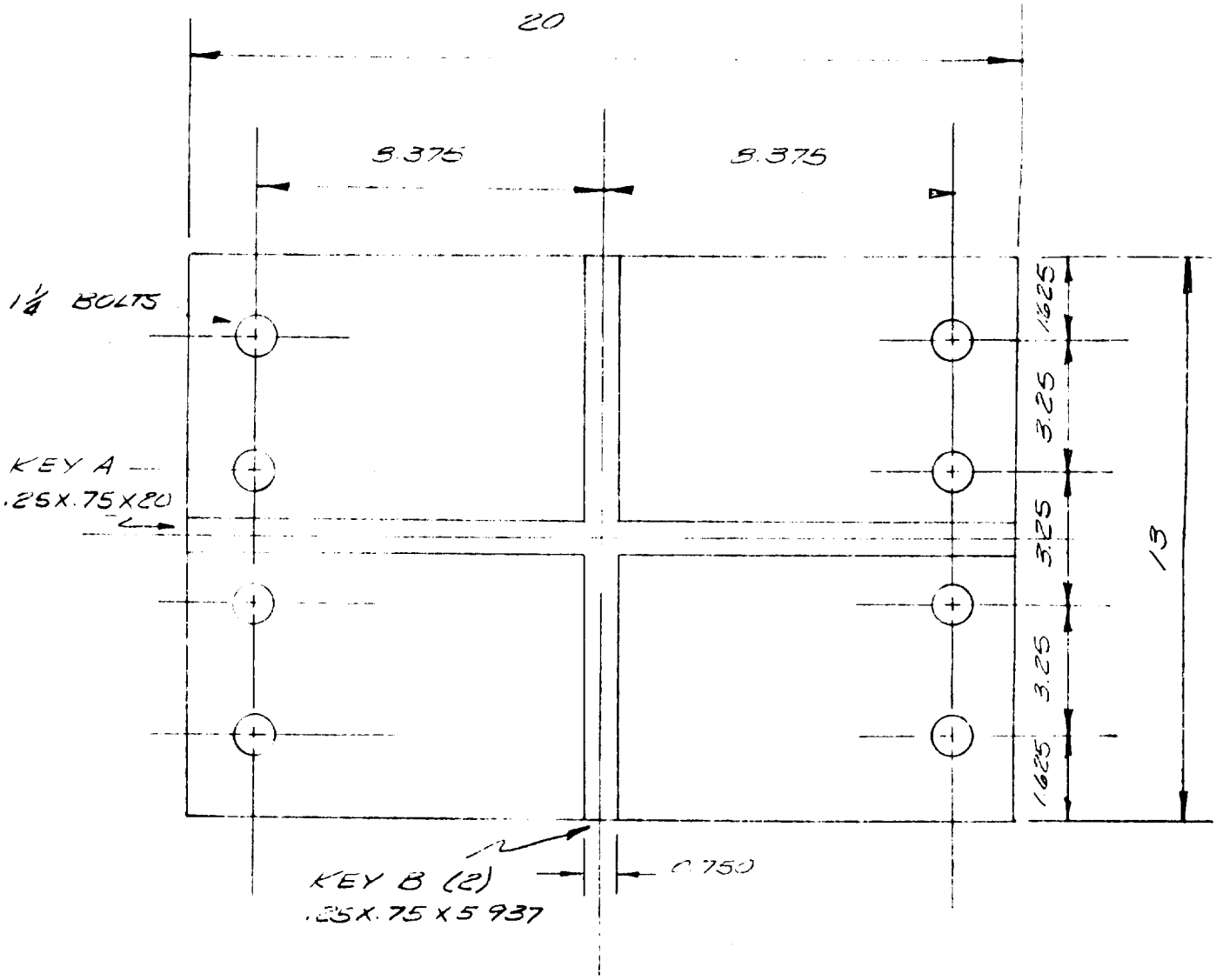

PREPARED BY RLH
CHECKED BY
REVISED BY

PAGE
REPORT NO.
DATE 5-13-64

DRAWING OR JOB TITLE	DRAWING NO. OR ITEM
APOLLO ACCESS ARM	HINGE PIVOT

BENDING IN BASE

$$P_A = \frac{60,200}{8}$$

$$= 7,525 \text{ LBS/BOLT ALL}$$

$$P_B = \frac{1,975,000}{4(6.75)}$$

$$= 29,500 \text{ LBS/BOLT LEFT}$$

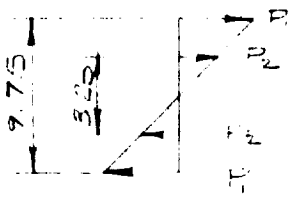

$$5.25 P_2 + 9.75 P_1 = 607,000$$

$$P_1 = 2 P_2$$

$$P_1 = 28,450 \text{ LBS}$$

OR 28,450 LBS/BOLT

$$P_T = 28,450 + 29,500 + 7,525$$

$$= 65,075 \text{ LBS.}$$

$$M = \frac{P}{2}$$

$$= \frac{65,075}{2}$$

$$= 32,538 \text{ IN-LB/IN.}$$

$$T = \frac{6M}{t^2} = \frac{6(32,538)}{(1.5)^2}$$

$$= 86,900 \text{ PSI.}$$

$$M.S. = \frac{103,000}{86,900} - 1 = \quad +0.19$$

APOLLO ACCESS ARM

HINGE PIVOT

$1\frac{1}{4}$" BOLTS

MIN. A = 1.055

HOLE A = 1.352

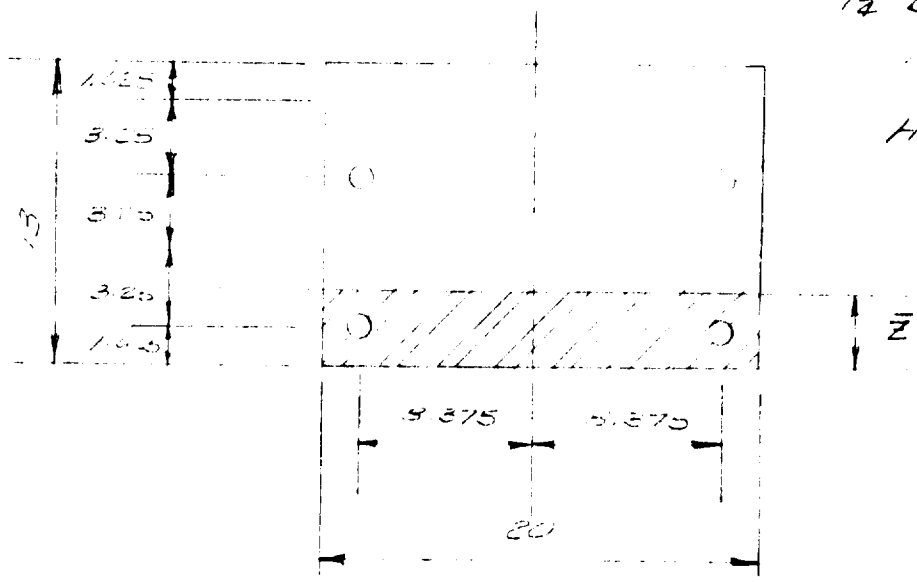

$$20Z(Z/2) - 2(1.352)(Z - 1.625) = 2(1.055)(4.875 - Z)$$
$$+ 2(1.055)(8.125 - Z)$$
$$+ 2(1.055)(11.375 - Z)$$

$$\bar{Z} = 1.9967 \text{ IN.}$$

$$I_{NA} = \frac{20(1.9967)^3}{3} - 2(1.352)(1.3717)^2 + 2(1.055)(2.8783)^2$$
$$+ 2(1.055)(6.1283)^2 + 2(1.055)(9.3783)^2$$

$$= 335 \text{ IN}^4$$

PREPARED BY RLH
CHECKED BY
REVISED BY

PAGE
REPORT NO.
DATE 10-22-63

APOLLO ACCESS ARM

HINGE PIVOT

BOLTS – F_{tu} = 166,000 PSI, F_{ty} = 132,000
F_{sy} = 77,200

$$\sigma_T = \frac{1,175,000}{4(16.75)(1.255)}$$

$$= 27,900 \text{ PSI.}$$

$$\sigma_b = \frac{M}{I}$$

$$= \frac{667,000(11.375 - 1.9967)}{335}$$

$$= 17,000 \text{ PSI.}$$

$$\sigma_T = 27,900 + 17,000$$

$$= 44,900 \text{ PSI.}$$

$$M.S. = \frac{132,000}{44,900} - 1 =$$

+1.95

$$\tau_1 = \frac{60778}{8(1.227)}$$

$$= 6210 \text{ PSI} \longrightarrow$$

APOLLO ACCESS ARM

HINGE PIVOT

$$\tau_2 = \frac{10,074}{8(1.227)}$$

$$= 1029 \text{ PSI} \downarrow$$

$$\tau_3 = \frac{T}{(\Sigma Z^2 + \Sigma Y^2)A} Y$$

$$= \frac{820,000 \ (8.375)}{\{4[(1.625)^2 + (4.875)^2] + 8(8.375)^2\}(1.227)}$$

$$= 8,400 \text{ PSI} \downarrow$$

$$\tau_4 = \frac{T \ Z}{(\Sigma Z^2 + \Sigma Y^2) A}$$

$$= \frac{820,000 \ (4.875)}{667(1.227)}$$

$$= 4900 \text{ PSI} \rightarrow$$

$$\tau = 6210 + 4900 \rightarrow 1029 + 8400$$

$$= 14,850 \text{ PSI}$$

$$M.S. = \frac{79,200}{14850} - 1 = \quad +4.43$$

THIS OBTAINED, NEGLECTING SHEAR CARRIED BY KEYS.

PREPARED BY RLH
CHECKED BY
REVISED BY

PAGE
REPORT NO.
DATE 7-26-63

APOLLO ACCESS ARM

MOUNTING PLATE — BOLTS

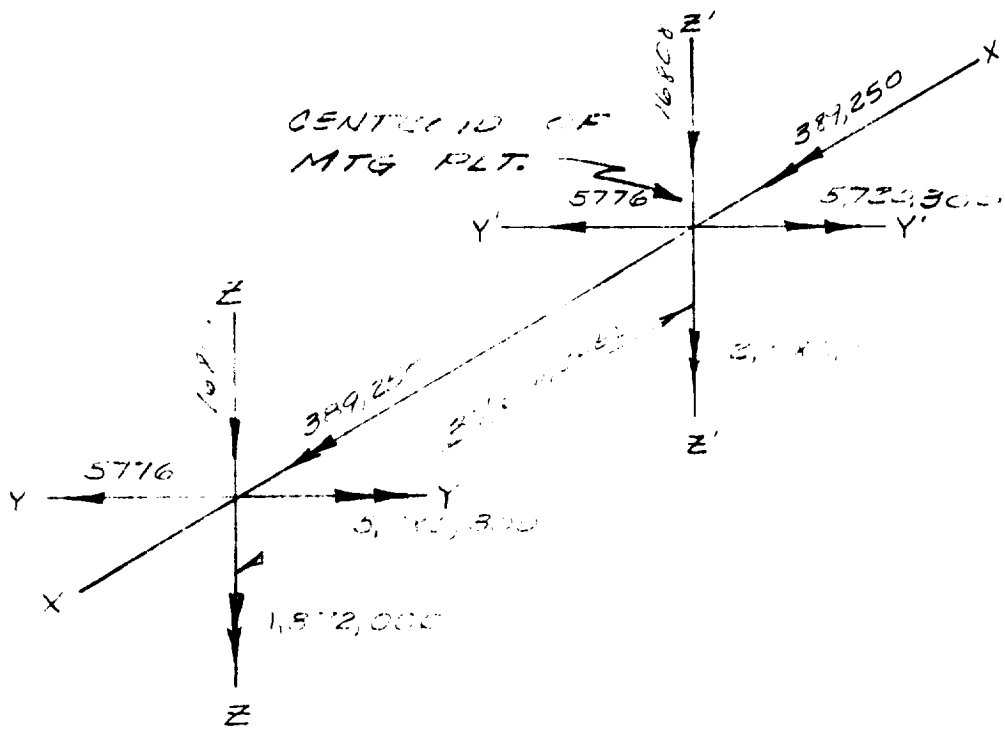

$M_{zz'} = 1,872,000 + 5776\,(37.6)$

$= 1,872,000 + 214,000$

$= 2,086,000$ IN-LBS.

$M_{y'y'} = 5,086,300 + (16,800)(37.6)$

$= 5,086,300 + 634,000$

$= 5,720,300$ IN-LBS.

PREPARED BY RLH
CHECKED BY
REVISED BY

PAGE 73
REPORT NO.
DATE 8-5-63

APOLLO ACCESS ARM

MOUNTING PLATE

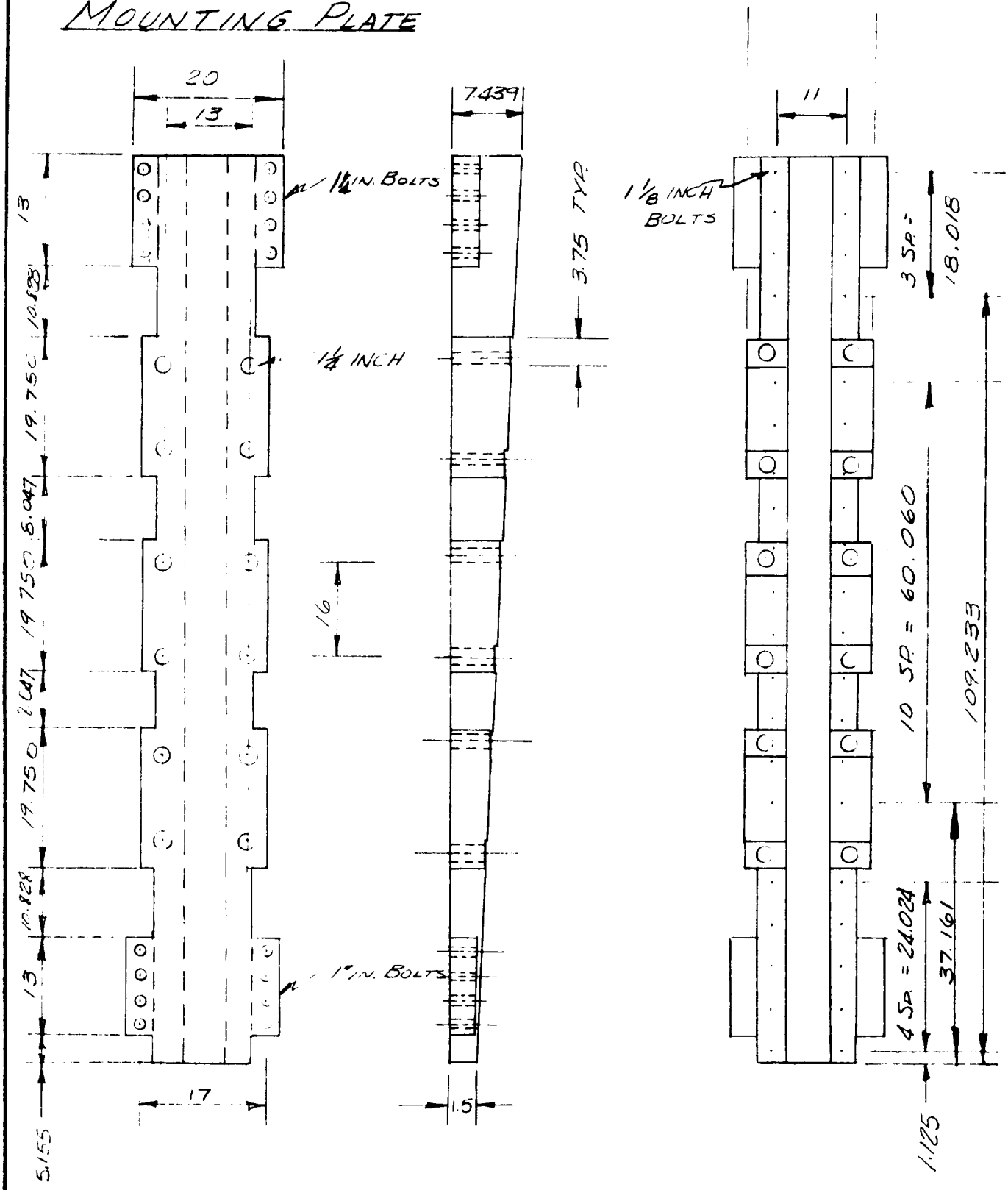

PREPARED BY RLH
CHECKED BY
REVISED BY

PAGE
REPORT NO.
DATE 8-8-63

APOLLO ACCESS ARM

MOUNTING PLATE

1 1/8 IN. BOLTS, A = 0.994

HOLE A = 1.108

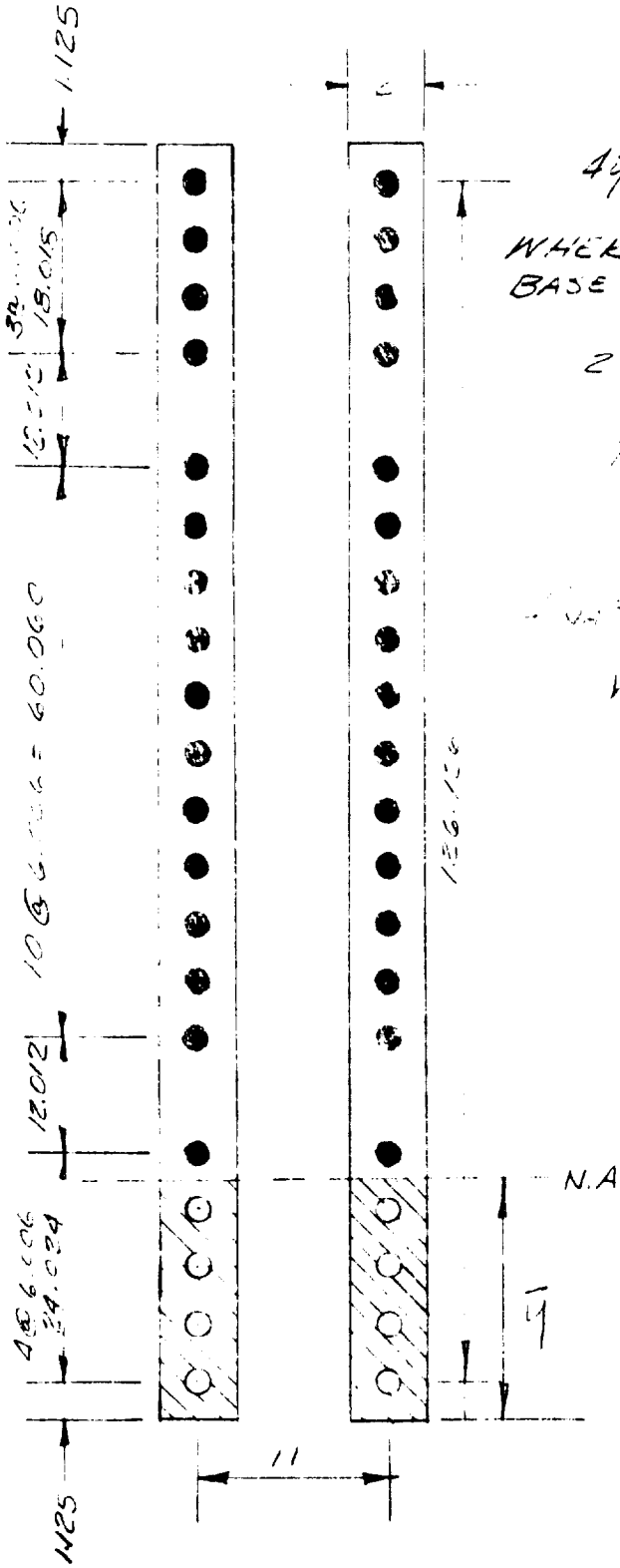

$$4\bar{y}\left(\frac{\bar{y}}{2}\right) - 2[2(\bar{y}-d)](1.108) = 2(0.994)[2(d-\bar{y})]$$

WHERE d IS THE DISTANCE FROM BASE TO HOLE.

$$2\bar{y}^2 - 2[5\bar{y} - 25.685]1.108 = 1.988[205.069 - 15\bar{y}]$$

$$\bar{y}^2 + 9.35\bar{y} - 1127.1 = 0$$

$$\bar{y} = 29.64 \text{ INCHES}$$

$$I_{NA} = 2[.994(2.\bar{y})] + 2\left[\frac{2(29.64)^3}{3}\right] - 2(1.108)(2d_B^2)$$

WHERE d_A = DISTANCE ABOVE N.A.
AND d_B = DISTANCE BELOW N.A.

$$= 2[.994(51.060)] + 2[17400] - 2(1900)$$

$$= 133,700 \text{ IN}^4$$

$$\sigma = \frac{Mc}{I}$$

$$= \frac{5,720,000(126.126 + 1.125 - 29.64)}{133,700}$$

$$4,180 \text{ PSI.}$$

APOLLO ACCESS ARM

MOUNTING PLATE

MATL: 4130 STL.
$F_{ty} = 132,000$
$F_{sy} = 87,500$

$$F_t = \frac{2,086,000}{11(20)}$$

$$= 9500 \text{ LBS.}$$

$$\sigma_t = +1850 + \frac{9500}{.994}$$

$$= 13,730 \text{ PSI}$$

$$M.S. = \frac{132,000}{13,730} - 1 =$$

+LARGE

$$F_{s_1} = \frac{16868}{40}$$

$$= 420.2 \text{ LBS/BOLT} \downarrow$$

$$F_{s_2} = \frac{5766}{40}$$

$$= 141.15 \text{ LBS/BOLT} \leftarrow$$

$$F_{s_3} = \frac{6(389,250)}{4(126.126)}$$

$$= 4640 \text{ LBS/BOLT} \leftarrow$$

$$\sigma_s = \frac{4640 + 141.15 + 420.2}{.994}$$

$$= 4,830 \text{ PSI.}$$

$$M.S. =$$

+LARGE

PREPARED BY RLH
CHECKED BY
REVISED BY

PAGE
REPORT NO.
DATE 5-12-64

DRAWING OR JOB TITLE	DRAWING NO. OR ITEM
APOLLO ACCESS ARM	MOUNTING PLATE

LOCAL CONDITION

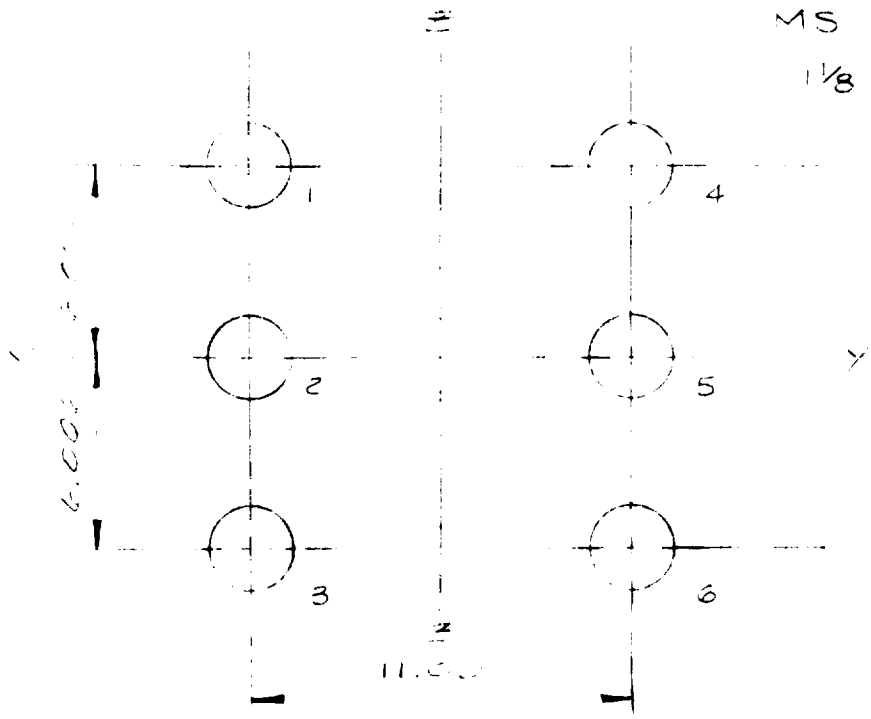

MS BOLTS 20018

1 1/8 DIA.

$P_{TY} = 127,000$

$P_{SY} = 76,300$

REF. PAGE ____ FOR LOADS.

$P_{T_1} = \frac{61,200}{6}$

$= 10,200$ LBS. 1, 2, 3, 4, 5, AND 6.

$P_{T_2} = \frac{607,000}{2(12.012)}$

$= 25,300$ LBS. 3 AND 6.

$P_{T_3} = \frac{1,975,000}{3(11)}$

$= 59,900$ LBS. 4, 5, AND 6.

AT 6,

$P = 59,900 + 25,300 + 10,200$

$= 95,400$ LBS.

DRAWING OR JOB TITLE	DRAWING NO. OR ITEM
APOLLO ACCESS ARM	MOUNTING PLATE

LOCAL CONDITION (CONT'D.)

$$P_{S_1} = \frac{60,778}{6}$$

$$= 10,130 \text{ LBS.} \quad \leftarrow \quad 1, 2, 3, 4, 5, \text{ AND } 6.$$

$$P_{S_2} = \frac{6734}{6}$$

$$= 1120 \text{ LBS.} \quad \downarrow \quad 1, 2, 3, 4, 5, \text{ AND } 6.$$

$$P_{S_3} = \frac{8[illegible] \text{ LBS}}{6(5.5)^2 + 4(6.00)^2}$$

$$= 13,880 \text{ LBS.} \quad \downarrow \quad 4, 5, 6$$

$$P_{S_4} = \frac{8[illegible] (6.[illegible])}{6(5.5)^2 + 4(6.00)^2}$$

$$= 15,120 \text{ LBS.} \quad \leftarrow \quad 6$$

AT 6,

$$P_S = (10,130 + 15,120) + (1120 + 13,880)$$

$$= 29,400 \text{ LBS.}$$

$$R_T = \frac{95,400}{127,000}$$

$$= 0.743$$

$$R_S = \frac{29,400}{76,200}$$

$$= 0.386$$

FROM INTERACTION CURVES, $R_T' = 0.94$, $R_S' = 0.49$

$$M.S. = \frac{0.940}{0.743} - 1 = \quad +0.27$$

PREPARED BY RLH
CHECKED BY
REVISED BY

PAGE
REPORT NO.
DATE 5-6-64

DRAWING OR JOB TITLE: APOLLO ACCESS ARM - COMPLEX 34

DRAWING NO. OR ITEM:

UNIT DEFLECTION AND ROTATION ANALYSES HAVE BEEN RUN ON THE TRUSS. THE SPACER IS ASSUMED TO HAVE THE CONFIGURATION SHOWN, SO AS TO GIVE THE SHEAR CONTINUITY NEEDED.

FOR THESE ANALYSES, THE FOLLOWING EQUATION WAS USED:

$$\delta = \sum \frac{p^2 L}{A E}$$

WHERE

δ - DEFLECTION AT POINT OF APPLICATION OF UNIT LOAD.

p - LOAD IN MEMBER DUE TO UNIT LOAD.

L - LENGTH OF MEMBER.

A - CROSS-SECTIONAL AREA

E - MODULUS OF ELASTICITY

FOR THE DEFLECTION ANALYSIS THE SUMMATION INCLUDED ALL MEMBERS. FOR THE ROTATION ANALYSIS, ONLY SHEAR MEMBERS WERE USED.

DRAWING OR JOB TITLE	DRAWING NO. OR ITEM
APOLLO ACCESS ARM - COMPLEX 34	UNIT DEFLECTION

FRONT FACE — VERTICAL DEFLECTION

ASSUMED CONFIGURATION OF SPACER.

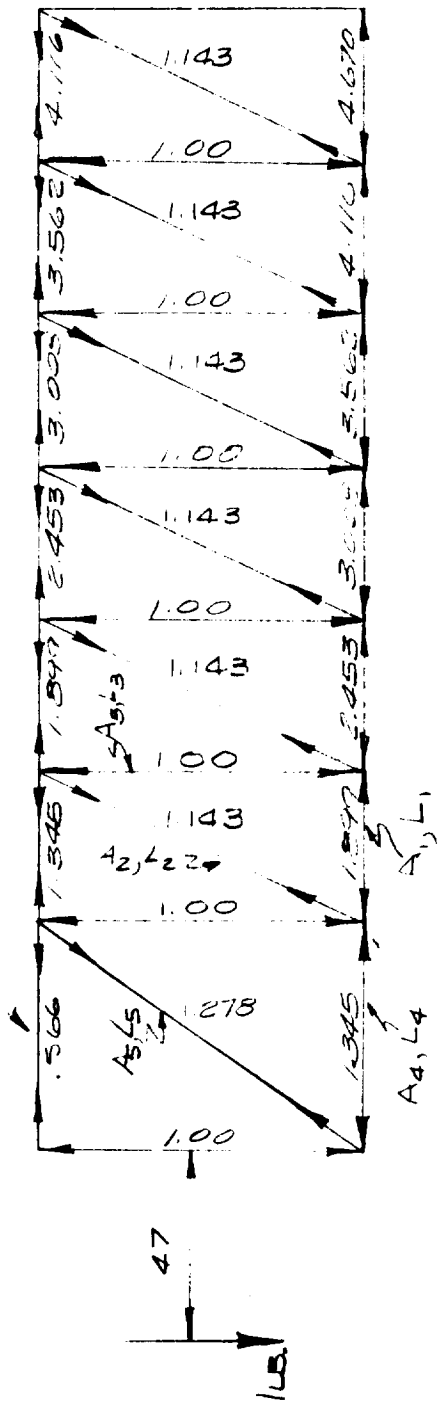

$L_1 = 46$ IN.
$L_2 = 95$
$L_3 = 83$
$L_4 = 66$
$L_5 = 106$

$L/AE = 21.3 \times 10^{-7}$ IN/LB.
$L/AE = 69.9 \times 10^{-7}$
$L/AE = 47.0 \times 10^{-7}$
$L/AE = 30.6 \times 10^{-7}$
$L/AE = 78.0 \times 10^{-7}$

$A_1 = 2.16$ SQ. IN.
$A_2 = 1.36$
$A_3 = 1.767$
$A_4 = 2.16$
$A_5 = 1.36$

PREPARED BY RLH
CHECKED BY
REVISED BY

PAGE
REPORT NO.
DATE 4-3-64

DRAWING OR JOB TITLE	DRAWING NO. OR ITEM
APOLLO ACCESS ARM - COMPLEX 34	UNIT DEFLECTION

FRONT FACE

$$\delta = \Sigma \frac{P^2 L}{A E}$$

$$\delta \; 10^7 = (1)^2(47)(6) + [(1.345)^2 + (.560)^2](30.6) + (1.278)^2(78.0)$$
$$+ (1.143)^2(6)(69.9) + (1.345)^2(21.3)$$
$$+ 2[(1.899)^2 + (2.453)^2 + (3.008)^2 + (3.562)^2$$
$$+ (4.116)^2] 21.3 + (4.67)^2(21.3)$$

$$\delta = .40737 \, (10^{-3}) \quad IN/LB.$$

TOTAL VERTICAL DEFLECTION OF BASE TRUSS UNDER A UNIT LOAD OF 1 LB. 47 INCHES OUT FROM TIP OF SPACER (δ_T) =

$$\delta_T = .5(.40737)(10^{-3})$$

$$= .2037 \times 10^{-3} \; IN/LB.$$

PREPARED BY RLH
CHECKED BY
REVISED BY

PAGE 81
REPORT NO.
DATE 4-3-64

DRAWING OR JOB TITLE	DRAWING NO. OR ITEM
APOLLO ACCESS ARM - COMPLEX 34	ROTATION

TOP FACE

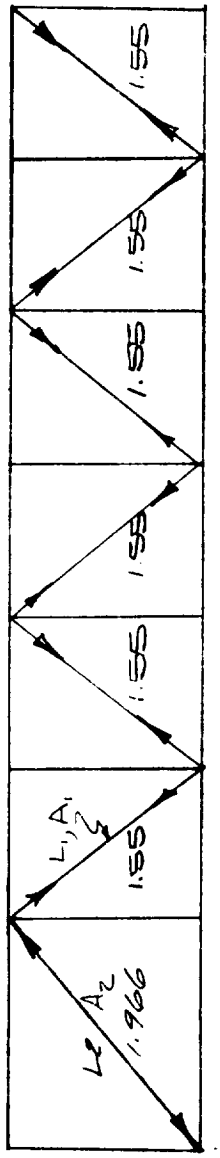

$L/AE = 44.3 \times 10^{-7}$ IN/LB

$L/AE = 56.4 \times 10^{-7}$

$L_1 = 60.4$ IN.

$L_2 = 77.6$ IN.

(SHEAR FORCES ONLY)

$A_1 = 1.36$ SQ. IN.

$A_2 = 1.36$

PREPARED BY RLH
CHECKED BY
REVISED BY

PAGE
REPORT NO.
DATE 4-3-64

DRAWING OR JOB TITLE	DRAWING NO. OR ITEM
APOLLO ACCESS ARM - COMPLEX 34	ROTATION

SHEAR DEFLECTION OF FRONT FACE (UNIT LOAD).

$$\delta_s = \Sigma \frac{p_s^2 L}{AE}$$

$$= (1)^2(47)(6) + (1.278)^2(78) + (1.143)^2(6)(69.9)$$

$$= 0.9585 \times 10^{-4} \quad IN/LB.$$

SHEAR DEFLECTION OF TOP FACE (UNIT LOAD)

$$\delta_s = \Sigma \frac{p_s^2 L}{AE}$$

$$\delta_s 10^7 = (1.966)^2 56.4 + (1.55)^2 (6)(44.3)$$

$$\delta_s = .858 \times 10^{-4} \quad IN/LB.$$

LOAD ON FRONT FACE (UNIT COUPLE)

$$P = \frac{1}{2(39)}$$

$$= .01282 \ LBS.$$

$$\delta_s = P(.9585)(10^{-4})$$

$$= 1.23 \times 10^{-6} \quad IN.$$

LOAD ON TOP FACE (UNIT COUPLE)

$$P = \frac{1}{2(83)}$$

$$= .00602 \ LBS$$

$$\delta_s = P(.858)(10^{-4}) = 0.516 \times 10^{-6}$$

PREPARED BY RLH
CHECKED BY
REVISED BY

PAGE 83
REPORT NO.
DATE 4-3-64

DRAWING OR JOB TITLE	DRAWING NO. OR ITEM
APOLLO ACCESS ARM - COMPLEX 34	ROTATION

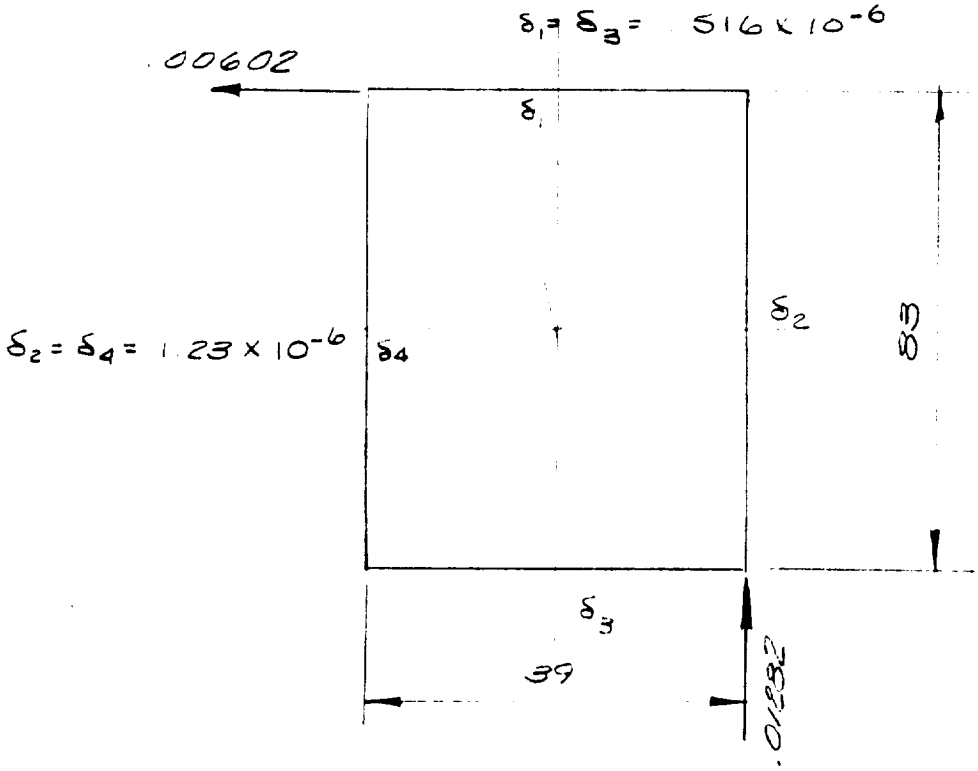

$$\theta = \frac{.516(10^{-6})(39) + 1.23(10^{-6})(83)}{83(39)}$$

$$= .378 \times 10^{-7} \text{ RADIANS}$$

84

PREPARED BY RLH

CHECKED BY

REVISED BY

PAGE

REPORT NO.

DATE 4-3-64

DRAWING OR JOB TITLE	DRAWING NO. OR ITEM
APOLLO ACCESS ARM - COMPLEX 34	CHANGE IN LOADS

THE LOADS CALCULATED ON THE FOLLOWING PAGES ARE CURRENT AS OF THE ABOVE DATE. CAREFUL COMPARISON OF THESE LOADS TO THOSE IN THIS REPORT OF AN EARLIER DATE REVEALS POSITIVE MARGINS OF SAFETY IN ALL CASES.

PREPARED BY RLH
CHECKED BY
REVISED BY

PAGE 85
REPORT NO.
DATE 3-19-64

DRAWING OR JOB TITLE: APOLLO ACCESS ARM - COMPLEX 34

DRAWING NO. OR ITEM: BASIC ARM

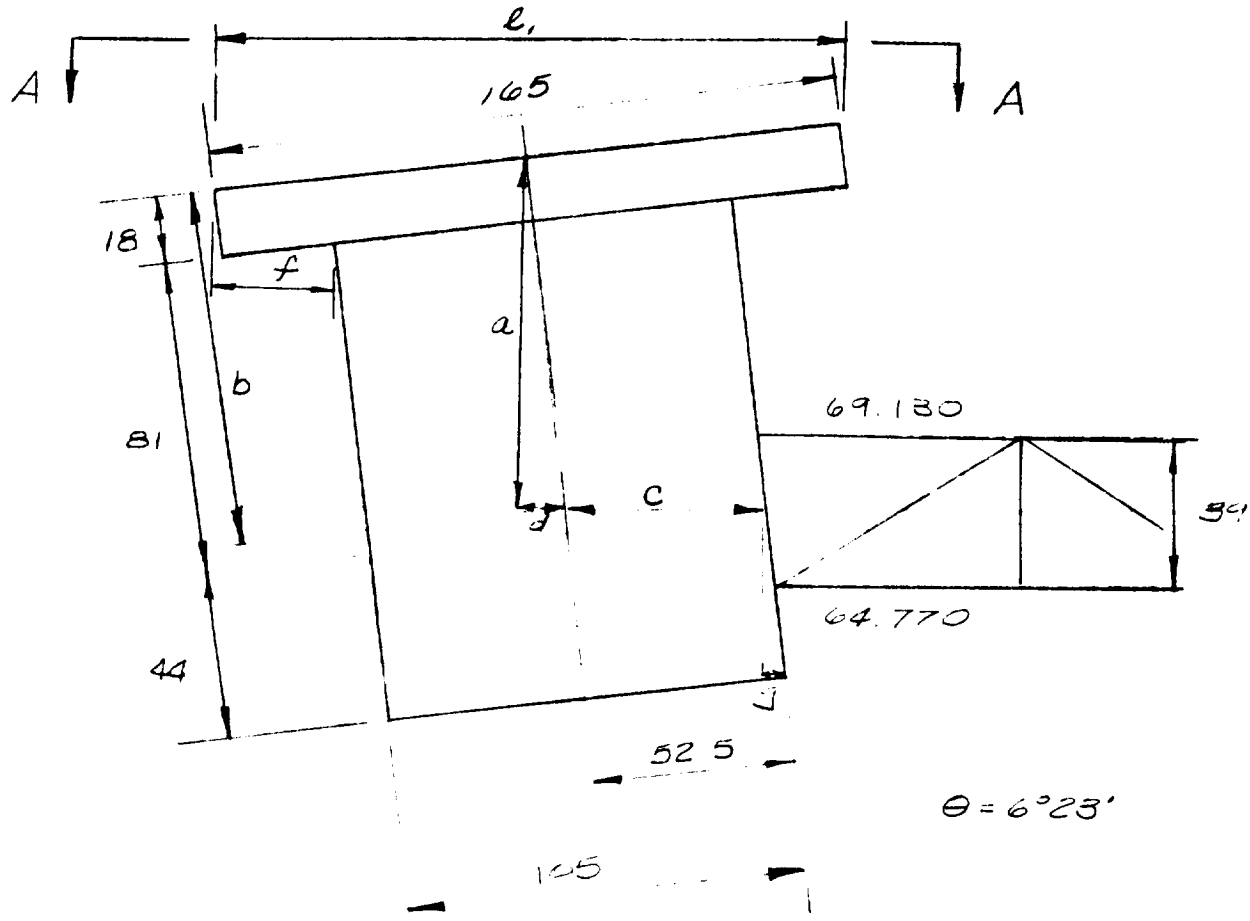

$c = \frac{92.5}{\cos\theta}$

$= 92.90$ IN.

$99 - b = c \sin\theta$

$b = 93.12$

$a = b \cos\theta$

$a = 92.50$ IN.

$f = \frac{165-105}{2} \cos\theta + 18 \sin\theta$

$= 31.85$ IN.

$d = b \sin\theta$

$= 10.36$ IN.

$g = 44 \sin\theta$

$= 4.89$ IN.

$\ell_1 = 165 \cos\theta$

$= 163.8$ IN.

PREPARED BY KCH
CHECKED BY
REVISED BY

PAGE
REPORT NO.
DATE 3-19-64

DRAWING OR JOB TITLE	DRAWING NO. OR ITEM
APOLLO ACCESS ARM - COMPLEX 34	BASIC ARM

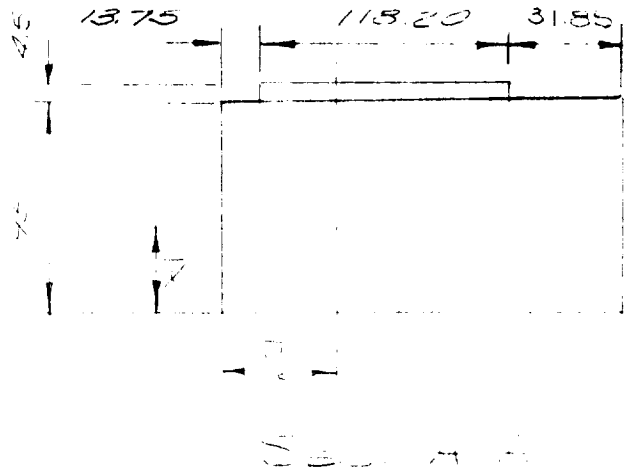

SECTION A-A

ITEM	AREA	Y	Ay
1	95,[illegible]	[illegible]/2	1,372,[illegible]
2	[illegible]	137.2 + [illegible]/2	38,700
Σ	[illegible]		1,310,700

$$\bar{y} = \frac{\Sigma Ay}{\Sigma A}$$

$$= \frac{13,[illegible]}{[illegible]}$$

$$= 81.60 \text{ IN.}$$

DISTANCE FROM BASIC ARM TO CENTROID OF AREA ALONG ℄ OF BASIC ARM =

$$D = \frac{64.130 + 64.77}{2} + 81.60 - (13.75 + 4.75)$$

$$= 129.91 \text{ IN.}$$

PREPARED BY RLH
CHECKED BY
REVISED BY

PAGE 87
REPORT NO.
DATE 3 [illegible] 64

DRAWING OR JOB TITLE	DRAWING NO. OR ITEM
APOLLO ACCESS ARM - COMPLEX 34	BASIC ARM

ITEM	AREA	x	Ax
1	15,530	47.5	738,000
2	531	97.25	51,600
Σ	16,061		789,600

$$\bar{x} = \frac{\Sigma Ax}{\Sigma A}$$

$$= \frac{789,600}{16,061}$$

$$= 49.1 \text{ IN.}$$

88

PREPARED BY R.H.
CHECKED BY
REVISED BY

PAGE
REPORT NO.
DATE 2-30-64

DRAWING OR JOB TITLE	DRAWING NO. OR ITEM
Apollo Access Hum - Complex 34	Basic Hum

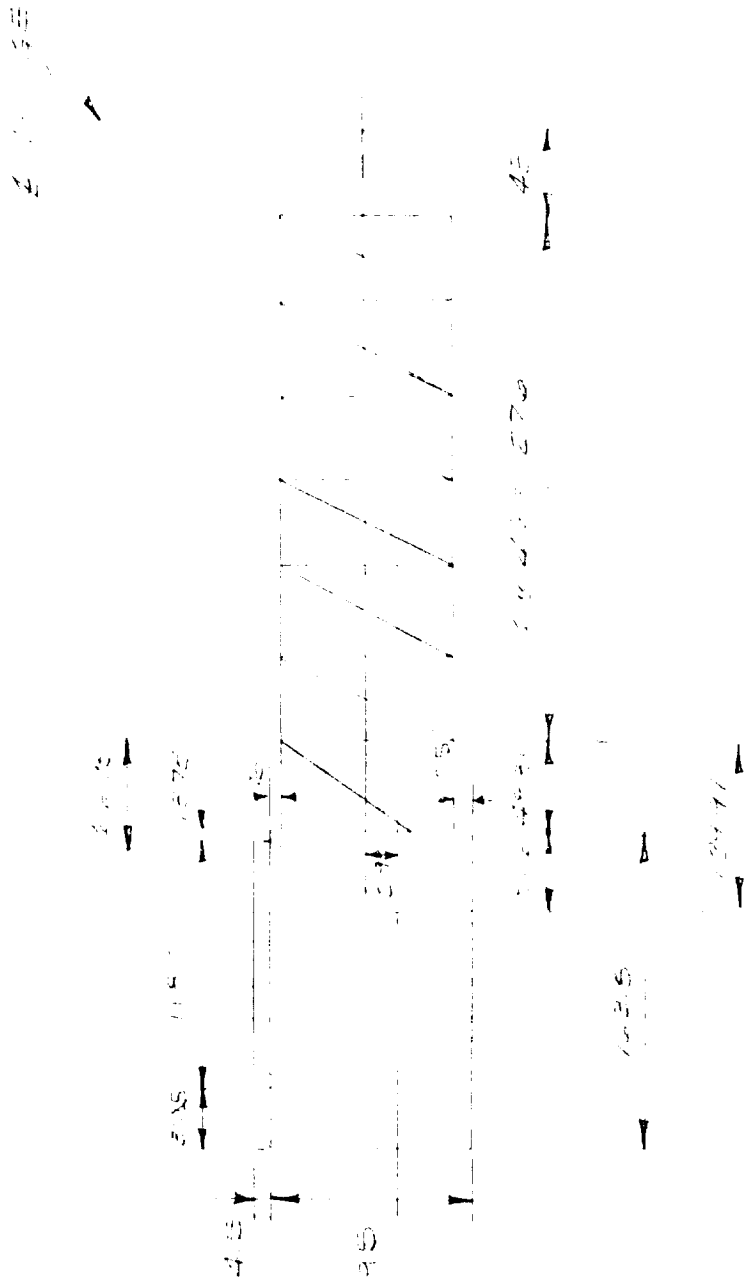

PREPARED BY RLH
CHECKED BY
REVISED BY

PAGE 89
REPORT NO.
DATE 3-20-63

DRAWING OR JOB TITLE	DRAWING NO. OR ITEM
APOLLO ACCESS ARM - COMPLEX 34	BASIC ARM

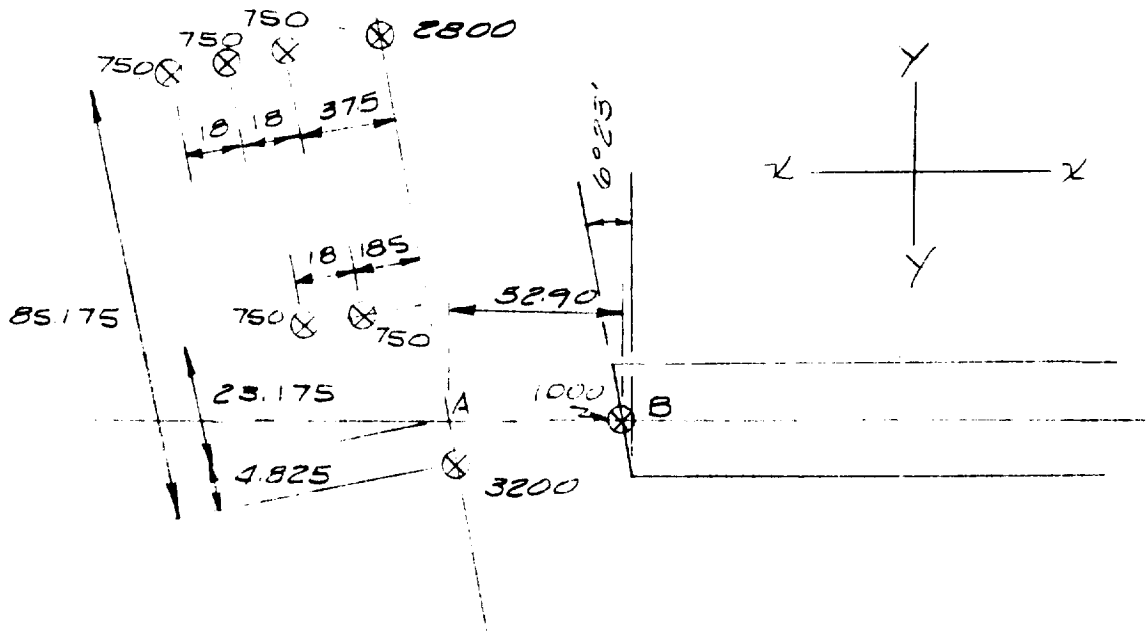

AT B, (LOAD FACTORS INCLUDED),

P_z = 10,750 LBS. (DOWN)

M_{xx} = 427,180 IN-LBS. ←

M_{yy} = 744,000 IN-LBS. ↓

WIND (95% - 43 MPH)

P_y = .0656 A_F 2

= .0656(16,061)(2) ↓

= 2110 LBS.

M_{zz} = 2110(12991-62.95)

= 133,000 IN-LBS. C. CLOCKWISE

M_{xx} = 2110(2.9)

= 6,110 IN-LBS.

90

PREPARED BY RLH
CHECKED BY
REVISED BY

PAGE
REPORT NO.
DATE 3-30-64

DRAWING OR JOB TITLE	DRAWING NO. OR ITEM
APOLLO ACCESS ARM - COMPLEX 34	BASIC ARM

LOADS AT CENTROID OF SPACER - WHITE ROOM CONNECT [illegible] 3).

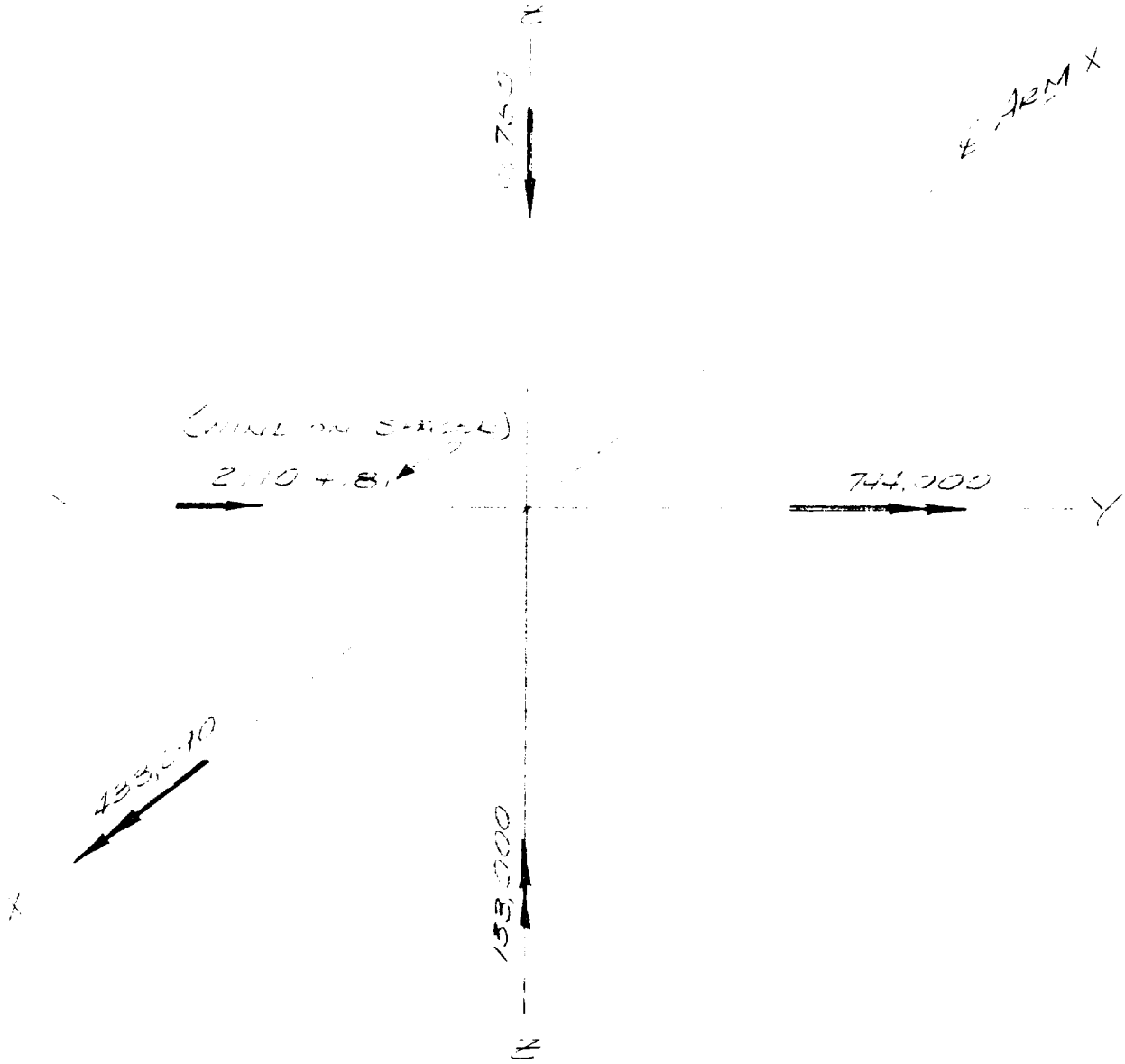

DRAWING OR JOB TITLE	DRAWING NO. OR ITEM
APOLLO ACCESS ARM - COMPLEX 34	LOADS

DISTRIBUTION AT SPACER

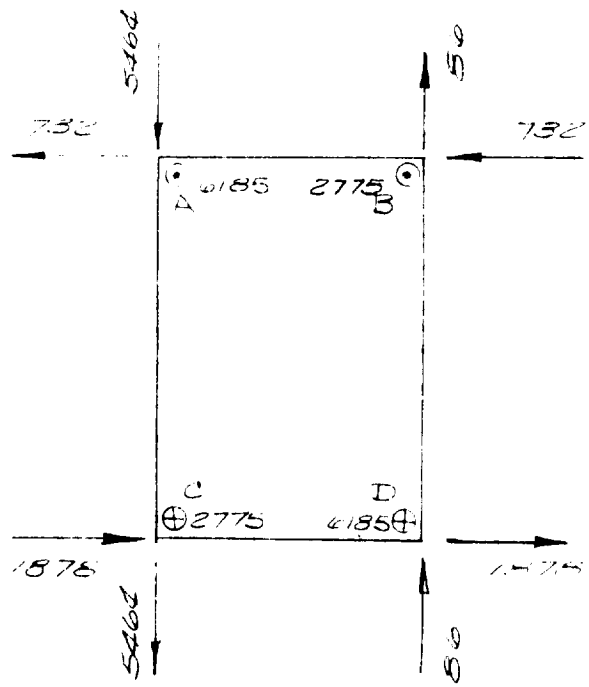

$$P_{Y_1} = \frac{2271}{4}$$

$$= 573 \text{ LBS.} \rightarrow$$

$$P_{Y_2} = \frac{433,290}{4(83)}$$

$$= 1305 \text{ LBS.} \quad \leftarrow A, B \quad \rightarrow C, D$$

$$P_{X_1} = \frac{744,000}{2(83)}$$

$$= 4,480 \text{ LBS.} \quad \odot A, B \quad \oplus C, D$$

$$P_{X_2} = \frac{133,000}{2(39)}$$

$$= 1,705 \text{ LBS.} \quad \odot A, C \quad \oplus B, D$$

$$P_{Z_1} = \frac{433,290}{4(83)}$$

$$= 2775 \text{ LBS.} \quad \downarrow A, C \quad \uparrow B, D$$

$$P_{Z_2} = \frac{10,750}{4}$$

$$= 2,689 \text{ LBS.} \downarrow$$

WT/PANEL BASIC TRUSS = 46(15.42) = 710 LBS.

WIND LOAD/PANEL = 46 (3.11) = 143 LBS.

PREPARED BY RLH
CHECKED BY
REVISED BY

PAGE
REPORT NO.
DATE 3-20-64

DRAWING OR JOB TITLE	DRAWING NO. OR ITEM
APOLLO ACCESS ARM - COMPLEX 34	LOADS

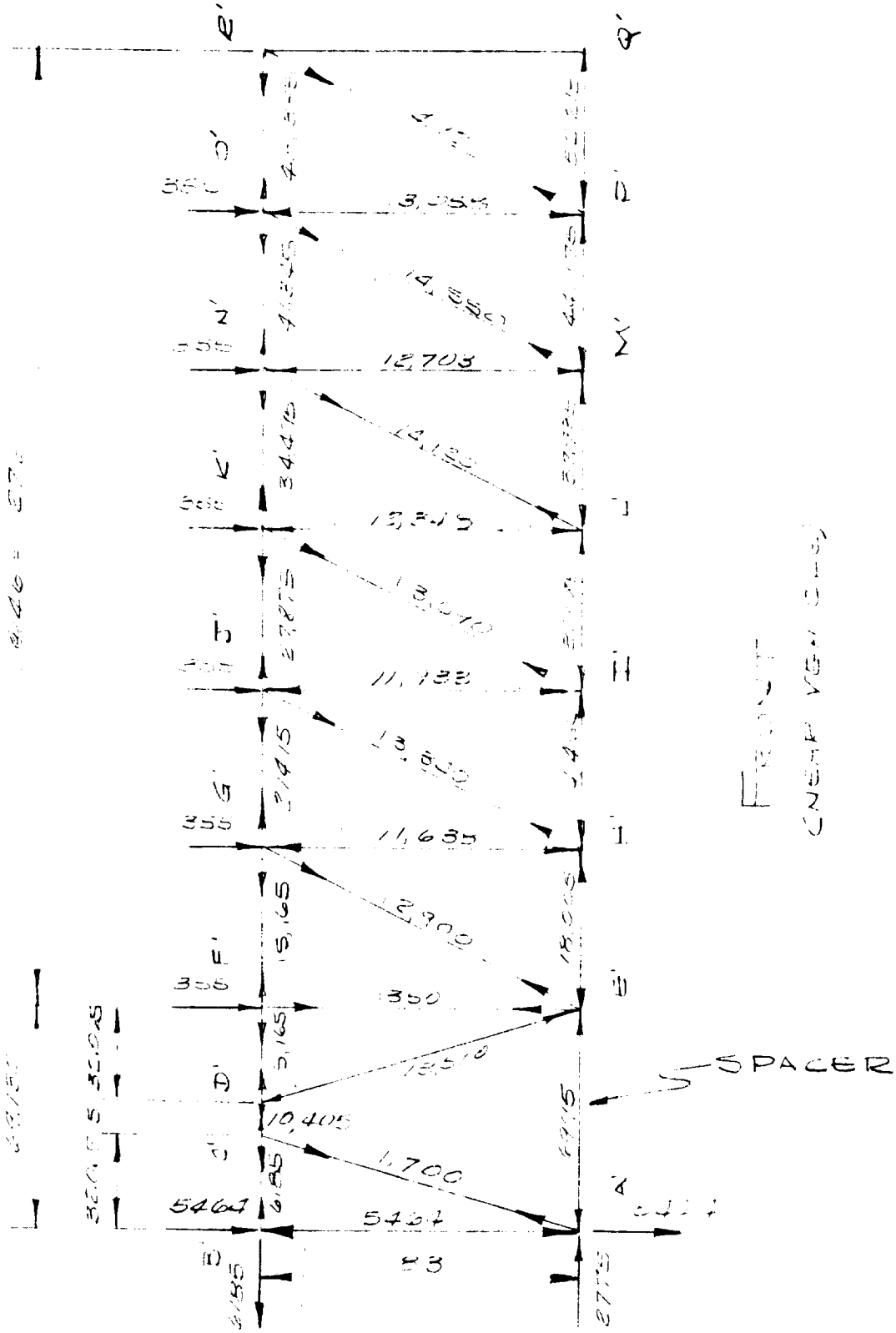

PREPARED BY RLH
CHECKED BY
REVISED BY

PAGE 93
REPORT NO.
DATE 4-2-62

DRAWING OR JOB TITLE	DRAWING NO. OR ITEM
APOLLO ACCESS ARM - COMPLEX 34	LOADS.

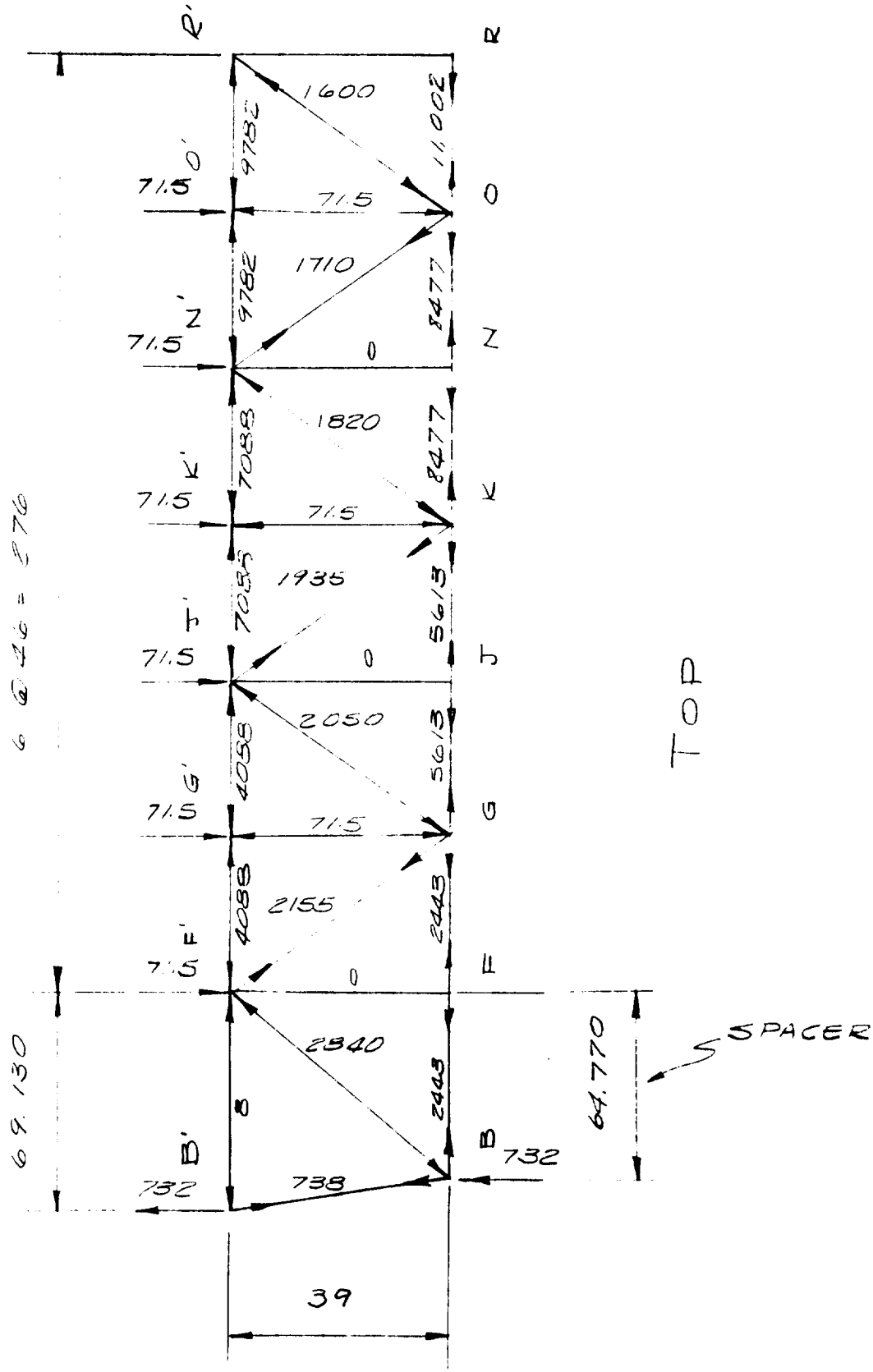

PREPARED BY RLH
CHECKED BY
REVISED BY

PAGE
REPORT NO.
DATE 4-2-64

DRAWING OR JOB TITLE	DRAWING NO. OR ITEM
APOLLO ACCESS ARM - COMPLEX 34	LOADS

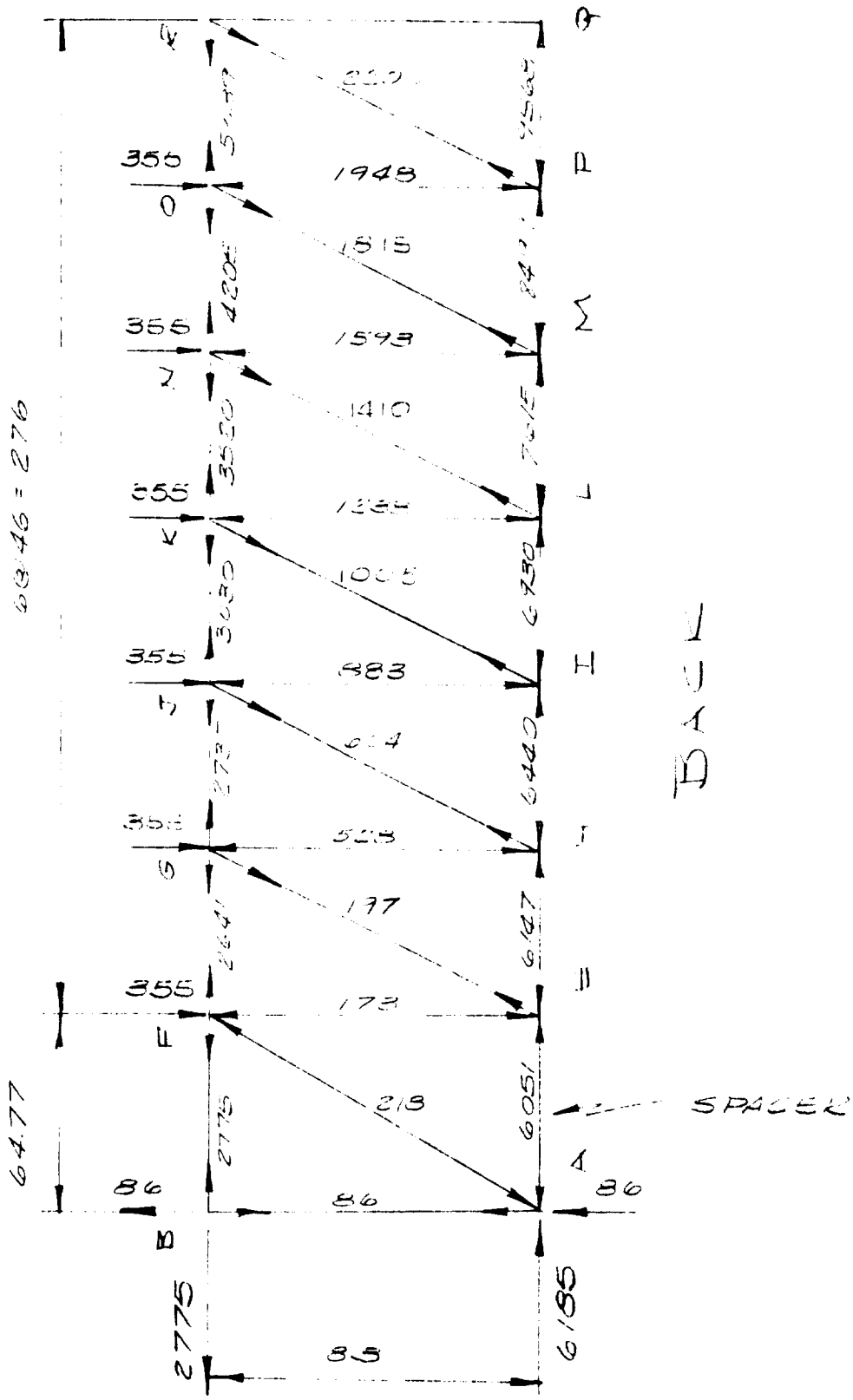

PREPARED BY KLH
CHECKED BY
REVISED BY

PAGE 95
REPORT NO
DATE 4-2-64

DRAWING OR JOB TITLE	DRAWING NO. OR ITEM
APOLLO ACCESS ARM - COMPLEX 34	LOADS

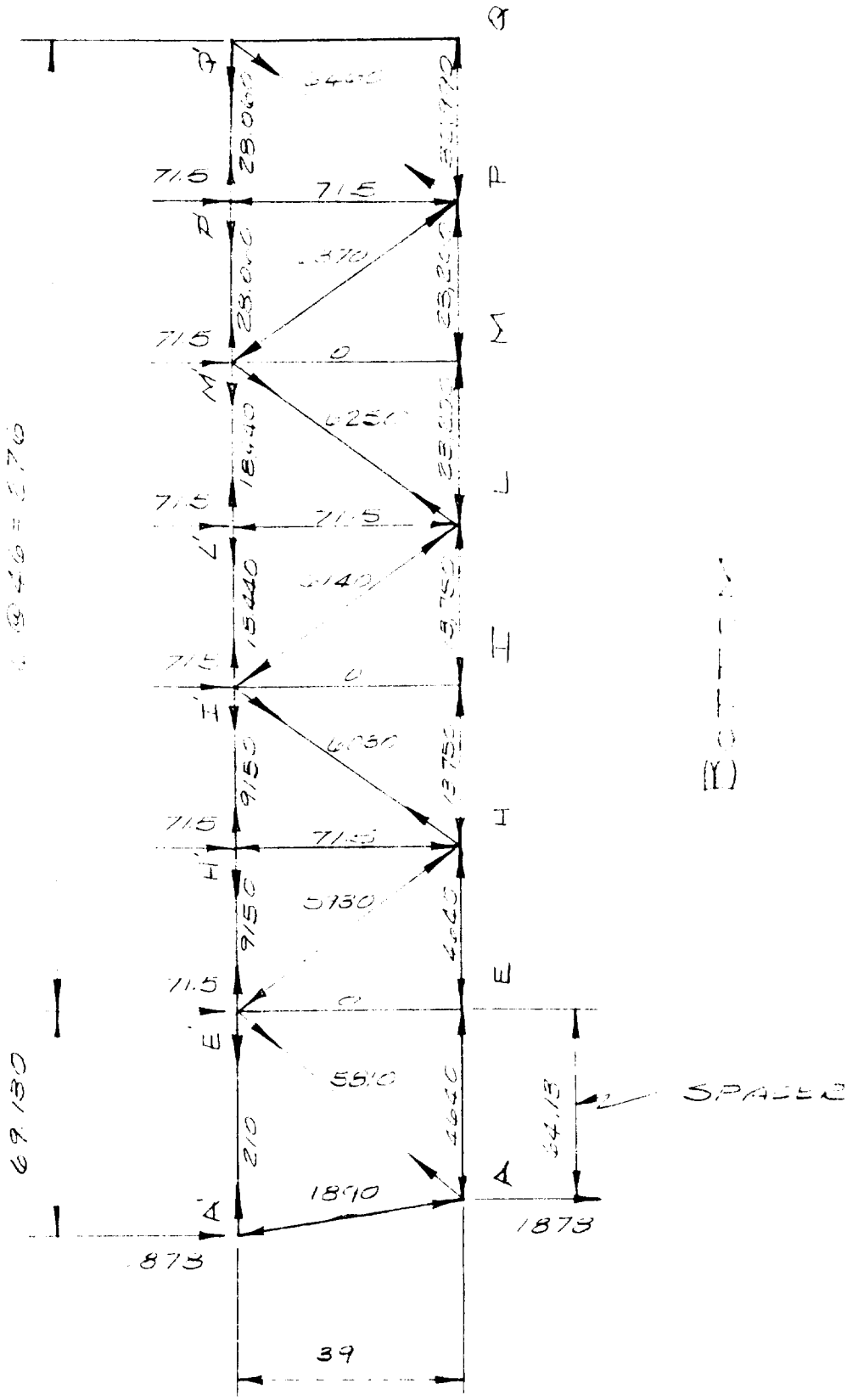

PREPARED BY RLH
CHECKED BY
REVISED BY

PAGE
REPORT NO.
DATE 4-3-64

DRAWING OR JOB TITLE	DRAWING NO. OR ITEM
APOLLO ACCESS ARM - COMPLEX 34	TOTAL LOADS

A'E =	-6785 LBS.	KN =	11,997 LBS.
EH =	-8655	NO =	-2,[illegible]
HI' =	-15,315	OR =	16,[illegible]11
I'U =	12,6[illegible]	AE =	-10,[illegible]91
U'M' =	-19,495	EH =	-[illegible]
M'P' =	-16,715	HI =	-20,190
P'Q =	-24,1[illegible]	IL =	-20,650
B'C' =	9,177	LM =	-30,815
C'D' =	10,397	MP =	-31,[illegible]77
D'F' =	15,157	PQ =	-42,558
F'G =	11,077		
G'J' =	17,[illegible]		
J'K' =	20,187		
K'N' =	27,407		
N'O' =	31,563		
O'R' =	38,603		
BF =	5,218		
FG =	5,084		
GJ =	8,350		
JK =	8,643		

PREPARED BY RLH
CHECKED BY
REVISED BY

PAGE 97
REPORT NO.
DATE 5-7-64

DRAWING OR JOB TITLE	DRAWING NO. OR ITEM
APOLLO ACCESS ARM	COMPLEX 34

JOINT R'

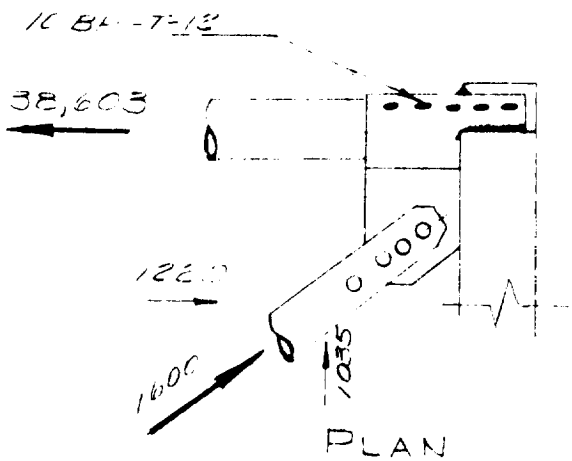

PLAN

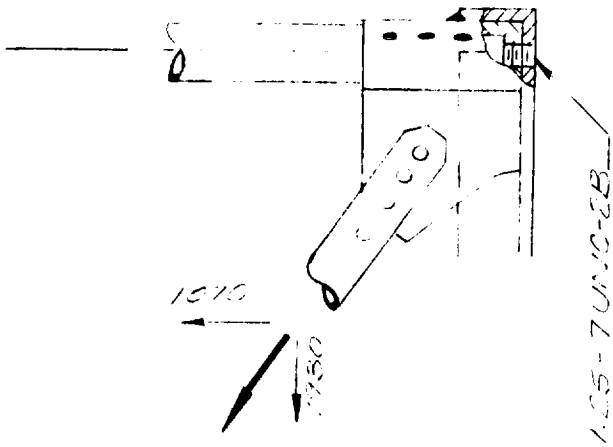

ELEVATION

BP-T-12

F_{SY} = [illegible] BOLT

1¼ INCH BOLT

A_R = [illegible] IN.

S_R = 0.1153 IN³

K_T = 1.125

K_S = 1.20

F_{TY} = 132,[illegible]

F_{SY} = 71,[illegible] PSI.

PREPARED BY RLH
CHECKED BY
REVISED BY

PAGE
REPORT NO.
DATE 5-7-64

DRAWING OR JOB TITLE	DRAWING NO. OR ITEM
APOLLO ACCESS ARM - COMPLEX 34	JOINT R'

IN [illegible] BOLTS

$P_S = \frac{38[illegible]}{[illegible]}$

$= 38[illegible]$ LBS [illegible]

$MS = \frac{[illegible]}{[illegible]}$ [illegible] | + 0.65

IN 1¼ INCH BOLT,

$P = 38[illegible] + 1,0[illegible]$

$= 38,458$ LBS

$T = K_T \frac{P}{A}$

$= 1.125 \frac{38,458}{8.70}$

$= 48,600$ PSI.

$R_T = \frac{48,600}{132,0[illegible]}$

$= 0.368$

PREPARED BY RLH
CHECKED BY
REVISED BY

PAGE 99
REPORT NO.
DATE 5-7-64

DRAWING OR JOB TITLE	DRAWING NO. OR ITEM
APOLLO ACCESS ARM	JOINT R'

$$T = K_s \frac{P_s}{A}$$

$$= [illegible] \frac{[illegible]}{[illegible]}$$

[illegible] PSIA

$$R_s = \frac{[illegible]}{[illegible]}$$

$$= [illegible]874$$

WITH R_s AND R_- FROM INTERACTION

[illegible]

$$R_s = [illegible]$$

$$R_T = [illegible]$$

$$M_s = \frac{[illegible]}{[illegible]874} - 1 = \boxed{+1.68}$$

PREPARED BY RLH
CHECKED BY
REVISED BY

PAGE
REPORT NO.
DATE 1-3-64

DRAWING OR JOB TITLE	DRAWING NO. OR ITEM
APOLLO ACCESS ARM-COMPLEX 34	SPACER

CRITICAL STRESSES

REF. PAGES 92 THROUGH 95 FOR LATEST CONFIGURATION.

MEMBER D'E'

O.D. = 2.5 IN.
t = 0.150 IN
A = 1.36 SQ IN.
r = 0.92 IN.

L = 97 IN.
K = 0.75 FOR RIVETED ENDS

MATL: 7075-T6

$$\sigma_{CR} = \frac{\pi^2 E}{\left(\frac{KL}{r}\right)^2}$$

$$= \frac{\pi^2 (10.4)(10^6)}{\left(\frac{(0.75)(97)}{.92}\right)^2}$$

$$= 16,230 \text{ PSI.}$$

$$\sigma = \frac{P}{A}$$

$$= \frac{13,510}{1.36}$$

$$= 9,950 \text{ PSI.}$$

$$M.S. = \frac{16,230}{9,950} - 1 = \boxed{+0.64}$$

PREPARED BY RLH
CHECKED BY
REVISED BY

PAGE 101
REPORT NO.
DATE 4-3-64

DRAWING OR JOB TITLE	DRAWING NO. OR ITEM
APOLLO ACCESS ARM – COMPLEX 34	SPACER

FITTING AT C'D'

MATL: ALMAG 35

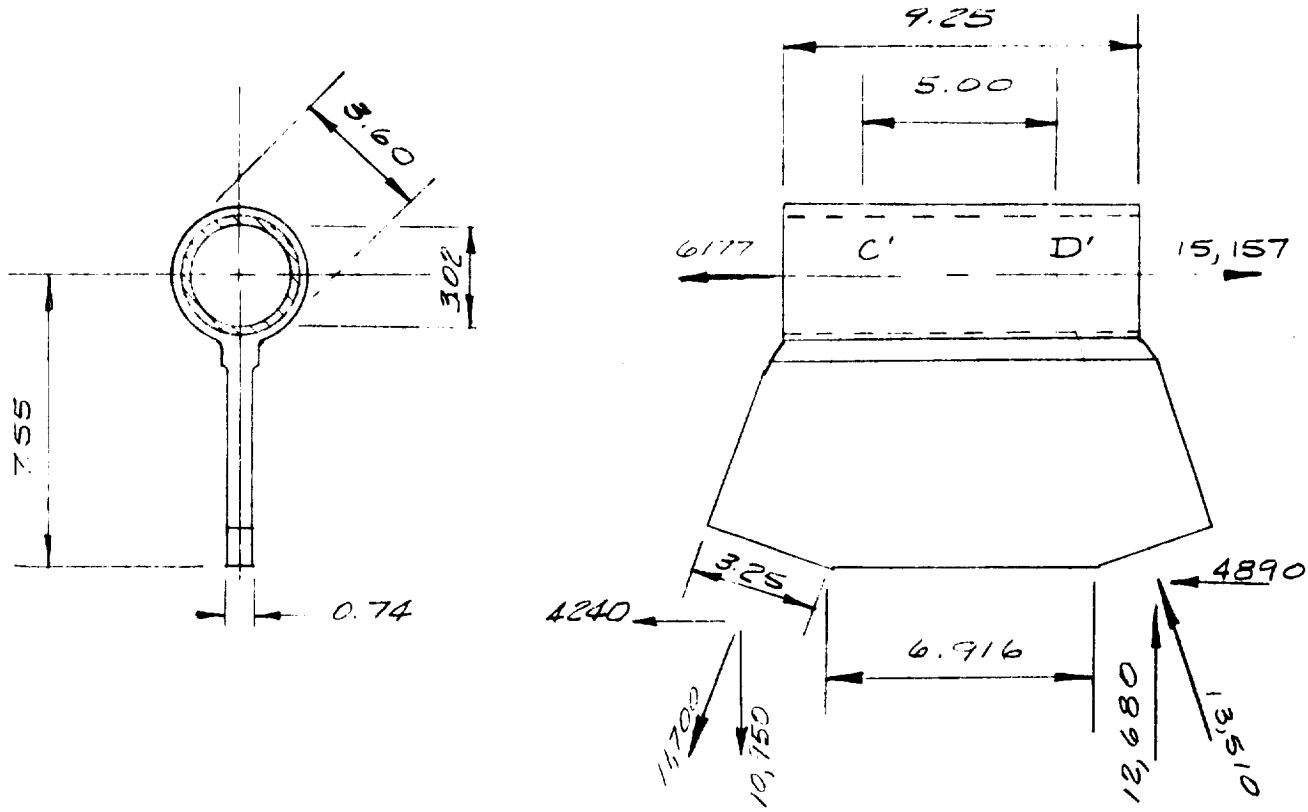

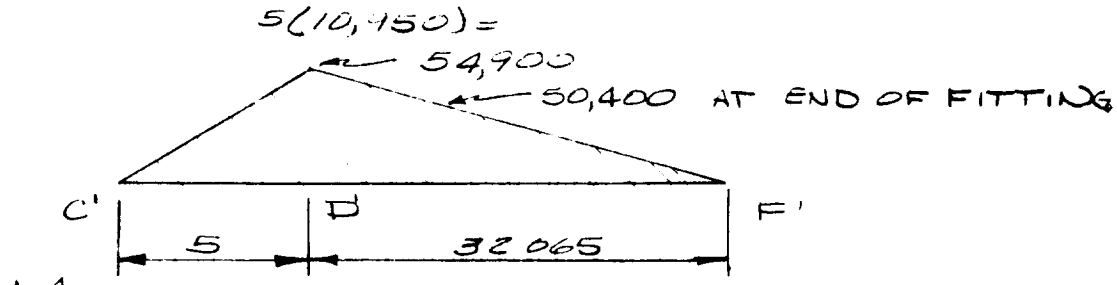

MOMENT DIAGRAM OF B'F'

PREPARED BY RLH
CHECKED BY
REVISED BY

PAGE
REPORT NO.
DATE 4-16-64

DRAWING OR JOB TITLE	DRAWING NO. OR ITEM
APOLLO ACCESS ARM - COMPLEX 34	SPACER

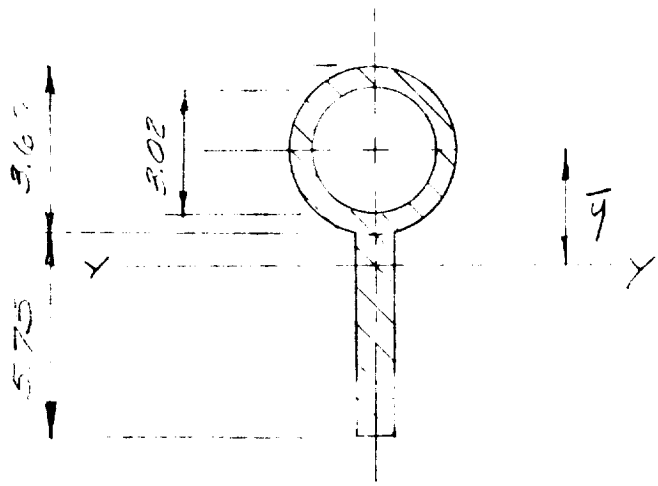

SEC. AT D!

ELEMENT	A	y	Ay	Ay^2	I_o
CIRCLE	3.025	0	0	0	4.21
RECTANGLE	4.260	4.6[illegible]	19.8	93.1	11.79
Σ	7.285		19.8	93.1	16.00

$$\bar{y} = \frac{\Sigma Ay}{\Sigma A}$$

$$= \frac{19.8}{7.285}$$

$$= 2.735 \text{ IN.}$$

$$A\bar{y}^2 = 54.4 \text{ IN.}^4$$

$$I_{YY} = 16.0 + 93.1 - 54.4$$

$$= 54.7 \text{ IN.}^4$$

DRAWING OR JOB TITLE	DRAWING NO. OR ITEM
APOLLO ACCESS ARM - COMPLEX 34	SPACER

FITTING:

MATL: ALMAG 35

$F_{SY} = 8{,}060$ PSI
$F_{TY} = 12{,}000$
$F_{BRY} = 20{,}650$

→ INCLUDE CASTING FACTOR OF 1.5

AT D',

$$\sigma = \frac{Mc}{I} + \frac{P}{A}$$

$$= \frac{54{,}900(7.550-2.735)}{34.7} + \frac{15157}{7.285}$$

$$= 6820 \text{ PSI.}$$

$$M.S. = \frac{12{,}000}{6820} - 1 = +0.76$$

IN TUBING,

AL 7075-T6, 3 IN O.D., $t = 0.25$, $S = 1.3724$
$A = 2.159$, $F_{TY} = 72{,}000$ PSI.

$$\sigma = \frac{M}{S} + \frac{P}{A}$$

$$= \frac{50{,}400}{1.3724} + \frac{15{,}157}{2.159}$$

$$= 43{,}620 \text{ PSI.}$$

$$M.S. = \frac{72{,}000}{43{,}620} - 1 = +0.65$$

PREPARED BY RLH
CHECKED BY
REVISED BY

PAGE
REPORT NO.
DATE 4-16-64

DRAWING OR JOB TITLE	DRAWING NO. OR ITEM
APOLLO ACCESS ARM - COMPLEX 34	SPACER

FITTING AT 'B' (ENVIRONMENTAL CHAMBER TO SPACER)

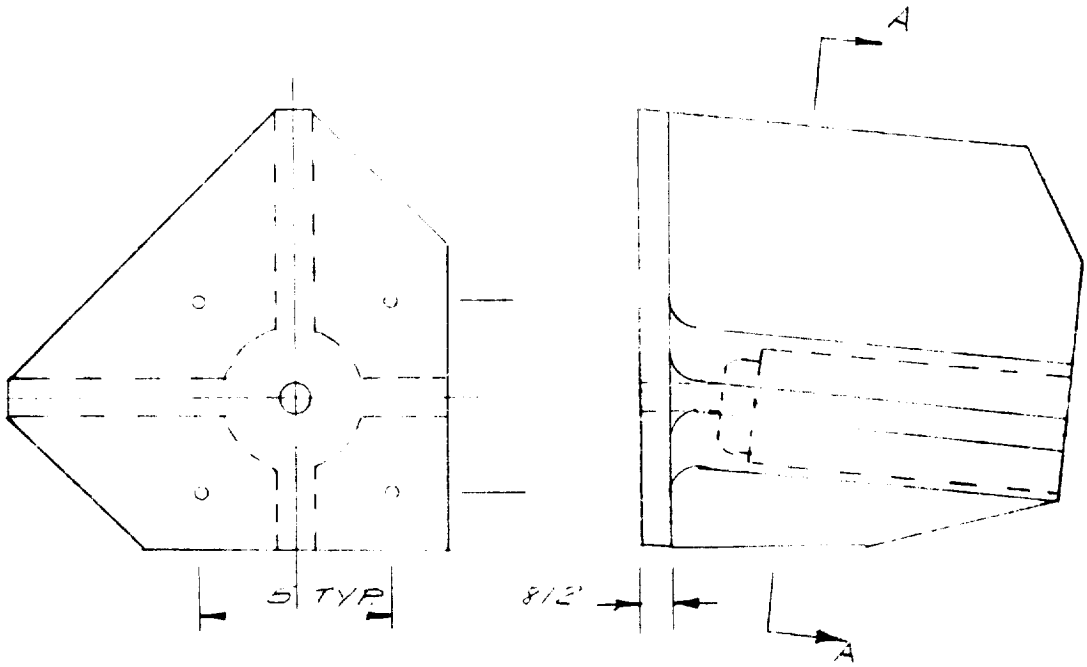

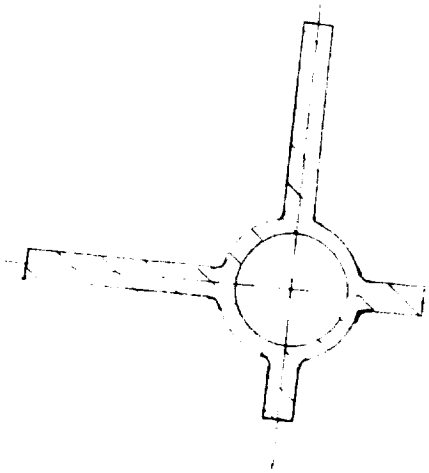

SEC. A-A

ALMAG 35
F_{ty} = 12,000 (C.F. = 1.5)

4-½ IN MS 35303
F_{ty} = 132,000
F_{sy} = 79,200

PREPARED BY RLH
CHECKED BY
REVISED BY

PAGE 105
REPORT NO.
DATE 4-16-64

DRAWING OR JOB TITLE	DRAWING NO. OR ITEM
APOLLO ACCESS ARM - COMPLEX 34	SPACER

FITTING AT B' D75M-06444

TENSILE LOAD = 6177 LBS.

$$P = \frac{6177}{4}$$

$$= 1544 \text{ LBS/BOLT.}$$

LOADS BEAMED INTO GUSSET,

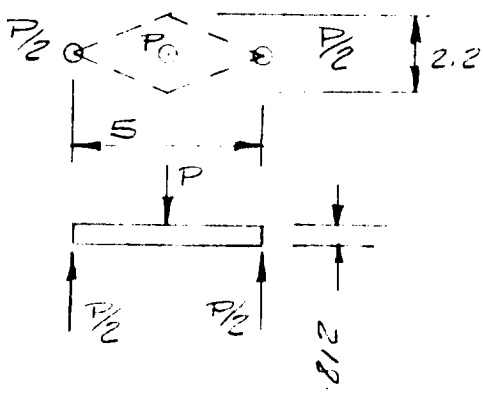

$$M_{MAX} = \frac{P}{2}(2.5)$$

$$= 1.25(1544)$$

$$= 1930 \text{ IN-LBS.}$$

$$S = \frac{2.2(.812)^2}{6}$$

$$= 0.242 \text{ IN}^3$$

$$f = \frac{M}{S}$$

$$= \frac{1930}{.242}$$

$$= 7980 \text{ PSI.}$$

$$M.S. = \frac{12,000}{7,980} - 1 = +0.51$$

PREPARED BY RLH
CHECKED BY
REVISED BY

PAGE
REPORT NO.
DATE 4-16-64

DRAWING OR JOB TITLE	DRAWING NO. OR ITEM
APOLLO ACCESS ARM - COMPLEX 34	SPACER

IN BOLTS,

$A_B = 0.126$ SQ. IN. $K_T = 1.125$, $K_S = 1.2$

$$\sigma_T = 1.125 \frac{1544}{26}$$

$$= 13,800 \text{ PSI.}$$

$$R_T = \frac{13,800}{132,000}$$

$$= 0.105$$

$$\tau = 1.2\left[\frac{732 + 5464}{4(126)}\right]$$

$$= 13,150 \text{ PSI}$$

$$R_S = \frac{13,150}{79,200}$$

$$= 0.166$$

FROM INTERACTION CURVES,

$R'_T = .515$

$R'_S = .865$

$$M.S. = \frac{R'_I}{R_T} - 1$$

$$= \frac{.515}{.105} - 1 = \quad +3.90$$

DRAWING OR JOB TITLE	DRAWING NO. OR ITEM
APOLLO ACCESS ARM-COMPLEX 34	SPACER

FITTING AT F' D75M-06925

FASTENS TO BASIC TRUSS WITH 2-3/4 IN. MS 35806 BOLTS.

$F_{ty} = 132{,}000$ PSI

$A_e = 0.302$

$F_{sy} = 79{,}200$

$K_T = 1.125$ $K_S = 1.2$

$$P_T = 15{,}157 - \frac{64.77}{75.5} 2840$$

$$= 12{,}717 \text{ LBS.}$$

$$f_T = 1.125 \frac{12{,}717}{2(.302)}$$

$$= 23{,}800 \text{ PSI.}$$

$$R_T = \frac{28{,}800}{32{,}000}$$

$$= 0.18$$

$$f_s = 1.2\left[\frac{\frac{39}{75.5}(2840) + 350}{2(.302)}\right]$$

$$= 3970 \text{ PSI.}$$

$$R_s = \frac{3970}{79{,}200}$$

$$= .05$$

FROM INTERACTION CURVES,

$R_s = 0.26$, $R_T = .99$

$$M.S. = \frac{.26}{.05} - 1 = +4.20$$

PREPARED BY
CHECKED BY
REVISED BY

PAGE
REPORT NO.
DATE 4-16-64

DRAWING OR JOB TITLE	DRAWING NO. OR ITEM
APOLLO ACCESS ARM	SPACER

FITTING AT F'

MATL: ALMAG 35

F_{ty} = 8 PSI (NO CASTING FACTOR).

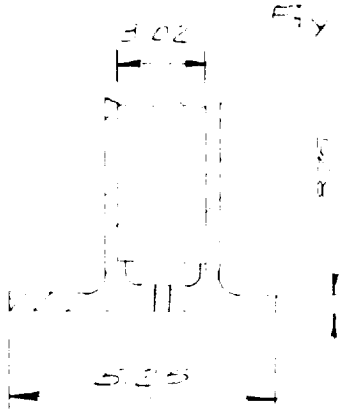

SECTION A-A

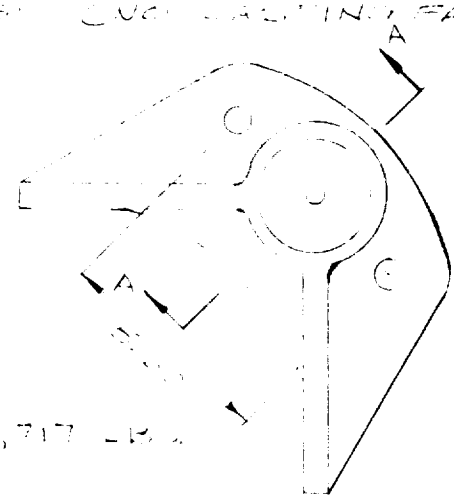

P = 12,717 LBS.

$M_{MAX} = \frac{P}{2}\frac{L}{2}(\ldots)$

8150 IN-LBS.

$S = \frac{bh^2}{6}$

$= \frac{5.25(.875)^2}{6}$

$= 0.67 \text{ IN.}^3$

$T = \frac{M}{S}$

$= \frac{8150}{0.67}$

$= 12,150 \text{ PSI.}$

$M.S. = \frac{18000}{12,150} - 1 =$ + 0.48

PREPARED BY RLM
CHECKED BY
REVISED BY

PAGE 109
REPORT NO.
DATE 3-30-64

DRAWING OR JOB TITLE: APOLLO ACCESS CHAMBER

DRAWING NO. OR ITEM: LOADS

ASSUMED LOADS

EXTENSION PLATFORM ~ COMPLEX 39

HORSE HEAD	=	300.0	
PLATFORM	=	600.0	(450.0 lbs FOR COMPLEX 34)
GRABBER	=	500.0	
HOOD		170.0	
HOOD FRAME		200.0	
TRACKS		75.0	
VERT. CURTAIN		60.0	
HOR CURTAIN		210.0	
BELLOWS		50.0	
		2165.0	
+ 5% ≈		110.0	~ HAND RAILS, BRACKETS, AND ETC.
TOTAL	=	2275.0 lbs	

WHITE ROOM

FLOOR	=	135.0
WALL PANELS	=	190.0
DOOR	=	30.0
SHEAR DOOR AND FRAME	=	80.0
FRAMES	=	345.0
TRUSS FRAME	=	300.0
ROLLER TRACK	=	75.0
ROLLERS	=	25.0
		1180.0
+ 5% ≈		60.0
TOTAL	=	1240.0 lbs.

MISC. LIGHTS, PNEU. CYLINDERS AND ETC. = 210.0 lbs.

*NO LOAD FACTORS INCLUDED

110
PREPARED BY RLM
CHECKED BY
REVISED BY

PAGE
REPORT NO.
DATE 4-1-64

DRAWING OR JOB TITLE APOLLO ACCESS CHAMBER	DRAWING NO. OR ITEM CHAMBER FRAMES

LOADS (COMPLEX 39, 34, & 37)

LOAD ON CHAMBER FRAMES DUE TO WEIGHT OF CHAMBER AND TWO MEN IN CHAMBER

ASSUME WEIGHT OF CHAMBER IS CARRIED EQUALLY BY FRAMES AT FOUR POINTS

$F'_{1,2,3,4}$ = FRAME REACTIONS

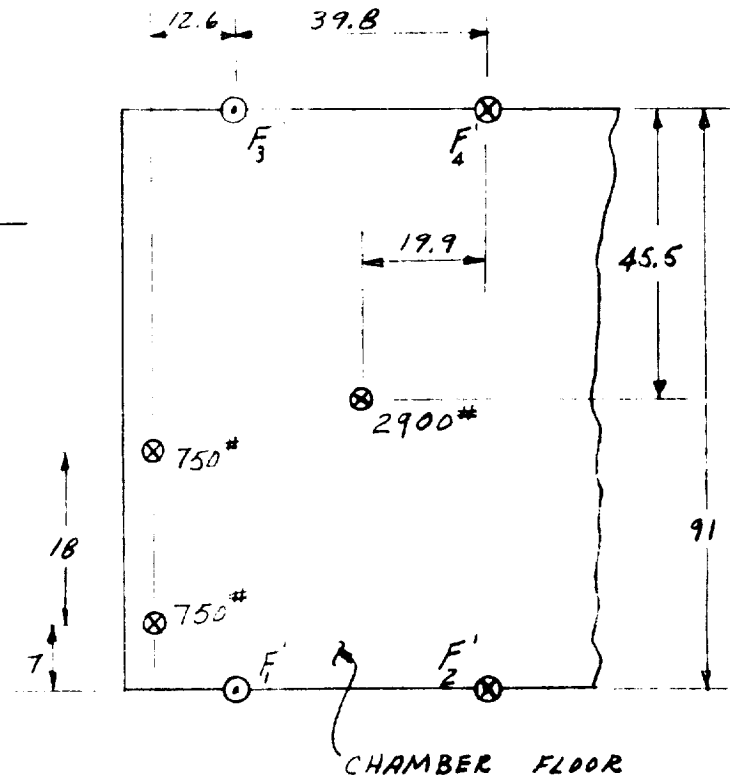

FRAME REACTIONS DUE TO WEIGHT OF CHAMBER

$F'_1 = F'_3 = 725$ lbs.

$F'_2 = F'_4 = 725$ lbs.

FRAME REACTIONS DUE TO LIVE LOAD

$F'_1 = 1,626$ lbs

$F'_2 = 388$ lbs.

$F'_3 = 345$ lbs.

$F'_4 = 83$ lbs.

PREPARED BY RZM
CHECKED BY
REVISED BY

PAGE 111
REPORT NO.
DATE 3-30-64

DRAWING OR JOB TITLE	DRAWING NO. OR ITEM
APOLLO ACCESS CHAMBER	LOADS

EXTENSION PLATFORM (COMPLEX 39)

ASSUMED LOADS AND C.G.'S (DEAD LOAD)

STATIC CONDITION ; PLATFORM EXTENDED 84 INCHES

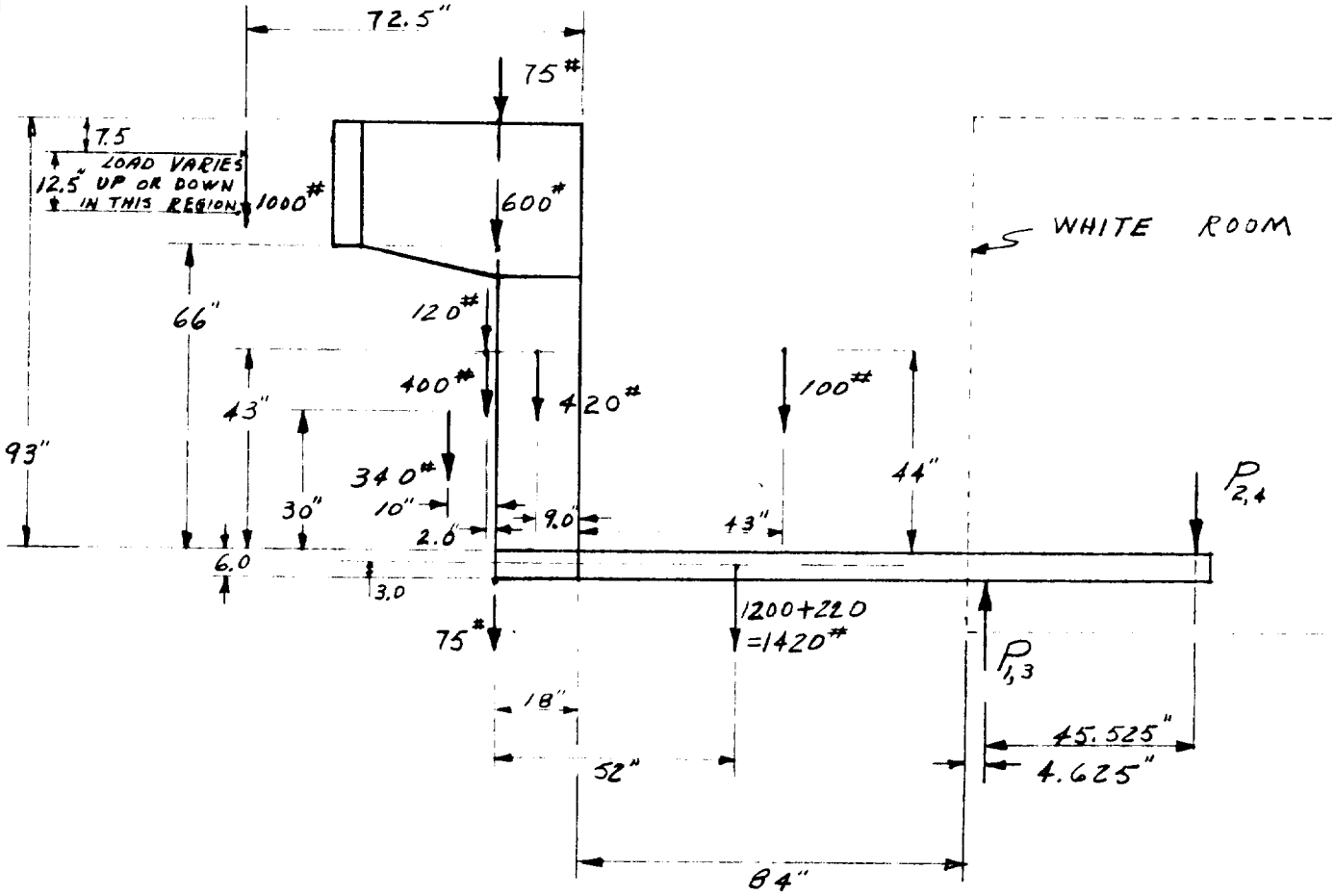

$P_{1,2,3,4}$ = ROLLER LOADS

THE LIVE LOAD OF 2250 lbs IS 97.625 INCHES OUT FROM FRONT ROLLERS. ($P_{1,3}$)

112

PREPARED BY RLM
CHECKED BY
REVISED BY

PAGE
REPORT NO.
DATE 3-31-64

DRAWING OR JOB TITLE	DRAWING NO. OR ITEM
APOLLO ACCESS CHAMBER	LOADS

EXTENSION PLATFORM (COMPLEX 39)

STATIC CONDITION; PLATFORM EXTENDED 84 INCHES

ROLLER LOADS

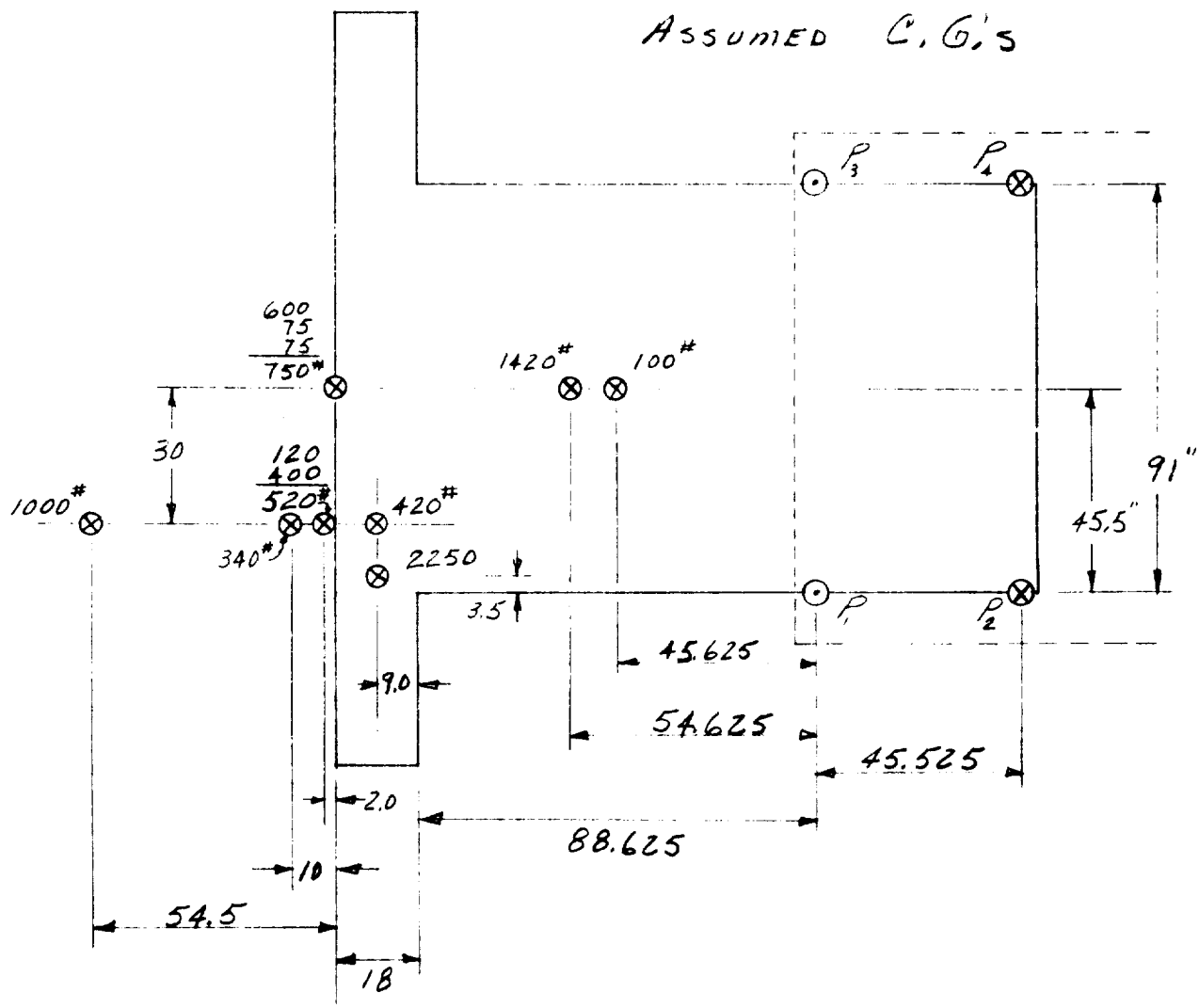

DRAWING OR JOB TITLE APOLLO ACCESS CHAMBER	DRAWING NO. OR ITEM LOADS

EXTENSION PLATFORM (COMPLEX 39)

STATIC CONDITION ; PLATFORM EXTENDED 84 INCHES

ROLLER LOADS

$$P_2 = \frac{830(161.125) + 282(116.625) + 432(108.625) + 375(106.625) + 2{,}510(97.625) + 710(54.625) + 50(45.625)}{45.525}$$

$P_2 = 11{,}854$ lbs.

$P_1 = 830 + 282 + 432 + 375 + 2510 + 710 + 50 + 11{,}854$

$P_1 = 17{,}043$ lbs.

$$P_4 = \frac{170(161.125) + 58(116.625) + 88(108.625) + 375(106.625) + 160(97.625) + 710(54.625) + 50(45.625)}{45.525}$$

$P_4 = 3{,}084$ lbs.

$P_3 = 170 + 58 + 88 + 375 + 160 + 710 + 50 + 3{,}084$

$P_3 = 4{,}695$ lbs.

PREPARED BY RLM
CHECKED BY
REVISED BY

PAGE
REPORT NO.
DATE 4-1-64

DRAWING OR JOB TITLE APOLLO ACCESS CHAMBER

DRAWING NO. OR ITEM LOADS

EXTENSION PLATFORM (COMPLEX 39)

STATIC CONDITION; PLATFORM EXTENDED 84 INCHES

FRAME LOADS DUE TO ROLLER LOADS

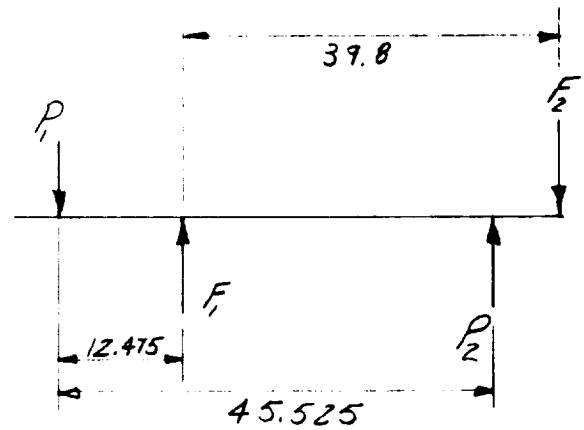

$P_1 = 17{,}043$ lbs.

$P_2 = 11{,}854$ lbs

$$F_1 = \frac{17{,}043(52.275) - 11{,}854(6.75)}{39.8}$$

$F_1 = 20{,}400$ lbs.

$F_2 = 20{,}400 + 11{,}854 - 17{,}043$

$F_2 = 15{,}211$ lbs.

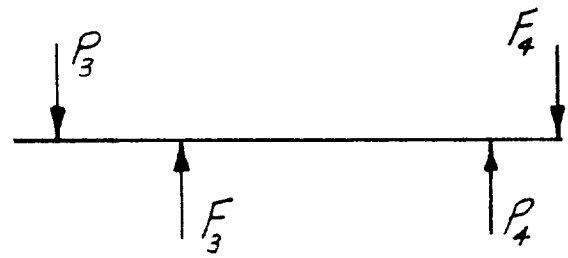

$P_3 = 4{,}695$ lbs

$P_4 = 3{,}084$ lbs

$$F_3 = \frac{4{,}695(52.275) - 3{,}084(6.75)}{39.8}$$

$F_3 = 5{,}635$ lbs.

$F_4 = 5635 + 3{,}084 - 4{,}695$

$F_4 = 4{,}024$ lbs

PREPARED BY RLM
CHECKED BY
REVISED BY

PAGE 115
REPORT NO.
DATE 4-2-64

DRAWING OR JOB TITLE APOLLO ACCESS CHAMBER

DRAWING NO. OR ITEM CHAMBER LOADS

LOADS (COMPLEX 39)

TOTAL CHAMBER FRAME LOADS

STATIC CONDITION ; PLATFORM EXTENDED 84 INCHES

$F_1 = 725 + 1,626 + 20,400 = 22,751$ lbs.
$F_2 = -725 + 388 + 15,211 = 14,874$ lbs.
$F_3 = 725 + 345 + 5,635 = 6,705$ lbs.
$F_4 = -725 + 83 + 4,024 = 3,382$ lbs.

116
PREPARED BY RLM
CHECKED BY
REVISED BY

PAGE
REPORT NO.
DATE 3-31-64

DRAWING OR JOB TITLE	DRAWING NO. OR ITEM
APOLLO ACCESS CHAMBER	LOADS

EXTENSION PLATFORM (COMPLEX 34 & 37)

ASSUMED LOADS AND C.G.'S (DEAD LOAD)

STATIC CONDITION ; PLATFORM EXTENDED 44 INCHES

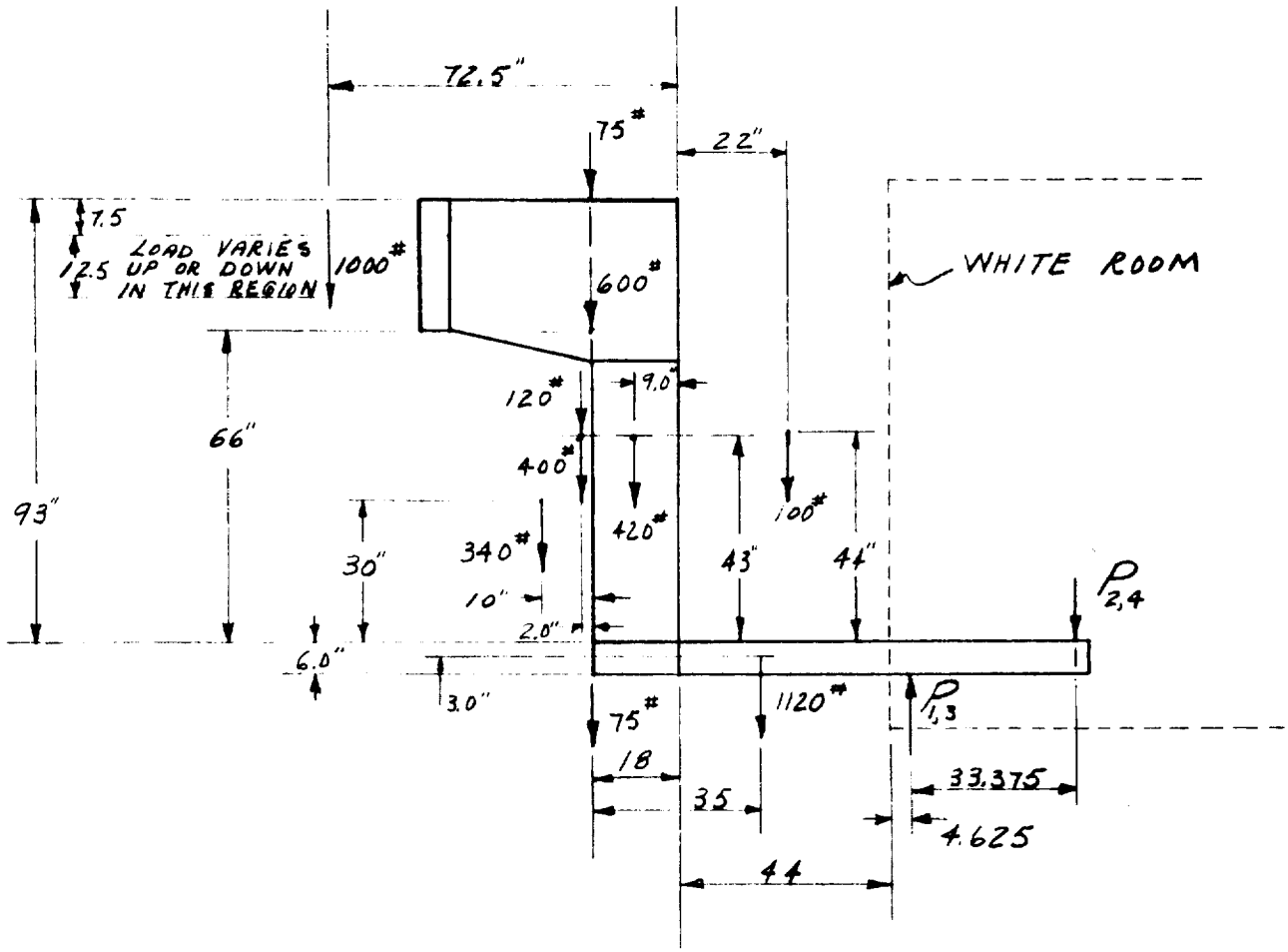

$P_{1,2,3,4}$ = ROLLER LOADS

THE LIVE LOAD OF 2250 lbs IS 57.625 INCHES OUT FROM FRONT ROLLERS. ($P_{1,3}$)

PREPARED BY RLM
CHECKED BY
REVISED BY

PAGE 117
REPORT NO.
DATE 3-31-64

DRAWING OR JOB TITLE	DRAWING NO. OR ITEM
APOLLO ACCESS CHAMBER	LOADS

EXTENSION PLATFORM (COMPLEX 34 & 37)

STATIC CONDITIONS; PLATFORM EXTENDED 44 INCHES

ROLLER LOADS

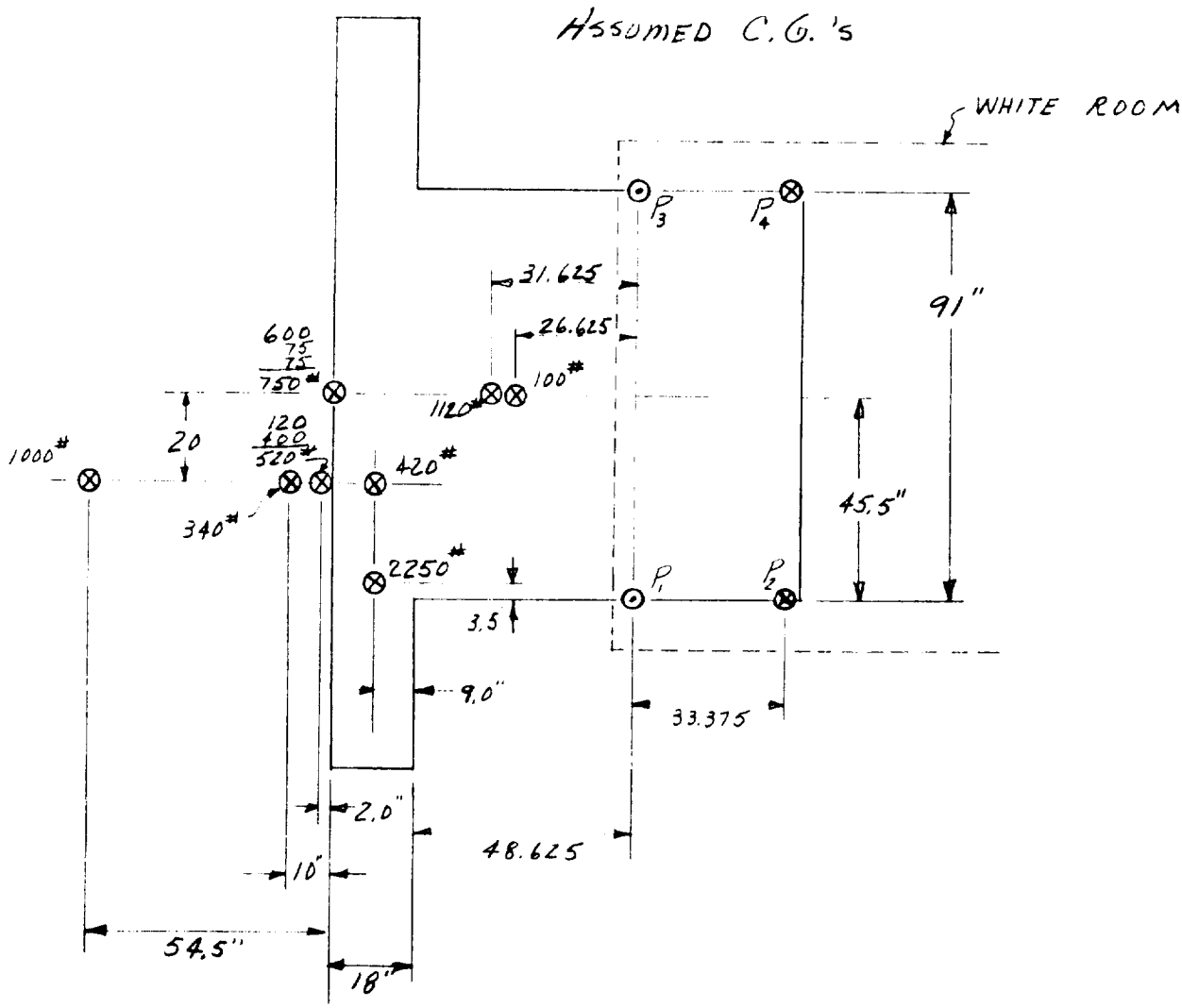

PREPARED BY RZM
CHECKED BY
REVISED BY

PAGE
REPORT NO.
DATE 4-1-64

DRAWING OR JOB TITLE APOLLO ACCESS CHAMBER

DRAWING NO. OR ITEM LOADS

EXTENSION PLATFORM (COMPLEX 34 & 37)

STATIC CONDITION; PLATFORM EXTENDED 44 INCHES

ROLLER LOADS

$$P_2 = \frac{720(121.125) + 245(76.625) + 374(68.625) + 375(66.625) + 2{,}462(57.625) + 560(31.625) + 50(26.625)}{33.375}$$

$P_2 = 9{,}515$ lbs

$P_1 = 720 + 245 + 374 + 375 + 2{,}462 + 560 + 50 + 9{,}515$

$P_1 = 14{,}301$ lbs

$$P_4 = \frac{280(121.125) + 95(76.625) + 146(68.625) + 375(66.625) + 208(57.625) + 560(31.625) + 50(26.625)}{33.375}$$

$P_4 = 3{,}213$ lbs

$P_3 = 280 + 95 + 146 + 375 + 208 + 560 + 50 + 3{,}213$

$P_3 = 4{,}927$ lbs.

EXTENSION PLATFORM (COMPLEX 34 & 37)

STATIC CONDITION ; PLATFORM EXTENDED 44 INCHES

FRAME LOADS DUE TO ROLLER LOADS

$P_1 = 14{,}301$ lbs.
$P_2 = 9{,}515$ lbs.

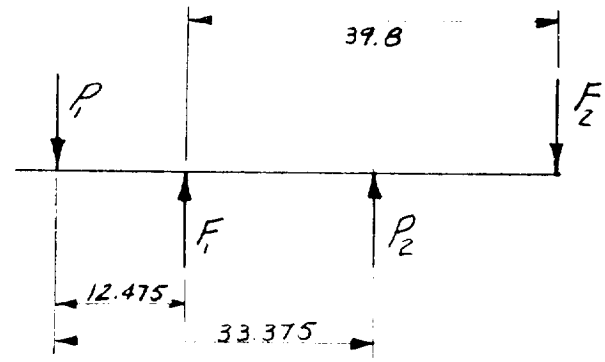

$$F_1 = \frac{(14{,}301)52.275 - 9515(18.9)}{39.8}$$

$F_1 = 14{,}280$ lbs.

$F_2 = 14280 + 9{,}515 - 14{,}301$

$F_2 = 9{,}494$ lbs

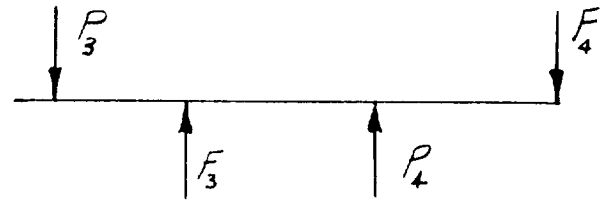

$P_3 = 4{,}927$ lbs.
$P_4 = 3{,}213$ lbs.

$$F_3 = \frac{4{,}927(52.275) - 3{,}213(18.9)}{39.8}$$

$F_3 = 4{,}950$ lbs.

$F_4 = 4{,}950 + 3{,}213 - 4{,}927$

$F_4 = 3{,}236$ lbs.

PREPARED BY RZM

CHECKED BY

REVISED BY

PAGE

REPORT NO.

DATE 4-2-64

DRAWING OR JOB TITLE	DRAWING NO. OR ITEM
APOLLO ACCESS CHAMBER	CHAMBER LOADS

LOADS (COMPLEX 34 & 37)

TOTAL CHAMBER FRAME LOADS

STATIC CONDITION; PLATFORM EXTENDED 44 INCHES

$F_1 = 725 + 1,626 + 14,280 = 16,631$ lbs.

$F_2 = -725 + 388 + 9,494 = 9,157$ lbs.

$F_3 = 725 + 345 + 4,950 = 6,020$ lbs.

$F_4 = -725 + 83 + 3,236 = 2,594$ lbs.

PREPARED BY Eden
CHECKED BY
REVISED BY

PAGE 121
REPORT NO.
DATE 4/3/64

DRAWING OR JOB TITLE	DRAWING NO. OR ITEM
APPOLO ACCESS CHAMBER	PLATFORM ROLLERS

PLATFORM ROLLERS

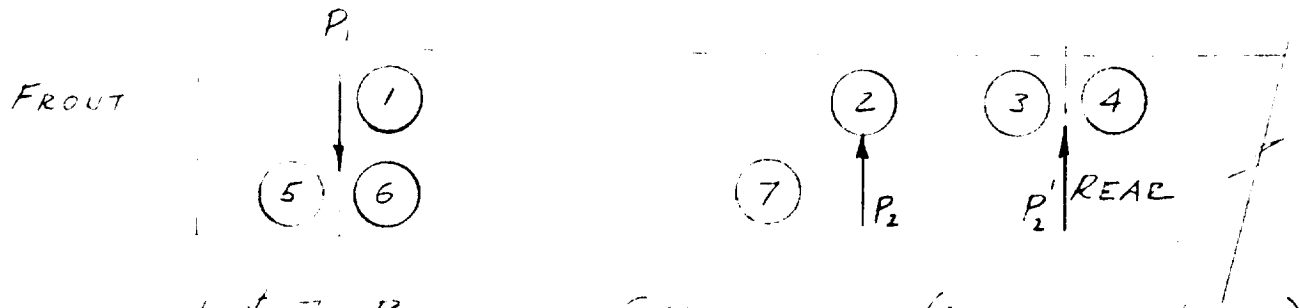

1 & 7 PLATFORM STABILIZERS (NEGLIGIBLE LOADS)
5 & 6 FRONT ROLLERS FOR COMPLEX 37, 34, & 37
2 REAR ROLLER FOR COMPLEX 34 & 37
3 & 4 REAR ROLLERS FOR COMPLEX 39

$P_1 = 17043^{\#}$ (COMPLEX 39) REF. PG. 114
$P_1 = 14,301^{\#}$ (COMPLEX 34 & 37) REF. PG. 119
$P_2 = 9515^{\#}$ (COMPLEX 34 & 37) REF. PG. 119
$P_2' = 11,864^{\#}$ (COMPLEX 39) REF. PG. 114

CRITICAL LOADING CONDITIONS TO INVESTIGATE

1) FRONT ROLLERS No. 5 & 6 $P_1 = 17043^{\#}$
(ROLLERS No. 3 & 4 ARE SIMILAR - NEGLECT)
2) REAR ROLLER No. 2 $P_2 = 9515^{\#}$

122
PREPARED BY Eder
CHECKED BY
REVISED BY

PAGE
REPORT NO.
DATE 4/3/64

DRAWING OR JOB TITLE	DRAWING NO. OR ITEM
APPOLO ACCESS CHAMBER	PLATFORM ROLLERS

FRONT ROLLERS (COMPLEX 39 34 & 37)

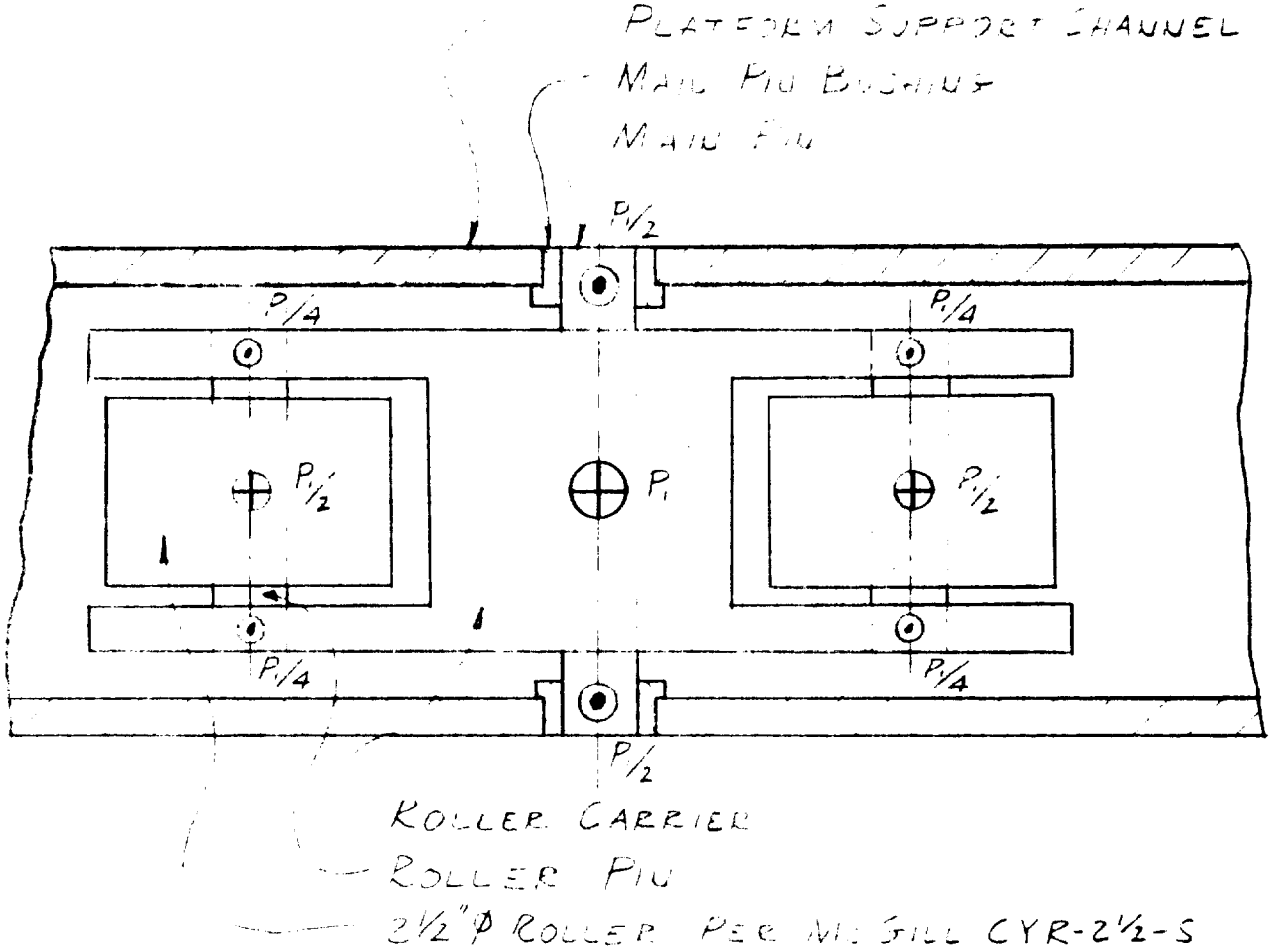

LOADS

$P_1 = 17{,}043^{\#}$ (COMPLEX 39) REF. P. 114

$P_1 = 14{,}301^{\#}$ (COMPLEX 34 & 37) REF. P. 119

PREPARED BY Eder
CHECKED BY
REVISED BY

PAGE 123
REPORT NO.
DATE 4/3/64

DRAWING OR JOB TITLE	DRAWING NO. OR ITEM
APPOLO ACCESS CHAMBER	PLATFORM ROLLERS (FRONT ROLLERS)

2½"Ø ROLLERS PER McGILL CYR-2½-S

LOADS

$P = 17{,}04$[illegible]# (COMPLEX 39) REF. PG. 119

$P_{1/2} = 85$[illegible]#/ROLLER

CAPACITY PER McGILL CATALOG #4-[illegible]

$P_{STATIC\ ALLOW.} = 49{,}360$#/ROLLER

MARGIN OF SAFETY

$M.S. = \frac{49{,}360}{8{,}522} - 1 =$ +4.80

ROLLER PIN

LOADS

$P_1 = 17{,}04$[illegible]# (COMPLEX 39) REF. PG. 119

$P_{1/2} = 85$[illegible]#/ROLLER

MATERIAL AISI 4340 PER MIL-S-5000
HEAT TREAT TO 180,000 psi. TENSILE MIN.

$F_{tu} = 180{,}000$ psi.

$F_{ty} = 168{,}000$ psi.

$F_{ry} = 97{,}800$ psi.

$F_{ty} = 230{,}000$ psi.

SECTION PROPERTIES

$d = 0.7495$ in.

$I = \frac{\pi d^4}{64} = \frac{3.1416(0.7495)^4}{64}$

$I = 0.0156\ in.^4$

$S = \frac{2I}{d} = \frac{2 \times 0.0156}{0.7495}$

$S = 0.0423\ in^3$

PREPARED BY Eder
CHECKED BY
REVISED BY

PAGE
REPORT NO.
DATE 4/3/64

DRAWING OR JOB TITLE	DRAWING NO. OR ITEM
APPOLO ACCESS CHAMBER	PLATFORM ROLLERS (FRONT ROLLERS)

ROLLER PIN - CONTINUED

[illegible]

$A = \frac{\pi d^2}{4} = \frac{[illegible]1416([illegible]7495)^2}{4}$

$A = 0.44[illegible]\ in^2$

STRESSES

$t_1 = 0.[illegible]75\ in$

$t_2 = [illegible]$

$y = [illegible]$

$b \cong 0.1875\ in$

ASSUME $b = \frac{t_2 - 2y}{4} = \frac{1.5625 - 2 \times 0.1875}{4}$

$b = [illegible]$

$R_L = [illegible]\ \#$

$R_R = 4[illegible]\ \#$

$M_{MAX} = 2270\ in\ \#$

$\sigma = \frac{M_{MAX}}{S} = \frac{2270}{0.0423}$

$\sigma = 53{,}600\ psi$

$r = \frac{4 R_R}{3 A} = \frac{4 \times 4300}{3 \times 0.442}$

$r = 13{,}000\ psi$

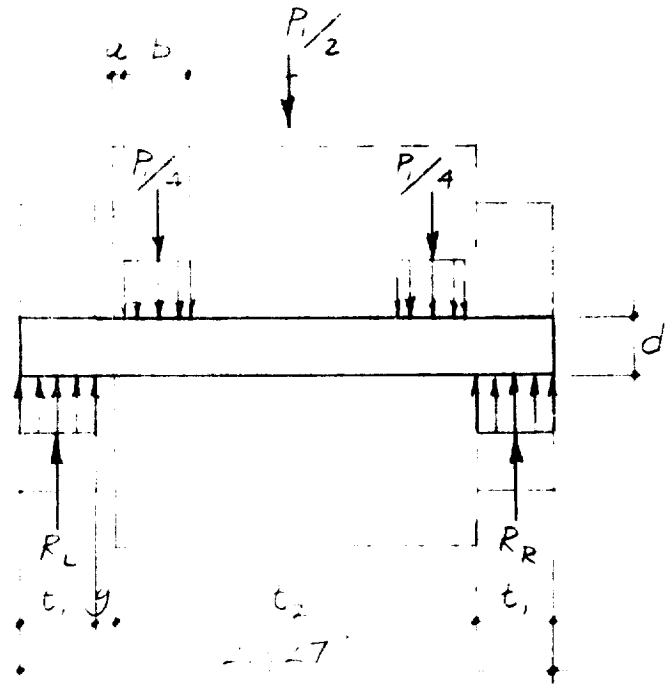

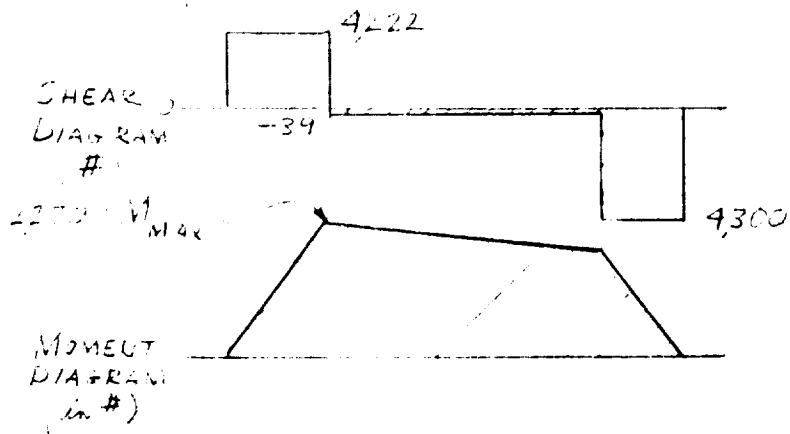

MARGIN OF SAFETY

$M.S. = \frac{163{,}000}{53{,}600} - 1 =$ +2.04

$M.S. = \frac{97{,}800}{13{,}000} - 1 =$ +6.51

PREPARED BY Eder
CHECKED BY
REVISED BY

PAGE 125
REPORT NO.
DATE 4/6/64

DRAWING OR JOB TITLE	DRAWING NO. OR ITEM
APPOLO ACCESS CHAMBER	PLATFORM ROLLERS (FRONT ROLLERS)

ROLLER CARRIER

LOADS

$P_1 = 17[illegible]^{\#}$ (COMPLEX 39) REF. PG. 119

$P_1/4 = [illegible]^{\#}$

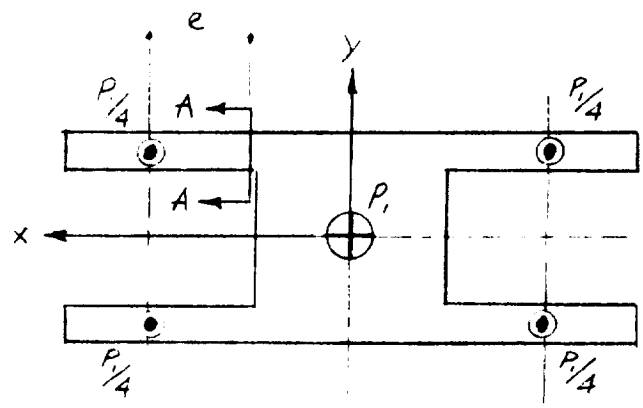

MATERIAL AISI 4340 PER MIL-S-5000
HEAT TREAT TO 160,000 psi. TENSILE MIN.

$F_{tu} = 160,000$ psi.
$F_{ty} = 141,000$ psi.
$F_{ry} = 84,600$ psi.
$F_{Ry} = 20[illegible]000$ psi.

SECTION PROPERTIES

AT SECTION AA

$A = 2.0 \times 0.375$

$A = 0.75 \text{ in.}^2$

$$I_{yy} = \frac{0.375(2)^3}{12}$$

$I_{yy} = 0.25 \text{ in.}^4$

$S_{yy} = 0.25 \text{ in.}^3$

PREPARED BY Eder
CHECKED BY
REVISED BY

PAGE
REPORT NO.
DATE 4/6/64

DRAWING OR JOB TITLE	DRAWING NO. OR ITEM
APPOLO ACCESS CHAMBER	PLATFORM ROLLERS (FRONT ROLLERS)

ROLLER CARRIER – CONTINUED

STRESSES

$\sigma = \frac{M}{S_{yy}}$ $\quad e = 1.32$ in.

$M = \frac{P_1 e}{4} = \frac{17043 \times 1.32}{4}$

$M = 5625$ in.#

$\sigma = \frac{5625}{0.25}$

$\sigma = 22{,}500$ psi.

$\tau_{MAX} = \frac{3}{8}\frac{P_1}{A} = \frac{3 \times 17043}{8 \times 0.75}$

$\tau = 8{,}520$ psi.

$\tau_E = \frac{P_1}{4 A_B}$ $\quad A_B = 0.7495 \times 0.375 = 0.281$ in.^{2}

$\tau_E = \frac{17043}{4 \times 0.281}$

$\tau_E = 15{,}200$ psi.

MARGIN OF SAFETY

$M.S. = \frac{141{,}000}{22{,}500} - 1$ — +5.26

$M.S. = \frac{84{,}600}{8{,}520} - 1$ — + 8.92

$M.S. = \frac{201{,}000}{15{,}200} - 1$ — +12.25

PREPARED BY Eder
CHECKED BY
REVISED BY

PAGE 127
REPORT NO.
DATE 4/6/64

DRAWING OR JOB TITLE	DRAWING NO. OR ITEM
APPOLO ACCESS CHAMBER	PLATFORM ROLLERS (FRONT ROLLERS)

MAIN PIN

LOADS

$P_1 = 17,048^{\#}$ (COMPLEX 39) REF. PG. 119

MATERIAL AISI 4340 PER MIL-S-5000
HEAT TREAT TO 180,000 TENSILE MIN.

$F_{tu} = 190,000$ psi.
$F_{ty} = 163,000$ psi.
$F_{sy} = 97,300$ psi.
$F_{By} = 230,000$ psi.

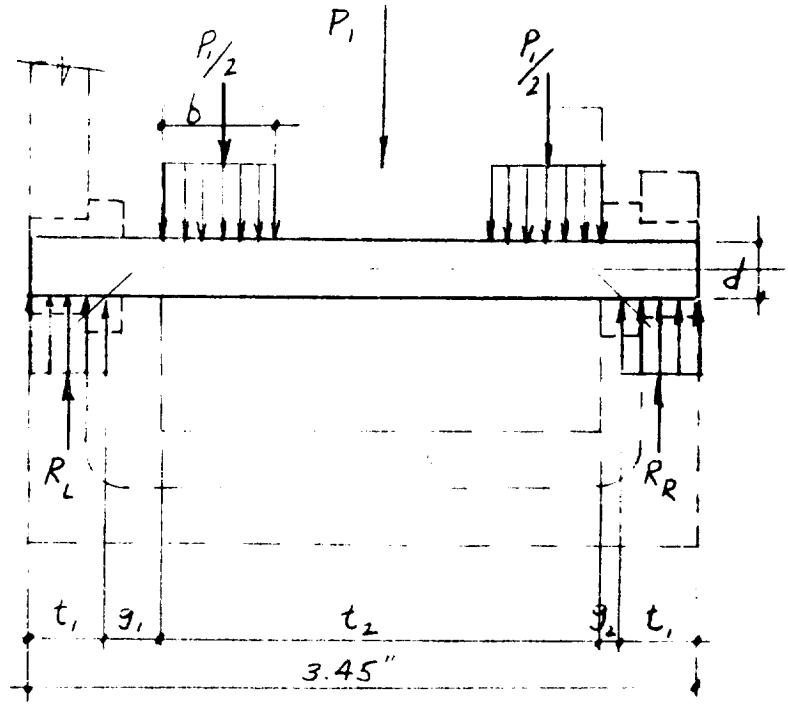

SECTION PROPERTIES

$d = 0.7475$ in.
$A = 0.442$ in.^{2}
$I = 0.0156$ in.^{4}
$S = 0.0423$ in.^{3}
REF PG. 123

STRESSES

$t_{1\,EFF} \cong 0.3750$ in.
$t_2 = 2.327$ in.
$g_1 = 0.248$ in.
$g_2 = 0.125$ in.

ASSUME $b = \frac{t_2}{4} = \frac{2.327}{4}$

$b = 0.5817$
$R_L = 8163^{\#}$
$R_R = 8800^{\#}$
$M_{MAX.} = 5925$ in.$^{\#}$

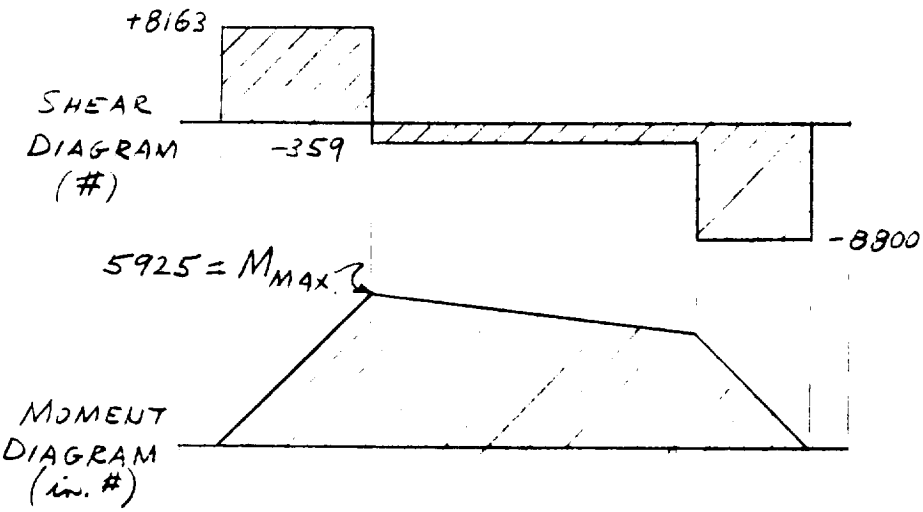

PREPARED BY Eden
CHECKED BY
REVISED BY

PAGE
REPORT NO.
DATE 4/6/64

DRAWING OR JOB TITLE	DRAWING NO. OR ITEM
APPOLO ACCESS CHAMBER	PLATFORM ROLLERS (FRONT ROLLERS)

MAIN PIN – CONTINUED

STRESSES – CONTINUED

$$\sigma = \frac{N_{MAX}}{S} = \frac{5945}{0.0423}$$

$\sigma = 140,000$ psi.

$$\tau = \frac{4}{3}\frac{R_R}{A} = \frac{4 \times 3800}{3 \times 0.442}$$

$\tau = 26,500$ psi.

MARGIN OF SAFETY

$$M.S. = \frac{163,000}{140,000} - 1 \qquad +0.17$$

$$M.S. = \frac{92,820}{26,500} - 1 \qquad +3.59$$

MAIN PIN BEARING

LOADS

$R_R = 3800^{\#}$ REF. PG. 127

$R_L = 3163^{\#}$ REF. PG. 127

MATERIAL AISI 4340 PER MIL-S-6153

$F_{tu} = 90,000$ psi.
$F_{ty} = 70,000$ psi.
$F_{ry} = 42,000$ psi.
$F_{BY} = 99,800$ psi.

STRESSES

$$\sigma_B = \frac{R_R}{A_B}$$

$A_B = t, d$

$A_B = 0.375 \times 0.7495$

DRAWING OR JOB TITLE	DRAWING NO. OR ITEM
APPOLO ACCESS CHAMBER	PLATFORM ROLLERS (FRONT ROLLERS)

MAIN PIN BUSHING – CONTINUED

STRESSES – CONTINUED

$A_B = 0.281 \text{ in.}^2$

$\sigma_E = \frac{8800}{0.281}$

$\sigma_E = 31,300 \text{ psi}$

MARGIN OF SAFETY

$M.S. = \frac{97,800}{31,300} - 1$ ..... +2.16

130

PREPARED BY RLM

CHECKED BY

REVISED BY

PAGE

REPORT NO.

DATE 4-7-64

DRAWING OR JOB TITLE	DRAWING NO. OR ITEM
APOLLO ACCESS CHAMBER	CHAMBER

ROLLER MOUNTING CHANNEL (COMPLEX 31)

STATIC CONDITION, PLATFORM EXTENDED 84 INCHES

LOCAL CONDITION

ASSUME A 60-40 DISTRIBUTION OF ROLLER LOADS ACTING ON SHAFT OF ROLLER. REF. PG. 119.

$P_1(.6) = 10,200$ lbs.

BEARING OF SHAFT ON MOUNTING CHANNEL

$A_{B_1} = .25(1.0) = .25 \text{ in}^2$

STRESS

$$\sigma_{B_1} = \frac{10,200}{.25} = 40,800 \text{ psi.}$$

MARGIN OF SAFETY

$$M.S. = \frac{86,000}{40,800} - 1 = \quad +.96$$

PREPARED BY Eder
CHECKED BY
REVISED BY

PAGE 131
REPORT NO.
DATE 4/6/64

DRAWING OR JOB TITLE	DRAWING NO. OR ITEM
APPOLO ACCESS CHAMBER	PLATFORM ROLLERS

REAR ROLLER (COMPLEX 34 & 37)

LOADS

$P_2 = 9515^{\#}$ (COMPLEX 34 & 37) REF. PG. 121

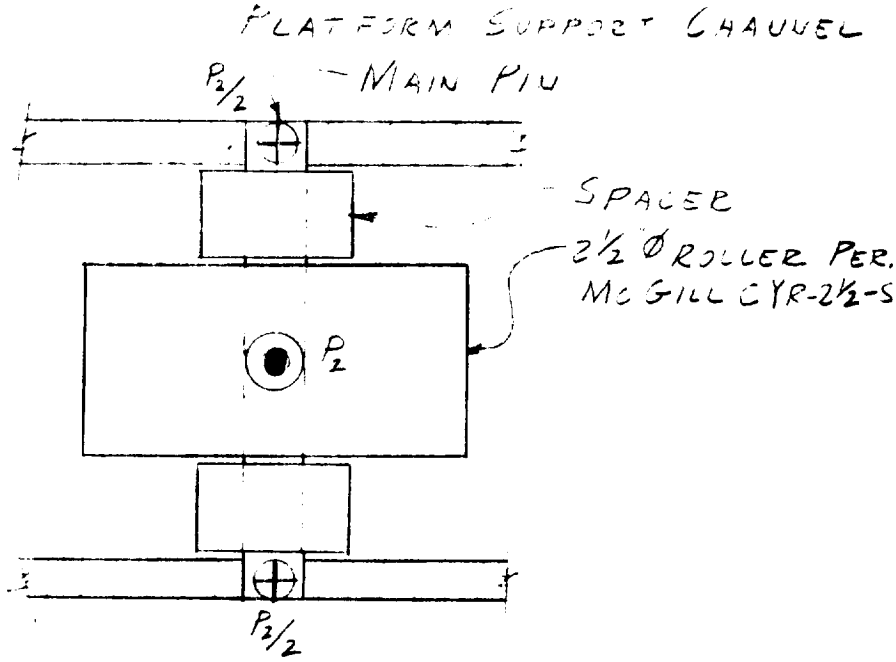

MAIN PIN

LOADS

$P_2 = 9515^{\#}$ (COMPLEX 34 & 37) REF. PG. 121

MATERIAL AISI 4340 PER MIL-S-5000
HEAT TREAT TO 180,000 TENSILE MIN.

$F_{tu} = 180{,}000$ psi.
$F_{ty} = 163{,}000$ psi.
$F_{ry} = 97{,}800$ psi.
$F_{By} = 230{,}000$ psi.

DRAWING OR JOB TITLE	DRAWING NO. OR ITEM
APPOLO ACCESS CHAMBER	PLATFORM ROLLERS

MAIN PIN - CONTINUED

SECTION PROPERTIES

$d = 0.7495$ in.

$A = 0.442$ in.^{2}
$I = 0.0156$ in.^{4}
$S = 0.0423$ in.^{3}
} REF. PG. 123

STRESSES

$t_1 = 0.25$ in

$t_2 = 1.5625$ in.

$g_1 = 0.7425$

$g_2 = 0.645$ in.

$a \cong 0.1875$ in.

ASSUME $b = \frac{t_2 - 2a}{4}$

$b = \frac{1.5625 - 2 \times 0.1875}{4}$

$b = 0.2969$ in.

$R_L = 4285$ #

$R_R = 5230$ #

$M_{MAX} = 5160$ in.#

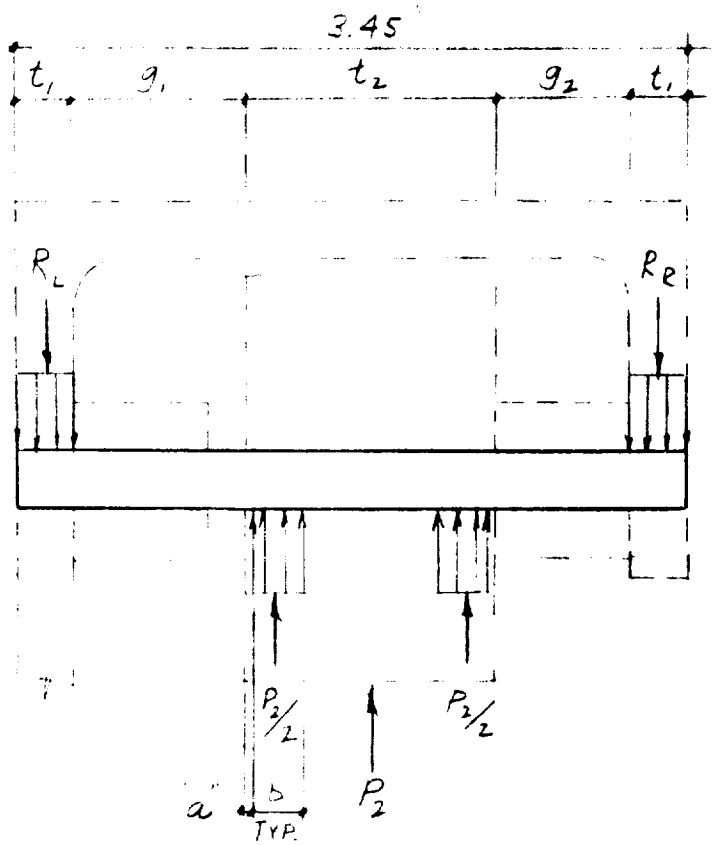

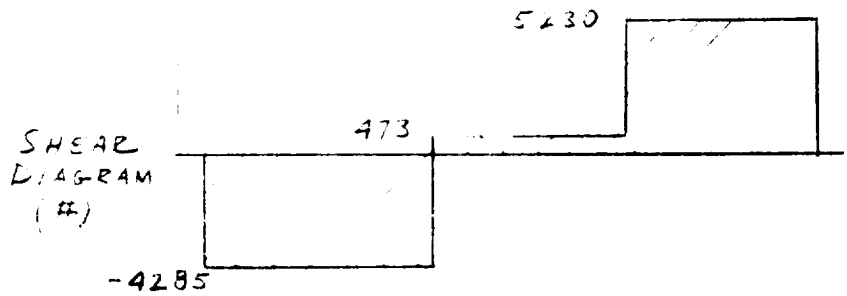

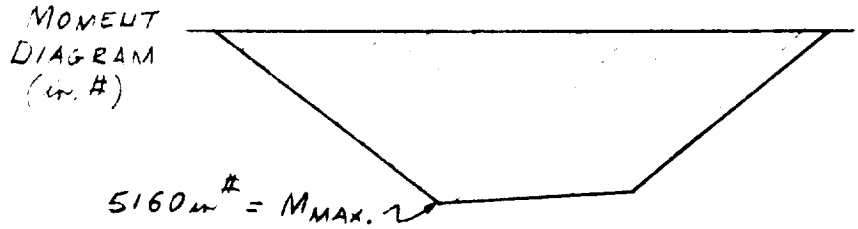

DRAWING OR JOB TITLE	DRAWING NO. OR ITEM
APPOLO ACCESS CHAMBER	PLATFORM ROLLERS

MAIN PIN - CONTINUED

STRESSES - CONTINUED

$$\sigma = \frac{M_{MAX}}{S} = \frac{5160}{0.0423}$$

$$\sigma = 122{,}000 \text{ psi}$$

$$\tau = \frac{4\,R_R}{3\,A} = \frac{4 \times 5230}{3 \times 0.442}$$

$$\tau = 15{,}900 \text{ psi}$$

MARGIN OF SAFETY

$$M.S. = \frac{163{,}000}{122{,}000} - 1 \qquad +0.33$$

$$M.S. = \frac{97{,}800}{15{,}900} - 1 \qquad +5.20$$

PREPARED BY RZ 211
CHECKED BY
REVISED BY

PAGE
REPORT NO
DATE

DRAWING OR JOB TITLE	DRAWING NO. OR ITEM
[illegible] CHAMBER	CHAMBER

ROLLER MOUNTING CHANNEL (COMPLEX 39)

STATIC CONDITION : PLATFORM EXTENDED [illegible] INCHES

SKETCH

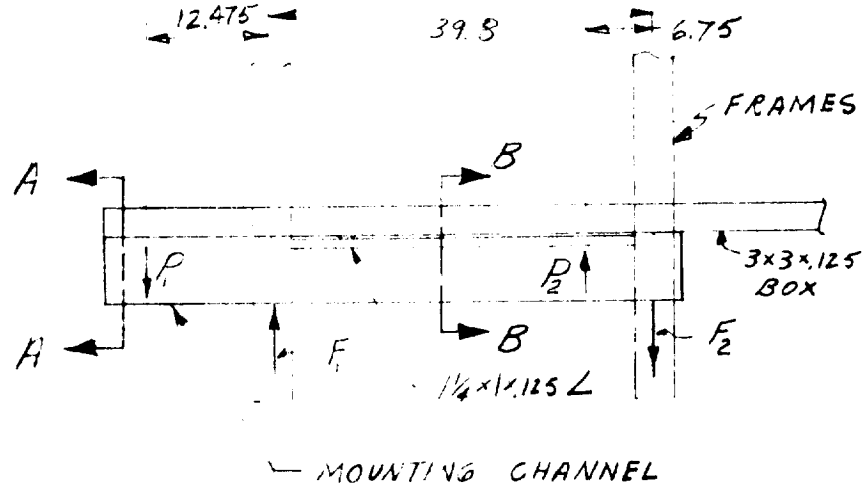

LOADS

P_1 = 17,043 lbs.
P_2 = 11,654 lbs.
F_1 = 20,400 lbs.
F_2 = 15,211 lbs.

REF PG. 113

MATERIAL

7075 - T6 ~ t = .25 - .499

F_{tu} = 77,000 psi
F_{ty} = 66,000 psi
F_{su} = 45,000 psi
F_{sy} = 39,600 psi
F_{bru} = 97,000 psi e/D = 1.5
F_{bry} = 80,000 psi e/D = 1.5

DRAWING OR JOB TITLE: APOLLO ACCESS CHAMBER

DRAWING NO. OR ITEM: CHAMBER

ROLLER MOUNTING CHANNEL (COMPLEX 39)

STATIC CONDITION: PLATFORM EXTENDED 84 INCHES

MATERIAL

7075-T6 ~ $t \leq .249$

$F_{tu} = 76,000$ psi

$F_{ty} = 64,000$ psi

$F_{su} = 43,000$ psi

$F_{sy} = 38,400$ psi

$F_{bru} = 101,000$ psi $e/D = 1.5$

$F_{bry} = 91,000$ psi $e/D = 1.5$

SECTION PROPERTIES

$A = 1.302 + .25(17.64) = 5.712$ in.^{2}

ELEMENT	A	Y	AY	AY^2	I_o
1	.6	1.2	.72	.865	.288
2	.6	5.8	3.48	20.200	.288
3	1.75	3.5	6.13	21.500	7.150
4	.73	6.875	5.02	34.500	
5	1.302	8.515	11.10	94.500	1.302
6	.106	7.015	.74	5.215	-
7	.73	.125	.09	.010	--
	5.816		27.28	176.790	9.028

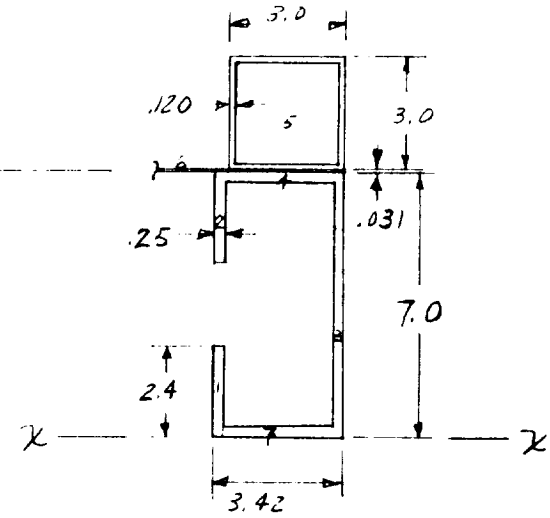

SECTION "A-A"

$$\bar{Y} = \frac{\Sigma AY}{\Sigma A} = 4.69$$

$$A\bar{Y}^2 = 128.1$$

$$I_{xx} = 9.03 + 176.79 - 128.1 = 57.72 \text{ in.}^4$$

PREPARED BY RZM
CHECKED BY
REVISED BY

PAGE
REPORT NO.
DATE 4-3-64

DRAWING OR JOB TITLE	DRAWING NO. OR ITEM
APOLLO ACCESS CHAMBER	CHAMBER

ROLLER MOUNTING CHANNEL (COMPLEX 39)

STATIC CONDITION ; PLATFORM EXTENDED 84 INCHES

SECTION PROPERTIES

$1\frac{1}{4} \times 1 \times .125 \angle$

$A = .27 \text{ in}^2$ $\quad I_o = .04 \text{ in}^4$

$y = 6.61 \text{ in}$

$Ay = 1.79 \text{ in}^3$

$Ay^2 = 11.8 \text{ in}^4$

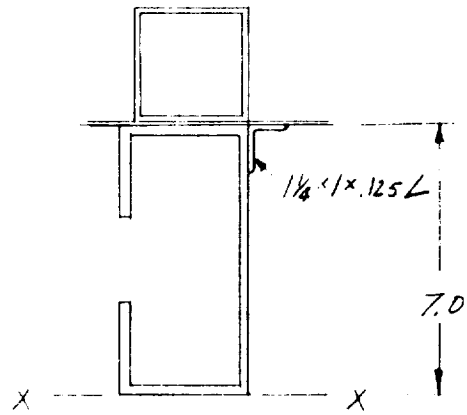

SECTION "B-B"

$$\bar{y} = \frac{\Sigma Ay}{\Sigma A} = \frac{27.28 + 1.79}{5.818 + .27} = 4.78 \text{ in.}$$

$A\bar{y}^2 = 139.1 \text{ in}^4$

$I_{x_1} = 1.068 + 188.59 - 139.1$

$I_{xx} = 56.558 \text{ in}^4$

$A_T = 6.088 \text{ in}^2$

DRAWING OR JOB TITLE	DRAWING NO. OR ITEM
APOLLO ACCESS CHAMBER	CHAMBER

ROLLER MOUNTING CHANNEL (COMPLEX 39)

STATIC CONDITION ; PLATFORM EXTENDED 84 INCHES

STRESSES

$M_{MAX} = 17{,}043(12.475) = 212{,}500$ in. lbs.

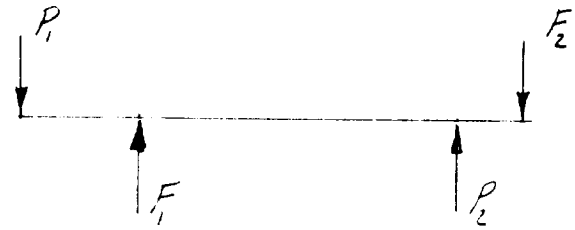

$$\sigma = \frac{Mc}{I} = \frac{212{,}500(5.341)}{57.72}$$

$\sigma = 19{,}650$ psi

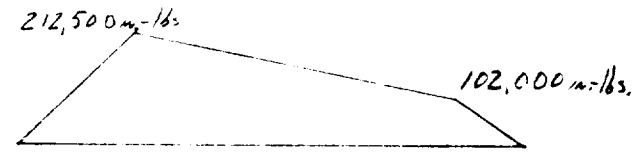

ASSUME WEB OF ROLLER MOUNTING BEAM TRANSFERS ALL OF THE SHEAR

$A_s = .25(7.0) = 1.75$ in.^{2}

$P_{s(max)} = 20{,}400$ lbs.

$$\tau = \frac{3}{2}\,\frac{V}{A} = \frac{3(17{,}043)}{2(1.75)} = 14{,}600 \text{ psi.}$$

MARGIN OF SAFETY

$$M.S._b = \frac{64{,}000}{19{,}650} - 1 = \quad +2.26$$

$$M.S._s = \frac{38{,}400}{14{,}600} - 1 = \quad +1.63$$

PREPARED BY RLM
CHECKED BY
REVISED BY

PAGE
REPORT NO.
DATE 4-3-64

DRAWING OR JOB TITLE	DRAWING NO. OR ITEM
APOLLO ACCESS CHAMBER	CHAMBER

ROLLER MOUNTING CHANNEL (COMPLEX 39)

STATIC CONDITION - PLATFORM EXTENDED 84 INCHES

FASTENER CONNECTING BOX TO CHANNEL

LOADS ~ SEE TO P

$$q = \frac{V}{I}\int y\,dA = \frac{17,043}{57.72}(1.302)(3.841) = 1,480 \text{ lbs/in.}$$

LOAD PER FASTENER

$$P_s = \frac{1.5}{2}(1480) = 1,110 \text{ lbs}$$

CONNECTION

HIGH SHEAR BB-352-6 - 431 STAINLESS (CORE BOLT)

$F_{su} = 125,000$ psi
$F_{sy} = 93,000$ psi

$F_{su} = 51,000$ psi ~ 305 STAINLESS (SLEEVE)
$F_{sy} = 21,000$ psi

$$A = \frac{\pi d^2}{4} = \frac{\pi(.122)^2}{4} = .0117 \text{ in.}^2 \sim \text{CORE BOLT}$$

$$(P_{sy})_{AL} = 1,090 \text{ lbs.} \sim \text{CORE BOLT}$$

$$A = \frac{\pi}{4}(d_1^2 - d_2^2) = \frac{\pi}{4}(.193^2 - .12\tfrac{3}{2}^2) = .0175 \text{ in.}^2 \sim \text{SLEEVE}$$

$$(P_{sy})_{AL} = 368 \text{ lbs} \sim \text{SLEEVE}$$

$$(P_s)_{TOTAL} = 1,090 + 368 = 1,458 \text{ lbs}$$

MARGIN OF SAFETY

$$M.S. = \frac{1458}{1,110} - 1 = +.31$$

DRAWING OR JOB TITLE	DRAWING NO. OR ITEM
APOLLO ACCESS CHAMBER	CHAMBER

ROLLER MOUNTING CHANNEL (COMPLEX 39)

STATIC CONDITION ; PLATFORM EXTENDED 84 INCHES

FASTENER CONNECTING BOX TO CHANNEL

LOADS ~ DUE TO P_1

$$q = \frac{V}{I}\int y\,dA = \frac{17{,}043}{57.72}(1.302)(3.841) = 1480 \text{ lbs/in}$$

LOAD PER FASTENER

$$P_s = \frac{3.25}{2}(1480) = 2{,}410 \text{ lbs.}$$

CONNECTION

HI-SHEAR BB-352-B

$F_{su} = 125{,}000$ psi
$F_{sy} = 93{,}000$ psi
~ 431 STAINLESS (CORE BOLT)

$F_{su} = 51{,}000$ psi
$F_{sy} = 21{,}000$ psi
~ 305 STAINLESS (SLEEVE)

$$A = \frac{\pi d^2}{4} = \frac{\pi(.163)^2}{4} = .021 \text{ in.}^2$$
$$(P_{sy})_{AL} = 1{,}950 \text{ lbs}$$
— CORE BOLT

$$A = \frac{\pi}{4}\left[d_1^2 - d_2^2\right] = \frac{\pi}{4}\left[.254^2 - .163^2\right] = .03 \text{ in.}^2$$
$$(P_{sy})_{AL} = 630 \text{ lbs.}$$
— SLEEVE

$$(P_s)_{TOTAL} = 1{,}950 + 630 = 2{,}580 \text{ lbs.}$$

MARGIN OF SAFETY

$$M.S. = \frac{2580}{2{,}410} - 1 = \boxed{+.07}$$

PREPARED BY RLM
CHECKED BY
REVISED BY

PAGE
REPORT NO.
DATE 4-6-64

DRAWING OR JOB TITLE	DRAWING NO. OR ITEM
APOLLO ACCESS CHAMBER	CHAMBER

ROLLER MOUNTING CHANNEL (COMPLEX 39)

STATIC CONDITION : PLATFORM EXTENDED 84 INCHES

BEARING OF FASTENER ON BOX SECTION

DUE TO F_1

$P_{B_1} = 1,330$ lbs.

$A_{B_1} = .12(.193) = .0232$ in.^{2}

$\sigma_{B_1} = 57,500$ psi

DUE TO P_1

$P_{B_1} = 2,410$ lbs.

$A_{B_1} = .12(.254) = .0305$ in.^{2}

$\sigma = 79,000$ psi.

MARGIN OF SAFETY

$$(M.S.)_{F_1} = \frac{91,000}{57,500} - 1 = \boxed{+.58}$$

$$(M.S.)_{P_1} = \frac{91,000}{79,000} - 1 = \boxed{+.15}$$

PREPARED BY RLM
CHECKED BY
REVISED BY

PAGE 141
REPORT NO.
DATE 4-6-64

DRAWING OR JOB TITLE	DRAWING NO. OR ITEM
APOLLO ACCESS CHAMBER	CHAMBER

ROLLER MOUNTING CHANNEL (COMPLEX 34 & 37)

STATIC CONDITION ; PLATFORM EXTENDED 44 INCHES

SKETCH

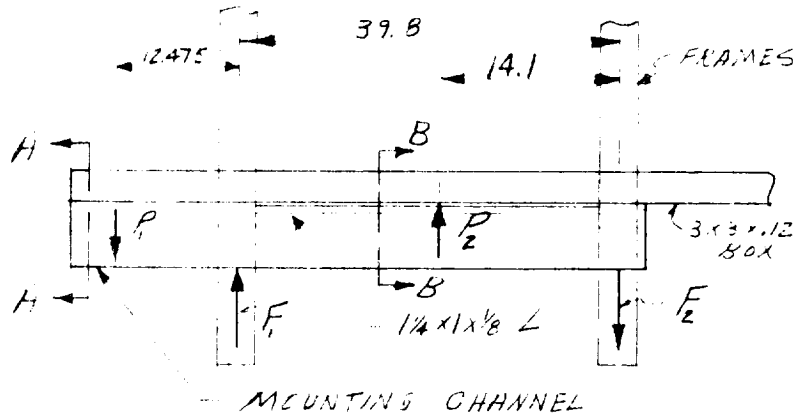

LOADS

P_1 = 4,301 lbs
P_2 = 9,515 lbs
F_1 = 14,280 lbs
F_2 = 9,494 lbs

REF PG. 118

MATERIAL

REF. PG. 134

SECTION PROPERTIES

REF. PG. 135

STRESSES

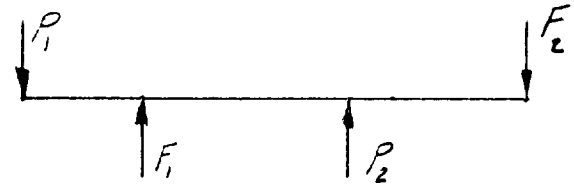

NOTE:
THE STRESSES ARE LOWER FOR COMPLEX 34 & 37 THAN THEY ARE FOR COMPLEX 39.
REF. PG. 137

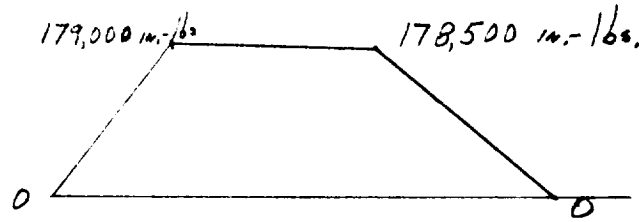

PREPARED BY RLM
CHECKED BY
REVISED BY

PAGE
REPORT NO.
DATE 4-7-64

DRAWING OR JOB TITLE	DRAWING NO. OR ITEM
APOLLO ACCESS CHAMBER	

ROLLER MOUNTING CHANNEL (COMPLEX 39)

STATIC CONDITION: PLATFORM EXTENDED 84 INCHES

FASTENERS CONNECTING MOUNTING CHANNEL TO REAR FRAME WHERE LOAD P_2 IS REACTED.

$F_2 = 11,854$ lbs

FASTENER ~ BP-T12 (3 REQ'D.)

$(P_{3_y})_{AL} = 3(8,740) = 26,200$ lbs

MARGIN OF SAFETY

$$M.S. = \frac{26\,200}{11,854} - 1 = \boxed{+1.21}$$

PREPARED BY RLM
CHECKED BY
REVISED BY

PAGE 143
REPORT NO.
DATE 4-7-64

DRAWING OR JOB TITLE	DRAWING NO. OR ITEM
APOLLO ACCESS CHAMBER	CHAMBER

ROLLER MOUNTING CHANNEL (COMPLEX 39)

STATIC CONDITION; PLATFORM EXTENDED 84 INCHES

FRONT ROLLERS, LOCAL CONDITION

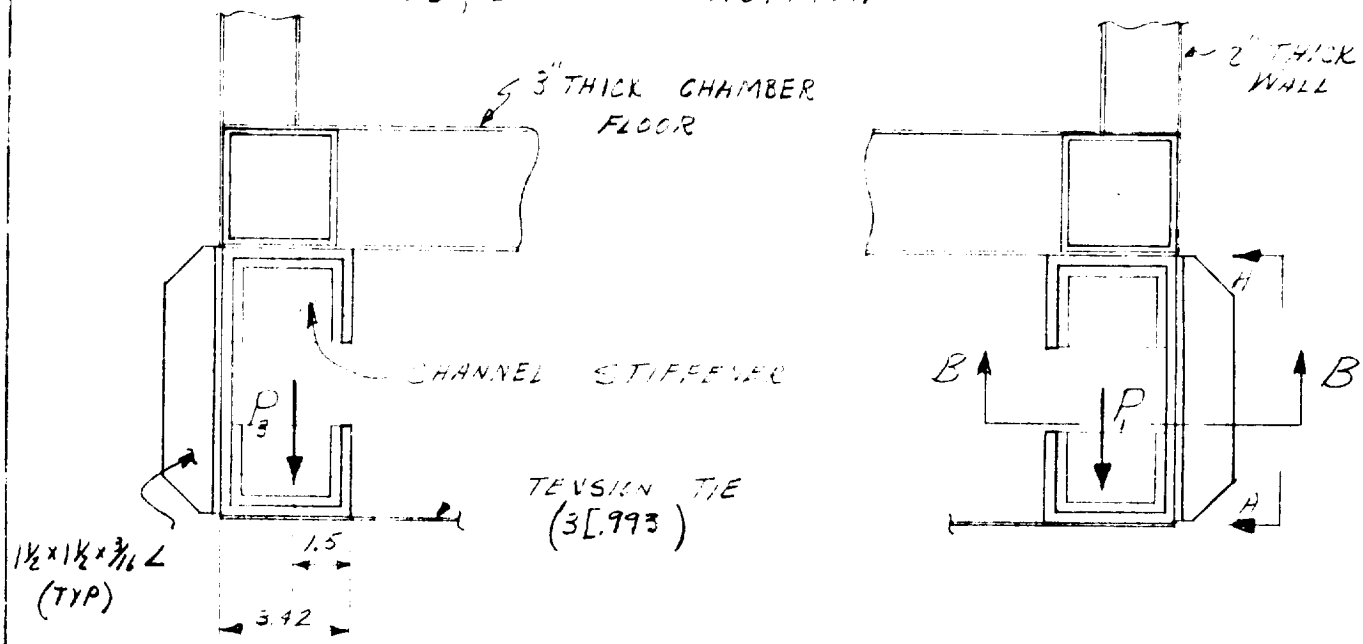

$P_1 = 17,043$ lbs.
$P_3 = 4,695$ lbs.
REF. P.6

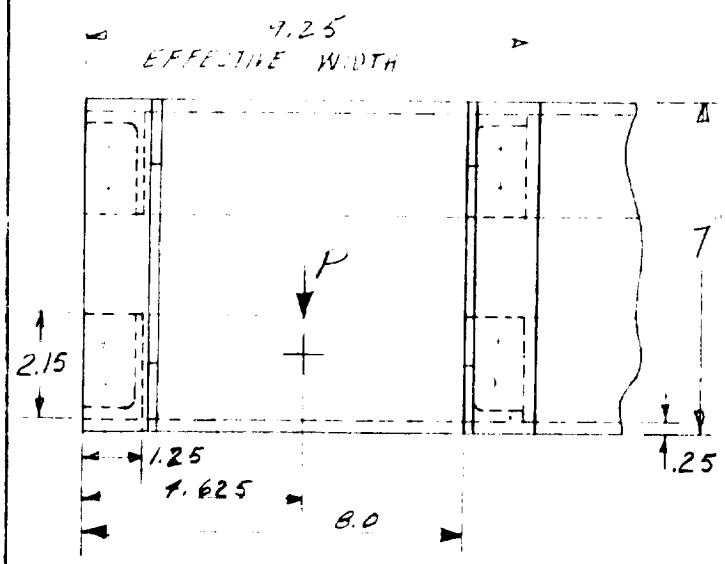

VIEW "A-A"

PREPARED BY RLM
CHECKED BY
REVISED BY

PAGE
REPORT NO.
DATE 4-7-64

DRAWING OR JOB TITLE	DRAWING NO. OR ITEM
APOLLO ACCESS CHAMBER	CHAMBER

ROLLER MOUNTING CHANNEL (COMPLEX 39)

STATIC CONDITION: PLATFORM EXTENDED 84 INCHES

LOCAL CONDITION

BENDING ACROSS SECTION B-B DUE TO LOADS P_1 AND P_3

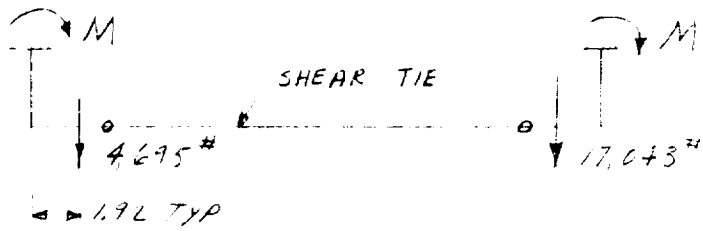

$$2M = 17{,}043(1.92) - 4{,}695(1.92) = 12{,}348(1.92)$$

$$M = 11{,}860 \text{ in. lbs.}$$

SECTION PROPERTIES

$$\bar{y} = \frac{2(.6682)(.45) - .25(9.5)(.125)}{2(.6682) + 9.5(.25)}$$

$$\bar{y} = .082 \text{ in.}$$

$$A\bar{y}^2 = .025 \text{ in}^2$$

$$A = 3.716 \text{ in}^2$$

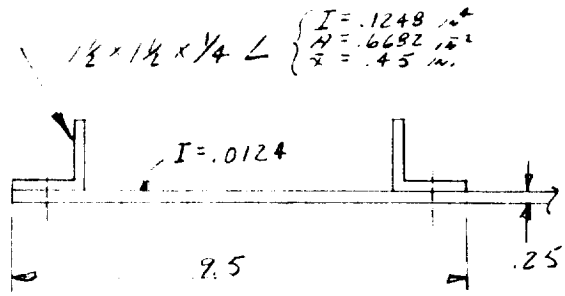

SECTION "B-B"

$$I = 2(.1248) + 2(.6682)(.45)^2 + .0124 + 2.38(.125)^2 - .025$$

$$I = .5452 \text{ in}^4$$

DRAWING OR JOB TITLE APOLLO ACCESS CHAMBER

DRAWING NO. OR ITEM CHAMBER

ROLLER MOUNTING CHANNEL (COMPLEX 39)

STATIC CONDITION; PLATFORM EXTENDED 84 INCHES

STRESS

TENSION

$$\sigma = \frac{Mc}{I} + \frac{P}{A} = \frac{11860(.332)}{.5452} + \frac{17,043}{3.716} = 11,810 \text{ psi.}$$

COMPRESSION

$$\sigma = \frac{Mc}{I} - \frac{P}{A} = \frac{11,860(1.418)}{.5452} - \frac{17,043}{3.716} = 26,200 \text{ psi}$$

BUCKLING OF LEG ON ANGLE

$a/b = 6/3 = 2$

$K = 21.7$

$F_{b_{cr}} = KE\left(t/b\right)^2$

$F_{b_{cr}} = 21.7(10)^7\left(\frac{.25}{3.0}\right)^2$

$F_{b_{cr}} = 1,560,000$ psi

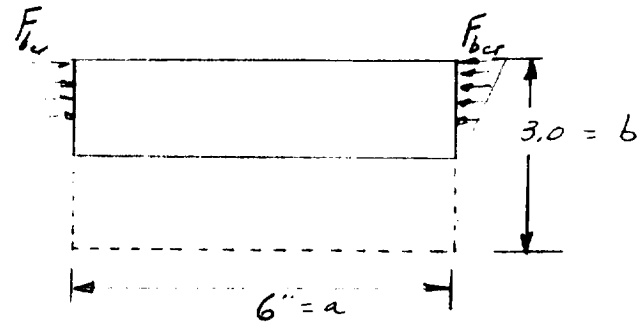

∴ BUCKLING NOT CRITICAL

MARIGIN OF SAFETY

$$M.S._{comp.} = \frac{64,000}{26,200} - 1 = \boxed{+1.44}$$

PREPARED BY RLM
CHECKED BY
REVISED BY

PAGE
REPORT NO.
DATE 4-10-64

DRAWING OR JOB TITLE	DRAWING NO. OR ITEM
APOLLO ACCESS CHAMBER	CHAMBER

ROLLER MOUNTING CHANNEL (COMPLEX 39)

STATIC CONDITION; PLATFORM EXTENDED 84 INCHES

TENSION TIE

SKETCH

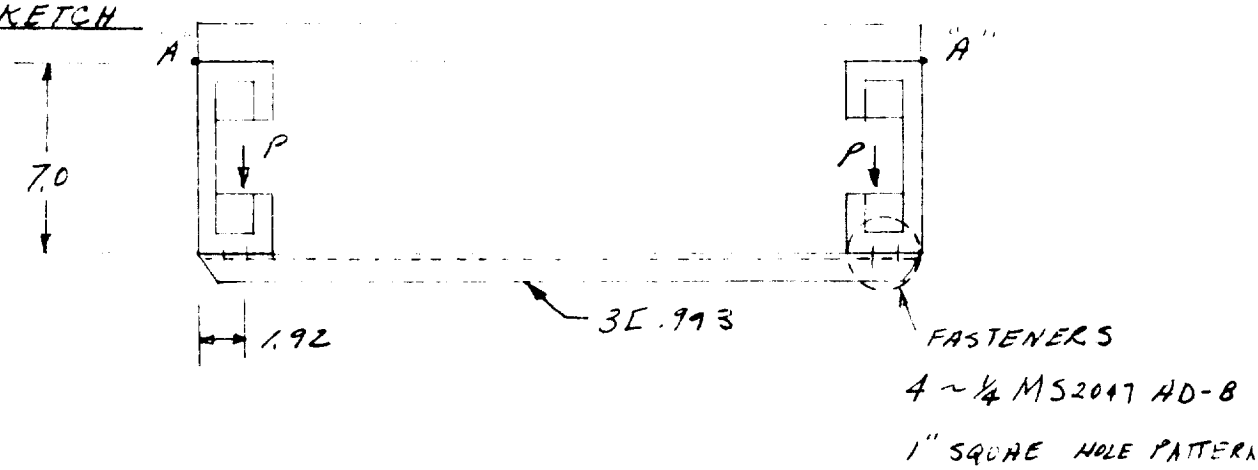

LOADS

ASSUME CHANNEL ROTATES ABOUT POINT "A"

$$P = \frac{17,043 + 4,695}{2} = 10,869 \text{ lbs.}$$

TENSION LOAD IN 3E.993

$$P_T = \frac{1.92(10,869)}{7.0} = 2,980 \text{ lbs.}$$

SHEAR IN FASTENERS

$$P_S = \frac{2980}{4} = 745 \text{ lbs.}$$

DEFLECTION OF 3E.993

$$\delta = \frac{PL}{AE} = \frac{2980(91)}{.845(10)^7} = .0321 \text{ in.}$$

PREPARED BY RLM
CHECKED BY
REVISED BY

PAGE 147
REPORT NO.
DATE 4-10-64

DRAWING OR JOB TITLE APOLLO ACCESS CHAMBER

DRAWING NO. OR ITEM CHAMBER

ROLLER MOUNTING CHANNEL (COMPLEX 39)

STATIC CONDITION ; PLATFORM EXTENDED 84 INCHES

STRESS

TENSION IN 3C.993

$$\sigma = P/A = \frac{2980}{.845} = 3,520 \text{ psi}$$

BEARING OF FASTENER ON WEB

$$A_{Br} = .25(.156) = .039 \text{ in.}^2$$

$$\sigma = \frac{P}{A} = \frac{745}{.039} = 19,100 \text{ psi.}$$

SHEAR ALLOWABLE OF FASTEAER

$$(P_s)_{AL} = .6(1,550) = 930 \text{ lbs.}$$

MARIGIN OF SAFETY

TENSION OF 3C.993

$$M.S. = \frac{64,000}{3,520} - 1 =$$ +LARGE

BEARING ON WED

$$M.S. = \frac{91,100}{19,100} - 1 =$$ +3.76

SHEAR OF FASTENERS

$$M.S. = \frac{930}{745} - 1 =$$ +.25

148
PREPARED BY R L M
CHECKED BY
REVISED BY

PAGE
REPORT NO.
DATE 5-4-64

DRAWING OR JOB TITLE	DRAWING NO. OR ITEM
APOLLO ACCESS CHAMBER	

CHAMBER FRAMES

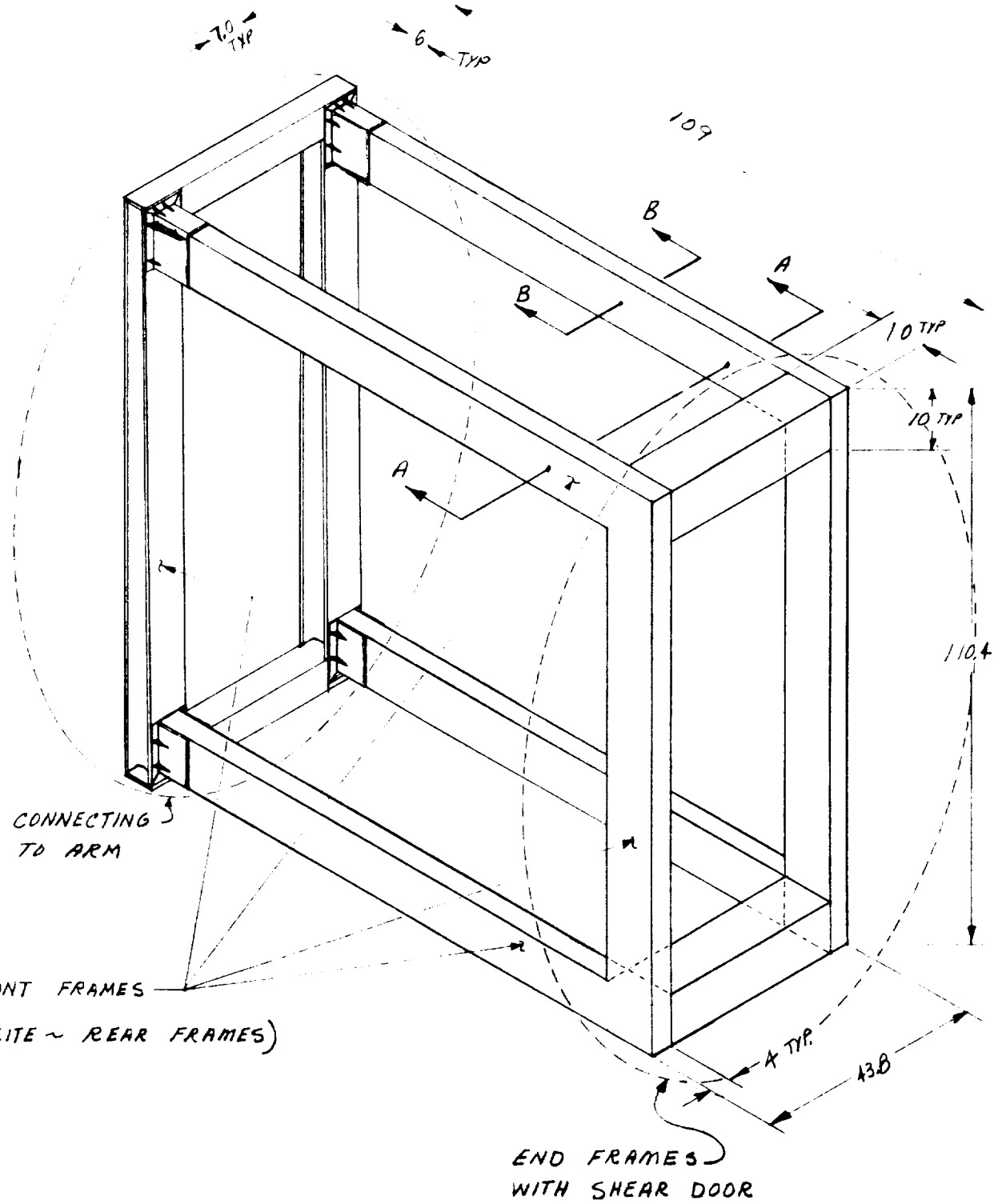

PREPARED BY RLM
CHECKED BY
REVISED BY

PAGE 149
REPORT NO.
DATE 5-6-64

DRAWING OR JOB TITLE APOLLO ACCESS CHAMBER

DRAWING NO. OR ITEM

SECTION PROPERTIES

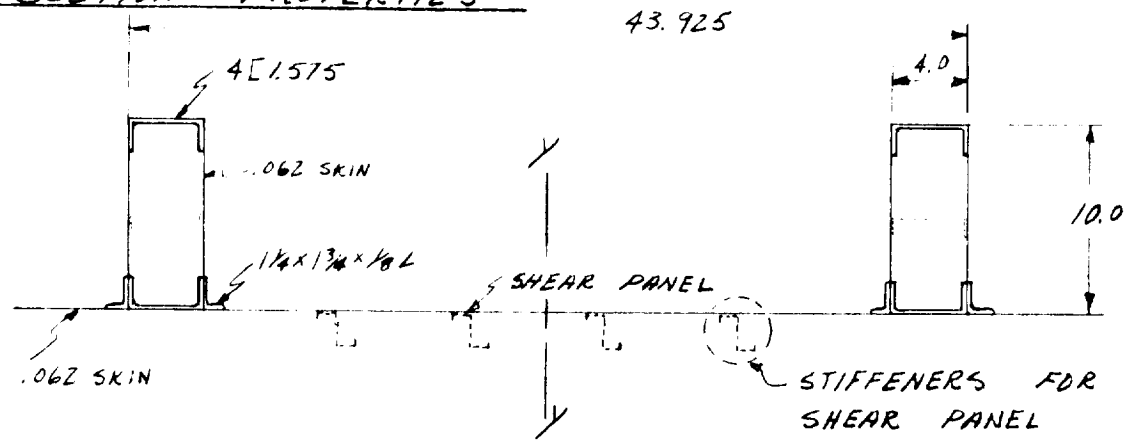

$$I_{yy} = 2(5.051)(19.9)^2 + 4(3.08) + 2.5(2)^2 + 4(.36)(2.362)^2 + 4(.046)$$

$$I_{yy} = 4{,}030 \text{ in.}^4$$

SECTION "A-A"

$$A = 2(1.339) + .72 + 1.25 + 6.5(.062) = 5.051 \text{ in.}^2$$

$$\bar{y} = 3.96 \text{ in.}$$

$$I_{xx} = 85.71 \text{ in.}^4$$

$$I_{yy} = 16.89 \text{ in.}^4$$

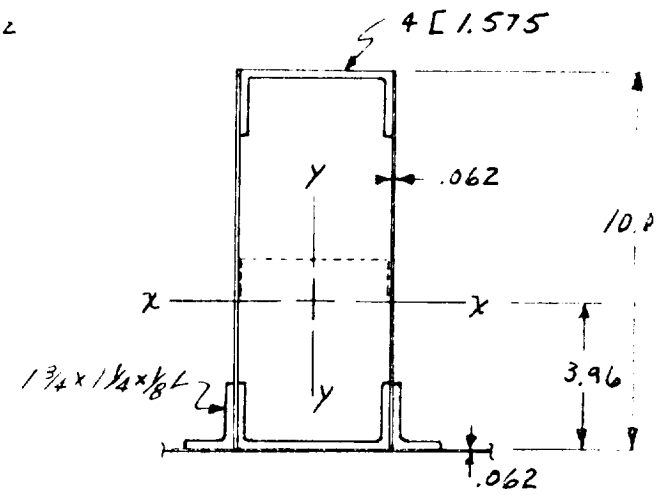

150

PREPARED BY RLM

CHECKED BY

REVISED BY

PAGE

REPORT NO.

DATE 3-25-64

DRAWING OR JOB TITLE	DRAWING NO. OR ITEM
APOLLO ACCESS CHAMBER	

FRAMES CONNECTING CHAMBER TO ARM

SKETCH

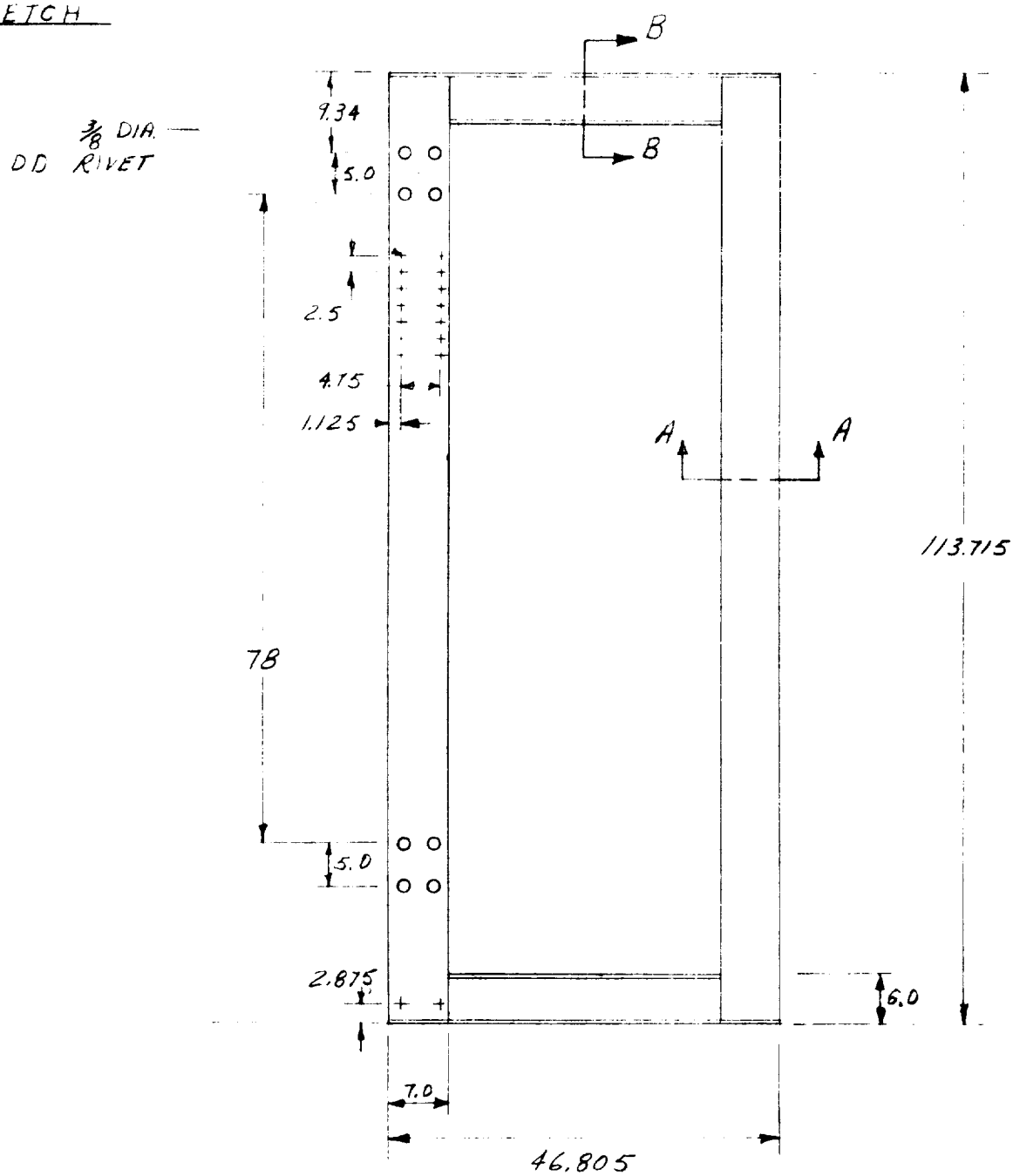

DRAWING OR JOB TITLE: APOLLO ACCESS CHAMBER

DRAWING NO. OR ITEM:

FRAMES CONNECTING CHAMBER TO ARM

SECTION PROPERTIES

SECTION "A-A"

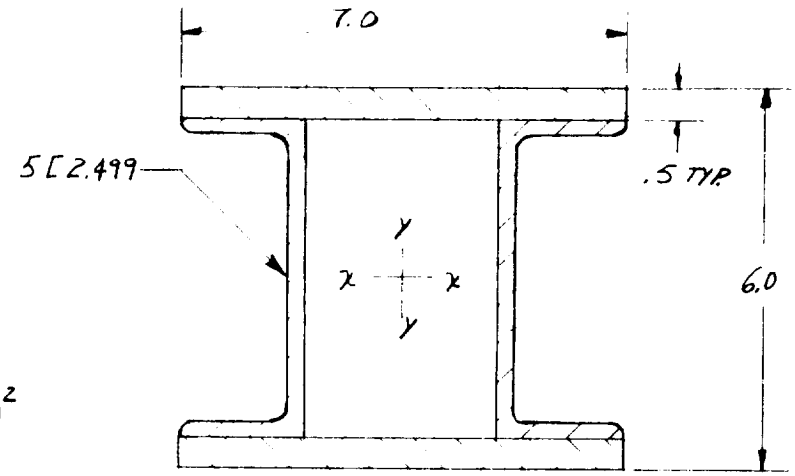

$$A = 2(2.125) + 7 = 11.25 \text{ in.}^2$$

$$I_{xx} = 2(7.384) + \frac{14(.5)^3}{12} + 1(7)(2.75)^2$$

$$I_{xx} = 67.9 \text{ in.}^4$$

$$I_{yy} = 2(.692) + \frac{1(7)^3}{12} + 2(2.125)(2.061)^2$$

$$I_{yy} = 47.3 \text{ in.}^4$$

SECTION "B-B"

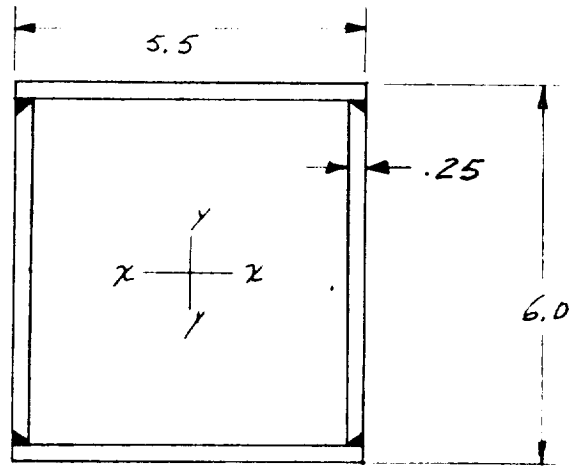

$$A = .25\left[2(5.5) + 2(5.5)\right] = 5.5 \text{ in.}^2$$

$$I_{xx} = \frac{.5(6)^3}{12} + \frac{11(.25)^3}{12} + .5(5.5)(2.875)^2$$

$$I_{xx} = 31.8 \text{ in.}^4$$

$$I_{yy} = \frac{.5(5.5)^3}{12} + \frac{12(.25)^3}{12} + .5(6)(2.625)^2$$

$$I_{yy} = 27.7 \text{ in.}^4$$

PREPARED BY RFM
CHECKED BY
REVISED BY

PAGE
REPORT NO.
DATE 5-5-64

DRAWING OR JOB TITLE APOLLO ACCESS CHAMBER

DRAWING NO. OR ITEM

CHAMBER FRAMES

END FRAMES WITH SHEAR DOOR

ASSUME FRAMES AND SHEAR DOOR ACT AS A RIGID JOINT

FOR SMALL ROTATIONS

$\Delta H = 49.16\,\theta$

$\Delta V = 19.9\,\theta$

$\Delta V = .405\,\Delta H$

$\Delta H = 2.47\,\Delta V$

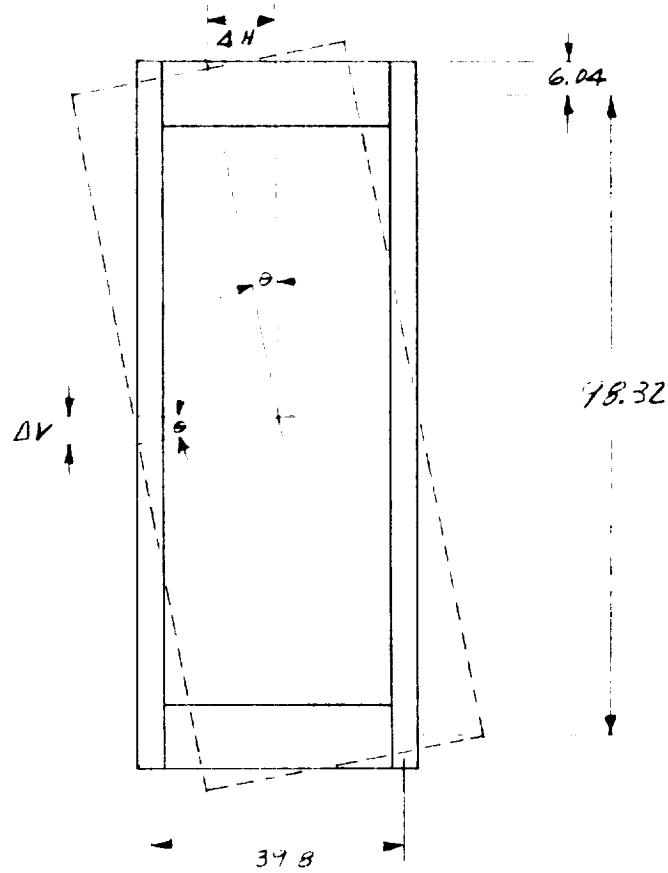

LOADS

DUE TO FRAME LOADS F_1 AND F_2. REF. PG. _____

$T = 22{,}751\,(19.9) + 14{,}874\,(19.9)$
$= 750{,}000$ in.-lbs.

$V = 22{,}751 - 14{,}874 = 7{,}877$ lbs.

DRAWING OR JOB TITLE: APOLLO ACCESS CHAMBER

DRAWING NO. OR ITEM:

TOP AND BOTTOM SHEAR PANEL WITH FRAMES, ACTING AS A DEEP BEAM

$$\Delta H = \frac{P_1 L^3}{3EI} + \frac{P_1 L}{A_w G}$$

$$\Delta H = P_1 \left[\frac{(98)^3}{3(10)^7 4030} + \frac{98}{.062(35.8)3.9(10)^6} \right]$$

$$\Delta H = 19.1 (10)^{-6} P_1$$

$$\Delta V = .405 \Delta H = 7.74 (10)^{-6} P_1$$

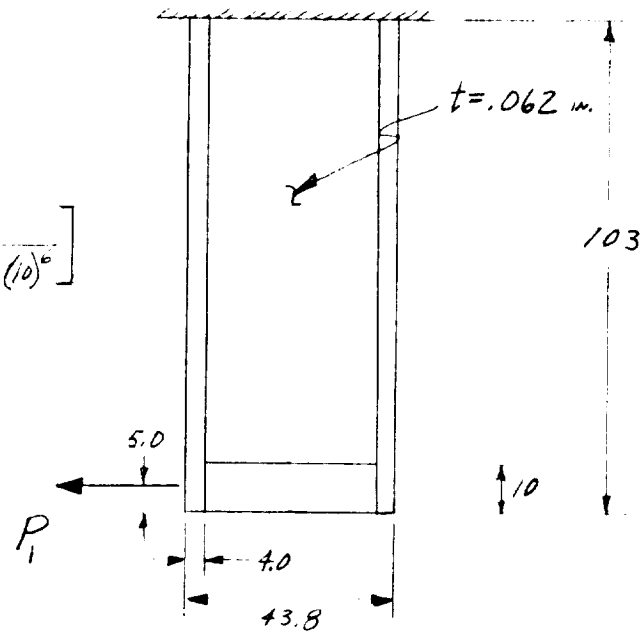

FRONT OR REAR FRAMES

$I_1 = 85.71$ in.^{4}

$I = 67.9$ in.^{4}

$h = 99.96$ in.

$\ell = 98.32$ in.

$$\Delta_V = \frac{P_2 h^2}{2E} \left\{ \frac{h}{3I_1} + \frac{\ell}{6I} - \left(\frac{h}{2I_1} + \frac{\ell}{6I} \right) \left[\left(1 + \frac{3hI}{\ell I_1} \right) \frac{1}{1 + \frac{I}{I_1} + 6 \frac{h}{\ell} \frac{I}{I_1}} \right] \right\}$$

$$\Delta_V = 102 (10)^{-6} P_2$$

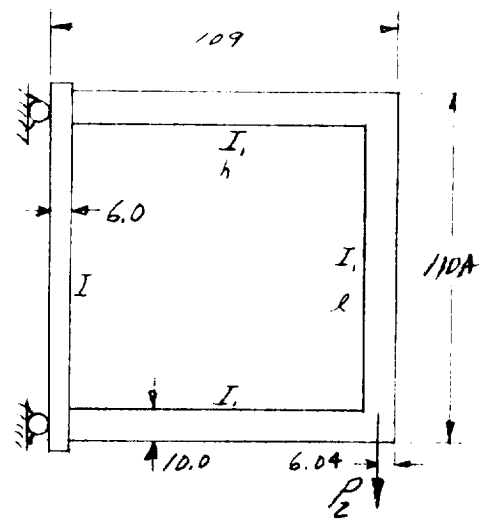

PREPARED BY RLM
CHECKED BY
REVISED BY

PAGE
REPORT NO.
DATE 5-6-64

DRAWING OR JOB TITLE APOLLO ACCESS CHAMBER	DRAWING NO. OR ITEM

TORSIONAL LOAD ON END FRAMES

$\Delta V = 7.74\,(10)^{-6}\,P_1$

$\Delta V = 102\,(10)^{-6}\,P_2$

$P_1 = \frac{102}{7.74}\,P_2 = 13.2\,P_2$

$T = 750{,}000$ in.-lbs. REF P_6 ____

$T = 39.8\,P_2 + 100.4\,P_1$

$750{,}000 = 39.8\,P_2 + 100.4\,(13.2)\,P_2$

$P_2 = 550$ lbs.

$P_1 = \frac{750{,}000 - 39.8\,(550)}{100.4}$

$P_1 = 7{,}250$ lbs.

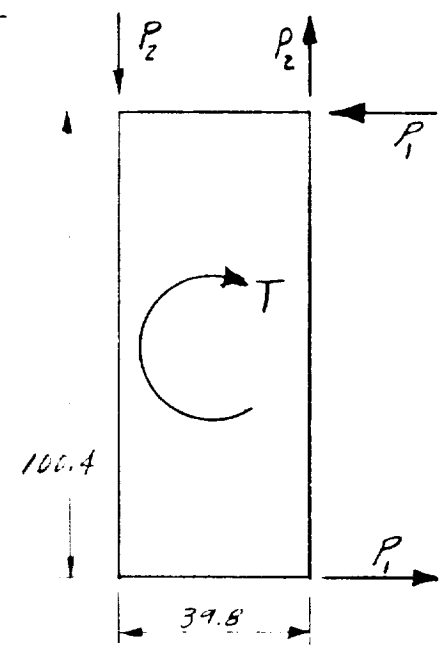

VERTICAL SHEAR LOAD ON END FRAMES

$V = 7{,}877$ lbs.

$V/2 = 3{,}938.5$ lbs.

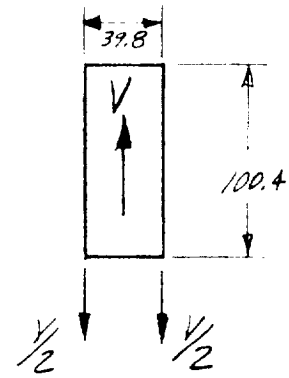

PREPARED BY R.L.M
CHECKED BY
REVISED BY

PAGE 155
REPORT NO.
DATE 5-6-64

DRAWING OR JOB TITLE APOLLO ACCESS CHAMBER	DRAWING NO. OR ITEM

LOADS ON END FRAMES DUE TO "V" AND "T"

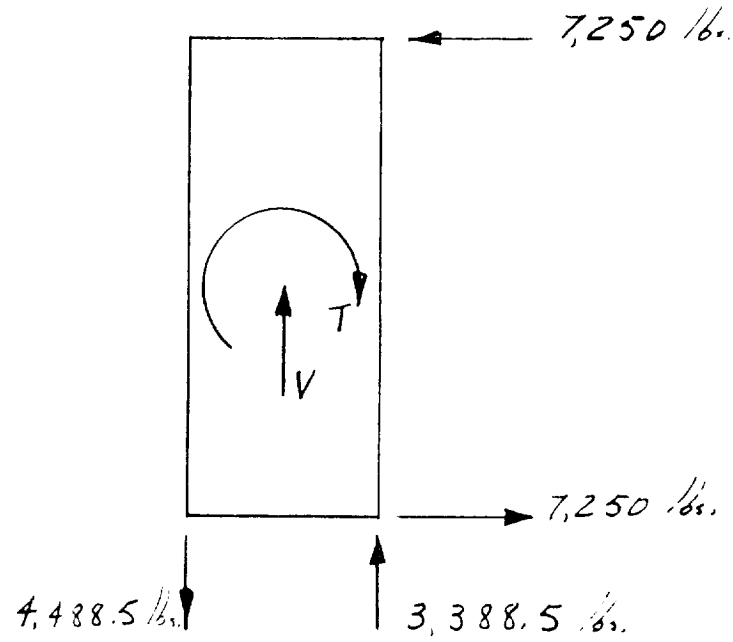

ASSUME

LOAD OF 7250 lbs IS CARRIED BY TOP OR BOTTOM SHEAR PANEL AND FRAMES

LOAD OF 4488.5 lbs IS CARRIED BY FRONT FRAMES

LOAD OF 3,388.5 lbs IS CARRIED BY REAR FRAMES

AXIAL LOAD IN "4×10" BOX FRAME DUE TO SHEAR LOAD OF 7,250 lbs @ THE CONNECTION OF THE "4×10" BOX FRAME TO THE FRAMES CONNECTING CHAMBER TO ARM.

$$P = \frac{7250(98)}{39.8} = 17{,}850 \text{ lbs.}$$

PREPARED BY RZM
CHECKED BY
REVISED BY

PAGE
REPORT NO.
DATE 5-6-64

DRAWING OR JOB TITLE APOLLO ACCESS CHAMBER

DRAWING NO. OR ITEM

LOADS IN FRONT AND REAR FRAMES DUE TO LOAD OF 4,488.5 lbs

$I = 67.9$ in.^{4}

$I_1 = 85.71$ in.^{4}

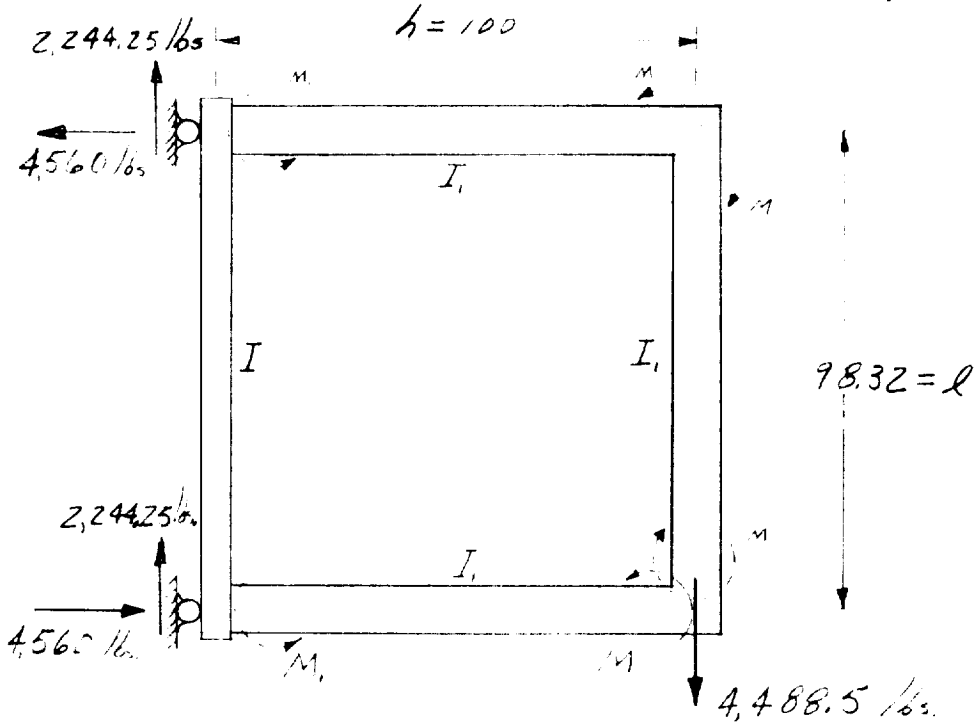

$$M = \frac{Pl}{2}\left(1 + \frac{3h}{l}\frac{I}{I_1}\right)\frac{1}{1 + \frac{I}{I_1} + 6\frac{h}{l}\frac{I}{I_1}}$$

$M = 115{,}800$ in.-lbs.

$M_1 = 224{,}425 - 115{,}800 = 108{,}625$ in.-lbs.

PREPARED BY RLM
CHECKED BY
REVISED BY

PAGE 157
REPORT NO.
DATE 5-7-64

DRAWING OR JOB TITLE: APOLLO ACCESS CHAMBER

DRAWING NO. OR ITEM

FRONT FRAMES

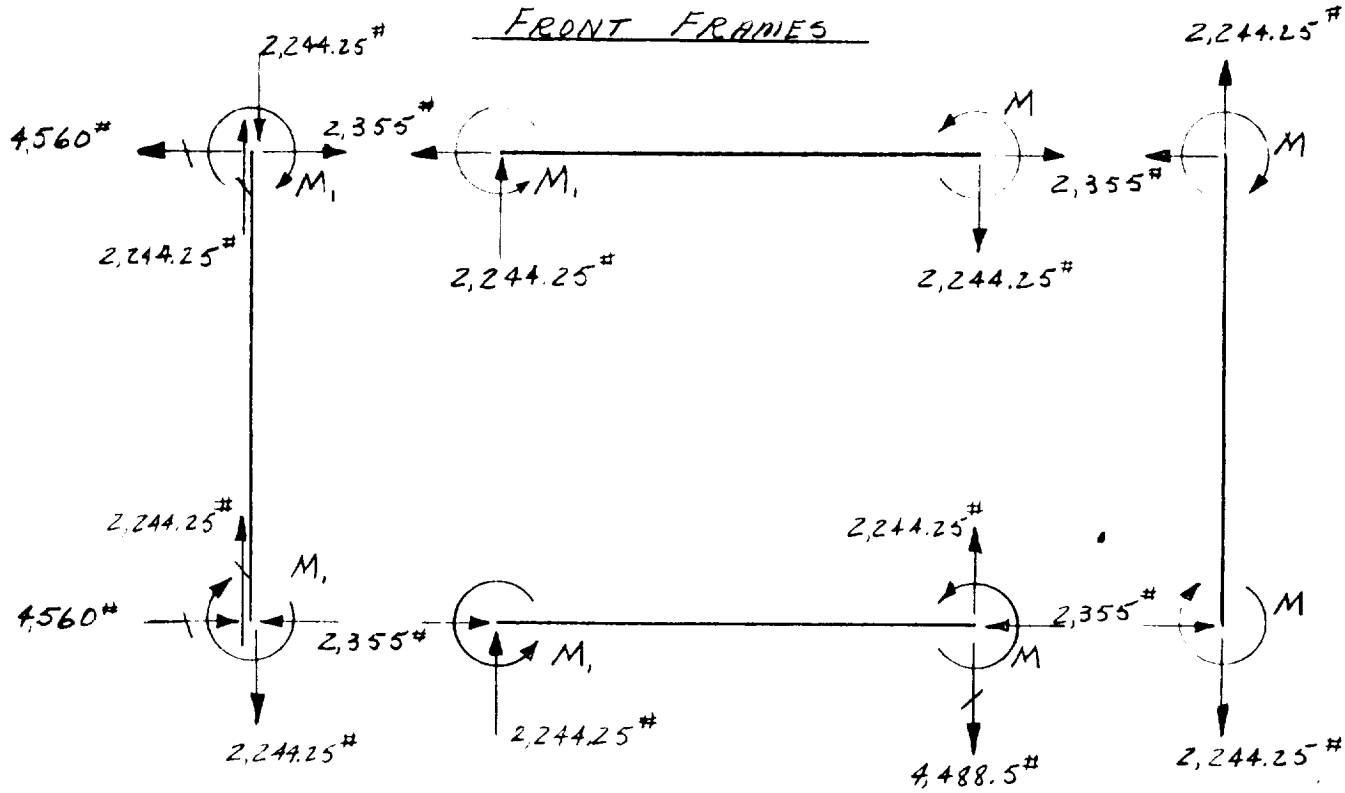

$M = 115,800$ in.-lbs
$M_1 = 108,625$ in.-lbs.

SUPERIMPOSE LOADS ON FRONT FRAMES DUE TO LOAD OF 4,488.5 lbs. AND LOADS INDUCED FROM TOP AND BOTTOM SHEAR PANELS.

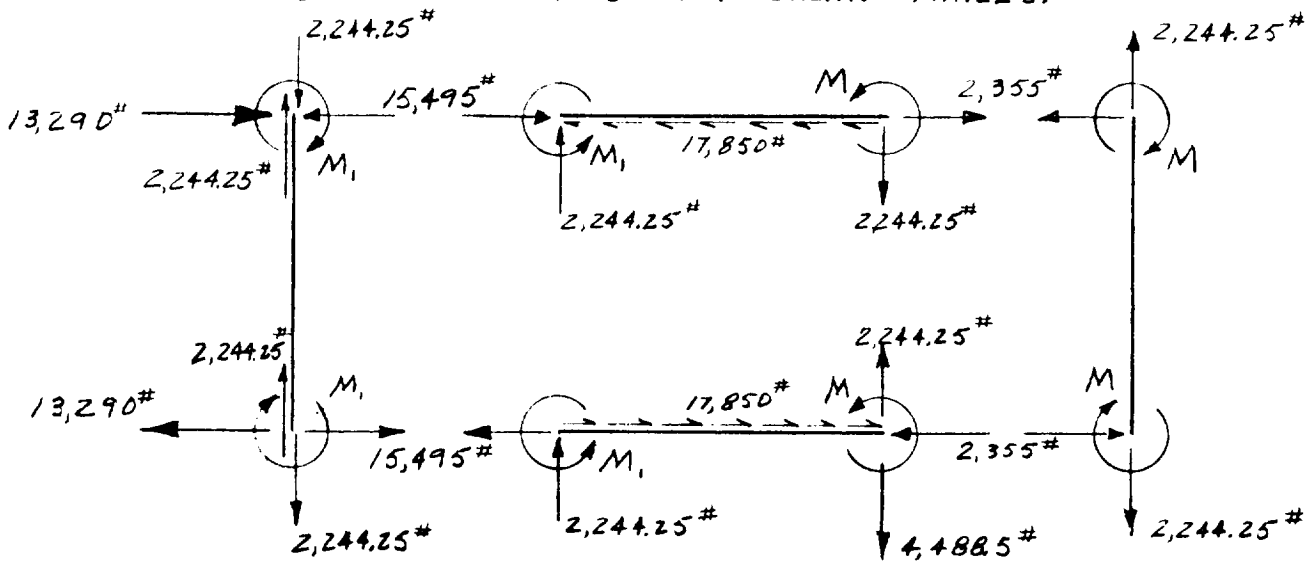

PREPARED BY RZM
CHECKED BY
REVISED BY

PAGE
REPORT NO.
DATE 5-7-64

DRAWING OR JOB TITLE APOLLO ACCESS CHAMBER

DRAWING NO. OR ITEM

REAR FRAMES

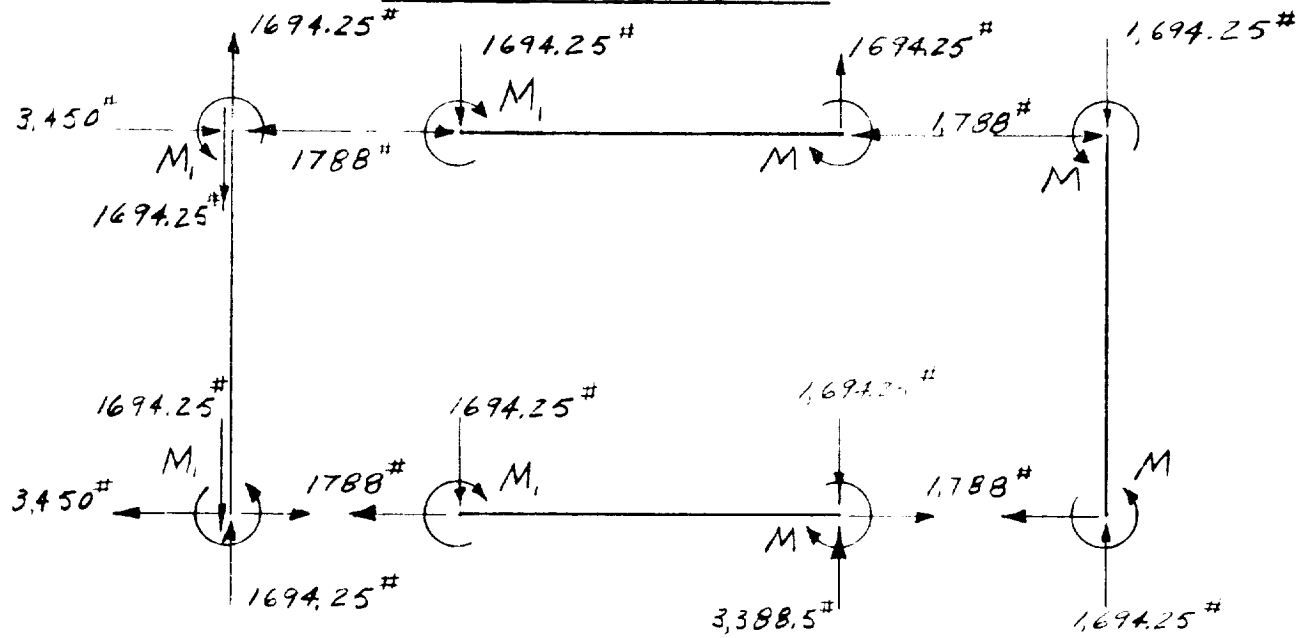

$M = 87,500$ in-lbs

$M_1 = 82,000$ in-lbs

SUPERIMPOSE LOADS ON REAR FRAMES DUE TO LOAD OF 3,388.5 lbs. AND LOADS INDUCED FROM TOP AND BOTTOM SHEAR PANELS.

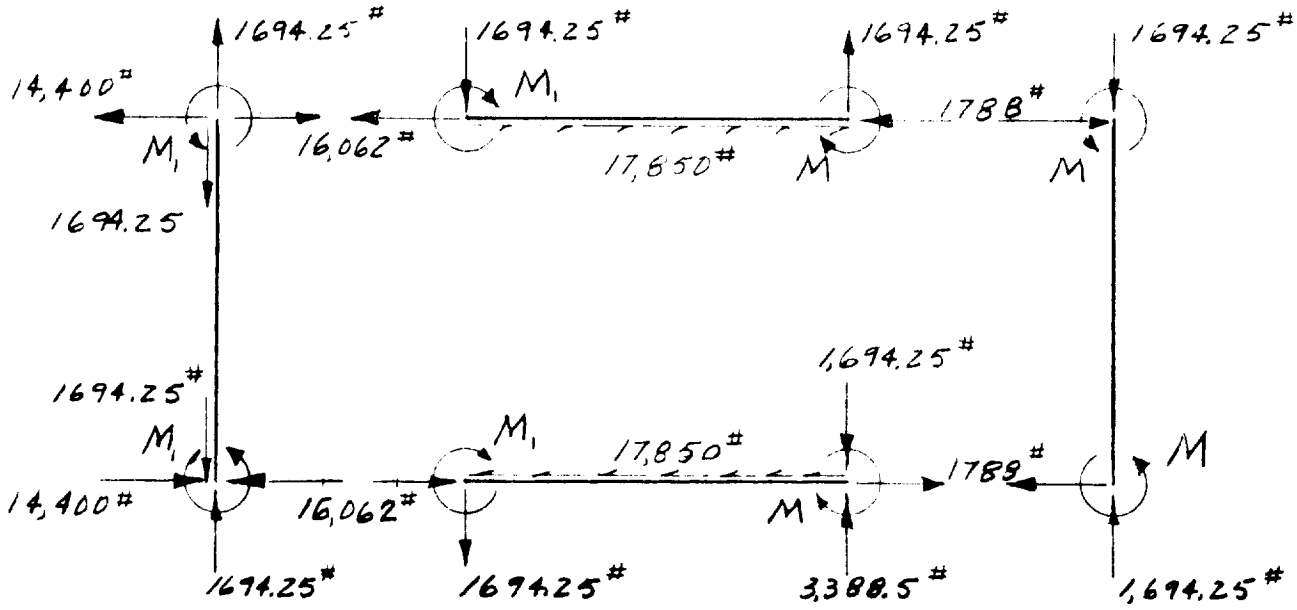

PREPARED BY RZM
CHECKED BY
REVISED BY

PAGE 159
REPORT NO.
DATE 5-7-64

DRAWING OR JOB TITLE APOLLO ACCESS CHAMBER

DRAWING NO. OR ITEM

FRONT FRAME JOINT

.062 in. SKIN ON BOTH SIDES OF FRAME

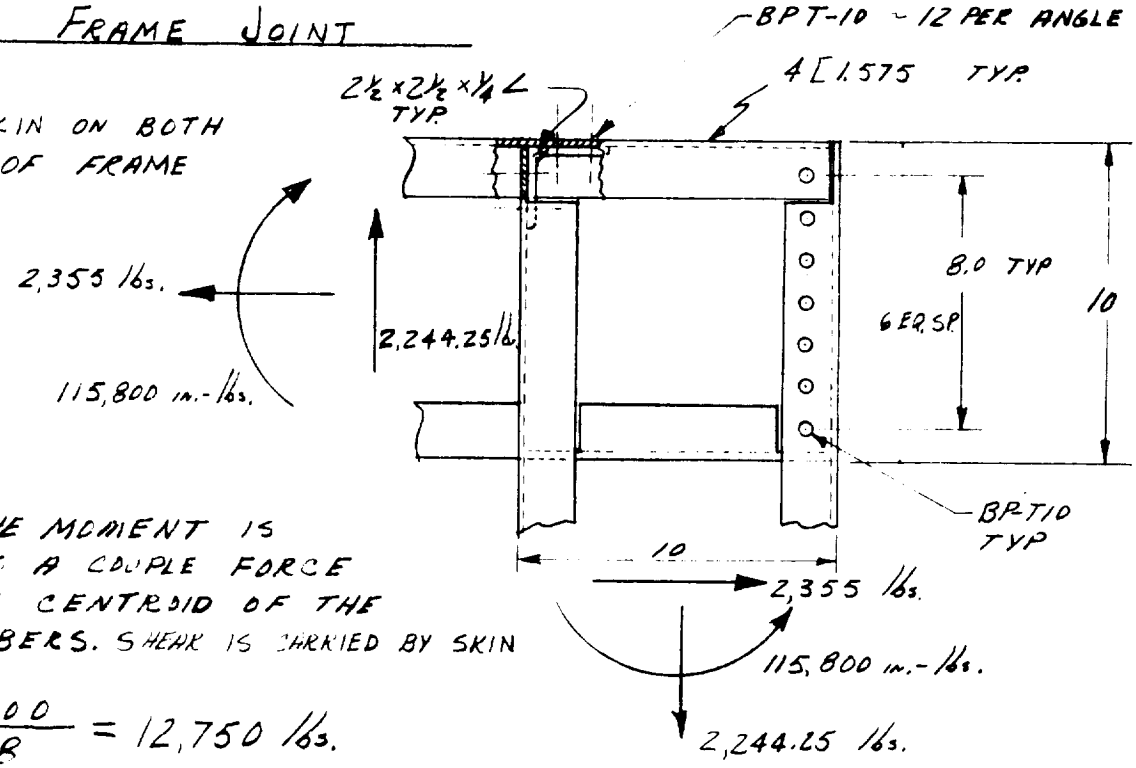

ASSUME THE MOMENT IS CARRIED AS A COUPLE FORCE ABOUT THE CENTROID OF THE CHP MEMBERS. SHEAR IS CARRIED BY SKIN

$$P_c = \frac{115,800}{9.078} = 12,750 \text{ lbs.}$$

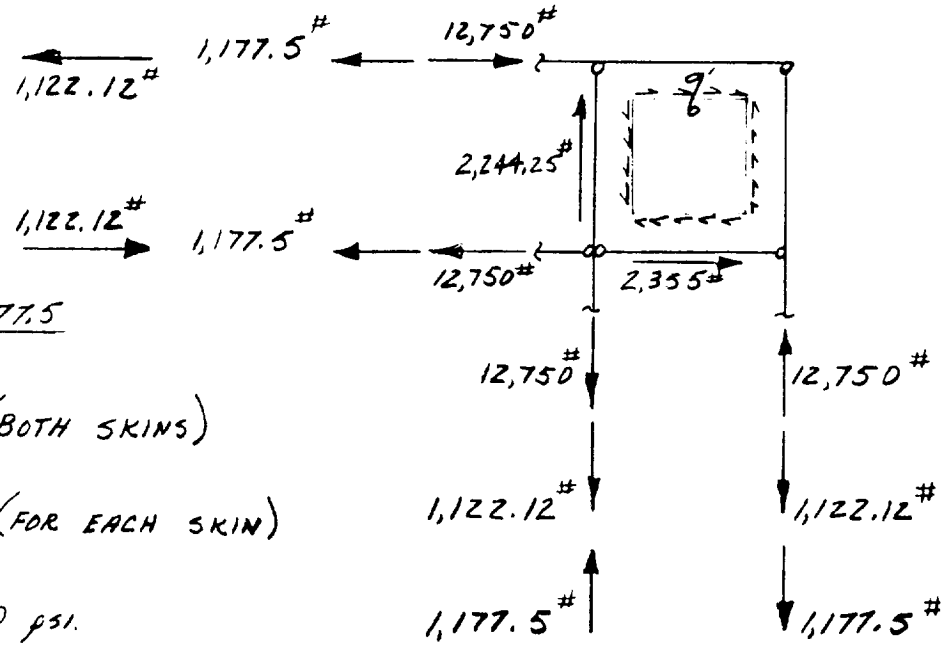

$$q' = \frac{12,750 - 1,122.12 - 1,177.5}{9.078}$$

$q' = 1,150$ lbs/in (BOTH SKINS)

$q = 575$ lbs/in (FOR EACH SKIN)

$$\tau = \frac{575}{.0625} = 9,200 \text{ psi.}$$

PREPARED BY RLM
CHECKED BY
REVISED BY

PAGE
REPORT NO.
DATE 5-8-64

DRAWING OR JOB TITLE APOLLO ACCESS CHAMBER | DRAWING NO. OR ITEM

FRONT FRAME JOINT

CRITICAL BUCKLING STRESS OF SKIN IN JOINT

ASSUME STIFFENER BREAKS SPAN

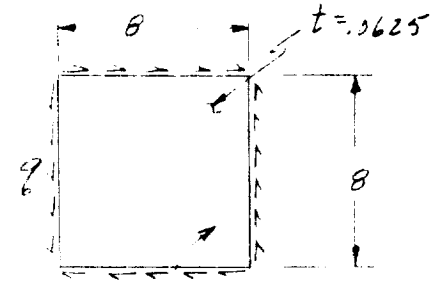

STIFFENER

$a/b = 2 \quad , K = 5.7$

$F_{S_{cr}} = KE\left(\frac{t}{b}\right)^2 = 5.7(10)^7\left(\frac{.0625}{4}\right)^2$

$F_{S_{cr}} = 13{,}900$ psi.

SHEAR IN BPT-10 FASTENER

$P_S = 575\left(\frac{4}{3}\right) = 767$ lbs.

$(P_S)_{AL} = 6{,}000$ lbs

BEARING ON SKIN

$\sigma_{B_r} = \frac{767}{.0625(.3125)} = 39{,}200$ psi

$(\sigma_{B_r})_{AL} = 107{,}000$ psi.

MARGIN OF SAFETY

SHEAR IN SKIN

$M.S. = \frac{13{,}900}{9{,}200} - 1 =$ +.51

SHEAR ON FASTENER

$M.S. = \frac{6{,}000}{767} - 1 =$ +LARGE

BEARING ON SKIN

$M.S. = \frac{107{,}000}{39{,}200} - 1 =$ +1.73

PREPARED BY RZM
CHECKED BY
REVISED BY

PAGE 10
REPORT NO.
DATE 5-8-64

DRAWING OR JOB TITLE APOLLO ACCESS CHAMBER

DRAWING NO. OR ITEM

END FRAME PORTION OF FRONT FRAMES

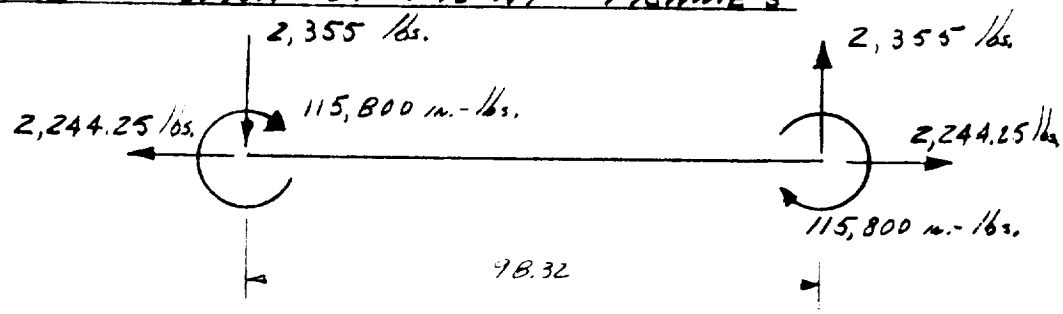

$$\sigma_T = \frac{Mc}{I} + \frac{P}{A} = \frac{115,800(6.04)}{85.71} + \frac{2,244.25}{5.051}$$

$$\sigma_T = 8,685 \text{ psi}$$

SKIN SHEAR

$$\tau = \frac{2,355}{9.078(.125)} = 2,075 \text{ psi.}$$

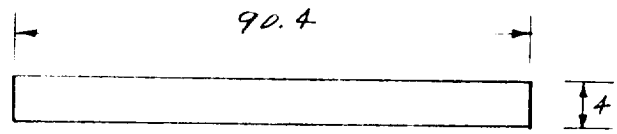

$$F_{S_{cr}} = 4.82(10)^7\left(\frac{.0625}{4}\right)^2$$

$$F_{S_{cr}} = 11,720 \text{ psi.}$$

$$a/b = 90.4/4 = 22.6$$

$$K = 4.82$$

SHEAR IN 9SP-B-R6

$$P_s = \frac{2,355}{2(9.078)}(1.5) = 195 \text{ lbs.}$$

$$(P_s)_{AL} = 1200(.6) = 720 \text{ lbs.}$$

BEARING ON SKIN

$$\sigma_{B_r} = \frac{195}{.1875(.0625)} = 16,650 \text{ psi}$$

PREPARED BY RZM
CHECKED BY
REVISED BY

PAGE
REPORT NO.
DATE 5-8-64

DRAWING OR JOB TITLE APOLLO ACCESS CHAMBER

DRAWING NO. OR ITEM

END FRAME PORTION OF FRONT FRAMES

CHECK OF SKIN STIFFENER

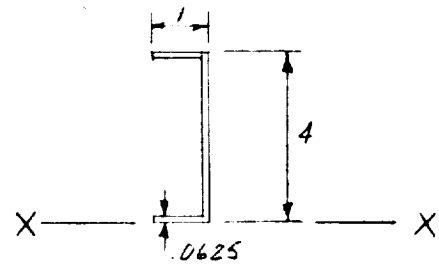

$$I_{xx} = \frac{.0625(4)^3}{12} + 4(.0625)(2)^2 + .9375(.0625)(4)^2$$

$$I_{xx} = 2.271$$

$$I/At^3 = \frac{2.271}{90.4(.0625)^3} = 103.2$$

$$\left(I/At^3\right)_{REQ'D.} = 2.56\left(\frac{90.4}{4} - 1.6\right) = 53.7$$

MARIGIN OF SAFETY

TENSILE STRESS IN CHANNEL PORTION OF FRAME

$$M.S. = \frac{64,000}{8685} - 1 = \quad +LARGE$$

SKIN SHEAR

$$M.S. = \frac{11,720}{2,075} - 1 = \quad +LARGE$$

SHEAR IN FASTENER

$$M.S. = \frac{720}{195} - 1 = \quad +2.69$$

BEARING ON SKIN

$$M.S. = \frac{107,000}{16,650} - 1 = \quad +LARGE$$

SKIN STIFFENER

$$M.S. = \frac{103.2}{53.7} - 1 = \quad +.92$$

LOWER CONNECTION OF "4×10" BOX FRAME ON FRONT FRAME TO FRAME CONNECTING CHAMBER TO ARM.

"4×10" BOX FRAME

$M = 108,625$ in.-lbs.

$P_T = 15,495$ lbs.

$$\sigma_T = \frac{Mc}{I} + \frac{P}{A} = \frac{108,625(3.96)}{85.71} + \frac{15,495}{5.051}$$

$\sigma_T = 8,080$ psi.

BRACKET CONNECTION, WELDMENT ~ T-1A STEEL ($F_{t_y} = 100,000$ psi)

ASSUME MOMENT ENTERS THE BRACKET AS A COUPLE FORCE ABOUT THE CENTROID OF THE CHANNELS

$$P_c = \frac{108,625}{9.078} = 11,950 \text{ lbs.}$$

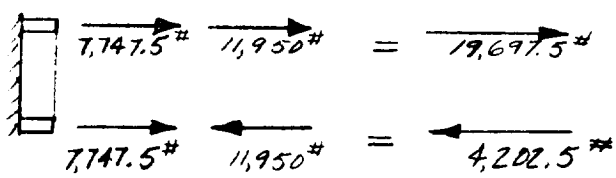

ASSUME THE TENSION IS CARRIED BY THE TOP 4 BOLTS

BOLT ~ MS-90727 ($F_{t_y} = 150,000$ psi)

$P_{t_y} = 14,000$ lbs.

$$\text{LOAD/BOLT} = \frac{19,697.5}{4} = 4,920 \text{ lbs.}$$

BENDING OF THE BRACKET

$$M = \frac{P}{2r} = \frac{4,920}{2r} = 783 \text{ in.-lbs/in}$$

$$\sigma_B = \frac{6M}{t^2} = \frac{6(783)}{(.25)^2} = 75,000 \text{ psi.}$$

PREPARED BY RLM
CHECKED BY
REVISED BY

PAGE
REPORT NO.
DATE 5-8-64

DRAWING OR JOB TITLE	DRAWING NO. OR ITEM
APOLLO ACCESS CHAMBER	75M12456

BRACKET CONNECTION, WELDMENT

SHEAR ON BPT-12 FASTENERS CONNECTING CHANNELS OF THE 4×10" BOX TO THE BRACKET

$$P_s = \frac{19,697.5}{6} = 3,280 \text{ lbs.}$$

$$(P_s)_{AL} = 6,360 \text{ lbs.}$$

BEARING OF FASTENER ON CHANNEL

$$\sigma_{Br} = \frac{3,280}{.375(.188)} = 46,500 \text{ psi.}$$

MARIGIN OF SAFETY

TENSILE STRESS IN CHANNEL OF BOX

$$M.S. = \frac{64,000}{8,080} - 1 = \text{+LARGE}$$

TENSION IN MS-90727 BOLT

$$M.S. = \frac{14000}{4,920} - 1 = +1.85$$

BENDING IN BRACKET

$$M.S. = \frac{100,000}{75,000} - 1 = +.33$$

SHEAR IN BPT-12 FASTENERS

$$M.S. = \frac{6,360}{3,280} - 1 = +.94$$

BEARING ON CHANNEL

$$M.S. = \frac{98,000}{46,500} - 1 = 1.11$$

DRAWING OR JOB TITLE	DRAWING NO. OR ITEM
APOLLO ACCESS CHAMBER	75M12456

UPPER CONNECTION OF "4×10" BOX FRAME ON REAR FRAME TO FRAME CONNECTING CHAMBER TO ARM

BRACKET CONNECTION, WELDMENT ~ T-1A STEEL (F_{ty} = 100,000 psi)

ASSUME MOMENT ENTERS THE BRACKET AS A COUPLE FORCE ABOUT THE CENTROID OF THE CHANNELS

$M = 82,000$ in.-lbs.

$P_T = 16,062$ lbs.

$$P_c = \frac{82,000}{9.078} = 9,040 \text{ lbs}$$

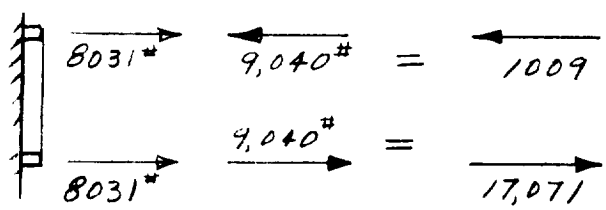

ASSUME THE TENSION IS CARRIED BY THE BOTTOM 4 FASTENERS

FASTENER ~ BPT-12

$P_{ty} = 6,200$ lbs.

$$\text{LOAD/FASTENER} = \frac{17,071}{4} = 4,260 \text{ lbs.}$$

BENDING OF THE BRACKET

$$M = \frac{P}{2\pi} = \frac{4260}{2\pi} = 678 \text{ in.-lbs/in}$$

$$\sigma_B = \frac{6M}{t^2} = \frac{6(678)}{(.25)^2} = 65,000 \text{ psi.}$$

PREPARED BY RZM
CHECKED BY
REVISED BY

PAGE
REPORT NO.
DATE 5-8-64

DRAWING OR JOB TITLE	DRAWING NO. OR ITEM
APOLLO ACCESS CHAMBER	75 M12456

BRACKET CONNECTION, WELDMENT

SHEAR ON BPT-12 FASTENERS CONNECTING CHANNELS OF THE "4 x 10" BOX TO THE BRACKET

$$P_s = \frac{16,062}{6} = 2,675 \text{ lbs.}$$

$$(P_s)_{AL} = 6,360 \text{ lbs.}$$

BEARING OF FASTENER ON CHANNEL

$$\sigma_{Br} = \frac{2675}{.375(.188)} = 37,600 \text{ psi}$$

MARIGIN OF SAFETY

TENSION IN BPT-2

$$M.S. = \frac{6,200}{4,260} - 1 = +.45$$

BENDING OF THE BRACKET

$$M.S. = \frac{100,000}{65,000} - 1 = +.54$$

SHEAR IN BPT-12

$$M.S. = \frac{6,360}{2,675} - 1 = +1.38$$

BEARING ON CHANNEL

$$M.S. = \frac{98,000}{37,600} - 1 = +1.60$$

PREPARED BY RLM
CHECKED BY
REVISED BY

PAGE 167
REPORT NO.
DATE 5-8-64

DRAWING OR JOB TITLE	DRAWING NO. OR ITEM
APOLLO ACCESS CHAMBER	

FRAMES CONNECTING CHAMBER TO ARM

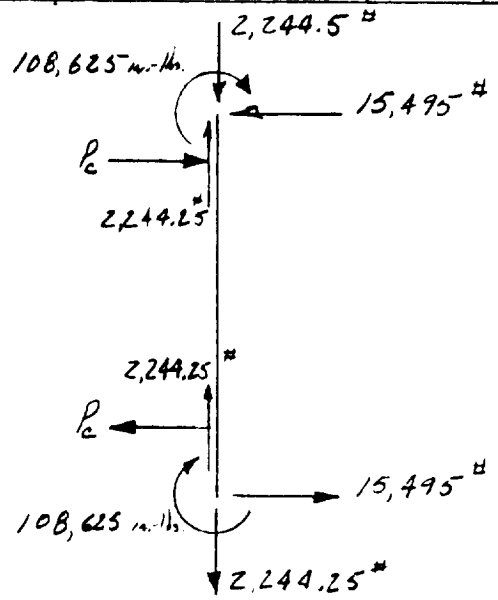

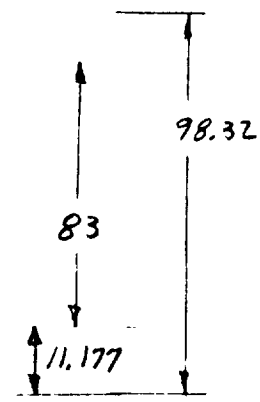

$$P_c = \frac{13290(98.32)}{83}$$

$$P_c = 15{,}710^{\#}$$

$$\sigma_T = \frac{Mc}{I} + \frac{P}{A} = \frac{108{,}625(3)}{47.3} + \frac{2244.25}{11.25}$$

$$\sigma_T = 7{,}090 \text{ psi.}$$

MATERIAL

6061-T6 (WELDED)

$$F_{ty} = 20{,}000 \text{ psi}$$

MARGIN OF SAFETY

$$M.S. = \frac{20{,}000}{7{,}090} - 1 = \qquad +1.82$$

PREPARED BY RLM
CHECKED BY
REVISED BY

PAGE
REPORT NO.
DATE 5-11-64

DRAWING OR JOB TITLE APOLLO ACCESS CHAMBER	DRAWING NO. OR ITEM

FRAMES CONNECTING CHAMBER TO ARM

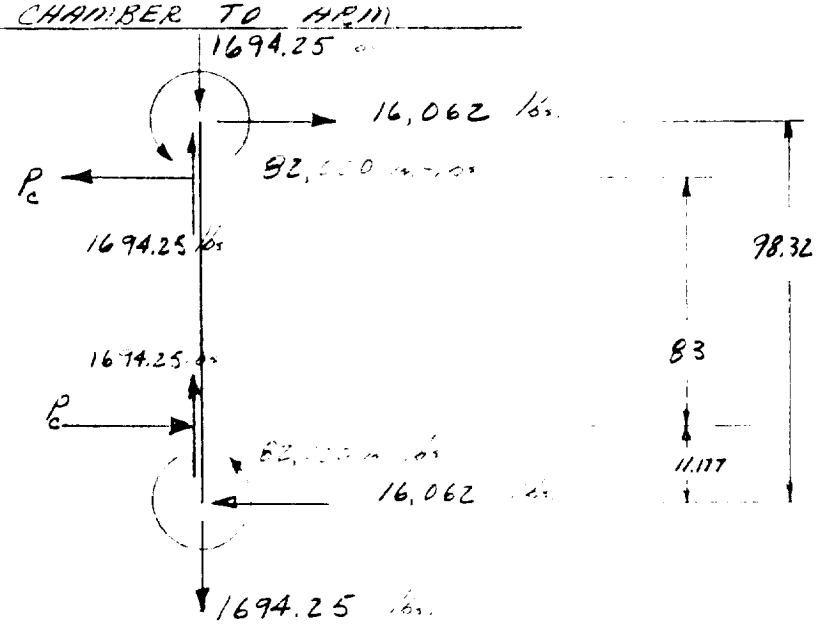

$$P_c = \frac{14,400\,(98.32)}{83}$$

$$P_c = 17,060 \text{ lbs.}$$

SHEAR ON 3/8 DD RIVETS

$$\tau = \frac{V}{bI}\int y\,dA$$

$$q = \frac{V}{I}\int y\,dA = \frac{16,062}{67.9}(3.5)(2.75) = 2,275 \text{ lbs/in.}$$

RIVET SPACING = 2.5 in.

LOAD PER RIVET

$$P_s = \frac{2.5}{2}(2,275) = 2,840 \text{ lbs.}$$

$$(P_{s_{MD}})_{AL} = 3.800 \text{ lbs.}$$

MARGIN OF SAFETY

$$M.S. = \frac{3800}{2840} - 1 = \boxed{+.34}$$

DRAWING OR JOB TITLE APOLLO ACCESS CHAMBER

DRAWING NO. OR ITEM

TOP SHEAR PANEL

$$\tau = \frac{7250}{38.9(.0625)} = 2,980 \text{ psi.}$$

$$q = 186 \text{ lbs/in.}$$

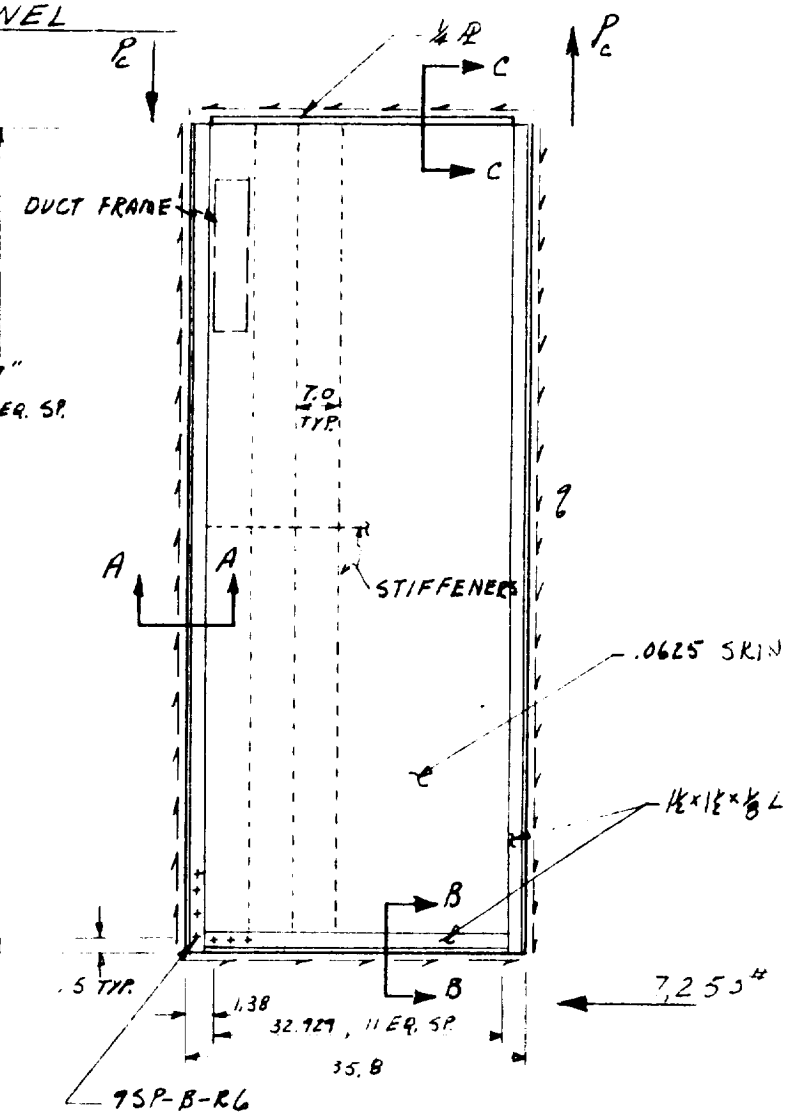

CRITICAL SHEAR STRESS OF SKIN

MAX $b = 7.0$ in

$$a/b = \frac{46}{7} = 6.56$$

$$\therefore K = 4.8$$

$$F_{s_{cr}} = 4.8(10)^7\left(\frac{.0625}{7}\right)^2$$

$$F_{s_{cr}} = 3,830 \text{ psi.}$$

STABILITY OF STIFFENER

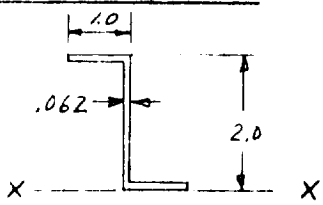

$$I_{xx} = .3861 \text{ in.}^4$$

$$(I/bt^3) = \frac{.3861}{46(.0625)^3} = 34.4$$

$$(I/bt^3)_{REQ'D.} = 2.56\left(\frac{b}{a} - 1.6\right) = 2.56\left(\frac{46}{7} - 1.6\right)$$

$$= 12.7$$

170

PREPARED BY RZM

CHECKED BY

REVISED BY

PAGE

REPORT NO.

DATE 5-1-64

DRAWING OR JOB TITLE APOLLO ACCESS CHAMBER	DRAWING NO. OR ITEM

TOP SHEAR PANEL

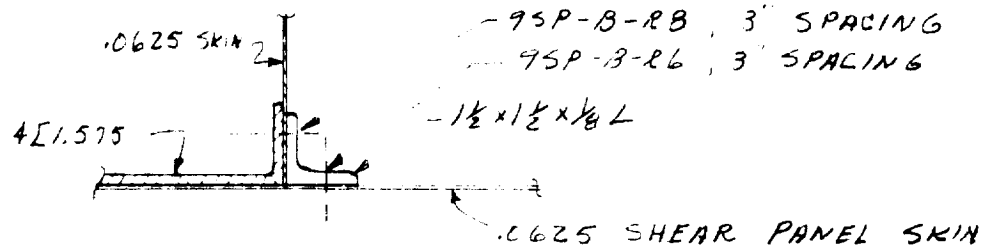

SECTION "A-A"

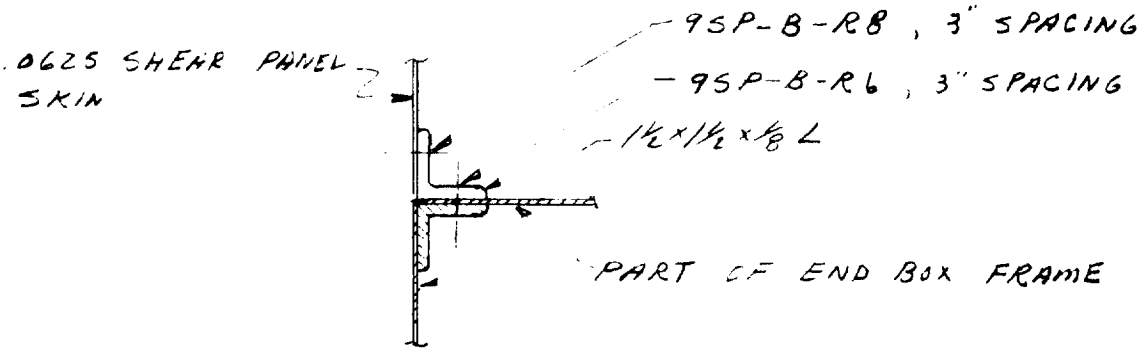

SECTION "B-B"

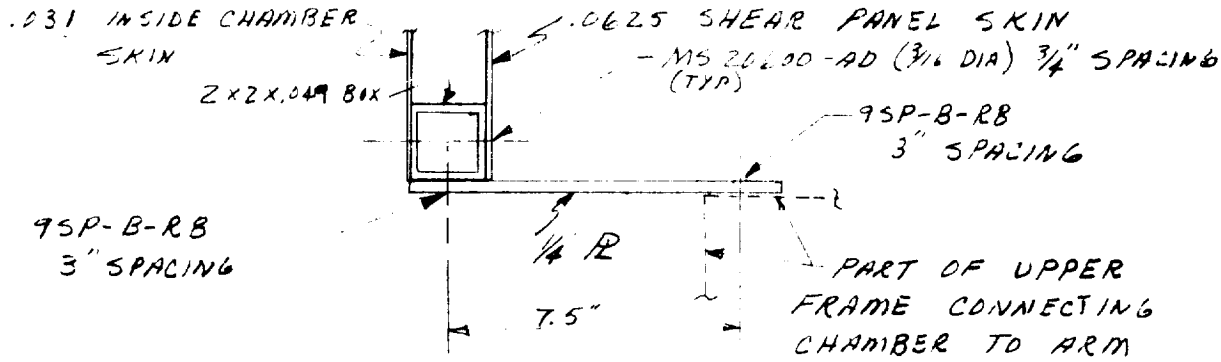

SECTION "C-C"

TOP SHEAR PANEL

CONNECTION OF 1½ × 1½ × ⅛ L TO .0625 SKIN AND SKIN TO 2×2×.049 BOX

FASTENER ~ 9SP-B-R6 ON 3" SPACING

$(P_{S_{120}})_{R_L} = 1200(.6) = 720$ lbs.

$P_S = 186(3) = 558$ lbs.

BEARING OF FASTER ON 2×2×.049 BOX (7075-T6 $F_{B_{ry}} = 107{,}000$ psi ~ e/D = 2.0)

$\sigma_{B_r} = \frac{558}{(.049).1875} = 60{,}800$ psi.

CONNECTION OF 1½ × 1½ × ⅛ L TO CHAMBER FRAMES AND 2×2×.049 BOX TO ¼ R

FASTENER ~ 9SP-B-R8 ON 3" SPACING

$(P_{S_{120}}) = 2{,}500(.6) = 1{,}500$ lbs.

$P_S = 186(3) = 558$ lbs.

¼" PLATE

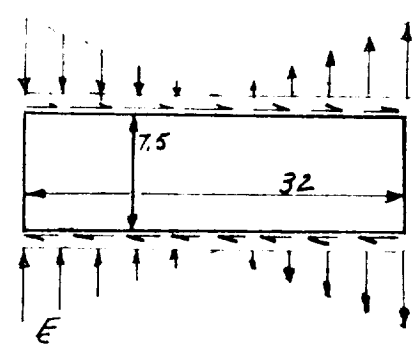

ASSUME BOTH ENDS PINNED

$Kl/r = .67\frac{l}{t} = .67\left(\frac{32}{.25}\right)$
$= 85.7$

$F_{c_{cr}} = 14{,}000$ psi.

$M = 186(32)(7.5) = 44{,}600$ in.-lbs.

$I = \frac{.25(32)^3}{12} = 684$ in.^{4}

$\sigma = \frac{Mc}{I} = \frac{44{,}600(16)}{684} = 1{,}045$ psi.

PREPARED BY RZM
CHECKED BY
REVISED BY

PAGE
REPORT NO.
DATE 5-11-64

DRAWING OR JOB TITLE	DRAWING NO. OR ITEM
APOLLO ACCESS CHAMBER	

TOP SHEAR PANEL

FRAME AROUND AIR-CONDITIONING DUCT

MATERIAL 6061-T6 (WELDED)

$F_{by} = 20{,}000$ psi.

$q = 186$ lbs/in

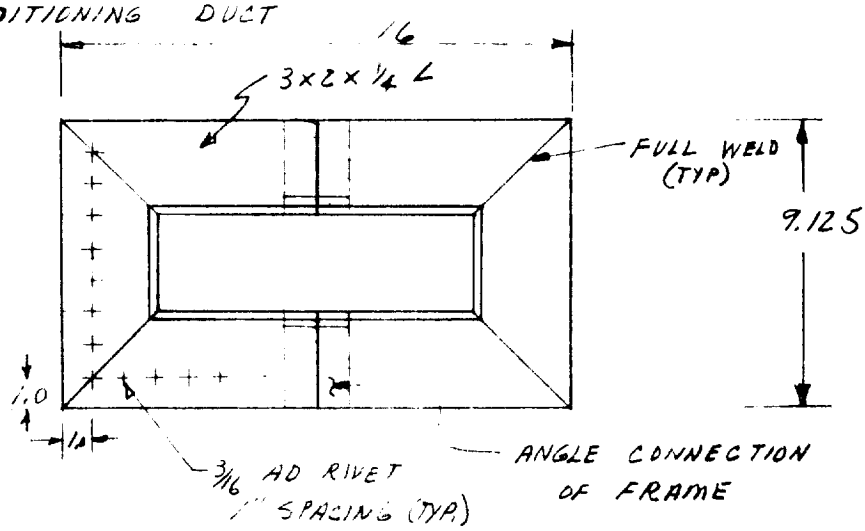

LOAD PER RIVET

$P_s = 186(1) = 186$ lbs.

$(P_{sy})_{AL} = 862(.6) = 517$ lbs.

LOADS ON FRAME

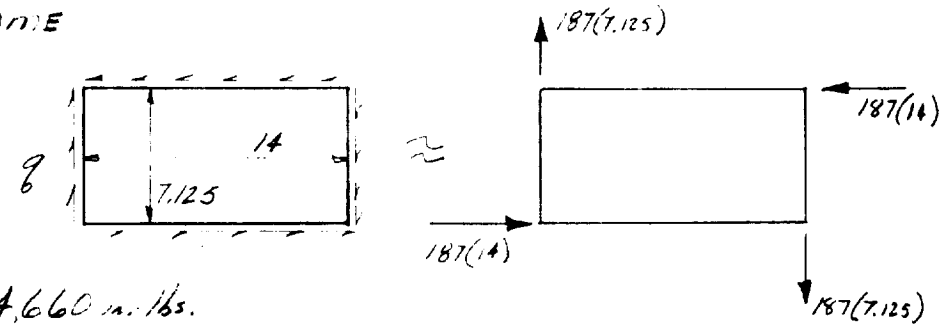

$M_{max} = \frac{7.125}{2}(187)7 = 4{,}660$ in. lbs.

$\sigma = \frac{M}{S} = \frac{4660}{.52} = 8{,}960$ psi.

$\frac{KL}{r} = 1.2\,h/t = 1.2\,\frac{3}{.25} = 14.4$

$F_{cr} = B - D\,\frac{KL}{r} = 38.3 - .202(14.4) = 35.9$ ksi $= 35{,}900$ psi

∴ BUCKLING NOT CRITICAL

DRAWING OR JOB TITLE: APOLLO ACCESS CHAMBER

DRAWING NO. OR ITEM:

TOP SHEAR PANEL

MARGIN OF SAFETY

SHEAR STRESS IN SKIN

$$M.S. = \frac{3,830}{2,980} - 1 = \quad +.29$$

STABILITY OF STIFFENER

$$M.S. = \frac{34.4}{12.7} - 1 = \quad +1.71$$

9SP-B-R6 FASTENER

$$M.S. = \frac{720}{558} - 1 = \quad +.29$$

BEARING OF FASTENER ON 2x2 x .049 BOX

$$M.S. = \frac{107,000}{60,800} - 1 = \quad +.76$$

9SP-B-R8 FASTENER

$$M.S. = \frac{1,500}{558} - 1 = \quad +1.69$$

1/4" PLATE

$$M.S. = \frac{14,000}{1,045} - 1 = \quad +\text{LARGE}$$

FRAME AROUND AIR-CONDITIONING DUCT

$$M.S. = \frac{20,000}{4,660} - 1 = \quad +3.28$$

174

PREPARED BY RLM

CHECKED BY

REVISED BY

PAGE

REPORT NO.

DATE 5-12-64

DRAWING OR JOB TITLE	DRAWING NO. OR ITEM
APOLLO ACCESS CHAMBER	75M12454

BOTTOM SHEAR PANEL

$\tau = 2{,}980$ psi

$q = 186$ lbs/in

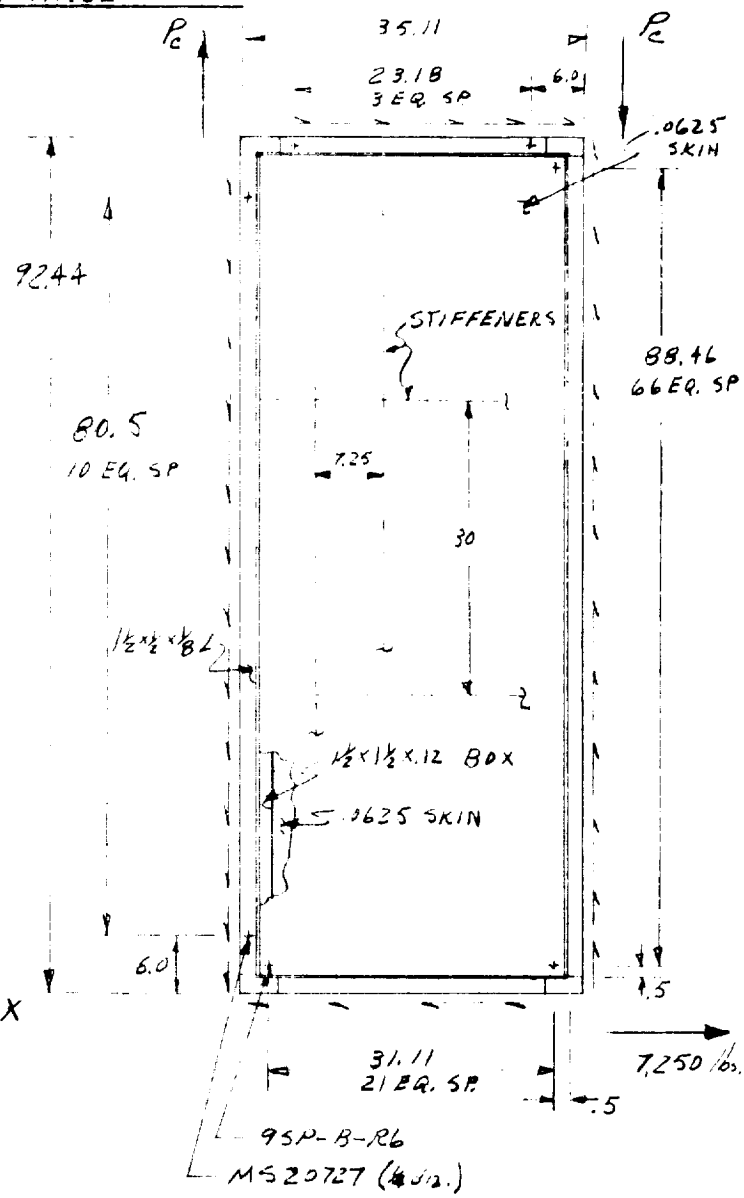

SKIN STABILITY

$a/b = \frac{30}{7.25} = 4.15$

$\therefore K = 5$

$F_{s_{cr}} = 5(10)^2\left(\frac{.0625}{7.25}\right)^2$

$F_{s_{cr}} = 3\,730$ psi

STABILITY OF STIFFENER

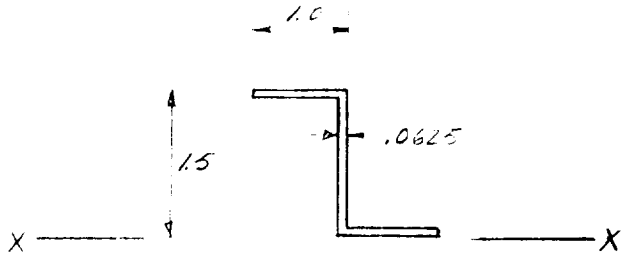

$I_{xx} = .1966$ in.^{4}

$I/ht^3 = \frac{.1966}{30(.0625)^3} = 26.8$

$\left(I/ht^3\right)_{REQ'D.} = 2.56\left(\frac{h}{d} - 1.6\right) = 2.56\left(\frac{30}{7.25} - 1.6\right)$

$= 6.53$

DRAWING OR JOB TITLE: APOLLO ACCESS CHAMBER

DRAWING NO. OR ITEM:

BOTTOM SHEAR PANEL

CONNECTION OF 1½ × 1½ × .12 BOX TO 1½ × 1½ × ⅛ ∠

FASTENER ~ 95P-8-R6 ON 1½" CENTERS

$(P_{s_y})_{AL} = 1200(.6) = 720$ lbs.

LOAD PER FASTENER

$P_s = 186(1.5) = 279$ lbs.

CONNECTION OF 1½ × 1½ × ⅛ ∠ TO CHAMBER FRAMES

FASTENER ~ MS 20727 ON 8.05 CENTERS

$(P_{s_y})_{AL} = 3,900$ lbs.

LOAD PER FASTENER

$P_s = 8.05(186) = 1,500$ lbs.

BEARING OF FASTENER ON 1½ × 1½ × ⅛ ∠

$(P_{B_{s_y}})_{AL} = .25(.125)107,000 = 3,350$ lbs $\quad (e/D = 2)$

MARGIN OF SAFETY

SKIN STABILITY

$M.S. = \frac{3730}{2980} - 1 =$ **+ .29**

STABILITY OF STIFFINER

$M.S. = \frac{26.8}{6.53} - 1 =$ **+3.10**

FASTENER ~ 95P-8-R6

$M.S. = \frac{720}{279} - 1 =$ **+1.58**

FASTENER ~ MS 20727

$MS = \frac{3900}{1,500} - 1 =$ **+1.60**

PREPARED BY RLM
CHECKED BY
REVISED BY

PAGE
REPORT NO.
DATE 5-13-64

DRAWING OR JOB TITLE	DRAWING NO. OR ITEM
APOLLO ACCESS CHAMBER	

BOTTOM SHEAR PANEL

MARGIN OF SAFETY

BEARING OF MS 20727 ON 1½ x 1½ x ⅛ ∠

$$M.S. = \frac{3,350}{1,500} - 1 = +1.23$$

PREPARED BY RZM
CHECKED BY
REVISED BY

PAGE 177
REPORT NO.
DATE 4-8-64

DRAWING OR JOB TITLE	DRAWING NO. OR ITEM
APOLLO ACCESS CHAMBER	SHEAR DOOR

STATIC CONDITION; PLATFORM EXTENDED 84 INCHES

SKETCH

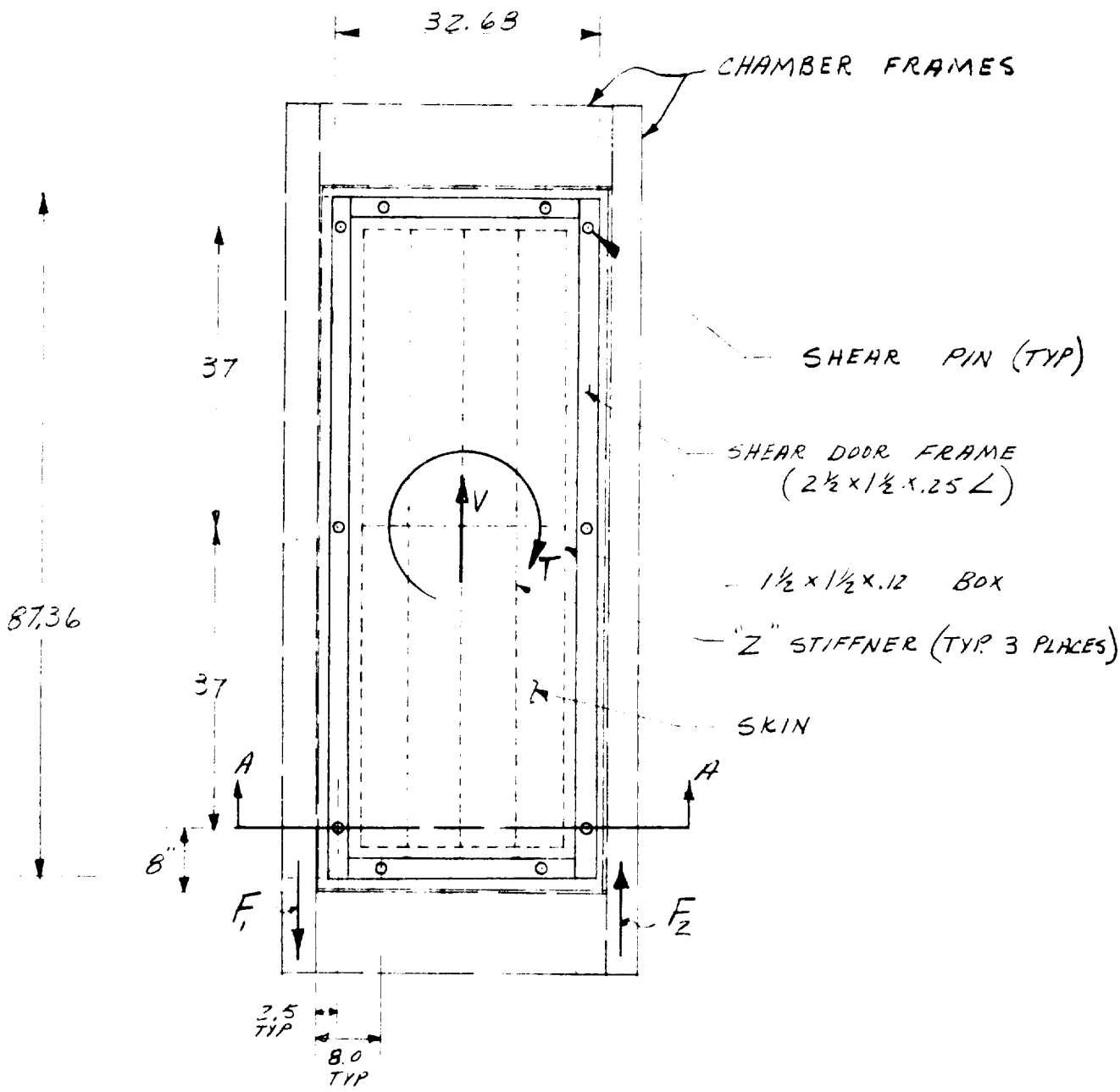

178

PREPARED BY RLM

CHECKED BY

REVISED BY

PAGE

REPORT NO.

DATE 4-8-64

DRAWING OR JOB TITLE	DRAWING NO. OR ITEM
APOLLO ACCESS CHAMBER	SHEAR DOOR

STATIC CONDITION: PLATFORM EXTENDED 84 INCHES

SKETCH

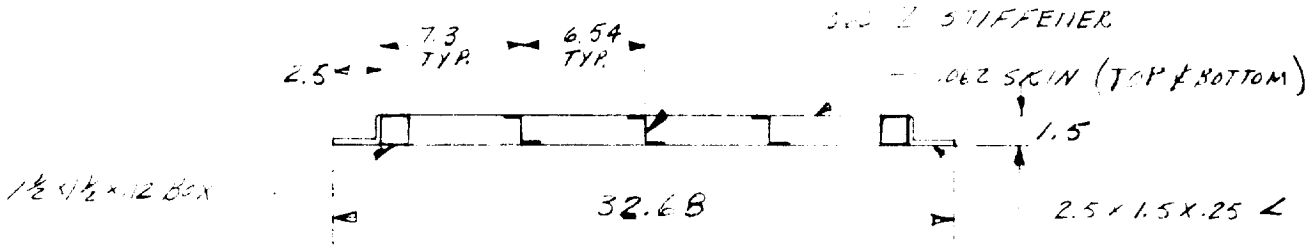

SEATING H-H

LOADS

$F_1 = 22,751$ lbs

$F_2 = 14,874$ lbs

TORSION SHEAR DOOR MUST TRANSFER

$$T = 22,751\left(\frac{39.8}{2}\right) + 14,874\left(\frac{39.8}{2}\right) = 750,000 \text{ in.-lb.}$$

TORSIONAL COUPLE

$$P_c = \frac{750,000}{39.8} = 18,850 \text{ lbs.}$$

SHEAR IN SKIN (BOTH)

$$q = \frac{18,850}{84.36} = 224 \text{ lbs/in}$$

SHEAR IN SINGLE SKIN PANEL

$$q = \frac{224}{2} = 112 \text{ lbs/in.}$$

PREPARED BY RLM
CHECKED BY
REVISED BY

PAGE 179
REPORT NO.
DATE 4-8-64

DRAWING OR JOB TITLE	DRAWING NO. OR ITEM
APOLLO ACCESS CHAMBER	SHEAR DOOR

STATIC CONDITION; PLATFORM EXTENDED 54 INCHES

MATERIAL

6061-T6 SHEET, THICKNESS < .25

$F_{tu} = 42,000$ psi
$F_{ty} = 35,000$ psi
$F_{su} = 27,000$ psi
$F_{sy} = 21,000$ psi

7075-T6 SHEET, THICKNESS = .04 — .249

$F_{tu} = 77,000$ psi
$F_{ty} = 66,000$ psi
$F_{su} = 46,000$ psi
$F_{sy} = 39,600$ psi
$F_{bru} = 116,000$ psi $e/D = 1.5$
$F_{bry} = 94,000$ psi $e/D = 1.5$

7075-T6 EXTRUSIONS THICKNESS = UP TO .249

$F_{tu} = 76,000$ psi
$F_{ty} = 64,000$ psi
$F_{su} = 43,000$ psi
$F_{sy} = 38,400$ psi
$F_{bru} = 101,000$ psi
$F_{bry} = 91,000$ psi

SHEAR PIN ~ STEEL

$F_{tu} = 125,000$ psi
$F_{ty} = 103,000$ psi
$F_{su} = 62,000$ psi
$F_{sy} = 61,000$ psi

FASTENERS CONNECTING SKIN, 'Z' SECTIONS, AND BOX SECTIONS

180

PREPARED BY RZM

CHECKED BY

REVISED BY

PAGE

REPORT NO.

DATE 4-8-64

DRAWING OR JOB TITLE	DRAWING NO. OR ITEM
APOLLO ACCESS CHAMBER	SHEAR DOOR

STATIC CONDITION : PLATFORM EXTENDED 84 INCHES

STRESS

SHEAR STRESS IN SKIN

$$\tau = \frac{112}{.062} = 1,810 \text{ psi}$$

CRITICAL SHEAR STRESS IN SKIN

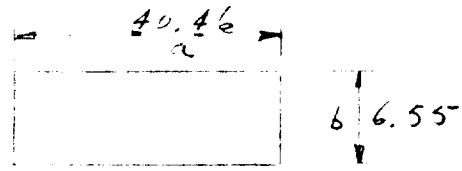

$$a/b = 6.2 \therefore K = 4.8$$

$$F_{cr} = K E \left(\frac{t}{b}\right)^2$$

$$F_{cr} = 4.8 (10)^7 \left(\frac{.062}{6.55}\right)^2 = 4\,3\,10 \text{ psi}$$

MINIMUM I OF STIFFENER FOR STABILITY

$$\frac{I}{at^3} = 2.56\left(\frac{a}{b} - 1.6\right)$$

$$I_{min} = 40.46(.062)^3\left[2.56(6.2 - 1.6)\right] = .114 \text{ in.}^4$$

ACTUAL I

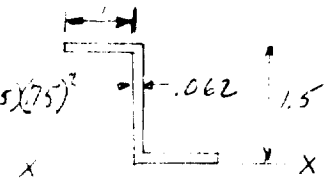

$$I_{xx} = \frac{2(.062)^3}{12} + \frac{.062(1.5)^3}{12} + .062(1.69)^2 + .062(1.5)(.75)^2$$

$$I_{xx} = .403 \text{ in.}^4$$

SHEAR ON SHEAR PIN

$$P_s = \tfrac{1}{3}(18,850) = 6,283.3 \text{ lbs.}$$

$$(P_s)_{AL} = 12,100 \text{ lbs.}$$

STATIC CONDITION; PLATFORM EXTENDED 84 INCHES

STRESS

FASTENER CONNECTING 2½ × 1½ × .25 L TO 1½ × 1½ × .12 BOX

9SP-B-R6 SPACED ON 1.5" CENTERS

$P_s = 224(1.5) = 336$ lbs.

$(P_s)_{AL} = 1200(.6) = 720$ lbs.

BEARING OF FASTENER ON 1½ × 1½ × .12 BOX

$A_{Br} = .188(.12) = .0226$ in.^{2}

$\sigma_{Br} = \frac{336}{.0226} = 14{,}900$ psi

FASTENER CONNECTING 1½ × 1½ × .12 BOX TO .062 SKIN

9SP-B-R4 SPACED ON 1.5" CENTERS

$P_s = 112(1.5) = 168$ lbs.

$(P_s)_{AL} = 600(.6) = 360$ lbs.

BEARING OF FASTENER ON 1½ × 1½ × .12 BOX

$A_{Br} = .125(.12) = .015$ in.^{2}

$\sigma_{Br} = \frac{168}{.015} = 11{,}200$ psi

182

PREPARED BY RLM

CHECKED BY

REVISED BY

PAGE

REPORT NO

DATE 4-9-64

DRAWING OR JOB TITLE	DRAWING NO. OR ITEM
APOLLO ACCESS CHAMBER	SHEAR DOOR

STATIC CONDITION: PLATFORM EXTENDED 84 INCHES

STRESS

FASTENER CONNECTING CHAMBER FRAMES TO $1\frac{3}{4} \times 3\frac{1}{2} \times \frac{1}{4}$ L

BP-T-12 SPACED ON 3" CENTERS

$P_s = 224(3) = 672$ lbs

$(P_s)_{AL} = .6(10{,}600) = 6{,}360$ lbs

BEARING OF FASTENER ON .25 THICK ANGLE

$A_{BR} = .375(.25) = .0938$ in.^{2}

$\sigma_{BR} = \frac{672}{.0938} = 7{,}160$ psi

BOLTS HOLDING SHEAR DOOR ON SHEAR PIN

$P = \frac{18850}{3}$

$P = 6243$ lbs.

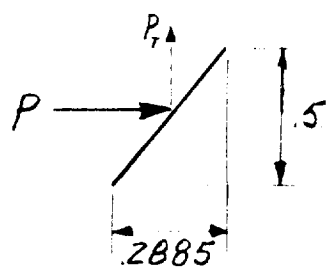

$P_T \approx 3{,}600$ lbs.

TWO 5/16 DIA. BOLTS HOLD THIS DOWN (150,000 psi. ULT.)

$P_{AL} = 2(.0767)132{,}000 = 20{,}200$ lbs.

DRAWING OR JOB TITLE	DRAWING NO. OR ITEM
APOLLO ACCESS CHAMBER	SHEAR DOOR

STATIC CONDITION: PLATFORM EXTENDED 84 INCHES

MARIGIN OF SAFETY

SHEAR STRESS IN SKIN

$$M.S. = \frac{4,300}{1,810} - 1 = \quad +1.38$$

STABILITY OF STIFFENER

$$M.S. = \frac{.403}{.114} - 1 = \quad +2.54$$

SHEAR ON SHEAR PIN

$$M.S. = \frac{12,150}{6,283.3} - 1 = \quad +.93$$

SHEAR ON 9SP-B-R6

$$M.S. = \frac{720}{336} - 1 = \quad +1.14$$

BEARING OF 9SP-B-R6 ON 1½ x 1½ X .12 BOX SECTION

$$M.S. = \frac{91,000}{14,900} - 1 = \quad +5.10$$

SHEAR ON 9SP-B-R4

$$M.S. = \frac{360}{168} - 1 = \quad +1.14$$

BEARING OF 9SP-B-R4 ON 1½ x 1½ X .12 BOX SECTION

$$M.S. = \frac{91,000}{11,200} - 1 = \quad +7.12$$

PREPARED BY RLM
CHECKED BY
REVISED BY

PAGE
REPORT NO.
DATE 4-9-64

DRAWING OR JOB TITLE	DRAWING NO. OR ITEM
APOLLO ACCESS CHAMBER	SHEAR DOOR

STATIC CONDITION; PLATFORM EXTENDED 84 INCHES

MARIGIN OF SAFETY

SHEAR ON BP-T-12

$$M.S. = \frac{6,360}{672} - 1 = \quad +8.50$$

BEARING OF BP-T-12 ON .25 THICK ANGLE

$$M.S. = \frac{91,100}{7,160} - 1 = \quad +11.70$$

TENSION LOAD ON BOLTS HOLDING SHEAR DOOR

$$M.S. = \frac{20,200}{3,600} - 1 = \quad +4.60$$

PREPARED BY J.D.W.
CHECKED BY
REVISED BY

PAGE 185
REPORT NO.
DATE 4-24-64

DRAWING OR JOB TITLE	DRAWING NO. OR ITEM
APOLLO ACCESS CHAMBER	CYLINDER BRACKET

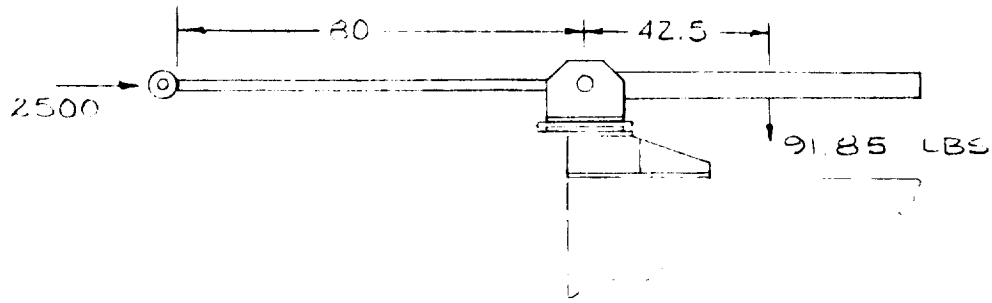

LOADS

TOTAL WT. OF CYLINDER AND ROD = 149.65 LBS.

WT. OF ROD = 57.80 LBS.

WT OF CANTILEVERED HOUSING

= 149.65 - 57.80

= 91.85

AXIAL LOAD ON CYLINDER ROD = 2500 LBS

MOMENT ON CYLINDER ROD = 91.85(42.5)

= 3,910 IN-LBS

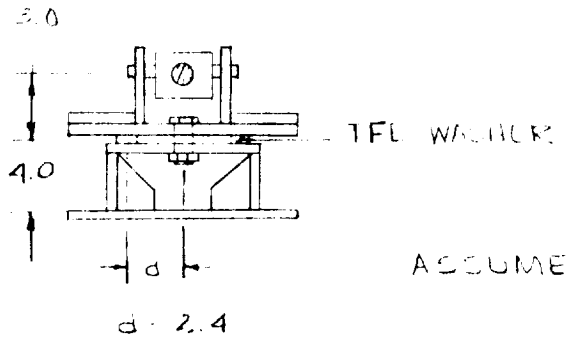

M_1 = MOMENT RESISTED BY COUPLE BETWEEN BOLT TENSION & TFE BRG

= 2500(3.0) = 7,500 IN LBS

ASSUME BOLT TENSION = BRG ON TFE

$= \frac{M_1}{d} = \frac{7,500}{3.5}$

= 2,140 LBS

MOMENT IN BOLT PLATE = $\frac{P}{\pi}$ = $\frac{2,140}{3.14}$ = 680 IN-LBS

186

PREPARED BY J. D. W.
CHECKED BY
REVISED BY

PAGE
REPORT NO.
DATE 4-24-64

DRAWING OR JOB TITLE	DRAWING NO. OR ITEM
APOLLO ACCESS CHAMBER	CYLINDER BRACKET

LOADS

BENDING STRESS IN SIDE PLATE AT WELD

M = 2500 (7.0) = 17,500 IN-LBS

TENSION IN BASE PLATE RIVETS

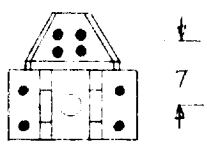

$$T = \frac{2500\,(7.625)}{4\,(7)} = 6[illegible]\ \text{LBS}$$

MATERIAL

BRACKET PLATES 6061 - T6 (ALIDED)

F_{TY} = 15,000 PSI

F_{SY} = 9,000 PSI

BOLT

P_{TY} =

P_{SY} =

TEE

F_{BRY} = 1,5[illegible] PSI

BUSHING

F_{BRY} = 4[illegible] PSI

RIVETS - BP-T12-13 HUCK

P_{TY} = 4,500 LBS

P_{SY} = 6,180 LBS

PREPARED BY J. D. W
CHECKED BY
REVISED BY

PAGE 187
REPORT NO.
DATE 4-24-64

DRAWING OR JOB TITLE	DRAWING NO. OR ITEM
APOLLO ACCESS CHAMBER	CYLINDER BRACKET

SECTIONAL PROPERTIES

CYLINDER ROD:

$$\frac{KL}{r} = \frac{[illegible]}{[illegible]} = 183 \qquad D = 1.75 \quad A = 2.405 \quad r = [illegible]$$

$$\sigma_{ALL} = \frac{\pi^2 E}{(KL/r)^2} = 8,840 \text{ PSI}$$

TEE WASHER

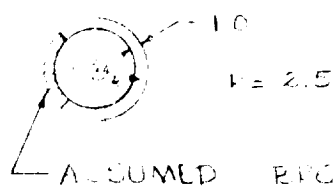

ASSUMED BRG AREA OF TEE

$$A = \frac{\pi \cdot [illegible]}{4} = [illegible] \text{ IN.}^2$$

DISTANCE FROM CENTER OF WASHER TO CENTROID OF SHADED AREA

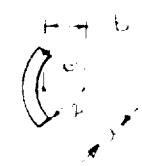

$$a = \frac{3.14(5)(12/3\pi) + \pi(4)(8/3\pi)}{3.14(5)(4)}$$

$$a = \frac{36 \quad 10.67}{15.7}$$

$$a = 1.7$$

$$b = \sqrt{2(a)} = 2.4 \text{ IN.}$$

SIDE PLATES AT WELD

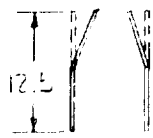

2-.5 IN WELDS ON EACH PLATE

ASSUME STRAIGHT

$$I = 2\,\frac{(.5)(12.5)^3}{12} = 163 \text{ IN}^4$$

$$A = 2(12.5)(.5) = 12.5 \text{ IN}^2$$

188

PREPARED BY J.D.W

CHECKED BY

REVISED BY

PAGE

REPORT NO.

DATE 4 24 64

DRAWING OR JOB TITLE	DRAWING NO. OR ITEM
APOLLO ACCESS CHAMBER	CYLINDER BRACKET

SECTIONAL PROPERTIES

BEARING AREA OF CYLINDER TIN 0 BUSHING

$A_{BR} = .875(1.25)$

$= 1.09 \text{ IN}^2$

SECTION MODULUS OF BOLT PLATE $= \frac{(.625)^2}{6} = .065$

STRESS

CYLINDER ROD:

$\sigma = \frac{P}{A} + \frac{MY}{I}$

$= \frac{2500}{.405} + \frac{3,910(.875)}{.460}$

$= 1,040 + 7,440$

$= 8,480$ PSI

TFE WASHER:

$\sigma_{BR} = \frac{P}{A} = \frac{2,140}{3.92}$

$= 546$ PSI

SIDE PLATE AT WELD

$\sigma = \frac{MY}{I}$

$= \frac{17,500(6.25)}{163}$

$= 670$ PSI

BUSHING

$\sigma_{BR} = \frac{2500}{1.09} = 2,290$ PSI

BOLT TENSION = 2,140 LBS

BOLT PLATE BENDING:

$\sigma = \frac{M}{Z} = \frac{680}{.065} = 10,450$ PSI

PREPARED BY J. D W
CHECKED BY
REVISED BY

PAGE 189
REPORT NO.
DATE 4-24-64

DRAWING OR JOB TITLE	DRAWING NO. OR ITEM
APOLLO ACCESS CHAMBER	CYLINDER BRACKET

MARGINS OF SAFETY

CYLINDER ROD:

$$M.S._{BUCKLING} = \frac{8\,840}{8,480} - 1 = \quad +.04$$

TFE WASHER:

$$M.S._{BRG.Y} = \frac{1560}{546} - 1 = \quad +1.85$$

SIDE PLATE:

$$M.S._{YLD} = \frac{15,000}{670} - 1 = \quad +\text{LARGE}$$

BUSHING:

$$M.S._{BRG\ YLD} = \frac{48,000}{2,290} - 1 = \quad +\text{LARGE}$$

BOLT:

$$M.S._{T\ YLD} = \frac{}{2,140} - 1 = \quad +$$

BOLT PLATE

$$M.S._{YLD} = \frac{15,000}{10,450} - 1 = \quad +.43$$

190

PREPARED BY J. D. W.
CHECKED BY
REVISED BY

PAGE
REPORT NO.
DATE 3-31-64

DRAWING OR JOB TITLE	DRAWING NO. OR ITEM
APOLLO ACCESS CHAMBER	CHAMBER FLOOR

SKETCH

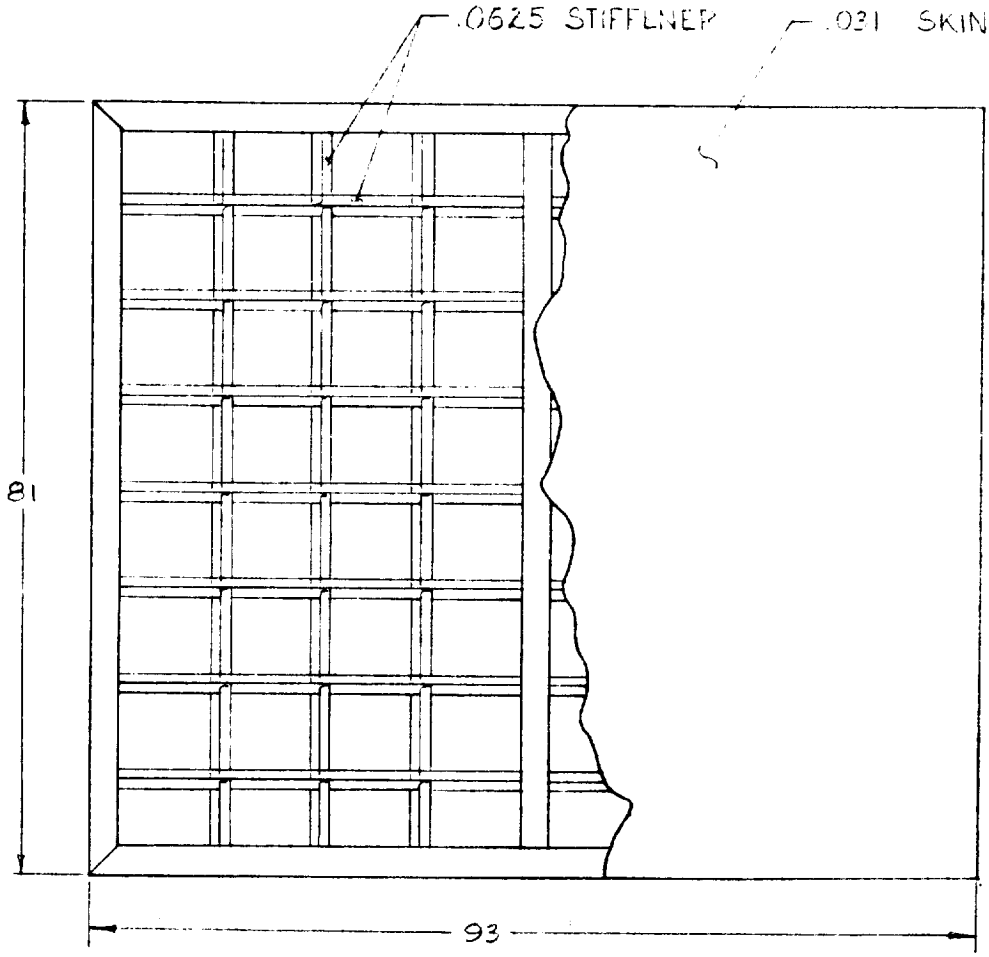

LOADS

CONTINUOUS STIFFENER:

ASSUME A MAXIMUM OF THREE MEN CAN STAND ON ONE CONTINUOUS STIFFENER AT ONE TIME (18 IN. APART).

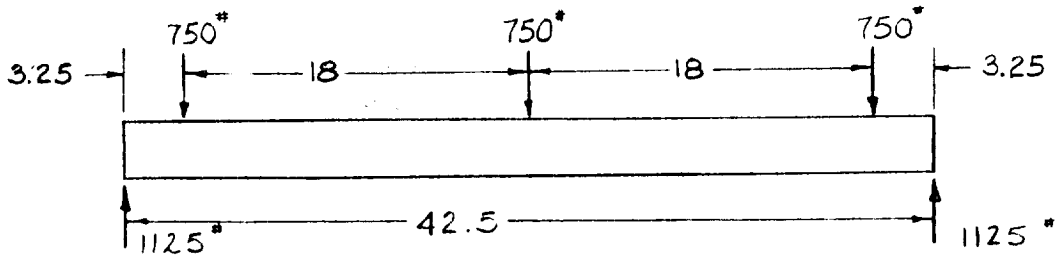

MAX. MOMENT = 1125(21.25) - 750(18)

= 10,400 IN-LBS

MAX. SHEAR = 1125 LBS.

SKIN:

ASSUME A SHEAR LOAD OF 750 LBS APPLIED OVER A 2 IN. LENGTH.

STIFFENER (ZEE) RIVETS:

3 RIVETS MUST TRANSFER 1125 LBS. (SHEAR) OR 375 LBS PER RIVET.

PREPARED BY J. D. W.
CHECKED BY
REVISED BY

PAGE
REPORT NO.
DATE 3-31-64

DRAWING OR JOB TITLE	DRAWING NO. OR ITEM
APOLLO ACCESS CHAMBER	CHAMBER FLOOR

LOADS

SQUARE MEMBER:

ASSUME MAXIMUM LOADING AS SHOWN BELOW

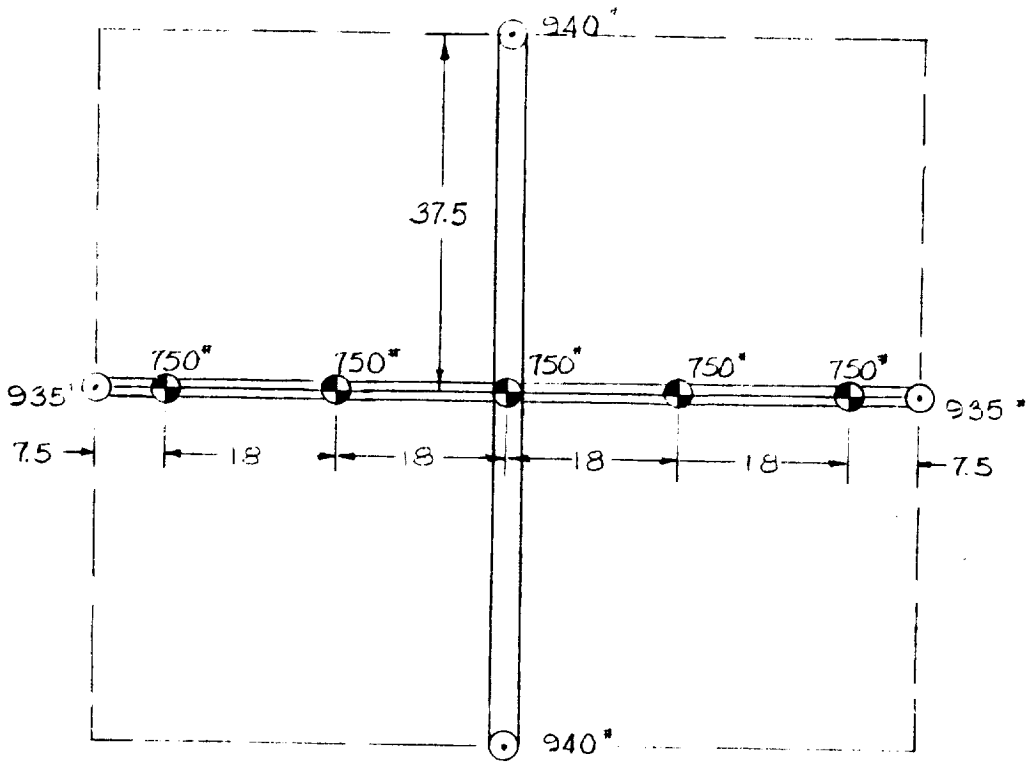

MAX. MOMENT = 940 (37.5) = 35,200 IN-LBS.

MAX. SHEAR (ASSUME ALL 5 MEN ON SQUARE MEMBER)

V = 1875 LBS.

RIVETS: 6 END RIVETS MUST TRANSFER 1875 LBS.
OR 312.5 LBS PER RIVET.

MATERIAL

SKIN — 7075 - T6

F_{TY} = 65,000 PSI

F_{SY} = 37,000 PSI

ZEE STIFFENERS, SQUARE MEMBER - 6061 - T6

F_{TY} = 35,000 PSI

F_{SY} = 20,000 PSI

F_{BRY} = 56,000 PSI

RIVETS - AD6

P_{SU} = 862 LBS

P_{SY} = 517 LBS ASSUMED .6 (P_{SU})

CLIP ANGLE - 2024-

F_{TY} = 42,000 PSI

F_{SY} = 24,000 PSI

F_{BRY} = 67,000 PSI

PREPARED BY J. D. W.
CHECKED BY
REVISED BY

PAGE
REPORT NO.
DATE 3-31-64

DRAWING OR JOB TITLE	DRAWING NO. OR ITEM
APOLLO ACCESS CHAMBER	CHAMBER FLOOR

SECTIONAL PROPERTIES

CONTINUOUS STIFFENER:

ASSUME ALL OF BOTTOM SKIN ACTS IN TENSION

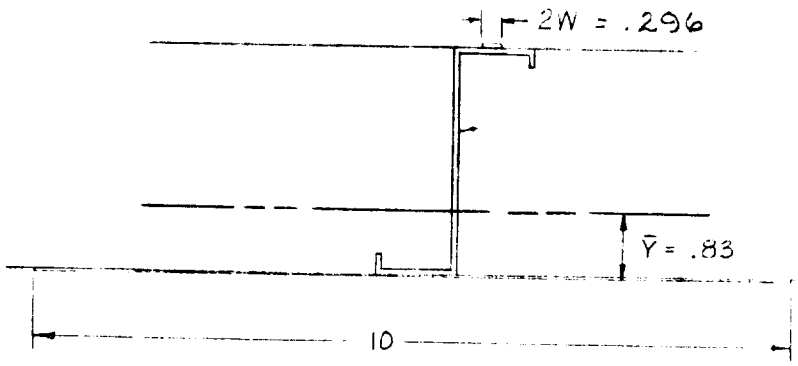

ZEE SECTION

I = .481

A = .3438

$$1.65\,\frac{s}{t} = 1.65\,\frac{.75}{.03125} = 39.6$$

$F_{cr} = 32{,}000$ PSI

REF. PEERY

$$W = .85t\sqrt{\frac{E}{F_c}} = .85(.03125)\sqrt{\frac{10^7}{32\times10^3}} = .148$$

$$\bar{Y} = \frac{\Sigma AY}{\Sigma A} = \frac{.3438(1.52) + .296(.03125)(3.05) + 10(.03125)(.016)}{.3438 + .03125(10 + .296)}$$

$\bar{Y} = .83$ IN

$$I = .481 + .3438(.67)^2 + 2(.148)(.03125)(2.17)^2 + 10(.03125)(.83)^2$$

$$I \quad .481 + .154 + .044 + .215$$

$I = .894$ IN.^{4}

PREPARED BY J. D. W
CHECKED BY
REVISED BY

PAGE 195
REPORT NO.
DATE 3-31-64

DRAWING OR JOB TITLE	DRAWING NO. OR ITEM
APOLLO ACCESS CHAMBER	CHAMBER FLOOR

SECTIONAL PROPERTIES

SQUARE MEMBER :

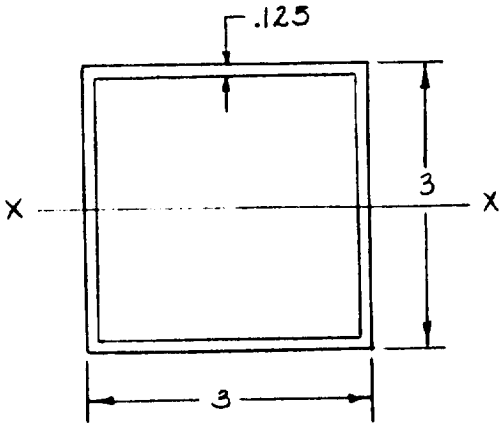

$$I_x = 2\,\frac{.125(3)^3}{12} + 2(.125)(2.75)(1.44)^2$$

$$I_x = 1.98 \text{ IN.}^4$$

CLIP ANGLE :

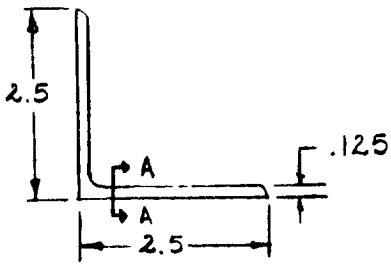

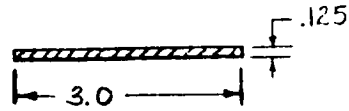

$A = .375 \text{ IN.}^2$

SECTION A-A

PREPARED BY J. D. W.
CHECKED BY
REVISED BY

PAGE
REPORT NO.
DATE 3-31-64

DRAWING OR JOB TITLE	DRAWING NO. OR ITEM
APOLLO ACCESS CHAMBER	CHAMBER FLOOR

STRESS

CONTINUOUS STIFFENER:

$$\sigma = \frac{MY}{I}$$

$$\sigma = \frac{10,400(1.5)}{.854} = 17,450 \text{ PSI}$$

$$\tau = \frac{3V}{2A} = \frac{3(1125)}{2(.0625)(3)} = 9000 \text{ PSI}$$

$$\sigma_{BR} = \frac{375}{(.1875)(.0625)} = 34,800 \text{ PSI}$$

SKIN:

$$\sigma_T = \frac{MY}{I}$$

$$\sigma_T = \frac{10,400(1.53)}{.854} = 11,800 \text{ PSI}$$

$$\tau = \frac{750}{2(.03125)} = 12,000 \text{ PSI}$$

SQUARE MEMBER:

$$\sigma = \frac{MY}{I}$$

$$\sigma = \frac{35,200(1.5)}{1.98} = 26,500 \text{ PSI}$$

RIVETS (ZEE SECTION):

$V = 375$ LBS

RIVETS (CLIP ANGLE):

$V = 312.5$ LBS

STRESS

CLIP ANGLE:

$$\tau = \frac{3V}{2A} = \frac{3(1875)}{2(.375)}$$

$$\tau = 7{,}500 \text{ PSI}$$

MARGINS OF SAFETY

CONTINUOUS STIFFENER:

$$M.S._{YLD} = \frac{35{,}000}{17{,}450} - 1 = \quad 1.01$$

$$M.S._{\tau} = \frac{20{,}000}{9{,}000} - 1 = \quad 1.22$$

$$M.S._{BRY} = \frac{56{,}000}{34{,}800} - 1 = \quad .61$$

SKIN:

$$M.S._{YLD} = \frac{65{,}000}{17{,}800} - 1 = \quad 2.65$$

$$M.S._{\tau} = \frac{37{,}000}{12{,}000} - 1 = \quad 2.08$$

SQUARE MEMBER:

$$M.S._{YLD} = \frac{35{,}000}{26{,}500} - 1 = \quad .32$$

198

PREPARED BY J. D. W.
CHECKED BY
REVISED BY

PAGE
REPORT NO.
DATE 3-31-64

DRAWING OR JOB TITLE	DRAWING NO. OR ITEM
APOLLO ACCESS CHAMBER	CHAMBER FLOOR

MARGINS OF SAFETY

RIVETS (ZEE SECTION):

$$M.S. = \frac{517}{375} - 1 = \quad .38$$

RIVETS (CLIP ANGLE):

$$M.S. = \frac{517}{312.5} - 1 = \quad .65$$

CLIP ANGLE:

$$M.S.\ \tau = \frac{24\,000}{1{,}500} - 1 = \quad 2.2$$

PREPARED BY RLM
CHECKED BY
REVISED BY

PAGE 199
REPORT NO.
DATE 3-23-64

DRAWING OR JOB TITLE	DRAWING NO. OR ITEM
APOLLO ACCESS CHAMBER	WALL PANEL

BACK WALL PANEL

SKETCH

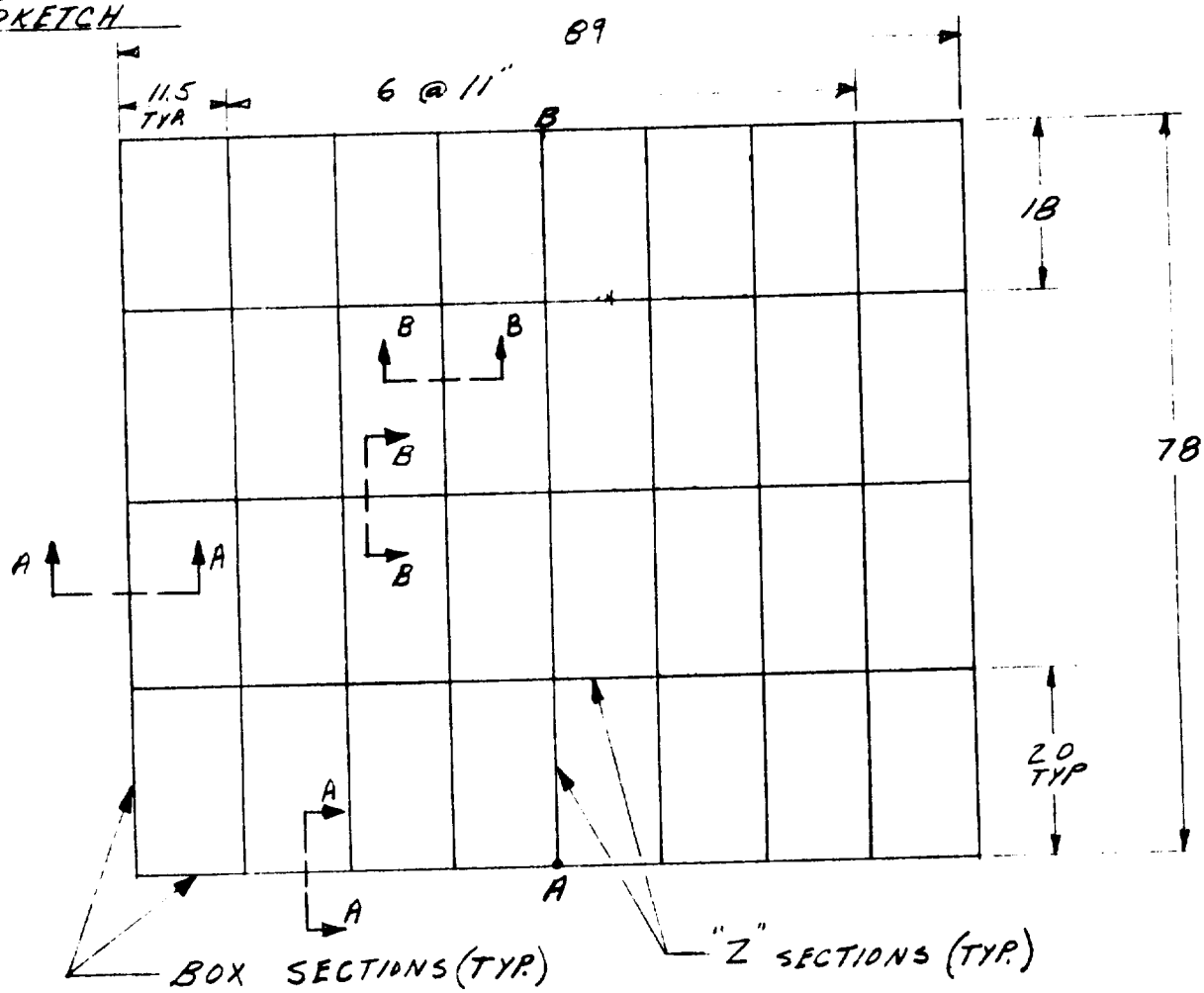

SKIN THICKNESS = .03125 IN. (FRONT AND BACK)

RIVET SPACING = 1.5 IN

200

PREPARED BY RZM

CHECKED BY

REVISED BY

PAGE

REPORT NO.

DATE 3-23-64

DRAWING OR JOB TITLE	DRAWING NO. OR ITEM
APOLLO ACCESS CHAMBER	WALL PANEL

BACK WALL PANEL

MATERIAL ~ SKIN, $t = .03125$ in.

7075-T6

$F_{tu} = 76,000$ psi

$F_{ty} = 65,000$ psi

$F_{su} = 46,000$ psi

$F_{sy} = 39,000$ psi

$F_{BRu} = 114,000$ psi $e/D = 1.5$

$F_{BRy} = 92,000$ psi $e/D = 1.5$

MATERIAL ~ "Z" SECTION, $t = .0625$ in.

6061-T6

$F_{tu} = 42,000$ psi

$F_{ty} = 35,000$ psi

$F_{su} = 27,000$ psi

$F_{sy} = 21,000$ psi

$F_{BRu} = 67,000$ psi $e/D = 1.5$

$F_{BRy} = 50,000$ psi $e/D = 1.5$

MATERIAL ~ BOX SECTION, $t = .049$ in.

7075-T6

$F_{tu} = 77,000$ psi

$F_{ty} = 66,000$ psi

$F_{su} = 46,000$ psi

$F_{sy} = 39,600$ psi

$F_{BRu} = 116,000$ psi $e/D = 1.5$

$F_{BRy} = 94,000$ psi $e/D = 1.5$

PREPARED BY RLM
CHECKED BY
REVISED BY

PAGE 201
REPORT NO.
DATE 3-25-64

DRAWING OR JOB TITLE	DRAWING NO. OR ITEM
APOLLO ACCESS CHAMBER	WALL PANEL

BACK WALL PANEL

TYPICAL SKIN SECTION

SKETCH

$a/b = 1.82$

$b/a = .55$

ALL EDGES FIXED

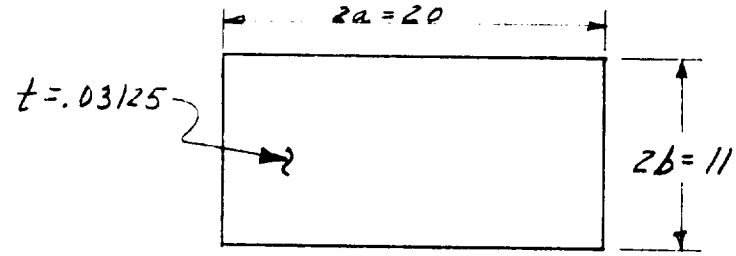

STRESS

ASSUME UNIFORM LOAD OVER ENTIRE SURFACE

ASSUME $w = 1 \ lb/in^2$ (COND. 1)

$$\frac{w b^4}{E t^4} = 96$$

$$\frac{\sigma}{E}\left(\frac{b}{t}\right)^2 = 60 \quad \text{REF.}$$

$$\sigma = \left(\frac{t}{b}\right)^2 60 E = 6(10)^8\left(\frac{.03125}{5.5}\right)^2 = 19{,}500 \text{ psi.}$$

DEFLECTION AT CENTER OF PLATE

$$\frac{\delta}{t} \approx 3.6 \quad \text{FOR } \frac{w b^4}{E t^4} = 96 \quad \text{REF.}$$

$$\delta = 3.6(.03125) = .113 \text{ in.}$$

PREPARED BY RZM
CHECKED BY
REVISED BY

PAGE
REPORT NO.
DATE 3-26-64

DRAWING OR JOB TITLE	DRAWING NO. OR ITEM
APOLLO ACCESS CHAMBER	WALL PANEL

BACK WALL PANEL

TYPICAL SKIN SECTION

STRESS

ASSUME $w = 1.5 \frac{lbs}{in^2}$ (COND. 2)

$$\frac{wb^4}{Et^4} = 145$$

$$\frac{\sigma}{E}\left(\frac{b}{t}\right)^2 = 80$$

$$\sigma = 26{,}000 \text{ psi.}$$

DEFLECTION AT CENTER OF PLATE

$$\frac{\delta}{t} \approx 4.3$$

$$\delta = 4.3(.03125) = .135 \text{ in.}$$

MARGIN OF SAFETY

COND. 1

$$M.S._{Y/L} = \frac{65{,}000}{19{,}500} - 1 = \boxed{+2.33}$$

COND. 2

$$M.S. = \frac{65{,}000}{26{,}000} - 1 = \boxed{+1.51}$$

PREPARED BY RLM
CHECKED BY
REVISED BY

PAGE 203
REPORT NO.
DATE 3-23-64

DRAWING OR JOB TITLE	DRAWING NO. OR ITEM
APOLLO ACCESS CHAMBER	WALL PANEL

BACK WALL PANEL

SECTION PROPERTIES

SECTION "A-A"

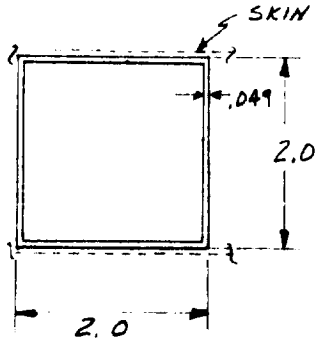

NEGLECTING SKIN

$I = .218 \text{ in.}^4$

$A = .3592 \text{ in.}^2$

SECTION "B-B"

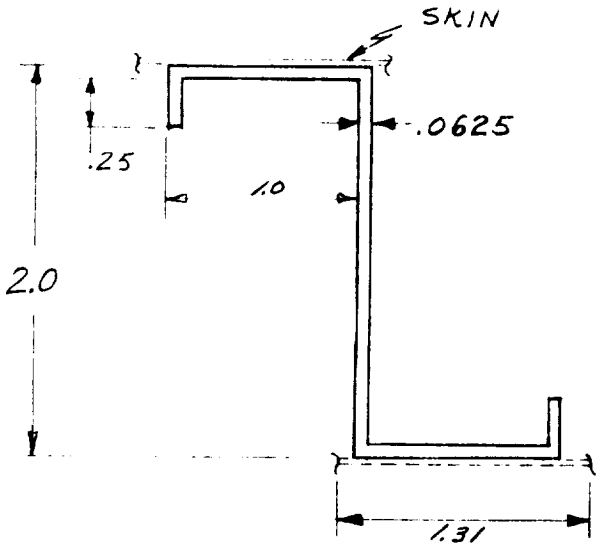

NEGLECTING SKIN

$$I = \frac{.0625(2)^3}{12} + \frac{.125(.25)^3}{12} + \frac{2(.0625)^3}{12} + .125(.969)^2 + .125(.25)(.8125)^2$$

$I = .18 \text{ in}^4$

$A = .0625(4.5) = .281 \text{ in}^2$

PREPARED BY RZM
CHECKED BY
REVISED BY

PAGE
REPORT NO.
DATE 3-23-64

DRAWING OR JOB TITLE	DRAWING NO. OR ITEM
APOLLO ACCESS CHAMBER	WALL PANEL

BACK WALL PANEL

ALLOWABLE LOADS ON SKIN

CRITICAL COMPRESSIVE STRESS OF SKIN BEFORE IT BUCKLES BETWEEN RIVETS

$$1.65\ s/t = 1.65\ 1.5/.03125 = 79.2$$

$$\therefore\ F_{cr} = 16,500 \text{ psi.}$$

EFFECTIVE WIDTH OF SKIN

$$w = .85t\sqrt{\frac{(10)^2}{16,500}} = .85t\sqrt{606} = 21t = .655 \text{ in.}$$

$$2w = 1.31 \text{ in.}$$

ALLOWABLE MOMENT THE SKIN WILL TRANSFER BEFORE IT BUCKLES

$$M = 1.31(.03125)(2.03125)16,500$$

$$M = 1,375 \text{ in.-lbs.}$$

DRAWING OR JOB TITLE	DRAWING NO. OR ITEM
APOLLO ACCESS CHAMBER	WALL PANEL

BACK WALL PANEL

ALLOWABLE LOADS ON "Z" SECTION

CRITICAL BUCKLING STRESS OF .25" LIP SUPPORTING FLANGE

$b/t = \frac{.25}{.0625} = 4.0$

$\frac{KL}{r} = 20.5$

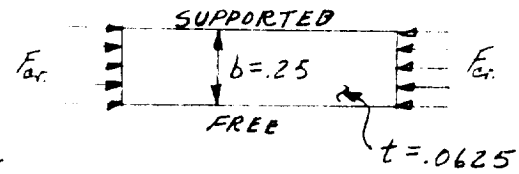

FOR 6061-T6, $t = .0625$

$B = 39.9 \quad D = .263 \quad C = 68$

$F_{cr} = B - D\left(\frac{KL}{r}\right) = 34,500$ psi.

CRITICAL BUCKLING STRESS OF FLANGE

$b/t = \frac{1.0}{.0625} = 16.0$

$\frac{KL}{r} = 26.1$

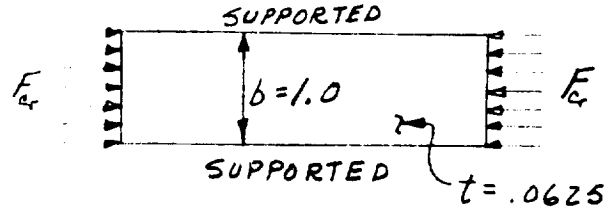

$F_{cr} = B - D\left(\frac{KL}{r}\right) = 33,050$ psi.

CRITICAL BUCKLING STRESS OF WEB

$a/b = \frac{20}{2} = 10 \quad \therefore K = 21.6$

$F_{cr} = KE\left(\frac{t}{b}\right)^2 = 211,000$ psi.

$\therefore$ NOT CRITICAL FOR BUCKLING

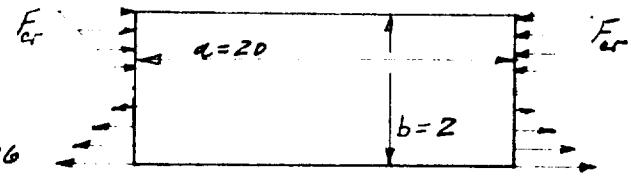

CRITICAL BUCKLING STRESS OF WEB

$b/a = \frac{2}{20} = .1 \quad \therefore K = 11.3$

$F_{cr} = KE\left(\frac{t}{a}\right)^2 = 1,105$ psi.

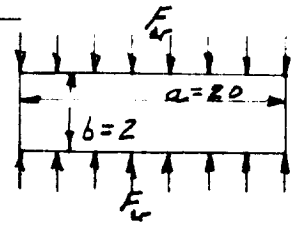

PREPARED BY RLM
CHECKED BY
REVISED BY

PAGE
REPORT NO.
DATE 3-24-64

DRAWING OR JOB TITLE	DRAWING NO. OR ITEM
APOLLO ACCESS CHAMBER	WALL PANEL

BACK WALL PANEL

ALLOWABLE LOADS ON "Z" SECTION

ALLOWABLE MOMENT CARRIED BY "Z" SECTION BEFORE BUCKLE OCCURS

$$M_{al} = \frac{\sigma_{cr} I}{C} = \frac{33,050(.18)}{.969} = 6,150 \text{ in.-lbs.}$$

ALLOWABLE MOMENT CARRIED BY "Z" SECTION AND SKIN COMBINATION BEFORE SKIN BUCKLES BETWEEN RIVETS

$$I = .18 + 2(1.31)(.03125)(1.0156)^2 = .2645$$

$$\sigma_{cr} = 16,500$$

$$M_{al} = \frac{16,500(.2645)}{1.0156} = 4300 \text{ in.-lbs.}$$

IF SKIN IS ALLOWED TO BUCKLE, THE ALLOWABLE MOMENT OF THE SECTION IS—

$$M = 6,150 + 1,375 = 7,525 \text{ in.-lbs.}$$

BACK WALL PANEL

BEAM "A-B" ~ ALLOWABLE LOADS

ASSUMED LOADING CONDITION

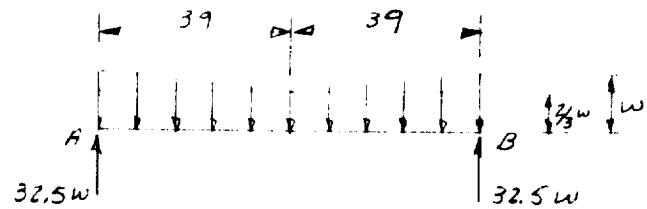

$$M_{max} = 32.5\,w(39) - 39\left(\tfrac{2}{3}\right)w\left(\tfrac{39}{2}\right) - \tfrac{1}{2}\left(\tfrac{1}{3}\right)w\,39\left(\tfrac{2}{3}\right)39$$

$$M_{max} = 591\,w$$

$$M_{AL} = 7{,}525 \text{ in.-lbs.}$$

$$w_{AL} = \frac{7{,}525}{591} = 12.72 \text{ lbs/in.}$$

TOTAL LOAD

$$P_T = 12.72(78) = 993 \text{ lbs.}$$

ASSUMED LOADING CONDITION

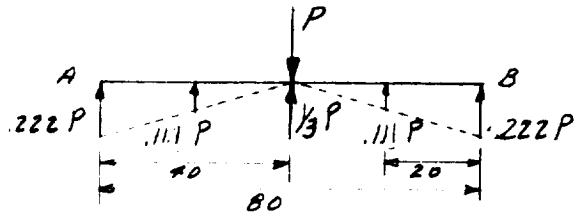

$$M_{max} = .222P(40) + .111P(20) = 11.1\,P$$

$$P_{AL} = \frac{7{,}525}{11.1} = 679 \text{ lbs.}$$

208
PREPARED BY R.L.M.
CHECKED BY
REVISED BY

PAGE
REPORT NO.
DATE 3-20-64

DRAWING OR JOB TITLE	DRAWING NO. OR ITEM
APOLLO ACCESS CHAMBER	EXTENSION PLATFORM

LOADS (COMPLEX 39)

STATIC CONDITION; PLATFORM EXTENDED 84 INCHES

ASSUMED LOADS AND C.G.'S

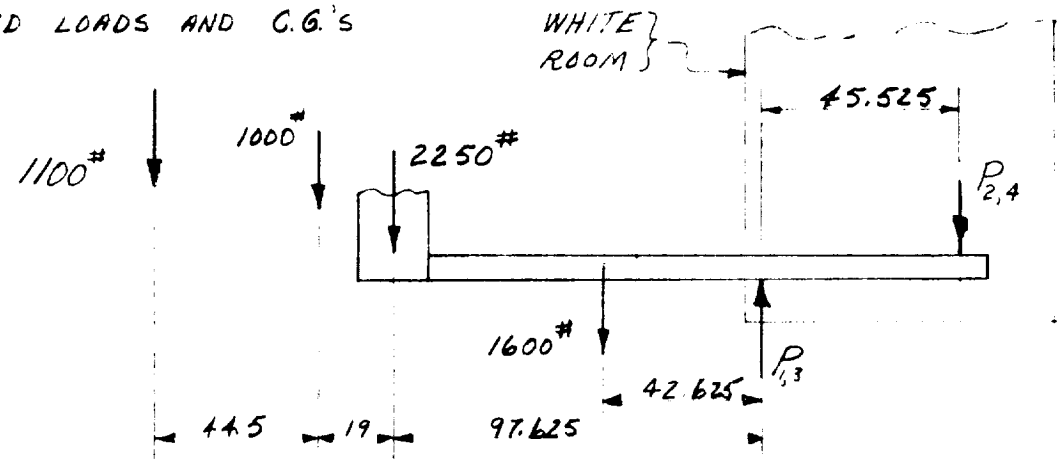

$P_{1,2,3,4}$ = ROLLER LOADS

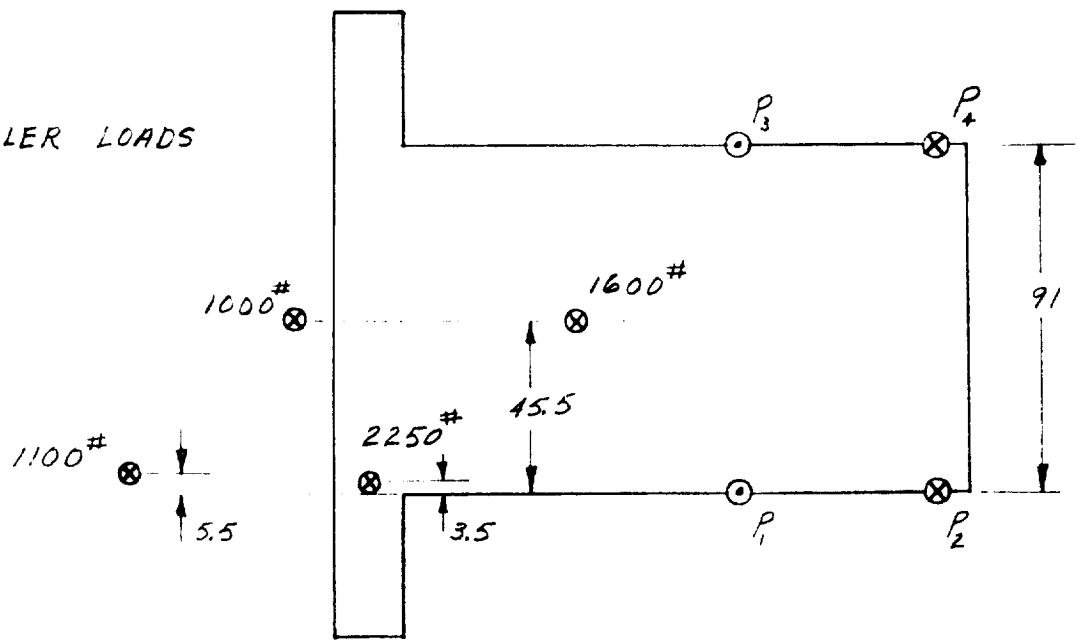

SUPPORT FRAME, HOOD, AND FRAME	= 1,000 lbs.
PLATFORM, MISC. CABLES, BELLOWS, AND ETC.	= 1,600 lbs.
LATCHING MECH.	= 1,100 lbs
3 MEN	= 2,250 lbs

CONTAINS LOAD FACTORS OF

LIVE LOAD = 3

DEAD LOAD = 2

DRAWING OR JOB TITLE	DRAWING NO. OR ITEM
APOLLO ACCESS CHAMBER	EXTENSION PLATFORM

LOADS (COMPLEX 39)

ROLLER LOADS — STATIC CONDITION ; PLATFORM EXTENDED 84 INCHES

$$P_2 = \frac{800(42.625) + 2163(97.625) + 500(116.625) + 1034(161.125)}{45.525}$$

$P_2 = 10,328$ lbs.

$P_1 = 800 + 2163 + 500 + 1034 + 10,328$

$P_1 = 14,825$ lbs.

$$P_4 = \frac{800(42.625) + 87(97.625) + 500(116.625) + 66(161.125)}{45.525}$$

$P_4 = 2,450$ lbs.

$P_3 = 800 + 87 + 500 + 66 + 2,450$

$P_3 = 3,903$ lbs

210

PREPARED BY RZM

CHECKED BY

REVISED BY

PAGE

REPORT NO.

DATE 3-20-64

DRAWING OR JOB TITLE	DRAWING NO. OR ITEM
APOLLO ACCESS CHAMBER	CHAMBER FRAMES

LOADS (COMPLEX 39)

STATIC CONDITION ; PLATFORM EXTENDED 84 INCHES

LOADS ON FRAMES DUE TO ROLLER LOADS

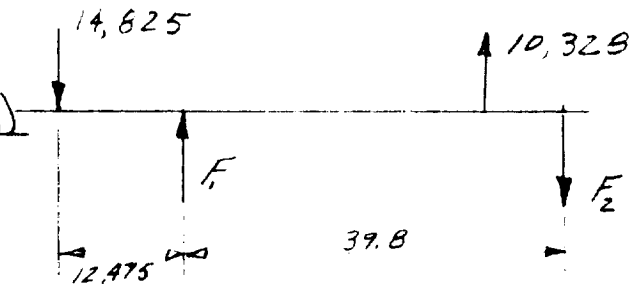

$$F_1 = \frac{14,825(52.275) - 10,328(6.75)}{39.8}$$

$F_1 = 17,700$ lbs.

$F_2 = 17,700 + 10,328 - 14,825$

$F_2 = 13,203$ lbs.

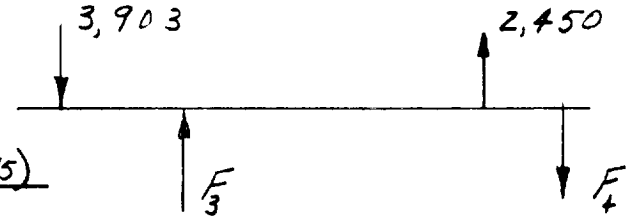

$$F_3 = \frac{3,903(52.275) - 2,450(6.75)}{39.8}$$

$F_3 = 4,715$ lbs.

$F_4 = 4,715 + 2,450 - 3,903$

$F_4 = 3,262$ lbs.

PREPARED BY RLM
CHECKED BY
REVISED BY

PAGE 211
REPORT NO.
DATE 3-23-64

DRAWING OR JOB TITLE	DRAWING NO. OR ITEM
APOLLO ACCESS CHAMBER	CHAMBER FRAMES

LOADS (COMPLEX 39)

TOTAL CHAMBER FRAME LOADS

STATIC CONDITION ; PLATFORM EXTENDED 84 INCHES

$F_1 = 17,700 + 800 + 1,626 = 20,126$ lbs.

$F_2 = 13,203 + 800 - 388 = 13,615$ lbs

$F_3 = 4,715 + 800 + 345 = 5,860$ lbs.

$F_4 = 3,262 + 800 - 83 = 3,979$ lbs.

212

PREPARED BY RLM
CHECKED BY
REVISED BY

PAGE
REPORT NO.
DATE 3-20-64

DRAWING OR JOB TITLE	DRAWING NO. OR ITEM
APOLLO ACCESS CHAMBER	EXTENSION PLATFORM

LOADS (COMPLEX 34 & 37)

STATIC CONDITION; PLATFORM EXTENDED 44 INCHES

ASSUMED LOADS AND C.G.'S

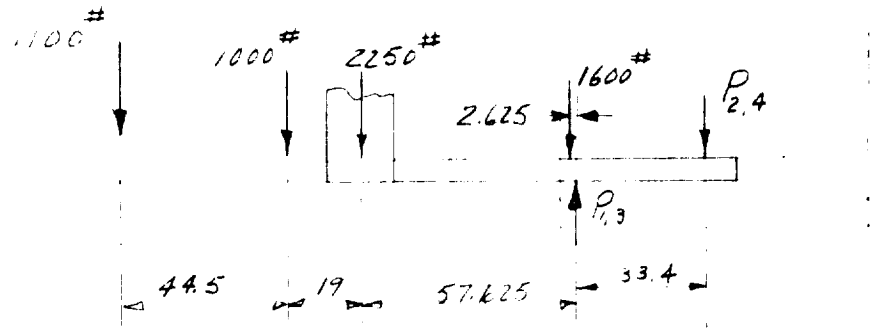

$P_{1,2,3,4}$ = ROLLER LOADS

SUPPORT FRAME, HOOD, AND FRAME = 1,000 lbs.
PLATFORM, MISC. CABLES BELLOWS AND ETC. = 1,600 lbs.
LATCHING MECH. = 1,100 lbs
3 MEN = 2,250 lbs.

CONTAINS LOAD FACTORS OF
LIVE LOAD = 3
DEAD LOAD = 2

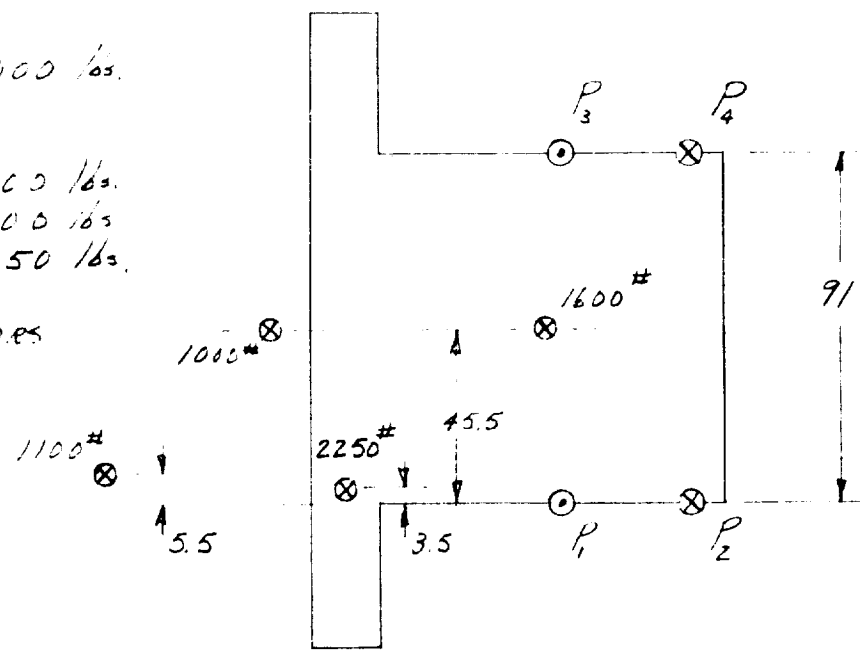

DRAWING OR JOB TITLE	DRAWING NO. OR ITEM
APOLLO ACCESS CHAMBER	EXTENSION PLATFORM

LOADS (COMPLEX 34 & 37)

ROLLER LOADS — STATIC CONDITION ; PLATFORM EXTENDED 44 INCHES

$$P_2 = \frac{800(2.625) + 2163(57.625) + 500(76.625) + 1034(121.125)}{33.4}$$

$P_2 = 9,300$ lbs.

$P_1 = 800 + 2,163 + 500 + 1,034 + 9,300$

$P_1 = 13,797$ lbs.

$$P_4 = \frac{800(2.625) + 87(57.625) + 500(76.625) + 66(121.125)}{33.4}$$

$P_4 = 1,600$ lbs.

$P_3 = 800 + 87 + 500 + 66 + 1,600$

$P_3 = 3,053$ lbs.

PREPARED BY RZM
CHECKED BY
REVISED BY

PAGE
REPORT NO.
DATE 3-20-64

DRAWING OR JOB TITLE	DRAWING NO. OR ITEM
APOLLO ACCESS CHAMBER	CHAMBER FRAMES

LOADS (COMPLEX 34 & 37)

STATIC CONDITION; PLATFORM EXTENDED 44 INCHES

LOADS ON FRAMES DUE TO ROLLER LOADS

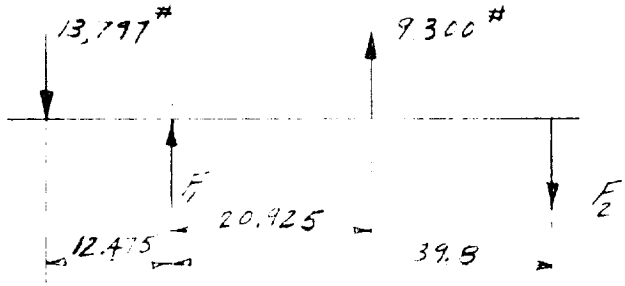

$$F_1 = \frac{13{,}797(52.275) - 9{,}300(18.875)}{39.8}$$

$F_1 = 13{,}680$ lbs.

$F_2 = 13{,}680 + 9{,}300 - 13{,}797$

$F_2 = 9{,}183$ lbs

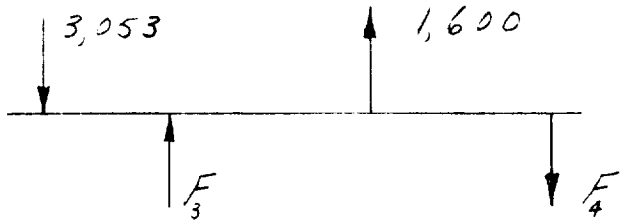

$$F_3 = \frac{3{,}053(52.275) - 1{,}600(18.875)}{39.8}$$

$F_3 = 3{,}260$ lbs.

$F_4 = 3{,}260 + 1{,}600 - 3{,}053$

$F_4 = 1{,}807$ lbs

PREPARED BY RLM
CHECKED BY
REVISED BY

PAGE 215
REPORT NO.
DATE 3-23-64

DRAWING OR JOB TITLE: APOLLO ACCESS CHAMBER

DRAWING NO. OR ITEM: CHAMBER FRAMES

LOADS (COMPLEX 39, 34, & 37)

LOAD ON CHAMBER FRAMES DUE WEIGHT OF CHAMBER AND TWO MEN IN CHAMBER

ASSUME WEIGHT OF CHAMBER IS CARRIED EQUALLY BY FRAMES AT FOUR POINTS

LOAD FACTORS
LIVE LOAD = 3
DEAD LOAD = 2

ASSUMED LOADS AND C.G.'S

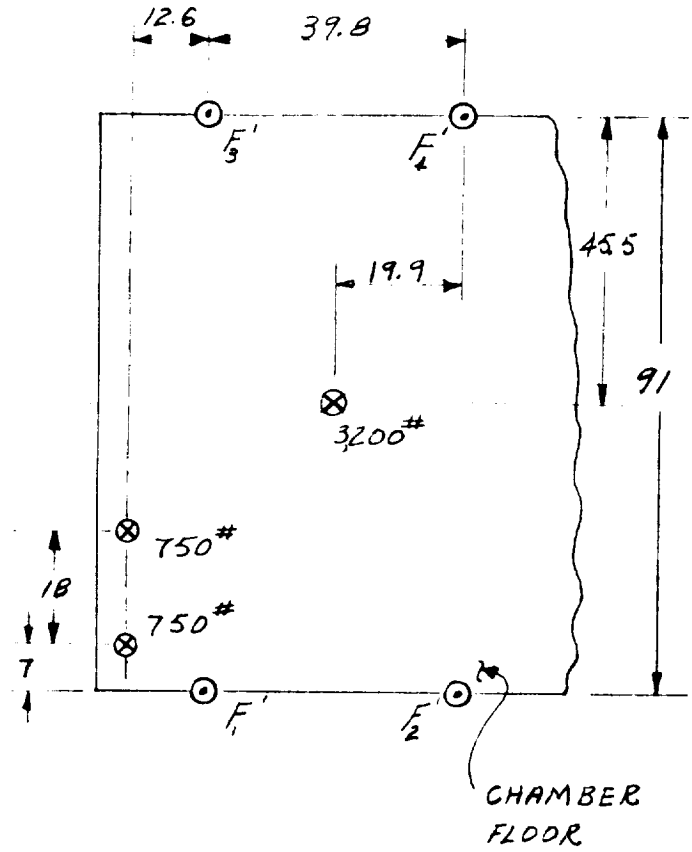

$F'_{1,2,3,4}$ = FRAME REACTIONS

FRAME REACTIONS DUE TO WEIGHT OF CHAMBER

$$F'_{1,2,3,4} = \frac{3200}{4} = 800 \text{ lbs}$$

FRAME REACTIONS DUE TO LIVE LOAD

$$F_1' = \frac{\left[\frac{750(66+84)}{91}\right]52.4}{39.8} = 1{,}626 \text{ lbs.}$$

$$F_2' = \frac{750(66+84)}{91} - 1{,}626 = -388 \text{ lbs.}$$

$$F_3' = \frac{\left[\frac{750(66+84)}{91} - 2(750)\right]52.4}{39.8} = 345 \text{ lbs}$$

$$F_4' = \left[\frac{750(66+84)}{91} - 2(750)\right] - 345 = -83 \text{ lbs}$$

PREPARED BY RLM
CHECKED BY
REVISED BY

PAGE
REPORT NO.
DATE 3-23-64

DRAWING OR JOB TITLE	DRAWING NO. OR ITEM
APOLLO ACCESS CHAMBER	CHAMBER FRAMES

LOADS (COMPLEX 34 & 37)

TOTAL CHAMBER FRAME LOADS

STATIC CONDITION; PLATFORM EXTENDED 44 INCHES

$F_1 = 13,680 + 800 + 1,626 = 16,106$ lbs

$F_2 = 9,183 + 800 - 388 = 9,595$ lbs

$F_3 = 3,260 + 800 + 345 = 4,415$ lbs

$F_4 = 1,807 + 800 - 83 = 2,524$ lbs

PREPARED BY JDW
CHECKED BY
REVISED BY

PAGE 217
REPORT NO.
DATE 3-19-64

DRAWING OR JOB TITLE	DRAWING NO. OR ITEM
APOLLO ACCESS CHAMBER	

SKETCH

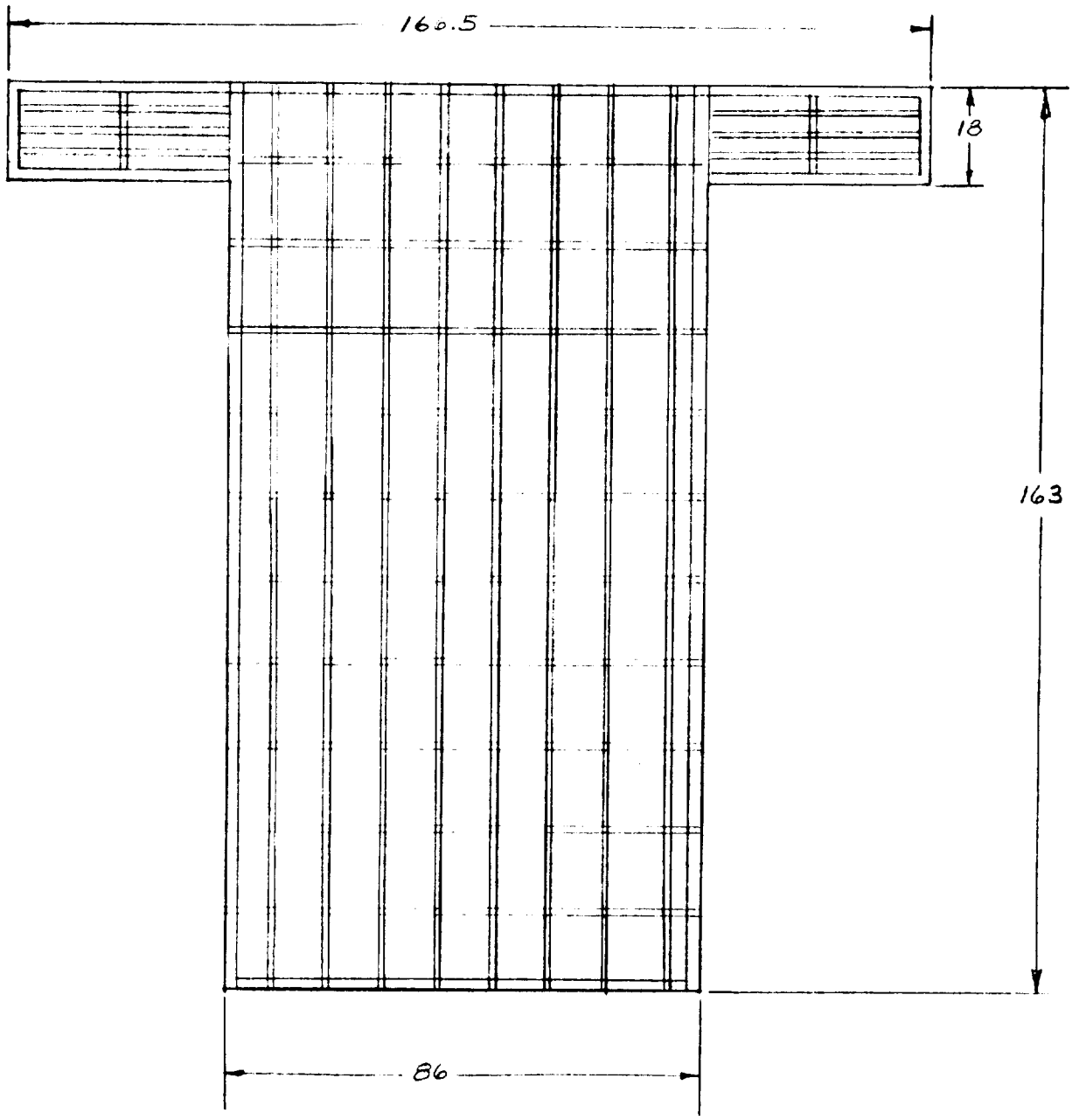

PREPARED BY J. D. W.
CHECKED BY
REVISED BY

PAGE
REPORT NO.
DATE 3-23-64

DRAWING OR JOB TITLE	DRAWING NO. OR ITEM
APOLLO ACCESS CHAMBER	

LOADS

THREE MEN ARE ALLOWED ON THE PLATFORM AT ONE TIME THEY ARE ASSUMED TO BE IN POSITIONS WHICH GIVE MAXIMUM STRESS AND DEFLECTION FOR EACH CONDITION.

THE DISTANCE THAT THE PLATFORM IS EXTENDED DEPENDS UPON CONDITIONS ASSUMED AND COMPLEX UNDER CONSIDERATION.

TWO CONDITIONS ARE ASSUMED FOR BOTH COMPLEX 39 AND COMPLEX 34, 37.

(1) MAXIMUM EXTENSION, NO INERTIA LOAD;

(2) NOMINAL EXTENSION, MAXIMUM INERTIA LOAD (MAXIMUM ACCELERATION: COMPLEX 39 = .41g COMPLEX 34 37 = 1.02 g). IN ADDITION FOR COMPLEX 39 STATIC [illegible] AND CONDITION JUST BEFORE THE PLATFORM IS ATTACHED TO MISSILE ARE CONSIDERED.

ASSUMED WEIGHTS (NO LOAD FACTORS) WITH THEIR CENTER OF GRAVITY

MEN (EACH):	200 LBS.	45 IN.
PLATFORM:	600 LBS.	0 IN.
SUPPORT FRAME:	600 LBS.	70 IN
[illegible] AND FRAME:	200 LBS.	45 IN.
BELLOWS:	50 LBS.	45.5 IN.
MISC. CABLES, ETC.:	150 LBS.	45.5 IN.

PREPARED BY J.D.W.
CHECKED BY
REVISED BY

PAGE 219
REPORT NO.
DATE 3-23-64

DRAWING OR JOB TITLE	DRAWING NO. OR ITEM
APOLLO ACCESS CHAMBER	

LOADS COMPLEX 34, 37 CONDITION NO. 1

PLATFORM EXTENDED 46.625 IN. FROM FRONT ROLLERS. ACCELERATION EQUALS 1.05 g TOWARD THE VEHICLE. THE HOOD IS 4 IN. TO ONE SIDE AND THE MEN ARE ASSUMED TO BE AS FAR TO THAT SIDE AS POSSIBLE, MAKING THE EXTRUDED CHANNEL ON THAT SIDE CRITICAL. ASSUME THE EXTENDED PART OF THE PLATFORM HAS 36% OF THE TOTAL WT. AND IT ACTS THE CENTROID OF THE EXTENDED PORTION, 27 IN. FROM THE ROLLERS. 36% OF THE WT. OF THE BELLOWS AND MISC. CABLES IS ALSO ASSUMED TO ACT THROUGH THIS POINT. ASSUME ONLY 1 MAN HAS INERTIA LOAD.

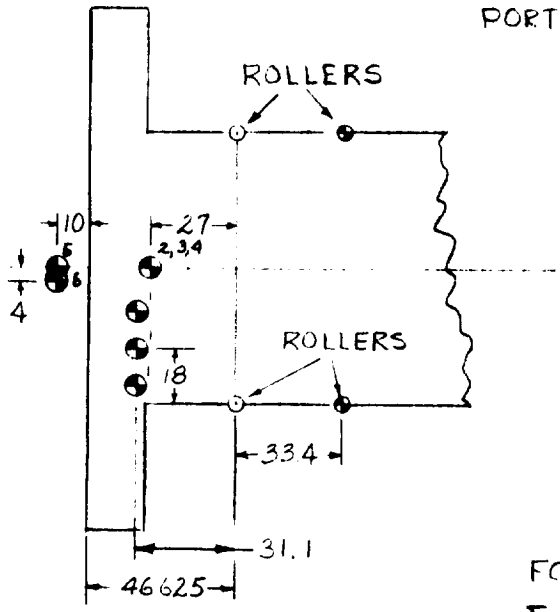

FORCES (WITHOUT LOAD FACTORS) — PORTION FELT BY CRITICAL CHANNEL

	VERTICAL	INERTIA
1 -	$750\left(\frac{86-18}{86}\right) = 594^{\#}$	$250(1.05)\left(\frac{86-18}{86}\right) = 207.5^{\#}$
2 -	$50(.36)\,\frac{1}{2} = 9^{\#}$	$50(1.05)\,\frac{1}{2} = 26.3^{\#}$
3 -	$150(.36)\,\frac{1}{2} = 28^{\#}$	$150(1.05)\,\frac{1}{2} = 78.8^{\#}$
4 -	$600(.36)\,\frac{1}{2} = 108^{\#}$	$600(1.05)\,\frac{1}{2} = 315^{\#}$
5 -	$(300)\,\frac{1}{2} = 150^{\#}$	$300(1.05)\,\frac{1}{2} = 157.5^{\#}$
6 -	$200\left(\frac{47}{86}\right) = 109^{\#}$	$200(1.05)\left(\frac{47}{86}\right) = 115^{\#}$

FORCE APPLIED TO FRAME EQUALS

$\sum$ INERTIA FORCES $= 900.1^{\#}$ @ 70 IN.

220

PREPARED BY J.D.W.
CHECKED BY
REVISED BY

PAGE
REPORT NO.
DATE 3-23-64

DRAWING OR JOB TITLE	DRAWING NO. OR ITEM
APOLLO ACCESS CHAMBER	

LOADS COMPLEX 34, 37 CONDITION NO. 2

PLATFORM EXTENDED 50.625 IN. FROM FRONT ROLLERS. ACCELERATION OF PLATFORM EQUALS ZERO. HOOD IS 4 IN. TO THE SIDE WHERE THE MEN ARE. EXTENDED CHANNEL ON THAT SIDE IS CRITICAL. ASSUME EXTENDED PART OF PLATFORM ARS 38% OF TOTAL WT., AND IT ACTS THROUGH CENTROID OF EXTENDED PORTION, 28 IN. FROM ROLLERS. 38% OF WT OF BELLOWS AND MISC CABLES IS ALSO ASSUMED TO ACT THERE.

FORCES (WITHOUT LOAD FACTORS) – PORTION FELT BY CRITICAL CHANNEL)

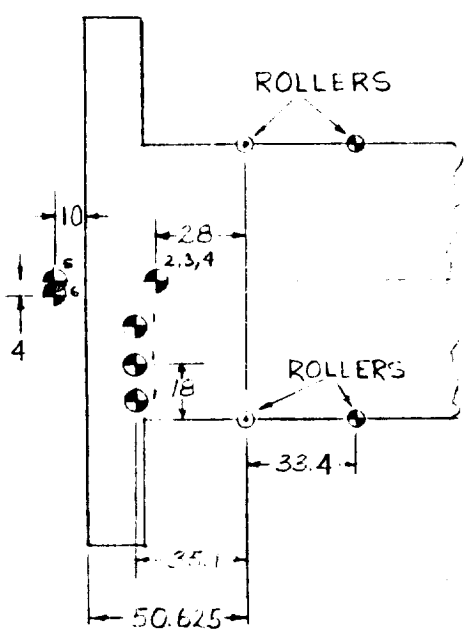

	VERTICAL	INERTIA
1	$750\left(\frac{86-18}{86}\right) = 594^{\#}$	0
2	$50(.38)\frac{1}{2} = 9.5^{\#}$	0
3	$150(.38)\frac{1}{2} = 28.5^{\#}$	0
4	$600(.38)\frac{1}{2} = 114^{\#}$	0
5	$300(\frac{1}{2}) = 150^{\#}$	0
6	$200\left(\frac{47}{53}\right) = 100^{\#}$	0

PREPARED BY J. D. W.
CHECKED BY
REVISED BY

PAGE 221
REPORT NO.
DATE 3-23-64

DRAWING OR JOB TITLE	DRAWING NO. OR ITEM
APOLLO ACCESS CHAMBER	

LOADS COMPLEX 39 CONDITION NO. 1

PLATFORM EXTENDED 66.625 IN. FROM FRONT ROLLERS. ACCELERATION EQUALS .419 TOWARD MISSILE. HOOD IS 28.8 INCHES TO ONE SIDE AND THE MEN ARE ON THAT SIDE, AS CLOSE TOGETHER AS POSSIBLE. THE EXTRUDED CHANNEL ON THAT SIDE IS CRITICAL. ASSUME WT. OF EXTENDED PART OF PLATFORM IS HALF OF TOTAL, AND ITS CENTROID IS 37 IN. FROM ROLLERS. ASSUME HALF THE WT. OF THE BELLOWS AND MISC. CABLES ALSO ACT THROUGH THAT POINT.

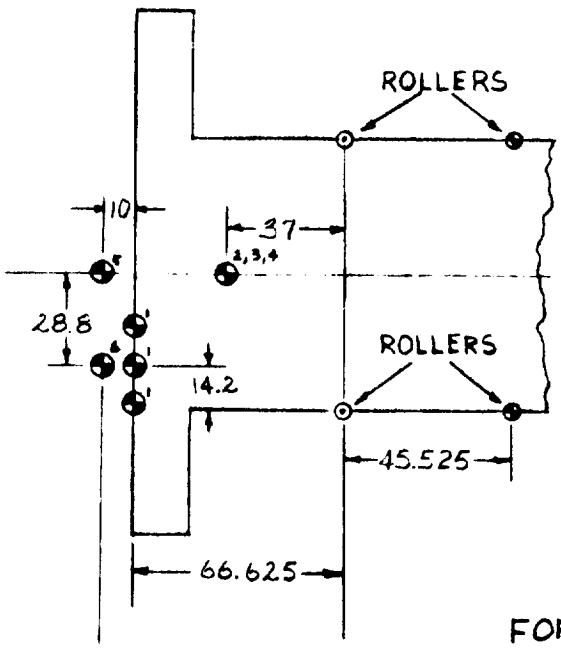

FORCES (WITHOUT LOAD FACTORS) – PORTION FELT BY CRITICAL CHANNEL

	VERTICAL	INERTIA
1 - $750\left(\frac{86-14.2}{86}\right)$	= 626#	$250(.41)\left(\frac{86-14.2}{86}\right)$ = 85.6#
2 - 50(.5)(.5)	= 12.5#	50(.41)(.5) = 10.3#
3 - 150(.5)(.5)	= 37.5	150(.41)(.5) = 30.8#
4 - 600(.5)(.5)	= 150#	600(.41)(.5) = 133#
5 - 300(.5)	= 150#	300(.41)(.5) = 61.5#
6 - $200\left(\frac{86-14.2}{86}\right)$	= 167#	$200(.41)\left(\frac{86-14.2}{86}\right)$ = 68.5#

FORCE APPLIED TO FRAME BY VEHICLE = $\sum$ INERTIA FORCES

= 389.7 LBS.

PREPARED BY J.D.W.
CHECKED BY
REVISED BY

PAGE
REPORT NO.
DATE 3-23-64

DRAWING OR JOB TITLE	DRAWING NO. OR ITEM
APOLLO ACCESS CHAMBER	

LOADS COMPLEX 39 CONDITION NO. 2

PLATFORM EXTENDS 35.425 IN. FROM FRONT ROLLERS. ACCELERATION OF PLATFORM EQUALS ZERO. HOOD IS 6.3 IN. TO ONE SIDE, AND THE MEN ARE ON THAT SIDE, AS CLOSE TOGETHER AS POSSIBLE. THE EXTRUDED CHANNEL ON THAT SIDE IS CRITICAL. ASSUME WT OF EXTENDED PART OF PLATFORM IS 63 % OF TOTAL WT. AND ITS CENTROID IS 42 IN. FROM ROLLERS. ASSUME 63 % OF WT. OF BELLOWS AND MISC CABLES ALSO ACTS THROUGH THAT POINT.

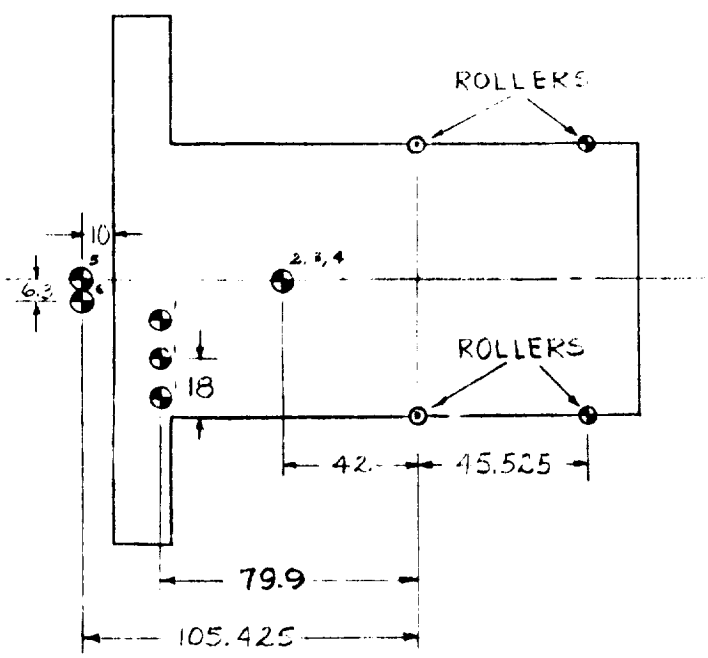

FORCES (WITHOUT LOAD FACTORS) PORTION FELT BY CRITICAL CHANNEL

	VERTICAL	INERTIA
1-	$750\left(\frac{86-18}{86}\right) = 594^{\#}$	0
2-	$50(.63)(.5) = 15.8^{\#}$	0
3-	$150(.63)(.5) = 47.3^{\#}$	0
4-	$600(.63)(.5) = 189^{\#}$	0
5-	$300(.5) = 150^{\#}$	0
6-	$200\left(\frac{86-36.7}{86}\right) = 114.7^{\#}$	0

PREPARED BY J. D. W.
CHECKED BY
REVISED BY

PAGE 223
REPORT NO.
DATE 3-24-64

DRAWING OR JOB TITLE	DRAWING NO. OR ITEM
APOLLO ACCESS CHAMBER	

LOADS COMPLEX 39 CONDITION NO. 3
(JUST BEFORE LATCHING TO MISSILE)

PLATFORM EXTENDS 95.425 IN. FROM FRONT ROLLERS. ACCELERATION OF PLATFORM IS ZERO. HOOD IS 6.3 IN. TO ONE SIDE, AND NO MEN ARE ON THE PLATFORM. THE LATCHING DEVICE IS 54.5 IN. FROM FRONT EDGE OF PLATFORM AND ITS WT. IS 550 LBS. ASSUME WT. OF EXTENDED PART OF PLATFORM IS 63 % OF TOTAL WT. AND ITS CENTROID IS 42 IN. FROM ROLLERS. ASSUME 63 % OF WT. OF BELLOWS AND MISC. CABLES ALSO ACTS THROUGH THAT POINT.

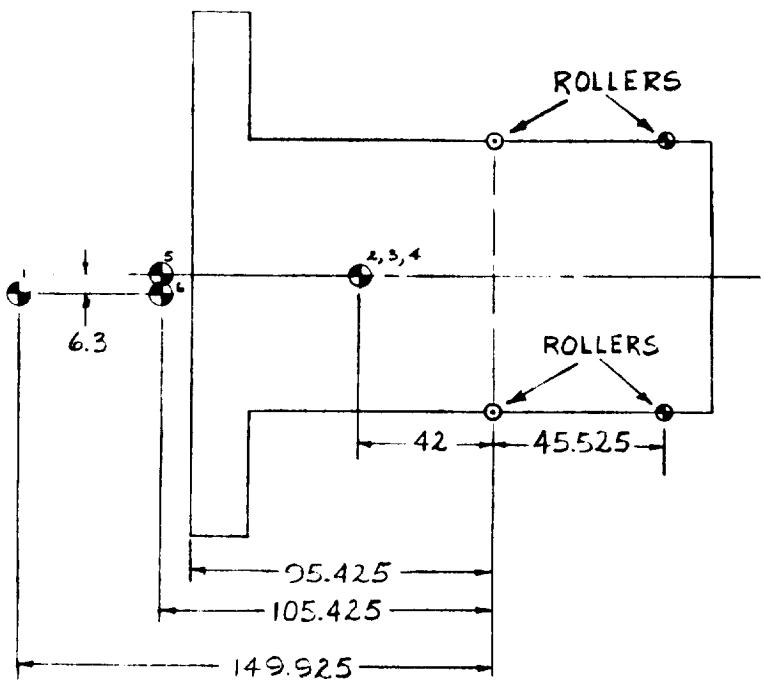

FORCES (WITHOUT LOAD FACTORS) - PORTION FELT BY CRITICAL CHANNEL

	VERTICAL	INERTIA
1- $550\left(\frac{86-36.7}{86}\right)$	= 315*	0
2- 50(.63)(.5)	= 15.8*	0
3- 150(.63)(.5)	= 47.3*	0
4- 600(.63)(.5)	= 189*	0
5- 300 (.5)	= 150*	0
6- $200\left(\frac{86-36.7}{86}\right)$	= 114.7*	0

PREPARED BY J.D.W.
CHECKED BY
REVISED BY

PAGE
REPORT NO.
DATE 3-25-64

DRAWING OR JOB TITLE	DRAWING NO. OR ITEM
APOLLO ACCESS CHAMBER	

LOADS

MAXIMUM MOMENT ON CRITICAL CHANNEL:

COMPLEX 34, 37 CONDITION NO. 1

$$M = 594(31.1)(3) + (9+28+108)(27)(2) + (150+109)(56.6)(2)$$
$$+[2(900.1) + 207.5](88.5) - 207.5(45)(3) - (26.3+78.9)(45.5)(2)$$
$$- 157.5(70)(2) - 115(45)(2)$$

$$M = 55,400 + 7,830 + 29,300 + 178,000 - 29,900$$
$$- 9,570 - 22,100 - 10,350$$

$$M = 198,610 \text{ IN-LBS}$$

COMPLEX 34, 37 CONDITION NO. 2

$$M = 594(35.1)(3) + (9.5+28.5+114)(28)(2) + (150+109)(60.6)(2)$$

$$= 62,500 + 8,520 + 31,400$$

$$= 102,420 \text{ IN-LBS}$$

COMPLEX 39 CONDITION NO. 1

$$M = 626(66.6)(3) + (12.5+37.5+150)(37)(2) + (150+167)(76.6)(2)$$
$$+[389.7(2) + 85.6](88.5) - 85.6(48)(3) - (10.3+30.8)(45.5)(2)$$
$$- 61.5(70)(2) - 68.5(45)(2)$$

$$M = 264,950 - 30,850$$

$$M = 234,100 \text{ IN-LBS}$$

DRAWING OR JOB TITLE	DRAWING NO. OR ITEM
APOLLO ACCESS CHAMBER	

LOADS MAXIMUM MOMENT ON CRITICAL CHANNEL:

COMPLEX 39 CONDITION NO. 2

$$M = 594(79.9)(3) + (15.8 + 47.3 + 189)(42)(2) + (150 + 114.7)(105.4)(2)$$

$$M = 142,300 + 21,200 + 55,800$$

$$M = 219,300 \text{ IN-LBS}$$

COMPLEX 39 CONDITION NO. 3

$$M = 315(149.9)(2) + (15.8 + 47.3 + 189)(42)(2) + (150 + 114.7)(105.4)(2)$$

$$M = 94,400 + 21,200 + 55,800$$

$$M = 171,400 \text{ IN-LBS}$$

PREPARED BY J. D. W.
CHECKED BY
REVISED BY

PAGE
REPORT NO.
DATE 3-24-64

DRAWING OR JOB TITLE	DRAWING NO. OR ITEM
APOLLO ACCESS CHAMBER	

DEFLECTION DERIVATION OF EQUATIONS:

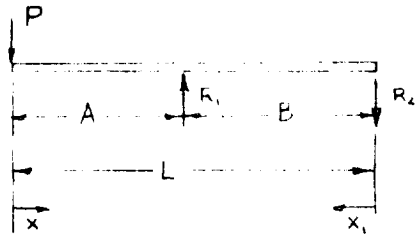

$$R_1 = \frac{PL}{B}$$

$$R_2 = \frac{PA}{B}$$

SEGMENT A

$$\frac{M}{EI} = \frac{Px}{EI}$$

$$\theta = \frac{Px^2}{2EI} + C_1$$

$$\Delta = \frac{Px^3}{6EI} + C_1 x + C_2$$

SEGMENT B

$$\frac{M_1}{EI} = \frac{-PAx_1}{BEI}$$

$$\theta_1 = \frac{-PAx_1^2}{2BEI} + C_3$$

$$\Delta_1 = \frac{-PAx_1^3}{6BEI} + C_3 x_1 + C_4$$

BOUNDARY CONDITIONS:

1 - $x = A$, $\Delta = 0$

2 - $\theta\big]_{x=A} = \theta_1\big]_{x_1=B}$

3 - $x_1 = 0$, $\Delta_1 = 0$

4 - $x_1 = B$, $\Delta_1 = 0$

$$C_1 = \frac{-PAB}{3EI} - \frac{PA^2}{2EI}$$

$$C_2 = \frac{PA^3}{3EI} + \frac{PA^2B}{3EI}$$

$$C_3 = \frac{PAB}{6EI}$$

$$C_4 = 0$$

AT $x = 0$:

$$\Delta = \frac{PA^3}{3EI} + \frac{PA^2B}{3EI}$$

$$\theta = -\frac{PAB}{3EI} - \frac{PA^2}{2EI}$$

DRAWING OR JOB TITLE: APOLLO ACCESS CHAMBER

DRAWING NO. OR ITEM

DEFLECTION DERIVATION OF EQUATIONS:

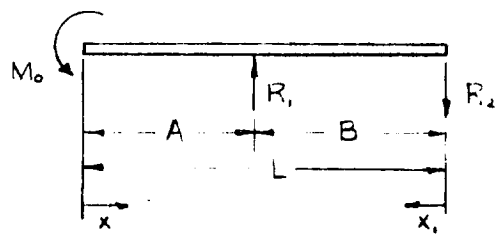

$$R_1 = R_2 = \frac{M_o}{B}$$

SEGMENT A

$$\frac{M}{EI} = \frac{M_o}{EI}$$

$$\theta = \frac{M_o X}{EI} + C_1$$

$$\Delta = \frac{M_o X^2}{2EI} + C_1 X + C_2$$

SEGMENT B

$$\frac{M}{EI} = \frac{-M_o X_1}{BEI}$$

$$\theta_1 = \frac{-M_o X_1^2}{2BEI} + C_3$$

$$\Delta_1 = \frac{-M_o X_1^3}{6BEI} + C_3 X + C_4$$

BOUNDARY CONDITIONS:

1 - $X = A, \ \Delta = 0$

2 - $\theta\big]_{X=A} = \theta\big]_{X_1=B}$

3 - $X_1 = 0, \ \Delta_1 = 0$

4 - $X_1 = B, \ \Delta_1 = 0$

$$C_1 = \frac{-M_o A}{EI} - \frac{M_o B}{3EI}$$

$$C_2 = \frac{M_o A^2}{2EI} + \frac{M_o AB}{3EI}$$

$$C_3 = \frac{M_o B}{6EI}$$

$$C_4 = 0$$

AT $X = 0$:

$$\Delta = \frac{M_o A^2}{2EI} + \frac{M_o AB}{3EI}$$

$$\theta = \frac{-M_o A}{EI} - \frac{M_o B}{3EI}$$

PREPARED BY J. D. W.
CHECKED BY
REVISED BY

PAGE
REPORT NO.
DATE 3-24-64

DRAWING OR JOB TITLE	DRAWING NO. OR ITEM
APOLLO ACCESS CHAMBER	

DEFLECTION COMPLEX 34, 37 CONDITION NO. 1

$$\Delta = \sum \frac{PA^3}{3EI} + \frac{PA^2B}{3EI} + \left[\frac{PAB}{3EI} + \frac{PA^2}{2EI}\right]\ell + \frac{M_0A^2}{2EI} + \frac{M_0AB}{3EI}$$ REF. P. 226

$$\Delta = \frac{594(31.1)^2}{3EI}(31.1 + 33.4) + \left[\frac{594(31.1)}{6EI}(66.8 + 93.3)\right]15.5$$

$$+ (9 + 2.8 + 108)\frac{(27)^2}{3EI}(27 + 33.4) + \left[\frac{145(27)}{6EI}(66.8 + 81)\right](46.625 - 27)$$

$$+ (157.5 + 115)\frac{(46.6)^2}{3EI}(46.6 + 33.4) + 272.5(10)\frac{(46.6)^2}{2EI} + 272.5\frac{(46.6)(33.4)}{3EI}$$

$$+ \left\{(900.1)(88.5) - 207.5(48) - (26.3 + 78.8)(45.5) - 157.5(70)\right.$$

$$\left. - 115(45)\right\}\left\{\frac{(46.6)^2}{2EI} + \frac{(46.6)(33.4)}{3EI}\right\}$$

$$\Delta = \left(12.38 + 7.65 + 2.13 + 1.80 + 15.78 + 2.96 + 1.41 + 78.23\right)\frac{10^6}{EI}$$

$$\Delta = (12.238)\frac{10^6}{EI}$$

I RESISTING DEFLECTION = 41.21 REF. P. 240

E OF ALUMINUM = 10^7

$$\therefore \quad \Delta = \frac{12.24}{41.21}$$

$$\Delta = .298 \text{ INCH}$$

DRAWING OR JOB TITLE	DRAWING NO. OR ITEM
APOLLO ACCESS CHAMBER	

DEFLECTION COMPLEX 34, 37 CONDITION NO. 2

$$\Delta = \sum \frac{PA^3}{3EI} + \frac{PA^2B}{3EI} + \left[\frac{PAB}{3EI} + \frac{PA^2}{2EI}\right] l + \frac{M_oA^2}{2EI} + \frac{M_oAB}{3EI}$$ REF. P. 226

$$\Delta = \frac{594(35.1)^2}{3EI}(35.1 + 33.4) + \left[\frac{594(35.1)}{6EI}(66.8 + 105.3)\right] 15.5$$

$$+ (9.5 + 28.5 + 114)\frac{(28)^2}{3EI}(28 + 33.4) + \left[\frac{152(28)}{6EI}(66.8 + 84)\right](50.6 - 28)$$

$$+ (150 + 109)\frac{(50.6)^2}{3EI}(50.6 + 33.4) + 259(10)\frac{(50.6)^2}{2EI} + 2590\frac{(50.6)(33.4)}{3EI}$$

$$\Delta = \left(16.70 + 9.27 + 2.44 + 2.42 + 18.55 + 3.32 + 1.46\right)\frac{10^6}{EI}$$

$$\Delta = (54.18)\frac{10^6}{EI}$$

I RESISTING DEFLECTION = 41.21 REF. P. 240

E OF ALUMINUM = 10^7

$$\therefore \quad \Delta = \frac{5.418}{41.21}$$

$\Delta = .131$ INCHES

PREPARED BY J.D.W.
CHECKED BY
REVISED BY

PAGE
REPORT NO.
DATE 3-24-64

DRAWING OR JOB TITLE	DRAWING NO. OR ITEM
APOLLO ACCESS PLATFORM	

DEFLECTION COMPLEX 39 CONDITION NO. 1

$$\Delta = \sum \frac{PA^3}{3EI} + \frac{PA^2B}{3EI} + \left[\frac{PAB}{3EI} + \frac{PA^2}{2EI}\right]\ell + \frac{M_oA^2}{2EI} + \frac{M_oAB}{3EI}$$ REF. P. 226

$$\Delta = \frac{626(66.6)^2}{3EI}(66.6+45.5) + (12.5+37.5+150)\frac{(37)^2}{3EI}(37+45.5)$$

$$+\left[\frac{200(37)}{6EI}(91+111)\right](66.6-37) + (150+167)\frac{(66.6)^2}{3EI}(66.6+45.5)$$

$$+ 317(10)\frac{(66.6)^2}{2EI} + 317(10)\frac{(66.6)(45.5)}{3EI} + \Big\{369.7(88.5)$$

$$- 85.6(45) - (10.3+30.8)45.5 - 61.5(70) - 68.5(45)\Big\}$$

$$\cdot\left\{\frac{(66.6)^2}{2EI} + \frac{(66.6)(45.5)}{3EI}\right\}$$

$$\Delta = \Big(103.00 + 7.54 + 7.37 + 52.60 + 7.04 + 3.20$$

$$+ 96.78\Big)\frac{10^6}{EI}$$

$$\Delta = (276.43)\frac{10^6}{EI}$$

I RESISTING DEFLECTION = 41.21 REF. P 240

E OF ALUMINUM = 10^7

$$\therefore \quad \Delta = \frac{27.84}{41.21}$$

$$\Delta = .675 \text{ INCHES}$$

DRAWING OR JOB TITLE	DRAWING NO. OR ITEM
APOLLO ACCESS CHAMBER	

DEFLECTION COMPLEX 39 CONDITION NO. 2

$$\Delta = \sum \frac{PA^3}{3EI} + \frac{PA^2B}{3EI} + \left[\frac{PAB}{3EI} + \frac{PA^2}{2EI}\right]\ell + \frac{M_oA^2}{2EI} + \frac{M_oAB}{3EI}$$ REF. P. 226

$$\Delta = \frac{594(79.9)^2}{3EI}(79.9 + 45.5) + \left[\frac{594(79.9)(45.5)}{3EI} + \frac{594(79.9)^2}{2EI}\right]15.5$$

$$+ (15.8 + 47.3 + 189)\frac{(42)^2}{3EI}(42 + 45.5) + \left[\frac{252.1(42)}{6EI}(91 + 126)\right]53.4$$

$$+ (150 + 114.7)\frac{(95.4)^2}{3EI}(95.4 + 45.5) + 264.7(10)\frac{(95.4)^2}{2EI}$$

$$+ 264.7(10)\frac{(95.4)(45.5)}{3EI}$$

$$\Delta = (158.6 + 40.20 + 12.97 + 20.42 + 113.20 + 12.00$$

$$+ 3.82)\frac{10^6}{EI}$$

$$\Delta = (361.21)\frac{10^6}{EI}$$

I RESISTING DEFLECTION = 41.21 REF. P. 240

E OF ALUMINUM = 10^7

$$\therefore \Delta = \frac{36.12}{41.21}$$

$$\Delta = .852 \text{ INCHES}$$

PREPARED BY J. D. W.
CHECKED BY
REVISED BY

PAGE
REPORT NO.
DATE 3-25-64

DRAWING OR JOB TITLE	DRAWING NO. OR ITEM
APOLLO ACCESS CHAMBER	

DEFLECTION COMPLEX 39 CONDITION NO. 3

$$\Delta = \sum \frac{PA^3}{3EI} + \frac{PA^2B}{3EI} + \left[\frac{PAB}{3EI} + \frac{PA^2}{2EI}\right]\ell + \frac{M_oA^2}{2EI} + \frac{M_oAB}{3EI}$$ REF. P. 226

$$\Delta = \frac{550(95.4)^2}{3EI}(95.4 + 45.5) + \frac{550(54.5)(95.4)}{6EI}(286.2 + 91)$$

$$+ (15.8 + 47.3 + 16.9)\frac{(42)^2}{3EI}(42 + 45.5) + \left[\frac{352.1(42)}{6EI}(91 + 126)\right]53.4$$

$$+ (150 + 114.7)\frac{(95.4)^2}{3EI}(95.4 + 45.5) + 264.7(10)\frac{95.4}{6EI}(286.2 + 91)$$

$$\Delta = \left(235.00 + 168.20 + 12.97 + 20.42 + 113.20 + 15.82\right)\frac{10^6}{EI}$$

$$\Delta = (560.61)\frac{10^6}{EI}$$

I RESTING DEFLECTION = 41.21 REF. P. 240

E OF ALUMINUM = 10^7

$$\therefore \Delta = \frac{56.06}{41.21}$$

$$\Delta = 1.36 \text{ INCHES}$$

DRAWING OR JOB TITLE	DRAWING NO. OR ITEM
APOLLO ACCESS CHAMBER	

SECTIONAL PROPERTIES

EXTRUDED CHANNEL:

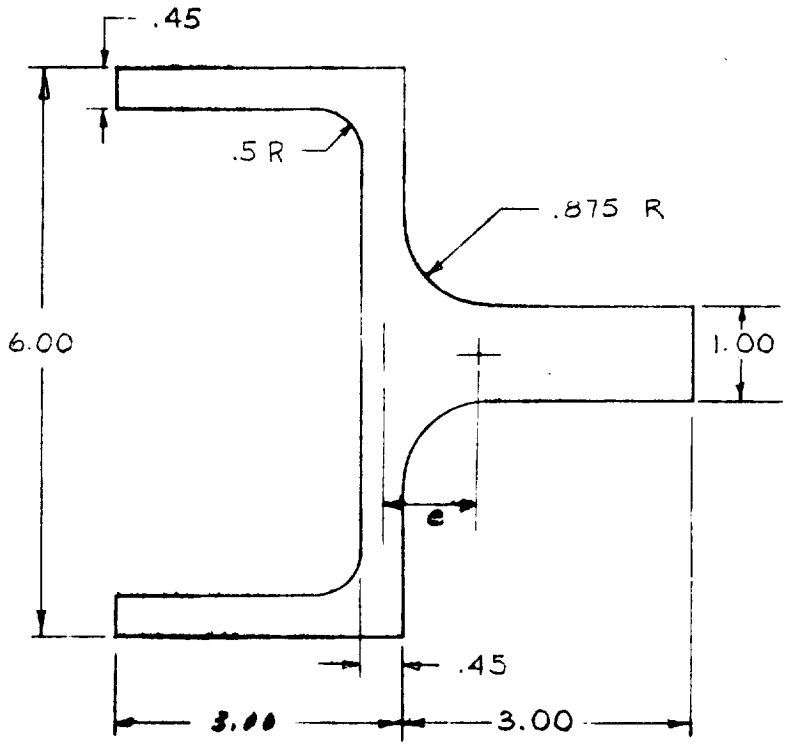

MOMENT OF INERTIA: (ASSUME ALL CORNERS SHARP)

$$I = 2(2.8)(.45)^3\frac{1}{12} + 2(.45)(2.8)(2.775)^2 + .45(6)^3\frac{1}{12} + 3(1)^3\frac{1}{12}$$

$$I = 27.79 \text{ IN.}^4$$

SHEAR CENTER: (ASSUME EXTRUSION HAS NO EFFECT)

$$e = \frac{b^2h^2t}{4I} = \frac{(3.00-.225)^2(6.0-.45)^2(.45)}{4(27.79)}$$

$$e = .96 \text{ IN.}$$

REF. POPOV

PREPARED BY J. D. W.
CHECKED BY
REVISED BY

PAGE
REPORT NO.
DATE 3-25-64

DRAWING OR JOB TITLE	DRAWING NO. OR ITEM
APOLLO ACCESS CHAMBER	

MATERIAL

EXTRUDED CHANNEL - 7075-T6511 PER QQ-A-277

F_{TU} = 82,000 PSI

F_{TY} = 73,000 PSI

F_{SU} = 45,000 PSI

F_{SY} = 42,000 PSI

F_{BKU} = 131,000 PSI

F_{BKY} = 102,000 PSI

SKIN - 7075 - T6

F_{TY} = 66,000 PSI

F_{SY} = 38,000 PSI

ZEE SECTION - 6061 - T6

F_{TY} = 35,000 PSI

F_{SY} = 20,000 PSI

DRAWING OR JOB TITLE: APOLLO ACCESS CHAMBER

DRAWING NO. OR ITEM:

EXTRUDED CHANNEL

FRONT ROLLER (COMPLEX 39)

ASSUME THE LOAD IS OVER A SPAN OF 4 in. AND FEEDS BACK AT 45°.

ASSUME THE LOAD ACTS 2 in. OUT FROM WEB OF CHANNEL

$P = 14,825$ lbs.

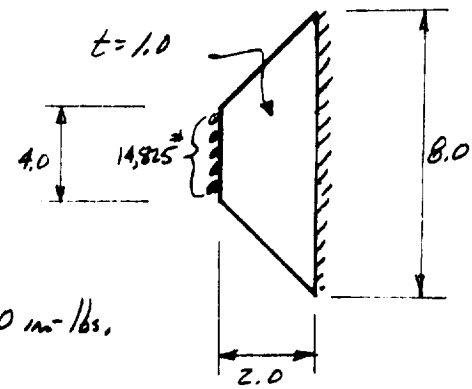

$M = 14,825(2) = 29,650$ in-lbs.

$I = \frac{bh^3}{12} = \frac{8(1)}{12} = .666$ in.^{4}

$\sigma = \frac{Mc}{I} = \frac{29,650(.5)}{.666} = 22,300$ psi.

$\tau = \frac{3}{2}\left(\frac{14,825}{4}\right) = 5,560$ psi. ~ NEGLIGIBLE

LOCAL BENDING IN WEB

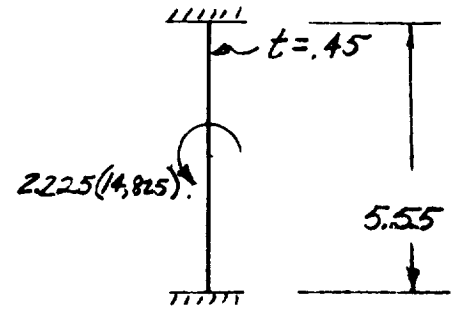

$I = \frac{8.2(.45)^3}{12} = .0625$ in.^{4}

$M_{max} = \frac{1}{2}(2.225)14,825 = 16,500$ in-lbs.

$\sigma = \frac{Mc}{I} = \frac{16,500(.225)}{.0625} = 59,400$ psi.

PREPARED BY RLM
CHECKED BY
REVISED BY

PAGE
REPORT NO.
DATE 3-31-64

DRAWING OR JOB TITLE: APOLLO ACCESS CHAMBER

DRAWING NO. OR ITEM

EXTRUDED CHANNEL

$T = 14{,}825(2.225 - .96) = 18{,}750$ in.-lbs.

$J = \frac{1}{3} \Sigma b t^3 = .338$ in.^{4}

$K_1 = 3J = 1.014$ in.^{4}

$$\theta = \frac{3T}{G K_1} = \frac{3(18{,}750)}{3.9(10)^6 1.014} = .0142 \text{ RAD/in}$$

$$\tau = G\theta t_{max} = 3.9(10)^6(.0142).45 = 24{,}900 \text{ psi.}$$

BENDING STRESS

$M = P_2(45.525) = 10{,}328(45.525)$

$M = 470{,}000$ in.-lbs.

$$\sigma = \frac{Mc}{I} = \frac{470{,}000(3)}{27.79} = 50{,}750 \text{ psi.}$$

BUCKLING OF LEG

$b/t = \frac{2.55}{.45} = 5.66$

$Kl/r = 16.3$, $B = 87.8$ $D = .859$

$F_{cr} = [B - D(Kl/r)](10)^3 = 73{,}800$ psi.

$\therefore$ BUCKLING NOT CRITICAL

DRAWING OR JOB TITLE	DRAWING NO. OR ITEM
APOLLO ACCESS CHAMBER	

EXTRUDED CHANNEL

TOTAL STRESS

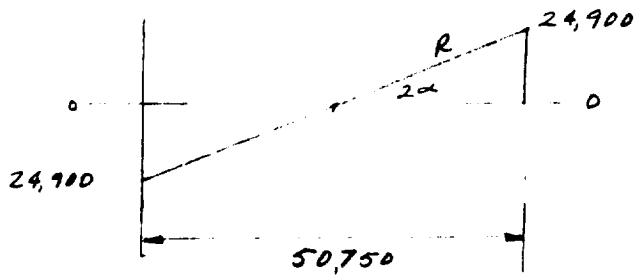

$$\tan 2\alpha = \frac{24900}{25,375}$$

$$2\alpha = 44.5^\circ$$

$$R = \frac{25,375}{\cos 44.5^\circ} = 35,600$$

$$\sigma_T = 35,600 + 25,375 = 60,975 \text{ psi.}$$

PREPARED BY RLM
CHECKED BY
REVISED BY

PAGE
REPORT NO.
DATE 3-31-64

DRAWING OR JOB TITLE	DRAWING NO. OR ITEM
APOLLO ACCESS CHAMBER	

EXTRUDED CHANNEL

MARGIN OF SAFETY

BENDING OF LIP WHICH ROLLERS ROLL ON

$$M.S. = \frac{73,000}{22,300} - 1 = +2.27$$

LOCAL BENDING IN WEB

$$M.S. = \frac{73,000}{59,400} - 1 = +.23$$

TORSION AND BENDING OF CHANNEL

$$M.S. = \frac{73,000}{60,975} - 1 = +.20$$

DRAWING OR JOB TITLE	DRAWING NO. OR ITEM
APOLLO ACCESS CHAMBER	

EXTRUDED CHANNEL

REAR ROLLER (COMPLEX 34 & 37)

$P_2 = 9{,}300$ lbs. (LOAD ON LIP DUE TO ROLLER)

$$M = \frac{P}{n} = \frac{9300}{n} = 296 \text{ in-lbs/in.}$$

$$\sigma = \frac{6M}{t^2} = \frac{6(296)}{(1)^2} = 17{,}800 \text{ psi.}$$

MARGIN OF SAFETY

$$M.S. = \frac{73{,}000}{17{,}800} - 1 = +3.10$$

PREPARED BY J. D. W.
CHECKED BY
REVISED BY

PAGE
REPORT NO.
DATE 3-30-64

DRAWING OR JOB TITLE	DRAWING NO. OR ITEM
APOLLO ACCESS CHAMBER	

SECTIONAL PROPERTIES

ASSUME DEFLECTION IS RESISTED BY EXTRUDED CHANNELS, HALF OF TOP SKIN, EFFECTIVE WIDTH OF BOTTOM SKIN, AND FOUR ZEE SECTIONS. THEN THE I PREVENTING DEFLECTION OF THE CRITICAL CHANNEL IS —

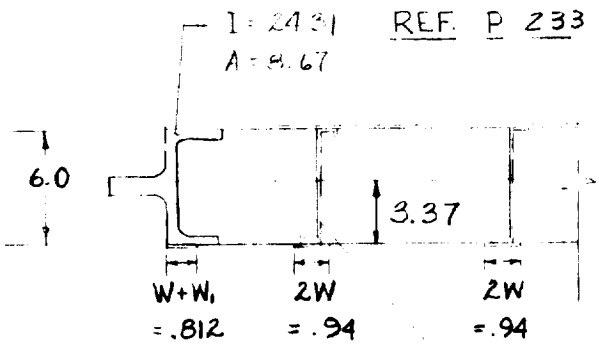

REF. P 233

$F_{c_{cr}}$: $1.65 \frac{S}{t} = 1.65 \frac{.75}{.031}$
$= .40$

$F_{c_{cr}} = 32$ KSI

$W = .85t\sqrt{\frac{E}{F_c}} = .47$ IN.

$W_1 = .62t\sqrt{\frac{E}{F_c}} = .342$ IN.

I = 2.55
A = .53

$\bar{Y} = \frac{\Sigma AY}{\Sigma A} = 2.98$ IN.

$$I = 24.31 + 8.67(.37)^2 + 2(2.55) + 2(.53)(.37)^2 + .0625(21.5)(2.66)^2 + .031(.812 + .94 + .94)(3.39)^2$$

$I = 41.21$ IN^4

DRAWING OR JOB TITLE	DRAWING NO. OR ITEM
APOLLO ACCESS CHAMBER	

STRESS

ASSUME EXTRUDED CHANNEL RESISTS ENTIRE LOAD.

$$\sigma_{MAX} = \frac{M_{MAX}\, Y}{I}$$

$$= \frac{234{,}000\,(3)}{24.31}$$

$$\sigma_{MAX} = 29{,}200 \text{ PSI}$$

MARGIN OF SAFETY

$$M.S._{YLD} = \frac{73{,}000}{29{,}200} - 1 = \boxed{1.50}$$

PREPARED BY J.D.W.
CHECKED BY
REVISED BY

PAGE
REPORT NO.
DATE 3-25-04

DRAWING OR JOB TITLE	DRAWING NO. OR ITEM
APOLLO ACCESS CHAMBER	EXTENSION EAR

LOADS

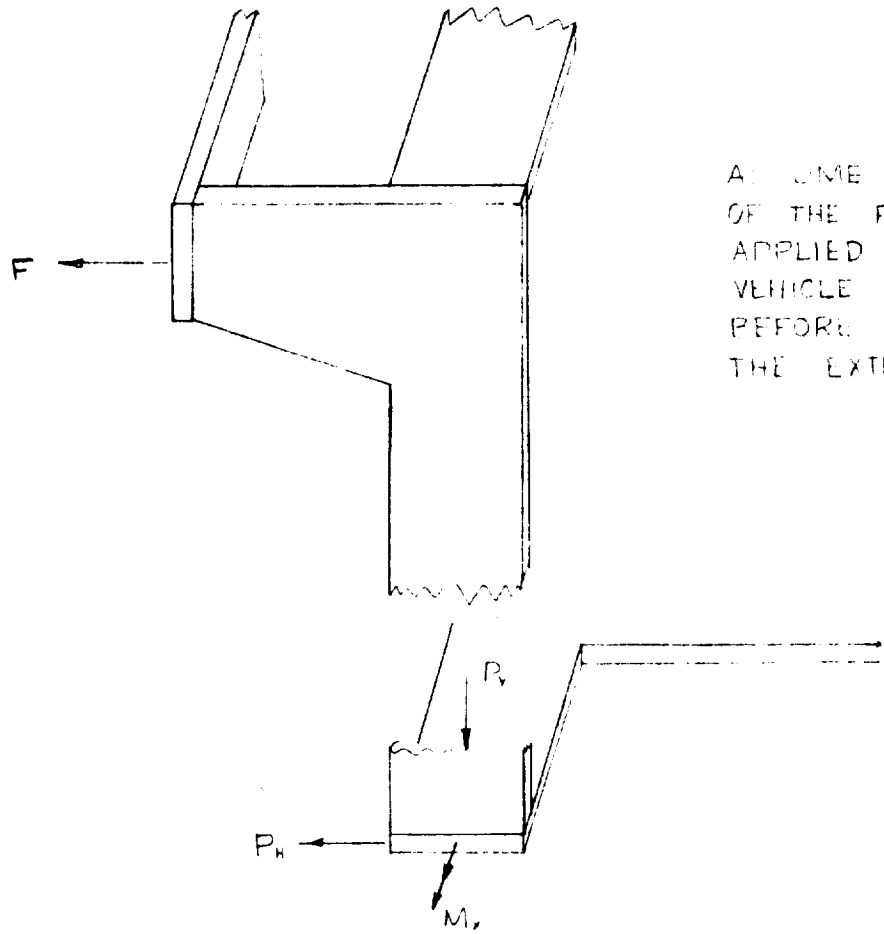

ASSUME NONE OF THE FORCE APPLIED BY THE VEHICLE IS DISIPATED BEFORE REACHING THE EXTENSION EAR

COMPUTED BY [illegible] CONDITION NO. 1 REF. P 219

$$P_V = 300(2)(.5) + 200(2)\left(\frac{47}{86}\right) + 250(2)\left(\frac{47}{86}\right)$$

$$= 930 \text{ LBS.}$$

$$P_H = \left[300(2) + 200(.5)\right]\frac{47}{86} = 1{,}100 \text{ LBS.}$$

$$M_x = 1{,}100(88.5) + 780(45) = 132{,}400 \text{ IN-LBS}$$

PREPARED BY JDW
CHECKED BY
REVISED BY

PAGE 243
REPORT NO.
DATE

DRAWING OR JOB TITLE	DRAWING NO. OR ITEM
APOLLO ACCESS CHAMBER	EXTENSION EAR

SKETCH

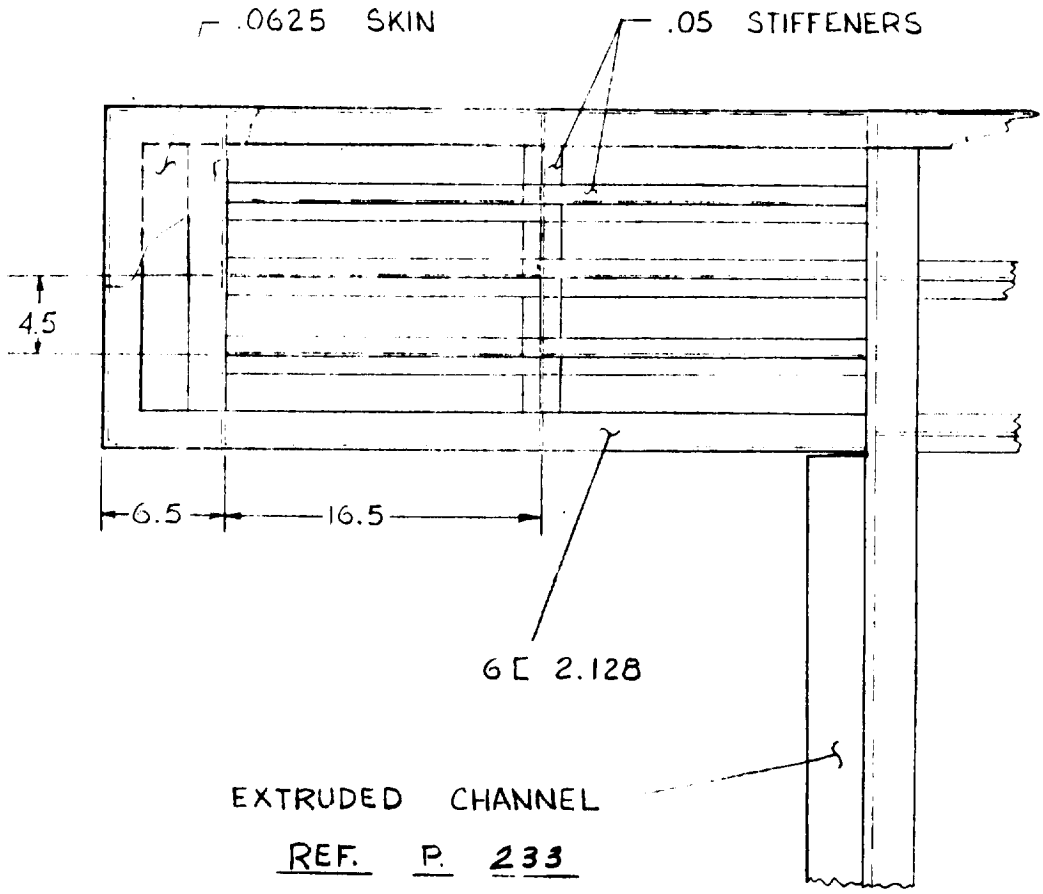

PREPARED BY JDW
CHECKED BY
REVISED BY

PAGE
REPORT NO.
DATE 3-25-64

DRAWING OR JOB TITLE	DRAWING NO. OR ITEM
APOLLO ACCESS CHAMBER	EXTENSION EAR

LOADS COMPLEX 34, 37 CONDITION NO. 1

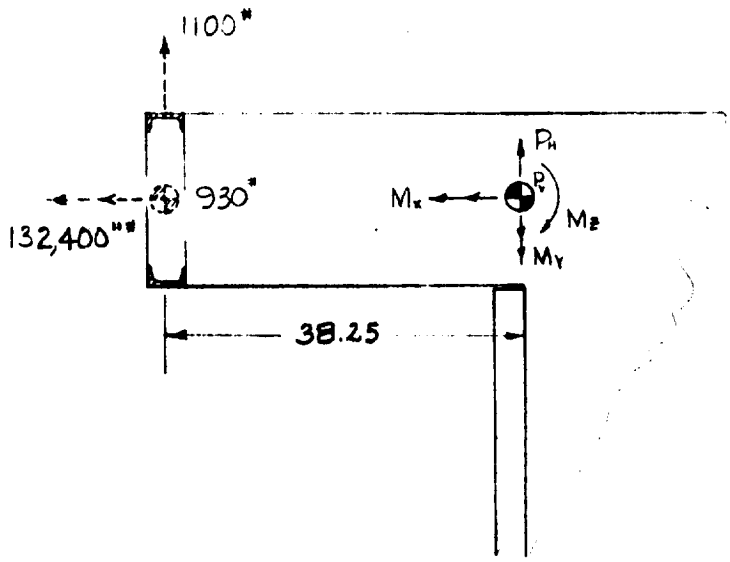

THE LOADS FELT AT THE POINT WHERE THE EXTENSION EAR CONNECTS TO THE PLATFORM ARE :

P_H = 1100 LBS

P_V = 930 LBS

M_X = 132,400 IN-LBS

M_Y = 35,500 IN-LBS

M_Z = 42,000 IN-LBS

DRAWING OR JOB TITLE	DRAWING NO. OR ITEM
APOLLO ACCESS CHAMBER	EXTENSION EAR

LOADS COMPLEX 39 CONDITION NO. 1

REF. P 221

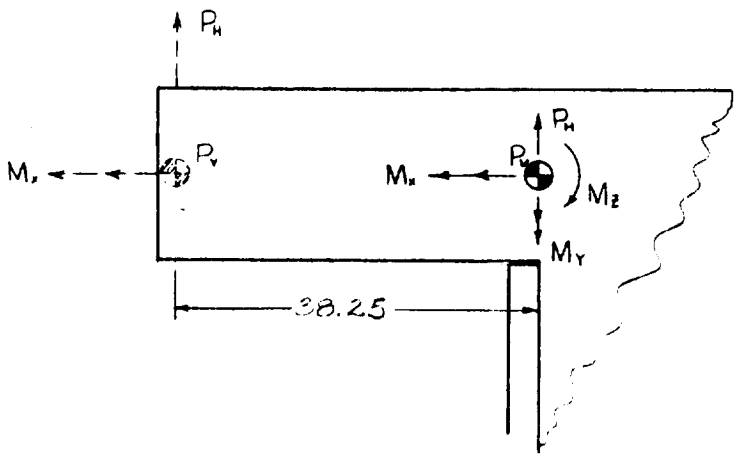

$$P_V = 300(2)(.5) + 250(3)\left(\frac{86-14.2}{86}\right) + 200(2)\left(\frac{86-14.2}{86}\right)$$

$P_V = 1260$ LBS

$$P_H = \left[(389.7)(2) + 85.6\right]\left(\frac{86-14.2}{86}\right)$$

$P_H = 722$ LBS.

$M_x = 1260(54) + 722(88.5)$

$M_x = 131,900$ IN·LBS

$M_Y = 1260(38.25)$

$M_Y = 48,200$ IN-LBS

$M_z = 722(38.25)$

$M_z = 27,600$ IN-LBS.

PREPARED BY J. D. W.
CHECKED BY
REVISED BY

PAGE
REPORT NO.
DATE 3-25-64

DRAWING OR JOB TITLE	DRAWING NO. OR ITEM
APOLLO ACCESS CHAMBER	EXTENSION EAR

MATERIAL

CHANNELS - 6061 - T6

F_{TY} = 35,000 PSI

F_{SY} = 20,000 PSI

SKIN - 7075 - T6

F_{TY} = 66,000 PSI

F_{SY} = 38,000 PSI

RIVETS - MS2047/SAD12

F_{TY} = 19,000 PSI

P_{SU} = 3,510 LBS

P_{SY} = 2,106 LBS (ASSUMED)

CLIP ANGLES - 2024 - T4

F_{TY} = 44,000 PSI

F_{CY} = 39,000 PSI

F_{SY} = 25,000 PSI

CLIP ANGLES - 6061 - T6

F_{TY} = 35,000 PSI

F_{SY} = 20,000 PSI

DRAWING OR JOB TITLE	DRAWING NO. OR ITEM
APOLLO ACCESS CHAMBER	EXTENSION EAR

SECTIONAL PROPERTIES

CROSS-SECTION OF EXTENSION EAR
AT POINT OF CONNECTION TO PLATFORM

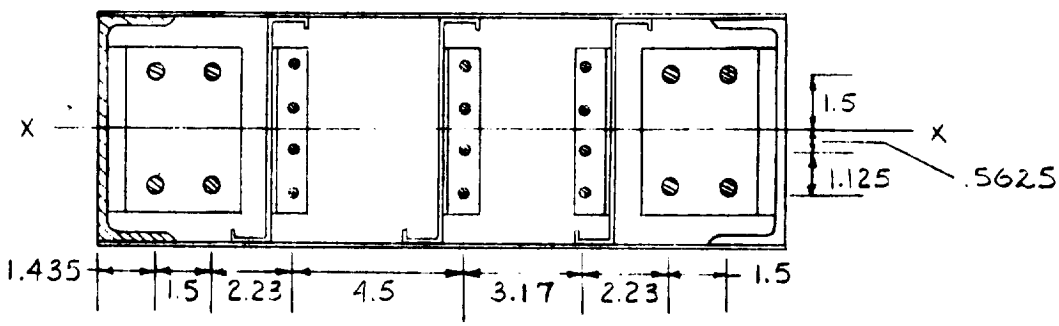

SHEAR IS TRANSFERRED BY CROSS-HATCHED AREAS. TOTAL AREA = 3.105 IN.^{2}

CHANNEL - $I_x = 9.007$, $I_y = .581$, $A = 1.809$, $X = .456$

LARGE RIVETS - $A = .1105$

SMALL RIVETS - $A = .0276$

ASSUME ONLY THE CONTINUOUS CHANNEL AND THE CLIP ANGLE WHICH CONNECTS THE OPPOSITE CHANNEL RESIST THE BENDING MOMENTS.

SECTIONAL PROPERTIES

ASSUME M_Y IS RESISTED ENTIRELY BY A COUPLE BETWEEN TOP AND BOTTOM SKIN. ALSO ASSUME THE AREA OF TOP SKIN IN TENSION EQUALS THE EFFECTIVE AREA IN COMPRESSION ON THE BOTTON. COUPLE FORCES $= \frac{M_Y}{6}$

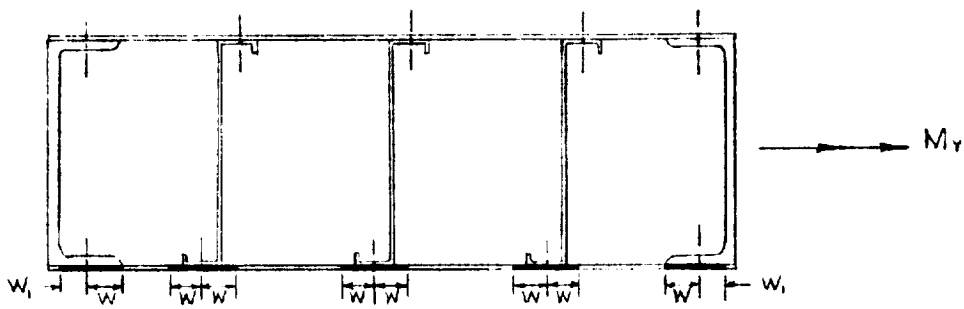

F_{ccr} : $1.65 \frac{S}{t} = 1.65 \frac{.75}{.0625}$

$= 19.4$

$F_{ccr} = 37{,}000$ PSI.

$W = .85\, t \sqrt{\frac{E}{F_c}} = .85(.0625)\sqrt{\frac{10^7}{37{,}000}}$

$W = .875$ IN.

$W_1 = .62\, t \sqrt{\frac{E}{F_c}}$

$W_1 = .640$ IN.

EFFECTIVE AREA IN COMPRESSION $= (8W + 2W_1)t$

$= .518$ IN.^{2}

DRAWING OR JOB TITLE	DRAWING NO. OR ITEM
APOLLO ACCESS CHAMBER	EXTENSION EAR

SECTIONAL PROPERTIES

ASSUME M_z IS RESISTED ENTIRELY BY A COUPLE BETWEEN THE CONTINUOUS CHANNEL AND A SEGMENT OF TOP AND BOTTOM SKIN.

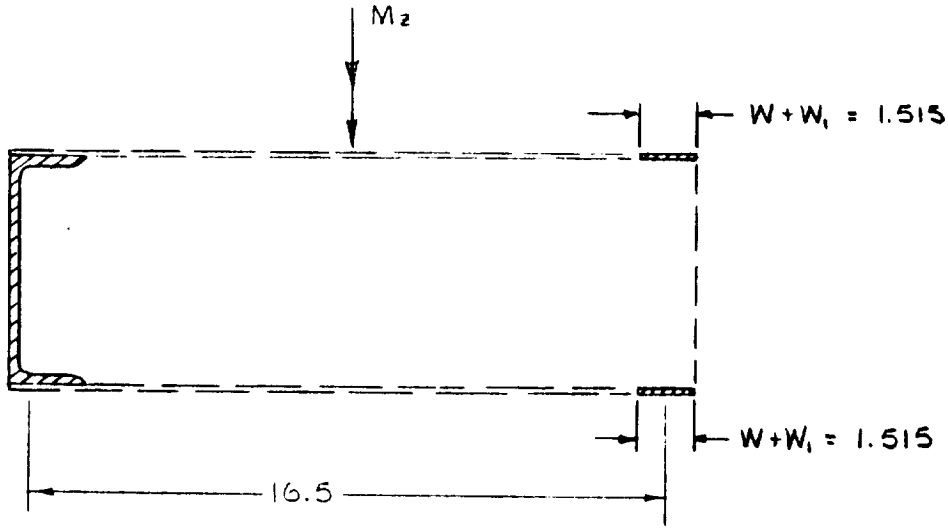

COUPLE FORCES $= \dfrac{M_z}{16.5}$

EFFECTIVE AREA OF SKIN IN COMPRESSION $= .0625(2)(1.515)$

$= .189 \text{ IN}^2$

250

PREPARED BY J. D. W.
CHECKED BY
REVISED BY

PAGE
REPORT NO.
DATE 3-27-64

DRAWING OR JOB TITLE	DRAWING NO. OR ITEM
APOLLO ACCESS CHAMBER	EXTENSION EAR

STRESS ONLY MAXIMUM STRESSES GIVEN

SHEARING STRESS IN SKIN:

$$\tau = \frac{q}{t} = \frac{T}{2At}$$

$$\tau = \frac{132,400}{2(18)(6)(.0625)}$$

$$\tau = 9,800 \text{ PSI.}$$

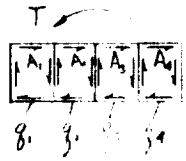

$T = 2A_1q_1 + 2A_2q_2 + 2A_3q_3 + 2A_4q_4$

ASSUME $q_1 = q_2 = q_3 = q_4 = q$

$T = 2A_{TOTAL}\, q$

ALLOWABLE: $F_{s\,cr} = KE\left(\frac{t}{b}\right)^2$ REF. PEERY

$$F_{s\,cr} = 5.2(10^7)\left(\frac{.0625}{4.5}\right)^2$$

$$F_{s\,cr} = 10,000 \text{ PSI}$$

NORMAL STRESS IN SKIN: (MAX COMPRESSIVE)

$$\sigma = \frac{P_1}{A_1} + \frac{P_2}{A_2}$$

$$\sigma = \frac{35,500}{6(.518)} + \frac{42,000}{(165)(.180)}$$

$$\sigma = 11,400 + 13,450 = 24,850 \text{ PSI}$$

ALLOWABLE: $F_{c\,cr}$: $1.65\frac{g}{t} = 1.65\frac{.75}{.0625}$

$$= 19.4$$

$$F_{c\,cr} = 37,000 \text{ PSI}$$

STRESS

SHEAR IN CLIP ANGLE RIVETS:

TORQUE (M_x) TAKEN BY SKIN = 9,800(18)(.0625)(6)
= 66,000 IN-LBS

REMAINING TORQUE IS TAKEN BY 4 CLIP ANGLE RIVETS. SHEAR DUE TO P_H AND P_V IS ALSO TAKEN BY RIVETS

RESULTANT SHEAR PER RIVET $= \sqrt{\left(\frac{P_H}{8}\right)^2 + \left(\frac{P_V}{8} + \frac{132,400 - 66,000}{8(16.5)}\right)^2}$

P_s = 634 LBS.

MARGINS OF SAFETY

SKIN:

$M.S._\tau = \frac{10,000}{9,800} - 1 =$ .02

$M.S._Y = \frac{37,000}{24,850} - 1 =$ .49

CLIP ANGLE RIVETS:

$M.S._Y = \frac{2,106}{634} - 1 =$ 2.33

252

PREPARED BY JDW
CHECKED BY
REVISED BY

PAGE
REPORT NO.
DATE 3-20-64

DRAWING OR JOB TITLE	DRAWING NO. OR ITEM
APOLLO ACCESS CHAMBER	PLATFORM FLOOR

LOADS :

THREE MEN ARE ALLOWED ON THE PLATFORM AT ONE TIME. ASSUME THAT THEY STAND TWELVE INCHES APART IN A LINE FOR THE MAXIMUM LOAD ON THE STIFFENERS ALSO ASSUME THAT THREE TRANSVERSE STIFFNERS TAKE 60% OF THE LOAD, WITH ONE LONGITUDINAL STIFFENER TAKING THE REMAINING 40%. ASSUME STIFFENERS HAVE SIMPLY SUPPORTED ENDS

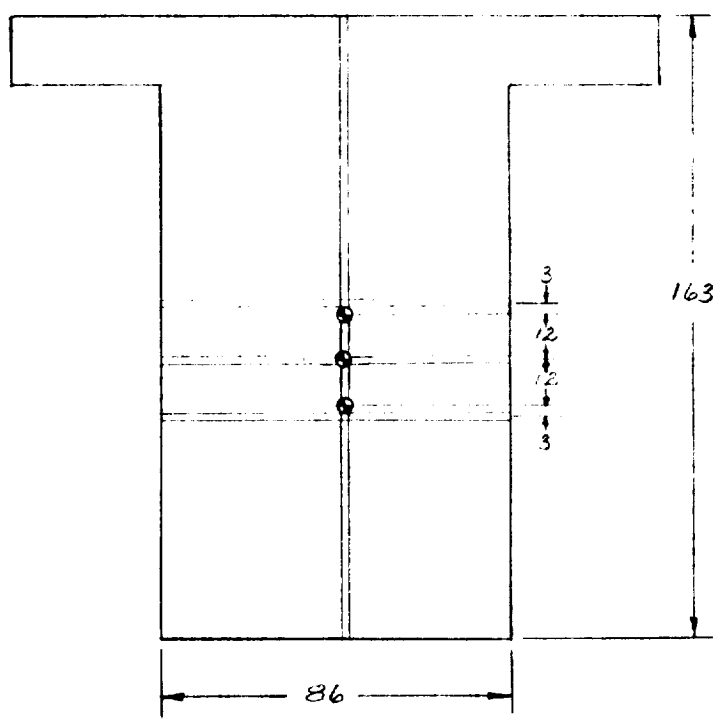

LOADS:

THE CRITICAL TRANSVERSE STIFFENER WOULD HAVE THE FOLLOWING LOAD:

60% (750) = 450 LBS.

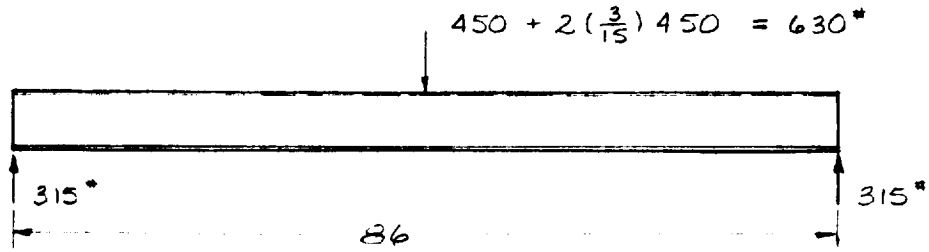

MAXIMUM MOMENT OCCURS AT MID-SPAN.

$M_{MAX.} = 315(43) = 13,500$ IN-LBS.

THE CRITICAL LONGITUDINAL STIFFENER HAS THE FOLLOWING LOAD.

40% (750) = 300 LBS.

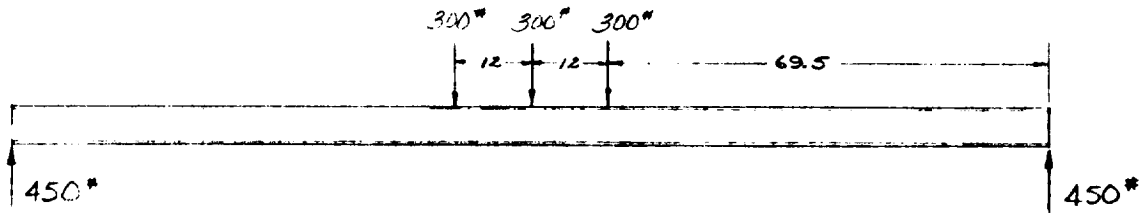

MAXIMUM MOMENT OCCURS AT MID-SPAN

$M_{MAX} = 450(81.5) - 300(12) = 33,100$ IN-LBS.

PREPARED BY J. D. W.
CHECKED BY
REVISED BY

PAGE
REPORT NO.
DATE 3-20-64

DRAWING OR JOB TITLE	DRAWING NO. OR ITEM
APOLLO ACCESS CHAMBER	PLATFORM FLOOR

LOADS:

TO CHECK SHEAR TEAR OF FLOOR SKIN ASSUME A MAN'S WEIGHT IS APPLIED ON A TWO INCH WIDTH.

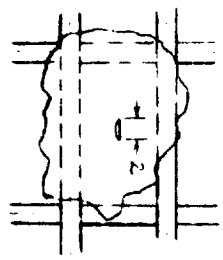

V = 750 LBS.

TO CHECK SHEAR IN WEB OF STIFFENER ASSUME A CONCENTRATED LOAD EQUAL TO 2000 LBS. THIS IS THE MAGNITUDE OF THE REACTION AT THE END OF THE CRITICAL LONGITUDINAL STIFFENER FOR THE LOADING SHOWN.

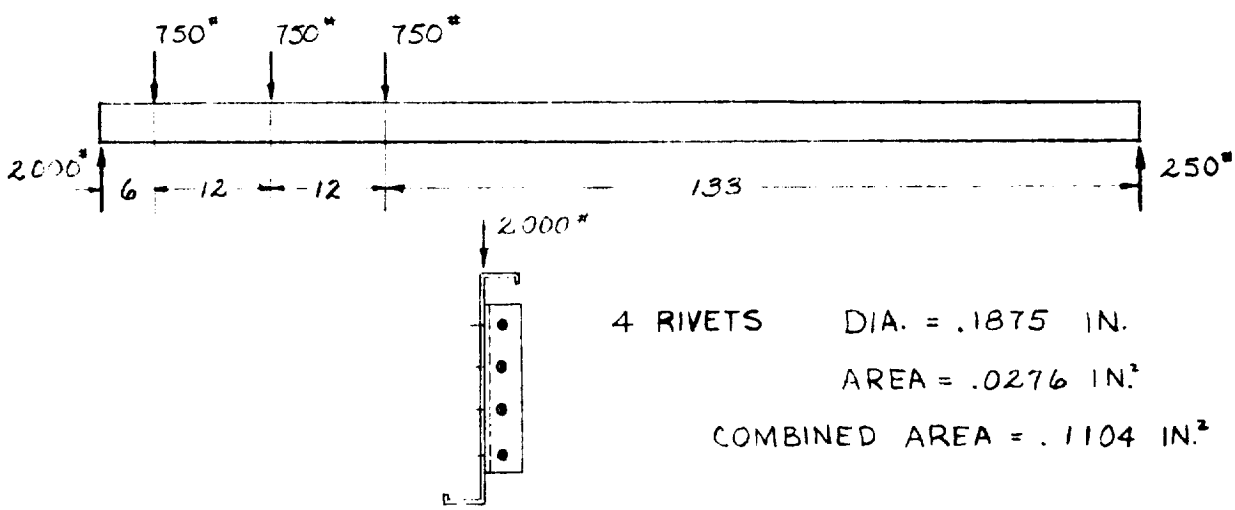

4 RIVETS DIA. = .1875 IN.

AREA = .0276 IN.^{2}

COMBINED AREA = .1104 IN.^{2}

DRAWING OR JOB TITLE	DRAWING NO. OR ITEM
APOLLO ACCESS CHAMBER	PLATFORM FLOOR

MATERIAL:

SKIN — 7075-T6

F_{TU} = 77,000 PSI

F_{TY} = 66,000 PSI

F_{SU} = 46,000 PSI

F_{SY} = 38,000 PSI

STIFFENERS — 6061-T6

F_{TU} = 42,000 PSI

F_{TY} = 35,000 PSI

F_{SU} = 27,000 PSI

F_{SY} = 20,000 PSI

RIVETS — 2117-T4

F_{SU} = 38,000 PSI

F_{SY} = 18,000 PSI

P_{SU} = 977 LBS

P_{SY} = 586 LBS. (ASSUMED)

CLIP ANGLES — 6061-T6

PREPARED BY J.D.W.
CHECKED BY
REVISED BY

PAGE
REPORT NO.
DATE 3-23-64

DRAWING OR JOB TITLE	DRAWING NO. OR ITEM
APOLLO ACCESS CHAMBER	PLATFORM FLOOR

SECTIONAL PROPERTIES

ZEE STIFFENERS:

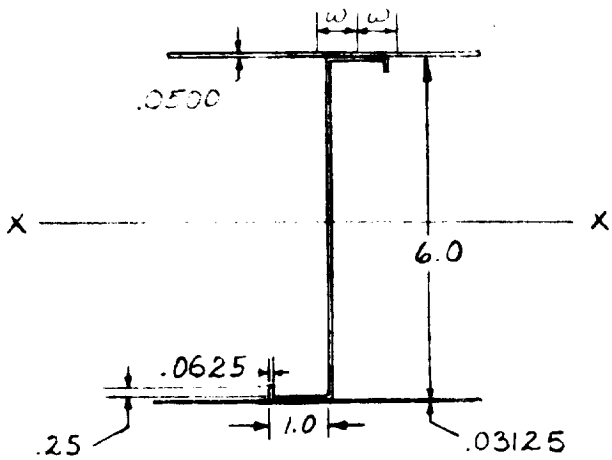

EFFECTIVE WIDTH OF SKIN (ω)

$$\omega = .85 t \sqrt{\frac{E}{F_c}}$$ REF PEERY

$$1.65 \frac{S}{t} = 24.8 \quad ; \quad F_c = 36{,}000$$

$$\omega = .708$$

$$2\omega = 1.416$$

ASSUME 2.29 IN. OF BOTTOM SKIN ACTS IN TENSION.

$$I_x = \frac{.0625(6)^3}{12} + 2\left[1(.0625)(2.97)^2\right] + 2\left[.25(.0625)(2.8125)^2\right]$$
$$+ 1.416(.0500)(3.03)^2 + 2.29(.03125)(3.016)^2$$

$$I_x = 3.736 \text{ IN.}^4$$

DRAWING OR JOB TITLE	DRAWING NO. OR ITEM
APOLLO ACCESS CHAMBER	PLATFORM FLOOR

SECTIONAL PROPERTIES

ASSUME MOMENT TAKEN BY TRANSVERSE STIFFENERS IS RESISTED ENTIRELY BY A COUPLE BETWEEN TOP AND BOTTOM SKIN.

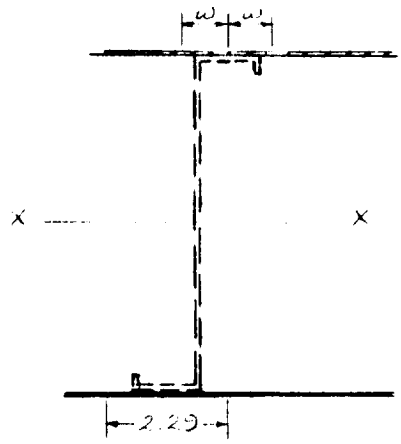

$\omega = .708$ REF PAGE 256

$$I_x = 1.416(.05)(3.03)^2 + 2.29(.03125)(3.016)^2$$

$$I_x = 1.3 \text{ IN}^4$$

PREPARED BY J.D.W.
CHECKED BY
REVISED BY

PAGE
REPORT NO.
DATE 3-23-64

DRAWING OR JOB TITLE	DRAWING NO. OR ITEM
APOLLO ACCESS CHAMBER	PLATFORM FLOOR

STRESSES

CRITICAL TRANSVERSE STIFFENER:

$F_c - 1.65 \frac{s}{t} = 24.8$

$F_c = 36,000$ PSI

REF. PEERY

$\sigma = \frac{MY}{I} = \frac{13,500(3)}{1.3}$

$\sigma = 31,200$ PSI

LONGITUDINAL STIFFENER:

$\sigma = \frac{MY}{I} = \frac{3,100(3)}{3.736}$

$\sigma = 2.6,600$ PSI

SHEARING STRESS IN STIFFENER WEB

$\tau = \frac{3}{2}\frac{V}{A} = \frac{3(2000)}{2(.0625)(6)}$

$\tau = 8,000$ PSI

INTERACTION OF SHEARING AND BENDING STRESS IN STIFFENERS:

$$\left(\frac{\sigma}{F_c}\right)^2 + \left(\frac{\tau}{F_s}\right)^2 \leq 1$$

$$\left(\frac{31,200}{35,000}\right)^2 + \left(\frac{8,000}{20,000}\right)^2 \leq 1$$

$.796 + .16 = .956$ O. K.

DRAWING OR JOB TITLE	DRAWING NO. OR ITEM
APOLLO ACCESS CHAMBER	PLATFORM FLOOR

STRESSES

SHEARING STRESS IN SKIN:

$$\tau = \frac{V}{A} = \frac{750}{(.05)(2)}$$

$$\tau = 7{,}500 \text{ PSI}$$

SHEARING FORCE IN STIFFENER RIVETS:

$$V = \frac{2000}{4}$$

$$V = 500 \text{ LBS}$$

SHEARING STRESS IN SKIN RIVETS (1.5 IN. C.C.)

$$\tau = \frac{VQ}{I}(1.5)\frac{1}{A_{RIVET}}$$

$$\tau = \frac{2000(.05)(1.416)(3.025)(1.5)}{3.736(.0276)}$$

$$\tau = 6{,}230 \text{ PSI}$$

MARGINS OF SAFETY

TRANSVERSE STIFFENER:

$$M.S._{ULT} = \frac{42{,}000}{31{,}200} - 1 = \boxed{+.35}$$

$$M.S._{YLD} = \frac{35{,}000}{31{,}200} - 1 = \boxed{+.12}$$

$$M.S._{\tau} = \frac{20{,}000}{5{,}330} - 1 = \boxed{+2.75}$$

PREPARED BY J. D. W.
CHECKED BY
REVISED BY

PAGE
REPORT NO.
DATE 3-23-64

DRAWING OR JOB TITLE	DRAWING NO. OR ITEM
APOLLO ACCESS CHAMBER	PLATFORM FLOOR

MARGINS OF SAFETY

LONGITUDINAL STIFFENER :

$$M.S._{ULT} = \frac{42,000}{26,600} - 1 = \quad \boxed{+.62}$$

$$M.S._{YLD} = \frac{35,000}{26,600} - 1 = \quad \boxed{+.32}$$

SKIN:

$$M.S._{\tau} = \frac{38,000}{7,500} - 1 = \quad \boxed{+4.06}$$

STIFFENER RIVETS:

$$M.S._{\tau} = \frac{586}{500} - 1 = \quad \boxed{+.17}$$

SKIN RIVETS:

$$M.S._{\tau} = \frac{586}{(6,230)(.0272)} - 1 \quad \boxed{+2.42}$$

DRAWING OR JOB TITLE	DRAWING NO. OR ITEM
APOLLO ACCESS CHAMBER	HORSE HEAD

LOADS

HORSE HEAD, TRACKS = 375 LBS
VERT. & HOR. CURTAINS = 270 LBS
PLATFORM - HANDRAILS, ETC = 560 LBS
HOOD AND FRAME = 370 LBS
BELLOWS = 50 LBS

P = 1625 LBS - TRUE DEAD WT.
USE LOAD FACTOR OF 2
P = 1625 (2) = 3250 LBS.

MAN = 250 LBS = TRUE LIVE LOAD
USE LOAD FACTOR OF 3
P = 250 (3) = 750 LBS

ADD 10% FOR FRICTION AND RESISTANCE OF BELLOWS P = .05 (4000) = 200 LBS

TOTAL DESIGN LOAD = Σ P
= 3250 + 750 + 200
= 4200 LBS.

g = 1.05 (COMPLEX 34, 37)

FORCE EXERTED BY MISSILE ON HORSE HEAD
= 1.05 (4200)
F_F = 4410 LBS

262

PREPARED BY J. D. W.
CHECKED BY
REVISED BY

PAGE
REPORT NO.
DATE 4-7-64

DRAWING OR JOB TITLE	DRAWING NO. OR ITEM
APOLLO ACCESS CHAMBER	HORSE HEAD

LOADS

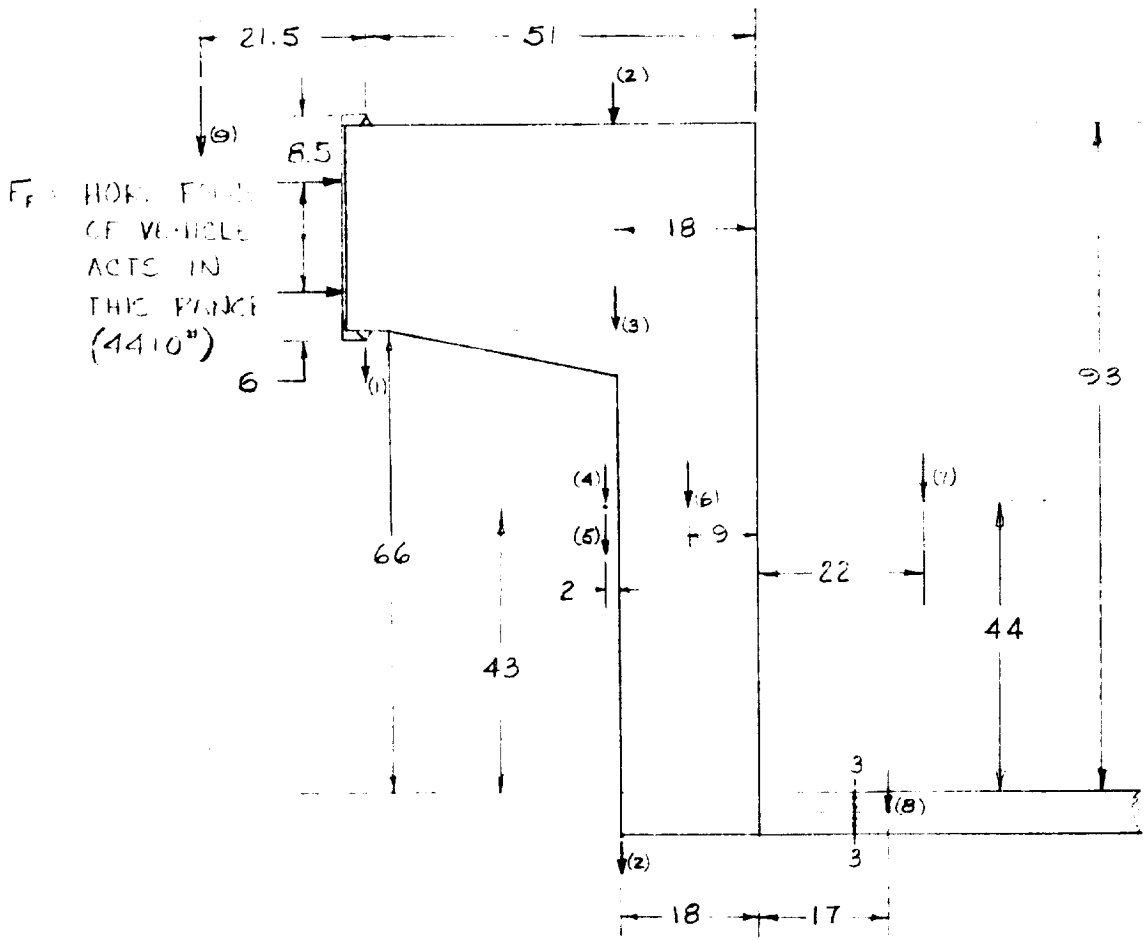

(1) MAN + HOOD = 1000 LBS
(2) TRACKS = 75 LBS TOP, 75 LBS BOTTOM
(3) HORSE HEAD = 600 LBS
(4) VERT CURTAINS 120 LBS
(5) HOOD FRAME = 400 LBS
(6) HOR CURTAINS = 420 LBS
(7) BELLOWS = 100 LBS
(8) PLATFORM HANDRAILS, ETC = 1120 LBS
(9) GRABBER = 1000 LBS

DRAWING OR JOB TITLE	DRAWING NO. OR ITEM
APOLLO ACCESS CHAMBER	HORSE HEAD

LOADS - BOX SECTION:

HORIZONTAL FORCE AT LOWEST POSITION

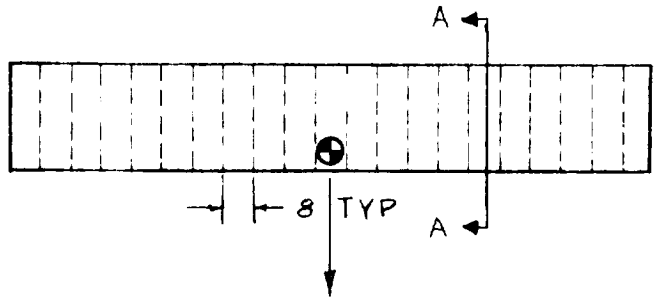

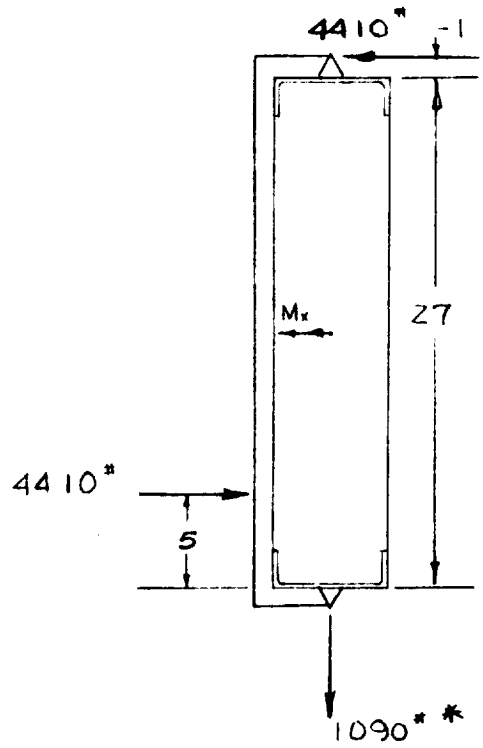

ASSUME BEAM DEFLECTS SO THAT ALL OF LOAD IS RESISTED AT TOP OF BOX SECTION

.0625 SKIN BOTH SIDES

ASSUME M_x RESISTED BY CHANNELS

$$M_x = \frac{1090}{2}(83.75) = 42{,}200''^{\#}$$

TORSION ON BOX SECTION = 4410 (23)

T = 101,500 IN-LBS

AXIAL LOAD IN EACH CHANNEL DUE TO M_x:

$$F = \frac{42{,}200}{27 - 2(.461)}$$

F = 1620 LBS

* AT MAX. POSSIBLE THIS LOAD = 1600 LBS LOCALLY

V ON SKIN = 800#

PREPARED BY J.D.W.
CHECKED BY
REVISED BY

PAGE
REPORT NO.
DATE 4-7-64

DRAWING OR JOB TITLE	DRAWING NO. OR ITEM
APOLLO ACCESS CHAMBER	HORSE HEAD

LOADS

ASSUME HALF OF TORSION IS RESISTED BY SKIN ON EACH SIDE

$$T' = \frac{T}{2} = 50,750 \text{ IN-LBS}$$

$$q = \frac{T}{2A} = \frac{50,750}{2(6)(27)}$$

$$q = 157 \text{ LBS/IN.}$$

SHEAR FLOW IN PLANE PERPENDICULAR TO BOX MEMBER RESISTED BY STIFFENER

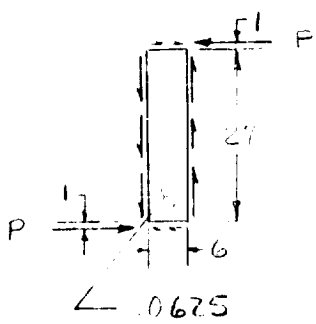

ASSUME P RESISTED BY TWO STIFFENERS.

$$V = \frac{P}{2} = \frac{4410}{2}\left(\frac{23}{29}\right)$$

$$V = 1750$$

AT MAXIMUM ACCELERATION OF VEHICLE TOWARD PLATFORM (COMPLEX 34, 37) THE HOOD CAN BE A MAXIMUM OF 4 IN. TO ONE SIDE OF THE NOMINAL POSITION. THIS IS THE ASSUMED COND'T. FOR CALCULATION OF LOAD ON HORSE HEAD.

DRAWING OR JOB TITLE	DRAWING NO. OR ITEM
APOLLO ACCESS CHAMBER	HORSE HEAD

LOADS

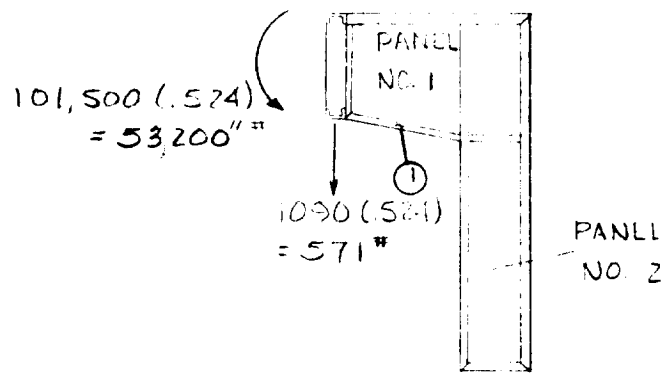

LOAD TO ONE SIDE OF HORSE HEAD

$= \frac{83.75 \cdot 4}{167.5} (P_{TOTAL})$

$= .524 (P_{TOTAL})$

$P_2 = 4110 \left(\frac{27}{33}\right)(.524)$

$= 1815$ LBS

$P_1 = .524(4410)\left(\frac{6}{33}\right)$

$= 405$ LBS

PANEL NO. 1 :

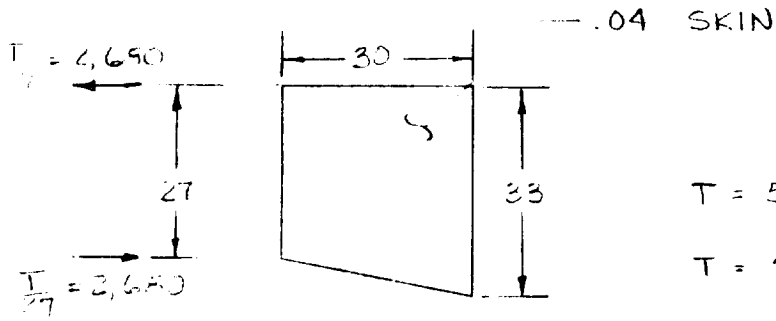

$T = 53,200 + 571(33)$

$T = 72,400$ IN-LBS

ASSUME HALF OF SHEAR RESISTED BY SKIN ON EACH SIDE

$V = \frac{2680}{2} = 1340$ LBS

MEMBER 1 —

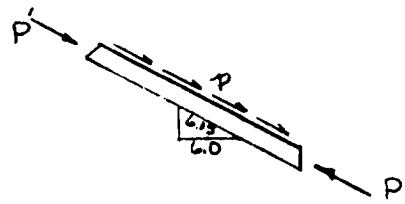

$P = 2680\left(\frac{6.05}{6}\right) = 2700$"

$p = 87.1$ LBS/IN

$L = 31$ IN.

$I = .352$ IN

$P'_{ALL} = \frac{\pi^2 EI}{L^2} - .5\,pL$

$= 34,850$

PREPARED BY J.D.W.
CHECKED BY
REVISED BY

PAGE
REPORT NO.
DATE 4-7-64

DRAWING OR JOB TITLE			DRAWING NO. OR ITEM
APOLLO	ACCESS	CHAMBER	HORSE HEAD

LOADS

PANEL NO. 2 :

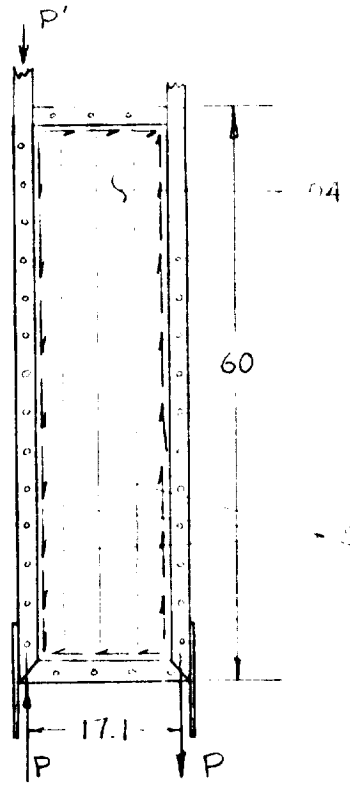

ASSUME CHANNELS RESIST ALL OF BENDING

PANEL SKIN SUBJECTED TO DIRECT SHEAR ONLY

$V = \frac{4410\,(.524)}{2}$

V = 1150 LBS ON SKIN ON EACH SIDE

CHANNEL BUCKLING :

$P = \frac{571(51) + 4410(.524)(84.5)}{17.1}$

P = 13,100 LBS (CARRIED BY SPLICE PLATE TO EXTENSION PLATFORM)

p : $\frac{a}{b} = \frac{60}{16} = 3.75$; K = 5.1 REF. PEERY

$F_{SCR} = KE\left(\frac{t}{b}\right)^2 = 5.1\,(10^7)\left(\frac{.04}{4}\right)$

= 5,100 PSI

q = 5,100 (.04) = 204 #/IN.

ASSUME p = 150 LBS/IN.

$P' = 13{,}100 - 150\,(60) = 4{,}100$ LBS

$P_{ALLOW} = \frac{\pi^2 EI}{L^2} - .5\,pL = \frac{\pi^2(10^7)(.352)}{60^2} - .5(60)(150)$

= 5140 LBS REF.

PREPARED BY J. D. W
CHECKED BY
REVISED BY

PAGE 267
REPORT NO.
DATE 4-7-64

DRAWING OR JOB TITLE	DRAWING NO. OR ITEM
APOLLO ACCESS CHAMBER	HORSE HEAD

LOADS

IF NO LOAD IS RESISTED BY CENTER PANEL, ALL IS BLAMED TO HORSE HEADS ON EACH END

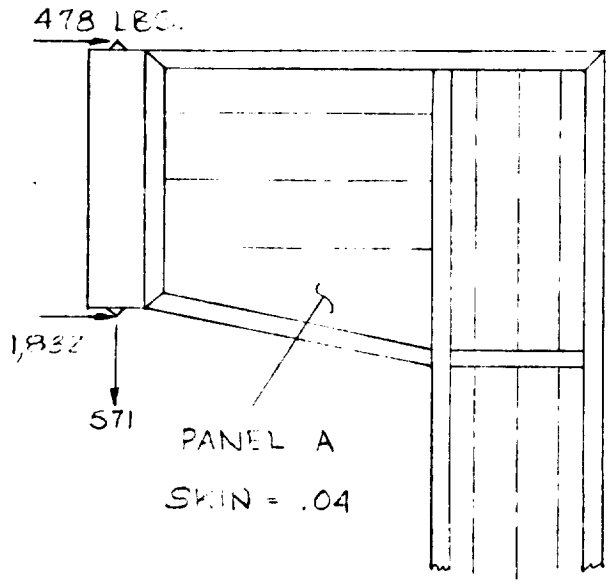

SHEAR PER WEB IN PANEL A

$$V = \frac{1832}{2} = 916 \text{ LBS}$$

LESS THAN CASE SHOWN ON P. 5

SPLICE PLATES:

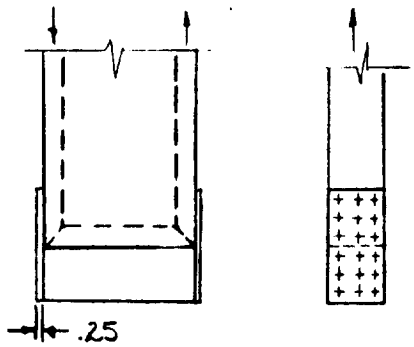

SHEAR PER RIVET

$$= \frac{13,100}{9}$$

$$= 1,455 \text{ LBS.}$$

PREPARED BY J. D. W.
CHECKED BY
REVISED BY

PAGE
REPORT NO.
DATE

DRAWING OR JOB TITLE	DRAWING NO. OR ITEM
APOLLO ACCESS CHAMBER	HORSE HEAD

MATERIAL

SKIN - 7075 - T6

F_{TY} = 65,000 PSI

F_{SY} = 37,000 PSI

ZEES, HAT SECTION - 6061 - O

F_{TY} = 6,000 PSI

F_{SY} = 3,500 PSI

SPLICE PLATE - 6061 - T6

F_{TY} = 35,000 PSI

F_{BRY} = 56,000 PSI

SPLICE PLATE FASTENERS - BPT8-11

F_{SU} = 5100 LBS

F_{SY} = 4200 LBS

SECTIONAL PROPERTIES

SPLICE PLATE:

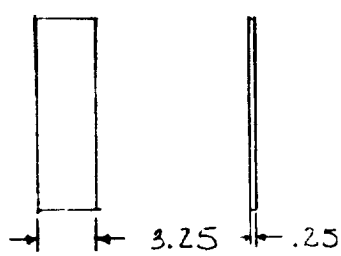

CROSS-SECTIONAL AREA

$= .25\,(3.25) = .8125\ IN^2$

RIVET BRG AREA $= .25(.25)$

$= .0625\ IN^2$

SECTIONAL PROPERTIES

CHANNELS IN BOX SECTION - 6 [2.128

$I_x = 9.007 \ IN^4$

$I_Y = .581 \ IN^4$

$x = .456 \ IN$

$A = 1.809 \ IN^2$

STRESS

BOX SECTION:

SKIN PANEL -

$$\tau = q/t = \frac{157}{.0625} = 2{,}520 \ PSI$$

F_{scr}: $a/b = 27/8 = 3.38$; $K = 5.1$

$$F_{scr} = 5.1(10)^7(.0625/8)^2$$

$$F_{scr} = 3{,}540 \ PSI$$

STIFFENER -

$$\tau = \frac{V}{A} = \frac{1750}{.063(6)}$$

$$\tau = 4{,}680 \ PSI$$

F_{scr}: $a/b = \frac{27}{6} = 4.5$; $K = 5$

$$F_{scr} = KE\left(\frac{t}{b}\right)^2 = 5{,}410 \ PSI$$

CHANNEL -

$$\sigma = \frac{P}{A} = \frac{1620}{1.809} = 900 \ PSI$$

PREPARED BY J. D. W.
CHECKED BY
REVISED BY

PAGE
C. REPORT NO.
DATE

DRAWING OR JOB TITLE	DRAWING NO. OR ITEM
APOLLO ACCESS CHAMBER	HORSE HEAD

STRESS

PANEL NO. 2

$$\tau = \frac{V}{A} = \frac{1150}{.04(18)}$$

τ = 1600 PSI

CHANNEL

$$\sigma = \frac{P}{A} = \frac{13100}{1.800}$$

σ = 7,740 PSI (COMPRESSION)

PANEL NO. 1

$$\tau = \frac{V}{A} = \frac{1340}{.04(30)}$$

τ = [illegible] PSI

PANEL A

$$\tau \quad \frac{V}{A} = \frac{916}{.04(30)}$$

τ = 763 PSI

F_{scr}: $a/b = \frac{30}{4.2} = 7.14$; $K = 4.82$

$$F_{scr} = KE\left(\frac{t}{b}\right)^2 = 4.82(10^7)\left(\frac{.04}{4.2}\right)^2$$

F_{scr} = 4370 PSI

SPLICE PLATE –

$$\sigma_T = \frac{P}{A} = \frac{13,100}{(.8125)} = 16,100 \text{ PSI}$$

$$\sigma_{BR} = \frac{V}{A} = \frac{1455}{.0625} = 23,300 \text{ PSI}$$

RIVETS –

V = 1455 LBS.

DRAWING OR JOB TITLE	DRAWING NO. OR ITEM
APOLLO ACCESS CHAMBER	HORSE HEAD

MARGINS OF SAFETY

SKIN PANEL -

$$M.S._{\tau} = \frac{3,540}{2,520} - 1 = \quad +.40$$

STIFFENER -

$$M.S._{\tau} = \frac{5,410}{4,680} - 1 = \quad +.15$$

CHANNEL -

$$M.S._{YLD} = \frac{35,000}{900} - 1 = \quad +\text{LARGE}$$

PANEL NO. 2 -

$$M.S._{\tau} = \frac{5,100}{1600} - 1 = \quad +2.19$$

CHANNEL -

$$M.S. = \frac{P_{ALL}}{P_{ACTUAL}} - 1 = \frac{5140}{4100} - 1 = \quad +.25$$

PANEL NO. 1 -

$$M.S._{\tau} = \frac{4370}{1118} - 1 = \quad +2.70$$

PANEL A -

$$M.S._{\tau} = \frac{4370}{763} - 1 = \quad +4.72$$

SPLICE PLATE -

$$M.S._{YLD} = \frac{35,000}{16,100} - 1 = \quad +1.17$$

$$M.S._{BRY} = \frac{56,000}{23,300} - 1 = \quad +1.40$$

SPLICE PLATE RIVETS -

$$M.S._{\tau} = \frac{4200}{1456} - 1 = \quad +1.89$$

272

PREPARED BY J.D.W.
CHECKED BY
REVISED BY

PAGE
REPORT NO.
DATE 4-9-64

DRAWING OR JOB TITLE	DRAWING NO. OR ITEM
APOLLO ACCESS CHAMBER	ACTUATOR PANEL

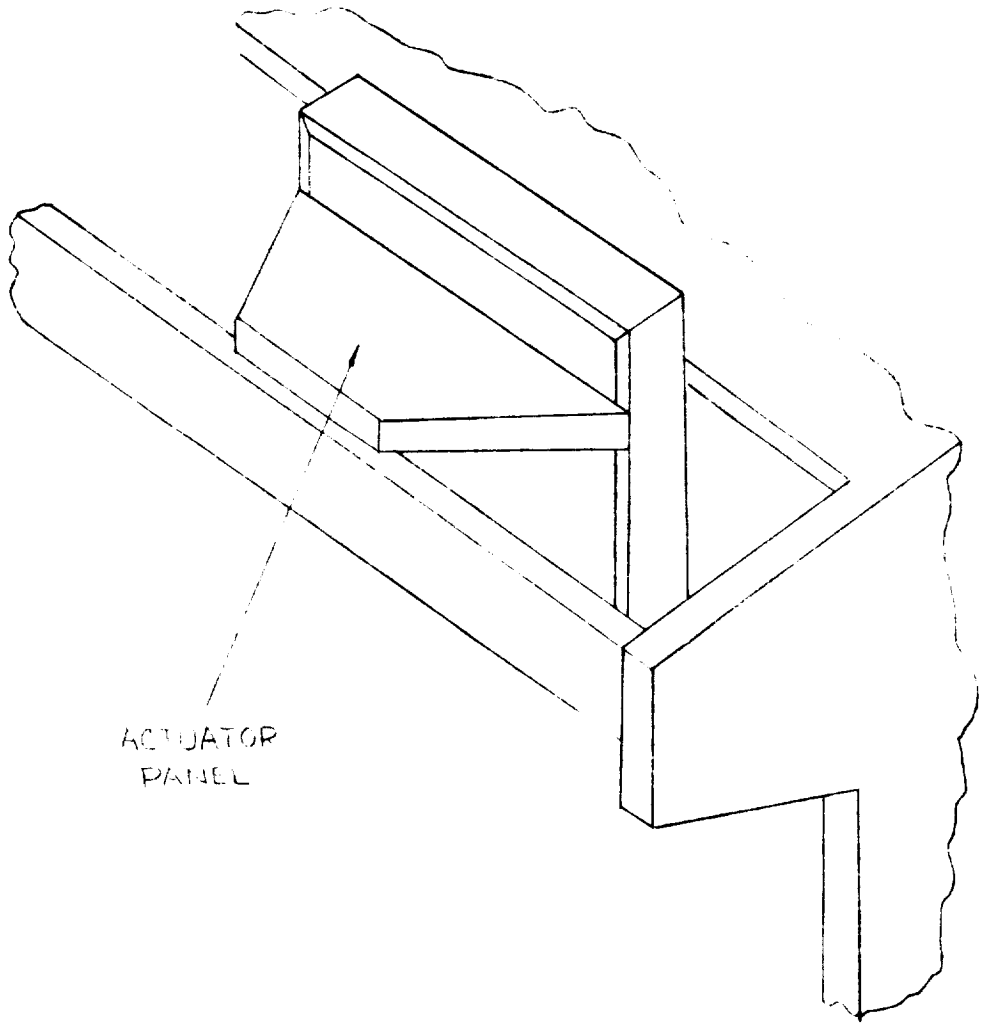

ASSUME ALL JOINTS PINNED WITH LOADS APPLIED AT JOINTS.

PREPARED BY J. D. W
CHECKED BY
REVISED BY

PAGE 273
REPORT NO.
DATE 4-9-64

DRAWING OR JOB TITLE	DRAWING NO. OR ITEM
APOLLO ACCESS CHAMBER	ACTUATOR PANEL

LOADS CONDITION NO. 1

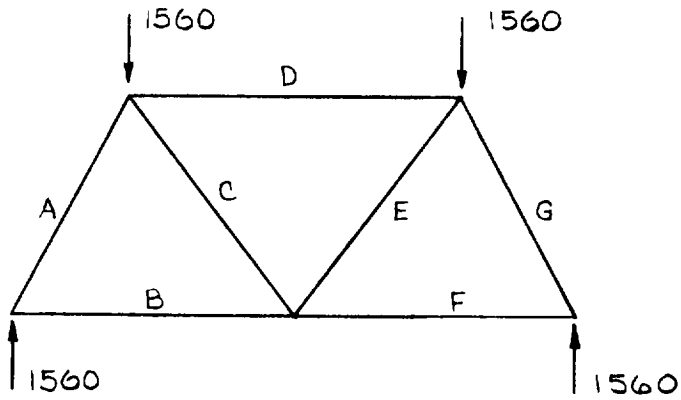

FOR LOAD CALCULATION SEE PAGE

MEMBER	LENGTH	AXIAL LOAD
A	25.9	-1,760
B	29.5	+816
C	28.9	0
D	35.0	-816
E	28.9	0
F	29.5	+816
G	25.9	-1,760

MEMBER A WITH A COMPRESSIVE LOAD OF 1,760 POUNDS IS THE CRITICAL MEMBER FOR THIS LOADING CONDITION

PREPARED BY J.D.W.
CHECKED BY
REVISED BY

PAGE
REPORT NO.
DATE 4-9-64

DRAWING OR JOB TITLE	DRAWING NO. OR ITEM
APOLLO ACCESS CHAMBER	ACTUATOR PANEL

LOADS CONDITION NO. 2

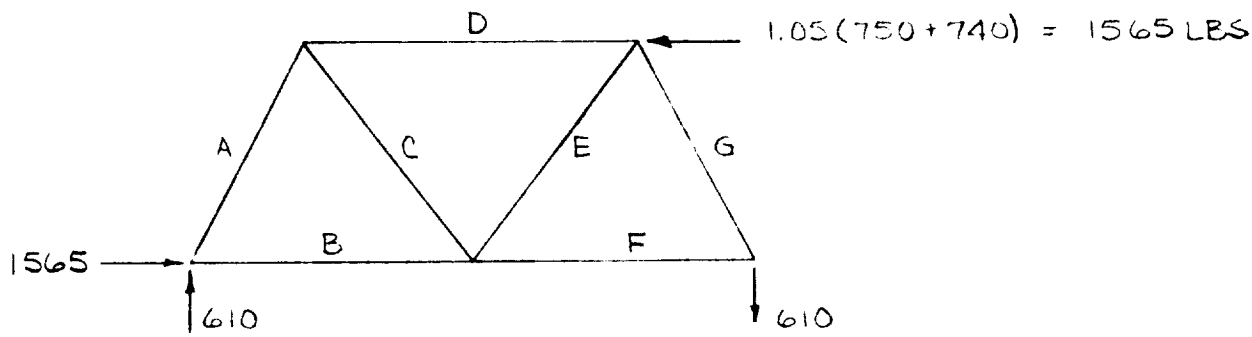

MEMBER	LENGTH	AXIAL LOAD
A	25.9	- 686
B	29.5	- 1246
C	28.9	+ 765
D	35.0	- 781
E	28.9	- 765
F	29.5	- 318
G	25.9	+ 686

MEMBER B WITH A COMPRESSIVE LOAD OF 1,246 LBS IS THE CRITICAL MEMBER FOR THIS CONDITION. HOWEVER, MEMBER A HAS A LOAD OF 1760 LBS. FOR CONDITION NO 1, SO IT WILL BE THE ONLY MEMBER ANALYZED. THIS IS DONE BECAUSE ALL MEMBERS HAVE IDENTICAL CROSS SECTIONS.

DRAWING OR JOB TITLE	DRAWING NO. OR ITEM
APOLLO ACCESS CHAMBER	ACTUATOR PANEL

LOADS

LOWER JOINT

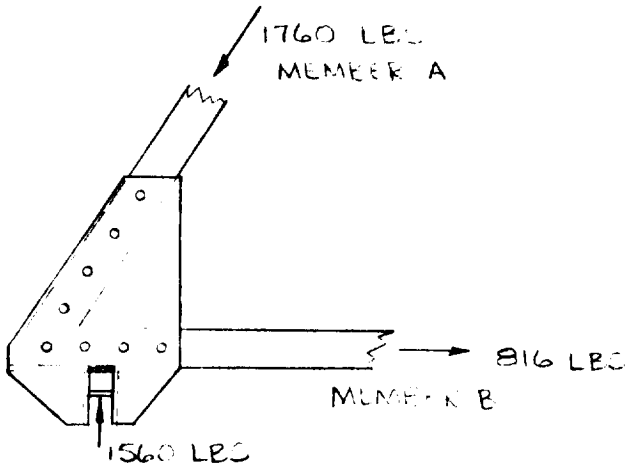

MEMBER A:

SHEAR PER RIVET $= \frac{1760}{8} = 220$ LBS.

MEMBER B:

SHEAR PER RIVET $= \frac{816}{8} = 102$ LBS

CONNECTING PIN:

SHEAR $= \frac{1560}{2} = 780$ LBS

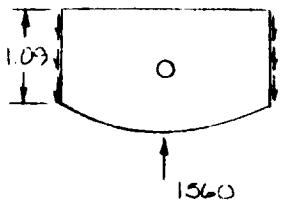

1/8 IN WELD ON THREE CONTACT EDGES

ASSUME END WELDS CARRY ALL OF APPLIED LOAD

SHEAR PER WELD $= \frac{1560}{4} = 390$ LBS.

PREPARED BY J. D. W.
CHECKED BY
REVISED BY

PAGE
REPORT NO.
DATE 4-9-64

DRAWING OR JOB TITLE	DRAWING NO. OR ITEM
APOLLO ACCESS CHAMBER	ACTUATOR PANEL

LOADS

UPPER JOINT

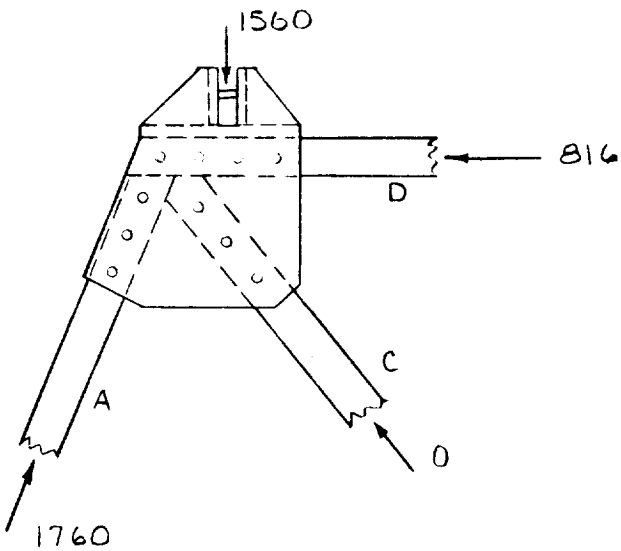

MEMBER A :

SHEAR PER RIVET = $\frac{1760}{6}$ = 293 LBS

MEMBER D :

SHEAR PER RIVET = $\frac{816}{8}$ = 102 LBS

PIN LOADING SAME AS FOR LOWER JOINT

CENTER LOWER JOINT :

MEMBERS PRODUCE LESS SHEAR PER RIVET THAN THE ABOVE JOINTS.

DRAWING OR JOB TITLE	DRAWING NO. OR ITEM
APOLLO ACCESS CHAMBER	ACTUATOR PANEL

MATERIAL

MEMBERS — 6061 T6

$F_{TY} = 35{,}000$ PSI

JOINT PLATES — 6061-T6 (WELDED)

$F_{BRY} = 30{,}000$ PSI

CONNECTING PIN

$F_{SY} = (35{,}000).6 = 21{,}000$ psi

RIVETS — CKL P5K

$P_{SU} = 675$ LBS

P_{SY} 405 LBS (ASSUMED .6 P_{SU})

SECTIONAL PROPERTIES

MEMBERS:

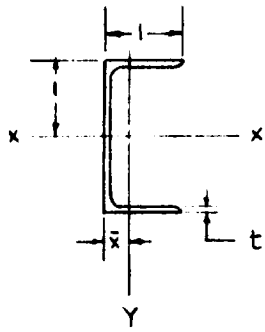

$A = .361$ IN.^{2} $\quad r_x = .779$

$t = .094$ IN. $\quad r_Y = .30$

$I_x = .2194$ IN.^{4}

$I_Y = .0324$ IN.^{4}

$\bar{x} = .274$ IN.

ALLOWABLE COMPRESSIVE STRESS IN MEMBER A

$$\sigma_{ALL} = \frac{\pi^2 E}{(L/r)^2} = \frac{(3.14)^2(10^7)}{(25.9/.3)^2} = 13{,}200 \text{ PSI}$$

PREPARED BY J D W
CHECKED BY
REVISED BY

PAGE
REPORT NO.
DATE 4-10-64

DRAWING OR JOB TITLE	DRAWING NO. OR ITEM
APOLLO ACCESS CHAMBER	ACTUATOR PANEL

SECTIONAL PROPERTIES

JOINT PLATES:

PIN BEARING AREA (.31 IN. PLATE)

$A = .31(.375) = .116 \text{ IN}^2$

RIVET BEARING AREA (.25 IN PLATE)

$A = .25(.156) = .039 \text{ IN}^2$

CONNECTING PIN: NAS 501-6

DIA = .375 IN.

$A = .1105 \text{ IN}^2$

STRESS

MEMBER A:

$\sigma = \frac{P}{A} = \frac{1760}{.361} = 4,880 \text{ PSI}$

JOINT PLATES

PIN BRG $\sigma_{BR} = \frac{1560}{.116} = 13,450 \text{ PSI}$

RIVET BRG $\sigma_{BR} = \frac{220}{.039} = 5,640 \text{ PSI}$

RIVETS:

$V_{max} = 220 \text{ LBS}$

CONNECTING PIN

$\tau = \frac{V}{A} = \frac{1560}{.1105} = 14,100 \text{ PSI}$

DRAWING OR JOB TITLE	DRAWING NO. OR ITEM
APOLLO ACCESS CHAMBER	ACTUATOR PANEL

MARGINS OF SAFETY

MEMBER A:

$$M.S._{BUCKLING} = \frac{13,200}{4,880} - 1 = \quad +1.71$$

$$M.S._{YLD} = \frac{35,000}{4,880} - 1 = \quad +\text{LARGE}$$

JOINT PLATES:

$$M.S._{BRY} = \frac{30,000}{13,450} - 1 = \quad +1.23$$

RIVETS

$$M.S._{\tau Y} = \frac{405}{220} - 1 = \quad +.84$$

CONNECTING PIN:

$$M.S._{\tau Y} = \frac{21,000}{14,100} - 1 = \quad +.49$$

PREPARED BY JDW
CHECKED BY
REVISED BY

PAGE
REPORT NO.
DATE 4-24-64

DRAWING OR JOB TITLE	DRAWING NO. OR ITEM
APOLLO ACCESS CHAMBER	BRACKET WELDMENT

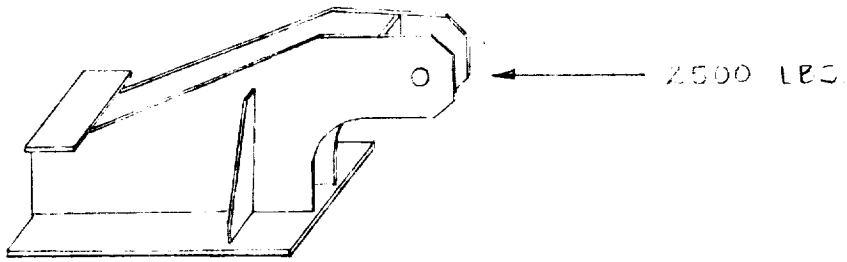

LOADS

BOLT SHEAR $= \frac{2500}{2} = 1250$ LBS

MOMENT RESISTED BY BOLT
(ASSUME POINT LOAD)

$M = \frac{PL}{4} = \frac{2500(1.63)}{4}$

$M = 1020$ IN-LBS

SHEAR IN SIDE PLATES

SHEAR PER PLATE $= \frac{2500}{2} = 1250$ LBS.

SHEAR IN BASE PLATE RIVETS

SHEAR PER RIVET $= \frac{2500}{4} = 625$ LBS

BOLT BEARING LOAD $= \frac{2500}{2} = 1250$ LBS

MOMENT RESISTED BY SIDE PLATE WELDS

$= 2500(7.63) = 19{,}100$ IN-LBS

DRAWING OR JOB TITLE	DRAWING NO. OR ITEM
APOLLO ACCESS CHAMBER	BRACKET WELDMENT

MATERIAL

BOLT - AN20 - 41

P_{SULT} = 91,050 LBS $F_{T\,YLD}$ = 103,000

$P_{S\,YLD}$ = 75,000 LBS

BRACKET PLATES - 6061 - T6 (WELDED .5 IN. STOCK)

$F_{T\,YLD}$ = 15,000 PSI

$F_{S\,YLD}$ = 9,000 PSI

$F_{BR\,YLD}$ = 22,000 PSI

BASE PLATE RIVETS - BP - TI2 - 13 HUCK

$P_{T\,YLD}$ = 4,500 LBS

$P_{S\,YLD}$ = 6,180 LBS

SECTIONAL PROPERTIES

BOLT CROSS-SECTIONAL AREA

DIA = 1.25 IN. SECTION MODULUS = .191 IN^3

A = 1.23 $IN.^2$

BRG AREA = (1.25)(.5) = .625 $IN.^2$

SHEAR AREA IN SIDE PLATES (ASSUME 5 IN. LENGTH)

A = .5 (5)

A = 2.5 $IN.^2$

SIDE PLATE WELDS

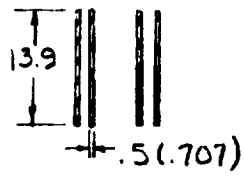

$$I = .5(.707)\frac{(13.9)^3}{12}(4) = 316\ IN.^4$$

PREPARED BY J. D. W
CHECKED BY
REVISED BY

PAGE
REPORT NO.
DATE 4-24-64

DRAWING OR JOB TITLE	DRAWING NO. OR ITEM
APOLLO ACCESS CHAMBER	BRACKET WELDMENT

STRESS

BOLT SHEAR = 1250 LBS

BOLT BENDING STRESS = $\frac{M}{Z}$ = $\frac{1000}{.187}$ = 5,340 PSI

SIDE PLATE SHEARING STRESS

$$\tau = \frac{V}{A} = \frac{1250}{2.5} = 500 \text{ PSI}$$

BEARING STRESS IN SIDE PLATES

$$\sigma_{BR} = \frac{1250}{.625} = 2{,}000 \text{ PSI}$$

RIVET SHEAR = 625 LBS.

STRESS IN SIDE PLATE WELDS

$$\sigma = \frac{MY}{I} = \frac{19{,}100\,(6.95)}{316}$$

$$\sigma = 420 \text{ PSI}$$

$$\tau = \frac{V}{A} \quad \frac{2500}{4(.5)(.707)(13.5)}$$

$$\tau = 127 \text{ PSI}$$

MARGINS OF SAFETY

BOLT: M. S. τ_{YLD} = $\frac{75{,}000}{1{,}250} - 1$ = + LARGE

M. S. σ_{YLD} = $\frac{102{,}000}{5{,}340} - 1$ = + LARGE

SIDE PLATE: M. S. τ_{YLD} = $\frac{9{,}000}{1{,}250} - 1$ = + LARGE

M. S. $_{BR\ YLD}$ = $\frac{22{,}000}{2{,}000} - 1$ = + LARGE

PREPARED BY J. D. W.
CHECKED BY
REVISED BY

PAGE 283
REPORT NO.
DATE 4-24-64

DRAWING OR JOB TITLE	DRAWING NO. OR ITEM
APOLLO ACCESS CHAMBER	BRACKET WELDMENT

MARGINS OF SAFETY

SIDE PLATE WELDS:

$$M.S._{\sigma YLD} = \frac{15,000}{420} - 1 = \text{------} \quad + \text{LARGE}$$

$$M.S._{\tau YLD} = \frac{9,000}{127} - 1 = \text{------} \quad + \text{LARGE}$$

RIVETS:

$$M.S._{\tau} = \frac{6,180}{625} - 1 = \text{------} \quad + \text{LARGE}$$

284

PREPARED BY J.D.W

CHECKED BY

REVISED BY

PAGE

REPORT NO.

DATE 2-24-64

DRAWING OR JOB TITLE	DRAWING NO. OR ITEM
APOLLO ACCESS CHAMBER	FOLDING CURTAINS

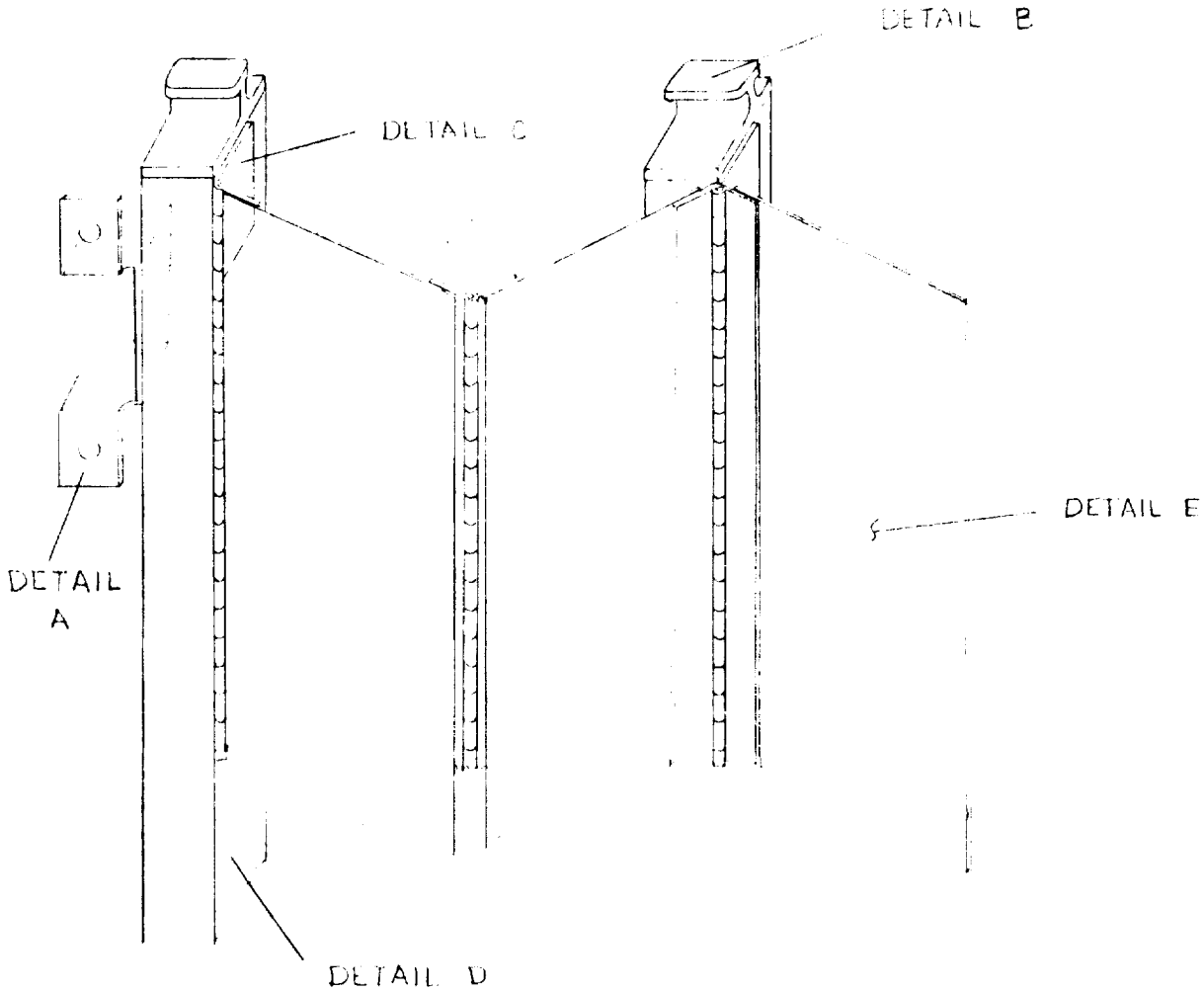

DRAWING OR JOB TITLE	DRAWING NO. OR ITEM
APOLLO ACCESS CHAMBER	FOLDING CURTAINS

LOADS

CURTAIN PANEL:

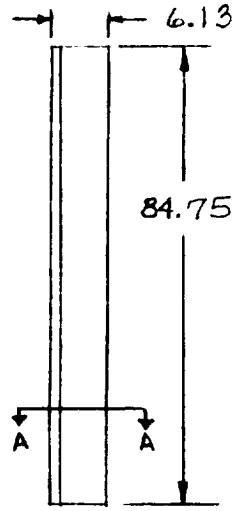

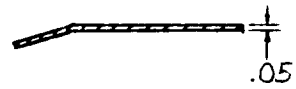

SECTION A-A

$WT = 84.75\,(6.13)(.031)(.1)$

$= 1.66$ LBS/PANEL

$W_1 = 1.66\,(16$ PANELS$)$

$W_1 = 26.6$ LBS.

ALUMINUM POST:

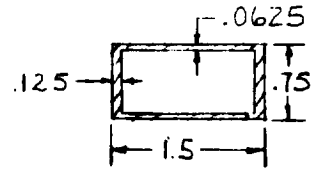

$WT = 54.33\,(.063)(4.75)(.1)$

$= 2.52$ LBS./ROD

$W_2 = 2.52\,(8$ RODS$)$

$W_2 = 20.16$ LBS.

HINGE:

$WT = 84.75\,(.056)(1.75)(.1) + 84.75\,(3.14)\left(\frac{.09}{4}\right)^2(.3)$

$= 1.369$ LBS/HINGE

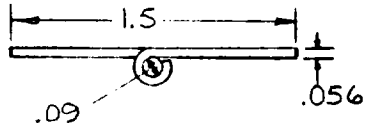

$W_3 = 1.369\,(8$ HINGES$)$

$W_3 = 10.95$ LBS.

TOTAL WT. OF CURTAIN:

$WT = W_1 + W_2 + W_3$

$WT = 57.7$ LBS $\times$ DEAD LOAD FACTOR OF 2

TOTAL WT = 115.4 LBS.

PREPARED BY J. D. W.
CHECKED BY
REVISED BY

PAGE
REPORT NO.
DATE 2-28-64

DRAWING OR JOB TITLE	DRAWING NO. OR ITEM
APOLLO ACCESS CHAMBER	HORIZONTAL CURTAINS

LOADS

MAX. FORCE ON CURTAINS DUE TO CABIN PRESSURE

F = PRESSURE x AREA

= .07 (97)(84.3)

= 572 LBS

OR 36 LBS PER POST

ASSUME COEF. OF FRICTION FOR TFE ON TFE = .04 REF.

FORCE REQ'D TO OVERCOME FRICTION

= .04 (115.4 + 572)

= 27.5 LBS.

MAX. ACCELERATION OF CURTAINS = 1.05 g REF. P.

ASSUME INERTIA FORCE OF 2 PANELS IS FELT BY THROUGH PANEL AT MAX ACC.

$F_1 = 1.05\left[2(1.66 + 2.52 + 1.37)\right]$

$F_1 = 11.66$ LBS.

RESISTANCE OF CURTAIN TO MOVEMENT

CONDITION 1 - MAX FRICTION RESISTANCE, MIN. INERTIA RESISTANCE.

$RESISTANCE_1 = 27.5$ LBS.

CONDITION 2 MAX. INERTIA RESISTANCE, MIN. FRICTION RESISTANCE.

$RESISTANCE_2 = 11.66 + 2\left[36 + 2(1.66 + 2.52 + 1.37)\right].04$

$= 11.66 + 3.77 = 15.43$ LBS

PREPARED BY J. D. W.
CHECKED BY
REVISED BY

PAGE 287
REPORT NO.
DATE 2-28-64

DRAWING OR JOB TITLE	DRAWING NO. OR ITEM
APOLLO ACCESS CHAMBER	HOR. CURTAINS

LOADS

DETAIL A - BRACKET

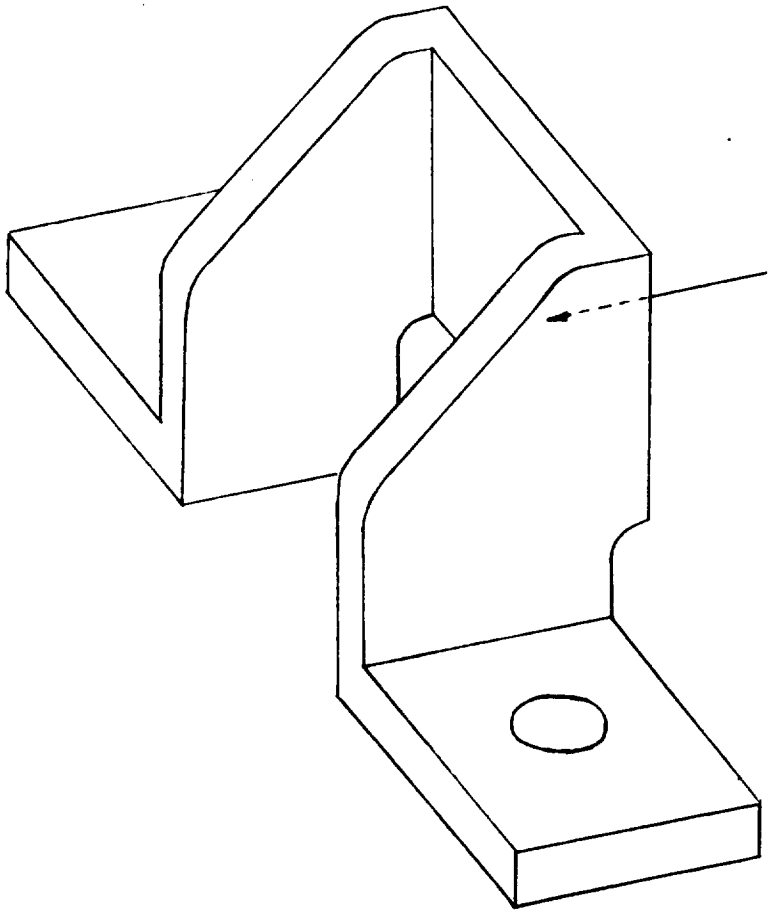

$\frac{15.43}{3} = 5.1$ LBS.

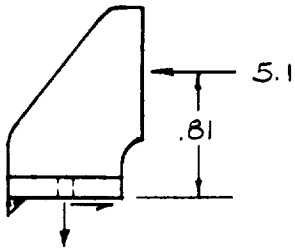

MOMENT = 5.1 (81) = 4.1 IN LBS

288

PREPARED BY J. D. W.
CHECKED BY
REVISED BY

PAGE
REPORT NO.
DATE 3-2-64

DRAWING OR JOB TITLE	DRAWING NO. OR ITEM
APOLLO ACCESS CHAMBER	HOR. CURTAINS

LOADS

DETAIL E - GLIDE

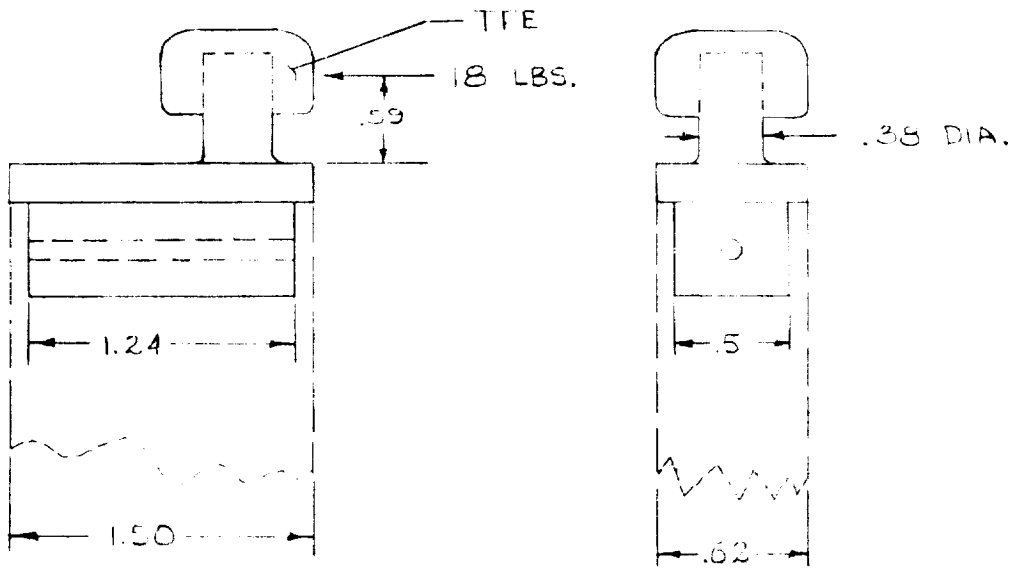

MOMENT ON STUD = 18(.59) = 10.6 IN-LBS

DETAIL C - TAB

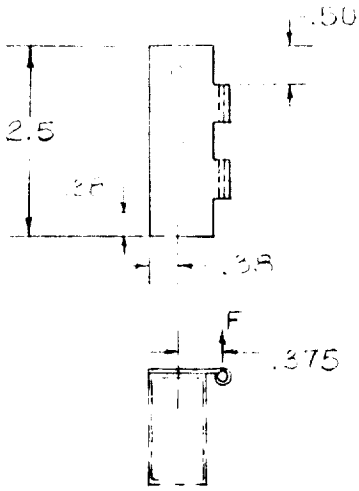

$$F = \frac{27.5 \text{ LBS (MAX RESISTANCE)}}{4 \text{ (NO OF TABS)}} = 6.9 \text{ LBS}$$

MOMENT = 6.9(.375) = 2.59 IN. LBS.

DRAWING OR JOB TITLE	DRAWING NO. OR ITEM
APOLLO ACCESS CHAMBER	HOR. CURTAINS

LOADS

DETAIL D - POST

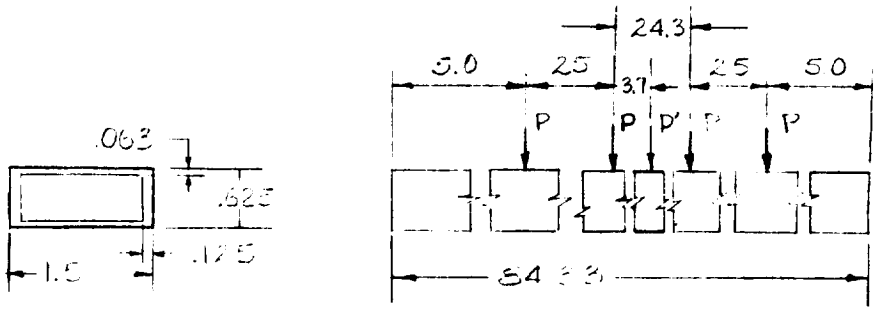

$$P = \frac{\text{PRESSURE FORCE ON 1 CURTAIN PANEL}}{4}$$

$$= \frac{36}{4} = 9 \text{ LBS.}$$ REF P 286

$P' = 150$ LBS LIVE LOAD

$M_{MAX} = 3348$ IN-LBS

DETAIL E - CURTAIN PANEL

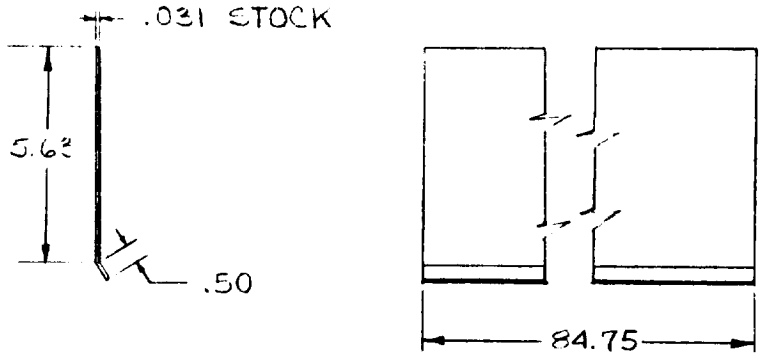

LOAD ON PANEL = .07 PSI OVER ENTIRE AREA

FOR A UNIT LENGTH, $\omega = .07(84.75)$
$= 5.9$ LBS/IN.

PREPARED BY J. D. W.
CHECKED BY
REVISED BY

PAGE
REPORT NO.
DATE 3-2-64

DRAWING OR JOB TITLE	DRAWING NO. OR ITEM
APOLLO ACCESS CHAMBER	HOR. CURTAINS

MATERIAL

BRACKET —— 6061 – T6

F_{TY} = 35,000 PSI

F_{SY} = 20,000 PSI

BRACKET FASTENERS —— ALPPN E6-3 (HUCK)

P_{TY} = 1070 LBS.

P_{SY} = 1,130 LBS.

GLIDE —— 6061 T6

F_{TY} = 35,000 PSI

F_{SY} = 20,000 PSI

TEFLON

F_{BRY} = 1,560 PSI

TAB —— 2024 T6

F_{TY} = 27,000 PSI

F_{SY} = 21,000 PSI

TAB FASTENERS —— CKL P5F (HUCK)

P_{TY} = 417 LBS

P_{SY} = 675 LBS

DRAWING OR JOB TITLE	DRAWING NO. OR ITEM
APOLLO ACCESS CHAMBER	HOR. CURTAINS

MATERIAL

POST —— 7075 - T6

$F_{TY} = 66,000$ PSI

$F_{SY} = 38,000$ PSI

CURTAIN PANEL —— 6061 - T6

$F_{TY} = 35,000$ PSI

$F_{SY} = 20,000$ PSI

SECTIONAL PROPERTIES

BRACKET: BEARING AREA

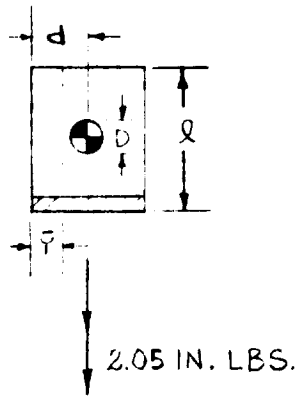

$D = .1875$

$A_{BOLT} = .0276$ IN.^{2}

$\ell = .78$

$d = .31$

Z AT FILLET

$= .625(.09)^2/6$

$= .00084$

$$\bar{Y} = \frac{\Sigma AY}{\Sigma A} = \frac{\bar{Y}\ell(\bar{Y}/2) + A_{BOLT}(d)}{\bar{Y}\ell + A_{BOLT}}$$

$$.78\bar{Y}^2 + .0276\bar{Y} = .39\bar{Y}^2 + .00891$$

$$\bar{Y} = .275$$

$$I = \frac{1}{3}\bar{Y}^3\ell + A_{BOLT}(d-\bar{Y})^2 = .0054 \text{ IN.}^4$$

$$\text{BOLT TENSION} = \frac{MY}{I}(A) = \frac{2.05(.035)}{.0054}(.0276) = .367 \text{ LBS.}$$

$$\text{MOMENT AT FILLET} = \frac{P}{\pi} = .117 \text{ IN-LBS.}$$

PREPARED BY J. D. W.
CHECKED BY
REVISED BY

PAGE
REPORT NO.
DATE

DRAWING OR JOB TITLE	DRAWING NO. OR ITEM
APOLLO ACCESS CHAMBER	HOR. CURTAINS

SECTIONAL PROPERTIES

GLIDE STUD:

$$I = \frac{\pi R^4}{4} = .00102 \text{ IN.}^4$$

$$A = .113 \text{ IN}^2$$

TAB:

$$I = \frac{bh^3}{12} = \frac{2.0(.056)^3}{12} = [illegible]$$

POST

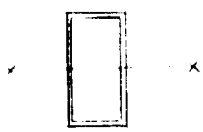

$$I_x = \frac{.625(1.5)^3}{12} - \frac{.5(1.25)^3}{12}$$

$$= .0945 \text{ IN}^4$$

CURTAIN PANEL:

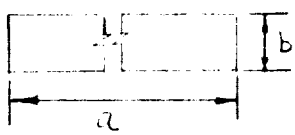

a = 8.1 [illegible] ω = .07 PSI

b = 6.0 t = .031

$$\frac{\omega b^4}{E t^4} = 0.09$$

∴ STRESS AND DEFLECTION ARE NEGLIGIBLE

DRAWING OR JOB TITLE	DRAWING NO. OR ITEM
APOLLO ACCESS CHAMBER	HOR. CURTAIN

DEFLECTION

POST :

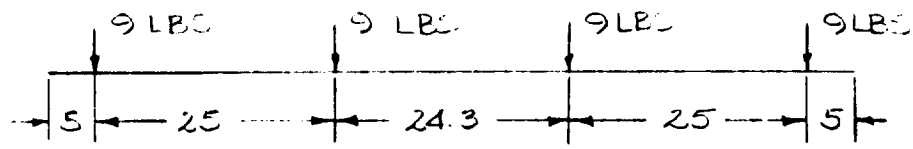

$$\Delta_{MAX} = 2\left[\frac{9(5)(L/2)}{6EIL}(5^2 - L^2 \quad L^2/4) + \frac{9(30)(L/2)}{6EIL}(30^2 - L^2 - L^2/4)\right]$$

$$= .251 \text{ IN.}$$

STRESS

BRACKET :

$$\sigma = \frac{M}{Z} = \frac{.117}{.00084}$$

$$\sigma = 139 \text{ PSI}$$

BRACKET FASTENERS:

$$\left.\begin{aligned} \sigma &= \frac{P}{A} = \frac{.367}{.0276} = 13.3 \text{ PSI} \\ \tau &= \frac{V}{A} = \frac{2.55}{.0276} = 92.3 \text{ PSI} \end{aligned}\right\} \text{NEGLIGIBLE}$$

GLIDE STUD:

$$\sigma = \frac{MY}{I} = \frac{10.6(.19)}{.00102}$$

$$\sigma = 1{,}975 \text{ PSI}$$

$$\tau = \frac{V}{A} = \frac{18}{.113} = 163.5 \text{ PSI}$$

TFE : $\sigma_{BRG} = \dfrac{18}{.187(.5)} = 193$ PSI

PREPARED BY J. D. W
CHECKED BY
REVISED BY

PAGE
REPORT NO.
DATE 3-3-64

DRAWING OR JOB TITLE	DRAWING NO. OR ITEM
APOLLO ACCESS CHAMBER	HOR CURTAINS

STRESS

TAB:

$$\sigma = \frac{MY}{I} = \frac{2.59(.02[illegible])}{3[illegible].6 \times 10^{6}} = 198[illegible] \text{ PSI}$$

POST:

$$\sigma = \frac{MY}{I} = \frac{3348(.75)}{.0945} = 26,6[illegible] \text{ PSI}$$

CURTAIN PANEL:

STRESS NEGLIGIBLE

REF P 292

MARGINS OF SAFETY

BRACKET:

$$M.S._{YLD} = \frac{35,000}{139} - 1 = \quad \text{+ LARGE}$$

GLIDE:

$$M.S._{YLD} = \frac{35,000}{1,975} - 1 = \quad \text{+ LARGE}$$

TAB:

$$M.S._{YLD} = \frac{37,000}{1,980} - 1 = \quad \text{+ LARGE}$$

POST:

$$M.S._{YLD} = \frac{66,000}{26,600} - 1 = \quad \text{+ 1.48}$$

PREPARED BY J.D.W
CHECKED BY
REVISED BY

PAGE 295
REPORT NO.
DATE 3-5-64

DRAWING OR JOB TITLE	DRAWING NO. OR ITEM
APOLLO ACCESS CHAMBER	BOTTOM CURTAIN TRACK

SKETCH

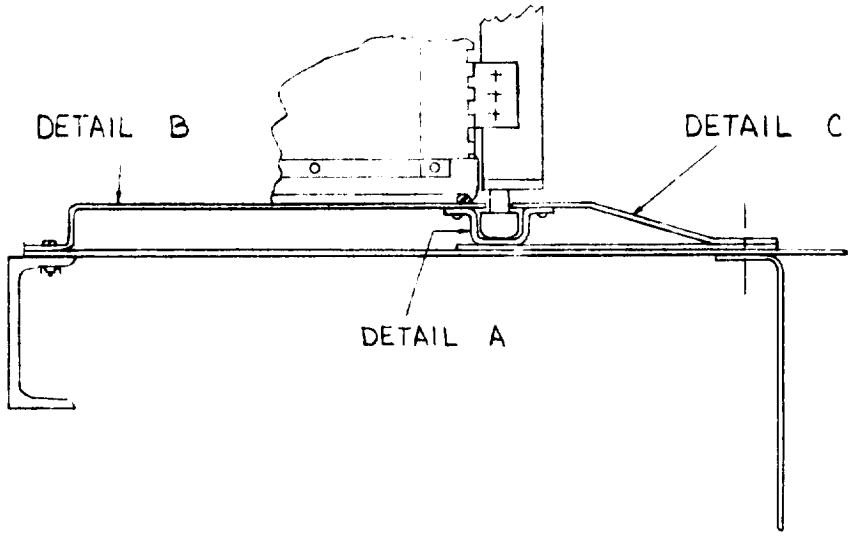

LOADS

VERTICAL LOAD FROM EACH CURTAIN ROD

$$W = \frac{158}{8}$$

$$W = 19.8 \text{ LBS}$$

REF. P _____

HORIZONTAL LOAD FROM EACH CURTAIN ROD

$$H = .07(84.671)(11) \quad \text{(MAXIMUM EXTENSION)}$$

$$H = 65.2 \times \text{LOAD FACTOR}(2)$$

$$= 130.4 \text{ LBS.}$$

REF. P _____

LOAD ON BOTTOM TRACK = 65.2 LBS.

PREPARED BY J D W
CHECKED BY
REVISED BY

PAGE
REPORT NO.
DATE 3-5-64

DRAWING OR JOB TITLE	DRAWING NO. OR ITEM
APOLLO ACCESS CHAMBER	BOTTOM CURTAIN TRACK

LOADS

CHAMBER PRESSURE = .07 PSI

WIND VELOCITY = 41 KNOTS

INWARD PRESSURE ON CURTAINS AT 41 KNOT WIND

$P = .002555\ V^2$ (PSF)

$P = \frac{.002555}{144}\left[(41)(1.152)\right]^2$

$P = .0597$ PSI

LOAD ON TRACK DUE TO WIND (ONE CURTAIN ROD)

$F = .0597(84.671)(11)$

$F = 37 \times$ LOAD FACTOR (2) = 74 LBS

LOAD ON BOTTOM TRACK = 37 LBS

DETAIL A - HAT SECTION

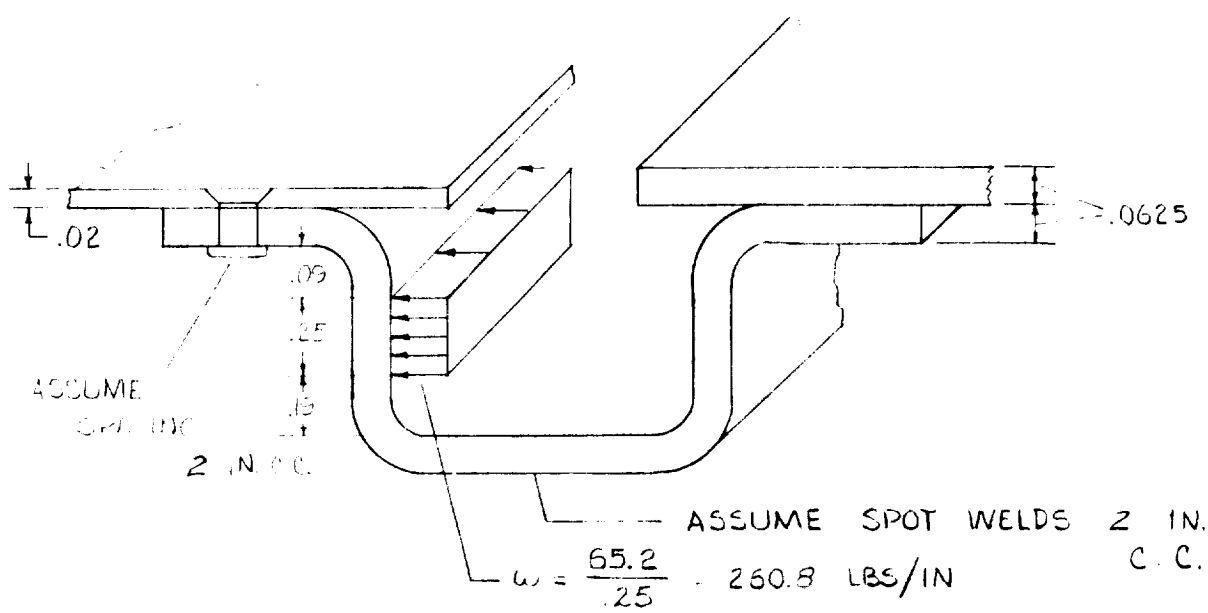

DRAWING OR JOB TITLE	DRAWING NO. OR ITEM
APOLLO ACCESS CHAMBER	BOTTOM CURTAIN TRACK

LOADS

ASSUME SIDE OF HAT SECTION ACTS AS A CANTILEVER BEAM ; NO LOAD GOES INTO .02 SKIN

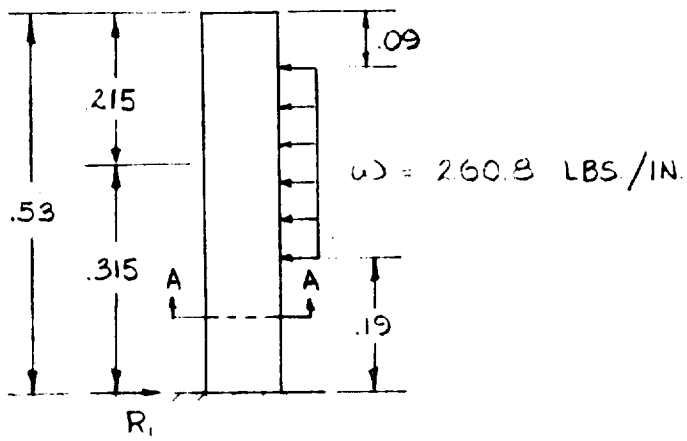

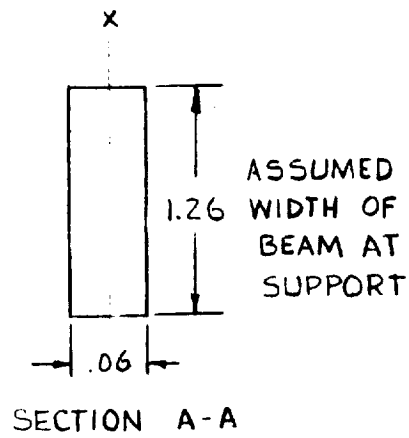

$M_1 = 260.8(.25)(.315)$

$M_1 = 20.5$ IN.-LBS

$R_1 = 65.2$ LBS.

ASSUME ALL OF R_1 IS TRANSFERRED BY SPOT WELDS TO BASE PANEL ; NO LOAD GOES INTO TRED PANEL.

PREPARED BY J. D. W.
CHECKED BY
REVISED BY

PAGE
REPORT NO.
DATE 3-6-64

DRAWING OR JOB TITLE	DRAWING NO. OR ITEM
APOLLO ACCESS CHAMBER	BOTTOM CURTAIN TRACK

LOADS

DETAIL B - .02 SKIN PANEL

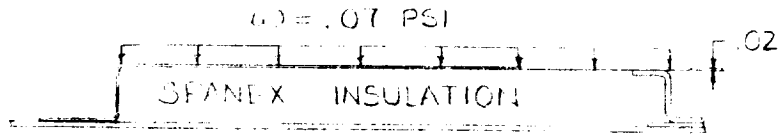

ASSUME ALL OF PRESSURE IS TAKEN BY INSULATION

DETAIL C - THIN PANEL

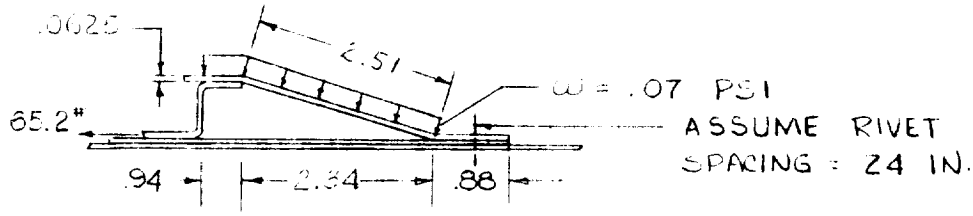

ASSUME A UNIT STRIP WITH SIMPLY SUPPORTED ENDS

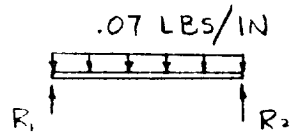

$R_1 = R_2 = .1757$ LBS

$M_{MAX} = .1757(1.26) - .07(1.26)(.63) = .165$ IN-LBS.

DRAWING OR JOB TITLE	DRAWING NO. OR ITEM
APOLLO ACCESS CHAMBER	BOTTOM CURTAIN TRACK

MATERIAL

HAT SECTION - 6061-T6

F_{TY} = 35,000 PSI

F_{SY} = 20,000 PSI

.02 SKIN PANEL - 6061-T6

TRED PANEL - 6061-T6

RIVETS - AD4-8

P_{SU} = 388 LBS

P_{SY} = 233 LBS (ASSUMED)

SPOT WELDS

P_{SU} = 344 LBS

P_{SY} = 287 LBS

SPANEX INSULATION

F_{CU} = 1850 PSF

F_{CY} = 1110 PSF

300

PREPARED BY J. D. W.
CHECKED BY
REVISED BY

PAGE
REPORT NO.
DATE 3-6-64

DRAWING OR JOB TITLE	DRAWING NO. OR ITEM
APOLLO ACCESS CHAMBER	BOTTOM CURTAIN TRACK

SECTIONAL PROPERTIES

HAT SECTION:

$$Z_1 = \frac{bt^2}{6} = \frac{1.26(.0625)^2}{6}$$

$$Z_1 = 8.2 \times 10^{-4} \text{ IN}^3$$

TRED PANEL:

$$Z \text{ OF CROSS SECTION} = \frac{bt^2}{6}$$

$$Z = \frac{1(.0625)^2}{6}$$

$$Z = 6.5 \times 10^{-4} \text{ IN}^3$$

STRESS

HAT SECTION

$$\sigma = \frac{M}{Z} = \frac{20.5}{8.2 \times 10^{-4}}$$

$$\sigma = 25{,}000 \text{ PSI}$$

$$\tau = \frac{3P}{2A}$$

$$\tau = \frac{3(65.2)}{2(.06)(1.26)} = 1300 \text{ PSI}$$

SPANEX INSULATION

$$\sigma = \frac{P}{A} = .07 \text{ PSI}$$

$$\sigma = 10.1 \text{ PSF}$$

DRAWING OR JOB TITLE	DRAWING NO. OR ITEM
APOLLO ACCESS CHAMBER	BOTTOM CURTAIN TRACK

STRESS

TRED PANEL:

$$\sigma = \frac{M}{Z} = \frac{.165}{6.5 \times 10^{-4}}$$

$$\sigma = 254 \text{ PSI}$$

SPOT WELDS:

$$P = \frac{\text{LOAD}}{\text{LOAD SPACING}} \cdot (\text{WELD SPACING})$$

$$P = \frac{65.2}{11} (24)$$

$$P = 142 \text{ LBS/WELD}$$

TRED PANEL RIVETS:

$$P = \frac{\text{LOAD}}{\text{LOAD SPACING}} (\text{RIVET SPACING})$$

$$P = \frac{65.2}{11} (24)$$

$$P = 142 \text{ LBS/RIVET}$$

MARGINS OF SAFETY

HAT SECTION:

$$M.S._{YLD} = \frac{37,000}{25,000} - 1 = \boxed{+.48}$$

$$M.S._{\tau} = \frac{20,000}{1,300} - 1 = \boxed{+ \text{LARGE}}$$

PREPARED BY J. D. W.
CHECKED BY
REVISED BY

PAGE
REPORT NO.
DATE 3-6-64

DRAWING OR JOB TITLE	DRAWING NO. OR ITEM
APOLLO ACCESS CHAMBER	BOTTOM CURTAIN TRACK

MARGIN OF SAFETY

SPANEX INSULATION:

$$M.S._{YLD} = \frac{1110}{10.1} - 1 = \quad + \text{LARGE}$$

TRED PANEL:

$$M.S._{YLD} = \frac{37,200}{204} - 1 = \quad + \text{LARGE}$$

SPOT WELDS:

$$M.S._{YLD} = \frac{287}{142} - 1 = \quad + 1.02$$

TRED PANEL RIVETS:

$$M.S._{YLD} = \frac{233}{142} - 1 = \quad + .64$$

DRAWING OR JOB TITLE	DRAWING NO. OR ITEM
APOLLO ACCESS CHAMBER	VERTICAL CURTAINS

CURTAIN HOUSING

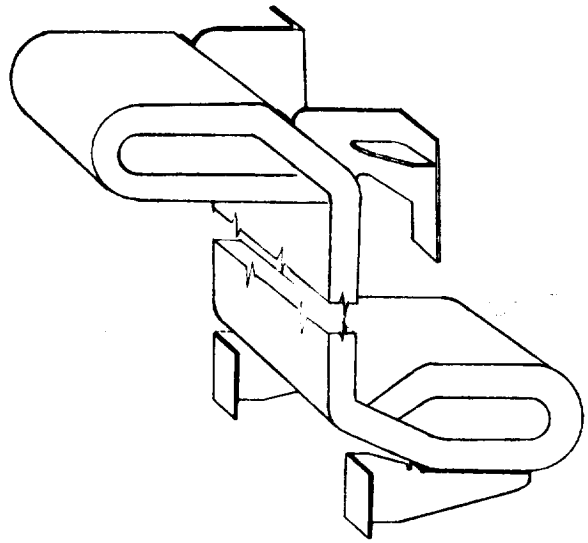

LOADS

CROSS SECTION OF ONE LINK OF CURTAIN

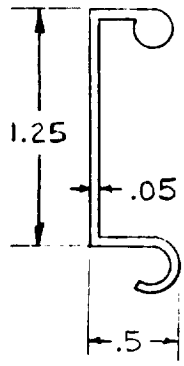

$$\text{AREA} = .05(1.25 + .2 + .3 + .6) + 3.14\frac{(.2)^2}{4}$$
$$= .1475 \text{ IN.}^2$$

LENGTH OF LINK = 53 IN.

ASSUME 28 LINKS IN TOP CURTAIN AND 28 LINKS IN BOTTOM CURTAIN.

WT. OF EACH CURTAIN = W_1

$$W_1 = .1475(53)(.1) = 21.9 \text{ LBS.}$$

PREPARED BY J. D. W.
CHECKED BY
REVISED BY

PAGE
REPORT NO.
DATE 4-26-64

DRAWING OR JOB TITLE	DRAWING NO. OR ITEM
APOLLO ACCESS CHAMBER	VERT. CURTAINS

LOADS

WT. OF LOWER HOUSING

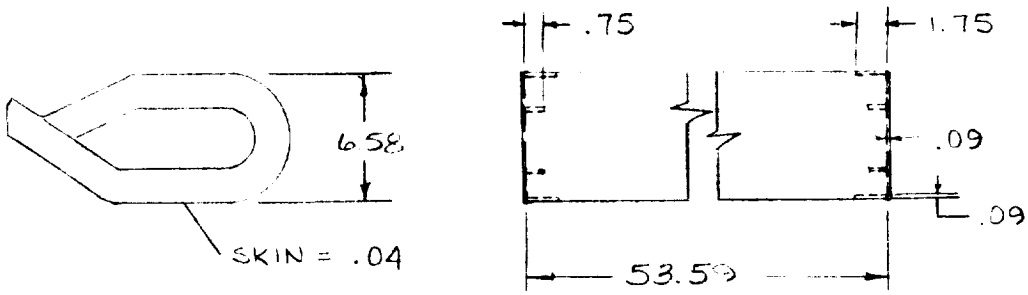

WT. = W_2

$$W_2 = .04(53.59)(34.1)(.1) + .09(1.75)(34.1)(.1)(2)$$
$$+ .09(.75)(24)(.1)(2) + .09(6.58)(6)(.1)(2)$$
$$+ .09(3.14)(6.58^2/4)(2)(.1) + .09\left(\frac{6.3+1.3}{2}\right)(4.8)(.1)(2)$$

W_2 = 10.05 LBS.

TOTAL WT. OF LOWER HOUSING AND CURTAIN

$= (W_1 + W_2) \times$ DEAD LOAD FACTOR

$= (21.9 + 10.05)\,2$

$= 64$ LBS

MAXIMUM ACCELERATION = 1.05 g

MAXIMUM INERTIA FORCE $= \frac{64}{g}(1.05\,g)$

$= 67.2$ LBS

DRAWING OR JOB TITLE	DRAWING NO. OR ITEM
APOLLO ACCESS CHAMBER	VERT. CURTAINS

LOADS

WT. OF UPPER HOUSING

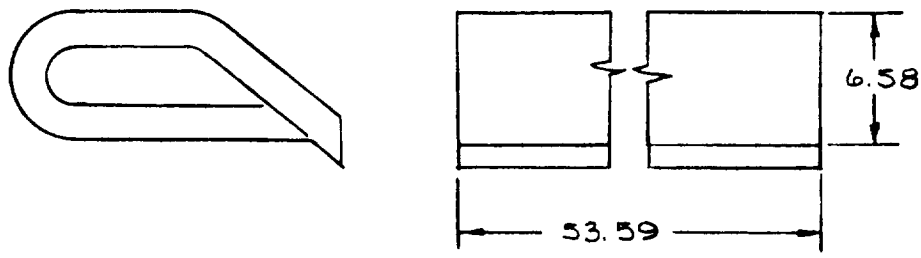

WT. = W_3

$$W_3 = .04(53.59)(41)(.1) + 2(.09)(1.75)(41)(.1)$$
$$+ 2(.09)(.75)(28.5)(.1) + 2(.09)(314)(6.58^2/8)(.1)$$
$$+ 2(.09)(6.58)(6)(.1) + .09\left(\frac{6.3+1.3}{2}\right)(4.8)(2)(.1)$$

$$W_3 = 11.83$$

TOTAL WT. OF UPPER HOUSING

$= (W_1 + W_3)$ LOAD FACTOR

$= (21.9 + 11.83)\ 2$

$= 67.5$ LBS.

MAXIMUM INERTIA FORCE $= 67.5\ (1.05)$

$= 70.8$ LBS

PREPARED BY J D.W.
CHECKED BY
REVISED BY

PAGE
REPORT NO.
DATE 4-26-64

DRAWING OR JOB TITLE	DRAWING NO. OR ITEM
APOLLO ACCESS CHAMBER	VERT. CURTAINS

LOADS

LOAD ON CURTAIN = .07 PSI

MAXIMUM MOMENT $= \frac{WL^2}{8} = \frac{.07(1.25)(53)^2}{8}$

$= 28$ IN-LBS

MATERIAL

CURTAIN — 6061-T6

$F_{TY} = 35{,}000$ PSI

UPPER AND LOWER BRACKET — 6061-T6 (WELDED)

$F_{TY} = 20{,}000$ PSI

$F_{BKY} = 30{,}000$ PSI

BRACKET FASTENERS — MS16998-45

$P_{TY} = 4{,}420$ LBS

$P_{SY} = 2{,}650$ LBS

SECTIONAL PROPERTIES

CURTAIN LINK:

$I = .0035$ IN^4 $\frac{KL}{r} = 38$

$\bar{Y} = .185$ IN

$\sigma_{ALLOW} = 28 - .155(38)$ REF. ALCOA

$= 22.1$

DRAWING OR JOB TITLE	DRAWING NO. OR ITEM
APOLLO ACCESS CHAMBER	

SECTIONAL PROPERTIES

LOWER HOUSING BRACKET:

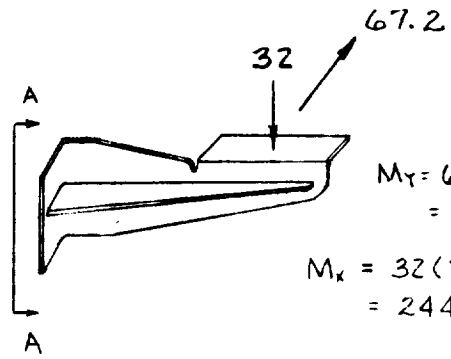

$M_Y = 67.2(7.62)$
$= 512$ IN-LBS

$M_X = 32(7.62)$
$= 244$ IN.-LBS.

FOR HOR. LOAD

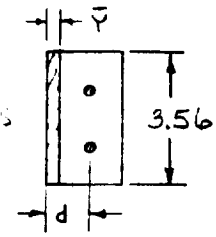

$A_{BOLT} = .0491$

$d = 1$

$\ell = 3.56$

BOLT TENSION $= T_1$

$$T_1 = \frac{M_Y(d-\bar{Y})}{I} A_{BOLT} = 276 \text{ LBS.}$$

$$\bar{Y} = \frac{\Sigma AY}{\Sigma A} = \frac{\bar{Y}\ell(\bar{Y}/2) + .0491(1)(2)}{\bar{Y}\ell + 2(.0491)}$$

$= .21$ IN.

$$I = \frac{1}{3}\bar{Y}^3\ell + 2A_{BOLT}(d-\bar{Y})^2$$

$= .072$ IN^4

FOR VERT. LOAD

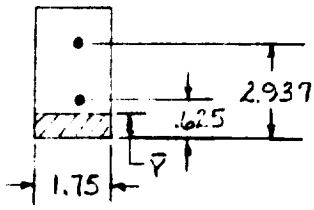

$A_{BOLT} = .0491$

$\ell = 1.75$

$$\bar{Y} = \frac{\Sigma AY}{\Sigma A} = \frac{\bar{Y}\ell(\bar{Y}/2) + .0491(.625 + 2.937)}{\bar{Y}\ell + 2(.0491)}$$

$= .406$

$$I = \frac{1}{3}\bar{Y}^3\ell + \Sigma A_{BOLT}(d-\bar{Y})^2$$

$= .353$ IN^4

BOLT TENSION $= T_2$

$$T_2 = \frac{M_X(d-\bar{Y})}{I} A_{BOLT} = 86 \text{ LBS}$$

MAX BOLT TENSION $= T_1 + T_2 = 362$ LBS

PREPARED BY _____ PAGE _____
CHECKED BY _____ REPORT NO. _____
REVISED BY _____ DATE 4-26-64

DRAWING OR JOB TITLE	DRAWING NO. OR ITEM
APOLLO ACCESS CHAMBER	VERT. CURTAINS

SECTIONAL PROPERTIES

MOMENT DUE TO BOLT TENSION = $\frac{P}{\pi}$

= 115 IN LBS

ASSUME HALF OF MOMENT GOES TO FILLET AND HALF TO STIFFENER WELD

SECTION MODULUS AT FILLET = $bt^2/6$

= .0059 IN^3

UPPER HOUSING BRACKET:

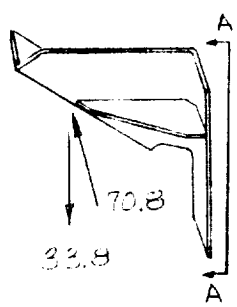

M_x = 33.8(3.5) = 118 IN.-LBS

M_Y = 70.8(3.5) = 248 IN.-LBS

FOR INERTIA LOAD:

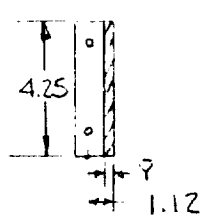

$\bar{Y} = \frac{\Sigma A\bar{Y}}{\Sigma A}$

= .206 IN.

$I = \frac{1}{3}\bar{Y}^3 \ell + 2(A_{bolt})(d-\bar{Y})^2$

= .0945 IN^4

BOLT TENSION = $\frac{M_Y(d-\bar{Y})}{I}(A)$

= 118 LBS

FOR VERTICAL LOAD:

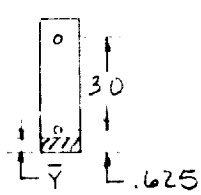

$\bar{Y} = \frac{\Sigma A\bar{Y}}{\Sigma A}$

= .468 IN.

I = .454 IN^4

BOLT TENSION = $\frac{M_x(d-\bar{Y})}{I}(A)$

= 40 LBS

SECTIONAL PROPERTIES

MAX BOLT TENSION = 118 + 40

= 158 LBS

MOMENT DUE TO BOLT TENSION = $\frac{P}{\pi}$

M = 50.3 IN-LBS.

ASSUME HALF OF MOMENT GOES TO FILLET AND HALF TO STIFFENER WELD

SECTION MODULUS = $\frac{bt^2}{6}$ = .0059 IN.^{3}

STRESS

CURTAIN:

$$\sigma = \frac{MC}{I} = \frac{28(.5-.185)}{.0035} = 2{,}520 \text{ PSI}$$

UPPER BRACKET:

$$\sigma = \frac{M}{Z} = \frac{50.3}{.0059} = 8{,}530 \text{ PSI}$$

LOWER BRACKET:

$$\sigma = \frac{M}{Z} = \frac{115}{.0059} = 19{,}500 \text{ PSI}$$

BRACKET FASTENERS:

P = 158 LBS

V = 35.4 LBS

PREPARED BY J. D. W.
CHECKED BY
REVISED BY

PAGE
REPORT NO.
DATE 4-28-64

DRAWING OR JOB TITLE	DRAWING NO. OR ITEM
APOLLO ACCESS CHAMBER	VERT. CURTAINS

MARGINS OF SAFETY

CURTAIN:

$$M.S._{YLD} = \frac{35,000}{2,520} - 1 \qquad \boxed{+\text{LARGE}}$$

UPPER BRACKET.

$$M.S_{YLD} = \frac{20,000}{8,530} - 1 \qquad \boxed{+1.35}$$

LOWER BRACKET:

$$M.S_{YLD} = \frac{20,000}{19,500} - 1 \qquad \boxed{+.025}$$

BRACKET FASTENERS:

$$M.S._{YLD} = \frac{4,420}{158} - 1 \qquad \boxed{+\text{LARGE}}$$

$$M.S_{\tau} = \frac{2,650}{35.4} - 1 \qquad \boxed{+\text{LARGE}}$$

PREPARED BY J. D. W.
CHECKED BY
REVISED BY

PAGE 3/1
REPORT NO.
DATE 4-17-64

DRAWING OR JOB TITLE	DRAWING NO. OR ITEM
APOLLO ACCESS CHAMBER	ADAPTER

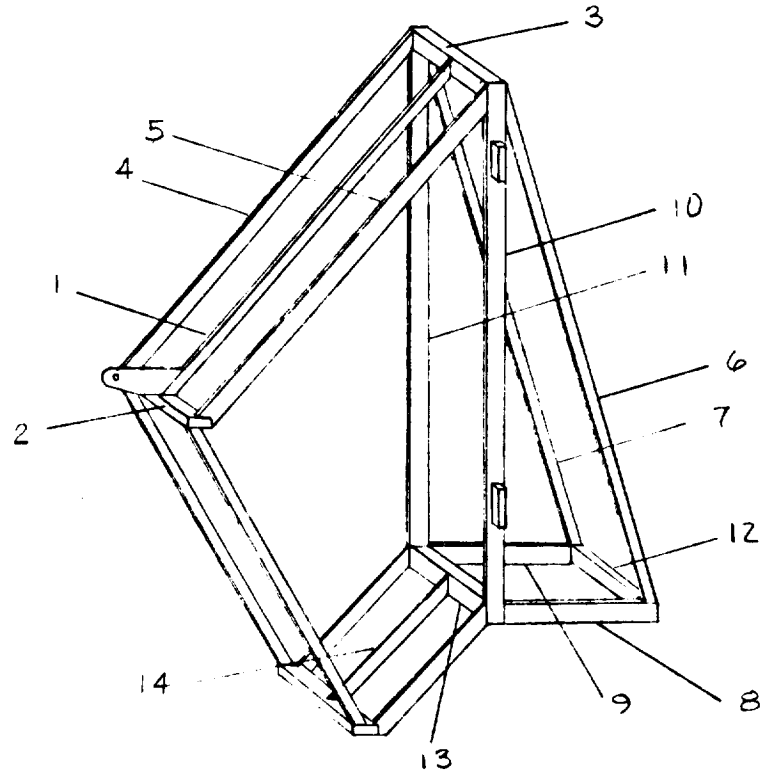

LOADS

PIVOT WELDMENT:

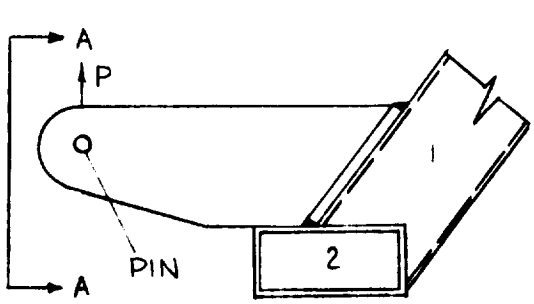

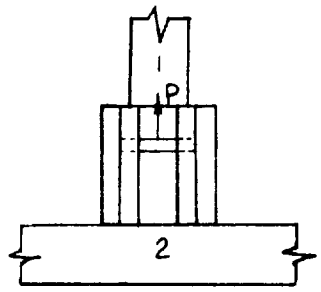

P = WT. OF MAN + WT OF HOOD

= 250(3) + 170(2) = 1090 LBS.

312

PREPARED BY J.D.W.
CHECKED BY
REVISED BY

PAGE
REPORT NO.
DATE 4-17-64

DRAWING OR JOB TITLE	DRAWING NO. OR ITEM
APOLLO ACCESS CHAMBER	ADAPTER

LOADS

SHEARING FORCE ON PIN $= \frac{P}{2}$ (DOUBLE SHEAR)

$= 545$ LBS.

ASSUME MOMENT ON SUPPORT ATTACHMENT DUE TO ECCENTRIC LOAD IS TAKEN AS A COUPLE AT THE WELDED END

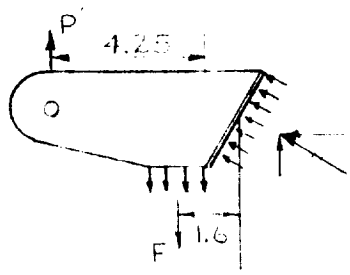

$P' = \frac{1090}{2} = 545$ LBS.

LENGTH OF WELD IN [illegible] .6 (2) [illegible] IN.

WELD = 1/[illegible] IN.

$P(4.25) = F(1.6)$

$F = 1,450$ LBS

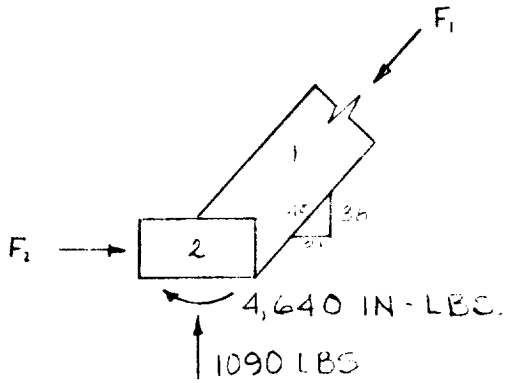

F_1 = AXIAL LOAD IN MEMBER 1

$= 1090\left(\frac{48}{38}\right) = 1375$ LBS

F_2 = FORCE RESISTED BY MEMBER 2 IN BENDING

$= 1375\left(\frac{31}{48}\right) = 889$ LBS

ASSUME MEMBER 1 TAKES 3,040 IN-LBS OF THE MOMENT AND MEMBER 2 TAKES 800 IN-LBS IN EACH DIRECTION

DRAWING OR JOB TITLE	DRAWING NO. OR ITEM
APOLLO ACCESS CHAMBER	ADAPTER

LOADS

MEMBER 2: - ASSUME SIMPLY SUPPORTED

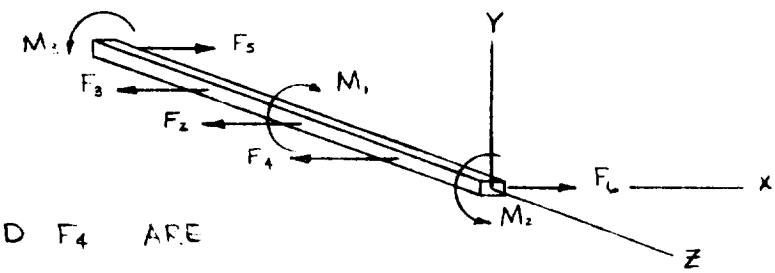

F_3 AND F_4 ARE FORCES FROM THE ADAPTER HANDRAILS

ASSUME $F_3 = F_4 = 225$ LBS

$F_2 = 889$ LBS. REF P 312

$M_1 = 1600$ IN-LBS REF P 312

$M_2 = M_3 = 800$ IN-LBS

$F_5 = F_6 = 667$ LBS

MAX. MOM. = M_Y

$$M_Y = 667(26) - 225(13) = 14{,}410 \text{ IN-LBS}$$

MEMBER 1:

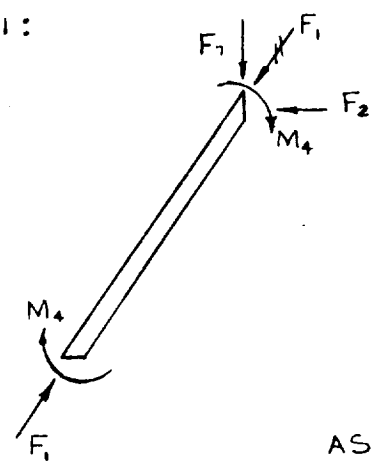

$F_1 = 1375$ LBS REF. P 312

$F_2 = 889$ LBS

$F_7 = 1090$ LBS

$M_4 = 3040$ IN-LBS

ASSUME FIXED ENDS

PREPARED BY J. D. W.
CHECKED BY
REVISED BY

PAGE
REPORT NO.
DATE 4-18-64

DRAWING OR JOB TITLE	DRAWING NO. OR ITEM
APOLLO ACCESS CHAMBER	ADAPTER

LOADS

MEMBER 3: ASSUME ENDS 75% FIXED

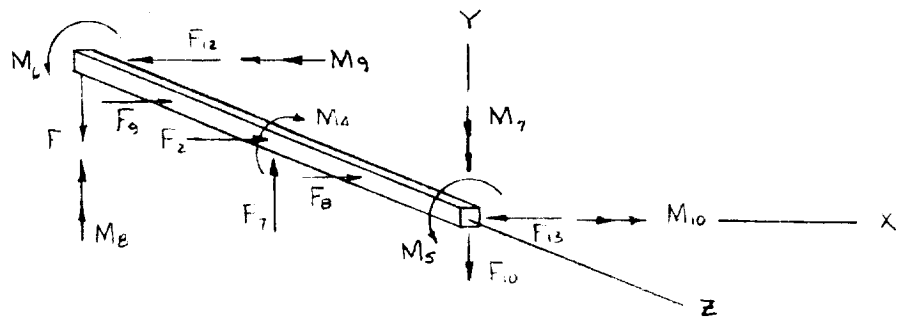

F_2 = 899 LBS

F_7 = 1090 LBS — REF P 313

F_8, F_9 — FORCE FROM ADAPTER HANDRAILS
ASSUME $F_8 = F_9$ = 200 LBS.

$F_{10} = F_{11}$ = 545 LBS

$F_{12} = F_{13}$ = 645 LBS

M_4 = 30,10 IN-LBS — REF P 313

$M_5 = M_6$ = 1520 IN-LBS

$M_7 = M_8$ = 5817.5 IN-LBS

$M_9 = M_{10}$ = 5,796 IN-LBS

M_x AT CENTER OF MEMBER = 8,862 IN-LBS

M_y AT CENTER OF MEMBER = 9,660 IN-LBS

DRAWING OR JOB TITLE	DRAWING NO. OR ITEM
APOLLO ACCESS CHAMBER	ADAPTER

LOADS

MEMBER 4, 5 :

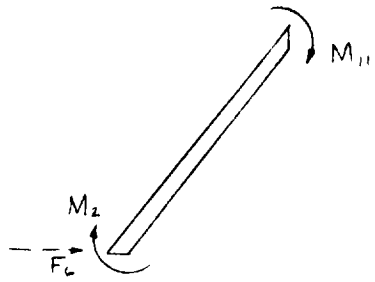

$M_2 = M_{11} = 800$ IN-LBS REF P. 313

ASSUME F_6 (REF. P. ?) IS TAKEN BY THE SKIN IN SHEAR.

MEMBER 12 : ASSUME SIMPLY SUPPORTED

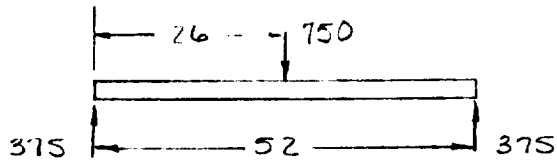

$$M_{MAX} = \frac{PL}{4} = 9{,}760 \text{ IN-LBS}$$

MEMBER 6, 7 :

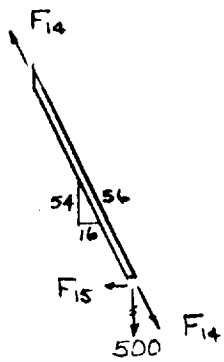

$F_{14} = 569$ LBS

$F_{15} = 163$ LBS

ASSUME F_{15} IS TAKEN BY MEMBER 8, 9

LOAD SHOWN RESULTS IF C.G. OF MAN IS 17 IN. FROM END OF MEMBER 12

PREPARED BY J. D. W

CHECKED BY

REVISED BY

PAGE

REPORT NO.

DATE 4-18-64

DRAWING OR JOB TITLE	DRAWING NO. OR ITEM
APOLLO ACCESS CHAMBER	ADAPTER

LOADS

MEMBER 8, 9 :

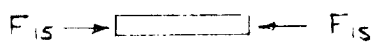

F_{15} 163 LBS REF P. 315

MEMBER 10 11

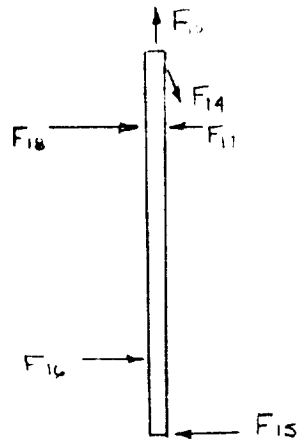

F_{18} — FORCE FROM ADAPTER HANDRAIL

ASSUME F_{18} = 400 LBS

F_{14} = 569 LBS REF. P 315

F_{15} = 163 LBS

F_{10} = 545 LBS REF. P 314

F_{16}, F_{17} — ADAPTER SLIDE BLOCK REACTIONS

F_{16} = 197 LBS

F_{17} = 507 LBS

MAX. MOM = 960 IN-LBS

NOTE : MEMBER NOT IN EQUILIBRIUM VERTICALLY BECAUSE F_{10} WAS CALCULATED WITH CONSIDERATION OF ADAPTER WT. AND F_{15} WAS NOT.

DRAWING OR JOB TITLE	DRAWING NO. OR ITEM
APOLLO ACCESS CHAMBER	ADAPTER

LOADS

MEMBER 13 :

ASSUME WT OF MAN AT CENTER

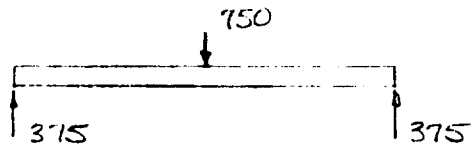

L = 52 IN.

$$\text{MAX. MOM.} = \frac{PL}{4} = 9,760 \text{ IN-LBS.}$$

MEMBER 14 :

ASSUME WT. OF MAN AT CENTER

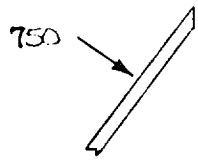

L = 16 IN.

$$\text{MAX. MOM.} = \frac{PL}{4} = 3,000 \text{ IN.-LBS.}$$

SKIN IN SHEAR:

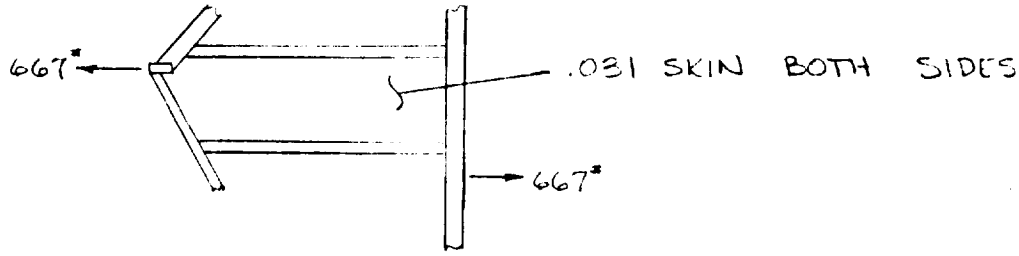

ASSUME:

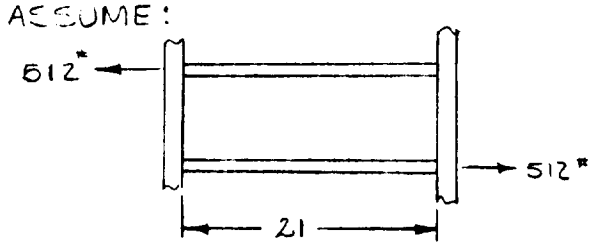

PREPARED BY J.D.W
CHECKED BY
REVISED BY

PAGE
REPORT NO.
DATE 4-18-64

DRAWING OR JOB TITLE	DRAWING NO. OR ITEM
APOLLO ACCESS CHAMBER	ADAPTER

LOADS

TRED PANEL STIFFENERS:

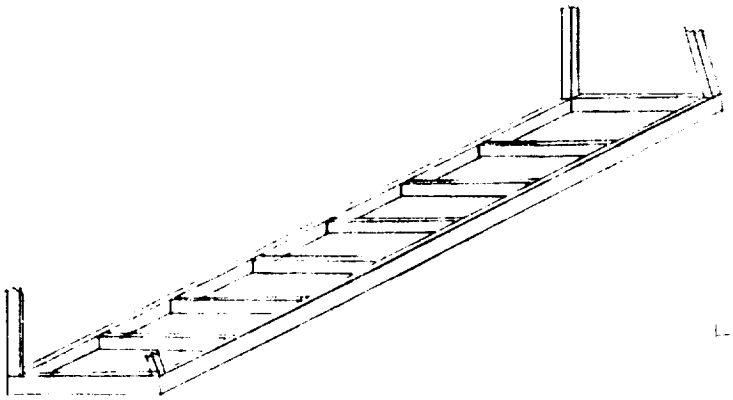

ASSUME CONCENTRATED LOAD OF 750 LBS
AT CENTER OF ONE STIFFENER

$M_{max} = \frac{PL}{4}$ = 2148 IN LBS

2 RIVETS EACH END OF
STIFFENER SHEAR PER
RIVET = 188 LBS.

INCLINED PANEL STIFFENERS:

ASSUME 750 LBS.
DIST. OVER SHADED
AREA

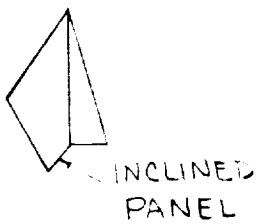

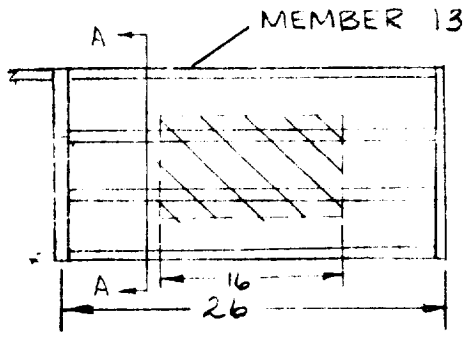

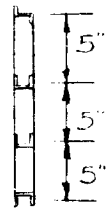

A-A

DRAWING OR JOB TITLE	DRAWING NO. OR ITEM
APOLLO ACCESS CHAMBER	ADAPTER

LOADS

INCLINED PANEL STIFFENER

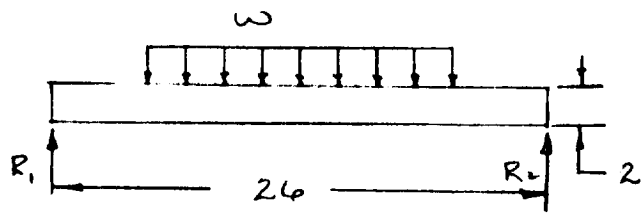

$$w = \frac{375}{16} = 23.4 \text{ LBS/IN.}$$

$$R_1 = R_2 = 187.5$$

MAX. MOM. = 2,691 IN-LBS

TWO RIVETS AT ENDS, SHEAR PER RIVET = 93.8 LBS.

SLIDE BLOCKS:

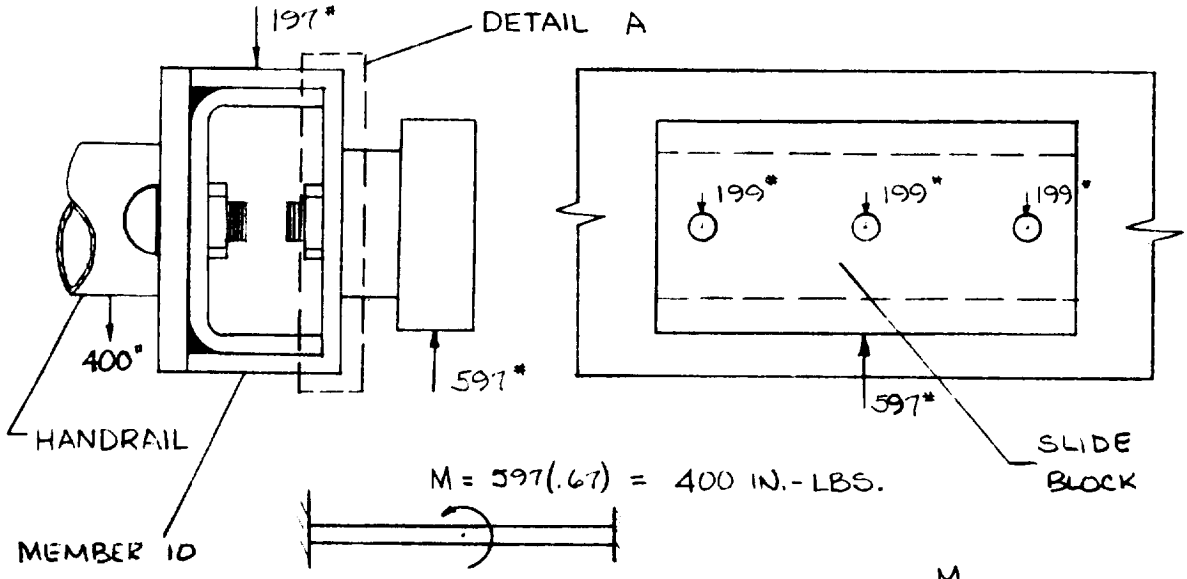

$M = 597(.67) = 400$ IN.-LBS.

MAX. MOM. $= \frac{M}{2} = 200$ IN-LBS

DETAIL A - SIDE OF MEMBER 10

320

PREPARED BY J. D. W

CHECKED BY

REVISED BY

PAGE

REPORT NO.

DATE 4-18-64

DRAWING OR JOB TITLE	DRAWING NO. OR ITEM
APOLLO ACCESS CHAMBER	ADAPTER

LOADS

HANDRAIL:

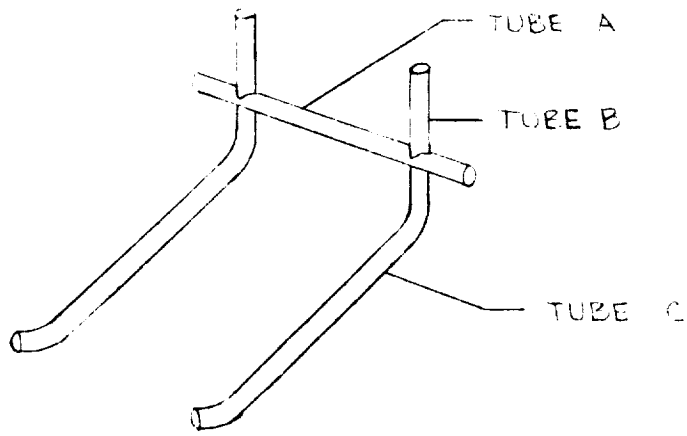

TUBE A —

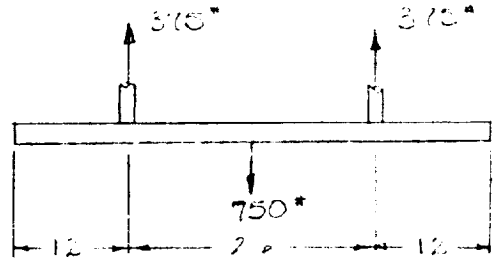

MAX MOM = $\frac{PL}{4}$ = 4875 IN-LBS

TUBE B —

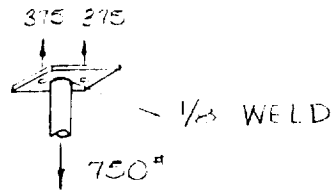

TUBE C —

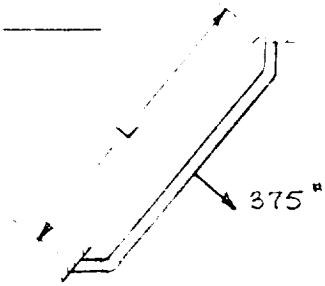

ASSUME 50% FIXED

MAX. MOM = $\left(\frac{PL}{8}\right)\frac{1}{2} = \frac{375(.159)}{8}(12)$

= 2830 IN-LBS.

PREPARED BY J. D. W.
CHECKED BY
REVISED BY

PAGE 321
REPORT NO.
DATE 4-20-64

DRAWING OR JOB TITLE	DRAWING NO. OR ITEM
APOLLO ACCESS CHAMBER	ADAPTER

LOADS

HANDRAIL BRACKET

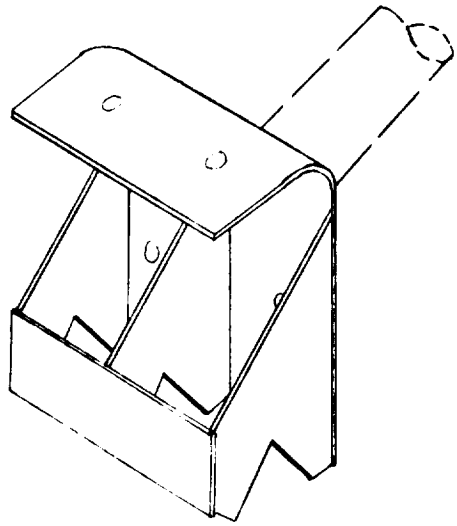

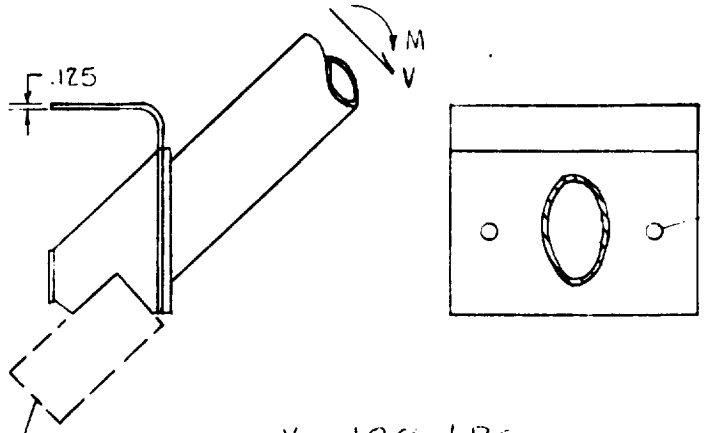

.25 IN. BOLT

MEMBER 2

V = 188 LBS

$M = \frac{2800}{2} = 1400$ IN-LBS

REF. P. 320

BOLT TENSION = 106 LBS

MOM. IN BASE PLATE $= \frac{P}{\pi} = 33.7$ IN-LBS/IN

MAX. SHEAR IN BRACKET STIFFENER = V
V = 393 LBS

PREPARED BY J.D.W.
CHECKED BY
REVISED BY

PAGE
REPORT NO.
DATE 4-20-64

DRAWING OR JOB TITLE	DRAWING NO. OR ITEM
APOLLO ACCESS CHAMBER	ADAPTER

MATERIAL

PIVOT WELDMENT —— 6061-T6 (WELDED)

F_{TY} = 15,000 PSI

PIVOT BOLT —— MS21301-31

F_{SY} = 64,200 PSI

ALL MONKLINES —— 6061 T6 (WELDED)

F_{TY} = 20,000 PSI

F_{SY} = 12,000 PSI

ALL STIFFENERS —— 6061-T6

F_{TY} = 35,000 PSI

F_{SY} = 20,[illegible] PSI

F_{BRY} = 56,[illegible] PSI

INCLINED PANEL STIFFENER RIVETS — MS20660AD4W4

P_{SU} = 4[illegible] LBS

P_{SY} = 296 LBS (ASSUMED .6 P_{SU})

SLIDE BLOCKS —— 6061-T6

F_{BRY} = 56,000 PSI

SLIDE BLOCK FASTENERS —— MS35191-295

P_{SY} = 1717(.6) = 1030 LBS

DRAWING OR JOB TITLE	DRAWING NO. OR ITEM
APOLLO ACCESS CHAMBER	ADAPTER

MATERIAL

HANDRAIL — STL. TUBE -4130 PER MIL-T-6736 COND N

F_{TY} = 70,000 PSI

HANDRAIL FASTENERS — AN4 - 7A

P_{TY} = [illegible] (6) = 2448 LBS

P_{SY} = 3[illegible](6) = 2208 LBS

HANDRAIL BRACKET — 6061 T6 (WELDED)

F_{TY} = 20,000 PSI

F_{SY} = 12,000 PSI

ADAPTER SIDE PANEL STIFFENER FASTENERS - MS20600AD4

P_{SY} = 265 LBS.

TRED PANEL STIFFENER FASTENERS — MS20600AD4

P_{SY} = 265 LBS

SECTIONAL PROPERTIES

PIVOT WELDMENT:

AREA WELD IN TENSION

$= .707(.125)(1.2)$

$= .0976 \text{ IN}^2$

PREPARED BY J. D. W.
CHECKED BY
REVISED BY

PAGE
REPORT NO.
DATE 4-20-64

DRAWING OR JOB TITLE	DRAWING NO. OR ITEM
APOLLO ACCESS CHAMBER	ADAPTER

SECTIONAL PROPERTIES

PIVOT BOLT:

CROSS-SECTIONAL AREA = .195 IN²

MEMBER 2 :

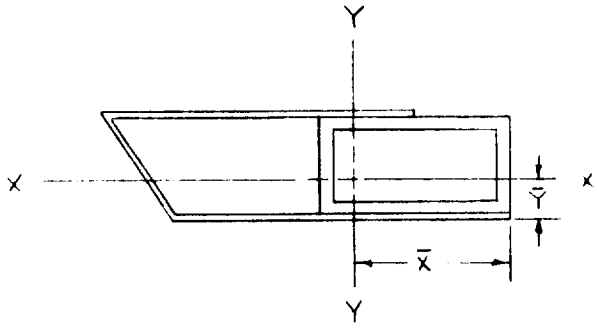

$\bar{X}$ = 1.65 IN. I_{xx} = .347 IN⁴

$\bar{Y}$ = .385 IN. I_{YY} = 2.09 IN⁴

MEMBER 1 :

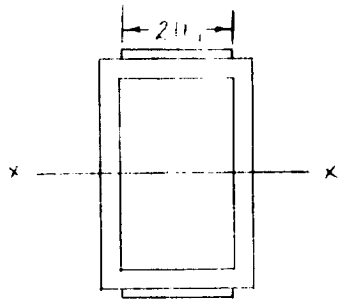

EFFECTIVE WIDTH OF SKIN:

$1.65 \frac{b}{t} = 53$

F_{ECR} = 27,000 PSI REF PEERY

ω_1 = .361

I_{xx} = .185 IN⁴

A = .563 IN²

ASSUME FIXED ENDS —

$\frac{KL}{r} = 57.8$

$\sigma_{ALLOW} = 38.3 - .202(57.8)$ REF
= 26,600 PSI ALCOA

DRAWING OR JOB TITLE	DRAWING NO. OR ITEM
APOLLO ACCESS CHAMBER	ADAPTER

SECTIONAL PROPERTIES

MEMBER 3:

CENTER OF SPAN –

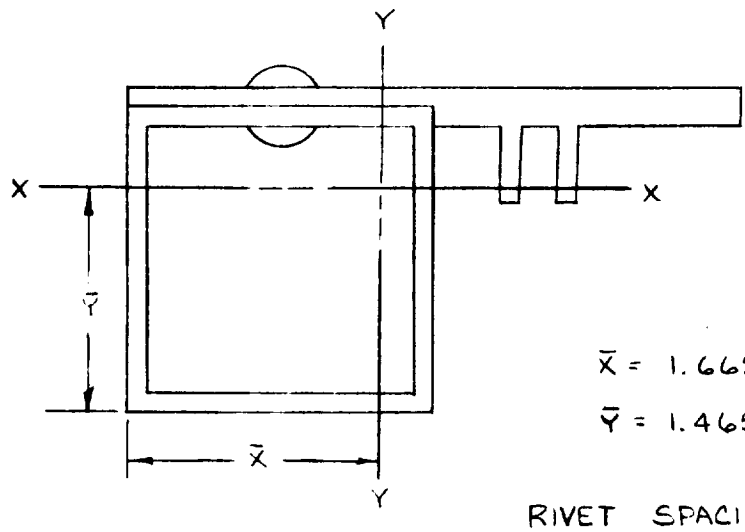

$\bar{X}$ = 1.665 IN. I_{YY} = 2.426 IN^4

$\bar{Y}$ = 1.465 IN. I_{XX} = .997 IN^4

RIVET SPACING = 4 IN.

SHEAR PER RIVET = $\frac{VQ}{I}$ (4 IN.) = 464 LBS/RIVET

ENDS OF MEMBER – ONLY TUBE WELDED

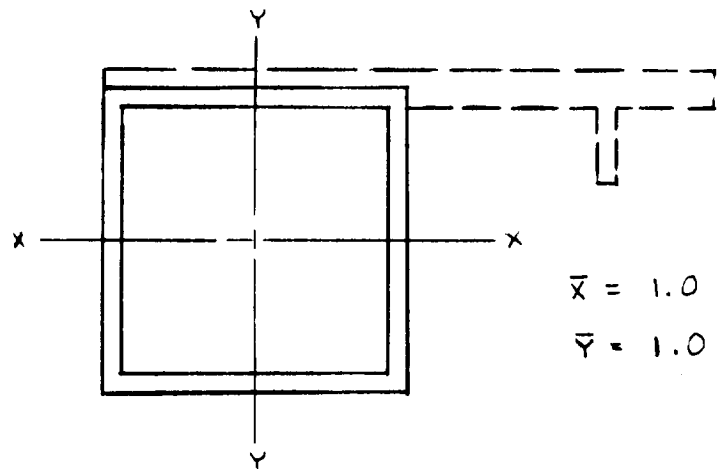

$\bar{X}$ = 1.0 IN I_{YY} = .552 IN^4

$\bar{Y}$ = 1.0 IN I_{XX} = .552 IN^4

PREPARED BY J. D. W.
CHECKED BY
REVISED BY

PAGE
REPORT NO.
DATE 4-21-64

DRAWING OR JOB TITLE	DRAWING NO. OR ITEM
APOLLO ACCESS CHAMBER	ADAPTER

SECTIONAL PROPERTIES

MEMBER 4, 5: 1 × 1.5 × .125

$I = .158$ IN.^{4}

$A = .563$ IN.^{4}

MEMBER 12: 1 × 2 × .125

$I = .332$ IN^4

MEMBER 6, 7: 1 × 1 × .125

$I = .0569$ IN.^{4}

$A = .438$ IN.^{2}

MEMBER 8, 9: 1 × 2 × .125

$A = .686$ IN.^{2}

MEMBER 13: 2 × 2 × .125

$I = .552$ IN.^{4}

MEMBER 10, 11:

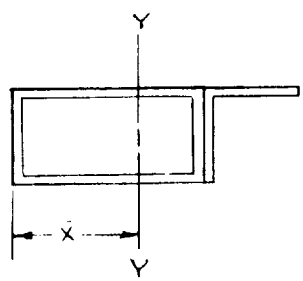

$\bar{x} = 1.33$ IN.

$I_{YY} = .64$

BUCKLING OF ANGLE LEG:

$$\frac{KL}{r} = 2.9\frac{b}{t} = 23.2$$

$$\sigma_{ALL.} = 39.9 - .263(23.2) = 33.8 \text{ KSI}$$

DRAWING OR JOB TITLE	DRAWING NO. OR ITEM
APOLLO ACCESS CHAMBER	ADAPTER

SECTIONAL PROPERTIES

MEMBER 14: 1 x 1.5 x .125

$I = .158 \text{ IN.}^4$

TRED PANEL STIFFENERS:

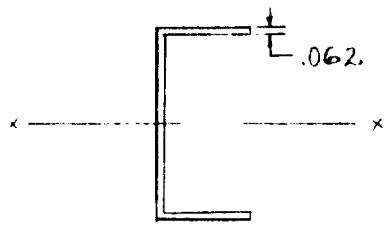

$I_{xx} = .107 \text{ IN.}^4$

FLANGE: $\frac{KL}{r} = 2.9\frac{b}{t} = 46.4$

$\sigma_{ALL} = 39.9 - .263(46.4)$

$= 27.7 \text{ KSI}$

RIVET BRG AREA $= .062(.125) = .00775 \text{ IN.}^2$

INCLINED PANEL STIFFENERS:

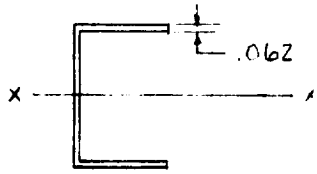

$I_{xx} = .088 \text{ IN}^4$

FLANGE: $\frac{KL}{r} = 46.4$

$\sigma_{ALL} = 39.9 - .263(46.4) = 27.7 \text{ KSI}$

RIVET BRG AREA $= .00775$

SKIN:

CRITICAL SHEARING STRESS —

$F_{scr} = KE\left(\frac{t}{b}\right)^2$

$= 5(10^7)\left(\frac{.031}{10}\right)^2$

$= 488 \text{ PSI}$

PREPARED BY J. D. W
CHECKED BY
REVISED BY

PAGE
REPORT NO.
DATE 4-21-64

DRAWING OR JOB TITLE	DRAWING NO. OR ITEM
APOLLO ACCESS CHAMBER	ADAPTER

SECTIONAL PROPERTIES

SLIDE BLOCK:

BRG. AREA OF FASTENERS = .25(.125)

= .0313 IN.^{2}

SLIDE BLOCK CONNECTION:

SIDE OF MEMBER 10 - $Z = \frac{bt^2}{6}$

= .0114 IN.^{3}

HANDRAIL:

TUBE A - Z = .071

TUBE B - DIA. = 1.0

AREA WELD = [illegible] IN.^{2}

TUBE C - Z = .071

FASTENER BRG AREA = .25(.125) = .0313 IN^2

HANDRAIL BRACKET:

AREA STIFFENER IN SHEAR

A = .094

BASE PLATE - $Z = \frac{bt^2}{6}$ = .0026 IN.^{3}

STRESS

PIVOT WELDMENT: WELD -

$\sigma = \frac{F}{A}$ = 14,850 PSI

DRAWING OR JOB TITLE	DRAWING NO. OR ITEM
APOLLO ACCESS CHAMBER	

STRESS

PIVOT BOLT:

$$\tau = \frac{V}{A} = 2,800 \text{ PSI}$$

MEMBER 2:

$$\sigma = \frac{MY}{I} = 17,950 \text{ PSI}$$

MEMBER 1:

$$\sigma = \frac{MY}{I} + \frac{P}{A} = 15,250 \text{ PSI}$$

MEMBER 3:

CENTER OF SPAN –

TUBE $\sigma_c = \frac{M_X C_1}{I_X} + \frac{M_Y C_4}{I_Y} = 19,070$ PSI

FLANGE $\sigma_T = \frac{M_X C_2}{I_X} + \frac{M_Y C_4}{I_Y} = 15,210$ PSI

END OF MEMBER –

TUBE $\sigma_c \cdot \sigma_T = \frac{M_X \bar{Y}}{I_X} + \frac{M_Y \bar{X}}{I_Y}$

$= 29,000$ PSI

MEMBER 4,5:

$$\sigma = \frac{MY}{I} = 3,800 \text{ PSI}$$

MEMBER 12:

$$\sigma = \frac{MY}{I} = 29,400 \text{ PSI}$$

MEMBER 6,7:

$$\sigma = \frac{P}{A} = 1,300 \text{ PSI}$$

MEMBER 8,9:

$$\sigma = \frac{P}{A} = 238 \text{ PSI}$$

DRAWING OR JOB TITLE	DRAWING NO. OR ITEM
APOLLO ACCESS CHAMBER	ADAPTER

STRESS

MEMBER 10, 11:

$$\sigma = \frac{MY}{I} = 2{,}650 \text{ PSI}$$

MEMBER 13:

$$\sigma = \frac{MY}{I} = 17{,}650 \text{ PSI}$$

MEMBER 14

$$\sigma = \frac{MY}{I} = 14{,}250 \text{ PSI}$$

SKIN:

$$\tau = \frac{V}{A} = 406 \text{ PSI}$$

TRED PANEL STIFFENERS:

$$\sigma = \frac{MY}{I} = 22{,}900 \text{ PSI}$$

TRED PANEL RIVETS:

$$P_s = 188 \text{ LBS}$$

INCLINED PANEL STIFFENERS:

$$\sigma = \frac{MY}{I} = 22{,}900 \text{ PSI}$$

INCLINED PANEL STIFFENER RIVETS:

$$P_s = 93.8 \text{ LBS}$$

SLIDE BLOCK:

RIVETS $\sigma_{BRG} = \frac{P}{A} = 6{,}350$ PSI

DRAWING OR JOB TITLE	DRAWING NO. OR ITEM
APOLLO ACCESS CHAMBER	ADAPTER

STRESS

SIDE OF MEMBER 10 (AT SLIDE BLOCK)

$\sigma = \frac{M}{Z} = 17,500$ PSI

HANDRAIL:

TUBE A – $\sigma = \frac{M}{Z} = 68,800$ PSI

TUBE B (WELD) – $\tau = \frac{P}{A} = 2,700$ PSI

TUBE C – $\sigma = \frac{M}{Z} = 39,400$ PSI

HANDRAIL BRACKET:

BASE PLATE – $\sigma = \frac{M}{Z} = 12,950$ PSI

STIFFENER – $\tau = \frac{V}{A} = 4,190$ PSI

FASTENERS – $P_S = 94$ LBS

$P_T = 106$ LBS

MARGINS OF SAFETY

PIVOT WELDMENT:

WELD – $M.S._\tau = \frac{15,000}{14,850} - 1 =$ **+.01**

BOLT – $M.S._\tau = \frac{64,200}{2,800} - 1 =$ **+ LARGE**

MEMBER 2:

$M.S._{YLD} = \frac{20,000}{17,950} - 1 =$ **+.11**

MEMBER 1:

$M.S._{YLD} = \frac{20,000}{15,250} - 1 =$ **+.31**

PREPARED BY J. D. W.
CHECKED BY
REVISED BY

PAGE
REPORT NO.
DATE 4-23-64

DRAWING OR JOB TITLE	DRAWING NO. OR ITEM
APOLLO ACCESS CHAMBER	ADAPTER

MARGINS OF SAFETY

MEMBER 3

CENTER $M.S._{YLD} = \frac{20,000}{19,070} - 1 =$ **+.05**

ENDS $M.S._{YLD} = \frac{20,000}{20,000} - 1 =$ **+0.0**

MEMBER 4, 5:

$M.S._{YLD} = \frac{20,000}{3,900} - 1 =$ **+4.3**

MEMBER 12:

$M.S._{YLD} = \frac{35,000^*}{29,400} - 1 =$ **+.19**

MEMBER 6, 7:

$M.S._{YLD} = \frac{20,000}{1,300} - 1 =$ **+ LARGE**

MEMBER 8, 9:

$M.S._{YLD} = \frac{20,000}{238} - 1 =$ **+ LARGE**

MEMBER 10, 11:

$M.S._{YLD} = \frac{20,000}{2,650} - 1 =$ **+6.5**

MEMBER 13:

$M.S._{YLD} = \frac{20,000}{17,650} - 1 =$ **+.13**

MEMBER 14:

$M.S._{YLD} = \frac{20,000}{14,250} - 1 =$ **+.40**

SKIN:

$M.S._{\tau} = \frac{488}{406} - 1 =$ **+.20**

* 35,000 PSI ALLOWED AT CENTER 26 IN. FROM WELD

DRAWING OR JOB TITLE	DRAWING NO. OR ITEM
APOLLO ACCESS CHAMBER	ADAPTER

MARGINS OF SAFETY

TRED PANEL STIFFENERS:

$$M.S._{YLD} = \frac{35,000}{22,800} - 1 = \quad +.53$$

TRED PANEL RIVETS:

$$M.S._{\tau} = \frac{494}{188} - 1 = \quad +1.62$$

INCLINED PANEL STIFFENERS

$$M.S._{YLD} = \frac{35,000}{22,900} - 1 = \quad +.53$$

INCLINED PANEL STIFFENER RIVETS.

$$M.S._{\tau} = \frac{494}{93.8} - 1 = \quad +4.25$$

SLIDE BLOCK FASTENERS

$$M.S._{\tau} = \frac{1,030}{199} - 1 = \quad +4.16$$

SIDE OF MEMBER 10 (AT SLIDE BLOCK)

$$M.S._{YLD} = \frac{20,000}{17,500} - 1 = \quad +.14$$

HANDRAIL:

TUBE A - $M.S._{YLD} = \frac{70,000}{68,800} - 1 = \quad +.018$

TUBE B - $M.S._{\tau WELD} = \frac{12,000}{2,700} - 1 = \quad +3.45$

TUBE C - $M.S._{YLD} = \frac{70,000}{39,400} - 1 = \quad +.77$

HANDRAIL BRACKET:

BASE PLATE - $M.S._{YLD} = \frac{20,000}{12,950} - 1 = \quad +.54$

STIFFENER - $M.S._{\tau} = \frac{12,000}{4,190} - 1 = \quad +1.87$

FASTENERS - $M.S._{T} = \frac{2448}{375} - 1 = \quad$ +LARGE

PREPARED BY J. D. W.
CHECKED BY
REVISED BY

PAGE
REPORT NO.
DATE 4-10-64

DRAWING OR JOB TITLE	DRAWING NO. OR ITEM
APOLLO ACCESS CHAMBER	ADAPTER FRAME

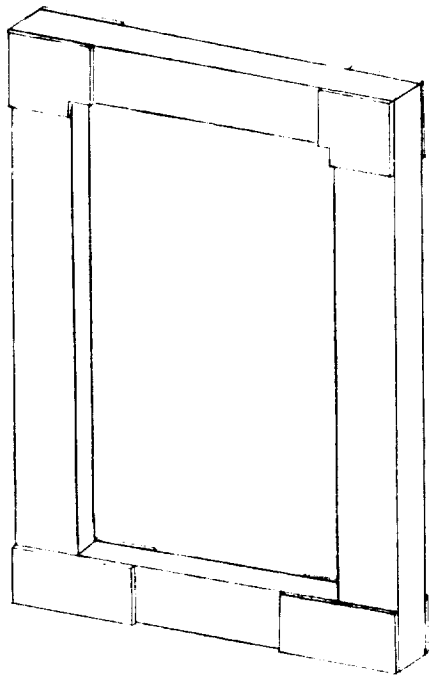

LOADS

FORWARD LUG:

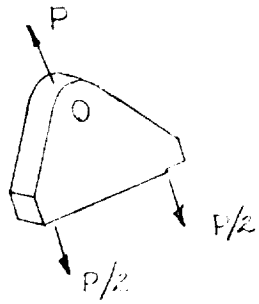

P = 1560 LBS REF P

PIN CARRIES P
IN DOUBLE SHEAR

LUG CAN BE SUBJECTED TO
SHEAR LOAD OF 1565 LBS
SHEAR PER FASTENER = 783 LBS.

PREPARED BY J. D. W.
CHECKED BY
REVISED BY

PAGE 335
REPORT NO.
DATE 4-10-64

DRAWING OR JOB TITLE	DRAWING NO. OR ITEM
APOLLO ACCESS CHAMBER	ADAPTER FRAME

LOADS

UPPER TROLLEY

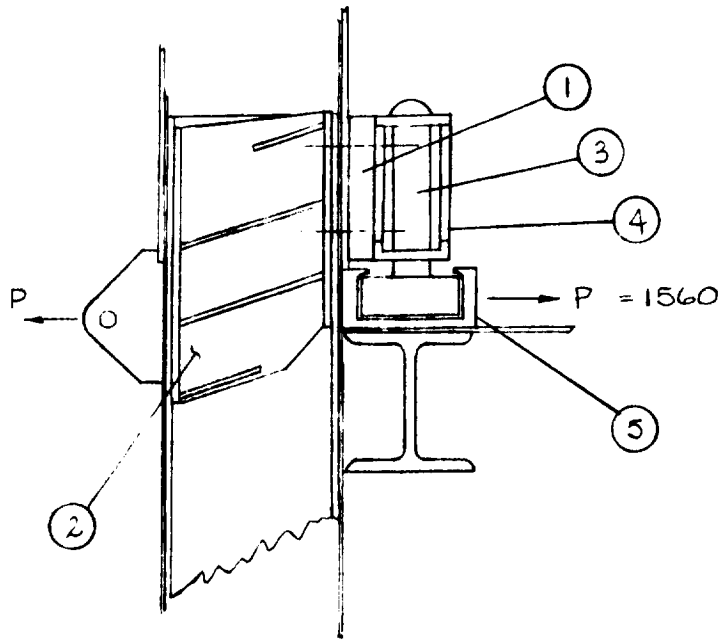

(1) - SPACER , (2) - STIFFENER

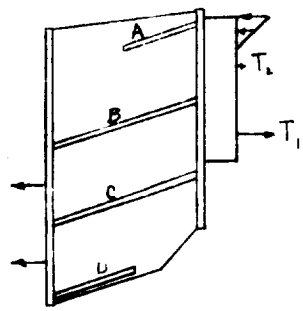

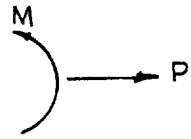

P = 1560 LBS

M = 1560 (4.4) = 6860 IN-LBS

PREPARED BY J. D. W
CHECKED BY
REVISED BY

PAGE
REPORT NO.
DATE 4-10-64

DRAWING OR JOB TITLE	DRAWING NO. OR ITEM
APOLLO ACCESS CHAMBER	ADAPTER FRAME

LOADS

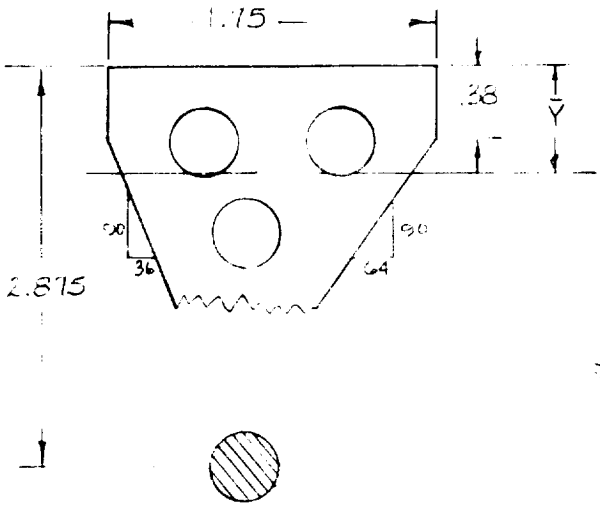

HOLES, BOLT A = .1105

ℓ = 1.75

$$\bar{Y} = \frac{\Sigma AY}{\Sigma A} = .60 \text{ IN.}$$

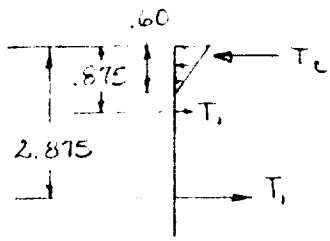

$$I = \frac{\bar{Y}^3 \ell}{3} + \Sigma A_{BOLT} (d - \bar{Y})^2$$

$$I = .695 \text{ IN}^4$$

ASSUME BOLTS EACH CARRY .125 P
PLUS TENSION DUE TO MOMENT

$$T_1 = \frac{MY}{I}(A) + .125 P$$

$$T_1 = 2,675 \text{ LBS}$$

$$T_2 = \frac{MY}{I}(A) + .125 P$$

$$T_2 = 495 \text{ LBS}$$

$$T_c = T_1 + T_2 - P$$

$$T_c = 1610 \text{ LBS.}$$

DRAWING OR JOB TITLE	DRAWING NO. OR ITEM
APOLLO ACCESS CHAMBER	ADAPTER FRAME

LOADS

FOR OPPOSITE CONDITION IN WHICH THE DIRECTION OF P IS REVERSED ASSUME P TAKEN BY BRG AREA GIVING MAX BRG STRESS

T_1 = 212 LBS

T_2 = 1750 LBS

STIFFENER A — REF. P. 335

ASSUME ALL OF T_c IS TAKEN BY STIFFENER A AS SHEAR

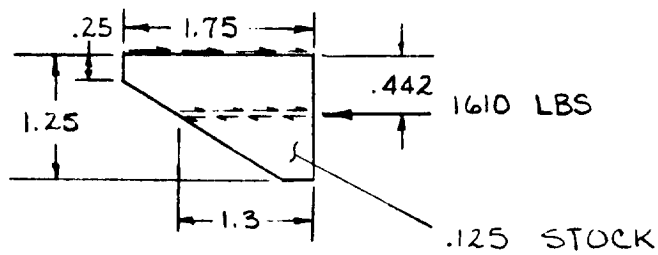

STIFFENERS B AND C —

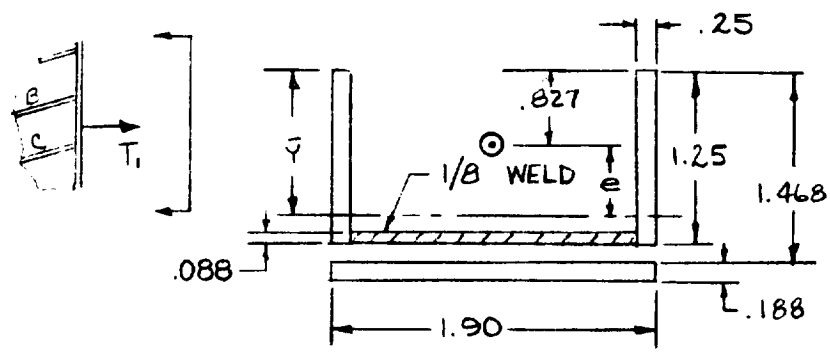

$\bar{Y} = \frac{\Sigma AY}{\Sigma A} = 1.1$ $\quad e = .273$

$M = T_1 e = 730$ IN-LBS

PREPARED BY J. D. W.
CHECKED BY
REVISED BY

PAGE
REPORT NO.
DATE 4-11-64

DRAWING OR JOB TITLE	DRAWING NO. OR ITEM
APOLLO ACCESS CHAMBER	ADAPTER FRAME

LOADS

(3) – VERTICAL SHAFT

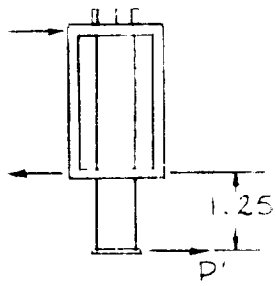

M = P'(1.25)
= 975 IN-LBS

P' = 780 LBS

(4) – UPPER TROLLEY BRACKET

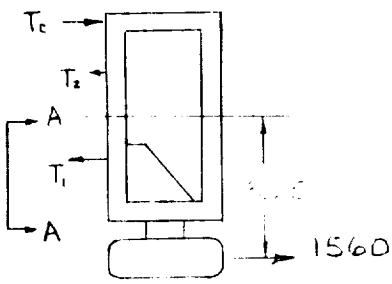

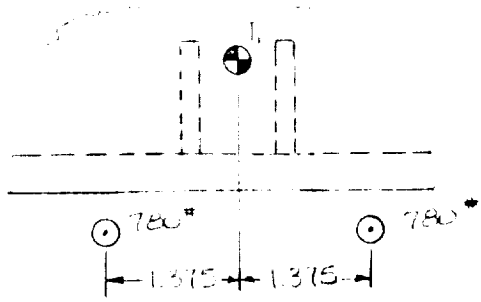

T_1 = 2675 LBS

T_1 IS TRANSFERRED AS BENDING TO THE STIFFENERS. ASSUME 1/3 GOES TO EACH SUPPORT

$$M = \frac{T_1}{11} = 850 \text{ IN-LBS}$$

= 284 IN-LBS EACH WAY

TORQUE CARRIED BY BOX = 780 (3.25) = 2530 IN-LBS

$$q = \frac{T}{2A} = 169 \text{ LBS/IN.}$$

DRAWING OR JOB TITLE	DRAWING NO. OR ITEM
APOLLO ACCESS CHAMBER	

LOADS

(5) - UPPER TRACK

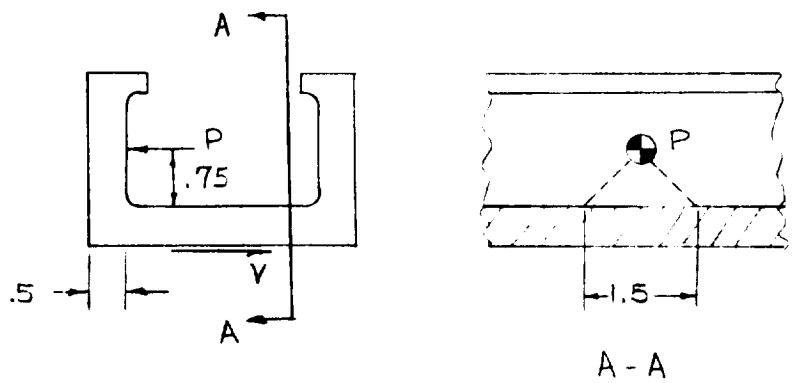

P = V = 1560

MAX. MOMENT = .75P = 1170 IN-LBS

V IS RESISTED BY .25 IN. DIA. RIVETS AT 2.5 IN. SPACING. MAX SHEAR PER RIVET = 780 LBS

LOWER TROLLEY -

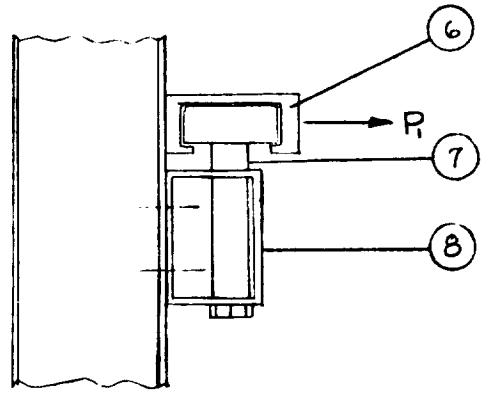

ASSUME $2P_1$ = 80% (WT. MAN + WT. ADAPTER) 1.05g
+ 50% (WT. ADAPTER FRAME) 1.05g

$2P_1$ = 1128 LBS

DRAWING OR JOB TITLE	DRAWING NO. OR ITEM
APOLLO ACCESS CHAMBER	ADAPTER FRAME

LOADS

(6) LOWER TRACK

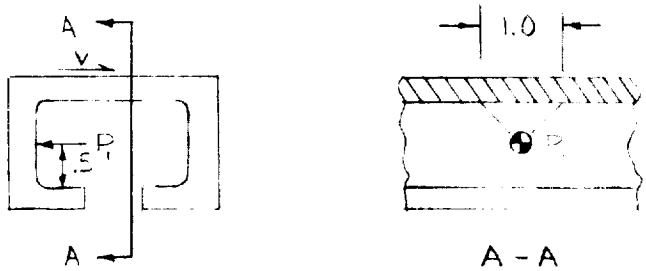

$P_1 - V = 564$ LBS

MAX MOMENT = $5P_1$ = [illegible] IN LBS

V IS RESISTED BY FRICTION

FORCE ON FASTENERS = P_2

COEF. OF FRICTION = .3

REF. ____

$P_2 = \frac{564}{.3} = 1880$ LBS

TORQUE = T = KDP_2 = [illegible] IN-LBS

(7) VERTICAL SHAFT

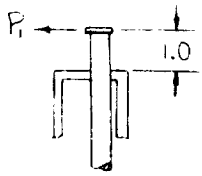

MOMENT = $P_1(1.0)$

= 564 IN-LBS

(8) TROLLEY BRACKET

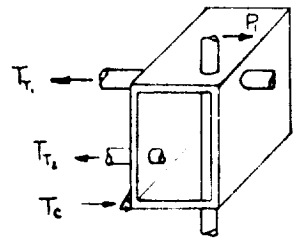

DRAWING OR JOB TITLE	DRAWING NO. OR ITEM
APOLLO ACCESS CHAMBER	ADAPTER FRAME

LOADS

CALCULATION OF T_{T1}

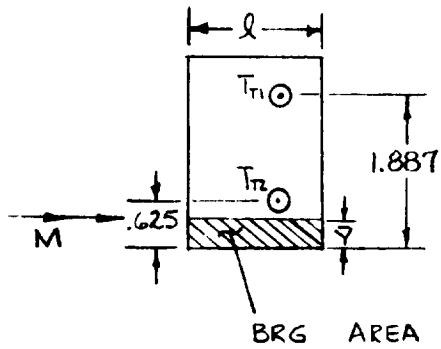

AREA BOLTS = .1105 IN.^{2}

ℓ = 1.75 IN.

$$\bar{Y} = \frac{\Sigma AY}{\Sigma A} = .45 \text{ IN}$$

$$I = \frac{1}{3}\bar{Y}^3\ell + \Sigma A_{BOLT}(d-\bar{Y})^2$$

$$I = .284$$

$$M = P_1(2.969)$$

$$M = 1675 \text{ IN-LBS.}$$

ASSUME P_1 IS TAKEN AS TENSION IN T_{T1} AND T_{T2}, HALF TO EACH.

$$T_{T1} = \frac{P_1}{2} + \frac{M(d-\bar{Y})}{I}(A_{BOLT})$$

$$T_{T1} = 1219 \text{ LBS}$$

$$T_{T2} = 396 \text{ LBS}$$

THE SHOULDER BOLT TAKING T_{T1} BEARS ON BOTH SIDES OF THE BRACKET, SO EACH SIDE TAKES HALF OF THE $\frac{P}{\pi}$ MOMENT.

$$\text{MOMENT TO EACH SIDE} = \frac{P}{2\pi}$$

$$= 194 \text{ IN-LBS/IN.}$$

PREPARED BY J. D. W.
CHECKED BY
REVISED BY

PAGE
REPORT NO.
DATE 4-16-64

DRAWING OR JOB TITLE	DRAWING NO. OR ITEM
APOLLO ACCESS CHAMBER	ADAPTER FRAME

LOADS

FRAME MOMENTS:

ACTUAL LOADING —

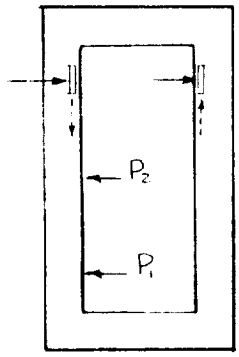

ASSUME ACTUAL LOADING IS SIMULATED BY THE SUPERPOSITION OF THE FOLLOWING SIMPLIFIED LOADINGS

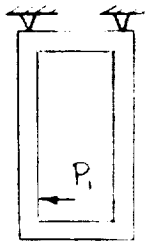

CONDITION 1

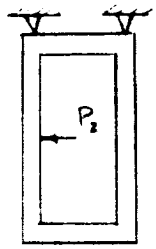

CONDITION 2

ASSUME P_1 = 70% (WT. MAN + WT. ADAPTER) 1.05 g
= 875 LBS.

ASSUME P_2 = 30% (WT MAN + WT. ADAPTER) 1.05 g
= 375 LBS.

LOADS

FRAME MOMENTS – COND'T 1 REF. _____

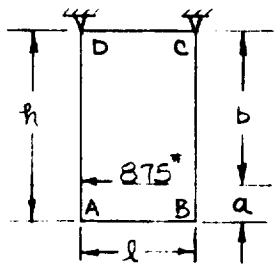

$a = 20$, $b = 94$, $l = 60$ $h = 114$
$P_1 = 875$ LBS

$I_{AB} = I_{BC} = I_{CD} = I_{DA}$
$= 22.086 \text{ IN}^4$ REF. P. 350

$K = \frac{I_{AB}}{l} = .368$

$n = \frac{Kh}{I_{AD}} = 1.9$

$p = \frac{Kl}{I_{DC}} = 1.0$

$\alpha = n^2 + 2pn + 2n + 3p = 14.21$

$\beta = 6n + p + 1 = 13.4$

$$M_{AB} = -\frac{P_1 b}{2}\left\{\frac{an}{h^2}\left[\frac{bn + bp + hp}{\alpha} + \frac{3h}{\beta}\right] - \frac{3n+p}{\beta}\right\} = +14{,}250 \text{ IN-LBS.}$$

$$M_{BC} = -\frac{P_1 b}{2}\left\{\frac{an}{h^2}\left[\frac{bn + bp + hp}{\alpha} - \frac{3h}{\beta}\right] + \frac{3n+p}{\beta}\right\} = -20{,}350 \text{ IN-LBS.}$$

$$M_{CD} = -\frac{P_1 b}{2}\left\{\frac{an}{h^2}\left[\frac{na + a + h}{\alpha} - \frac{3h}{\beta}\right] - \frac{3n+1}{\beta}\right\} = +22{,}100 \text{ IN-LBS.}$$

$$M_{DA} = -\frac{P_1 b}{2}\left\{\frac{an}{h^2}\left[\frac{na + a + h}{\alpha} + \frac{3h}{\beta}\right] + \frac{3n+1}{\beta}\right\} = -25{,}000 \text{ IN-LBS}$$

FRAME MOMENTS – COND'T 2 REF. _____

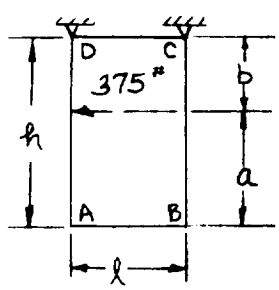

$a = 68$ $K = .368$
$b = 46$ $n = 1.9$
$l = 60$ $p = 1.0$
$h = 114$ $\alpha = 14.21$
$\beta = 13.4$

LOADS

FRAME MOMENTS – COND'T 2

$$M_{AB} = -\frac{P_2 b}{2}\left\{\frac{an}{h^2}\left[\frac{bn+bP+hP}{\alpha} + \frac{3h}{\beta}\right] - \frac{3n+P}{\beta}\right\} = +634 \text{ IN-LBS}$$

$$M_{BC} = -\frac{P_1 b}{2}\left\{\frac{an}{h^2}\left[\frac{bn+bP+hP}{\alpha} - \frac{3h}{\beta}\right] + \frac{3n+1}{\beta}\right\} = -3{,}740 \text{ IN-LBS}$$

$$M_{CD} = -\frac{P_2 b}{2}\left\{\frac{an}{h^2}\left[\frac{na+a+h}{\alpha} - \frac{3h}{\beta}\right] - \frac{3n+1}{\beta}\right\} = +4{,}725 \text{ IN-LBS}$$

$$M_{DA} = -\frac{P_2 b}{2}\left\{\frac{an}{h^2}\left[\frac{na+a+h}{\alpha} + \frac{3h}{\beta}\right] + \frac{3n+1}{\beta}\right\} = -8{,}525 \text{ IN-LBS}$$

TOTAL MOMENTS ON FRAME

= COND'T 1 + COND'T 2

$M_{AB} = +14{,}250 + 634 = +14{,}884$ IN-LBS

$M_{BC} = -20{,}350 - 3{,}740 = -24{,}090$ IN-LBS

$M_{CD} = +22{,}100 + 4{,}725 = +26{,}825$ IN-LBS

$M_{DA} = -25{,}000 - 8{,}525 = -33{,}525$ IN-LBS

SHEAR IN MEMBERS IS FOUND BY TAKING EACH AS A FREE BODY AND SOLVING FOR END REACTIONS

$V_{AD} = V_{BC} = V_{CB} = 449$ LBS.

$V_{DA} = 801$ LBS.

$V_{CD} = V_{DC} = V_{AB} = V_{BA} = 650$ LBS.

DRAWING OR JOB TITLE	DRAWING NO. OR ITEM
APOLLO ACCESS CHAMBER	ADAPTER FRAME

LOADS

FRAME MOMENTS AND SHEARS

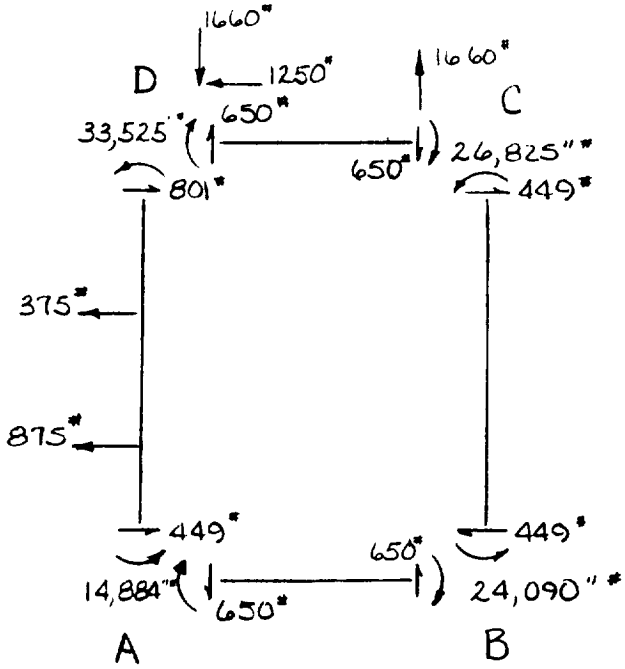

JOINT A —

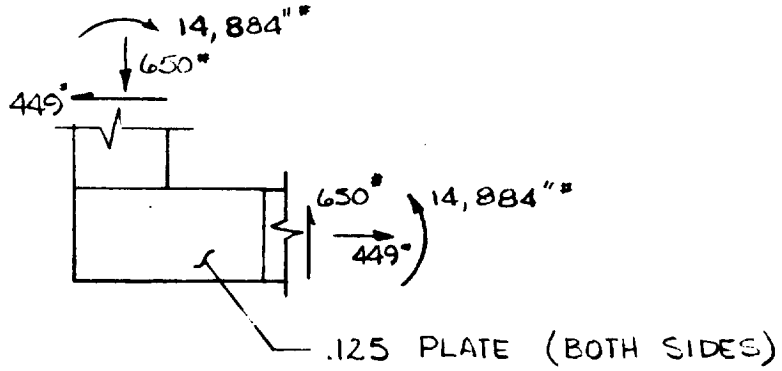

ASSUME ALL LOAD IS TAKEN BY .125 IN. PLATES

M = 14,884 IN-LBS

V = 650 LBS

P_{AXIAL} = 449 LBS

MAX SHEAR PER RIVET = 559 LBS

PREPARED BY J.D.W.
CHECKED BY
REVISED BY

PAGE
REPORT NO
DATE 4-16-64

DRAWING OR JOB TITLE	DRAWING NO. OR ITEM
APOLLO ACCESS CHAMBER	ADAPTER FRAME

LOADS

JOINT B:

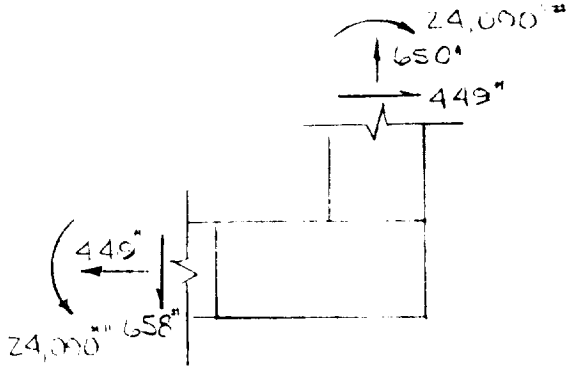

ASSUME ALL LOAD TAKEN BY .125 IN. PLATES

M = 24,090 IN-LBS

V = 449 LBS

P_{AXIAL} = 650 LBS

SHEAR PER RIVET = 502 LBS

JOINT C

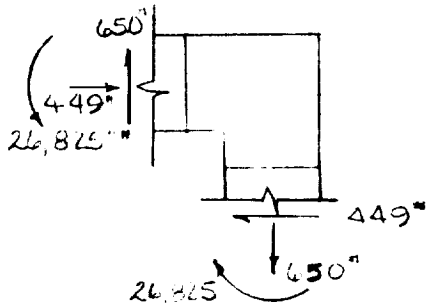

ASSUME ALL LOAD TAKEN BY .125 IN. PLATES

M = 26,825 IN-LBS

V = 449 LBS

P_{AXIAL} = 650 LBS

SHEAR PER RIVET = 559 LBS

DRAWING OR JOB TITLE	DRAWING NO. OR ITEM
APOLLO ACCESS CHAMBER	ADAPTER FRAME

LOADS

JOINT D :

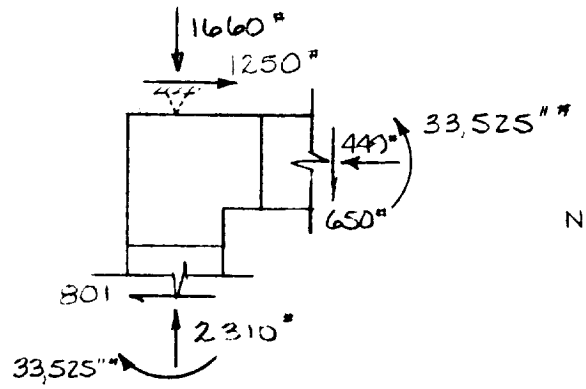

NOTE : 1250 LBS REACTION IS ACTUALLY LOCATED AT FOREWARD LUG.

ASSUME ALL LOAD TAKEN BY .125 IN. PLATES

M = 33,525 IN-LBS

V = 801 LBS

P_{AXIAL} = 2310 LBS

MAX SHEAR PER RIVET = 698 LBS

STRESS CONCENTRATION IN THE CORNER OF THE JOINTS WAS NEGLECTED; IT WAS ASSUMED THAT SHOULD THE PLATES YIELD LOCALLY THE CLIP ANGLES WOULD TAKE THE LOAD

MAXIMUM LOADING FOR A FRAME LEG

M = 33,525 IN-LBS

V = 801 LBS TAKEN BY SKIN, HALF TO EACH SIDE

P = 2310 LBS

348

PREPARED BY J. D. W.
CHECKED BY
REVISED BY

PAGE
REPORT NO.
DATE 4-16-64

DRAWING OR JOB TITLE	DRAWING NO. OR ITEM
APOLLO ACCESS CHAMBER	ADAPTER FRAME

MATERIAL

FOREWARD [illegible] 6[illegible] T6

F_{TY} = 3[illegible],000 PSI

F_{BRY} = 56,[illegible] PSI

F_{S} [illegible] PSI

SPACER [illegible] T6

STIFFENER [illegible] T6 (WELDED)

F_{TY} 20,[illegible]

F_{S} 15,[illegible]

UPPER TROLLEY BRANCH [illegible] 6061 T6

VERTICAL [illegible] ([illegible]) - [illegible] D[illegible]

F_{TY} - 70[illegible]

F_{BY} = 3[illegible]

UPPER, LOWER TRACKS - 6061 T6

UPPER TRACK FASTENERS - MS 2[illegible]AD8 P_{SY} = 1182 LBS

VERTICAL SHAFT (LOWER BRANCH) - [illegible] BAR [illegible] D[illegible]

LOWER TROLLEY BRANCH - 6061 T6

[illegible] SHAFT ([illegible]) [illegible] BAR 4130 [illegible] D[illegible]

FRAME CHANNEL 6061 T6

SKIN - 6061 T6

PLATE RIVETS - MS20601AD8W6

P_{SY} = 1182 LBS

PREPARED BY J.D.W.
CHECKED BY
REVISED BY

PAGE
REPORT NO.
DATE 4-16-64

DRAWING OR JOB TITLE	DRAWING NO. OR ITEM
APOLLO ACCESS CHAMBER	ADAPTER FRAME

MATERIAL

JOINT PLATES - 6061-T6

FOREWARD LUG FASTENERS - MS16998-77

$P_{TY} = 15{,}000$ LBS

$P_{SY} = 9{,}000$ LBS

SECTIONAL PROPERTIES

FOREWARD LUG -

BRG AREA FOR P LOAD

$A = .375(.75) = .281 \text{ IN}^2$

STIFFENER A -

SHEAR AREA $= 1.3(.125) = .325 \text{ IN}^2$

STIFFENER B, C -

I RESISTING $T_1 = \sum\left(\frac{bh^3}{12} + Ad^2\right)$

$= .1614 \text{ IN}^4$

VERTICAL SHAFT -

$I = \frac{\pi R^4}{4} = .0188 \text{ IN}^4$

UPPER TROLLEY BRACKET -

SECTION MODULUS FOR $\frac{T_1}{\pi}$ MOMENT

$= \frac{bt^2}{6} = .0104 \text{ IN}^3$

UPPER TRACK -

SECTION MODULUS RESISTING P

$Z = \frac{bt^2}{6} = .0625 \text{ IN}^3$

DRAWING OR JOB TITLE	DRAWING NO. OR ITEM
APOLLO ACCESS CHAMBER	ADAPTER FRAME

SECTIONAL PROPERTIES

LOWER TRACK -

SECTION MODULUS FOR BENDING P_1

$$Z = \frac{bt^2}{6} = [illegible] \text{ IN}^3$$

VERTICAL CHAIN (LOWER TROLLEY)

$$I = \frac{\pi R^4}{4} = [illegible]44$$

BRACKET (LOWER TROLLEY) -

SECTION MODULUS FOR BENDING T_1

$$Z = \frac{bt^2}{6} = .0104 \text{ IN}^3$$

FRAME MEMBERS -

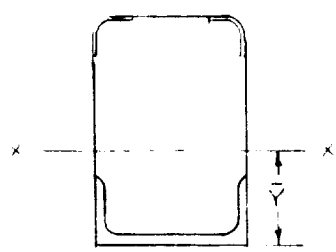

$A = 2.80 \text{ IN}^2$

$\bar{Y} = \frac{\Sigma AY}{\Sigma A} = 2.03 \text{ IN}$

$I = 22.086 \text{ IN}^4$

A_{min} [illegible] $= .281 \text{ IN}^2$

FRAME JOINTS -

I OF JOINT PLATES,

$$I = \frac{bt_1}{12} = 1.73 \text{ IN.}^4$$

FOR PLATE ON EACH SIDE, $I = 3.46 \text{ IN}^4$

$A = 1.975 \text{ IN}^2$

STRESS

FORWARD LUG

$$\sigma_{BRG} = \frac{1560}{.281} = 5,550 \text{ PSI}$$

STRESS

FOREWARD LUG FASTENERS

$P_S = 783$ LBS

$P_T = 780$ LBS

SPACER -

$\sigma_{BRG} = \frac{MY}{I} = 5{,}920$ PSI

HOR. SHAFT (UPPER) -

$\sigma = \frac{P}{A} = 7{,}130$ PSI

STIFFENER A -

$\tau = \frac{V}{A} = 4{,}950$ PSI

STIFFENERS B, C -

$\sigma = \frac{MY}{I} + \frac{P}{A} = 8{,}260$ PSI

VERTICAL SHAFT -

$\sigma = \frac{MY}{I} = 20{,}400$ PSI

UPPER TROLLEY BRACKET -

$\sigma = \frac{M}{Z} = 29{,}500$ PSI

$\tau = \frac{q}{t} = 423$ PSI

UPPER TRACK -

$\sigma = \frac{M}{Z} = 18{,}700$ PSI

UPPER TRACK FASTENERS -

$P_S = 780$ LBS.

LOWER TRACK -

$\sigma = \frac{M}{Z} = 20{,}100$ PSI

PREPARED BY J. D. W.
CHECKED BY
REVISED BY

PAGE
REPORT NO.
DATE

DRAWING OR JOB TITLE	DRAWING NO. OR ITEM
APOLLO ACCESS CHAMBER	ADAPTER FRAME

STRESS

VERTICAL SHAFT -

$$\sigma = \frac{MY}{I} = 52,200 \text{ PSI}$$

TROLLEY BRACKET (LOWER) -

$$\sigma = \frac{M}{Z} = 19,070 \text{ PSI}$$

HOP SHAFT LOWER -

$$\sigma = \frac{P}{A} = 11,[illegible] \text{ PSI}$$

FRAME MEMBERS -

$$\sigma_{MAX} = \frac{P}{A} + \frac{MY}{I} = 6,0[illegible]0 \text{ PSI}$$

$$\tau_{MAX} = \frac{V}{A} = 1,425 \text{ PSI}$$

FRAME JOINT PLATES

$$\sigma_{MAX} = \frac{MY}{I} + \frac{P}{A} = 27,970$$

JOINT RIVETS -

$$P_{S\,MAX} = 698 \text{ LBS}$$

MARGINS OF SAFETY

FORWARD LUG -

$$M.S._{BRY} = \frac{56,000}{5,550} - 1 = \text{+LARGE}$$

FORWARD LUG FASTENERS -

$$M.S._{YLD} = \frac{15,000}{780} - 1 = \text{+LARGE}$$

$$M.S._{\tau} = \frac{9,000}{783} - 1 = \text{+LARGE}$$

MARGINS OF SAFETY

STIFFENER A -

$$M.S._{\tau} = \frac{15,000}{4,950} - 1 = \quad +2.03$$

SPACER -

$$M.S._{BP\,\tau} = \frac{56,000}{5,920} - 1 = \quad +\text{LARGE}$$

HOR. SHAFT (UPPER) -

$$M.S._{T\,YLD} = \frac{70,000}{7,130} - 1 = \quad +\text{LARGE}$$

STIFFENERS B, C -

$$M.S._{YLD} = \frac{20,000}{8,260} - 1 = \quad +1.42$$

VERTICAL SHAFT (UPPER) -

$$M.S._{YLD} = \frac{70,000}{20,400} - 1 = \quad +2.43$$

UPPER TROLLEY BRACKET -

$$M.S._{YLD} = \frac{35,000}{29,500} - 1 = \quad +.18$$

$$M.S._{\tau} = \frac{20,000}{423} - 1 = \quad +\text{LARGE}$$

UPPER TRACK -

$$M.S._{YLD} = \frac{35,000}{18,700} - 1 = \quad +.87$$

PREPARED BY J. D. W.
CHECKED BY
REVISED BY

PAGE
REPORT NO.
DATE 4-16 64

DRAWING OR JOB TITLE	DRAWING NO. OR ITEM
APOLLO ACCESS CHAMBER	ADAPTER FRAME

MARGINS OF SAFETY

UPPER TRACK FASTENERS

$$M.S_{\tau} = \frac{1182}{780} - 1 = \qquad +.51$$

LOWER TRACK

$$M.S_{YLD} = \frac{35,000}{20,100} - 1 = \qquad +.74$$

VERTICAL SHAFT (LOWER)

$$M.S_{YLD} = \frac{70,000}{52,200} - 1 = \qquad +.34$$

TROLLEY BRACKET (LOWER)

$$M.S_{YLD} = \frac{35,000}{18,650} - 1 = \qquad +.88$$

HOR SHAFT (LOWER) -

$$M.S_{YLD} = \frac{70,000}{11,000} - 1 = \qquad +5.36$$

FRAME MEMBERS -

$$M.S_{YLD} = \frac{35,000}{6090} - 1 \qquad +4.75$$

$$M.S_{\tau} = \frac{20,000}{1,425} - 1 = \qquad +\text{LARGE}$$

JOINT PLATES -

$$M.S_{YLD} = \frac{35,000}{27,970} - 1 = \qquad +.25$$

JOINT RIVETS -

$$M.S_{\tau} = \frac{1182}{698} - 1 = \qquad +.69$$

DRAWING OR JOB TITLE	DRAWING NO. OR ITEM
APPOLO ACCESS CHAMBER	LES COUPLER

LOADS

CONSIDER HOOKS OF COUPLER MECHANISM IN CLAMPED POSITION (HERE-AFTER REFERRED TO NOMINAL POSITION)

LIVE LOAD

CASE A : FORWARD INERTIA OF SATURN IB*

CASE B : SIDE INERTIA OF SATURN IB*

* NOTE: CONSIDER CASE A OR CASE B SEPARATELY

DEAD LOAD

CASE C: DEAD LOAD UNCONNECTED

CASE D: DEAD LOAD IN NOMINAL POSITION

ITEM	COMPONENTS	ACTUAL WEIGHT **
W_1	2-HOOK ASS'Y	35
W_2	SLIDE ASS'Y	242
W_3	UPPER PIVOT	18
W_4	LOWER PIVOT	18
W_5	UPPER CYLINDER	15
W_6	COUPLER BRACKET	18
W_7	TOP GLIDE	70
W_8	TIE PLATE - 35% FOR HOLES	40
W_9	BOTTOM GLIDE	68
W_{10}	BOTTOM CYLINDER	8
W_{11}	TUBE	25

W_T = LES COUPLER TOTAL WEIGHT = 557 #

** ASSUMED WEIGHTS AS OF 4/20

356

PREPARED BY Oder

CHECKED BY

REVISED BY

PAGE

REPORT NO.

DATE 4/20/64

DRAWING OR JOB TITLE	DRAWING NO. OR ITEM
APPOLO ACCESS CHAMBER	LES COUPLER

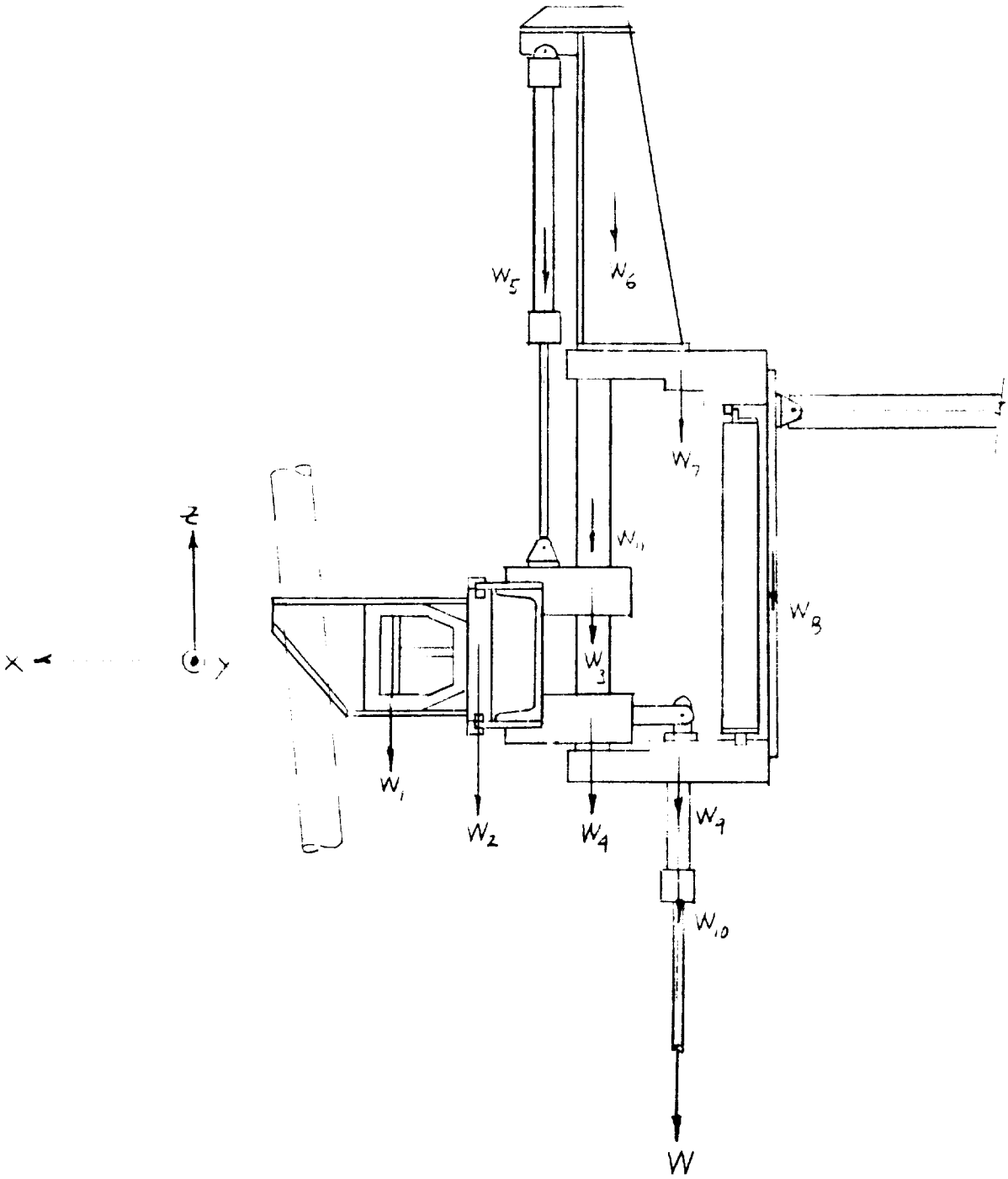

PREPARED BY Eder
CHECKED BY
REVISED BY

PAGE 357
REPORT NO.
DATE 4/21/64

DRAWING OR JOB TITLE: APPOLO ACCESS CHAMBER

DRAWING NO. OR ITEM: LES COUPLER

(WORK THIS SHEET WITH)

LOADS - CONTINUED

CASE A : FORWARD INERTIA

$F_F = 4410^{\#}$ REF. PG. _____

$W_T = 557^{\#}$ REF. PG. 355

$W_F = 2 \times 557 = 1114^{\#}$

$M_u = \frac{W_F}{g} 1.05g = 1.05 W_F = 1.05 \times 1114 = 1170^{\#}$

$P_x = F_F + M_u = 4410 + 1170 = 5580^{\#}$

ALL INERTIA LOADS BASED ON 1.05g ACCELERATION OF SATURN/B

— COMPONENT (1) $W_1 = 35^{\#}$ TOTAL REF. PG. 355 $W_1' = 1.05 \times 2W_1 = 74^{\#}$

ASSUME F_A TO BE EQUALLY DISTRIBUTED ON HOOKS

$F_1 = \frac{P_x - W_1'}{2} = \frac{5580 - 74}{2} = 2753^{\#}$

— COMPONENT (2) $W_2 = 242^{\#}$ REF. PG. 355 $W_2' = 1.05 \times 2W_2 = 508^{\#}$

$F_2 = F_1 - \frac{254}{2} = 2753 - \frac{508}{2} = 2499^{\#}$

— COMPONENT (3) $W_3 = 18$ REF. PG. 355 $W_3' = 1.05 \times 2W_3 = 38^{\#}$

$F_3 = F_2 - W_3' = 2499 - 38 = 2461$

— COMPONENT (10) $W_{10} = 8^{\#}$ REF. PG. 355 $W_{10}' = 1.05 \times 2W_{10} = 17^{\#}$

— COMPONENT (4) $W_4 = 18^{\#}$ REF. PG. 355 $W_4' = 1.05 \times 2 W_4 = 38^{\#}$

$F_4 = F_2 - W_4' - W_{10}' = 2499 - 38 - 17 = 2444^{\#}$

— COMPONENT (5) $W_5 = 15^{\#}$ REF. PG. 355 $W_5' = 1.05 \times 2 W_5 = 32^{\#}$

— COMPONENT (6) $W_6 = 18^{\#}$ REF. PG. 355 $W_6' = 1.05 \times 2W_6 = 38^{\#}$

$F_5 = W_5' + W_6' = 32 + 38 = 70^{\#}$

$M_1 = 14 W_6' + 28 W_5' = 14 \times 38 + 28 \times 32 = 1427 in^{\#}$

— FRAME PARTS 7, 8, 9, & 11 $W_{7,8,9,11} = 70 + 40 + 68 + 25 = 203^{\#}$

$W_{7,8,9,11}' = 1.05 \times 2 W_{7,8,9,11} = 425^{\#}$ REF. PG 355

$$W_{7,8,9,11}' = \left\{ \begin{array}{l} W_7' = 2 \times W_7 \times 1.05 = 2 \times 70 \times 1.05 = 146^{\#} \\ W_8' = 2 \times W_8 \times 1.05 = 2 \times 40 \times 1.05 = 84^{\#} \\ W_9' = 2 \times W_9 \times 1.05 = 2 \times 68 \times 1.05 = 143^{\#} \\ W_{11}' = 2 \times W_{11} \times 1.05 = 2 \times 25 \times 1.05 = 52^{\#} \end{array} \right\} \Sigma = 425^{\#}$$

358

PREPARED BY Eder

CHECKED BY

REVISED BY

PAGE

REPORT NO.

DATE 4/21/54

DRAWING OR JOB TITLE	DRAWING NO. OR ITEM
APPOLO ACCESS CHAMBER	LES COUPLER

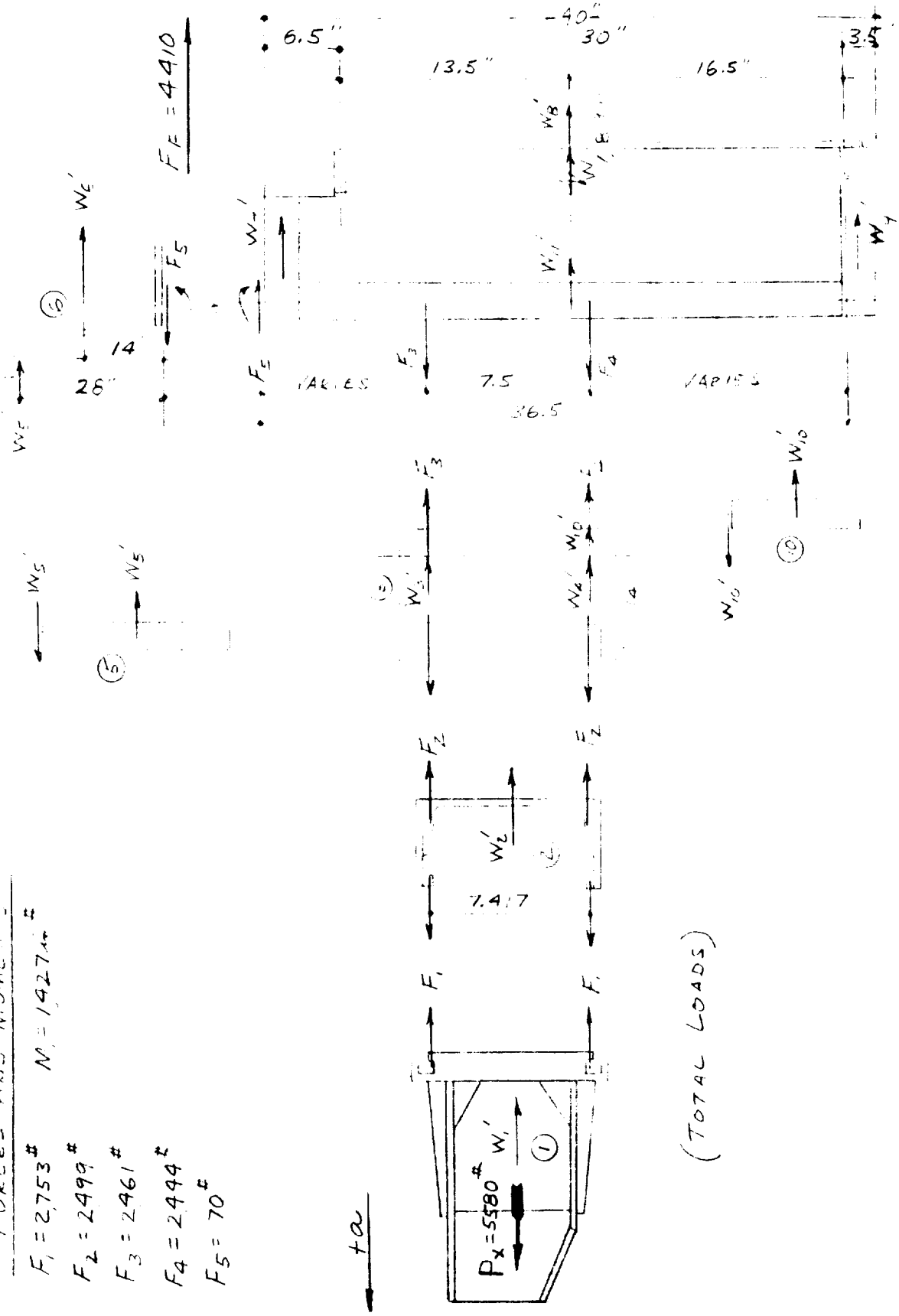

CASE A: FORWARD INERTIA

ASSUME ALL LOAD LOCATIONS

FORCES AND MOMENTS

$F_1 = 2753^{\#}$ $M_1 = 1427^{\#}$

$F_2 = 2499^{\#}$

$F_3 = 2461^{\#}$

$F_4 = 2444^{\#}$

$F_5 = 70^{\#}$

DRAWING OR JOB TITLE	DRAWING NO. OR ITEM
APPOLO ACCESS CHAMBER	LES COUPLER

LOADS - CONTINUED

CASE B : SIDE INERTIA - ASSUME NOMINAL POSITION

	MOVING MASS	ACTUAL WT.	ADJUSTED WT.
REF. PG. ____	MAU	250	3 × 250 = 750
	HOOD	170	2 × 170 = 340
	VERTICAL CURTAIN	60	2 × 60 = 120
	HOOD FRAME	200	2 × 200 = 400
REF. PG. ____	LES COUPLER	557	2 × 557 = 1114
			2724#
	MISCELLANEOUS HANDRAILS & ETC.		= 46
			W = 2770#

$$P_y = \frac{W}{g} \times 1.05g = 1.05W = 1.05 \times 2770$$

$$P_y = 2910^{\#}$$

FIND T_{xy}

$$T_{xy} = \frac{17.625 P_y - 14 W_1' - 8 W_2'}{47.086 (0.8192)}$$

$$T_{xy} = \frac{17.625 \times 2910 - 14 \times 74 - 8 \times 508}{47.086 \ (0.8192)}$$

$$T_{xy} = 1197^{\#}$$

$$\therefore T_y = T_{xy} \cos 55^\circ$$

$$T_y = 1197 \times 0.5736$$

$$T_y = 687$$

$$T_x = 1566 \sin 55^\circ$$

$$T_x = 1197 \times 0.8192$$

$$T_x = 981^{\#}$$

$W_1' = 74$, $W_2' = 508$ } REF. PG. 357

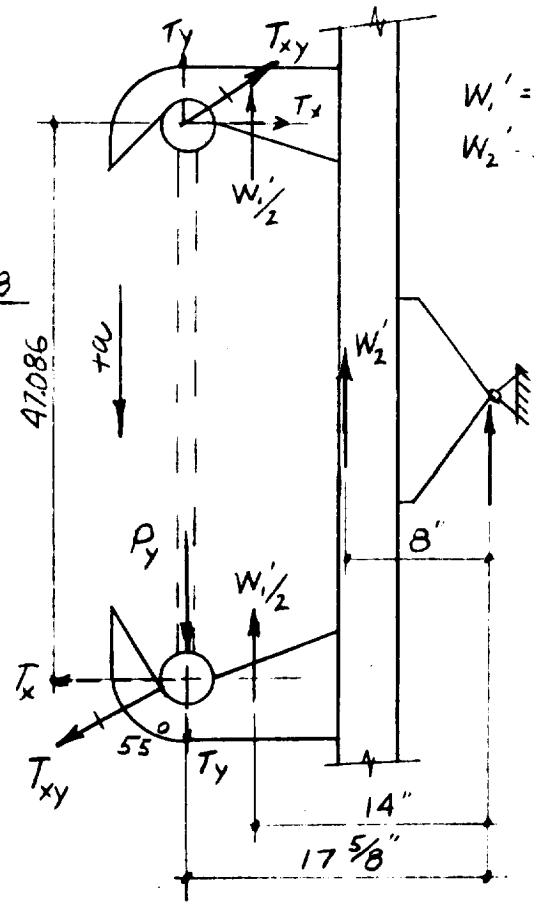

360

PREPARED BY Eder

CHECKED BY

REVISED BY

PAGE

REPORT NO.

DATE 4/21/64

DRAWING OR JOB TITLE	DRAWING NO. OR ITEM
APPOLO ACCESS CHAMBER	LES COUPLER

(WORK THIS SHEET WITH)

LOADS - CONTINUED

CASE B: [illegible] - CONTINUED

ALL INERTIA LOADS BASED ON 1.05 [illegible] ACCELERATION [illegible] 3

- COMPONENT [illegible] $W_1 = 35^{\#}$ REF. PG. 355 $W_1' = 1.05 \times 2 W_1 = 74^{\#}$

$F_1 = T_y - W_1 = [illegible] - \frac{74}{2} = 724^{\#}$

$T_y = [illegible]$ REF. PG. 359

$F_2 = F_4 = T_x = 981^{\#}$ $T_x = [illegible]$ REF. PG. 359

$F_3 = P_y + T_y - \frac{W_1}{2} = 2910 + [illegible] - \frac{74}{2}$ $P_y = 2910$ REF. PG. 359

$F_3 = 3560^{\#}$

$M_1 = 1.625 T_y [illegible]$

$M_1 = 9.625 [illegible] 724 [illegible]$

$M_1 = 6224 [illegible]^{\#}$

$M_2 = 9.625 (P_y + T_y) + [illegible] (T_x + P_x) [illegible]$

$M_2 = 1.625 ([illegible]) + 2.[illegible] ([illegible]) - [illegible] \times 74$

$M_2 = 45134 [illegible]$

- COMPONENT (2) $W_2 = 242^{\#}$ REF PG. 357 $W_2' = 1.05 \times 2 W_2 = 508^{\#}$

$F_5 = F_3 - F_1 - W_2' = 3560 - 724 - 508$

$F_5 = 2328^{\#}$

$M_3 = 51.836 F_2 + 4.375 W_2' - 2(F_3 - F_1) + M_1 - M_2$

$M_3 = 51.836 \times 981 + 4.375 \times 508 - 2(3560 - 724) + 6224 - 45134$

$M_3 = 8442 [illegible]^{\#}$

REF. PG. 357

- COMPONENT (3)(4) & (10) $W_3 = W_4 = 18^{\#}$ $W_3' = 1.05 \times 2 W_3 = 38^{\#}$

$W_{10} = 8^{\#}$ $W_{10}' = 1.05 \times 2 W_{10} = 17^{\#}$

$W_{3,4,10}' = 2 \times 38 + 17 = 93^{\#}$

$F_6 = F_5 - W_{3,4,10}' = 2328 - 93 = 2235^{\#}$

$M = 0$

REF. PG. 357

- BACK FRAME ASSEMBLY $= W_{5,6,7,8,9,11} = 15 + 18 + 70 + 40 + 68 + 25$

$W_{5,6,7,8,9,11} = 236^{\#}$ $W_{5,6,7,8,9,11}' = 1.02 \times 2 W_{5,6,7,8,9,11}$

LOADS - CONTINUED

CASE B: SIDE INERTIA - CONTINUED

- BACK FRAME ASSEMBLY - CONTINUED

$W'_{5,6,7,8,9,11} = 1.05 \times 2 \times 236 = 495^{\#}$

$F_S = F_6 - W'_{5,6,7,8,9,11} = 2235 - 495 = 1740^{\#}$

MOVING MASS EXCLUDING LES COUPLER = F_S

$F_S = 1.05 \times 2(W - 2W_T)$ $\quad W = 2770^{\#}$ REF. PG. 359

$W_T = 557^{\#}$ REF. PG. 357

$F_S = 1.05 \times 2(2770 - 2 \times 557)$

$F_S = 1740$ OK

362

PREPARED BY Eder

CHECKED BY

REVISED BY

PAGE

REPORT NO.

DATE 4/21/64

DRAWING OR JOB TITLE	DRAWING NO. OR ITEM
APPOLO ACCESS CHAMBER	LES COUPLER

CASE B: SIDE INERTIA

(ASSUME ALL C.G. [illegible])

FORCES AND MOMENTS

$F_1 = 724^{\#}$ $M_1 = 6224 \text{ in}^{\#}$

$F_2 = 781^{\#}$ $M_2 = 45184 \text{ in}^{\#}$

$F_3 = 3550^{\#}$ $M_3 = 8441 \text{ in}^{\#}$

$F_4 = 181^{\#}$

$F_5 = 2543^{\#}$

$F_6 = 2235$

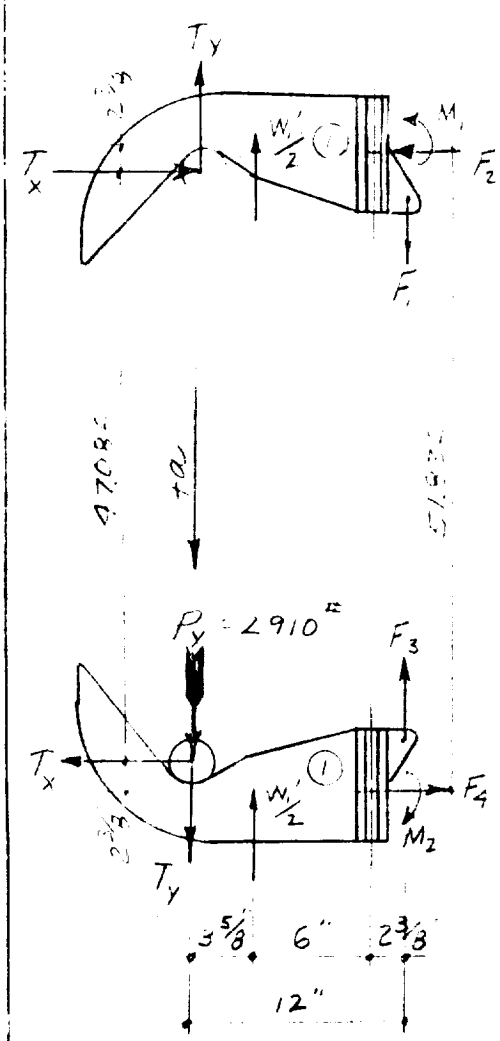

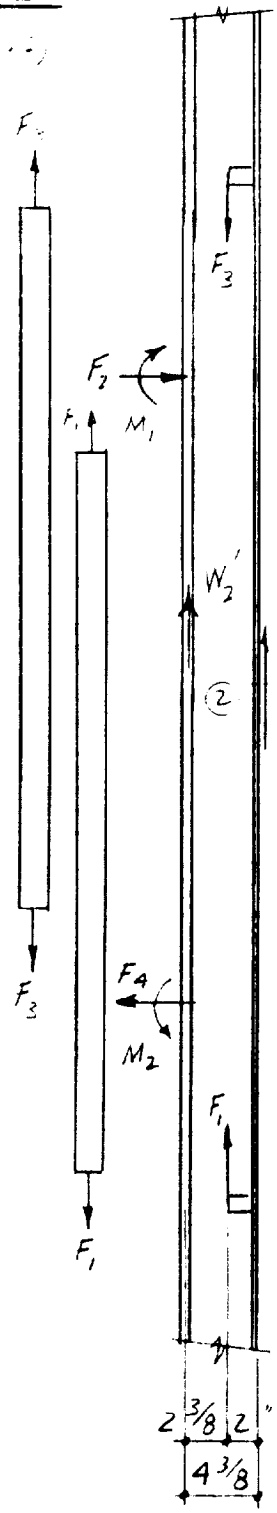

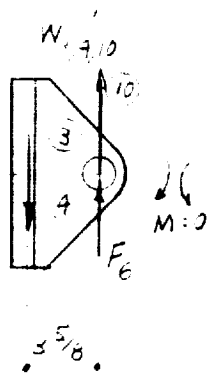

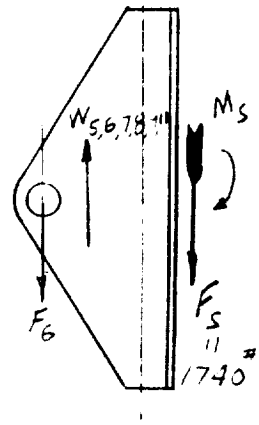

DRAWING OR JOB TITLE: APPOLO ACCESS CHAMBER

DRAWING NO. OR ITEM: LES COUPLER

LOADS - CONTINUED

CASE C: DEAD LOAD, UNCONNECTED

	ITEMS	DEAD WEIGHT	ADJUSTED WEIGHT
REF. PG. ____	ASSUME NO MAN		
	HOOD	170	$2 \times 170 = 340$
	VERTICAL CURTAIN	60	$2 \times 60 = 120$
REF. PG. ____	BOTTOM CYLINDER	8	$2 \times 8 = 16$
			$476^{\#}$
	MISCELANEOUS		$= 24^{\#}$
			$W_U = 500^{\#}$

— COMPONENT ① $W_1 = 35^{\#}$ TOTAL REF. PG. 355

$W_{1T} = 2W_1 = 70^{\#}$

$F_2 = \frac{6 W_{1T}}{7.417} = \frac{6 \times 70}{7.417} = 57^{\#}$

$F_1 = W_{1T} = 70^{\#}$

— COMPONENT ④ $W_4 = 18^{\#}$ REF. PG. 355

$W_{4T} = 2 \times W_4 = 2 \times 18 = 36^{\#}$

$F_3 = W + W_{4T} = 500 + 36 = 536^{\#}$

$M_1 = 5F_3 + 6.188W = 5 \times 536 + 6.188 \times 500$

$M_1 = 5774 \text{ in}^{\#}$

— COMPONENT ② $W_2 = 242^{\#}$ REF. PG. 355

$W_{2T} = 2W_2 = 2 \times 242 = 484^{\#}$

$F_5 = F_1 + F_3 + W_{2T} = 70 + 536 + 484$

$F_5 = 1090^{\#}$

$F_4 = \frac{3(F_1 + W_{2T}) + 7.417 F_2}{7.417} = \frac{3(70 + 484) + 7.417 \times 57}{7.417}$

$F_4 = 281^{\#}$

— COMPONENT ③ $W_3 = 18^{\#}$ REF. PG. 355

$W_{3T} = 2W_3 = 2 \times 18 = 36^{\#}$

$F_6 = F_5 + W_{3T} = 1090 + 36 = 1126^{\#}$

364

PREPARED BY Eder
CHECKED BY
REVISED BY

PAGE
REPORT NO.
DATE 4/21/64

DRAWING OR JOB TITLE	DRAWING NO. OR ITEM
APPOLO ACCESS CHAMBER	LES COUPLER

LOADS - CONTINUED

CASE C: DEAD LOAD UNCONNECTED

— COMPONENT 3 - CONTINUED

$M_2 = 5(F_6 - F_5) = 5(1126 - [illegible])$

$M_2 = 180 \text{ in}^{\#}$

— COMPONENT (5) $W_5 = 15^{\#}$ REF. PG. 355

$W_{5T} = 2W_5 = 2 \times 15 = 30^{\#}$

$F_7 = F_6 + W_{5T} = 1126 + 30 = 1156^{\#}$

— COMPONENT (6) $W_6 = 18^{\#}$ REF. PG. 355

$W_{6T} = 2W_6 = 2 \times 18 = 36^{\#}$

$F_8 = F_7 + W_{6T} = 1156 + 36$

$F_8 = 1192^{\#}$

$M_3 = 2W_{6T} + 8F_7 = 2 \times 36 + 8 \times 1156$

$M_3 = 9320 \text{ in}^{\#}$

PREPARED BY Eden
CHECKED BY
REVISED BY

PAGE 365
REPORT NO.
DATE 4/21/64

DRAWING OR JOB TITLE
APPOLO ACCESS CHAMBER

DRAWING NO. OR ITEM
LES COUPLER

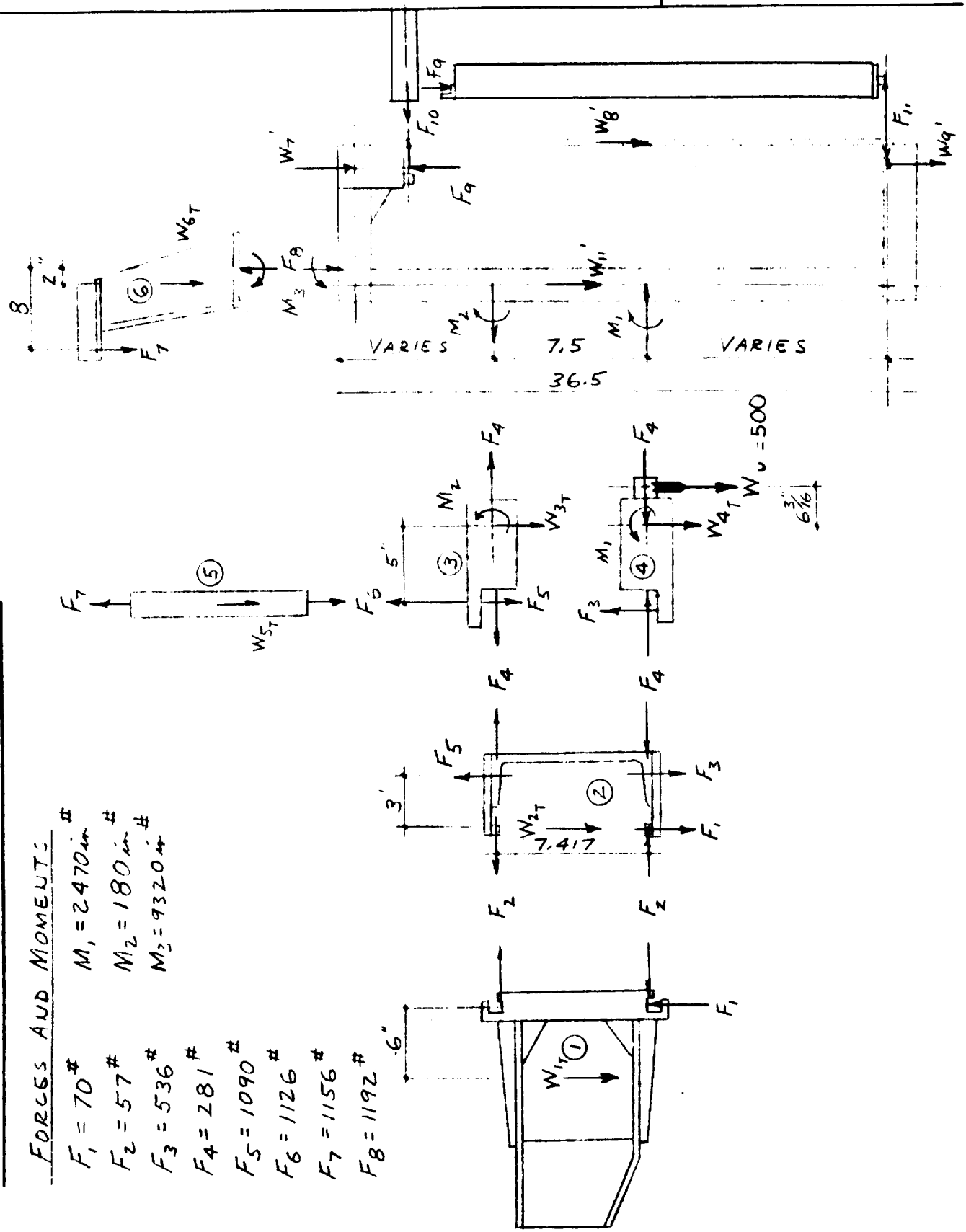

CASE C: DEAD WEIGHT UNCONNECTED

FORCES AND MOMENTS

$F_1 = 70^{\#}$ $M_1 = 2470 in^{\#}$
$F_2 = 57^{\#}$ $M_2 = 180 in^{\#}$
$F_3 = 536^{\#}$ $M_3 = 9320 in^{\#}$
$F_4 = 281^{\#}$
$F_5 = 1090^{\#}$
$F_6 = 1126^{\#}$
$F_7 = 1156^{\#}$
$F_8 = 1192^{\#}$

366

PREPARED BY Edw

CHECKED BY

REVISED BY

PAGE

REPORT NO.

DATE 4/22/64

DRAWING OR JOB TITLE	DRAWING NO. OR ITEM
APPOLO ACCESS CHAMBER	LES COUPLER

LOADS - CONTINUED

CASE [illegible]

	ITEM	LEAD WEIGHT	ADJUSTED WEIGHT
REF. PG.	A		500
	[illegible]	250	3×250 = 750
			1250
	MISCELLANEOUS		50
			W_c = 1300#
REF. PG. 355	W_4 - LOWER PIVOT	18	2×18 = 36 = W_{4T}
	W_3 - UPPER PIVOT	18	2×18 = 36 = W_{3T}
	W_2 - [illegible] ARM	242	2×242 = 484 = W_{2T}
	W_1 - HOOK ARM	35	2×35 = 70 = W_{1T}
			P = 1926#

COMPONENT (1)

$F_1 = P - W_{1T} = 1926 - 70 = 1856^{\#}$

$F_2 = \frac{6F_1}{7.417} = \frac{6 \times 1856}{7.417} = 1500^{\#}$

— COMPONENT (4)

$F_3 = W_c + W_{4T} = 1300 + 36 = 1336^{\#}$

$M_1 = 5F_3 + 6.188\,W_c = 5 \times 1336 + 6.188 \times 1300$

$M_1 = 14{,}730$ in.#

— COMPONENT (2)

$F_4 = \frac{3(F_1 - W_{2T}) + 7.417 \times F_2}{7.417} = \frac{3(1856 - 484) + 7.417 \times 1500}{7.417}$

$F_4 = 2050^{\#}$

— COMPONENT (3)

$M_2 = 5\,W_{3T} = 5 \times 36 = 180$ in.#

DRAWING OR JOB TITLE	DRAWING NO. OR ITEM
APPOLO ACCESS CHAMBER	LES COUPLER

LOADS - CONTINUED

CASE D: DEAD LOAD CONNECTED - CONTINUED

- COMPONENT (6)

$F_5 = W_{5T} + W'_{5T}$

$W_5 = 15^{\#}$ REF. PG. 355 $W_{5T} = 2W_5 = 30^{\#}$

$W_6 = 18^{\#}$ REF. PG. 355 $W_{6T} = 2W_6 = 36^{\#}$

$F_5 = 30 + 36 = 66^{\#}$

$M_3 = 2W_{5T} + 8W_{5T} = 2 \times 36 + 8 \times 30$

$M_3 = 312 \text{ in}^{\#}$

- FRAME ASSEMBLY

$W_7 = 70^{\#}$ REF. PG. 355 $W_7' = 2W_7 = 140^{\#}$

$W_8 = 40^{\#}$ REF. PG. 355 $W_8' = 2W_8 = 80^{\#}$

$W_9 = 68^{\#}$ REF. PG. 355 $W_9' = 2W_9 = 136^{\#}$

$W_{11} = 25^{\#}$ REF. PG. 355 $W_{11}' = 2W_{11} = 50^{\#}$

368

PREPARED BY cder

CHECKED BY

REVISED BY

PAGE

REPORT NO.

DATE 4/22/64

DRAWING OR JOB TITLE	DRAWING NO. OR ITEM
APPOLO ACCESS CHAMBER	LES COUPLER

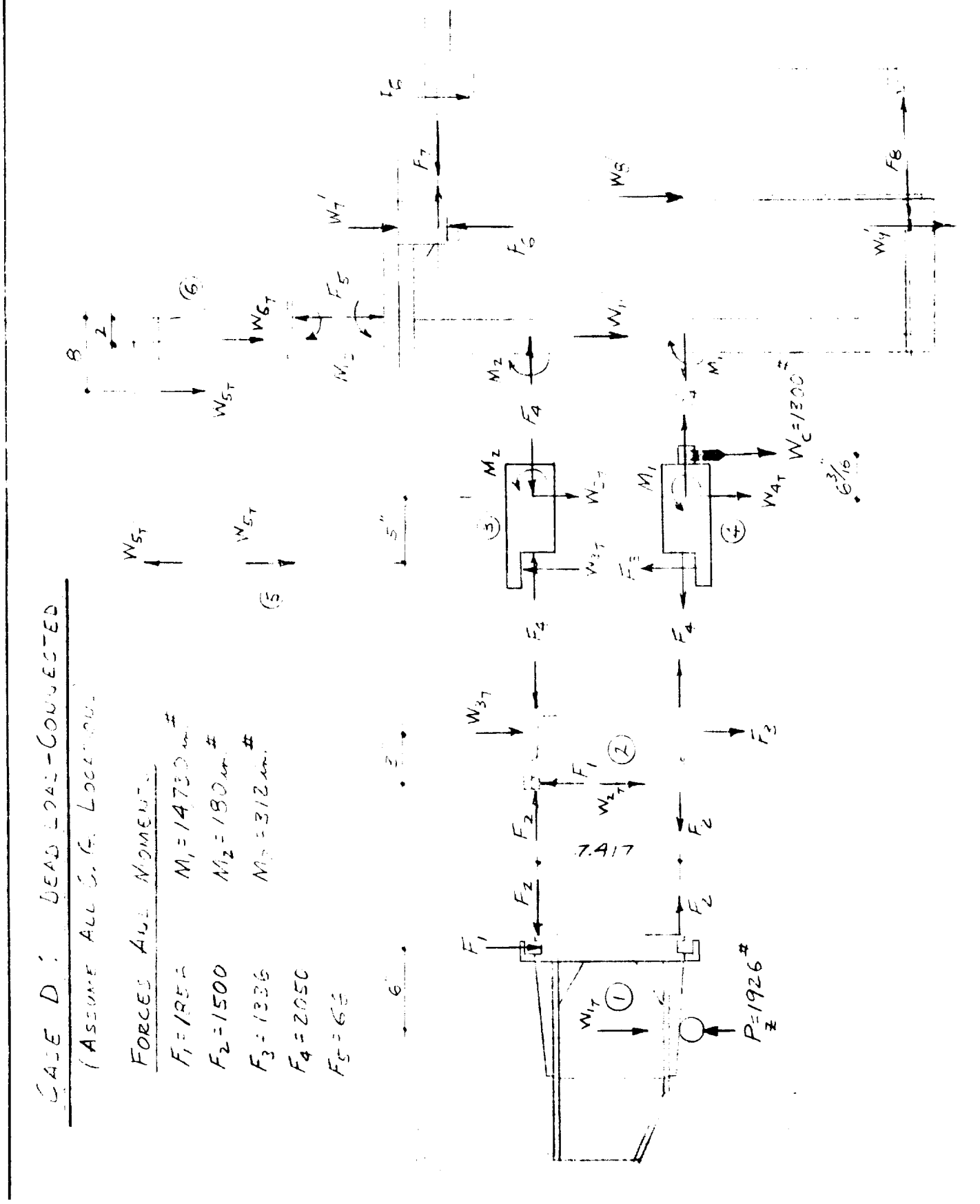

DRAWING OR JOB TITLE	DRAWING NO. OR ITEM
APPOLO ACCESS CHAMBER	LES COUPLER

HOOK CONTROL TUBE - C75M12535

LOADS

$P_z = 1925^{\#}$ REF. PG. 366

ASSUME TOTAL LOAD P_z IS BEARING AT FOUR POINTS

ASSUME TEFLON TAPE IS NOT TORN-OFF BY HOOK SLIDING FRICTION

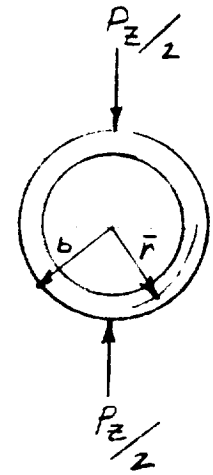

MATERIAL

AL ALY EXTR. 6061-T6 PER WW-T-787

PARENT MATERIAL	WELD AREA
$F_{tu} = 38{,}000$ psi.	$F_{tu}' = 24{,}000$ psi.
$F_{ty} = 35{,}000$ psi.	$F_{ty}' = 20{,}000$ psi.
$F_{ry} = 20{,}000$ psi.	$F_{ry}' = 12{,}000$ psi.
$F_{By} = 56{,}000$ psi.	$F_{By}' = 30{,}000$ psi.

SECTION PROPERTIES

TUBE: $1\frac{1}{4}'' \phi \times \frac{1}{8}''$ W.T.

$b = 5/8''$ $\quad \bar{r} = 9/16''$

STRESSES

REF: { FORMULAS FOR STRESS AND STRAIN
BY: RAYMOND J. ROARK PP 270 & 283

(1) $\sigma_{MAX.} = -\dfrac{P}{2t^2} \log_e \dfrac{0.3\bar{r}}{b}$ WHERE $\dfrac{b}{\bar{r}} > 0.05$

ASSUME $b = 1/8''$

$\dfrac{b}{\bar{r}} = \dfrac{0.125}{0.625} = 0.2 > 0.05$ ∴ FORMULA (1) APPLIES

370

PREPARED BY Eder

CHECKED BY

REVISED BY

PAGE

REPORT NO.

DATE 5/1/64

DRAWING OR JOB TITLE	DRAWING NO. OR ITEM
APPOLO ACCESS CHAMBER	LES COUPLER

HOOK CONTROL TUBE — C75M12535 — CONTINUED

STRESSES CONT'D:

$\sigma_{MAX} = \frac{1926}{4(0.125)^2} \log_e \frac{0.3 \times 0.125}{0.125}$

$\sigma_{MAX} = 2500$ psi

MARGIN OF SAFETY

$M.S. = \frac{20000}{12500} - 1$ ..... +0.60

PREPARED BY Eden
CHECKED BY
REVISED BY

PAGE 371
REPORT NO.
DATE 4/23/64

DRAWING OR JOB TITLE	DRAWING NO. OR ITEM
APPOLO ACCESS CHAMBER	LES COUPLER

RIGHT COUPLER HOOK - D75M12541

LOADS

CASE A: FORWARD INERTIA: REF. PG. 357
CASE B: SIDE INERTIA: REF. PG. 360
CASE C: DEAD LOAD - UNCONNECTED (ASSUME NEGLIGIBLE)
CASE D: DEAD LOAD - CONNECTED REF. PG. 366

TOTAL LOADS FROM CASE A (REF. PG. 358) + CASE D (REF. PG. 368)
(LOADS IN POUNDS, MOMENTS IN INCH-POUNDS)

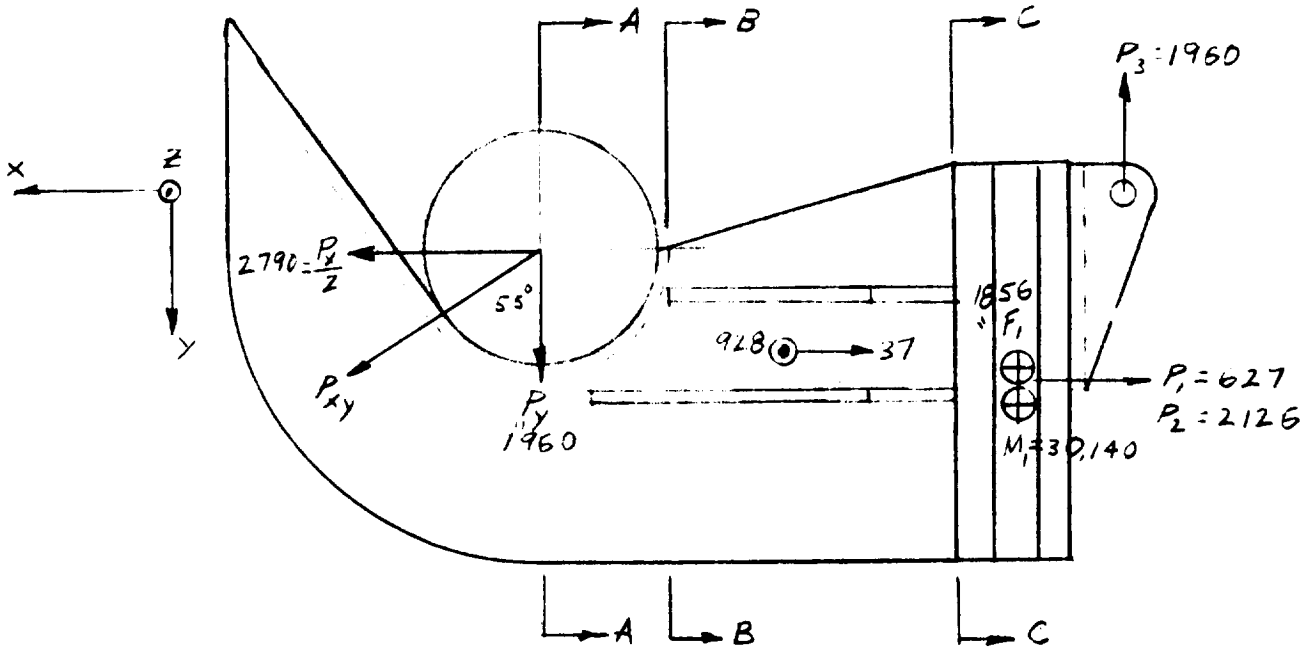

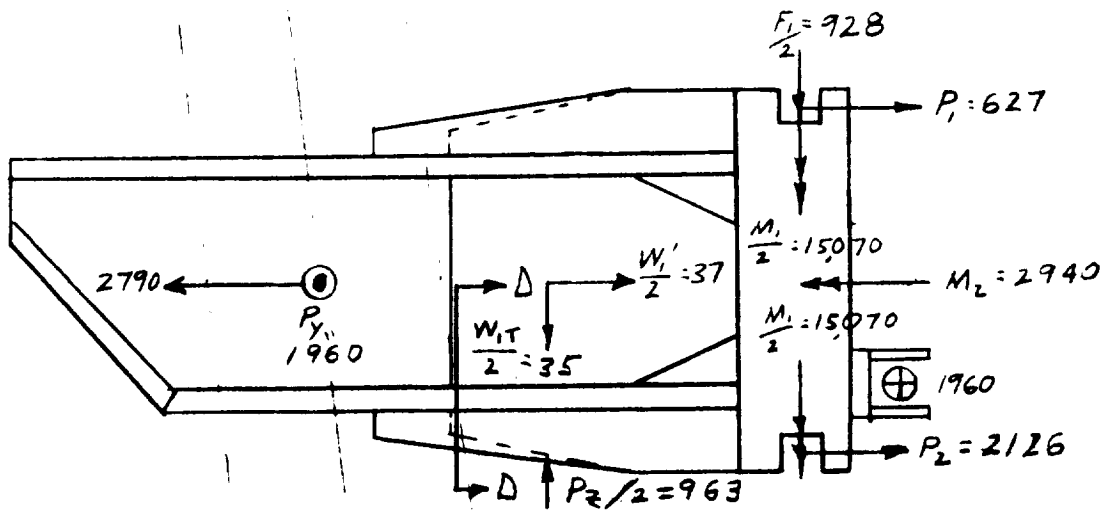

PREPARED BY [illegible]
CHECKED BY
REVISED BY

PAGE
REPORT NO.
DATE 4/23/64

DRAWING OR JOB TITLE	DRAWING NO. OR ITEM
APPOLO ACCESS CHAMBER	LES COUPLER

RIGHT COUPLER HOOK - D75M12541 - CONTINUED

LOADS - CONTINUED

TOTAL LOAD FROM CASE B (REF. PG. 362) + CASE D (REF. PG 368)
(LOADS IN POUNDS, MOMENTS IN INCH-POUNDS)

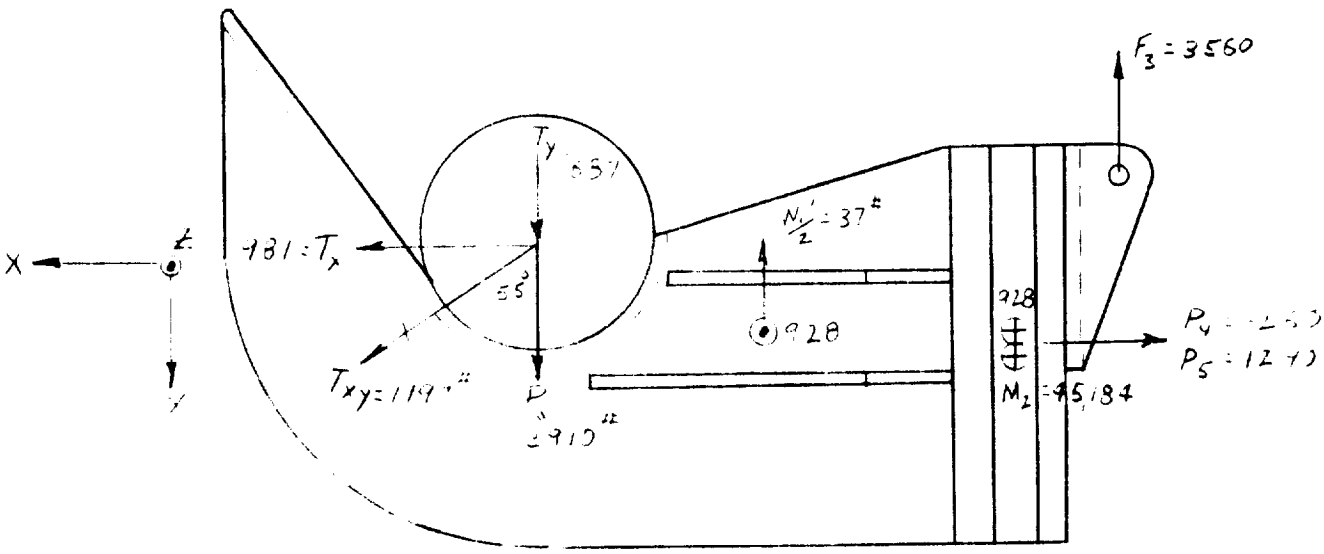

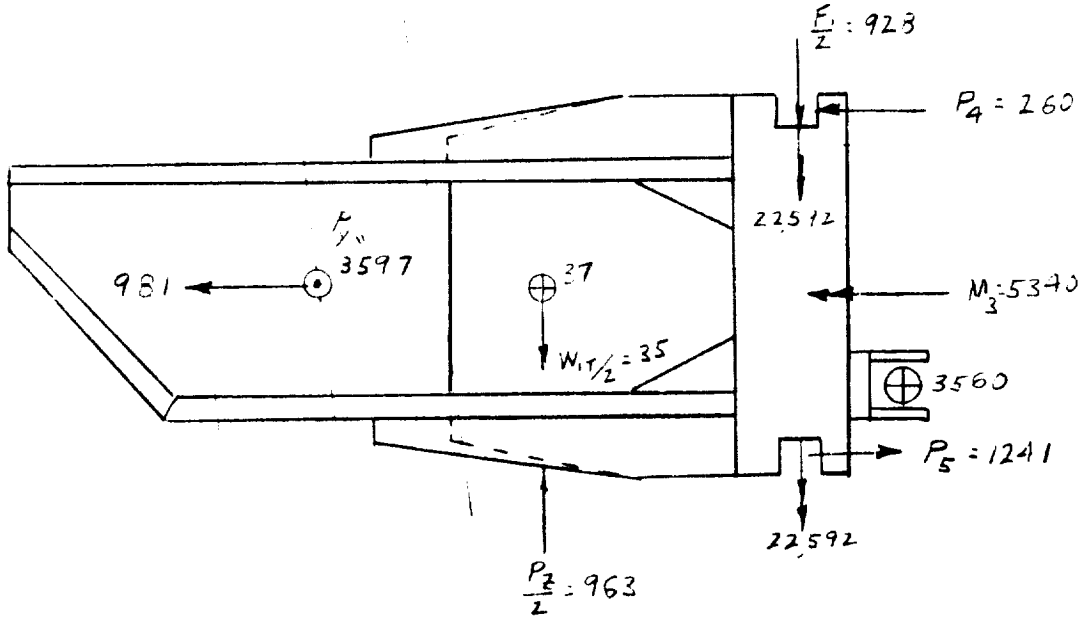

DRAWING OR JOB TITLE	DRAWING NO. OR ITEM
APPOLO ACCESS CHAMBER	LES COUPLER

RIGHT COUPLER HOOK - D75M12541 - CONTINUED

MATERIAL 6061-T651 ALUMINUM

PARENT MATERIAL		WELD AREA
$F_{tu} = 38{,}000$ psi.	MAT'L LESS THAN 5/8" THICK 4043 WELD RODS	$F_{tu}' = 24{,}000$ psi.
$F_{ty} = 35{,}000$ psi.		$F_{ty}' = 20{,}000$ psi.
$F_{ry} = 20{,}000$ psi.		$F_{ry}' = 12{,}000$ psi.
$F_{By} = 56{,}000$ psi.		$F_{By}' = 30{,}000$ psi.

SECTION PROPERTIES

SECTION AA - REF. PG 371

$\bar{y} = 0.801$ in.
$c_y = 2.3865$ in.
$A = 3.655$ in.^{2}
$I_{zz} = 3.121$ in.^{4}
$S_{zz} = 1.31$ in.^{3}

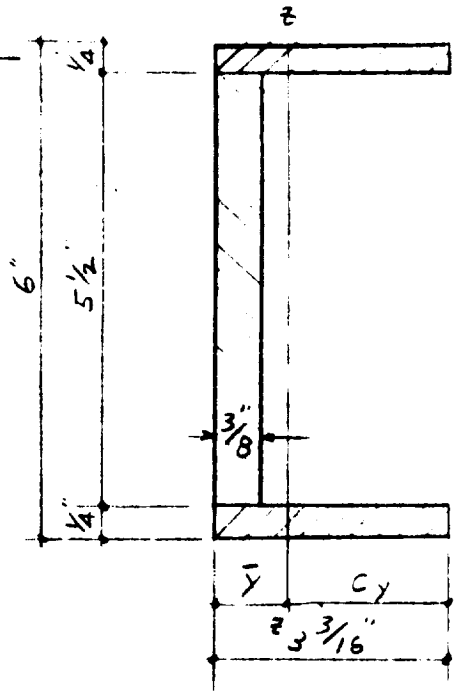

PREPARED BY Edw
CHECKED BY
REVISED BY

PAGE
REPORT NO.
DATE 5/1/64

DRAWING OR JOB TITLE	DRAWING NO. OR ITEM
APPOLO ACCESS CHAMBER	LES COUPLER

RIGHT COUPLER HOOK – D75M12541 – CONTINUED

SECTION PROPERTIES – CONTINUED

SECTION B B – REF. Pg.

$\bar{y} = 2.3$ in.

$A = 2.3$ in.^{2}

$I_{zz} = 4.05$ in.^{4}

$S_{zz} = 1.76$ in.^{3}

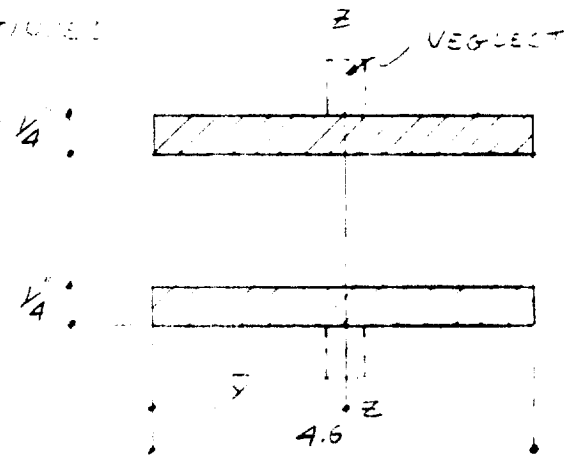

SECTION C C – REF. Pg.

$\bar{y} = 3.125$ in.

$A = 3.13$ in.^{2}

$I_{zz} = 9.15$ in.^{4}

$S_{zz} = 3.25$ in.^{3}

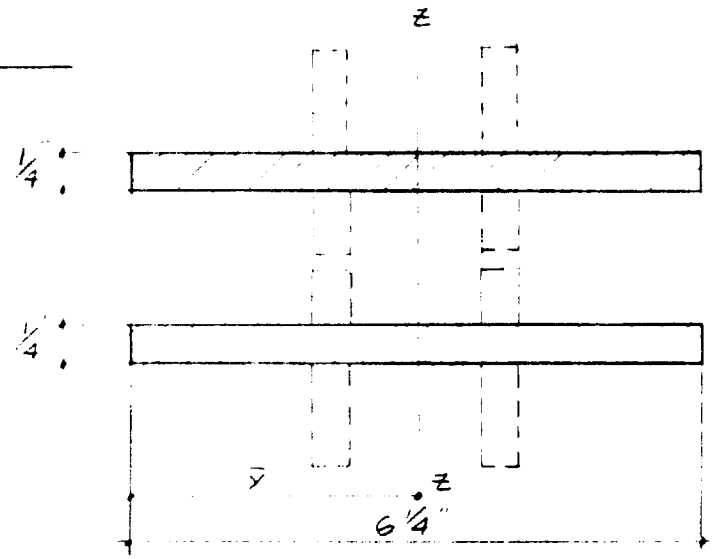

SECTION D D – REF. Pg.

$\bar{z} = 0.178$ in.

$A = 1.306$ in.^{2}

$I_{yy} = 0.027$ in.^{4}

$S_{yy} = 0.0387$ in.^{3}

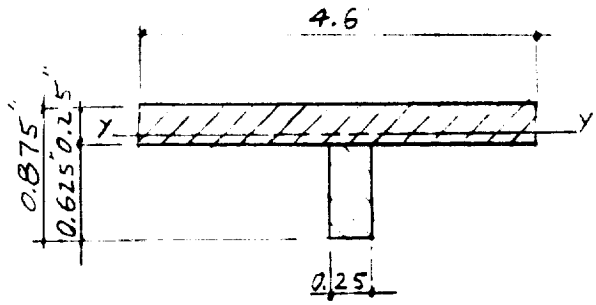

RIGHT COUPLER HOOK – D75M12541 – CONTINUED

STRESSES

CONSIDER SECTION AA

$P_x/2 = 2790^{\#}$ CASE A + CASE D REF. PG. 371

$P_y = 3597^{\#}$ CASE B + CASE D REF. PG. 372

$M_z = \frac{P_x e}{2}$ $e = 2.375 + \bar{x} = 2.375 + 0.801$

$e = 3.176$ in.

$M_z = 3.176 \times 2790$

$M_z = 8850$ in.#

$\sigma = \frac{P_x}{2A} + \frac{M_z}{S_{zz}} = \frac{2790}{3.655} + \frac{8850}{1.31}$

(2) $\sigma = 7514$ psi.

$\bar{\tau} = \frac{P_y}{A} = \frac{3597}{3.655}$

(3) $\bar{\tau} = 984$ psi. (NEGLIGIBLE)

CONSIDER SECTION BB

$P_x/2 = 2790^{\#}$, $P_y = 1960^{\#}$ } CASE A + CASE D REF. PG. 371

$T_x = 981^{\#}$, $P_y = 3597^{\#}$ } CASE B + CASE D REF. PG. 372

$e_y = 3.2$ in.

$e_x = 2.495$ in.

$M_{z_{MAX.}} = \frac{P_x e_y}{2} + P_y e_x$ (CASE A + CASE D – CRITICAL)

$M_{z_{MAX.}} = 2790 \times 3.2 + 1960 \times 2.495 = 13820$ in.#

PREPARED BY Eden
CHECKED BY
REVISED BY

PAGE
REPORT NO.
DATE 5/1/64

DRAWING OR JOB TITLE	DRAWING NO. OR ITEM
APPOLO ACCESS CHAMBER	LES COUPLER

RIGHT COUPLER HOOK – D75M12541 – CONTINUED

STRESS [illegible] CONTINUED

$$\sigma = \frac{P_x}{2A} + \frac{M_{z\,max}}{S_{zz}} = \frac{2790}{2.3} + \frac{[illegible]}{1.75}$$

(4) $\sigma = 9075$ psi.

$\bar{r} \cong \frac{P_y}{A}$ (CASE B + CASE D – CRITICAL)

(5) $\bar{r} \cong \frac{3597}{2.3} = 1540$ (NEGLIGIBLE

CONSIDER SECTION CC

$P_x/2 = 2790^{\#}$
$P_y = 1760^{\#}$ } CASE A + CASE D REF. PG. 371

$T_x = 981^{\#}$
$P_y = 3597^{\#}$ } CASE B + CASE D REF. PG. 372

$e_y = 2.375$ in.

$e_x = 8.495$ in.

$M_{z\,MAX.} = T_x e_y + P_y e_x$ (CASE B + CASE D – CRITICAL)

$M_{z\,MAX.} = 981 \times 2.375 + 3597 \times 8.495$

$M_{z\,MAX.} = 32{,}840$ in.$^{\#}$

$$\sigma = \frac{T_x}{A} + \frac{M_{z\,MAX.}}{S_{zz}} = \frac{981}{3.13} + \frac{32{,}840}{3.25}$$

(6) $\sigma = 10{,}400$ psi.

$\bar{r}$ IS NEGLIGIBLE

DRAWING OR JOB TITLE	DRAWING NO. OR ITEM
APPOLO ACCESS CHAMBER	LES COUPLER

RIGHT COUPLER HOOK - D75M12541-CONTINUED

STRESSES-CONTINUED

$\frac{P_z}{2} = 963^{\#}$ REF PG. 371 & 372

ASSUME NO JOINT TRANSLATION AND ROTATION AT L

ASSUME CONSTANT EI

$\therefore R_L = \frac{P_z b^2 (3a+b)}{2 l^3}$

$R_L = \frac{963(4.92)(3\times 1.08 + 4.92)}{(6)^3}$

$R_L = 179^{\#}$

$R_R = \frac{P_z}{2} - R_L = 963 - 179$

$R_R = 84^{\#}$

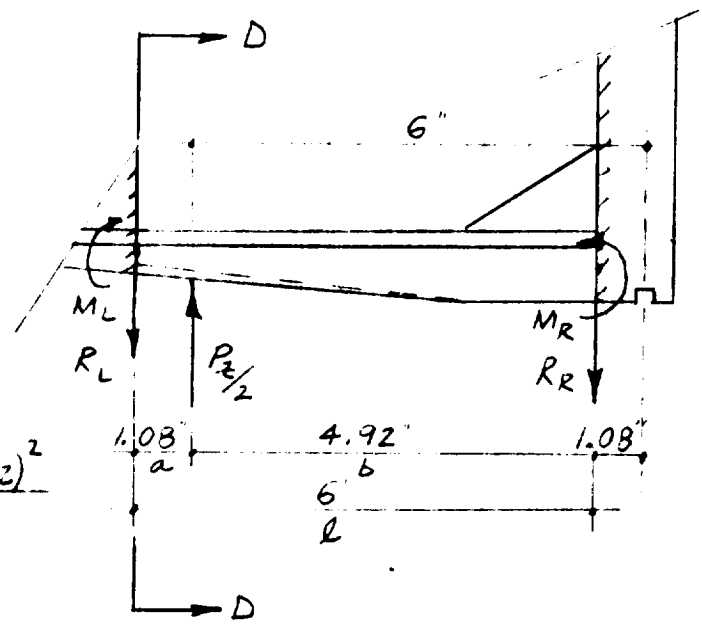

$M_L = \frac{P_z a b^2}{2 l^2} = \frac{963(1.08)(4.92)^2}{(6)^2}$

$M_L = 700 \text{ in.}^{\#}$

$M_R = \frac{P_z a^2 b}{2 l^2} = \frac{963(1.08)^2(4.92)}{(6)^2}$

$M_R = 154 \text{ in.}^{\#}$

CONSIDER SECTION DD REF. PG. 371

$\left.\begin{array}{l} A = 1.306 \text{ in.}^2 \\ S_{yy} = 0.0387 \text{ in.}^3 \end{array}\right\}$ REF. PG. 374

(7) $\sigma = \frac{M_L}{S_{yy}} = \frac{700}{0.0387} = 18{,}100 \text{ psi.}$

SHEAR AT LEFT & RIGHT REACTION IS NEGLIGIBLE

BENDING STRESS AT RIGHT REACTION IS LOW

378

PREPARED BY Edw

CHECKED BY

REVISED BY

PAGE

REPORT NO.

DATE 5/6/64

DRAWING OR JOB TITLE	DRAWING NO. OR ITEM
APPROX ACCESS CHAMBER	LES COUPLER

RIGHT COUPLER HOOK - D75M12541 - CONTINUED

STRESSES

$M_1 = 30,190$ in.# $P_2 = 2128$# } CASE A + D REF PG. 371

$M_2 = 45,64$ in.# $P_5 = 1240$# } CASE B + D REF. PG. 372

CASE B + D IS CRITICAL

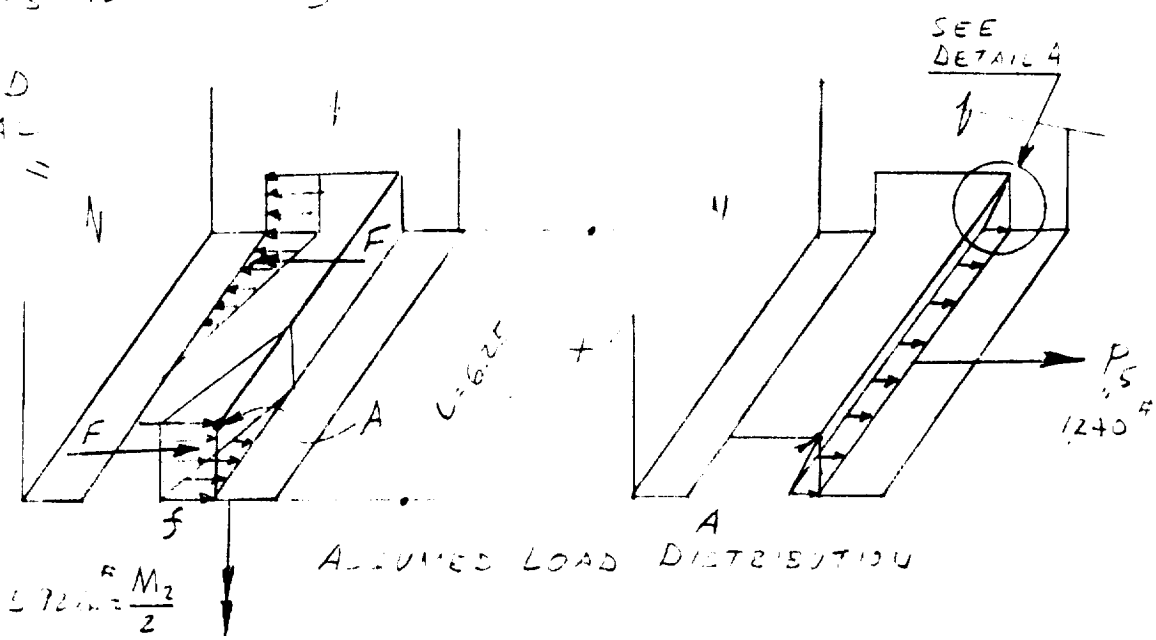

ASSUMED LOAD DISTRIBUTION

$22,592$ in.# $= \frac{M_2}{2}$

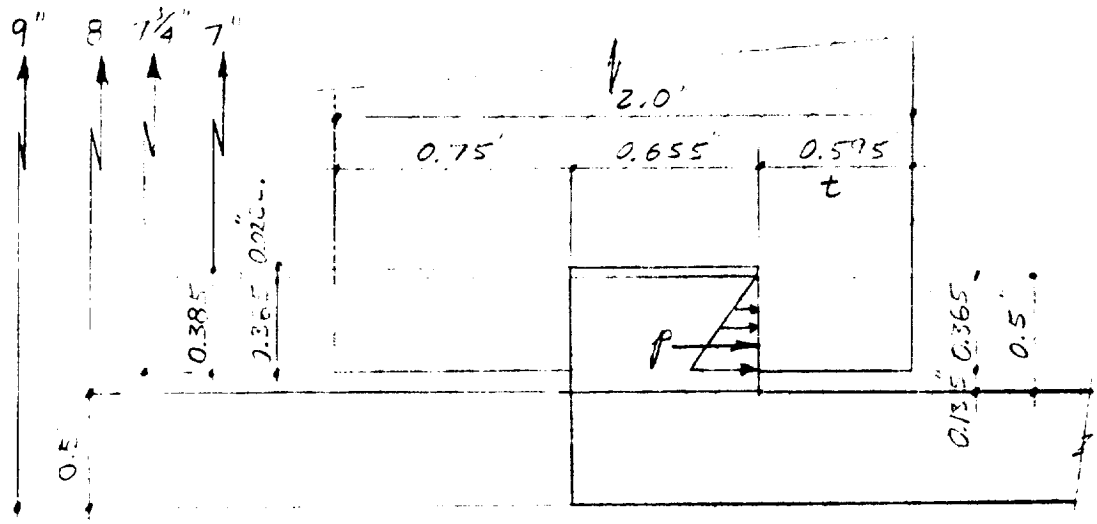

DETAIL A

RIGHT COUPLER HOOK - D75M12541 - CONTINUED

STRESSES - CONTINUED

CASE B + D - CONTINUED

$M_2 = 45{,}184 \text{ in}^{\#}$

$P_5 = 1{,}240^{\#}$

} CASE B + D - REF. PG. 372

$$F = \frac{M_2/2}{\frac{2\ell}{3}} = \frac{3M_2}{4\ell}$$

$\ell = 6.25 \text{ in}$ REF. PG. 378

$$F = \frac{3 \times 45{,}184}{4 \times 6.25} = 5{,}400^{\#}$$

$$f = \frac{4F}{\ell}$$

$$f = \frac{4 \times 5400}{6.25} = 3460 \ \#/\text{in}$$

$$p = \frac{P_5}{\ell} = \frac{1240}{6.25} = 199 \ \#/\text{in}$$

STRESS AT POINT A REF. PG. 378

$$m = fe + pe'$$

SEE DETAIL A REF. PG. 378

$b = 0.365$

$e = \frac{b}{2} + 0.02 = \frac{0.365}{2} + 0.02 = 0.2025 \text{ in.}$

$e' = \frac{2b}{3} + 0.02 = \frac{2 \times 0.365}{3} + 0.02 = 0.2633 \text{ in.}$

ASSUME A ONE INCH STRIP - f & p CONSTANT FOR ONE INCH

$m = 3460 \times 0.2025 + 199 \times 0.2633$

$m = 752 \text{ in } \#/\text{in}$

$$\sigma = \frac{6m}{t^2}$$

$t = 0.595 \text{ in}$ REF. PG. 378

(8) $$\sigma = \frac{6 \times 752}{(0.595)^2} = 12{,}750 \text{ psi}$$

380

PREPARED BY Eder

CHECKED BY

REVISED BY

PAGE

REPORT NO.

DATE 5/6/64

DRAWING OR JOB TITLE	DRAWING NO. OR ITEM
APPOLO ACCESS CHAMBER	LES COUPLER

RIGHT COUPLER HOOK - D75M12541 - CONTINUED

STRESSES - CONTINUED

$$\sigma = \frac{P_T}{A}$$

$P_T = f + p$

$f = 3460$ #/in.

$p = 177$ #/in.

$A = t = 0.575$ in²/in.

REF. PG. 379

(9) $\sigma = \frac{3460 + 177}{0.575} = 6150$ psi.

PREPARED BY Eder
CHECKED BY
REVISED BY

PAGE 381
REPORT NO.
DATE 5/1/64

DRAWING OR JOB TITLE	DRAWING NO. OR ITEM
APPOLO ACCESS CHAMBER	LES COUPLER

RIGHT COUPLER HOOK - D75M12541 - CONTINUED

MARGIN OF SAFETY

(2) $M.S. = \frac{20,000}{7,514} - 1$ ..... +1.66

(3) $M.S. = \frac{12,000}{984} - 1$ ..... + HIGH

(4) $M.S. = \frac{20,000}{9,075} - 1$ ..... +1.21

(5) $M.S = \frac{12,000}{1560} - 1$ ..... + HIGH

(6) $M.S. = \frac{20,000}{10,400} - 1$ ..... +0.93

(7) $M.S. = \frac{20,000}{18,100} - 1$ ..... +0.11

(8) $M.S. = \frac{20,000}{12,750} - 1$ ..... +0.57

(9) $M.S. = \frac{12,000}{6,150} - 1$ ..... +0.95

382

PREPARED BY Edew

CHECKED BY

REVISED BY

PAGE

REPORT NO.

DATE 5/6/64

DRAWING OR JOB TITLE	DRAWING NO. OR ITEM
APPOLO ACCESS CHAMBER	LES COUPLER

HOOK CYLINDER FOR - J75M12546

LOADS

CASE A: POWERED INERTIA: REF. PG. 357

CASE B: SITE INERTIA: REF. PG. 359

CASE C: DEAD LOAD - UNCONNECTED (ASSUME NEGLIGIBLE)

CASE D: DEAD LOAD - COUPLED: REF. PG. 366

TOTAL LOADS FROM CASE A (REF. PG. 358) + CASE D (REF. PG. 368)
(LOADS IN POUNDS; MOMENTS IN INCH POUNDS)

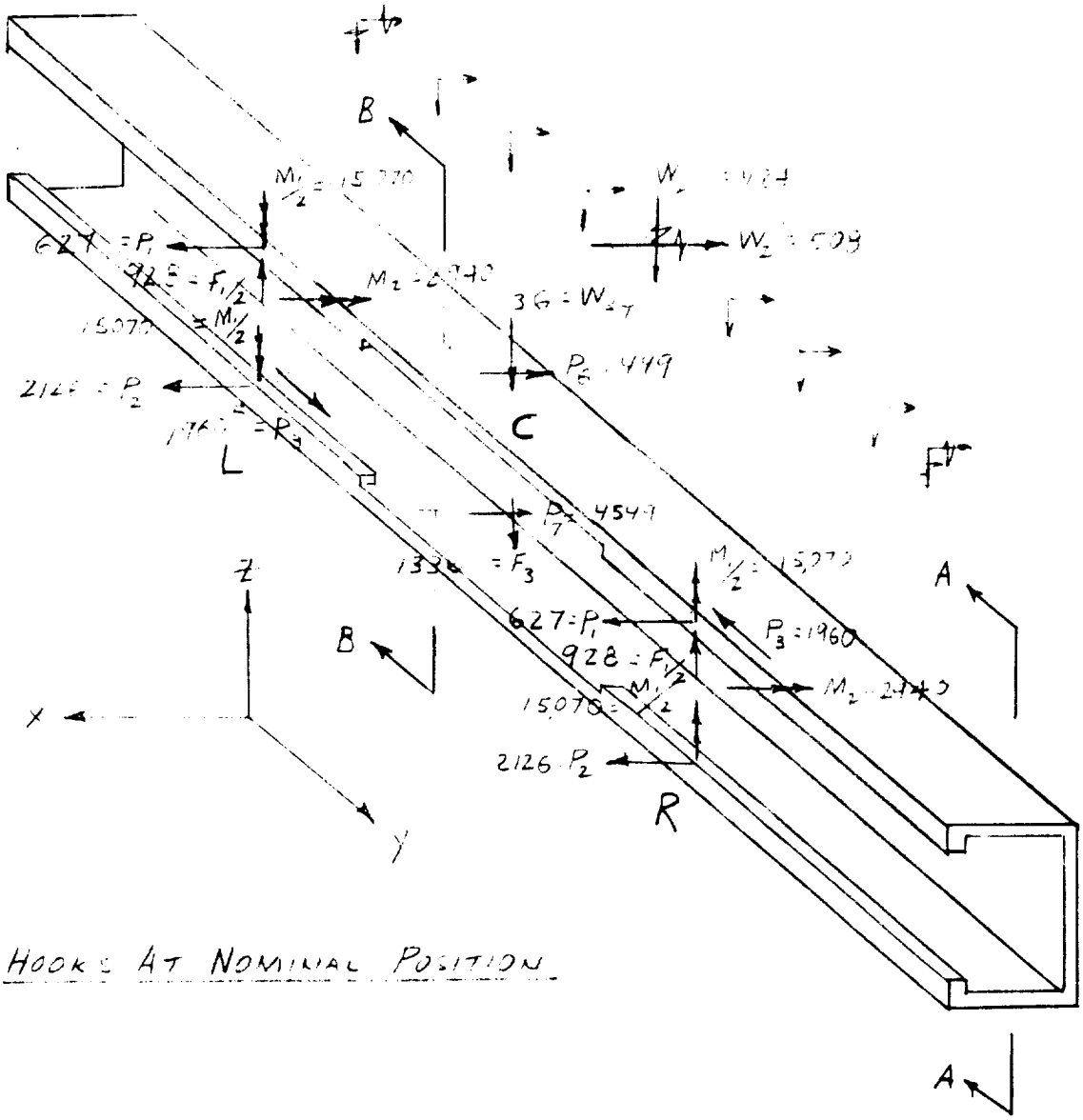

HOOKS AT NOMINAL POSITION

PREPARED BY Eder
CHECKED BY
REVISED BY

PAGE 383
REPORT NO.
DATE 5/6/64

DRAWING OR JOB TITLE	DRAWING NO. OR ITEM
APPOLO ACCESS CHAMBER	LES COUPLER

HOOK CYLINDER BOX - J75M12546 - CONTINUED

LOADS - CONTINUED

TOTAL LOAD FROM CASE B (REF. PG. 362) + CASE D (REF. PG. 368)
(LOADS IN POUNDS; MOMENTS IN INCH POUNDS)

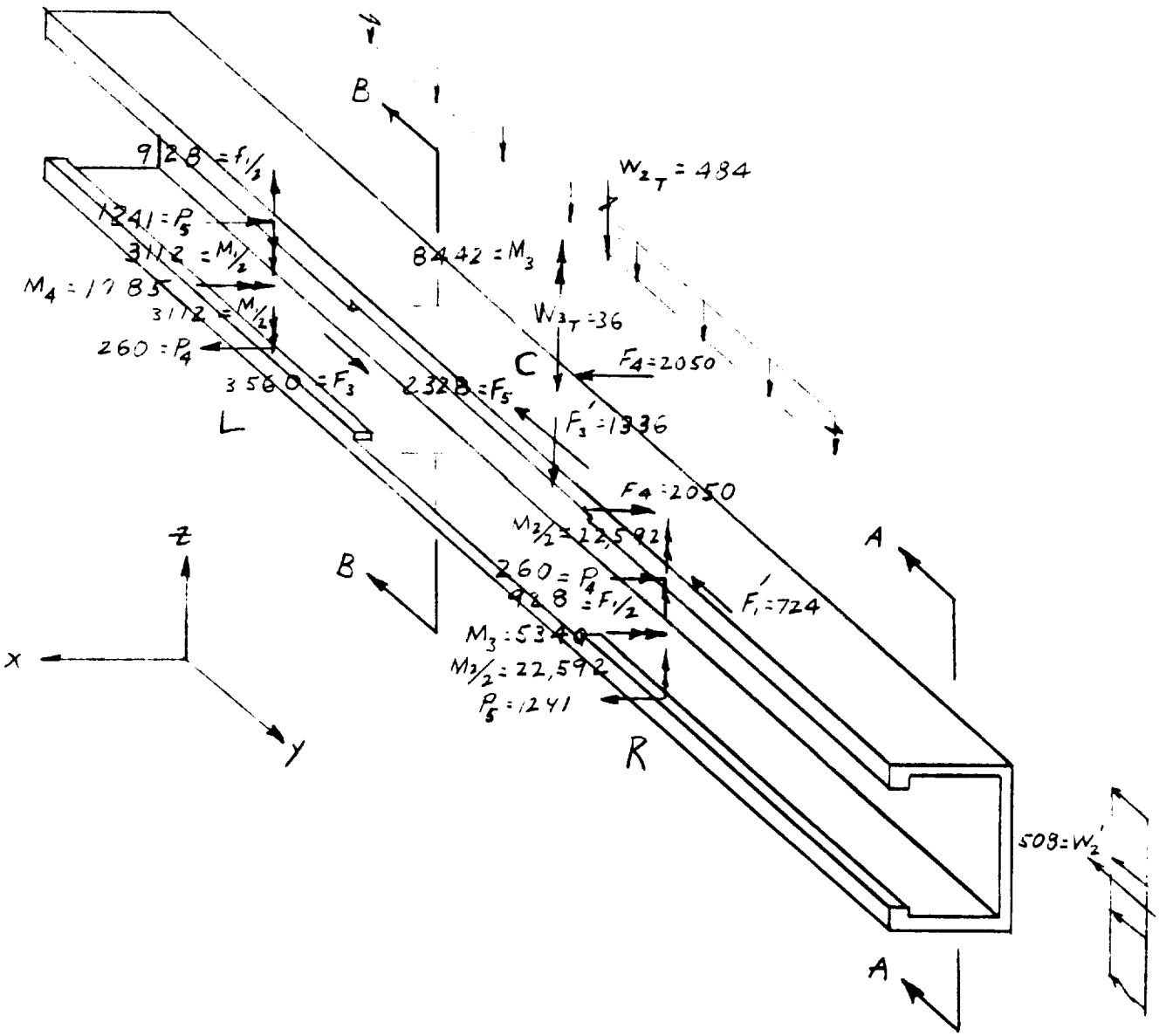

PREPARED BY Eder
CHECKED BY
REVISED BY

PAGE
REPORT NO.
DATE 5/6/64

DRAWING OR JOB TITLE	DRAWING NO. OR ITEM
APPOLO ACCESS CHAMBER	LES COUPLER

HOOK CYLINDER BOX - J75M12546 - CONTINUED

MATERIAL: 6061-T6 ALUMINUM

PARENT MATERIAL		WELD AREA
$F_{tu} = 38{,}000$ psi.	MAT'L LESS THAN 3/8" THICK 4043 WELD RODS	$F_{tu}' = 24{,}000$ psi.
$F_{ty} = 35{,}000$ psi.		$F_{ty}' = 20{,}000$ psi.
$F_{ry} = 20{,}000$ psi.		$F_{ry}' = 12{,}000$ psi.
$F_{By} = 56{,}000$ psi.		$F_{By}' = 30{,}000$ psi.

SECTION PROPERTIES

SECTION AA REF. PG. 383

$\bar{X} = 1.74$ in. $\quad C_x = 3.01$ in.

$A = 9.44$ in.^{2}

$I_{zz} = 23.3$ in.^{4}

$S_{zz} = 7.75$ in.^{3}

$I_{xx} = 130.95$ in.^{4}

$S_{xx} = 29.1$ in.^{3}

ASSUME t CONSTANT
$t = 1/2$"
$e = 2.05$ in.

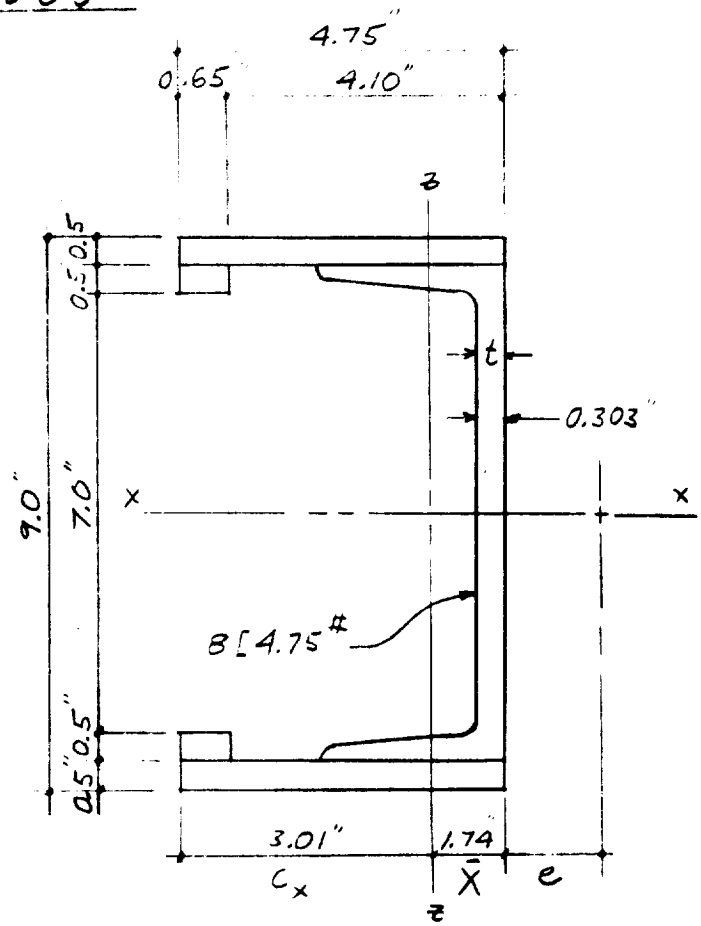

PREPARED BY Eder
CHECKED BY
REVISED BY

PAGE 385
REPORT NO.
DATE 5/6/64

DRAWING OR JOB TITLE	DRAWING NO. OR ITEM
APPOLO ACCESS CHAMBER	LES COUPLER

HOOK CYLINDER BOX - J75M12546 - CONTINUED

SECTION PROPERTIES - CONTINUED

SECTION BB REF. PG. 383

$\bar{x} = 1.54$ in. $C_x = 3.21$ in.

$A = 8.79$ in.^{2}

$I_{zz} = 15.69$ in.^{4}

$S_{zz} = 4.88$ in.^{3}

$I_{xx} = 121.81$ in.^{4}

$S_{xx} = 27.1$ in.^{3}

$J = 0.706$ in.^{4}

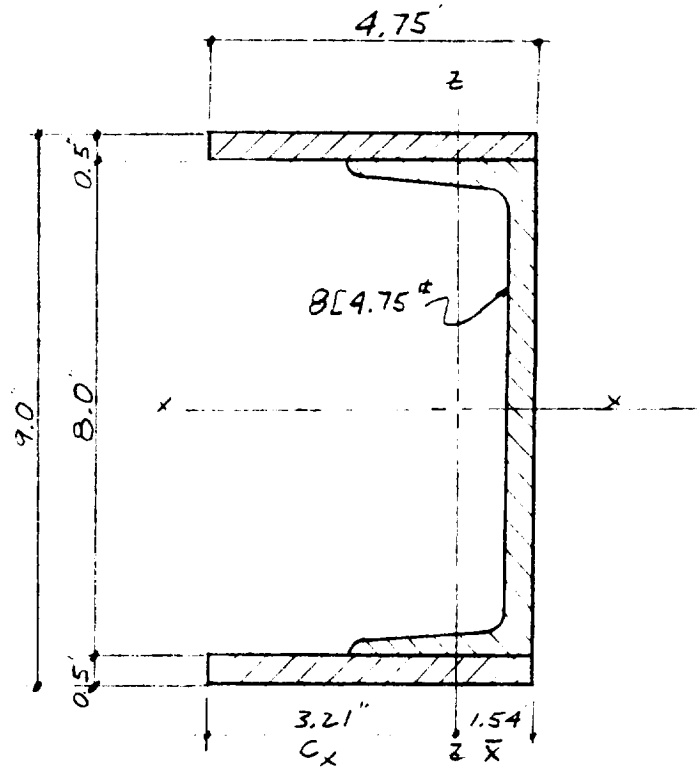

PREPARED BY Eder
CHECKED BY
REVISED BY

PAGE
REPORT NO.
DATE 5/6/64

DRAWING OR JOB TITLE: APPOLO ACCESS CHAMBER

DRAWING NO. OR ITEM: LES COUPLER

HOOK CYLINDER BOX – J75M12546 – CONTINUED

STRESSES

CONSIDER CASE A + CASE D REF. PG. 371

LOADS AND MOMENTS FROM REF. PG. 371

CONSIDER XY PLANE

$P_6 = 449^{\#}$
$P_1 = 627^{\#}$
$P_2 = 2126^{\#}$
$P_3 = 1960^{\#}$

$P_7 = 4549^{\#}$
$W_2 = 508^{\#}$
$M_1 = 30{,}140 \text{ in}^{\#}$

REF. PG.

$P_x = P_1 + P_2 = 627 + 2126$

$P_y = 2753^{\#}$

$Q = P_6 + P_7$

$Q = 449 + 4549$

$Q = 4998^{\#}$

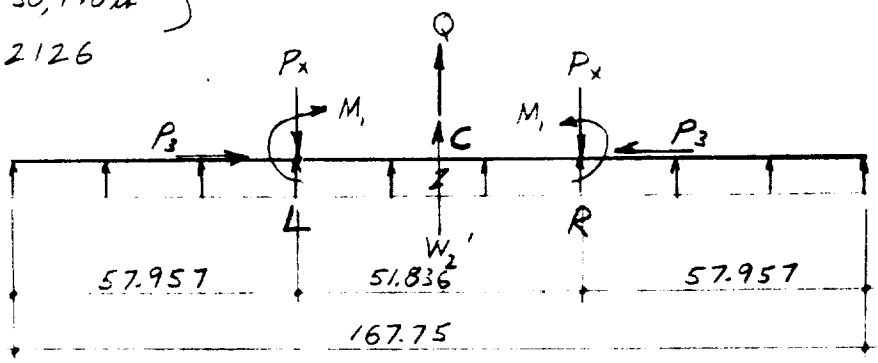

SHEAR DIAGRAM (#)

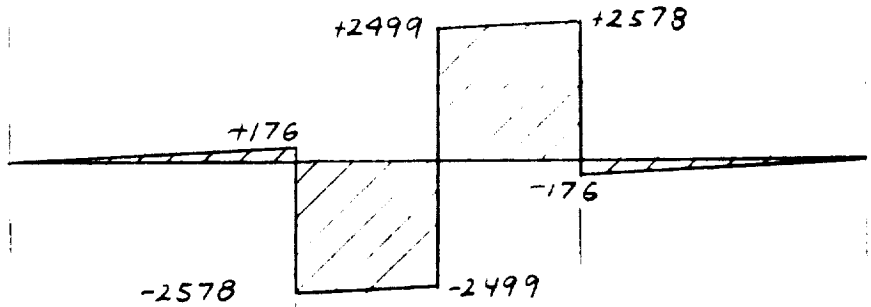

MOMENT DIAGRAM (in.#)

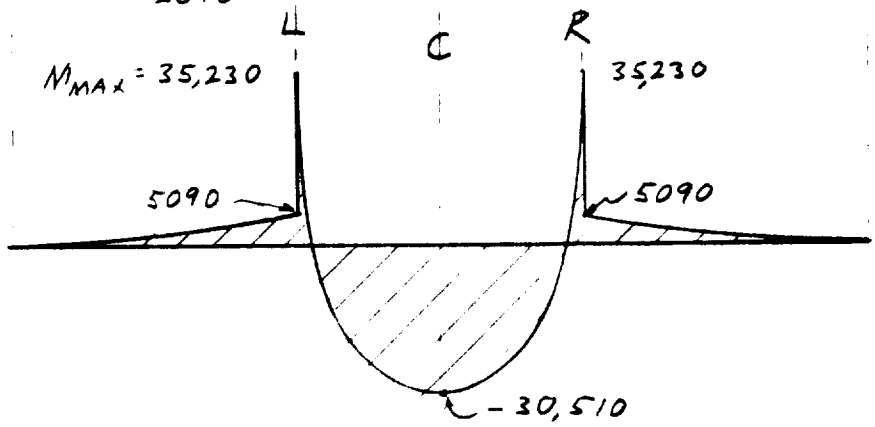

DRAWING OR JOB TITLE	DRAWING NO. OR ITEM
APPOLO ACCESS CHAMBER	LES COUPLER

HOOK CYLINDER BOX - J75M12546 - CONTINUED

STRESSES - CONTINUED

CONSIDER CASE A + CASE D REF. PG. 371

LOADS AND MOMENTS FROM REF. PG. 371

CONSIDER ZY PLANE.

$P_3 = 1960^{\#}$ $\quad W_{2T} = 484^{\#}$

$F_{1/2} = 928^{\#}$ $\quad W_{3T} = 36^{\#}$

$F_3 = 1336^{\#}$ $\quad M_2 = 2940 \text{ in.}^{\#}$

$e = 1.5 \text{ in.}$

REF. PG. 371

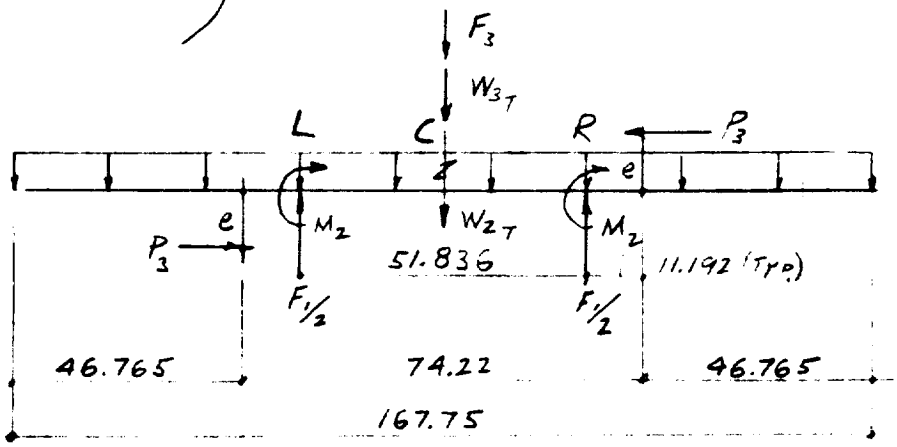

SHEAR DIAGRAM (#)

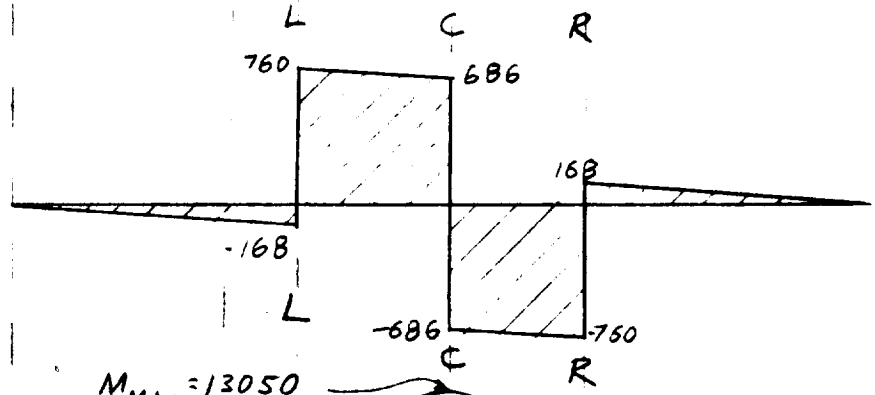

MOMENT DIAGRAM (in.#)

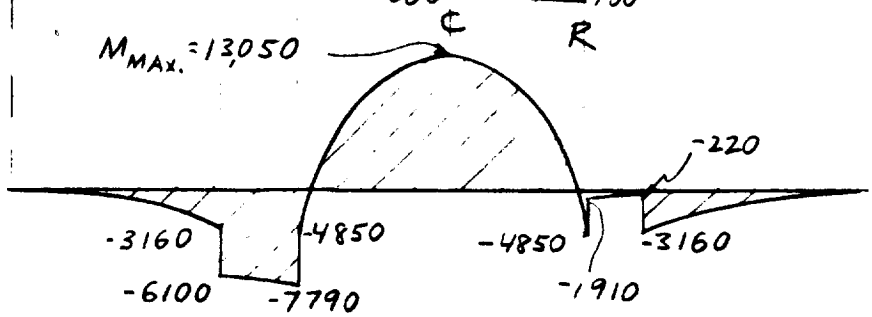

388
PREPARED BY Eder
CHECKED BY
REVISED BY

PAGE
REPORT NO.
DATE 5/6/64

DRAWING OR JOB TITLE	DRAWING NO. OR ITEM
APPOLO ACCESS CHAMBER	LES COUPLER

HOOK CYLINDER BOX - J75M12546 - CONTINUED

STRESSES - CONTINUED

CONSIDER CASE B + CASE D REF. PG. 372

LOADS AND MOMENTS FROM REF. PG. 372

CONSIDER XY PLANE

$P_4 = -260^{\#}$ $N_2' = 508^{\#}$ $F_5 = 2328^{\#}$

$P_5 = 1241^{\#}$ $M_1 = 6224$ in.$^{\#}$

$F_1 = 724^{\#}$ $M_2 = 45,184$ in.$^{\#}$

$F_3 = 3560^{\#}$ $M_3 = 8942$ in.$^{\#}$

REF. PG. 372

$e_1 = 2'$ $e_2 = 4\frac{3}{8}''$

$P_x = P_4 + P_5$

$P_x = 1241 - 260$

$P_x = 981^{\#}$

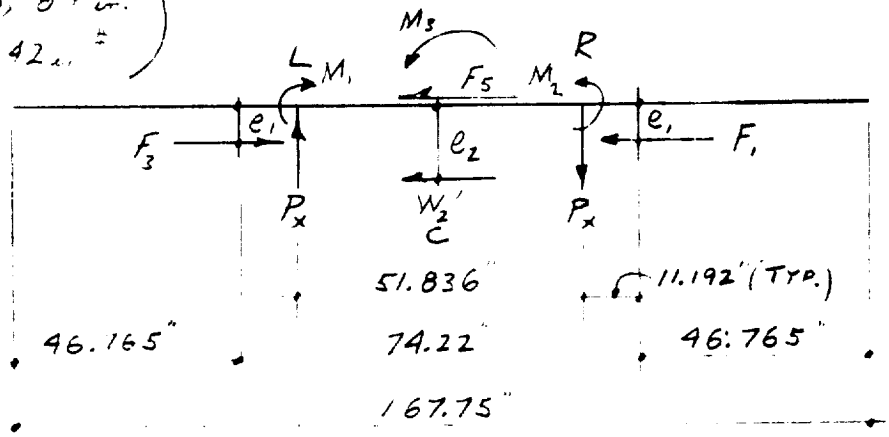

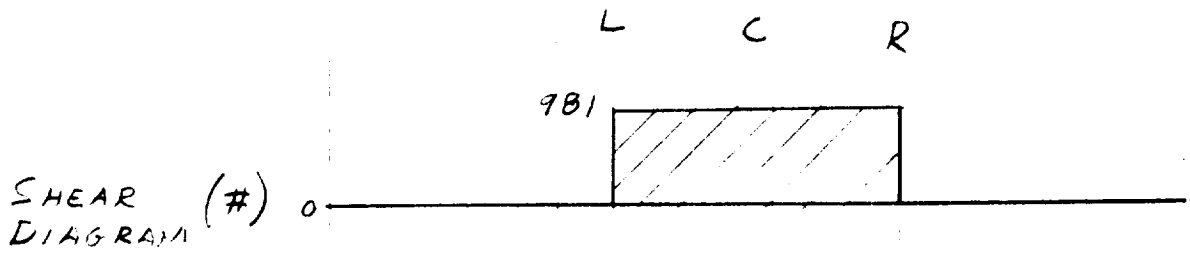

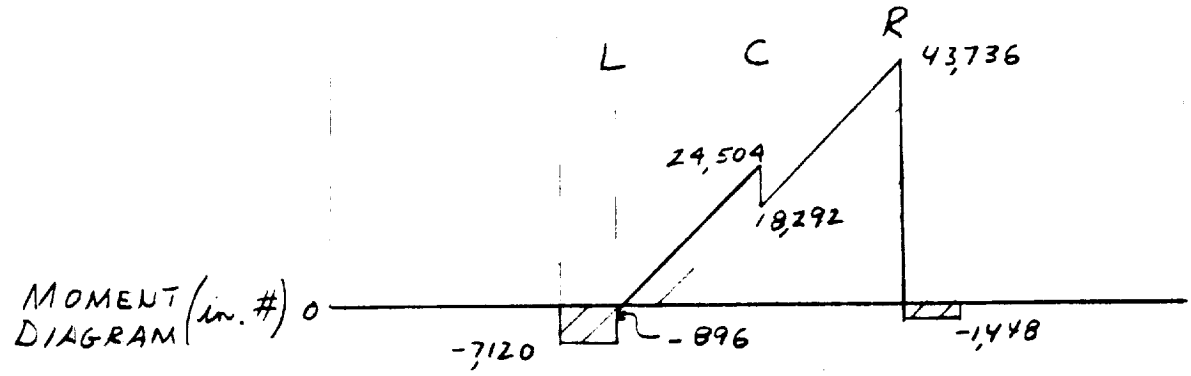

DRAWING OR JOB TITLE	DRAWING NO. OR ITEM
APPOLO ACCESS CHAMBER	LES COUPLER

HOOK CYLINDER BOX - J75M12546 - CONTINUED

STRESSES - CONTINUED

CONSIDER CASE B + CASE D REF. PG. 372

LOADS AND MOMENTS FROM REF. PG. 372

CONSIDER ZY PLANE

$F_1' = 724^{\#}$ $W_{3T} = 36^{\#}$ $M_4 = 1085 in^{\#}$ } REF. PG. 372

$F_1/2 = 928^{\#}$ $F_3' = 1336^{\#}$ $e = 1.5 in.$

$F_3 = 3560^{\#}$ $F_5 = 2328^{\#}$

$W_{2T} = 484^{\#}$ $M_3 = 5340 in^{\#}$

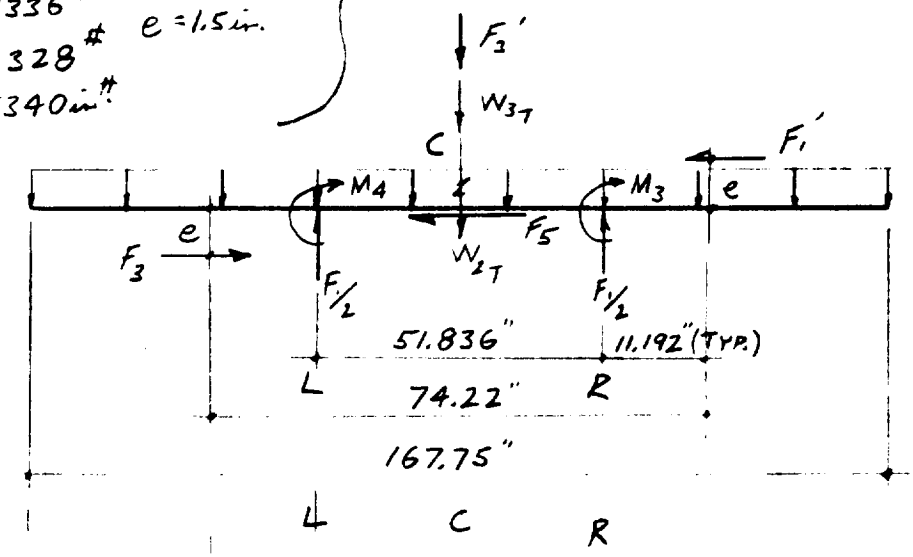

SHEAR DIAGRAM (#)

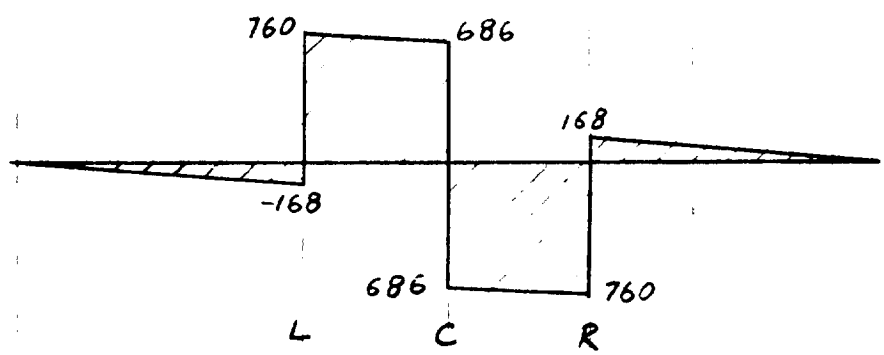

MOMENT DIAGRAM (in. #)

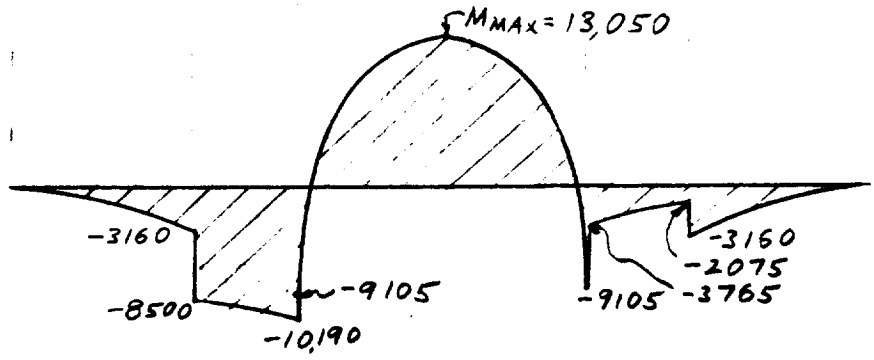

390
PREPARED BY Eder
CHECKED BY
REVISED BY

PAGE
REPORT NO.
DATE 5/6/64

DRAWING OR JOB TITLE	DRAWING NO. OR ITEM
APPOLO ACCESS CHAMBER	LES COUPLER

HOOK CYLINDER BOX - J75M12546 - CONTINUED

STRESSES - CONTINUED

CONSIDER SECTION AA REF. PG. 371 & 373

→ CRITICAL LOADING + CONDITION IS CASE B + CASE D

CONSIDER LOADS AND MOMENTS AT POINT R

$M_{Rxy} = 43{,}736 \text{ in}^{\#}$ REF. PG. 388

$M_{Rzy} = 9105 \text{ in}^{\#}$ REF. PG. 389

$F_1' = 724^{\#}$ REF. PG. 388

$P_4 = 260^{\#}$
$P_5 = 1241^{\#}$
$F_1/2 = 928^{\#}$
REF. PG. 383

$P_0 = 931^{\#}$ REF. PG. 388

$V_0 = 760^{\#}$ REF. PG. 389

$T_0 = \frac{7.5}{2}(P_5 + P_4) + 6.475 \frac{F_1}{2}$

$T_0 = \frac{7.5}{2}(1241 + 260) + 6.475 \times 928$

$T_0 = 11{,}650 \text{ in}^{\#}$ (MAX. TORSION)

TORSION CRITICAL ON SECTION BB
(SEE PG. 383)

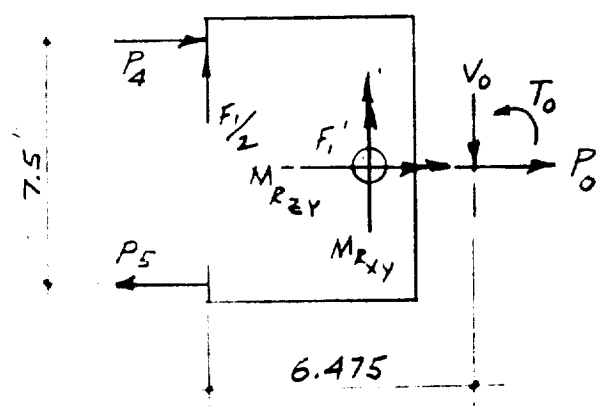

$$\sigma = \frac{M_{Rxy}}{S_{zz}} + \frac{M_{Rzy}}{S_{xx}} + \frac{F_1'}{A}$$

$S_{zz} = 7.75 \text{ in}^3$
$S_{xx} = 29.1 \text{ in}^3$
$A = 9.44 \text{ in}^2$
REF. PG. 384

$$\sigma = \frac{43{,}736}{7.75} + \frac{9105}{29.1} + \frac{724}{9.44}$$

(1) $\sigma = 6030$ psi.

HOOK CYLINDER BOX - J75M12546 - CONTINUED

STRESS - CONTINUED

CONSIDER SECTION BB REF. PG. 371 & 374
CRITICAL LOADING CONDITION IS CASE B + CASE D
CONSIDER LOADS AND MOMENTS NEAR POINT R

$T_0 = 11{,}650 \text{ in}^{\#}$ FROM REF PG. 390

$M_{Rxy} \cong 43{,}736 \text{ in.}^{\#}$
$P_x = 981^{\#}$
$P_y = 724^{\#}$
} REF. PG. 388

$M_{Rzy} = 9105 \text{ in}^{\#}$
$P_z = 760^{\#}$
} REF. PG. 389

$$\sigma = \frac{M_{Rxy}}{S_{zz}} + \frac{M_{Rzy}}{S_{xx}} + \frac{P_y}{A}$$

$S_{zz} = 4.88 \text{ in}^3$
$S_{xx} = 27.1 \text{ in}^3$
$A = 8.79 \text{ in}^2$
$J = 0.706 \text{ in}^4$
} REF. PG. 385

$$\sigma = \frac{43{,}736}{4.88} + \frac{9105}{27.1} + \frac{724}{8.79}$$

(2) $\sigma = 9370 \text{ psi.}$

SHEARING STRESS IS CRITICAL IN COVER PLATES

$$r = \frac{T_0 c}{J} + \frac{P_x}{A} = \frac{11{,}650 \times 0.5}{0.706} + \frac{981}{8.79}$$

(3) $r = 8362 \text{ psi.}$

PREPARED BY Eder
CHECKED BY
REVISED BY

PAGE
REPORT NO.
DATE 5/13/64

DRAWING OR JOB TITLE	DRAWING NO. OR ITEM
APPOLO ACCESS CHAMBER	LES COUPLER

HOOK CYLINDER BOX - J75M12546 - CONTINUED

STRESSES - CONTINUED

CONSIDER LOCAL STRESSES FROM RIGHT COUPLER HOOK

$M_1 = 30,140 \text{ in}^{\#}$
$P_x = 2753^{\#}$
} CASE A + CASE D REF. PG. 371

$M_2 = 45,184 \text{ in}^{\#}$
$P_x = 981^{\#}$
} CASE B + CASE D REF. PG. 362

CONSIDER CASE A + CASE D AS CRITICAL

ASSUME WELDS CARRY APPLIED MOMENT

$$r_1 = \frac{M}{\frac{d}{A}}$$

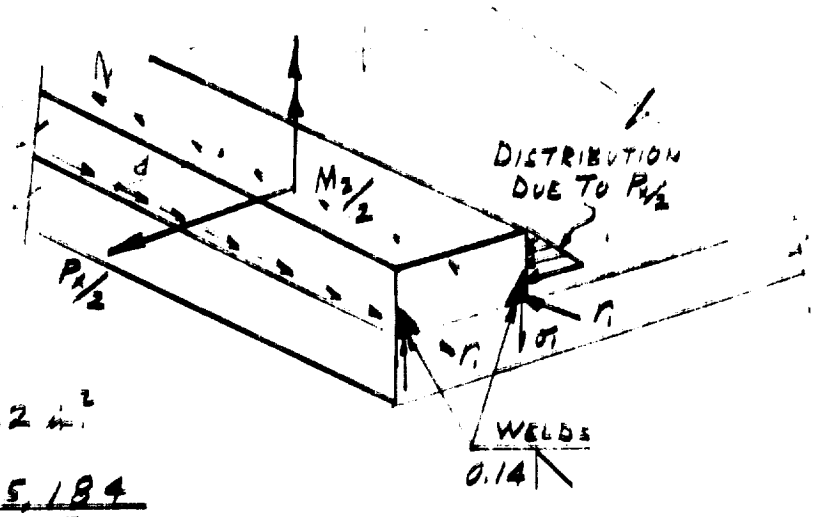

ASSUME $\begin{cases} d = 0.556 \text{ in.} \\ l_{EFF} = 30 \text{ in.} \end{cases}$

$A = 0.14\, l = 0.14 \times 30 = 4.2 \text{ in}^2$

$$r_1 = \frac{M_2}{2 \times 0.556 \times 4.2} = \frac{45,184}{4.67}$$

(4) $r_1 = 9,650$ psi.

$$\sigma_1 = \frac{M'c}{I} \qquad M' = Pe \qquad c = \frac{d}{2} = 0.278$$

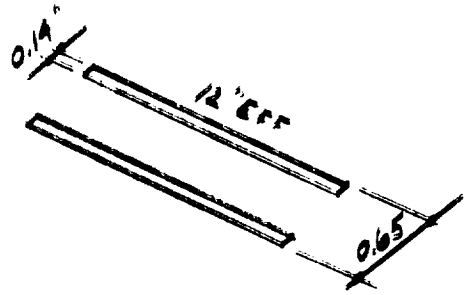

$I = 2Ay^2 = 2 \times 0.14 \times 12\,(0.255)^2$

$I = 0.219 \text{ in}^4$

$e = \frac{b}{3} + 0.135$ $\qquad b = 0.365$ REF. PG. 379

$e = \frac{0.365}{3} + 0.135 = 0.257 \text{ in.}$

DRAWING OR JOB TITLE	DRAWING NO. OR ITEM
APPOLO ACCESS CHAMBER	LES COUPLER

HOOK CYLINDER BOX-J75M12546-CONTINUED

STRESSES-CONTINUED

LOCAL STRESSES FROM RIGHT COUPLER HOOK-CONTINUED

$$M' = \frac{P_x e}{2} = \frac{981 \times 0.257}{2} = 126 \text{ in}^{\#}$$

$$\sigma_1 = \frac{M_1 c}{I} = \frac{126 \times 0.278}{0.219}$$

(5) $\sigma_1 = 160$ psi. (NEGLIGIBLE)

FOR $P_x = 2753^{\#}$ (CASE A+CASE D · REF. PG. 386)

REF. ONLY $\sigma_1 = \frac{160 \times 2753}{981} = 449$ psi. (NEGLIGIBLE)

ASSUME: BENDING STRESSES IN COVER PLATES ARE ALSO SMALL DUE TO P_x AND M_2 ∴ NEGLECT HERE

PREPARED BY Eder
CHECKED BY
REVISED BY

PAGE
REPORT NO.
DATE 5/13/64

DRAWING OR JOB TITLE	DRAWING NO. OR ITEM
APPOLO ACCESS CHAMBER	LES COUPLER

HOOK CYLINDER BOX - J75M12546 - CONTINUED

STRESSES - CONTINUED

LOCAL STRESSES FROM RIGHT COUPLER - CONTINUED

$F_1/2 = 928^{\#}$ REF PG. 382 AND 383

{REF. THEORY OF PLATES AND SHELLS
BY: TIMOSHENKO
PP. 336 & 337}

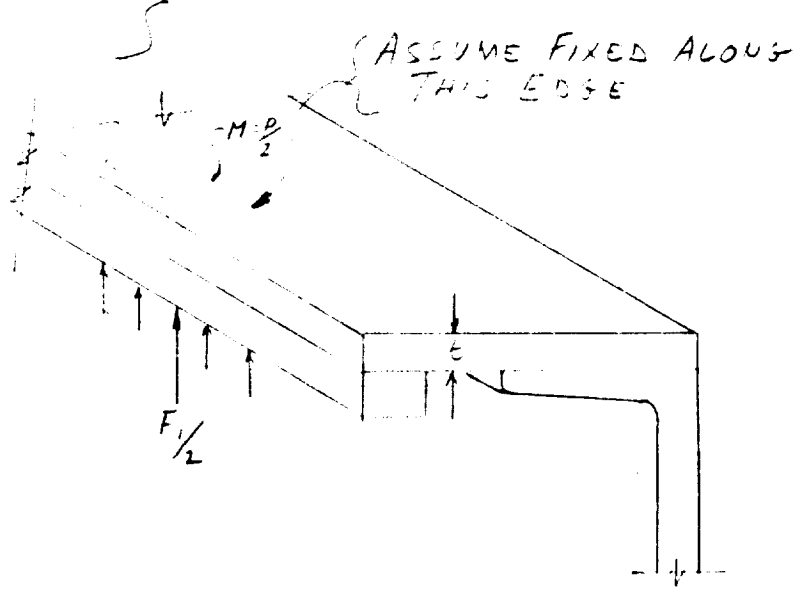

$M = \frac{P}{2}$

$M = \frac{F_1/2}{2} = \frac{928}{2}$

$M = 464 \text{ in}^{\#}/\text{in}$

$\sigma = \frac{6M}{t^2}$

$t = 0.5 \text{ in.}$

$\sigma = \frac{6 \times 464}{(0.5)^2}$

(6) $\sigma = 11{,}150 \text{ psi.}$

DRAWING OR JOB TITLE	DRAWING NO. OR ITEM
APPOLO ACCESS CHAMBER	LES COUPLER

HOOK CYLINDER BOX - J75M12546 - CONTINUED

STRESSES - CONTINUED

LOCAL STRESSES - CONTINUED

$F_3 = 3560$ CASE B + CASE D · REF. PG. 383

$M = Pe$

$e = 1.125 + 0.062$

$e = 1.187$

$M = Pe = 3560 \times 1.187$

$M = 4230 \text{ in.\#}$

$\sigma = \dfrac{5.66\,M}{t D^2 \pi}$ $\quad t = 5/16''$

REF. WELDING HANDBOOK 3RD. ED.
BY: AMERICAN WELDING SOCIETY
PP 1566-1567

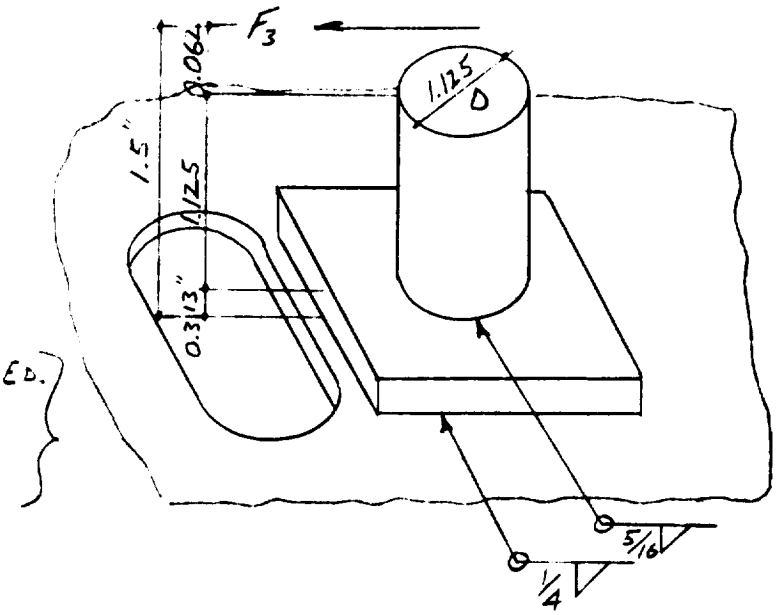

$\sigma = \dfrac{5.66 \times 4230}{0.313(3.1416)(1.125)^2}$

(7) $\sigma = 19{,}250$ psi.

ASSUME STRESS LEVEL IN 1/4" WELDS ARE SMALL

396

PREPARED BY Eder

CHECKED BY

REVISED BY

PAGE

REPORT NO.

DATE 5/6/64

DRAWING OR JOB TITLE	DRAWING NO. OR ITEM
APPOLO ACCESS CHAMBER	LES COUPLER

HOOK CYLINDER BOX - J75M12546 - CONTINUED

MARGINS OF SAFETY

(1) $M.S. = \frac{20,000}{6,770} - 1$ | +2.32

(2) $M.S. = \frac{22,000}{1,370} - 1$ | +1.13

(3) $M.S. = \frac{12,000}{8,362} - 1$ | +0.44

(4) $M.S. = \frac{12,000}{9,650} - 1$ | +0.25

(5) $M.S. = \frac{20,000}{160} - 1$ | HIGH

(6) $M.S. = \frac{20,000}{11,150} - 1$ | +0.80

(7) $M.S. = \frac{20,000}{19,250} - 1$ | +0.04

PREPARED BY Eder
CHECKED BY
REVISED BY

PAGE 397
REPORT NO.
DATE 5/13/64

DRAWING OR JOB TITLE	DRAWING NO. OR ITEM
APPOLO ACCESS CHAMBER	LES COUPLER

UPPER PIVOT - D75M12543

LOADS

CASE A: FORWARD INERTIA: REF. PG. 358
CASE B: SIDE INERTIA: REF. PG. 362
CASE C: DEAD LOAD - UNCONNECTED (ASSUME NEGLIGIBLE)
CASE D: DEAD LOAD - CONNECTED: REF. PG. 368

TOTAL LOADS FROM CASE A (REF. PG. 358) + CASE D (REF. PG. 368)
(LOADS IN POUNDS; MOMENTS IN INCH-POUNDS)

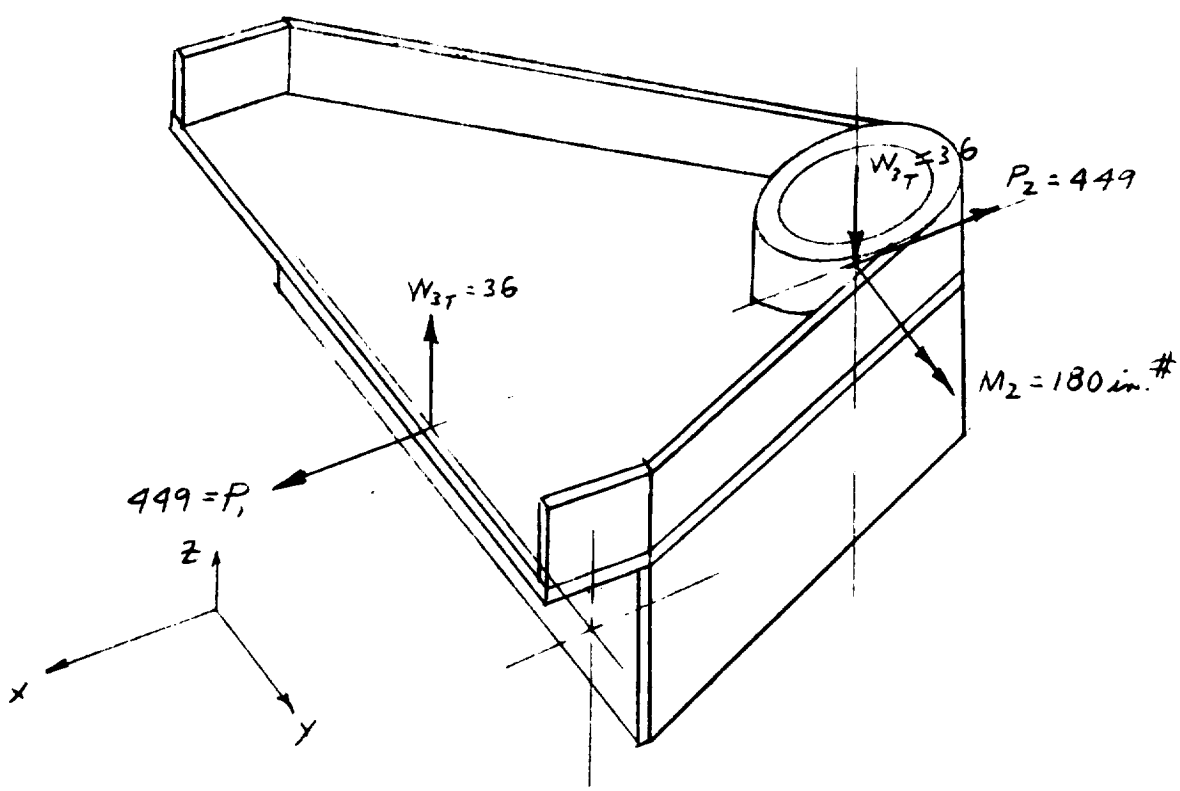

PREPARED BY Eder
CHECKED BY
REVISED BY

PAGE
REPORT NO.
DATE 5/13/64

DRAWING OR JOB TITLE	DRAWING NO. OR ITEM
APPOLO ACCESS CHAMBER	LES COUPLER

UPPER PIVOT – D75M12543-CONTINUED

LOADS-CONTINUED

TOTAL LOADS FROM CASE B (REF. PG 362) + CASE D (REF. PG. 368)
(LOADS IN POUNDS; MOMENTS IN INCH-POUNDS)

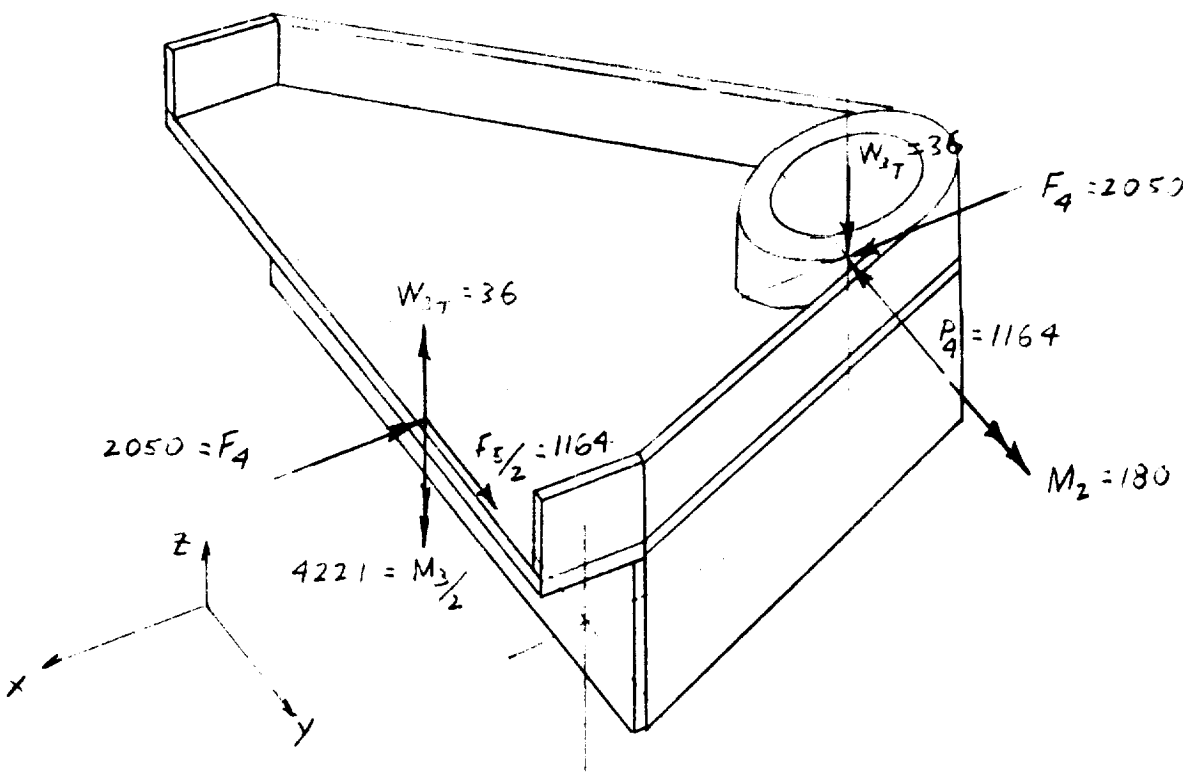

PREPARED BY Eden
CHECKED BY
REVISED BY

PAGE 399
REPORT NO.
DATE 5/13/64

DRAWING OR JOB TITLE	DRAWING NO. OR ITEM
APPOLO ACCESS CHAMBER	LES COUPLER

LOWER PIVOT - D75M12544

LOADS

CASE A: FORWARD INERTIA : REF. PG. 358
CASE B: SIDE INERTIA : REF. PG. 362
CASE C: DEAD LOAD UNCONNECTED (ASSUME NEGLIGIBLE)
CASE D: DEAD LOAD - CONNECTED : REF. PG. 368

TOTAL LOADS FROM CASE A (REF. PG. 358) + CASE D (REF. PG. 368)
(LOADS IN POUNDS - MOMENTS IN INCH-POUNDS)

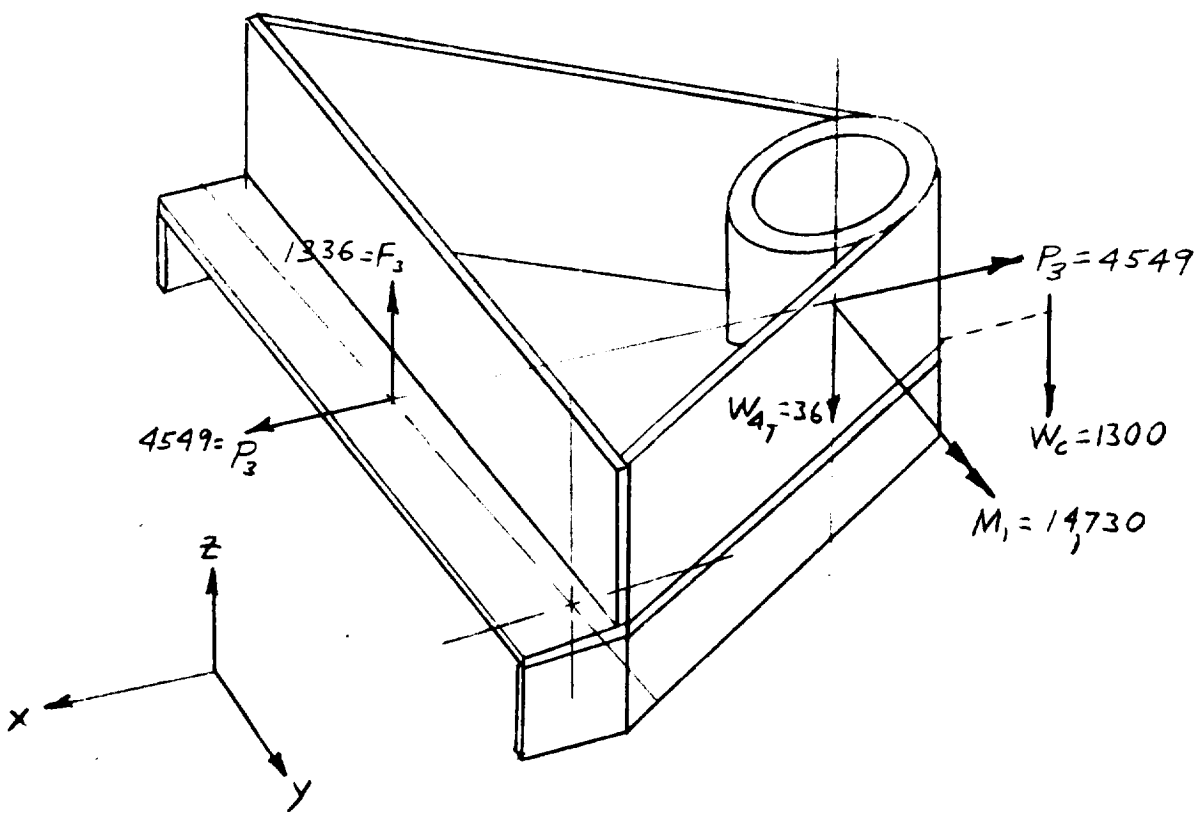

400

PREPARED BY Eder

CHECKED BY

REVISED BY

PAGE

REPORT NO.

DATE 5/13/64

DRAWING OR JOB TITLE	DRAWING NO. OR ITEM
APPOLO ACCESS CHAMBER	LES COUPLER

LOWER PIVOT - D75M12544 - CONTINUED

LOADS - CONTINUED

TOTAL LOADS FROM CASE B (REF. PG 362) + CASE D (REF. PG 368)
(LOADS IN POUNDS; MOMENTS IN INCH-POUNDS)

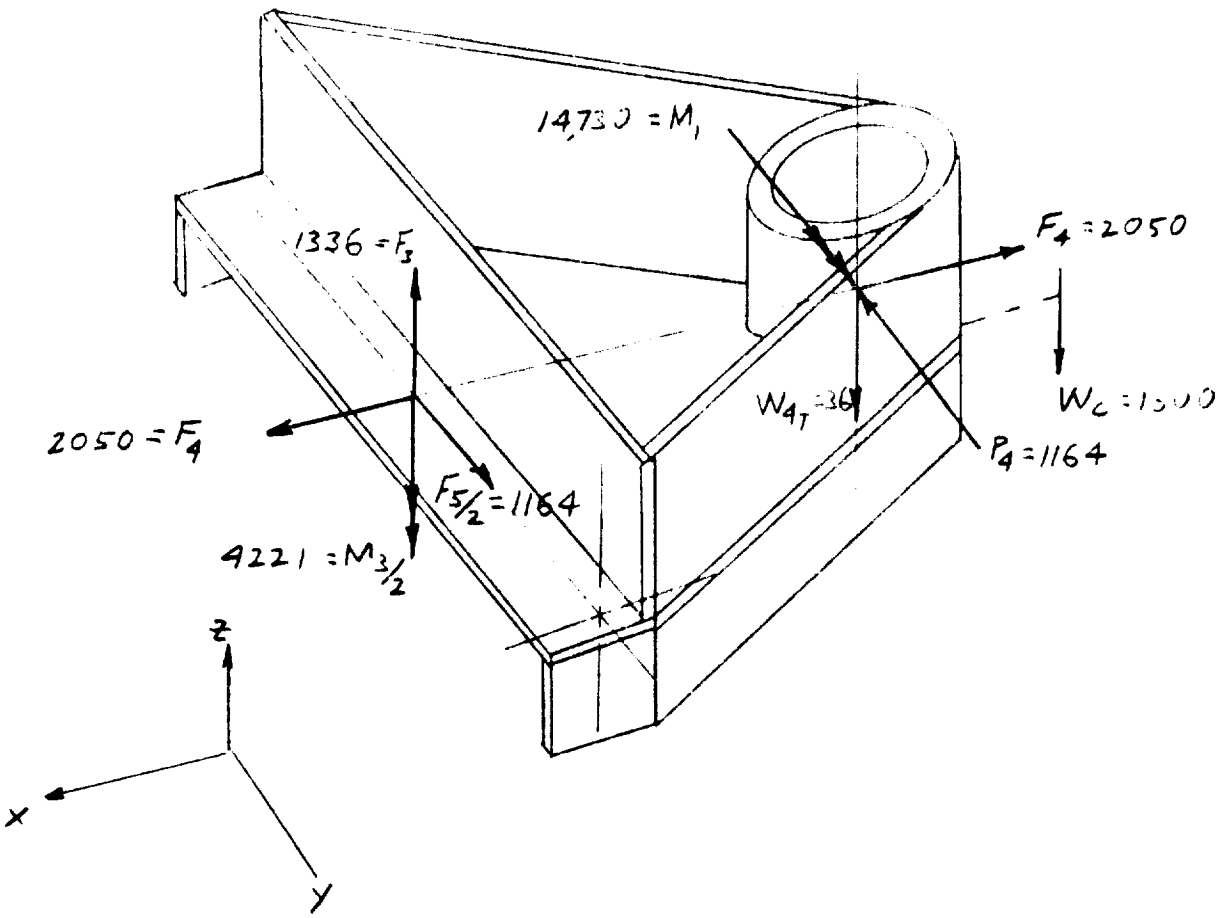

LOWER PIVOT - D75M12544 - CONTINUED

MATERIAL: 6061-T6 ALUMINUM

PARENT MATERIAL		WELD AREA
$F_{tu} = 38{,}000$ psi.	MATERIAL LESS THAN 3/8 THICK 404? WELD RODS	$F_{tu}' = 24{,}000$ psi.
$F_{ty} = 35{,}000$ psi.		$F_{ty}' = 20{,}000$ psi.
$F_{ry} = 20{,}000$ psi.		$F_{ry}' = 12{,}000$ psi.
$F_{By} = 56{,}000$ psi.		$F_{By}' = 30{,}000$ psi.

SECTION PROPERTIES

SECTION AA REF. PG. 402

$A = 5.62 \text{ in.}^2$

$S_{ww} = 4.22 \text{ in.}^3$

$S_{zz} = 1.17 \text{ in}^3$

$b/a = 3.6$

$\alpha = 0.27$ (TORSIONAL CONSTANT)

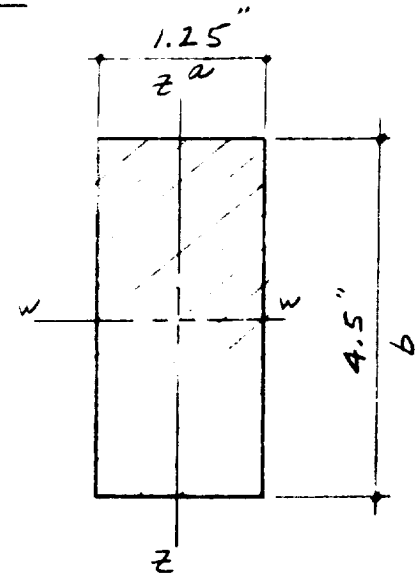

SECTION BB REF. PG. 404

$A = 4.05 \text{ in.}^2$

$S_{ww} = 3.04 \text{ in.}^3$

$S_{zz} = 0.607 \text{ in.}^3$

$b/a = 5.0$

$\alpha = 0.286$ (TORSIONAL CONSTANT)

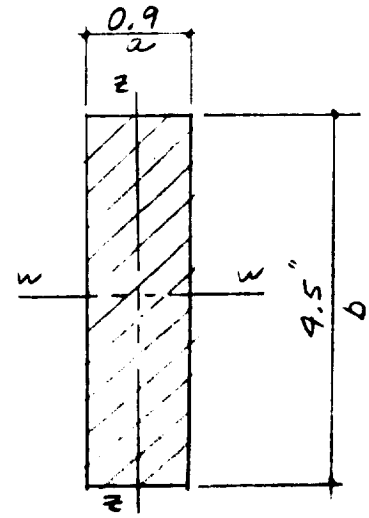

402

PREPARED BY Eder

CHECKED BY

REVISED BY

PAGE

REPORT NO.

DATE 5/13/64

DRAWING OR JOB TITLE	DRAWING NO. OR ITEM
APPOLO ACCESS CHAMBER	LES COUPLER

LOWER PIVOT - D75M12544 - CONTINUED

STRESSES - CONTINUED

ZY PLANE - CONTINUED

CONSIDER SECTION AA

$M = \frac{4.288 F_4}{2}$

$F_4 = 1300^{\#}$ REF. PG. 400

$M = \frac{4.288 \times 1300}{2}$

$M = 2785 \text{ in.}^{\#}$

$M' = M \sin\theta$

$\theta = 37.5^\circ$ (SCALED)

$M' = 2785 \sin 37.5^\circ$

$M' = 1700 \text{ in.}^{\#}$

$T = M \cos 37.5^\circ$

$T = 2785 \cos 37.5^\circ$

$T = 2210 \text{ in.}^{\#}$

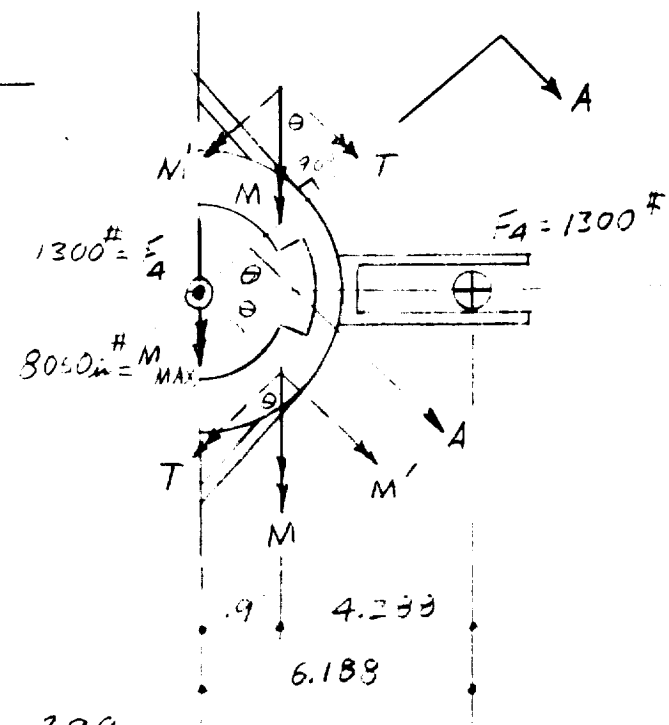

$P_N = \frac{P_3}{2} \cos\theta$ $\quad P_3 = 4549$ REF. PG. 399

$P_N = \frac{4549}{2} \cos 37.5^\circ$

$P_N = 1800^{\#}$

$P_T = \frac{4549}{2} \sin 37.5^\circ$

$P_T = 1385^{\#}$

PLUS

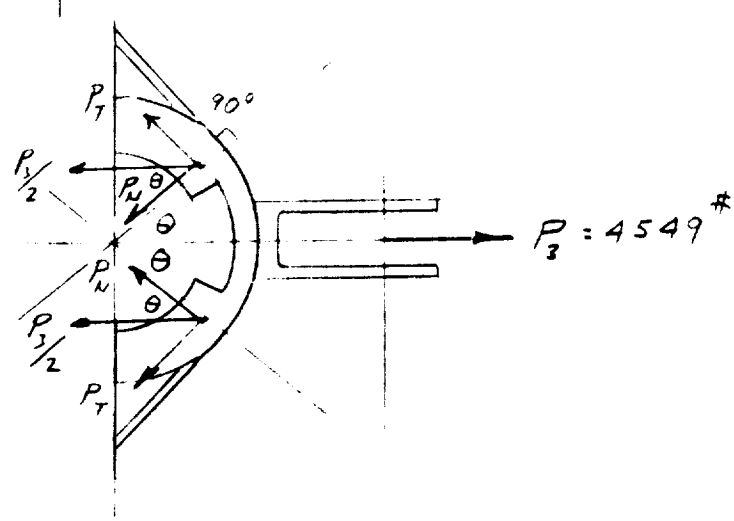

DRAWING OR JOB TITLE	DRAWING NO. OR ITEM
APPOLO ACCESS CHAMBER	LES COUPLER

LOWER PIVOT - D75M12544 - CONTINUED

STRESSES - CONTINUED

SECTION AA - CONTINUED

$$\sigma = \frac{M'}{S_{WW}} + \frac{P_T}{A}$$

$M' = 1700 \text{ in}^{\#}$, $P_T = 1380^{\#}$ } REF. PG. 402

$S_{WW} = 4.22 \text{ in}^3$, $A = 5.62 \text{ in}^2$ } REF. PG. 401

$$\sigma = \frac{1700}{4.42} + \frac{1380}{5.62}$$

(1) $\sigma = 631$ psi. (NEGLIGIBLE)

$$r = \frac{T}{\alpha b a^2} + \frac{3 F_4}{2 A}$$

$T = 2210 \text{ in}^{\#}$, $F_4 = 1300^{\#}$ } REF. PG. 402

$\alpha = 0.27$, $b = 4.5$ in, $a = 1.25$ in. } REF. PG. 401

$$r = \frac{2210}{0.27 \times 4.5 (1.25)^2} + \frac{3 \times 1300}{2 \times 5.62}$$

(2) $r = 1512$ psi (NEGLIGIBLE)

404

PREPARED BY Edir

CHECKED BY

REVISED BY

PAGE

REPORT NO.

DATE 5/13/64

DRAWING OR JOB TITLE	DRAWING NO. OR ITEM
APPOLO ACCESS CHAMBER	LES COUPLER

LOWER PIVOT - D75M12544 - CONTINUED

STRESSES - CONTINUED

CONSIDER SECTION B B

$M = \frac{3.688 F_4}{2}$

$M = \frac{3.688 \times 1300}{2}$

$M = 2400 \text{ in.}^{\#}$

$\alpha = 15^\circ$

$M' = M \sin \alpha$

$M' = 2400 \sin 15^\circ$

$M' = 620 \text{ in}^{\#}$

$T = M \cos 15^\circ$

$T = 2400 \cos 15^\circ$

$T = 2320 \text{ in.}^{\#}$

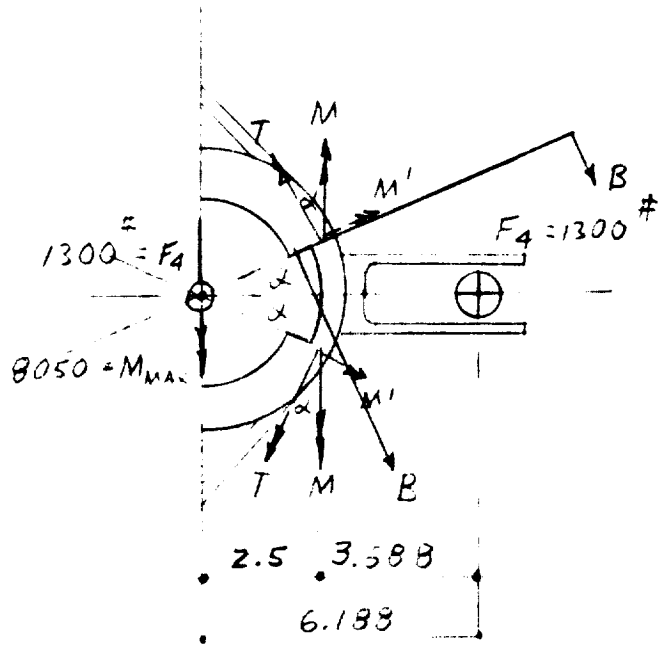

$P_3 = 4549$ REF. P_3 399

$P_N = \frac{P_3}{2} \cos \alpha$

$P_N = \frac{4549}{2} \cos 15^\circ$

$P_N = 2190^{\#}$

$P_T = \frac{P_3}{2} \sin 15^\circ$

$P_T = \frac{4549}{2} \sin 15^\circ$

$P_T = 587^{\#}$

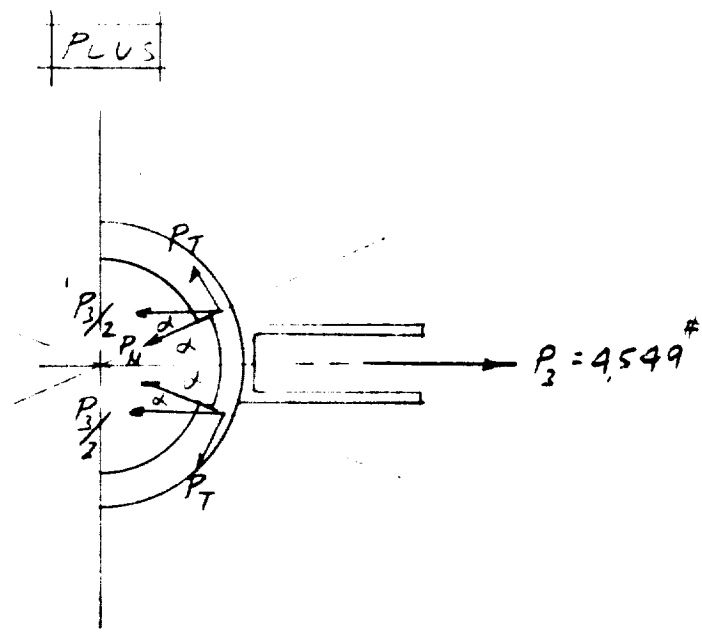

DRAWING OR JOB TITLE	DRAWING NO. OR ITEM
APPOLO ACCESS CHAMBER	LES COUPLER

LOWER PIVOT - D75M12544 - CONTINUED

STRESSES - CONTINUED

SECTION B B - CONTINUED

$$r' = \frac{3 P_N}{2 A}$$

$A = 4.05 in^2$, $\alpha = 0.286$ } REF. PG. 401

$P_N = 2190^{\#}$ REF. PG. 404

$$r' = \frac{3 \times 2190}{2 \times 4.05} = 510 psi \text{ (NEGLIGIBLE)}$$

$$r = \frac{T}{\alpha b a^2} + \frac{3 F_4}{2 A}$$

$T = 2320 in^{\#}$, $F_4 = 1300^{\#}$ } REF. PG. 404

$$r = \frac{2320}{0.286 \times 4.5 (0.7)^2} + \frac{3 \times 1300}{2 \times 4.05}$$

(3) $r = 2712 psi.$

ASSUME

BENDING STRESS AT SECTION BB WILL BE LESS THAN σ REF. PG. 403 ∴ NEGLECT HERE

406

PREPARED BY Eder

CHECKED BY

REVISED BY

PAGE

REPORT NO.

DATE 5/12/64

DRAWING OR JOB TITLE	DRAWING NO. OR ITEM
APPOLO ACCESS CHAMBER	LES COUPLER

LOWER PIVOT - D75M12544-CONTINUED

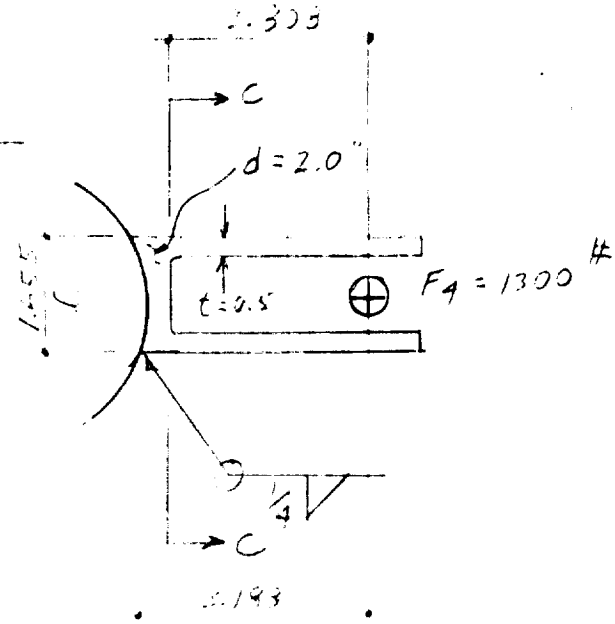

$F_4 = 1300^{\#}$ [illegible] $\mu = 400$

$$\sigma = \frac{4.24\,M}{t\left[d^2 + 3\,\ell(d+t)\right]}$$

{ REF. WELDING HANDBOOK
BY: AMERICAN WELDING SOCIETY
PP. 1566-1577 }

$M = 3.188\,F_4$

$M = 3.188 \times 1300$

$M = 4150$ in.#

$$\sigma = \frac{4.24 \times 4150}{0.25\left[(2)^2 + 3 \times 1.655\,(2 + 0.25)\right]}$$

(4) $\sigma = 4650$ psi.

CONSIDER SECTION CC

$M = 2.808\,F_4$

$M = 2.808 \times 1300 = 3650$ in.#

$$\sigma = \frac{M}{S_x} \qquad S_x = \frac{t\,d^2}{3} = \frac{0.5(2)^2}{3} = 0.667 \text{ in.}^3$$

(5) $\sigma = \frac{3650}{0.667} = 5470$ psi.

PREPARED BY Eder
CHECKED BY
REVISED BY

PAGE 407
REPORT NO.
DATE 5/13/64

DRAWING OR JOB TITLE	DRAWING NO. OR ITEM
APPOLO ACCESS CHAMBER	LES COUPLER

LOWER PIVOT - D75M 12544 - CONTINUED

MARGIN OF SAFETY

(1) $M.S. = \frac{20,000}{631} - 1$ HIGH

(2) $M.S. = \frac{12,000}{1512} - 1$ HIGH

(3) $M.S. = \frac{12,000}{2,712} - 1$ HIGH

(4) $M.S. = \frac{20,000}{4,650} - 1$ +3.3

(5) $M.S. = \frac{20,000}{5470} - 1$ +2.65

408
PREPARED BY Eder
CHECKED BY
REVISED BY

PAGE
REPORT NO.
DATE 5/14/64

DRAWING OR JOB TITLE	DRAWING NO. OR ITEM
APPOLO ACCESS CHAMBER	LES COUPLER

VERTICAL TUBE SLIDE – C75M12521

LOADS

CASE A: FORWARD INERTIA REF. PG. 358
CASE B: SIDE INERTIA REF. PG. 362
CASE C: DEAD LOAD UNCONNECTED (NEGLIGIBLE)
CASE D: DEAD LOAD CONNECTED REF. PG. 368

TOTAL LOAD: CASE A (REF. PG. 358) + CASE D (REF. PG. 368)
CASE B + CASE D IS LESS CRITICAL

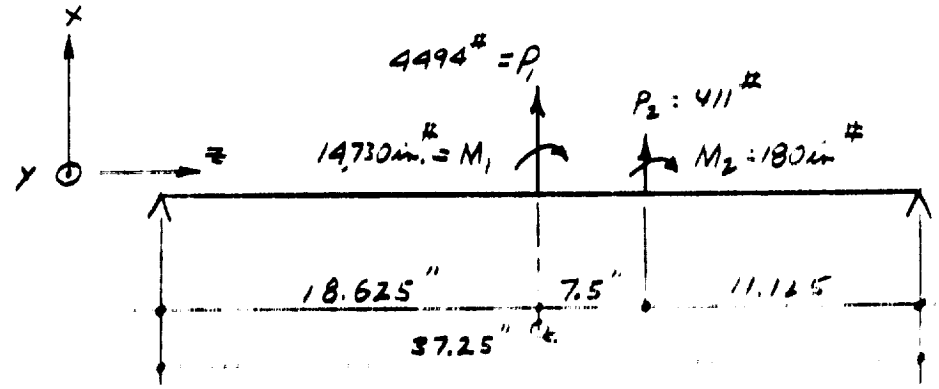

SHEAR DIAGRAM (#)

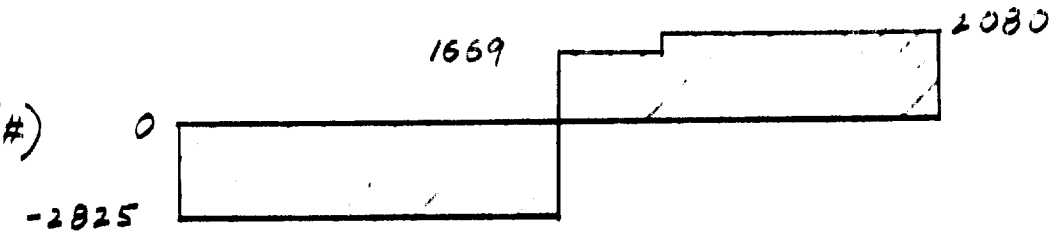

MOMENT DIAGRAM (in.#)

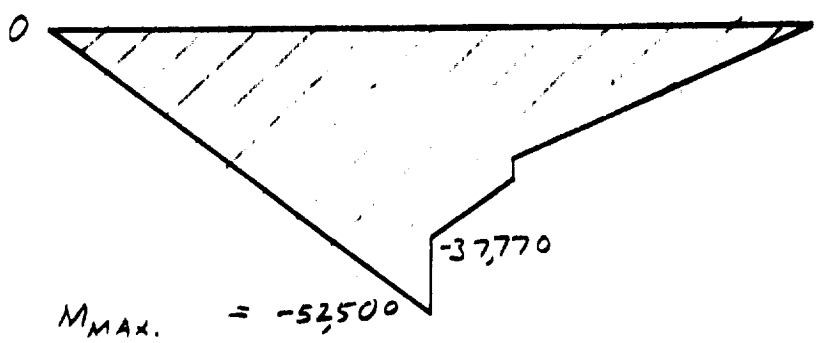

$M_{MAX.} = -52,500$

PREPARED BY Eden
CHECKED BY
REVISED BY

PAGE 409
REPORT NO.
DATE 5/14/64

DRAWING OR JOB TITLE	DRAWING NO. OR ITEM
APPOLO ACCESS CHAMBER	LES COUPLER

VERTICAL TUBE SLIDE - C75M12521 - CONTINUED

MATERIAL 7075-T651 ALUMINUM

$F_{tu} = 70{,}000$ psi.
$F_{ty} = 60{,}000$ psi
$F_{ry} = 46{,}000$ psi.
$F_{By} = 92{,}000$ psi.

SECTION PROPERTIES

$\bar{X} = 1.71$ in. $C_x = 1.79$ in.
$A = 6.29$ in.^{2}
$I_{yy} = 6.06$ in.^{4}
$S_{yy} = 3.39$ in.^{3}

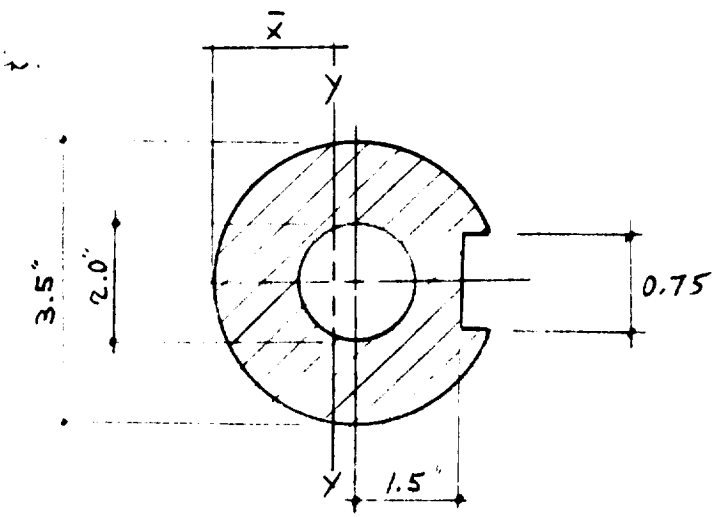

SECTION AA
(FROM DWG.)

410
PREPARED BY Eder
CHECKED BY
REVISED BY

PAGE
REPORT NO.
DATE 5/14/64

DRAWING OR JOB TITLE	DRAWING NO. OR ITEM
APPOLO ACCESS CHAMBER	LES COUPLER

VERTICAL TUBE SLIDE - C75M12521 - CONTINUED

STRESSES

MOMENT TOTAL = M_{MAX} (REF. PG. 408) + M_1

M_1 = MOMENT FROM EXTERNAL LOADS & MOMENTS

ASSUME $M_1 = -2000 in.^{\#}$

$M_{MAX} = 52,500 in^{\#}$ REF. PG. 408

$M_T = 52,500 + 2000 = 54,500 in.^{\#}$

$\sigma = \frac{M_T}{S_{YY}}$ $S_{YY} = 3.39 in.^3$ (REF. PG. 409)

$\sigma = \frac{54500}{3.39}$

(1) $\sigma = 16,100$ psi.

τ IS NEGLIGIBLE

MARGIN OF SAFETY

(1) $M.S = \frac{60,000}{16,100} - 1$ +2.73

PREPARED BY Eden
CHECKED BY
REVISED BY

PAGE 411
REPORT NO.
DATE 5/14/64

DRAWING OR JOB TITLE	DRAWING NO. OR ITEM
APPOLO ACCESS CHAMBER	LES COUPLER

UPPER GLIDE - J75M12548

LOADS

CASE A: FORWARD INERTIA REF. PG. 358
CASE B: SIDE INERTIA REF. PG. 362
CASE C: DEAD LOAD UNCONNECTED REF. PG. 365
CASE D: DEAD LOAD CONNECTED REF. PG. 368

ASSUME:

CRITICAL LOADING CONDITION IS CASE C, BECAUSE THIS CASE WILL DEVELOP MAXIMUM MOMENTS IN UPPER GLIDE.

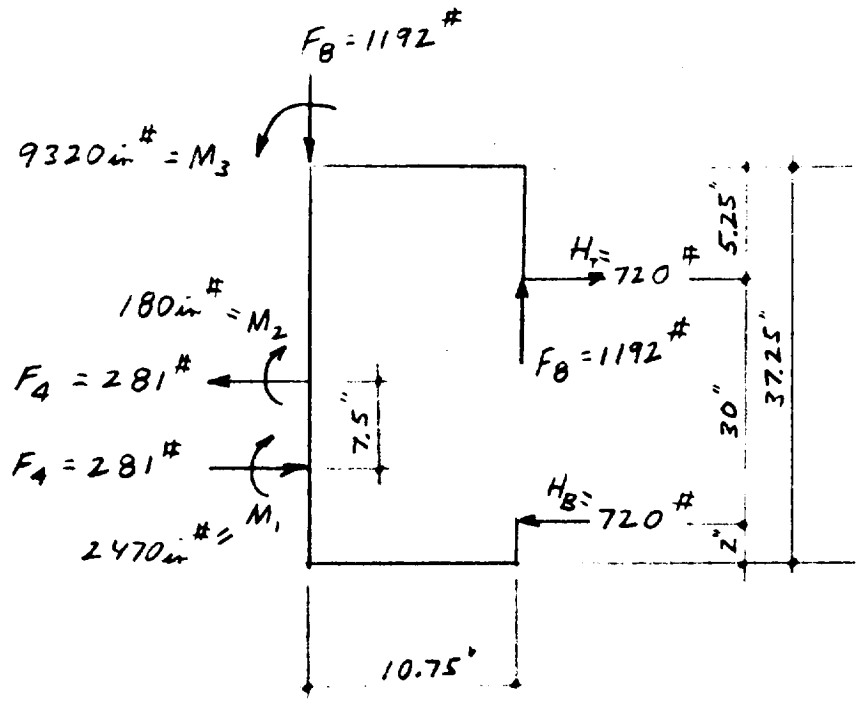

412
PREPARED BY Eder
CHECKED BY
REVISED BY

PAGE
REPORT NO.
DATE 5/14/64

DRAWING OR JOB TITLE	DRAWING NO. OR ITEM
APPOLO ACCESS CHAMBER	LES COUPLER

UPPER GLIDE - J75M12548 - CONTINUED

STRESSES

CONSIDER SECTION AA

$M = 16,580 \text{ in}^{\#}$

$T = 720^{\#}$

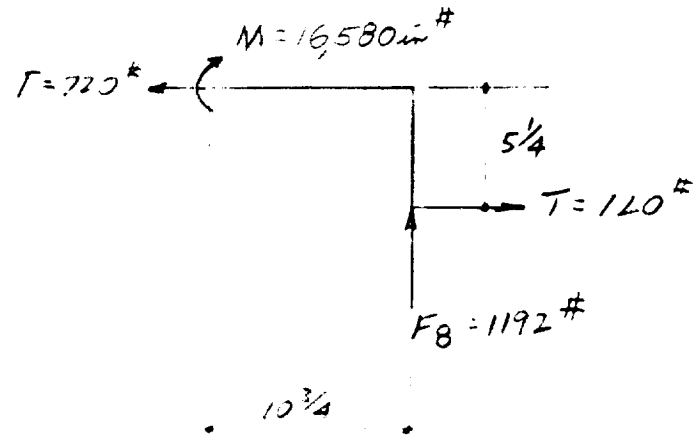

$\theta = 30°$

$T = \frac{M}{2} \cos\theta$

$T = \frac{16580}{2} \cos 30°$

$T = 7180 \text{ in}^{\#}$

$M' = \frac{M}{2} \sin\theta$

$M' = \frac{16580}{2} \sin 30°$

$M' = 4145 \text{ in}^{\#}$

$P_T = \frac{H_T}{2} \sin\theta$

$P_T = \frac{720}{2} \sin\theta$

$P_T = 180^{\#}$

$P_N = \frac{H_T}{2} \cos\theta$

$P_N = \frac{720}{2} \cos 30°$

$P_N = 234^{\#}$

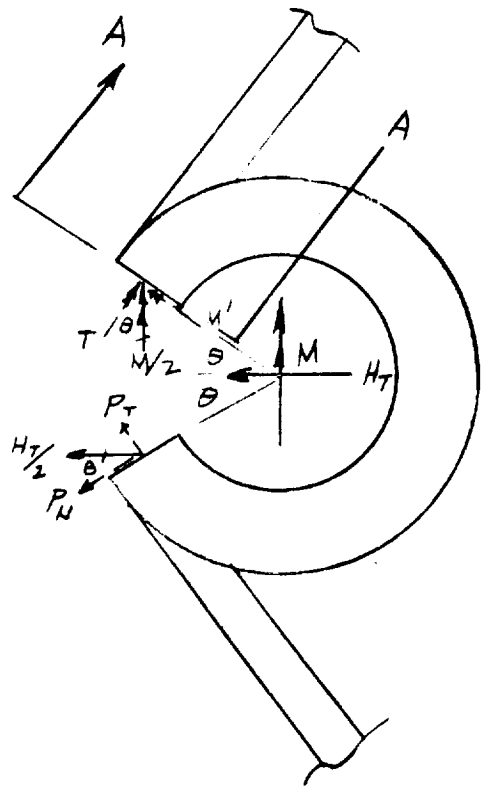

DRAWING OR JOB TITLE	DRAWING NO. OR ITEM
APPOLO ACCESS CHAMBER	LES COUPLER

UPPER GLIDE - J75M12548 - CONTINUED

MATERIAL : 6061-T6 ALUMINUM

PARENT MATERIAL		WELD AREA
$F_{tu} = 38{,}000$ psi.	MATERIAL LESS THAN 3/8" THICK 4043 WELD ROD USED	$F_{tu} = 24{,}000$ psi.
$F_{ty} = 35{,}000$ psi.		$F_{ty} = 20{,}000$ psi.
$F_{ry} = 20{,}000$ psi.		$F_{ry} = 12{,}000$ psi.
$F_{By} = 56{,}000$ psi.		$F_{By} = 30{,}000$ psi.

SECTION PROPERTIES

$A = 3.75 \text{ in.}^2$

$S_{ww} = 1.875 \text{ in.}^3$

$S_{zz} = 0.781 \text{ in.}^3$

$b/a = 2.4$

$\alpha = 0.256$ (TORSIONAL CONSTANT)

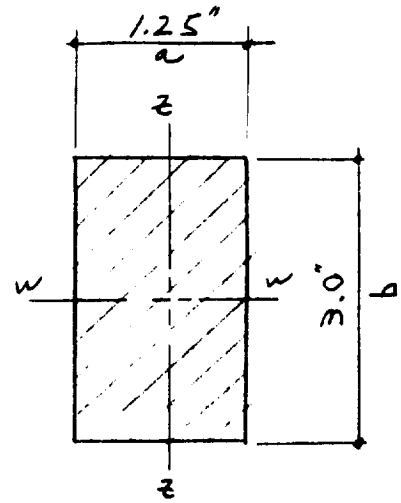

SECTION AA

PREPARED BY Eden
CHECKED BY
REVISED BY

PAGE
REPORT NO.
DATE 5/15/64

DRAWING OR JOB TITLE	DRAWING NO. OR ITEM
APPOLO ACCESS CHAMBER	LES COUPLER

UPPER GLIDE - J75M12548 - CONTINUED

STRESSES - CONTINUED

SECTION AA - CONTINUED

$$\sigma = \frac{M'}{S_W} + \frac{P_T}{A}$$

$M' = 4145 \text{ in}^{\#}$, $P_T = 180^{\#}$ } REF. PG. 412

$S_W = 0.781 \text{ in}^3$, $A = 3.75 \text{ in}^2$ } REF. PG. 413

$$\sigma = \frac{4145}{0.781} + \frac{180}{3.75}$$

(1) $\sigma = 5350$ psi.

$$r = \frac{T}{\alpha L a^2}$$

$T = 7180 \text{ in}^{\#}$

$\alpha = 0.256$, $a = 1.125 \text{ in.}$, $L = 3 \text{ in.}$ } REF. PG. 413

$$r = \frac{7180}{0.256 \times 1.125 \times (3)^2}$$

(2) $r = 2{,}770$ psi.

MARGIN OF SAFETY

(1) $M.S. = \frac{20{,}000}{5350} - 1$ ..... **+2.74**

(2) $M.S. = \frac{12{,}000}{2770} - 1$ ..... **+3.33**

PREPARED BY RLH
CHECKED BY
REVISED BY

PAGE 415
REPORT NO.
DATE 3-15-64

DRAWING OR JOB TITLE	DRAWING NO. OR ITEM
APOLLO ACCESS ARM - COMPLEX 34	LATCHBACK

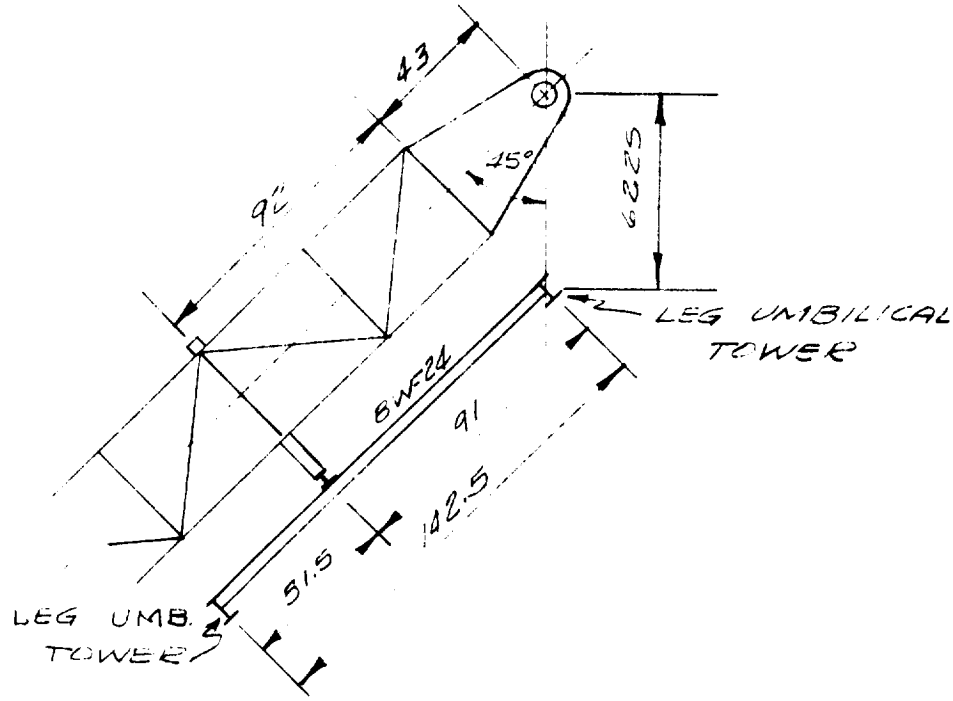

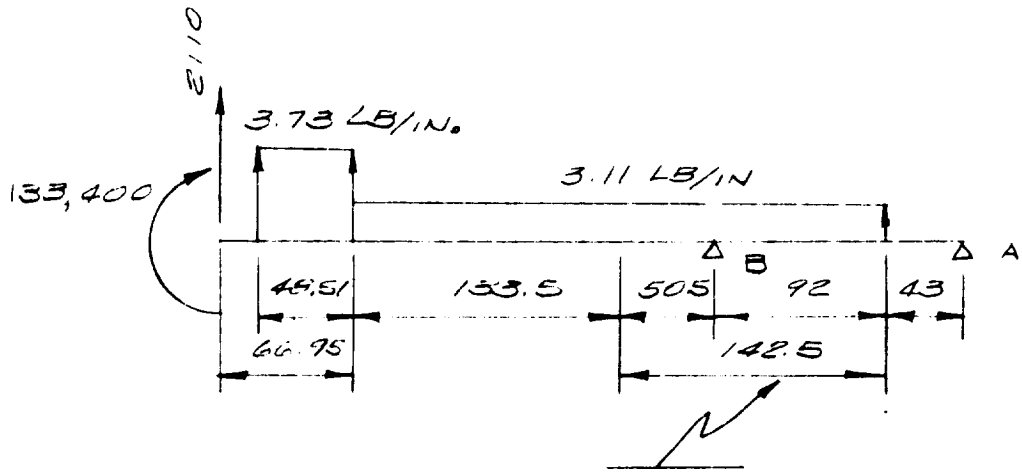

TOWER PROVIDES 50% SHIELDING IN THIS AREA.

R_B = 8440 LBS.

416

PREPARED BY XLH

CHECKED BY

REVISED BY

PAGE

REPORT NO.

DATE 3-19-64

DRAWING OR JOB TITLE	DRAWING NO. OR ITEM
APOLLO ACCESS ALL-COMPLEX 34	LATCHBACK

LOADS

MATL: ASTM A-7 STL

F_{ty} = 33,000 PSI.

F_{sy} = 19,800

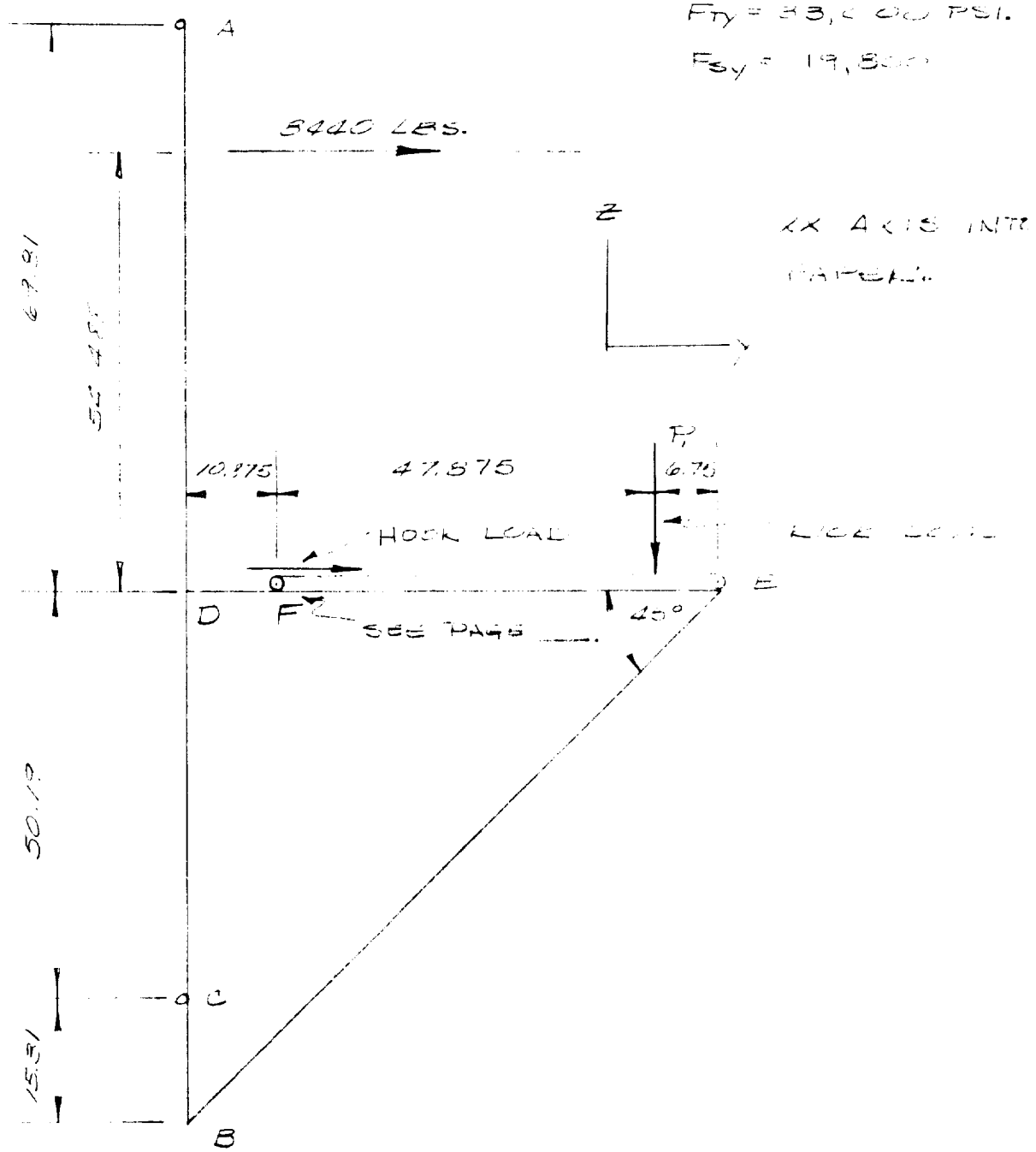

PREPARED BY RLH
CHECKED BY
REVISED BY

PAGE 417
REPORT NO.
DATE 3-13-64

DRAWING OR JOB TITLE	DRAWING NO. OR ITEM
APOLLO ACCESS ARM - COMPLEX 34	LATCHBACK

KICK LOAD

$$P_1 = \frac{54.488(8440)}{47.875}$$

$$= 9610 \text{ LBS.}$$

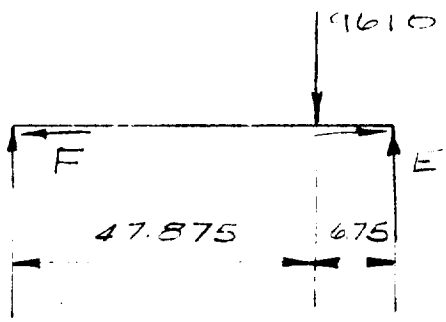

$$R_{E_V} = \frac{9610(47.875)}{54.625}$$

$$= 8430 \text{ LBS.}$$

$$R_{F_V} = 1180 \text{ LBS.}$$

DE = 8430 LBS. TENSION

$$BE = \frac{8430}{.707}$$

= 11,900 LBS. COMPRESSION

418

PREPARED BY RLH

CHECKED BY

REVISED BY

PAGE

REPORT NO.

DATE 3-13-64

DRAWING OR JOB TITLE	DRAWING NO. OR ITEM
APOLLO ACCESS ARM - COMPLEX 34	LATCHBACK

KICK LOAD

IN MOMENT [illegible]

6 WF [illegible]

$r = 1.5$

$L = 93.[illegible]$, $A = 5.[illegible]$

$L/r = \frac{93.[illegible]}{1.5}$

$= 61.[illegible]$

$\bar{\sigma}_{ALL.} = 1.6[illegible](16,0[illegible])$

$= 26,400$ PSI

$\sigma = \frac{11,[illegible]}{5.[illegible]}$

$= 2,020$ PSI.

$M.S. = \frac{26,400}{2,020} - 1 =$ + LARGE

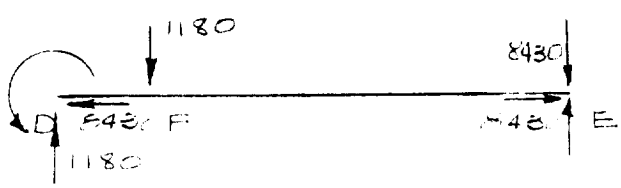

$M_{D_{xx}} = 1180(10.875)$

$= 12,800$ IN-LBS.

PREPARED BY ELH
CHECKED BY
REVISED BY

PAGE 419
REPORT NO.
DATE 3-13-64

DRAWING OR JOB TITLE	DRAWING NO. OR ITEM
APOLLO ACCESS ARM-COMPLEX 34	LATCHBACK

KICKLOAD

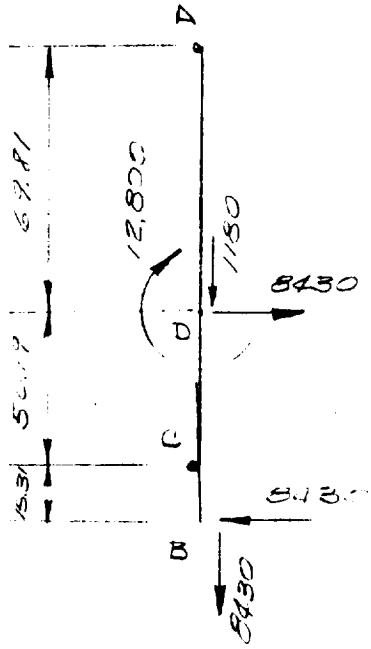

$120 R_{C_H} = 12,800 + 65.5(8430)$

$R_{C_H} = 4700$ LBS. ←

$R_{A_H} = 4700$ LBS. ←

$R_{C_V} = 8430$ LBS. ↑

$R_{A_V} = 1180$ LBS. ↑

$M_{D_{XX}} = 12,800 + 8430(65.5) - 4700(50.19)$

$= 328,800$ IN-LBS.

420

PREPARED BY RLH

CHECKED BY

REVISED BY

PAGE

REPORT NO.

DATE 3-11-64

DRAWING OR JOB TITLE	DRAWING NO. OR ITEM
APOLLO ACCESS ARM - CONTD. 34	LATCHHOOK

HOOK - D75M-06829

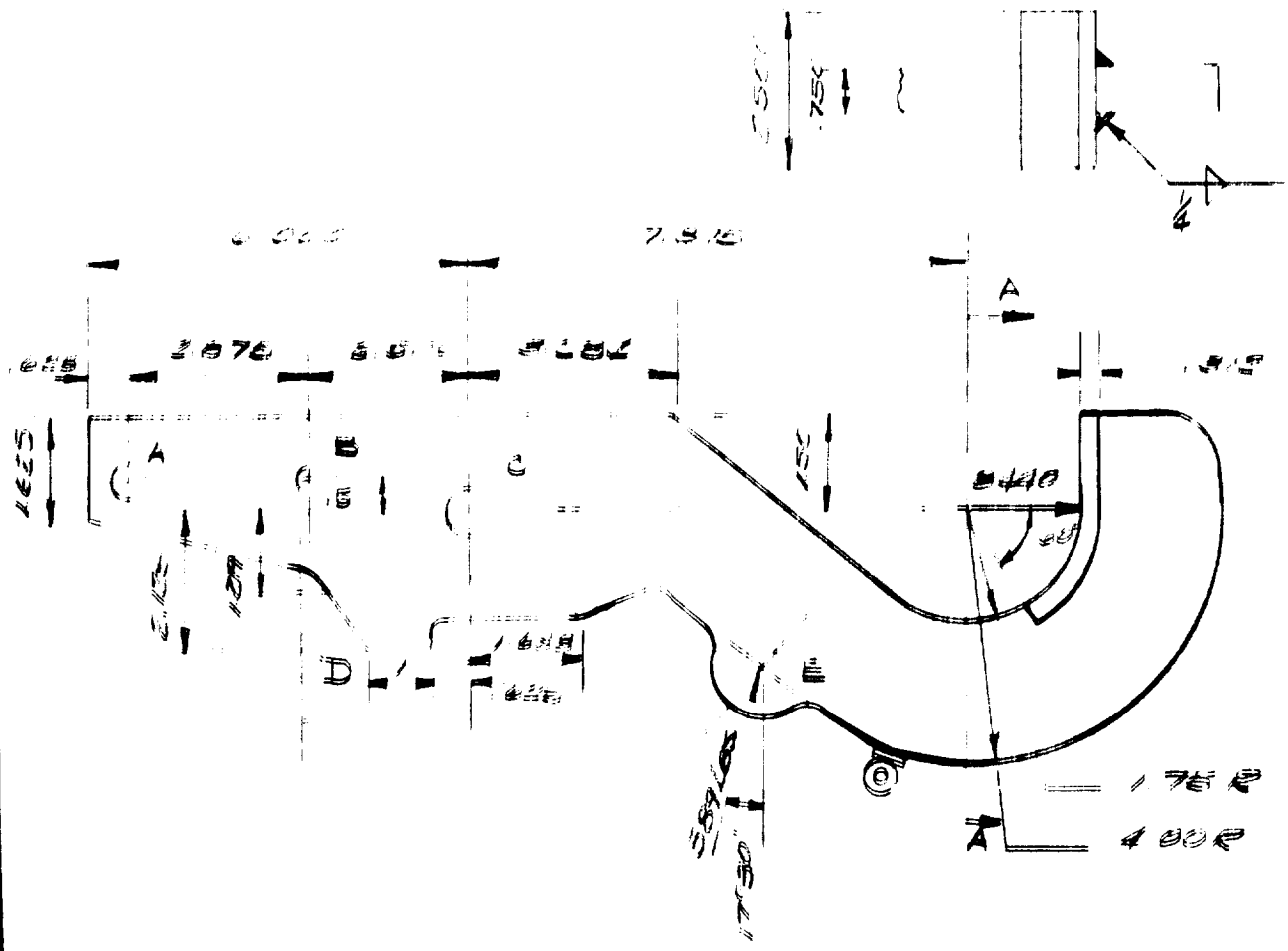

DRAWING OR JOB TITLE	DRAWING NO. OR ITEM
APOLLO ACCESS ARM - COMPLEX 34	LATCH BACK

HOOK CONT'D.

MATL: 4130 STL. N
F_{ty} = 70,000 PSI.
$h = 2.25$, $r = 2.875$,
$P = 8440$, $y = \pm 1.125$

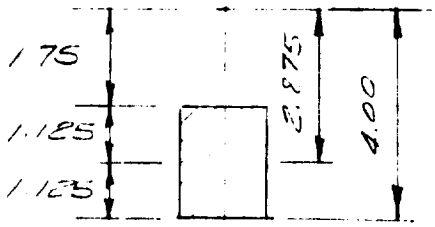

SEC. A-A

$$e = \frac{h^2}{12r}\left(1 + \frac{h^2}{15r^2}\right)$$

$$= \frac{(2.25)^2}{12(2.875)}\left[1 + \frac{(2.25)^2}{15(2.875)^2}\right]$$

$$= 0.153 \text{ IN.}$$

$$A = 0.75(2.25)$$

$$= 1.688 \text{ SQ. IN.}$$

$$T = \frac{P(r-e)(y-e)}{Ae(r-y)} \pm \frac{P}{A}$$

$$= \frac{8440(2.875-0.153)(1.125-0.153)}{1.688(.153)(2.875-1.125)} + \frac{8440}{1.688}$$

$$= 54,500 \text{ PSI.}$$

$$M.S. = \frac{70,000}{54,500} - 1 = \boxed{+0.28}$$

422

PREPARED BY RLH

CHECKED BY

REVISED BY

PAGE

REPORT NO.

DATE 3-11-64

DRAWING OR JOB TITLE	DRAWING NO. OR ITEM
APOLLO ACCESS ARM - COMPLEX 34	LATCHBACK

BENDING ON 7075-T6 TUBING.

$A_{BL} = 2.5\left(\frac{\pi t}{3}\right)$; $t = 1.125$ IN.

$= 4.51$ SQ. IN.

$\sigma_{BL} = \frac{2440}{4.51}$

$= 1540$ PSI., NEGLIGIBLE

MAXIMUM LOADS OCCUR AT PIVOT WHEN FULL WIND (75 MPH) IS BLOWING AND PISTON IS EXTENDING.

$C_V = 587 \cos 17.5$

$= 560$ LBS. ↑

$C_H = 8440 + 587 \sin 17.5$

$= 8617$ LBS. →

$C = 8617 + 560$

$= 8790$ LBS.

PREPARED BY RLH
CHECKED BY
REVISED BY

PAGE 423
REPORT NO.
DATE 3-11-64

DRAWING OR JOB TITLE	DRAWING NO. OR ITEM
APOLLO ACCESS ARM - COMPLEX 34	LATCHBACK

PIN C

MATL: 440C CRES. STL.

$F_{TY} = 65,000$

$F_{SY} = 39,000$

$F_{BRY} = 58,100$

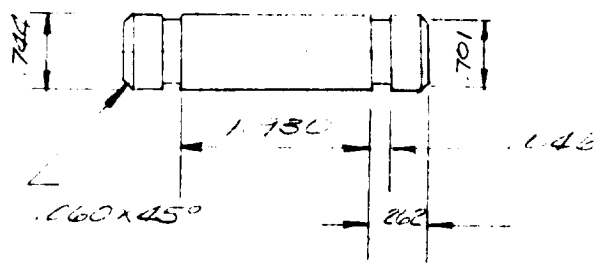

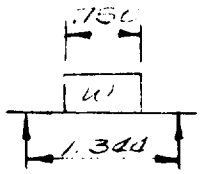

$$w = \frac{8790}{.750}$$

$$= 11,700 \text{ LB/IN.}$$

$$R = \frac{11,700(.750)}{2}$$

$$= 4395 \text{ LBS.}$$

$$M_{MAX} = 4395\left(\frac{1.344}{2}\right) - \frac{11,700(.375)^2}{2}$$

$$= 2133 \text{ IN-LBS.}$$

$$\tau = \frac{4}{3}\frac{V}{A}$$

$$= \frac{4(4395)}{3(.7854)(.744)^2}$$

$$= 13,500 \text{ PSI.}$$

$$M.S. = \frac{39,000}{13,500} - 1 = +1.89$$

424

PREPARED BY RLH

CHECKED BY

REVISED BY

PAGE

REPORT NO.

DATE 3-11-64

DRAWING OR JOB TITLE	DRAWING NO. OR ITEM
APOLLO ACCESS ARM - COMPLEX 34	LATCH BACK

PIN C CONT'D.

$$T = \frac{M}{S}$$

$$= \frac{2133}{.0982(.744)^3}$$

$$= 53,600 \text{ PSI}$$

$$M.S. = \frac{65,000}{53,600} - 1 = +0.21$$

CLEVIS PIN - C75M-06822

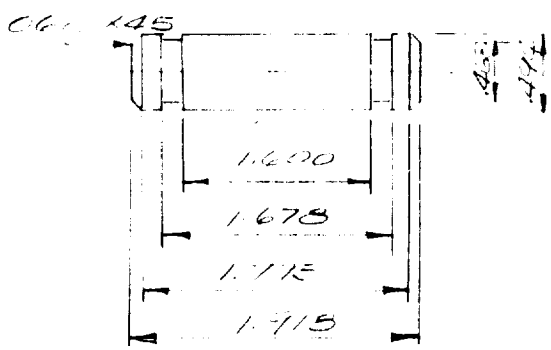

MATL: 303 CRES STL.

$F_{TY} = 35,000$ PSI

$F_{SY} = 21,000$

PISTON LOAD = 589 LB.

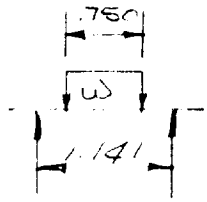

$$\frac{589}{.750}$$

$$= 785 \text{ LB/IN.}$$

$$R = \frac{785(.750)}{2}$$

$$= 294.5 \text{ LBS.}$$

$$M_{MAX} = \frac{294.5(1.141)}{2} - \frac{785(.750)^2}{8}$$

$$= 133 \text{ IN-LBS.}$$

PREPARED BY RLH
CHECKED BY
REVISED BY

PAGE 425
REPORT NO.
DATE 3-11-64

DRAWING OR JOB TITLE	DRAWING NO. OR ITEM
APOLLO ACCESS ARM - COMPLEX 34	LATCHBACK

CLEVIS PIN CONT'D

$$\tau = \frac{4V}{3A}$$

$$= \frac{4(294.5)}{3(.7854)(.494)^2}$$

$$= 2050 \text{ PSI.}$$

$$M.S. = \frac{21,000}{2,050} - 1 =$$ +LARGE

$$\sigma = \frac{M}{S}$$

$$= \frac{133}{.0982(.494)^3}$$

$$= 11,300 \text{ PSI.}$$

$$M.S. = \frac{35,000}{11,300} - 1 =$$ +2.10

426

PREPARED BY [illegible]

CHECKED BY

REVISED BY

PAGE

REPORT NO.

DATE 3-11-74

DRAWING OR JOB TITLE	DRAWING NO. OR ITEM
APOLLO ACCESS ARM-COMPLEX 34	LATCHBACK

CYLINDER CLEVIS 275M-[illegible]34

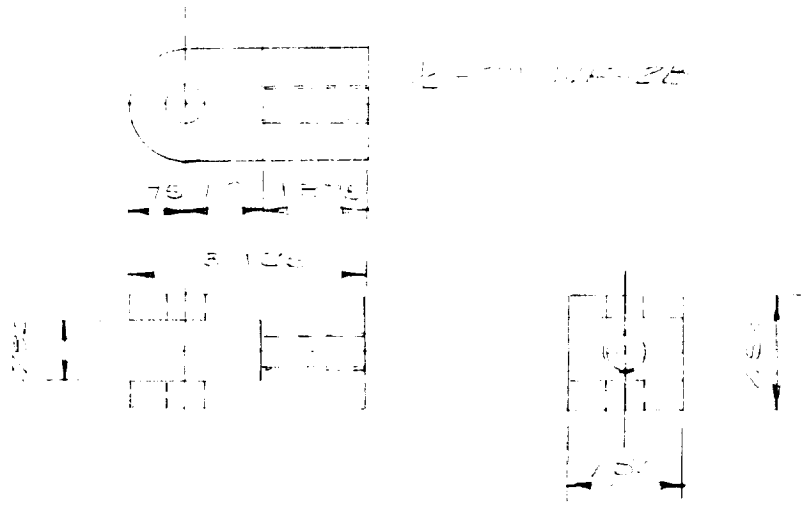

MATL: [illegible] STL.

F_{TY} = [illegible] PSI

F_{SY} = [illegible]

F_{BRY} = [illegible]

C = [illegible], D = [illegible], W = [illegible], t = [illegible]

C/D = 1.5, W/D = [illegible], D/t = [illegible]

K_{BR} = 1.5, K_T = [illegible]

σ_{BL} = 1.5 $\frac{[illegible]}{(2.5)(.359)}$

= [illegible] PSI, NEGLIGIBLE

σ_T = $\frac{[illegible]}{(.75)([illegible] - .5)(.359)}$

= 1092 PSI. NEGLIGIBLE

PREPARED BY RLH
CHECKED BY
REVISED BY

PAGE 427
REPORT NO.
DATE 3-11-64

DRAWING OR JOB TITLE	DRAWING NO. OR ITEM
APOLLO ACCESS ARM - COMPLEX 34	LATCHBACK

HOOK SUPPORT WELDMENT D75M06821

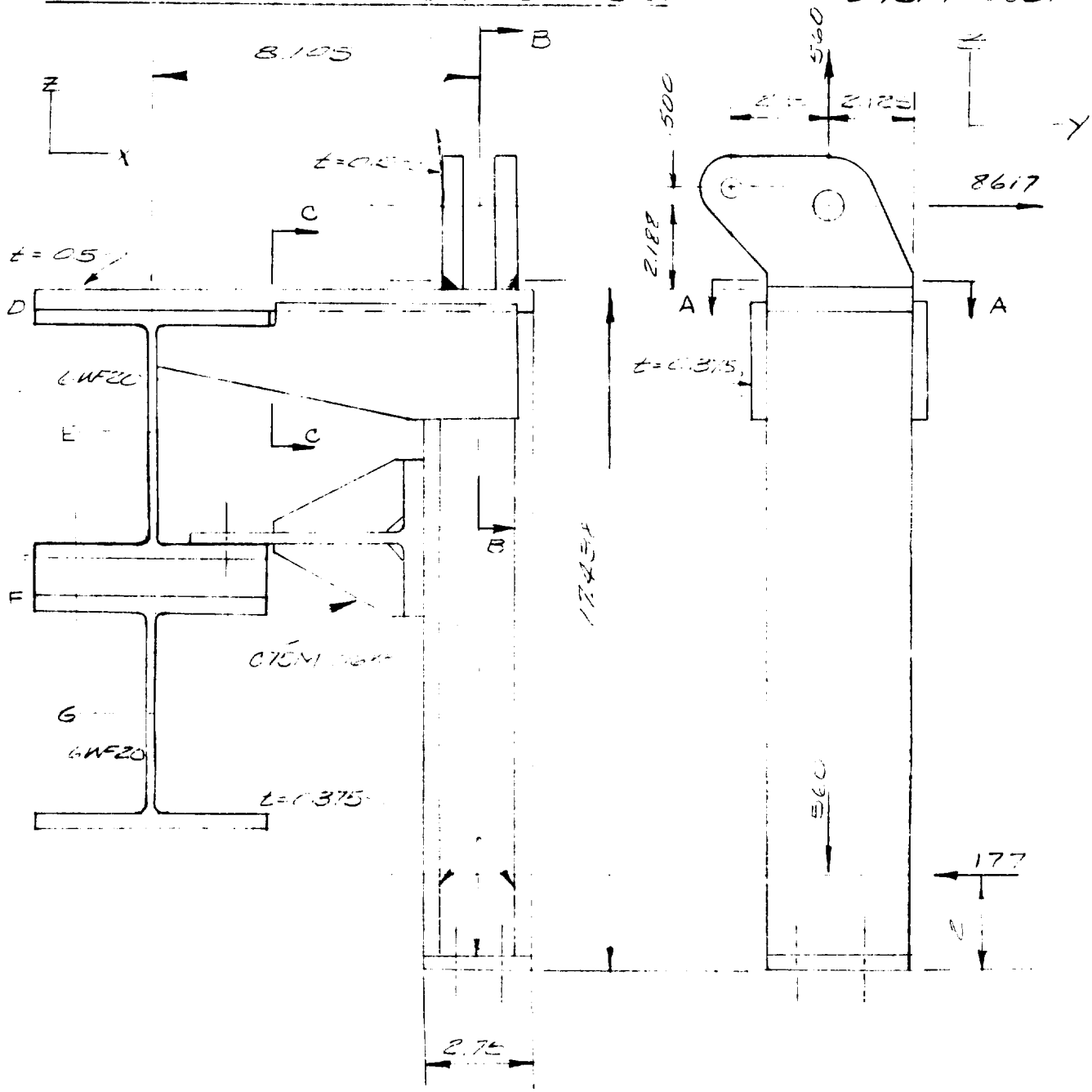

MATL: ASTM A-7 STEEL

F_{TY} = 33,000 PSI

F_{SY} = 19,500

428

PREPARED BY RCH

CHECKED BY

REVISED BY

PAGE

REPORT NO.

DATE 3-13-64

DRAWING OR JOB TITLE	DRAWING NO. OR ITEM
APOLLO ACCESS ARM - COMPLEX 34	LATCHBACK

HOOK SUPPORT WELDMENT

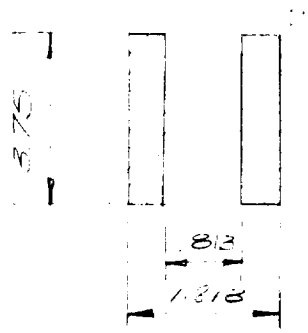

SEC. A-A

$$S = \frac{bh^2}{6}$$

$$= \frac{.5\,(3.75)^2}{6}$$

$$= 2.34 \quad IN^3$$

$$M = 2417\,(2.188 + 2.25) + 3[illegible]\,(2.[illegible] - 1.875)$$

$$= 21,240 \quad IN\text{-}LBS.$$

$$\sigma = \frac{M}{S}$$

$$= \frac{21,240}{2.34}$$

$$= 9,090 \quad PSI$$

$$M.S. = \frac{53,000}{9,090} - 1 = \quad \boxed{+2.63}$$

DRAWING OR JOB TITLE	DRAWING NO. OR ITEM
APOLLO ACCESS ARM - COMPLEX 34	LATCHBACK

HOOK SUPPORT WELDMENT CONT'D.

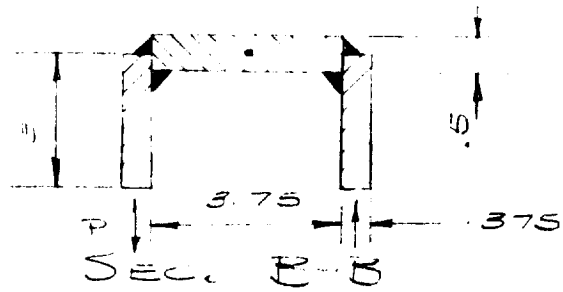

ALL WELDS 1/4 IN.

$$M_{xx} = 5,617(2.156+0.25) + 177(15.438-0.25)$$

$$= 23,790 \text{ IN-LBS.}$$

$$P = \frac{23,790}{4.125}$$

$$= 5,760 \text{ LBS.}$$

$$\tau = \frac{3}{2}\frac{V}{A}$$

$$= \frac{3(5760)}{2(3)(.375)}$$

$$= 7,690 \text{ PSI.}$$

$$M.S. = \frac{19,800}{7,690} - 1 = +1.58$$

430

PREPARED BY RLH

CHECKED BY

REVISED BY

PAGE

REPORT NO.

DATE 3-12-64

DRAWING OR JOB TITLE	DRAWING NO. OR ITEM
APOLLO ACCESS ARM - COMPLEX 34	SATCHBACK

HOOK SUPPORT WELDMENT CONT'D.

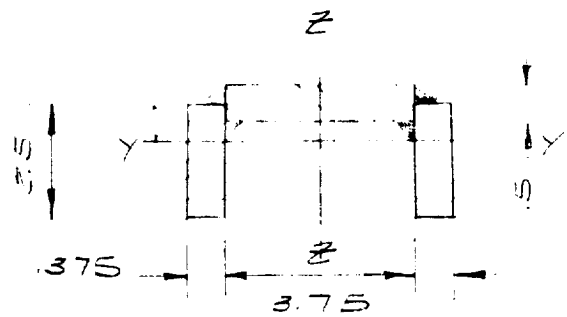

SEC. C-C.

$$I_{zz} = \frac{.5(3.75)^3}{12} + 2\frac{2.5(.375)^3}{12} + 2(.375)(2.5)(2.25)^2$$

$$= 11.702 \text{ IN}^4$$

$$M_{zz} = (8,617 - 177)(8.105 - 3.0[illegible])$$

$$= 43,000 \text{ IN-LBS}$$

$$\sigma = \frac{Mc}{I}$$

$$= \frac{43,000(1.875 + .375)}{11.702}$$

$$= 8,2[illegible] \text{ PSI.}$$

$$M.S. = \frac{33,000}{8260} - 1 = \quad +2.99$$

PREPARED BY RLH
CHECKED BY
REVISED BY

PAGE 431
REPORT NO.
DATE 3-12-64

DRAWING OR JOB TITLE	DRAWING NO. OR ITEM
APOLLO ACCESS ARM - COMPLEX 34	LATCHBACK

HOOK SUPPORT WELDMENT CONT'D.

AT SEC. C-C

P DUE TO V_{XX} = 5,760 LBS, REF. PAGE ____.

$$\tau = \frac{3}{2}\frac{V}{A}$$

$$= \frac{3(5760)}{2(.25)(.375)}$$

$$= 9,210 \text{ PSI.}$$

$$M.S. = \frac{19,800}{9,210} - 1 = \quad \boxed{+1.15}$$

IN 0.5 INCH PL.

$$\tau = \frac{3V}{2A}$$

$$= \frac{3(8440)}{2(.5)3.75}$$

$$= 6,750 \text{ PSI.}$$

$$M.S. = \frac{19,800}{6750} - 1 = \quad \boxed{+1.94}$$

432

PREPARED BY RLH

CHECKED BY

REVISED BY

PAGE

REPORT NO.

DATE 3-13-64

DRAWING OR JOB TITLE	DRAWING NO. OR ITEM
APOLLO ACCESS ARM - COMPLEX 34	LATCHBACK

BOLT PATTERN AT SURFACE F IN DE.

(REF. PAGE ____)

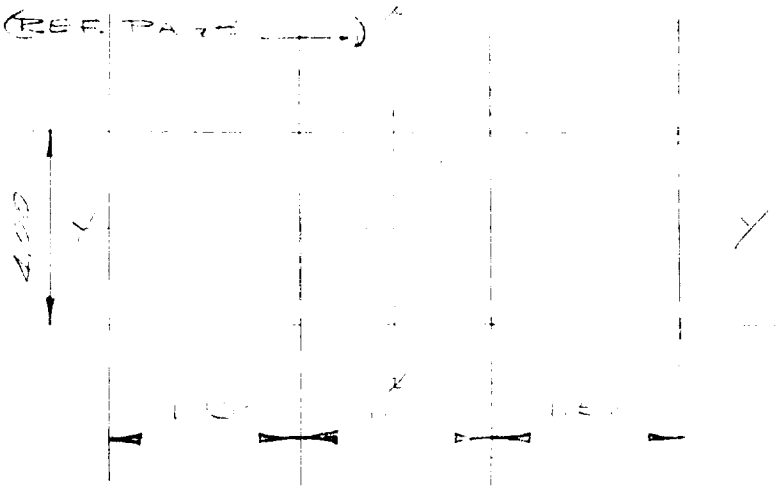

8 MS 353.5 BOLTS

½ INCH DIA.

F_{TY} = 132,000

F_{SY} = 61,800

A = 0.1964

P_Y = 8440 LBS →

M_{XX} = 8440 (9.88)

= 83,400 IN-LBS ↑

M_{ZZ} = 8440 (8.105)

= 68,400 IN-LB. CCW.

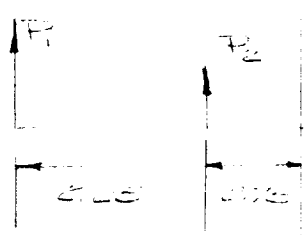

$2.25 P_1 + 0.75 P_2 = \frac{83,400}{2}$

$P_1 = 3 P_2$

P_2 = 2,780 LBS/BOLT

P_1 = 8,340 LBS/BOLT.

DRAWING OR JOB TITLE	DRAWING NO. OR ITEM
APOLLO ACCESS ARM - COMPLEX 34	LATCHBACK

BOLTS

$$\sigma_T = \frac{8340}{0.1964}$$

$$= 42,400 \text{ PSI.}$$

$$K_T = \frac{42,400}{132,000}$$

$$= .321$$

$$P_{Y_T} = P_{Y_1} + P_{Y_2}$$

$$= \frac{M_{zz}\, x}{\Sigma(x^2 + y^2)} - \frac{F_Y}{8}$$

$$= \frac{68400\,(2)}{8(2)^2 + 4(0.75)^2 + 4(2.25)^2} - \frac{8440}{8}$$

$$= 1455 \text{ LBS.} \leftarrow$$

$$P_X = \frac{M_{zz}\, Y}{\Sigma(X^2 + Y^2)}$$

$$= \frac{68,400\,(2.25)}{54.488}$$

$$= 2800 \text{ LBS.} \uparrow$$

$$T = \frac{1455 + 2800}{.1964}$$

$$= 16,050 \text{ PSI.}$$

434

PREPARED BY RLH

CHECKED BY

REVISED BY

PAGE

REPORT NO.

DATE 3-16-64

DRAWING OR JOB TITLE	DRAWING NO. OR ITEM
APOLLO ACCESS ARM - [illegible] 34	LATCHHACK

BOLTS

$\lambda_s = \frac{[illegible]}{[illegible]}$

$= 0.26$

WITH $\lambda_t = .801$ AND $\lambda_s = .[illegible]$, FROM

BOLT INTERACTION CURVES $R_t = .[illegible]$, $R_s = .67$

$M.S. = \frac{R_s}{R_s} - 1$

$= \frac{.67}{.26} - 1 =$ | $+1.58$

BEARING IN GWFCC IS NEGLIGIBLE.

DRAWING OR JOB TITLE	DRAWING NO. OR ITEM
APOLLO ACCESS ARM - COMPLEX 34	LATCHBACK

AT D (IN MEMBER AB)

TOTAL LOADS = KICK LOAD + HOOK LOAD

KICK LOAD (REF PAGE ___.)

$P_x = 0$

$P_y = 8430$ LBS. →

$P_z = 1180$ LBS. ↓

$M_{Dxx} = 325,800$ IN-LBS.

HOOK LOAD.

$P_y = 8440$ LBS →

$M_{Dxx} = 8440\,(12.988)$

$= 109,600$ IN-LBS.

$M_{zz} = 8440\,(8.105)$

$= 67,400$ IN-LBS

TOTALS

$P_y = 16,870$ LBS.

$P_z = 1180$ LBS

$M_{xx} = 438,000$ IN-LBS.

$M_{zz} = 67,400$ IN-LBS.

436

PREPARED BY [illegible]
CHECKED BY
REVISED BY

PAGE
REPORT NO.
DATE 3-16-[illegible]

DRAWING OR JOB TITLE	DRAWING NO. OR ITEM
APOLLO ACCESS ARM-COMPLEX 34	LATCHBACK

A. D.,

[illegible]

[illegible]

[illegible]

SHEAR;

IN WEB,

$\eta = \frac{S}{C} \frac{V}{A}$

$= \frac{3(6,870)}{2(.255)(0.2)}$

$= 15,800$ PSI

$M.S. = \frac{17,800}{15,800} - 1 =$ + 0.25

DRAWING OR JOB TITLE	DRAWING NO. OR ITEM
APOLLO ACCESS ARM - COMPLEX 34	LATCHBACK

AT D,

SHEAR IN FLANGES,

$$P = \frac{67,400}{5.833}$$

$$= 11,700 \text{ LBS.}$$

$$\tau = \frac{3}{2}\frac{V}{A}$$

$$= \frac{3(11,700)}{2(6.010)(.367)}$$

$$= 7950 \text{ PSI.}$$

$$M.S. = \frac{19,800}{7,950} - 1 = \quad \boxed{+1.49}$$

$$\sigma_T = \frac{M_{xx}}{S_{xx}} \pm \frac{P_z}{A}$$

$$= \frac{438,000}{13.4} + \frac{1180}{5.9}$$

$$= 32600 + 200$$

$$= 32,800 \text{ PSI.}$$

$$M.S. = \frac{33,000}{32,800} - 1 = \quad \boxed{+0.01}$$

438

PREPARED BY RLH

CHECKED BY

REVISED BY

PAGE

REPORT NO.

DATE 3-17-64

DRAWING OR JOB TITLE	DRAWING NO. OR ITEM
APOLLO ACCESS ARM - COMPLEX 34	LATCHBACK

MEMBER AB

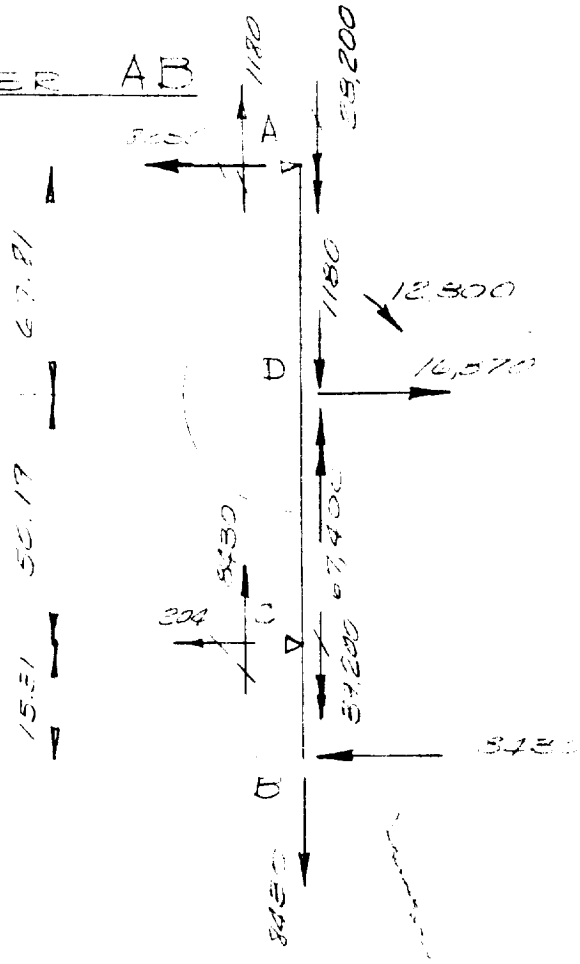

$T_1 = \frac{L_2}{L_1} T_2$

$= \frac{50.19}{67.81} T_2 = 0.719\, T_2$

$T_1 + T_2 = 67,400$

$T_1 = 28,200$ IN-LBS, $T_2 = 39,200$ IN-LBS.

$\Sigma M_A = 0;$

$16,870(67.81) - 135.31(8430) - 12,800 - 120\, C_H = 0$

$C_H = 304$ LBS. ←

$\Sigma M_C = 0$

$15.31(8430) + 12,800 + 16,870(50.19) - 120\, A_H = 0$

$A_H = 8250$ LBS. ←

PREPARED BY RHH
CHECKED BY
REVISED BY

PAGE 439
REPORT NO.
DATE 3-17-64

DRAWING OR JOB TITLE	DRAWING NO. OR ITEM
APOLLO ACCESS ARM - COMPLEX 34	LATCHBACK

BRACKET, SUPPORT ASSEMBLY

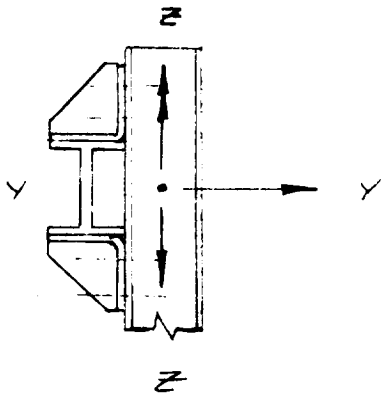

JOINT A

X-X AXIS INTO PAPER.

P_Y = 8250 LBS.

P_Z = 1180 LBS.

M_{ZZ} = 28,000 IN-LBS.

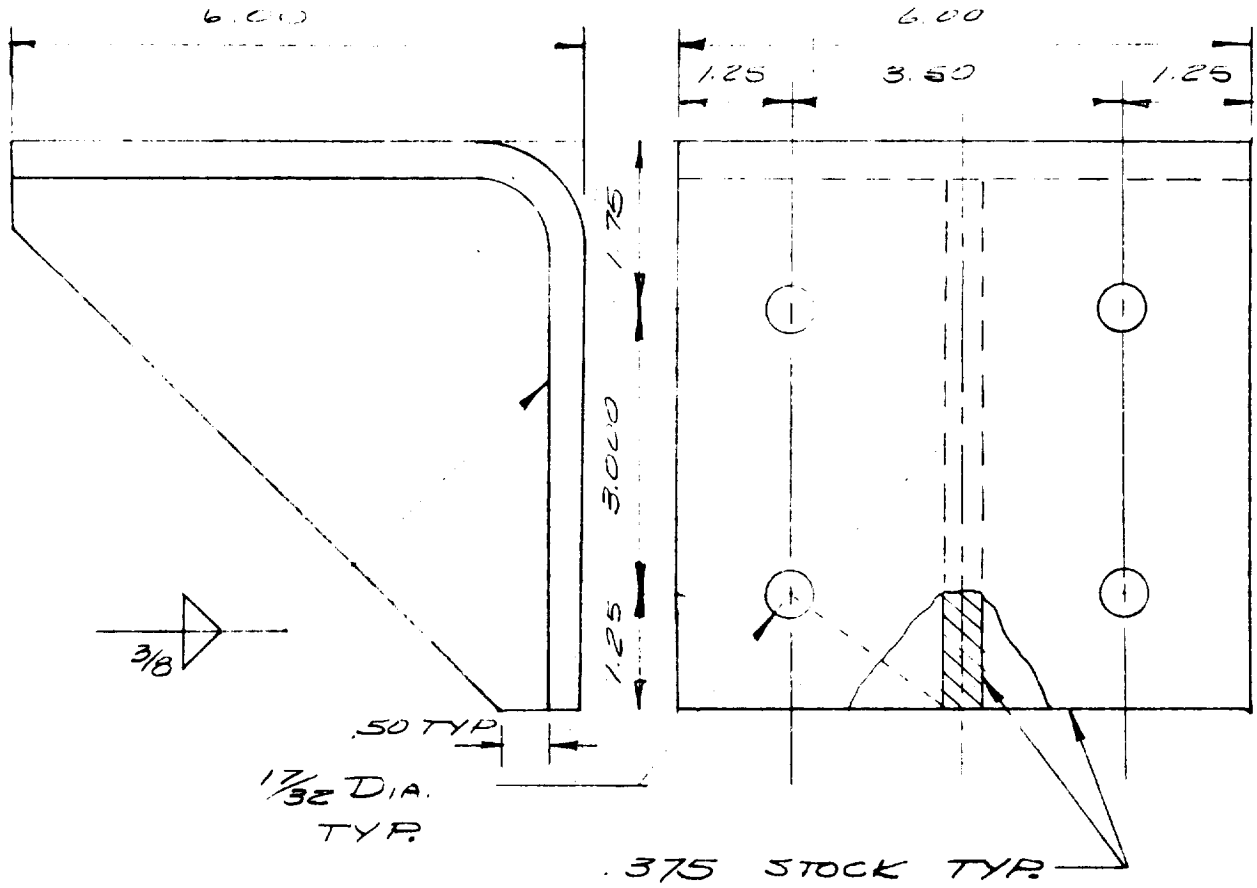

PREPARED BY KLH
CHECKED BY
REVISED BY

PAGE
REPORT NO.
DATE 3-17-64

DRAWING OR JOB TITLE	DRAWING NO. OR ITEM
APOLLO ACCESS ARM - COMPLEX 34	LATCHBACK

BRACKET, SUPPORT ASSEMBLY AT A

BOLTS: 5 MS 8[illegible]
1/2 INCH DIAMETER
F_{ty} = 180,000 PSI
F_{sy} = [illegible] PSI

TENSION

$$P = \frac{1}{3}(8250) + \frac{1}{4}\left(\frac{[illegible]}{3.5[illegible]}\right)$$

= 3045 LBS.

$$T = \frac{P}{A}$$

$$= \frac{3045}{(.785)(.5)^2}$$

= 15,500 PSI.

$$R_T = \frac{T}{F_{ty}}$$

$$= \frac{15,500}{180,000}$$

= .117

$$\tau = \frac{P}{A}$$

$$= \frac{[illegible]}{5(.785)(.5)^2}$$

= 754 PSI.

$$R_s = \frac{\tau}{F_{sy}} = \frac{754}{69,000} = .0109$$

$$M.S. = \frac{1}{.0109} - 1 =$$

+LARGE

PREPARED BY RLH
CHECKED BY
REVISED BY

PAGE 441
REPORT NO.
DATE 3-17-64

DRAWING OR JOB TITLE	DRAWING NO. OR ITEM
APOLLO ACCESS ARM - COMPLEX 34	LATCHBACK

BRACKET, SUPPORT ASSEMBLY AT C.

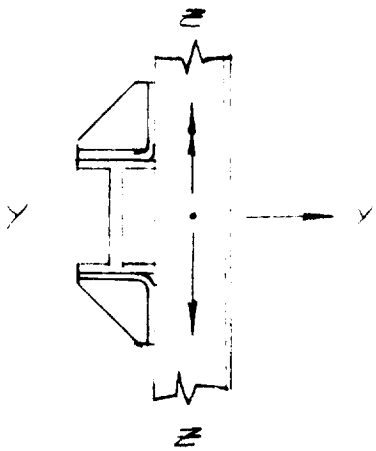

X-X AXIS INTO TAPER

$P_y = 204$ LBS.

$P_z = 5430$ LBS.

$M_{zz} = 39,200$ LBS.

JOINT C

$$P_T = \frac{1}{8}\left(204 + \frac{39,200}{3.50}\right)$$

$= 1425$ LBS., NEGLIGIBLE

$$\tau = \frac{P}{A}$$

$$= \frac{1430}{\pi(.7554)(.5)^2}$$

$= 5360$ PSI., NEGLIGIBLE

442

PREPARED BY RLH

CHECKED BY

REVISED BY

PAGE

REPORT NO.

DATE 4-3-64

DRAWING OR JOB TITLE	DRAWING NO. OR ITEM
APOLLO ACCESS ARM – COMPLEX 37	LATCH BACK

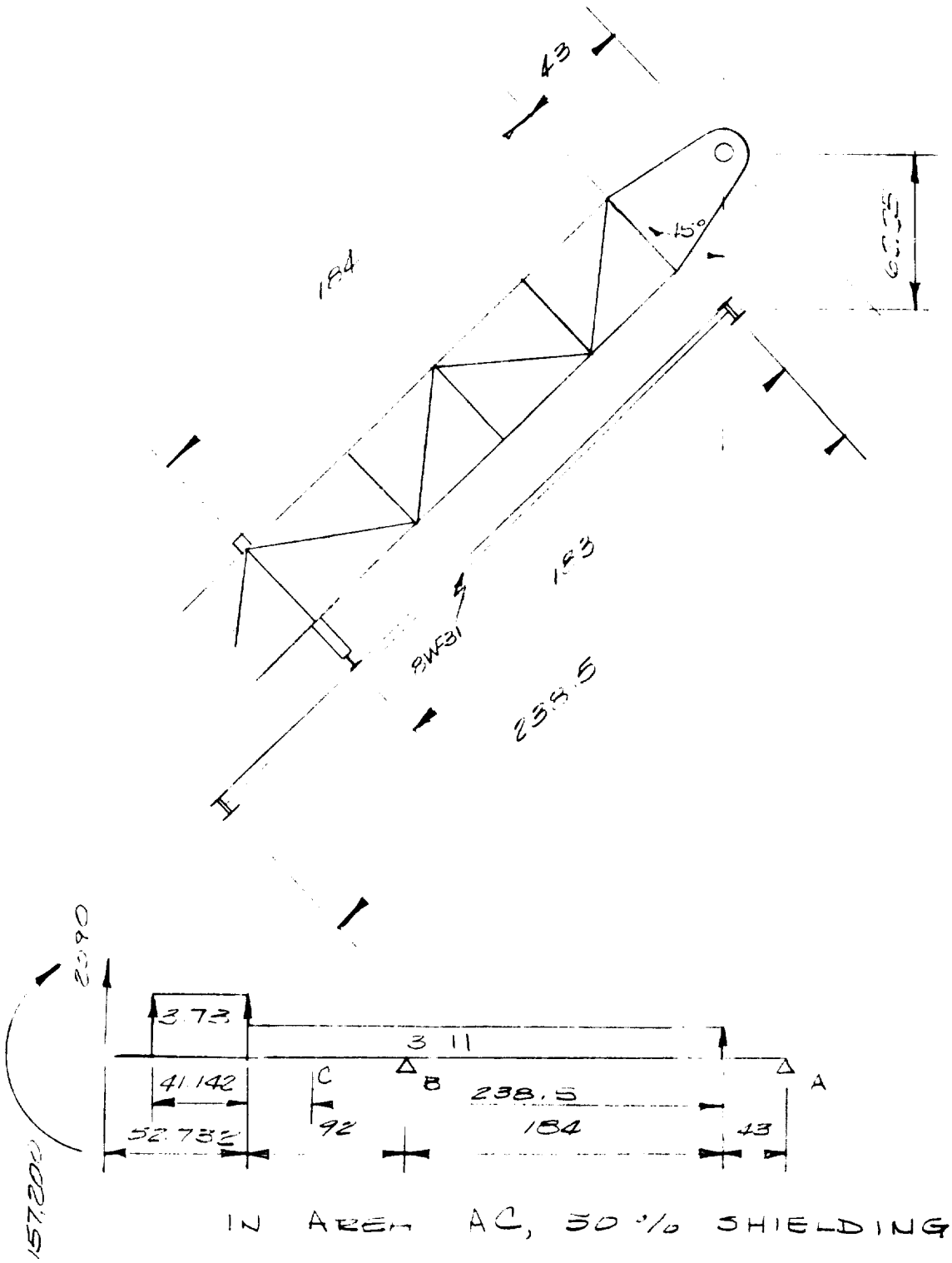

IN AREA AC, 50 % SHIELDING.

R_B = 4760 LBS.

PREPARED BY RLH
CHECKED BY
REVISED BY

PAGE 443
REPORT NO.
DATE 4-9-64

DRAWING OR JOB TITLE	DRAWING NO. OR ITEM
APOLLO ACCESS ARM - COMPLEX 37	LATCHBACK

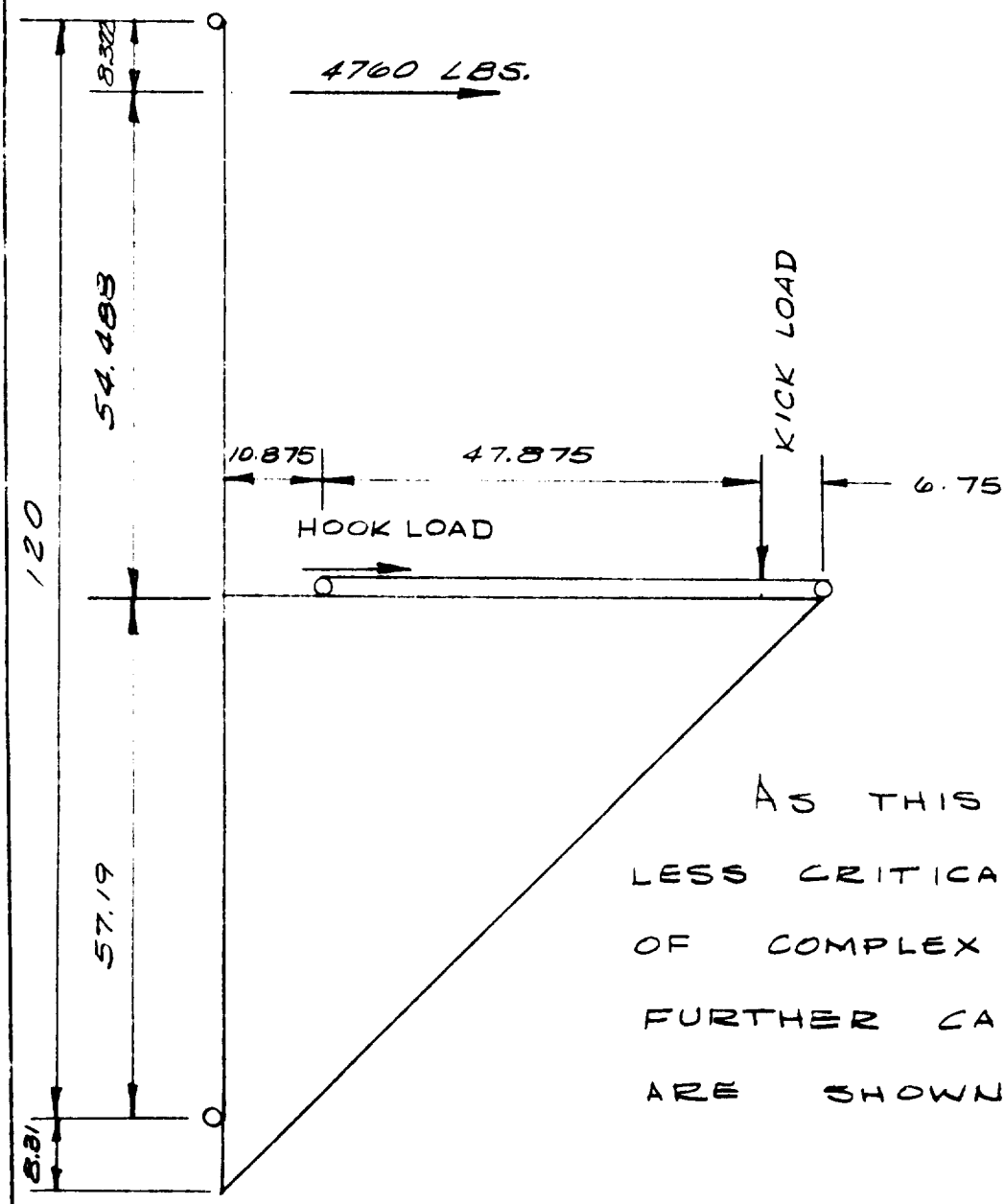

AS THIS SYSTEM IS LESS CRITICAL THAN THAT OF COMPLEX 34, NO FURTHER CALCULATIONS ARE SHOWN FOR 37.