OPTICAL TECHNOLOGY
APOLLO EXTENSION SYSTEM

(NAS 8-20256)

Final Report

PART I PRESENTATION

TO

MSFC

September 27, 1966

FACILITY FORM 602

N67-37575
(ACCESSION NUMBER)

113
(PAGES)

CR-88704
(NASA CR OR TMX OR AD NUMBER)

(THRU)

1
(CODE)

31
(CATEGORY)

SPACE DIVISION CHRYSLER CORPORATION

OTAES PHASE I PRESENTATION AGENDA

Time	Description	Speaker	Chart Page Numbers
1:00 to 1:25	OTAES Program OTAES Objective Historical Example of Technology Development	W. W. Kloepfer	1 thru 13
1:25 to 1:40	Sylvania Experiments Description Justification	W. R. Young	51 thru 60
1:40 to 1:45	Questions and Answers		
1:45 to 2:00	Kollsman Experiments Description Justification	J. Trocchia	61 thru 72
2:00 to 2:05	Questions and Answers		
2:05 to 2:20	Chrysler Experiments Description Justification	M. L. Scott	25 thru 41
2:20 to 2:25	Questions and Answers		
2:25 to 2:45	Coffee Break		
2:45 to 3:00	Experiment Integration	M. L. Scott	42 thru 50
3:00 to 3:05	Questions and Answers		
3:05 to 3:20	OTAES Spacecraft Configuration and Subsystem Concepts	G. Hempfling	73 thru 89
3:20 to 3:25	Questions and Answers		
3:25 to 3:40	OTAES Technology Development	P. Vrzal	14 thru 24
3:40 to 3:45	Questions and Answers		
3:45 to 4:00	OTAES Phase I Recommendations	W. W. Kloepfer	90 thru 112

PROGRAM PHILOSOPHY

OTAES IS DEVELOPING A LOGICAL ORGANIZED OPTICAL TECHNOLOGY DEVELOPMENT PLAN.

SPACE EXPERIMENTS ARE MERELY ONE PHASE OF THIS PLAN.

THEIR OBJECTIVE IS TO GAIN MAXIMUM POSSIBLE TECHNOLOGICAL INFORMATION.

OTAES PROGRAM GOAL IS TO PROVIDE NASA WITH FEASIBLE AND TIMELY ALTERNATIVES FOR DEVELOPING THE SPACE OPTICS REQUIRED TO MEET FUTURE NATIONAL SPACE GOALS.

OTAES EXPLOITS THE ECONOMIES OFFERED BY THE COMMONALITIES IN THE SPACE OPTICAL TECHNOLOGY REQUIRED FOR VARIOUS APPLICATIONS.

OTAES IS THE RECOGNITION OF:

THE VALUE AND NEED FOR ACQUIRING SCIENTIFIC DATA IN THE FUTURE NATIONAL SPACE PROGRAM THROUGH THE TOOLS OF SPACE OPTICS.

THE NECESSITY OF HAVING THE SPACE OPTICAL TECHNOLOGY AVAILABLE WHEN IT IS NEEDED.

THE NEED FOR HIGH RELIABILITY IN SPACE APPLICATIONS INVOLVING OPTICAL SYSTEMS.

THE COMPLEXITY OF THE OPTICAL TECHNOLOGY REQUIREMENTS OF THE FUTURE.

THE INADEQUACY OF PRESENT STATE-OF-THE-ART TO ACCOMPLISH FUTURE SPACE GOALS.

THE NEED FOR AN INTERMEDIATE STEP OF SPACE TESTING PRIOR TO UNDERTAKING THE AMBITIOUS SPACE GOALS OF THE FUTURE.

THE FEASIBILITY OF DEVELOPING SPACE EXPERIMENTS WHICH WILL BRIDGE THIS GAP IN SPACE OPTICAL TECHNOLOGY.

THE ECONOMIC SAVING TO THE FUTURE SPACE PROGRAMS THROUGH EXPLOITATION OF THE COMMONALITY INHERERENT IN THE OPTICAL TECHNOLOGY REQUIRED BY VARIOUS APPLICATION INTERESTS.

SPACE OPTICAL TECHNOLOGY DEVELOPMENT

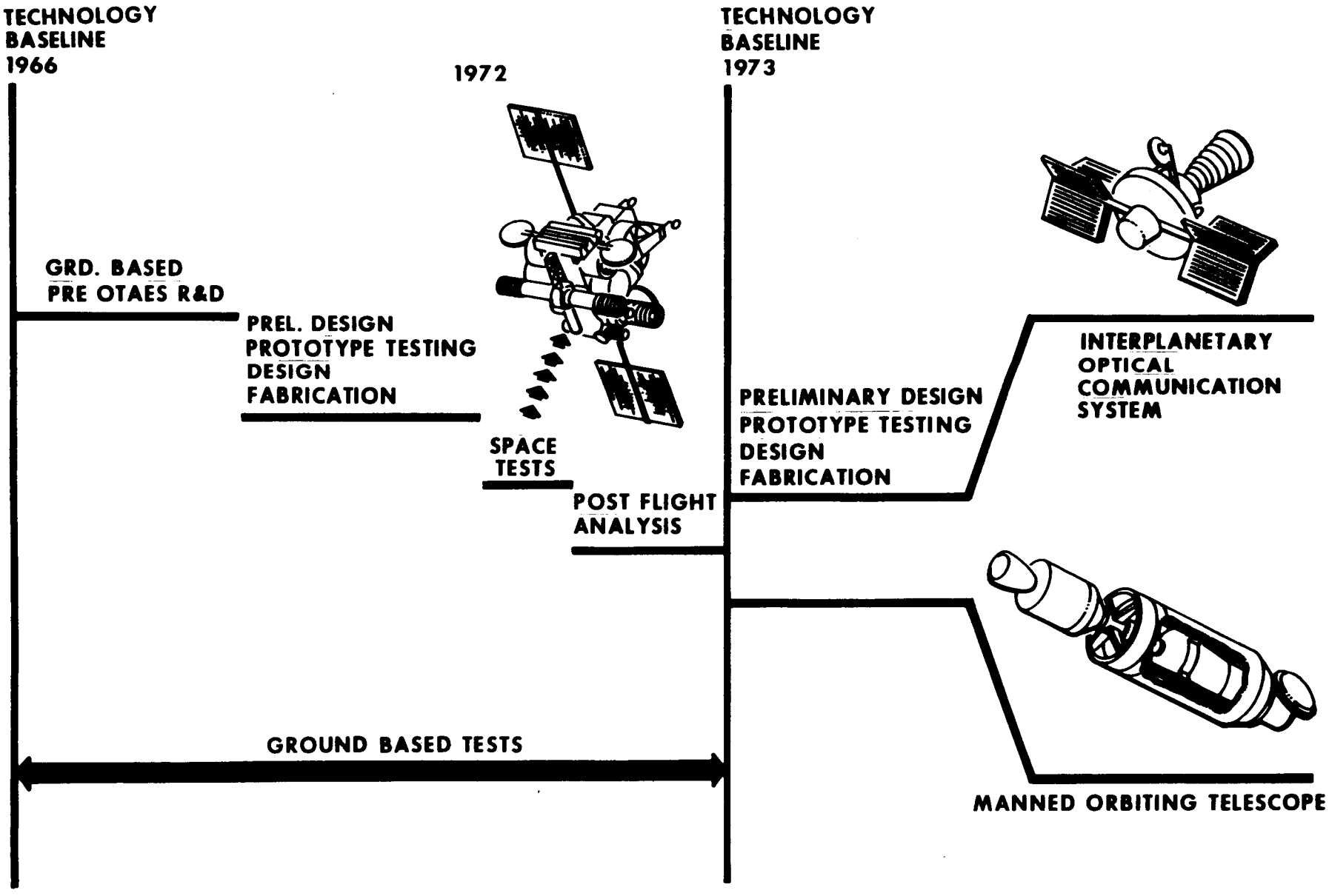

DEVELOPMENT OF THE SPACE SPECTROGRAPH FOR SOLAR SPECTROSCOPY

TECHNOLOGY ADVANCE		SCIENTIFIC GAIN
	1820	
DAGUERREOTYPE PLATE		DISCOVER UV SOLAR SPECTRUM (1801)
NARROW SLIT USED IN FRONT OF PRISM	1860	FIRST PRACTICAL SPECTROSCOPE
FIRST USE OF QUARTZ INSTEAD OF GLASS		OBSERVED LINES DOWN TO 1830A (1862)
ROWLAND INVENTED CONCAVE DIFFRACTION GRATING		SUPERIOR SPECTRUM OF SUN (1882)
SCHUMANN CONSTRUCTED FIRST VACUUM SPECTROGRAPH (FLUORIDE OPTICS, SCHUMANN PLATE)		OZONE ABSORPTION OF UV (1889)
USE OF ROWLANDS CONCAVE GRATING	1900	DISCOVERED SPECTRUM BELOW 500A (1904)
		ATMOSPHERE ABSORPTION OF UV PROVED (1913)
	?	UNSUCCESSFUL EXPEDITION OF MT. WHITNEY FOR SOLAR SPECTROSCOPY (INSUFFICIENT ALTITUDE)
CONSTRUCTED SPECIAL SPECTROGRAPHS FOR BALOON USE	1940	UNSUCCESSFUL BALLOON BORNE SOLAR SPECTROSCOPY (INSUFFICIENT ALTITUDE) (1934)
DOUBLE-DISPERSING AND CIBR FILTER TO SUPPRESS STRAY LIGHT		OBSERVED SPECTRUM DOWN TO 2869A (1941)
CONSTRUCTED SPECIAL SPECTROGRAPH FOR ROCKET USE		UNSUCCESSFUL ATTEMPT TO GAIN RIDE FOR SOLAR SPECTROGRAPH (1943)
	1945	
40 CM RADIUS 600 LINE DIFFRACTION GRATING IN V-2 NOSECONE		UNSUCCESSFUL ROCKET-BORNE SOLAR SPECTROGRAPH (NO RECOVERY) (1946)
40 CM RADIUS 600 LINE DIFFRACTION GRATING IN V-2 TAIL		FIRST ROCKET BORNE SPECTROGRAPH EXTENDS SPECTRUM TO 2300A (1946)
RAPID EXPOSURE PHOTOGRAPHIC PHOTOMETRY	1950	OZONE OF UPPER ATMOSPHERE MEASURED (1949)
		SPECTRUM QUALITY IMPROVED DOWN TO 2000A (1947 - 1953)
GRAZING INCIDENCE GRATING GUIDED WITH POINTING CONTROL		LYMAN ALPHA LINE OF HYDROGEN PHOTOGRAPHED (1952)
USE OF BIAXIAL POINTING	1955	FIRST SPECTRUM NEAR LYMAN ALPHA (FOCUS PROBLEM) (1954)
ELIMINATION OF TEMPERATURE DEPENDENT DEFOCUSING PROBLEM		LYMAN ALPHA PHOTOGRAPHED ALONG WITH 50 NEW LINES (1955)
ECHELLE GRATING SPECTROGRAPH		PARTIALLY SUCCESSFUL HIGH RESOLUTION SPECTRA TO 0.1A AT 2600A (ROCKET FAILURE) (1957)
GRAZING INCIDENT SPECTROGRAPH	1960	FIRST SOLAR SPECTRA BELOW 977A (STRAY LIGHT) (1958)
PREDISPERSER ELIMINATES STRAY LIGHT, HIGH UV SPEED DUE TO COATING		REAL SPECTRUM UNCONTAMINATED BY STRAY LIGHT (LIGHT LEAK) (1959)
30,000 LINE GRATING IN THE 13TH ORDER		HIGH RESOLUTION SPECTRA TO 0.3A (1959)
FIRST SOLAR MEASUREMENT SATELLITE SR-1		LYMAN ALPHA VARIATION RECORDED (DETECTOR DIFFICULTIES) (1960)
ORBITING SOLAR OBSERVATORY 1 PROVIDING 2000 HOURS OF DATA		SOLAR SPECTRUM VARIATIONS OBSERVED (1962)
	1965	UNSUCCESSFUL 3RD STAGE IGNITED DURING CHECKOUT
ORBITING SOLAR OBSERVATORY 2 IMPROVED COMMAND AND DATA CAPABILITY		UV SPECTROHELIOGRAPH AND 300 TO 1400A SCANNING UV SPECTROMETER (1965)
ORBITING SOLAR OBSERVATORY 3 PREMATURE 3RD STAGE IGNITION		UNSUCCESSFUL FAILED TO ORBIT (1965)
STAR TRACKING ROCKET ATTITUDE POSITIONING (STRAP)		UV SPECTRUM OF THREE STARS VEGA, LAMDA SCORPIA & ZETA OPHIUCHUS (1966)
INCREASED POINTING ACCURACY 5 ARC SECONDS	1970	ATM UV CHROMOSPHERIC SPECTROGRAPH, SPECTROHELIOGRAPH, X-RAY SPECTROGRAPH AND SCANNING UV SPECTROGRAPH DURING MAXIMUM SOLAR ACTIVITY
MANNED EARTH ORBIT OPERATIONS		ORBITING ASTRONOMICAL SUPPORT FACILITY/LONG DURATION OBSERVATIONS

TIME SCALE: COMPRESSED / EXPANDED

HISTORY: PAST / FUTURE

SPACE SOLAR SPECTROSCOPY

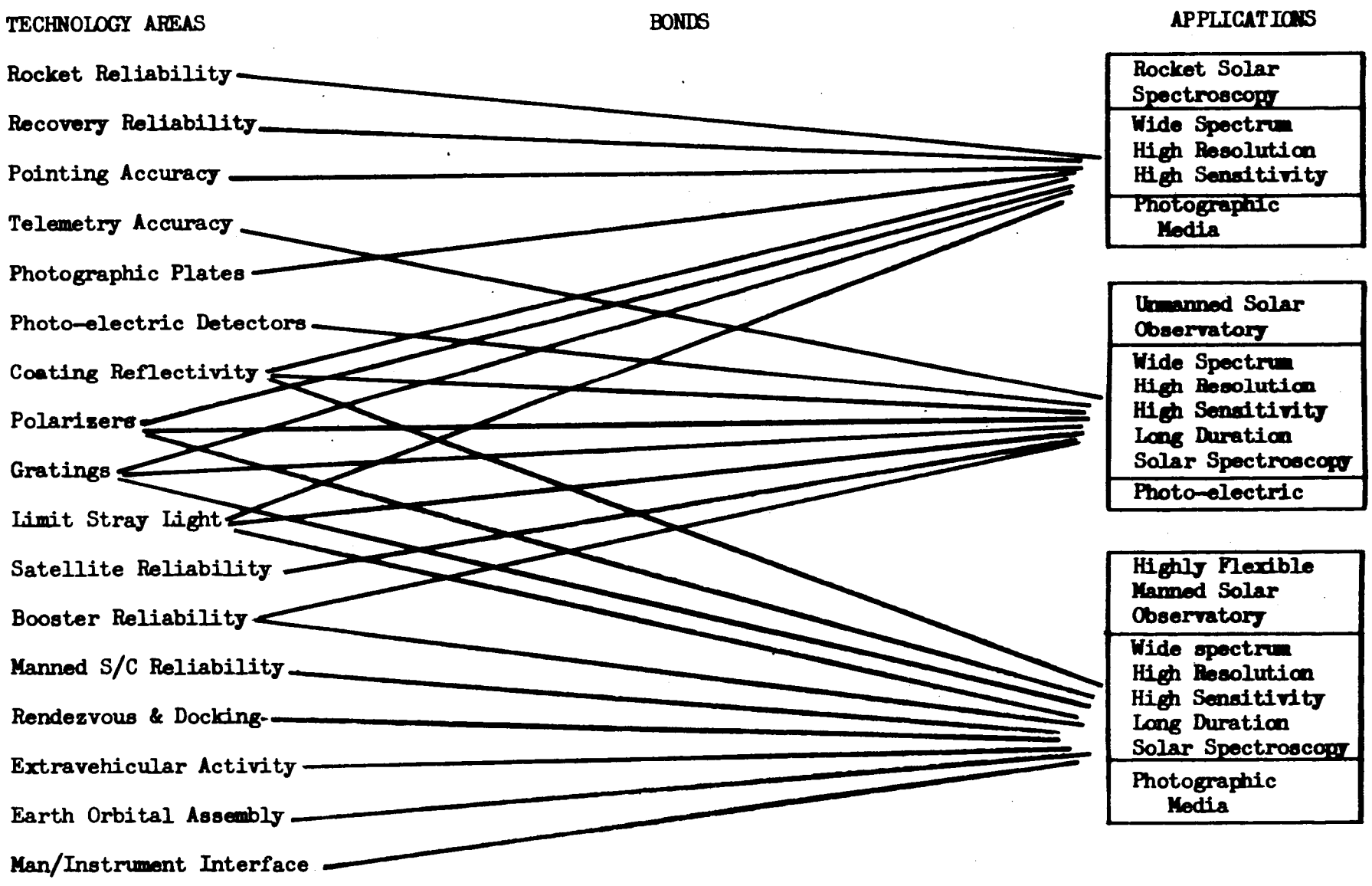

COMMONALITY OF TECHNOLOGY MATRIX

TECHNOLOGY	APPLICATIONS	ROCKET SOLAR SPECTROSCOPY: WIDE SPECTRUM	ROCKET SOLAR SPECTROSCOPY: HIGH RESOLUTION	ROCKET SOLAR SPECTROSCOPY: HIGH SENSITIVITY	SATELLITE SOLAR SPECTROSCOPY: WIDE SPECTRUM	SATELLITE SOLAR SPECTROSCOPY: HIGH RESOLUTION	SATELLITE SOLAR SPECTROSCOPY: HIGH SENSITIVITY	SATELLITE SOLAR SPECTROSCOPY: LONG DURATION	MANNED SOLAR OBSERVATORY: WIDE SPECTRUM	MANNED SOLAR OBSERVATORY: HIGH RESOLUTION	MANNED SOLAR OBSERVATORY: HIGH SENSITIVITY	MANNED SOLAR OBSERVATORY: LONG DURATION
ROCKET	ROCKET RELIABILITY	▲	▲	▲								
ROCKET	RECOVERY RELIABILITY	▲	▲	▲								
ROCKET	POINTING ACCURACY		▲			▲		●		▲		●
DETECTION	TELEMETRY ACCURACY	●	●	●	▲	▲	▲	▲				
DETECTION	PHOTOGRAPHIC PLATES	▲	▲	▲					▲	▲	▲	▲
DETECTION	PHOTO-ELECTRIC	●	●	●	▲	▲	▲	▲				
SPECTROGRAPH	COATING EFF.	▲		▲	▲		▲		▲		▲	
SPECTROGRAPH	FILTERS	●			●				●			
SPECTROGRAPH	GRATINGS	▲	▲	▲	▲	▲	▲		▲	▲	▲	
SPECTROGRAPH	STRAY LIGHT			▲			▲				▲	
SPECTROGRAPH	STABILITY		▲	▲		▲				▲		
SPACE	SATELLITE REL				▲	▲	▲	▲				
SPACE	BOOSTER REL.				▲	▲	▲	▲	▲	▲	▲	▲
SPACE	MANNED S/C REL.								▲	▲	▲	▲
SPACE	RENDEZ. & DOCKING								▲	▲	▲	▲
SPACE	E.V.A.								●	●	●	●
SPACE	E.O.A.								●	●	●	●
SPACE	MAN/INST. INT.								▲	▲	▲	▲

□ WEAK RELATIONSHIP ● SIGNIFICANT RELATIONSHIP ▲ MAJOR REQUIREMENT

SOLAR SPECTROSCOPY TECHNOLOGY EVOLUTION

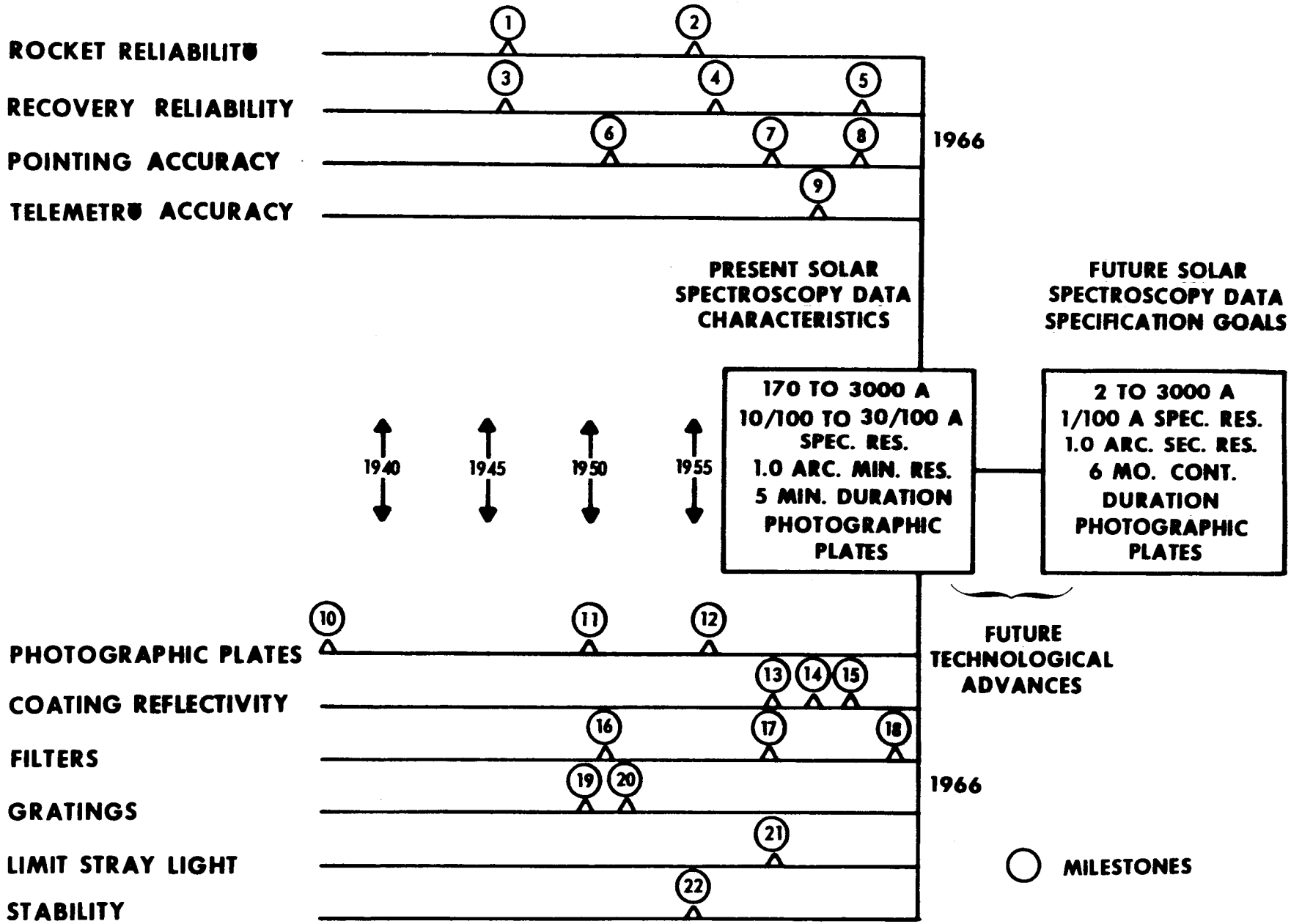

SOLAR SPECTROSCOPY TECHNOLOGY MILESTONES

1. FIRST ROCKET BORNE SOLAR SPECTROGRAPH (1946)
2. FIRST OF THE 95% RELIABLE AEROBEE 150 FLIGHTS (1955)
3. RECOVERY BY BLOWING TAIL FIN (1946)
4. IMPROVED CHUTE PACKAGING (1956)
5. RAMJET EFFECT ON ALTITUDE SENSOR OVERCOME (1963)
6. FIRST BIAXIAL POINTING FLIGHT ± 2 MIN/SERVOMOTORS (1961)
7. MODEL 2 BIAXIAL POINTING FLIGHT ± 1 MIN/SERVO-CLUTCHES (1959)
8. MODEL 3 BIAXIAL POINTING FLIGHT ± 1/2 MIN/D.C. TORQUE (1963)
9. SOLID STATE SUBCARRIER IN TELEMETRY ± 5% TO ± 1%
10. KODAK LACQUERED U.V. PHOTOGRAPHIC PLATES (1935)
11. KODAK SWR LOW GELETIN PLATES (1950)
12. KODAK SC-5 BY AUDRAN PROCESS (1956)
13. AL MIRROR OVERCOATING OF MGFL/REFLECTING 80% DOWN TO 1200 A (1959)
14. AL MIRROR OVERCOATING OF LIFL/REFLECTING 65% DOWN TO 1000 A (1961)
15. MEASURED REFLECTANCE OF EVAPORATED AL/REFLECTING 87% DOWN TO 1026 A (1963)
16. USE OF UNBACKED AL FILM AS TRANSMISSION FILTER/170 A-250 A (1951)
17. DIFFERENT MATERIALS INCLUDING INDIUM (1959)
18. PARLODIUM, BISMUTH, GERMANIUM & SILICON (1965)
19. BAUSCH & LOMB FIRST ROCKET BORNE GRATING/TRIPARTITE (1950)
20. BAUSCH & LOMB GRATING #185 FIRST OF HIGH QUALITY (1952)
21. PREDISPERSER ELIMINATES STRAY LIGHT, HIGH U.V. SPEED DUE TO COATING (1959)
22. DEFOCUSING CAUSED BY THERMAL PROBLEM OVERCOME

RECOMMENDED EXPERIMENTS

1. OPTICAL HETERODYNE DETECTION ON EARTH.
2. OPTICAL HETERODYNE DETECTION ON THE SPACECRAFT.
3. DIRECT DETECTION SPACE-TO-GROUND.
4. COMMUNICATION WITH 10 MEGAHERTZ BANDWITH.
5. PRECISION TRACKING OF A GROUND BEACON.
6. POINT AHEAD AND SPACE-TO-GROUND-TO-SPACE LOOP CLOSURE.
7. TRANSFER TRACKING FROM ONE GROUND STATION TO ANOTHER.
8. PHASE CORRELATION MEASUREMENTS.
9. PULSE DISTORTION MEASUREMENTS.
10. PRIMARY MIRROR FIGURE TEST AND CORRECTION.
11. THIN MIRROR NESTING PRINCIPLE AND ERECTION AND ALIGNMENT OF LARGE OPTICS IN SPACE.
12. FINE GUIDANCE.
13. COMPARISON OF ISOLATION TECHNIQUES.
14. INTERFEROMETER SYSTEMS.
15. SEGMENTED OPTICS.

RECOMMENDED DISCARD

1. SPECTROGRAPH DEVELOPMENT.
2. BAFFLES COMPARISON.
3. ATMOSPHERIC ABOSRPTION SPECTROSCOPY.
4. PHOTON-PHOTON SCATTERING.
5. REMOTE MANUAL OPTICAL ALIGNMENT.
6. VISUAL TRACKING RATING.
7. CRYOGENIC COOLING.
8. PHOTO-ELECTRO-OPTICAL EXPERIMENT.
9. MIRROR COATING IN SPACE.

QUESTIONS CONSIDERED BY THE EXPERIMENT INVESTIGATOR IN THE EXPERIMENT WRITE-UPS

QUANTIFIED JUSTIFICATION

1. WRITE EQUATION OR EQUATIONS DESCRIBING THE ACTION OF THE SYSTEM.
2. IF THERE ARE OMITTED TERMS IN THE EQUATION WHAT IS THE % ERROR OF OMISSION?
3. CAN OMITTED TERMS JUSTIFY A SPACE EXPERIMENT?
4. WHAT IS THE INITIAL UNCERTAINTY OF THE PHYSICAL CONSTANTS IN THE EQUATION?
5. WHAT % ERROR DO THEY INTRODUCE?
6. CAN UNCERTAINTIES BE REMOVED BY GROUND EXPERIMENTS?
7. MUST THEY BE REMOVED BY SPACE EXPERIMENT? IF SO, WHY?
8. DISPLAY AND COMPARE % OF UNCERTAINTY ERROR REMOVED BY GROUND TESTING AND % OF UNCERTAINTY ERROR REMOVED BY SPACE TESTING.

FAMILY OF TECHNOLOGY CURVES FOR A HYPOTHETICAL EXAMPLE

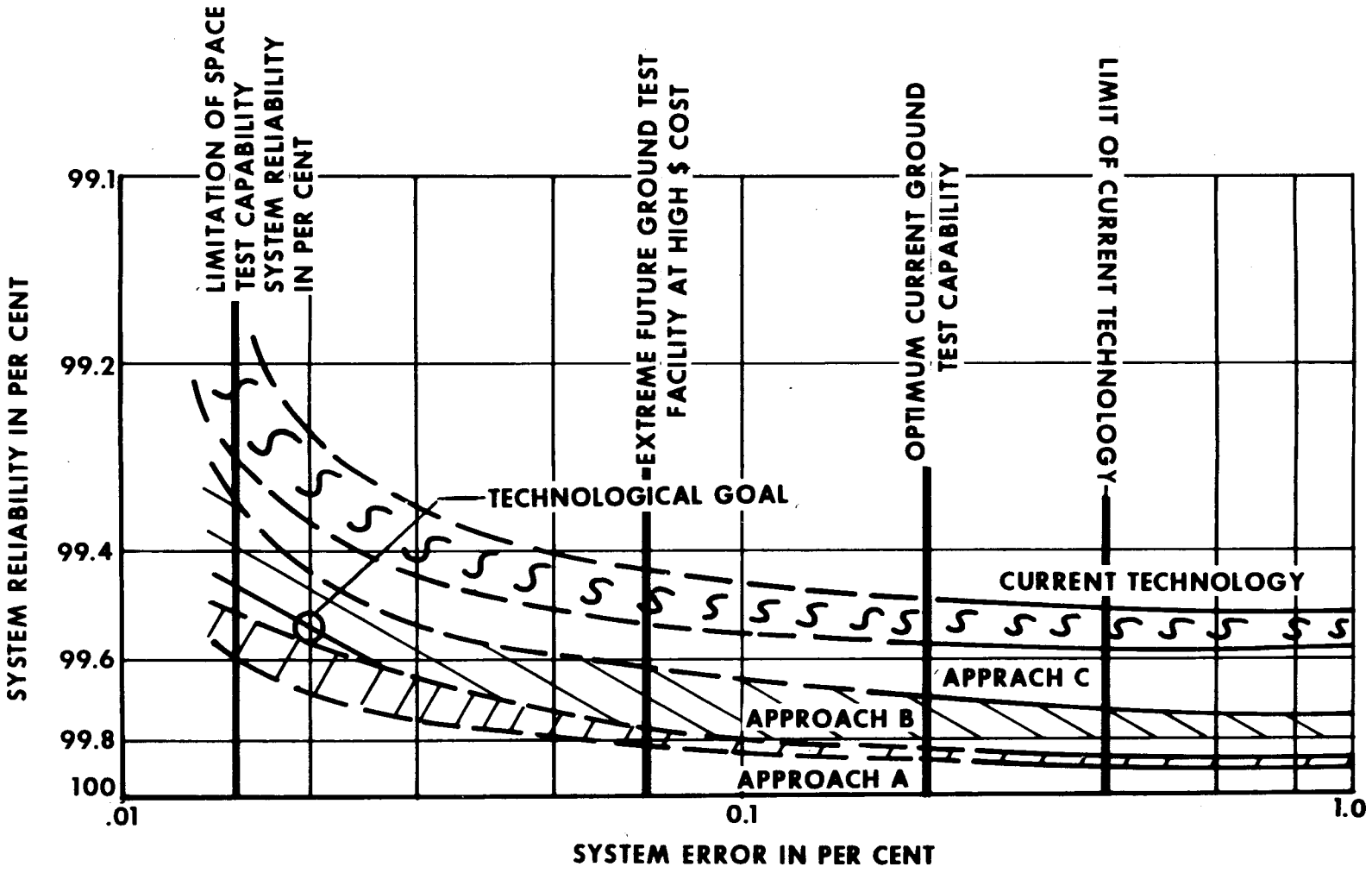

OBJECTIVES

- PRESENTS A SEQUENCED EVOLUTIONARY PROCEDURE FOR THE ADVANCEMENT OF OPTICAL TECHNOLOGY AS A PRELUDE TO THE PERFORMANCE OF OTES SPACE EXPERIMENTS
- INDICATES EXPERIMENT AVAILABILITY
- ASSIST IN THE DEFINITION OF SPACE EXPERIMENTS FOR THE SUPPORT OF FUTURE SPACE APPLICATIONS

ANALYTICAL LOGIC

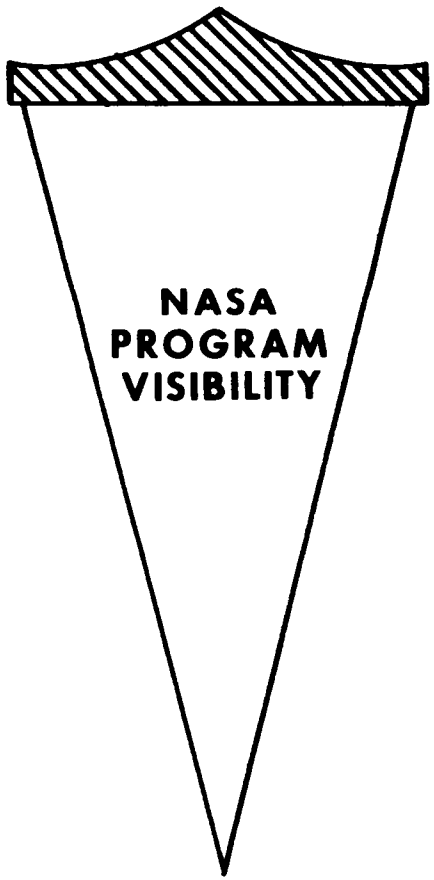

7. LONG - RANGE (POST OTES) TECHNOLOGY DEVELOPMENT MILE STONES
6. EXPERIMENT INTEGRATION ANALYSIS
5. EXPERIMENT GROUP-CANDIDATE MISSION RELATIONSHIPS
4. EXPERIMENT AVAILABILITY SUMMARY
3. EXPERIMENT DEVELOPMENT SCHEDULE DELINEATION
2. PREREQUISITE TECHNOLOGY IDENTIFICATION
1. TECHNOLOGY PROBLEMS - EXPERIMENTS RELATIONSHIP

PRIMARY TECHNOLOGY PROBLEM AREAS

A. OPTICAL SUB-SYSTEMS

B. TELESCOPE STRUCTURE & MECHANISMS

C. CONTROL/STABILIZATION

D. DETECTION & CONDITIONING

E. OPTICAL PROPAGATION TRANSMISSION

F. OPTICAL PROPAGATION RECEPTION

G. AUXILIARY DEVICES

H. OPERATIONS

TYPICAL OUTLINE

16.2.1 DIGEST OF PREREQUISITE TECHNOLOGY ACTIVITIES

EXPERIMENT: OPTICAL HETERODYNE DETECTION ON EARTH (E-1)

TIME SPAN TO COMPLETION: THIRTY-SIX MONTHS

RESEARCH AND DEVELOPMENT

A. VIDEO MODULATORS DEVELOPMENT (24 MONTHS)

B. INFRARED PHOTO DETECTORS DEVELOPMENT (30 MONTHS)

C. STABLE 10.6 MICRON LASER DEVELOPMENT WITH EMPHASIS ON RUGGEDIZATION. (24 MONTHS, NOW IN PROCESS).

D. LASER MODE CONTROL AND STABILIZATION TECHNIQUES DEVELOPMENT (24 MONTHS NOW IN PROCESS).

E. SPACE-QUALIFIED HELIUM-NEON AND N2 - CO2 LASERS DEVELOPMENT. (12 MONTHS).

PROJECT: OTAES PH I EXTENSION

LEGEND: SEGMENTED OPTICS
LEVEL OF DETAIL: EXPERIMENT PECULIAR MAJOR ASSEMBLIES/SUB-SYSTEMS
DETAILED ELSEWHERE: OTAES COMMON ASSEMBLIES/SUB-SYSTEMS

Figure IV-15

Detail Schedule E-15
Sheet 1 of 1
Date: 4 August 1966
Prepared by: D. Veith

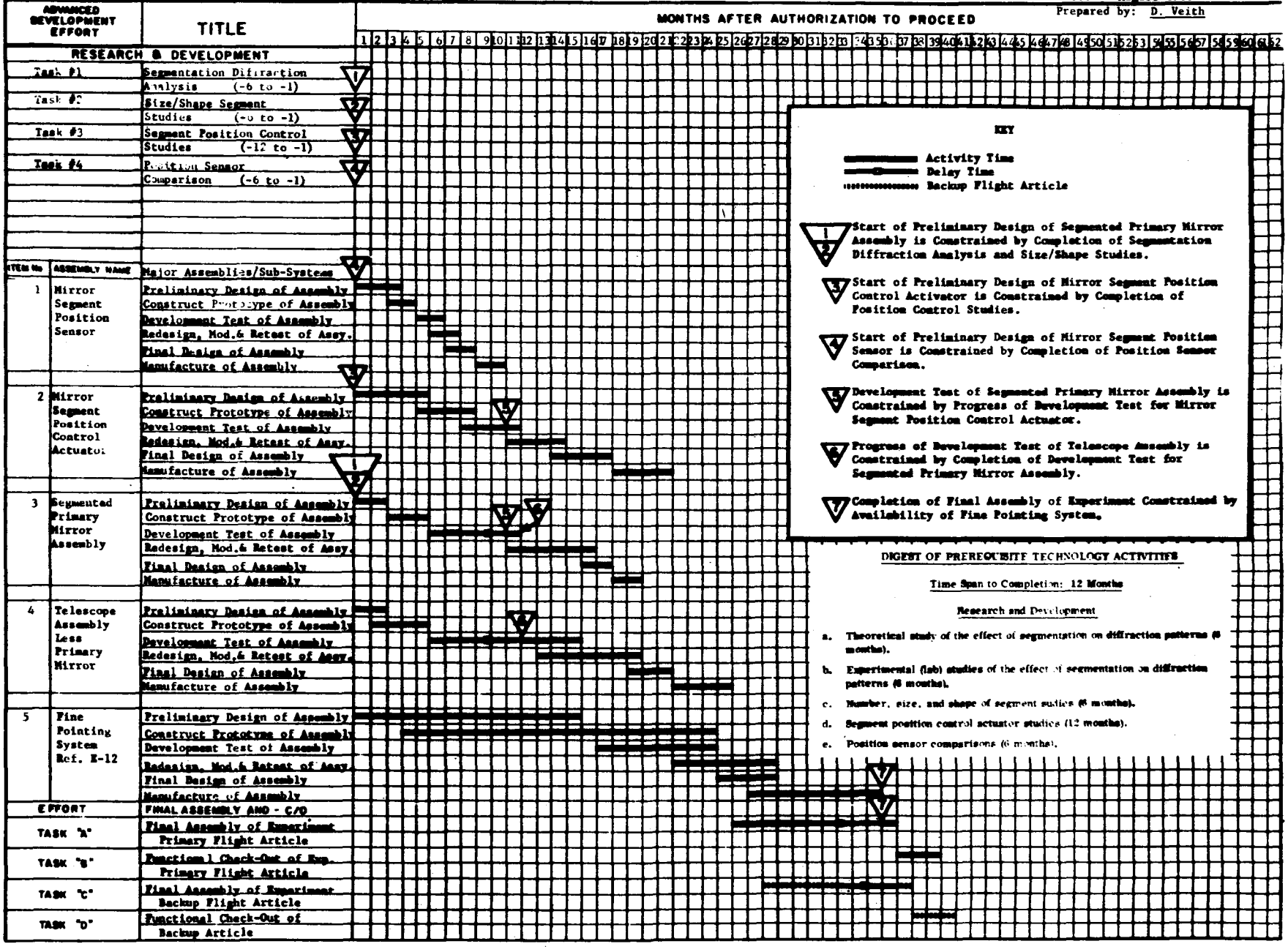

PROJECT: OTAES PH I EXTENSION

LEGEND: OPTICAL TECHNOLOGY APOLLO EXTENSION SYSTEM
MASTER PLANNING SCHEDULE

Figure 17.2-1
Date: 18 August 1966

MASTER SCHED. ITEM	DETAIL SCHED. REFERENCE	TITLE
1.0		EXPERIMENT AVAILABILITY SUMMARY
1.1	E-1	OPTICAL HETERODYNE DETECTION OF EARTH
1.1.1		Research & Development (-36
1.1.2		PD, Fab. & Test Prototype
1.1.3		Redesign, Fab. & C/O Flt.Art.
1.2	E-2	OPTICAL HETERODYNE DETECTION OF THE SPACECRAFT
1.2.1		Research & Development (-36 to -1)
1.2.2		PD, Fab.& Test Prototype
1.2.3		Redesign, Fab.& C/O Flt. Art.
1.3	E-3	COMMUNICATION WITH 10 MEGAHERTZ BANDWIDTH
1.3.1		Research & Development
1.3.2		PD, Fab.& Test Prototype
1.3.3		Redesign, Fab.& C/O Flt. Art.
1.4	E-4	DIRECT DETECTION - SPACE TO GROUND
1.4.1		Research & Development (-24 to -1)
1.4.2		PD, Fab.& Test Prototype
1.4.3		Redesign, Fab.& C/O Flt. Art.
1.5	E-5	PRECISION TRACKING OF A GROUND BEACON
1.5.1		Research & Development (-24 to -1)
1.5.2		PD, Fab. & Test Prototype
1.5.3		Redesign, Fab.& C/O Flt. Art.
1.6	E-6	POINT AHEAD AND SPACE-GROUND-SPACE LOOP CLOSURE
1.6.1		Research & Development (-24 to -1)
1.6.2		PD, Fab.& Test Prototype
1.6.3		Redesign, Fab.& C/O Flt. Art.
1.7	E-7	TRANSFER TRACKING FROM ONE GROUND STATION TO ANOTHER
1.7.1		Research & Development (-18 to
1.7.2		PD, Fab. & Test Prototype
1.7.3		Redesign, Fab.& C/O Flt. Art.
1.8	E-8	ATMOSPHERIC MEASUREMENTS
1.8.1		Research & Development
1.8.2		PD, Fab. & Test Prototype
1.8.3		Redesign, Fab.& C/O Flt. Art.
1.9	E-9	PULSE DISTORTION MEASUREMENTS
1.9.1		Research & Development
1.9.2		PD, Fab. & Test Prototype
1.9.3		Redesign, Fab.& C/O Flt. Art.
1.10	E-10	PRIMARY MIRROR FIGURE TEST AND CORRECTION
1.10.1		Research & Development (-24 to -1)
1.10.2		PD, Fab. & Test Prototype
1.10.3		Redesign, Fab.& C/O Flt. Art.
1.11	E-11	THIN MIRROR NESTING VERIFICATION
1.11.1		Research & Development (-24 to -1)
1.11.2		PD, Fab. & Test Prototype
1.11.3		Redesign, Fab.& C/O Flt. Art.

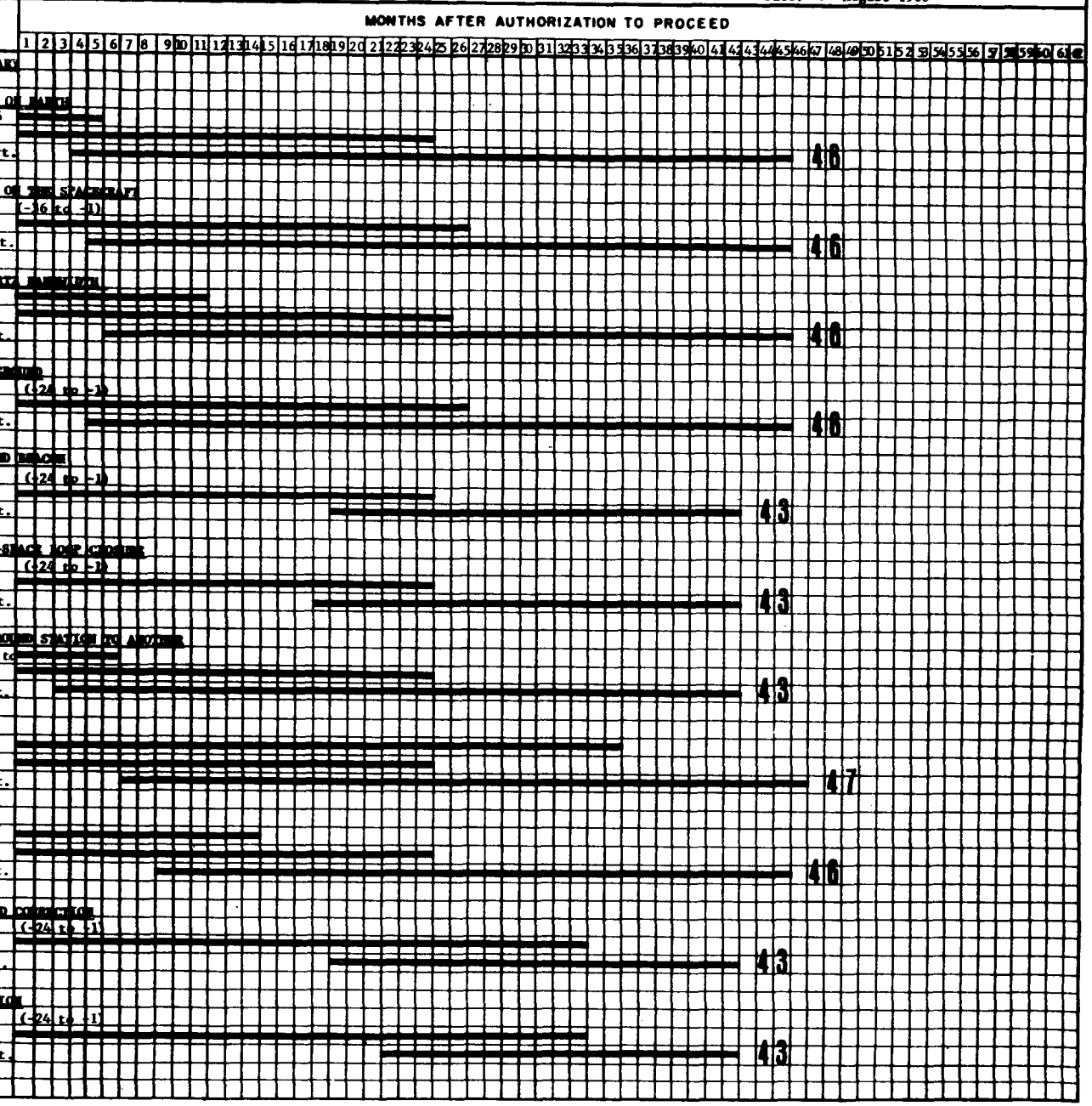

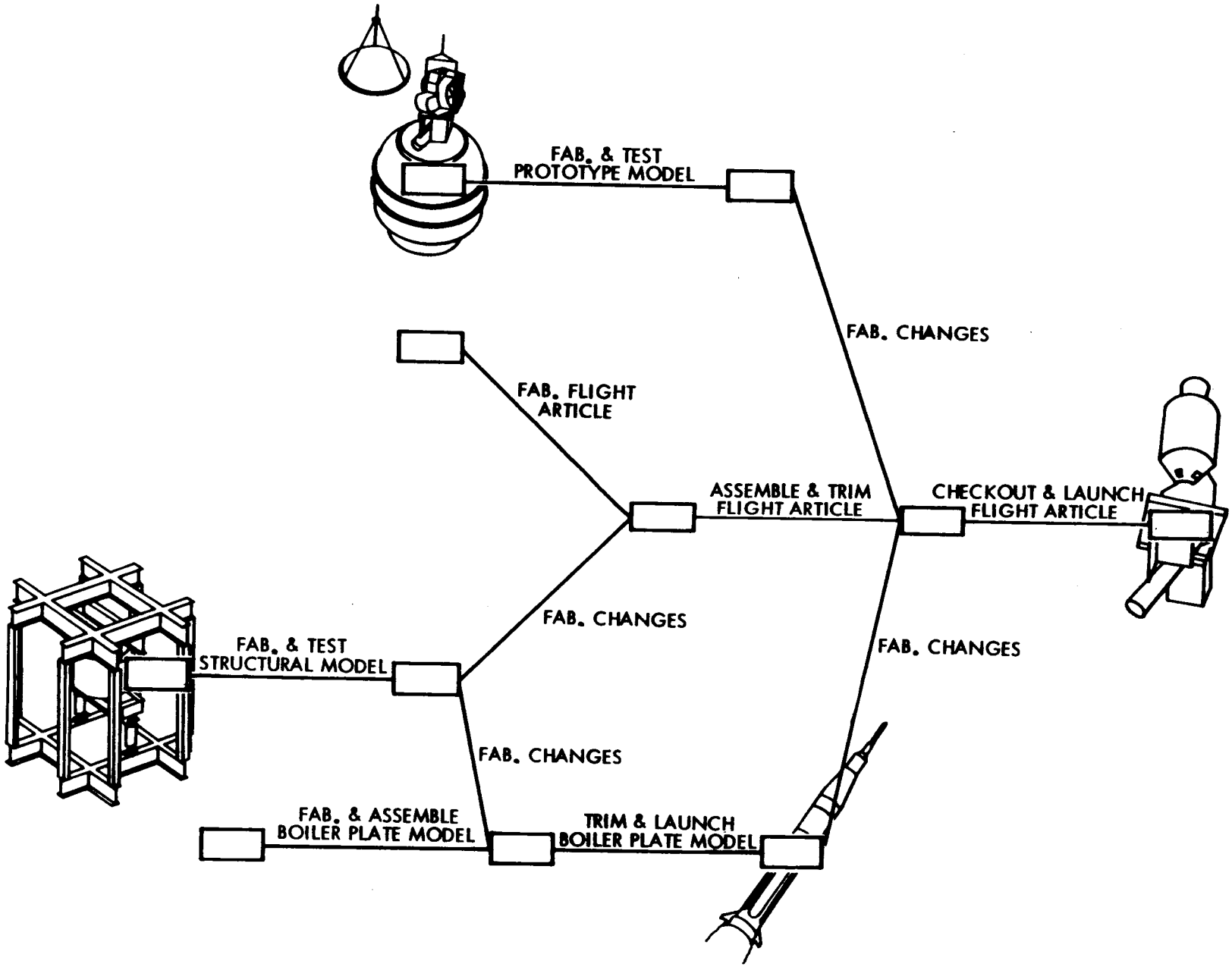
FAB. & TEST
PROTOTYPE MODEL
FAB. CHANGES
FAB. FLIGHT
ARTICLE
ASSEMBLE & TRIM
FLIGHT ARTICLE
CHECKOUT & LAUNCH
FLIGHT ARTICLE
FAB. CHANGES
FAB. & TEST
STRUCTURAL MODEL
FAB. CHANGES
FAB. CHANGES
FAB. & ASSEMBLE
BOILER PLATE MODEL
TRIM & LAUNCH
BOILER PLATE MODEL

PROJECT: OTAES PH. I EXTENSION

LEGEND: OPTICAL TECHNOLOGY APOLLO EXTENSION SYSTEM
MASTER PLANNING SCHEDULE

Figure 17.4-5
Date: 24 August 1966

MASTER SCHED. ITEM	DETAIL SCHED. REFERENCE	TITLE
7.0		PRE-LAUNCH CHECK-OUT & MISSION SUPPORT
7.1		Approach I
7.1.1		Boiler Plate Mission
7.1.1.1	5.1.3	Experiments & Launch Sys.C/O
7.1.1.2		Range & Mission Support
7.1.1.3		Mission Support for B/P Exp.
7.1.2		OTAES-A Mission
7.1.2.1	5.1.4/5.1.5	Experiments & Launch Sys. C/O
7.1.2.2		Range & Mission Support C/O
7.1.2.3		Mission Support for OTAES-A Exp.
7.2		Approach II
7.2.1		Boiler Plate Mission
7.2.1.1	5.2.3	Experiments & Launch Sys. C/O
7.2.1.2		Range & Mission Support
7.2.1.3		Mission Support for B/P Exp.
7.2.2		OTAES-B Mission
7.2.2.1	5.2.4/5.2.5	Experiments & Launch Sys. C/O
7.2.2.2		Range & Mission Support C/O
7.2.2.3		Mission Support for OTAES-B Exp.
7.3		Approach III
7.3.1	5.3.3	Boiler Plate Mission
7.3.1.1		Experiments & Launch Sys. C/O
7.3.1.2		Range & Mission Support C/O
7.3.1.3		Mission Support for B/P Exp.
7.3.2		OTAES-B Mission
7.3.2.1	5.3.7/5.3.8	Experiments & Launch Sys. C/O
7.3.2.2		Range & Mission Support
7.3.2.3		Mission Support for OTAES-B Exp.
7.3.3		OTAES-C Mission
7.3.3.1	5.3.4/5.3.5	Experiments & Launch Sys. C/O
7.3.3.2		Range & Mission Support
7.3.3.3		Mission Support for OTAES-C Exp.
7.4		Approach IV
7.4.1		Boiler Plate Mission
7.4.1.1	5.4.3	Experiments & Launch Sys. C/O
7.4.1.2		Range & Mission Support
7.4.1.3		Mission Support for B/P Exp.
7.4.2		OTAES-C Mission
7.4.2.1	5.4.4/5.4.5	Experiments & Launch Sys. C/O
7.4.2.2		Range & Mission Support
7.4.2.3		Mission Support for OTAES-C Exp.

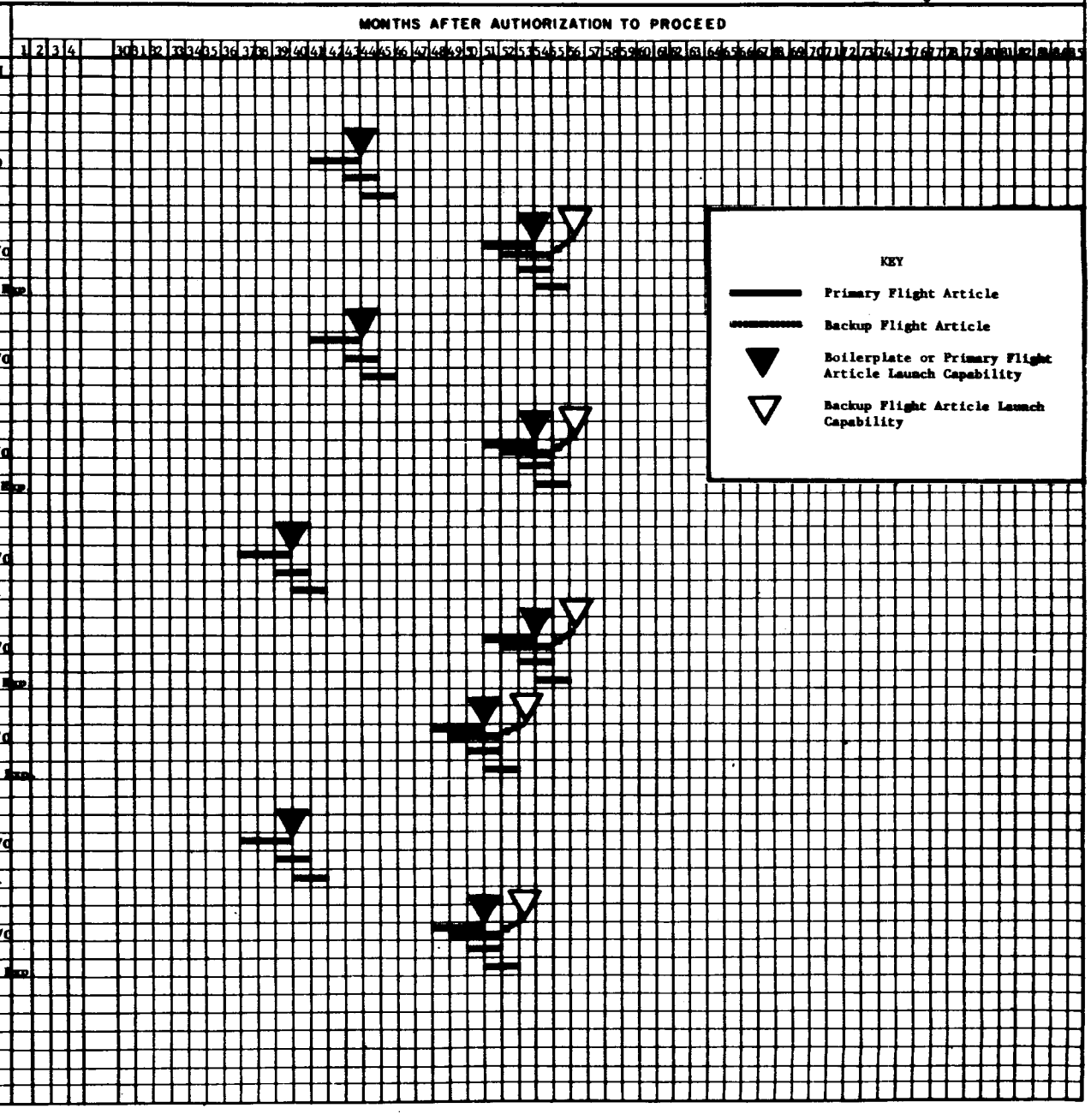

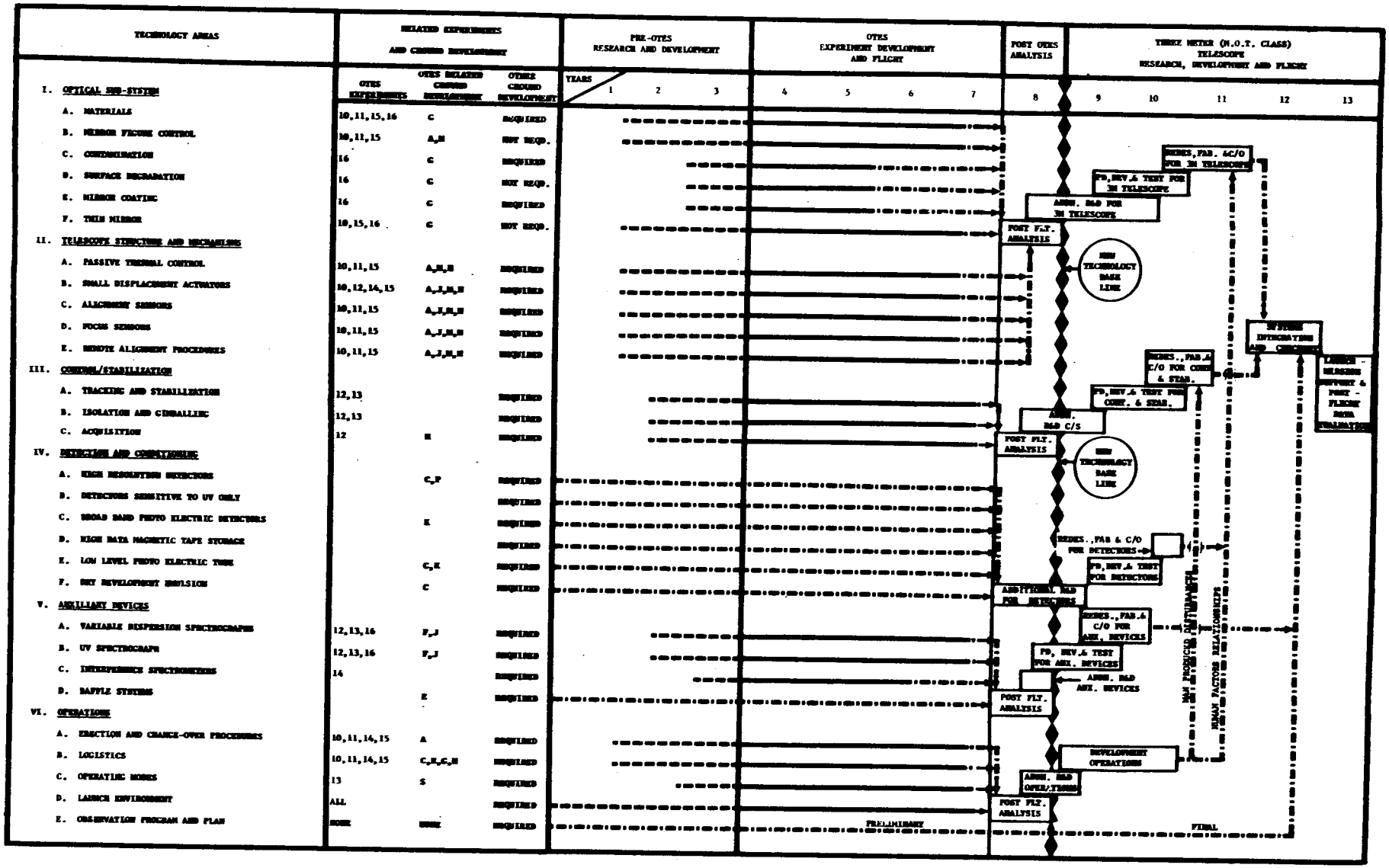

NOTES: 1. SEE SECTION 16.0 FOR EXPERIMENT DEVELOPMENT DETAILS.

2. THIS FIGURE IDENTIFIES BUT DOES NOT SCHEDULE OTHER NEEDED GROUND DEVELOPMENT NOT SPECIFICALLY IN SUPPORT OF SPACE EXPERIMENTS.

KEY

- OTES EXPERIMENT DEVELOPMENT & FLIGHT
- PRE-OTES RESEARCH & DEVELOPMENT
- GROUND DEVELOPMENT & DELAY TIME

FIGURE 15.2-1

LONG RANGE ASTRONOMICAL TECHNOLOGY DEVELOPMENT MILESTONES

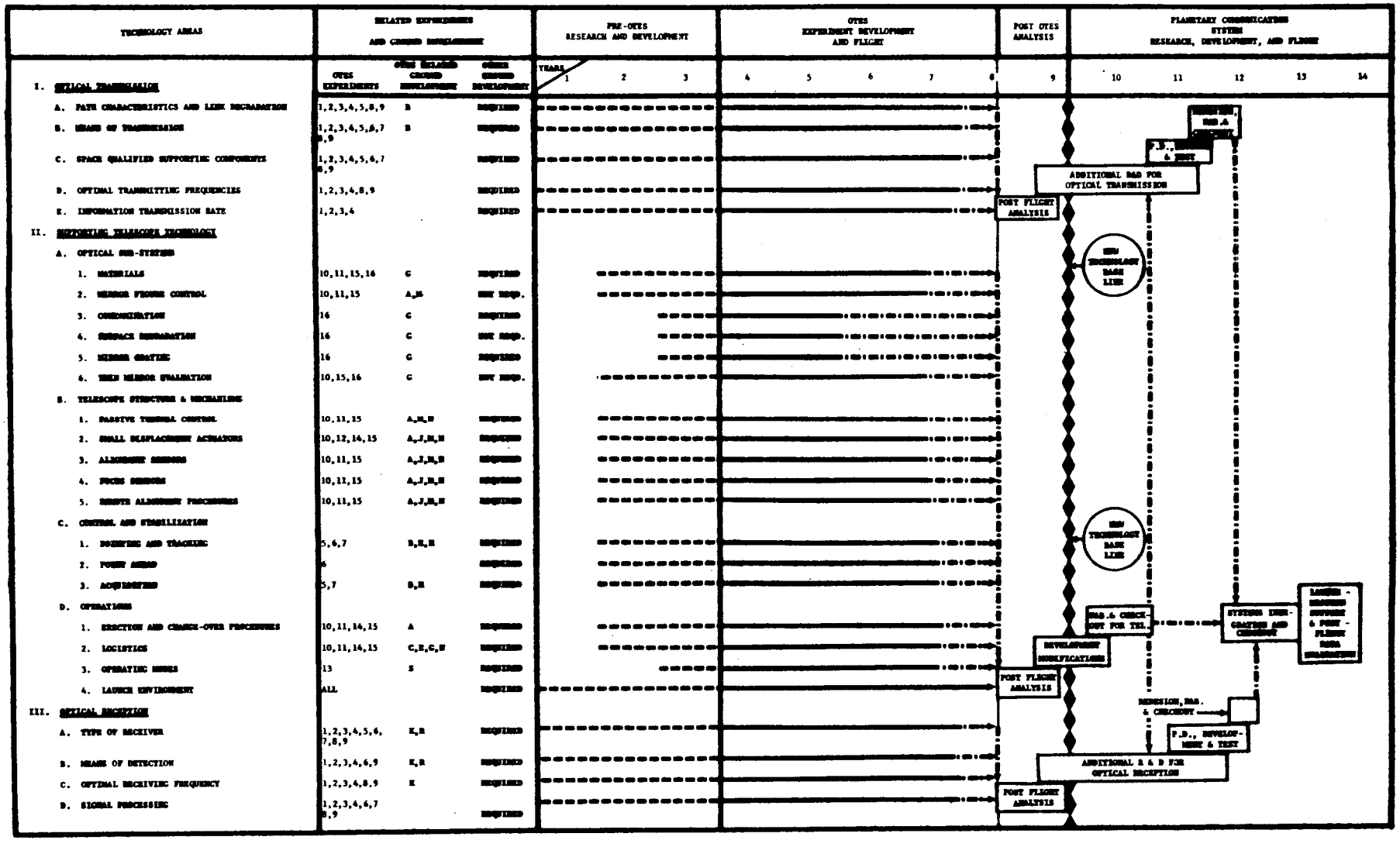

NOTES: 1. SEE SECTION 16.0 FOR EXPERIMENT DEVELOPMENT DETAILS.

2. THIS FIGURE IDENTIFIES BUT DOES NOT SCHEDULE OTHER NEEDED GROUND DEVELOPMENT NOT SPECIFICALLY IN SUPPORT OF SPACE EXPERIMENTS.

KEY

OTES EXPERIMENT DEVELOPMENT AND FLIGHT

PRE-OTES RESEARCH AND DEVELOPMENT

GROUND EXPERIMENTS AND DELAY TIME

FIGURE 16.2-2

LONG RANGE OPTICAL PROPAGATION TECHNOLOGY DEVELOPMENT MILESTONES

SUMMARY

THE BROAD COMMONALITY OF OPTICAL TECHNOLOGY IN APPLICATIONS

- FRAGMENTED PROGRAM PITFALLS
- THE COMMONALITY OF DEVELOPMENT IN A CENTRALIZED PROGRAM
- QUANTUM JUMPS VS. LOGICAL STEPS

CHART 1
ISOLATION COMPARISONS

Isolation Requirements depend on:

Disturbance Environment

Spacecraft Control System

Telescope Control System

Fine Guidance Loop

Image Stability Requirements

ISOLATION SYSTEMS COMPARISON
JUSTIFICATION

NEED	ISOLATION OF FINE CONTROL LOOPS FROM SPACECRAFT DISTURBANCES (0.01 ARC SEC SEC. POINTING ACCURACY)
NEED FOR SPACE TESTING	SYSTEMS UNABLE TO SUPPORT OWN WEIGHT
FEASIBILITY	INTEGRATION PROBLEM

DISTURBANCE SPECTRUM

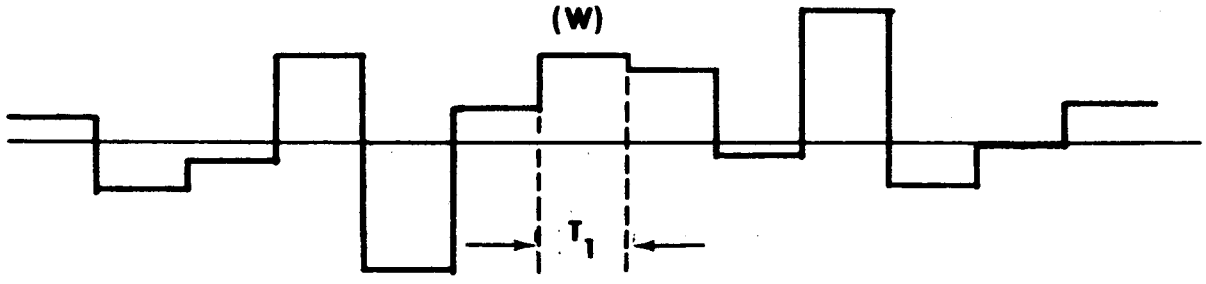

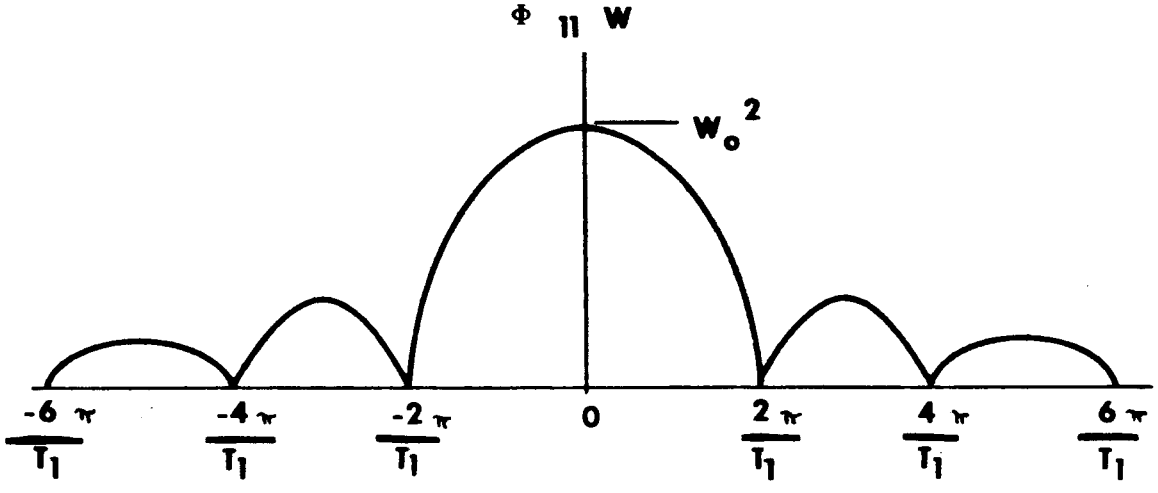

DISTURBANCE MODEL

ISOLATIONS COMPARISON

SPACE SIMULATORS

AIR BEARING LEVEL TABLE	ONE DEGREE TRANSLATION ONE DEGREE ROTATION
WIRE SUSPENSION	FRICTION TORQUES TWO DEGREE TRANSLATION
FLOTATION	VISCOUS DAMPING Δ T STATIC LOADING RESOLUTION DEGRADATION

ISOLATIONS COMPARISONS CONTROL SYSTEM MODEL

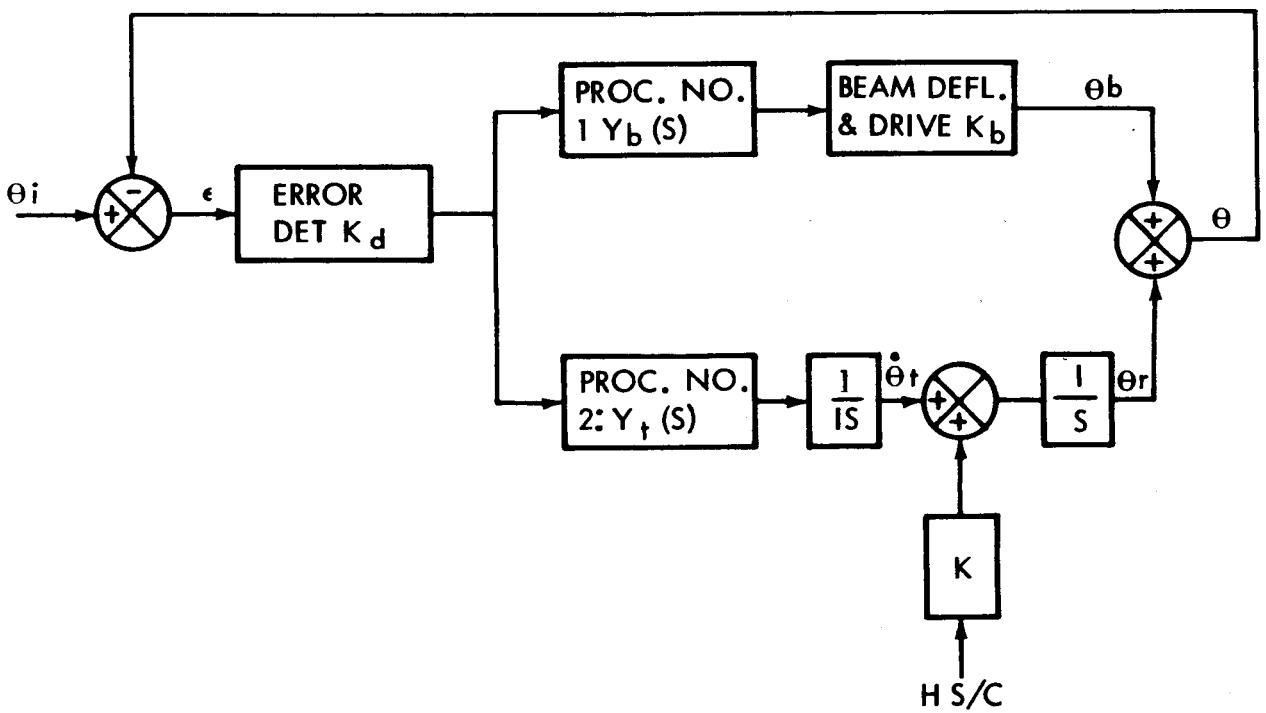

$$\theta = \frac{\bar{H}_M M_{T/S}\ d}{K_{vb}\ I_{sk}\ I_{t/s}} \left\{ 1 - \frac{1}{K_{vb}\ T_1} \left[1 - e^{-K_{vb}\ T_1} \right] \right\}^{1/2}$$

FOR 0.01 ARC-SECOND IMAGE STABILITY, AND USING TYPICAL VALUES OF SPACECRAFT AND TELESCOPE INERTIA, CONTROL SYSTEM GAIN AND MEAN DISTURBANCE MOMENTUM REQUIRE AN ATTENUATION FACTOR OF 0.01 AT ONE CPS.

ELECTROMAGNETIC BEARING AND SUSPENSION

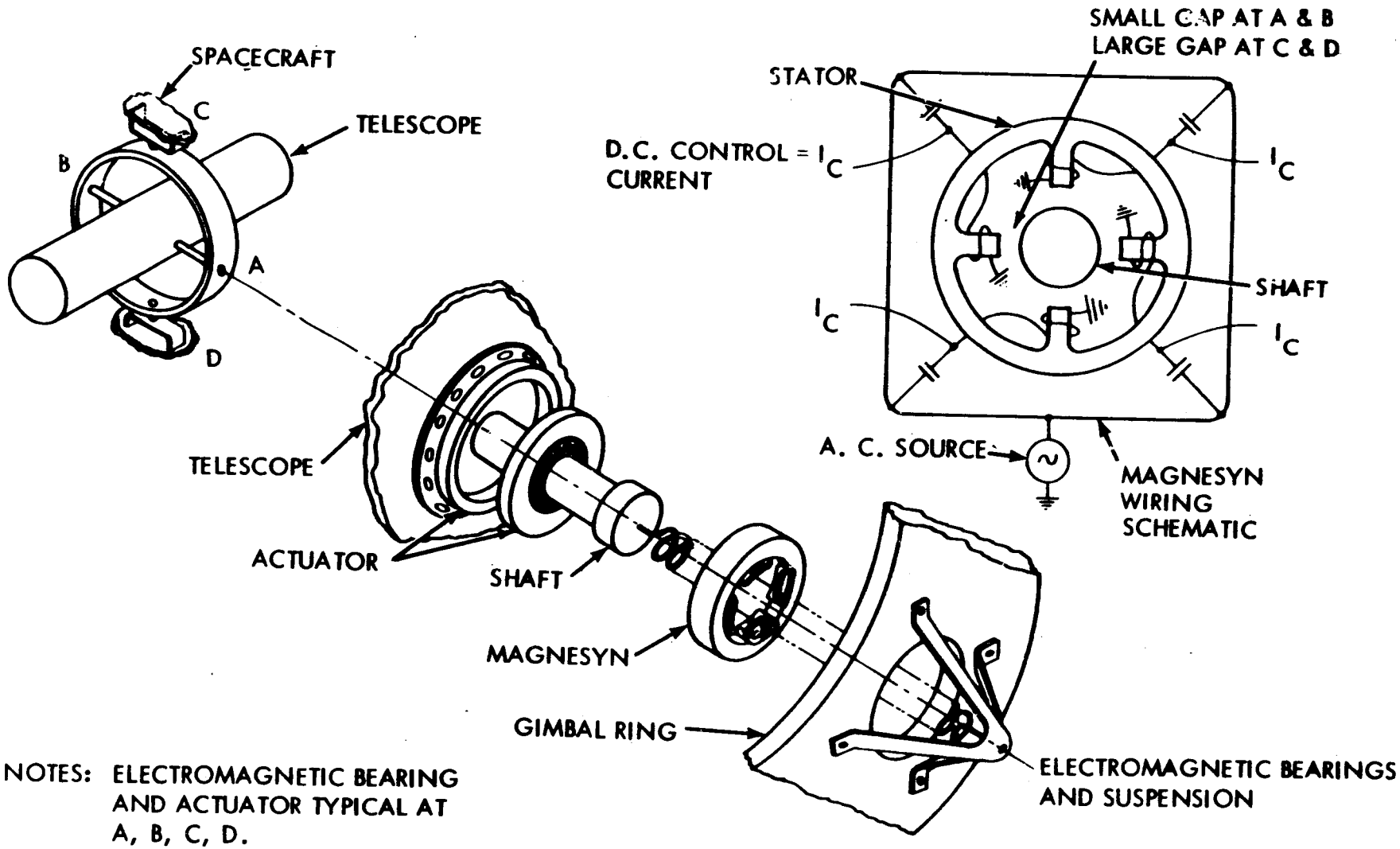

NOTES: ELECTROMAGNETIC BEARING AND ACTUATOR TYPICAL AT A, B, C, D.

DIAMAGNETIC BEARING SUSPENSION

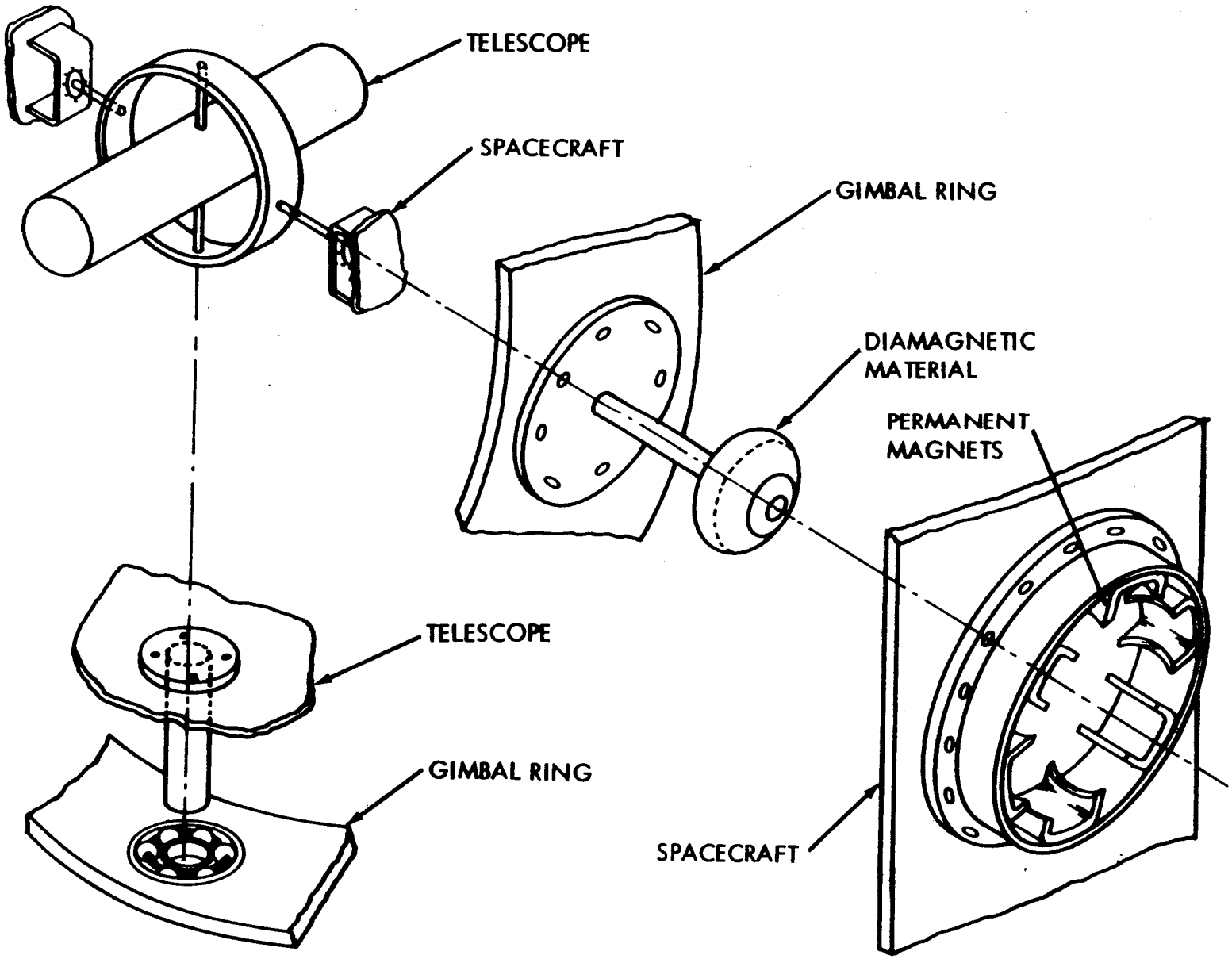

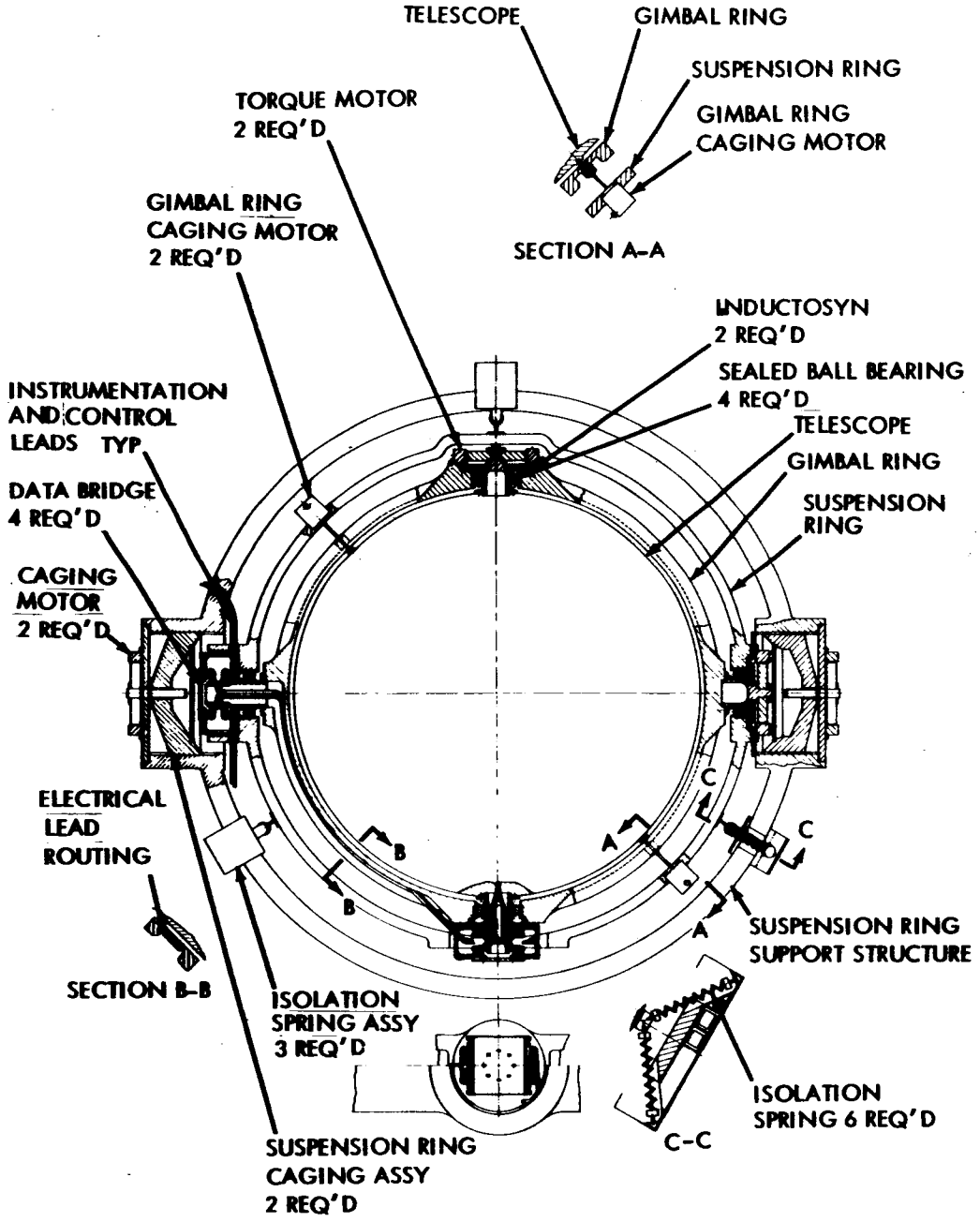
TELESCOPE
GIMBAL RING
SUSPENSION RING
GIMBAL RING CAGING MOTOR
SECTION A-A
TORQUE MOTOR 2 REQ'D
GIMBAL RING CAGING MOTOR 2 REQ'D
INDUCTOSYN 2 REQ'D
SEALED BALL BEARING 4 REQ'D
TELESCOPE
GIMBAL RING
SUSPENSION RING
INSTRUMENTATION AND CONTROL LEADS TYP
DATA BRIDGE 4 REQ'D
CAGING MOTOR 2 REQ'D
ELECTRICAL LEAD ROUTING
SECTION B-B
B
B
A
A
C
C
SUSPENSION RING SUPPORT STRUCTURE
ISOLATION SPRING ASSY 3 REQ'D
ISOLATION SPRING 6 REQ'D
C-C
SUSPENSION RING CAGING ASSY 2 REQ'D

SEGMENTED MIRROR TELESCOPES

ADVANTAGES

- MIRROR FIGURE CONTROL
- WEIGHT CONSTRAINTS
- DIMENSIONAL CONSTRAINTS

PROBLEMS

- DIFFRACTION
- ACTUATION
- ERROR SENSING
- ASSEMBLY COMPLEXITY

SEGMENTED OPTICS

JUSTIFICATION

NEED - FUNDED NASA STUDIES; LARGE DIAMETER, LIGHT WEIGHT, FIGURE CONTROLLED MIRROR

NEED FOR SPACE TESTING - MIRROR SURFACE DEFLECTION

FEASIBLITY - ACTIVE CONTROL PROBLEM

DEFLECTION TABLE

DEFLECTION AT THE CENTER OF A CIRCULAR PLATE 1 IN. THICK, WITH RADIUS a, SUPPORTED AT THREE EQUALLY SPACED POINTS ON A CIRCLE OF RADIUS A/2, DUE TO 1G LOAD.

a (IN.)	MATERIAL	DEFLECTION (A)
12	BERYLLIUM	4,940
6	BERYLLIUM	308
3	BERYLLIUM	20
12	GLASS	30,400
6	GLASS	1,900
3	GLASS	120

SEGMENTED MIRROR WITH PNEUMATIC ACTUATORS

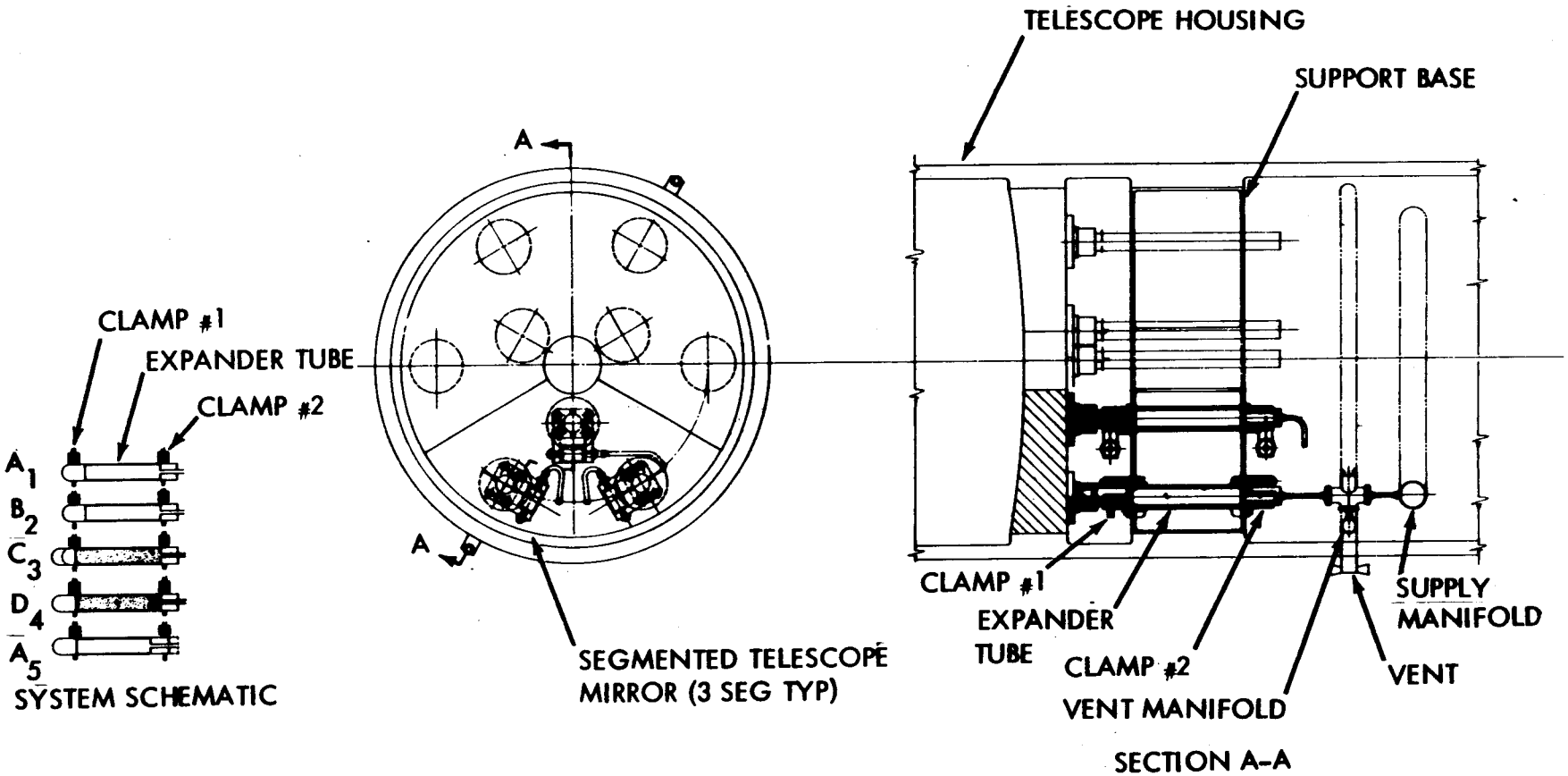

SEGMENTED MIRROR WITH GEAR TRIM ACTUATORS

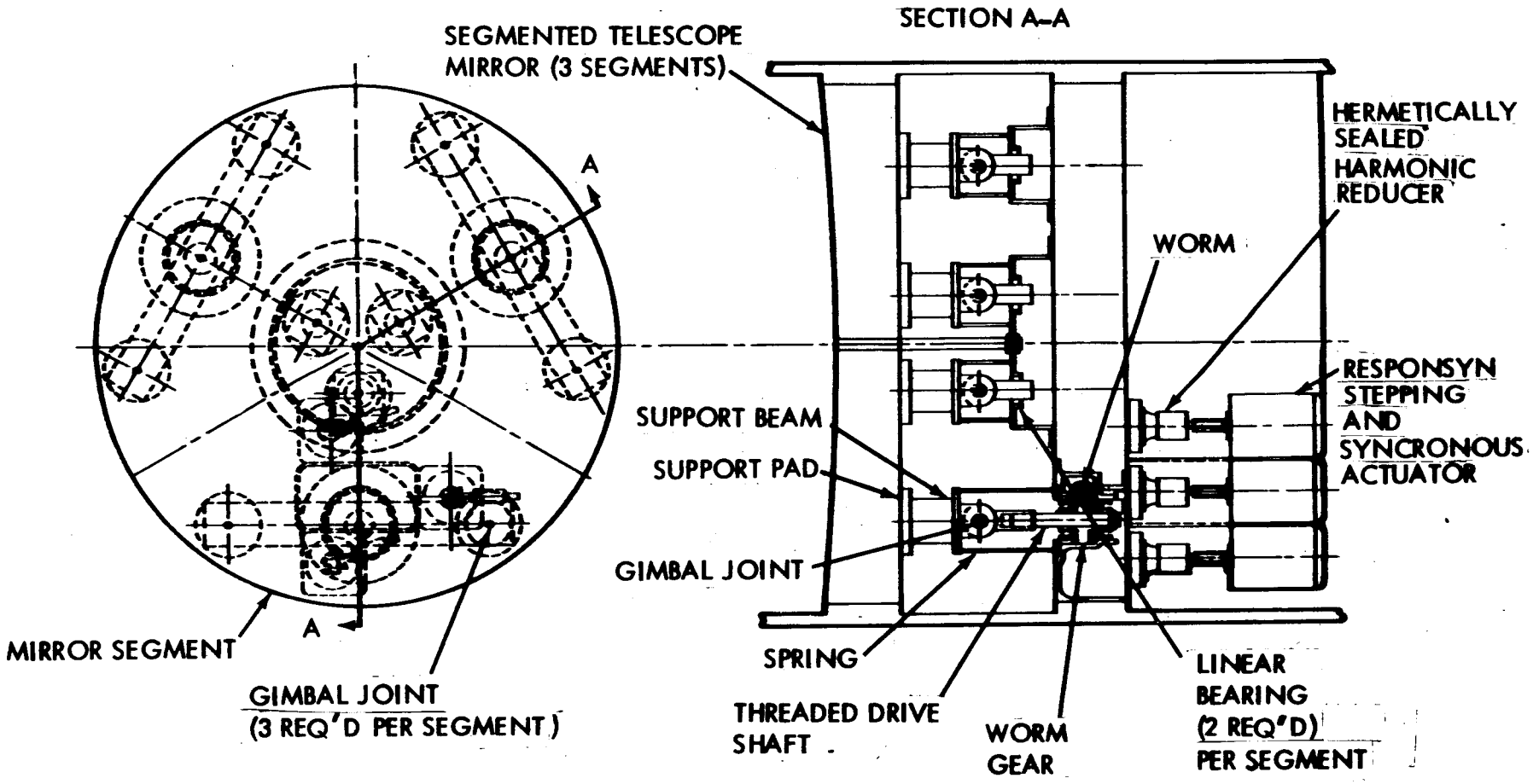

INTERFEROMETER DEVELOPMENT

JUSTIFICATION

NEED - SPACE SCIENCE BOARD RECOMMENDATION

NEED FOR SPACE TESTING - BEAM STABILITY

FEASIBILITY - ALIGNMENT PROBLEM

CONCEPTUAL INTERFEROMETER DESIGN

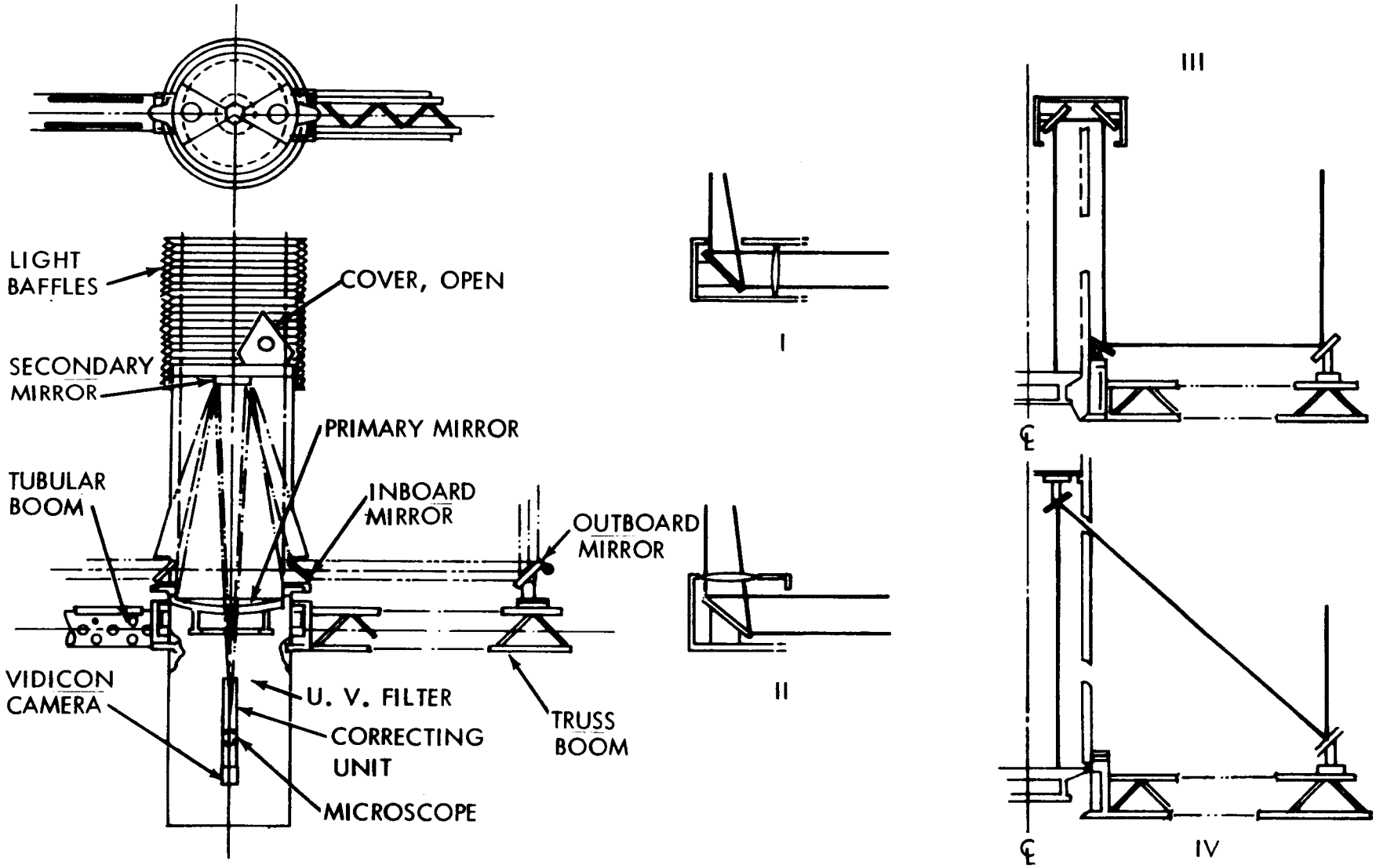

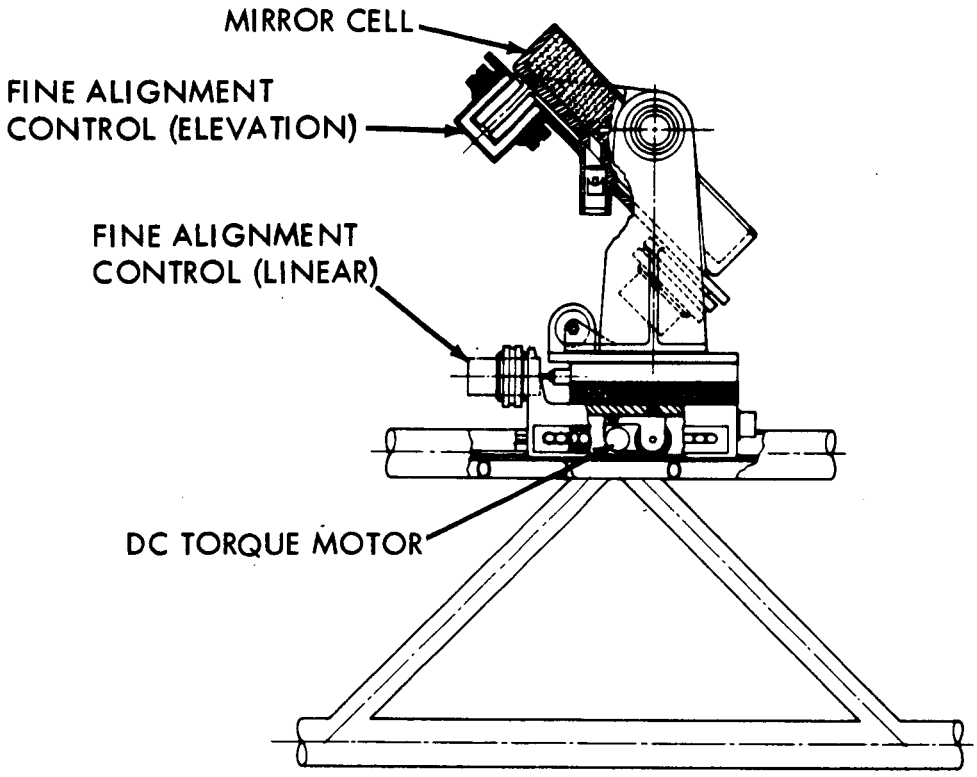
MIRROR CELL
FINE ALIGNMENT
CONTROL (ELEVATION)
FINE ALIGNMENT
CONTROL (LINEAR)
DC TORQUE MOTOR

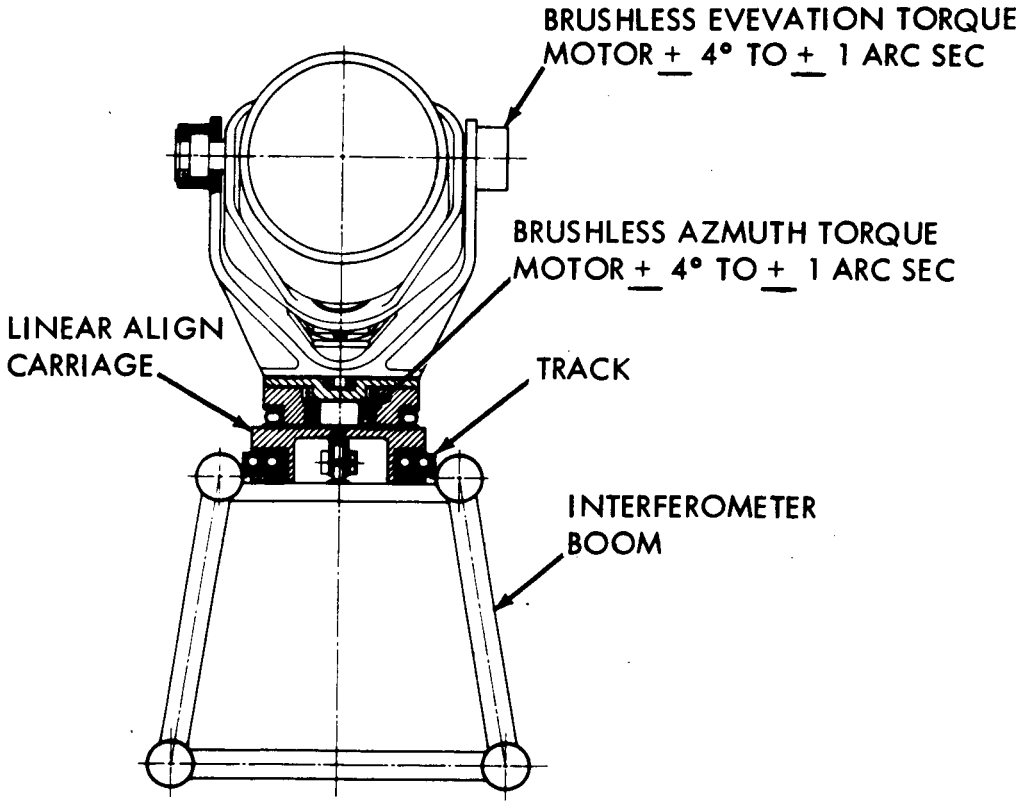
BRUSHLESS EVEVATION TORQUE
MOTOR ± 4° TO ± 1 ARC SEC
BRUSHLESS AZMUTH TORQUE
MOTOR ± 4° TO ± 1 ARC SEC
LINEAR ALIGN
CARRIAGE
TRACK
INTERFEROMETER
BOOM

PROJECT: OTAES PH I EXTENSION

LEGEND: INTERFEROMETER SYSTEM
LEVEL OF DETAIL: EXPERIMENT PECULIAR MAJOR ASSEMBLIES/SUB-SYSTEMS
DETAILED ELSEWHERE: OTAES COMMON ASSEMBLIES/SUB-SYSTEMS

Figure IV-14

Detail Schedule E-14
Sheet 1 of 1
Date: 6 July 1966

MONTHS AFTER AUTHORIZATION TO PROCEED

Prepared by: G.L. Hempfling

ADVANCED DEVELOPMENT EFFORT	TITLE
RESEARCH & DEVELOPMENT SUMMARY	
Task No. 1	Theoretical Analysis of Concepts (-6 to +3)
Task No. 2	Mirror Fine Alignment Actuator (-6 to +3)
Task No. 3	Laboratory Experiments (-4
ITEM No. / ASSEMBLY NAME	Major Assemblies/Sub-Systems
1 Beam	Preliminary Design of Assembly
	Construct Prototype of Assembly
	Development Test of Assembly
	Redesign, Mod.& Retest of Assy.
	Final Design of Assembly
	Manufacture of Assembly
2 Outer Mirror Assembly	Preliminary Design of Assembly
	Construct Prototype of Assembly
	Development Test of Assembly
	Redesign, Mod. & Retest of Assy.
	Final Design of Assembly
	Manufacture of Assembly
3 Inner Mirror Assembly	Preliminary Design of Assembly
	Construct Prototype of Assembly
	Development Test of Assembly
	Redesign, Mod.& Retest of Assy.
	Final Design of Assembly
	Manufacture of Assembly
4 Imaging Assembly	Preliminary Design of Assembly
	Construct Prototype of Assembly
	Development Test of Assembly
	Redesign, Mod.& Retest of Assy.
	Final Design of Assembly
	Manufacture of Assembly
5 Telescope Cover Positioning Mechanism	Preliminary Design of Assembly
	Construct Prototype of Assembly
	Development Test of Assembly
	Redesign, Mod.& Retest of Assy.
	Final Design of Assembly
	Manufacture of Assembly
6 Optics	Preliminary Design of Assembly
	Construct Prototype of Assembly
	Development Test of Assembly
	Redesign, Mod. & Retest of Assy.
	Final Design of Assembly
	Manufacture of Assembly
EFFORT	FINAL ASSEMBLY AND - C/O
TASK "A"	Final Assembly of Experiment Primary Flight Article
TASK "B"	Functional Check-Out of Exper. Primary Flight Article
TASK "C"	Final Assembly of Experiment Backup Flight Article
TASK "D"	Functional Check-Out of Exp. Backup Article

KEY

- Activity Time
- Delay Time
- Backup Flight Article

1. Preliminary Design of Optics Constrained by Completion of Theoretical Analysis of Concept.
2. Preliminary Design of Outer Mirror Assembly and Inner Mirror Assembly Constrained by Completion of R & D of Mirror Fine Alignment Actuators and Completion of Laboratory Experiments.
3. Completion of Preliminary Design of Outer Mirror Assembly Constrained by Completion of Beam Preliminary Design.
4. Development Test of the Prototype Experiment is Constrained by Development Test of Imaging Assembly.
5. Development Test of the Prototype Experiment is Further Constrained by Availability of Remote Display and Controls.
6. Completion of Final Assembly Constrained by Availability of Imaging Assembly.
7. Completion of Final Assembly Constrained by Availability of Imaging Assembly.

DIGEST OF PREREQUISITE TECHNOLOGY ACTIVITIES

Time Span to Completion: 9 months.

Research and Development

a. Theoretical analysis of beam concepts (6 months).
   (1) Materials survey.
   (2) Conceptual design and analysis.
   (3) Computer analysis of performance.
   (4) Compilation of weight/performance data.
   (5) Environmental disturbances investigation.

b. Mirror fine alignment actuator analysis (6 months).
   (1) Survey and evaluation of techniques.
   (2) Materials survey.
   (3) Computer determination of performance coefficients.
   (4) Insulation and power requirements investigation.

c. Laboratory experiments.
   (1) Beam concept design.
      (a) Model design.
      (b) Model construction.
      (c) Environmental tests and comparison.
   (2) Mirror fine alignment actuators.
      (a) Model design.
      (b) Model construction.
      (c) Environmental tests and comparison.

CANDIDATE MISSIONS

Mission Number	Manned for 45 Days	Initially Unmanned But Capable of Rendezvous	Orbit	Launch Vehicle
I	X		Synchronous	Saturn V
II	X		Elliptical	Saturn V
III		X	Synchronous	Saturn IB/Centaur
IV		X	Elliptical	Saturn IB/Centaur
V	X		Near Earth	Saturn IB
VI	Near Earth Vehicle	High Energy Vechile	Near Earth & Synchronous	Saturn V
VII	Near Earth Vehicle	High Energy Vehicle	Near Earth & Elliptical	Saturn V
VIII		X	Synchronous	Saturn IB/Zero Stage
IX		X	Elliptical	Saturn IB/Zero Stage

CRITICALITY OF MAN'S PARTICIPATION

EXPERIMENT \ HUMAN FUNCTION CLUSTER	PREPARATION & SET-UP	EXPERIMENT OPERATIONS	COMMUNICATION AND DATA MANAGEMENT	PREVENTIVE & REMEDIAL MAINTENANCE
Optical Heterodyne Detection on Earth	C	CD	C	C
Optical Heterodyne Detection on the Spacecraft	C	CD	C	C
Communication with 10 Megahertz Bandwidth	B	CD	B	C
Direct Detection from Space to Ground	B	CD	E	C
Precision Tracking of a Ground Beacon	C	CD	E	C
Point Ahead and Space-to-Ground-to-Space Loop Closure	C	CD	E	C
Transfer Tracking from One Ground Station to Another	C	CD	C	C
Phase Correlation Measurements	B	CD	C	C
Pulse Distortion Measurements	B	CD	C	C
Primary Mirror Figure Test and Correction	B	A	A	C
Thin Mirror Nesting Verification	A	BD	C	C
Fine Guidance	B	BD	C	C
Comparison of Isolation Techniques	B	B	B	C
Interferometer System	A	A	C	C
Segmented Optics	A	C	A	C
Degradation of Optical Materials and Coatings	C	E	E	C

KEY: A = Man is essential.
B = Man is best, most efficient and/or hightly desirable.
C = Man can perform useful tasks.
D = Man could be undesirable.
E = Man is not involved.

ORBIT AND MANNING REQUIREMENTS

Experiment	Manning	Orbit
1. Heterodyne Detection	O	S
2. Direct Detection	O	S
3. 10 Megahertz Communication	O	S
4. Precision Tracking	O	S
5. Point Ahead	O	S
6. Transfer Tracking	O	S
7. Phase Correlation Measurements	O	S
8. Pulse Distortion Measurements	O	S
9. Primary Mirror Figure Correction	M	N
10. Thin Mirror Nesting	M	N
11. Fine Guidance	M	N
12. Comparison of Isolation Techniques	M	N
13. Interferometer System	M	S
14. Segmented Optics	M	N
15. Degradation of Optical Materials	M	N

O - Manning Optinal
M - Manned Preferred
S - Synchronous Orbit Preferred
N - Orbit Optional

OTAES MISSIONS

1. A MANNED SYNCHRONOUS MISSION.

2. AN UNMANNED SYNCHRONOUS MISSION.

3. A MANNED LOW EARTH ORBIT MISSION.

4. A SINGLE LAUNCH DUAL MISSION COMBINING THE UNMANNED SYNCHRONOUS AND MANNED LOW EARTH ORBIT MISSIONS.

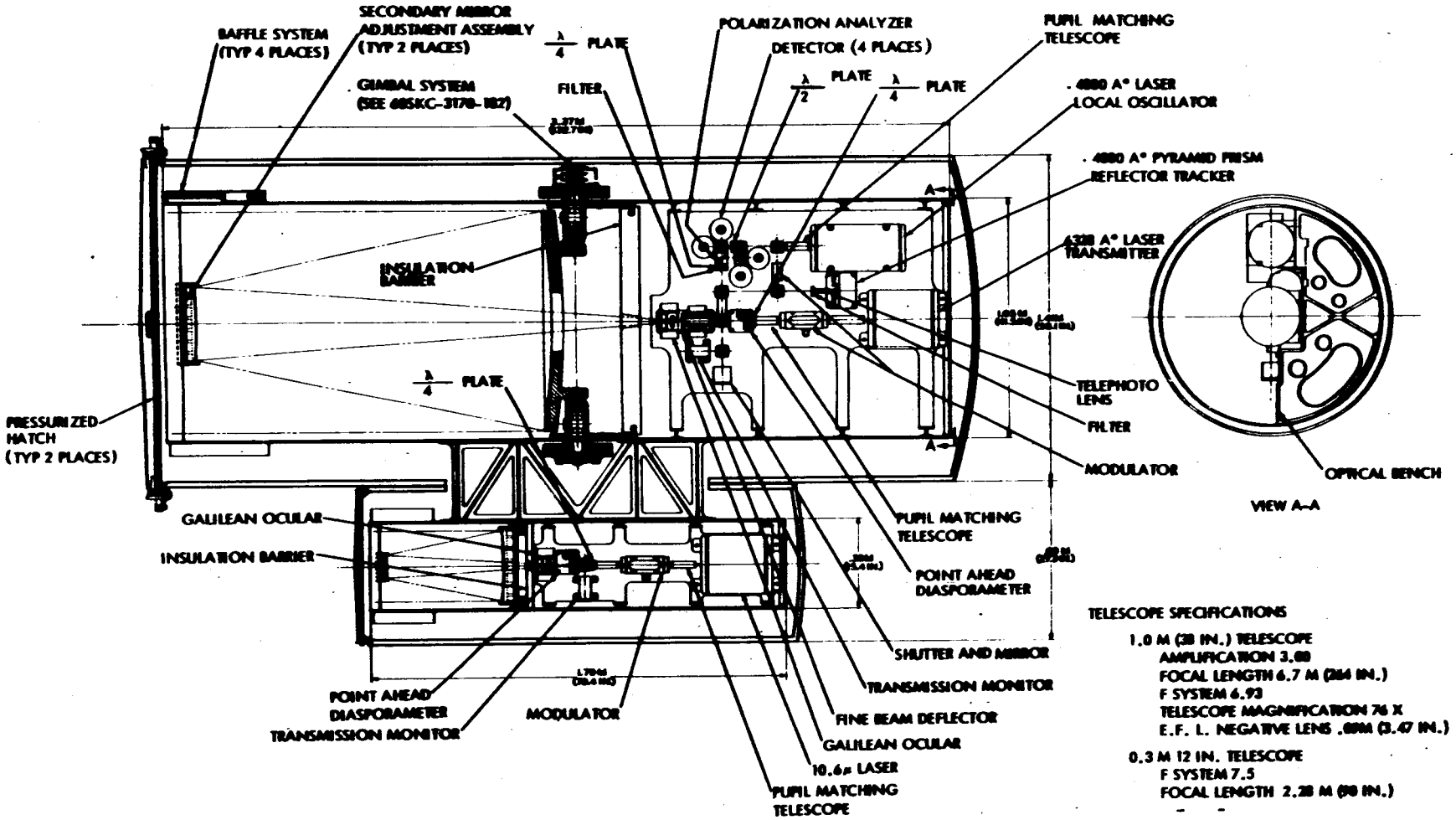

Figure 7. One Meter Telescope with Three-tenths Strapped Down Telescope

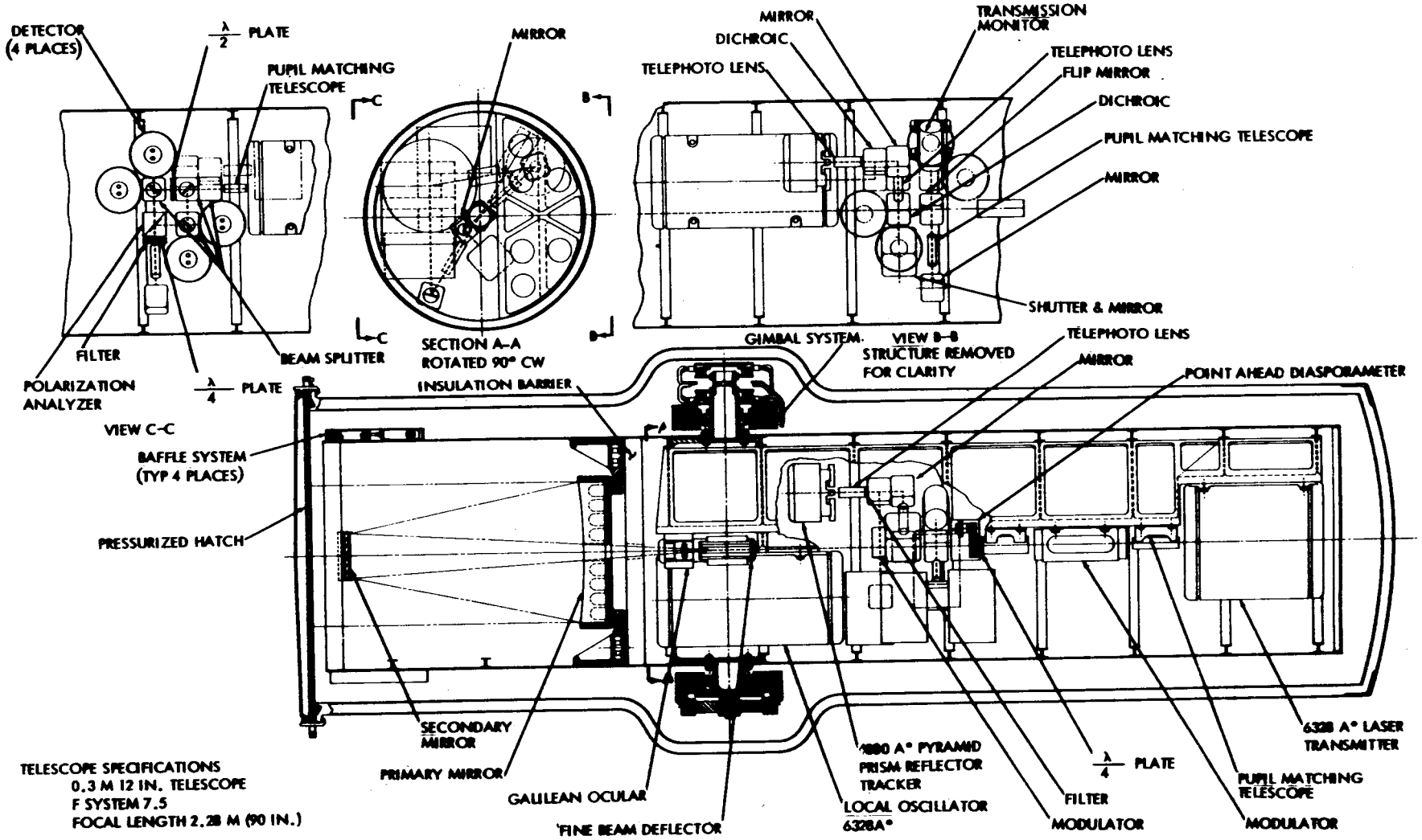
DETECTOR (4 PLACES)
λ/2 PLATE
PUPIL MATCHING TELESCOPE
FILTER
BEAM SPLITTER
POLARIZATION ANALYZER
λ/4 PLATE
VIEW C-C
MIRROR
SECTION A-A ROTATED 90° CW
MIRROR
DICHROIC
TELEPHOTO LENS
TRANSMISSION MONITOR
TELEPHOTO LENS
FLIP MIRROR
DICHROIC
PUPIL MATCHING TELESCOPE
MIRROR
SHUTTER & MIRROR
GIMBAL SYSTEM
VIEW B-B STRUCTURE REMOVED FOR CLARITY
TELEPHOTO LENS
MIRROR
POINT AHEAD DIASPORAMETER
INSULATION BARRIER
BAFFLE SYSTEM (TYP 4 PLACES)
PRESSURIZED HATCH
SECONDARY MIRROR
PRIMARY MIRROR
GALILEAN OCULAR
FINE BEAM DEFLECTOR
LOCAL OSCILLATOR 6328A°
1880 A° PYRAMID PRISM REFLECTOR TRACKER
FILTER
MODULATOR
λ/4 PLATE
PUPIL MATCHING TELESCOPE
MODULATOR
6328 A° LASER TRANSMITTER
TELESCOPE SPECIFICATIONS
0.3 M 12 IN. TELESCOPE
F SYSTEM 7.5
FOCAL LENGTH 2.28 M (90 IN.)

TIME LINES FOR OPTICAL COMMUNICATION TELESCOPES

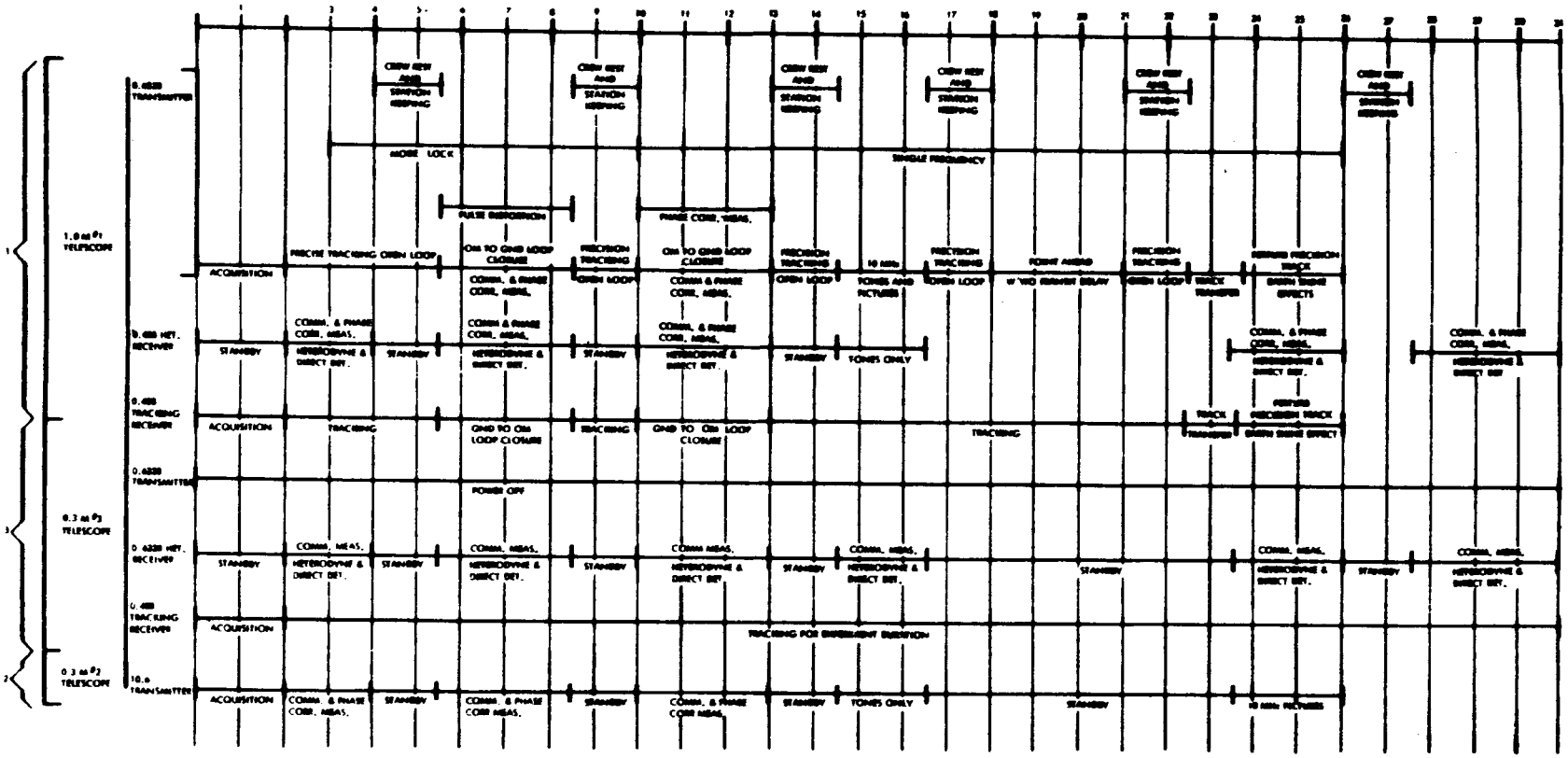

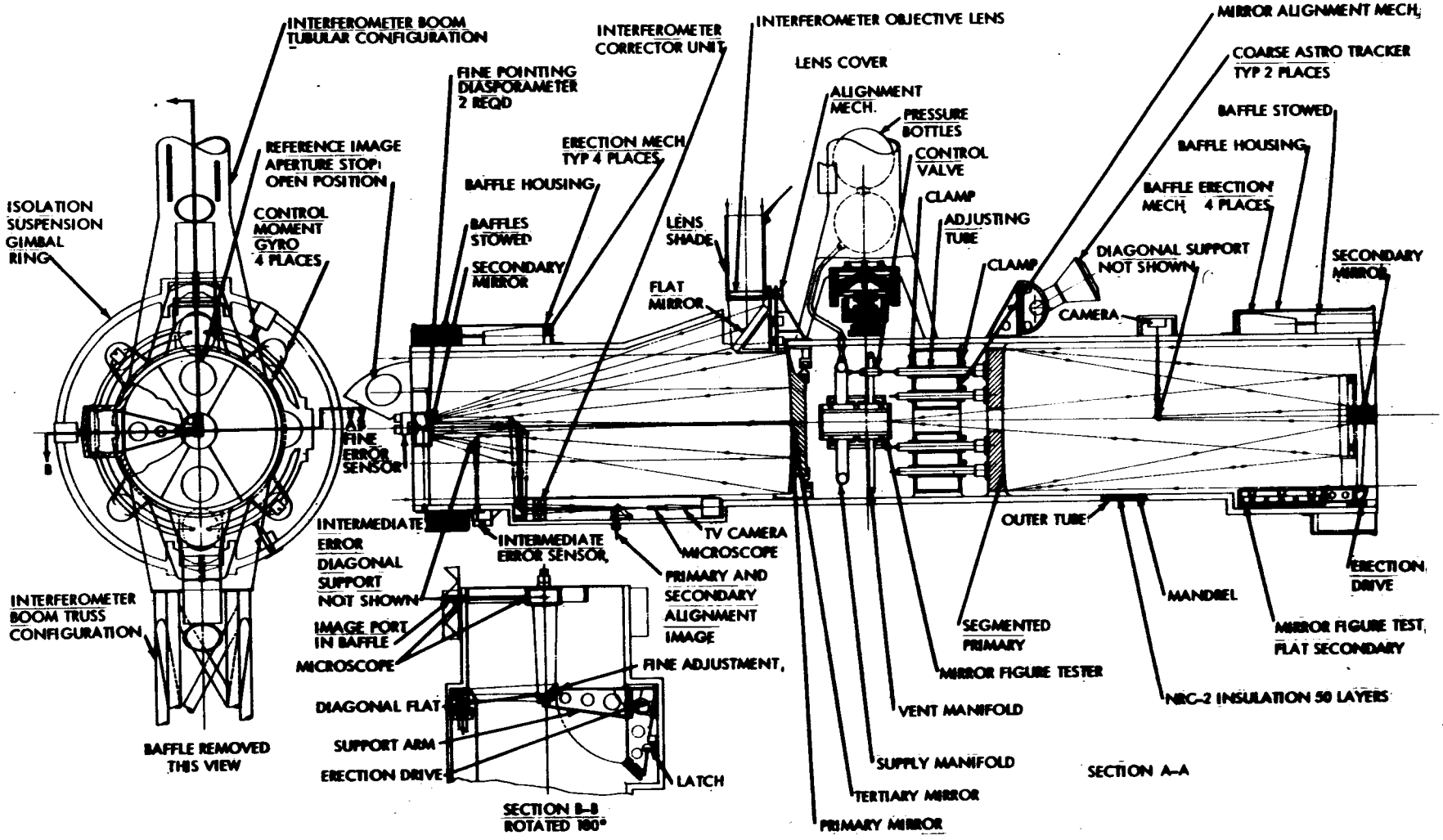
INTERFEROMETER BOOM TUBULAR CONFIGURATION
FINE POINTING DIASPORAMETER 2 REQD
INTERFEROMETER CORRECTOR UNIT
INTERFEROMETER OBJECTIVE LENS
LENS COVER
MIRROR ALIGNMENT MECH.
COARSE ASTRO TRACKER TYP 2 PLACES
ALIGNMENT MECH.
PRESSURE BOTTLES
BAFFLE STOWED
REFERENCE IMAGE APERTURE STOP: OPEN POSITION
ERECTION MECH. TYP 4 PLACES
CONTROL VALVE
BAFFLE HOUSING
BAFFLE HOUSING
BAFFLE ERECTION MECH. 4 PLACES
ISOLATION SUSPENSION GIMBAL RING
CONTROL MOMENT GYRO 4 PLACES
BAFFLES STOWED
LENS SHADE
CLAMP
ADJUSTING TUBE
SECONDARY MIRROR
DIAGONAL SUPPORT NOT SHOWN
CLAMP
SECONDARY MIRROR
FLAT MIRROR
CAMERA
TV AS FINE ERROR SENSOR
INTERMEDIATE ERROR DIAGONAL SUPPORT NOT SHOWN
INTERMEDIATE ERROR SENSOR
TV CAMERA
MICROSCOPE
OUTER TUBE
PRIMARY AND SECONDARY ALIGNMENT IMAGE
ERECTION DRIVE
MANDREL
INTERFEROMETER BOOM TRUSS CONFIGURATION
IMAGE PORT IN BAFFLE
SEGMENTED PRIMARY
MIRROR FIGURE TEST, FLAT SECONDARY
MICROSCOPE
FINE ADJUSTMENT,
MIRROR FIGURE TESTER
DIAGONAL FLAT
VENT MANIFOLD
NRC-2 INSULATION 50 LAYERS
SUPPORT ARM
SUPPLY MANIFOLD
BAFFLE REMOVED THIS VIEW
ERECTION DRIVE
LATCH
SECTION A-A
TERTIARY MIRROR
SECTION B-B ROTATED 180°
PRIMARY MIRROR

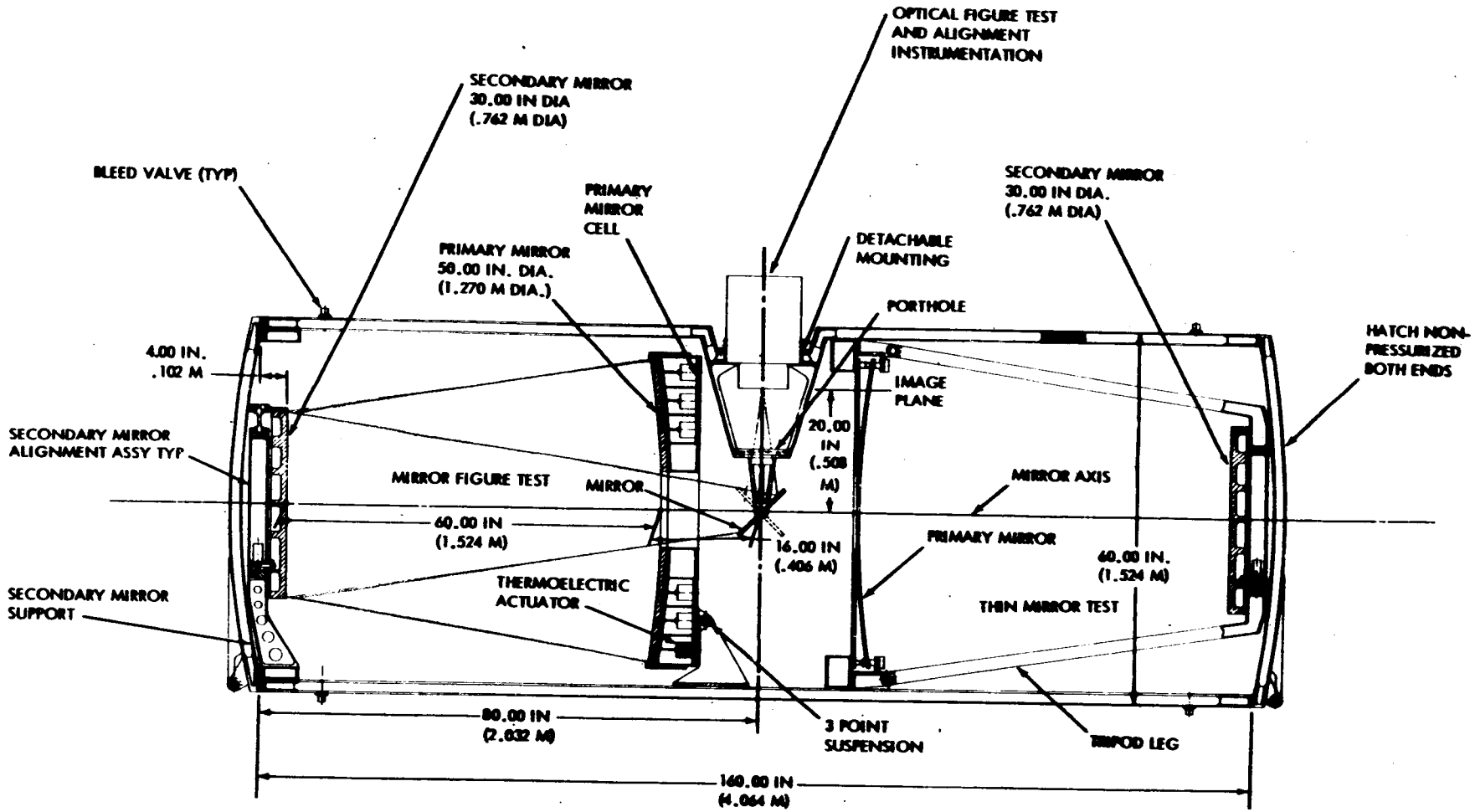
OPTICAL FIGURE TEST
AND ALIGNMENT
INSTRUMENTATION
SECONDARY MIRROR
30.00 IN DIA
(.762 M DIA)
BLEED VALVE (TYP)
PRIMARY
MIRROR
CELL
SECONDARY MIRROR
30.00 IN DIA.
(.762 M DIA)
PRIMARY MIRROR
50.00 IN. DIA.
(1.270 M DIA.)
DETACHABLE
MOUNTING
PORTHOLE
HATCH NON-
PRESSURIZED
BOTH ENDS
4.00 IN.
.102 M
IMAGE
PLANE
20.00
IN
(.508
M)
SECONDARY MIRROR
ALIGNMENT ASSY TYP
MIRROR FIGURE TEST
MIRROR
MIRROR AXIS
60.00 IN
(1.524 M)
16.00 IN
(.406 M)
PRIMARY MIRROR
60.00 IN.
(1.524 M)
THERMOELECTRIC
ACTUATOR
SECONDARY MIRROR
SUPPORT
THIN MIRROR TEST
80.00 IN
(2.032 M)
3 POINT
SUSPENSION
TRIPOD LEG
160.00 IN
(4.064 M)

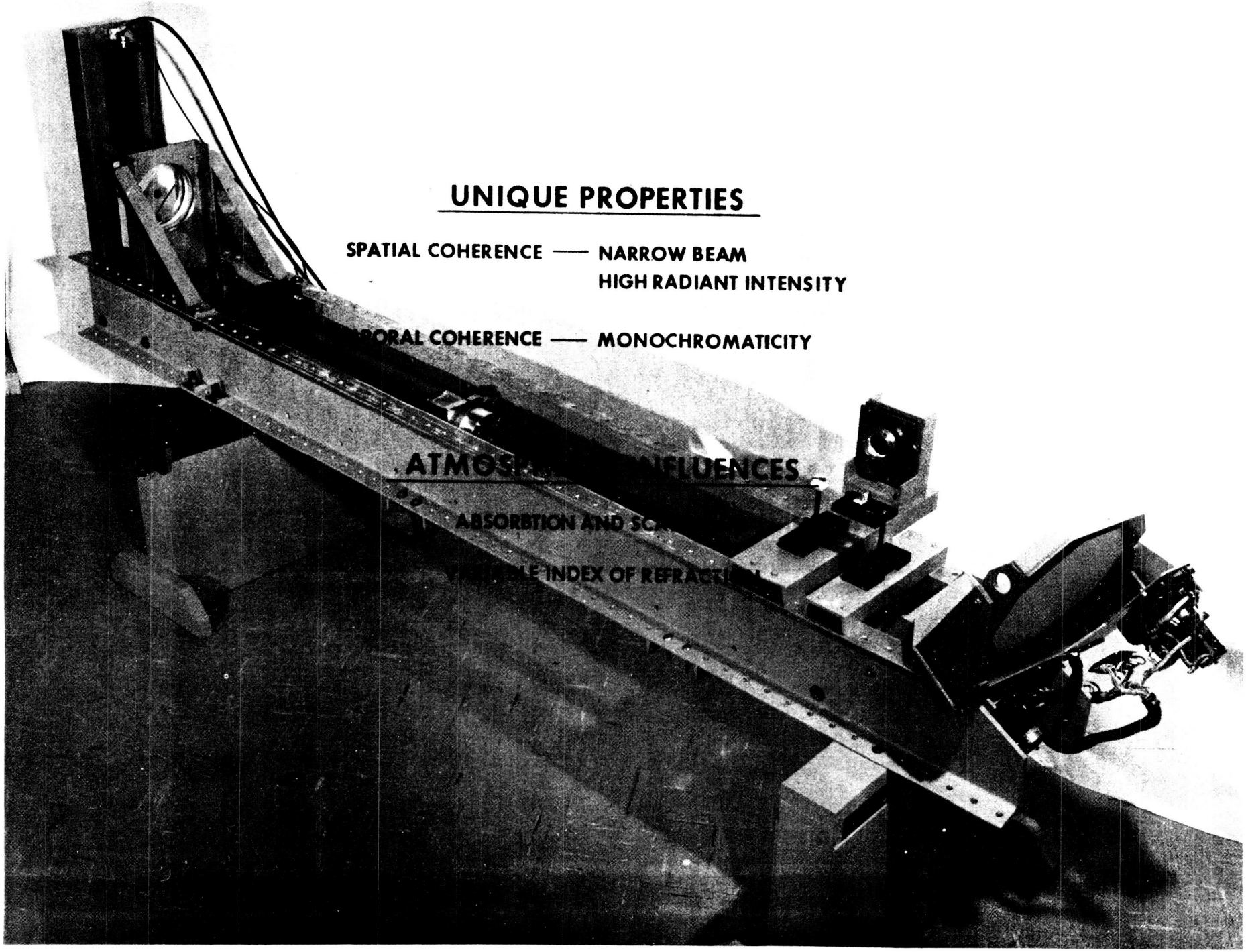
UNIQUE PROPERTIES
SPATIAL COHERENCE —— NARROW BEAM
HIGH RADIANT INTENSITY
ORAL COHERENCE —— MONOCHROMATICITY
ATMOS FLUENCES
ABSORBTION AND SC
INDEX OF REFRACT

ATMOSPHERIC PHYSICS

TURBULENT REGION

TURBULENT STRUCTURE

	AMPLITUDE	PHASE	POLARIZATION
AUTO-CORRELATION		STABILITY?	
CROSS-CORRELATION			NEED ?

SYLVANIA ELECTRONIC SYSTEMS
GENERAL TELEPHONE & ELECTRONICS

EXPERIMENT AREAS

APPLICATIONS

COMMUNICATIONS

~~METEOROLOGY~~

ATMOSPHERIC SCIENCE

PHYSICAL

~~CONSTITUENTS~~

COMMUNICATION ENGINEERING

MEASUREMENT	DESIRED DATA	COMMUNICATION PARAMETER
AMPLITUDE (A)	ΔA % OF TIME vs. ΔA	APERTURE, S/N, ERROR RATE
	$\dot{A}$ ΔA vs. λ	LOWEST AM FREQUENCY AGC
PHASE (ϕ)	$\dot{\phi}$ $\Delta\phi$ vs. λ	RECEIVER NOISE
PHASE CORRELATION ϕ (X, Y)	% TIME vs. ϕ (X, Y)	IMAGE SIZE MIXING EFFICIENCY
	ϕ vs. (X, Y)	APPARENT IMAGE MOTION ANGLE TRACKING RATES
PULSE DISTORTION	TIME DISPERSION % OF TIME vs. DISTORTION	MAX. BANDWIDTH OF MEDIUM
POLARIZATION (ξ)	$\Delta\xi$ $\dot{\xi}$ $\Delta\xi$ vs. TIME	CODE

ATMOSPHERIC PHYSICS	HETERODYNE LINKS	DIRECT DETECTION	PHASE CORRELATION	PULSE DISTORTION
POLARIZATION DISTORTION	•	•		
PHASE FLUCTUATION	•		•	
RECEIVED INTENSITY FLUCTUATIONS	•	•	•	
HETERODYNE SIGNAL INTENSITY	•			
ANGLE OF ARRIVAL	•		•	
PHASE CORRELATION			•	
RECEIVED NOISE LEVELS	•	•	•	•
FORWARD SCATTER (MULTIPATH)			•	•

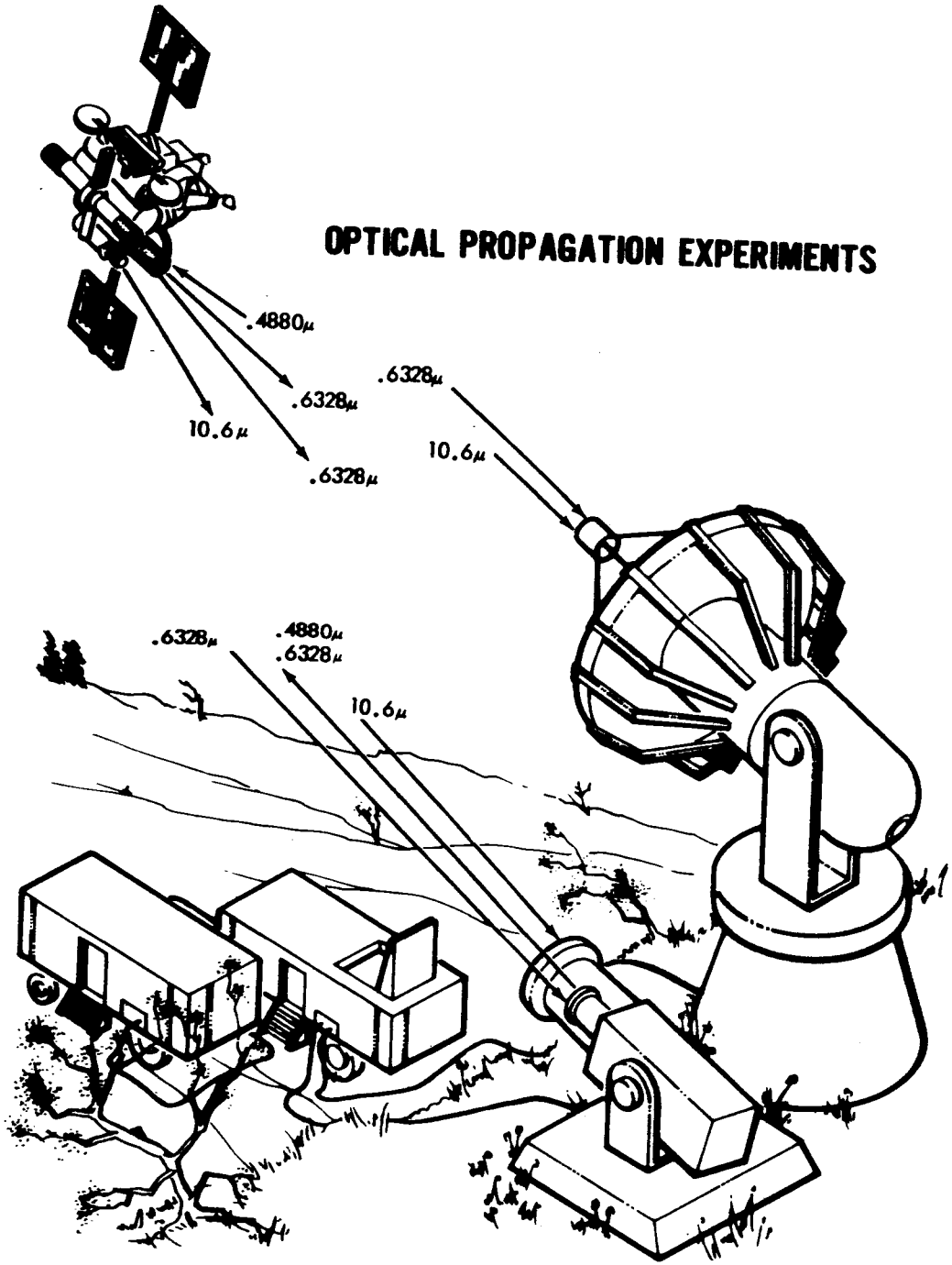
OPTICAL PROPAGATION EXPERIMENTS
.4880μ
.6328μ
10.6μ
.6328μ
.6328μ
10.6μ
.6328μ
.4880μ
.6328μ
10.6μ

PHASE CORRELATION INSTRUMENTATION

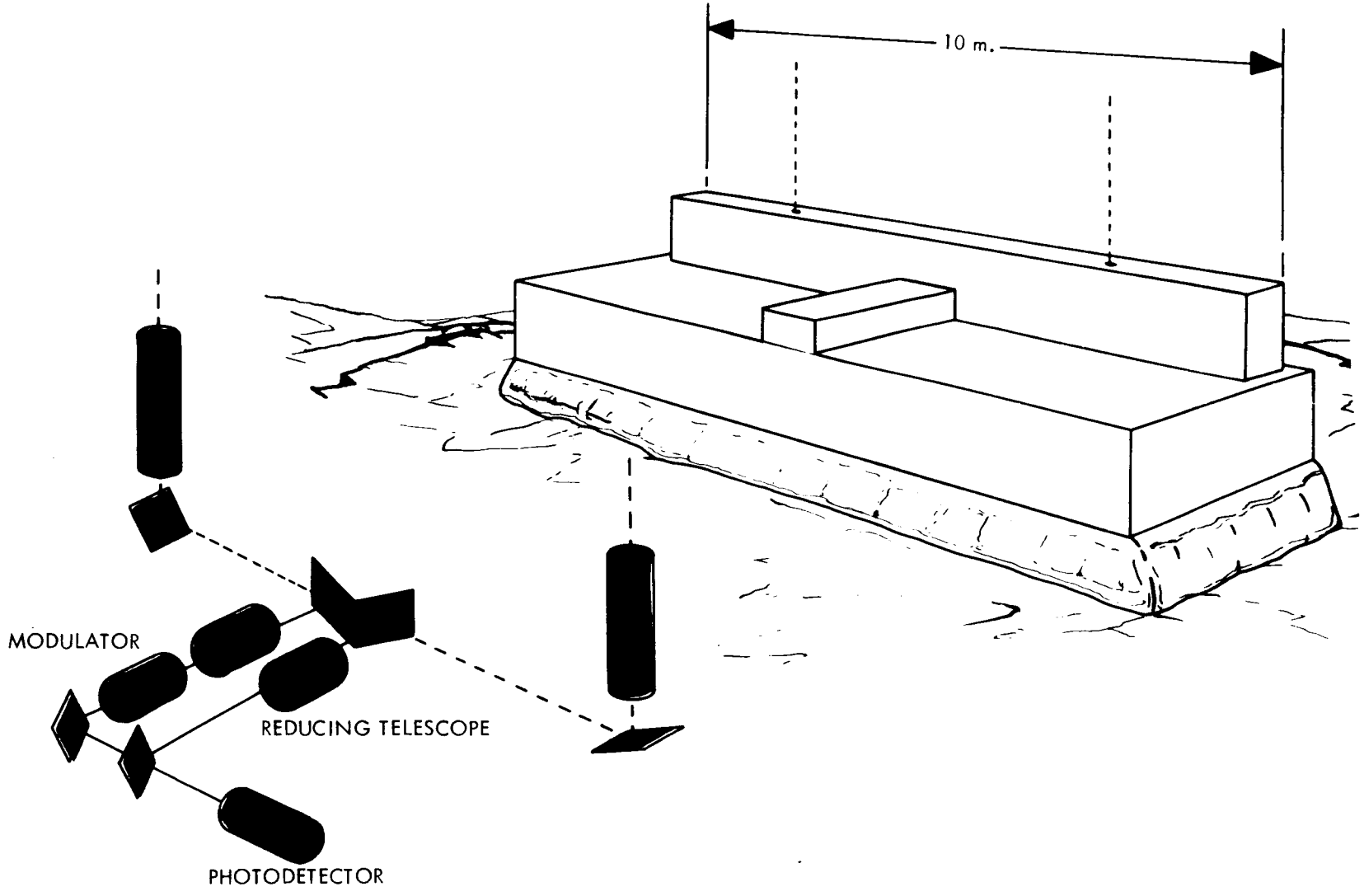

MODE-LOCKED TRANSMITTER

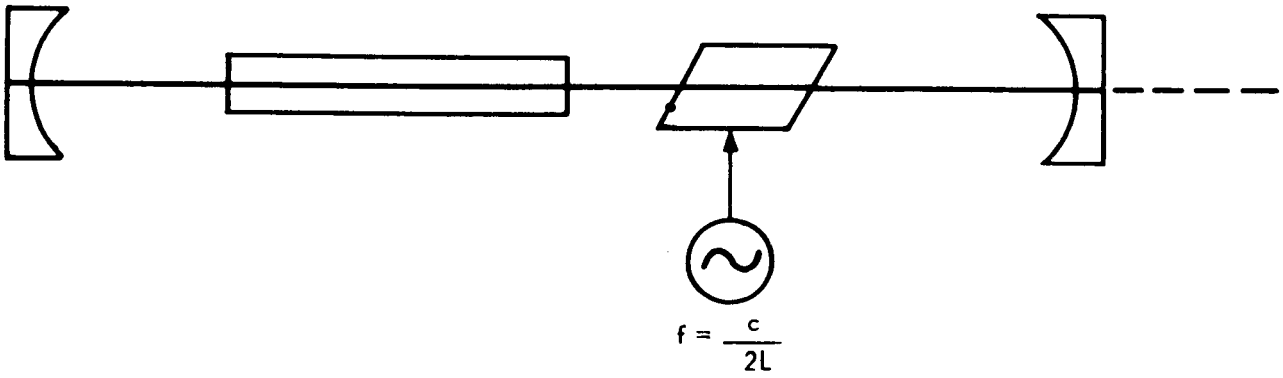

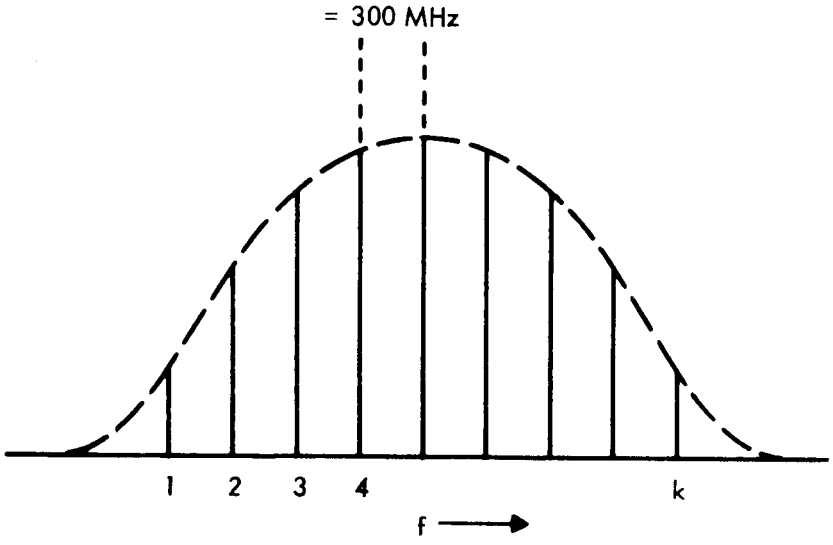

SPECTRUM

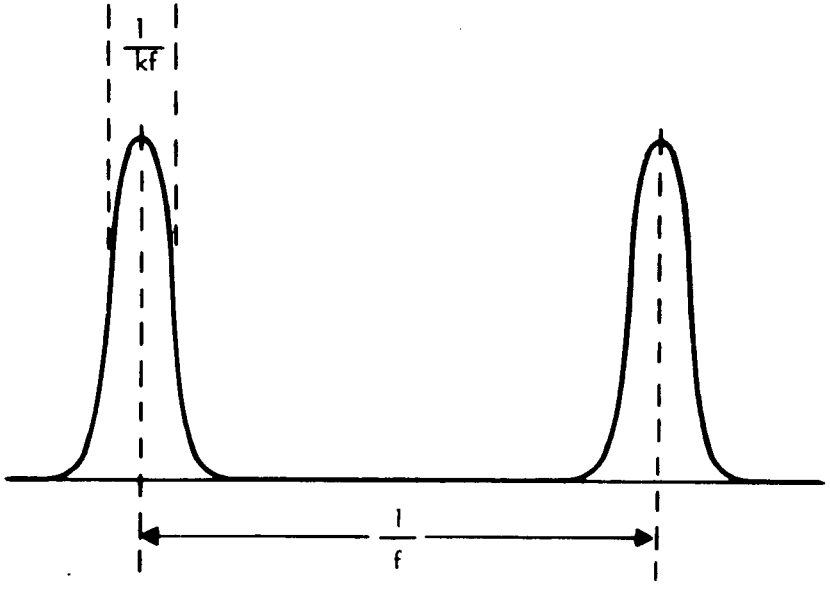

ENVELOPE OF WAVEFORM

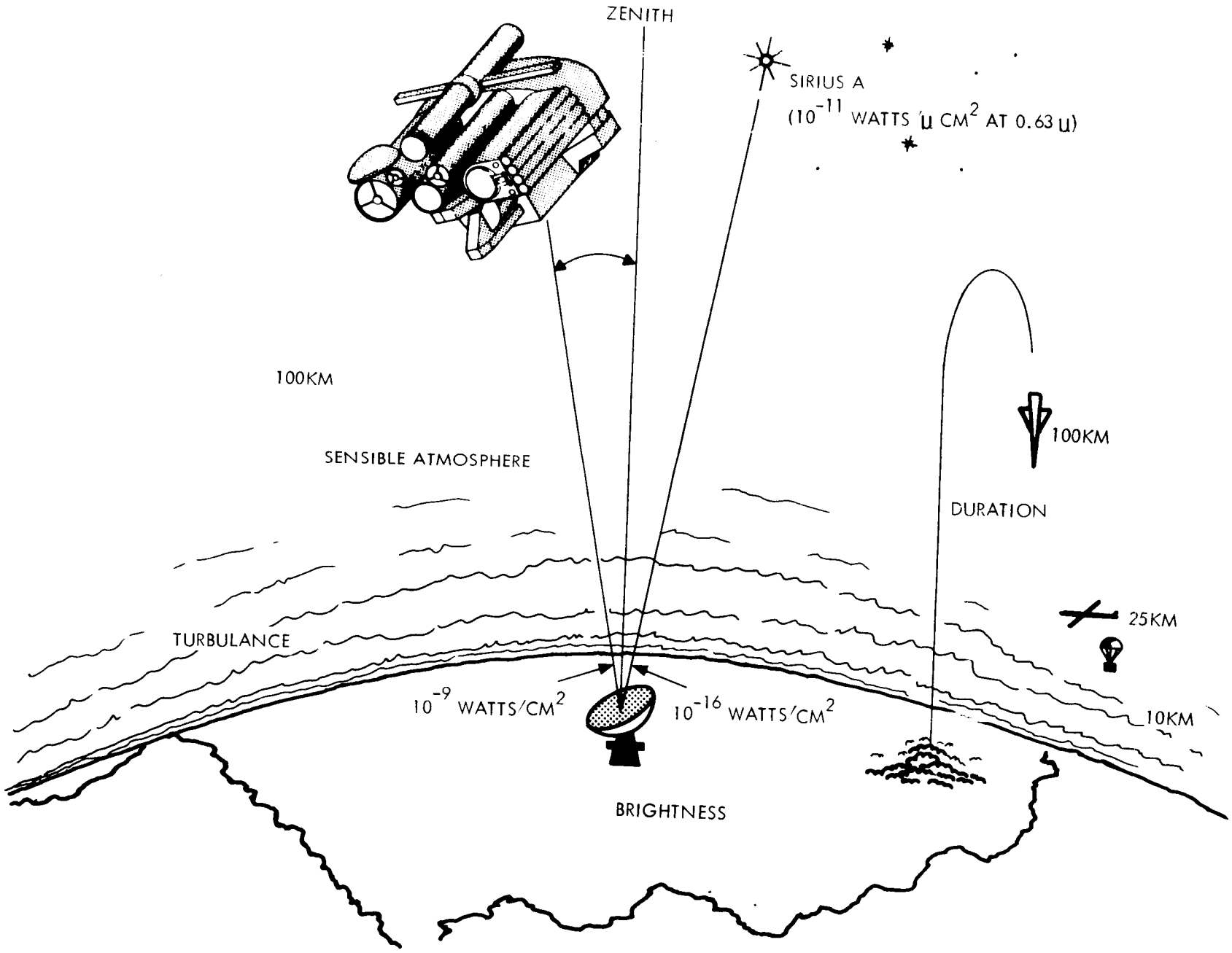
ZENITH
SIRIUS A
(10^{-11} WATTS/μ CM^2 AT 0.63 μ)
100KM
SENSIBLE ATMOSPHERE
100KM
DURATION
25KM
TURBULANCE
10^{-9} WATTS/CM^2
10^{-16} WATTS/CM^2
10KM
BRIGHTNESS

FRAUNHOFER (FAR-FIELD) REGION

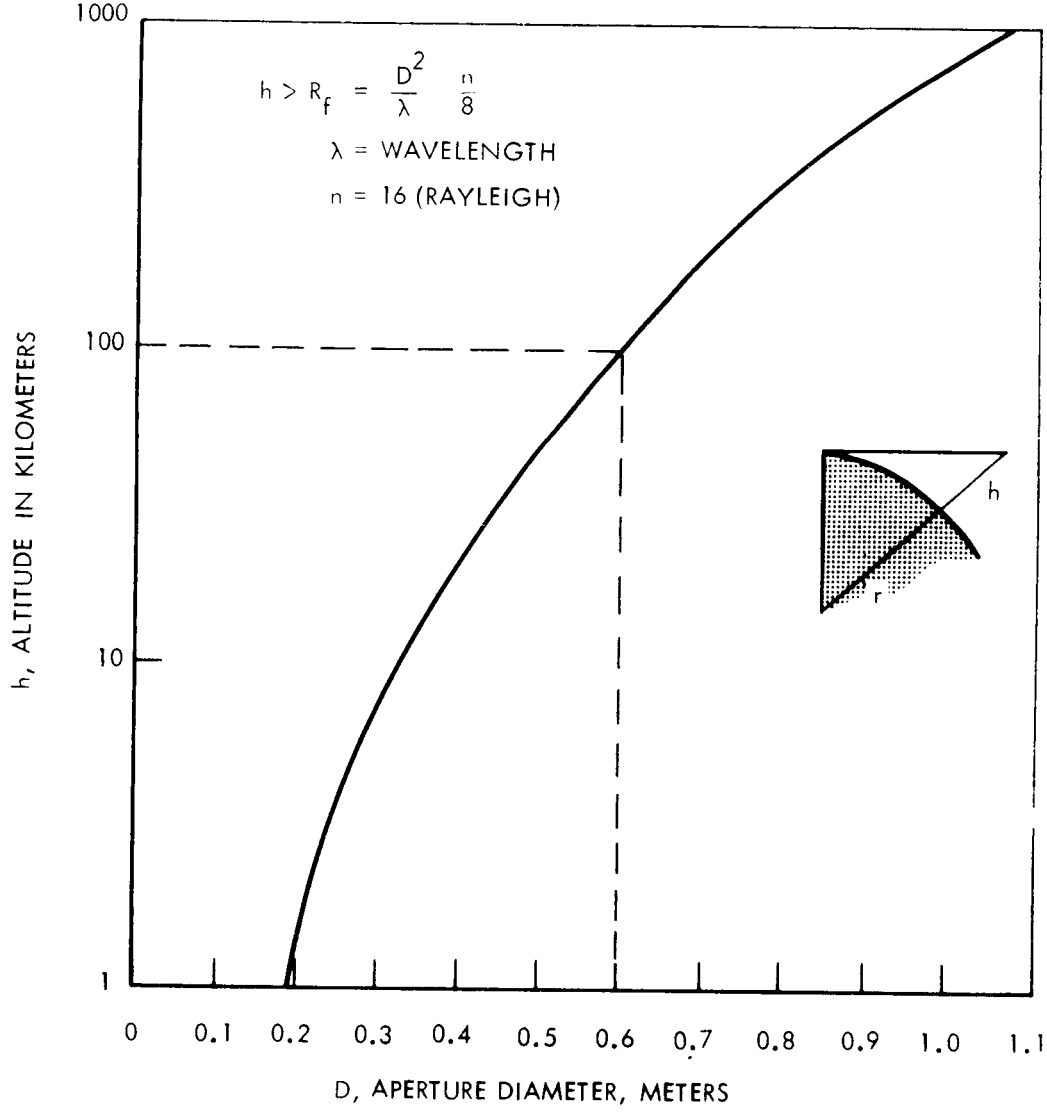

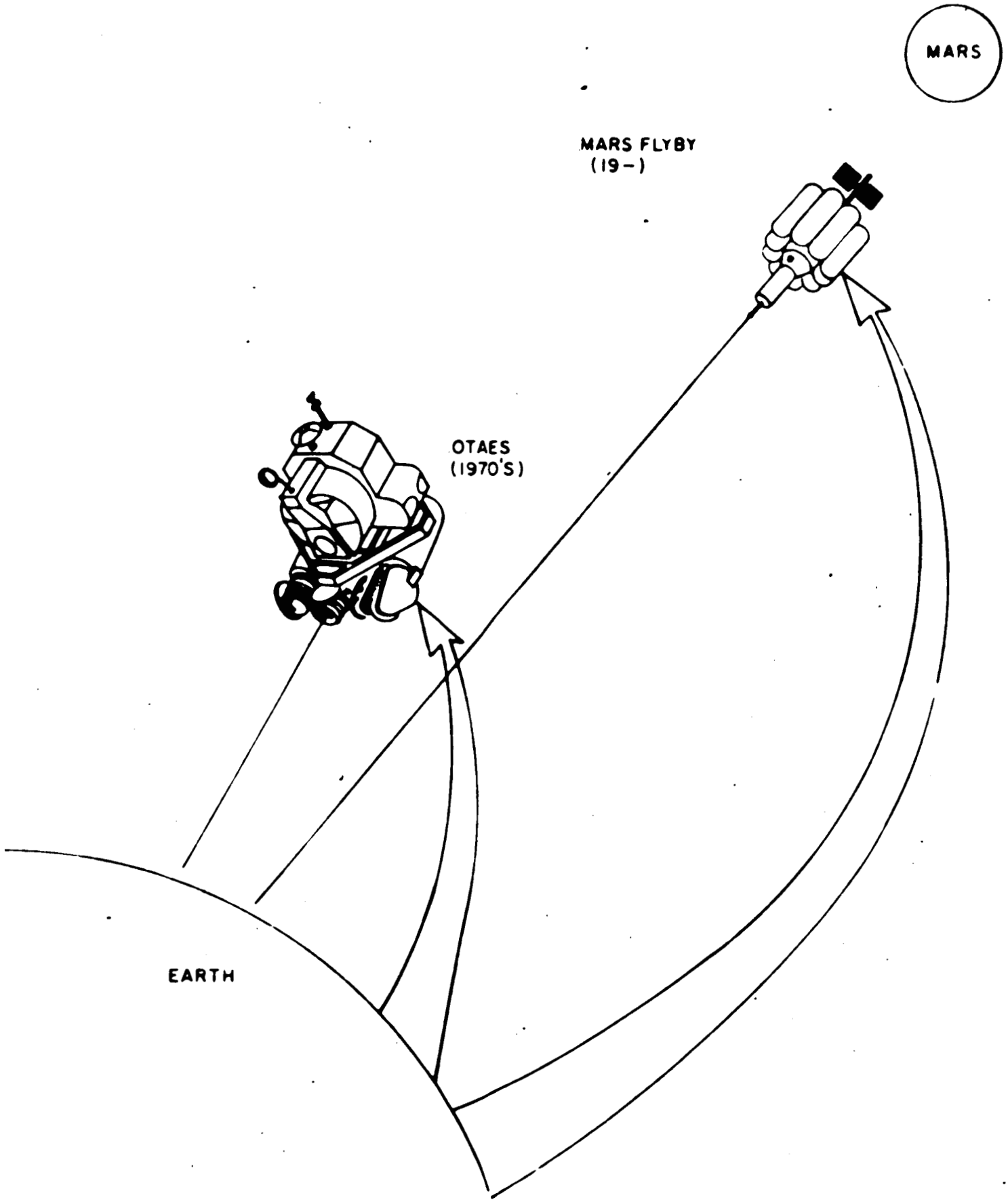

PRECISION TRACKING EXPERIMENTS

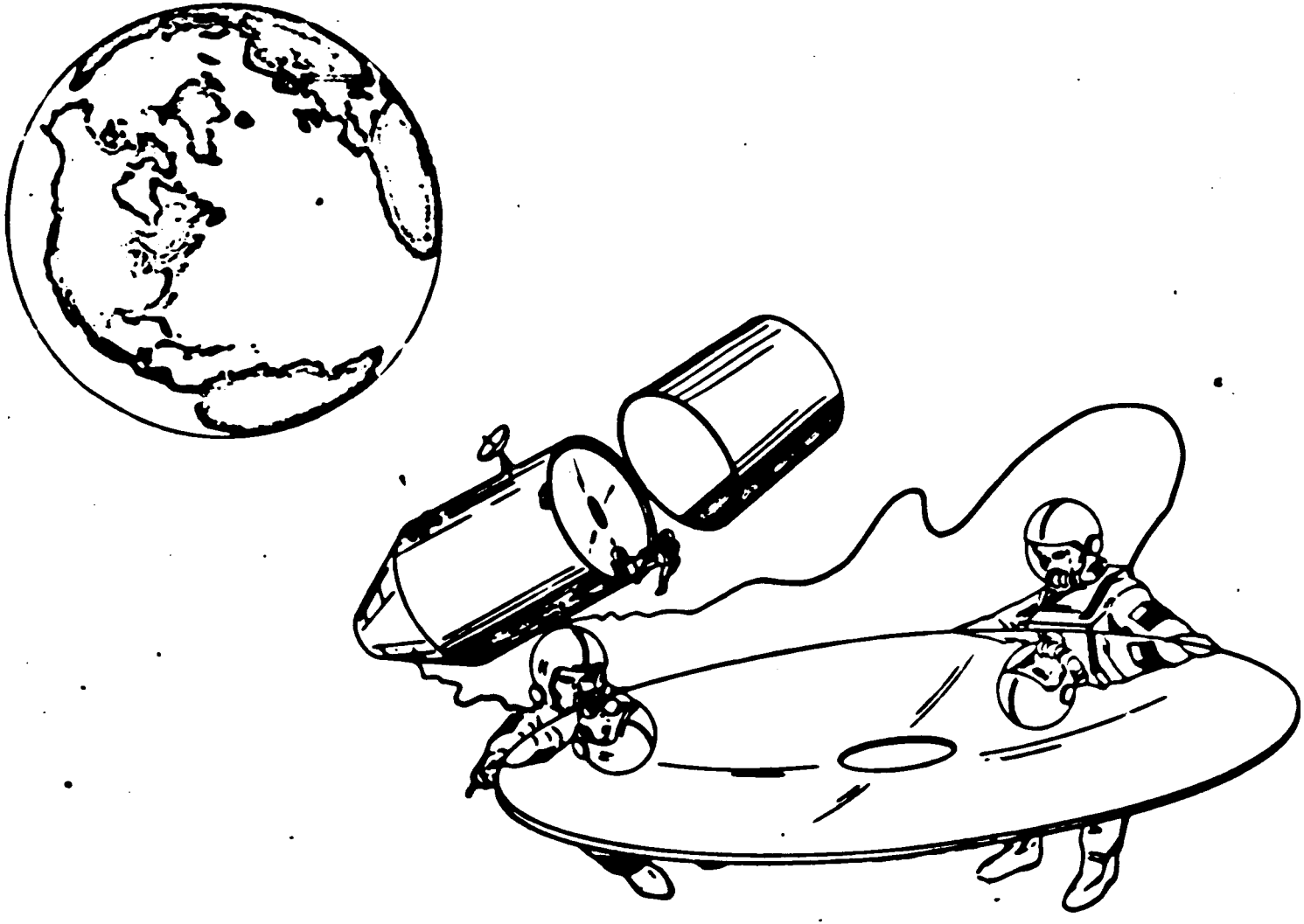

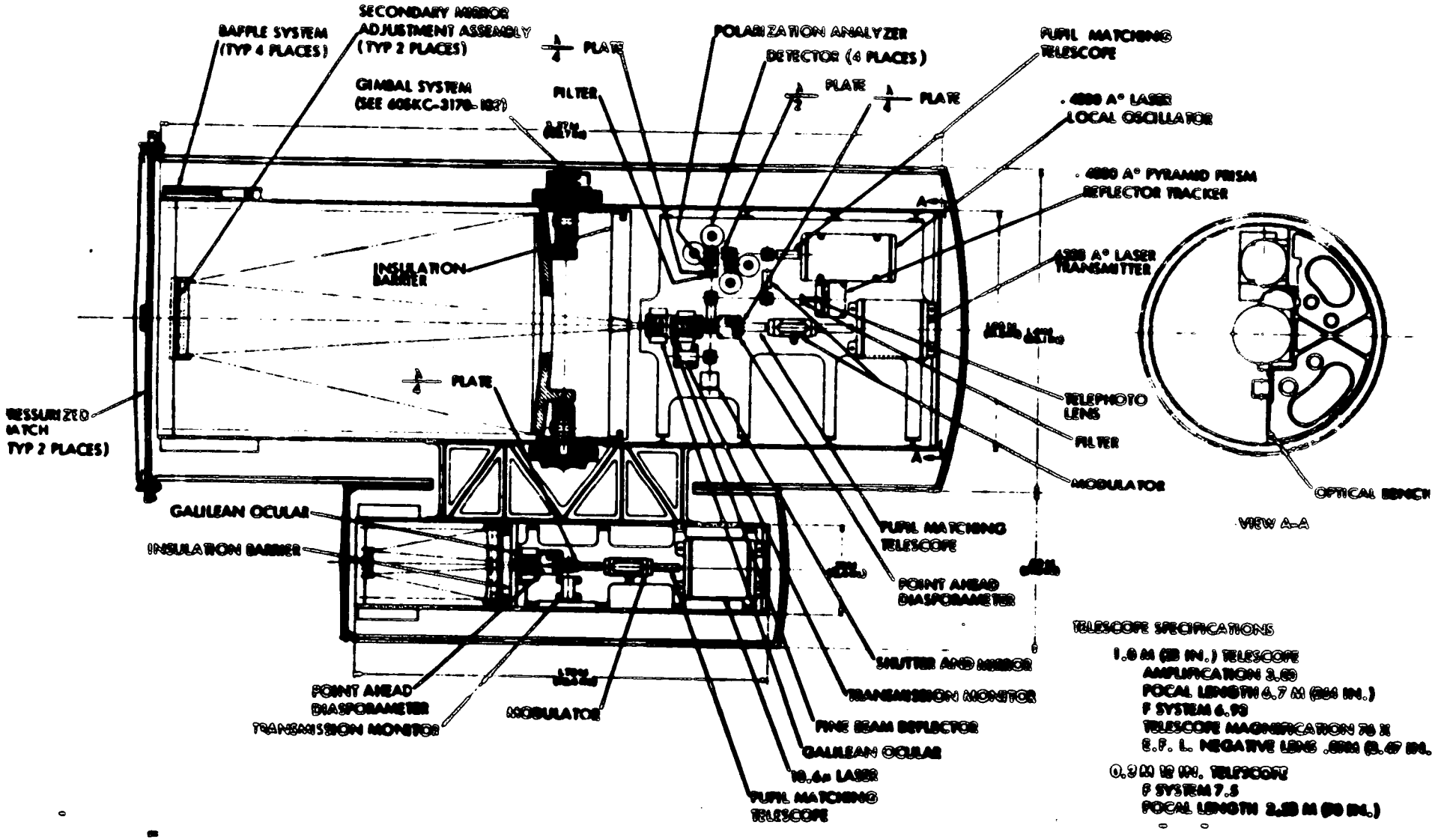

One Meter Telescope with Three-tenths Stripped Down Telescope

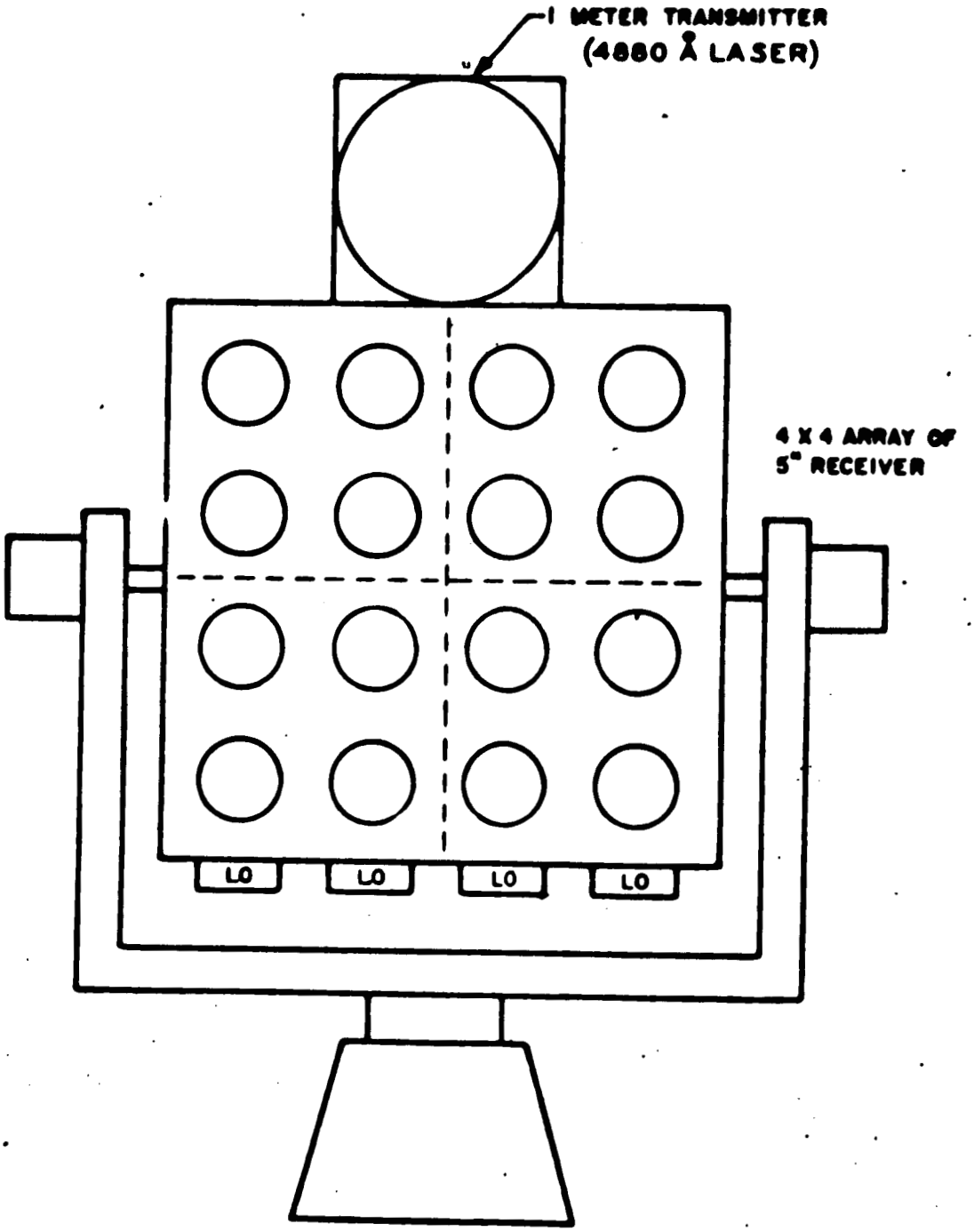

DISTRIBUTED TELESCOPE ARRAY

MULTIPLE LARGE APERTURE ARRAY

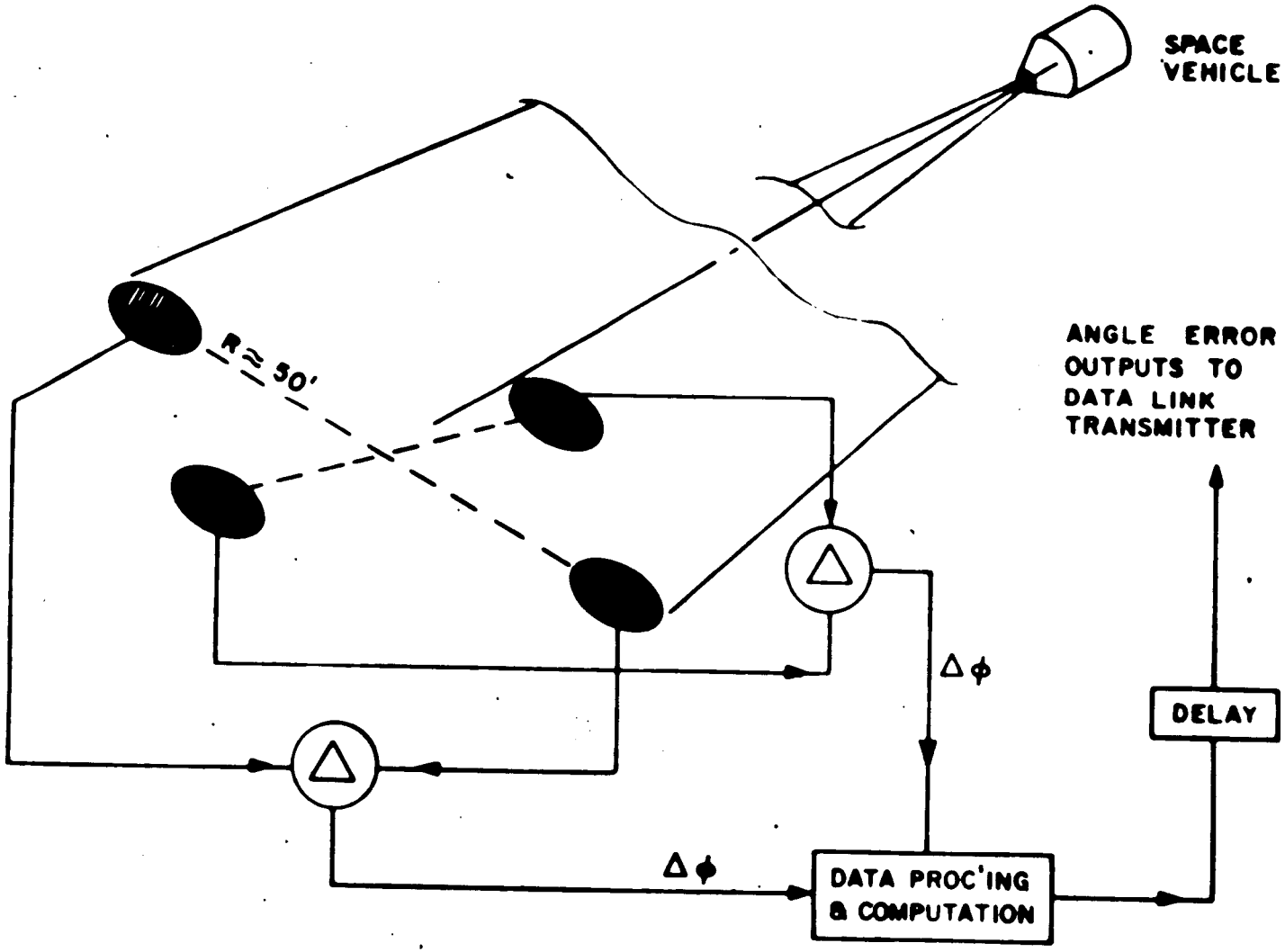

SINGLE LARGE PHOTON BUCKET

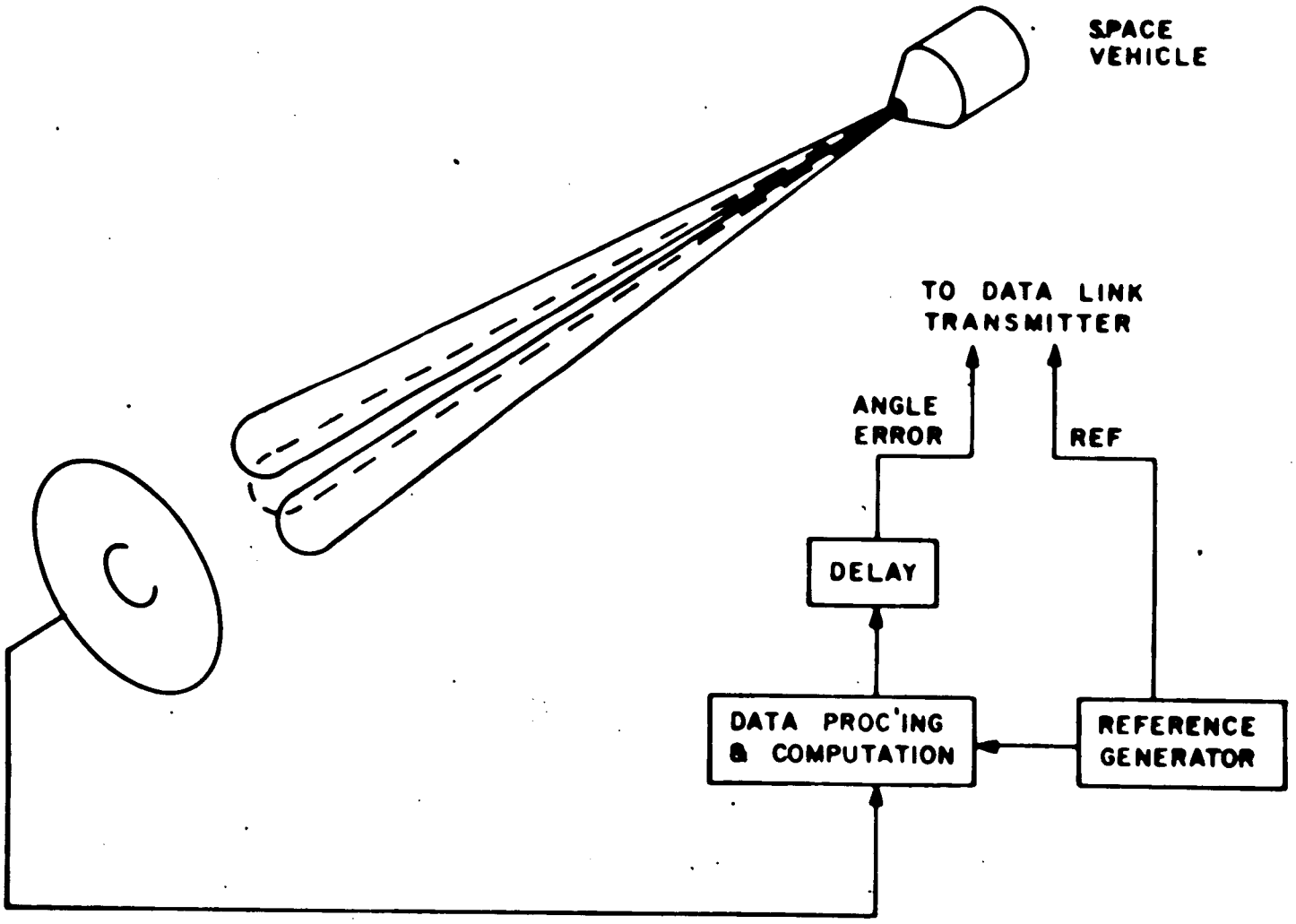

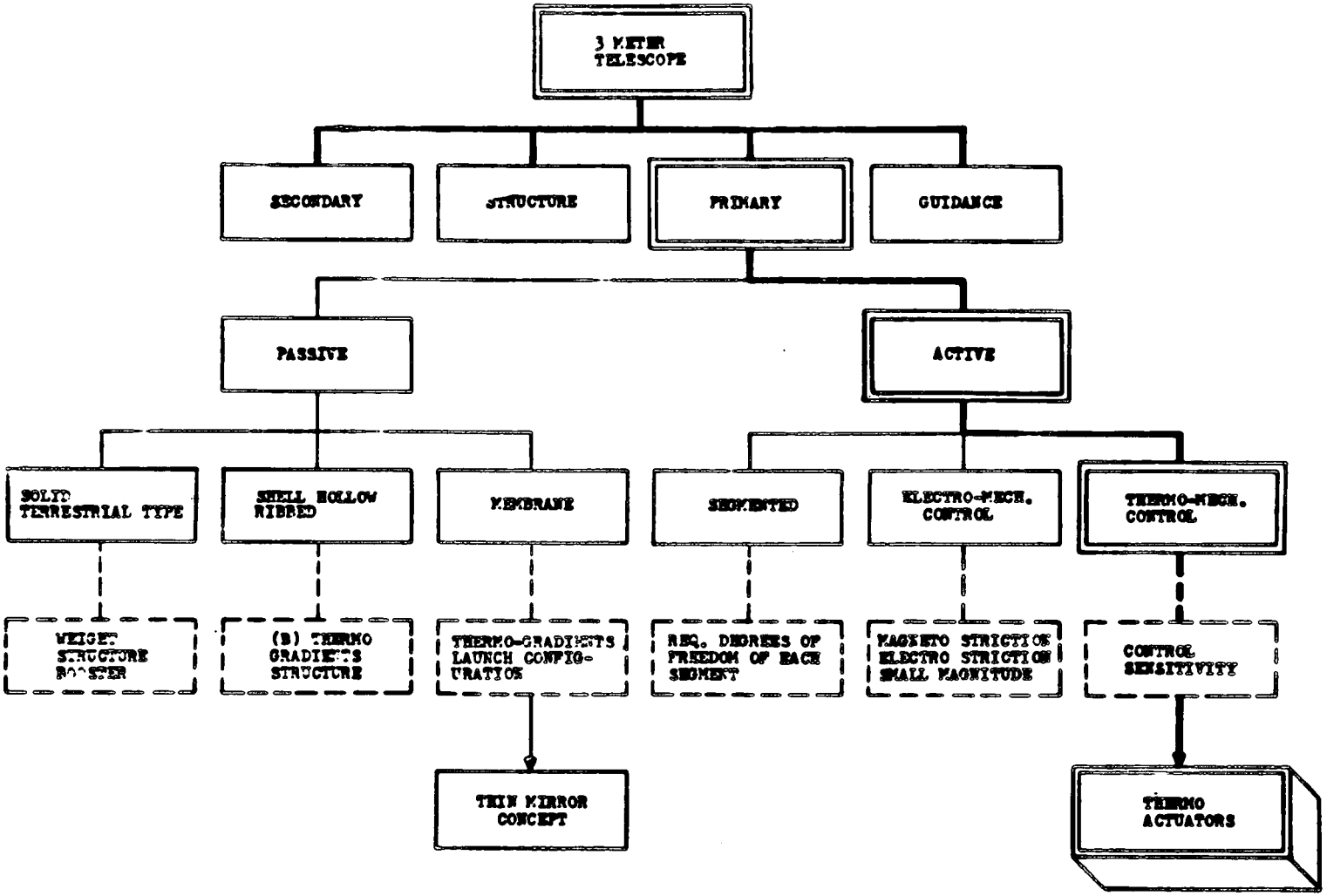
3 METER TELESCOPE
SECONDARY
STRUCTURE
PRIMARY
GUIDANCE
PASSIVE
ACTIVE
SOLID TERRESTRIAL TYPE
SHELL HOLLOW RIBBED
MEMBRANE
SEGMENTED
ELECTRO-MECH. CONTROL
THERMO-MECH. CONTROL
WEIGHT STRUCTURE BOOSTER
(B) THERMO GRADIENTS STRUCTURE
THERMO-GRADIENTS LAUNCH CONFIG-URATION
REQ. DEGREES OF FREEDOM OF EACH SEGMENT
MAGNETO STRICTION ELECTRO STRICTION SMALL MAGNITUDE
CONTROL SENSITIVITY
THIN MIRROR CONCEPT
THERMO ACTUATORS

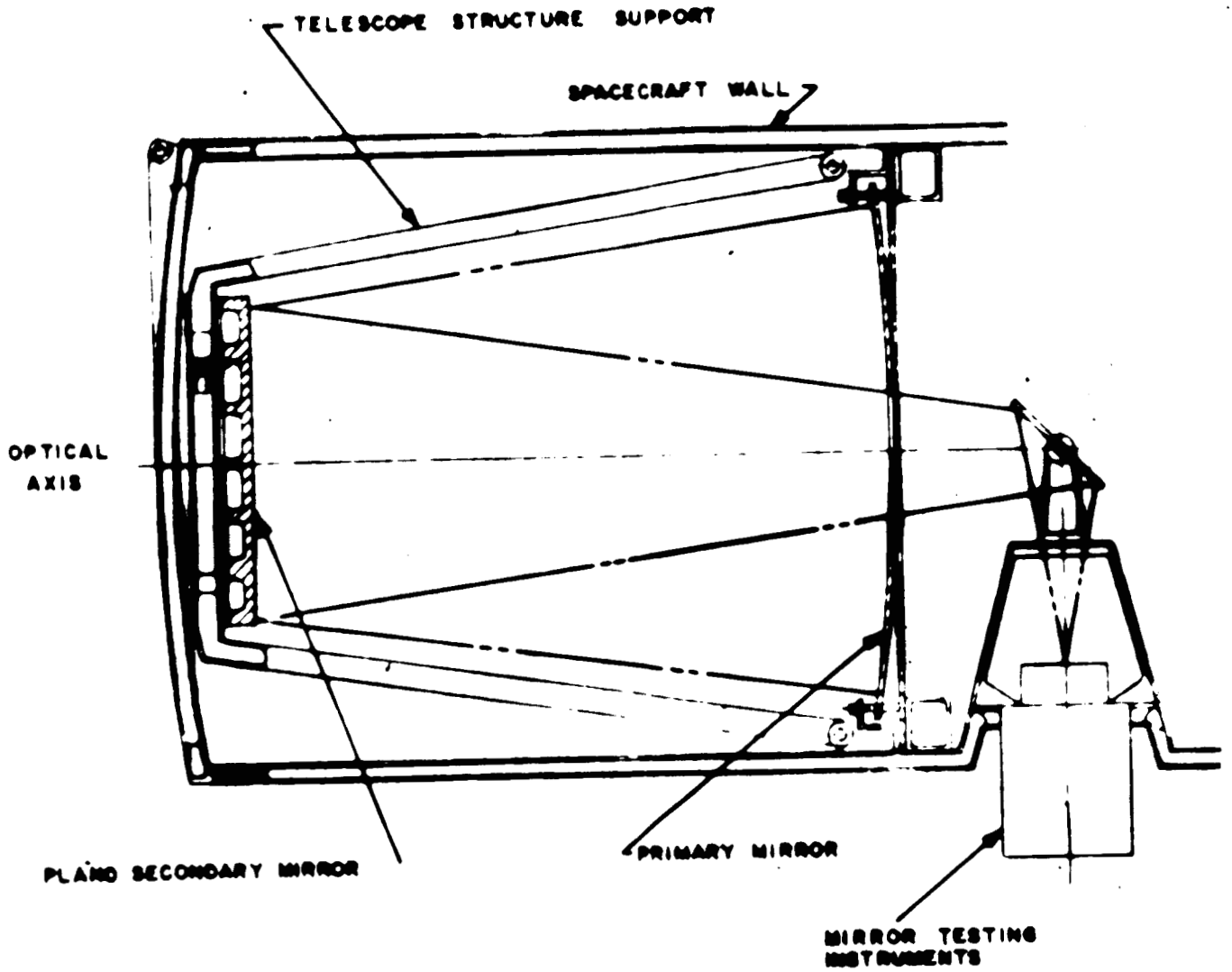

THIN MIRROR EXPERIMENT WELL

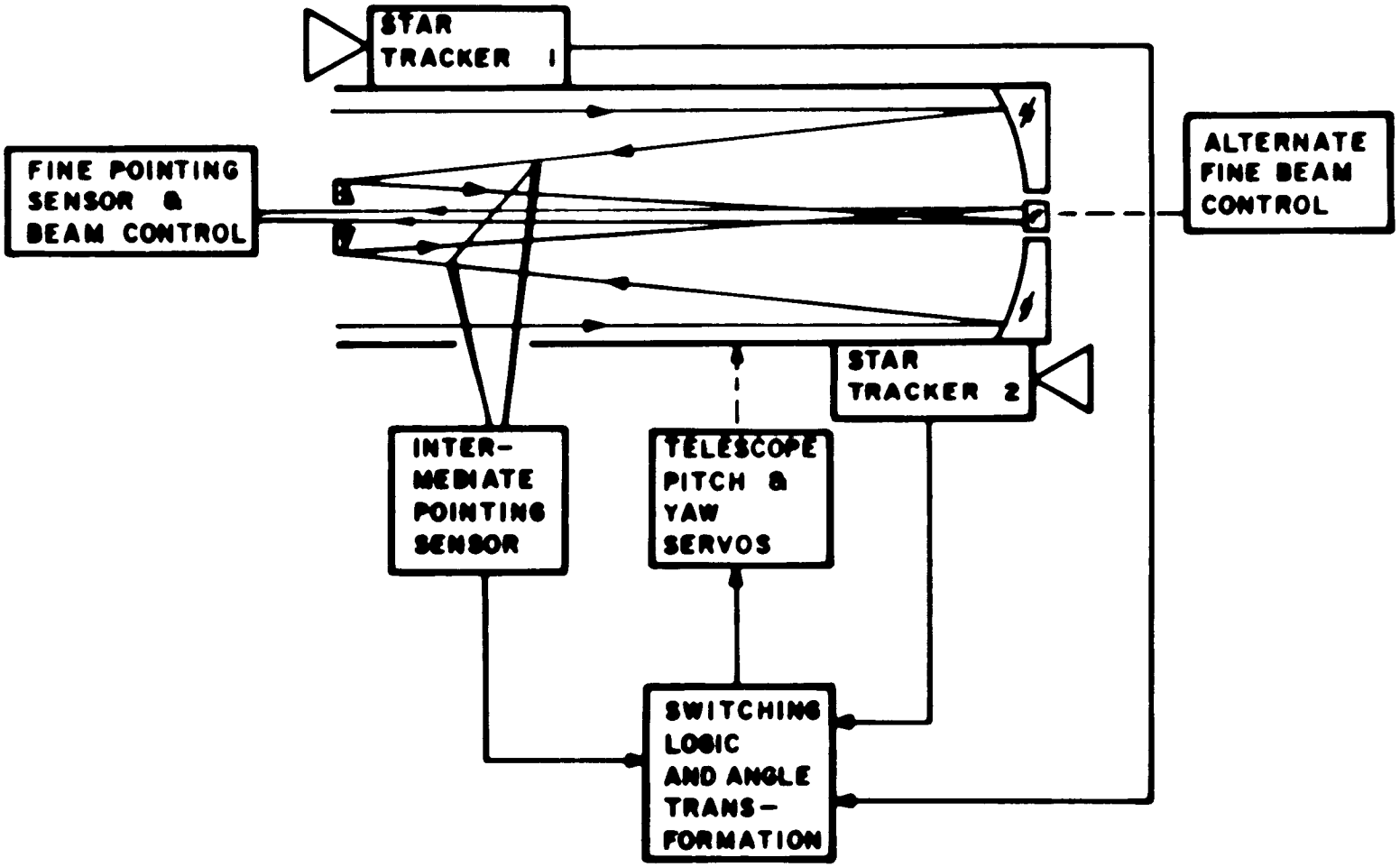

SIMPLIFIED BLOCK DIAGRAM

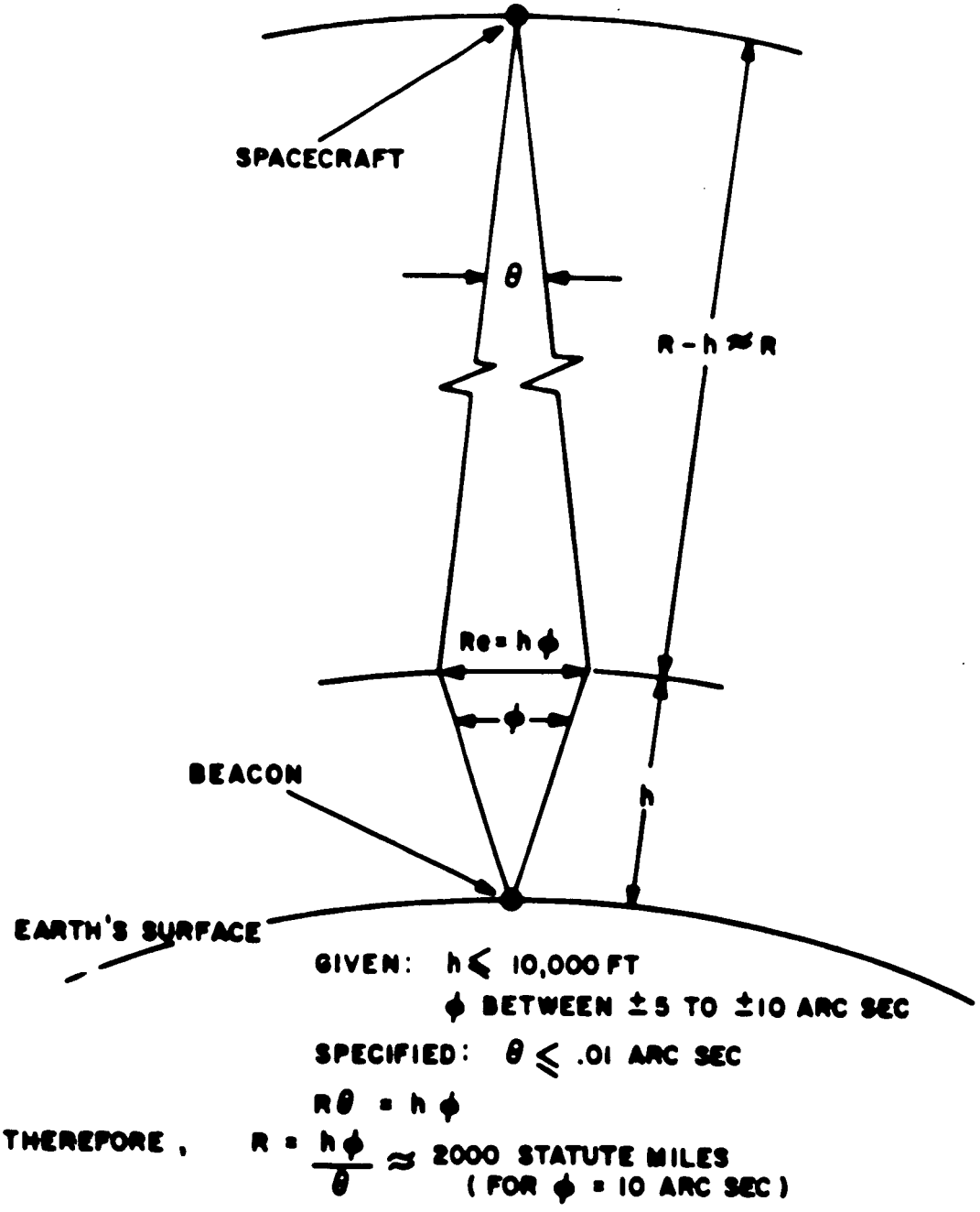

IMAGE DANCING

SIMULATED ZERO-G TESTING METHODS

- WATER FLOATATION
- MERCURY FLOATATION
- SUBMERSION
- ZERO-G AIRCRAFT TEST
- PNEUMATIC FLOATATION

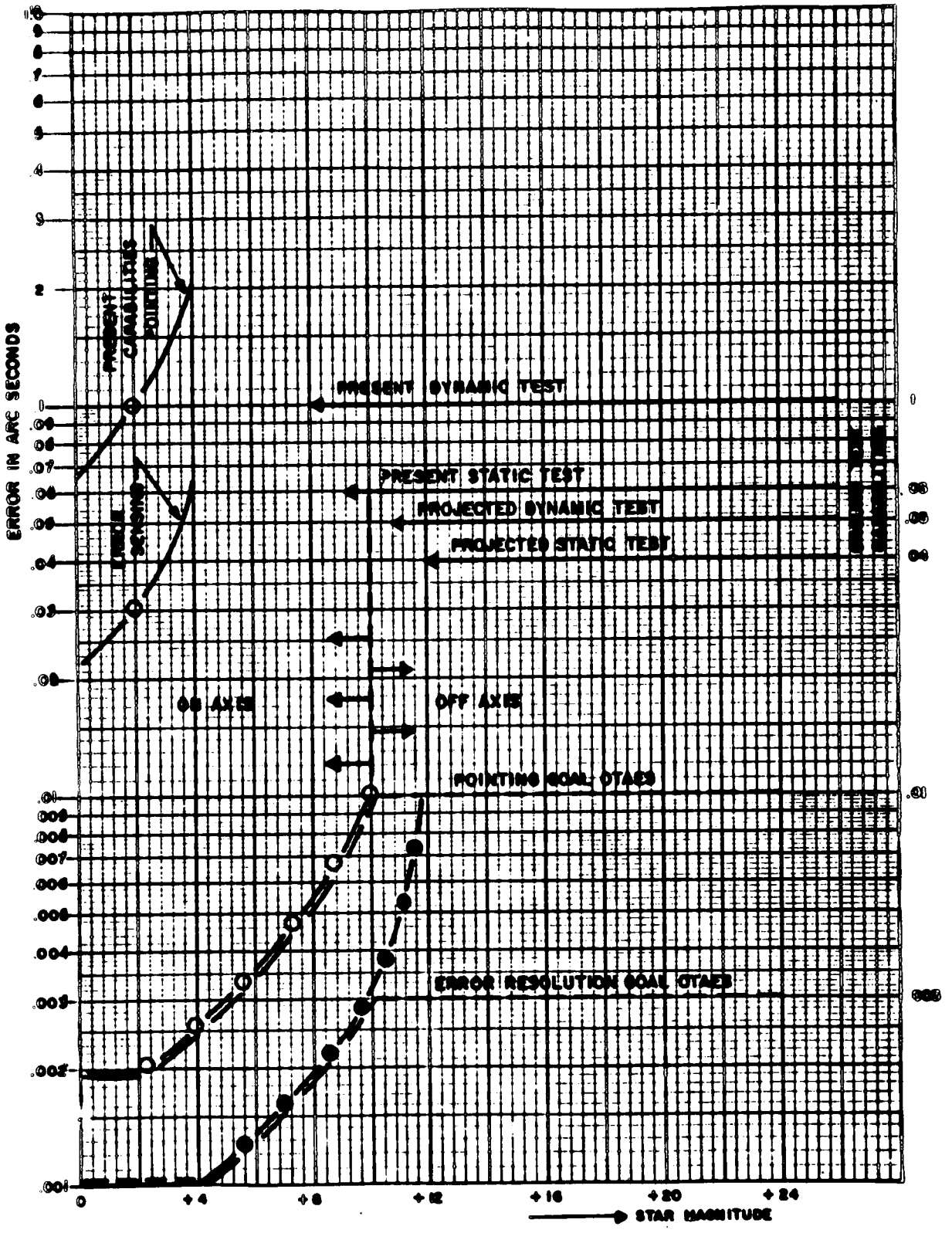
ERROR IN ARC SECONDS
PRESENT CAPABILITIES
POINTING
ERROR SENSING
PRESENT DYNAMIC TEST
PRESENT STATIC TEST
PROJECTED DYNAMIC TEST
PROJECTED STATIC TEST
ON AXIS
OFF AXIS
POINTING GOAL, OTAES
ERROR RESOLUTION GOAL, OTAES
STAR MAGNITUDE

CRITICALITY OF MAN PARTICIPATION

EXPERIMENT	PREP.	EXP. OPS.	C&D MGT.	MAINT.	ORBIT
PRECISION TRACKING OF GROUND BEACON	C	CD	E	C	S
MIRROR FIGURE TEST	B	A	A	C	S or L
ISOLATION TECHNIQUES	B	B	B	C	S or L

KEY:

A= MAN IS ESSENTIAL

B= MAN HIGHLY DESIRABLE

C= MAN PERFORMS TASKS

D= MAN COULD BE UNDESIRABLE

E= MAN NOT INVOLVED

S= SYNC. ORBIT

L= LOW EARTH ORBIT

SELECTED MISSIONS

MISSION	L.V. STACK UP	ORBIT	EXPERIMENTS GROUP
I	S-IC/S-II/S-IVB/S/C #1	SYNC	A
III	S-IB/S-IVB/CENTAUR/S/C #2	SYNC	B
V	S-IB/S-IVB/SM/S/C #4	CIRCULAR	C
VI	S-IC/S-II/S-IVB/S/C #3-1	SYNC	B
	#3-2	CIRCULAR	C

EXPERIMENT EQUIPMENT COMMONALITY

COMMON EQUIP. EXPS	BASIC EQUIP. GROUP
LASER COMMUNICATION	1.0 & 0.3 M TELESCOPES
LASER COMMUNICATION	0.3 M TELESCOPE
STELLAR ORIENTED	0.6 M TELESCOPE
MIRROR TECHNOLOGY	1.25 M EXP. WELL

MODIFIED APOLLO SYNCHRONOUS SPACECRAFT

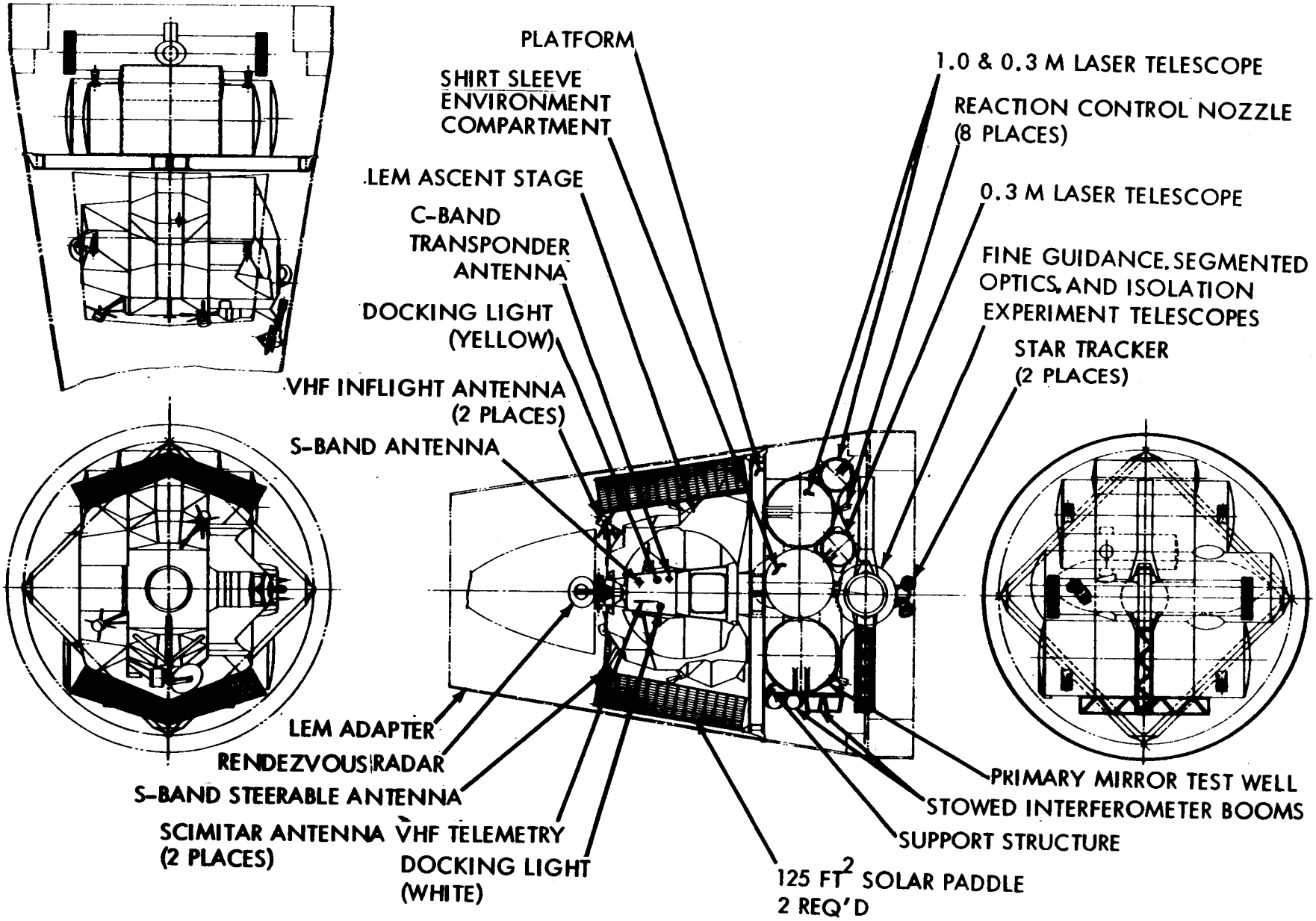

MODIFIED APOLLO SYNCHRONOUS SPACECRAFT

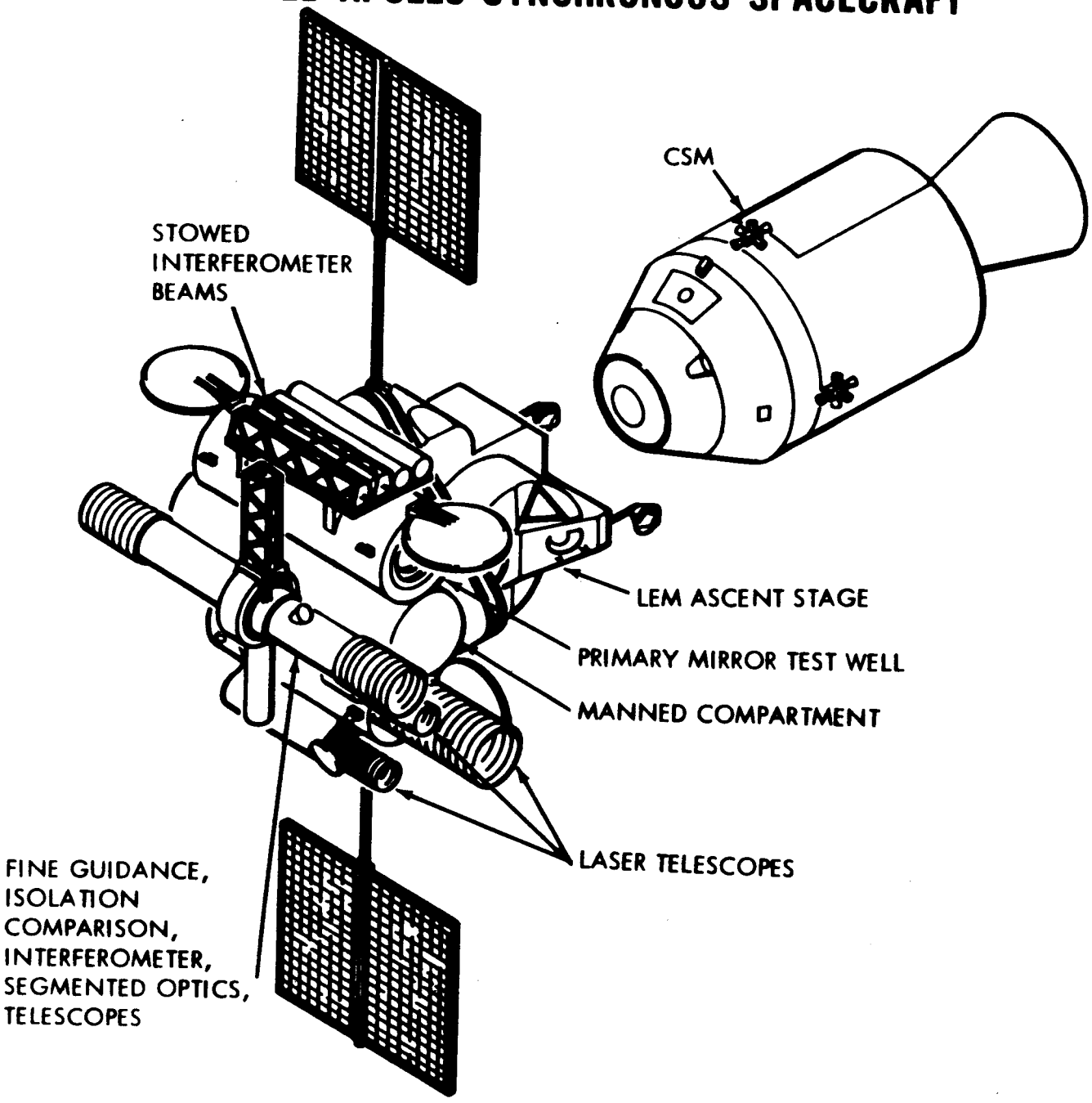

SYNCHRONOUS SPACECRAFT

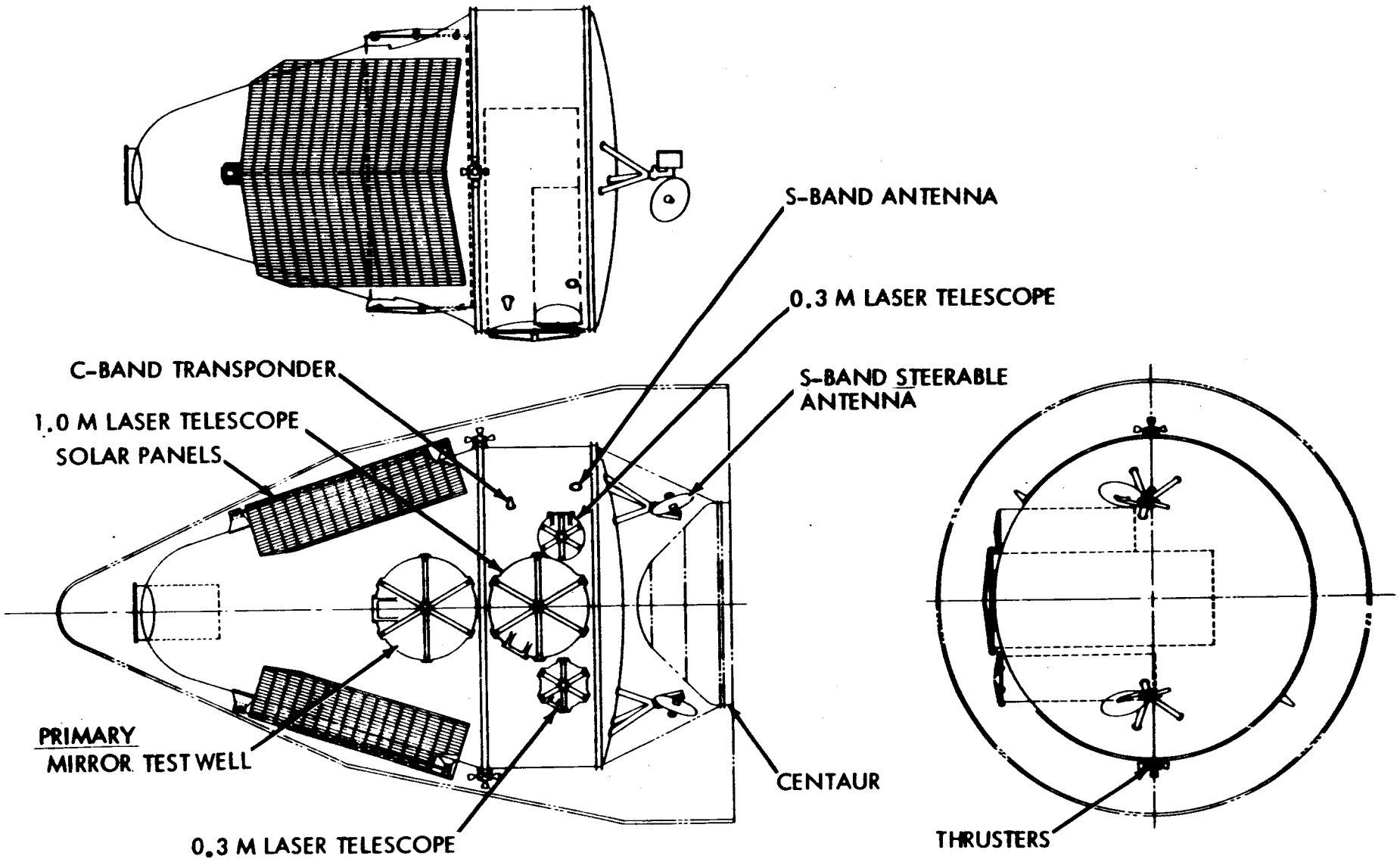

SYNCHRONOUS SPACECRAFT

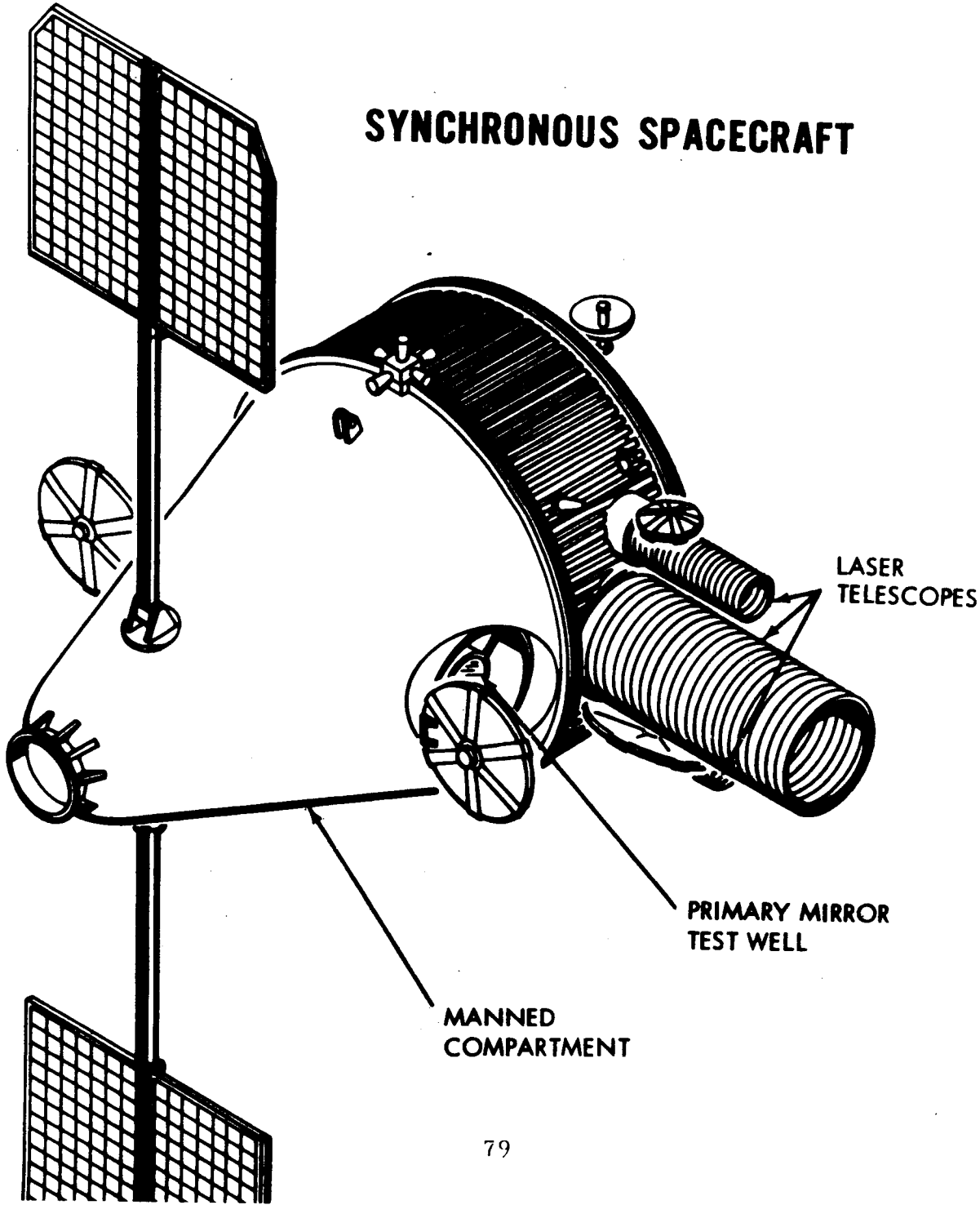

DUAL MISSION SPACECRAFT

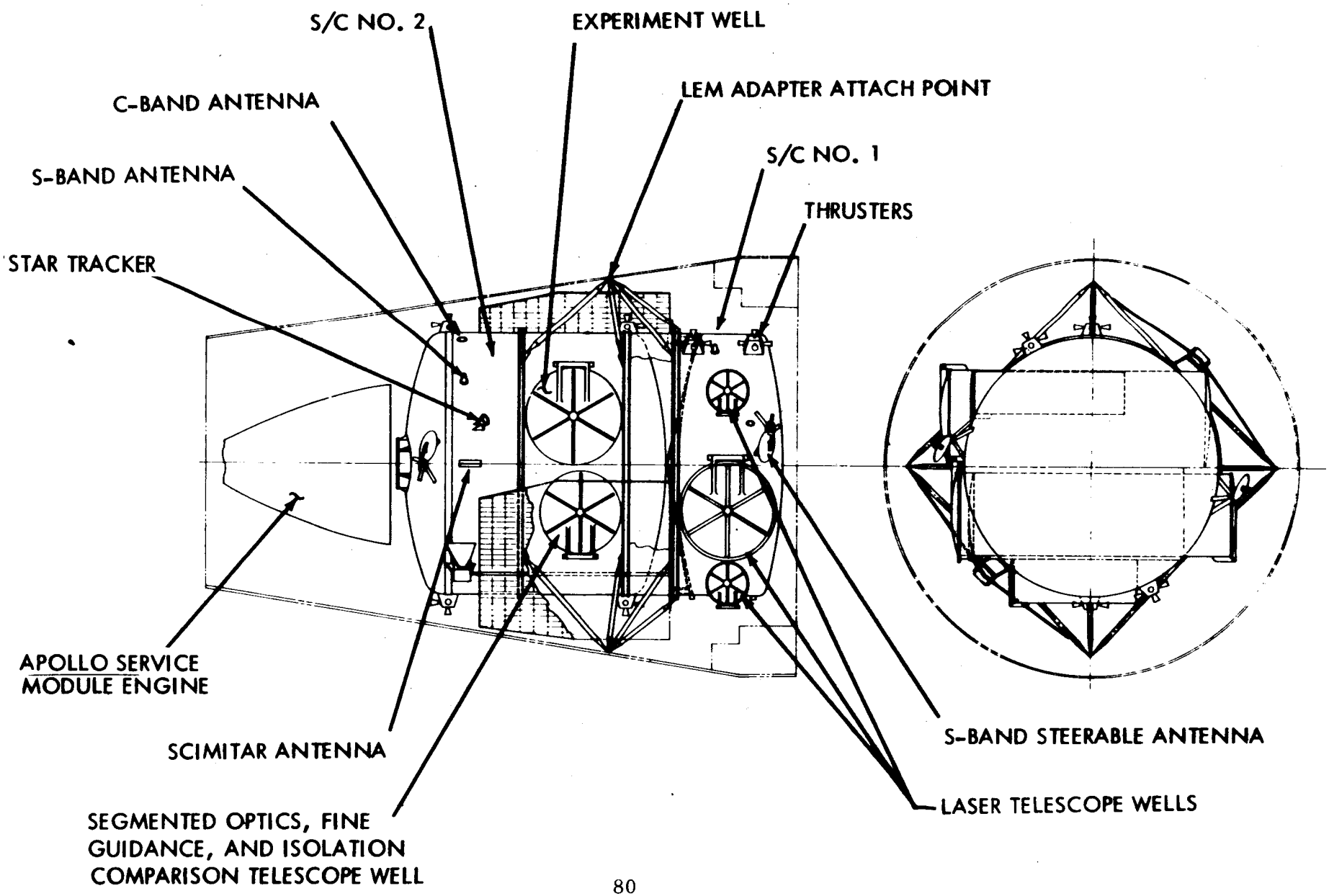

DUAL MISSION SPACECRAFT

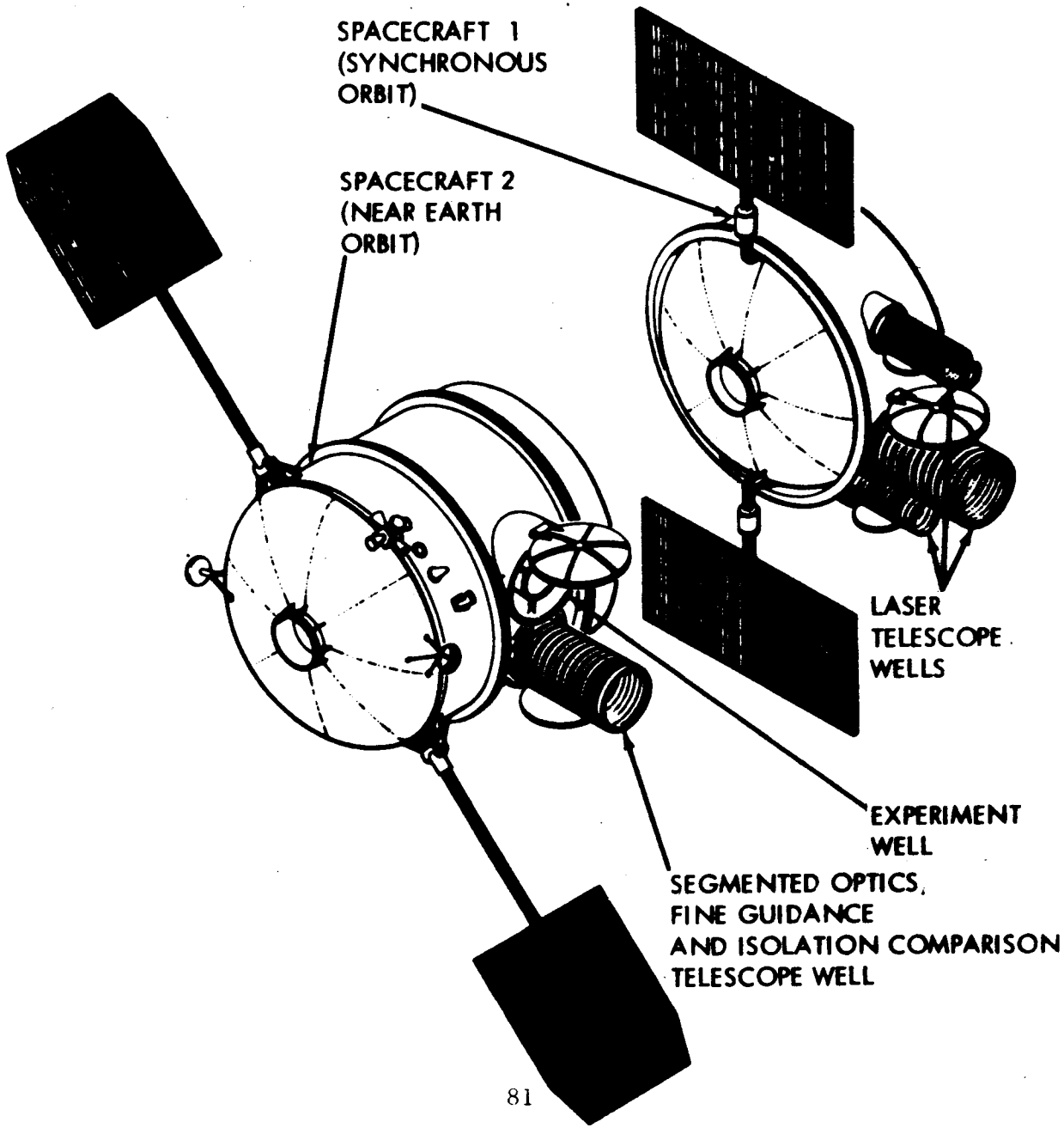

NEAR EARTH ORBIT LEM SPACECRAFT

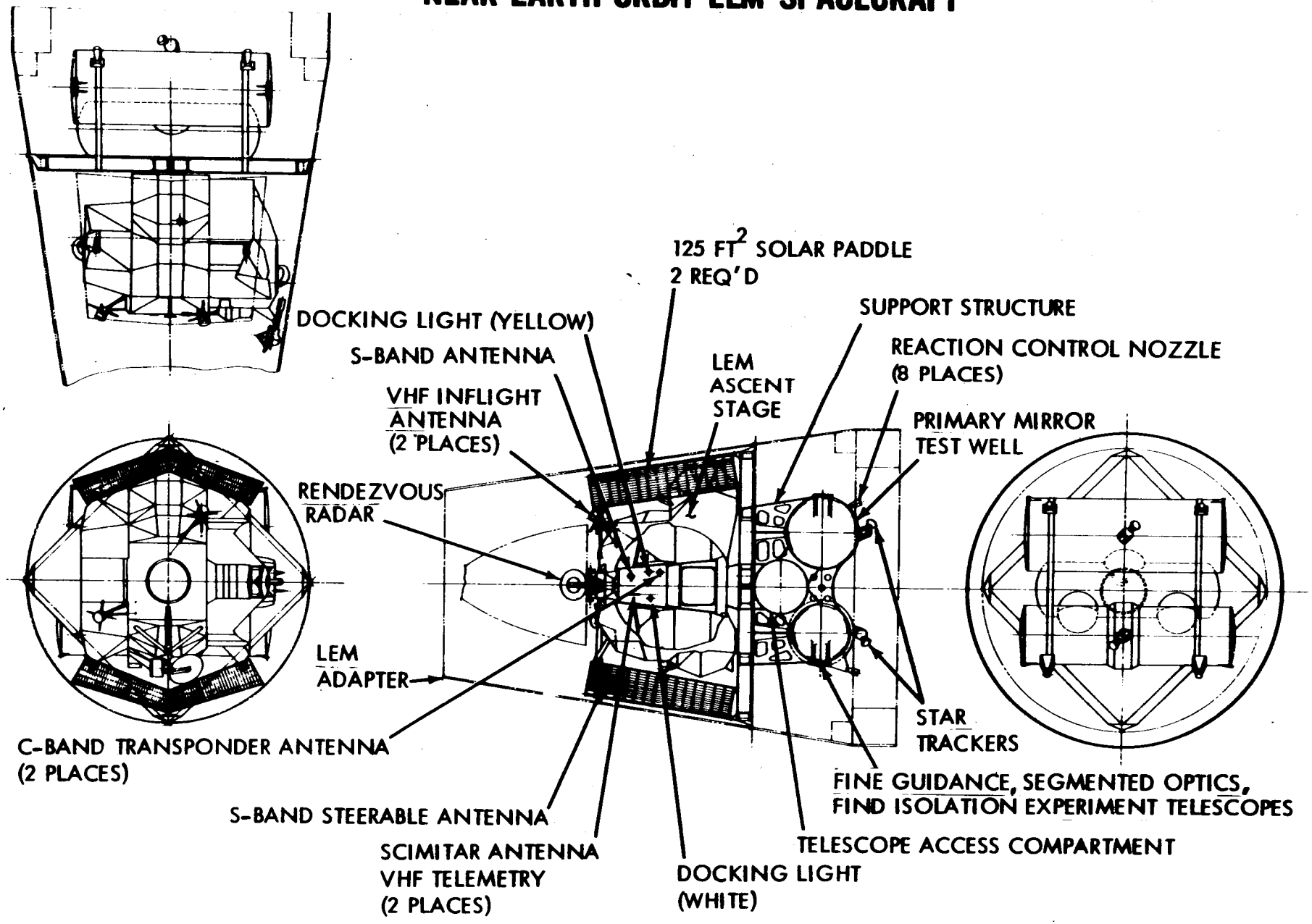

NEAR EARTH ORBIT LEM SPACECRAFT

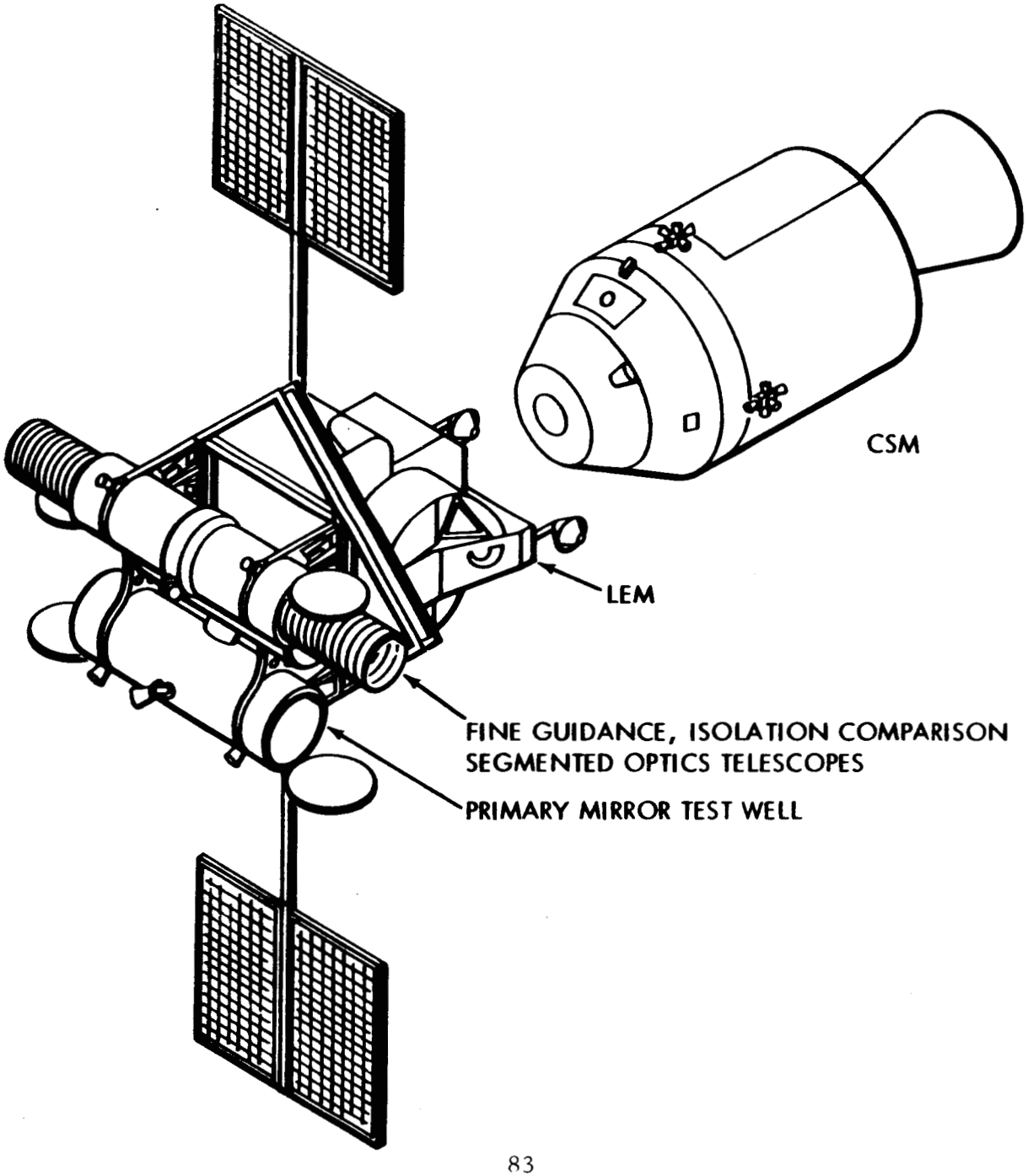

OTAES POWER PROFILE

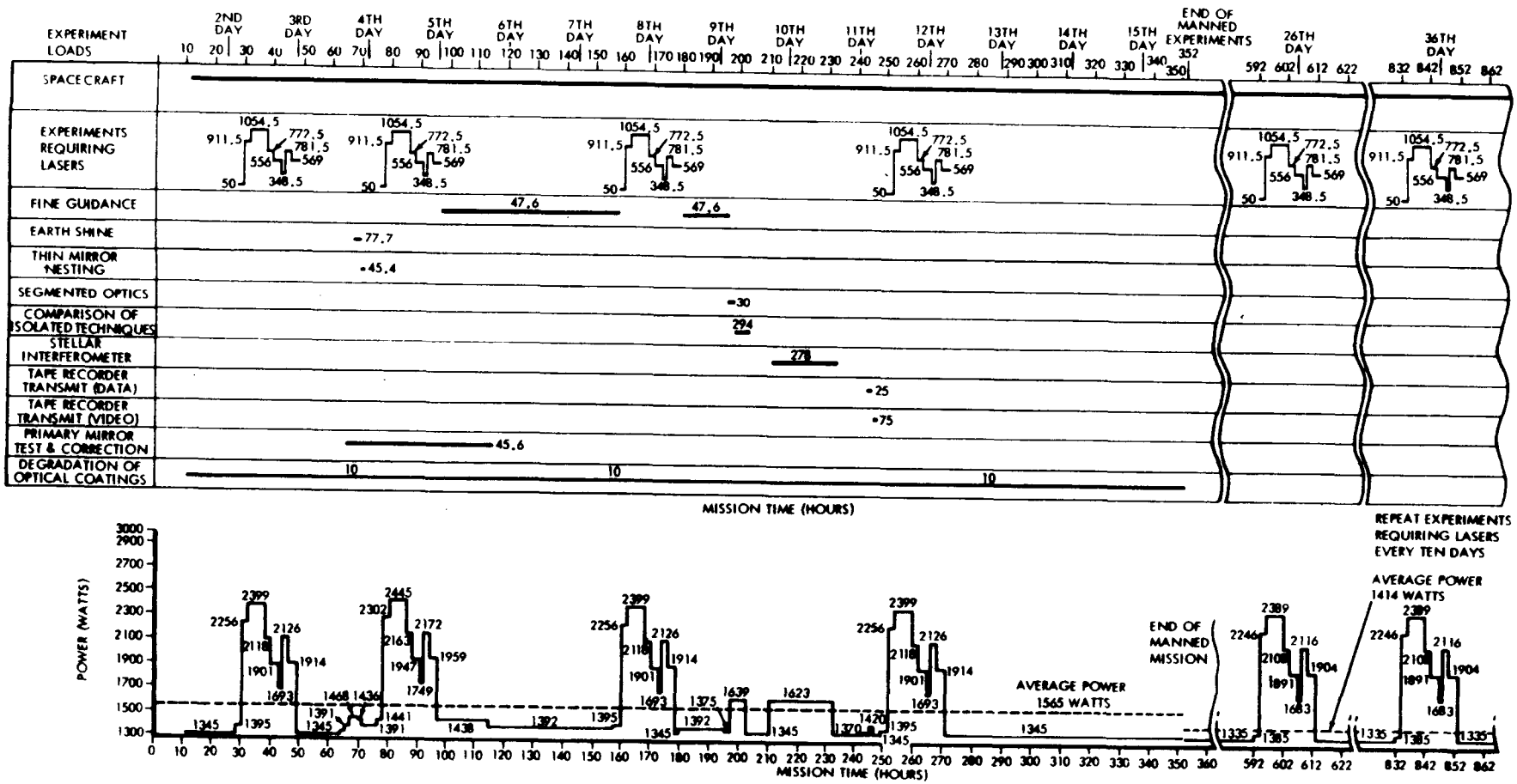

PHOTOVOLTAIC WEIGHT/POWER OPTIMIZATION

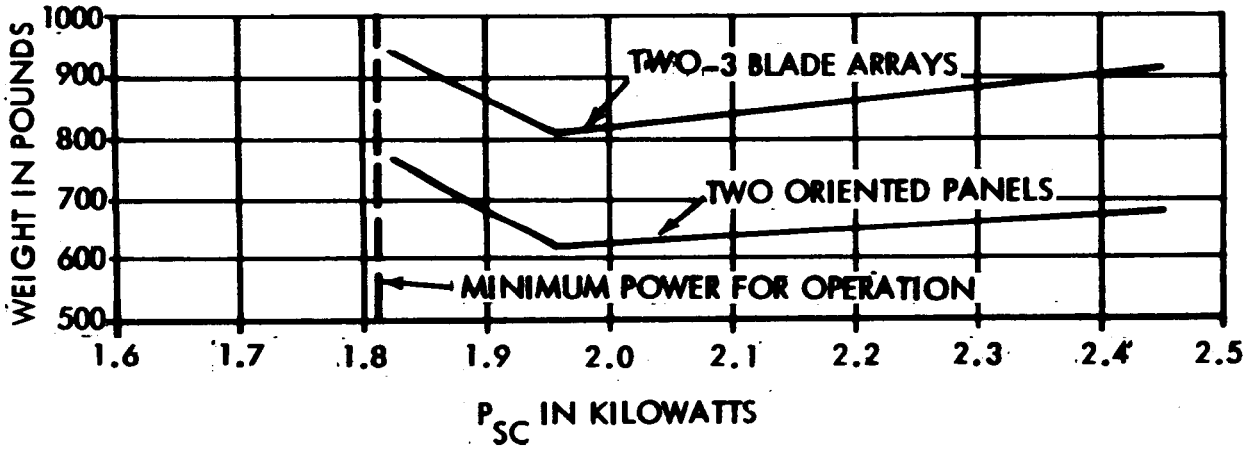

Figure 11.5.3.3-1. Photovoltaic Weight/Power Optimization

POWER SYSTEM COMPARISON SUMMARY

PARAMETER	MISSION	ORIENTED SOLAR CELL	UNORIENTED SOLAR CELL	RTG
WEIGHT (Kg)	1	423.	669.	618.
	2	327.	472.	618.
	3	222.	373.	618.
VOLUME (m3)	1	3.12	5.72	4.83
	2	1.64	3.97	4.83
	3	1.73	3.18	4.83
AREA (m2)	1	39.6	73.6	15.6
	2	20.3	37.7	15.6
	3	22.0	41.0	15.6
PRIMARY POWER (watt) LEVEL	1	4,370.	4,370.	2,000.
	2	1,965.	1,965.	2,000.
	3	1,960.	1,960.	2,000.

INTEGRATED RTG CONFIGURATION

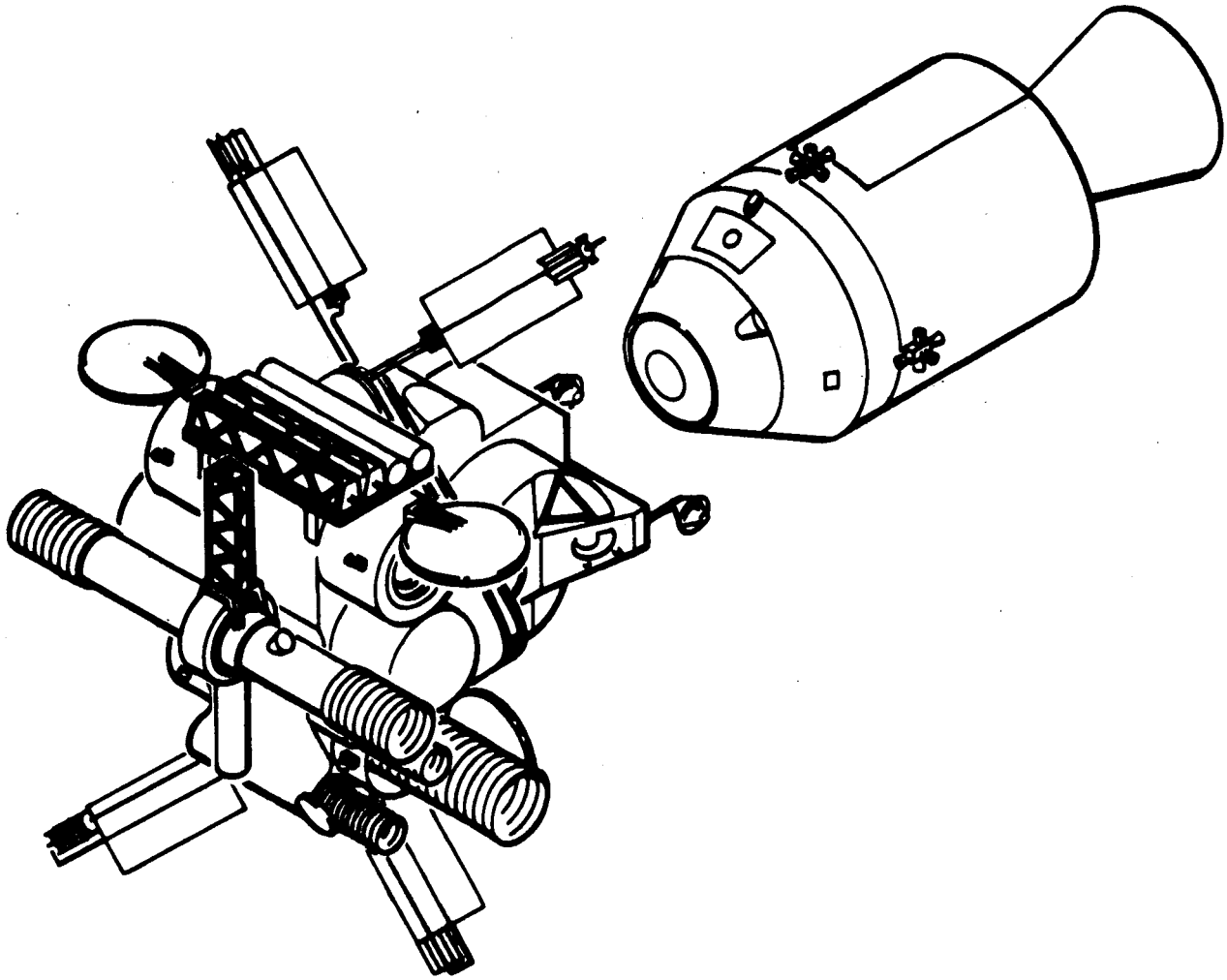

CONTROL & STABILIZATION TRADE - OFF AREAS

- WEIGHT AND POWER OF CONTROL SYSTEM
- RESTRAINTS ON CREW MOTION
- SHORT - TERM ATTITUDE STABILITY
- TELESCOPE GIMBAL FREEDOM
- SUSPENSION SYSTEM DYNAMIC RANGE

SPACECRAFT STABILIZATION AND CONTROL

OPERATIONAL MODE	STABILITY REQUIREMENTS	SENSOR	ACTUATOR
LASER EXPERIMENTS	±1 DEG PITCH & ROLL	GIMBAL ANGLE PICK-OFFS	TWO-AXIS CONTROL GYRO
	± 1 MIN ROLL	STAR TRACKER	SINGLE AXIS CONTROL GYRO
FINE GUIDANCE EXPERIMENTS	± 30 MIN PITCH & YAW	COARSE TELESCOPE STAR SENSOR	TWO-AXIS CONTROL GYRO
	± 1 DEG ROLL	STAR TRACKERS	SINGLE AXIS CONTROL GYRO
COMPARISON OF ISOLATION TECHNIQUES	±6 MIN PITCH & YAW	COARSE TELESCOPE STAR SENSOR	TWO-AXIS CONTROL GYRO
	± 1 MIN ROLL	STAR TRACKER	SINGLE AXIS CONTROL GYRO
ACQUISITION	± .25 DEGREE	SUN SENSOR	RCS
RENDEZVOUS	± .50 DEGREE	INERTIAL PLATFORM	RCS

COMMONALITY CONCLUSIONS

- THE NEEDED OPTICAL TECHNOLOGY IS COMMON TO THE FIVE APPLICATION AREAS STUDIED.
- THE NEEDED OPTICAL TECHNOLOGY LEADS TO COMMON DEVELOPMENT EXPERIMENTS AND PROGRAMS.
- THIS COMMONALITY STRONGLY FAVORS A COMPREHENSIVE INTEGRATED DEVELOPMENT PROGRAM.

CONCLUSIONS ON COMPLETENESS OF OTAES IN DEFINING THE OPTICAL TECHNOLOGY REQUIREMENTS OF THE FUTURE NATIONAL SPACE PROGRAM

- A COMPREHENSIVE, ORDERLY PROGRAM FOR OPTICAL TECHNOLOGY SHOULD INCLUDE IN PROPER PERSPECTIVE BOTH THAT PART WHICH LEADS TO SPACE TESTING AND THAT PART WHICH DOES NOT.

CONCLUSIONS ON THE EXPERIMENT PROGRAM

- THE RESULTS SHOW THAT AN OTAES WOULD MAKE A SIGNIFICANT AND NEEDED CONTRIBUTION TO THE NATIONAL SPACE PROGRAM, THAT OTAES IS TECHNOLOGICALLY AND ECONOMICALLY FEASIBLE, AND THAT THE OTAES MISSION CONCEPT IMPOSES NO EXTRAORDINARY SUPPORT REQUIREMENTS.

- HOWEVER, IT CANNOT BE SAID THAT THESE EXPERIMENTS AND THE OTAES ALTERNATIVE MISSIONS ARE TRULY DESIGNED. THE EFFORT HAS ONLY BEEN CARRIED TO A POINT SUFFICIENT TO ASSURE THE FEASIBILITY AND PRACTICALITY OF AN OTAES DEVELOPMENT PROGRAM AND TO BE CERTAIN THAT SUCH A PROGRAM WOULD BE A SIGNIFICANT CONTRIBUTION TO THE NATIONAL SPACE GOALS.

CONCLUSIONS ON OTAES MISSIONS

- THERE ARE SEVERAL ALTERNATIVES FOR PERFORMING THE RECOMMENDED EXPERIMENTS, AND

- NONE OF THE ALTERNATIVES REQUIRE MAJOR SPACECRAFT OR SPACE VEHICLE DEVELOPMENT.

CONCLUSION ON OTAES SPACEBORNE SUPPORT

- ALL FLIGHT EXPERIMENTS CAN BE PERFORMED WITH MODIFIED APOLLO HARDWARE WITHOUT A MAJOR SPACECRAFT DEVELOPMENT PROGRAM, AND

- SUBSYSTEM TECHNOLOGIES ARE ADEQUATE TO SUPPORT THE EXPERIMENTS.

SCHEDULE CONCLUSIONS

- THE SCHEDULES FOR FLIGHT EXPERIMENTS CALL FOR LEAD TIMES THAT ARE LONG ENOUGH TO IMPART SOME URGENCY TO GETTING STARTED NOW.

GENERAL OPTICAL RECOMMENDATIONS

- DEFINITION OF THE PROJECTED OPTICAL TECHNOLOGY NEEDS IN EACH OF THE APPLICATION AREAS OF ASTRONOMY, EARTH REMOTE SENSING, METEOROLOGY, AND OPTICAL COMMUNICATIONS SHOULD BE CONTINUED.

- A STUDY SHOULD BE INITIATED TO IDENTIFY THOSE TECHNOLOGIES NOT IN SPECIFIC SUPPORT OF FLIGHT EXPERIMENTS. THIS WILL COMPLEMENT THE OPTICAL TECHNOLOGY ASSOCIATED WITH THE OTAES EXPERIMENTS.

- AN OVERALL OPTICAL TECHNOLOGY PROGRAM PLAN SHOULD BE DEVELOPED TO RELATE THESE TWO PROGRAMS AND OTHERS WHICH WILL HAVE IMPACT.

OTAES EXPERIMENT FLIGHT PROGRAM RECOMMENDATIONS

- A CONTINUED EFFORT IN DEFINING NEW OTAES EXPERIMENTS SHOULD BE MAINTAINED.

- THE DEVELOPMENT OF EXPERIMENT JUSTIFICATION SHOULD BE CONTINUED AND FURTHER SUPPORTED BY THE NEW ANALYSES RECOMMENDED AS NECESSARY IN THE CONTINUATION OF OTAES WORK.

RECOMMENDED EXPERIMENTS

1. OPTICAL HETERODYNE DETECTION ON EARTH.
2. OPTICAL HETERODYNE DETECTION ON THE SPACECRAFT.
3. DIRECT DETECTION SPACE-TO-GROUND.
4. COMMUNICATION WITH 10 MEGAHERTZ BANDWITH.
5. PRECISION TRACKING OF A GROUND BEACON.
6. POINT AHEAD AND SPACE-TO-GROUND-TO-SPACE LOOP CLOSURE.
7. TRANSFER TRACKING FROM ONE GROUND STATION TO ANOTHER.
8. PHASE CORRELATION MEASUREMENTS.
9. PULSE DISTORTION MEASUREMENTS.
10. PRIMARY MIRROR FIGURE TEST AND CORRECTION.
11. THIN MIRROR NESTING PRINCIPLE AND ERECTION AND ALIGNMENT OF LARGE OPTICS IN SPACE.
12. FINE GUIDANCE.
13. COMPARISON OF ISOLATION TECHNIQUES.
14. INTERFEROMETER SYSTEMS.
15. SEGMENTED OPTICS.

SPACECRAFT & MISSION RECOMMENDATIONS

CANDIDATE SPACECRAFT

1. MODIFIED APOLLO SYNCHRONOUS SPACECRAFT
2. SYNCHRONOUS SPACECRAFT
3. DUAL MISSION SPACECRAFT
4. NEAR EARTH ORBIT LEM SPACECRAFT

CANDIDATE OTAES MISSION

1. A MANNED SYNCHRONOUS MISSION.

2. AN UNMANNED SYNCHRONOUS MISSION.

3. A MANNED LOW EARTH ORBIT MISSION.

4. A SINGLE LAUNCH DUAL MISSION COMBINING THE UNMANNED SYNCHRONOUS AND MANNED LOW EARTH ORBIT MISSIONS.

- THESE MISSION AND SPACECRAFT CANDIDATES SHOULD BE INVESTIGATED FOR THE PURPOSE OF DETERMINING AN OPTIMUM OTAES FLIGHT PROGRAM.

- FURTHER DEFINITION OF THE MAN/EXPERIMENT INTERFACE IS NECESSARY TO COINCIDE WITH THE LEVEL OF EXPERIMENT CONCEPTUAL DETAIL AND THE INTEGRATED EXPERIMENT GROUPINGS DEVELOPED IN PART I.

- ALTHOUGH THE EXPERIMENT CONCEPTS DESCRIBED IN THE REPORT ARE FEASIBLE, THEY ARE NOT NECESSARILY OPTIMUM. IN PARTICULAR, A CONSIDERATION OF ALTERNATIVES WHICH WOULD ENHANCE THE OVERALL OTAES PROBABILITY OF SUCCESS (INSURE MAXIMUM TECHNOLOGICAL DATA) IS NEEDED. A SERIES OF CONDITIONAL PROBABILITY ANALYSES ARE NEEDED WHICH, WHEN ASSEMBLED, WILL RELATE SUCCESS IN ALL FLIGHT PHASES (LAUNCH, INJECTION, EXPERIMENT, ETC.) WITH MISSION, SPACECRAFT, AND EXPERIMENT GROUPING ALTERNATIVES.

- SPECIFIC ELEMENTS OF THE ABOVE GENERATED RELIABILITY ESTIMATES SHOULD BE COMPARED TO RELIABILITY ESTIMATES FOR ACCOMPLISHING THE TECHNOLOGICAL EXPERIMENT OBJECTIVE DIRECTLY IN THE APPLICATION WITHOUT THE INTERMEDIATE STEP. SUCH A COMPARISON WOULD YIELD A QUANTIFICATION OF THE OTAES TECHNOLOGICAL GAIN.

- IT IS RECOMMENDED THAT THE HIGH RELIABILITY STANDARDS OF THE MANNED SPACE PROGRAM BE MAINTAINED IN ALL SPACE AREAS THROUGH THE DEVELOPMENT OF OPTIMUM TECHNOLOGY TO INSURE MAXIMUM NATIONAL SUPPORT OF THESE FUTURE POTENTIAL SPACE GOALS.

- FURTHER ANALYSIS OF THE SPACE OPERATIONAL ENVIRONMENT FOR INDIVIDUAL EXPERIMENTS IS REQUIRED. IN PARTICULAR, THE CONTAMINANT ENVIRONMENT AND THE INFLUENCE OF CONTAMINANT PARTICLE SIZE AND DISTRIBUTION ON MIRROR DEGRADATION CHARACTERISTICS SHOULD BE DETERMINED.

PLANNING RECOMMENDATATIONS

- AN OTAES TECHNICAL PLAN SHOULD BE DEVELOPED WHICH WILL DESCRIBE THE TASK REQUIRED IN THE FOLLOWING OTAES PHASE AND A PLAN FOR ACCOMPLISHING THESE TASKS.

- AN OTAES PRELIMINARY FACILITY PLAN SHOULD BE DEVELOPED WHICH DEFINES THE NATURE AND EXTENT OF THE FACILITIES REQUIRED FOR THE OTAES FLIGHT PROGRAM.

- AN OTAES PRELIMINARY TEST PLAN SHOULD BE DEVELOPED WHICH INDICATES THE NATURE AND EXTENT OF TEST AND CHECKOUT ACTIVITY FOR THE OTAES FLIGHT PROGRAM.

- AN OTAES PRELIMINARY SCHEDULE SHOULD BE PREPARED WHICH WILL ESTABLISH A FEASIBLE TIMING FOR DEVELOPMENT OF THE OTAES FLIGHT PROGRAM AND WILL IDENTIFY THE CRITICAL PATHS IN THIS DEVELOPMENT AND THE URGENCY OF TIMING OF THE SPECIFIC DEVELOPMENT TASKS.

- AN OTAES PRELIMINARY COST PLAN SHOULD BE DEVELOPED WHICH WILL INDICATE THE COST OF THE OTAES ALTERNATIVES.