FINAL REPORT PEGASUS PROGRAM OCTOBER 1965

N 68-87604
(ACCESSION NUMBER)
(THRU)
(PAGES)
(CODE)
(NASA CR OR TMX OR AD NUMBER)
(CATEGORY)

REPRODUCED BY
NATIONAL TECHNICAL
INFORMATION SERVICE
U. S. DEPARTMENT OF COMMERCE
SPRINGFIELD, VA. 22161

Sy 41983

FAIRCHILD HILLER
SPACE SYSTEMS DIVISION

Available to NASA Offices and
Research Centers Only.

TABLE OF CONTENTS

Section		Page
I	INTRODUCTION	1
	A. Program Implementation	2
	B. The Pegasus Spacecraft	4
	C. Mission Performance	4
II	PROGRAM MANAGEMENT	7
	A. Organization	7
	B. Management Controls	14
	C. Finance and Contracts	26
	D. Logistics	30
III	ENGINEERING	35
	A. The Pegasus System	35
	B. Detecta Panel Development	36
	C. Data Subsystem Development	45
	D. Attitude Subsystem Development	66
	E. Thermal Design	75
	F. Communication Subsystem	92
	G. Structure and Deployment Subsystem	115
	H. Electrical Power Subsystem	163
	I. Radiation Detection Experiment	174
	J. Test Philosophy and Plan	178
	K. Ground Support Equipment	201
	L. Launch Operations	229
	M. Engineering Support	262
IV	PRODUCT ASSURANCE	267
	A. Quality Control	267
	B. Reliability	278
V	MANUFACTURING	293
	A. Electronic Fabrication	293
	B. Spacecraft Structure and Tooling	298
	C. Electronics Canister	299
	D. Systems Integration Area	300

Preceding page blank

LIST OF ILLUSTRATIONS

Figure		Page
1	Corporate Organization at Inception of the Pegasus Program	8
2	Original Pegasus Program Organization	9
3	Revised Pegasus Program Organization	11
4	Sample Master Plan	15
5	Page and Line Schedule	16
6	Gantt Chart	16
7	Input-Output Chart	17
8	Pegasus Master Plan	18
9	MMC Work Breakdown Structure	21
10	PERT Network Sample	22
11	Pegasus Detailed Schedule	22
12	Pegasus Chart Room	23
13	Material Control Flow Chart	31
14	Pegasus Transporter	32
15	Pregnant Guppy Aircraft	33
16	Original System Block Diagram	37
17	Pegasus Deployment	38
18	Final System Block Diagram	39
19	Cross Section of a Detector Panel	42
20	Data Subsystem Functional Block Diagram	46
21	Data Subsystem Detector Components Location	48
22	Electronics Canister View	49
23	Electronics Canister	50
24	Sensor Word Format	53
25	Thermal Vacuum Test Facilities	56
26	Pegasus Vibration Test Facilities	57
27	Typical Detector Circuit	65
28	Attitude Geometry	66
29	Gravitational Gradient Stabilized Pegasus	67
30	Proposed Attitude Subsystem Block Diagram	68
31	Attitude Subsystem Block Diagram	69
32	IR Sensor Orientation	69
33	Geometrical Location of Sensors	70
34	Sensor Head Cross-Sectional View	70
35	Solar Sensor Output Arrangement	71
36	Sensor Assembly Sensor Arrangement	72
37	Sun Sensor Functional Arrangement	72
38	MTS Rotation Around the Vehicle Sun Line	73

LIST OF ILLUSTRATIONS (Continued)

Figure		Page
39	Earth Sensor Illumination Pattern	74
40	Electronics Canister Cut-Away View	77
41	Thermal Circuit Schematic Diagram	79
42	Average Component Temperature vs Number of Louver Blades Open	80
43	Average Component Temperature vs Dissipation Hot and Cold Case	81
44	Electronics Canister Thermal Test	83
45	Component Temperature vs Louvered Angle Hot and Cold Case (All Blades at the Same Angle)	84
46	Detector Panel Maximum Orbital Temperature	86
47	Detector Panel Minimum Orbital Temperatures	87
48	Lateral Solar Panel Calculated Orbital Temperatures	89
49	Forward Solar Panel Calculated Orbital Temperatures	90
50	Forward and Lateral Panels Calculated Orbital Temperatures	91
51	Analytical Model for Square Tube	91
52	Center Section Two-Inch Square Tube Orbital Temperature Histories	91
53	Original Communication System Block Diagram	93
54	Location of Communication Subsystem Units	98
55	Communication Subsystem Block Diagram	99
56	Two Element Array Coverage	102
57	Four Element Array Coverage	102
58	Three Element Array Coverage	103
59	MTS Model in Anechoic Chamber	104
60	Typical MTS Antenna Patterns	105
61	Wing Frames	116
62	Deployment Sequence	118
63	Deployment Drive Mechanism	118
64	Center Section	118
65	Restraint System	118
66	Top Solar Panel Assembly	119
67	Capsule Assembly	121
68	Extension Mechanism Comparison	122
69	Side Solar Panel	124
70	Upper Solar Panel	125
71	Panel Support Frame	127
72	Restraining System	127
73	Outriggers	128
74	Detecta Panel Isolation	130
75	Scissors Restraint Concept	131
76	Harmonic Drive	134
77	Adjustable Torque Shaft Coupling	134
78	Lateral Solar Panel Restraint System	136

LIST OF ILLUSTRATIONS (Continued)

Figure		Page
79	Forward Solar Panel Restraint System	137
80	Forward Panel Restraint System	138
81	Forward Lateral Restraint	138
82	Forward Lateral Restraint System	140
83	First and Second Normal Vibration Modes of Panel	142
84	Panel Bending in Second Normal Mode	143
85	Stiffened Panel Response	143
86	Beam Convection	143
87	Recommended Modification to Electronic Components Qualification Vibration Levels	145
88	Transmissibility Y Axis	146
89	Bending Moments Y Axis	146
90	Interaction Analysis System by Equivalent Stiffness (Z Direction Loading - Dynamic Loading)	150
91	Center Section Static Test X Axis Loading	151
92	Center Section Static Test Y Axis Loading	152
93	Forward Solar Panel	154
94	Electronics Canister Mounting and Isolation System	156
95	Structure Functional Weight Trend	159
96	Electrical, Electronic and Environmental Control Functional Weight Trend	160
97	Total Weight Trend and Projected Growth	160
98	Longitudinal Center of Gravity History	161
99	Mass Moment of Inertia History	161
100	Original Power Subsystem Block Diagram	164
101	Electrical Load Profiles, Original Concept	164
102	Power Subsystem Components and Locations	165
103	Final Power Subsystem Block Diagram	166
104	Radiation Detection Experiment Block Diagram	175
105	Pulse Height vs Energy	176
106	Events vs Depth of Discharge, 1.5 Mil Bonded Target	196
107	Events vs Depth of Discharge 8 Mil Bonded Target	196
108	Events vs Depth of Discharge 16 Mil Bonded Target	197
109	Population vs Voltage, 16 Mil Panel (Energy: 0.5 Mev, Current: 1.5×10^{-10} amps, Flux: 3.7×10^{9} e/cm^2/sec)	198
110	Population vs Voltage, 16 Mil Panel (Energy: 0.75 Mev, Current: 6×10^{-11} amps, Flux: 1.5×10^{9} e/cm^2/sec)	198
111	Population vs Voltage, 16 Mil Panel (Energy: 1 Mev, Current: 2×10^{-10} amps, Flux: 5×10^{9} e/cm^2/sec)	199
112	Pupulation vs Voltage, 8 Mil Panel (Energy: 0.5 Mev, Current: 4×10^{-12} amps, Flux: 10^{8} e/cm^2/sec)	199
113	Population vs Voltage, 8 Mil Panel (Energy: 0.75 Mev, Current: 4×10^{-12} amps, Flux 10^{8} e/cm^2/sec)	200
114	Population vs Voltage, 8 Mil Panel (Energy: 1.0 Mev, Current: 4×10^{-11} amps, Flux: 10^{9} e/cm^2/sec)	200

LIST OF ILLUSTRATIONS (Continued)

Figure		Page
115	Capsule Checkout Unit, Mobile	201
116	Capsule Checkout Unit, Launch Complex	202
117	CCU-M Block Diagram	204
118	CCU Control	205
119	MTS Power Control	206
120	Instrument Unit Simulator Panel	206
121	Command Encoder	207
122	PCM Data Readout Unit	208
123	CCU-LC Block Diagram	211
124	Power Control Panel	212
125	Test Conductor's Console	212
126	Command Status Panel	213
127	SATCON Functional Block Diagram	216
128	SATCON Facility	217
129	SATCON Equipment Arrangement	218
130	SATCON Equipment Rack	219
131	Command Status Display	220
132	PAM Rack	221
133	Circuit Isolation Test Set	223
134	Deployment Motor Simulator	224
135	Deployment Continuity Test Set	225
136	PAM/PCM Simulator	225
137	Interface Unit Test Set	226
138	System Integration Patch Rack Panel	227
139	Integrator Distributor Panel	227
140	Forward Solar Panel Current Output	245
141	Lateral Solar Panel Current Output	246
142	Quality Program Flow Diagram	268
143	Deployment System	280
144	Electrical Power Subsystem	280
145	Detector Subsystem	280
146	Attitude Subsystem	281
147	Temperature Subsystem	281
148	Data Subsystem	281
149	Pegasus C Reliability Model	282
150	Communication Subsystem Math Model	283
151	Command Receiver and Decoder Interconnecting Diagram	286
152	Occurrence of Design Approvals	287

LIST OF TABLES

Tables		Page
1	Contract Changes	27
2	The Progressive Development of Detector Panel Configuration	40
3	Data Subsystem Assemblies	47
4	Box Test Discrepancies	63
5	Communication Subsystem Changes	95
6	Antenna Measurements Program Results	108
7	Transmitter Performance	110
8	Antenna Conducted Spurious Output	111
9	Beacon Carrier and Sideband Power Comparison	113
10	Load Components Breakdown	167
11	Test Results, Pre-Prototype Canister Thermal Vacuum Test No. 2	184
12	Purchased Components	186
13	Fairchild Hiller Fabricated Components	187
14	Pegasus B and C Configured Units Test Results	188
15	Hit Registration	195
16	Shorted Detectors, Impact Testing	195
17	CU Commercial Test Equipment	203
18	Power Subsystem Test Results	244
19	Satcon Modifications	249
20	+Y Wing Pulse Verify Information	250
21	-Y Wing Pulse Verify Information	251
22	Wing Resistance Data	252
23	Pulse Verify Data Obtained Using Various Fuse Conditions	253
24	Comparison of Initially Apportioned and Final Predicted Reliability	279
25	Trouble Reports and Problem Notifications Issued	291

FRONTISPIECE

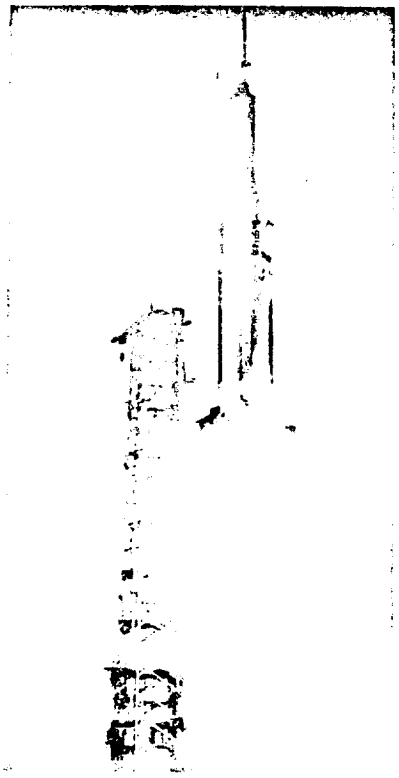

PEGASUS A
Feb 16

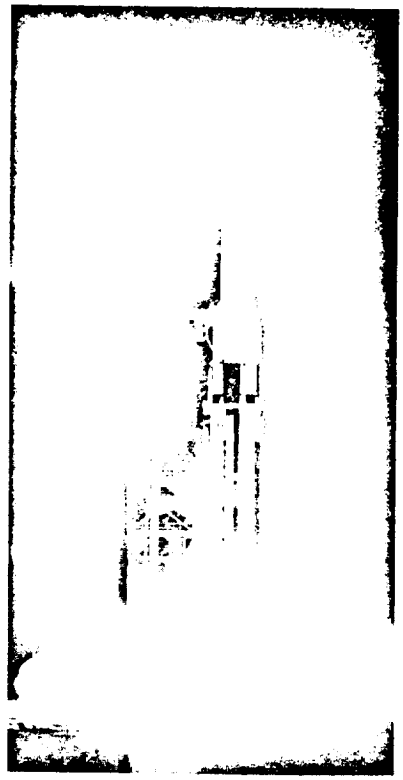

PEGASUS B
May 25

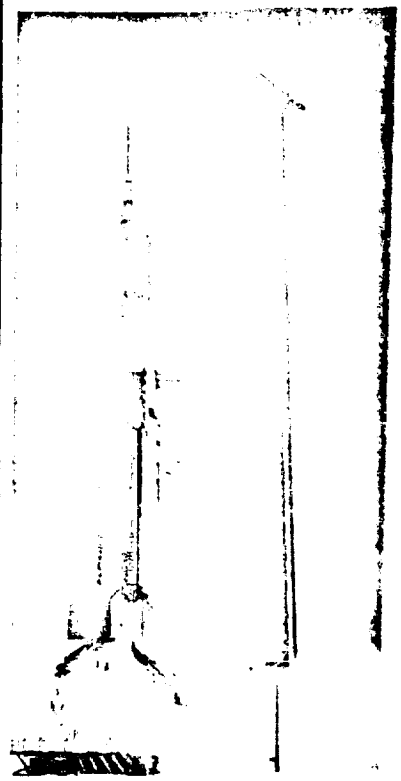

PEGASUS C

FAIRCHILD HILLER
SPACE SYSTEMS DIVISION

LIST OF ILLUSTRATIONS (Continued)

Figure		Page
115	Capsule Checkout [illegible] Mobile	201
116	Capsule Checkout [illegible] Launch Complex	202
117	CCU-M Block Diagram	204
118	CCU Control	205
119	MTS Power Control	206
120	Instrument Unit Simulator Panel	206
121	Command Encoder	207
122	PCM Data Readout [illegible]	208
123	CCU-LC Block Diagram	211
124	Power Control Panel	212
125	Test Conductor's Console	212
126	Command Status Panel	213
127	SATCON Functional Block Diagram	216
128	SATCON Facility	217
129	SATCON Equipment Arrangement	218
130	SATCON Equipment Rack	219
131	Command Status Display	220
132	PAM Rack	221
133	Circuit Isolation Test Set	223
134	Deployment Motor Simulator	224
135	Deployment Continuity Test Set	225
136	PAM/PCM Simulator	225
137	Interface Unit Test Set	226
138	System Integration Math Rack Panel	227
139	Integrator Distribution Panel	227
140	Forward Solar Panel Current Output	245
141	Lateral Solar Panel Current Output	246
142	Quality Program Flow Diagram	268
143	Deployment System	280
144	Electrical Power Subsystem	280
145	Detector Subsystem	280
146	Attitude Subsystem	281
147	Temperature Subsystem	281
148	Data Subsystem	281
149	Pegasus C Reliability Model	282
150	Communication Subsystem Math Model	283
151	Command Receiver and Decoder Interconnecting Diagram	286
152	Occurrence of Design Approvals	287

I. INTRODUCTION

At its inception in Feburary 1963, the Pegasus program (known then as the Micro-Meteoroid Measurement Capsule program), was to be a secondary NASA payload for Saturn research vehicles SA-8, SA-9, and SA-10, under the technical direction of Marshall Space Flight Center. Time from award of the contract to Fairchild Hiller to first flight was to have been only 13 months. The original spacecraft concept was to incorporate a large proportion of "off the shelf" hardware. By the end of the program, all three of these conditions had changed. The Pegasus name was assigned and the program status changed to that of a primary payload (on the same three Saturn vehicles); the first spacecraft was orbited 23 months from go ahead; and extensive development programs became necessary to produce many of the spacecraft's components and systems to the standards of performance required for the mission.

The basic Pegasus mission remained unchanged throughout the program: determine the hazard to spacecraft from micrometeoroids in the near earth orbit and their density, and provide as much information as possible concerning their temporal and spatial distribution and their directionality. The presence of micrometeoroids had been suspected for many years and had been indicated by many small experiments, from Pioneer I through many satellites in the Explorer series. In particular, Explorer XVI had provided useful data from which curves had been drawn showing that space travel would be entirely feasible using practicable skin thicknesses. The validity of these curves was, perforce, in doubt until more empirical points could be plotted.

Flat plate capacitor detectors, much larger but of a type already flown on Explorer XVI, were chosen for Pegasus. In the configuration proposed by Fairchild Hiller, 416 of the detectors (each 20 by 40 inches) were mounted in folding "wings" which provided the ideal flat plate surface for maximum exposure in a tumbling orbit. When penetrated by micrometeoroids, the capacitor type detectors would discharge, allowing detection of the impact. Three different thicknesses of aluminum were chosen to give three points on a curve for extrapolation: 0.0015 inch, 0.008 inch, and 0.016 inch. Parallel development programs at Fairchild Hiller and at G. T. Schjeldahl Co. eventually were necessary to produce a workable detector in the large size needed for the mission. In their final configuration, the detectors, mounted in pairs on either side of a foam core, consisted of an outer target sheet, a mylar dielectric, and a vapor-deposited copper inner capacitor face. Even though the discharge phenomenon remains only vaguely understood, these detectors are capable of registering meteoroid impacts reliably.

Three Pegasus spacecraft are in orbit and returning useful data. Pegasus A has lost all but the thinnest detectors, because of permanent shorts and no

onboard provisions for selectively eliminating a bad panel from a logic group, but Pegasus B and Pegasus C are returning data from all three thicknesses. This data is still being reduced at the time of writing of this report.

A. Program Implementation

To implement the Pegasus program, Fairchild Hiller established a facility in Bladensburg, Maryland, at which engineering and program management were performed. During the course of the program, this facility was equipped with a complete electronics manufacturing capability and with certain required test capabilities. Ultimately, all of the Fairchild Hiller electronics "black boxes" (primarily those in the data subsystem), the electronic canister and its associated interconnecting harnesses, and the electrical ground support equipment were manufactured at Bladensburg.

Within the first months of the program, definitive subcontracts were let for all major components and subsystems not to be manufactured by Fairchild Hiller's Space Systems Division. The subcontractors and their assignments were:

Adcole—Solar aspect sensor

Aero-Geo-Astro—Power supply

Applied Electronics—
- Commutator - PAM
- Commutator - PCM
- Subcarrier Oscillator

AVCO—Receiver

Barnes Eng.—IR sensor

Consolidated Systems—Decoder

DI/AN—
- Core memory
- Clock unit
- Modules

Motorola—
- Antenna diplexer
- Hybrid ring

R.C.A.—Telemetry transmitter

Space Craft—
- Beacon transmitter
- Modules

United Electrodynamics—Temperature sensor

Fairchild Hiller—Motor gearbox

In addition, Fairchild Hiller's Aircraft-Missiles Division, at Hagerstown, Maryland, was to fabricate the structural members. The large space environmental test facilities of General Electric, Valley Forge, Pennsylvania, were put under contract to test the Pegasus spacecraft, which was far too large for any other available facilities.

A controlled atmosphere area was established at the Fairchild Hiller plant at Hagerstown to assemble the Pegasus spacecraft.

By the end of the program, there were constructed three flight spacecraft, a prototype, and a special Dynamic Test Model (DTM) which was used to prove out the structural/mechanical system and to establish structural responses to vibration stresses of the boosted phase of flight. The prototype electrical and mechanical systems were modified at each stage of the program to reflect flight configuration (including the changes made between flight models). An electrical test model of the entire electronics system was also fabricated, to establish system responses and characteristics.

The basic Pegasus system remained the same from the beginning of the program to the end, although many detail changes were incorporated.

Because of the very short time span of the Pegasus program, Parallel development paths were established at all possible points. Development and production of flight, prototype, and qualification hardware proceeded simultaneously, and an attempt was made to qualify the data system with single qualification test units. This attempt was partially successful, with system and subsystem qualification, development, and acceptance testing being completed in sufficient time for assurance of the characteristics of flight hardware but with qualification of some individual boxes lagging behind. Because of this lag, and because of a feeling that adequate demonstration of the deployment system had not been possible on the ground, the first Pegasus was flown as a test model. Its performance, however, proved that all spacecraft systems were flight-ready.

Several other departures from serial pathways were taken. The spacecraft electronics were subjected to thermal vacuum test in a 6 foot by 6 foot chamber, mounted in a portion of the center section, rather in the large General Electric chamber as a part of the whole spacecraft. This procedure allowed for a more realistic procedure at the same time that it shortened development schedules by several months.

Detector panels were developed and, ultimately, fabricated at the same time that tests were under way to determine their characteristics. Light gas gun tests to determine panel responses were actually not completed until after the first spacecraft was in orbit. Permanent shorts caused the loss of all of the two thickest panels early in the life of Pegasus A. This failure was due to the electrical configuration which caused the loss of an entire logic group when one panel was shorted. The second and third spacecrafts contained fused blowout circuits that permitted removal of shorted panels from a logic group without causing loss of the entire group, and their panel failure rate is approximately as predicted before flight.

The three Pegasus spacecrafts were launched from Cape Kennedy with no holds or major modifications after their arrival there. The launches were in February, May, and July, 1965. All three were successful. Data from the three spacecraft is received at SATCON, a special facility established at Kennedy Space Center, and is under analysis at Marshall Space Flight Center. SATCON also is used to transmit operating commands to the spacecraft.

B. The Pegasus Spacecraft

In space the Pegasus spacecrafts are approximately 96 feet long by 13.5 feet high. They remain attached to the Saturn S-IV stage. Initial signals for deployment and power for deployment are received from the S-IV stage instrument unit, but after deployment the spacecraft are electrically independent, powered by solar cells and batteries. During boost, the spacecraft were folded to fit within the envelope of the Apollo service module; the wing stacks, consisting of six and one half panels on either side of the center section, and the solar panels were restrained against vibration during boost. After ejection of the Apollo command module and service module boilerplate units, the Pegasus restraints were pyrotechnically released, and springs at the hinge points unfolded the wings. A scissor linkage operating through redundant electric motors controlled the rate of deployment of the wings. Springs also deployed the solar panels, which were not rate controlled.

Pegasus data is received at STADAN stations from a continuous beacon and a commanded FM telemetry transmitter. The data system is digital, with both PAM and PCM outputs. The PAM is used primarily for housekeepin[illegible], temperature data and an added [illegible] spectrometer experiment. The [illegible] to the data system are the disc[illegible] recharge indications from the [illegible] panels at meteoroid impact, tem[illegible] ture sensor information, and a[illegible] information from earth and sola[illegible] sensors.

The spacecraft structure an[illegible] get faces of the detector panels a[illegible] within allowable temperature ra[illegible] the use of an alodine coating wi[illegible] duces a pale green color. The [illegible] alodine process was modified b[illegible] child Hiller to produce the nece[illegible] absorption and emmitance chara[illegible] tics. Temperature control of t[illegible] tronics canister is through a bi[illegible] aluminized mylar super insulat[illegible] a set of individually acting ther[illegible] louvers which open and close i[illegible] sponse to the heat input they re[illegible] from the electronics.

On command from SATCON, [illegible] Pegasus spacecraft will transm[illegible] contents of the memory, perfor[illegible] rapid scan of attitude inputs, o[illegible] a reference temperature seque[illegible] check of system performance. [illegible] commands will cause the space[illegible] switch between redundant units: [illegible] mitters, batteries, system cloc[illegible] all, some 96 commands can be [illegible] mitted to the spacecraft.

C. Mission Performance

Data returned from the Pega[illegible] spacecraft is complex and requi[illegible] much analysis to be useful. Ho[illegible] the data is being returned, and [illegible] ultimately be reduced to provid[illegible] cant new insights into the chara[illegible] tics of the meteoroid environme[illegible] near earth region.

All Pegasus subsystems have performed well. Television cameras mounted in the S-IV stage instrument unit for the first two flights showed a perfect opening sequence, duplicating performance in the "zero g" fixtures used on the ground for testing. One item of significance is the verification of the validity of the practice of testing and building to as near a simulation of the actual orbital condition as possible. The Pegasus wings cannot deploy unsupported in a one g field, but, of course, there was no need for them to do so.

Attitude sensing aboard Pegasus, necessary for any kind of meteoroid directionality determination, provides a set of data which can be reduced, although with some difficulty. On Pegasus A the data is more ambiguous than on the other two spacecraft, in which improvements in sensor location and sensitivity were incorporated.

The loss of the thicker panels aboard Pegasus A makes that spacecraft's data somewhat less useful than that of the other two spacecraft, since no determination of frequency of impacts at different energy levels can be made. Total count, that is to say an indication of total meteoroid concentration, is being obtained from Pegasus A, however.

The only electrical abnormality occuring in any of the three Pegasus spacecraft is in the loss of most PAM data from Pegasus B. This channel has operated intermittently, often enough that an adequate indication of spacecraft condition can be obtained, so that no loss of necessary data has been experienced. On all three spacecraft, power, power consumption, temperatures, responses, and all other performance parameters have been nominal, except that power available has been consistently greater than the conservative estimates and thermal control of the electronics unit has been more exact than had been predicted.

Ground support equipment, including that used in the control center, has functioned without problems. No erroneous commands have been issued to the spacecraft (except when the operator has issued a wrong command), and no ambiguities in data handling have been noted.

In sum, the Pegasus systems are performing according to predictions and within specifications in all cases. The spacecraft are returning useful data which is susceptible to detailed analysis. In all respects the mission must be considered successful, including concept as well as performance.

II. PROGRAM MANAGEMENT

A. Organization

The Pegasus program, initiated 27 February 1963, was a program of high interest and priority throughout the Fairchild Hiller Organization (formerly Fairchild Stratos). This interest and priority, coupled with sound engineering, enabled the successful launching of Pegasus A, B, and C within the short time span of 29 months.

The Pegasus program was monitored closely by a Program Management Team originally formed prior to award of the Pegasus contract. This organization provided Fairchild Hiller with insight into the many problems that may arise in performing a task of this complexity.

The Program Management Team was responsible for all planning necessary to provide a reliable, successful spacecraft in accordance with the delivery requirements. The plan devised was a flexible one that permitted required and requested modifications to be incorporated with minimum wasted time and at minimum cost.

The Program Management Team was closely monitored throughout the program and implemented as necessary. It maintains an efficient organization.

1. Original Concept

The original program management concept under which the Pegasus contract was to be performed called for direct, short lines of communication to top company management; focusing corporate priority directly on the program; adequate check and balance systems for control; and staffing with top quality people who possessed obvious qualifications to do the job. The program as initiated met these criteria. Specifically:

- The program was established as a direct responsibility of the Corporate Director - Space Programs.
- A program management organization containing all line functions reporting directly to the Program Director was established.
- Check-and-balance was provided by having the Manager of Product Assurance report directly to Corporate Director while serving on the operating staff of the Program Director.
- Periodic reviews by the President of the corporation and his staff provided further control over the program.
- Technical and management personnel of the existing corporate level Spacecraft Systems Engineering organization were utilized to form the nucleus of the program staff.
- Selected specialists from other divisions of the company augmented the program staff nucleus.
- All program functions with exception of spacecraft assembly, structural fabrication and

specialized testing were segregated from all other corporate activity in one building.

The position of the program within the corporate organization at inception is shown in Figure 1. The placement of the Pegasus program in the corporate structure was a direct indication of the high level interest within the company to effectively accomplish this particular program.

The program organization as initiated is shown in Figure 2. The organization encompassed all functions necessary for performance of the contract in a timely and efficient manner while other ancillary functions were supplied on a demand basis from other divisions of the corporation.

The functions of the various elements within the program organization were established as follows:

- Corporate Director - Space Programs

  The Corporate Director - Space Programs, acting as the agent of the President of the corporation, was to provide the means and authority for focusing total corporate capability on the program. This included insuring the availability of experienced personnel, manufacturing facilities and test facilities in accordance with program requirements. In addition, the Product Assurance Manager was to report to the Corporate Director - Space Programs in

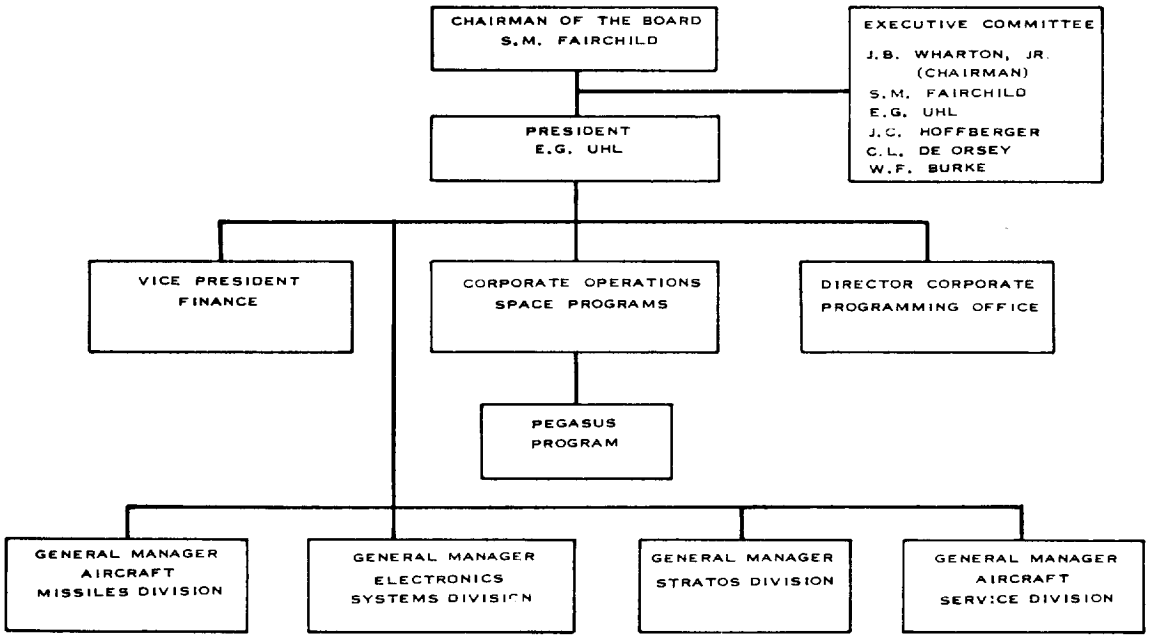

Figure 1. Corporate Organization at Inception of The Pegasus Contract

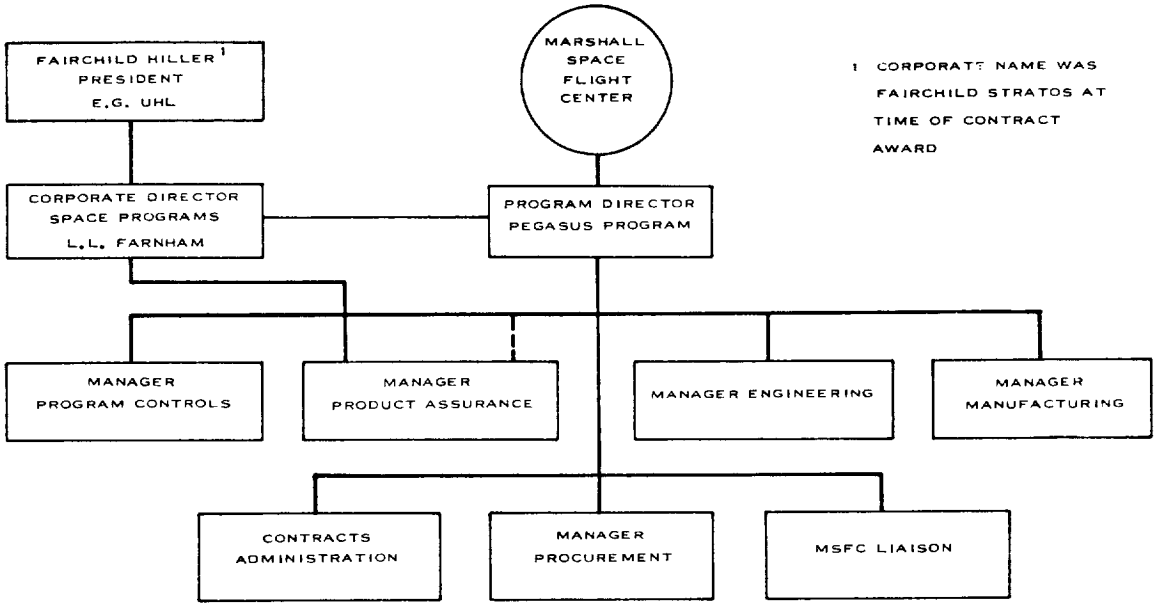

Figure 2. Original Pegasus Program Organization

order to guarantee line authority for evaluation and corrective action activity on the program.

- Program Director

  The Program Director was to be singularly responsible for total accomplishment of the overall program. He was to direct all aspects of the program in both the technical and business areas. He was to be internally responsible to the Corporate Director - Space Programs and externally responsible to the George C. Marshall Space Flight Center. He was to represent the single focal point, highly placed within the corporation, for all MSFC contracts.

- Manager of Program Controls

  The Manager of Program Controls was to establish and implement program master plans, detail schedules, schedule control systems, cost allocation categories, budgets, budget control systems and handle all program administrative functions. In addition, the Manager of Program Controls was to be responsible for coordinating documentation requirements and coordinating change control activities on the program.

- Manager of Product Assurance

  The Manager of Product Assurance was to be responsible for all aspects of the reliability and

quality assurance programs implemented on the Pegasus program. The reliability effort was to encompass design support, test programming and failure reporting and analysis. The quality program was to encompass documentation review and approval, quality support of procurement activity, manufacturing inspection, test verification and test equipment logistics.

- Manager of Engineering

  The Manager of Engineering was to be responsible for all aspects of engineering design, test, evaluation and flight support activity. The engineering activity was to be divided into five discipline areas (Spacecraft, Electronic Systems, Test & Evaluation, Dynamic Analysis, Thermal Control) which were to be responsible for providing rapid attainment of an integrated balanced design.

- Manager of Manufacturing

  The Manager of Manufacturing was to be responsible for all fabrication aspects of the Pegasus program. He was to be responsible for tooling, structural fabrication, electronic fabrication, production planning and spacecraft system integration. All mechanical tooling and structural fabrication was to be performed in the Hagerstown plant but coordinated by the Pegasus program Manufacturing Manager.

- Contracts Administrator

  The Contracts Administrator was to be responsible for all contractual matters pertinent to the program including interfaces with both MSFC and vendors. Vendor activity was to be closely coordinated with the procurement organization.

- Manager of Procurement

  The Manager of Procurement was to be responsible for all procurement, material control and subcontractor management activity required by the program. The procurement activity was to be closely coordinated with engineering and contracts administration to assure a closely integrated system necessary for vendor performance on an expedited basis.

- MSFC Liaison Engineer

  The MSFC Liaison Engineer was to maintain continuous and effective communication between MSFC and the company Program Director. This activity was believed mandatory to the success of the program due to the stringent schedule requirements imposed.

2. Final Evolution

The program management concept as originally conceived was implemented during the initial phase of performance of the contract. The program was assigned as a direct responsibility to the Corporate Director - Space Programs and thus assured of top corporate

priority. A separate functional organization located in a separate building and staffed with Spacecraft Systems Engineering personnel and selected other specialists was established in Bladensburg, Maryland. The program was reviewed by the President of the corporation on a monthly basis and all planned controls were instituted.

After approximately one year of program performance and immediately prior to the intensive fabrication and test period, the former Corporate Director - Space Programs, then a Vice President and General Manager of the newly created Space Systems Division, assumed the Program Directorship of the Pegasus program. The situation at that time required, in the opinion of the new Program Director, a modification to the program organization. Consequently the organization shown in Figure 3 was created.

All operations retained their areas of responsibility as originally defined with the following exceptions: Launch Operations was created as a function separate from Engineering with complete responsibility for all phases of activity including documentation planning and administration; an Operations Department was created encompassing the following functions — electronic fabrication, production planning and control, material control, procurement, spacecraft integration and model shop activity. The Operations Manager also had responsibility for integrating structural fabrication activities, which were primarily performed by Aircraft-Missiles Division of the corporation, with the other manufacturing activities such that all interfaces were in accordance with schedule requirements. A Corporate Staff Consultant, reporting directly to the Program Director, was to continually review the planned activities to maximize parallelism

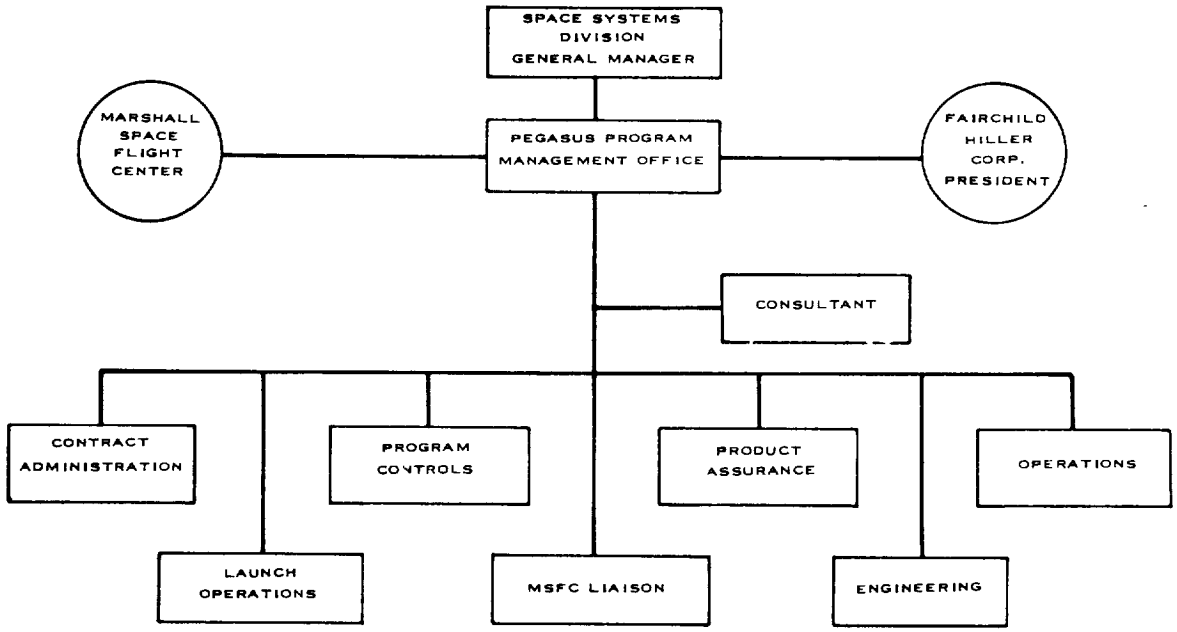

Figure 3. Revised Pegasus Program Organization

and assure meeting of schedule commitments. This individual was also available to perform other special program tasks provided his primary assignment was fulfilled.

The function of the Program Director remained as originally planned, but the office was amplified to include additional management talent. In addition to the Program Director, a Program Manager for Prototype Spacecraft, a Program Manager for Flight Spacecraft and a Program Manager for Ground Equipment were added to the office. Each of these program managers was given responsibility and authority for total accomplishment of his designated portion of the program. These individuals were responsible for all direction on their part of the program as well as integration necessary between Fairchild Hiller's functional groups including Engineering, Operations, Product Assurance and Program Controls. Any interference or conflict at the program manager level was resolved by the Program Director.

Another amplification made to the office of the Program Director was the inclusion of a Subcontract Manager. This individual was assigned the responsibility of coordinating and integrating subcontract effort with the in-house portion of the program. The integration and coordination of Engineering, Operations and Product Assurance to achieve acceptable subcontractor performance was also a prime part of this management responsibility.

The final management organization as outlined above was utilized throughout the program. The organization functioned smoothly and showed great ability to respond quickly to changes in technical direction as the hardware phase of the program progressed. The division of responsibility within the Program Office assured high level attention to each major subdivision of the program on a continuing basis, thereby assuring successful performance in meeting tight schedules dictated by the Saturn program.

3. Results and Conclusions

The Pegasus program was initiated 27 February 1963. The first flight occurred on 16 February 1965, less than two years later. This successful launch was followed by two others on 25 May 1965 and 30 July 1965.

It is believed that this enviable record of success is a result of the management philosophy applied to this program and a sound engineering approach as outlined in the proposal and essentially carried through into hardware.

The organization established to perform this task retained its short lines of communications throughout the life of the program which was essential to being able to respond to fast changing requirements inherent in an R&D effort. The communication loop within the organization was further improved as a result of the daily program meetings discussed under "Schedule Controls," which follows, and the assignment of the program team to a building separate from all other activity. This unimpeded ability to communicate within the program task force was instrumental in achieving the ends of the program.

Top corporate priority and interest were also instrumental in expediting all phases of the program. The individual assigned as "consultant" from the

corporate office was able to assure complete cooperation of all divisions of the company as necessary to enable successful completion of the program.

The most significant aspect of the management pertinent to the success of the program was, however, the assignment of responsibility for sections of the program to Program Managers by the Program Director. This innovation, keyed to basic hardware, provided for continual management attention to all phases of the contract effort which assured correct decision and trade-off essential to program success. This depth of management focused on the program along with the engineering talent and effort expended was the key to success on Pegasus.

B. Management Controls

Management control of the Pegasus Program was directed to: 1) Schedule Controls, and 2) Boards and Scheduled Meetings.

Schedule Control of the program was of extreme importance due to the stringent delivery schedule involved. To support the schedule various charts were used as an aid to the PERT methods.

Daily management meetings were also used to provide a program communication link and to insure immediate correction of all problem areas. A Pegasus chart room was established that was used to provide current scheduling information concerning all facets of the program.

The "Boards" established for the Pegasus program served as an expedient for decision making and provided guidelines for support of the overall reliability of the Program. The Boards consisted of a Change Control, an Integrated Test Program and Test Review. The Board titles are indicative of their function. The Boards were convened on a regular basis.

1. Schedule Controls

a. Original Concepts

The schedule control methods in general usage throughout the Fairchild Hiller Corporation were set forth in the proposal for the MMC Program. The implementation of these methods as planned for the MMC Program involved the use of the following tools:

(1) Master Plan

The Master Plan (Figure 4) graphically represents, in simple bar-chart format, the sequencing and timing of all program activities from beginning to end. It is easily and quickly adjusted or revised, and is an efficient means for dissemination of up-to-date information. It provides the basis for determining manpower, facilities, funding requirements, and measures relative accomplishment including overall effectiveness.

(2) PERT Networks

The Master Plan is developed from a PERT network. Since the relationship between individual goals and overall progress is one of varying significance, the PERT network graphically represents time-flow and the sequence of activities. Paths of activities are plotted showing both series and parallel events.

By monitoring actual performance on individual activities, it is possible to determine rapidly the extent to which this performance lengthens or shortens time to delivery. Should it appear to lengthen time to delivery, it is also possible to access quickly the effects of reallocating program resources in order

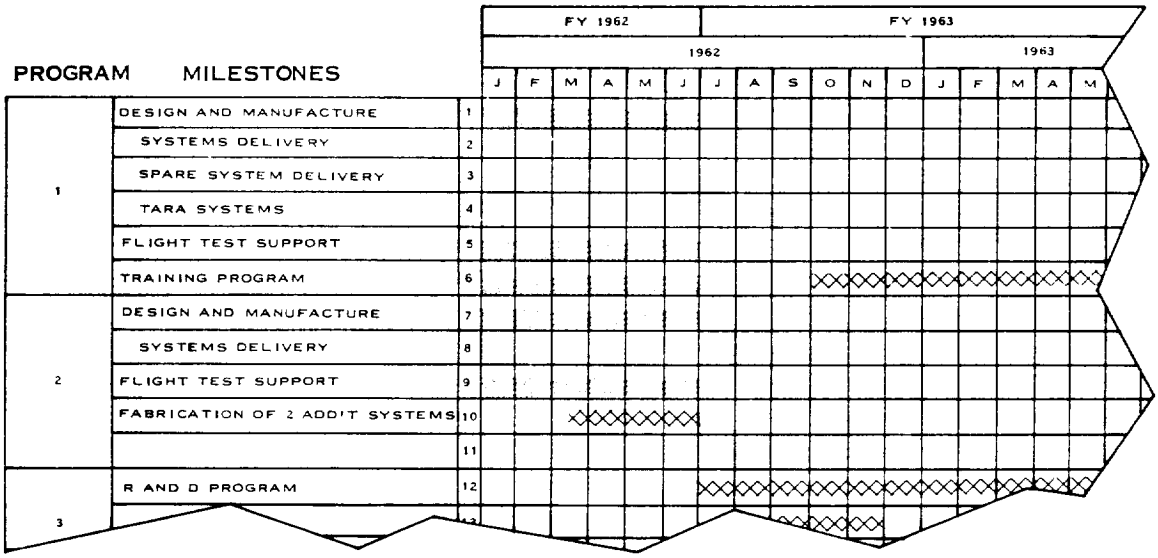

Figure 4. Sample Master Plan

to maintain schedule in the critical path.

(3) Page and Line Schedules

The Page and Line Schedule (Figure 5) is the tool used to implement the Master Plan on a detailed level and establish work status for the PERT reports.

This schedule is developed by tabulating activities or events in the left vertical columns and listing system components across the top of the form. Where lines and columns intersect, thus matching events and components, the PERT expected date is entered and compared with planned or completed dates as these become available. The forms thus provide an immediate and continuous status record which is transferred to the PERT network and reviewed at periodic program staff meetings.

(4) Gantt Charts

The Gantt Chart (Figure 6) is used by Engineering to implement the goals specified by the Master Plan and the time intervals specified by the Page and Line Schedule for an individual engineering task. This chart is used to lay out a single sequence of engineering development, determine the necessary manpower requirements for these tasks, and measure outputs as a result of engineering effort.

CONTRACT

WORK AUTHORIZATION

MODEL

* TOTAL QUANTITY

LINE		DESCRIPTION	* COL.	1 79-0046234 CHASSIS ASSY	2 79-01124-400 FRAME STRUCT. SUB-ASSY	3 79-01124-401 HARNESS ASSY	4 79-01124-402 CABLE ASSY	5 79-0014-2	6	7 79-0011 416 ANTENNA ASSY	8	9	
1		ENGINEERING RELEASE	S										N.R.
			P										↑
			A										
2		RAW MATERIAL AVAILABLE	S	1-2-2	1-8-1	N.R.	N.R.	1-15-2	1-29-2	1-29-2	2-13-2	2-14-2	
			P										
			A										
3		PURCHASED AND SUBCONTRACT PARTS AVAILABLE	S	N.R.	2-8-2	2-8-2	2-15-2	2-15-2	2-23-2	3-2-2	3-15-2	3-16-2	
			P										
			A										
4			S	1-31-2	2-7					2-27-2	3-9-2	3-13-2	
			P										
			A										

Figure 5. Page and Line Schedule

		ITEM NAME					
	1	CONFIG. I					
	2	G & C SECT. STR.	711	-	-	940	
	3	LAYOUT & DATA PG.	"		400		
	4	BULKHD AFT END	"				
	5	" FWD "	"				
101 & 102	6	SKIN & ACCESS DOORS	"				
	7	INTER FRAMES	"		20		
	8	FITTING	"		120		
	9	ASSEMBLY DWG	"		160		
	10						
	11	G & C SECT. INSTALLATION	712	-	-	140	
	12	ASSEMBLY DWG.	"		140		
	13						

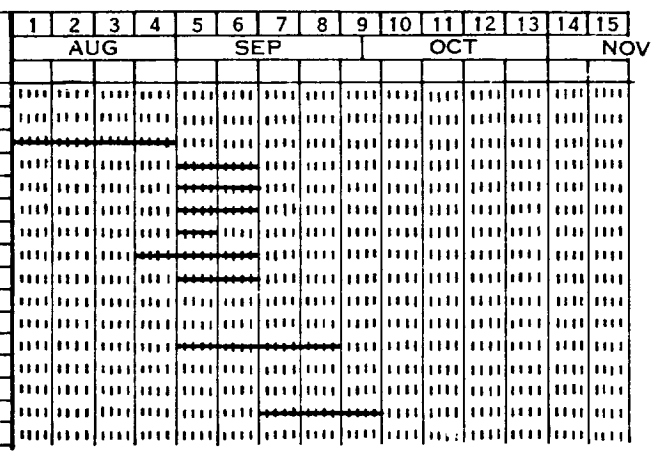

Figure 6. Gantt Chart

Input-Output Charts

The critical relationship between cost and progress is represented graphically by Input-Output Charts (Figure 7). At any time during the program, the system shows expenditures, both planned and actual (known as the Input), against the amount of work accomplished, both planned and actual (known as the Output). The system is based upon activities, and can be used readily with the Page and Gantt, and PERT networks.

Control System for Delinquencies

The schedule of the program is controlled by highlighting the exceptions to the schedule through a delinquency report issued by the Program Control Manager to the Program Director and higher level management. This report summarizes the problem areas, and the persons responsible for corrective action. Since corrective action called for in the delinquency report must be executed promptly to avoid a delay in the program, these reports are part of the permanent agenda at management staff meetings.

b. History and Evolution

The extreme tightness of the original program schedule necessitated close management control, utilizing scheduling and reporting techniques capable of supplying up-to-date status. The contract, as signed on 27 February 1963, called for delivery to KSC of the three flight capsules in March, April and June of 1964; the same dates set forth in the "Request for Proposal". The original planning and scheduling took place during this proposal period and the Master Plan, Figure 8, was evolved depicting the broad program schedule with dates for the significant program milestones.

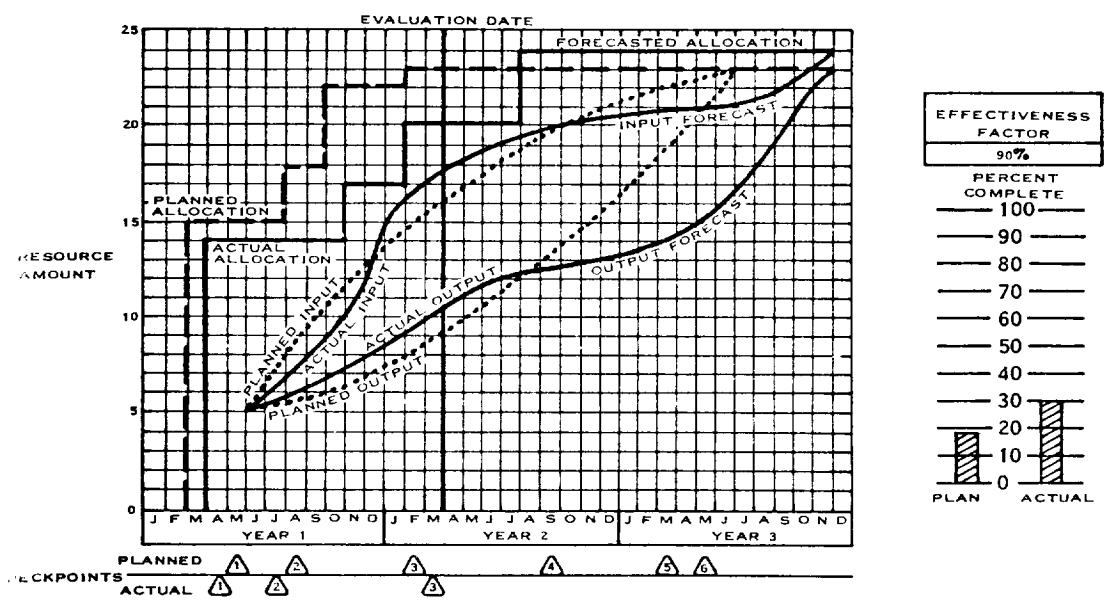

Figure 7. Input-Output Charts

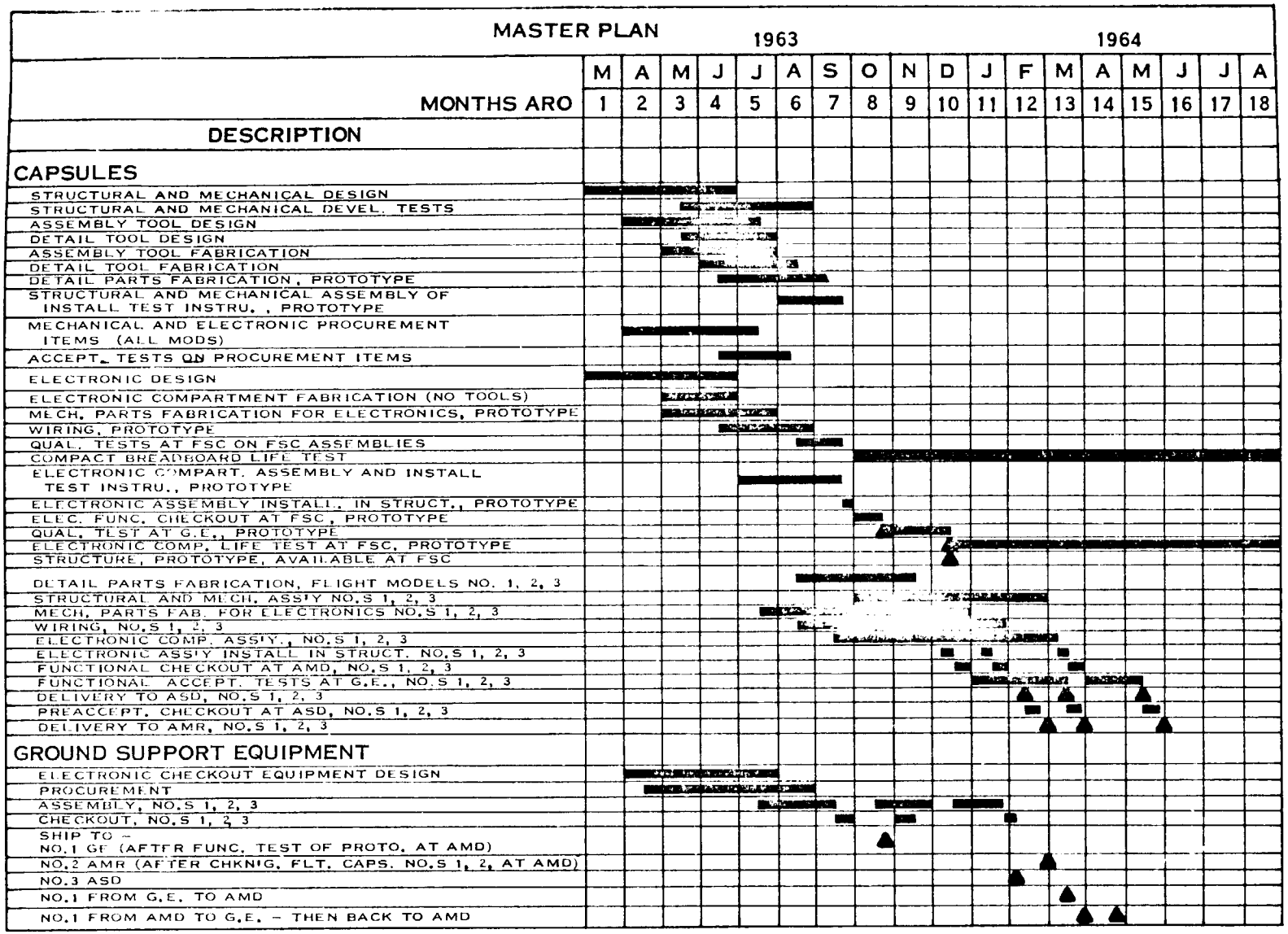

Figure 8. Pegasus Master Plan (Sheet 1 of 2)

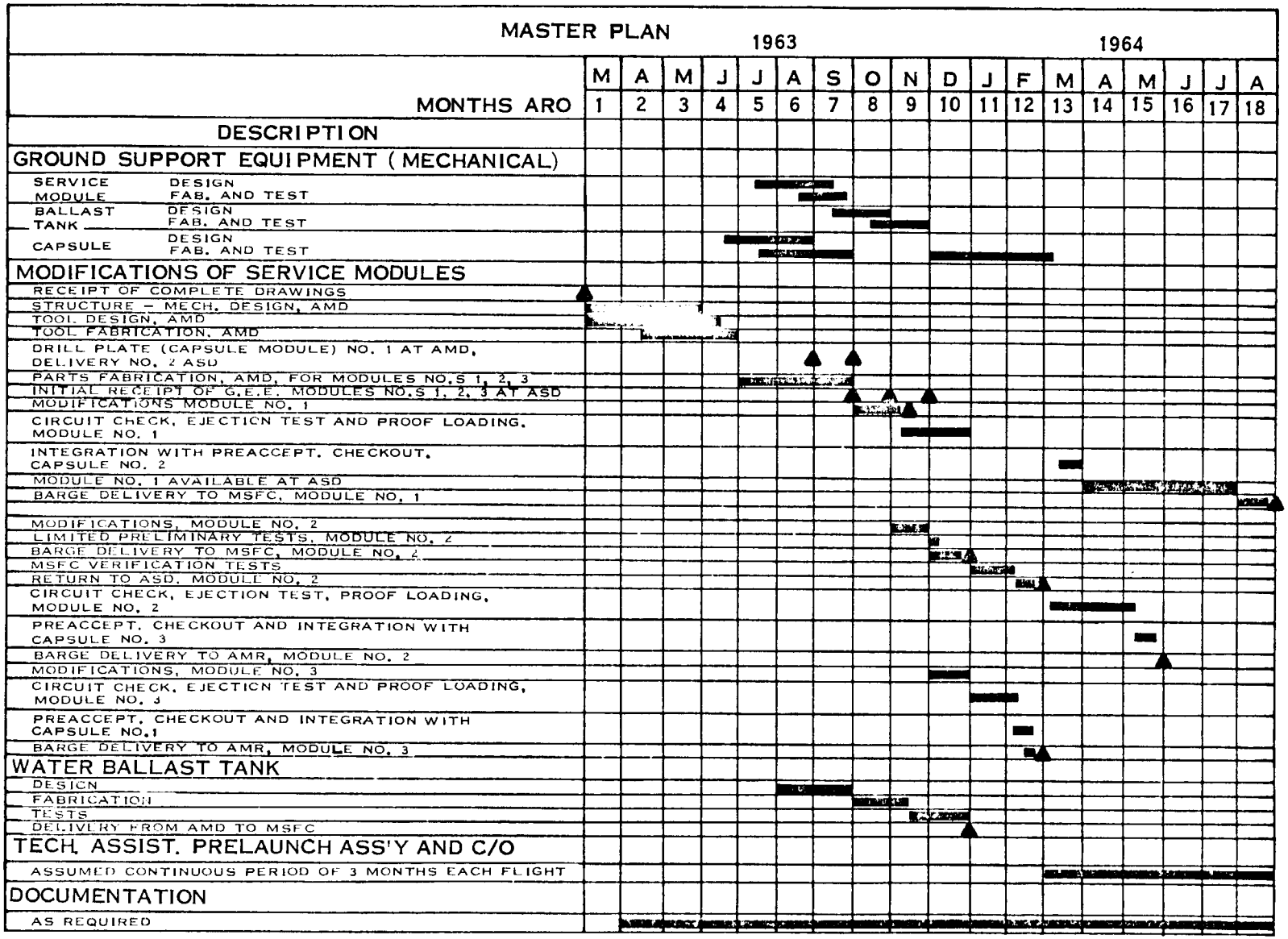

Figure 8. Pegasus Master Plan (Sheet 2 of 2)

Also, during this time the first cut was taken at the PERT networks for the program. These networks and the Master Plan were presented in Fairchild Hiller's proposal.

During the negotiation of the contract, a work breakdown structure for the program was developed jointly by Fairchild Hiller and MSFC. This work breakdown structure, shown in Figure 9, was appended to the contract and formed the basis for all planning activity by dividing the scope of work into manageable subdivisions. Also, during negotiations, the level of detail of the PERT networks was agreed upon, along with Fairchild's responsibilities concerning frequency of reporting and interfacing with MSFC in-house networks.

After the completion of negotiations, work began on the preparation of the detailed networks for submission to MSFC by the end of March 1963. These networks, upon their completion and approval by MSFC, formed the basis for all subsequent program scheduling activities. Bi-weekly updating of the networks provided the MSFC Program Office with program status throughout the life of the program. A sample network is shown in Figure 10.

The first computer run of these networks established the expected and latest allowable dates for completion of each of the detailed activities. For internal schedule control these expected dates were converted into bar chart type schedules, a sample of which is shown in Figure 11. These schedules were updated on a weekly basis and distributed to all levels of management operating on the program. In addition, a report was issued each week delineating those activities scheduled to start or complete for the ensuing two-week period with the responsible manager's name beside each item. This report was used as the primary agenda for a weekly status meeting attended by all those having responsibility for items on the report. At this meeting each report activity was discussed and its status determined. Those activities scheduled further along in time, but lying on the most critical paths as determined by the most recent PERT tab run, were also discussed and their status determined.

The status thus obtained was then analyzed for program effect and a delinquency report was issued listing all activities past due or promised beyond the scheduled date. This status was also utilized directly to prepare the inputs to MSFC for updating the PERT networks. The resulting tab runs were analyzed to find the less obvious effects on program progress which are pointed out very graphically by PERT methodology.

The foregoing methods were employed during the design and initial development phase of the program. As the program moved into the fabrication phase, it became necessary to employ additional tools to maintain schedule control. The completion of fabrication of the prototype and flight hardware, and subsequent acceptance testing constituted the critical activities toward delivery of the flight spacecraft. Management attention was, therefore, directed toward these activities. To ensure accurate and timely status of fabrication activities, extremely detailed schedules were prepared for the

APPENDIX D
M M C WORK BREAKDOWN STRUCTURE
CONTRACT NAS 8 - 5 6 1 5

AS REQUIRED BY THE CLAUSE OF THIS CONTRACT ENTITLED, "NASA PERT AND COMPANION COST SYSTEM, THIS WORK BREAKDOWN STRUCTURE WILL BE USED BY THE IMPLEMENTATION TEAM AS THE FRAMEWORK FOR STRUCTURING OF THE NASA PERT FRAGNET AND COMPANION COST REPORTING CATEGORIES.

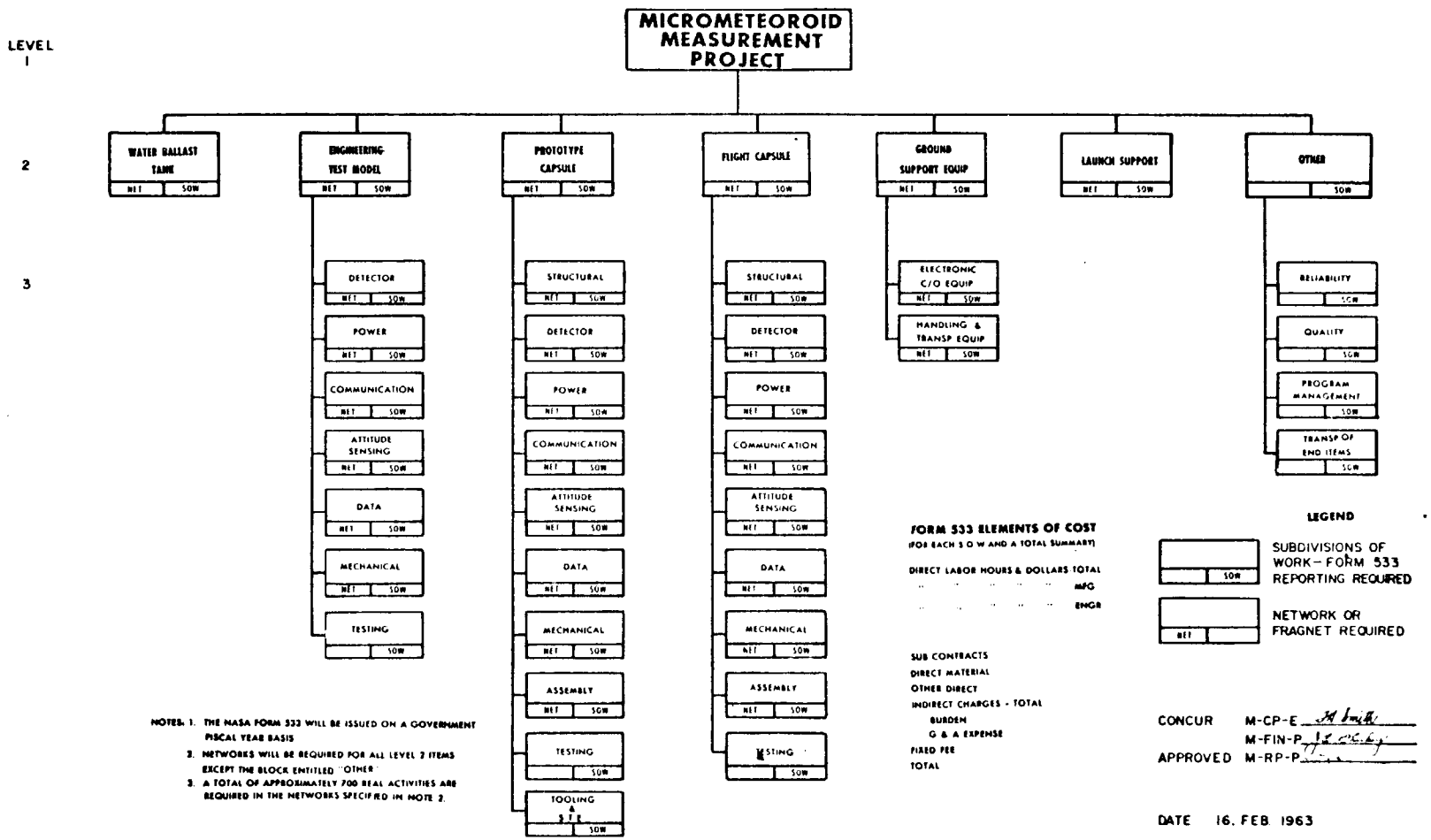

Figure 9. MMC Work Breakdown Structure

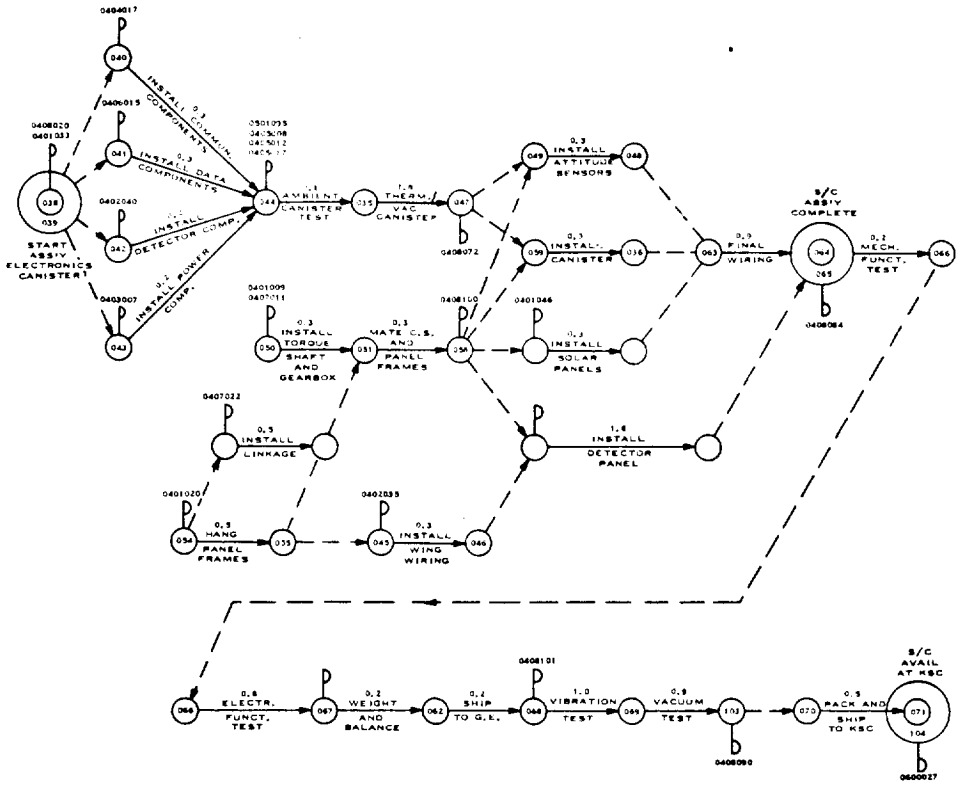

Figure 10. Pert Network Sample

	1963										1964			
DESCRIPTION	MAR	APR	MAY	JUNE	JULY	AUG	SEPT	OCT	NOV.	DEC	JAN	FEB	MAR	APR
MONTHS ARO	1	2	3	4	5	6	7	8	9	10	11	12	13	14
DATA SUB-SYSTEM														
ENGINEERING TEST MODEL														
PREPARE TEST PLAN.														
MSFC APPROVAL														
DESIGN TEST HARDWARE														
INPUTS TO PURCHASING – MAJOR COMPONENTS														
PLACE P.O.'S – MAJOR COMPONENTS														
PLACE P.O.'S – SMALL PARTS														
DELIVER SMALL PARTS														
DELIVER MAJOR COMPONENTS														
FABRICATION														
ASSEMBLY														
TESTING														
PREPARE REPORT														
PROTOTYPE														
DESIGN														
SUBMIT CONCEPT DESIGN, MSFC APPROVAL														
SUBMIT DETAIL DESIGN, MSFC APPROVAL														
INPUTS TO PURCHASING – MAJOR COMPONENTS														
INPUTS TO PURCHASING – SMALL PARTS														
RELEASE FINAL DRAWINGS														
PLACE P.O.'S – MAJOR COMPONENTS														
PLACE P.O.'S – SMALL PARTS														
FABRICATE PARTS														
DELIVER SMALL PARTS														
ASSEMBLE FAB. COMPONENTS														
TEST FAB. COMPONENTS														
DELIVER PURCHASED COMP														
PREPARE TEST PROCEDURES FOR FAB. COMP., MSFC APPROV.														
PREPARE TEST PROCEDURES FOR PURCH. COMP., MSFC APPROV.														
PREPARE SUB-SYS. TEST PROCED., MSFC APPROV.														
TEST PURCHSED COMPONENTS														
SUB-SYSTEM ASSEMBLY														
SUB-SYSTEM TESTS														

Figure 11. Pegasus Detailed Schedule

hardware fabrication. These schedules were prepared in a bar-chart format, to the PC card level and posted in a chart room accessible to all program personnel. The end dates reflected on these detailed schedules were derived from the Master Plan and the PERT networks. Status was collected and posted on these charts by production expeditors on a daily basis. This room was the scene of a daily meeting chaired by the Program Director and attended by representatives from each department. At this meeting, status was discussed and on-the-spot direction was given. The function of the chart room was later expanded such that schedules for all program activities and status of all completed hardware was maintained therein. Figure 12 shows the Pegasus chart room.

Special scheduling and control techniques were employed during the program as situations arose which required them. After direction from MSFC rescheduled the delivery of the three flight spacecraft to June, July and September of 1964, special PERT networks were drawn up to analyze the most efficient way to utilize the additional time. The results of this analysis were then used to change the time span in the detailed PERT networks from which all other schedules were generated. Later in the program, design changes in the data subsystem and other delays, necessitated reprogramming to a delivery in December, 1964, for the first flight unit with the second and third units being delivered in April and July, 1965, respectively. The analysis of schedule status and estimating of time required to complete the program was done in September, 1964, utilizing large summary PERT networks. By the use of PERT in this reprogramming effort, all eventualities could be considered and a high degree of confidence could be placed in the resulting

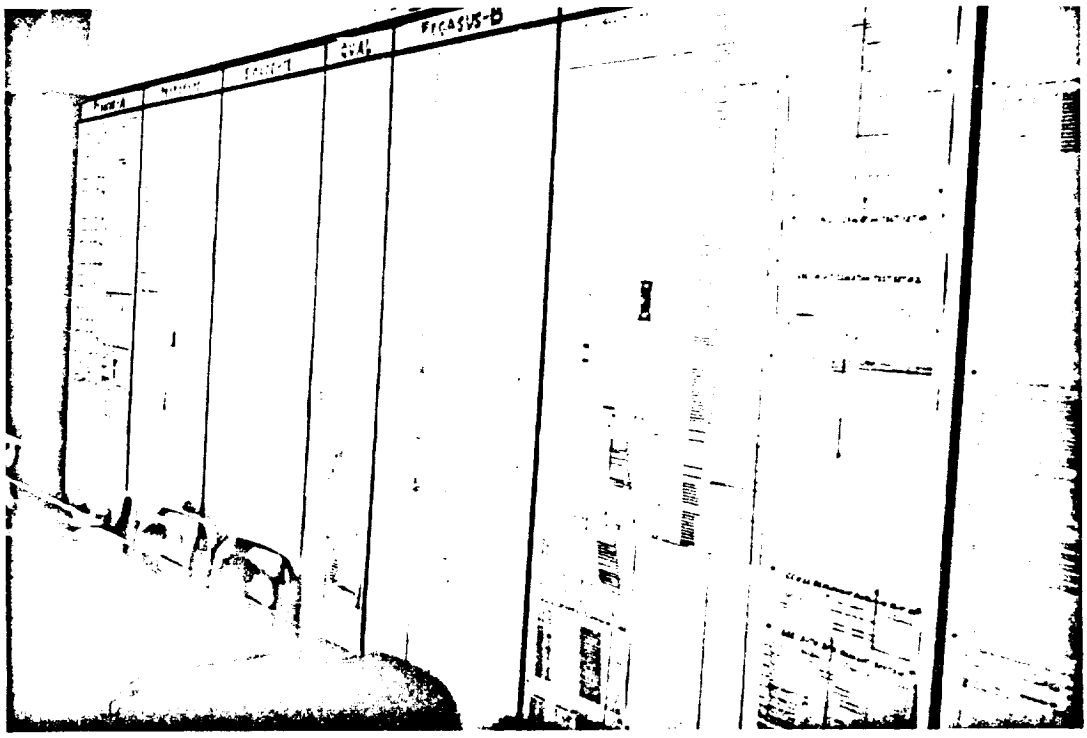

Figure 12. Pegasus Chart Room

delivery promises. Every milestone scheduled during this reprogramming was met or improved.

As design improvement changes were factored into the second and third flight units, Pegasus B and C, detailed Page and Line Schedules were issued to insure incorporation of the changes as early as possible consistent with direction to proceed from the MSFC Project Office. The point of incorporation of these changes into the hardware varied from just prior to subsystem tests to as late as substitution of reworked black boxes on the pad. The schedules issued for these "out-of-sequence" items also insure the availability of spare components in all active configurations by controlling the start of modification on each changed box by serial number. Similar schedules were issued not only for FHC fabricated components, but also for vendor boxes which had to be cycled through the manufacturer's facility for rework and modification. Here again, particular attention was given to the need for maintaining an adequate supply of spares in all configurations in use at the time by specifying not only the date for completion of the rework of a particular box, but also the date for the start of rework. By strict adherence to these "out-of-sequence" schedules, the situation never arose wherein a failed black box could not be replaced because the spares were either being reworked or were not in the proper configuration.

c. Results and Conclusions

During the course of the program, various methods and tools of scheduling and schedule control were utilized. It became apparent that certain courses of action were preferable to others depending upon the particular phase in which the program was active at the time. The use of PERT in initial planning and replanning on a program-wide basis was shown to be of significant value. For control and communication within the program, the conversion of the PERT networks into time scaled bar charts proved to be effective in that this format was more easily grasped at the working level. The production phase of the program required scheduling to a very high level of detail for effective control. The smooth flow of hardware during this phase required close cooperation between the various functional departments, i.e. Purchasing, Fabrication, Quality Control and Engineering. The daily management meetings provided a place and time for ironing out problems arising from interdepartment work flow, and helped keep work stoppages to a minimum in both frequency and duration.

The results of the Pegasus program have shown that effective program schedule control must be instituted from an organization independent of any functional department operating on the program. This program management method provides the only reliable way of establishing a cohesive project organization operating in the best interests of the program.

2. Boards and Scheduled Meetings

The efficient accomplishment of program activities necessitated the establishment of several Boards holding regular meetings. A description of these Boards and their function is detailed as follows:

a. Change Control Board

This Board consisted of representatives from Engineering, Contracts, Procurement, Product Assurance, Program Controls, Manufacturing and MSFC. It was chaired by a Program Manager and served as the basic instrument in control of end item configuration. All proposed changes to drawings, specifications, procedures and test plans were reviewed by the Change Control Board and either approved or rejected. Rejection of a proposed change by the Change Control Board necessitated either modification and resubmittal to the Board or withdrawal by its sponsor. Approval allowed the necessary documentation to be changed and circulated through the normal sign-off chain for release.

b. Integrated Test Program Board

The Integrated Test Program Board (ITPB) functioned to review test failures occurring during acceptance and qualification tests. It was composed of representatives from the Engineering Design groups, Quality Control, Reliability, MSFC, and was chaired by a member of the Engineering Test and Evaluation group. Meetings of the ITPB were held on an "as required" basis as test failures occurred. A course of action was determined at the meeting for such things as further failure analysis, repair of the failed item, resumption of testing, recommendations for changes to the test procedures, etc. As the program progressed to the point where testing of flight and qualification hardware was being conducted at a higher rate, the ITPB assumed jurisdiction only over qualification testing and the Test Review Board assuming the ITPB functions with regard to acceptance tests.

c. Test Review Board

The Test Review Board (TRB) met after each acceptance test failure to determine disposition of the hardware involved; i. e. troubleshooting, repair, failure analysis, etc. It was created to take faster action than the ITPB. The Test Review Board was composed of a representative from Quality Control, MSFC, and the Engineering Design group involved. It could be convened almost immediately after a test failure as the Quality Control and MSFC representatives were available as test witnesses, and it remained only to summon the responsible design engineer. As the urgency for immediate action on acceptance test failures lessened when Pegasus A hardware was completed, the TRB meeting itself was dispensed with and the Quality Control and MSFC test witnesses simply forwarded a copy of the failure report (Parts Discrepancy and Disposition Report) to Design Engineering for disposition recommendation. Upon receipt of Engineering recommendation and subsequent MSFC and Quality Control concurrence, the Parts Discrepancy and Disposition Report became the action initiating document rather than the Test Review Board minutes.

C. Finance and Contracts

The Pegasus contract was origninally negotiated at a cost to the Government of $6,517,556. It was recognized at the time of the original negotiation that there were many areas that could not be defined at that time and would have to be incorporated into the contract at a later date. Under this concept it was expected that the value of the contract would increase substantially.

The increases in value can be segregated into four major areas. They were:

- Tasks purposely not defined or negotiated at original contractual meetings. This procedure was agreed to by both Contractor and NASA. (Example: Spares and Qualification Programs and Dynamic Test Model.)

- Tasks not contemplated at basic negotiations, but directed by NASA during the course of the program. (Example: Electron Spectrometer Experiment.)

- Tasks not contemplated at basic negotiations, but suggested by FHC and approved contractually by NASA. (Example: Satellite Control Center.)

- Overrun

Table 1 presents the change data identified by contract modification number grouped into associated tasks.

The overrun indicated is, at this writing, subject to minor adjustment due to the fact that overhead figures for the years of performance are not negotiated. Undoubtedly these negotiations will have some effect on the incurred costs as booked, and thus on the overrun. As presented, the figure represents about 35% of the fee bearing value of the contract. Although this figure is considerable, it must be recognized that the Pegasus was a complicated spacecraft designed and built for high levels of performance within an extremely tight schedule. Much of the effort required by Fairchild Hiller and our subcontractors to assure the high quality of the spacecraft could not have been anticipated at the time of negotiation and is one of the major causes of the overrun.

The sum total figures defining the final cost of the contract are as follows:

Basic Contract	$ 6,517,556
Fee Bearing Changes	14,040,618
Overrun (estimated)	7,239,826
Total Cost	$ 27,798,000

All contract activity on the Pegasus contract was coordinated through the Contract Administrator assigned to NAS 8-5615 by Fairchild Hiller. This individual was the prime contractual interface with Government for Fairchild Hiller and was supported by the Manager of Program Controls and the Project Finance Officer in this capacity.

TABLE 1. CONTRACT CHANGES

Contract Mod. No.	Description	Cost through fee Rounded to Thousands
3, 5, 47, 80, 55, 85, 102, 109 *	Meteoroid Sensor Developments: Basic contract required use of the sensor "type currently under development by the Langley Research Center". After contract go-ahead an initial quantity of these sensors were procured and found to be deficient. At that time, an extensive development program was authorized. Later in the program, a decision was made to use a new NASA sponsored detector developed by G. T. Schjeldahl in lieu of the design developed by Fairchild Hiller. Further testing and design improvement activity occurred after this procurement was initiated.	2,286,000
10, 13, 47, 64, 71, 68, 99	Spares & Qualification Units: At time of original negotiation both parties agreed that spare and qualification programs would be established at a later date. The purpose of this was to allow the qualification and spare units and tests to be accurately defined and costed, based upon actual program procurement experience.	777,000
51, 69 * 96, 109	Flight Support Program: The original contract scope allotted Fairchild Hiller an advisory role only in supporting vehicle launch and control. This scope was increased to include: (1) and Formulation of an extensive prelaunch analyses to generate spacecraft orbital operation plans (2) Designing and installing a Satellite Communication Center for postlaunch Satellite Contact and Control.	862,000
8, 78, 88*	Vehicle Dynamic Testing: In original contract negotiations, the subject of the need or [illegible] was discussed. Both parties agreed to defer [illegible] need until after initial dynamic analysis would be completed. Initial dynamic analysis indicated potential stress problems and NASA authorized Fairchild Hiller to build, and test a Dynamic Test Model. After a first series of successful tests, NASA directed additional special tests to be performed on this unit. Dynamic acceptance testing of flight vehicles, which had originally been prohibited, was also directed by NASA in lieu of originally authorized prototype dynamic testing.	428,000

* Indicates items nogotiated but not officially incorporated into Contract as of Date of Writing

TABLE 1. CONTRACT CHANGES (Continued)

Contract Mod. No.	Description	Cost through fee Rounded to Thousands
42, 53, 62, * 86, 109, *, *	Electron Radiation Entrapment: In the 5th month of the contract, NASA informed Fairchild Hiller that NASA in-house research uncovered a potential problem of entrapment of electron radiation in the detector dielectric. The following May, after completion of radiation caused redesign, NASA directed Fairchild Hiller to perform design assurance impact and radiation tests on detector panels. Further verification tests were also authorized on flight panels.	801,000
36	Electron Spectrometer: NASA directed that an additional experiment be added to the spacecraft. The experiment was not contemplated by either party at the beginning of the program. The original design was modified for use on Pegasus B & C.	385,000
31, 109, 24, 72, 15, 19, 21, 23, 26, 28, 37, 67, *, *, *, *	Product Improvement: Fairchild Hiller was authorized to undertake a broad range of engineering studies to determine means of improving the quality and reliability of the spacecraft during late 1963 and early 1964. This effort was to include engineering activity only. No change was to be incorporated into the spacecraft without specific approval of the Contracting Officer. Further improvements were directed after launch of the first and second vehicles.	2,340,000
38, 104	Program Extensions: NASA extended first spacecraft delivery a total of nine months in two steps. This was done to allow incorporation of certain NASA desired product improvement changes, as well as to expand upon program documentation.	4,177,000
38	NASA Process Specification: Imposition of certain NASA specifications of Fairchild Hiller subcontractors in excess of those contractually required by the basic contract. This specification insures manufacturing to the highest quality standards.	671,000
37, 38, 109	Microfilming and Data Handbooks: NASA directed FHC to prepare certain handbooks and drawing-microfilming that was in addition to that contained in the Documentation Clause of the original contract. This activity was pertinent to all three vehicles launched.	197,000
40, 77, *	Mission Expansion: NASA directed studies of an enlarged mission objective for the third spacecraft, which was originally designated as a spare, authorized launch of the third vehicle and changed the orbit of the third vehicle from that of the first two.	543,000

TABLE 1. CONTRACT CHANGES (Continued)

Contract Mod. No.	Description	Cost through fee Rounded to Thousands
95, *	Shipping Activity: NASA directed a practice shipment of the DTM prior to shipment of Pegasus A. Additional shipping instrumentation to that originally contemplated was also specified.	88,000
6, 7, 9, 11, 33, 37, 47, 56, 57, 60, 65, 66, 70, 75, 82, 95, 101, 109, 100, *	Other Contract Changes: This grouping includes 20 contract changes, each costing less than $100,000 that have been authorized by NASA. Among these are included: Service module wood mock-up; spacecraft RFI test; dual source of solar cells; NASA/FHC master interface gauge; modify spacecraft interface; capsule test simulator; wheel sets; panel and wing deployment studies; circuit isolation test sets; long-term thermal louver tests; deployment simulator; GSE product improvements; canister thermal vacuum test; harness improvement; thermal property tests at KSC, Battery Cycling Tests; etc.	485,000
38, *	Overrun: Overruns incurred were due primarily to: Self-imposition of higher quality fabrication specifications than contemplated in original proposal. This resulted in unusually high fabrication labor hours and high scrappage rates. The original proposal stated an "off-the-shelf" philosophy for vendor hardware. After program go-ahead, it became apparent that although most vendor items had previously flown on other space vehicles, they did not satisfy the new NASA quality and reliability requirements. This area accounted for the major part of the material overrun. The radiation entrapment problem that Fairchild Hiller received a contract change to incorporate a fix for, proved to be much more complex than anticipated. Development difficulties were encountered in system de-bugging of the data/detector systems which required greater expenditure of manpower and material than originally contemplated.	7,240,000

D. Logistics

The Pegasus Logistic plan was established early in the program. This plan covered three important phases of logistic operations:

- Material Control
- Purchasing Methods
- Transportation and Handling

1. Material Control

All materials and services for the Pegasus program were closely monitored by the Material Control Group. This group operated in conjunction with Engineering, Purchasing, Quality Control, and the supplier to insure that all parts and services were ordered properly and that the end items were of high quality. The Material Control Group function is shown in Figure 13.

2. Purchasing Methods and Procedures

Purchased parts and services required that stringent control be exercised to insure prompt delivery of all purchased items.

To facilitate control procurement activities were divided into two main categories:

- Production Procurement
- Subcontract Procurement

The Production Procurement category controlled the purchasing of parts and material not fabricated by Fairchild Hiller for the Pegasus. The subcontract procurement category established commitments with firms or individuals to perform work, supply services, and/or furnish parts and assemblies capable of being manufactured by Fairchild Hiller in accordance with FWC engineering designs.

All purchasing cycles were initiated by the department with the need by the generation of a purchase requisition. After generation of the purchase requisition the requirements were reviewed and bids obtained for the item or service to be purchased. All bids are reviewed, and in some cases, the vendor's facilities inspected, to insure that the orders were placed with a competent vendor that would provide high quality end items, in accordance with the delivery requirements, and still maintain reasonable costs.

3. Transportation and Handling

Transportation and handling of the Pegasus spacecraft required that special items of equipment be fabricated and that procedures be established to enable safe efficient handling. The need for transportation equipment was fulfilled by providing a flexible, economical, and practicable means of transportation in the Pegasus Transporter (see Figure 14). This unit provided an environmental housing that was adaptable to in-plant, highways, and air movement of the Pegasus. A trailer cradle was designed and adapted to an Air Ride Low Bay Trailer. To accomodate the Pegasus Transporter and allow room for access to intransit instrumentation equipment mounted on the rear of the trailer. Preparation of the Pegasus for loading into the transporter, securing the trailer, and test monitoring enroute is detailed in Fairchild Hiller document OP-MMC-1.

Land movement from Fairchild Hiller, Hagerstown, Maryland, to the General Electric Company, Valley Forge, Pennsylvania, was accomplished via the Air Ride Low Bay Trailer.

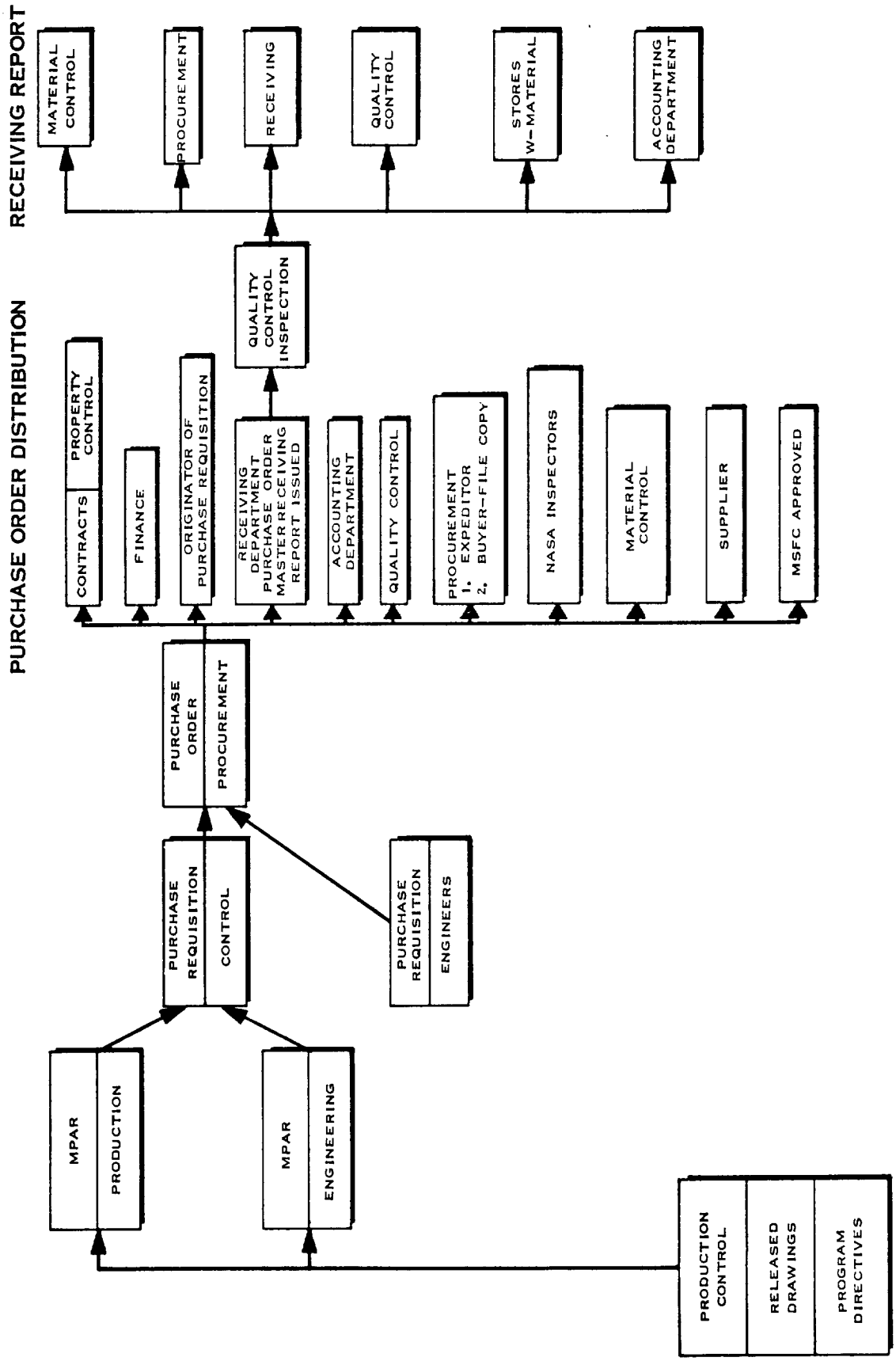

Figure 13. Material Control Flow Chart

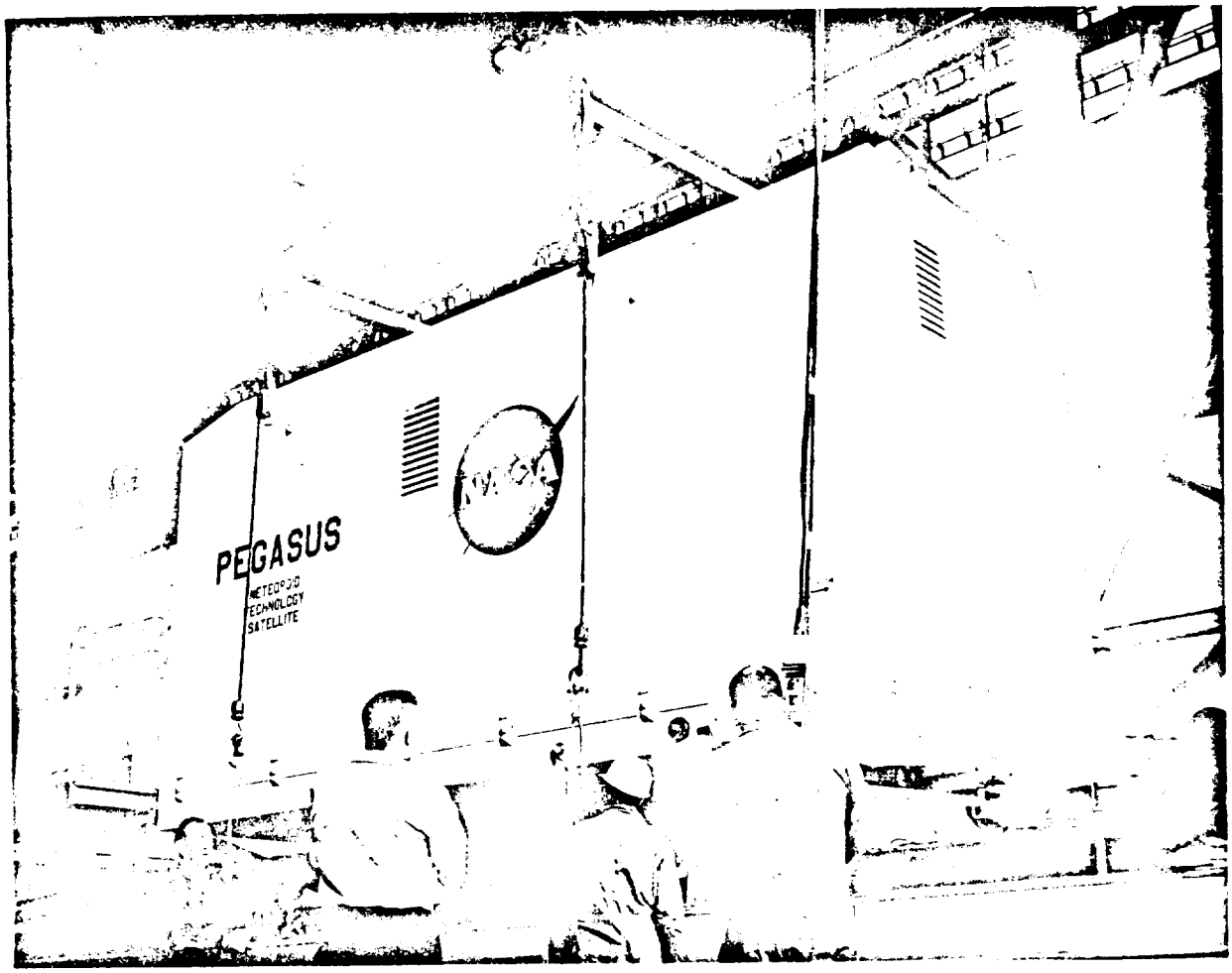

Figure 14. Pegasus Transporter

The 'Pregnant Guppy Aircraft' (see Figure 15) was provided by MSFC for transportation of the Pegasus from the Johnsville Naval Air Station, Johnsville, Pennsylvania, and the Martin Marietta Airport, Baltimore, Maryland, to Cape Kennedy, Florida. All loading operations were supervised by Fairchild Hiller personnel and the availability of the required equipment was coordinated by Fairchild Hiller through the MSFC transportation section.

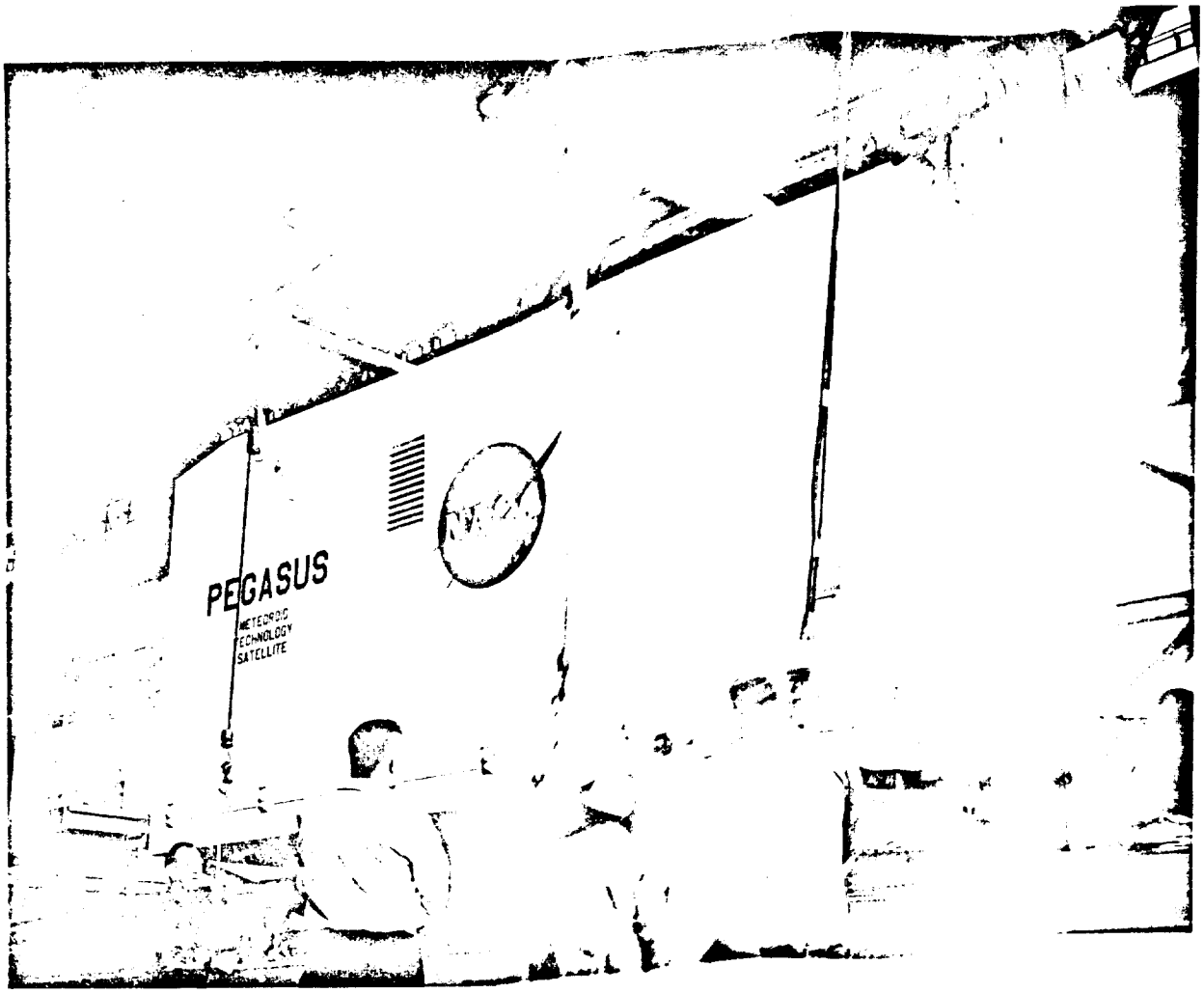

Figure 14. Pegasus Transporter

The 'Pregnant Guppy Aircraft' (see Figure 15) was provided by MSFC for transportation of the Pegasus from the Johnsville Naval Air Station, Johnsville, Pennsylvania, and the Martin Marietta Airport, Baltimore, Maryland, to Cape Kennedy, Florida. All [illegible] operations were supervised by [illegible] Hiller [illegible] and the availability of the required equipment was [illegible] by [illegible] Hiller through the MSFC transportation section.

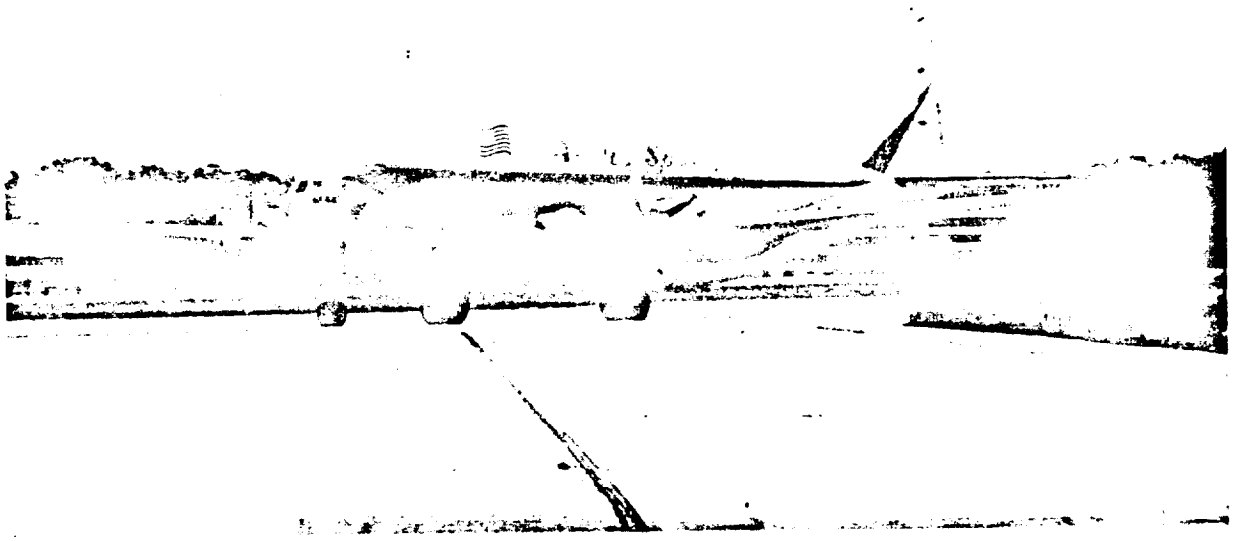

Figure 15. Pregnant Guppy Aircraft

III. ENGINEERING

A. The Pegasus System

The Pegasus is an orbiting spacecraft that transmits information to earth that is indicative of micrometeoroid presence in near-earth space. The information obtained from the Pegasus vehicle is used to determine the hazards that may be encountered during manned-space flights.

1. Original Concept

The original Pegasus (formerly the Micrometeoroid Measurement Capsule - MMC) concept involved the design and development of a spacecraft that consisted of a structural-mechanical system, and an electronic package.

The structural-mechanical system was to consist of a pair of wings that extend from a rectangular center section. The wings would consist of meteoroid sensing devices or detector panels. Aspect sensors both earth and solar, are mounted on the wings and center section to determine the spacecraft attitude. Solar panel would also be mounted on the center section to provide power to the electronics package.

Initially the complete structure would be folded and contained within a service module. After launch, the folded package separates from the Service Module and deploys. The deployment mechanism was to consist of a scissors-like linkage system driven by torsional springs at the hinge joints. The wing extension rate was to be limited by a redundant auxiliary motor drive. The upper and lower scissors linkage would be interconnected by a torque tube. This torque tube would also be used for deployment of the communication system antenna and the solar panels.

Four solar panels were to be used; two sections mounted on booms that rotate out from the sides of the center section. The remaining two solar panels were to be hinged to each other at the upper portion of the center section. The communications antenna was to be crossed-dipoles boom mounted ten feet above the center section.

The electronics package was to be mounted in a canister in the center section. This package was to contain the following subsystems:

- Detector
- Attitude-Temperature
- Communications
- Launch Phase
- Power
- Data

The subsystems listed above would provide all facilities required to detect, process and transmit the received data. In addition to the micrometeoroid data information is also transmitted that pertains to time and the attitude of the spacecraft.

The original concept of the electronics package is shown in block diagram form in Figure 16.

2. Final System

The final Pegasus was quite similar to the original concept. The Pegasus deployment sequence is shown in Figure 17.

During development of the Pegasus most structural-mechanical and electronic portions were modified slightly. The modifications incorporated were to improve the system reliability and operating characteristics. Other changes, specified by NASA, increased the versility of the spacecraft. The major changes included:

- Increased use of redundant circuits to ensure high reliability.
- Incorporation of a "Burnout/Blowout" feature used to "cure" or disable detector panels damaged during flight.
- Replacement of the crossed-dipole antenna and the deployment mechanism with a bent stub antenna.
- Dissociation of the solar panel operating mechanism from the torque shaft motion. Deployment of the solar panel was accomplished using springs.

The basic concept of the electronics package did not change appreciably. Functional changes involved deletion of the launch phase subsystem and auxiliary batteries and the combination of the functions into a single unit. The final electronic system is shown in Figure 18.

B. Detector Panel Development

The Pegasus spacecraft uses 208 20" x 40" flat capacitor type detector panels. These detector panels are meteoroid sensing devices that form the wing surface of the spacecraft. Meteoroids that strike the detector panels cause the panels to discharge causing a "Hit" to be recorded.

The development program used to design the detector panels was a joint effort of Fairchild Hiller and G. T. Schjedahl. During detector panel development, various combinations of materials were used to obtain a suitable design. The final design consisted of a 1-inch foam core, to which are bonded oppositely facing capacitor plates. The outer surface is an aluminum alloy and acts as the negative plate; the inner positive plate is of vapor-deposited coating of copper with a trilaminate layer of 0.005" mylar as the dielectric. The surface of the aluminum target sheets are of three different thicknesses (0.0015", 0.008", and 0.0016"). Detector panels with the 0.0015 target sheet use a 1-inch thick rigid polyurethane foam core. The core of the 0.008" and 0.016" target sheets is a one-half inch thick rigid foam core each side of which is covered with a one-quarter inch of flexible foam.

1. Detector Concept

The Pegasus Satellite obtains information concerning the presence of micrometeoroids in the near-earth space. The micrometeoroid sensing elements of the satellite, known as the detectors, are a series of large, flat capacitors which are normally 20" x 40",

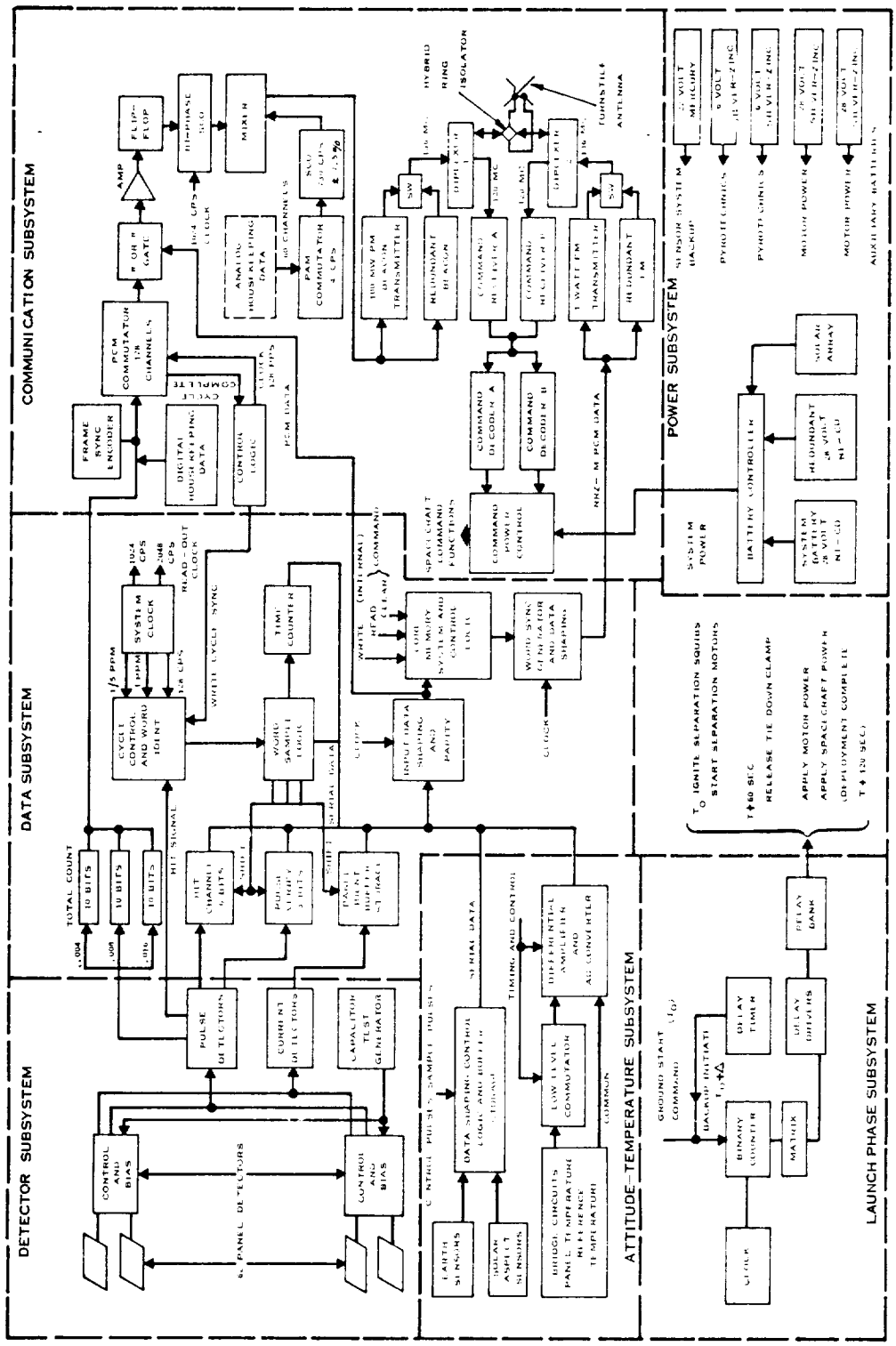

Figure 16. Original Electronic System Block Diagram

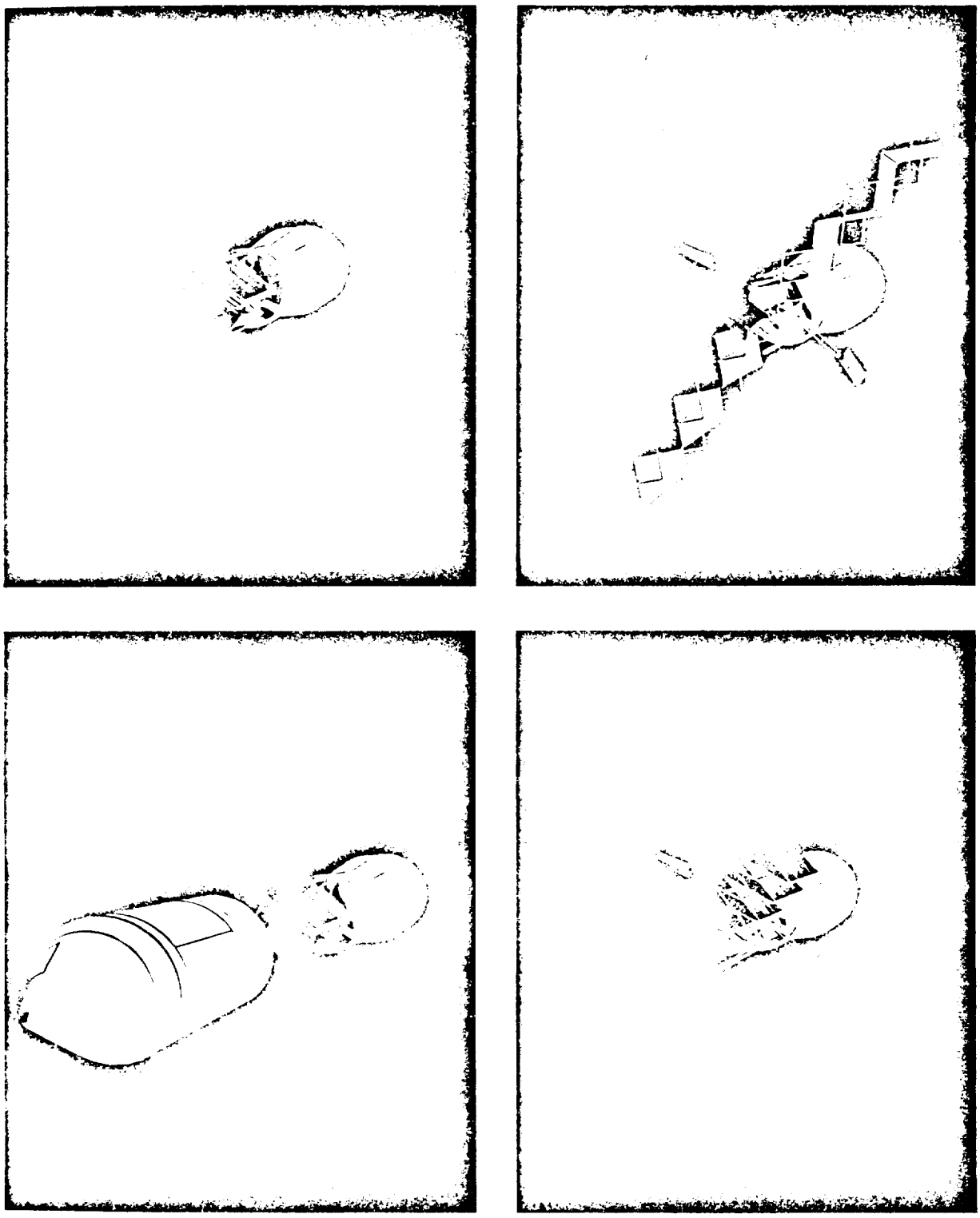

Figure 17. Pegasus Deployment

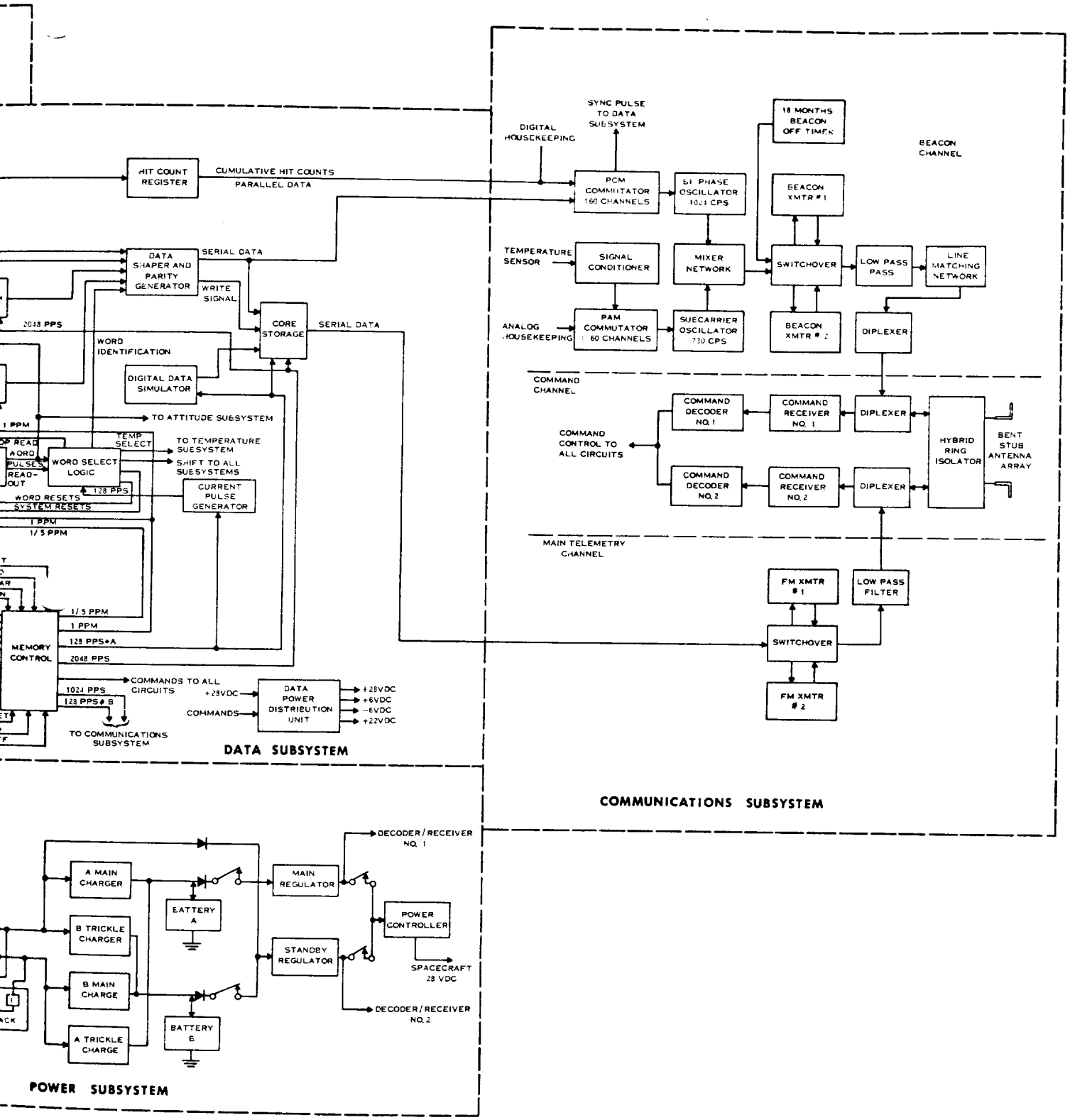

Figure 18. Final System Block Diagram

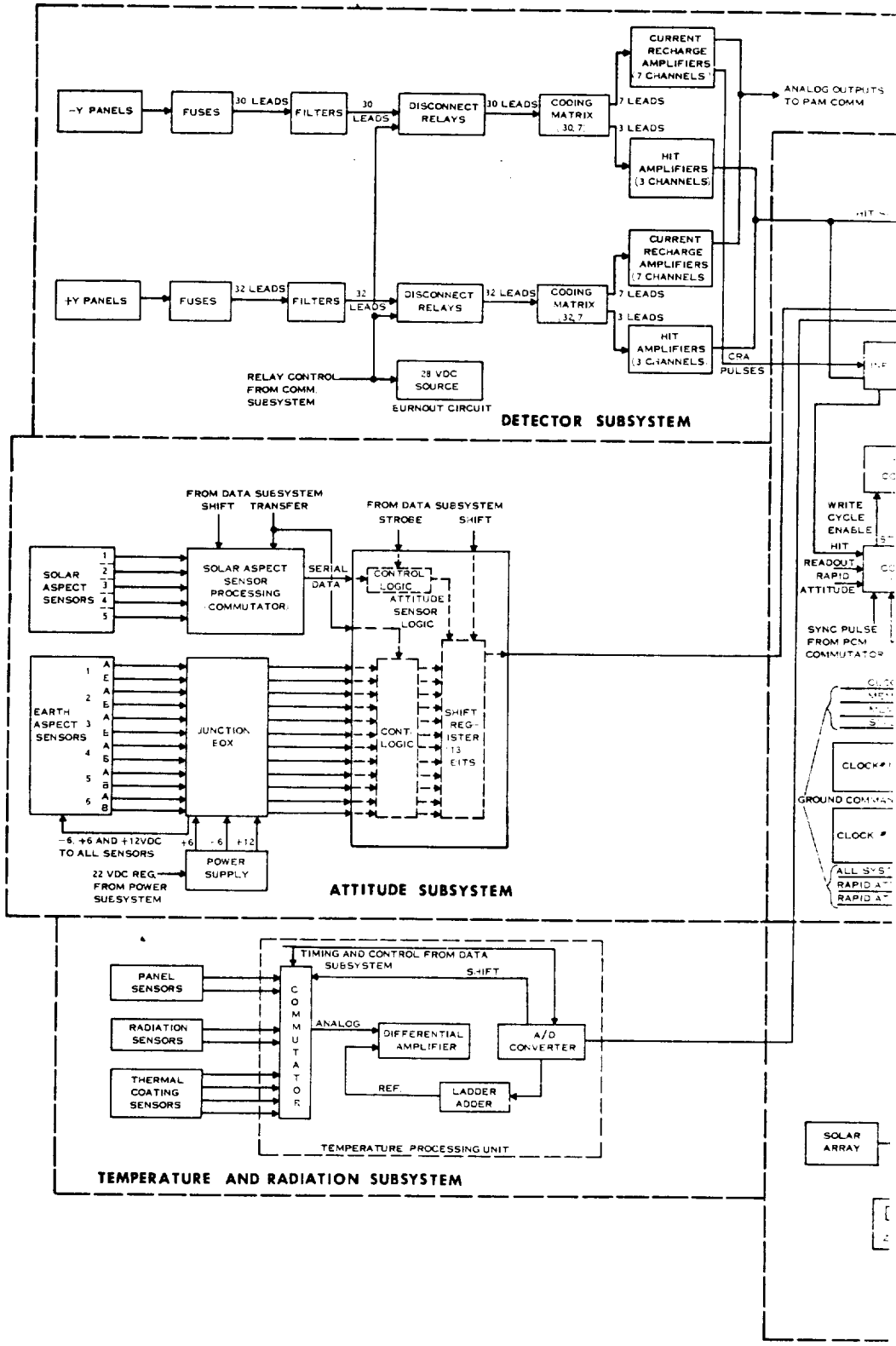
-Y PANELS
FUSES
30 LEADS
FILTERS
30 LEADS
DISCONNECT RELAYS
30 LEADS
CODING MATRIX (30,7)
7 LEADS
3 LEADS
CURRENT RECHARGE AMPLIFIERS (7 CHANNELS)
HIT AMPLIFIERS (3 CHANNELS)
ANALOG OUTPUTS TO PAM COMM
+Y PANELS
FUSES
32 LEADS
FILTERS
32 LEADS
DISCONNECT RELAYS
32 LEADS
CODING MATRIX (32,7)
7 LEADS
3 LEADS
CURRENT RECHARGE AMPLIFIERS (7 CHANNELS)
HIT AMPLIFIERS (3 CHANNELS)
CRA PULSES
RELAY CONTROL FROM COMM. SUBSYSTEM
28 VDC SOURCE
BURNOUT CIRCUIT
DETECTOR SUBSYSTEM
FROM DATA SUBSYSTEM
SHIFT
TRANSFER
FROM DATA SUBSYSTEM
STROBE
SHIFT
SOLAR ASPECT SENSORS
SOLAR ASPECT SENSOR PROCESSING (COMMUTATOR)
SERIAL DATA
CONTROL LOGIC
ATTITUDE SENSOR LOGIC
EARTH ASPECT SENSORS
JUNCTION BOX
CONT. LOGIC
SHIFT REGISTER (13 BITS)
-6, +6 AND +12VDC TO ALL SENSORS
+6
-6
+12
POWER SUPPLY
22 VDC REG. FROM POWER SUBSYSTEM
ATTITUDE SUBSYSTEM
WRITE CYCLE ENABLE
HIT
READOUT
RAPID ATTITUDE
SYNC PULSE FROM PCM COMMUTATOR
CLOCK #
GROUND COMMAND
CLOCK #
ALL SYST
RAPID AT
RAPID AT
TIMING AND CONTROL FROM DATA SUBSYSTEM
SHIFT
PANEL SENSORS
RADIATION SENSORS
THERMAL COATING SENSORS
COMMUTATOR
ANALOG
DIFFERENTIAL AMPLIFIER
A/D CONVERTER
REF.
LADDER ADDER
TEMPERATURE PROCESSING UNIT
TEMPERATURE AND RADIATION SUBSYSTEM
SOLAR ARRAY

TABLE 2. THE PROGRESSIVE DEVELOPMENT OF DETECTOR PANEL CONFIGURATION

	FHC Original	FHC Final	GTS Original	GTS Final
Thermal Control Coating	Alodine 401 - 45	MTL-3	(same)	(same)
Target Sheet	Al (0.0015", 0.008", 0.016")	(same)	(same)	(same)
Dielectric	0.5 mil. Mylar + 50 μ in. adhesive	0.25 mil. Mylar + 180μ-in. adhesive on each side	0.25 mil. Mylar + 25μ-in. adhesive	Trilaminate of 0.15 mil. Mylar +25μ -in. adhesive per layer
Inner Plate	Vapor deposited Al 25μ-in.	Gold leaf (rolled on and bonded to Mylar 3 to 4μ -in.	Vapor deposited Cu (25μ-in)	(same)
Contacts	Brass tabs + conductive adhesive	Pre-tinned (indium) Flattened copper wire (peripherial) + brass tab (soldered)	Soldered Brass tab soldered to terminal pins	Soldered Double brass tabs soldered to terminal pins.
Core	4 lb/ft^3 rigid urethane foam, closed cell	(same)	Flexible/rigid/ flexible foam core. Flexible foam, urethane, open cell. Rigid foam urethane, closed cell	Flexible/rigid/flexible foam core for 8 and 16 mil. target sheets, and all-rigid foam core for 1 1/2 mi. target sheet

each. The distribution of meteoroid penetrating capabilities is determined by using aluminum target sheets of 0.0015", 0.008" or 0.016" thickness as one of the plates of the capacitor. When a micrometeoroid penetrates the target sheet, a plasma is formed which serves to partially discharge the capacitor. This voltage drop triggers the associated electronic devices and a "Hit" is recorded. Since the inner capacitor plate is burned away in the hit area the discharge also tends to provide a "self-healing" characteristic to the capacitors. The capacitor is immediately recharged. This part of the report relates the development of the detectors of the Pegasus Satellite.

The conceptual design of the detector was a flat capacitor to be manufactured by laminating a film of 0.25 mil Mylar, which had been metallized on one side with a thick layer of vapor deposited aluminum, to an aluminum target sheet. Two capacitors were bonded on opposite sides of a slab of foam to form a detector panel. The foam was intended to provide rigidity and also to absorb energy from the penetrating particles thus preventing the back side capacitor from being impacted.

The development from this simple concept to the final configuration is summarized in Table 2. This development was conducted initially by Fairchild Hiller Corporation and was later subcontracted to G. T. Schjeldahl Company. Table 2 reflects the stages of development in the two locations.

2. Material Development

The selection and development of the detector panel materials will be discussed by separating them into the functional items as they appear in a cross-sectional view of the panel (Figure 19). These functional items are:

- Target Sheet
- Dielectric and Adhesives
- Inner Plate (Electrode)
- Contactors and Attaching Materials
- Foam Core
- Adhesives for Bond Capacitors to Core

The thermal control coating which is applied to the exterior of the target sheets is discussed in paragraph E of this section.

a. Target Sheets

The original specifications designated the thickness of the aluminum sheets to be 0.0015", 0.008", and 0.016". A readily available structural alloy 2024-T3 Al clad was selected for the 0.008" and 0.016" sheets and either 1100-0 or 1145-0 for the foil (0.0015") target sheets.

b. Dielectric and Adhesives

The dielectric requirements dictated that it must be a thin, tough commercially available film with acceptable electrical properties through a temperature range of -107°C to +121°C.

The only dielectric meeting this description was Mylar (DuPont polyester film) used in the manufacture of

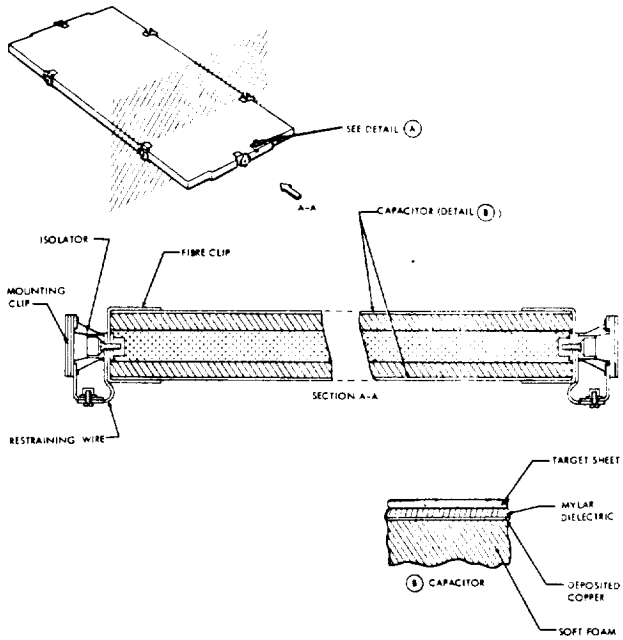

Figure 19. Detector Panel Cross-Sectional View

commercially available high quality capacitors. The first test capacitors were manufactured using 0.25 mil film although 0.50 mil was also evaluated.

The dielectrics were evaluated by laminating them to aluminum sheets and testing them as capacitors and/or in thermal vacuum environment. Characteristics such as adhesion and tendency for air entrapment during laminating, as well as the electrical characteristics were observed. The original concept of using 50 microinches of adhesive did not produce successful laminates due to poor adhesion and air entrapment.

A study evaluating adhesive formulations and thickness was combined with a study of film thickness and laminating techniques. The best combination of dielectric and adhesive was 0.50 mil Mylar with 200 microinches of a blended isocyanate cured, polyester adhesive.

The 0.50 mil Mylar was noticeably easier to handle than the 0.25 throughout the coating at Riegel Paper Company, Mathews, North Carolina, and laminating processes. There was also less susceptibility for inclusions of metal faults to injure the capacitor. While the first successfully functioning capacitors used 0.5 mil Mylar with 180 microinches of adhesive, radiation tests indicated a potential problem of spurious discharges, and a change was made to 0.25 mil Mylar. This change increased the capacitance slightly and lowered the insulation resistance slightly.

After the preliminary radiation test results indicated the potential trouble, a program was started to evaluate

Soldering to vapor deposited aluminum could not be accomplished as the high soldering temperature (450°F) affected the Mylar dielectric. Other unsuccessful techniques investigated for attaching the contractor to the vapor deposited aluminum included mechanical methods, ultrasonic welding and soldering, and spot welding. The attempt to use vapor deposited aluminum as the inner plate of the capacitor was abandoned.

(2) Thin Aluminum Foil

The aluminum foil (0.25 mil) was investigated as an alternate to the vapor deposited aluminum. This approach was succeeding, but further work was discouraged by NASA/MSFC since an inner capacitor plate of this thickness may "back crater" and become permanently shorted.

(3) Vapor Deposited Gold and Copper

The material investigation was broadened to include several approaches simultaneously. The inherently superior electrical properties of vapor deposited gold and copper were the basis of study of these materials. They functioned satisfactorily as capacitors but panels made from these capacitors failed to survive thermal cycling (-160°F to +250°F) tests (the failures occurred at the metalized layer). In one case, the adhesive pulled away from the gold and in the other, the copper was pulled from the Mylar. In spite of the potential success of these approaches due to the then pressing time schedule and the success with another approach, the use of gold leaf was discontinued.

(4) Sprayed Conductive Paint

Another concept briefly explored was the use of a sprayed electrically conductive paint (Hanna Paint Co. XC3800). Capacitors made by spraying the paint onto laminated Mylar were encouraging but were discontinued due to insufficient time allowances. Capacitors were also made by spraying the conductive paint onto polyimide and acrylic films, but due to the aforementioned porosity, the results were random.

(5) Gold Leaf

Concurrent with the other efforts, a further approach to the capacitor inner plate problem was under study involving the use of gold leaf as the inner plate material. Because of its good electrical properties, gold was a natural material to consider for the inner plate application. Additionally, it was expected that attachment of electrical contractors to gold would present less technical difficulty than was being experienced with the vapor-deposited aluminum inner plate. With vapor-deposited gold being studied on the one hand it was believed that wrought gold should also be considered, and for this purpose commercial gold leaf represented a logical and well suited form of raw material. Commercial gold leaf is relatively inexpensive and is readily available in quantity. It is only 3 to 4 microinches in thickness, a desirable characteristic since the capacitor inner plate should be thin. It is available in small (approximately 3.5' x 3.5") sheets or in rolls 3.5" wide by 67' long. Its principal disadvantage is the limitation in width, since its ultimate use would be to cover the wide surfaces of the 20" x 40" capacitors.

other dielectrics. The aim of these studies was to find a Mylar substitute that was either electrically "leaky" or had fewer electron traps.

The materials investigated included the following:

- Natural and synthetic mica sheets; bare or impregnated.
- Film forming coating, such as epoxy, polyesters, acrylic, polyimide and sodium silicate.
- Films; cellulose triacetate and Ioplex (Kapton a polyimide film was not readily available at the time of this study).
- Anodic coatings with various sealers such as acrylic, polyimide and sodium silicate.

Mica materials were not suitable since: 1) Only thick dielectrics could be obtained, and 2) Handling difficulties. Porous-free resinous coatings were not obtained in the 0.5 mil dielectric thickness desired during the time allocated for this study.

The anodic coating was also ineffectual due to being too thin (600-200 mgms/ft^2) and somewhat porous, the insulation resistance being only a few ohms. However, a polyimide coating over the anodized surface succeeded in improving the insulation resistance to several kilomegohms. The study of other potential dielectrics was not followed to completion due to immediate problems dealing with the Mylar capacitors and subsequent termination of the development phase intervened.

c. Capacitor Inner Plates and Electrical Contractor

(1) Vapor Deposited Aluminum

The original capacitor inner electrode was vapor deposited aluminum. The metalizing was conducted such that the aluminum film on 0.25 mil Mylar was visually opaque and had an electrically resistance of less than 0.5 ohm per square.

As the development program evolved, two difficulties in the use of vapor deposited aluminum became apparent. The coating tended to be brittle which presented problems in adhesive coating and laminating. The main difficulty, however, was centered in the problem of making reliable electrical contact with the aluminized surface.

Silver filled epoxy conductive adhesives initially had satisfactory low contact resistance (approximately 0.5 ohms). However, after relatively short aging periods, from one day to several weeks, the resistance increased randomly to unacceptable levels.

A series of aging tests were conducted to determine the cause of this resistance increase. Tests were made of the adhesives, Emerson and Curing 57C and Hysol K20, in addition to various adhesive bonded joints, e.g. aluminum-aluminum, vapor deposited aluminum-vapor deposited aluminum, brass-aluminum, etc. The tests indicated that the vapor deposited aluminum was the cause of the instability since the sheet metal, sheet metal joints, and the adhesive were stable. When gold leaf was used as the inner plate, the electrical conductivity of a brass-gold junction was stable.

The earliest gold leaf capacitors made were used primarily in the contactor attachment investigation, and the results were so impressive that serious efforts were undertaken to determine the technical feasibility and manufacturing practicability of using gold leaf as the capacitor inner plate.

The decision to use gold leaf over vapor deposited metals was based on the ease of contactor attachment, and ease of applying the gold leaf as well as functionality. The gold leaf is rolled onto an adhesive coated film and heat cured.

(6) Electrical Contactor Attachment

Directly related to the selections of the inner capacitor plate is the selection of the contactor material, design and method of attachments.

A flat brass strip (0.002" thick) was the original contactor in the capacitors using vapor deposited aluminum. It remained as the final take-off contact throughout the program. However, since the gold leaf had inherent cracks due to the heating process, a redundant peripheral contact was added to the capacitor design.

Using first strips of shim stock, then roll flattened annual copperwire (0.003" x 0.050"), the attachment was made to the gold leaf by soldering. The same techniques that were attempted on the vapor deposited aluminum plates were tried on the gold, i.e. ultrasonic welding, spot welding. Using unalloyed indium, melting at about 310°F, it is feasible to solder the brass to the gold.

C. Data Subsystem Development

The Pegasus data subsystem collects and processes micrometeoroid information from the detector panels and aspect data from the earth and solar sensors. It also gathers key temperatures and a measure of the electron radiation through a separate digital temperature subsystem. Time data is monitored and processed during the entire flight. A functional block diagram of the data subsystem is shown in Figure 20. The data subsystem boxes are listed in Table 3. The location of the various boxes on the canister is shown in Figures 21, 22, and 23. Basically the unit operates as a synchronous machine driven by a current pulse generator and clock source. Four types of information words are continuously processed:

- Attitude words (vehicle attitude)
- Reference temperature words (GFE thermal coating experiment)
- Panel temperature words (Sample panel temperature)
- Total hig count vs. target sheet thickness words.

In the event a detector is discharged a hit word is processed. Since this may occur at any time, temporary storage is provided in order that it can be synchronized with the machine. The data is processed continuously at 128 bits/second through the PCM commutator located in the communication subsystem. All data with the exception of the total hit data is also processed through a large capacity memory capable of holding 30,080 bits. Upon

ground command, memory data is read out at a 2048 bit/second rate to an FM transmitter.

In order to obtain attitude information quickly, a so-called "rapid attitude" mode of data processing is provided by ground command. In this mode attitude and panel temperature (calibration word) appears every 1.25 seconds.

1. Detailed Functional Description

A functional block diagram of the subsystem is shown in Figure 20. There are two main paths of data flow: one for cumulative hit count and one for all other data.

The cumulative hit count data is instrumented by means of three shift registers, one for each detector panel thickness. Each register consists of ten flip-flop circuits. Hit pulses are applied into the registers serially (one pulse for each hit) forming three ten-bit binary words for each panel thickness, which represent the total number of hits for each thickness. The set output of each flip-flop is connected to an assigned slot in the communications subsystem PCM commutator, so that for each commutator cycle all three cumulative hit words are read and transmitted.

All other data are channeled through the data shaper and parity generator to both the PCM commutator and core storage. Attitude and temperature data are read out of their respective blocks in serial form acceptable to the data shaper and parity generator. Detector discharge and recharge pulses are processed within the panel information logic to produce the serial hit word. Information is read out of the sensor subsystems

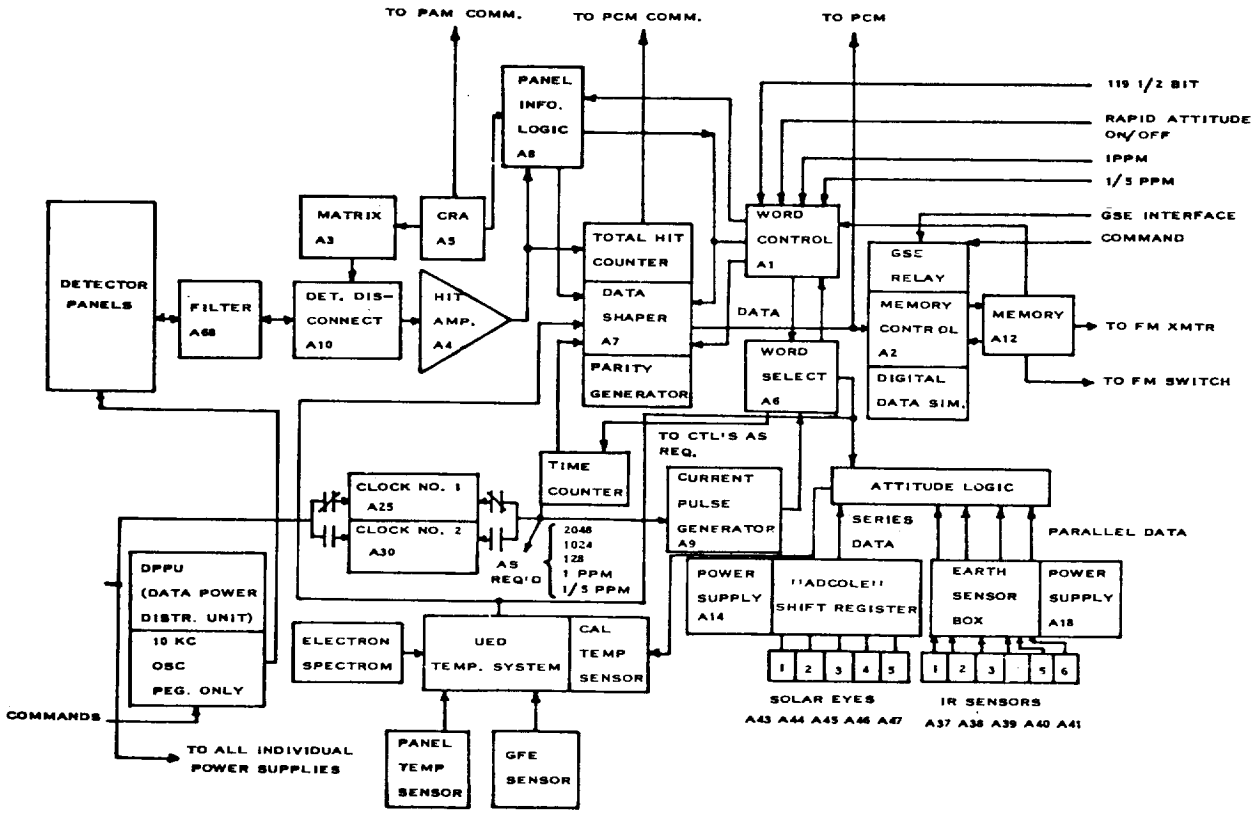

Figure 20. Data Subsystem Functional Block Diagram

TABLE 3. DATA SUBSYSTEM ASSEMBLIES

Reference Designation	Component	FHC Dwg. No. or Vendor
900A10A1	Word Control	300ED10016
900A10A2	Memory Control	300ED10062
900A10A3	Detector Matrix	300ED10011
900A10A4	Detector Matrix and Hits Amps	300ED10042
900A10A5	Detector Current Recharge Amps	300ED10040
900A10A6	Word Select	300ED10018
900A10A7	Total Count Register and Data Shaper	300ED10022
900A10A8	Panel Information Logic	300ED10024
900A10A9	Earth Aspect Data and Time Counter	300ED10015
900A10A10	Detector Panel Disconnect	300ED10013
900A10A16	Temperature Processing System	UED
900A10A17	Data Power Distribution Unit	300ED10225
900A10A18	Earth Aspect Power Supply	Barnes
900A10A19	Solar Aspect Processing System	Adcole
900A10A25	Synchronous Clock No. 1	DI/AN
900A10A30	Synchronous Clock No. 2	DI/AN
900A10A36	Junction Box (Earth Aspect)	300ED10193
900A10A12	Data Storage	DI/AN
900A10A37	Earth Sensor No. 1	
900A10A38	Earth Sensor No. 2	
900A10A39	Earth Sensor No. 3	Barnes
900A10A40	Earth Sensor No. 4	
900A10A41	Earth Sensor No. 5	
900A10A42	Earth Sensor No. 6	
900A10A43	Solar Sensor No. 1	
900A10A44	Solar Sensor No. 2	
900A10A45	Solar Sensor No. 3	Adcole
900A10A46	Solar Sensor No. 4	
900A10A47	Solar Sensor No. 5	
900A10A57	Temperature Sensor (GFE)	NASA Supplied Item
900A10A58	+Y Detector Panel Group (Wing)	G.T.S.
900A10A59	-Y Detector Panel Group (Wing)	G.T.S.
900A10A67	Electron Detector	STL
900A10A68	Filter Networks	300ED10290
900A10A69	Electron Spectrometer	STL

TABLE 3. DATA SUBSYSTEM ASSEMBLIES

Reference Designation	Component	FHC Dwg. No. or Vendor
900A10A1	Word Control	300ED10016
900A10A2	Memory Control	300ED10062
900A10A3	Detector Matrix	300ED10011
900A10A4	Detector Matrix and Hits Amps	300ED10042
900A10A5	Detector Current Recharge Amps	300ED10040
900A10A6	Word Select	300ED10018
900A10A7	Total Count Register and Data Shaper	300ED10022
900A10A8	Panel Information Logic	300ED10024
900A10A9	Earth Aspect Data and Time Counter	300ED10015
900A10A10	Detector Panel Disconnect	300ED10013
900A10A16	Temperature Processing System	UED
900A10A17	Data Power Distribution Unit	300ED10225
900A10A18	Earth Aspect Power Supply	Barnes
900A10A19	Solar Aspect Processing System	Adcole
900A10A25	Synchronous Clock No. 1	DI/AN
900A10A30	Synchronous Clock No. 2	DI/AN
900A10A36	Junction Box (Earth Aspect)	300ED10193
900A10A12	Data Storage	DI/AN
900A10A37	Earth Sensor No. 1	
900A10A38	Earth Sensor No. 2	
900A10A39	Earth Sensor No. 3	Barnes
900A10A40	Earth Sensor No. 4	
900A10A41	Earth Sensor No. 5	
900A10A42	Earth Sensor No. 6	
900A10A43	Solar Sensor No. 1	
900A10A44	Solar Sensor No. 2	
900A10A45	Solar Sensor No. 3	Adcole
900A10A46	Solar Sensor No. 4	
900A10A47	Solar Sensor No. 5	
900A10A57	Temperature Sensor (GFE)	NASA Supplied Item
900A10A58	+Y Detector Panel Group (Wing)	G.T.S.
900A10A59	-Y Detector Panel Group (Wing)	G.T.S.
900A10A67	Electron Detector	STL
900A10A68	Filter Networks	300ED10290
900A10A69	Electron Spectrometer	STL

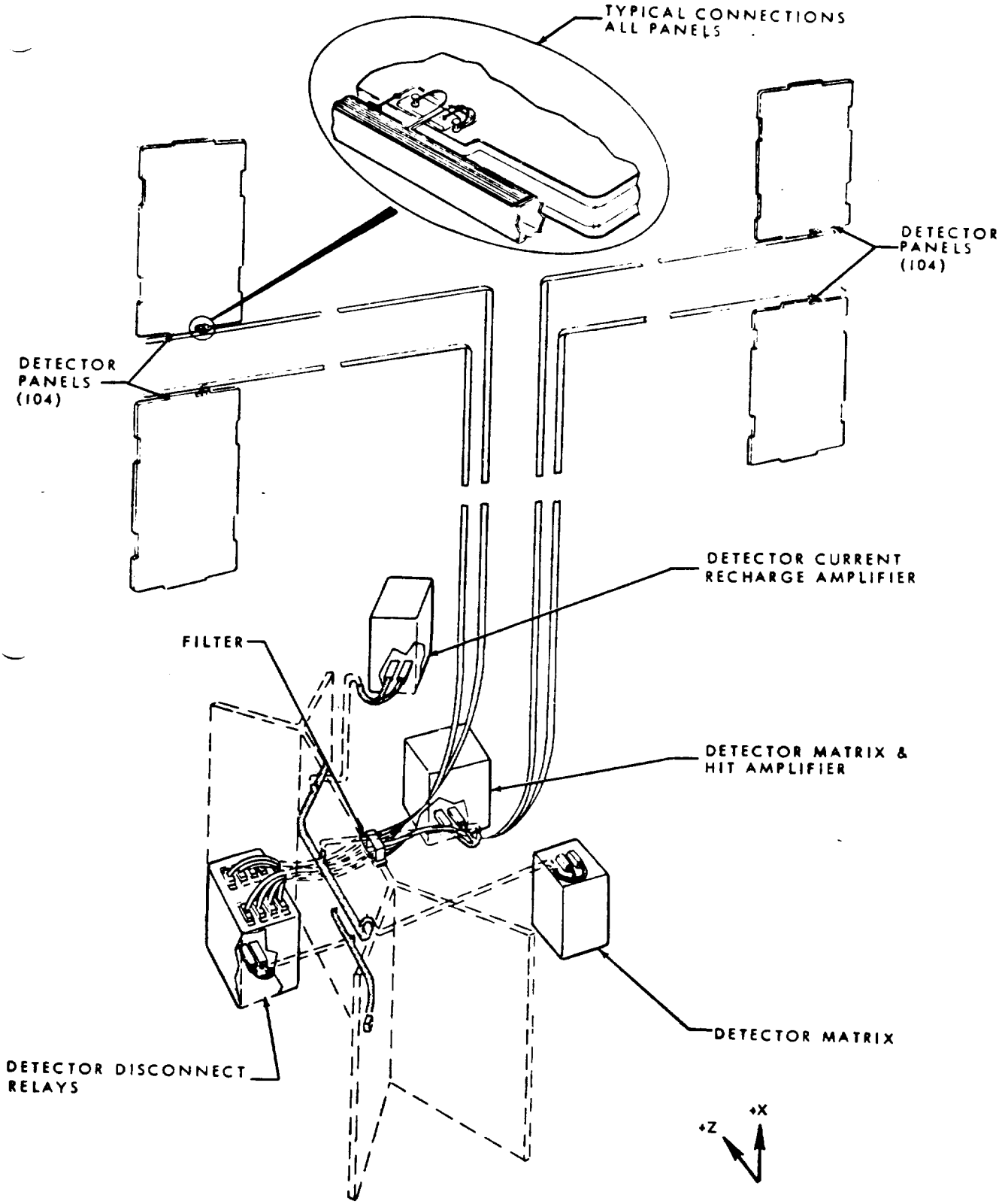

Figure 21. Data Subsystem Detector Components Location

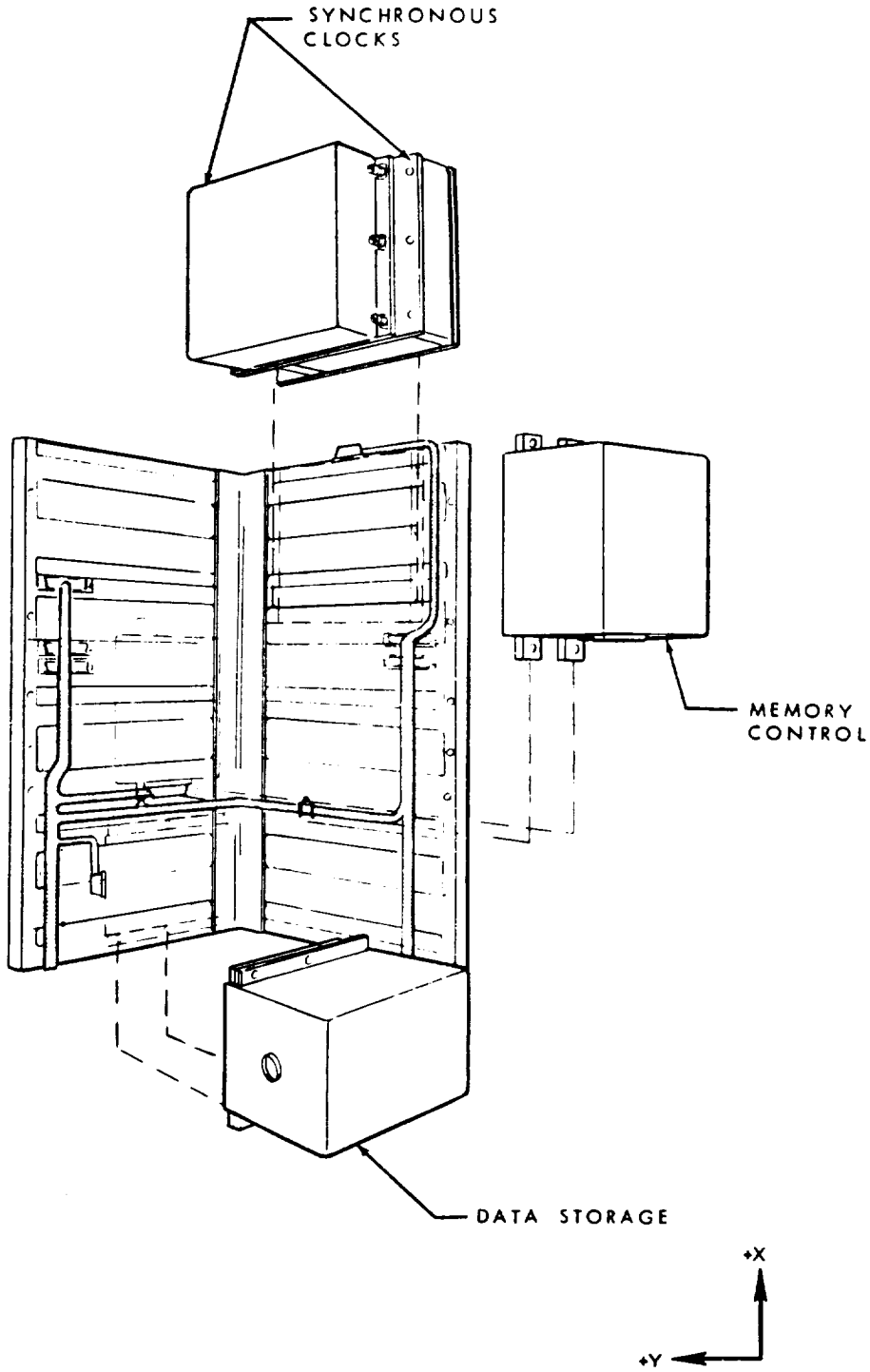

Figure 22. Electronic Canister View

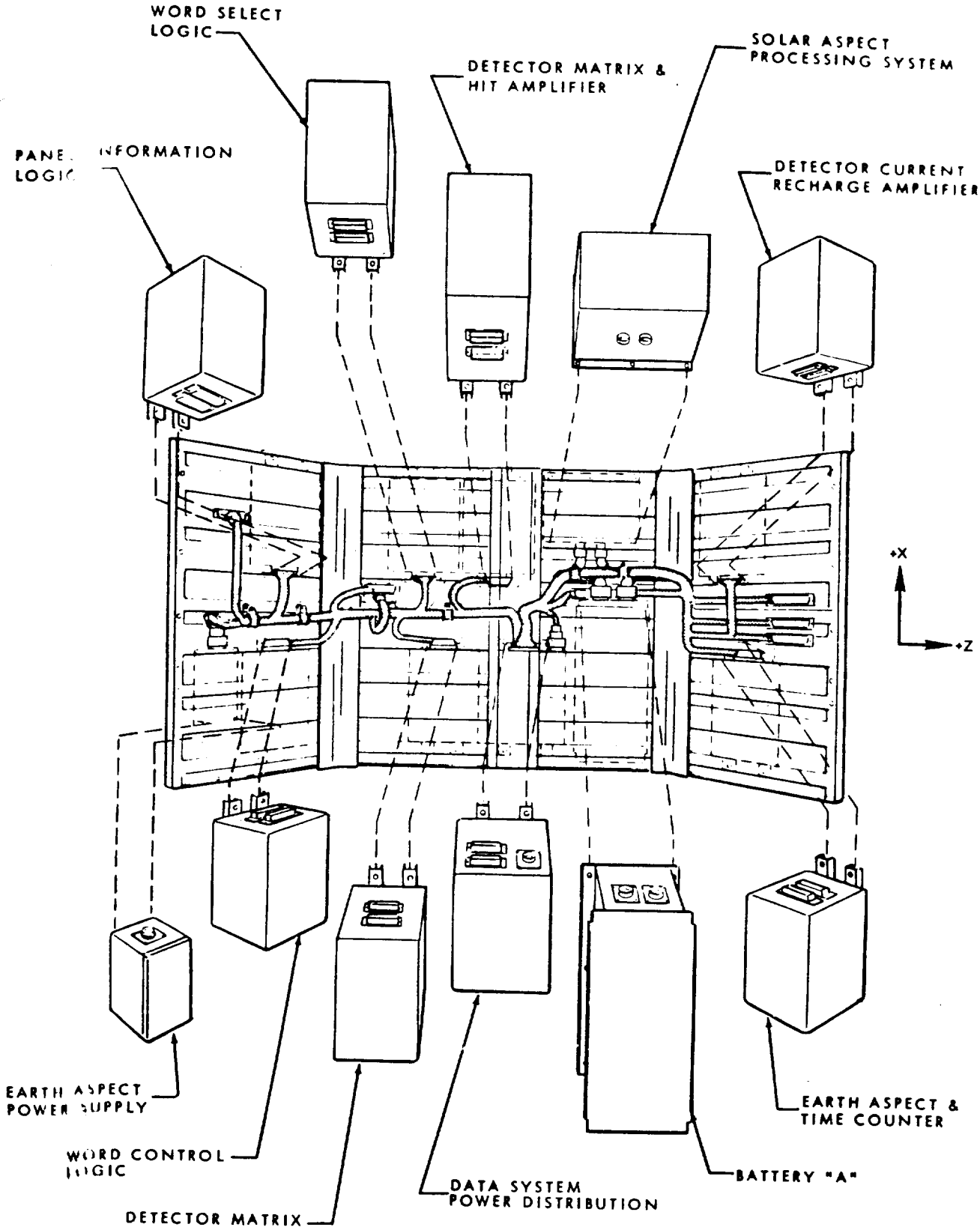

Figure 23. Electronic Canister

in a prescribed sequence upon receipt of a word pulse from the word control logic.

a. Modes of Operation

In the "normal" mode of operation, the data subsystem collects and processes a recurrent series of forty bit words associated with impact, attitude, temperature, radiation and time information relative to spacecraft operation. Three of these words are processed at a synchronous rate determined by the system clock, while the fourth (hit word) occurs at any rate determined by the occurrence of micrometeoroid penetrations of the sixty-two detector panel circuits mounted on the wings of the spacecraft. Priority of word processing is such that in most cases the hit word takes precedence over any of the others. Exceptions to this case are when an impact occurs in the middle of processing one of the normal synchronous words, and in the "rapid attitude" mode. If an impact (hit) occurs while the data subsystem is processing another word, this fact is stored, and identification data pertinent to the panel which was hit is stored in the appropriate registers. At the time when the data subsystem completes the synchronous word, the "remembered" hit word is processed during the next PCM frame. Essentially the same procedure is followed when in the rapid attitude mode, with the exception that the "remembered" word is not processed until the system is commanded out of this mode.

The usual sequence of synchronous words is such that reference temperature (thermal surfaces experiment) words are processed each minute for the first one hundred-twenty minutes of each memory readout cycle. (A memory readout cycle is the time between periods when the data storage unit is ground commanded to readout all the data within its memory element. Because of ample storage capacity, this period is between six and eight hours, depending on the anticipated number of micrometeoroids colliding with the spacecraft. In practice, the readout cycle period will, in all probability, depend more on the number of synchronous words that may be comfortably accommodated between times when the spacecraft is over a ground station.)

Each five minutes a three word combination is processed until such a time as the reference temperature word ceases to be initiated (after two hours). The order in which this combination is processed is such that first the reference temperature word is processed, then an attitude word, and last, a panel temperature and radiation word. In this fashion, the data subsystem furnishes hit information immediately (except as noted above) upon being struck by a micrometeorite, attitude data once each five minutes, panel temperature and radiation measurements each five minutes, and reference temperature measurements each minute for the first two hours of every readout cycle.

The "rapid attitude" mode differs from the "normal" mode in that continuous word processing takes place from the moment of ground initiation to the time the mode is commanded off. The prime purpose behind the requirement of this mode is to enable the ground stations to get a "fine cut" at any orbital tumbling or spacecraft attitude variations as it passes within the "line of sight" of transmission of a ground station. In operation, the data subsystem goes into a continuous mode, first

processing an attitude word, then a temperature calibration word, then another attitude word, then a temperature calibration word, then another attitude word, etc. In the "rapid attitude" mode only, the temperature subsystem is switched to a calibration mode wherein it processes a word corresponding to a known standard, thus providing a check of the temperature system electronics. The "rapid attitude" mode of operation is initiated by a ground command at the beginning of a pass over some nearby ground station. Before the spacecraft is out of "sight" for radio transmission, the mode is commanded off, at which time it reverts back to its "normal" mode of operation as described above.

h. Word Format

The sensor word format is shown in Figure 24. The hit word can occur at any time except when another word is being processed or the system is in the rapid attitude mode. A hit pulse is, in essence, a command to process the hit word. When a hit occurs a pulse is transmitted from the panel information logic to the word control logic. If no other word is being processed at this time, the word control logic generates a hit word pulse, which is a transfer command to the panel information logic, and word select logic. Upon receipt of this command, the word select logic generates the first three bits (word identification) of the hit word, 21 bits of panel information are read out serially from a register in the panel information logic, and an eleven-bit time subword is read out of the time counter. The parity bit is added in the data shaper and parity generator, from which the entire word is transferred to core storage and the PCM commutator. If another word is being processed when a hit occurs, hit word data remains in the panel information logic register until the next PCM commutator cycle at which time the hit word is read out. Thus, in the normal mode of operation, an on-line hit word will be transmitted via the PCM commutator and beacon transmitter within 1.25 seconds (time for one PCM commutator cycle) of the hit, and the same hit data will be stored for transmission via the main telemetry transmitter upon ground command.

As shown in Figure 24 there are three panel information subwords: pulse verification, panel identification and thickness data. The pulse verification subword is generated by gating 2048 pps timing signals with recharge pulses and feeding the gated pulses into a seven-bit shift register in serial form. This produces a seven-bit binary coded subword that is an indication of the duration of the recharge pulse. Upon transfer command this subword is "dumped" in parallel into the main panel information register. The panel identification word is obtained by gating the outputs of the current recharge amplifiers in the detector subsystem into the main panel information register in parallel. The information is gated into the register with a hit signal from any one of the hit amplifiers in the detector subsystem. The wing identification bit is obtained by "dumping" the hit signal from any one of the three +Y hit amplifiers into one bit of the main panel identification register. Thickness data are obtained by reading the six hit amplifier outputs from the detector subsystem in parallel directly into the main panel identification register. The eleven-bit time subword is read into the data shaper from the time counter which is an eleven-bit ring counter. The ring counter counts the 1 ppm pulses, and reads out the eleven-bit binary coded

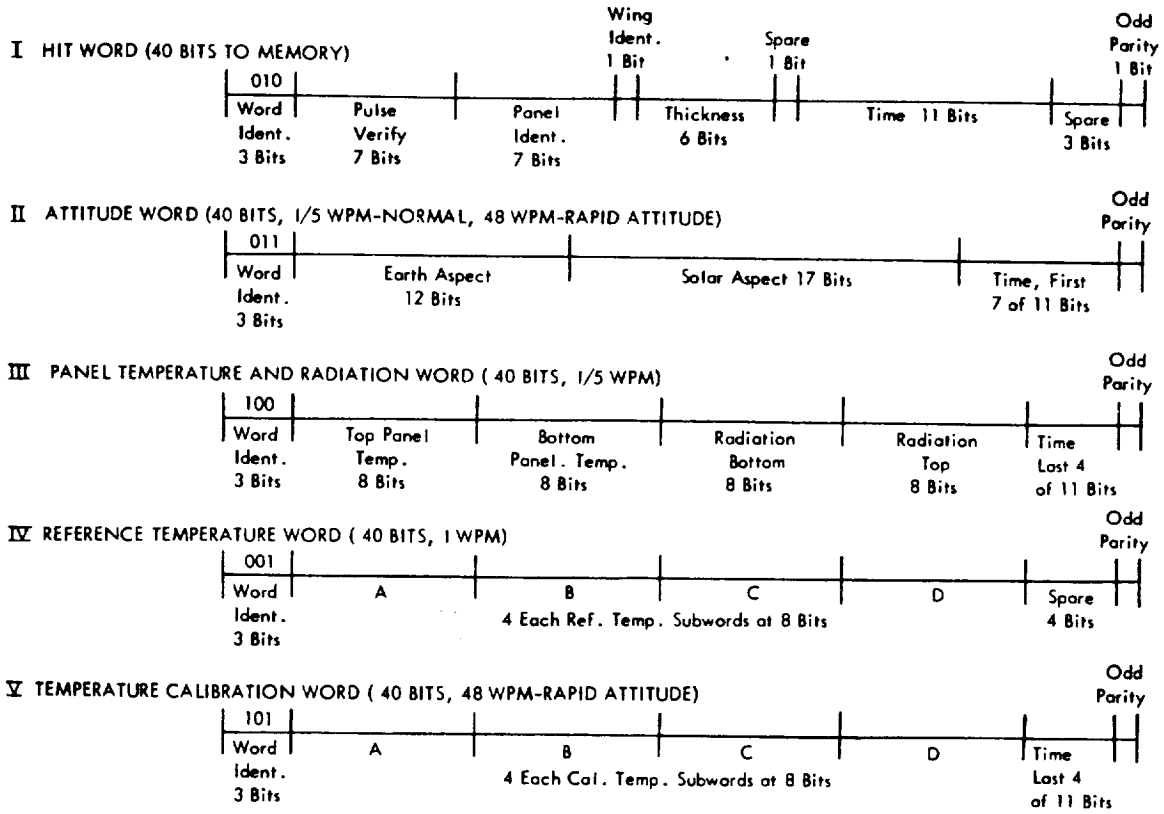

Figure 24. Word Formats

word serially upon command from the word select logic.

The attitude word is comprised of a three-bit word identification, a twelve-bit earth aspect subword, a seventeen-bit solar aspect subword, and seven bits of an eleven-bit time subword. (The remaining four bits of the time subword are included in the panel temperature word which normally follows the attitude word.) The word identification is read out of the word select logic, and the serial earth and solar aspect subwords are read out of the subsystem into the data shaper and parity generator. The partial time subword is added, and the parity bit generated within the data shaper and parity generator completes the attitude word.

Three different words are read out of the temperature subsystem. The panel temperature and radiation word and the reference temperature (thermal surfaces experiment) word are utilized in the "normal" mode of operation, and the temperature calibration word is used in the "rapid attitude" mode. The format is essentially the same for all three words. They consist of the three-bit word identification, four eight-bit data subwords, the last four bits of the eleven-bit time word that is shared between the attitude and temperature words (except in the reference temperature word, which has four spare bits instead) and one parity bit. Word identification is generated in the word select logic; the appropriate temperature word is read out of the temperature subsystem

on receipt of a word select signal from the word select logic; the last four bits of the time subword are read out of the time counter; and the parity bit is added in the data shaper and parity generator.

c. Control Circuits

The data subsystem is under control of ground commands received via the communications subsystem and an internal clock. The memory control circuits receive both commands from the communications subsystem and clock pulses from the redundant clocks. The memory control unit contains all of the necessary gating and control logic to select the clock and distribute timing and command signals through the system.

The basic timing signals are the 128 pps clock signals, which represent the bit time for all data handling except memory readout, which is 2048 pps. In order to provide the necessary current for the shift registers, which are current operated devices, the 128 pps output is fed into a current pulse generator in order to provide the necessary shift pulses to the word select logic whence they are distributed to all other circuits and subsystems as required.

The word control logic, under command of hit signals from the panel information logic, readout signals from the PCM commutator and rapid attitude commands from the memory control circuits, generates word pulses for the appropriate words in the proper sequence. The word pulse is transmitted to word select logic, which generates the appropriate word identification code, and to the data circuits, from which sensor data are to be read, where it is used as a transfer signal. In normal operation, the 1 ppm and 1/5 ppm timing pulses initiate the reference temperature and attitude panel temperature words respectively, and a hit signal initiates the hit word. A readout signal from the PCM commutator is provided so that words are transferred from the data system in synchronization with the PCM commutator.

In addition to generating the word identification, the word select logic counts the bits in each word and initiates time counter readout and parity pulses at the appropriate time.

The digital data simulator provides a means of checking the operation of the memory and subsequent elements of the communications subsystem. A "simulator on" command from the memory control circuits is gated with the 128 pps clock to operate flip-flop circuits that produce a fixed pattern of "ones" and "zeros." Since this pattern is known and unvarying, when the core storage is loaded from the simulator, the readout can be used to verify the operation of the core storage as well as all of the intermediate circuits involved in the transmission and reception of data from the memory.

d. Core Storage

The magnetic core memory provides 30,080 bits of storage (752 40-bit words). This storage capacity is adequate for from six to eight hours of normal operation. Core logic operates on timing and "write cycle enable" signals generated from within the data subsystem, and "readout" and "clear" ground commands received via memory control. In addition to its serial data output the core

logic puts out an "end memory clear", a "last address marker" and an "end read" signal.

In write cycle operation a "write cycle enable" signal is generated in the word control logic if the previous word has been processed or if the digital data simulator has been commanded on. The "write cycle enable" signal is transferred to core logic via the data shaper and parity generator and the memory control circuits. If the memory is not performing another function, clear or read, the "write cycle enable" signal will be transferred to memory and data will be read in at the rate of 128 pps.

A readout is initiated by ground command and received via the memory control circuits. Upon command, a complete readout is repeated six times after which a "sixth frame marker" (end read) signal from the memory resets a command flip-flop, stopping the read operation. This signal is also used to remove power from the FM transmitter. Readout is at the rate of 2048 pps to minimize the required "on" time for the FM transmitter.

The "memory clear" function is also initiated by ground command, received via the memory control circuits. When commanded to clear, the memory rapidly resets all its cores to zero, initiates an "end memory clear" signal, and resets itself to the first data address. The "end memory clear" signal resets a command flip-flop in the memory control circuits to end the reset cycle.

The "last address marker" output is used to control the digital data simulator. When the digital simulator has filled the core storage, this signal is used to reset a command flip-flop which turns off the simulator.

2. Test History

The data subsystem has undergone extensive testing both as a subsystem and as a part of the total spacecraft canister electronics. Preliminary testing was done on an Engineering Test Model (ETM) to prove the basic design concepts and to assure proper interfaces among the 35 boxes that comprise the subsystem. Once this phase of the program had been completed, extensive detailed testing began on the prototype model (later to be called the preprototype). The DSS (data subsystem) was subjected to temperature extremes, thermal vacuum, and vibration. The facilities used for the thermal vacuum and the complete system test are shown in Figures 25 and 26.

The systems tested and covered in this report are: preprototype, prototype, Pegasus A and Pegasus B.

An acceptance test procedure is performed to prove that the DSS is functioning properly. This procedure (ATP-MMC-06) defines the test conditions and the function tests that must be performed to determine proper system operation. The ATP is performed before, during, and after the temperature tests and before and after vibration (test qualification and prototype only). The most significant portions of the DSS test are:

- The 62 hit detection circuits for the +Y and -Y wing are tested using commands through decoder A and decoder B of the communications subsystem.

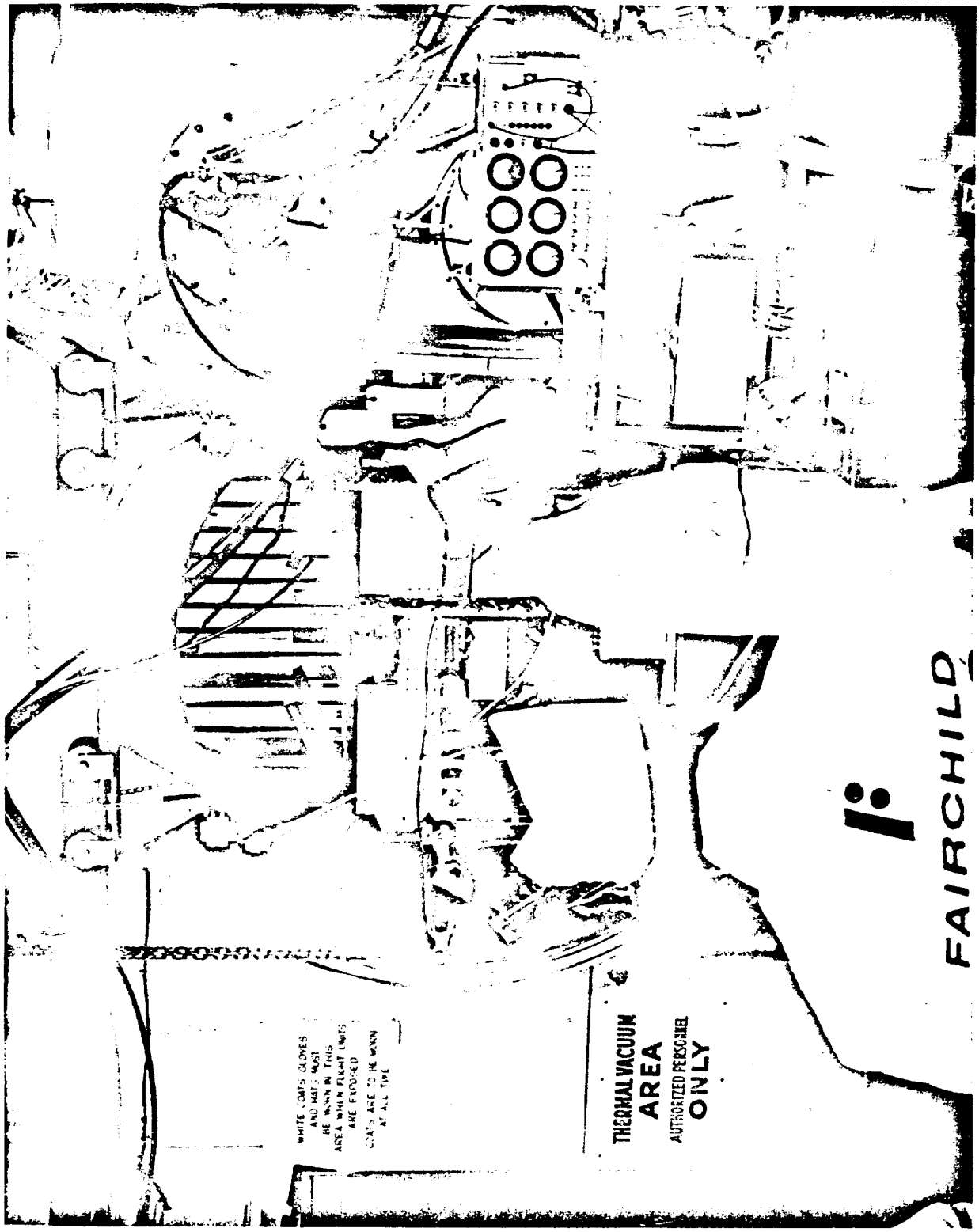

Figure 25. Thermal Vacuum Test Facilities

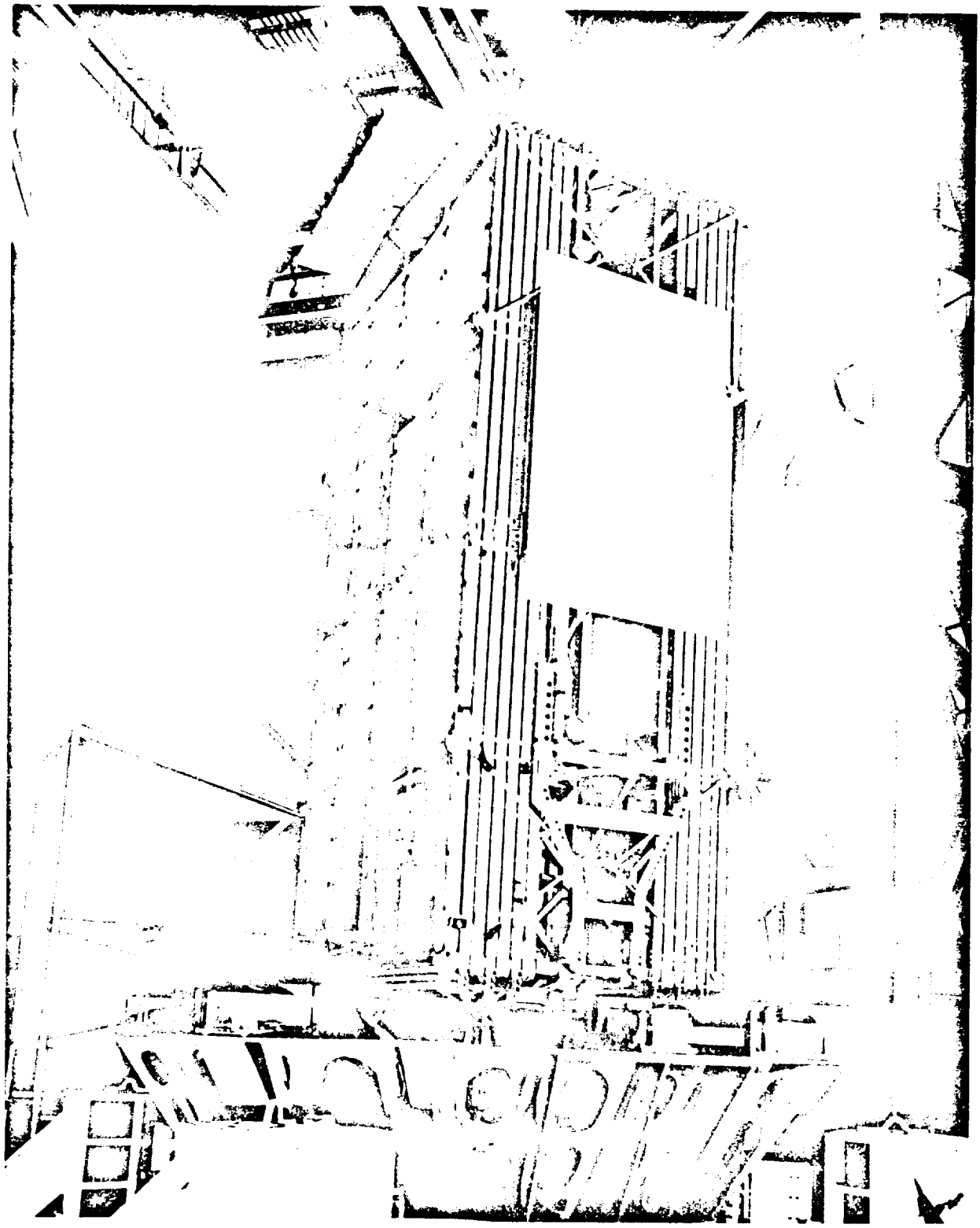

Figure 26. Pegasus Vibration Test Facilities

- The 14 current recharge amplifier circuits are tested for the proper analog output voltages with open panel lines and the 10 kc oscillator operating and for proper analog output voltages with the panel lines shorted.

- The attitude subsystem is tested by stimulating the six earth aspect sensors and the five solar sensors.

- A two hour test is performed on the temperature subsystem to check the "÷ 24 counter" and to check for proper readout of temperature data.

- A one hour test is performed on the time counter to check for proper updating.

- The redundant clock switching circuits are checked by applying commands through decoder A and decoder B.

- The memory subsystem is tested for the memory clear, memory read, system reset, digital data simulator, and FM XMTR OFF functions.

- The ground support equipment checkout functions are tested.

- The launch readiness relay circuits are tested.

The extensive testing to which the preprototype DSS has been exposed has resulted in logging approximately 1000 hours of operating time on that subsystem. The prototype and Pegasus A data subsystems have logged operating times of over 200 hours each.

a. Subsystem and System Testing

Testing was initiated on the first complete DSS (prototype) in April, 1964. A program of evaluation and trouble shooting was pursued until July, at which time the subsystem was downgraded to preprototype status. This decision accelerated the completion of the final configuration by permitting less formalized trouble shooting procedures. Formal acceptance test on the preprototype DSS was passed in August, 1964. Based on the preprototype test results, a new prototype (hereinafter called the prototype) was fabricated and tested. These test results were also incorporated into Pegasus A, Pegasus B and the qualification DSS. Charts on pages III-53-73 of the Pegasus A Launch Readiness Report give the testing performed on the preprototype, prototype, Pegasus A and qualification DSS beginning 1 August 1964. The testing of each DSS will now be covered in more detail in the order of its occurrence.

Upon completion of the trouble shooting phase of the preprototype DSS, the system was tested under the following conditions:

- +32v @ room ambient
- +28v @ room ambient
- +24v @ room ambient
- +32v @ -5° C
- +24v @ -5° C
- +32v @ +55° C
- +24v @ room ambient

- +32v @ room ambient
- +32v @ vacuum
- +28v @ room ambient

The DSS acceptance test procedure was performed for each condition specified. The results of the tests were very encouraging, showing only the discrepancies listed below. (Subsequent testing of Pegasus A verified the changes made to eliminate these discrepancies.)

- Five hit words did not contain the panel identification information when sending commanded hits. This problem was corrected by putting a clamping circuit on the one shot output of the hit amplifier. Testing at the canister level verified that this clamping circuit has corrected this panel identification problem.
- The open panel test failed at +24v @ -5° C. This failure was corrected by a design change in the current recharge amplifier that increased the amplifier gain for the 10 kc signal. This change has been verified on canister tests and Pegasus A tests.
- The in-flight temperature calibration read low at +24v @ room ambient. This was a test procedure problem in the method for defining the in-flight temperature calibration mode.

At the conclusion of the temperature tests noted above, the preprototype DSS Fairchild Hiller components were subjected to vibration on an individual box level. (All vendor boxes of the DSS are subjected to environmental tests at the vendor's plant.) Each box was given one 10-minute logarithmic sweep in each of three mutually perpendicular axes at the vibration levels listed below:

- 16 to 40 cps at 1 g peak
- 42 to 95 cps at .011 inch double amplitude
- 95 to 2000 cps at 5 g peak

At the conclusion of each vibration test, an acceptance test was performed. No failures occurred.

At the completion of the preprototype data subsystem testing, it was assembled with the power subsystem and communications subsystem into the canister. This configuration was subjected to room ambient and thermal vacuum tests which simulated hot and cold orbital extremes. Then the canister was installed into the prototype spacecraft and the Pegasus A spacecraft for room ambient tests. During these test sequences, the preprototype data subsystem satisfied the performance requirements of the acceptance test procedure.

In order to verify that the preprototype wing wiring to each capacitor panel was correct, each capacitor panel was shorted with a test cable and the data subsystem wrote a hit word to identify the panel. During this period of shorting capacitor panels, it was found that some of the capacitor panels would not generate a hit word when shorted. Investigation of this problem pointed out the necessity of a more sensitive "one-shot" in the hit amplifier and a resistor-diode pair added in series with each detector panel. These changes were incorporated

into Pegasus A with flight quality hardware.

At the conclusion of the integrated tests on the canister with the power and communication subsystems, the preprototype DSS was removed and is now being used as a test tool in the qualification program. In this capacity, the preprototype has received and is still receiving fairly rugged treatment; preprototype boxes are constantly being removed and added to the subsystem depending on the status of the respective qualification box. To date, the preprototype DSS has accumulated over 1,000 hours of operating time and is still functioning properly.

The prototype DSS underwent the same functional tests listed for the preprototype at room ambient temperature and 28 volts input. Only one failure was noted:

> Two commanded hits were not processed by the data subsystem. The cause of these two malfunctions was attributed to disconnect relays exhibiting excessive bounce. The relay bounce has the effect of recharging the test capacitor in incremental steps. Occasionally, these incremental steps do not have the required energy content needed for the hit amplifier to generate a hit signal. A hit signal is required before the data subsystem will write a hit word. This relay bounce will not affect the ability of the spacecraft to detect meteoroid penetrations.

During the early phases of the qualification DSS testing, the prototype was used as a test tool. Approximately 100 hours of operation were accumulated as a result of this testing; no malfunctions occurred during this period. The prototype was then integrated with the power and communications subsystem at the canister level. All canister level tests were passed successfully and the prototype DSS is now mounted on the prototype spacecraft.

The Pegasus A DSS was also subjected to the same electrical functional tests as prototype under the following conditions:

- +32v at room ambient
- +28v at room ambient
- +24v at room ambient
- +32v at +55° C
- +24v at +55° C
- +32v at room ambient
- +24v at room ambient
- +24v at -5° C
- +32v at -5° C
- +28v at room ambient

The Pegasus A data subsystem passed all of the electrical functional tests under the test conditions specified with the following exceptions:

- Four PAM analog voltage readings were low due to redesign of the data power distribution unit. The ATP-MMC-06 did not reflect the correct limits for the redesigned unit and was a paper discrepancy only.
- Pulse verify was not within the specified limit for a stored hit.

This test was repeated and the pulse verify malfunction did not occur.

- Solar aspect shift register (S/N 104) gave an incorrect output with no illumination on solar eyes. As a result, the shift register was modified so that the proper output (in the angle data) was obtained.

- The in-flight temperature calibration on probe 1 of the UED temperature subsystem read one bit low at +24v @ -5° C. This was a test procedure problem in the method for defining the in-flight temperature calibration mode. The procedure was modified to more nearly reflect the true calibration of the unit.

Upon the successful completion of the above tests, the Pegasus A DSS was integrated with the power and communications subsystems at the canister level. The canister was then subjected to room ambient temperature and thermal vacuum tests simulating the cold orbital extreme. No DSS malfunctions occurred during these tests. (The DSS passed the performance requirements of the acceptance test procedure.) The canister was then mounted on the Pegasus A spacecraft and the following tests were run:

- Room Ambient Temperature
- Vibration
- Vacuum

Again, the data subsystem passed all functional requirements without any malfunctions.

The Pegasus B data subsystem was subjected to the following tests:

- +32v at room ambient temperature
- +24v at room ambient temperature
- +32v at -5° C
- +24v at -5° C
- +32v at +55° C
- +24v at +55° C

After successfully completing all tests listed above, the data subsystem was mounted on the canister with the power and communication subsystems. At the canister level the following hot and cold orbital simulations were run:

Hot Test - 31.5 volts on the regulated bus; 78 min. on; 22 min. off

Cold Test - 24 volts on the regulated bus; 65 min. on; 35 min. off.

The canister was then integrated with the spacecraft and testing was performed successfully for a period of 3 weeks. The spacecraft subsequently successfully passed the vibration test.

The Pegasus C system was subjected to the same tests as Pegasus B except for the hot orbital simulation test and the vibration test. Pegasus C passed all tests successfully.

b. Component Testing

The Fairchild Hiller manufactured boxes that receive electrical functional checks at the box level are the data power distribution unit A17, the detector

disconnect A10, and the filter network A68. The remaining Fairchild Hiller manufactured boxes, A1 through A9 and A36, receive printed circuit card functional tests and box wiring continuity tests. Vended data subsystem boxes, A16, A18, A19, A25, A30, A37 through A47, A57, A67 and A69 are functionally tested at the vendor's facility. The +Y and -Y detector panel groups are the capacitor panels and have functional tests run both at Schjeldahl and at the Fairchild Hiller facility.

The electrical functional tests on the Fairchild Hiller boxes that do not have the box level test are performed on the subsystem level. As an example, after the vibration test was performed on the word control box A1, it was then integrated with the other boxes of the subsystem and functionally tested in accordance with the data subsystem acceptance test procedure.

Charts on pages III-53 through III-73 of the Pegasus Launch Readiness Report, and the charts of Section B of the same report list all the environmental tests performed on the data subsystem boxes for the preprototype, prototype, Pegasus A, Pegasus B, and the qualification systems. Before and after each test, the applicable functional test procedure was performed (either Fairchild Hiller system or box level, or the vendor procedure).

As a result of the tests referred to above, a number of failure and discrepancies were encountered. Table 4 lists these failures on a box level. Included are the box type, serial number, failure report number (PNN), system used on, failure description, and corrective action.

3. Design Changes

The various data subsystems that have been built and tested are:

1) ETM (Engineering Test Model)

2) Preprototype

3) Prototype

4) Qualification Unit

5) Pegasus A

6) Pegasus B

7) Pegasus C

All of the data subsystems contained the same type and number of boxes. The design changes were made internal to several boxes adding to or subtracting from their functional capability. The prototype and qualification systems were periodically updated to the latest configuration, now the Pegasus C configuration. Listed below are the design changes incorporated into Pegasus A, B and C as a result of testing systems 1 through 4 above and the performance of Pegasus A and Pegasus B.

a. Changes Between Original Concept and Pegasus A, B and C

- Addition of 22v regulator to +28v power in the word select box. This was done because CTL's in the box would not function properly above 24vdc.

- Addition of +50v regulator to DPDU to reduce cross talk between the CRA lines following a hit signal.

TABLE 4. BOX TEST DISCREPANCIES

BOX TYPE	PNN	SYSTEM	DISCREPANCY	COMMENTS
MATRIX SERIAL NO 1 A3	121 212	PRE PROTO	RESISTOR CHANGED IN VALUE	THIS RESISTOR IS CORNING, INC., TYPE WITH DUMET LEADS. REPLACED WITH COPPER LEAD RESISTOR. (DUMET LEADS ARE NOT USED IN FLIGHT OR SPARE HARDWARE).
WORD SELECT SERIAL NO. 1 A9	154	PRE PROTO	UNABLE TO RECOVER STORED HIT FROM PANEL INFO. REGISTER	WORD SELECT MODIFIED TO SUPPLY MORE SHIFT CURRENT. CHANGE INCORPORATED IN ALL UNITS. RETESTED AND PASSED.
TIME COUNTER ASPECT SENSOR SERIAL NO. 1 A9	107 SUPL 2	PRE-PROTO	COULD NOT LOAD ONES INTO TIME COUNTER FROM GSE	MODIFIED PC BOARDS IN TIME COUNTER BOX. RETESTED AND PERFORMED SATISFACTORILY.
TIME COUNTER & ASPECT SENSOR SERIAL NO. 1 A9	155	PRE-PROTO	TIME COUNTER DID NOT UP-DATE.	DESIGN CHANGE TO TIME COUNTER CARDS. RETESTED SATIS FACTORILY AND CHANGE INCORPORATED IN ALL UNITS.
CRA-SERIAL NO. 1 A5	115 SUPL 3	PRE PROTO	RESISTOR CHANGED IN VALUE	THIS RESISTOR IS CORNING, INC., TYPE WITH DUMET LEADS. REPLACED WITH COPPER LEAD RESISTOR. (DUMET LEADS ARE NOT USED IN FLIGHT OR SPARE HARDWARE).
DPDU-SERIAL NO. 2 A17	92 SUPL 15	PRE-PROTO	LOW 10KC OSCILLATOR VOLTAGE	MODIFIED 10KC OSCILLATOR CIRCUIT. RETESTED SATISFACTORILY AND CHANGE INCORPORATED IN ALL UNITS.
DETECTOR DISC.- SERIAL NO. 2 A10	93 SUPL 6	PRE-PROTO	BOUNCING RELAY RESULTED IN 2 HITS OUT OF HIT AMPS	INCREASED TIME OF ONE SHOT ON HIT AMP CARDS TO 4M SEC. RETESTED AND PERFORMED SATISFACT-ORILY.
DETECTOR DISC.- SERIAL NO. 2 A10	214	PRE-PROTO	FAST BOUNCING RELAY RESULTS IN OCCASIONAL FAIL-URE TO REGISTER A HIT.	BETTER RELAY SELECTION ELIMINATED THIS PROBLEM.
I. R. SENSOR- SERIAL NO. 7	145	PRE-PROTO	NO OUTPUT FROM EARTH ASPECT SENSORS	FAULTY CABLE CONNECTED TO SENSOR. CABLE RE-PLACED AND RETESTED SUCCESSFULLY.
CLOCK-SERIAL NO. 4 A25/30	110 SUPL 1	PROTO	FAILED TO OPERATE AT $/55^0$ C.	RETURNED TO VENDOR. INTERMITTENT MECHANICAL SHORT COLLECTOR TO BASE ON A TRANSISTOR. TRAN-SISTOR REPLACED & RETESTED SUCCESSFULLY.
PANEL INFO. - SERIAL NO. 4 A8	211 SUPL 1	PEGASUS A	LAUNCH OPERATIONS PERSONNEL REPORTED FAILURE OF BOX	BOX RETESTED IN PRE-PROTO DATA SUB-SYSTEM & FUNCTIONED PROPERLY.
EARTH SENSOR- F-22	156	SPARE	FAILED INCOMING INSPECTION	VENDOR DETERMINED AN INTERMITTENT LEAD ON SENSOR HEAD DUE TO EXCESSIVE FLEXING. DAMAGED CABLE REPLACED & UNIT FUNCTIONED PROPERLY.
DETECTOR DISC.- SERIAL NO. 3 A 19	165	SPARE	TWO DIODES OPEN IN BOX. ONE OF THE TWO WAS PUT IN, IN REVERSE.	DIODES REPLACED & UNIT FUNCTIONED PROPERLY.

- The +28 power to the system clock was shifted to the main bus rather than the data subsystem power distribution unit. Thus, the data subsystem can be turned off, but other systems such as the PCM and PAM commutators can still be operated with the clock.

b. Pegasus B and C Changes

- A fuse module was added in series with each capacitor detector as part of an additional function which was introduced in order to conserve detector area in the event a permanent short occurs in a single capacitor detector. On Pegasus A, a permanent short necessitates removal of all the capacitors in a panel logic group, where in Pegasus B and C the capacitor that is shorted can be removed via a burnout/blowout cycle. The corrective action taken to improve the panel shorting problem was to incorporate a burnout/blowout capability in Pegasus B and C. This capability permits 28vdc to be applied, upon ground command, across the panel which has indicated a short. By incorporating a 100 ma fuse in series with each detector, it is possible to either burnout the short or to remove the individual detector as a result of blowing the fuse. Figure 27 represents the typical circuit diagram for each detector. The shorted panel will either be burned ("cured") or the fuse will be blown in which case the panel will be removed from the panel group. The 28vdc will then be commanded to "OFF" and the panel group commanded to "CONNECT". This capability permits a single detector to be either "cured" or removed from the logic group and prevents the loss of the balance of the detector group with the possible exception of a group with high impedance shorts to ground. This latter case still retains the ability to be disconnected as an entire logic group.

- One group each of the A, B and C thickness panels on the +Y wing were made "zero bias" to provide the capability of detecting the existence, if any, of spurious hits produced by radiation fields.

- The current recharge amplifiers (CRA) were completely redesigned to allow complete identification (panel ident, pulse verify) in the event of low level discharges. On Pegasus A low level discharges may result in no panel identification and erroneous pulse verify. The hit amplifier was modified slightly for the same reason.

- The panel information circuit was modified to perform the following: 1) Prevent radiation induced hits (if present) from filling the memory, and 2) Prevent the pulse verify register from locking out the hit data.

c. Pegasus C Change

A relay was added to the DPDU to allow switching the radiation spectrometer on and off by ground command (per NASA directive).

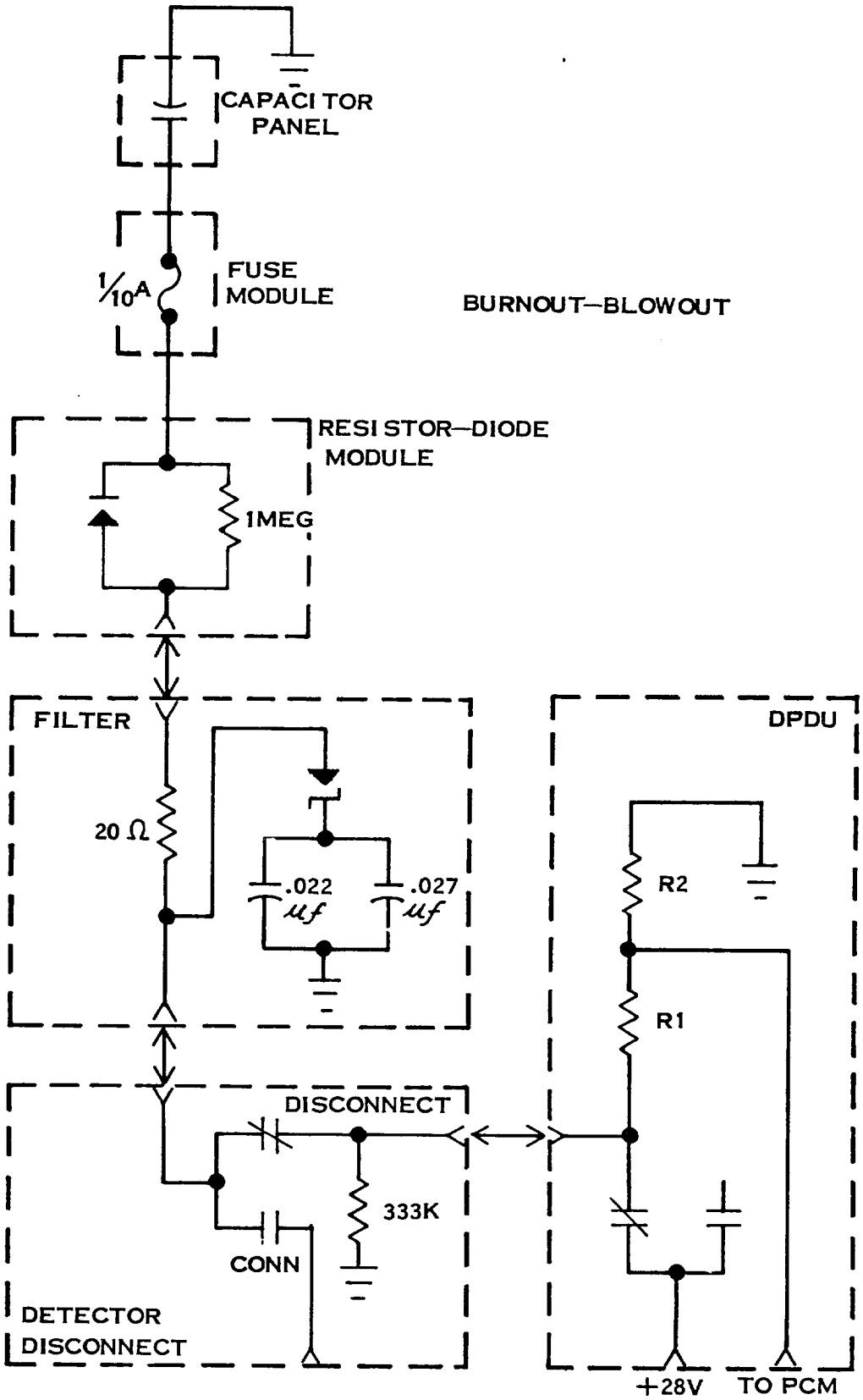

Figure 27. Typical Detector Circuit

D. Attitude Subsystem Development

The Pegasus attitude system makes possible direct determination of spacecraft attitude with respect to earth and sun vectors. Data defining these two vectors is telemetered to earth and used in conjunction with ephemeris data to fix spacecraft attitude in the near earth environment. The angles which may be resolved by the attitude system are shown in Figure 28.

The Pegasus spacecraft has two different possible modes of attitude behavior. One is a gravitational gradient stabilized mode, the other is a spinning mode.

The stable gravitational gradient attitude orientation is depicted in Figure 29. In this orientation, the spacecraft wings will be in the Pegasus orbital plane, while the booster section will point either up or down along the local vertical. If the initial tumbling rate is not excessive (significantly greater than one revolution per orbital period), Pegasus will settle in this attitude after some transient librational motion. The duration of the transient is difficult to predict. It will depend on the initial tumbling rate and also on hysteresis (damping) losses. The hysteresis losses include, for example, frictional dissipation in structural joints (hinges), as the structure deflects under changing load conditions during the transient motion.

Thus, in the gravitational gradient stabilized condition, Pegasus will be stabilized such that the plane of the detector wings coincide with the orbital plane. This limits the "view angle" of the detectors to a cone about the normal to the orbital plane. However, the orbital plane will precess about the earth's

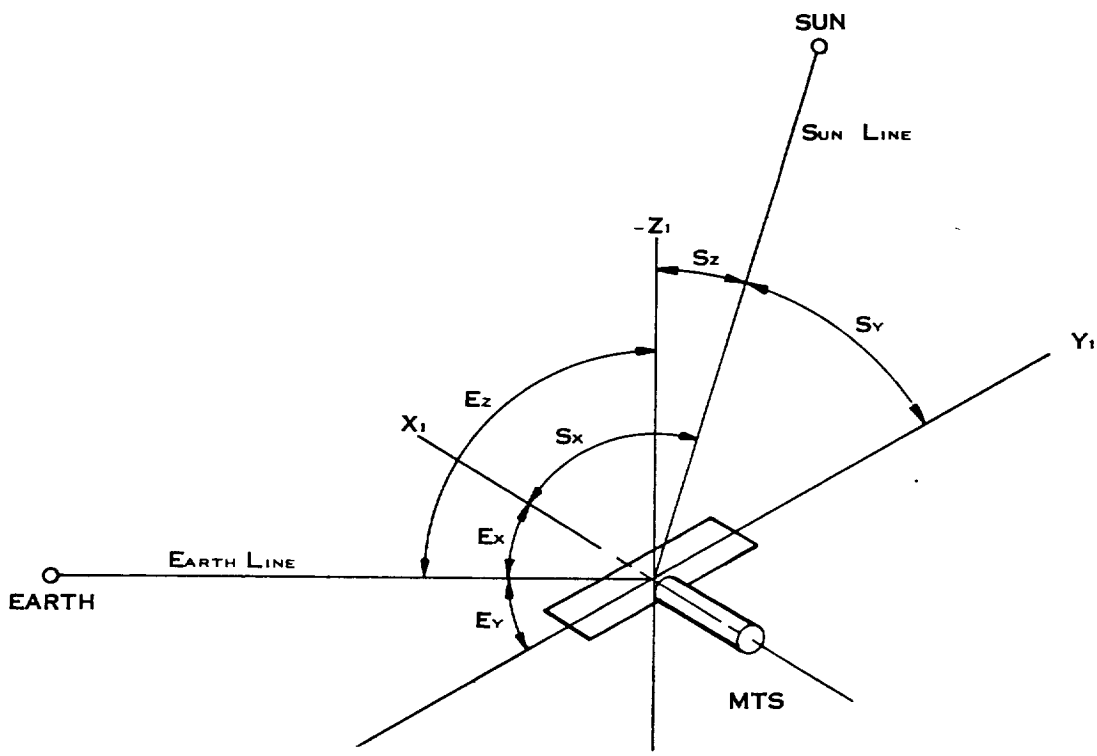

Figure 28. Attitude Geometry

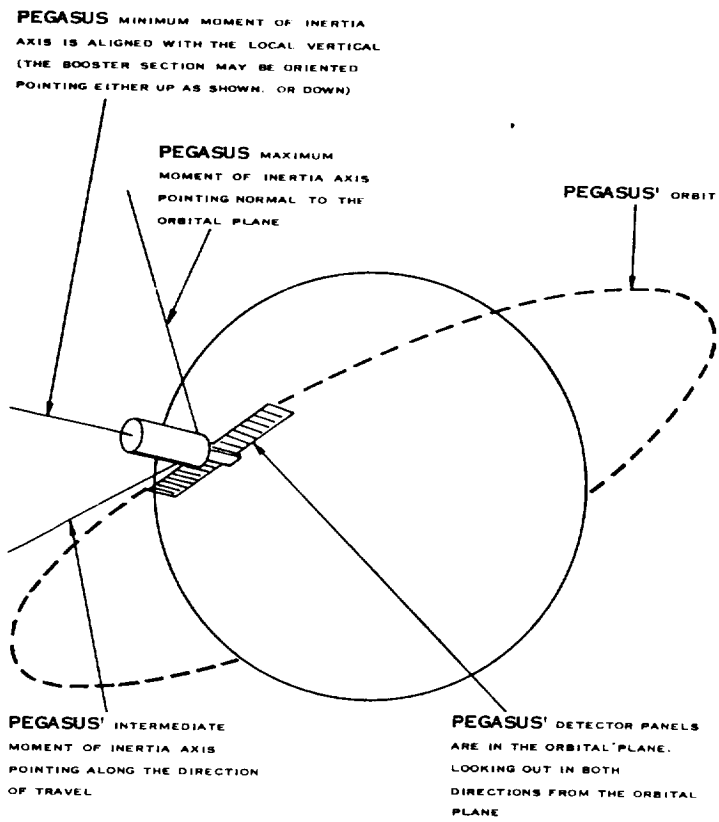

Figure 29. Earth Attitude Sensor Components

polar axis due to the earth's equatorial bulge. For this reason, the detector cone of view will scan a significant fraction of space over the operational life of Pegasus, even in the case when the spacecraft is gravitational gradient stabilized.

The second mode, spin stabilization occurs if the spacecraft and attached last stage booster section have a relatively fast tumble rate at burnout (several revolutions per orbit or more). The only spin mode which is stable over the longer term is spin about the maximum moment of inertia axis. Thus, if the initial spin is about a different axis, i.e. the booster longitudinal axis, the spacecraft will go through a period of transitional motion before settling down to a stable spin about its axis of maximum moment of inertia. This means that in time the spacecraft will spin about the normal to the plane of the detector wings. The required transition time to arrive at this stable mode depends on how fast the spacecraft is spinning initially, how much initial nutational motion is present, and on the structural hysteresis losses which occur. (Spin about the maximum moment of inertia axis is a stable condition because it results in a minimum of kinetic energy for a given amount of angular momentum.) Once in the stable spin mode, the spacecraft will precess in response to externally applied torques due to, for example, the earth's gravitiational gradient or solar pressure. Therefore, even in a spin stabilized mode, when the detector panels

are normal to the spin axis, the spacecraft may scan out a significant part of space as the spin axis precesses.

The succeeding paragraphs detail the attitude sensing system that was designed to define the previously described motions.

1. Proposed Subsystem Concept

The proposed subsystem was based on a satellite initially tumbling but decaying to an oscillation of the axis of maximum moment of inertia and eventually approximating an earth fixed orientation. An array of solar aspect sensor with a 4 pi steradian field of view coupled with an array of IR sensors mounted normal to the faces of a printed dodecahedron comprised the hardware of the attitude sensing system as originally conceived.

Figure 30 depicts the attitude subsystem portion of the block diagram contained in the proposal.

2. Final Subsystem Concept

The final subsystem configuration is identical to the subsystem configuration initially proposed. The block diagram of the final subsystem (Figure 31) is more detailed than the proposed block diagram but the concept is unchanged.

The position of the earth vector within the satellite coordination system (X1, Y1, Z1) is determined from the outputs of twelve IR sensors. The twelve sensors are mounted such that their axes of response are centered on the lines normal to the planes of an imaginary dodecahedron enclosing the spacecraft. Figure 32 shows the conceptual orientation of the IR sensors whereas Figure 33 indicates the geometrical location of each of the sensor heads.

As can be seen from Figure 33, six sensor heads are employed in the earth sensing portion of the attitude system. Each sensor head is made up of two sensors or eyes which subtend 2° solid angles in opposite directions, centered around the axis of the sensor head. Figure 34 depicts a cross-sectional view of a sensor head.

The complete earth sensor system consists of the six sensor heads and a power supply.

The earth sensor system is designed to indicate the presence or absence of earth within the 12 fields of view. The indication appears as a positive dc voltage

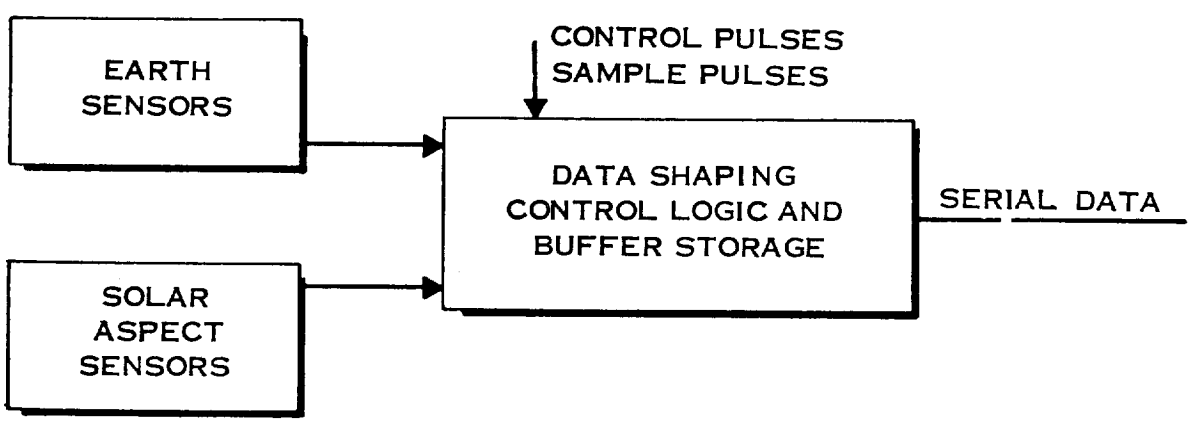

Figure 30. Proposed Attitude Subsystem Block Diagram

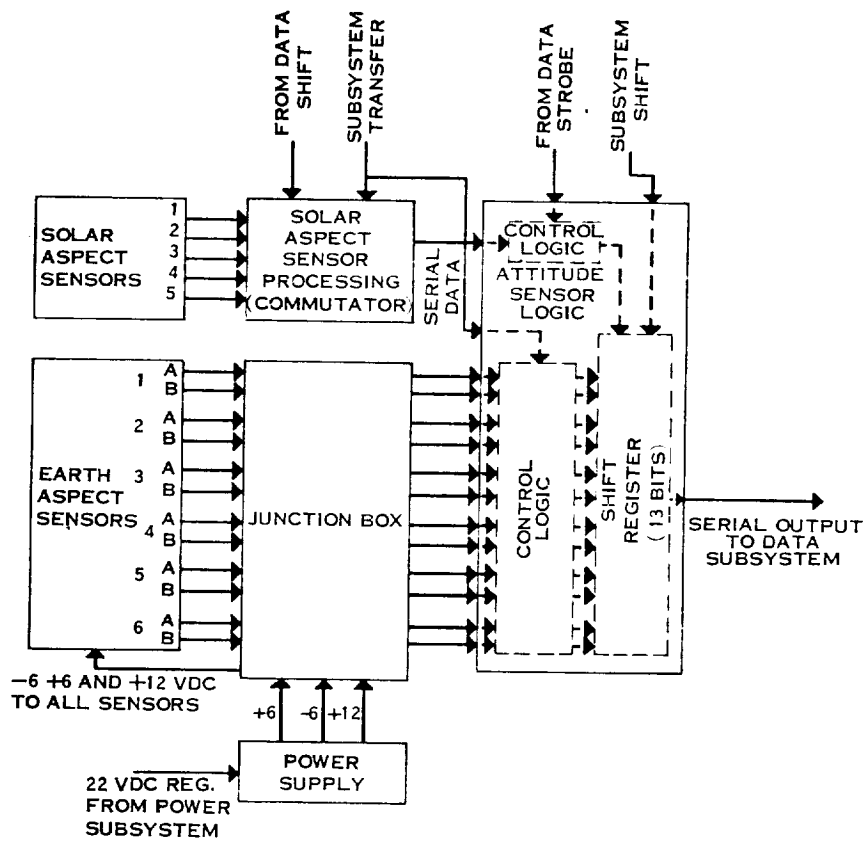

Figure 31. Attitude Subsystem Block Diagram

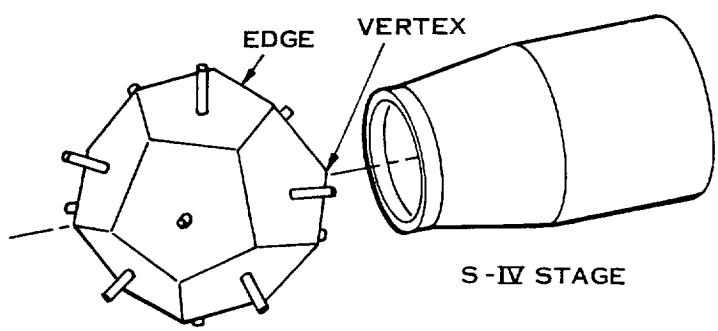

Figure 32. IR Sensor Orientation

(for earth in view) or 0 volts (for absence of the same) on 12 output lines, (two for each head). The inputs to the system are derived from a differential output of two thermopiles (corresponding to two fields of view) in each head. This voltage is modulated, then amplified and demodulated. The outputs of the system are generated in the logic circuit, which in turn is actuated by the demodulated radiation signals.

The optics of each head comprises two radial thermopile detectors placed

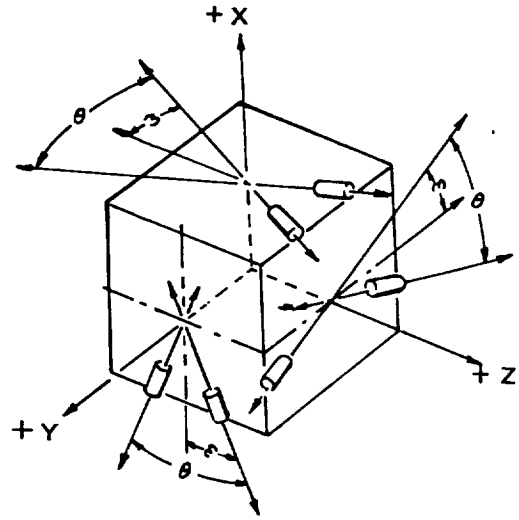

Figure 33. Geometrical Location of Sensors

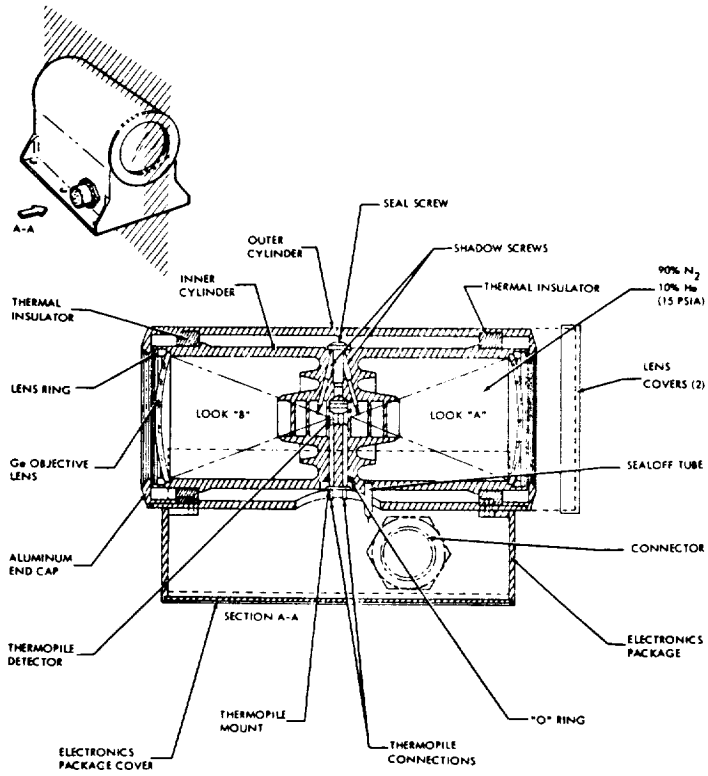

Figure 34. Sensor Head Cross-Sectional View

between two objective lenses. The two detectors are cemented back-to-back such that they point in opposite directions along the optical axis which is common to both lenses. Each lens, a positive meniscus made of germanium, provides a clear aperture of two inches, has a three-inch focal length and subtends a two-degree field of view. The lenses are coated with a multiple layer interference filter which provides an average transmission of 75 percent in the spectral range of 9 μ to 16 μ.

Each thermopile detector measures 2.5 millimeters in diameter and consists of a radial array of 20 radiation thermocouples connected in series. Each

thermocouple, basically a bismuth-antimony pair, is connected to form two junctions, one of which is blackened and sensitive to infrared radiation while the other is shielded from it. The junctions are vacuum deposited on an insulating strip imbedded in an aluminum heat sink. Infrared radiation striking a thermocouple causes an increase in the temperature of the radiation-sensitive or "active" junction. The result is an output signal which is a function of the resulting temperature difference between the two junctions. Since the output signal is thermovoltaic, no bias or polarizing voltage is required.

The two thermopiles are connected in series-opposing configuration and thus provide a differential output whenever the two detectors are viewing different temperatures. To ensure that the responsivity of the two lens-detector combinations is identical, two aluminum shadow screws are provided. The responsivity symmetry is then obtained by setting the appropriate screw until a null output is obtained from the detector pair.

The power supply provides the drive for the photomodulator and sync signals for demodulator and the logic circuit. In addition, it supplies +6 and -6 volts bias and filters the +21 volt dc input.

The position of the sun vector within the satellite coordinate system is determined from the outputs of five solar sensor assemblies arranged as shown in Figure 35.

A sensor assembly is made up of two sensors, A and B, each capable of generating data relative to the sun's position in one plane. A given sensor has a field of view of plus or minus 63.5° measured angle about one axis and a field of view of plus or minus 63.5° about the other axis without regard to the value of the angle other than that the sun must lie within the field of view.

The two sensors are so arranged in a sensor assembly (see Figure 36), that sensor A measures the angle (δ) between one plane intersecting the sun (A. B. C. D.) and the (Γ, Σ) plane while sensor B measures the angle (ψ) between a second plane intersecting the sun (D. E. F. G.) and the (Δ, Σ) plane. The functional operation of the sun sensor can be seen by examination of Figure 37. Sunlight entering the sensor through the entrance slit is optically coded as it passes through the gray-coded pattern and energizes those cells which are illuminated.

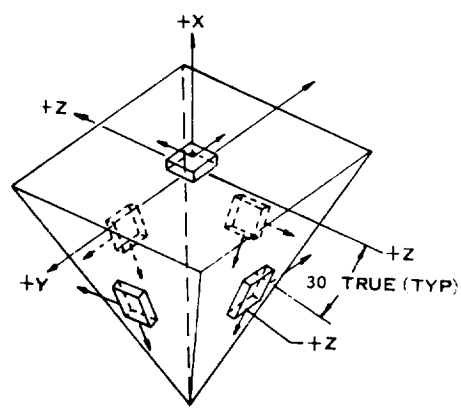

Figure 35. Solar Sensor Output Arrangement

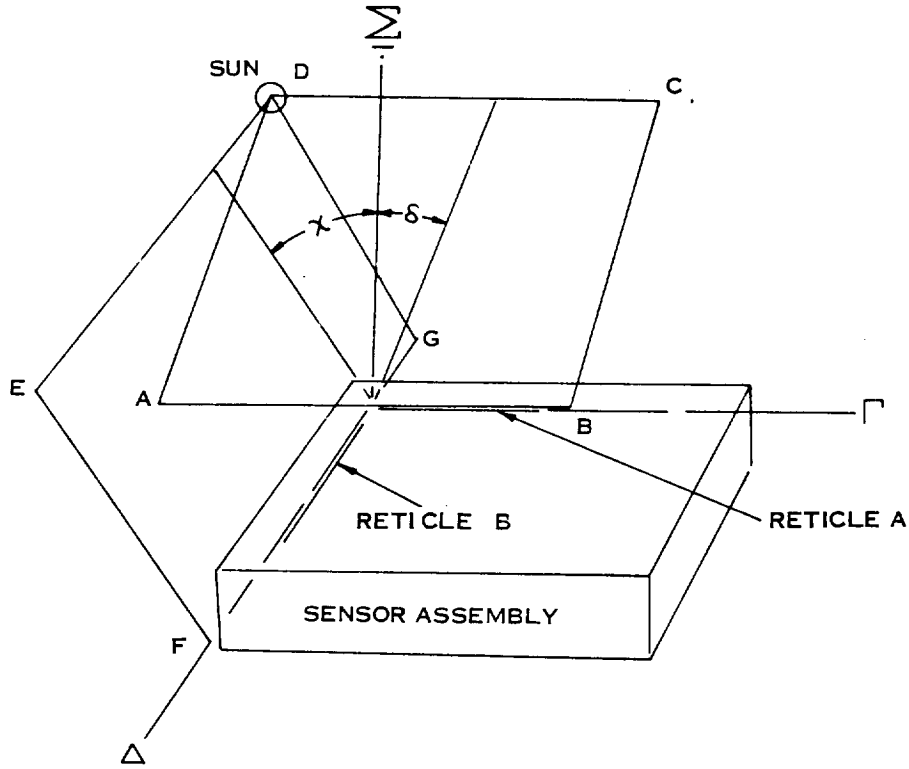

Figure 36. Sensor Assembly Arrangement

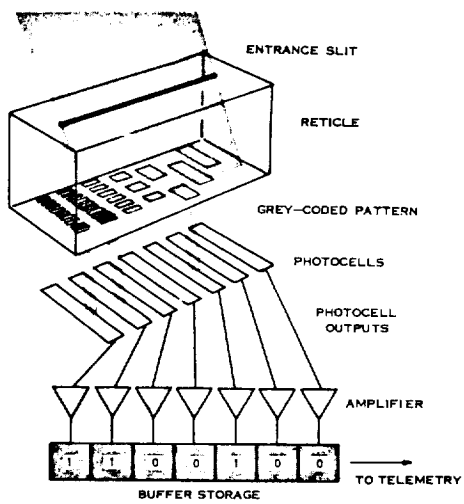

Figure 37. Sun Sensor Functional Arrangement

As the angle of incidence upon the face of the sensor changes, different gray-coded bits are generated. The output signal to the telemetry can therefore be calibrated as a function of incident sun angle.

Since each sensor assembly optically determines two angles and because light must arrive from the front or active surface of the sensor, the output from a single sensor assembly is sufficient to uniquely determine the position of the solar vector with respect to the spacecraft coordinate system.

It has now been shown how the two portions of the attitude system function individually. The manner in which these data are used to define satellite attitude is as follows:

For any orientation of the spacecraft one can determine from ephemeris and solar aspect data that the spacecraft lies on a given cone determined by a rotation of the vehicle around the vehicle-sun line. (See Figure 38.) The in conjunction with a theoretical study simultaneous illumination of certain members of the IR array, considered in conjunction with the constraint of vehicle rotation about the vehicle-sun line, permits the local vertical to assume a limited range of azimuth and elevation in body coordinates along a definable function of these variables. (Figure 39 shows the pattern of earth sensor illumination for a particular altitude of the spacecraft.) The vehicle orientation in iner-

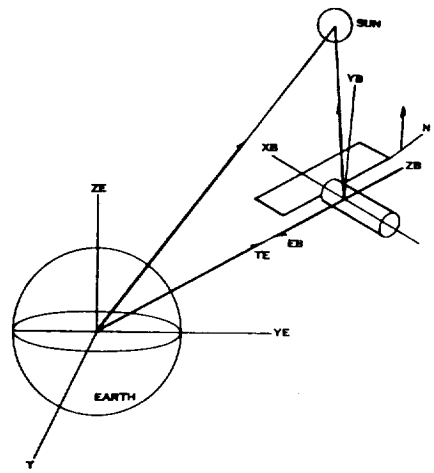

Figure 38. MTS Rotation Around the Vehicle Sun Line

a definable function of azimuth and elevation in inertial space. This logic applies at the instant of a particular measurement. Successive measurements in this manner define a time distribution of permissible vehicle orientations in inertial space. The overall determination of attitude system accuracy is defined by the application of appropriate statistical techniques to these distributions.

3. Subsystem Performance

Inflight data from Pegasus A IR sensors indicated an extremely high number of earth inputs. An analysis of the data tial space correspondingly may assume of the possible modes of oscillation or tumbling of the spacecraft revealed that the data received from the spacecraft must be in error.

Subsequent investigations of the IR sensor system revealed the cause to be improper sensor location with respect to proximate structure. Although each sensor had an unobstructed view within what was felt to be its 2° field of view, the radiation from nearby structure was sufficient to yield an output under certain conditions. It was determined that the field of view for large nearby objects as wide as 7°.

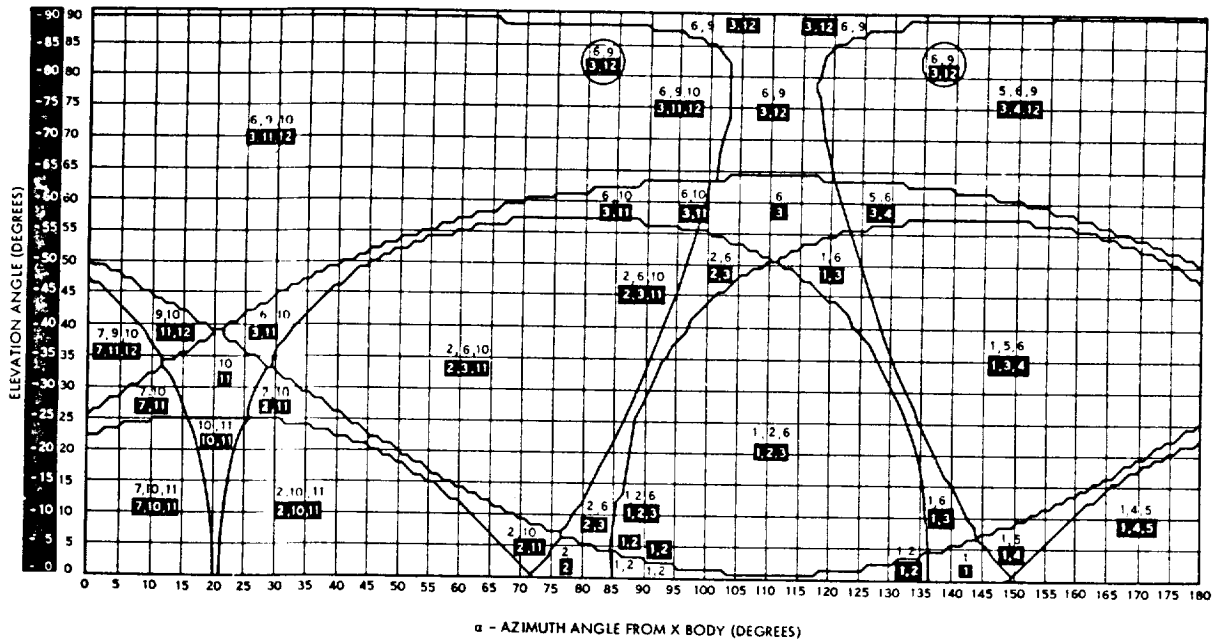

Figure 39. Earth Sensor Illumination Pattern

These facts were revealed at such a point in time that the only fix possible for Pegasus B was to decrease the sensitivity of the sensors from their initial value of 180°K to 210°K (sensitivity limit verified by data from Tiros). It was not possible to readjust all sensors to 210°K as was planned since this range was out of the specified design limit for the sensors. Due to the pressure of the launch schedule, the Pegasus B sensors were adjusted to as near as possible to 210°K without any internal rework.

The IR sensors employed on the Pegasus C spacecraft have been reworked in the same manner as those employed on Pegasus B. Additionally, the Pegasus C IR system was realigned slightly where possible in order to better accommodate the 7° field of view actually required for maximum efficiency of operation.

Data from the Pegasus B attitude system have been analyzed and the attitude of the satellite plotted as a function of time. These plots compare favorably with the anticipated sateilite motion and thereby demonstrate the suitability of the system as modified for Pegasus B.

E. Thermal Design

Temperature control was required for the electronics canister, detector and solar panels, the motor gearbox, and the electronic components that attach to the center section.

Active thermal control was only required for the electronics canister. This control was achieved through the use of a louver system activated by bimetal springs and by insulating with superinsulation blankets. The louver system controls heat flow from the electronic boxes as a function of their temperature.

Temperature control of the detector panels solar panels and motor gearbox was achieved in design by controlling the emissivity and conductivity of the respective units.

1. Electronics Canister

In support of the mission there are in addition to the meteoroid detection system, subsystems to provide power; process data; measure temperatures, voltages, currents and ionizing radiation; determine attitude, and provide telemetered communications. These components are grouped and supported by the electronic canister located in the thermally controlled area at the lower end of the center section. Each functional unit is separately packaged in an RFI shielded box and mounted on a double Y shaped frame. The structure frame is covered on five sides by superinsulation blankets. On the bottom side it is covered by two sets of louvers. Each louver is separately controlled by a bimetallic spring to provide reliable thermal control on a zoned basis.

The thermal radiation heat sink consists of the service module adapter and Saturn S-IV stage, the exterior surfaces of which are coated with S-13 (zinc oxide pigmented methyl silicone elastomer). This thermal coating was developed by ITT and is unique for its low absorptivity to emissivity ratio and stability to long term U.V. radiation. The nominal α/ϵ ratio is 0.22 to 4-5 mils thickness and it can be expected to degrade to only 0.26 after 1800 equivalent sun-hours. The Pegasus is the first spacecraft to use S-13 thermal coating.

Thermal control of the spacecraft is independent of attitude in order to maintain temperature levels for an inertially fixed as well as randomly tumbling vehicle.

a. Hardware Description

The electronics canister is positioned in the lower portion of the center section. The double Y shaped canister is bolted to the four vertical center section members by textolite clips. The clips were designed to provide high thermal resistance to heat flow by conduction from the warm components to the relatively cold structure. Radiative resistance is effective by the use of superinsulation blankets on each side except the bottom. The blanket consists of 10 sheets of 1/4 mil thick aluminized Mylar, sandwiched between an inner Mylar support card and outer aluminum face sheet. The face sheets are coated with S-13 thermal coating.

A cutaway view of the canister is shown in Figure 40.

At the bottom of the canister, louvers are installed. Each louver blade is independently actuated by a bimetallic spring to provide thermal control on a zoned basis. The louvers control the heat flow from the electronic boxes as a function of their temperature in much the same way as a venetian blind may be used to control the sunlight into a room. The temperature swing between the full open and full closed position is 40° F. The blades are fabricated from 5052 aluminim and are highly polished to attain a highly reflective, specular surface. The average blade emissivity ranges between 0.03 and 0.04.

To effect maximum heat sharing between the individual components, radiation interchange within the electronics canister was carefully controlled. This was achieved by: 1) painting the double "Y" mounting plate and surface of each component with a high emissivity paint such as flat white enamel, 2) providing low emittance surfaces ($\epsilon \approx .05$) on the interior of the superinsulation blankets, and 3) by using aluminized Mylar tape ($\epsilon \approx 0.03$) on all structural tubes and fittings. In addition, all cables and wire bundles which penetrate the enclosure were wrapped with six sheets of aluminized Mylar.

This coating selection minimized the temperature drop between the "hot", heat dissipating components, and the "cool", non-dissipators. It may be noted that due to a severe weight penalty it was undesirable to employ a thermally conductive mounting plate which would distribute heat by conduction.

b. Analysis

The orbital temperature protection of the electronics canister is based on two thermal environmental extremes. They are designated "Cold Case" and "Hot Case" and are defined as follows:

Cold Case

1) Minimum power dissipation averaged over a 100-minute cycle — about 45 watts.

2) 63% sunlight orbit.

3) Solar direction 15 degrees off the longitudinal (-X) axis of the Saturn S-IV stage.

4) Applied optical properties of thermal coatings. Negative α/ϵ tolerance used.

5) Negative tolerance used on 3σ values of incident solar, albedo, and earth radiation.

Hot Case

1) Maximum power dissipation, about 62 watts.

2) 78% sunlight orbit.

3) Sun normal to spacecraft axis.

4) Optical properties corresponding to maximum U. V. degradation of thermal coatings which can be achieved over a one-year period.

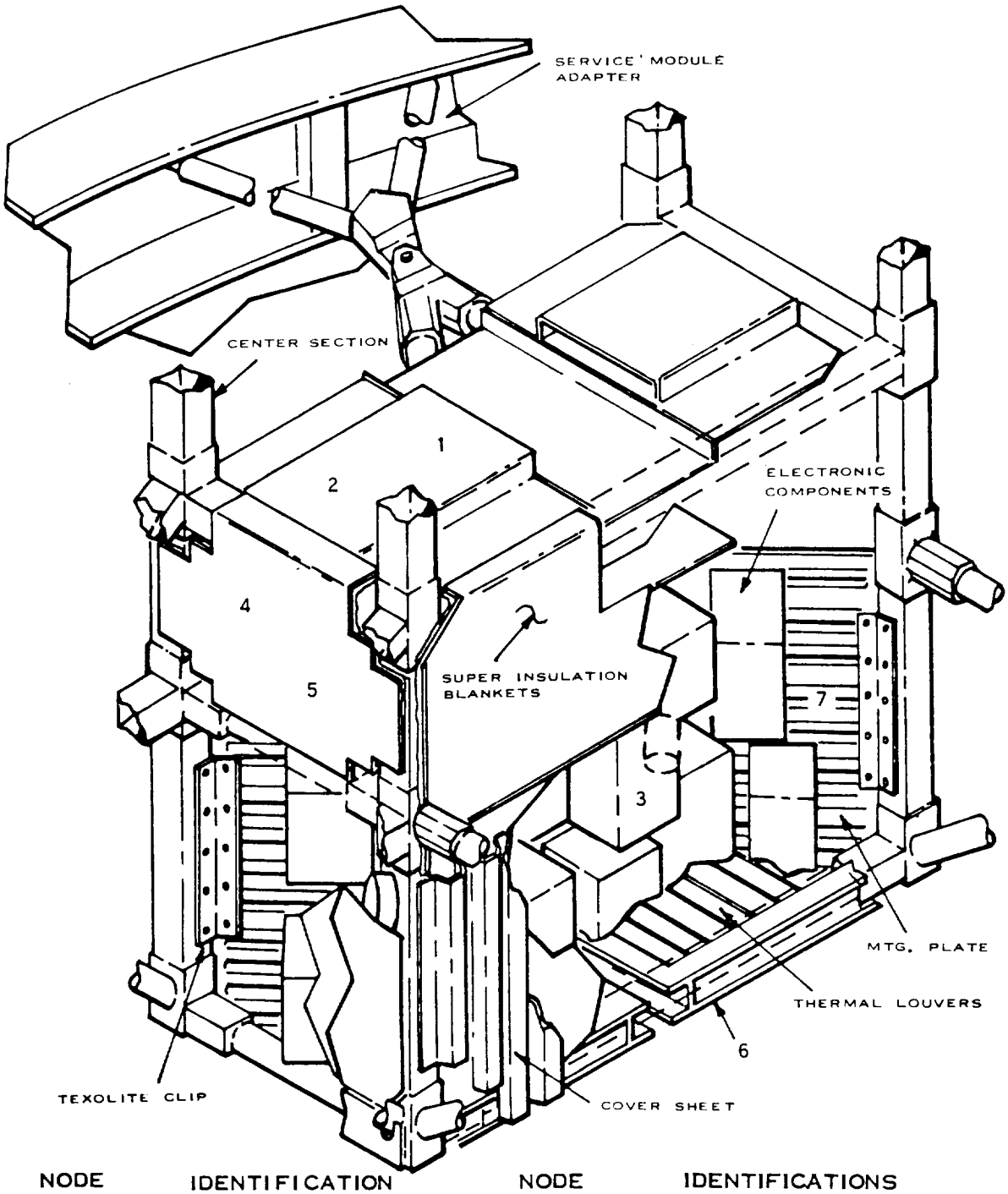

NODE	IDENTIFICATION	NODE	IDENTIFICATIONS
1	OUTSIDE INSULATION, TOP	5	OUTSIDE INSULATION, SIDES AND ENDS
2	INSIDE INSULATION, TOP	6	LOUVER FRAME
3	COMPONENTS	7	CENTER SECTION SIDE OF INSULATION, CLIP
4	INSIDE INSULATION, SIDES AND END		

Figure 40. Electronic Canister Cut-Away View

5) Positive tolerance used on 3σ values of incident heating fluxes.

Note

A second hot case with the sun looking into the open adapter (along +X axis) was considered and found to be slightly less severe. In this case, the shadowing effect of the forward solar panels is significant in reducing the total incident flux.

Significant mathematical simplification in the heat balance equations is achieved by making use of the large thermal time constants associated with the structure, adapter and superinsulated electronic canister. In the case of the electronics, the time constant varies from about 15 hours, in the cold case with the louvers closed, to over 30 hours in the hot case with the louvers open. This, together with the isothermal packaging concept means that component dissipation can be averaged over relatively long time periods and peak or spike dissipation loads need not be considered in the analysis. For this reason it is possible to use orbital average heating fluxes and the corresponding sink temperatures. It follows that the canister temperature is virtually invarient during a given orbit, i.e., there is no significant temperature decrease during shadow periods.

In determining the orbital heat sink temperatures, it was possible to neglect the dissipation of the electronics. Relative to the impinging, solar, albedo and earth fluxes, the component dissipation flux is small and has negligible effect on the heat balance computations related to the structure, adapter, instrument units and Saturn S-IV stage. For this reason, the orbital temperature variation of these items were computed separately and used as inputs for the canister mathematical model. In this manner, the canister analysis was greatly simplified and parametric studies involving conductivities, emissivities, louver area, and thermal dissipation could readily be handled during the early design and development stages of the program.

The notation used for the mathematical model corresponds to Figure 41. The symbols are defined below:

T_s1 Adapter Radiative Sink Temperature

T_s2 Center Section Structure Conduction Sink

T_s3 Adapter Support Structure Conduction Sink

Node 1 Outside Surface Insulation Blanket, Top Section

Node 2 Inside Surface Insulation Blanket, Top Section

Node 3 Electronic Components

Node 4 Inside Surface Insulation Blankets, Sides

Node 5 Outside Surface Insulation Blankets, Sides

Node 6 Louver Frame

Node 7 Center Section Side of Insulating Clip

A schematic of the thermal circuit is shown in Figure 41. The steady state heat balance equations for each node are:

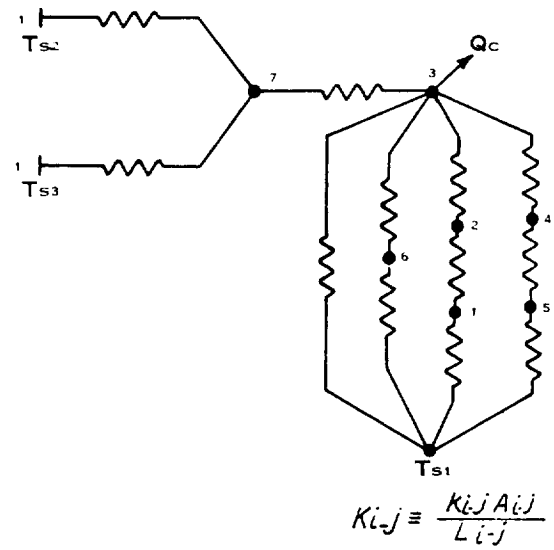

Figure 41. Thermal Circuit Schematic Diagram

1. $Fe_{1-s1}\, FA_{1-s1}\, A_1 \sigma\, (T_1^4 - T_{s1}^4) = Fe_{2-1}\, FA_{2-1}\, A_2 \sigma\, (T_2^4 - T_1^4)$

2. $Fe_{3-2}\, FA_{3-2}\, A_3\, \sigma\, (T_3^4 - T_2^4) = Fe_{2-1}\, FA_{2-1}\, A_2 \sigma\, (T_2^4 - T_1^4)$

3. $K_{3-7}\, (T_3 - T_7) + Fe_{3-s1}\, FA_{3-s1}\, A_3\, \sigma\, (T_3^4 - T_{s1}^4) + Fe_{3-6}\, FA_{3-6}\, A_3 \sigma (T_3^4 - T_6^4)$

$$+ Fe_{3-2}\, FA_{3-2}\, A_3 \sigma\, (T_3^4 - T_2^4) + Fe_{3-4}\, FA_{3-4}\, A_3 \sigma\, (T_3^4 - T_4^4) = Q_c$$

4. $Fe_{3-4}\, FA_{3-4}\, A_3 \sigma\, (T_3^4 - T_4^4) = Fe_{4-5}\, FA_{4-5}\, A_4 \sigma\, (T_4^4 - T_5^4)$

5. $Fe_{4-5}\, FA_{4-5}\, A_4 \sigma\, (T_4^4 - T_5^4) = Fe_{5-s1}\, FA_{5-s1}\, A_5 \sigma\, (T_5^4 - T_{s1}^4)$

6. $Fe_{3-6}\, FA_{3-6}\, A_3 \sigma (T_3^4 - T_6^4) = Fe_{6-s1}\, FA_{6-s1}\, A_6 \sigma\, (T_6^4 - T_{s1}^4)$

7. $K_{3-7}\, (T_3 - T_7) = K_{7-s2}\, (T_7 - T_{s2}) + K_{7-s3}\, (T_7 - T_{s3})$

Using boundary conditions determined for the "hot" and "cold" cases previously defined, the above equations were solved on a computer to determine the component temperature (Node 3) as a function of the louvered area. The results are shown plotted in Figure 42. The results were used to determine the optimum area as 3.4 square feet. Corresponding to this area, the component operating range is between 44° F and 81° F.

Effective hemispherical emissivity of the louvers was taken as 0.15 for the closed position and 0.65 for the open. The emissivity relationship as a function of the blade opening angle was assumed to vary as,

$$Fe = 0.65 \cos (-0.851\, \theta + 76.6)$$

This relation agrees with the analytically predicted result published in the literature corresponding to a component (back surface) emissivity of 0.9 and blade surface emissivity of 0.05. In

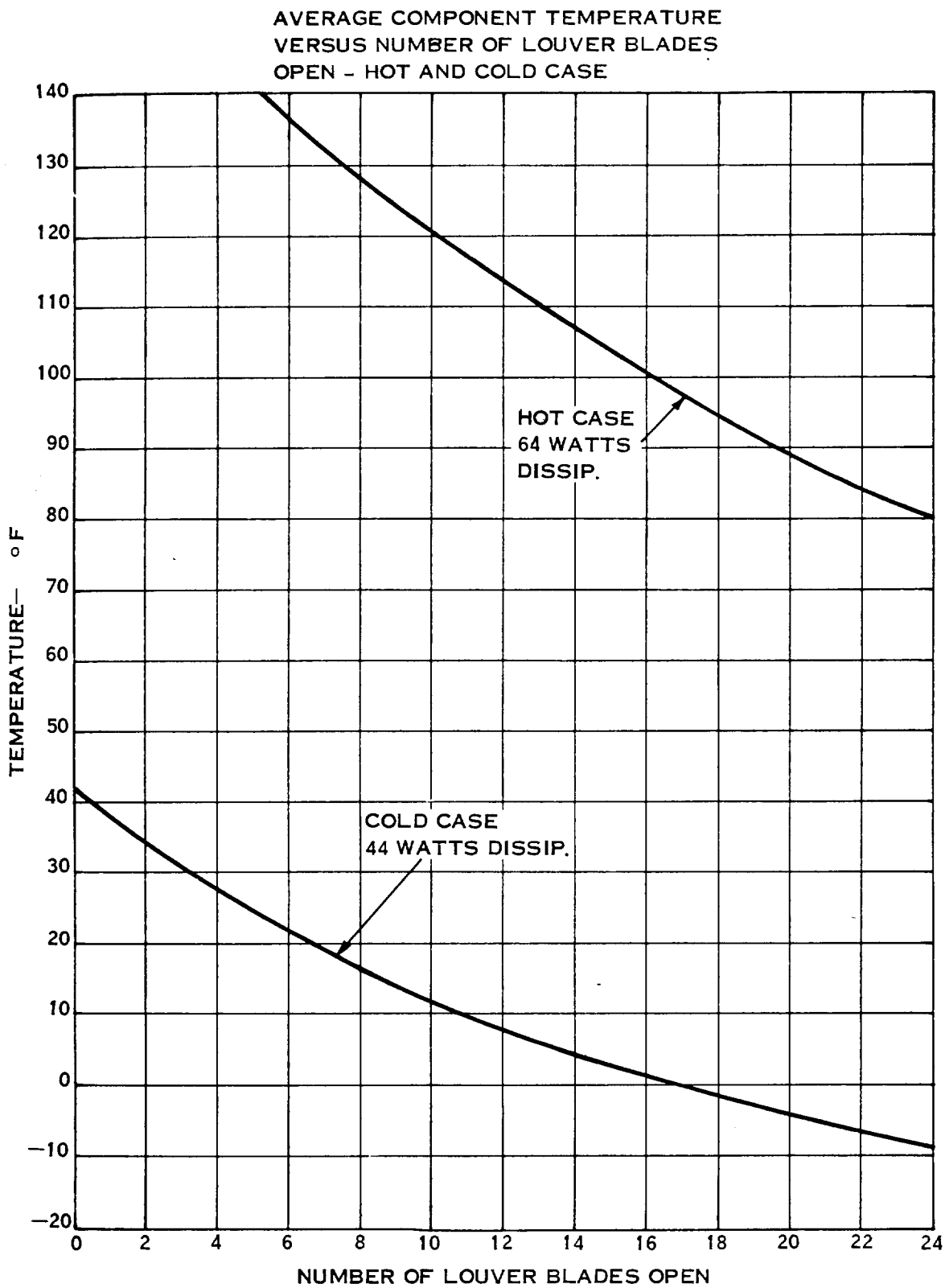

Figure 42. Average Component Temperature Vs Number of Louver Blades Open

the closed position, the effective emissivity is higher than that which was determined for the ideal system. This is due to the existence of radiation gaps between the individual blades and the frame at the sides and ends as well as conduction losses which exist at the frame mounting points.

Figure 43 shows how the average component temperature varies with the orbital average power dissipation of the components. The uppermost curve is for the hot case with the blades fully open; the lower is based on the cold case with the blades shut. Corresponding to a minimum dissipating of 45 watts in the cold case, the average temperature is 46° F. In the hot case, the maximum average dissipation of 62 watts, and the maximum component temperature will be 80° F.

c. Thermal Vacuum Orbital Simulation

A series of thermal vacuum orbital simulation tests were conducted in the Fairchild Hiller Bladensburg facility. The prime test objective was to validate analytical predictions concerning component temperature levels as a function of orbital sink temperature. The test also served to verify the adequacy of the thermal blankets and fiberglass isolator clips to maintain suitable temperature levels within various component dissipation ranges.

The test model consisted of the prototype electronics canister mounted in a prime center section modified only as dictated by chamber spatial requirements. In general, all tubular structural members were intact a distance exceeding two feet outward from the canister superinsulation interface.

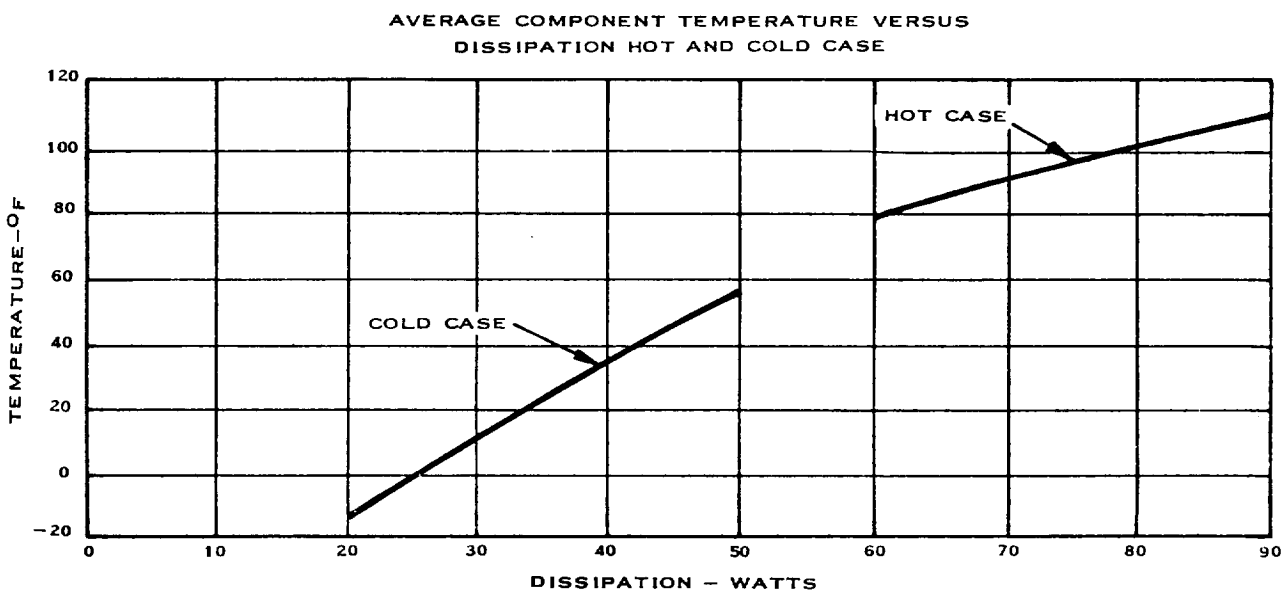

Figure 43. Average Component Temperature Vs Dissipation Hot and Cold Case

Orbital average sink temperatures corresponding to the computed incident fluxes were applied to external structure and canister surfaces through the use of 11 zoned electric heating blankets which completely enclosed the canister shown in Figure 44.

A total of 201 thermocouples were used to instrument the test model. Thermocouples were located on each component and throughout the mounting plate and structure so as to allow a verification of the various heat paths.

The tests were conducted in two phases: a cold case orbital simulation with minimum power dissipation corresponding to a 63% sunlight orbit, and a hit case simulation corresponding to a 77% sunlight orbit with maximum dissipation. During the transition between the "cold" and "hot" cases, all data were recorded. This enabled the verification of the computed thermal time constant.

The louver position was monitored by using a rotating sensing device. The device consisted of a shaft extension and disc combination which was affixed to the rotating blade. The disc had an elongated pie-shaped slot located eccentric to its axis of rotation. A light was passed through the slot and impinged upon a photoelectric cell, the output of which was then calibrated so that the electrical signal corresponds to the louver position. The device was mounted on every third blade. This enabled the louver position to be correlated with the component and heat sink temperature.

d. Failure Analysis

An analysis was conducted to determine the effect of louver blade failure on the average component temperature. Each spacecraft contains a total of 24 louver blade sets. In multiples to two, the blades were assumed to fail so as to maximize the temperature change; i. e., in the hot case, blades were assumed to fail closed, in the cold case, open. The results are shown in Figure 45 where it may be seen that the minimum allowable temperature of 30° F is maintained with three blades failed open. In the hot case, 120° F is not exceeded when 14 blades fail closed.

The average component temperature as a function of louver blade opening angle was investigated. The analysis was based upon an assumed case where all blades become locked at the same angle regardless of thermal conditions. The analysis applies only to this special type of failure or malfunction since for normal operation the blades will be completely closed in the cold case and fully open in the hot. Thus, the lower curve in Figure 45 gives the component temperature during the cold environmental extreme for various blade angles off of the completely closed position. Similarly, the upper curve applies only to the hot extreme and shows the effect of the louvers remaining partially closed. It must be noted that all blades are assumed to fail in the same angular position. Although this type of failure is a practical impossibility, the curves do provide an additional parameter for evaluating the sensitivity of the system.

2. Detector Panels

Detector panel temperature control is achieved by specifying a value of α, absortivity, and ϵ, emissivity, which will maintain a target sheet temperature above -160° F (300° R) and below 250° F (710° R) for all orbital environments which will be encountered throughout the mission. Target

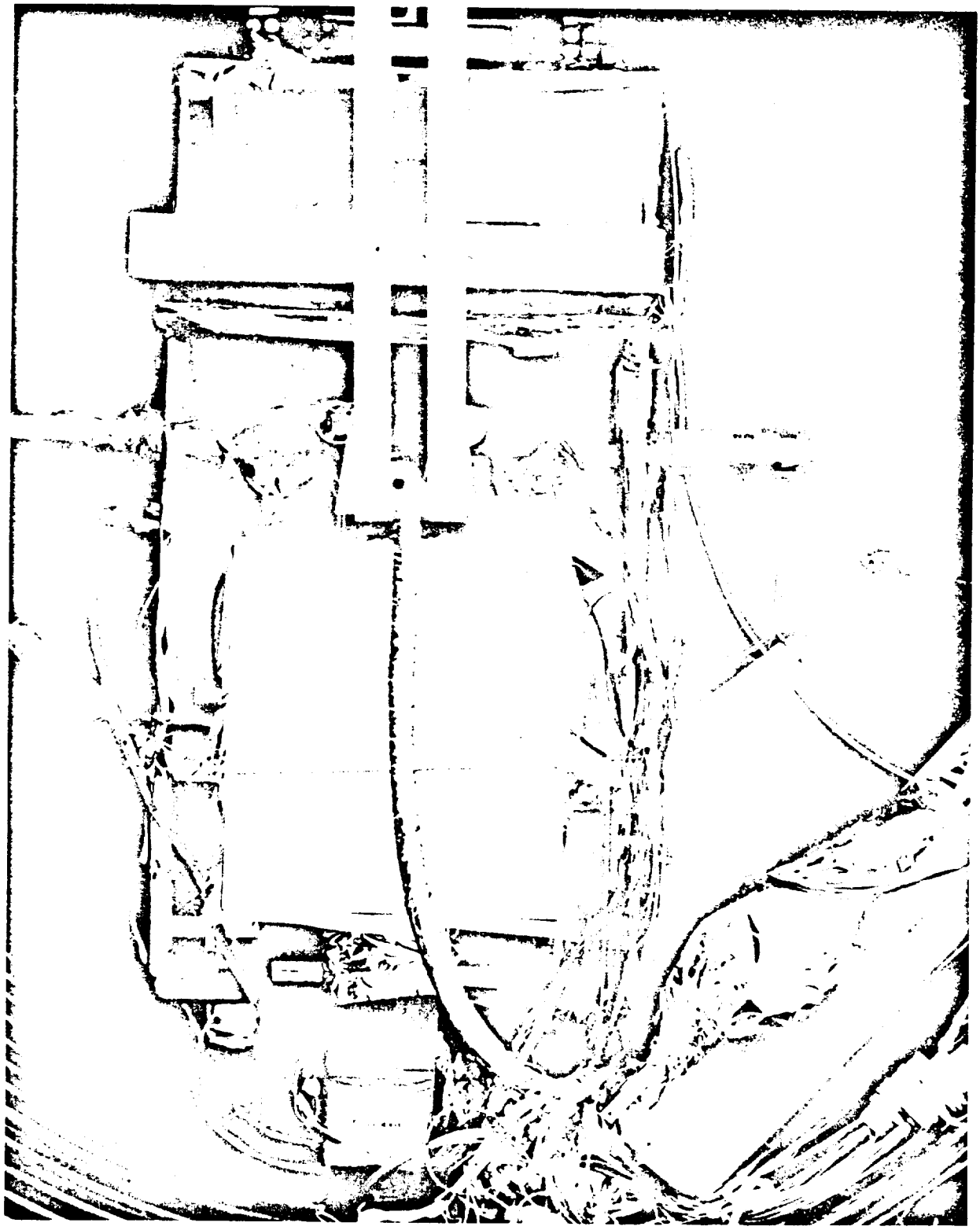

Figure 44. Electronics Canister Thermal Test

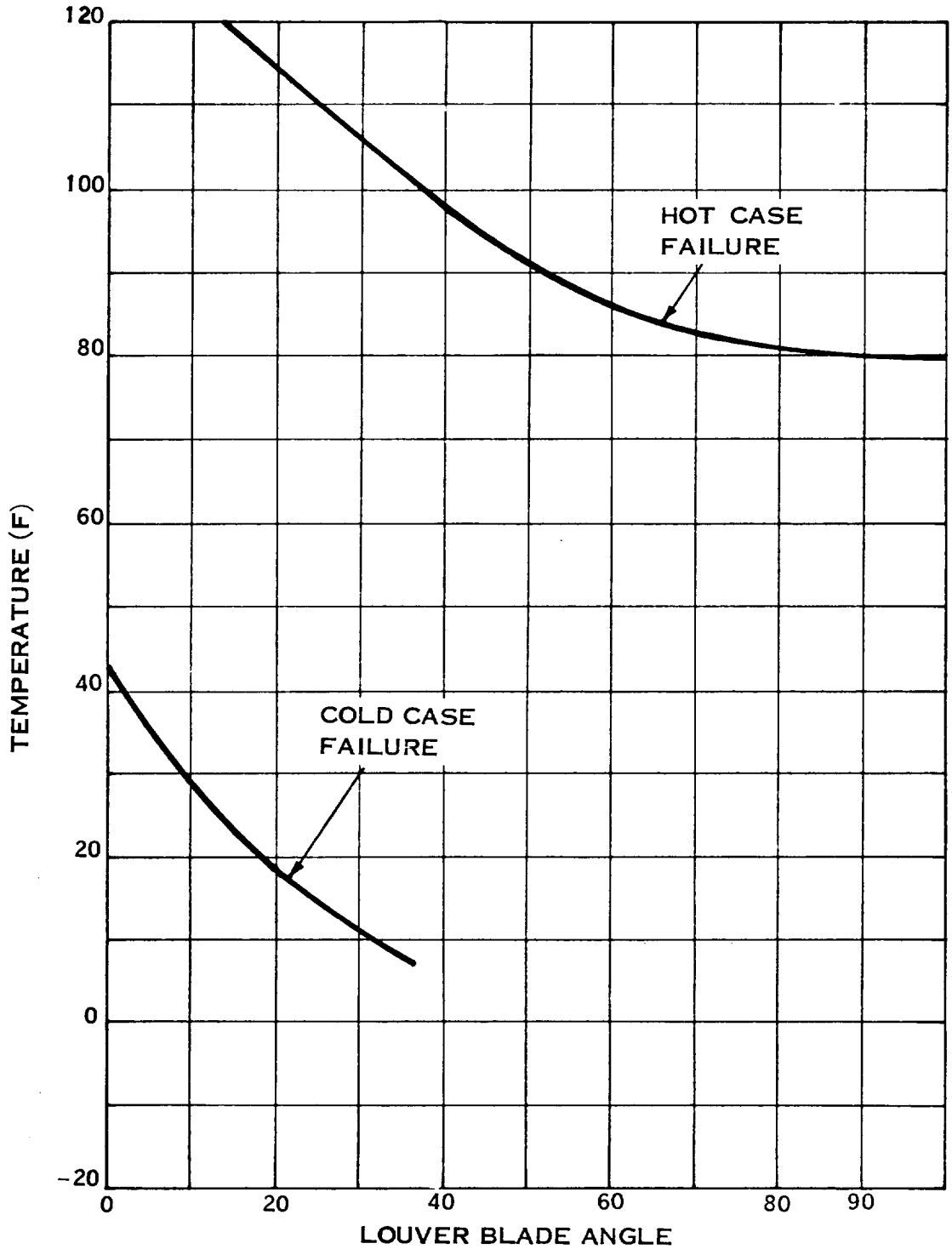

Figure 45. Component Temperature Vs Louver Blade Angle Hot and Cold Case (All Blades at Same Angle)

sheet temperature extremes, based on solar broadside and solar null orientations, are given as a function of α and ϵ in Figure 46 and Figure 47. These curves are identical to those published with MMC-TH-0061 and MTS-TH-0069.

An α/ϵs 1.0 was used as a criteria for thermal coating acceptability. It may be noted from the curves that this ratio will maintain an upper limit below 250° F (710° R) regardless of the individual values of α and ϵ. The lower temperature is a function of and will approach -160° F (300° R) as ϵ approaches 1.0. For high values of ϵ, the effective time constant is reduced and temperature changes with time $dT/d\tau$ became great. This may be observed from the curves where it is seen that the decay in temperature for a heated, sun facing panel is about 100° F/min. when it enters the earth's shadow.

3. Solar Panels

Preliminary transient one dimensional studies indicated temperatures greatly in access of the 60° C upper limit to efficient conversion due to large gradients across the panels in the sun-oriented solar broadside case. A three-dimensional evaluation was then considered. However, it was soon found that edge effects would not significantly affect panel thermal performance because there are too many cells too remote from the edge of the panels. Two alternatives to redesign were considered. These were:

1) Change of thermal design basis to a solar incident angle less than a broadside exposure.

2) Improvement of the honeycomb thermal conductance by removing the adhesive skrim cloth at the joint between the honeycomb and each facing sheet.

Initially, the first alternative was rejected because it was observed that in the case of normal solar exposure on one panel, the remaining three panels do not receive direct solar radiation. Although it was generally believed that a broadside sun-oriented mode was hardly more than a statistical longshot, the fact that a panel would have to bear the entire charging burden in such a case prevented the exclusion of this case from the design basis. Item 2 then came under close scrutiny. Skrim cloths are a manufacturing expedient. They are gauze cloths impregnated with adhesive and their use permits a neat, reliable bond between core and facing sheet with a controlled amount of adhesive. In lieu of skrim cloth, the adhesive can be applied directly to the facing sheet. This results in a reliable bond between core and facing sheet of much higher thermal conductance, but the panel weighs more due to an excess of adhesive. This weight penalty was found to be moderate. The skins were therefore deleted and the sun-oriented bases were upheld.

Analytical predictions of thermal performance showed that if the adhesive skrim cloths were excluded from the solar panel assembly,

- One-dimensional transient calculations based on a three-node model could accurately predict the cell orbital temperature history,

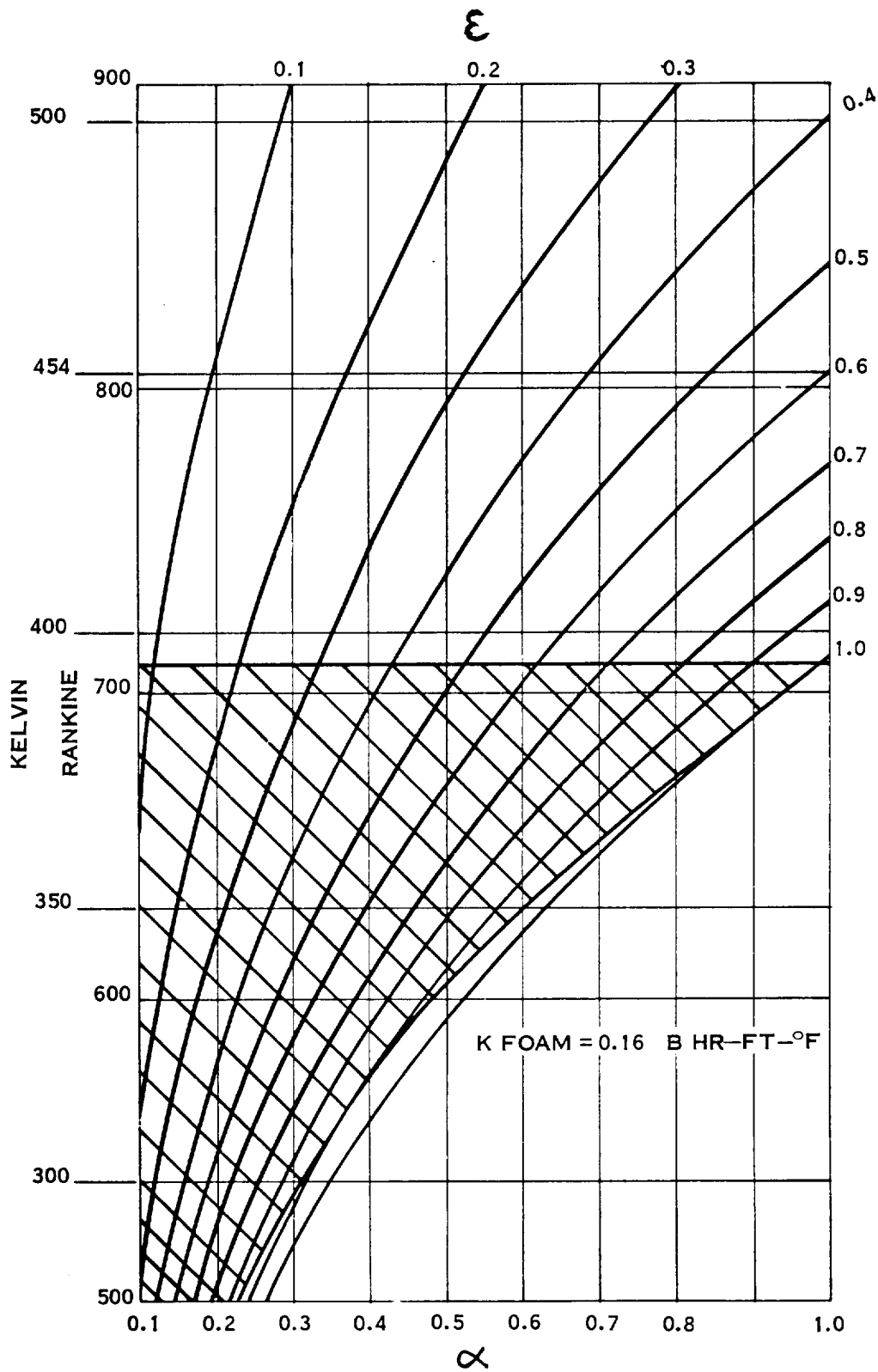

Figure 46. Detector Panel Maximum Orbital Temperature

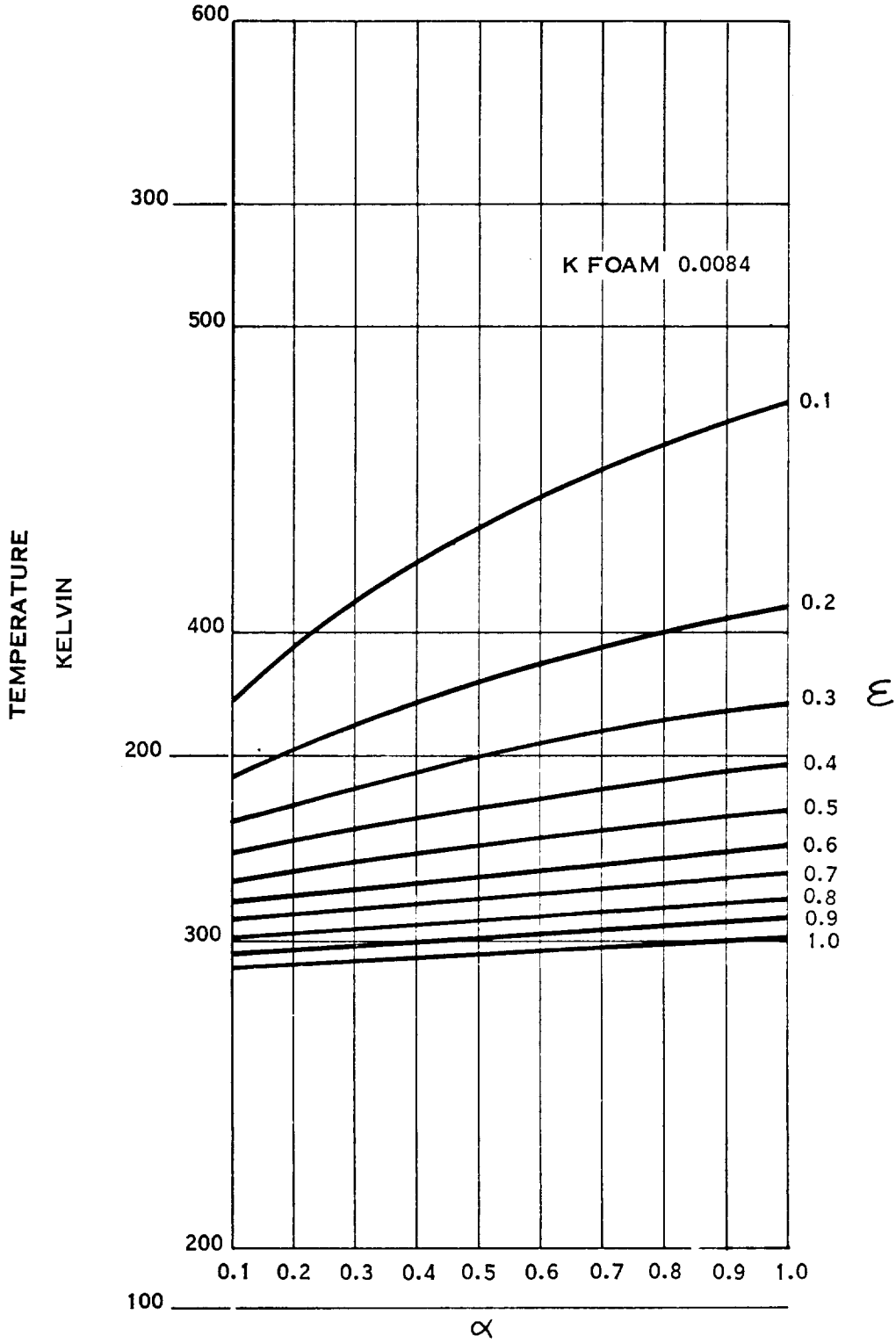

Figure 47. Detector Panel Minimum Orbital Temperatures

- The solar cell temperature will achieve a steady state value of 67° C but the average sunlight temperature is considerably less than 60° C, and

- The minimum cell temperature is -79°C in the solar null altitude; the gradients through the panel are negligible in this case.

Figures 48, 49 and 50 show the calculated orbital temperature histories for the lateral and forward solar panels.

4. Center Section Structure

The 2" x 2" x 0.093" dimension tube, of which the four main center structure members are fabricated was divided into 16 circumferential nodes, four on each side of the tube. Orbital heat fluxes, corresponding to a path stabilized hot case of 110-minute period and a vertically stabilized cold case of 104-minute period were entered as tabulated functions of time. These OHF schedules correspond to an earlier Pegasus orbit whose eccentricity is 0.55. Hence, there is a distinction between vertical and path stability. However, this in itself is hardly significant. The important difference is the percent solar exposure per orbit. Sun-oriented cases would result in more extreme structural temperatures and gradients, but this is not considered to be a realistic flight mode for Pegasus.

The analytical model for the tube showing node disposition is shown in Figure 51.

The results are shown in Figure 52 for the hot and cold cases. In both cases, gradients around the tube were negligible.

5. External Components

Analyses were performed on all externally mounted components. These include:

- STL Spectrometer
- Gearbox and Motor Assembly
- Antenna Cable
- Detector Panel Rubber Isolators
- Zener Diode Package
- Detector Panel Fuses
- Shaft Position Encoder
- IR Sensors

The analyses are discussed individually in DR-MTS-23, "Pegasus Final Thermal Design Report."

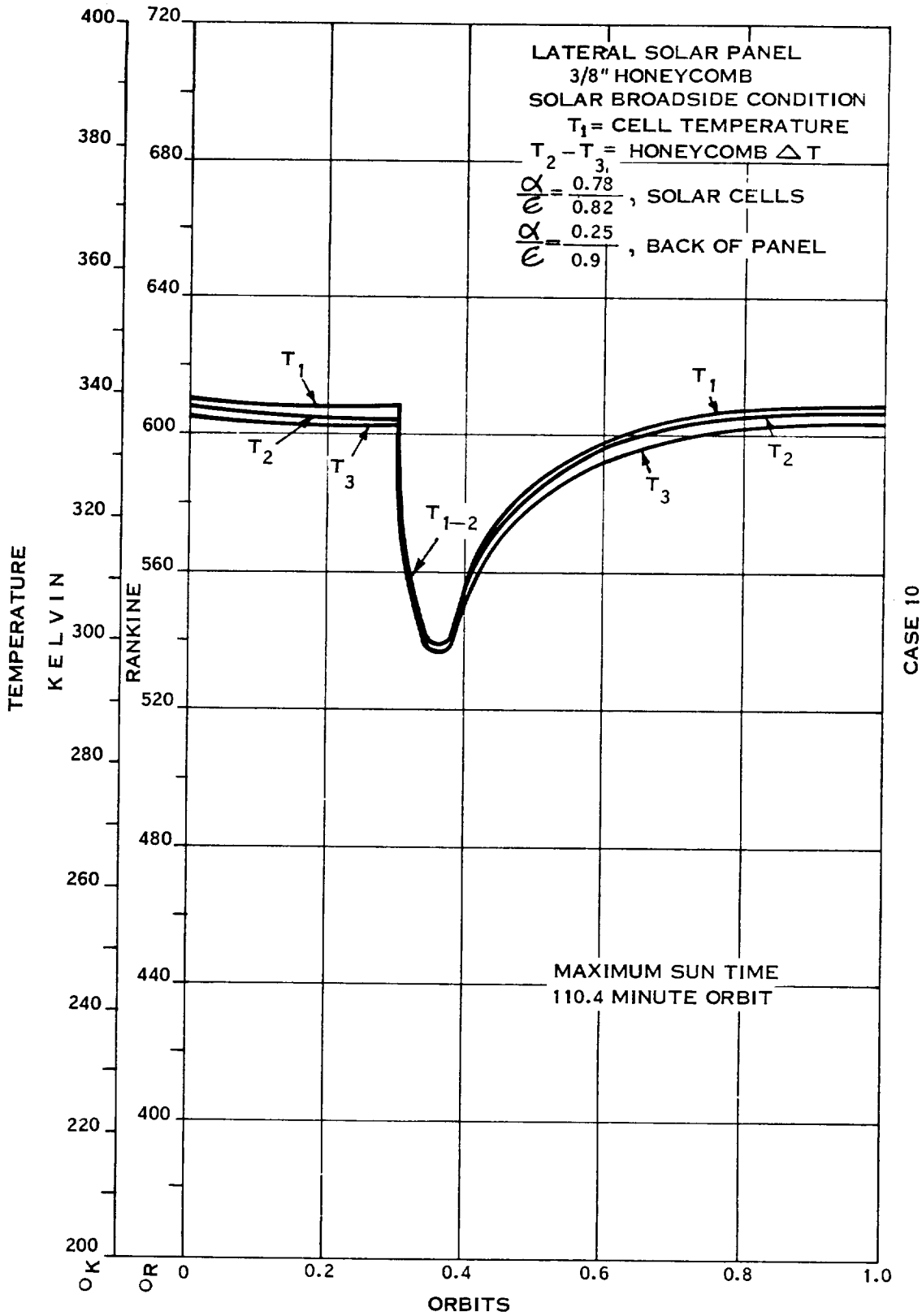

Figure 48. Lateral Solar Panel Calculated Orbital Temperatures

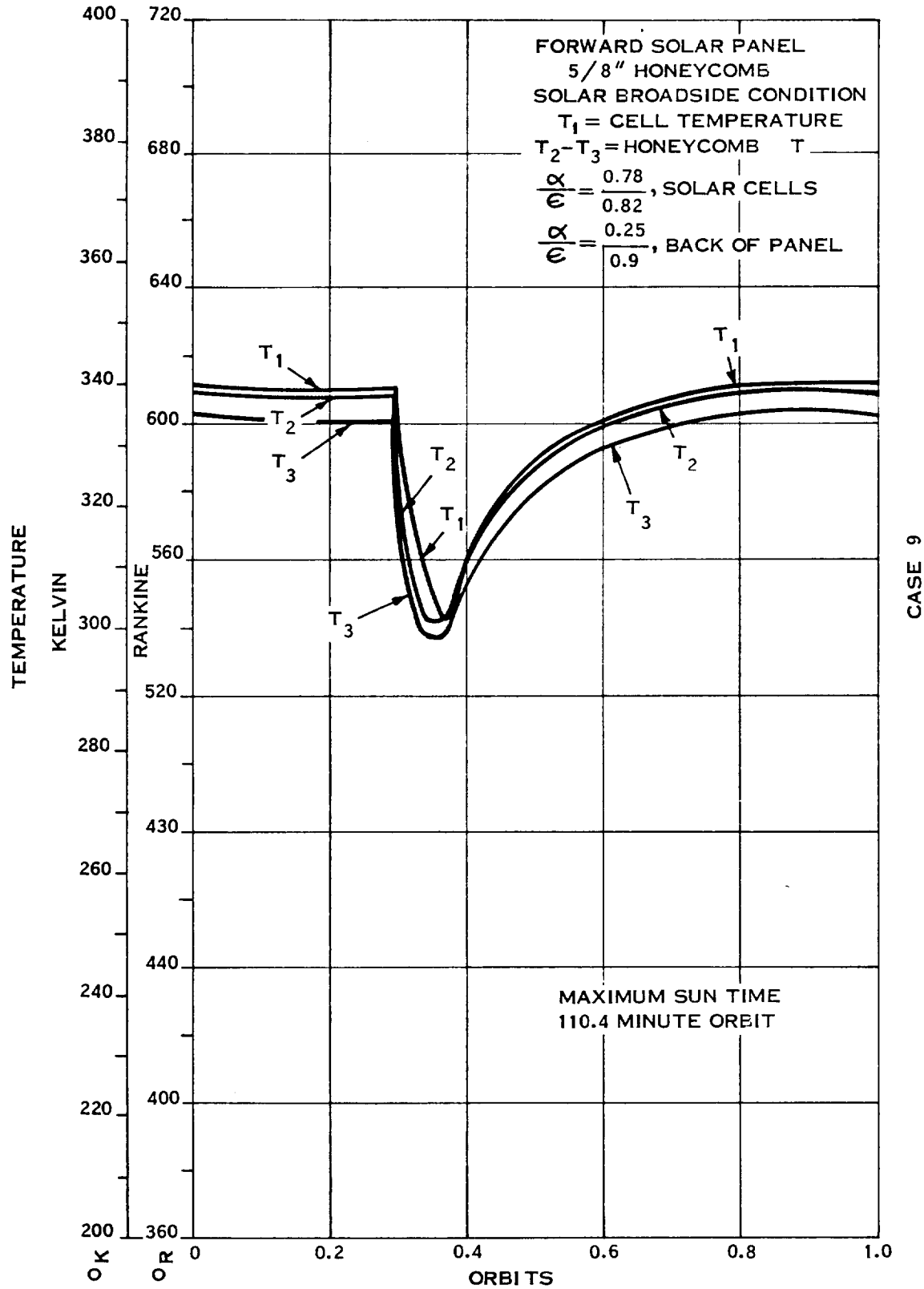

Figure 49. Forward Solar Panel Calculated Orbital Temperatures

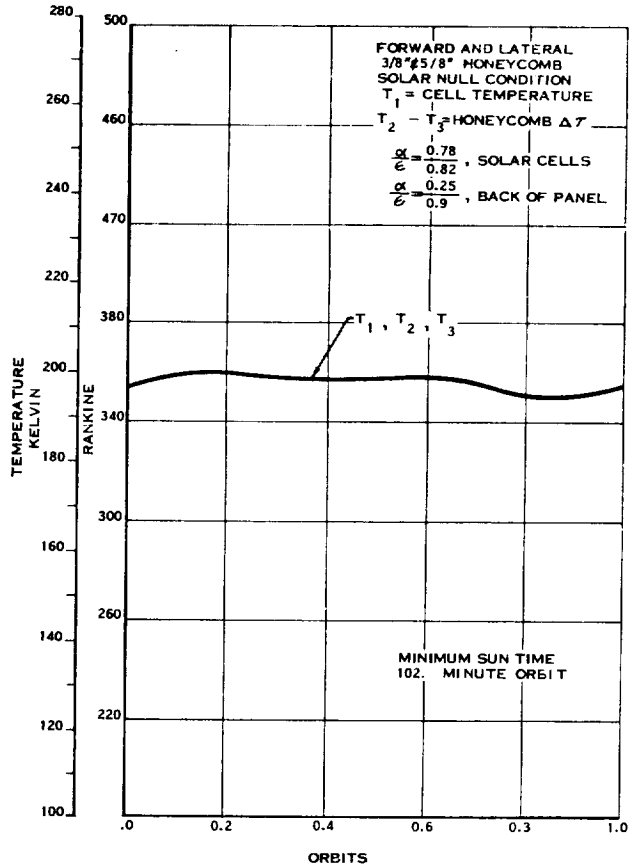

Figure 50. Forward and Lateral Panels Calculated Orbital Temperatures

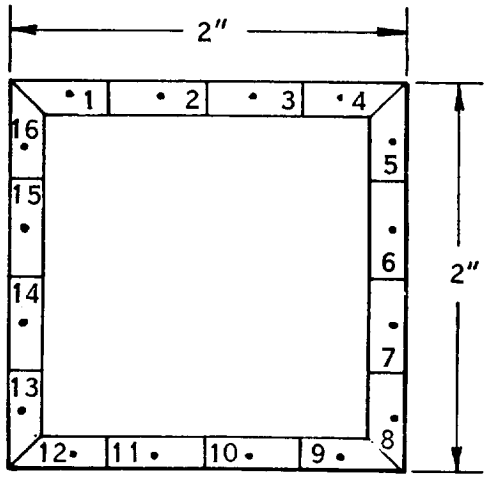

Figure 51. Analytical Model for Square Tube

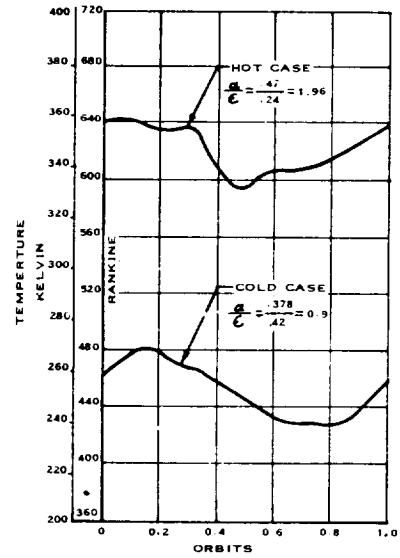

Figure 52. Center Section Two-Inch Square Tube Orbital Temperature Histories

F. Communication Subsystem

The communications subsystem design philosophy was established during the first three months of the Pegasus program. In the process of establishing the design criteria, it became apparent that the initial concepts should be modified to improve the subsystem reliability and versatility.

The extendable antenna was replaced by a pair of stub antennas mounted on the adapter section. This change increased the reliability of the communication subsystem by eliminating the antenna deployment mechanism. This modification also enabled r-f communications between the spacecraft and ground station before and during launch that was not possible previously.

During the design phase, the philosophy was to obtain a simple and reliable subsystem. This was achieved by using proven techniques, redundant circuits, and previously space proven components and equipments.

1. Original Configuration

The original communication subsystem consisted of a main telemetry channel for commanded transmission of stored data to the ground, a beacon telemeter for tracking, computation and continuous transmission of housekeeping data, a 70 command tone digital command system, and an antenna system for telemeters and command receivers. (See Figure 53.)

a. Main Telemetry Channel

The main telemetry channel data transmission rate is 2048 bits per second. This rate was compatible with the readout capability of the storage system and allows three passes through 30,096 bits of storage in approximately 45 seconds. PCM/FM modulation was employed, and conventional limiter/discriminator demodulation of the carrier performed by the ground receiving station.

The telemetry transmitter generated 2 watts of r-f power, of which at least 1 watt was radiated. The power requirement was based on the requirement of quieting the 30 kc noise band-width ground receiver with ample service margin when the spacecraft is at maximum range.

The transmitter for the main telemetry channel was subcontracted to the Montreal division of RCA and is almost identical to other units previously used in NASA satellites.

b. Beacon Telemetry Channel

The beacon telemetry channel provides the following:

1) An unmodulated carrier component at a sufficient power level for ground tracking of the spacecraft.

2) A 1024 cps bi-phase modulated, 128 bit per second, PCM subcarrier for continuous transmission of required cumulative count data and intermittent transmission of orientation and temperature data.

3) A 730 cps plus or minus 7.5 percent PAM modulated subcarrier channel for transmission of analog housekeeping data.

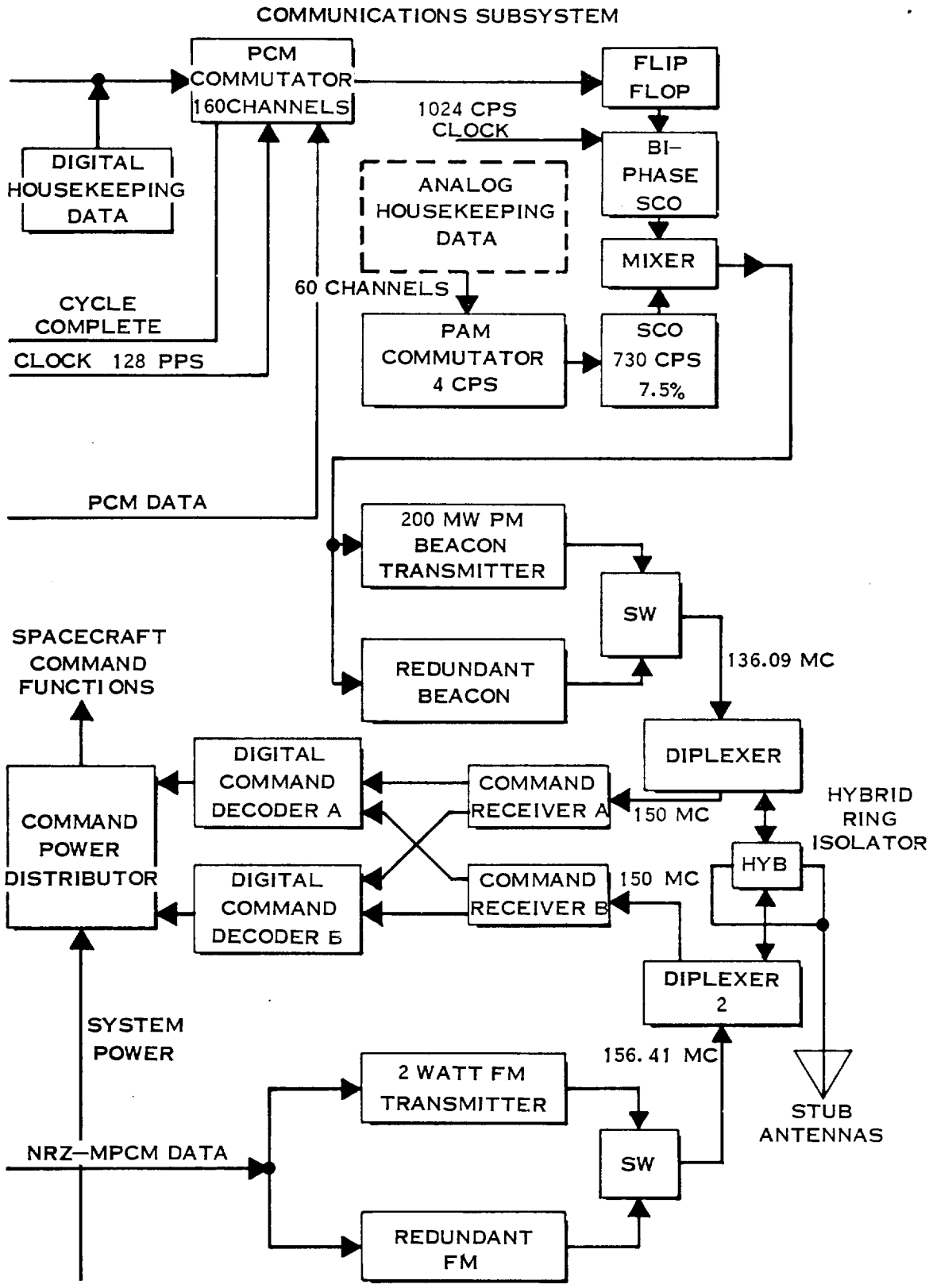

Figure 53. Communication Subsystem Block Diagrams Original Concept

Seventy milliwatts of power would remain in the carrier component for reliable tracking. Phase modulation was used for the subcarrier components. An additional tracking requirement is that no modulation sidebands exist within 500 cps of the carrier component.

c. PCM Frame Format

The PCM frame format of the originally proposed system used a 128 bit frame with a variable word length. PCM commutator would be stopped periodically for insertion of specific 40 bit data words, and an additional random halting of the commutator for the insertion of impact words.

This format could not be handled by the Minitrack ground decommutation equipment to provide the desired rapid scanning capability. Therefore, the PCM frame format was changed to a 160 bit length composed of a 30 bit synchronizing word followed by 13 words, each 10 bits long. This new PCM frame format is fully compatible with the Minitrack decommutation equipment.

The signal processing function now included in the bi-phase subcarrier oscillator is the conversion of the RZ pulse train format from the PCM commutator into NRZ-M format. The need for the "OR Gate" function has been eliminated by the PCM frame format change discussed above.

d. PAM Format

The analog housekeeping data is commutated at a rate of four samples per second. The commutator has a 60 channel frame which includes synchronizing and calibration channels.

Both the PAM and PCM commutators and the analog subcarrier oscillator were subcontracted to Applied Electronics Corporation. The beacon telemetry transmitter was supplied by Spacecraft, Inc.

e. Command Channel

A PCM/AM/AM command system with a 70 command capability was used. This system has been in operation at all Minitrack stations since April, 1962. PCM decoder units were subcontracted to the Consolidated Systems Corporation. Command receivers were subcontracted to AVCO Manufacturing Corporation.

The 70 command functions required by the MTS payload is listed in Fairchild Hiller specification OP-MMC-6.

2. Final Configuration

During development of the communications subsystem it became necessary to modify the subsystem concept slightly. These modifications are listed and explained in Table 5.

a. Physical Description

The final communications subsystem consists of an antenna array comprised of two bent stubs mounted 180 degrees apart on the payload adapter skin, a hybrid, three diplexers, a line filter network, and two low pass r-f filters, mounted on the center section framework, and electronic units mounted on

TABLE 5. COMMUNICATION SUBSYSTEM CHANGES

Change	Reason
Elimination of the command power distribution in the command channel.	The command power distributor unit was eliminated to improve the canister electronic packing arrangement. The components originally located in the distributor were relocated in the units that were to be sequenced.
Addition of a third diplexer in the beacon channel.	The beacon transmitters generated excessive noise at the command frequency and caused loss of command sensitivity. This problem was corrected by passing the transmitter output through an additional diplexer that filtered out excessive noise. The additional diplexer was also incorporated into the prototype communications subsystem.
Addition of a line filter in the beacon channel.	Instability of the beacon transmitter was identified during Pegasus A canister testing. The instability appeared in the form of a drop in power at the assigned frequency and the appearance of spurious components. Investigation indicated that this condition was caused by the comparatively narrow bandwidth over which the transmitter terminations approximate a 50 ohm resistive load. Outside of this range, the load becomes reactive and, under certain conditions, can produce parametic oscillations in the beacon. This problem was corrected by incorporating a stabilizing line filter on Pegasus A; this change was also incorporated on Pegasus B and C.
Elimination of the receiver-decoder cross coupling network.	Elimination of the receiver-decoder cross coupling network is described in paragraph F4e of this section.
Modification of the decoder-receiver power feed.	The power distribution to the decoders and receiver was modified to improve the reliability of the command channel. Originally, the receivers obtained power from the regulator bus in the power controller energized by the regulator switchover network. The modification results in the decoders and receiver obtaining power from the two regulator buses in the battery controller.
Replacement of the deployable antenna with stub antennas.	This change is described in paragraph F4a of this section.
Beacon frequency change.	The beacon frequency was changed from 136.89 mcs to 136.59 mcs. This change was incorporated on Pegasus C only.
Beacon telemetry modulation index change.	The beacon telemetry modulation index change is described in paragraph F4f.

TABLE 5. COMMUNICATION SUBSYSTEM CHANGES (Continued)

Change	Reason
Decoder address change.	The decoder address change was made to Pegasus C to reduce the possibility of inadvertently commanding Pegasus A and B spacecraft from: 1000 0100 (main channel) 0000 1001 (standby channel) to: 0101 1111 (main channel) 1100 1101 (standby channel)
PCM frame length change.	The PCM frame length change is described in paragraph F2c of this section.

the electronics canister. The relative location and interconnection of the various units are shown in Figure 54. The antenna elements and frame-mounted units are interconnected by means of coaxial cables. Interconnections between all units in the canister are made via canister wiring harnesses. All electronic circuits within the canister are of solid state construction and are packaged in shielded metal containers which, in turn, are mounted on the canister framework.

b. Functional Description

As shown in the functional block diagram of Figure 55, the communications subsystem is divided into three major channels: beacon, command and main FM transmitter. The beacon channel is further subdivided into three separate functions: digital data (which includes digital housekeeping, cumulative hit count, and a duplication of data stored in core memory which is transmitted via main FM transmitter), analog data (principally from housekeeping sensors), and the carrier for tracking. The command decoder is selected by an address received with ground command. The main FM transmitter is a single channel with redundant standby transmitter. All three of the major channels use a common antenna system.

(1) Beacon Channel

The two data functions of the beacon channel are introduced via the PCM and PAM commutators. The PCM commutator introduces digital data, and the PAM commutator introduces analog data into the channel.

The PCM commutator is an electronic device with 160 segments. Each commutator segment equals one bit at a rate of 128 pps. A complete commutator cycle lasts 160/128 or 1.25 seconds. Each cycle comprises 16 ten-bit words. These words include three ten-bit frame synchronization words, three ten-bit cumulative hit count words, 60 bits of digital housekeeping data, and one 40-bit data word. The commutator receives both parallel and serial data. Frame synchronization is a fixed word built into the commutator; cumulative hit count and digital housekeeping data are connected in parallel to assigned segments; and the 40-bit data word is serially fed in synchronization with the last 40 commutator segments. The output of the commutator is a train of digital pulses which feed the bi-phase modulator.

The PAM commutator is a solid state electronic commutator with 60 segments or channels and a scanning rate of four segments per second. Thus, a complete commutator cycle or frame consumes 15 seconds. Analog data are fed to the commutator in parallel in the form of voltage analogs of the functions measured. Inputs are conditioned at the data sources to produce proper analogs prior to being fed into the commutator. The commutator output is a series of voltage levels which are used to amplitude modulate the subcarrier oscillator. Fourteen of the 60 PAM commutator segments are used for the analog of detector recharge current. The remaining segments carry analog housekeeping data such as temperatures, voltages and currents at significant points throughout the capsule.

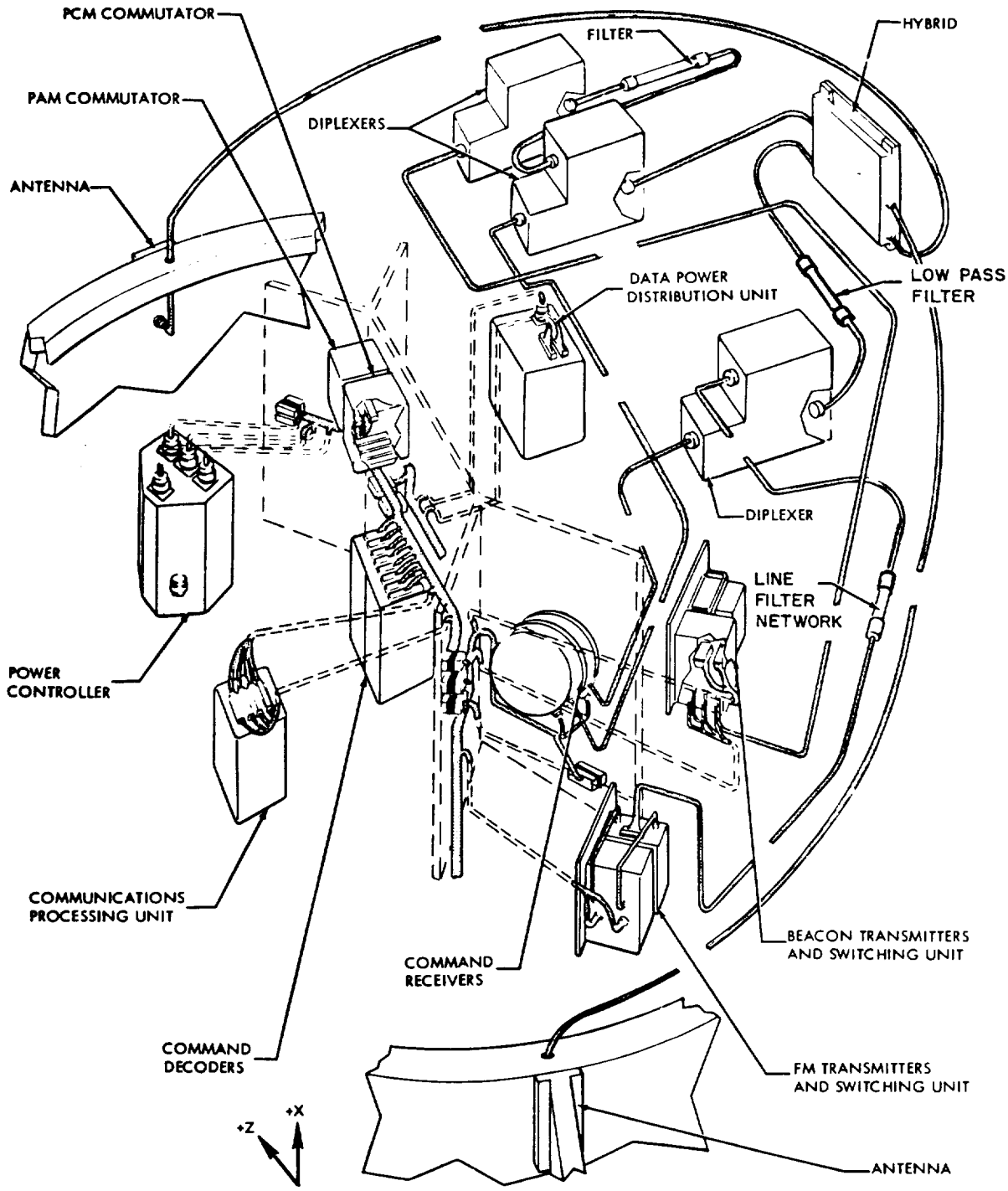

Figure 54. Location of Communication Subsystem Units

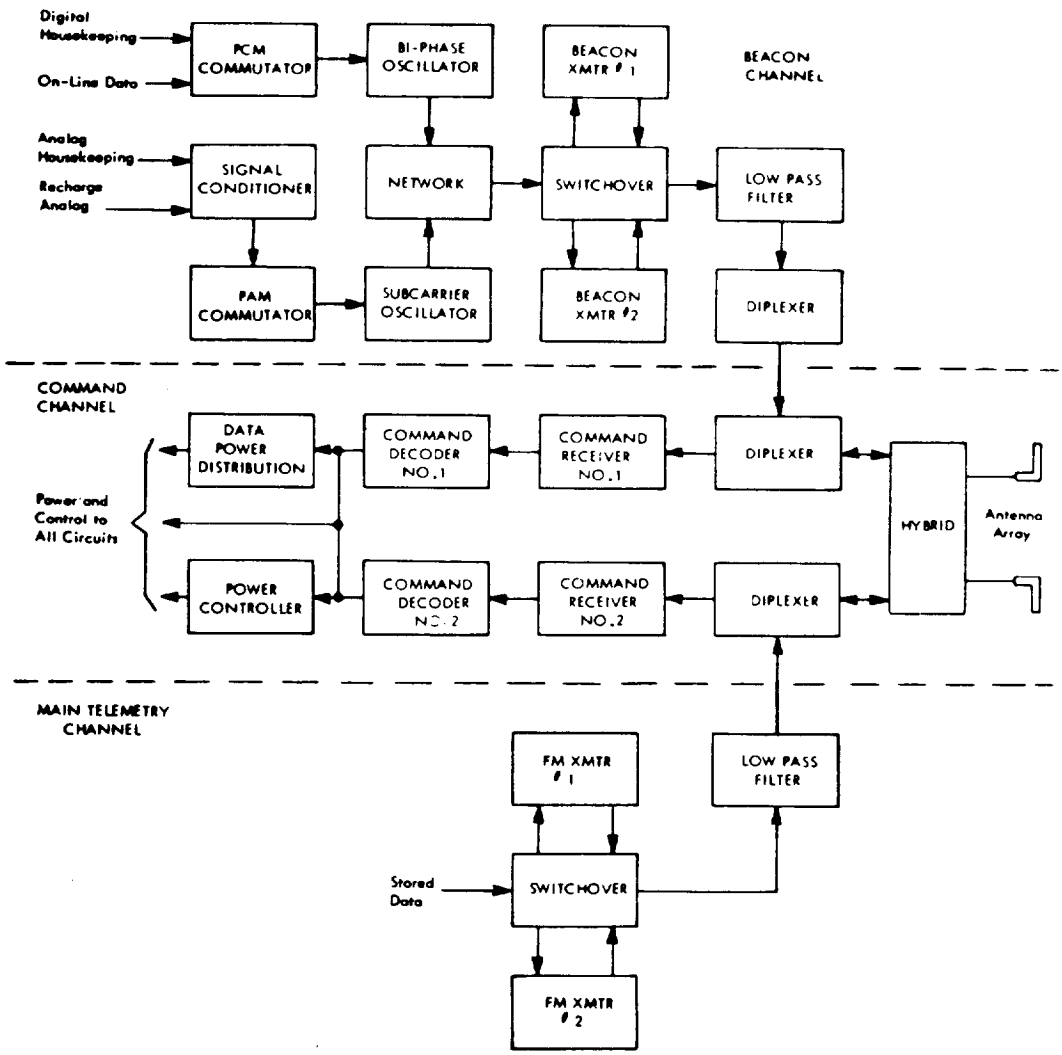

Figure 55. Communication Subsystem Block Diagram

The bi-phase modulator, which is a synchronous switch located in the communications processing unit, operates at a frequency of 1024 cps. The modulator is phase controlled by positive pulses received from the PCM commutator. Commutator pulses are diode coupled to the modulator so that each time a positive pulse appears there is a phase reversal (180° shift) in the output. Thus, if there is a phase reversal in a given bit time, that bit is interpreted as a logical "1"; if there is no phase change during a given bit time, that bit is interpreted as a logical "0".

The subcarrier oscillator, associated with the PAM commutator, operates at a frequency of 730 cps. The amplitude of the oscillator output varies in proportion to the amplitude of the voltage analogs applied to it from the PAM commutator. The output of the subcarrier oscillator is combined with the output of the bi-phase oscillator in a resistance network. The combined signal is applied to the beacon that has been selected for operation via the beacon switchover circuits.

The beacon transmitter provides 200 mw of r-f power at a frequency of 136.89 mcs. This signal is modulated by the PCM bi-phase subcarrier and the PAM subcarrier oscillator to produce a phase modulated subcarrier. Sufficient power remains in the unmodulated carrier component for tracking purposes. The beacon transmitter output is transferred to the antenna array via filters, diplexers, and hybrid.

(2) Command Channel

Command channel instrumentation consists of two AM receivers, two decoders and units actuated by the commands. The duplication of receivers and decoders provides two identical paths for information flow, and one or both may be selected by addressing either or both decoders at the beginning of a command message. Both receivers are in operation continuously. The receivers are solid-state devices tuned to a fixed frequency of approximately 150 mcs. The input signal is received via the antenna array, hybrid and diplexers. The received signal for a logical "1" consists of a 150 mcs carrier, amplitude modulated by a 7.8 kcs signal; an unmodulated carrier represents logical "0". Commands are transmitted in binary code; the normal format for a command word is to repeat the address twice and the command three times.

The detected binary coded address and command are transferred to both decoders. The decoder which is addressed will be enabled to process the command. The decoder receives the binary coded command in serial form and translates from binary to decimal to produce a command pulse on the appropriate one of its seventy output lines.

The decoder output pulse is a positive going square pulse of 25 v p-p amplitude and 30 m/sec duration (nominal values). This is adequate to set the latching relays. Decoder outputs are utilized throughout the capsule wherever control by ground command is required. One of their principal functions is the control of power and power distribution which is accomplished principally by setting and releasing latching relays in the power controller and data power distribution units.

There are provisions for 70 commands, 68 of which are used with two designated as spares.

(3) Main Telemetry Channel

The main telemetry channel consists of two solid-state FM transmitters and a switchover unit. Data from core storage is fed to the selected transmitter, via the switchover unit, at a rate of 2048 bits per second. The data input to the transmitter frequency modulates the r-f output which is coupled to the antenna via filter, diplexer and hybrid.

The telemetry transmitter generates two watts of r-f power, of which at least one watt is radiated. The power output fulfills the requirement of quieting the 30 kc noise bandwidth ground receiver, with ample service margin, when the spacecraft is at maximum range.

Because of the relatively high transmitter power consumption, the "on" time is limited to approximately 1. 5 minutes per memory readout. This allows six complete passes through the core memory, which is adequate for data reliability.

3. Subsystem Testing

The primary effort in the development of the communications subsystem was to achieve a high degree of reliability by using simple and proven components. The development of the components are described in this section as follows:

- Antenna
- FM Transmitter
- Beacon Transmitter and RF Units
- Decoders and Receivers
- Bi-Phase and Mixer
- Switching Units
- Antenna

a. Antenna

The boom-mounted turnstile antenna originally proposed had two major disadvantages. First, the deployment mechanism became complex, and the reliability associated with the erection of the antenna structure became a major concern. Second, there was no practical method to test the antenna or communication subsystem without resorting to r-f switching devices. Due to these difficulties, it was decided that antennas on the adapter section should be considered.

Model studies of 2, 3 and 4 bent stubs on the adapter section showed very good pattern performance; it was decided that this approach would be used.

(1) Antenna Pattern Tests

The bent stub antenna was selected because this configuration prohibits nulls that may occur in both parallel and perpendicular polarizations at the same point in space. The experimental results are shown in Figures 56, 57, and 58. These experiments show that the requirements for uniform coverage are satisfied.

During the tests, experimental pattern investigations received the greatest amount of attention. A photograph of the antenna pattern model in position for a pattern measurement is shown in

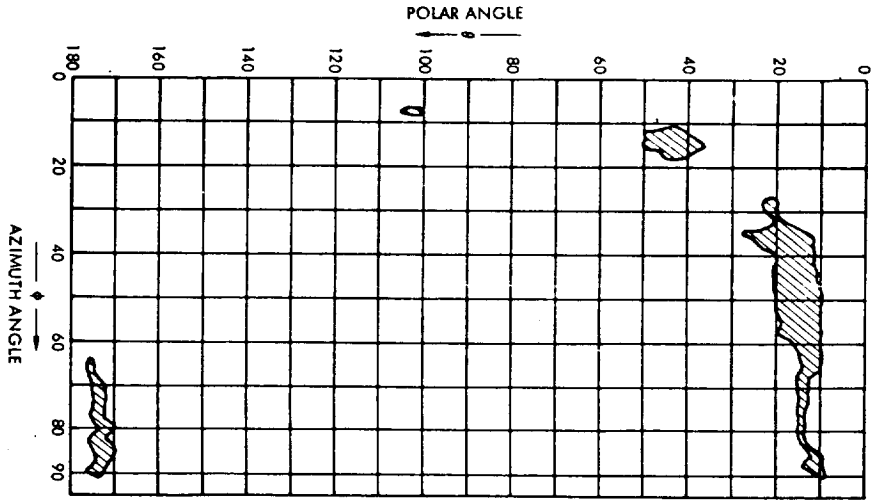

Figure 56. Coverage From Two Element Array

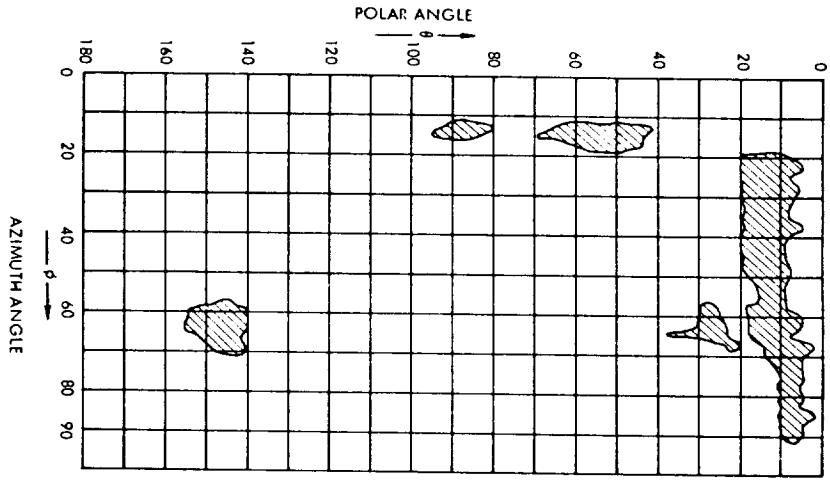

Figure 57. Coverage From Four Element Array

Figure 59, some details of the anechoic chamber and turntable can be seen in this picture.

Three antenna configurations were investigated in detail:

- Two element array, antennas located 180 degrees apart.
- Three element array, antennas located 120 degrees apart.
- Four element array, antennas located 90 degrees apart.

The elements of the arrays were fed with equal amplitude signals. For the two element array, phasing was 180 degrees. The other two configurations were phased to produce circular polarization along the capsule's longitudinal axis. Figure 60 illustrates the type of data obtained. The voltage scale is linear.

The results of the investigation are summarized in the coverage diagrams of Figures 56, 57 and 58. The shaded areas are those regions of space in which the pattern gain for both polarizations is

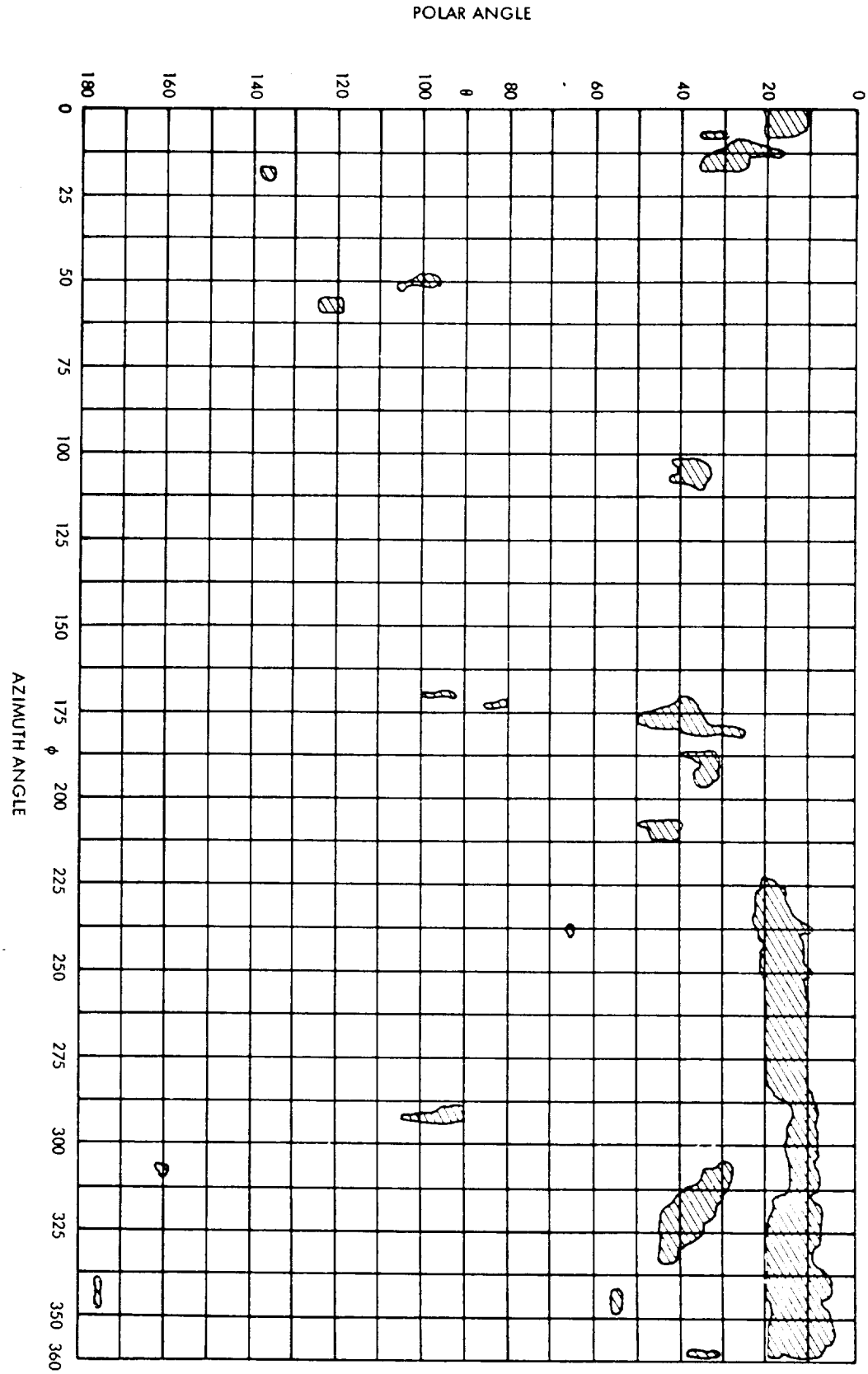

Figure 58. Coverage from Three Element Array

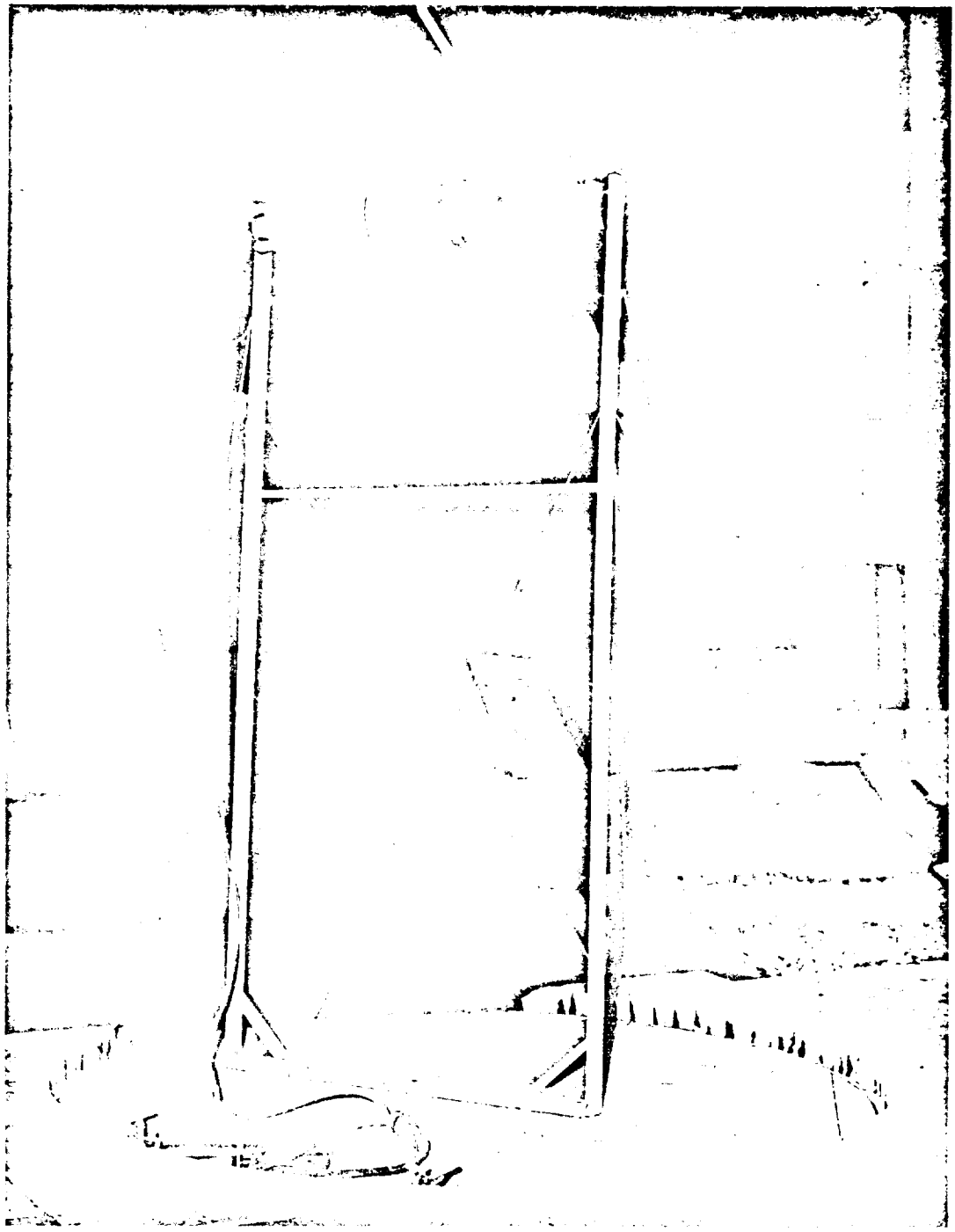

Figure 59. MTS Model in Anechoic Chamber

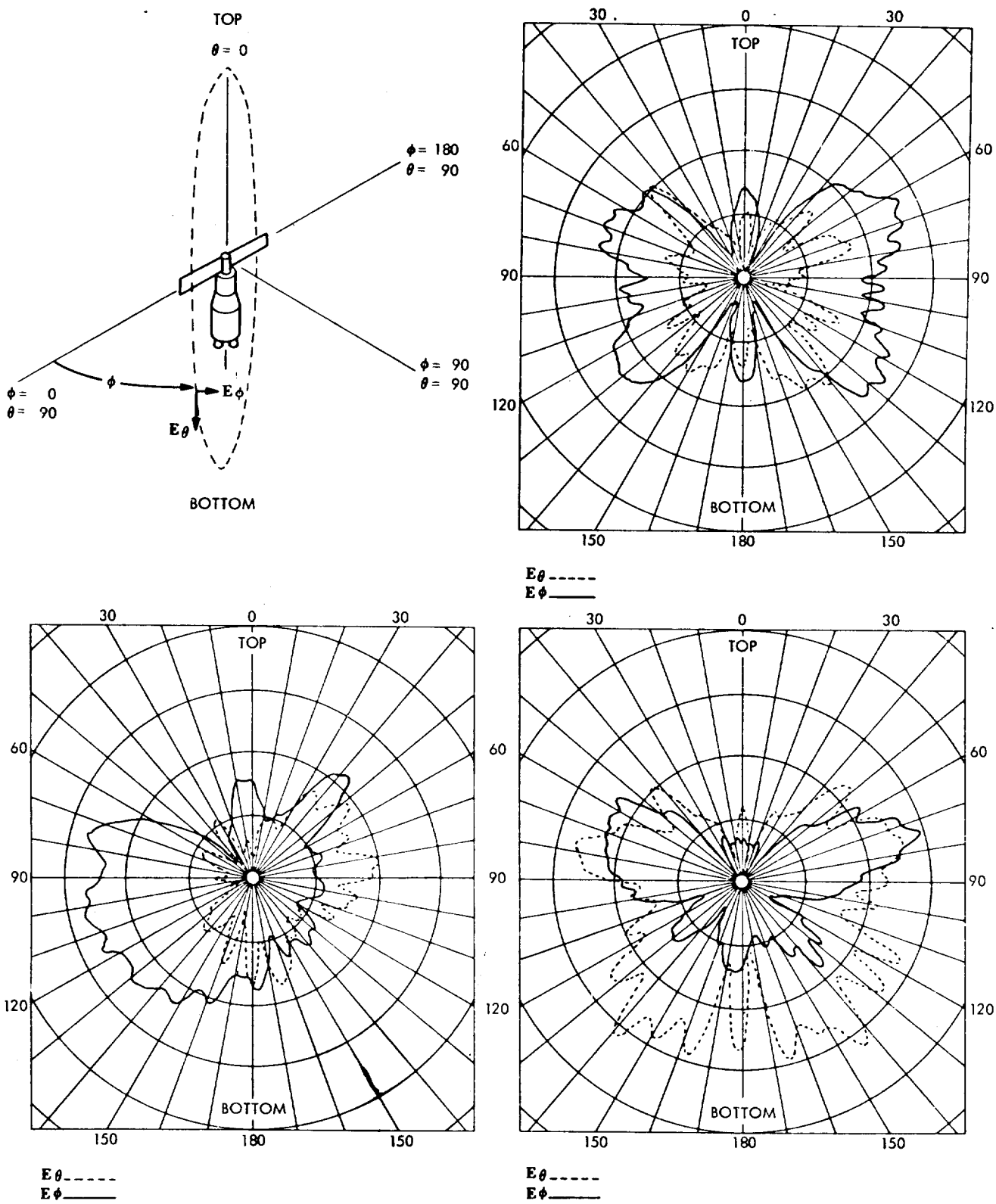

Figure 60. Typical MTS Antenna Patterns

12 db or more below pattern maxima. Pattern maxima for a two element array are approximately 6 db above isotropic. The basis for the -12 db level used as the criterion for the coverage diagrams is a +4 db communications system power margin, so that for all orientations of the capsule outside the contours, the power margin is 4 db or more (>2.5:1). In the coverage diagrams, two octants are shown for the two element and four element arrays; all eight octants are shown for the three element array.

The coverage obtained from the two element array is slightly better than that obtained from the three element array, which is in turn slightly better than that obtained from the four element array. However, in each instance the coverage exceeds 94 percent, a value considered acceptable. Neglecting fading effects, and assuming random capsule orientation, pattern results for the adapter-mounted stub antenna indicate that reliable communications with the capsule will exist at least 94 percent of the time. It is felt that this result indicates the feasibility of the configuration.

(2) Antenna Measurement Program

With the two element bent stub, adapter-mounted antenna chosen as the final design, an investigation of this particular configuration was conducted to provide final antenna design data. The investigation followed the pattern outlined below. The subjects of investigation were:

1) Effect of antenna design configuration on radiation pattern for two-stub array: rectangular bent monopole — effect of height/length ratio; tapered bent monopole — effect of angular variation.

2) Effect of location on antennas on radiation pattern for two-stub array: angular location and station location.

3) Isolation between proximate antennas — variation with separation: tandem mount and side-by-side mount.

Principal plane cuts were made at θ = 90 degrees, ϕ = 180 degrees, at polarization of $E\theta$, $E\phi/\phi$ = 90 degrees, 270 degrees with zero and 180 degrees phase separation. The investigations included the stub dimensions used in previous tests as well as others consistent with Sandia (AGOJ, three-wire) and Canoga (broadband notch) designs. Departure from axial direction for the measurements were 0 to 20 degrees in 10 degree increments.

For the single antenna design configuration study, longitudinal cuts were made at ϕ = 0 to 90 degrees in either 5 degree or 7-1/2 degree increments and zero and 180 degree phase separation. The angular locations for the antenna are indexed by stringer locations 2(17) and 4(20). Two longitudinal principal plane cuts were made at ϕ = 0; 180 degrees; ϕ = 90 degrees, 270 degrees. For these, angular location were indexed by stringer location 1(17). Station locations are prescribed as (1) antenna leading edge 40 inches aft from leading end of adapter section and (2) antenna trailing edge 20 inches forward from aft end of adapter section.

Bench tests were made on a full scale preliminary assembly.

The pattern range used had the following characteristics:

1) Range length: 50 feet

2) Transmitted power: 1 to 2 watts

3) Recording: Polar or rectangular, logarithmic

4) Recorder scale: 5 millivolts, 40 dbs (full scale)

5) Detector constant: 100 millivolts/milliwatts, -13 dbm, full scale

6) Transmitting horn gain: 20 dbs

7) Dynamic range: 16 to 19 dbs

A gain reference level was established for use on every pattern set (day-to-day check) by use of a standard gain horn in conjunction with a calibrated step attenuator. It was desirable that this signal level be maintained as a fixed recording level on all records. (The recording level corresponding to zero directivity should then be equal for all records and can be closely estimated by correction of the gain reference level by the difference accountable to insertion losses for the two antenna circuits involved.

Phase separation between antennas was controlled by insertion of line stretchers, one in each antenna branch circuit. To avoid random errors in repeated adjustment, line stretchers were preset to lengths of the differences required for all desired values of phase separation. Unbalance in amplitude due to insertion loss of the line stretcher itself was reduced to a negligible value by this procedure.

The pattern program was as shown in Table 6.

b. Main Telemetry Transmitter

Two prototype telemetry transmitters were received and bench tested satisfactorily. Preliminary system evaluations showed satisfactory operation of the transmitters. However, the transmitters exhibited a desensitizing effect on the command channels. The cause and methods for elimination of this interference were investigated. Under certain conditions of load, spurious oscillations were observed which are dependent on line lengths and phasing. After preliminary investigation at Fairchild Hiller Space Systems Division, a complete r-f system was supplied to RCA, Montreal, for use in evaluation of transmitter tuning. RCA conducted a series of tests to determine if the transmitters could be made stable while operating into the MTS r-f subsystem. After retuning, the transmitters stability was achieved for any and all phases of the load, and for temperature and supply voltage variations. It was concluded that retuning of the transmitters solved the problem of spurious oscillation; no deviations or waivers to specifications were necessary.

c. RCA Transmitter Investigation

The material below is a summary of the RCA investigation into spurious oscillation of the MTS telemetry transmitter while operating into the MTS system.

The purposes of this investigation were to determine the stability of the transmitter while operating into the MTS r-f subsystem under the following conditions:

TABLE 6. ANTENNA MEASUREMENTS PROGRAM RESULTS

Investigation	Subject	Cuts ($\theta = 90°$)	Polarization	Phase Separation	No. of Patterns
1(a)	Minimum of three design configurations	$\phi = 0°$ $\phi = 90°$	E_θ E_ϕ	0 180°	24 (min)
1(b)	Three values of stub angle	$\phi = 0$ $\phi = 90°$	E_θ E_ϕ	0 180°	24
2(a)*	Single angular location; two station locations	$\phi = 0°$ $\phi = 90°$	E_θ E_ϕ	0 180	24
2(b)	Single antenna design; two angular locations	$\phi = 0$ to 90° x 5°	E_θ E_ϕ	0 180°	240

*Investigation 2(a) preceded investigation 2(b), since station location for 2(b) should be that yielding the better results in terms of coverage.

1) After tuning the transmitter to meet the specification of the RCA acceptance test,

2) After retuning the transmitter if it proved unstable in condition 1,

3) With the transmitter operating under temperature extremes of -5° C and +55° C and power supply voltages of 24, 28 and 32 vdc.

It was also necessary to determine if retuning would result in degraded performance of the transmitter.

Three flight model transmitters were selected for this investigation and were adjusted to meet the acceptance test requirements of RCA A 1584862, Revision 1. Then each transmitter, in turn, was connected to the MTS r-f subsystem with a line stretcher inserted between the transmitter and the low-pass filter. The transmitters were then tested according to the ATP for minimum output power, maximum input current, and stability for all phases of the load, introduced by varying the length of the lines through at least a half wave length of 136 mc.

The same measurements were then taken with the line stretcher connected between the diplexer and the load. The load for all trials were selected at the load box for a VSWR of 1. 1, 1. 5, and 3.

After completion of the testing in ambient environment, the transmitters were subjected to temperature extremes and retested in exactly the same manner.

Finally, all transmitters were again subjected to the regular RCA acceptance test.

The results of the study showed that transmitter serial number F1 showed spurious oscillations with a VSWR of 1.5 and 30. Transmitter serial number F5 remained stable even with a VSWR of 3, and serial number F2 showed spurious oscillation with a VSWR of 3, although only with the line stretcher between transmitter and diplexer. Tables 7 and 8 summarize the data collected during the tests.

The data show it is possible to tune the RCA transmitters for stability while operating into the MTS r-f subsystem and a load having a VSWR of 1.5. Only minor changes in electrical characteristics have resulted from retuning the transmitters; performance meets all specifications. The stability test and antenna-conducted spurious output test used in this study have been incorporated into the acceptance test procedure for flight and spare units. For more details of this study, refer to RCA test report, "An Investigation on Spurious Oscillations in a MMC Telemetry Transmitter While Operating Into MMC RF System," dated April, 1964.

d. Beacon Transmitters

During the development of the beacon telemetry channel, two deficiencies were noted that could cause possible malfunctions in the beacon channel. They were as follows:

1) Noise. The beacon transmitters were found to generate excessive noise at the command frequency and cause some loss in command sensitivity. To remedy this problem, the output of the transmitter was passed through an additional diplexer, which filtered out the excessive noise; the additional diplexer was also incorporated into the prototype subsystem.

2) Instability. Potential instability in the beacon transmitter was identified during Pegasus A canister testing. The instability appeared in the form of a drop in power output at the assigned frequency and the appearance of spurious components. Investigation by FHC and the manufacturer, Spacecraft, Incorporated, indicated that this condition was caused by the comparatively narrow bandwidth over which the Pegasus transmitter terminations approximate a 50-ohm resistive load. Outside this range, the load becomes highly reactive and, under certain conditions, can produce parametric oscillations in the beacon. To remedy this problem, a stabilizing line filter was built and installed on Pegasus A; the design was also incorporated on Pegasus B and C. No symptoms of instability have been observed since incorporation of this unit.

e. Command Decoders and Receivers

The major change associated with these units was the elimination of the receiver-decoder coupling network. The receiver-decoder coupling network previously planned was no longer used. Each command receiver now operates a command decoder; no cross-coupling is utilized. This change reduced the amplitude variations which the decoder must contend with and thereby improve the reliability of decoder operation. Elimination of the cross-coupling reduces reliability a negligible amount by comparison. Output circuits in the decoders have been changed to

TABLE 7. TRANSMITTER PERFORMACE

Condition	Transmitter Serial No.		
Load VSWR = 1.5 : 1	F1	F2	F5
Output power from MTS load (watts)			
Minimum Output, Normal tuning 25°C	2.70	2.50	2.60
Minimum Output, After retuning 25°C	2.75	2.50	(not retuned)
Minimum Output, After retuning -5°C	2.75	2.55	2.75
Minimum Output, After retuning 55°C	2.25	2.30	2.40
Input Current (milliamperes)			
Maximum Input Current, Normal tuning 25°C	358	344	366
Maximum Input Current, After Retuning 25°C	368	329	(not retuned)
Maximum Input Current, After Retuning -5°C	356	316	379 (not retuned)
Maximum Input Current, After Retuning 55°C	307	343	350 (not retuned)
Stability = S Unstable = U			
Stability, Normal tuning	U	S	S
Stability, After retuning 25°C	S	S	S
Stability, After retuning -5°C	S	S	S
Stability, After retuning +55°C	S	S	S

eliminate the need for silicon control rectifiers which may be susceptible to gamma radiation. Improvements were also made in the timing circuits, and investigations into the use of automatic threshold control was carried out. Due to an increase in bit error rate, as a result of broadening the input filter bandwidth, the automatic threshold control was not included in the decoder. During a data subsystem qualification test, the decoder exhibited unreliable operation at +55° C. Tests at the subcontractor's facility repeated the condition and led to a "worst case" analysis of the decoder memory strobe circuits. Results indicated a design deficiency at +55° C which could be corrected by use of a different transistor in the circuit and a lower tolerance collector resistor. Although this revised circuit was built and evaluated, the +20° C to +30° C controlled temperatures aboard Pegasus A appear to be sufficiently below +55° C to make such a change to Pegasus B and C decoders not necessary.

TABLE 8. ANTENNA CONDUCTED SPURIOUS OUTPUT

Transmitter F1	
17 Mcs - 64 DB below carrier	102 Mcs - 55 DB below carrier
34 Mcs - 60 DB below carrier	119 Mcs - 47 DB below carrier
51 Mcs - 67 DB below carrier	153 Mcs - 51 DB below carrier
68 Mcs - 58 DB below carrier	272 Mcs - 50 DB below carrier
85 Mcs - 68 DB below carrier	408 Mcs - 42* DB below carrier
Transmitter F5	
17 Mcs - 68 DB below carrier	102 Mcs - 56 DB below carrier
34 Mcs - 74 DB below carrier	119 Mcs - 44 DB below carrier
51 Mcs - 66 DB below carrier	153 Mcs - 52 DB below carrier
68 Mcs - 64 DB below carrier	272 Mcs - 55 DB below carrier
85 Mcs - 74 DB below carrier	408 Mcs - 57 DB below carrier
Transmitter F2	
17 Mcs - 63 DB below carrier	102 Mcs - 60 DB below carrier
34 Mcs - 64 DB below carrier	119 Mcs - 44 DB below carrier
51 Mcs - 65 DB below carrier	153 Mcs - 52 DB below carrier
68 Mcs - 54 DB below carrier	272 Mcs - 50 DB below carrier
85 Mcs - 68 DB below carrier	408 Mcs - 51* DB below carrier

* The level of third harmonic emissions have been reduced to within present specification limits since the date of this study by a new technique involving the dressing of a capacitor lead in the output stage.

f. Bi-Phase, SCO and Mixer Circuits

The modulation index of the beacon transmitter was increased from the original value of 0.3 to the new value of 0.67. This change increased the power in the side-bands (which contain digital and analog housekeeping information) and in the carrier (which is used for tracking the spacecraft). The change also takes advantage of the 100 mw higher power output of the beacon transmitter (220 mw at the most unfavorable temperature and supply voltage). The new modulation index resulted in a radiated carrier power of 70 mw, a value estimated to be ample. The remainder of the radiated power (50 mw) is divided equally between sidebands produced by the two subcarriers. The overall result was to increase the radiated carrier power by 1.4 db over that of a 100 mw beacon using a 0.3 modulation index, while increasing the sideband power by the large value of 10 db. The increase in modulation index was accomplished by a very simple change in the resistive network, (mixer) which combines the outputs of the two subcarriers. Comparison of the power outputs are shown in Table 9.

The amplitude of the bi-phase oscillator was found to vary considerably with changes in the supply voltage. In addition, it was found that triggering of the flip-flop in the bi-phase oscillator could be made more positive and reliable by changes in the steering diodes. These changes have been incorporated in the units.

g. PAM and PCM Commutators

During prototype electronics canister testing, extraneous pulses were observed to emanate from the PCM commutator. These pulses, while of short duration, were long enough to trigger the flip-flop in the bi-phase modulator. They therefore, appeared as binary "ones" and hence constituted a malfunction of the commutator. The vendor, AEC, has studied the changes necessary to eliminate the extraneous pulses. The engineering changes were reviewed and found satisfactory. All PCM commutators were re-worked and re-tested after incorporation of the fix.

The final version of ETM switch unit was completed and tested. The highest measured insertion loss for the r-f switch was 0.2 db. VSWR's of the r-f channels were less than 1.05 at the transmitting frequency. These channels were also monitored for evidence of voltage breakdown under a 5 watt load; they showed no signs of breakdown at ambient temperature and pressure. The present performance is considered entirely satisfactory.

4. Subsystem Performance

Performance of the communication subsystem is described by referring to the operation of the communication subsystem aboard Pegasus A, B and C spacecrafts. These spacecrafts were launched on 16 February, 25 May and 30 July, respectively. The only problem reported with the communication subsystem has been the intermittent operation of the PAM/PCM channel on Pegasus B which occurred three days after launch.

On 5/28/1532Z, the Santiago tracking station reported the loss of the beacon PAM information on Pegasus B. Command of the alternate beacon channel did not rectify this problem.

TABLE 9. BEACON CARRIER AND SIDEBAND POWER COMPARISON

Component	Beacon Power Modulation Index		Improvement
	0.3	0.67	
Beacon power output*	100 mw	220 mw	+3.4 db
Rf carrier	50 mw	71 mw	+1.5 db
PCM subcarrier**	2.4 mw	24 mw	+10 db
PAM subcarrier**	2.4 mw	24 mw	+10 db

* Measured output at worst conditions of temperature and supply voltage
** First order sidebands only

The beacon was turned off until 5/29/2202Z when beacon 1 was reconnected. PAM and PCM were present until 5/29/2342Z when PCM was lost. PCM was still missing when beacon 2 was selected. Preliminary investigation revealed that the element common to PAM and PCM was the system clock. On 6/1/1930Z selection of clock 1 brought PCM back. Alternate selection of clocks showed that the PCM was inoperative with clock 2. Clock 1 was again selected and PAM and PCM were normal until 6/15/1028Z when PAM was lost.

On 6/18/1634Z, clock 2 was selected which dropped out the PCM information. Clock 1 was then again selected which brought back the PCM, but no PAM. This condition remained 7/5/1117Z when PAM returned for one complete real timepass. The condition since then is that PAM data has appeared randomly. However, the PAM data has been such as to indicate that the spacecraft system is functioning normally.

Comprehensive tests undertaken by Fairchild Hiller could not determine or simulate the exact conditions experienced on Pegasus B. Attempts to duplicate the failure on existing equipments were unsuccessful in that no single or common mode could be found that produced the condition experienced on Pegasus B. However, it was noticed that the 128 cps clock drive was higher for the PCM commutator.

It is hypothesized that this condition is caused by an intermittent high resistance contact in the system, caused by wetting of the spacecraft by rain during spacecraft installation on Pad 37. This hypothesis is strengthened by the fact that both the PAM and PCM commutators failed the salt spray tests. Diagnostic tests revealed that the commutators ceased functioning at voltages below 40 volts. This much voltage drop could be caused by high impedance mentioned above. Details of this investigation could be found in Fairchild Hiller document SSD-SE-060.

No other communications subsystem malfunctions have been reported.

The detailed description of the test performance of the communication units can be found in the following reports:

Beacon Clock, TR-MTS-10

FM Transmitter Switching Unit, TR-MTS-20

Beacon Switching Unit, TR-MTS-21

Shaft Encoder, TR-MTS-35

Line Filter, TR-MTS-36

Communication Processing Unit, TR-MTS-37

Command Receiver, AVCO 125.39

FM Transmitter, RCA 1584858

PCM Commutator, Applied Electronics, J-234-4464

PAM Commutator, Applied Electronics, HO-4-291A-TP

Decoder, Consolidated Systems, NP 1395

Beacon Transmitter, Spacecraft, WO-319001-QTP-2

Diplexer and Hybrid Ring, Motorola, 2911QTP-1

Low Pass Filter, Motorola, 2956-QTP-1B

G. Structure and Deployment Subsystem

The structure and deployment subsystems eventually used in Pegasus A, B, and C are quite similar to the proposed design.

Throughout the program refinements were incorporated into the various subassemblies to improve the design in accordance with information obtained from test. Some of the major improvements incorporated were:

- The addition of a lateral restraint at the top of the center section structure. This restraint is attached to the forward end of the Apollo service module.
- Revised method of support of the wing panels by the center section structure.
- An increase in the number of wing stack restraint system from one on each side to two per side.
- Disassociation of the solar panel operating mechanism from the Torque shaft motion and operation of the solar panel operating mechanism by springs alone (except for restraint of the forward solar panel).
- Elimination of the antenna deployment mechanism.

1. General Discussion

The Pegasus configuration was dictated by five basic requirements:

- 2150 square feet of meteoroid detector panels
- The use of capacitor-type meteoroid detector panels
- Envelope during launch limited to nine-foot diameter and a length above the Service Module separation plane of 15-1/4 feet
- Pegasus to remain attached to the S-IV stage to insure long-life orbit
- Pegasus weight not to exceed 3307 pounds.

Consideration of several possible configurations led to the selection of "wings" as best satisfying the requirements of the mission. The 96-foot span places much of the meteoroid detector area remote from the attached S-IV stage, thereby minimizing its shadowing effect. In addition, the number of folded sections or wing frames is relatively small and the deployment system is simple and straightforward.

a. Wing System

The structural arrangement was governed primarily by the area requirement of the meteoroid detector panels (Figure 61). The area was distributed into 208 detector panels, approximately 20" x 40" in area with 16 panels to a full wing frame. Twelve full wing frames and two "half" frames (eight panels each) permit the entire area to be folded within the nine-foot diameter launch envelope. Three sets of hinge fittings join each wing frame to the adjoining and/or to the center

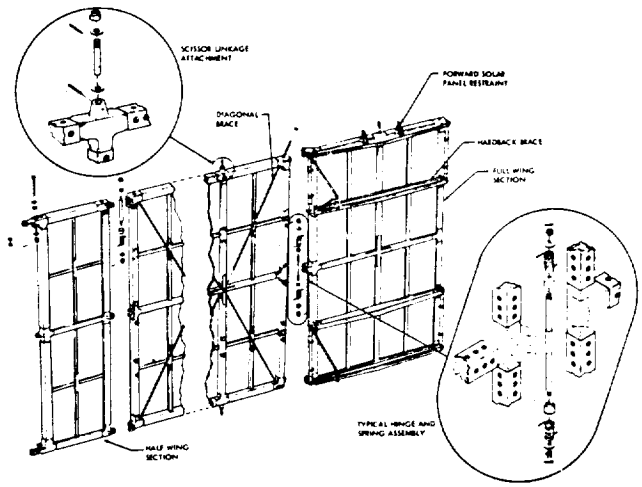

Figure 61. Wing Frames

section.

The hinges alone are inadequate to support the wings during the boost phase, so tongue-and-groove fittings were added to transmit the axial loads from wing frame to wing frame and then to the center section. The tongues and grooves disengage immediately after initiation of wing deployment. Diagonal tension rods on each wing frame transmit shear loads across the frame and directly into the hinge fittings.

The wing frames are held in a tightly stacked assembly by four sets of restraint trusses, each of which is preloaded against the center section with a load of 8000 pounds. Each pair of trusses is "hooked" together by a tongue-and-groove fitting which is held in the engaged position by a bolt and separation nut. The pre-tensioning is accomplished by a turnbuckle, and the load application is monitored by strain gauges on the trusses. Firing of the separation nuts allows the tongue-and-groove fittings to rotate apart, and the wings are then free to deploy (Figure 62).

Wing deployment geometry is controlled by a series of scissor links pivoted at the top and bottom centers of each wing frame. The inboard link and inboard wing frame are "geared" by pushrods and bellcranks to a torque shaft in the center section. Full wing deployment is accomplished with 63° rotation of the shaft. The primary deployment

energy is provided by torsion springs located at each wing frame hinge. A backup mode is provided by a motor driven gearbox located at the center of the torque shaft (Figure 63). Redundant motors are coupled directly to a pair of harmonic drives which deliver the power to the double ended planetary gearbox. The harmonic drive reduction is 3400 to 1 and the gearbox reduction is 6 to 1 for a total reduction of almost 21,000 to 1. The differential action of the gearbox permits deployment even with a single jammed motor or harmonic drive, and the wing spring energy is sufficient to accomplish full deployment with no motors operating. The motors contain magnetic brakes, thereby providing a damping action which establishes a nominal deployment time of approximately 45 seconds.

b. Center Section

The function of the center section is to attach the Pegasus spacecraft to the booster and to provide a support for the wings, solar panels, and electronics (Figure 64). Its lower end is joined to the Service Module Adapter by six bolts and six shear pins equally spaced on an 80-inch diameter bolt circle. Since the Pegasus remains attached to the upper stage, no separation provisions are required at this interface. The upper end of the center section requires lateral support from the Service Module. This is accomplished by six equally spaced tension rods attached to a centrally located spider fitting (Figure 65). The spider fitting has a conical lower end which engages matching fittings on the top solar panels and the center section, and is held in place by a single bolt and separation nut. Firing of this nut frees the engaged fittings and permits the tension rods and spider fitting to leave with the Service Module.

c. Solar Panels

The solar array consists of four, single faced panels which when deployed lie in the planes defined by the surfaces of a tetrahedron. They were initially intended to be deployed by linkages driven by the torque shaft thereby relating solar panel position to wing position. However, it was felt that although some degree of mission success could be achieved with partial wing deployment, full solar panel deployment is always necessary to assure adequate power. Therefore, it was determined to make the solar panel deployment as independent of the wing deployment as possible.

The top solar panels presented a special case because of their method of restraint and their proximity to the tension rods, which provide lateral support to the center section. During boost, these panels are restrained by the same bolt which attaches the center section to the tension rod spider fitting. Since the panels are spring-loaded at their hinges to deploy, it was necessary that their deployment be delayed after release of this bolt to preclude any possibility of a damaging impact against the tension rods. A cam-controlled locking pin mechanism was provided to key the panel support linkage to the torque shaft for the first 10° of shaft motion (Figure 66). The cam then permits the locking pin to disengage, releasing the solar panel linkage from the torque shaft and allowing spring force alone to deploy the panels to their final position. The delay between Service Module separation and initiation of torque shaft motion allows more than ample time for safe solar panel deployment.

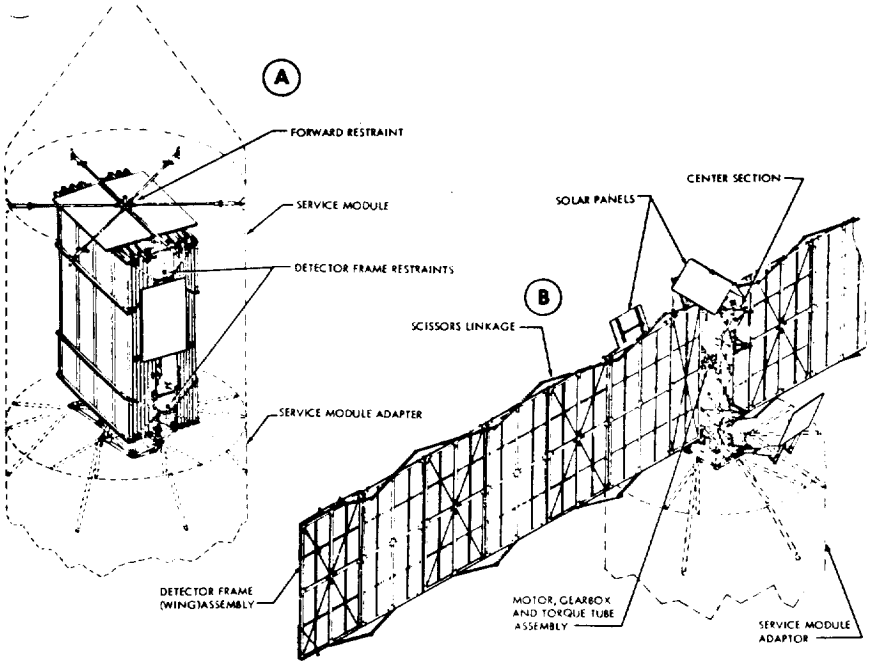

Figure 62. Deployment Sequence

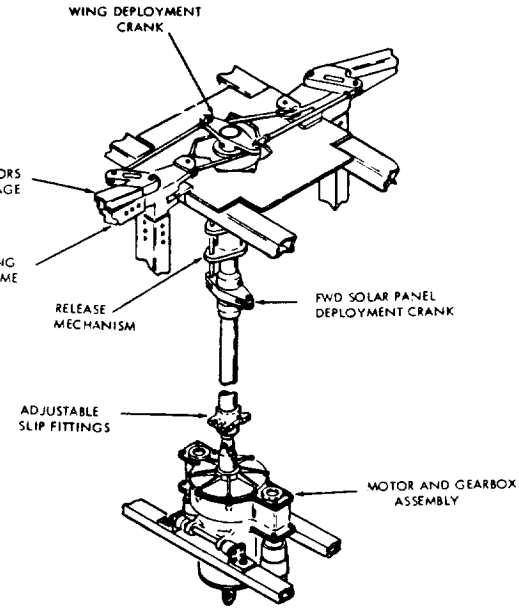

Figure 63. Deployment Drive Mechanism

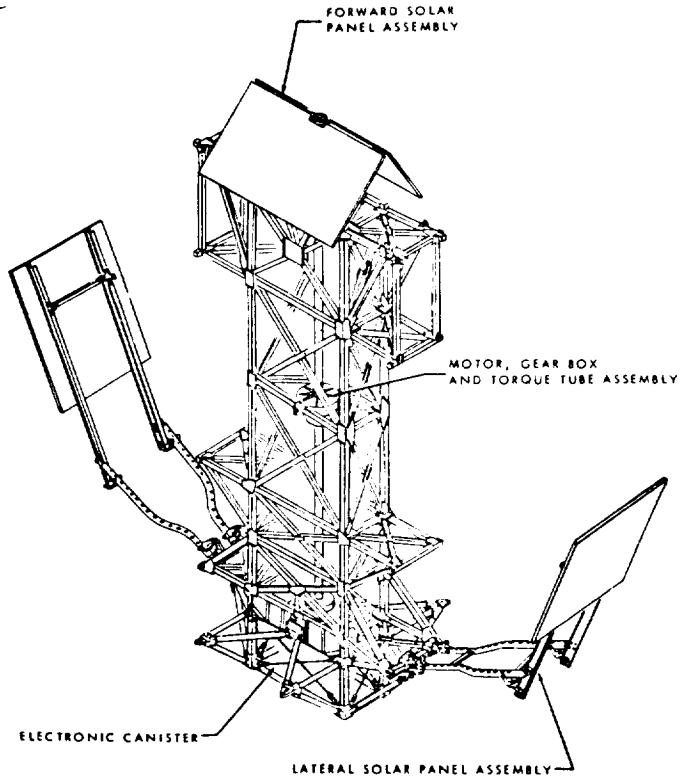

Figure 64. Center Section

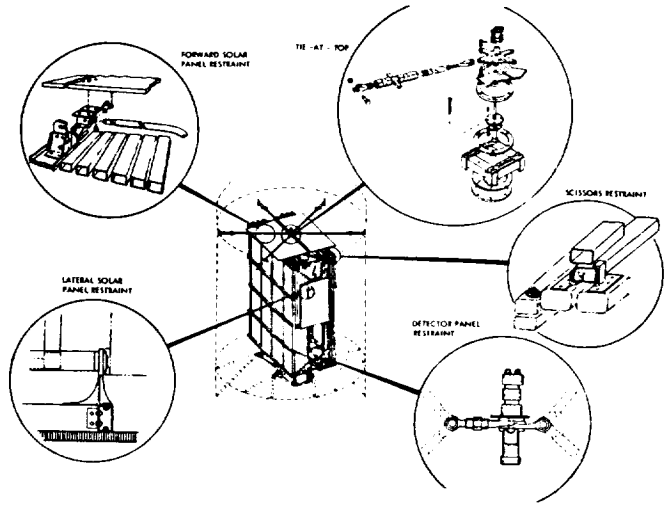

Figure 65. Restraint Systems

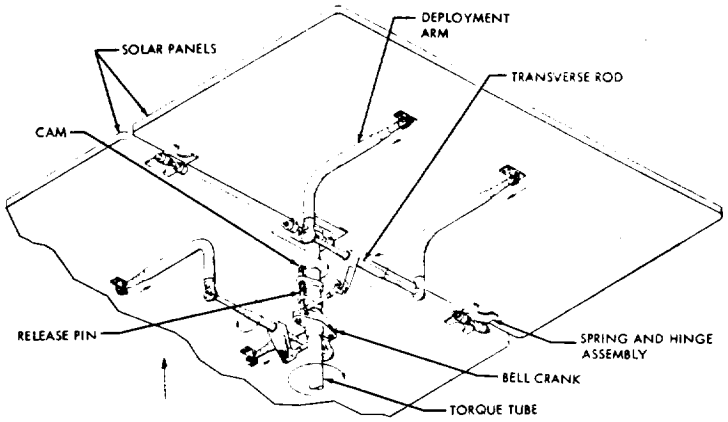

Figure 66. Top Solar Panel Assembly

Each of the lateral solar panels is restrained during the boost phase by two conical fittings which are pinched against the center section by the preloaded stack of wing frames. The initial motion of the deploying wings releases these fittings and allows the panels to be spring-driven to their final position. The panels are mounted on double-jointed arms to achieve the desired angular relationship and at the same time eliminate shadowing by the S-IV stage. Over-center links attached to the arms prevent the panels from rebounding and also lock them at their correct angles. The drive springs are located at these links.

d. Service Module Separation

Structural separation of the Service Module must occur at the plane of attachment to the Service Module Adapter and at the spider fitting which offers lateral support to the upper end of Pegasus. The adapter attachment consists of six axial bolts and separation nuts, while the spider fitting attachment is a single bolt and separation nut as previously described. A pair of short-stroke "starter" springs surrounds each of the six bolts at the adapter interface, but the principal ejection energy is provided by four negator springs each having a constant load of 40 pounds and a stroke of 15 feet. Exit velocity of the Service Module is approximately five feet per second. In order to preclude any possibility of the Service Module's contacting the Pegasus during its separation, two guide rails are cantilevered from the Service Module Adapter and extend alongside the Pegasus for its full length. The rails are located to avoid subsequent deployment of wings and solar panels.

e. Orbital Deployment Sequence

The complete deployment sequence is as follows:

1) Three minutes after orbit injection, the six nuts at the base of the Service Module and the one nut tieing the top of the Pegasus to the Service Module are simultaneously fired. The 12 starter springs and the four Negator springs are then free to propel the Command Module/Service Module forward on the guide rails.

2) One minute later, a signal fires the four wing restraint separation nuts and simultaneously energizes the deployment motors.

3) Almost instantaneously, the side solar panels are released by the wings and are free to fully deploy.

4) After 10° of torque shaft rotation, the top solar panels are released and are free to fully deploy.

5) Approximately 45 seconds after energizing the motors, the wings are fully deployed.

2. Original Concepts

a. Center Section

The original section was a rectangular trussed box 20" x 40" extending from station 1585.596 to station 1756. Frames were to be located at various hinge and equipment locations to provide rigid support for the detector paddles, solar paddles, paddle extension mechanism, antenna and electronic equipment. The base of the center section was to be joined to six trussed sections which extend mounting "feet" out to a diameter of 80". The feet provide a planar surface for bolting the Pegasus to the modified adapter. (See Figure 67).

The electronics equipment was bench installed into its canister which would then be installed into the center section structure. This arrangement permits thorough checking of the equipment either before or after installation in the spacecraft, thereby minimizing delays.

b. Detector Support Frames

The basic detector support was a "window frame" structure fabricated of rectangular aluminum extrusions joined at the corners by an integral hinge. A central hinge was also mounted integrally, joining the long sides of the extrusion frame. The pivots for the actuation scissor linkage were also located top and bottom with fasteners through the extruded frame structure. The rectangular frame is further stiffened by a single vertical and three horizontal rectangular extrusions spliced to the main frame. Also, tension rods were to be located on one side of the frame; (they have a minuscule blocking effect on the detector). All frame hinges incorporate anti-friction needle bearings at one hinge for axial loading between adjacent hinges.

The detector panels were retained mechanically by clips or tabs and would be removable for testing or replacement as single units. The wiring of the detector panels would be brought to three central junction boxes on each "window frame" and then carried inboard to the electronic compartment in the capsule center section.

During boosted flight, the panels

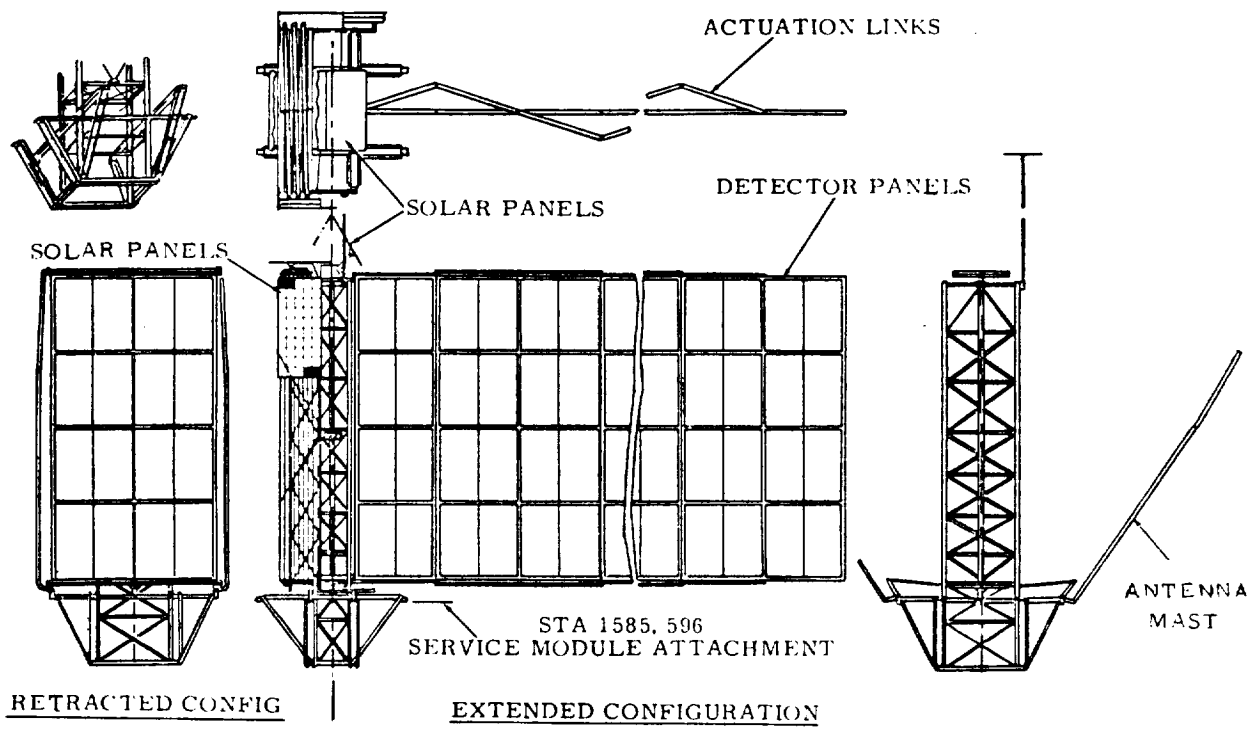

Figure 67. Capsule Assembly

would be restrained by trusses attached to each outboard panel frame. Trusses joined at their apexes by an explosive bolt with redundant squibs. When the bolts fire, the panels are released, and the trusses swing outboard to assure maximum clearance. The captive explosive separation device precludes any blast damage to the panels.

c. Support Frame Extension Mechanism

Several methods were considered for extending the detector support frames. These included gear drives; springs with scissor linkage; springs with tension rods; cables; gas jets; telescoping rods and others. Figure 68 presents the results of a trade-off study of the four most promising approaches. For obvious reasons, reliability measured in terms of complexity, redundancy, and environment was weighted as the most significant parameter. Manufacturing and development time were weighted highly because of the importance attached to the Pegasus schedule. On the basis of this, the spring and scissor system was selected as best suited for extending the Pegasus detector support frames.

The support frames were to be interconnected through an upper and lower scissors linkage. At each full frame hinge there is a torsion spring which overcomes local hinge moments and provides the primary extension force for the system. The symmetrical panel linkage mechanisms are synchronized in motion by linking them to a central torque shaft with upper and lower bellcranks. System redundancy is provided by driving the torque shaft with redundant dc motors which act as a speed

	Weighting Factors	Gear System	Spring & Scissor	Spring & Tension	Cable System
Reliability					
Complexity	25	8	7	6	6
Environment	10	4	3	2	1
Total	35	10	10	8	7
Manufacturing	20	3	7	5	5
Development Time	20	1	6	6	4
Panel Stability	10	2	4	2	2
Weight	10	4	2	2	2
Design Analysis	5	3	5	3	1
Total	100	26	29.5	23.5	21

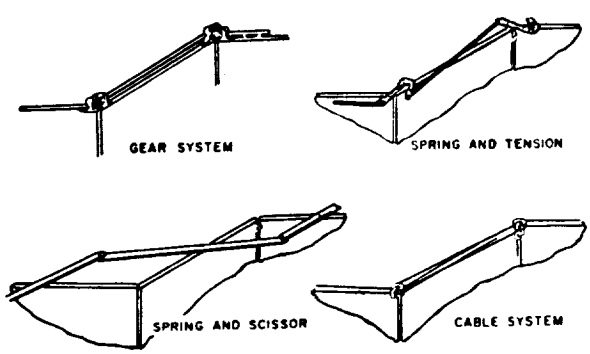

Figure 68. Extension Mechanism Comparison

limiter. Additional redundancy would be achieved by providing a separate battery for each motor.

The outputs of the drive springs and of the motors were conservatively based upon a coefficient of friction of 0.1 at all hinge points with a vertical load of 1 g on the panels. Thus, the gearbox will normally be functioning as a braking device through the constant speed restraint of the electric driving motors.

The time for panel extension would be 45 seconds, and stroke would be limited by a cam actuated rotary switch, integral within the gearbox assembly. Under normal conditions, both electric drive motors would function, however, failure of either would not affect the extension cycle but merely the rate of extension. In this mode, the differential would merely walk around the fixed or non-operative input which is locked out by the irreversible harmonic drive. All of the gearing would be within the existing state-of-the-art as evidenced on past Explorer programs.

In summary, the spring-scissor extension system had the following advantages:

- A completely redundant drive system
- A proven state-of-the-art principle of extension
- Low complexity and interchangeability of drive components
- Short manufacturing lead times.

d. Solar Cell Panels

The two lateral extending solar panels, as well as the upper hinge-joined solar panels would be linked up to the detector panel extension torque drive shaft and would be erected simultaneously with the detector panels and antenna (Figures 69 and 70). Thus, the panel motion would be slow, and inertia and shock loading on the solar cells minimized.

The panel structure was a 3/4" x 5/8" thick aluminum honeycomb sandwich. The cells were bonded in modular form to substrates, which in turn were mounted to the skin. This configuration eliminated the low reliability usually resulting from damaged cell replacement.

3. Design Evolution

a. Load Criteria

The original structural design load factors of 9 g ultimate axial load and 3 g ultimate lateral load combined, which were used in the initial analysis, were modified as the result of dynamic analysis to the following criteria:

Direction	Ultimate Load Factor
Axial (X)	plus or minus 18.75
Lateral (Y and Z)	
forward end	plus or minus 4.5
mid point	plus or minus 15.0
aft end	plus or minus 7.5

In the course of the dynamic analysis, load factors as high as 30 g axial and 20 g lateral were obtained, along with excessive lateral deflections of the

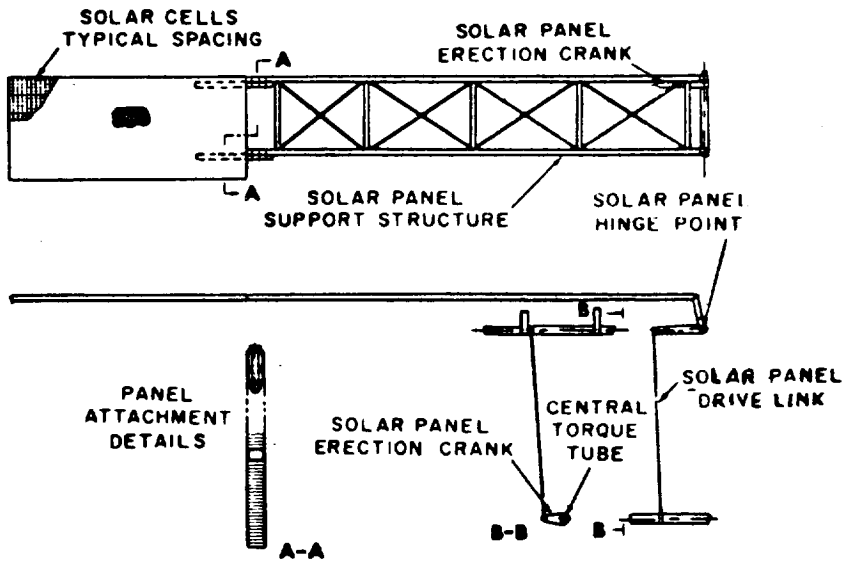

Figure 69. Side Solar Panel

forward end of the spacecraft. These high load factors in the analyses were reduced by using detector panel mounts which have varying spring rates. This has the effect of "detuning" the response of the wing panels to the dynamic input. Since the detector panels constitute the largest mass of the spacecraft, this detuning reduces structural loads throughout the structure.

The analysis showed that, in addition to detuning the detector frames, it it was necessary to add a lateral support at the forward end of the capsule so that both the dynamic load factors at the forward end and the high lateral deflections would be reduced. With this forward lateral restraint, there is also a corresponding reduction in bending moments in the detector panel frames and the center section structure.

b. Detector Panel Frame Design

In the initial analysis of the detector panel frames, it was found that they would deflect individually in excess of 1.5 inches in the thrust axis under the boost phase loading conditions. The frames were stabilized with continuous diagonal tension rods from corner to corner. In an attempt to reduce the deflection, the diagonal rods were connected to each other and to the framework at the center of each panel, and both the vertical and horizontal members were increased in size. This arrangement provided a reduction in overall deflections of the individual frames provided

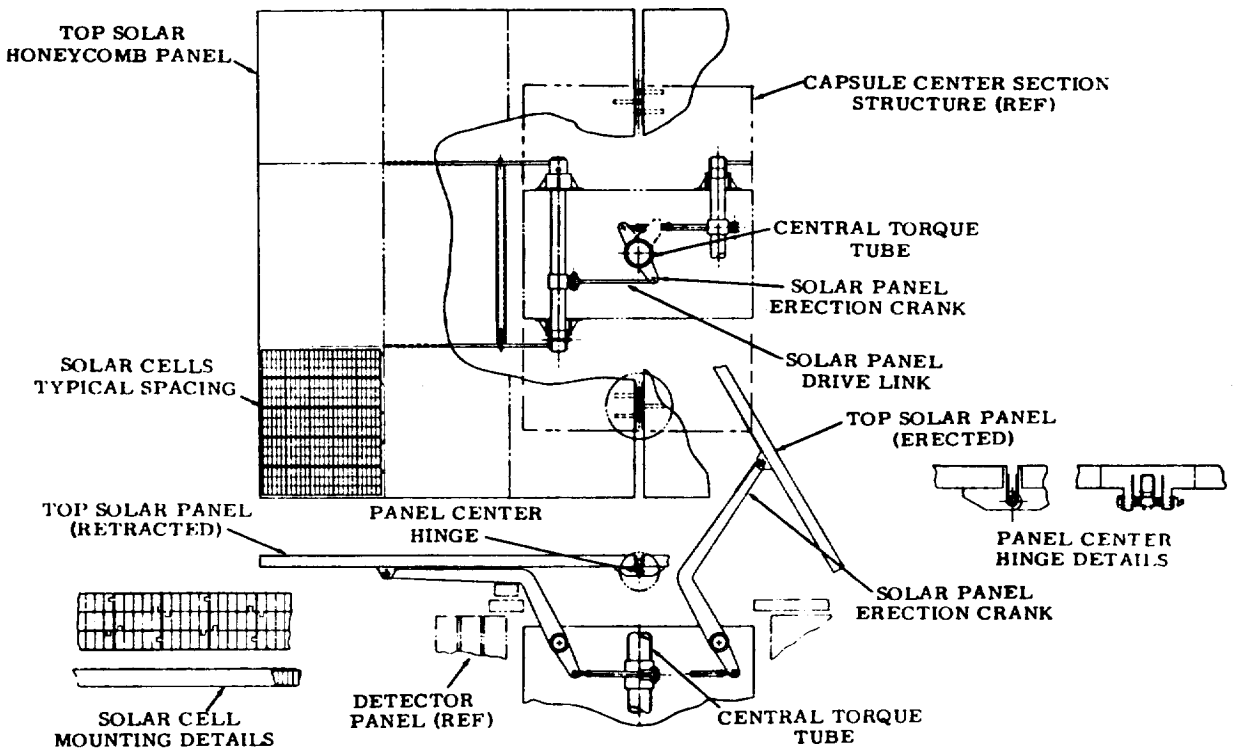

Figure 70. Upper Solar Panel

that the frame loads could be transferred from panel to panel at the panel centers where the tension rods intersected. To meet this latter condition, the diagonal tension rods were at first tied together into the framework at the center and shear pins were provided at the top center, center, and bottom center of each panel, thereby pinning each panel to the next one and into the center section structure. Thus solving the vertical deflection problem, the pin design was evaluated for panel deflections in the Y Axis, where the panels were loaded perpendicular to the stack. It was found that the bending of the wing frames as a stack, relative to the center section structure, caused serious problems of load transfer with the tendency of the shear pins to withdraw out of the hole in the next adjacent frame. This would not have been a problem had the shear pins been straight pins in close tolerance straight holes, but straight pins in close tolerance holes could not be considered because of the potential bind at the time of deployment when there was a relative rotation of the panels. Tapered pins in tapered holes were therefore tentatively considered for design.

As a result of several problems, however, with deflections, pin withdrawal, and panel support, a final configuration was evolved in which the diagonal tension rods are tied to each other and to the center of the panel, and the frames furnished with separate tongue and groove fittings at the aft end of the outside edge members of each panel, as shown in Figure 71. The tongue and groove fittings at the aft end of each detector panel mate with each other when the panels are in the closed configuration such that the axial (X direction) loading on any one panel is reacted by the tongue and groove fittings to the adjacent inboard panel. The individual panels, therefore, carry only their own axial (X direction) loads, and permit a shear transfer of outboard panels locally at the aft end. With this arrangement, some provisions must be made to react the moment caused by the transfer of axial shear through the panels and center section. This moment reaction is provided by the lower restraint mechanism and its supporting structure. In addition to the tongue and groove fittings, for X load transfer there are pressure pads located at various intersections of the detector panel framework to react inward Y loading.

The detector frame restraint system consists of two "X" members on each of the long edges of the wing frame stack on each side, as shown in Figure 72. Each of these "X" restraint systems has a turnbuckle and a pyrotechnically released bolt connection. When the wings are installed and folded, the restraint separation nut and bolt is attached; then the turnbuckle is tightened to provide approximately 6,000 pounds tension in each of the restraint "X" members. This preload applies approximately 3,000 pounds force at four points on each longitudinal edge of the outer panel. With pressure pads provided under each of these eight points, the preload is applied from panel to panel, proceeding inboard to the innermost full or half panel (the inboard panel on each wing is half the width of the other panels). At this inboard end, the preload is transmitted across to the opposite wing panel stack by means of outriggers from the center section structure. These outriggers are shown in Figure 73.

With this restraint preload arrangement, the moment caused by the axial

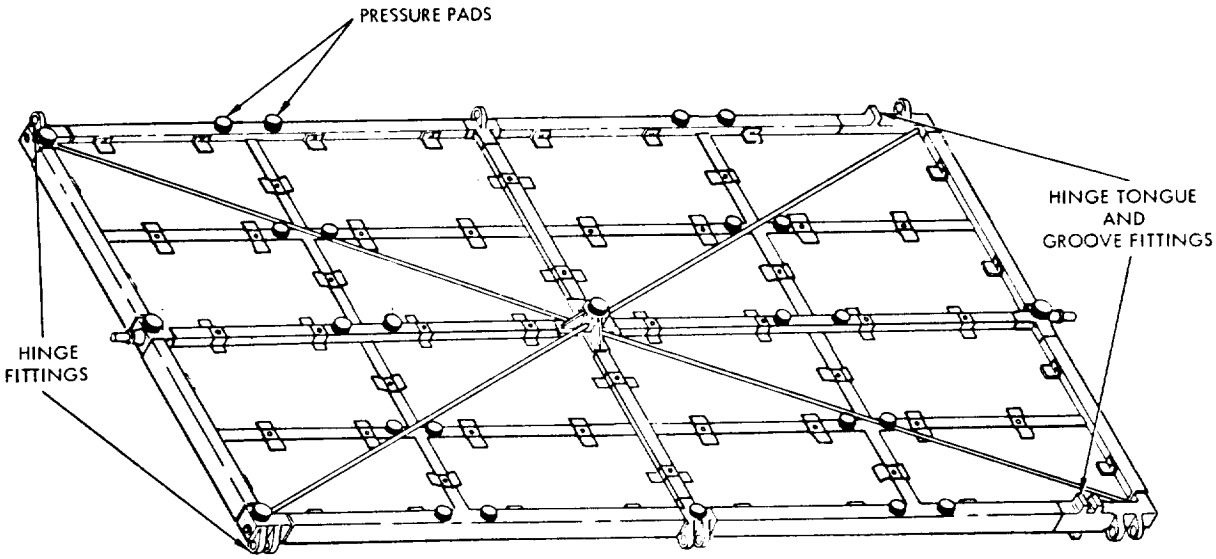

Figure 71. Panel Support Frame

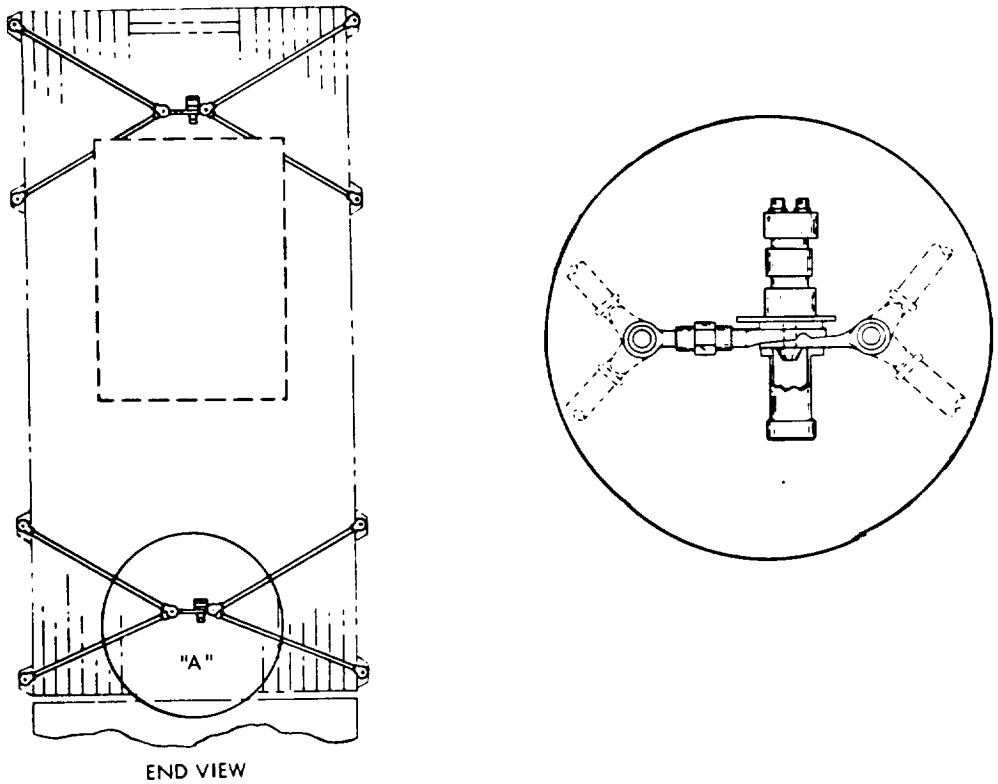

Figure 72. Restraining System

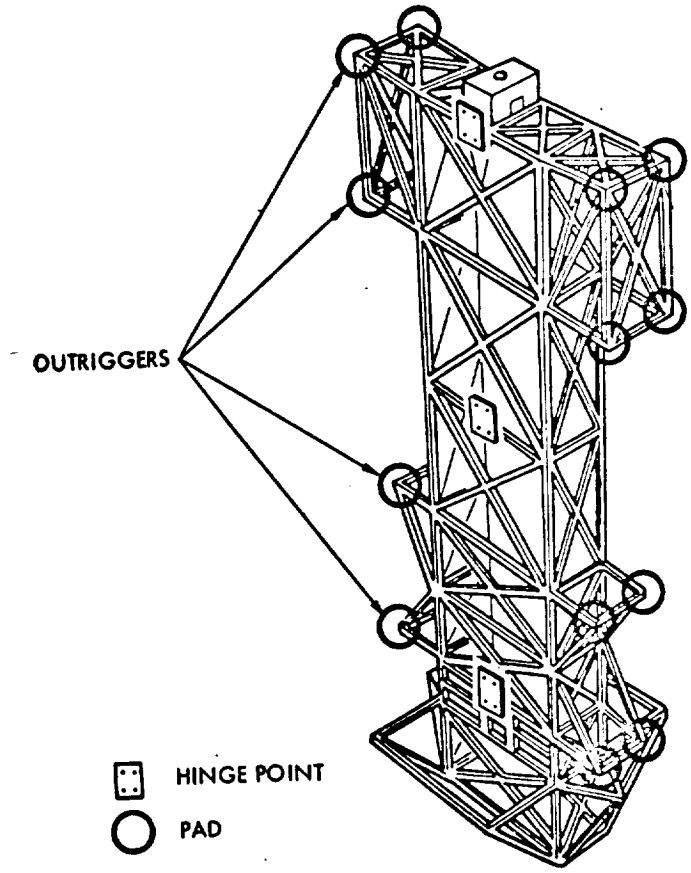

Figure 73. Center Section Outrigger

load transfer from fitting to fitting at the bottom of the detector panel frames can be reacted by the restraint system without causing separation between the pads on adjacent frames.

At any one time, dynamic lateral loads perpendicular to the planes of the wing stack act outboard on one side of the spacecraft; on the other side, they act inboard. On the side where the loads act outboard, the load is transmitted from the inboard panel to the outboard panel through the pressure pads. The load on the outboard panel is reacted back through the restraint mechanism to apply an inboard load on the outboard panel on the opposite side. This load and the inboard loads on this side act through the pressure pads from wing frame to wing frame into the outriggers of the center section structure. In the horizontal plane, where these loads are applied, each of the outriggers have an "X" brace which permits transfer of loads into the basic 20" x 40" center section structure.

Loads in the plane of the panel perpendicular to the longitudinal axis of the panels (Z direction) are carried from panel to panel through the panel hinge points. This load condition determines the sizes of the top, middle and lower cross members in each panel frame. As the loads are transmitted inboard from panel to panel in a "seesaw" fashion through the hinges, the loads increase, requiring larger member sizes in the panels further inboard. All

of the hinges were designed and conservatively analyzed for the radial load imposed on the hinge fitting for this loading condition. This is the only primary load applied to the wing hinge fitting in the critical folded configuration.

To correct a large vibration magnification indicated by dynamic analysis, an investigation was conducted and drawings were made to attach Z direction tongue and groove fittings to the forward and aft end of the wing panels. This change was intended to stiffen the wing stack in the Z direction and thereby reduce the large magnifications. It was later determined that, although the loads were reduced at one point in the structure, they increased excessively elsewhere; a more satisfactory structure was achieved without the modification.

The mounting of the detector specimens is accomplished in such a manner as to preclude load transfer to them. The detector is supported by a low durometer silicon rubber isolator which damps boost vibration as well as prevents edge shorting of the detector capacitors.

The detector panel isolation system was designed to provide a more satisfactory installation during final assembly and to provide a fail-safe method of attachment in the event of rubber deterioration in the space environment. (See Figure 74).

c. Wing Panel Extension Mechanism

The wing panel extension mechanism did not change in configuration from that shown in the proposal, except for the removal of unneeded needle bearings at the scissor link pivot points. At each of the wing hinge points, torsion springs were installed which exerted an opening moment between each of any two adjacent wing frames. The geometry of deployment from the closed to the open position is maintained by a scissor linkage at the top and bottom ends of the wing frames. Each member of the scissor linkage is pinned to the top or bottom center of a wing panel and connected to each other.

As a result of a review of the full scale preliminary assembly of the center section, detector panel frames, and scissor linkage, it was realized that support must be provided for the scissor linkage in the boost phase to keep the linkage from violent vibration. This restraint was accomplished by including "L" shaped clips at the ends of the wing panel top and bottom edge members, as shown in Figure 75. The clips on two adjacent wing frames will trap the lower scissor linkage and prevent the vibration. The upper link will be supported at its outboard end by the connection to the adjacent trapped scissor linkage.

d. Straight Line Wing Deployment

A study was conducted to establish the optimum cam method of obtaining a straight line wing deployment as directed by NASA. Four approaches to cam development were pursued as follows:

1) Fixed cam in scissor link driver.

2) Fixed cam in panel link driver.

3) Combined fixed and sliding cam in scissor link.

4) Rotary cam on torque shaft.

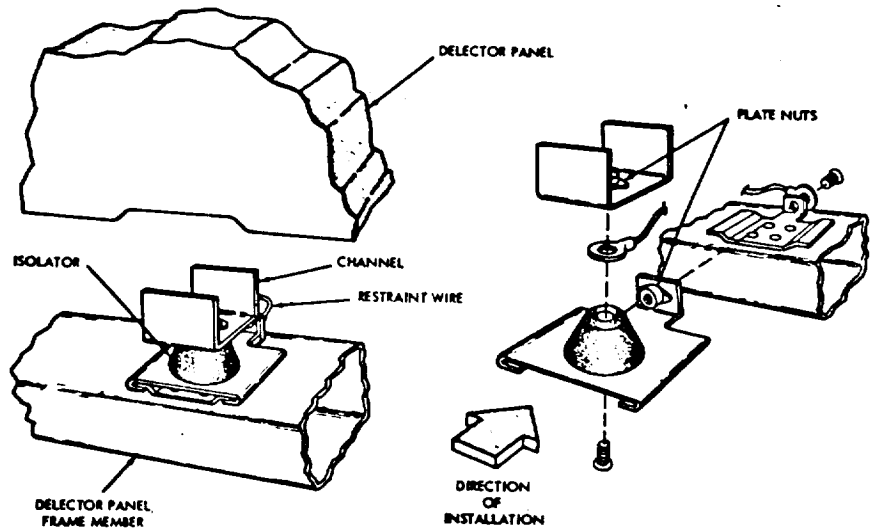

Figure 74. Detector Panel Isolation System

After extensive evaluation of the operational integrity of the cams and the structural rework required to the MTS, the rotary cam was selected as having the greatest potential.

The straight line wing motion was discontinued by direction of NASA. A report delineating the development and conclusions of the straight line wing motion study was published.

e. Center Section Structure

The center section structure originally consisted of a 20" x 40" section running the full length of the spacecraft. Outriggers were subsequently added to support the wing frame stack, the number of bays was changed to be consistent with the new outrigger locations, and a 6" increase in length below the primary mounting interface at station 1585.596 to allow space for a larger electronics canister. The primary structure members are four full length 2" by 2" square tubes at the four corners; the internal diagonals and the outriggers are attached to the tubes by means of riveted clip fasteners. In those areas where a large load exists, hogged-out fittings are provided. This occurs generally in the lower section where the interface loads to the service module are concentrated. The center section structure includes three hinges on each 40" side for attachment of the wing panels; the structure provides the outriggers with stops for the wing panels, as well as support for the motor/gearbox, torque shaft, lateral solar panel, and forward solar panels.

f. Wing Restraint Mechanism

The function of the wing restraint mechanism in reacting wing stack loads was described above. This function is performed during the boost phase when the wings, solar panels, and all mechanisms are in their restrained configuration. At the time of wing deployment, the nut and bolt holding the two separating portions of the restraint mechanism together are separated by an explosive charge on signal from the ground. With the release of these four connections, the wings will start to deploy under the spring force actuation. The half of each restraint system, which is attached to the outboard end of the outer wing panel frame, will be spring loaded to rotate

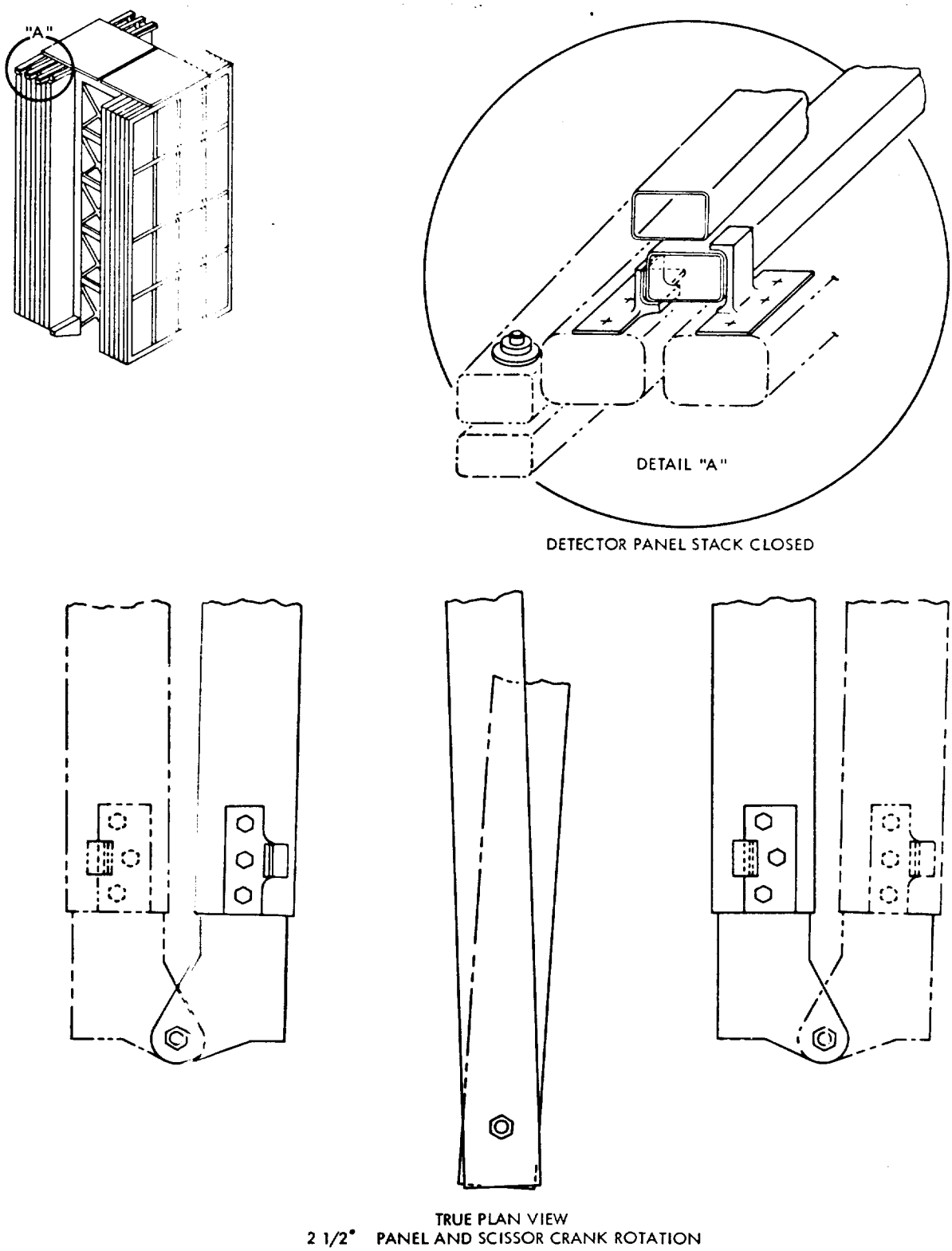

Figure 75. Scissors Restraint Concept

5 degrees to provide clearance from the inboard wing panel frames. The halves of the restraint system which are attached to the inboard edge of the outboard wing panel frame will be rotated 180 degrees relative to the outboard panel so that they do not interfere with the next adjacent inboard detector panel frame in the full deployed position. This 180 degree rotation is accomplished by a simple linkage which is operated by the relative motion between the outboard and the next inboard wing panel frames.

In order to provide a reliable wiring arrangement to the pyrotechnic for the actuation of the separation nut, the separation nut housing is designed to come free from the restraint mechanism on separation and is retained on the center section structure. With this provision, wiring to each of the pyrotechnics will come straight from the center section structure without having to be routed through all of the wing panels.

g. Antenna Deployment

In the initial proposal concept, the telemetry antenna was mounted in the restrained position on the lower end of an antenna mast, approximately 23 feet long. The upper end of this mast was attached with a driving mechanism to the upper portion of the center section structure. On deployment of wings, the antenna mast rotated 180 degrees, swinging out through the space originally enclosed by the restraint mechanism. This caused clearance problems as well as problems in location and size of the lateral solar panels. As a modification to eliminate these space problems, it was then proposed to use a De Havilland stem antenna erection mechanism located on the upper portion of the center section structure clear of the forward solar panels. This would eliminate the clearance problem and provide the possibility of independent deployment of the antenna system. This arrangement was expensive, however, and required separate actuating motors and signals. Further investigation of the antenna r-f radiation pattern revealed that satisfactory patterns could be obtained with bent stub antennas located on the sides of the Apollo service module adapter, so that the antenna deployment mechanism was eliminated from the design.

h. Torque Shaft and Motor Gearbox

The wing deployment mechanism is primarily powered by the springs on the wing hinge points with deployment position maintained by the scissor linkages. With spring actuation of wing deployment, however, uncontrolled deployment rates can occur. Therefore, the scissor linkage and wing panel actuation are controlled by links to bellcranks at the top and bottom end of a torque shaft so that motion of the torque shaft controls deployment. At the midpoint of the center section structure there is installed a motor gearbox which is attached to the upper and lower halves of the torque shaft. The primary function of this motor gearbox is to restrain the rate of rotation of the torque shaft and thereby control the deployment of the wings. Energy absorption for this restraint control is provided by including in the motor housing a magnetic brake. In the event that the friction in the wing deployment linkage is far in excess of anticipated values and, therefore, in excess of the capability of the wing torsion springs, the motor portion of the motor gearbox will provide the driving force.

The gear reduction from the motor generator to the torque shaft is 21,700 to 1.

In order to provide a highly reliable unit, there are two motors, two magnetic brakes, and two harmonic drives, operating through a differential unit to the torque shaft. Therefore, in case a malfunction occurs which locks one side, the other side will be available to provide the restraint or driving force necessary. The differential arrangement reduces the rate of deployment from the planned one minute, for the required 63 degrees rotation of the torque shaft, to a two minute deployment in the event that only one side functions.

A structural problem occurred when a flexspline (See Figure 76) in the harmonic drive portion of the motor gearbox failed during qualification testing. Investigation revealed that the flexing of the cup-shaped part (type 321 stainless steel) had caused a fatigue failure. This part, which is subjected to 7600 flex cycles per deployment cycle, was operating at stresses above the endurance limit of the material. United Shoe recommended a rework of the flexsplines in order to reduce the stress level at the point where failure had occurred in the qualification unit. FHC ordered United Shoe Machinery Company to rework the prototype flexsplines and to make qualification and flight units to the new dimensions. It was also decided to run one harmonic drive to 50,000,000 flexspline cycles or failure with the original design and then repeat the test using a reworked flexspline. United Shoe Machinery Company also agreed to supply the failed unit and a copy of the derivation of their stress analysis to MSFC for review.

Another area of redesign was the attachment of the motor gearbox to the torque shaft. On the prototype Pegasus, a careful rotational alignment of torque shaft and coupling must be made with the gearbox in place and then the two must be drilled and reamed together. Because of the difficulties in interchanging gearboxes with this arrangement, it was decided to incorporate the adjustment feature shown in Figure 77 into the system on all flight units. Several degrees of misalignment can now be compensated for by adjustment of the four stop bolts, and no drilling is required during gearbox installation.

A spare motor gearbox was installed on the DTM, and tests were run with all combinations of motor failures simulated as well as the condition in which both motors were operating. It was determined that by reducing the brake effectiveness on the motor, by backing off the adjustment 12 of the available 14 turns, deployment will occur even with neither motor operating.

During functional check of a gearbox, it was noticed that there was a slip in adjustment. Upon tear-down of the gearbox it was found that a pair of shear bolts transmitting the torque from the gear carrier to the output shaft had partially sheared. It was determined that, during factory acceptance testing, the gearbox was subjected to excessive loads. The bolts have been replaced with bolts having a considerably higher allowable stress limit.

Subsequent to replacing the gearbox carrier bolts with higher strength bolts, qualification testing on gearbox S/N 001 was started again. The following tests were conducted:

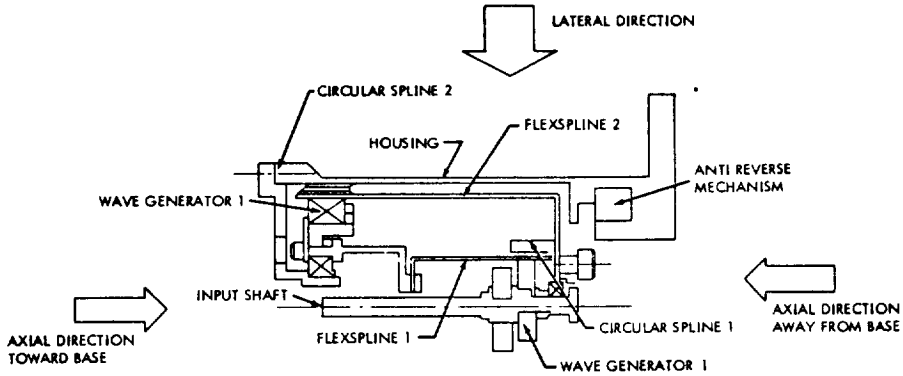

Figure 76. Harmonic Drive

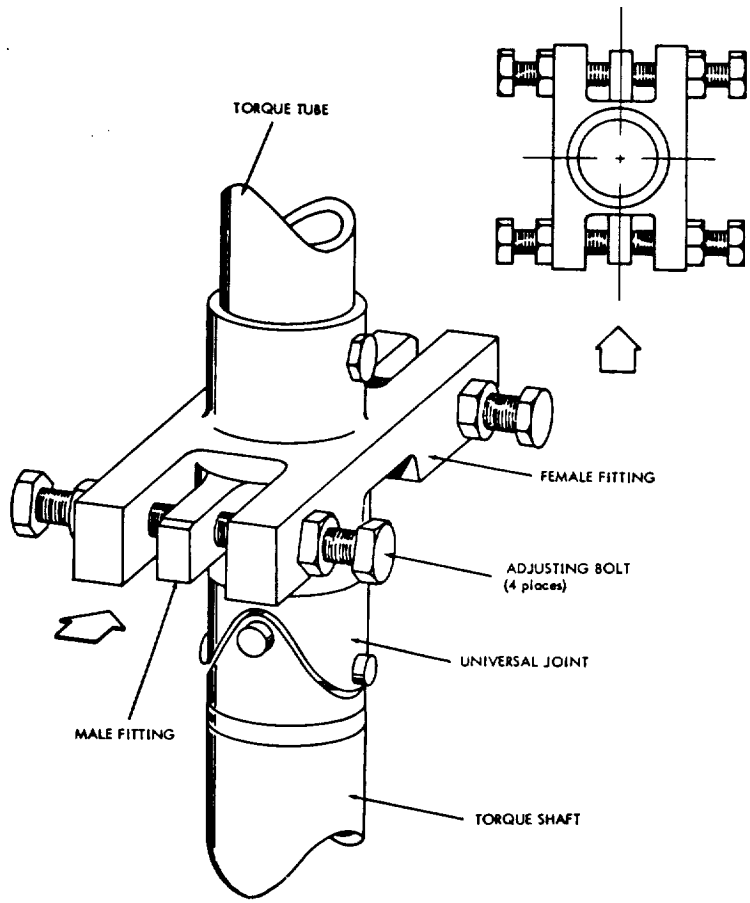

Figure 77. Adjustable Torque Shaft Coupling

High Temperature — passed
Low Temperature — passed
Acceleration — passed
Humidity — passed

After the humidity test, rust was evident on the drive shaft, motor brake adjustment disk, and the switch actuators. The gearbox was allowed to

sit for approximately 3 days during preparation for the next test. At the end of the three-day period, the gearbox was found to be jammed. Disassembling the gearbox, revealed that the needle bearings were frozen due to rust.

Gearbox S/N 004 was utilized as a qualification unit while gearbox S/N 001 was being refurbished. The following tests were conducted on gearbox S/N 004.

High Temperature — passed
Low Temperature — passed
Mechanical Shock — passed
Acceleration — passed
Acoustics — passed
Vibration — passed
Altitude — passed

The qualification humidity requirements were relaxed to move realistic conditions as directed by NASA. Gearbox S/N 001 was subjected to these requirements, allowed to sit for 76 hours, then subjected to the functional test. After the test, gearbox S/N 001 was disassembled and examined for rust. No detrimental corrosion effects were visible.

i. Lateral Solar Panel

The lateral solar panels are located outboard of the long edges of the wing panels and outboard of the restraint mechanism parallel to the 20-inch face of the center section. (See Figure 78.) In the original proposal, the lateral solar panels were assymetrical to provide clearance for the antenna deployment, were inside the restraint mechanism, and were operated by linkages from the torque shaft. The final design provides larger panels, symmetrically located about the center line of the wing, outboard of the wing restraining mechanism, and operated by springs independently of the torque shaft motion. The separation of the solar panels from the wing deployment mechanism will provide a much higher probability of complete solar panel deployment in case the wing deployment system operates only partially. (The basic mission of the spacecraft can then still be accomplished, even though the wings are only partially deployed, since the solar cells will be in their final position and able to provide the electrical power required.)

Restraint for the lateral solar panels, required during the boost phase, is accomplished by providing fittings on the inboard side of the solar panel support structure. These fittings are "pinched" between the wing stack and the outriggers of the center section. The cinch-up forces from the wing restraint mechanism pass through this fitting which is conically shaped on one side to assure that it will not slide out in the restrained position. As soon as the separation nuts are fired, the restraint mechanism releases, the wings start to deploy, and there will be no restraint for the lateral solar panels; they will go to their full deployed position under spring force. The position and geometry of the lateral solar panel support arms have gone through numerous changes to accommodate the changes in geometry configurations of the restraint system. Stiffening beams were added to the support arms to preclude bending during ground deployment. A pair of kicker springs were incorporated to insure deployment and the skids were redesigned to increase standoff capability.

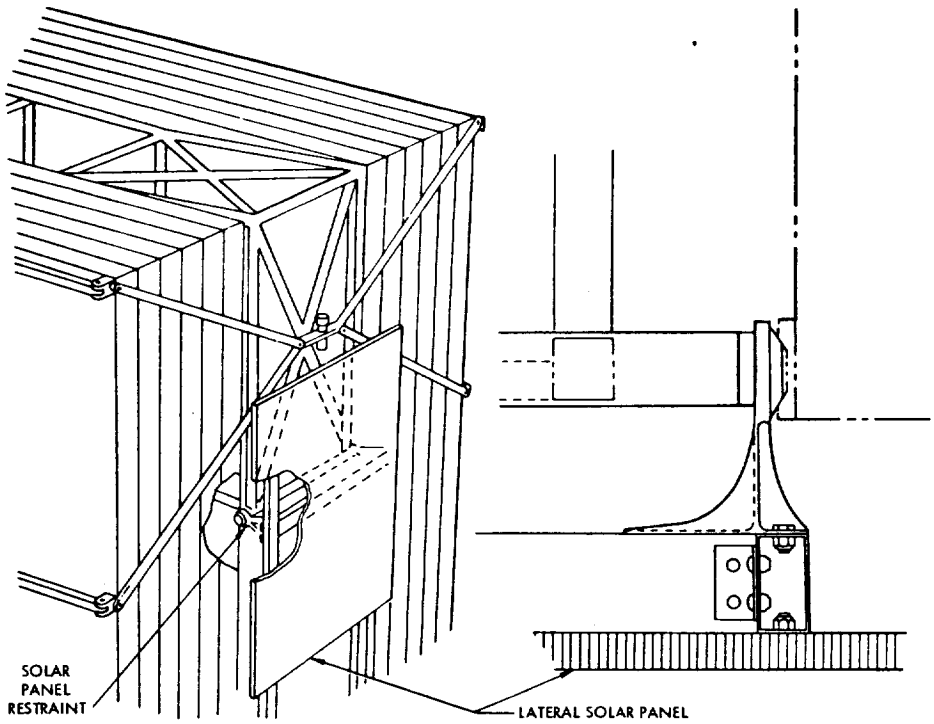

Figure 78. Lateral Solar Panel Restraint System

The solar panels have been increased in size to assure that the complete lateral solar panels are outboard of the shadow cast by the S-IV when the sun is directly behind the satellite.

j. Forward Solar Panels

The forward solar panels have gone through the same evolution of geometric changes, increase in size and separation from the torque shaft mechanism as the lateral solar panels. The forward solar panels are restrained by the bolt which attaches the top of the spacecraft to the service module. During boost phase, this bolt, which is aligned on the axis of the spacecraft, holds the top solar panels to the basic structure through suitable fittings. When the command module and service module are deployed from the service module adapter, this bolt is released. To assure that the solar panels do not start to deploy at the same time the command and service modules deploy, possibly damaging the solar cells, an additional restraint consisting of a cam and detent mechanism is provided to key the forward solar panel support linkage to the torque shaft for the first 10 degrees of torque shaft motion. (See Figure 79.) After 10 degrees of the torque shaft rotation, the cam permits the vertical restraining pin to rise, releasing the solar panel linkage from the torque shaft and permitting the solar panel to deploy by spring force alone to its final position.

The forward solar panel was stiffened later by 0.032 doublers to increase the panel stiffness. This change was made to increase the natural frequency

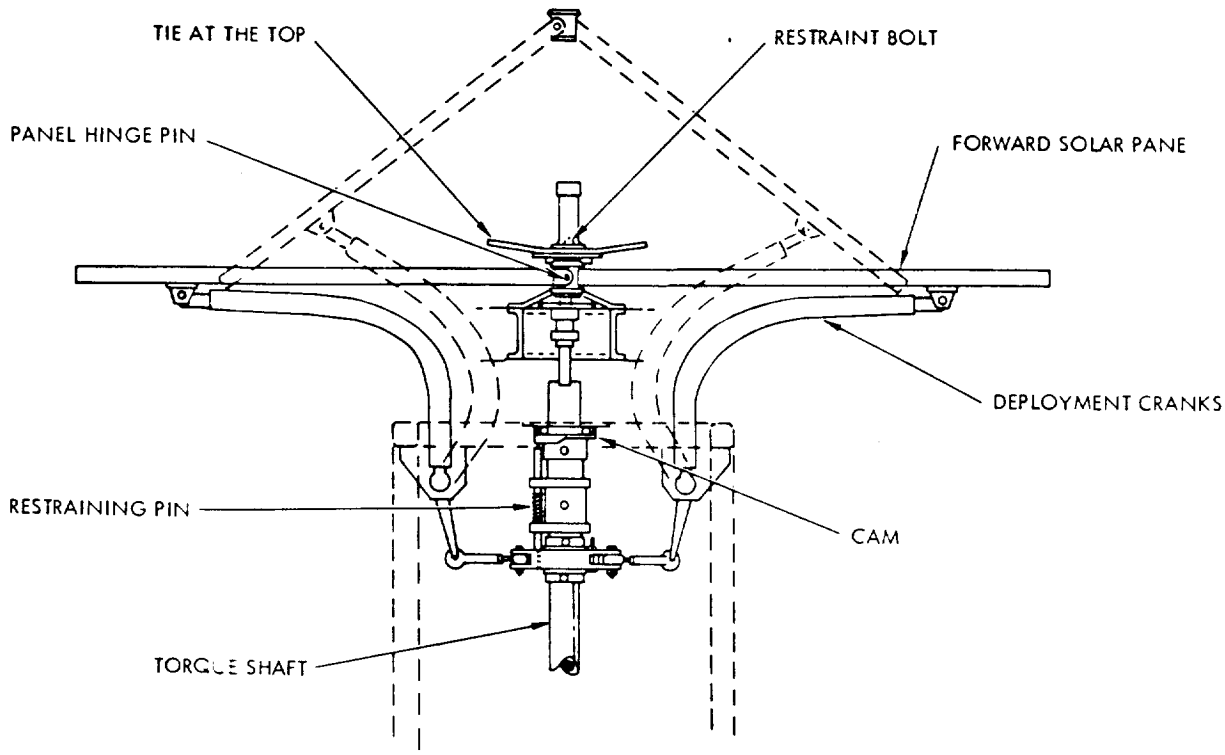

Figure 79. Forward Solar Panel Restraint System

since the panels, as originally designed, had a natural resonant frequency prohibitively close to the resonant frequency of the center section.

A design change of a forward solar panel restraint system to alleviate the large vibratory deflections at the edge was incorporated. The additional support was provided by attaching the solar panels to the forward hardback of the outboard wing panels. (See Figure 80.) The solar panel and hardback are disengaged upon deployment of the wings.

k. Forward Lateral Restraint

The forward lateral restraint on the center section structure, required to eliminate high lateral dynamic load factors and deflections, is attached to the Pegasus by a separation nut and bolt. The nut and bolt are attached to the sheet metal structure and fittings at the forward end of the center section covering the forward wing deployment bellcranks. (See Figure 81.) On the spacecraft, this structure is removable to provide access to the linkage; it also includes access holes for installation of the pyrotechnic charge associated with the separation nut. The upper end of the attachment consists of a fitting with six fingers, approximately 7" in diameter, to which are attached six tension rods, which run radially outboard to the six service module longerons. These rods are pre-tensioned on installation to minimize local dynamic vibration of the rods. The 7" diameter fitting and the six tension rods, as well as the bolt and its retainer, are

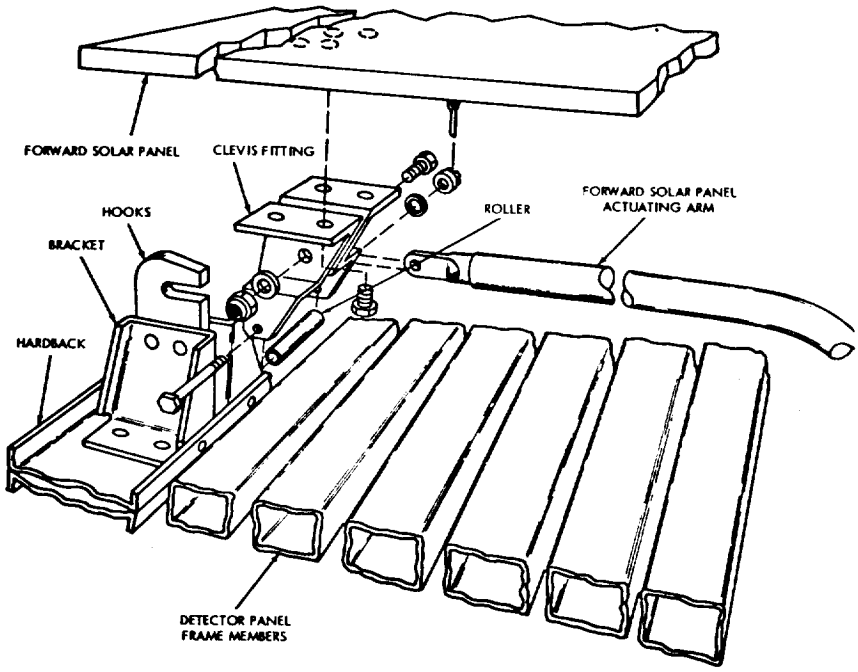

Figure 80. Forward Panel Restraint System

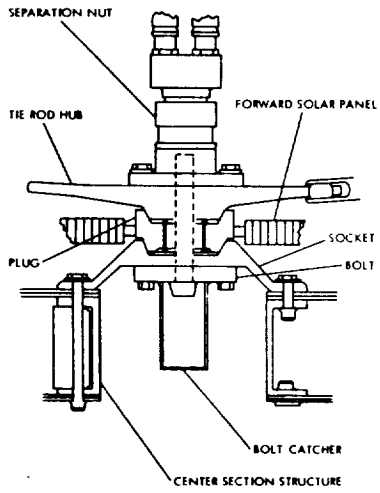

Figure 81. Forward Lateral Restraint Mechanism (Tie-at-the-Top)

removed with the command and service modules when they are separated from the service module adapter. This relatively simple attachment is the most significant design improvement in the structural mechanical area. It reduced loads, provided rigidity, and made the weight limitation a reasonable design objective.

The forward lateral restraint was later redesigned to place the separation

nut on the upper side of the joint. This arrangement permitted arming the nut through an opening in the bottom of the standard command module, eliminating the need for performing the arming function from inside the center section structure. (See Figure 82.)

4. Vibration Analysis

The first analyses of the Pegasus structural dynamic characteristics used idealized lumped parameter models which indicated the dynamic characteristic of the Pegasus under forced vibration. Initial results showed that Pegasus should be restrained at the top to limit the deflection of the structure and to raise the natural frequency in lateral vibration above the frequencies of the Saturn lateral bending modes. It was also found that additional restraint had to be provided to the stacks of frames by preloaded straps, binding the stacks to the center section of the top, bottom, and two intermediate locations.

a. Analysis of Center Structure

The Pegasus had to survive not only the flight vibration environment, but also sinusoidal vibration testing at levels more severe than the flight environment to establish the reliability required prior to flight. Therefore, the structural and mechanical functional integrity of the Pegasus is dependent on accurately predicting the dynamic response and dynamic loads which will occur during vibration testing rather than during flight.

The Pegasus structure was idealized into a lumped parameter system for purposes of analysis. The matrices which define the structural characteristics were derived in two ways:

- Equivalent spring constants based on assumed load paths with simplified bending and axially loaded members.
- Deflection influence coefficients based on an energy solution for unit loads applied to the actual redundant structure.

The inertia matrices consist of concentrated masses acting at a point assumed to be the center of gravity of locally distributed weight. The damping matrices are assumed values of a structural damping parameter defined as $g = 2\ c/c_c$. The differential equations of motion for forced vibration were solved to obtain a transmissibility equation in matrix notation:

$$\{T_1\} = \left[[1] - \omega^2 [\delta_{11}] [M_1] + i [g_1]\right]^{-1} \left[1 - i [g_1]\right] \{1\}$$

T = transmissibility or ratio of response to input

$\omega = 2\pi f$, radians/second

$\delta = k^{-1}$ = flexibility influence coefficient, in/lb

M = mass matrix lb in^{-1} sec^2

g = nondimensional structural damping coefficient.

The transmissibility equation was solved by computer for a range of ω's, including all structural resonances and anti-resonances, to obtain a plot of response versus frequency for each station of the lumped parameter model. The internal loads were then obtained directly from the response calculations

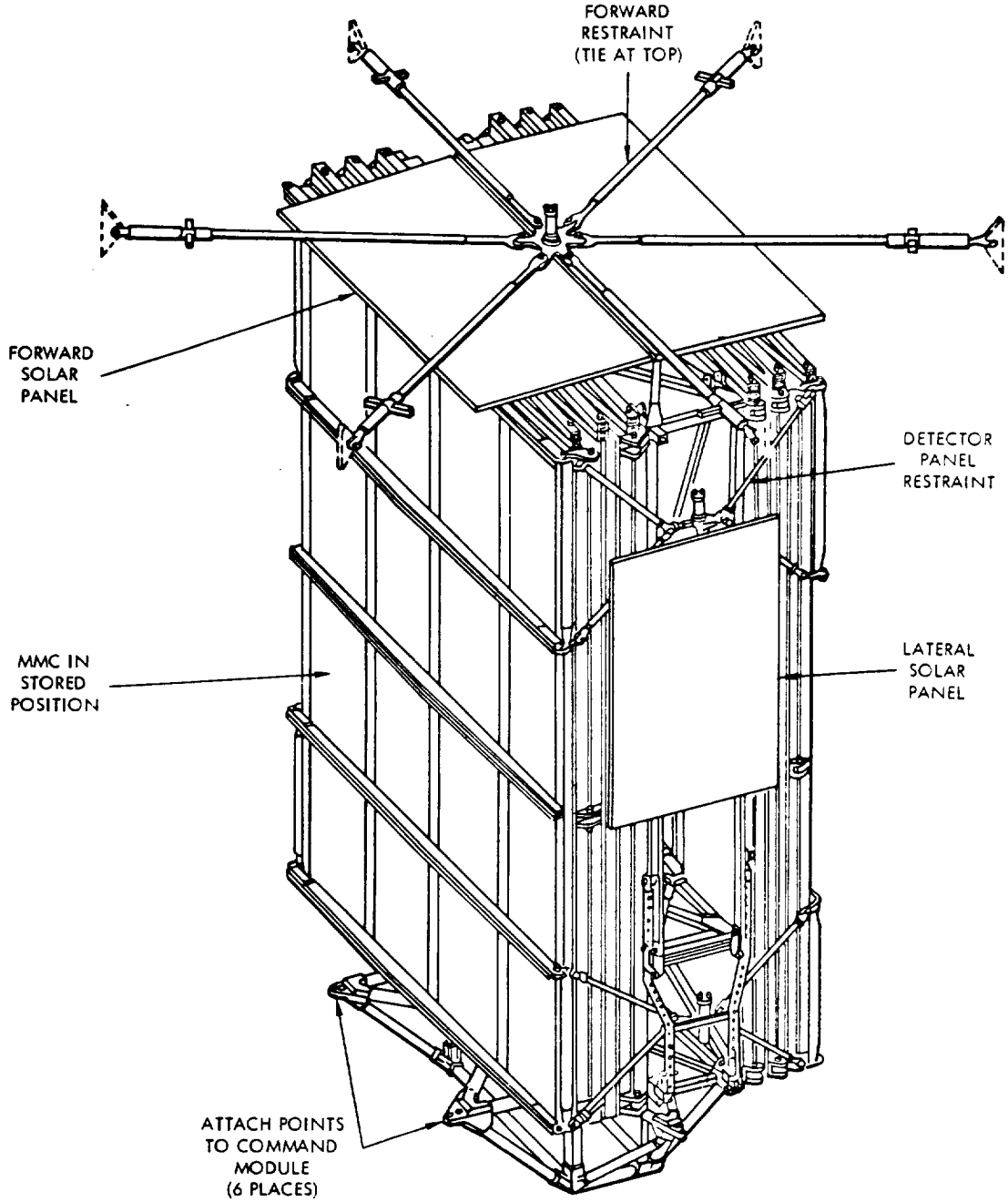

Figure 82. Pegasus Restraint System

using the unit solution matrix which defines the flexibility matrix.

The lumped parameter models initially analyzed were simplified models. The response to longitudinal and lateral forced vibration were obtained on these models and the results of these analyses showed that:

1) Loads in the structure were high, with amplifications as great as 20 in the detector panels during longitudinal vibration. Structural damping was assumed to vary from g = 0. 04 to g = 0.08.

2) The natural frequency of the Pegasus supported as a cantilever at the base was 2. 4 cps, which was prohibitively low both because of actual deflection during vibration and because it was within the range of the Saturn bending modes.

3) Longitudinal deflection of the hinge points from center section flexure caused the top and center hinge to move closer by 0. 315 inch with a 1 g lateral (y axis) vibration input at the base.

4) Detuning the detector panels by providing an arbitrary difference in the spring rate of panel supports reduced the amplification at resonance, and hence reduced the structural loads.

Changes were then incorporated into the structure design to limit induced dynamic loads as well as to limit deflection under static load. Changes which affect dynamic characteristics and reduce dynamic loads include:

1) Restraining the top of the Pegasus with a tie to the service module.

2) Providing highly preloaded straps at top and bottom of the frames so that the frame stack will be restrained to center section during vibration.

3) Adding outriggers which transfer lateral (y axis) vibration loads into the center section.

4) Using high damping material to support detector panels in the frame.

Since the detector panels make up approximately one-third of the Pegasus mass, the use of high damping elastomer with broad temperature range substantially reduced dynamic magnification of vibration loads.

More refined lumped parameter models were then developed which incorporate the mentioned design changes and which provide a more realistic evaluation of the structural response.

The tie at the top of the Pegasus to the service module raised the lateral frequency (y axis) from 2. 4 cps to 13.7 cps. A more refined analyses of the primary structure vibration characteristics showed a resonant frequency of 11. 9 cps on the basis of a lumped mass model.

b. Forward Solar Panel

The analysis of the forward solar panel, supported at three points, was reduced to one of equivalent beams through use of a model wherein the panel was partitioned into 28 rectangular segments.

Figure 83 presents isometric views of the first and second modes of vibration of the panel. The actual bending

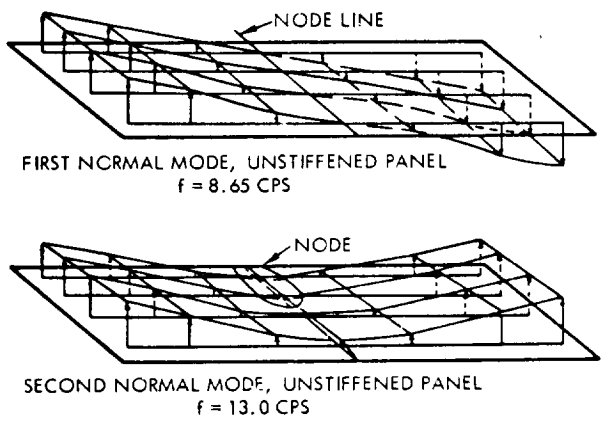

Figure 83. First and Second Normal Vibration Modes of Panel

associated with the second mode occurring at 13. 0 cps is shown in Figure 84. In Figure 84, spanwise and chordwise denote the long and the short dimensions of one half panel, respectively. The large deflections and the proximity of the panel frequency (13. 0 cps) to the center section longitudinal frequency (16. 3 cps) disclosed the necessity of stiffening the forward solar panel. Elevation of the resonant frequency to about 20 cps was necessary. Such elevation in frequency reduces the deflection in this mode by a factor of 0. 42 for the same input, as well as reducing the possibility that the solar panel could be excited at a level many times higher than 1 g at the center section longitudinal frequency.

Figure 85 presents the deflection and magnification factor characteristics of the panel stiffened by 0. 032 inch doublers, added to both the upper and lower surfaces, which cover about one half the panel area. The resonant frequency was calculated to be 17 cps, with peak deflections of 1 inch. The distribution of magnification factor with frequency, presented in the lower half of Figure 85, shows that an increase of only a few cps in panel resonant frequency resulted in a drastic decrease of panel magnification factor. On the basis of inherently non-conservative analyses, which resulted in too low a calculated resonant frequency, the doubler fix was acceptable. Figure 86 gives the doubler location notation convention. The analysis was reported in DAR-MMC-1.

c. Electronics Canister Analysis

Development tests of the electronics canister vibration isolation mounts showed the natural frequencies of the isolators, loaded to simulate the installed canister to be: X direction, f = 34 cps; Y direction, f = 33 cps. The corresponding isolator transmissibilities at the resonant frequencies were determined to be 2. 1 and 2. 3, respectively. The natural frequencies and transmissibilities of the isolator system were found to be insensitive to input level in the frequency range near resonance.

The experimentally determined vibration isolator characteristics were incorporated into the theoretical analysis of canister vibration, submitted as report DR-MMC-14, with Addendum, "Vibration Analysis of the MMC

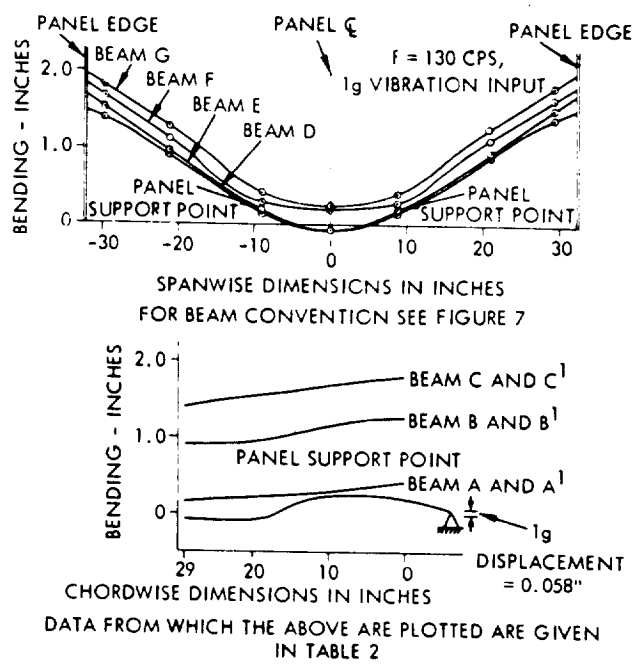

Figure 84. Panel Bending in Second Normal Mode

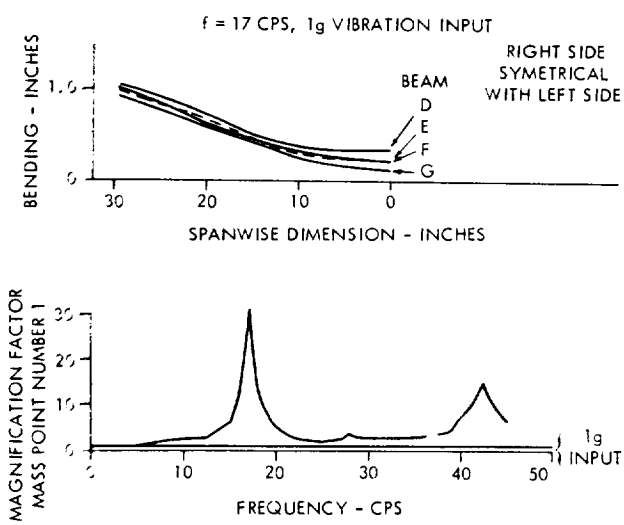

Figure 85. Stiffened Panel Response

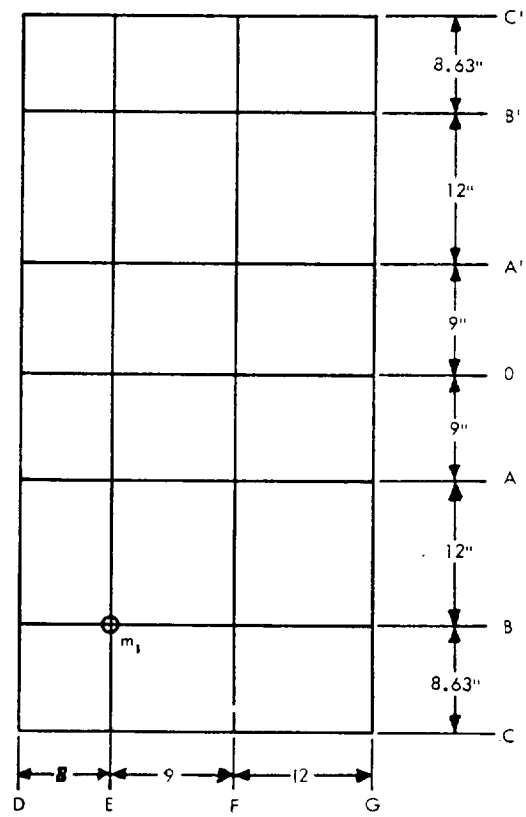

Figure 86. Beam Convention

Electronics Canister." Predictions of the canister responses exceeded the electronic component qualification levels in the frequency range from 16-100 cps. The predicted responses were anticipated to be conservative by virtue of (1) the relaxation in canister support boundary conditions provided by the presence of the isolators, and (2) the augmentation to canister stiffness provided by the attached black boxes themselves, a factor which was not taken into account in the analysis.

Since the degree of conservatism inherent in the analysis was uncertain, two approaches to combat excessively low canister frequency responses were initiated. The feasibility of significantly increasing the structural damping of the canister through use of elastomeric extensions was first investigated; discussions with the research staff of the Lord Manufacturing Company were conducted for this purpose.

The simplest conceptual extension to the canister consisted of filling the corrugations with elastomer compound. However, this measure was discarded as being virtually ineffective due to the small attainable distance between the elastomer and the neutral axis of the canister section.

The suitability of a constrained three-ply shear damping material was next investigated, and the unavailability of any off-the-shelf material which would ensure achieving the desired damping was determined. Lord Manufacturing Company subsequently sized the constrained laminate requirements. The tentative shear laminate configuration which evolved caused the damping concept to be discarded because:

1) The elastomer required was not a production run item, but rather was under laboratory development.

2) The space environment qualification of this elastomer was totally unknown.

3) The weight penalty for the configuration was formidable (about 45 pounds).

4) Considerable problems in remounting of the black boxes would be encountered.

Another approach considered was the possibility of requalification of black boxes to the theoretically predicted levels. These admittedly conservative levels are shown in Figure 87.

d. Detector Panel Analysis

Mathematical models and digital computer programs previously employed in Pegasus vibration analyses were used to evaluate the effect of the installation of Schjeldahl panels in the prototype. All panels were considered to have the equivalent stiffness of the 16 mil GTS panels (whose population are the majority). The transmissibilities and bending moments induced in the center section, frames, and panels are presented in Figures 88 and 89 for the first natural frequency for the FHC and the GTS panels.

Center section and frame transmissibilities at the first resonance are virtually identical for the two panel installations; panel responses for the GTS panel were prediced to be uniformly higher. Center section and frame bending moments at the first

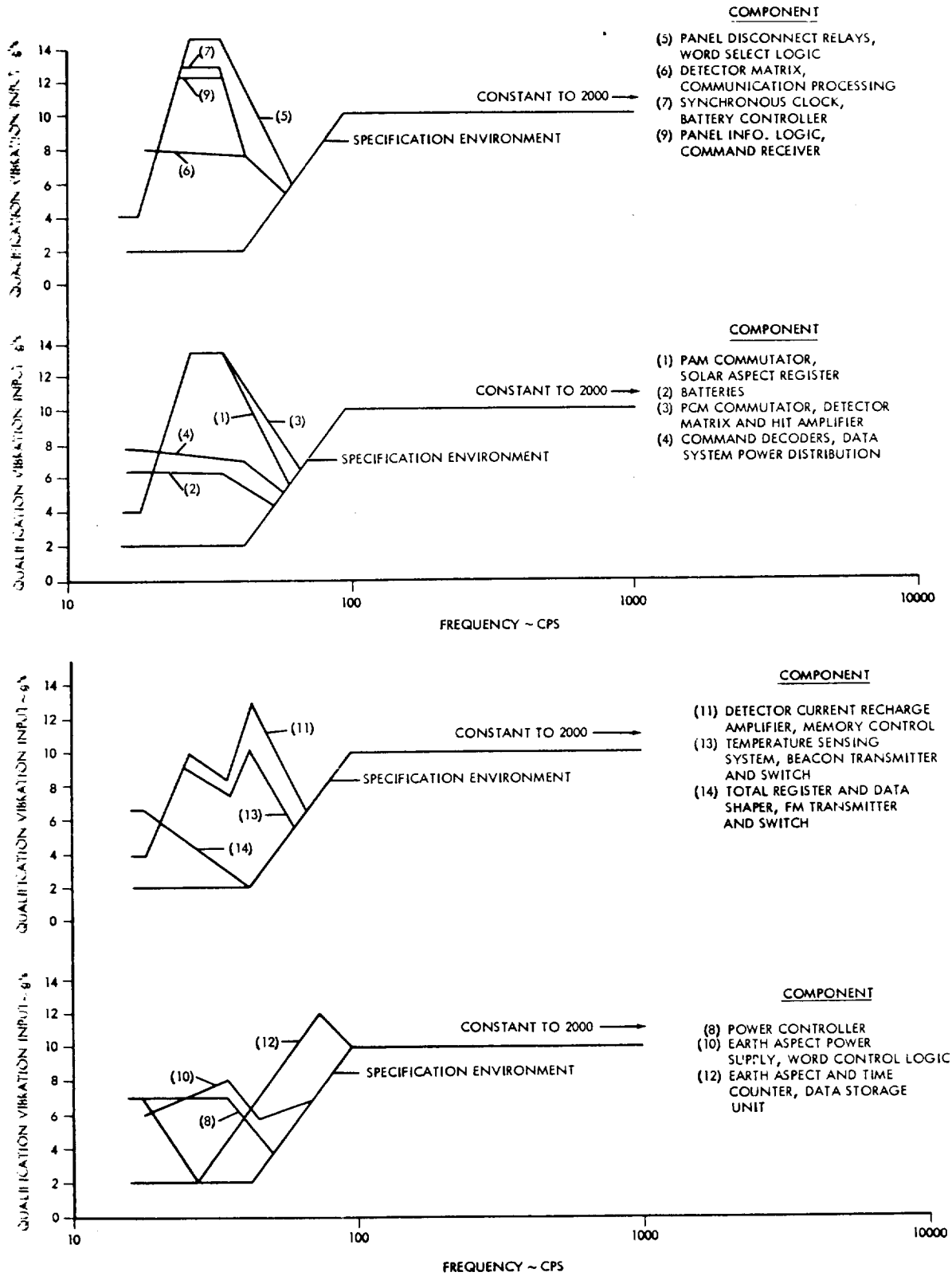

Figure 87. Recommended Modifications to Electronic Component Qualification Vibration Levels

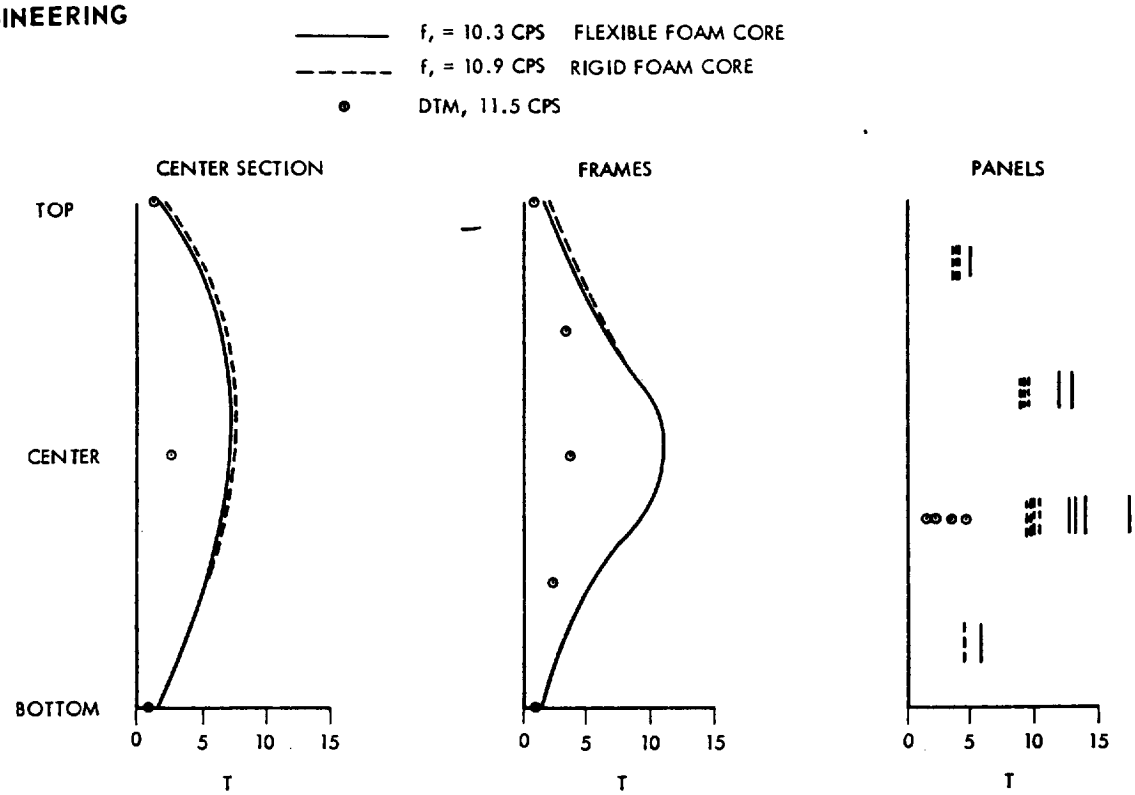

Figure 88. Transmissibility, Y-Axis

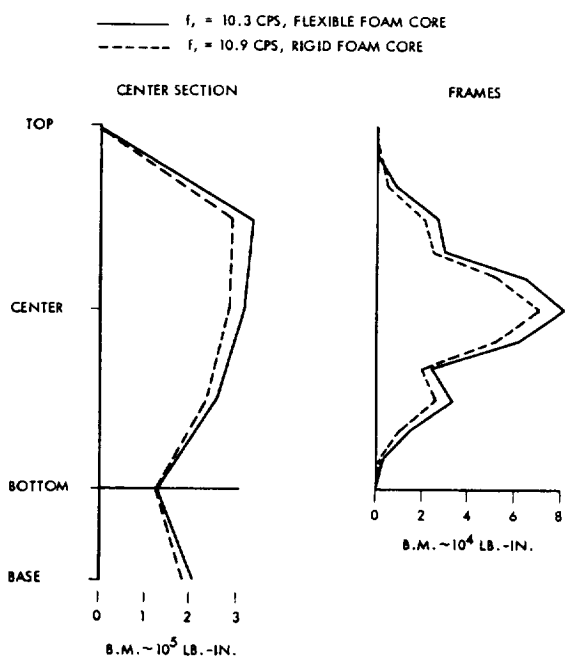

Figure 89. Bending Moment, Y-Axis

resonance were about 12 percent higher with the GTS panels than with the FHC panels because of associated resonant frequencies: GTS = 10.3 cps, FHC = 0.7 cps. The inherent conservatism of the FHC analytical results is shown by comparison with the DTM test results.

Acoustic environment qualification tests were conducted on the detector

panels at Wylie Laboratories, Huntsville, Alabama. These tests repeated, and supposedly duplicated, previous tests conducted at Aerotest Laboratories. Several panel failures occurred early in the Wylie program, whereas no failures had occurred during the Aerotest program. These diverse results required a detailed examination of the nature of the failures, and of the various related test conditions. In the panel failures at Wylie, the panel material tore out in the vicinity of the Lord Mount clips, on a side having a single clip. Three such failures occurred which were virtually identical. Initiation of these failures by cracks at the edges of the clip notches caused by the cutting tool appeared a possibility. Hairline cracks were observed after the vibration qualification tests as well as after the Aerotest acoustic noise tests.

Examination of the acoustic environments indicates both Aerotest and Wylie conditions conformed to those specified by MIL-STD-810 (Category C, random noise bandwidth 37.5 cps to 9600 cps @ 160 db sound level). However, the broad tolerance on spectral distribution permitted by this specification in the critical low frequency region makes it possible that the Wylie tests imposed higher acoustic loads on the panels than did the Aerotest runs.

Subsequent to the panel failures at Wylie, conference with MSFC Dynamics personnel concluded that the test levels were not realistic in the light of SA-6 and SA-8 flight data. Consequently, the acoustic test level was reduced from 158 db (+0, -2) (ref. 2×10^4 dynes/cm^2) to 154 db (+0, -2) and the duration from 30 minutes to a more realistic 3 minutes. In addition, the spectral distribution tolerance was reduced so that the maximum level in the 27.5 cps to 75 cps·octave was reduced to a total of approximately 12 db, whereas the 4600 cps to 9600 cps level was reduced somewhat less. Retest based on the revised test conditions resulted in no failures.

e. Summary of Dynamic Analyses

A documentation summary of the vibration analyses follows:

DR-MMC-1	Dynamics and Structural Design
DAR-MMC-1	Top Solar Panel Vibration Analysis
DAR-MMC-2	MMC Lateral Solar Panel Vibration Analysis
DAR-MMC-3	MMC Drive Shaft System Vibration Analysis
DAR-MMC-4	Lateral Solar Panel Deployment Analysis
DAR-MMC-5	MMC Vibration Analysis
DR-MMC-14	Vibration Analysis of the MMC Electronic Canister
DAR-MMC-7	MMC Water Ballast Tank Vibration Analysis

5. Structural Analyses

The structural integrity of the Pegasus is based upon the accuracy of the internal loads distribution, a function of the design configuration, structural

stiffness, and applied loads. The applied loads are a function of a vibration analysis.

Early in the program, the interrelationship of loading due to dynamic response, design configuration, and structural analysis dictated a development design philosophy which subsequently set the present design configuration.

a. Detector Support Frames

When an efficient light-weight design is attempted, the structure becomes extremely complex and contains many redundant factors. Such is the case with the detector support frames; each frame is redundant in itself, and in turn with the complete system; that is, the interaction of each frame within the stack, the center section structure, the forward lateral support, and the service module base support.

The analysis of the total support frame interaction required an energy solution, which was performed by the least work or minimum energy method. The solution of the redundant structure in matrix notation is: $(x) = (S_i)^{-1} (S_o)$, where (x) are the redundant factors, (S_i) the inverted redundant load system, and (S_o) the assumed load distribution. This method of analysis is more elaborately explained in the Pegasus stress analysis report, with its application to y axis detector-support frame loading. (Reference DR-MMC-9).

An internal load distribution of the complete system was prohibited by the limitation the computer program used. The program was limited to the solution of 100 simultaneous equations, whereas the complete system under consideration required approximately 270 simultaneous equations.

The problem was resolved by performing an energy solution of each detector-support frame in the X, Y, and Z directions with their external supports on an infinitely stiff foundation. The solution of the detector-support frames for loading in the y axis was accomplished as a "stacked" frame.

The x axis loading was considered on an individual frame basis since each frame is supported at the aft corners. To the internal member loads from the x axis loading is added the moment (mz) as each frame transfers its load across to the adjacent frame inboard, and then to the center section structure.

Analysis of the Z axis considered a varying load along the X axis of the frames because of the interaction of the service module support, center section, and forward lateral support structures. Each frame was analyzed for its respective loading with three external supports on an infinitely stiff foundation. An analysis was then performed on the frames by relaxing the center reaction, and with a unit load applied at that point, an influence coefficient was determined from which an equivalent EI, or stiffness of the frame, was obtained. In addition, equivalent EI's of the center section, center section base, service module support, and forward lateral support structures are determined, linked together as a system, and their several interactions considered as the overall system. These interaction loads were then fed back into the individual energy analyses of the true structure, and the internal loads of the panel frames are

determined as a function of the complete system. Figure 90 illustrates this complete system.

The analysis of the detector support frames for loading in the x axis was analyzed with 21 redundant factors for the full frame and 18 redundant factors for the half frame. The design loading was for a uniform 18.75 g ultimate.

The Y axis energy analysis was accomplished and fully reported in the Pegasus stress analysis report, DR-MMC-9. The solution contained 48 redundant factors. Four additional pressure-pad locations were added to the frames to increase the redundancy to 56. The solution was modified for the added redundancy.

The Z axis detector frame analysis, with its system complexity as mentioned above, was set up with 30 redundant factors for the full frames and 14 redundant factors for the half frame. Both of these configurations are based on three rigid supports. An internal loads distribution was accomplished for the outboard frame with load factors of 4.5 g ultimate at the forward hinge, 15.0 g at the center hinge and 7.5 at the aft hinge. The secondary effects, bending resulting from one frame transferring load to another along the hinge plane, have been considered in the detail analysis.

b. Center Section Analysis

The analysis of the center section proper, its base support, and the top-tie structure conservatively considers a predominately statically determinate structure, based upon loads resulting from its own dynamic response and from those loads imparted by the detector frames and other component structure. Further conservatism is achieved through consideration of pin-ended columns.

A static test of the center section was performed with loading based upon the calculated responses from the criteria of P & VE-S-62-7. The applied loads were limited to the actual equivalent steady state loads, such as would be experienced during vibration testing (limit load), since the article tested was the center section of the dynamic test model. The resulting loading is as published in MMC-TP-11. It should be noted, however, that to facilitate physical application of the loads the following simplifications were employed:

X Axis

Total inertia of the center section and gearbox were lumped together and were conservatively applied at the top of the four corner posts. Detector and panel loads were applied at their actual locations.

Z Axis

Loading was reduced to application of the detector panel center hinge load only. Z axis loads were not critical for the center section, and this load application was intended only to verify local center-hinge back-up structure.

Y Axis

Detector panel loads were applied in their actual locations,

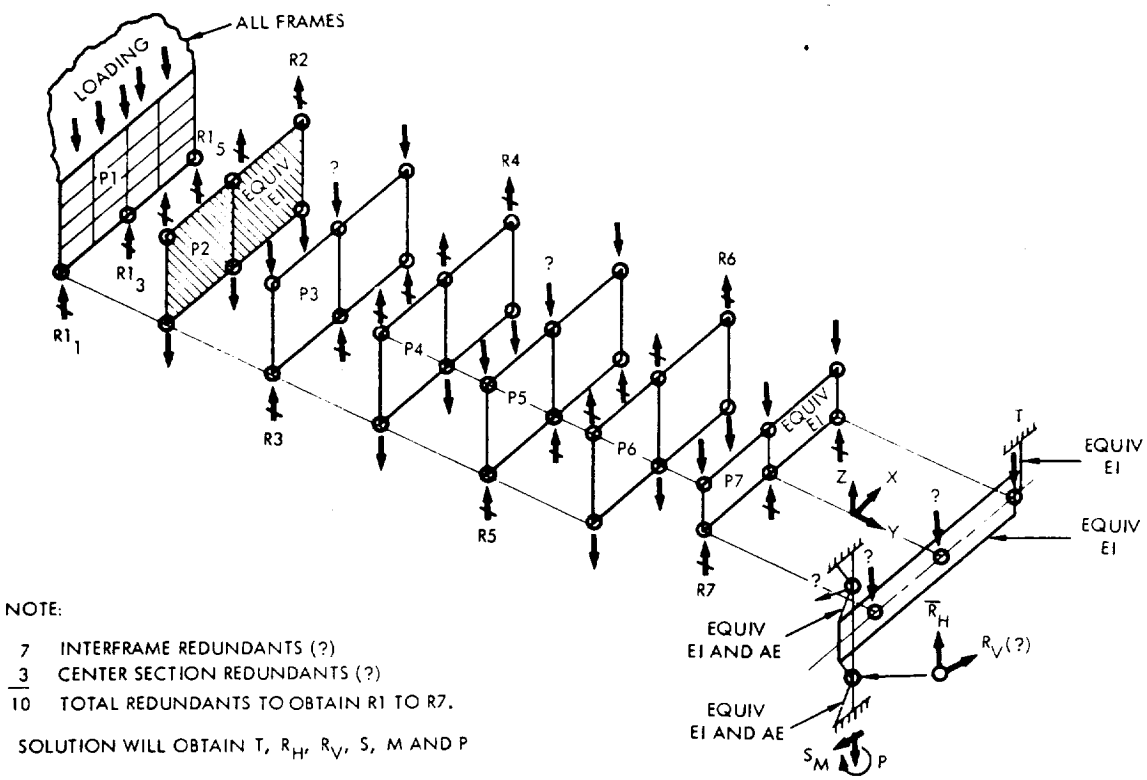

Figure 90. Interaction Analysis System by Equivalent Stiffness (Z Direction Loading — Dynamic Loading)

and of the correct magnitude with the exception of 48 pounds which occurs at the farthest forward outrigger point and was neglected. Center section and gearbox inertia was applied at the center and aft hinges; the 270 pounds at the forward hinge was neglected, incurring negligible error.

Location of instrumentation and a comparison of the calculated or predicted stresses versus the actual stresses are shown on Figures 91 and 92 for the X and Y axes. Examination of the figures reveals close agreement. It should be noted that actual stresses quoted reflect the loading as modified above.

c. Detector Deflections

Deflection analysis of the detector support frames for the X, Y and Z loading was performed permitting analysis of the resulting forced deflections of the detector panel isolators (reference DR-MMC-3). The results of the foregoing were utilized in the completion of the load and stress analysis of the revised detector isolator support brackets. A thermal analysis of the detector panels and their support framework revealed that "worst-case" thermal loading produces a panel deflection of 0.747 inch across the long diagonal for the 0.0015 inch panel. No face sheet stresses are experienced since the panel edges are

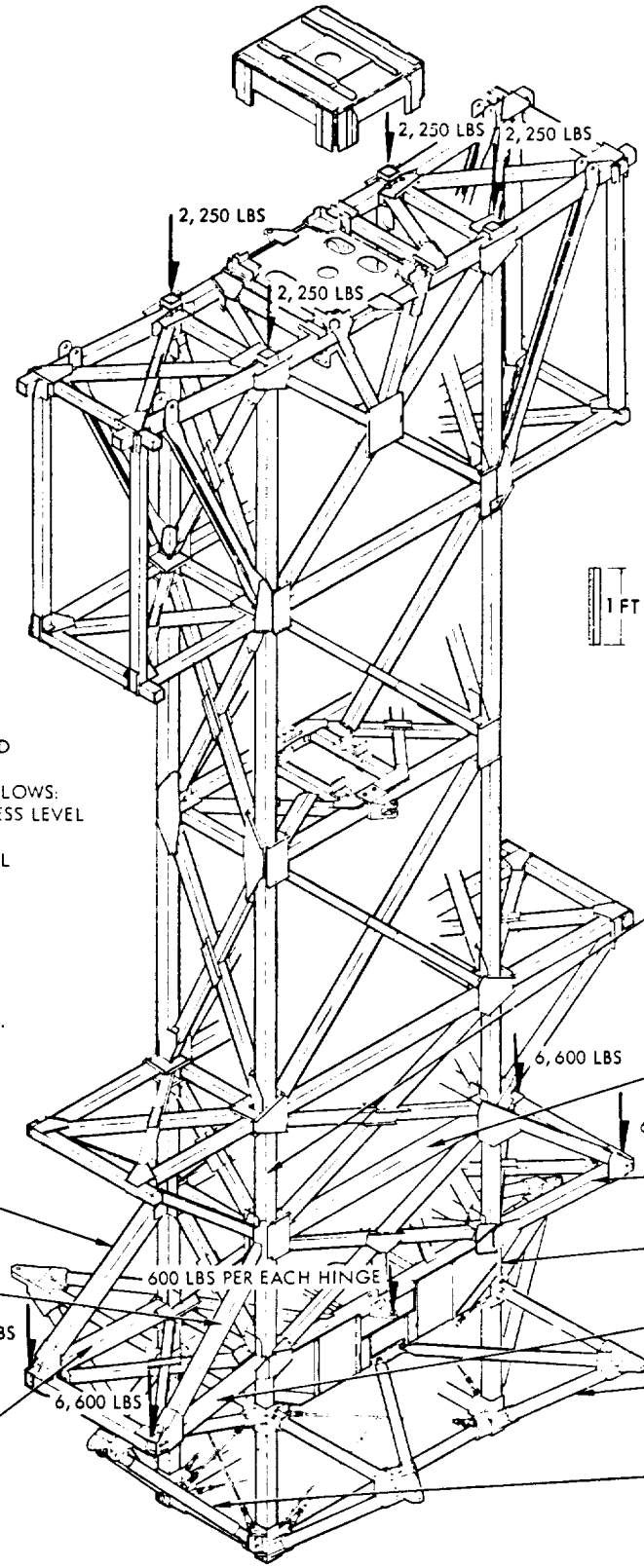

NOTES:

1. COMPARISON BETWEEN CALCULATED STRESS LEVELS AND STRAIN GAGE TEST READINGS ARE SHOWN AS FOLLOWS:
   (XX, XXX PSI) C - CALCULATED STRESS LEVEL
   (XX, XXX PSI) T - STRAIN GAGE READ STRESS LEVEL
2. APPLIED LIMIT TEST LOADS ARE SHOWN FOR REFERENCE.
3. TOTAL DEFLECTION IN "X" DIRECTION: MEASURED = 0.180 IN.
   CALCULATED = 0.83 IN.

Figure 91. Center Section, Static Test X Axis Loading

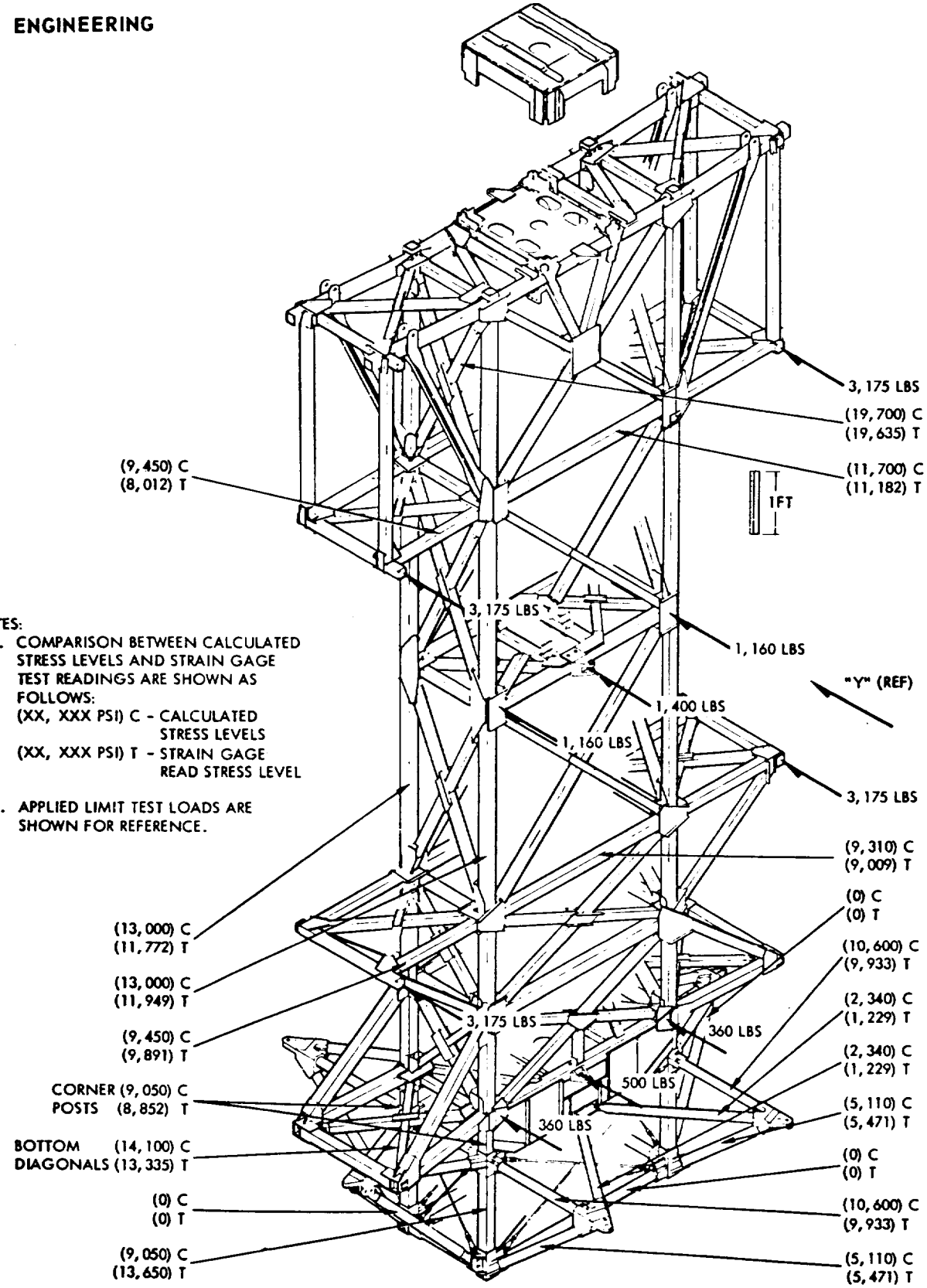

NOTES:

1. COMPARISON BETWEEN CALCULATED STRESS LEVELS AND STRAIN GAGE TEST READINGS ARE SHOWN AS FOLLOWS:
   (XX, XXX PSI) C - CALCULATED STRESS LEVELS
   (XX, XXX PSI) T - STRAIN GAGE READ STRESS LEVEL
2. APPLIED LIMIT TEST LOADS ARE SHOWN FOR REFERENCE.

Figure 92. Center Section, Static Test Y Axis Loading

virtually unrestrained and panel bowing is compensated for by isolator displacement.

d. Forward Solar Panel Deflections

The forward solar panel restraints were analyzed for the induced ultimate g loading of the panels, together with loads imparted by virtue of a wing stack deflection of $\delta x = 0.137$ inch, assuming the solar panel and wing stack to be out of phase. A subsequent deflection analysis of the forward solar panel, for the aforementioned loading (reference DR-MMC-4), yields a maximum deflection of the panel tip of $\delta x = 0.155$ inch, relative to a tube-support point deflection of $\delta x = 0.092$ inch, which is well within the established allowable deflection of 0.200 inch per foot. The basic Pegasus restraint system is shown in Figure 82. Figure 93 shows the forward solar panels.

e. Tumbling Effects

Determination of the permissible roll, yaw, and pitch rates of the vehicle as defined by the structural integrity of the Pegasus was made. Anticipated tumbling rates of SA-9, due to LH_2 and lox venting of the S-IV stage were supplied by Marshall Space Flight Center.

The effects of the venting were investigated by Fairchild Hiller in the following manner:

1) Resultant stresses due to venting impulses and their resulting rates of angular rotations and induced angular accelerations.

2) Resultant stresses due to induced rotation and angular acceleration during some possible critical phase of wing deployment.

3) Resultant stresses due to increased effects of centrifugal loading with an assumed large wing tip deflection.

The load paths for a six-force-vector loading system, as a result of "triaxial" tumbling, were resolved as a function of wing deployment position. Generalized equations for combined loading were written which permitted generation of a complete load/stress-level time history during deployment.

The results indicated that the vehicle would survive the combined tumbling rates due to three venting occurrences during deployment, but would not survive the accumulated roll (x) and yaw (z) angular velocities resulting from the entire venting sequence.

The target tumbling rates defined by MSFC are:

During Deployment

$$\dot{\omega}_{xyz}(\text{rms}) = 0.15 \text{ deg/sec}^2$$

$$\omega_{xyz}(\text{rms}) = 1.0 \text{ deg/sec}$$

Deployed

$$\dot{\omega}_{xyz}(\text{rms}) = 0.15 \text{ deg/sec}^2$$

$$\omega_{xyz}(\text{rms}) = 6.0 \text{ deg/sec}$$

and cause no damage to the Pegasus structure.

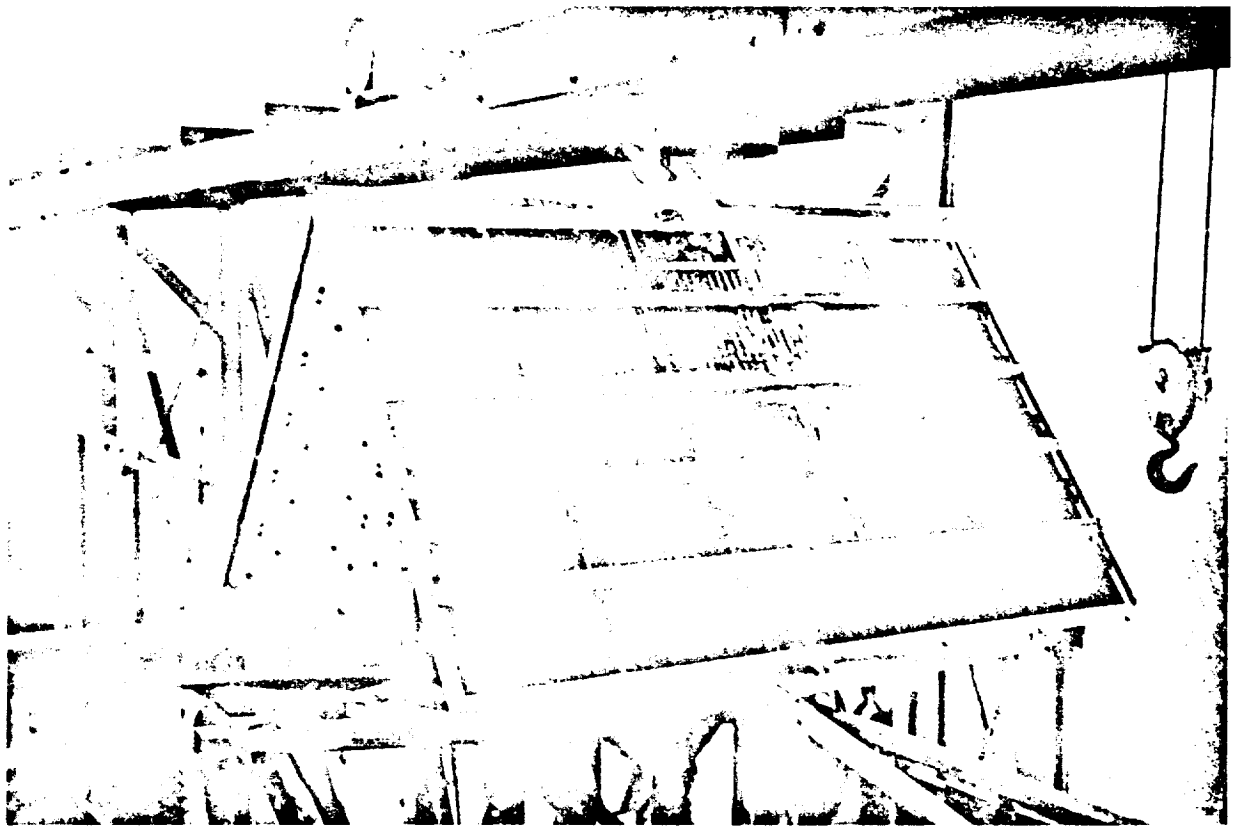

Figure 93. Forward Solar Panel

The maximum allowable rates, producing a zero margin on the structure, are determined by analysis to be:

During Deployment

$$\dot{\omega}_{xyz}(\text{rms}) = 0.75 \text{ deg/sec}^2$$

$$\omega_{xyz} = 3.2 \text{ deg/sec}$$

Deployed

$$\dot{\omega}_{xyz}(\text{rms}) = 0.569 \text{ deg/sec}^2$$

$$\omega_{xyz} = 14.15 \text{ deg/sec}$$

The complete analysis was published as FHC Report DR-MMC-15.

f. Lateral Solar Panel Deployment

(1) Zero "G" Environment

Analysis of the lateral solar paddle during zero g deployment was submitted as an addendum to FHC Report MMC-DAR-4. The solution employs D'Alembert's Principle for a compound physical pendulum and allows a non-linear torque output based on link geometry. The resultant levels of stress in the solar panel and supporting structure all lie within acceptable levels. Evaluation of data from the air-bearing-supported and boom-supported deployments indicates close agreement of deployment time, velocity,

acceleration, deflections, and strain levels of the forward structure. Measured levels of strain for the aft support tubes were lower than calculated levels, because of the torsional spring of the center section support, conservatively neglected in the analysis.

(2) One "G" Environment

A structural analysis of the lateral solar panel to determine the external and internal loading and stresses produced at terminal locking of the panel, during a 1 g deployment, was accomplished. The study utilized the kinetic energy developed in deployment, as determined analytically using Legrange's energy relations, to determine impact loading. After impact, the kinetic energy distribution to each mass point was equated to its strain energy resulting in the determination of internal loading and stresses. In an effort to reflect the correct stiffness of the panel and its supporting structure, the analysis includes axial bending and torsional energies of the forward and aft struts and the supporting outrigger structure. The analysis was presented in FHC report DR-MTS-18.

g. Electronics Canister Vibration Environment

The DTM vibration test showed that the vibration response levels of the electronics canister would exceed the levels which the individual black boxes were designed to withstand. Therefore, a vibration isolator system was designed, and considerable testing was performed to provide data and supporting analysis which will ensure satisfactory performance of the isolated canister during vibration testing of the prototype. (See Figure 94.)

Development tests were performed, using a single degree of freedom spring mass system, to determine the most desirable isolator configuration, and to ascertain the size of the isolator consistent with natural frequency requirements and useful life expectancy.

The existing bolt pattern which attaches the canister "Y" legs to the center section was retained so that the isolator system consists of 20 pairs of isolators, or five pair on each leg. The isolator system single degree of freedom natural frequency is 32 cps under a 1 g vibration input. Stiffeners were added to the canister structure to raise the lowest canister frequency, which had been 45 cps. The canister vibration analysis indicated the lowest frequency of the stiffened canister to be 65 cps, which provided satisfactory separation between the isolator frequency and the lowest canister frequency. Preliminary results of the detailed vibration analysis of the canister showed satisfactory coincidence with DTM canister frequencies which, in turn, provided validity of the structural model used to predict the dynamic characteristics of the stiffened canister with isolation.

Special instrumentation was provided during prototype vibration testing to ensure that the isolation system was properly evaluated and to define the actual canister vibration levels which appear as an input to the black boxes. A total of 30 accelerometers were attached to the canister surface, and the outputs of 22 of these were recorded during low level vibration sweep testing in each axis of the Pegasus prototype. The outputs of these accelerometers were

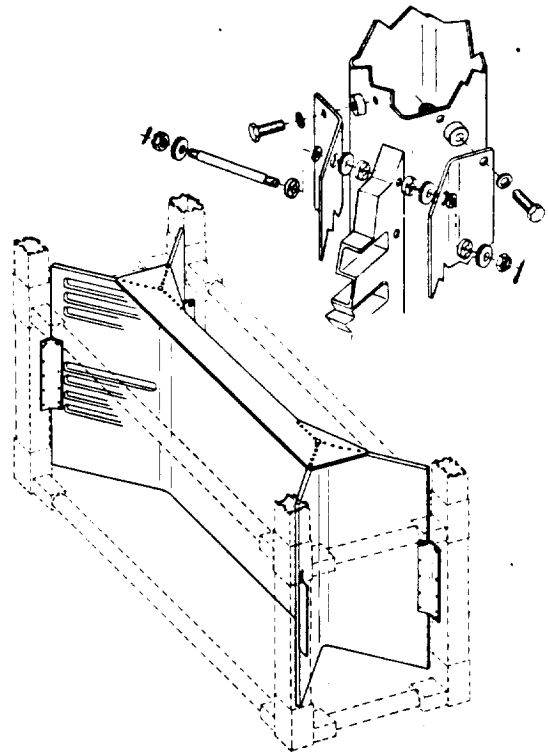

Figure 94. Electronics Canister Mounting and Isolation System

evaluated prior to high level sweep and random vibration testing in order to insure that no black box components could be damaged by vibration testing.

h. Component Mounting

During the qualification tests of electronic components, the FM transmitter and switching unit sustained a yielding of its supports and attaching fasteners under an overload shock condition. During the vibration test phase, the same unit experienced two failures of the spacer mounting bolt caused by over torquing and a material deficiency.

An additional failure was experienced during a high level developmental vibration series of tests on a conservatively simulated hit amplifier box when the supporting channels yielded in bending.

Reanalysis of all the electronic component mounting structure was undertaken, and was reported as Section V of FHC report Pegasus-DR-4. The analysis concluded that the majority of component mounting structures was critical for a 40 g peak (60 g ultimate) qualification shock-test loading, although a higher than qualification level vibration environment was also considered.

A redesign was effected whereby the channel support rails were replaced by solid rails for the majority of the rail-supported components. Other changes were included in a few components to assure an additional margin of safety.

Subsequent changes were also made to the FM transmitter switching unit, synchronous clock support, and command receivers as a result of MSFC recommendations; analytical reporting of these latter changes was included in Pegasus-DR-4.

i. Harmonic Drive

The first stage flexspline of harmonic drive unit No. 371 (original design) was cycled under load by the United Shoe Machinery Corp for 26.6 million cycles with no failure of the unit. A reworked unit (new design) from harmonic drive No. 373 was cycled to 50 million cycles with no failure at the reduced diaphram stress level of approximately 30,000 psi. The foregoing tests were requested by FHC to provide additional confidence in the redesign. With reference to recommendations of MSFC concerning the minimization of tool marking on the first stage flexsplines of the harmonic drive units, FHC directed the United Shoe Machinery Corp to disassemble and remove flexsplines from units 361, 362, 370 and 373 for the purpose of obtaining macrographs of the diaphram area. USMC had assured FHC that particular attention is directed to surface finish. The part is designed for a finish of 63, but it is likely that a smoother finish was actually achieved. Moreover, unlike the ferritic steels, this material (321 stainless) exhibits a low notch sensitivity.

j. Wing Motion Analysis

A "Wing Straight-Line-Motion Study" was conducted. Four types of deployment mechanisms, each using a cam element, were investigated. The loading criteria used for the analysis was two-fold. First, it considered the maximum available torque from the motors and gearbox as applied to the deployment linkage. Second, it considered the system loading resulting from a combination of the rotational and translational energy during deployment superimposed upon the effects of spacecraft tumbling. A report of the analysis performed was published as DR-MTS-20.

k. Solar Module Mounting Stud

A study was completed to determine the detrimental effects of loss of one or more solar module mounting studs. The study was composed of several phases, briefly stated as follows:

1) Analytically removing combinations of studs to determine the structural integrity of the remaining studs and the 0.032 module base plate.

2) Shear and bending testing of studs to determine allowable stress of the stud as welded to the module base.

3) Lap shear of, and tension tests of, the RTV 602 thermal layer to determine if it exhibited any structural capability for module retention on the honeycomb substrate.

4) X-axis vibration dwell test at forward solar panel resonant frequencies, while mounted on the DTM, and using a live panel with combinations of studs removed.

5) A proof load tension test of all mounting studs.

The study revealed that the RTV 602 thermal layer bond does not provide any load-reaction capability, and any combination of two studs may be "lost" without detriment to the module retention or solar cell performance.

1. Restraint Arm Study

During a "live" deployment at Fairchild Hiller in Hagerstown, the Pegasus A restraint arms were dented by the impacting of the hi-shear bolt catches.

Since the probability existed that the restraint system would undergo further "live" deployments prior to launch, the effects of impacting were investigated further. The analysis performed conservatively employed conservation of energy in the system, requiring that the external work done by the bolt and catcher be equal to the energy absorbed by the restraint arm in deformation. Since the impacting load is of a transistory nature, its duration of impulse was compared with the period of response of the structure to determine the damaging effects.

It was found that the impulse load duration was approximately 22 times the structural response time for local plastic dimpling of the restraint-arm-tube-wall. Plastic dimpling was then considered to have occurred over a 1/2" diameter area. The ultimate allowable load was based upon a plastic deflection, over this region, in excess of three times the elastic limit deflection. A plastic deflection of this magnitude would cause stresses slightly less than ultimate, but with no cracking or rupture of the tube wall.

It was concluded from the foregoing that the dented tubes were satisfactory for use as flight hardware since a conservative margin of safety of +0. 58, on ultimate, is realized.

m. Summary

Analysis of primary and secondary structure is contained in the following documentation submitted to Marshall Space Flight Center:

DR-MMC-2	Loads Criteria Report
DR-MMC-3	MMC detail Structural Analysis; Part I-Detector Support Frames
DR-MMC-4	MMC Detail Structural Analysis; Part II-Center Section and Miscellaneous Components
DR-MMC-5	MMC Detail Structural Analysis; Part III - Ground Handling Equipment
DR-MMC-9	MMC Detail Load Analysis
DR-MMC-15	MMC Detail Structural Analysis Orbital Venting Effects
DR-MTS-18	Lateral Solar Panel 1 G Deployment Study
DR-MTS-20	Original Study of Straight Line Deployment Mechanism

6. Mass Property Analysis

The final Pegasus weight (through 31 July 1965) was 3174. 3 pounds. This was 132. 7 pounds below the contractual weight of 3307 pounds and 132. 3 pounds above Fairchild Hiller's target weight of 3042 pounds. For convenience of presentation, four functional weight groups have been established; their respective weight trends are presented in Figures 95 and 96. The total Pegasus weight trend and the original projected weight growth is illustrated in Figure 97. The longitudinal center center of gravity history is noted in Figure 98. The mass moment of inertia history is presented in Figure 99.

The moment of inertia change was approximately proportional to the weight change.

Actual weights for Pegasus A, B and C were:

	Weight (lbs)	X (in.)	Y (in.)	Z (in.)
Pegasus A	3118. 5	1662. 9	-0. 1	0. 4
Pegasus B	3110. 4	1662. 6	-0. 1	0. 4
Pegasus C	3116. 4	1662. 9	-0. 1	0. 4
Pegasus C (Detachable Panel and Fluorescent Paint Modification)	3138. 6			

Pegasus A weight of 3118. 4 pounds included 18 pounds for antenna, coax and installation.

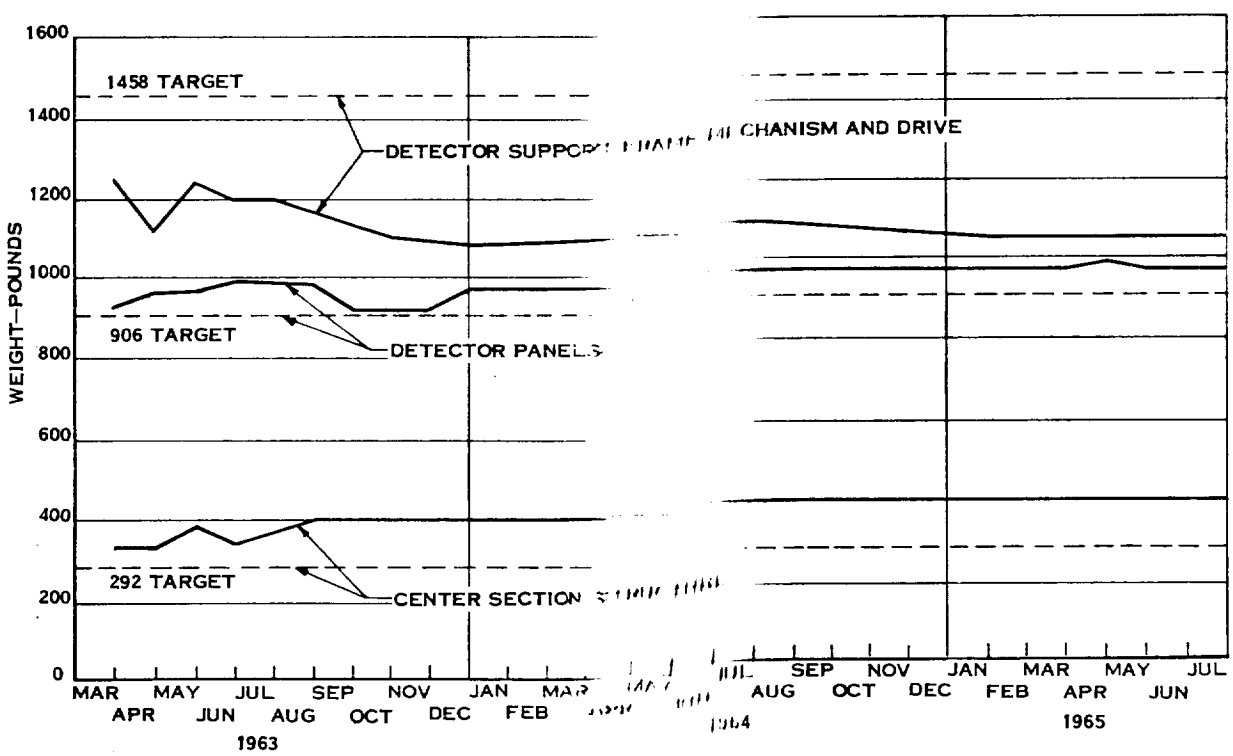

Figure 95. Structure Functional Weight Trend

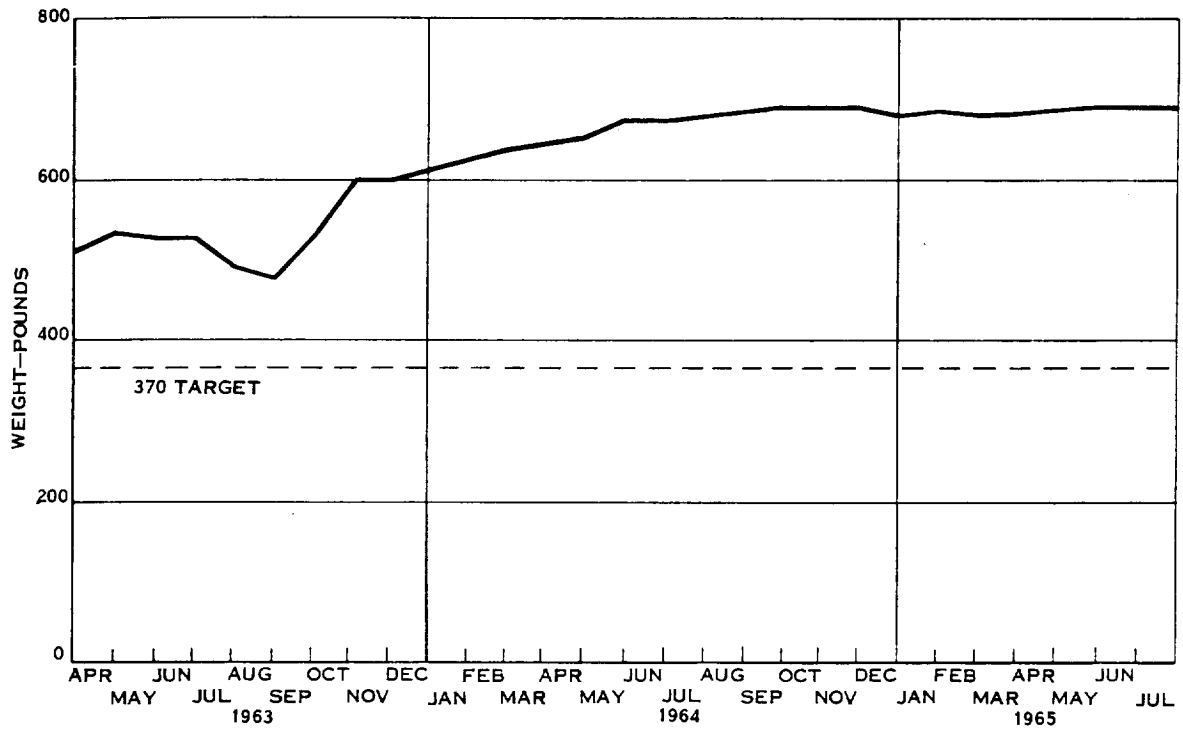

Figure 96. Electrical, Electronic and Environmental Control Functional Weight Trend

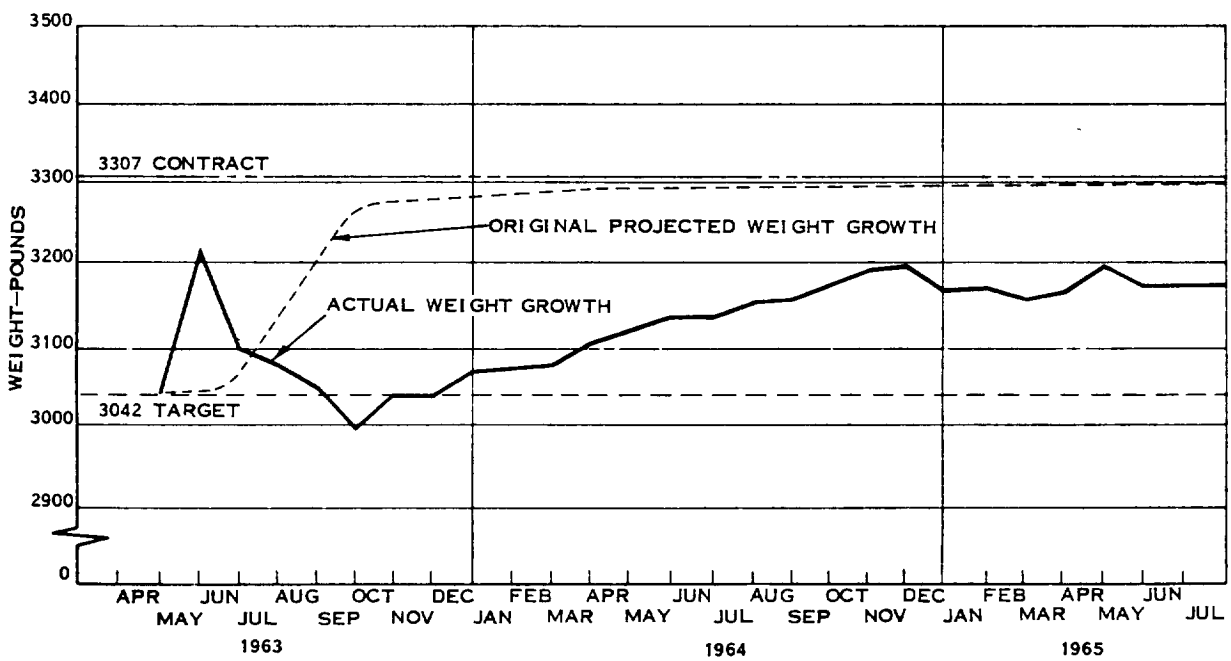

Figure 97. Total Weight Trend and Projected Growth

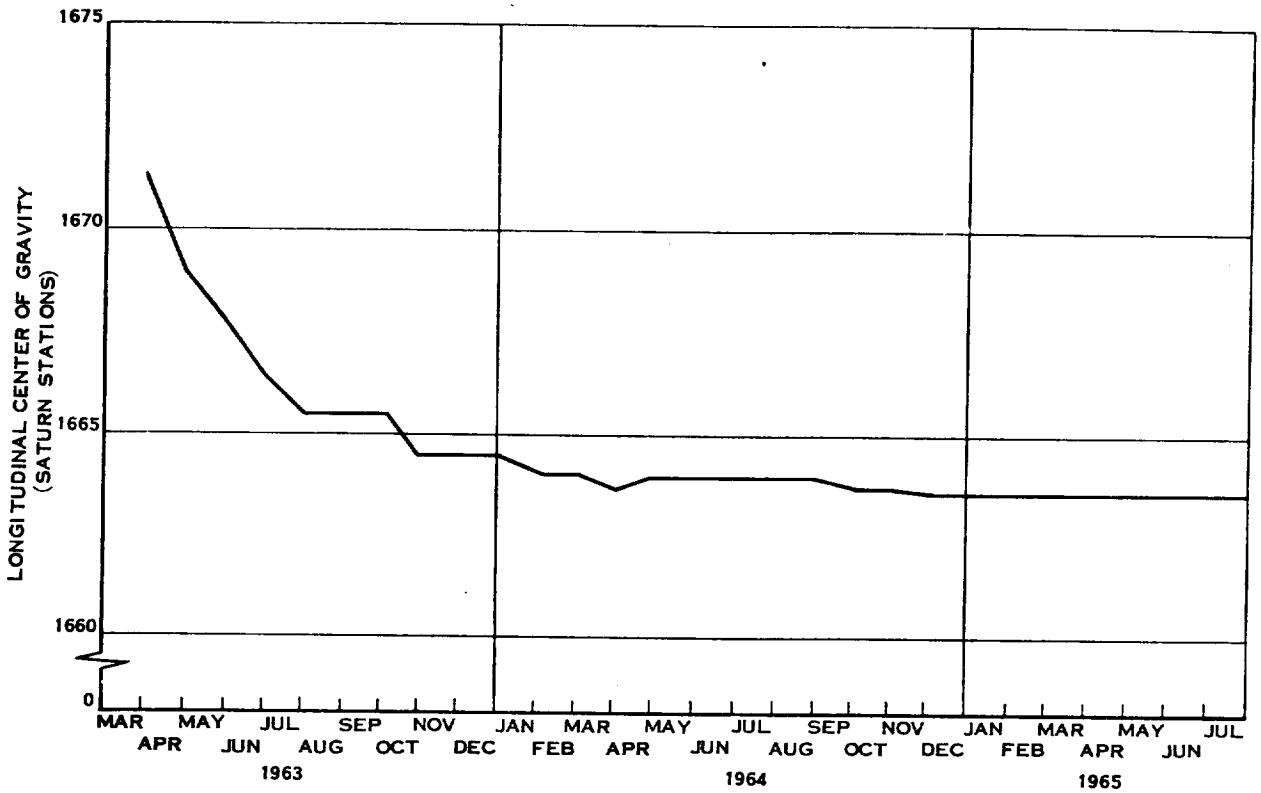

Figure 98. Longitudinal Center of Gravity History

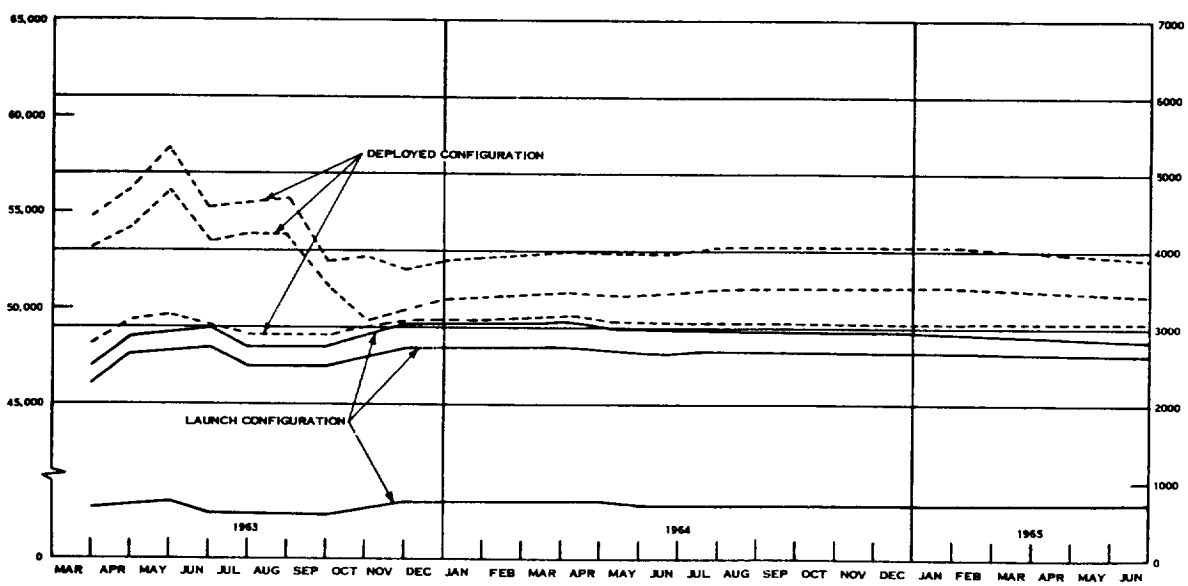

Figure 99. Mass Moment of Inertia History

Pegasus B, C and C (modified) weights of 3110. 4, 3116. 4 and 3138. 6 pounds, respectively, did not include 15. 4 pounds for antenna, coax and installation.

Pegasus C (modified) weight of 3138. 6 pounds was an increase of 22. 2 pounds over Pegasus C (3116. 4 pounds) and included the deletion of 8 FHC detector panels (27. 8 pounds) and the addition of 8 MSFC installed detector panels with coupons (40 pounds) and epoxy paint (10 pounds).

All Y and Z centers of gravity were calculated.

Results of the mass properties analysis of the Pegasus water ballast tank as reported in DR-MMC-13 were as follows:

	Weight	Longitudinal Arm
Corrected Weight (dry)	2883. 5	1663. 28
Corrected Weight (loaded)	3360. 3	1664. 71

H. Electrical Power Subsystem

The electrical power subsystem underwent considerable redesign throughout the development program. A major cause of the redesign was due to the increased load placed on the power subsystem as a result of design refinement in the related subsystems. This load increase required modification of the current capacity, battery charging capability, current regulation and power monitoring and switching networks.

1. Original Concept

The purpose of the electrical power subsystem, as originally conceived, was to provide the electrical energy to power the erection motors and fire the pyrotechnics with batteries that were not part of the operational satellite power system. The operational satellite power system consisted of 14,400 1 by 2 cm N on P type solar cells mounted on four single-sided panels, two 22-cell nickel cadmium batteries and a battery controller. This power subsystem is shown in a simple block diagram in Figure 100. This subsystem was designed to satisfy the load profile shown in Figure 101.

The battery controller was to provide a constant current charging source that was reduced to a trickle charge after proper amount of energy was returned, as determined by an ampere-hour metering unit, and then the standby battery was switched on to a trickle charge. The battery controller provided the automatic battery changeover based upon voltage and temperature. Voltage limitation was obtained by Zener control across the solar array output.

2. Final Concept

The final design of the electrical power subsystem evolved into a similar system with substantial differences. The final power subsystem consists of the four solar panels (two forward and two lateral), a Zener pack mounted above the electronics canister and, mounted in the canister, two batteries, battery controller and power controller as shown in Figure 102.

The solar panels are flat, rigid structures on which 25,200 solar cells are bonded in a series parallel combination. Each series string of solar cells on the four panels is terminated (through diodes to prevent reverse current in shorted or shadowed cells) to a common bus that is then split into two branches. The Zener pack contains two "strings" of Zener diodes, one for each branch, which act as shunt regulators. The battery controller contains battery chargers and regulators. Each battery is made up of 23 nickel-cadmium 6 amp hour 1.2 volt cells forming a 28 vdc battery (nominal). All switching functions affecting power subsystem operation, circuit protection and monitoring are included in the power controller.

A functional block diagram of the power subsystem is shown in Figure 103. All relay contacts are shown in the proper position for using battery A to supply power through the main regulator. The heavy flow lines indicate the main paths of current flow with the switches set as shown. The lighter flow lines represent the path of current flow when battery B and the standby regulator are selected.

With relays set as shown in Figure 103, the A string of diodes in the Zener

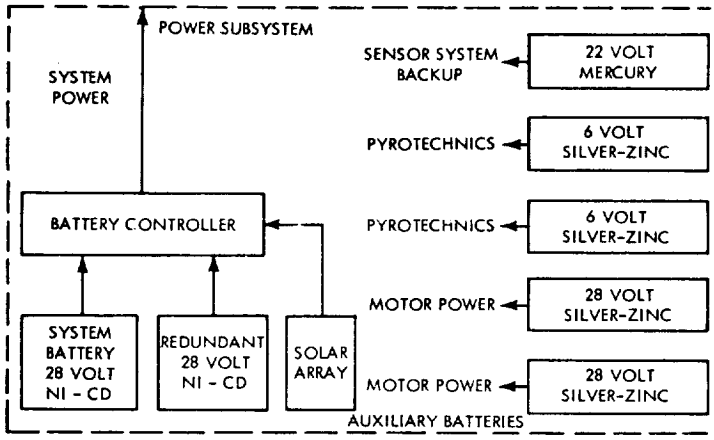

Figure 100. Original Power Subsystem Block Diagram

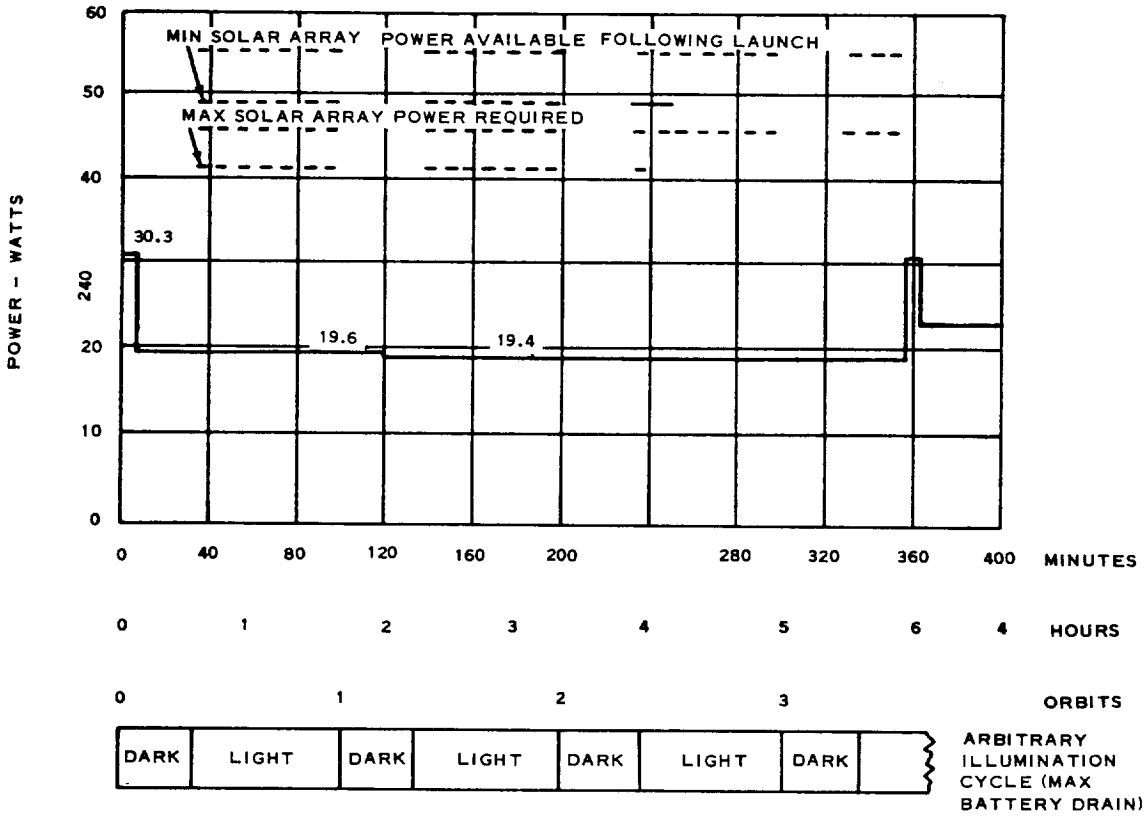

Figure 101. Electrical Load Profiles, Original Concept

pack is connected across the A branch of the charging circuit from the solar array to ground, providing a shunt regulator which prevents excessive voltage input to the chargers and regulators from the solar array. The main chargers allow a maximum charging current of approximately one ampere; the trickle

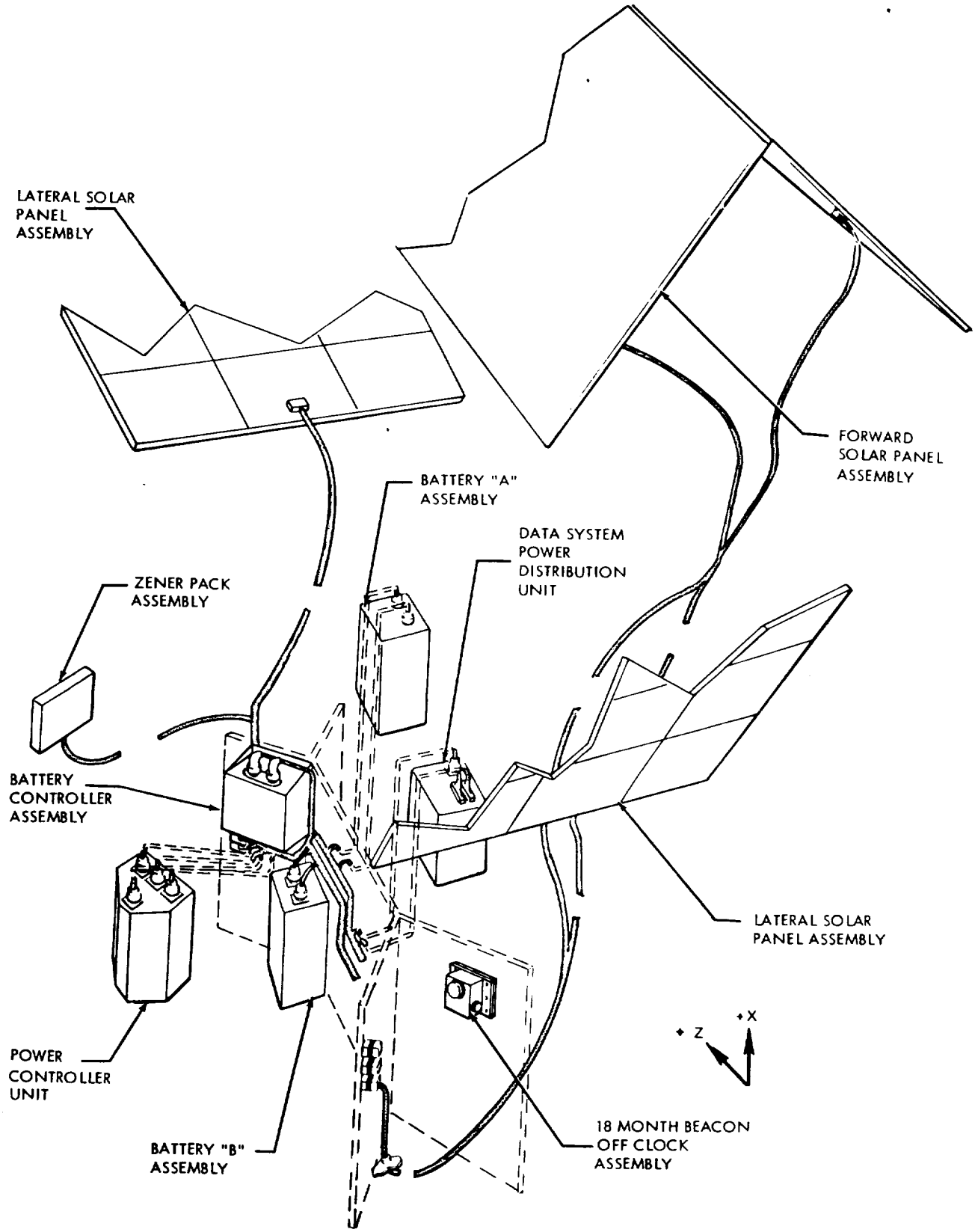

Figure 102. Power Subsystem Components and Location

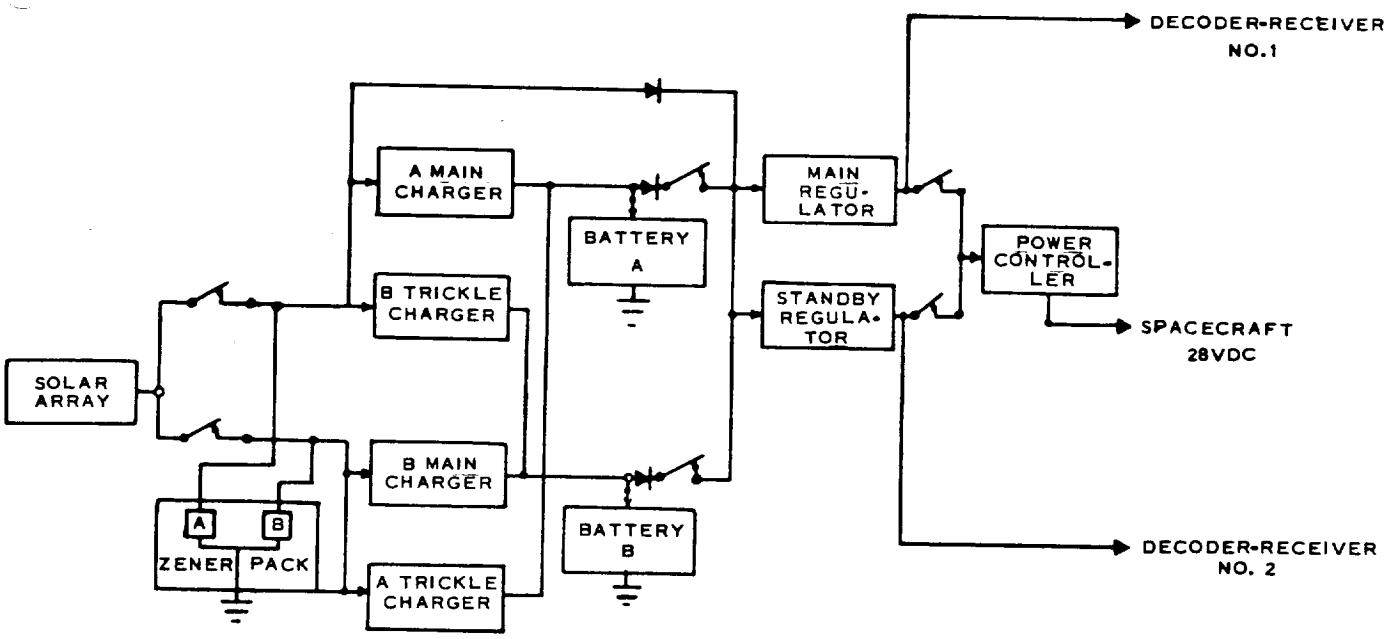

Figure 103. Final Power Subsystem Block Diagram

chargers may allow a rate of either 100 or 500 ma. This rate is selected by ground command via the power controller.

When battery A is selected as the power source it is charged by the main charger, and battery B is charged by the trickle charger. The reverse is true when battery B is selected for use. The battery in use is connected to both regulators, but only the output of the selected regulator is connected to the load via the power controller. In addition to switchover by ground command, provision is made for automatically switching the load and chargers from battery A to battery B and vice versa. If the automatic switching mode is selected by ground command, voltage sensors monitor the line voltage. When the line voltage drops below acceptable level, the sensors actuate the necessary relays in the power controller to switch the load and charging circuit to the battery not in use.

Table 10 presents the electrical supply loads for the Pegasus without including conversion efficiency. The average system power requirement has increased from the original 0.72 amperes to the present 1.26 amperes, a 75% load increase.

3. Subsystem Development

Due to the increased load power requirement, the solar array was increased from the original 14,400 cells proposed to 25,200 presently used. The original concept of replacable solar cell modules mounted to solar panels was retained throughout the program.

TABLE 10. LOAD COMPONENTS BREAKDOWN

Circuit	28 Volts ma	22 Volts ma	22.7 Volts ma	+6 Volts ma	-6 Volts ma	50 Volts ma	Duty Cycle
Data Subsystem (Normal Mode)							
Word Control	4.25			61.0	4.5		Continuous
Memory Control Digital Data Simulator				59.5	3.4		Continuous
Detector Matrix Hit Amp.				56.0	35.0		Continuous
Current Recharge Amp.		40.0		19.0		30.5	Continuous
Word Select Logic Group			2.85	7.65	1.45		Continuous
Total Hit Counter Data Shaper & Parity				76.0	4.8		Continuous
Panel Info Logic Group	19.25			23.0	4.8		Continuous
Time Counter & Aspect Sensor	10.5			7.2	2.8		Continuous
Solar Aspect Sensor	24.4						Continuous
Earth Aspect Sensor		180.0			5.0		1st 2 Hrs 5 sec. of ea. min. temp. on
Temperature Sub-System	62.0						After 2 Hrs 5 sec. of Earth Aspect followed by 5 sec. of temp. out of ea. 5 min.

TABLE 10. LOAD COMPONENTS BREAKDOWN — Continued

Circuit	28 Volts ma	22 Volts ma	22.7 Volts ma	+6 Volts ma	-6 Volts ma	50 Volts ma	Duty Cycle
Data Subsystem (Normal Mode) (cont)							
Memory	8.0 (Stand By) 42.0 (Readout 1.5 min. Orbit)						
Clock	100.0						Continuous
Data System Total	573 623 Memory Readout						
Data Subsystem (Rapid Attitude Mode)							
Word Control	7.5			60.0	4.9		Continuous
Memory Control Digital Data Simulator				62.0	3.5		Continuous
Detector Matrix Hit Amp.				56.0	35.0		Continuous
Current Recharge Amp.		39.5		19.0		30.5	Continuous
Word Select Logic Group			15.0	8.0	1.65		Continuous
Total Hit Counter Data Shaper & Parity				76.0	5.0		Continuous
Panel Info Logic Group	18.5			23.0	6.0		Continuous
Time Counter & Aspect Sensor	10.6			7.0	2.8		Continuous

TABLE 10. LOAD COMPONENTS BREAKDOWN — Continued

Circuit	28 Volts ma	22 Volts ma	22.7 Volts ma	+6 Volts ma	-6 Volts ma	50 Volts ma	Duty Cycle
Data Subsystem (Rapid Attitude Mode) (cont)							
Clock	100.0						Continuous
Solar Aspect Sensor	25.0						Continuous
Earth Aspect Sensor		180.0			6.9		Continuous
Temperature Sub-System	62.0						Continuous
Memory	50.0						Continuous
Data System Total	820						

Circuit	Temp. °C	24 Volts ma	28 Volts ma	32 Volts ma	Duty Cycle
Communication Subsystem					
PCM Commutator	-5 25 55	61.0 60.0 62.0	63.0 63.0 67.0	68.0 68.0 71.0	Continuous
PAM Commutator	-5 25 55	59.0 63.0 66.0	66.0 71.0 74.0	72.0 78.0 82.0	Continuous
Communication Processing Unit Bi-Phase	-25 20 85	35.5 35.5 35.1	40.0 40.0 39.7	49.3 49.5 49.0	Continuous
Communication Processing Unit Power Supply	-10 25 85	100 - 164 100 - 165 104 - 169	109 - 175 110 - 176 114 - 180	120 - 185 120 - 188 125 - 190	Continuous

TABLE 10. LOAD COMPONENTS BREAKDOWN — Continued

Circuit	Temp. C	24 Volts ma	28 Volts ma	32 Volts ma	Duty Cycle
Communication Subsystem (cont)					
Beacon Transmitter (Each	-5 25 55	44.0 47.5 47.5	46.0 48.0 49.0	49.0 50.5 51.5	Continuous (One on at a time)
FM Transmitter (Each)	-5 25 55	256.0 257.0 269.0	286.0 294.0 318.0	375.0 375.0 353.0	1.5 Min./Orbit (5 Min. Max.)
FM Switching Unit		.8	1.07	1.25	Continuous
Beacon Switching Unit		.8	1.07	1.25	Continuous
Decoders (2 Units Operating)	-5 25 55	300.0 300.0 300.0	300.0 300.0 300.0	300.0 300.0 300.0	1/2 Sec. per Command. Stand By is 100 microamps
Receivers (2 Units Operating)	-5 25 55	Not Tested	Not Tested	34.2 38.2 37.6	1/2 Sec. per Command. Stand By is 20 ma.

Four problems arose with the battery system. The most serious was silver migration across the insulators. This resulted in a high impedance short internal to the battery cell. The short would manifest itself as rapid self discharge and inability to accept a complete recharge at 600 ma rates or less. This problem was eliminated by nickel plating over the silver material, thus preventing the silver from migrating. All flight batteries were plated in this fashion. A slight leakage of KOH at the positive terminal which utilized a ceramic seal was noticed on some of the older test batteries. Although the leakage rate was not excessive, a secondary seal was provided by the addition of an epoxy coating. This epoxy coating was applied to all exposed surfaces of the battery cells to eliminate the possibility of inadvertent shorting during ground handling. The intercell connections between cells were changed from solid form shaped metal straps to insulated stranded wire. This reduced the mechanical loads on the ceramic insulators, thus reducing the possibility of seal leakage.

The original battery controller functions were split into two units, power controller and battery controller as described in the final system section. The power controller contains all the monitoring, switching and circuit protection. The battery controller contains the charging circuits and regulation circuits.

The original constant current charge and trickle charge which could charge either battery were replaced by individual tapered chargers for each battery as well as individual dual rate trickle chargers. Two series regulators were added to limit the load bus voltage. Either of the regulators can be selected by command or switched automatically from main to standby upon sensing an overvoltage conditions of the load bus. Early testing indicated that the series regulator would burn out when the load bus was inadvertently shorted. The battery controller design was modified to incorporate a transistorized short circuit sensing and cut-out circuit as part of the series regulators. As the power requirements on the load bus increased during the program, the main charger rate was increased from 800 ma to 1040 ma to provide sufficient recharge in the alloted time under specified environments.

a. Test Program

The power subsystem is tested at the box level in accordance with its individual ATP. A subsystem test is conducted in accordance with ATP-MMC-07, which operates the power subsystem into a dummy load and simulates orbital cycling of the system at several voltage levels. Next, the power subsystem is married with the data and communication subsystems and canister testing is performed with the power subsystem providing the power. In these cases the solar array is simulated by the use of a GSE power supply operating at the solar array voltage for the sunlight portion of the orbit. This type of testing has been done with the power subsystem for the preprototype, prototype and all flight systems during canister thermal vacuum testing and full spacecraft testing. During these tests the power subsystem not only performs its normal function of providing power to other subsystems while they are undergoing testing, but is monitored for voltage and current tolerance at several critical points throughout the power subsystem.

Specific test experience during the program on the various elements making up the power subsystem are discussed in the following paragraphs.

(1) Batteries

The batteries are provided by Gulton Industries and are quite similar to an existing design used previously on other programs. Throughout all testing, ATP, RIP, subsystem, canister and spacecraft theres, there has not been any difficulty with the batteries. The aforementioned battery problems were found during storage and corrective action was taken.

(2) Zener Package

Throughout all testing, ATP, RIP, subsystem, canister and spacecraft tests, there has not been any difficulty with the Zener package.

(3) The Battery Controller

The battery controller has been tested at the following acceptance, subsystem, canister, spacecraft and qualification levels. During qualification testing the battery controller failed to pass the RFI requirements. It was found that the static inverter in the controller was generating noise. A filter was added, the test rerun, and the RFI requirement satisfied.

(4) Solar Panels

The solar panel testing did not follow the normal black box testing procedure. Each solar panel is acceptance tested in accordance with an ATP and includes a power output check performed at Table Mountain, California. The panels are next tested as part of the spacecraft testing. Physical damage occurred during shipment to California, and minor repairs were made. Qualification testing has been performed on a section of a solar panel due to its physical size. No problems were encountered. Dummy solar panels with discretely placed live modules have been present on the Dynamic Test Vehicle during all of its extensive testing. No failures have occurred. In addition, the active prototype top solar panel was vibrated on the DTM to qualification levels in the X axis (as discussed in the Structural/Mechanical Section) with no adverse effects.

(5) 18-Month Beacon Off Timer

The 18-month beacon off timer has been completely qualified. It has performed satisfactorily during receiving inspection, ATP, canister and spacecraft testing. The only problem experienced occurred when the first timer was mounted in the prototype canister. A restraining clamp was so located as to deform the timer case and cause the timer to stop. When the clamp was relocated, the prototype timer restarted itself and has operated normally since.

(6) Power Controller

The power controllers were tested at the box level, as part of the power subsystem and during canister and spacecraft tests. Qualification testing was completed without failure. Other power controllers were found to be out-of-tolerance on the high-low voltage automatic changeover circuit. The system implications of this failure was reviewed and a command capability incorporated to enable command of either of the regulators to the main bus regardless of the status of the other

regulator. Subsequently, an improved automatic high voltage switching circuit was designed, tested and installed in all flight configurations.

During box-level ATP and canister testing, the power controller drew excessive current when subjected to a regulated bus voltage greater than 34 volts. This was due to a breakdown of the capacitor across the input to the static inverter for the current sensors. Investigation revealed the capacitor in question was rated for 35 volts maximum. The component was replaced with a properly rated capacitor and no further incidents have occurred.

4. Subsystem Performance

The three Pegasus power subsystems have accumulated 9 months of orbital operation during which time the temperatures, voltages and currents have been within nominal limits and have been within nominal limits and have required no corrective operation. No degradation has been noted in the solar array performance of the three power subsystems.

I. Radiation Detection Experiment

A radiation detection experiment, built by STL, was utilized to access the radiation environment to which the Pegasus spacecraft is exposed. Figure 104 shows a block diagram of the experiment.

1. Description of Operation

The sensing element of the experiment was a plastic scintillator crystal having the property of emitting light energy when penetrated by a high energy particle or gamma ray. Furthermore, the intensity of the light emitted is directly proportional to the energy of the particle so long as total penetration does not occur. This particular crystal is a hemisphere of 1 cm radius and is capable of stopping a Beta particle (β) of energy less than 2.5 Mev. The scintillator crystal is shielded so that electrons of energy less than 7 Mev and protons of energy less than 85 Mev are restricted to radially penetrate the crystal. Errors introduced by particles of energy greater than those described above are negligible since the number of particles is, relative to those in the determinable region, quite small.

The light, generated within the crystal at the instance of a particle penetration, is transmitted to a photomultiplier tube that yields an output pulse which is amplified and applied to the three level detectors. A graph of pulse height verses energy is shown in Figure 105 for the case of electrons and protons.

The magnitude of E_A (threshold sensitivity of channel A) and the magnitude of E_B (threshold sensitivity of channel B) were, in the case of Pegasus A and B, adjusted so that channel A would trigger when the energy of the incident particle was greater than 0.5 Mev and that channel B would trigger if the energy of the particle was greater than 2 Mev. The third level detector, known as the veto channel, was adjusted such that all electrons were analyzed but that pulses generated by protons of energy greater than approximately 9 Mev did not contribute inputs to the count rate meters.

Note that protons with energy in the range of 5 to 9 Mev did contribute to the count rate of the experiment. These particles, however, constitute a small part of the total population and the error introduced by counting them is negligible. This system was flight qualified during the program.

After the launch of the Pegasus A it became apparent that the experiment should be modified in order to make it count particles with energy as low as 100 Kev. In order to accomplish this it was necessary to place an amplifier in front of the channel A level detector. This change was carried out on the qualification unit, the prototype unit, and the third flight unit. The sensitivity of the qualification unit and the prototype unit was limited to 200 Kev because the photomultiplier tubes had not been originally selected for high gain although the units did reach the earlier lower sensitivity requirement.

At present STL is still conducting research into the spectrometer operation to determine the saturation (with respect to count rate) characteristics and the proper geometrical factor to use because of particle scattering.

The inflight operation of the experiments has been good except for some

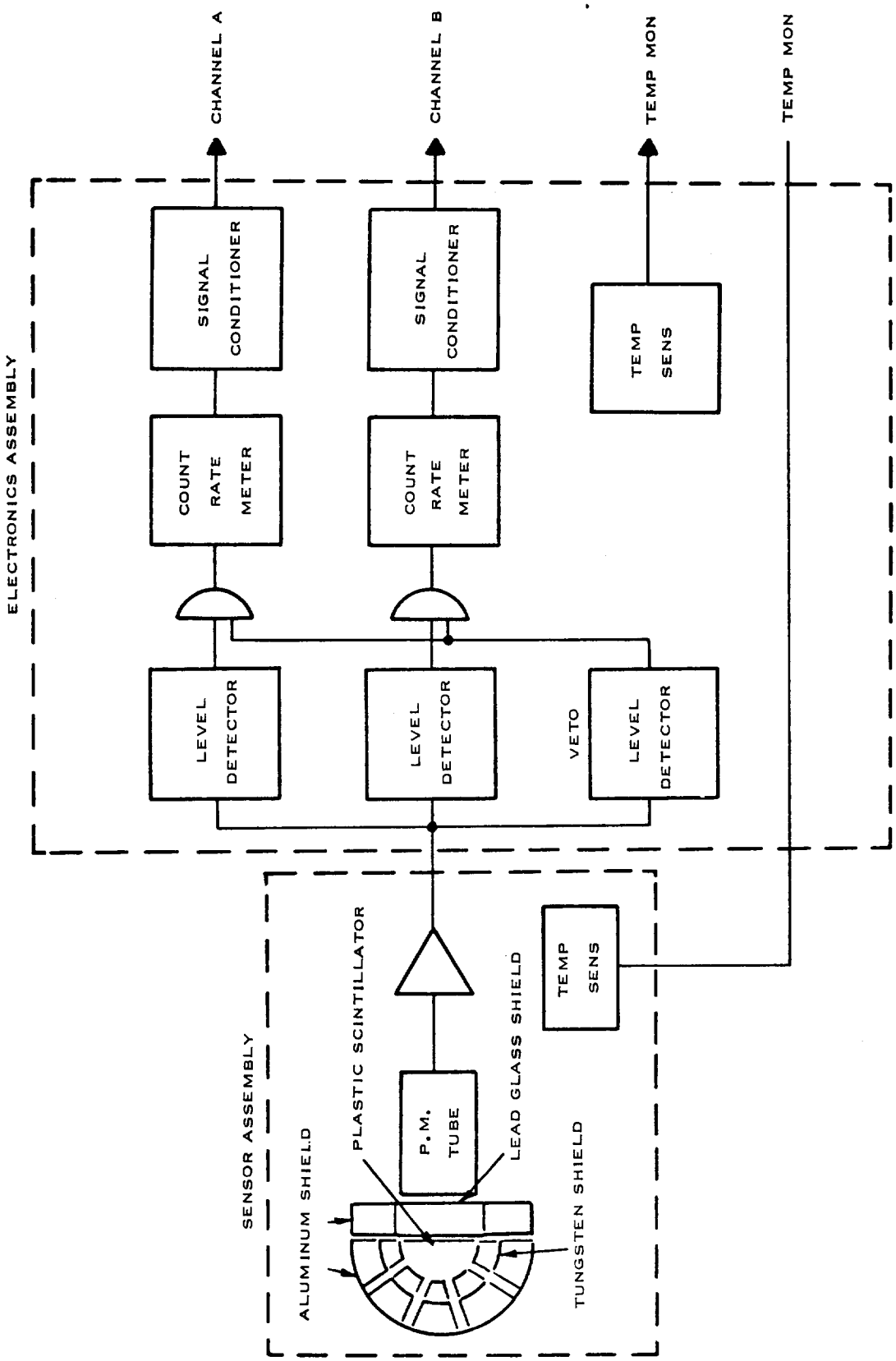

Figure 104. Electron Spectrometer Experiment Block Diagram

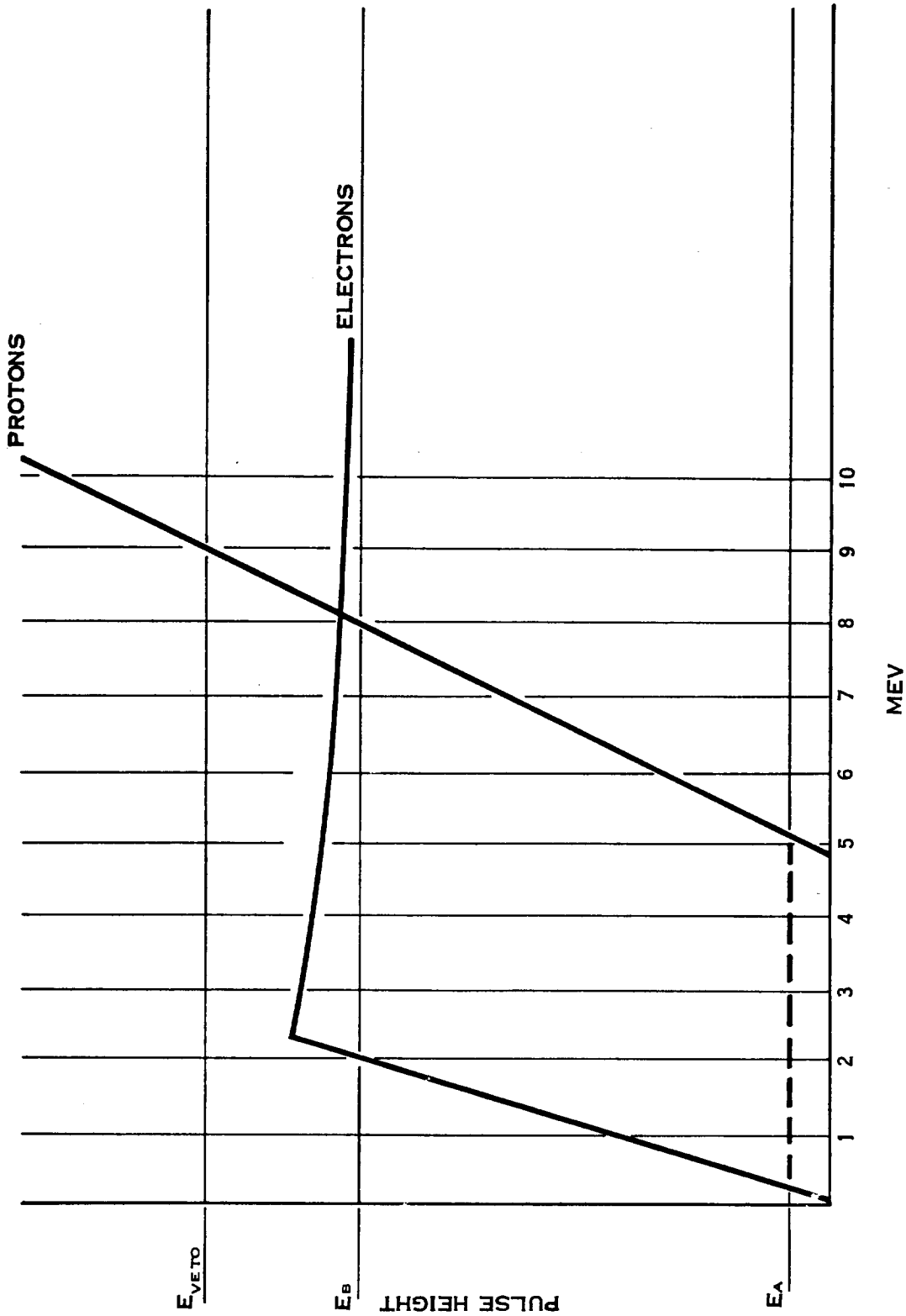

Figure 105. Pulse Height vs Energy

still unexplained perturbations in the Pegasus A experiment. Data reduction has been somewhat handicapped because the temperature monitor outputs of the experiment are telemetered via the PAM commutator which does not yield full orbital coverage.

J. Test Philosophy and Plan

Early in the program a general test plan, TP-MMC-001, was established. This plan defined a practical Pegasus test program, while meeting the basic contractual requirements. As defined by TP-MMC-001, the test program involved four separate phases of test:

- Development Tests
- Qualification Tests
- Acceptance Tests
- Reliability

As the Pegasus program progressed, changes to the test philosophy were necessary to maintain the ultimate goal of assuring a high probability of successful operation of the Pegasus spacecraft in its intended function.

In the case of development testing, the original test concept did not include a dynamic test model (DTM). However, it became apparent by mid 1963, that the information gained from such a model in advance of prototype testing could be extremely beneficial to the program by permitting early evaluation of the structure. During the period from October, 1963, through December, 1964, the following DTM tests and activities resulted:

- Center Section/Static Test
- DTM Vibration Test I/Structure Evaluation
- Wing Deployment Development
- DTM Vibration Test II/Electronic Canister Evaluation
- Dry Run of Pegasus Shipping Exercise/G. E., Valley Forge, Pa., to KSC
- Fit Checks with Apollo Service Module/KSC

Changes also resulted in qualification testing with respect to the original test philosophy. The most significant of these was the deletion of the prototype system level vibration and thermal vacuum tests that were to be conducted at G. E. The primary reason for the deletion of the prototype system qualification tests was that sufficient test data were available from the various electronics canister thermal vacuum tests to provide assurance that the electronics canister would survive its predicted environment. The same was true of vibration testing. The results of DTM vibration tests offered sufficient proof of the design.

Changes in test philosophy also resulted in deletion of the thermal vacuum acceptance testing of each flight capsule. In place of performing this system level test, a similar acceptance test of the electronics canisters in a simulated capsule structure was performed using the Fairchild Hiller Hy-Vac test facility at Bladensburg. This method provided a more realistic and closer controlled test of the space electronics in the thermal-vacuum environment.

In order to increase the probability of successful flight and mission of the Pegasus spacecraft, a system level vibration and vacuum acceptance test of Pegasus A was conducted using G. E. facilities.

Acceptance of Pegasus B consisted of a system level vibration test only. With

the successful completion of thermal vacuum testing of Pegasus B electronics canister and the fact that no difficiencies were presented during the Pegasus A vacuum test, vacuum acceptance testing of Pegasus B was not performed.

As a result of the successful flights of Pegasus A and B, the absence of prior environmental test failures, and in order to provide more preparation time for Pegasus C at KSC, vibration and vacuum acceptance testing of Pegasus C were not conducted.

Satisfactory accomplishment of the Pegasus test program is evidenced in the successful flights of Pegasus A, B and C. The sequence of test programs in support of the development of Pegasus has helped to make possible the success of these flights.

The results of tests conducted during various phases of the program directly contributed to design changes as follows:

- Vibration Isolation to the Electronics Canister
- Isolator Mountings for Capacitor Panels
- Electronics Canister Thermal Control Louvers
- Stronger Wing Frame Bumper Springs
- Determination of Preload to Wing Restraint System
- Re-design of Restraint System Turnbuckles
- Modifications to Motor Gearbox
- Re-design of Components and Component Mountings
- Development of Capacitor Panel Configuration

In addition, the test results obtained from development tests, component qualification tests, and spacecraft systems functional and acceptance tests have clearly demonstrated the integrity of the Pegasus design.

1. Test Program Summary

a. DTM Center Section Structure Static Test

In September, 1963, the center section structure of the DTM was subjected to a three axis static load test. Applied test loads were the equivalent predicted spacecraft dynamic loads determined by analysis. Since the same center section was to be used in the DTM vibration test, the static loads were restricted to limit design load to preclude any possible yielding of component structure. Test results indicated actual measurements which were basically in agreement with calculated values. Upon completion of the static test, the center section was placed in the main assembly jig and found to be in satisfactory alignment.

b. DTM Vibration Test I/Structure Evaluation

During the period from October through December, 1963, the DTM was subjected to a three axis sine sweep and resonant dwell vibration test. This test was used to evaluate dynamic characteristics of the spacecraft structure and to demonstrate structural integrity. The vibration test was conducted in accordance

with TP-MMC-09 which specified the prototype qualification levels.

The DTM specimen was identical to the prototype spacecraft, except that the following hardware was mass simulated:

- Capacitor Panels
- Electronic Components
- Motor Gearbox
- Canister Electrical Harness (only harness installed)

Results of the vibration test were reported in TR-MTS-04. No major structural failures occurred, and the basic structural integrity of the spacecraft was demonstrated by the test. The frequencies and modes of vibration, and the dynamic load distributions agreed with those predicted by analysis.

The overall damping developed by the structure in its lowest frequency mode was determined to be approximately $g = 2\ {}^{C}/C_c = 0.15$. Since the value of $g = 0.15$ was much greater than the $g = (0.05)$ which had been used in all dynamic analysis for predicting dynamic loads, the magnitude of the loads predicted by analysis did not develop during vibration testing.

Fundamental spacecraft resonant frequencies determined by the test were as follows:

Axis	Frequency (cps)
X	15, 18, 111
Y	11.5, 17.5, 26.3, 46, 110
Z	14.5, 17.5, 24.5, 65

The following are the two design changes made to the Pegasus as a result of the DTM vibration test:

- Additional supports were added to the forward solar panels to eliminate excessive excursion of the panel leading edge.
- An electronics canister vibration isolation system was developed for purposes of reducing the high level responses of the canister structure. Stiffeners were also added to the canister in an effort to raise its fundamental resonant frequency to a level not in tune with the fundamental frequency of the isolation system.

A wing deployment of the DTM preceded the vibration test. A wing deployment was also performed at the conclusion of the vibration test to evaluate the effects of vibration on the extension system.

A dummy motor gearbox and a hand crane arrangement were used to control the wing deployments. Each deployment resulted in a bending failure of the motor gearbox support bolt and a seizing of the restraint system turnbuckles.

The deployments, while successful, were determined to be inconclusive as the result of using the dummy motor gearbox. An extensive wing deployment development program followed. A prime motor gearbox was used as reported in the following paragraph.

c. DTM Wing Deployment Development

A three part wing deployment test program was conducted on the DTM in evaluating the performance of the MTS Motor

Gearbox and Wing Extension System. Part I included an initial series of deployments performed on the DTM using a hand mounted dummy motor gearbox to determine basic torque values in each torque tube for various wing restraint preloads and numbers of wing springs installed. A live motor gearbox was also tested while varying the wing restraint preloads and the number of wing springs installed. Part II included using a hard mounted live motor gearbox with various combinations of half wing springs, three-quarter wing springs and full wing springs with a 6000 pound preload in the wing restraint system. In addition, the magnetic brakes in the motor gearbox were varied from full brakes to no brakes while running deployments. Part II results were reported in Fairchild's Motor Gearbox and Wing Deployment Interim Test Report, TR-MMC-06. Part III testing was conducted with a 6000 pound wing restraint preload, with full wing springs installed, with the motor gearbox hard mounted, and while utilizing 14% of the magnetic brakes. With this arrangement, completely satisfactory deployments were obtained with all motor gearbox operating modes: no motors, either motor, or both motors.

d. Vibration Test II/Electronics Canister Evaluation

During the latter portion of 1964, the DTM again underwent vibration testing; this time to evaluate the effects of vibration isolation to the electronics canister and to determine vibration input levels to the canister and external canister components.

The test consisted of a three axis sine sweep and random motion test at the prototype qualification test levels. Generally, indicated vibratory input levels to spacecraft components are less than test levels to which the components were qualified.

Fundamental resonant frequency of the canister was determined to be 43 cps in the Y direction. Certain components did experience somewhat high input levels in this frequency range, but were assumed to be not detrimental as this frequency is below critical frequencies of the particular components. At frequencies above 150 cps, many narrow band high level spike inputs were determined. However, most of these conditions were determined to be the result of frequency responses of the complex shaker drive fixture and therefore would not be experienced during a Pegasus launch.

2. Detector Panel Development Testing

a. Fairchild Hiller Capacitor Panel Configuration and mounting Development

Development vibration tests were conducted on dummy detector panels to evaluate various methods of panel support. The original clip design and the use of Lord mounts were tested with four and six mounting points while using a one inch thick foam core with 16 mil aluminum target sheets bonded on each side. The six point Lord mount suspension was determined to be the best panel support system.

b. G. T. Schjeldahl Detector Panel Development Vibration and Acoustic Noise Tests

Developmental vibration tests were run on 8 mil and 16 mil thickness detector

panels with no physical or electrical deterioration resulting from the vibration. Fatigue cracks were found around the attachment clips on the 1.5 mil panels, but most of these panels had been previously subjected to acoustic noise test and these cracks may have resulted from either acoustic noise or vibration. With a reinforced attachment clip and an unkerfed foam core, no physical or electrical deterioration was noted in the 1.5 mil panels after vibration.

There was no indication of physical or electrical deterioration on the 8 mil and 16 mil detector panels as a result of the acoustic noise environment of 160 db for 30 minutes. However, fatigue cracks were found adjacent to the phenolic attachment clips on the 1.5 mil panels. These failures probably resulted from the change in stiffness at the edge of the attachment clips and from the capacitor foil being unsupported on the 0.06" x 0.12" kerfs in the rigid foam core. Two 1.5 mil panels with the reinforced attachment clip and unkerfed foam cores successfully withstood the above acoustic environment. However, during qualification testing, the 1.5 mil panels again failed. With a close analysis of the Saturn flight data, the acoustic environment was reduced from 158 db for 30 minutes to 152 db for a 3-minute duration; at this level there was no physical or electrical deterioration of the unreinforced 1.5 mil panels.

c. G. T. Schjedahl Detector Panel Thermal Cycling Tests (at Republic Aviation)

Twenty panels, consisting of 40 capacitors, were thermal cycled 250 times between the temperature extremes of 100° F and 245° F, while constantly under power at 44 vdc. The detector panels consisted of five of the 8 mil thickness and fifteen of the 16 mil thickness. Current leakage was continuously monitored throughout the test.

The results of these tests indicated a short for one capacitor which did not recover. Eight other capacitors showed intermittent disturbances, however, each of these returned to normal conditions within a maximum disturbance duration of 15 cycles.

It was also noted that post-test measurements of insulation resistance indicated that of the 38 capacitors completing the test, 37 had insulation resistance greater than or equal to pre-test values. One capacitor was lower but still within the specification limit.

3. Miscellaneous Development Tests

a. Hinge Bearing Cyclic Test

A cyclic test was performed on the wing hinge bearing (Garlock Bushing) to evaluate the effects of the applied limit Y axis wing loads on the teflon lined bushing. Results indicated no physical damage to any of the specimens tested.

b. Lord Mounts

Lord isolators with spring constants of 103 in/lb to 230 in/lb underwent a development program to determine the best suspension system for the detector panels. Four-point and six-point mounting systems were investigated with the six-point being required and most suitable for the 20" x 40" panels. Lord isolators with various spring constants were vibrated with a mass simulated load for number of cycles to failure. The isolators were also checked for their

resonant frequency at various displacement amplitudes. The Lord isolator with a 230 in/lb spring constant produced the best results and was used in the detector panel suspension system.

c. Canister Isolation Development

As a result of the first DTM vibration test, it was found that excessive vibration levels were being developed locally in the canister area. Fairchild Hiller developed an isolation system for the canister. However, MSFC concurrently developed an isolation system and directed use of this system on the second DTM vibration test. The maximum magnifications across the selected isolators in the Y axis were 1.7 at 40 cps and 2.0 at 95 cps. In the X axis, a maximum magnification of 1.7 occurred at 50 and 65 cps. In the Z axis, a magnification of 2.5 occurred at 50 cps.

d. Lateral Solar Panel Deployment Tests

A development test program was conducted to evaluate the deployment of the lateral solar panel in a simulated zero g environment (panel deployed in a horizontal attitude). Test results demonstrated successful deployment of the lateral solar panel with relatively small dynamic responses and stress levels being experienced. This testing demonstrated close correlation between test results and stress analysis.

e. Thermal Control Development Tests

In accordance with the General Test Plan TP-MMC-001, a test using a thermal mock-up of the electronics canister was performed during the early part of 1964. Dummy components with heaters were used to simulate power dissipation. The tests were performed at 10^{-5} mm Hg for simulated hot and cold cases in accordance with DTP-MMC-10.

Shortly after the completion of the mock-up test, it was decided that an active thermal control system should be incorporated into the canister. This decision led to the necessity of performing another test similar to the first except that a thermal louver assembly was added to the system. The test results indicated that the temperature extremes obtained corresponded very closely to the calculated values.

Two additional thermal vacuum tests were performed on the preprototype electronics canister as follows:

(1) Pre-Prototype Canister Thermal Vacuum Test No. 1

This test was performed during August, 1964. The purpose of this test was to ascertain electronic and thermal behavior of the electronics within the canister under simulated orbital extremes. The canister was mounted on a prime center section modified to fit into the 6.5 foot diameter by 6 foot long vacuum chamber. All basic structural members were intact at least two feet outward from the canister super-insulation interface. The louvers and the prescribed insulating blankets and thermal coatings were applied.

The results of this test indicated that the battery temperature was lower than the allowable limit of 30° F. An analysis attributed this low temperature condition to heat leaks caused by the various cables, harnesses and grounding systems which penetrated the superinsulation.

(2) Pre-Prototype Canister Thermal Vacuum Test No. 2

Due to the thermal leak conditions which existed in Test No. 1, another test was repeated with thermally insulated harnesses, cables and machined fittings. The test was performed during September, 1964. The test results are listed in Table 11.

The thermal louvers worked perfectly during both pre-prototype tests.

f. Thermal Testing of the New Design 0.0015" Detector Panels

These tests were performed on two of the latest configured detector panels and consist of two test phases. Phase I includes 10 complete cycles of thermal gradient exposure between 250° F and 50° F; Phase II will be performed at a gradient between 50° F and -200° F.

Electrical and physical characteristics were continuously monitored and recorded throughout the test period and compared to pre and post-test data.

The test results proved the new process of mounting the clips to the detector panel to be satisfactory.

g. Long Life Louver Test

In order to further substantiate the reliability function of the thermal louver assembly, a long life louver test was performed.

The tests were performed at temperature levels defined in DTP-MTS-34, while in a vacuum environment of 10^{-5} mm Hg.

300 cycles of operation was successfully achieved with no indication of malfunctioning or failure.

4. Qualification Test Program

In accordance with the Pegasus General Test Plan, TP-MMC-001, all of the required components were qualification tested to the designated requirements of the respective specifications.

The qualification test requirements for these components were derived from the General Environmental Test Specification, GS-MMC-3. Test levels for this document were determined from the following MSFC documents:

- ASTR-TSR-1-62, Environmental Test Specification for Saturn C-1, Block II Vehicles (applicable paragraphs for Major Zone 16 Payload)
- IN-P and VE-S-62-7, Vibration and Shock Specifications for Components on Saturn C-1, Block II Vehicles (applicable paragraphs for Major Zone 16 Payload)

The tests for each component were performed in accordance with an approved detailed qualification test procedure. A complete series of environments was included as follows:

TABLE 11. TESTS RESULTS, PRE-PROTOTYPE CANISTER THERMAL VACUUM TEST NO. 2

Test Phase	Dissipation (Watts)	Average Component Temperature	Battery Temperature
Hot	64.1	80.8°F	80.8°F
Cold	44.9	43.3°F	46.6°F

- Vibration
- Mechanical Shock
- Acceleration
- Acoustic Noise
- High and Low Temperature Exposures
- Humidity Exposure
- Thermal Shock
- Radio Frequency Interference
- Altitude

Salt spray testing was originally included as a general requirement, however, an evaluation of this requirement was made and it was concluded, with MSFC concurrence, that salt spray testing was not applicable and was therefore deleted as a requirement.

All other environmental test requirements were maintained, however, revisions were introduced to the General Specification, GS-MMC-3, and to the individual component specifications when required. All revisions were evaluated and approved through FHC Change Control Board action.

All deviations from qualification test requirements were evaluated by the Integrated Test Program Board. The Board, consisting of a member each from FHC Engineering, Test and Evaluation, Quality Control, Reliability and the MSFC Resident Office, directed the best course of action in each case. During the span of the qualification test program over 300 such action items were completed.

All phases of the qualification test program were under the cognizance of the Test and Evaluation Section of FHC Engineering. Surveillance of the tests was provided by FHC Quality Control, Government Inspection Agencies and MSFC representatives, when required.

The components tested consisted of those which were: (1) manufactured by outside vendors (see Table 12), and (2) those which were manufactured by FHC (see Table 13).

All of the reports for the above including retests necessitated by design change are complete.

In summary, basic design compliance with qualification test requirements has been achieved. Detailed laboratory test data and problems which have occurred during portions of the tests, course of actions, and resolutions are given in the respective final test reports.

5. Summarized Test Results

a. Pegasus A Configured Units

The results of the Pegasus A configured tests indicate that all of the components tested showed compliance with qualification requirements. The components have therefore demonstrated proof of design and sufficient resistance to the environments to perform satisfactorily in their anticipated functional use. All test reports for the aforementioned components have been completed and have been transmitted to MSFC.

b. Pegasus B and C Configured Units

FHC had analyzed the design changes for Pegasus B and C configured units versus the configuration of previously

TABLE 12. PURCHASED COMPONENTS

Item	Vendor	Qualification Test Document
Power Supply	Aero-Geo-Astro	QA-4054-3
Command Receiver	AVCO	125.39
FM Transmitter	RCA	1584858
Solar Sensor	Adcole	3185
Shift Register	Adcole	3192
System Clock & Frequency Divider	DI/AN	QTP-1393
PCM Commutator	Applied Electronics	HO-4-291B-TP
PAM Commutator	Applied Electronics	HO-4-291A-TP
Decoder	Consolidated Systems	NP-395
Temperature Sensor	United Electrodynamics	T-234
Core Memory	DI/AN	QTP-1392
Beacon Transmitter	Space Craft	WQ-319-01-QTP-2
Diplexer and Hybrid Ring	Motorola	2911-QTP-1
Low Pass Filter	Motorola	2956-QTP-1B
Earth Aspect Sensor	Barnes	4297-QTP-1
Detector Panels	G. T. Schjeldahl	QTP-P-280

TABLE 13. FAIRCHILD HILLER FABRICATED COMPONENTS

Component	Qualification Test Document
18-Month Timer	QTP-MTS-08
Beacon Switching Unit	QTP-MTS-19
Thermal Louvers	QTP-MTS-15
FM Switching Unit	QTP-MTS-12
Motor Gearbox	QTP-MTS-6
Detector Disconnect	QTP-MTS-1
Filter Network	QTP-MTS-1
Matrix Box	QTP-MTS-1
Matrix and Hit Amplifier	QTP-MTS-1
Current Recharge Amplifier	QTP-MTS-1
Word Control	QTP-MTS-2
Word Select	QTP-MTS-2
Hit Counter and Data Shaper	QTP-MTS-3
Panel Information Logic	QTP-MTS-4
Time Counter Aspect Sensor	QTP-MTS-4
Memory Control	QTP-MTS-16
Shaft Encoder	QTP-MTS-10
Data Power Distribution Unit	QTP-MTS-5
Earth Sensor Junction Box	QTP-MTS-11
Deployment Instrumentation Junction Box	QTP-MTS-20
Communication Processing Unit	QTP-MTS-14
Power Controller	QTP-MTS-9

qualified units and determined that because of these changes, the following units be subjected to selected critical environments in order to qualify the latest configuration. The required tests were completed. The test results are shown in Table 14.

6. Pegasus Systems Testing

a. Pegasus A Systems Testing

(1) Functional Checkout

Pegasus A system testing was initiated in early November, 1964, with the electronics canister ambient functional test conducted per ATP-MTS-103.

An integrated testing arrangement was assembled consisting of the canister, and the CCU-M. Testing was in accordance with ATP-MTS-103, which was designed to provide a checkout of each subsystem on the canister as integrated in the overall spacecraft. Objectively, the test was designed to provide proof of compatibility of the subsystems in the spacecraft through use of the actual or simulated interfaces.

Initial power on testing revealed intermittent type operation with widespread influence into all areas of the canister. Problems existed in acceptance of ground commands, in improper PCM bit status, in multiple "trash words" in the data subsystem, in various forms of "Lock Up" of the data subsystem and in excessive noise transients generated in the CCU-M as evidenced by the affected performance of the data subsystem. Corrective actions taken in resolving these problems were the following:

1) A thorough cleaning of all critical connectors in the canister which could affect its performance

TABLE 14. PEGASUS B AND C CONFIGURED UNITS TEST RESULTS

Units	Environmental Retests Performed For B and C Congifured Units	Test Results
Detector Matrix & Hit Amplifier	Temperature and Vibration	Compliance to Specification
Detector Filter Network	Temperature, Vibration, and Mechanical Shock	Compliance to Specification
Communications Processing Unit	Temperature, Vibration, Mechanical Shock, Acceleration and Thermal Shock	Compliance to Specification
Power Controller	Temperature and Vibration	Compliance to Specification
Detector Disconnect	Vibration and Temperature	Compliance to Specification
Data Power Distribution Unit	Vibration and Temperature	Compliance to Specification
Word Select	Vibration	Compliance to Specification
Current Recharge Amplifier	Mechanical Shock, Temperature and Vibration	Compliance to Specification

qualifi... and determined that because changes, the following cause ...jected to selected critical units ... in order to qualify the enviro... ...uration. The required tests latest ...ted. The test results are were ...able 14. shown

6. ...us Systems Testing

a. ...us A Systems Testing

(1) ...ctional Checkout

Pe... A system testing was initiated ...rly November, 1964, with the el... ...ics canister ambient functional ...onducted per ATP-MTS-103.

An ...rated testing arrangement was a... ...oled consisting of the canister, ...e CCU-M. Testing was in accor... with ATP-MTS-103, which was ...d to provide a checkout of each subsystem on the canister as integrated in the overall spacecraft. Objectively, the test was designed to provide proof of compatibility of the subsystems in the spacecraft through use of the actual or simulated interfaces.

Initial power on testing revealed intermittent type operation with widespread influence into all areas of the canister. Problems existed in acceptance of ground commands, in improper PCM bit status, in multiple "trash words" in the data subsystem, in various forms of "Lock Up" of the data subsystem and in excessive noise transients generated in the CCU-M as evidenced by the affected performance of the data subsystem. Corrective actions taken in resolving these problems were the following:

1) A thorough cleaning of all critical connectors in the canister which could affect its performance

TABLE 14. PEGASUS B AND C CONFIGURED UNITS TEST RESULTS

Units	Environmental Retests Performed For B and C Congifured Units	Test Results
...tor Matrix & Hit ...plifier	Temperature and Vibration	Compliance to Specification
...tor Filter Network	Temperature, Vibration, and Mechanical Shock	Compliance to Specification
...unications Proc-...g Unit	Temperature, Vibration, Mechanical Shock, Acceleration and Thermal Shock	Compliance to Specification
...er Controller	Temperature and Vibration	Compliance to Specification
...tor Disconnect	Vibration and Temperature	Compliance to Specification
... Power Distribution ...it	Vibration and Temperature	Compliance to Specification
... Select	Vibration	Compliance to Specification
...ent Recharge ...plifier	Mechanical Shock, Temperature and Vibration	Compliance to Specification

2) Improvement of the grounding system in the CCU-M by the removal of filtering in the neutral line of the input power.

3) Complete interrogation of systems performance and the recognition of the fact that the system's sensitivity to transients (both internal and external) does not prevent the system from performing the mission.

4) Established through testing the need for improved design in the data power distribution unit in the power switching of the attitude and temperature subsystems.

5) Performed interchange of data subsystem units to demonstrate identical performance and to provide some level of confidence in the fabrication cycle on the units and canister harness.

After improved test results were attained, the entire test setup was relocated in the thermal vacuum chamber test area in preparation for the canister level thermal vacuum test. System performance was entirely satisfactory except for a few open items which did not affect mission performance.

(2) Thermal Vacuum Test

The Pegasus A electronics canister was installed in the vacuum test chamber, and the cold-cycle portion of ATP-MTS-108, MTS Canister Thermal Vacuum Test, begun on 1 December 1964. This test was identical to that of ATP-MTS-103, and designed to correlate actual temperatures with thermal design parameters and to check the compatibility of the MTS subsystems while being subjected to environmental conditions similar to those encountered during hot and cold orbital extremes. During the cold cycle of this thermal vacuum test, it was observed that the MTS beacon transmitter power output decreased with the decrease in chamber temperature. The beacon transmitter operated normally when returning to ambient temperature. It was determined that this was peculiar to the beacon being used in test, as after its replacement, the problem did not exist. All other subsystems operated normally.

The primary concern of this environmental test, from the thermal design aspect, was to check the stabilized temperature at the cold extreme. Previous testing with the pre-prototype electronics canister had established additional requirements to attain proper thermal balance in the system. It was concluded that since cold stabilization was within design parameters and the temperature spread for the electronics canister during prior testing had been satisfactory, the test could be cut short prior to completion of the temperature stabilization point for the hot side. Component hot case temperatures were previously determined as non-critical.

Upon completion of the thermal vacuum test at Bladensburg, the electronics canister and the cut away center section in which it was contained were shipped to AMD to be integrated into the Pegasus A spacecraft.

(3) Overall Spacecraft Function Test

The overall Spacecraft Function Test, ATP-MTS-101, performed in the Spacecraft Integration Area at AMD in

Hagerstown, Maryland, consisted of a comprehensive series of tests designed to functionally check every subsystem within the spacecraft, including deployment.

Prior to the arrival of the Pegasus A electronics canister from the FHC Bladensburg facility, the operational Pegasus prototype electronics canister was temporarily installed in the Pegasus A structure to verify the external spacecraft wiring. This proved to be of value when two wires in the radiation experiment cable were found reversed.

Testing of the Pegasus A electronics canister installed in the spacecraft began on 9 December 1964 and consisted of a dry-run of ATP-MTS-101 to check both systems and procedures. Performance of ATP-MTS-101 was completed on 16 December 1964. In addition to the formal acceptance tests of the spacecraft, several engineering evaluation tests were performed in order to gain further knowledge into the operation characteristics of Pegasus A. One such test was an r-f open-loop test in which the spacecraft umbilical, coaxials, and all other test cables were disconnected, and the MTS was operated on internal battery power. A series of RF commands were then transmitted from the CCU-M via the antennas mounted on its top, and the spacecraft telemetered data was analyzed to verify open-loop operation and to demonstrate improved operation with minimized system noise. The overall operation of the MTS was very satisfactory. Overall spacecraft testing was concluded in AMD with several outstanding open items. Electronically, several assemblies were not flight worthy or were not of the latest design configuration. These included the data power distribution unit, the battery controller, the 18-month beacons off timer, the GFE thermal unit, and the relay disconnect unit.

With full agreement on the observed discrepancies, the Pegasus A spacecraft was prepared for shipment to G. E., Valley Forge, Pa. Final configuration for the flight was completed at KSC during the hangar operation.

(4) Spacecraft Environmental Test

Testing of the Pegasus A began immediately upon arrival and after installation of the spacecraft onto the vibration table at the General Electric test facility. The CCU-M arrived in advance of the spacecraft and was unpacked, assembled, and checked out per OP-MTS-11. The CCU-M was operationally integrated into the spacecraft which was mounted upon the vibration fixture. The low level random vibration for the purpose of demonstrating design assurance and acceptance of Pegasus A was successfully performed on 19 December 1964 per DTP-MTS-102. The spacecraft was then moved to an adjacent building where it was installed in the vacuum chamber in preparation for the vacuum test.

The CCU-M was relocated in the control room adjacent to the vacuum test chamber. The test in accordance with OP-MTS-11 was performed to qualify the inter-area cabling provided by G. E. between the control room and the spacecraft. No problem was encountered in the performance of this checkout.

Spacecraft performance during the vacuum test was satisfactory. Special testing was performed at various levels

of vacuum, particularly in the area of simulated test hits. The detector panels as contained on the wings were subjected to a vacuum environment for the first time as a group. Data from the test hits were analyzed in an effort to observe any noticeable change in capacitance that might be due to the vacuum environment, outgassing, contaminants or moisture. Observations indicated identical performance at all vacuum levels.

At the conclusion of testing, it was noted that the shaft encoder output had changed, indicating a rotation of the torque tube of approximately 0.5 degree. At the time, it was agreed that the rotation may have been caused by the manner in which the spacecraft was suspended in the chamber.

(5) Spacecraft Wing Deployments

Pegasus A underwent 28 wing deployments per OP-MMC-20 prior to launch. The deployment encountered a problem with shear fitting hang-ups, which was remedied by replacing the shear fitting push out springs with rubber bumpers. The spacecraft mechanical adjustments were completed along with four successful acceptance deployments before shipment to G. E. for environmental testing. When the spacecraft arrived at the Cape, the torque tube was found loaded as a result of an inadvertent motor gearbox operation at G. E. This motor gearbox was removed for failure investigation, test, and reinstallation of a new system and three acceptance deployments were achieved in preparation for flight readiness. Torque tube loads during deployments at KSC, were greater than the loads achieved during deployments at Fairchild Hiller's Hagerstown facility. This is assumed to be caused by more friction in the KSC deployment fixture which was of a slightly different design than the fixtures in Hagerstown and at G. E.

b. Pegasus B Systems Testing

(1) Spacecraft Functional and Environmental Tests

Pegasus B system testing was initiated in early March, 1965, with the electronics canister confidence checkout per ATP-MTS-203, and in turn, the canister thermal vacuum test satisfactorily completed per ATP-MTS-208. By the middle of the month, the canister was shipped to Hagerstown for installation in the spacecraft. The spacecraft integration testing per ATP-MTS-201, spacecraft environmental testing per DTP-MTS-201, and spacecraft wing deployments per OP-MTS-20, covered the period up to delivery of the spacecraft at KSC.

The Pegasus B electronics canister was assembled and delivered for initial systems testing on 5 March 1965. The acceptance test procedure, ATP-MTS-203, was designed to provide a checkout of each subsystem on the canister as integrated into the overall spacecraft. The test provided proof of the subsystem compatibility in the spacecraft through use of actual or simulated interfaces. Problems existed in multiple "trash words" in the data subsystem, starting at the data subsystem level and continued up to delivery of the spacecraft. These problems were believed to exist in Pegasus A and become more evident on Pegasus B with the implementation of the digital readout unit (DRU). Cause for the fault was isolated to high frequency switching transients aggravated

by multiple GSE spacecraft grounds and on launch would be eliminated or reduced to a level which would not affect data acquisition and analyzing.

Pegasus B was prepared for shipment to the G. E. test facility, Valley Forge, Pa., and the environmental testing commenced immediately upon arrival and after installation of the spacecraft onto the vibration test fixture. The CCU-M was operationally integrated into the spacecraft and the low level vibration testing per DTP-MTS-204, was successfully performed. The spacecraft vacuum testing was waived by MSFC based on the fact that this environment was shown not to be critical during Pegasus A test and the thermal vacuum test of Pegasus B canister.

(2) Spacecraft Wing Deployments

Pegasus B spacecraft experienced twelve wing deployments, per OP-MTS-20, prior to launch. Five preliminary deployments were performed while making adjustments in order to obtain confidence status of a working system. The four acceptance deployments were successfully accomplished by 29 March 1965 before the spacecraft was shipped to Valley Forge, Pa.

The spacecraft was received at KSC and two trial deployments were performed to check out the deployment fixture rigging. A final accpetance deployment was conducted with no major problems being experienced on Pegasus B in the mechanical system. A corrosion investigation per LOD-MTS-555 was carried out as a result of rain contamination on the launch pad. The investigation revealed no deleterious effects at the time.

c. Pegasus C Systems Testing

(1) Spacecraft Functional and Environmental Tests

Pegasus C system testing began during the middle of May, 1965, with the electronics canister confidence checkout per ATP-MTS-203; and then the canister thermal vacuum testing (cold case only) was conducted per ATP-MTS-208. Upon the completion of the thermal vacuum test, the canister was shipped to Hagerstown for installation in the spacecraft. Neither vibration nor vacuum environmental testing was conducted on Pegasus C spacecraft. Both tests were considered not required by MSFC. This allowed additional time for testing and preparation at KSC.

The Pegasus C electronics canister testing, per ATP-MTS-203, was designed to provide a checkout of each subsystem on the canister as integrated into the overall spacecraft. The test demonstrated proof of compatibility of the systems in the spacecraft through application of actual or simulated interfaces.

Problems existed in improper PCM and memory tapes status, in FM print-out between hits, in the inability of the data subsystem to process hit words, in "Lock Up" conditions, in occurrences of double updating, and in "trash words" having no word identification appearing in the memory prior to print-out of panel temperature words. These discrepancies were considered virtually non-critical to mission performance.

(2) Spacecraft Wing Deployments

Pegasus C experienced 14 wing deployments per OP-MMC-20, prior to

launch. While making shear fitting adjustments, it was found that proper alignment could not be achieved on the +Y wing. An investigation determined that the +Y +Z center section shear fitting was 0.058 inch low. The problem was resolved by adjusting the wing tension rods with a torque of 2 in/lb to 7 in/lb which was allowed by stress analysis. The six preliminary and four acceptance deployments performed perfectly. Pegasus C was shipped directly to Cape Kennedy where three deployments were performed to check the fixture rigging. One deployment was jammed when a trolley guide wheel dislodged from the track, but the gearbox power was cut off before any damage occurred. A final acceptance deployment was completed and the spacecraft was considered flight ready.

7. Detector Panel Design Assurance Impact Test Program

The detector impact test program was conducted to provide assurance that the meteoroid detectors and detector electronics would register hit indications upon perforation of the detector by meteoroids. This was accomplished by assembling a test set which contained specific portions of the Pegasus electronics and wiring it to full size detectors which were then perforated by simulated meteoroids. The results of this program are described in detail in the "Detector Panel Development Report."

a. Test Program History

An RFP was prepared defining the required test conditions. This RFP was sent to nine companies with hypervelocity facilities. Two proposals were received and reviewed and a facilities survey conducted which resulted in a contract award to Hayes International Corporation, Birmingham, Alabama. The initial contract covered 1000 shots or 100 "good" shots into each of the three thickness of detectors, whichever came first. The targets used were standard production detectors except they were not bonded to foam cores but mounted firmly against the applicable type foam substrate. The test program was partially completed when it was determined that the targets, particularly the 1.5 mil detectors, were not responding to perforations as expected. As a result, additional instrumentation was installed to determine the perforating particle velocity in an independent fashion not dependent on the detector responding to perforation. During the course of setting up and becoming familiar with the new instrumentation, a series of shots were fired into detectors which were bonded to foam. Analysis of this data revealed that there was a substantial difference in detector performance between bonded and unbonded targets with respect to the depth of capacitor discharge and the minimum size of penetrating particle that the detector responded to. It was therefore determined that only data obtained from test shots into bonded detectors could properly be used to conduct the required probability analysis. The test configuration therefore was an exact simulation of Pegasus hardware and as changes were made to flight electronic equipment, the changes were incorporated into the test set. In order to accomplish the required objectives, the program was extended for an additional 1200 shots.

b. Test Results

The following criteria was applied to the test data in order to determine its acceptability for consideration in the reliability analysis.

- There must be a single output from the velocity measuring system (photomultiplier tube).
- There must be a single perforation in the target capacitor.
- In the event the detector responds to an impact, the velocity of the particle causing the first discharge must correspond to the velocity of the particles causing the single photomultiplier output.
- There must be assurance that all electronic equipment was operating properly.

A total of 280 shots met the above criteria but, as explained in the "Detector Panel Development Report", only 244 were used in the analysis. Table 15 is a breakdown of the data used in the hit registration analysis. Assuming a hit threshold level of 4 volts, it was determined that the probability a single perforation particle will produce a hit registration for 1.5 mil, 8 mil and 16 mil detectors is 0.77, 0.77 and 0.76 respectively. Table 16 is a listing of the data used in the shorted panel analysis. From this data it was determined that the probability a single penetrating impact will result in a permanently shorted 1.5 mil, 8 mil and 16 mil detector is 4, 17, and 13 percent respectively. Figures 106, 107, and 108 are graphs of the depth of capacitor discharge vs. the number of times it was experienced for the entire 280 single perforation data shots.

8. Detector Panel Irradiation Test Program

The detector panels were subjected to electron radiation in a simulated space environment to determine the peak amplitude irradiation induced negative discharge pulse outputs. The detector panel irradiation test program was conducted utilizing the facilities of Ion Physics Corporation, Burlington, Massachusetts.

a. Test Program History

The radiation test program was divided into three distinct phases. The first phase was a familiarization and investigation period with respect to the irradiation facility and the detector panels. During this period, information regarding the basic properties of the detector panels was obtained. Much of the work consisted of investigation of panel pulse rates, radiation generator conditions, temperature control and outgassing properties of the detector panel.

The second phase of the program consisted of a facility investigation to reduce the effect of noise which was influencing the recorded data. Changes were made to the test facility hardware to eliminate or reduce external or internal system induced noise. The data electronics, which functionally represented specific portions of the Pegasus detector electronics, were modified to the Pegasus B configuration. The Van de Graaf generator and vacuum test chamber were improved and the quality

TABLE 15. HIT REGISTRATION

1. 1.5 Mil Target Thickness	
a) No. of penetrations with 4V or greater depth of discharge	60
b) Total penetrations on target thickness	70
c) Percent 4V or greater	86
2. 8 Mil Target Thickness	
a) No. of penetrations with 4V or greater depth of discharge	60
b) Total penetrations on target thickness	70
c) Percent 4V or greater	86
3. 16 Mil Target Thickness	
a) No. of penetrations with 4V or greater depth of discharge	85
b) Total penetrations on target thickness	104
c) Percent 4V or greater	82

TABLE 16. SHORTED DETECTORS, IMPACT TESTING

1. 1.5 Mil Target Thickness	
a) Capacitor shorted on first discharge	0
b) Total tested	70
c) Percent shorted	0
2. 8 Mil Target Thickness	
a) Capacitor shorted on first discharge	6
b) Total tested	70
c) Percent shorted	8.6
3. 16 Mil Target Thickness	
a) Capacitor shorted on first discharge	8
b) Total tested	104
c) Percent shorted	7.7

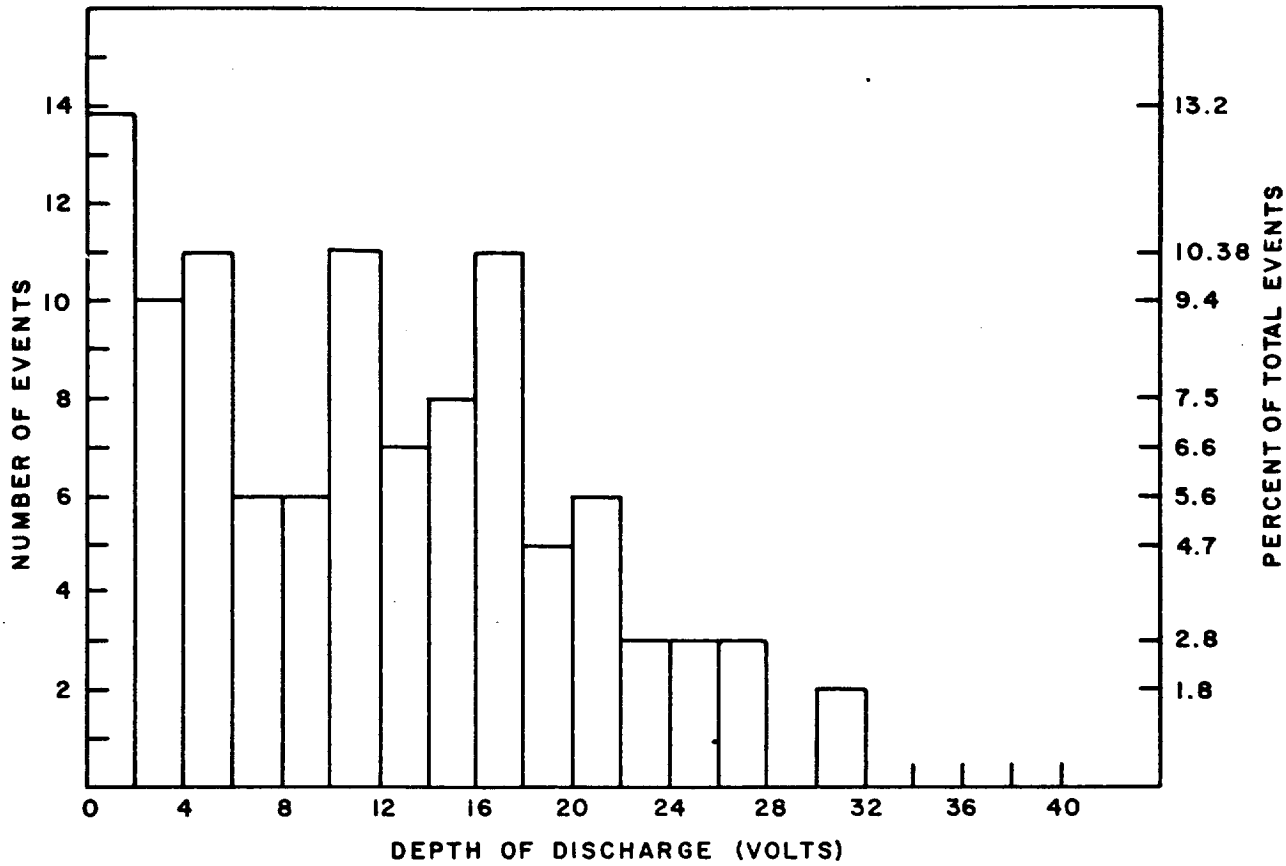

Figure 106. Events vs Depth of Discharge, 1.5 Mil Bonded Target

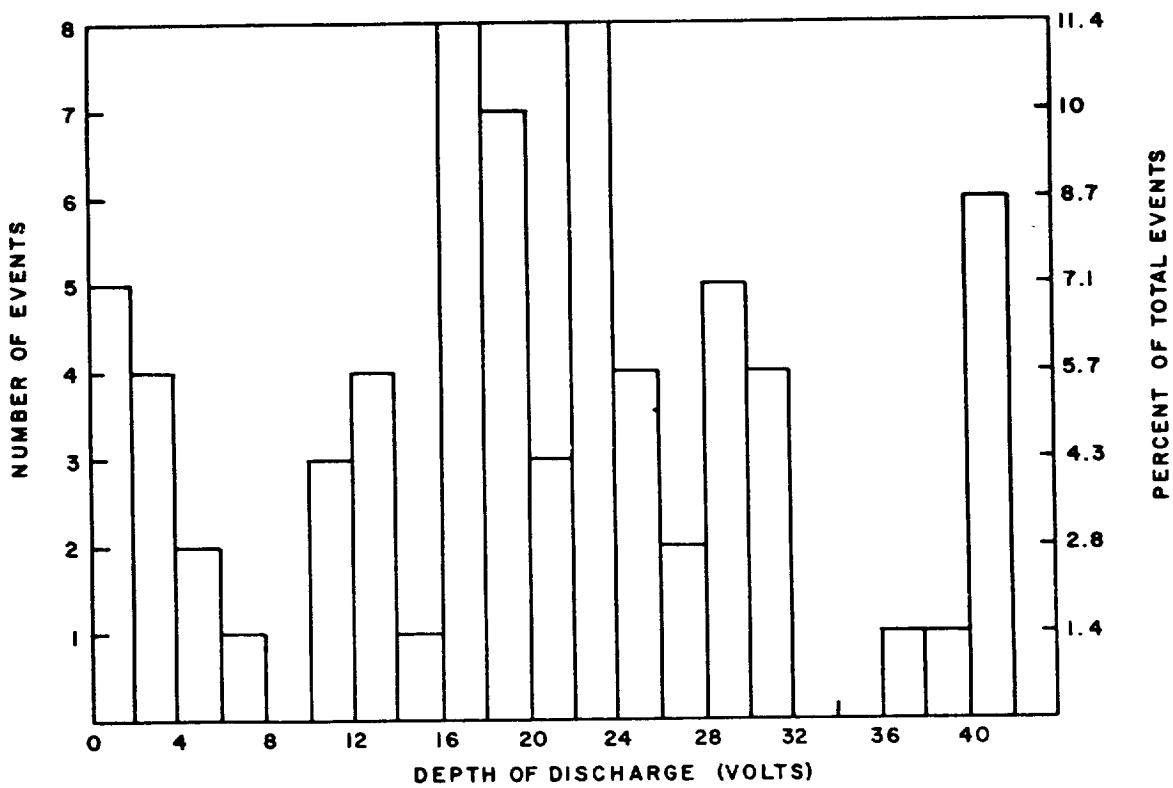

Figure 107. Events vs Depth of Discharge, 8 Mil Bonded Target

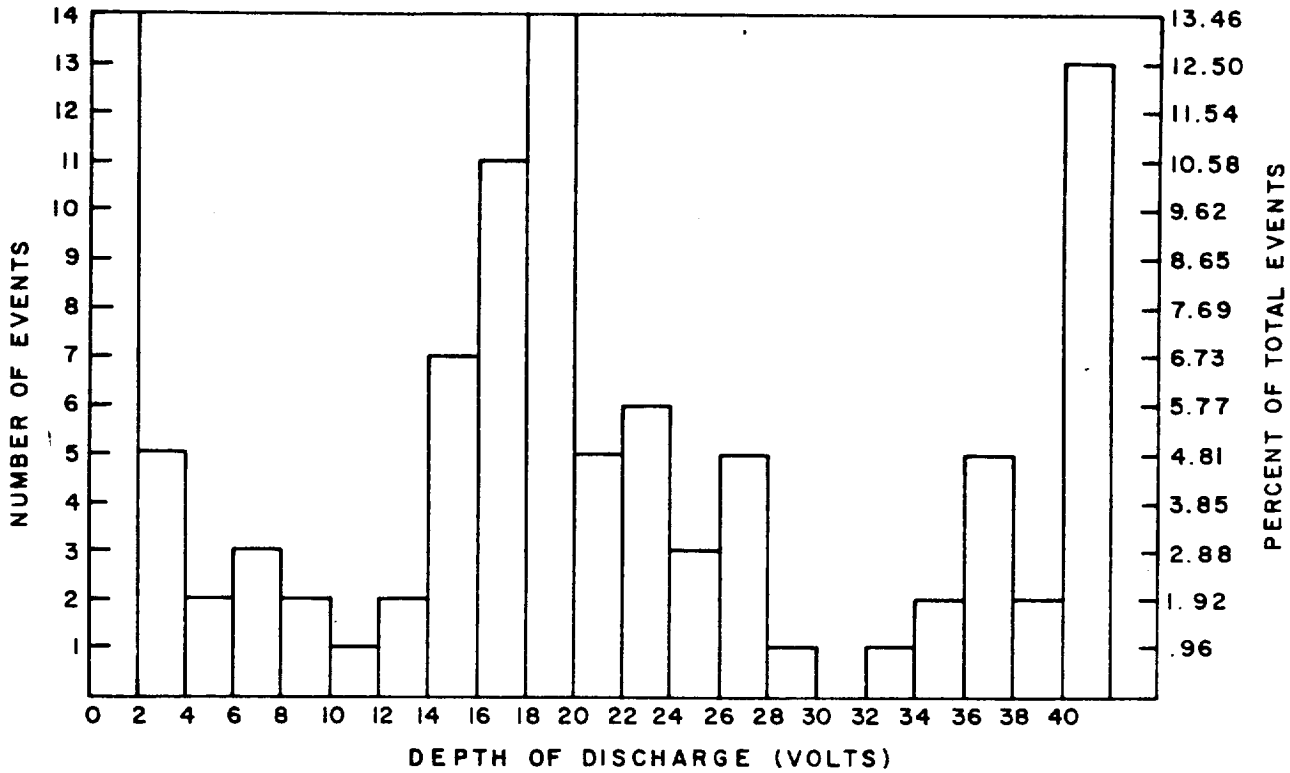

Figure 108. Events vs Depth of Discharge, 16 Mil Bonded Target

of information transmission and recording were upgraded. Once repeatable and reliable data was obtained from various detector panels, the system was considered acceptable to perform the intended tests.

The third and final phase of the test program was to obtain a peak amplitude distribution of irradiation induced negative discharge pulses from detector panels when subjected to discrete changes in energy levels at a constant flux.

b. Test Results

An 8 mil and a 16 mil detector panel were exposed to radiation. Each panel was exposed to three energy levels, 0.5 mev, 0.75 mev and 1.0 mev, for a total of 16 hours at each level. Both sides of the detector panel were monitored on oscilloscopes at the input to the detector electronics with the scope trigger levels adjusted for 2 volts. The scope trace was photographed on Polaroid film by holding open the camera aperture during test runs. Approximately 12% of the pulse information was lost as a result of changing film, pictures not developing, and multiple exposures.

The data obtained for both types of detector panels indicated similar trends. It was noted at low energy (0.5 mev) the panel top capacitor had the most pulse activity. At medium energy (0.75 mev) the pulses seem to occur on both sides of the panel and when high energy was applied (1.0 mev), the lower capacitor had the most pulse activity. This was

not unexpected considering the electron stopping potential of the materials involved.

Population plots of the number of events versus pulse level are presented in Figures 109 through 114 for different test conditions.

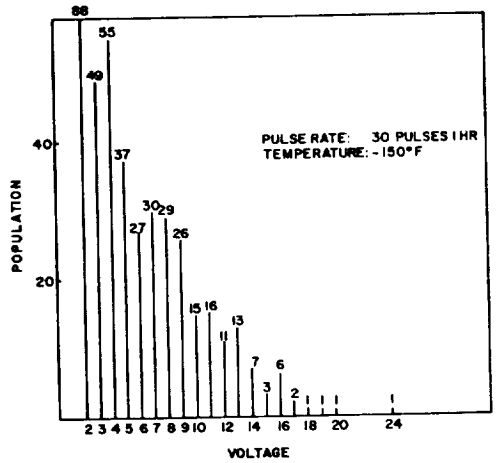

Figure 109. Population vs Voltage, 16 Mil Panel (Energy: 0.5 Mev, Current: 1.5×10^{-10} amps, Flux: 3.7×10^{8} e/cm^2/sec)

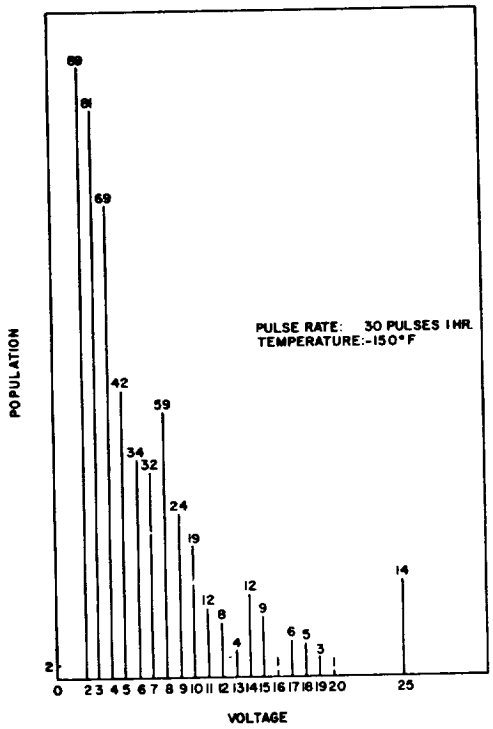

Figure 110. Population vs Voltage, 16 Mil Panel (Energy: 0.75 Mev, Current: 6×10^{-4} amps, Flux: 1.5×10^{8} e/cm^2/sec)

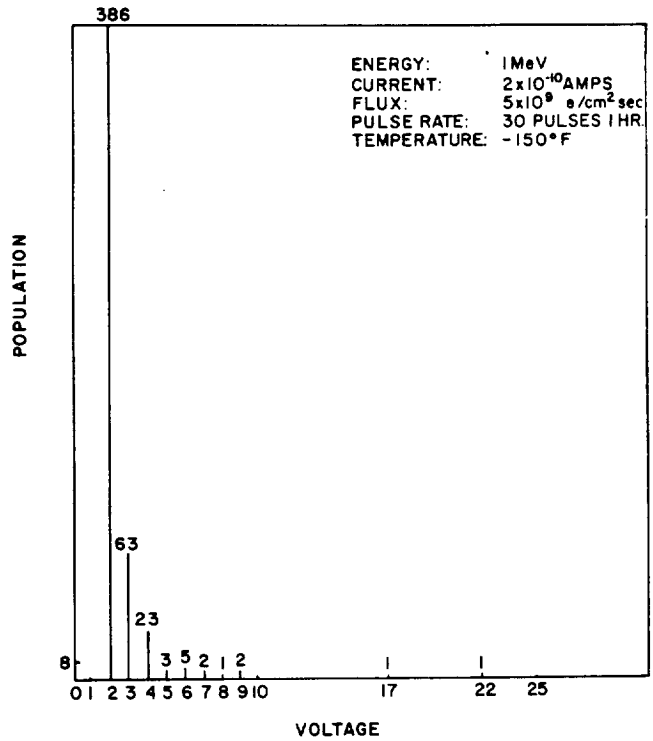

Figure 111. Population vs Voltage, 16 Mil Panel (Energy: 1 Mev, Current: 2×10^{-10} amps, Flux: 5×10^{9} e/cm^2/sec)

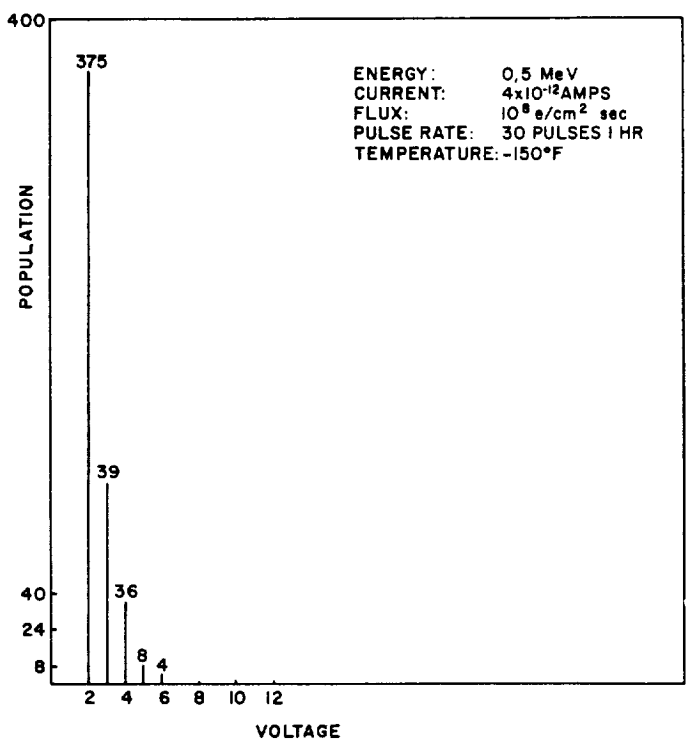

Figure 112. Population vs Voltage, 8 Mil Panel (Energy: 0.5 Mev, Current: 4×10^{-12} amps, Flux: 10^{8} e/cm^2/sec)

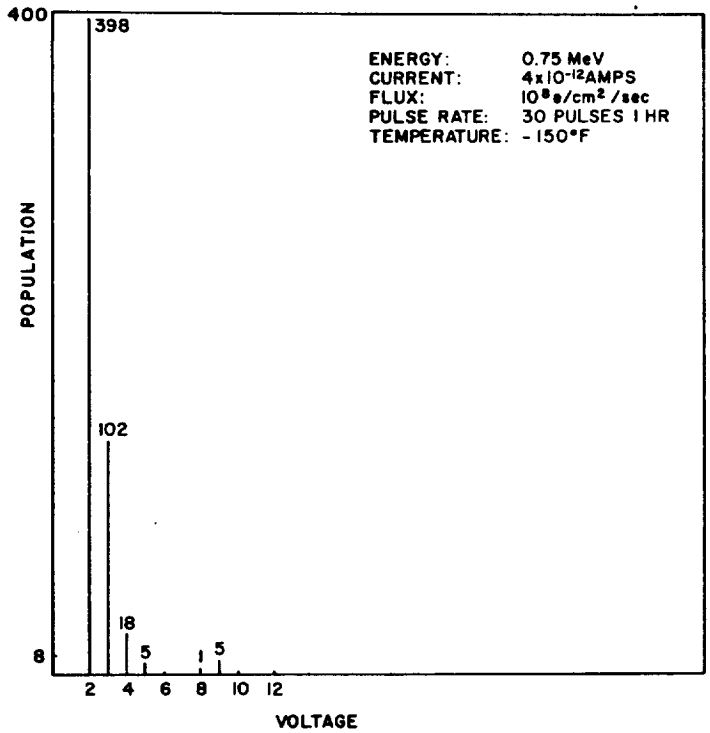

Figure 113. Population vs Voltage, 8 Mil Panel (Energy: 0.75 Mev, Current: 4×10^{-12}, Flux 10^8 e/cm^2/sec)

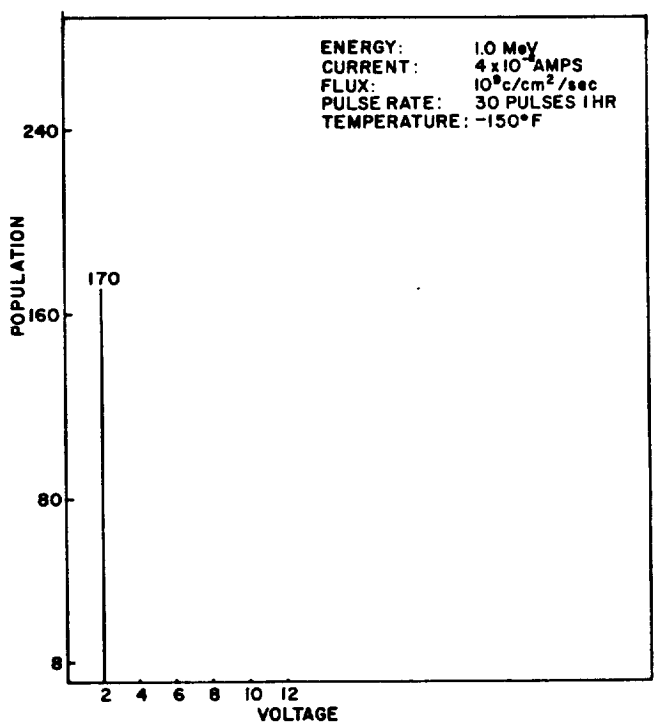

Figure 114. Population vs Voltage 8 Mil Panel (Energy: 1.0 Mev, Current: 4×10^{-11} amps, Flux: 10^9 e/cm^2/sec)

K. Ground Support Equipment

In accordance with contractual obligations, the Fairchild Hiller Corporation designed and fabricated four capsule checkout units (CCU) for performing all required system tests on the Pegasus satellite. Three of these units were designed as mobile units (CCU-M) utilizing dolly mounted racks (Figure 115) and the fourth unit was installed in the launch complex (CCU-LC) utilizing KSC furnished racks (Figure 116).

In November of 1964, an additional GSE contract was awarded to FHC for the design and development of a satellite control facility (SATCON). This task was completed in mid-January of 1965 and provided equipment for the distribution, evaluation, recording and display of spacecraft telemetry signals.

Additional requirements necessitated the design of a circuit isolation test set (CITS), deployment motor simulator, deployment continuity test set, PCM/PAM simulator, interface unit test set, KSC patch rack and launch control simulator, KSC event recorder simulator and several line load box simulators.

1. CCU-M

a. Functional Description

The CCU-M provides all facilities required for complete checkout of all spacecraft systems, verification of interface wiring between the Pegasus and the Saturn Instrument Unit, and simulation of all IU functions for system and hangar tests. Figure 117 illustrates the interconnection of CCU-M equipment.

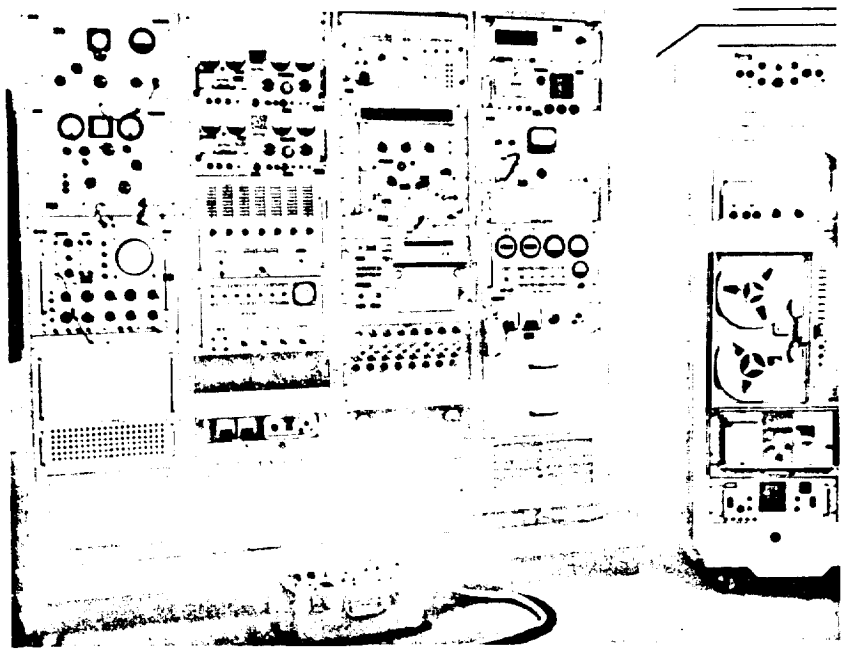

Figure 115. Capsule Checkout Unit - Mobile Unit 1

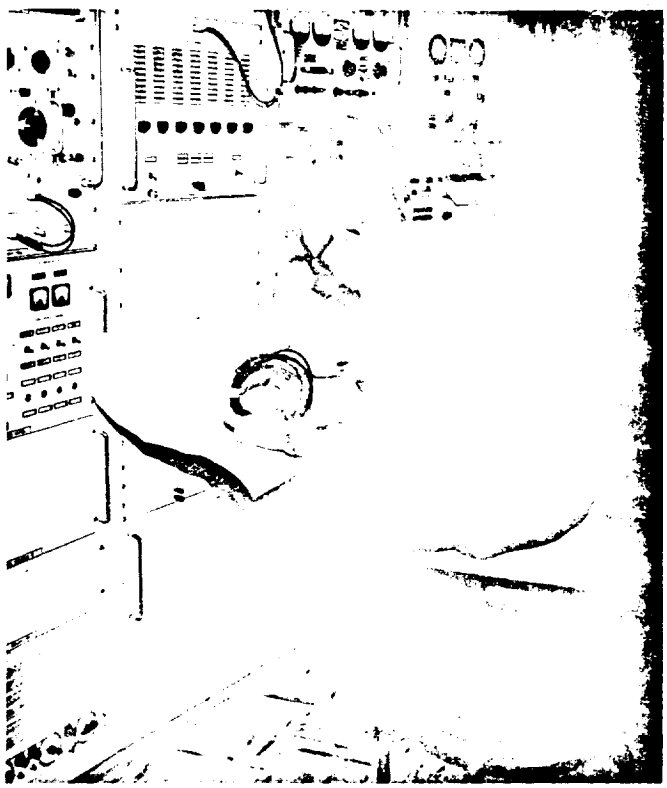

Figure 116. CCU-LC

(1) Commercial Equipment

Table 17 lists the commercial equipment used in the CCU.

(2) FHC Designed Equipment

(a) CCU Control Panel (See Figure 118) — The test control panel contains circuits to perform the following functions:

1) PCM phase detection of beacon video from telemetry receiver.

2) Switch output of PCM detector to the data readout unit, oscillograph recorder or both simultaneously.

3) Switch output of FM receiver to the data readout unit, oscillograph recorder or both simultaneously.

4) Switch inputs to the electronic counter.

5) Switch the output of the PAM discriminator to the scope, oscillograph recorder or both.

6) MTS normal and overheat indications.

7) Control and verify the earth aspect sensor test inputs (IR sensor).

8) Control and verify the MTS time count register test inputs.

9) Control and verify the hit count register set and reset test inputs.

10) Control and monitor the launch status of the MTS.

11) Provide a panel mounted clock for timing purposes.

TABLE 17. CU COMMERCIAL TEST EQUIPMENT

Nomenclature	Manufacturer	Part No.	Primary Function in CCU
1. Power Supply	NJE	Sy-36-10	28 VDC power to GSE chassis & 28 VDC indicator power to spacecraft
2. Power Supply	NJE	QR-60-6	28 VDC power to spacecraft load bus or 40 VDC to spacecraft solar bus
3. Digital Voltmeter	Hewlett-Packard	405CR	General voltage measurements
4. Electronic Counter	Hewlett-Packard	524C	Primarily used for frequency measurements in conjunction with Pegasus communication subsystem
5. VHF Signal Generator	Hewlett-Packard	608CR	Generates modulated r-f carrier in conjunction with encoder for spacecraft commands
6. Audio Oscillator	Hewlett-Packard	650AR	Provides audio carrier used by encoder to produce command signals
7. Calorimetric Power Meter	Hewlett-Packard	434AR	Measures output power of the Pegasus beacon and FM transmitters
8. Optical Recorder	Sanborn	650	Records beacon PAM data. Also used as a PCM data recorder as a back-up to the DRV
9. Oscilloscope	Tecktronics	RM35A	Beacon PAM, PCM and FM waveform analysis
10. Subcarrier Discriminator	EMR	189D	PAM demodulation
11. Telemetry Receiver	Nems-Clark	1456A	Beacon receiver
12. Telemetry Receiver	Nems-Clark	1456A	FM receiver
13. Spectrum Analyzer	Nems-Clark	SDU 200	Spectrum display

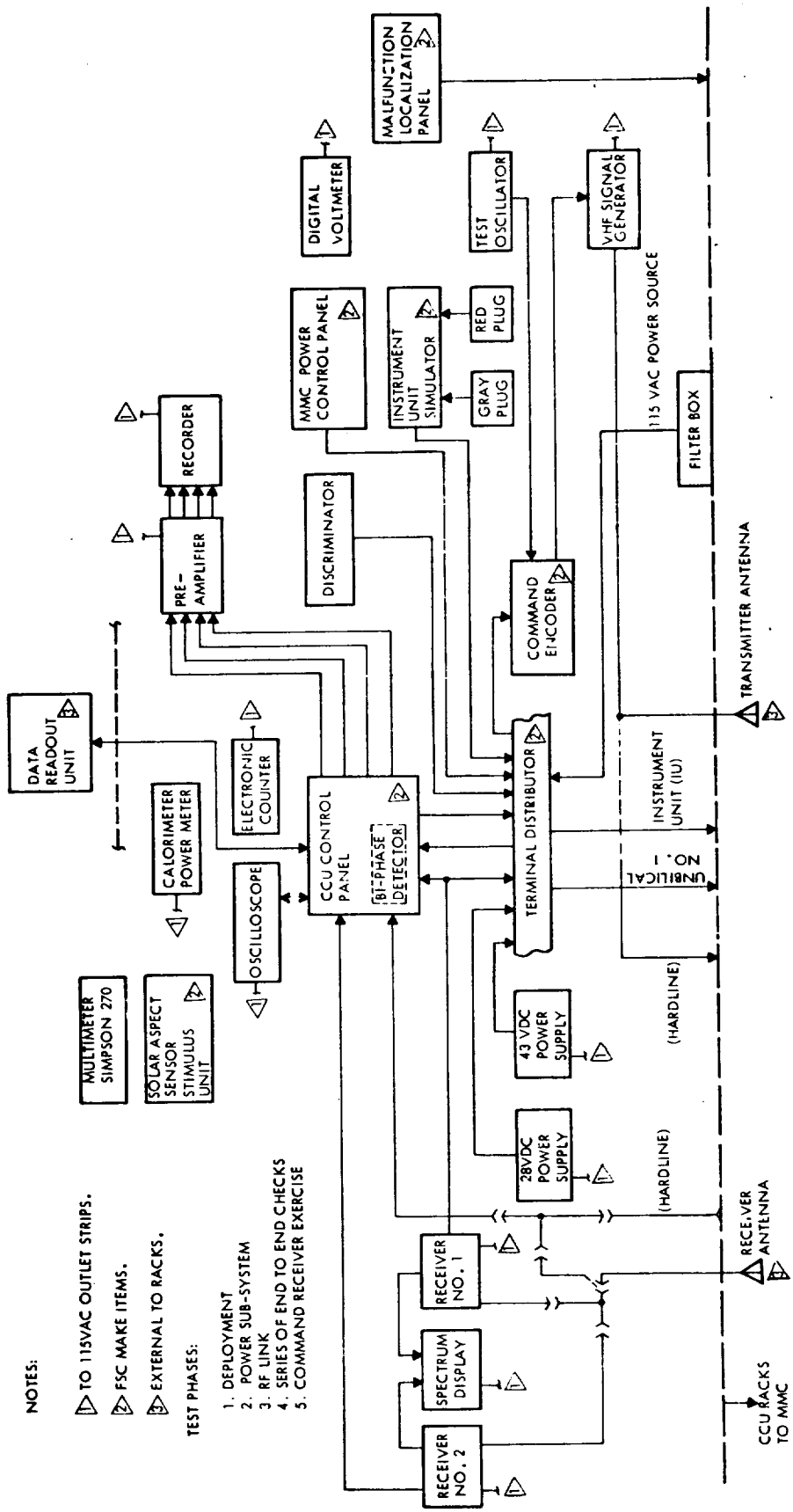

Figure 117. CCU-M Block Diagram

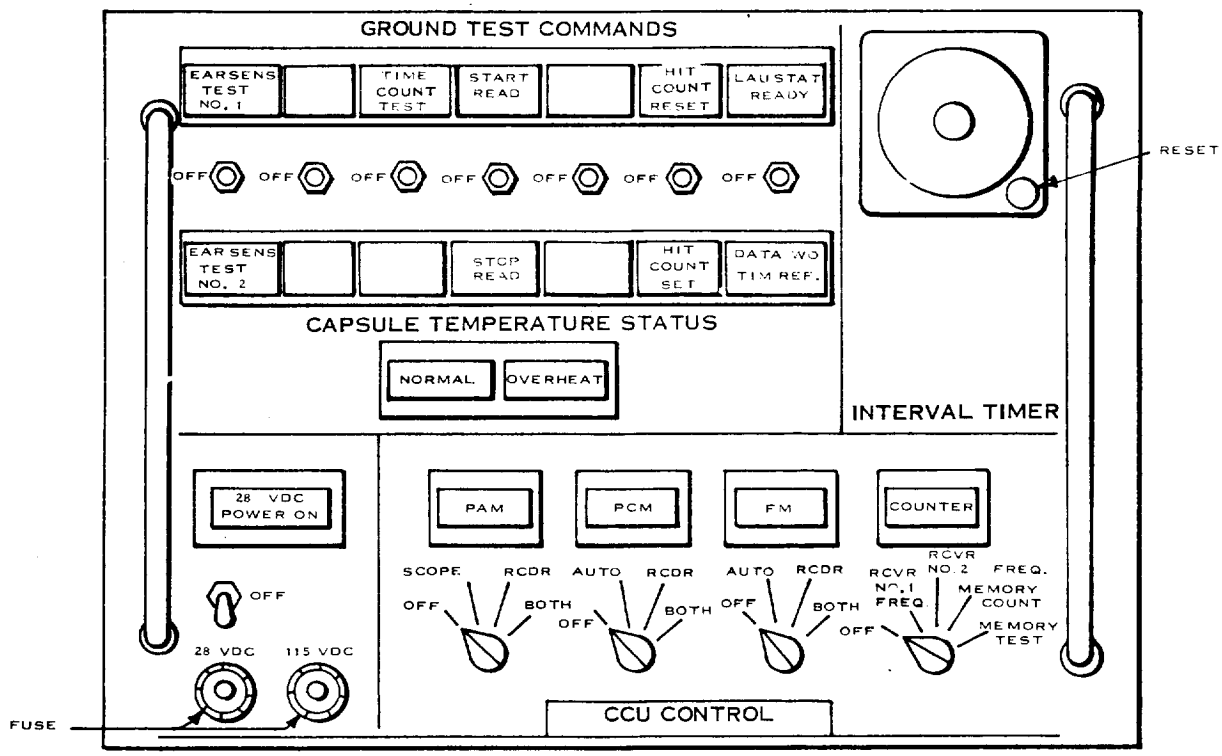

Figure 118. CCU Control Panel

(b) MTS Power Control Panel (See Figure 119) — The Power Control Panel, mounted on the CCU, provides circuits to perform the following:

1) Control the application of ground power to the MTS or Solar Bus.

2) Control the transfer from ground power to MTS power.

3) Monitor MTS System voltages.

4) Control and monitor functions to check out the following: Regulator selection, Main or Standby Battery selection, A or B.

5) Provide elapsed time indication of internal/external power application to the MTS.

6) Monitor Battery Temperature of Battery A and B.

(c) Instrument Unit Simulator Panel (See Figure 120) — This panel is utilized to test the MTS deployment phase. The panel contains circuits to:

1) Simulate the MTS deployment signal 28 v dc.

2) Provide 5 vdc excitation to MTS deployment telemetry circuit.

3) Provide MTS deployment telemetry circuit outputs.

4) Provide telemetry output points for monitoring.

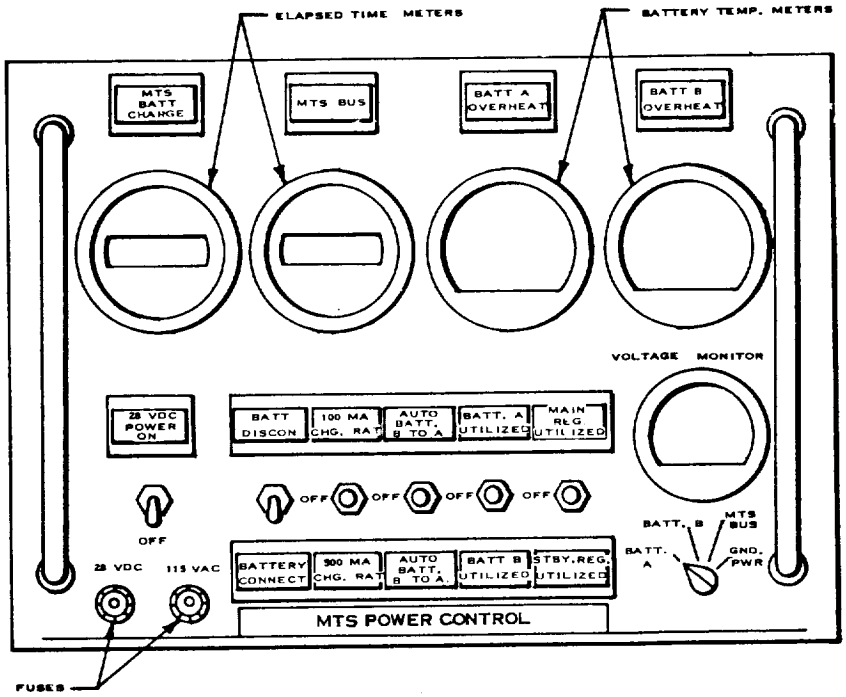

Figure 119. MTS Power Control, Front Panel

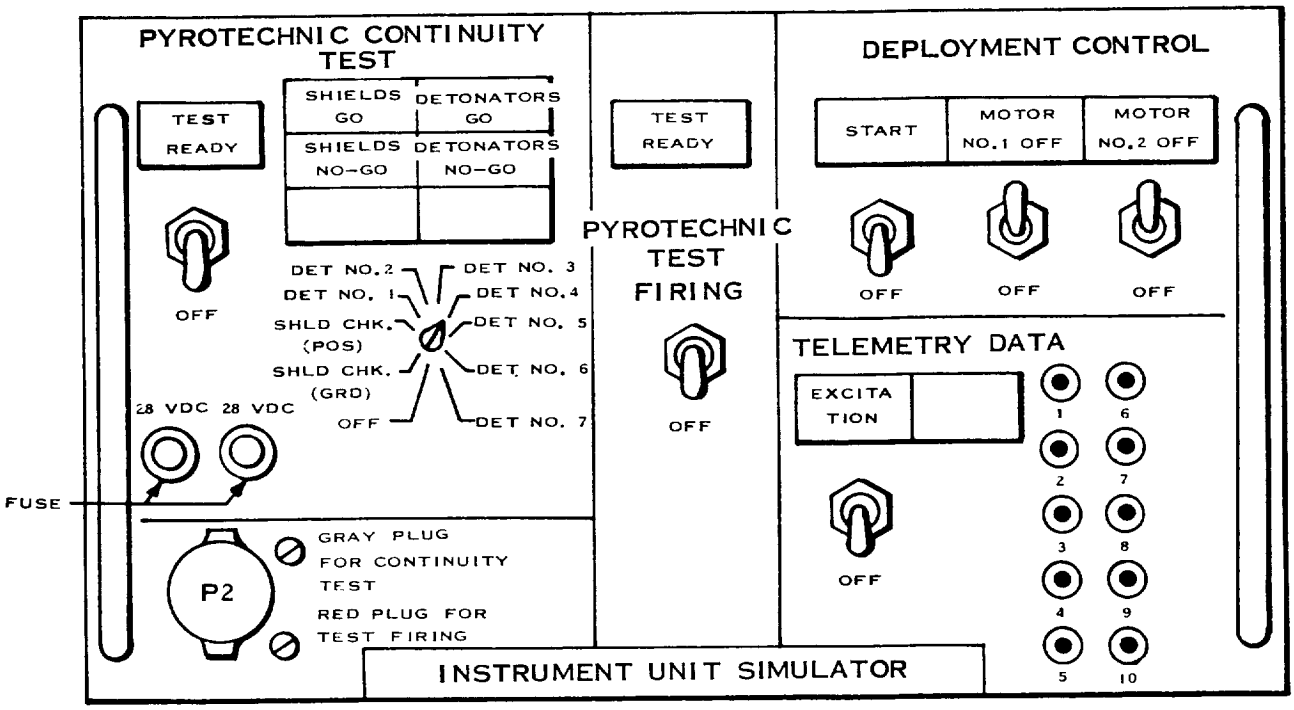

Figure 120. IU Simulator, Front Panel

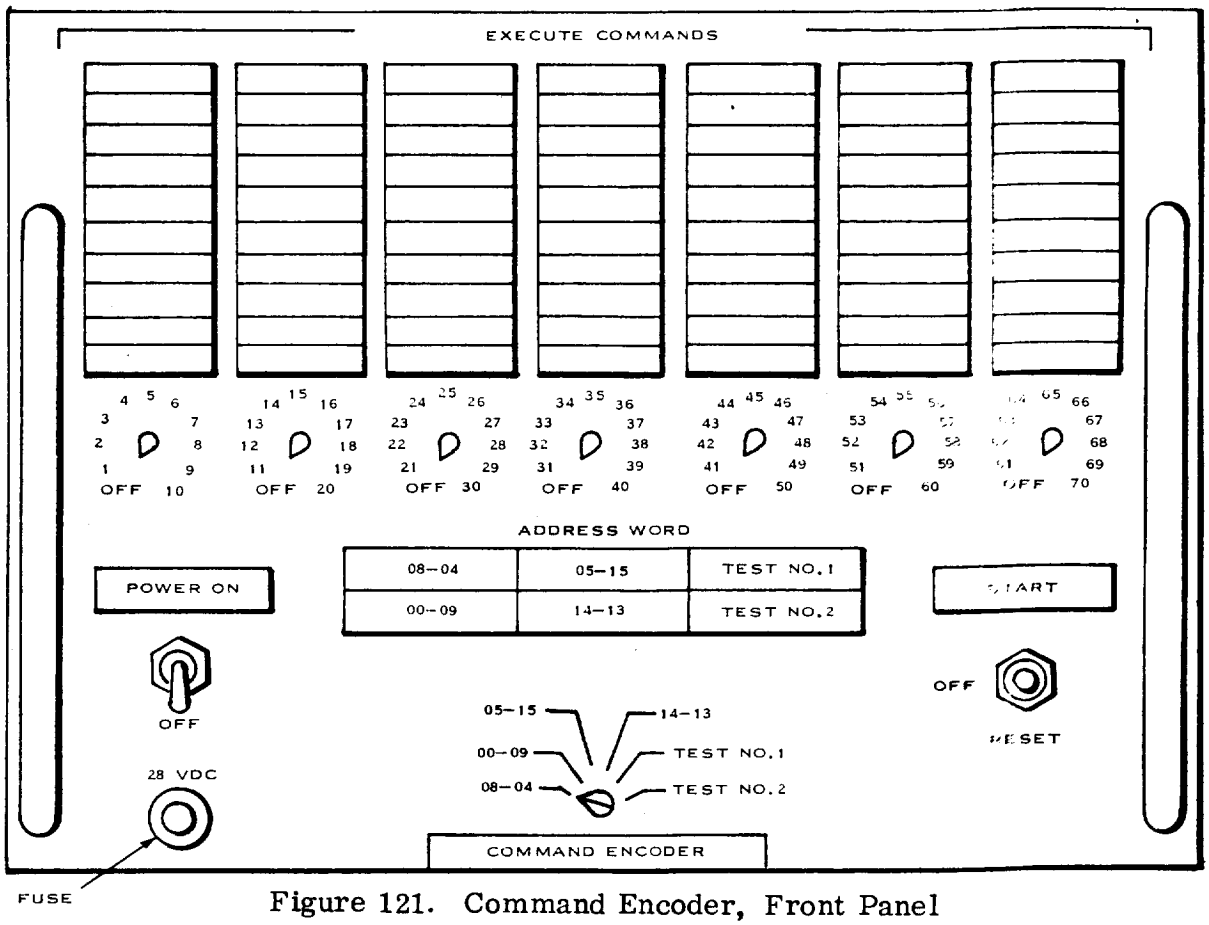

Figure 121. Command Encoder, Front Panel

5) Check continuity of all the detonator wiring and shields separately.

6) Option to fire detonator circuit.

(d) Malfunction Localization Panel — This panel is employed to facilitate malfunction isolation. It provides access to strategically located test points of the MTS electronics system for connection of these signals to the various CCU instruments and ancillary equipment.

(e) Ground Command Encoder (See Figure 121) — The Ground Command Encoder incorporates circuitry to provide the following:

1) Simulation of tone digital system for formation of digit command words for ground command control.

2) A fixed sync pulse of 54 cycles duration and a means of selecting 2 different word bits of 18 and 36 cycles of the tone frequency.

3) An output to code modulate the command frequency.

4) Means of constructing both an address word and an execute word.

5) Fixed output pattern of two address words followed by two execute words.

6) Means of selecting any one of 70 pre-programmed execute commands.

7) Means of selecting either of four valid address word commands.

8) Means of selecting any one of two different invalid address words for MTS Decoder test purposes.

(9) After completion of second execute word provides automatic reset and indication of readiness for next command transmission.

(f) PCM Data Readout Unit (See Figure 122) — The purpose of the DRU is to process serial PCM data from the Capsule Control Unit (CCU), provide visual data display, hard copy data printout, and magnetic tape recordings of both the PCM data and auxiliary data inputs. The PCM data is supplied in two fixed formats, identified as Beacon and Memory data. Visual displays and printouts obtained from the System allow every bit position or data point of the Beacon and Memory PCM data to be analyzed individually.

Physically, the System is completely self-contained, except for the differences among models noted below and requires only primary power and input signal connections from the CCU. The PCM Data Readout Unit contains a signal conditioner, PCM decommutator, a recorder/reproducer and a power supply.

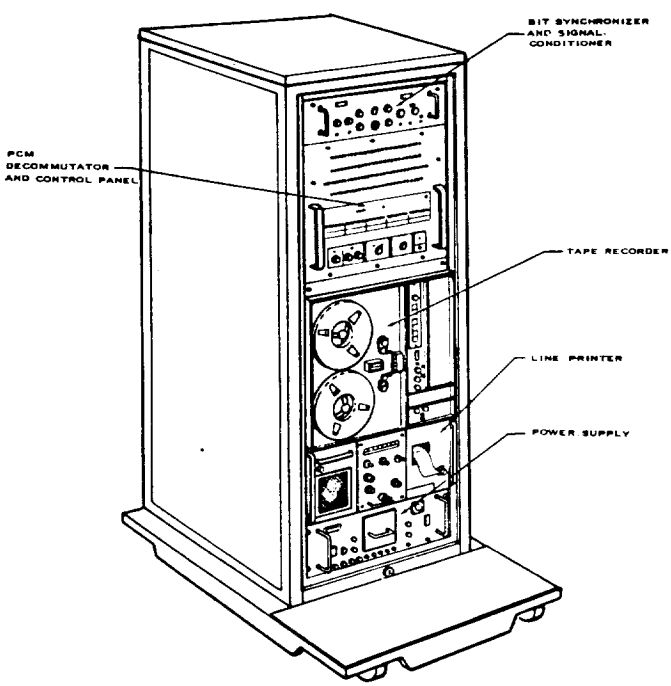

Figure 122. PCM Data Readout Unit

Signal Conditioner

Serial Beacon or Memory PCM data is applied to the Signal Conditioner which performs two functions: (1) it regenerates the serial data bits and converts the data to NRZ-C type code, and (2) it generates clock timing pulses to synchronize system operation. The clock pulse outputs are synchronized with the regenerated data. Inputs to the Signal Conditioner are switch-selectable to accept real-time Beacon data, playback Beacon data, or playback Memory data in addition to auxiliary PCM data supplied from external sources. Regenerated data and clock timing pulses are routed to the input of the PCM Decommutator. The Signal Conditioner is completely self-contained, including internal power supply.

PCM Decommutator

The PCM Decommutator accepts serial regenerated Beacon and Memory data and bit-rate clock pulses from the Signal Conditioner. Its function is to establish synchronization with the data word and frame rate and provide the means for identifying specific data points in the Beacon and Memory data formats. Either format can be processed individually, and can be changed from one format to the other by a single switch selection. The unit displays every bit position of Beacon data on front panel indicators, and has optional printout control modes for printing out all data or only printing out when a change of data occurs in the data word. When Memory data is processed, all data bits are printed

out. Twenty bits of the frame sync pattern is excluded from the printout for both Beacon and Memory data. DC operating power is supplied by the Power Supply unit.

Recorder/Reproducer

The Recorder/Reproducer records and plays back the Beacon and Memory PCM data and auxiliary inputs such as video, range time, and other data signals. The unit uses 1/2-inch instrumentation magnetic tape with up to seven record/reproduce channels. All channels contain f-m record and reproduce electronics. As used in this system, all data is recorded at 30 inches-per-second; Beacon data is played back at 30 inches-per-second and Memory data is played back at 1 7/8 inches-per-second. All operation functions are independent of the other units in the System, except for input-output signals.

Line Printer

The Line Printer provides a hard copy record of data processed in the system. It operates under control of the PCM Decommutator to print out either the Beacon or Memory data in a 20-column format. Each bit position (except for 20 bits of the sync patterns) is printed in binary form. Data is presented to the Line Printer from the PCM Decommutator in 20-bit parallel form, and the actual printout of the 20-bit words is executed by a print-command from the PCM Decommutator.

Power Supply

The Power Supply unit provides regulated dc operating power for the PCM Decommutator. Output voltages are -6 volts, ±12 volts, and ±24 volts; only the -6 volt, ±12 volt and -24 volt outputs are used by the PCM Decommutator.

(g) Difference Among Models — This description refers to the engineering test unit. The engineering test unit is the standard model.

1) First Production Unit. The first production unit is the same as the engineering test unit except that it is mounted in a different type of rack and contains no blower. The AC power to the Signal Conditioner, Recorder/Reproducer, and the Line Printer, in the first production unit, is controlled by a circuit breaker located at the rear of the rack.

2) Second Production Unit. The second production unit is the same as the engineering test unit except for the Recorder/Reproducer and the rear connector panel. The Recorder/Reproducer has all seven tracks of electronics instead of four; and all inputs and outputs of the tracks are available at the rear connector panel. This unit is utilized in the SATCON area.

3) Third and Fourth Production Units. The third and fourth production units are the same as the engineering test unit.

(h) CCU-M Interface Cabling — There are seven exterior interface cables associated with the operation of CCU-M. Their functions are as follows:

1) AC Power. Connected between CCU-M and 115 v ac power source to provide primary AC power required for CCU-M operation.

2) DC Power. Connected between CCU-M and a high current external 28 vdc power source to initiate Pegasus Deployment Detonator firings.

3) Umbilical Functions. This is a 60 conductor exterior cable used to facilitate the transmission of hard-line Command and monitor functions between the CCU-M and 900A10J1 connector on Pegasus.

4) IU Functions. This cable is connected to the 900A10J2 connector on Pegasus to provide for transmissions of the Saturn IU functions simulated by the CCU-M.

5) Test Functions. Connected between CCU-M and the 900A10J3 test connector on Pegasus to enable electronic subsystem malfunction localization by CCU-M.

6) RF Transmit. Connected to Pegasus communication subsystem to facilitate r-f "closed-loop" command transmission from the CCU-M.

7) RF Receive. Connected to Pegasus communication subsystem to facilitate reception of "closed-loop" Beacon and f-m information by CCU-M.

(3) CCU-LC

This equipment group enables complete test and checkout of the Pegasus spacecraft on the launch pad. It performs basically the same functions as the mobile with some additions. Much of the CCU-M design is also used in the CCU-LC.

Interconnections are shown in Figure 123. The Data Readout unit is the same as that employed in the CCU-M.

The Power Control Panel (Figure 124), CCU Control Panel (Figure 118), and Command Encoder (Figure 121) perform the same functions as in the CCU-M. However, they are not electrically interchangeable with their CCU-M counterparts. The commercial test equipment complement is identical with that of the mobile unit excepting for deletion of the spectrum display, calorimetric power meter, and substitution of the MSFC power supply for the SY-36-10.

(a) Test Conductors' Console (See Figure 125) — The Pegasus test conductors' panel is installed on Console 34 in the Blockhouse at Saturn Complex 37.

It provides the Pegasus test conductor with sufficient Pegasus launch readiness indicators to enable him to ascertain spacecraft status at any time during test on countdown.

This panel also displays significant Saturn events so that the Pegasus test conductor may ascertain the status of the spacecraft relative to that of the launch vehicle at significant points in the countdown.

A status switch on the panel is provided to enable the Pegasus test conductor to transmit spacecraft status to the Saturn test conductor.

An RF silence enable switch is provided so that the Pegasus test conductor may initiate a spacecraft RF silence upon receipt of an RF silence request from the Saturn test conductor.

A command status panel (Figure 126) is provided to indicate all the hard-line and r-f commands that are transmitted by the CCU-LC during a test sequence.

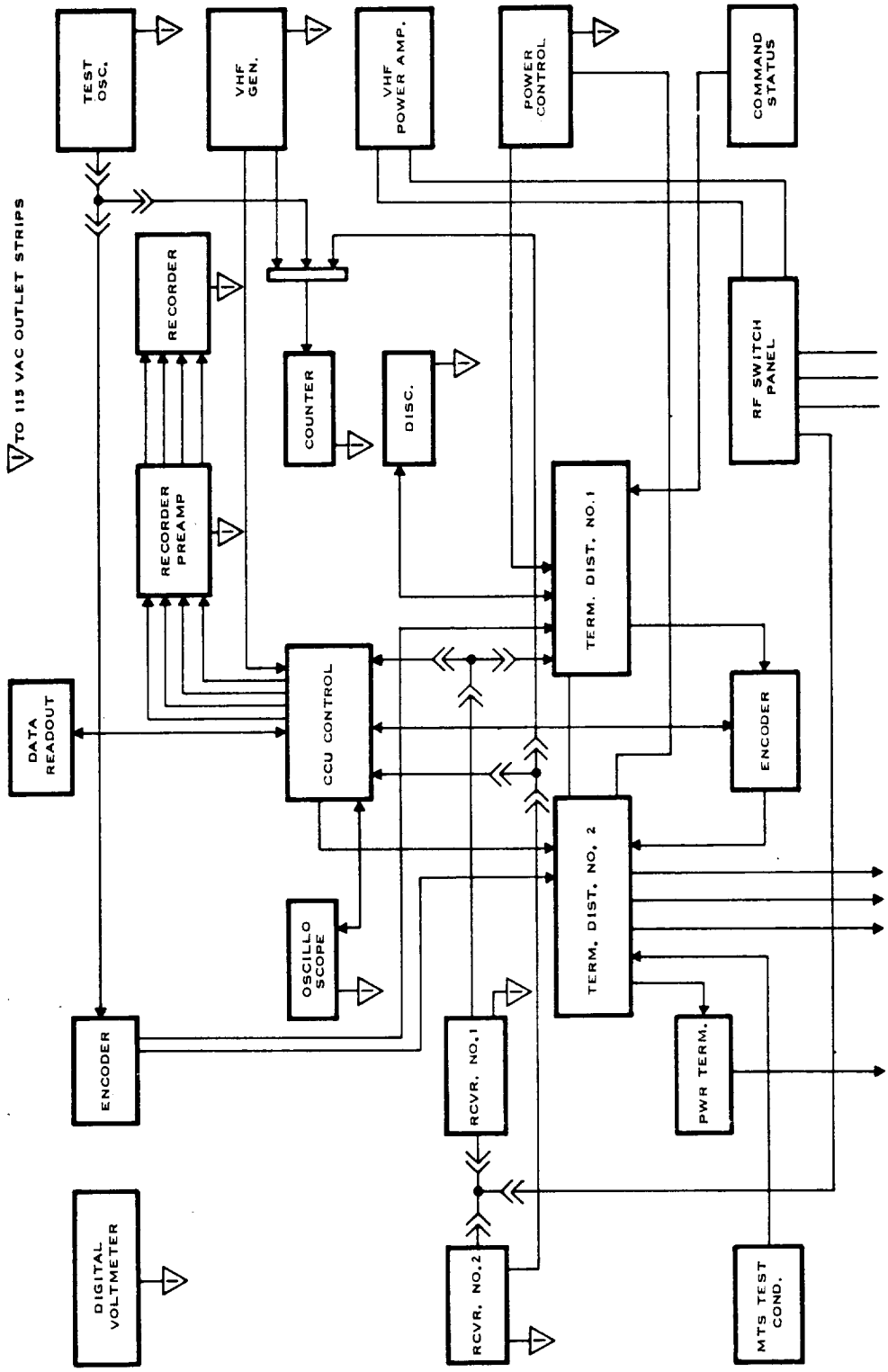

Figure 123. CCU-LC Block Diagram

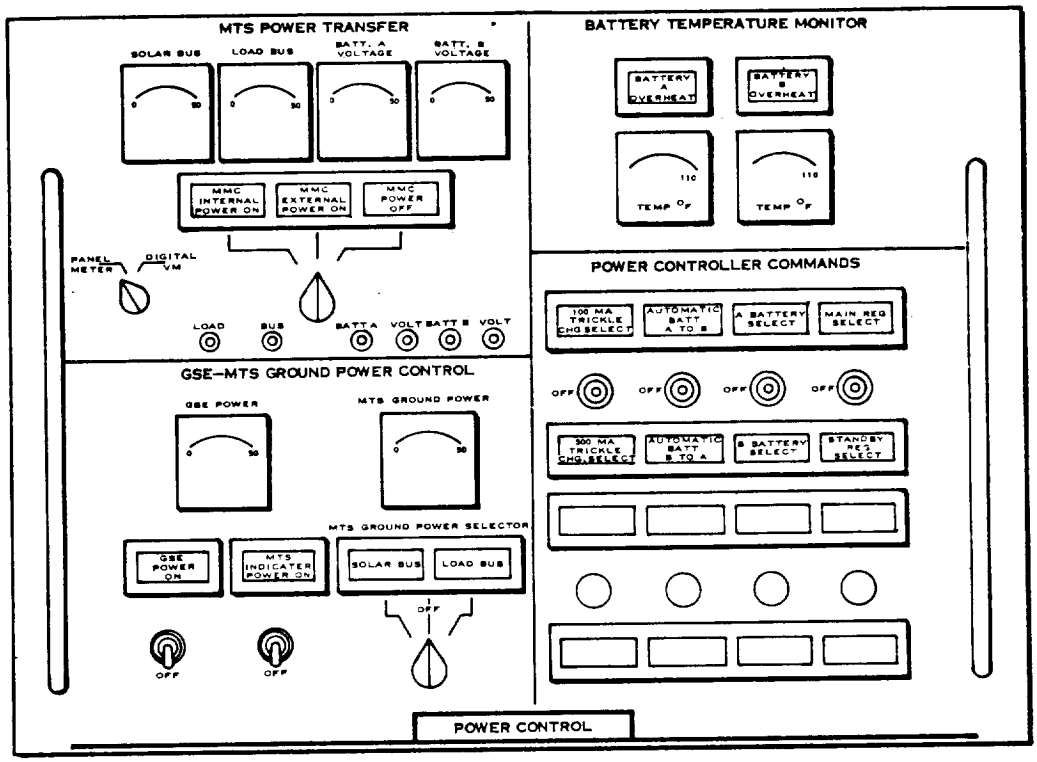

Figure 124. Power Control, Front Panel

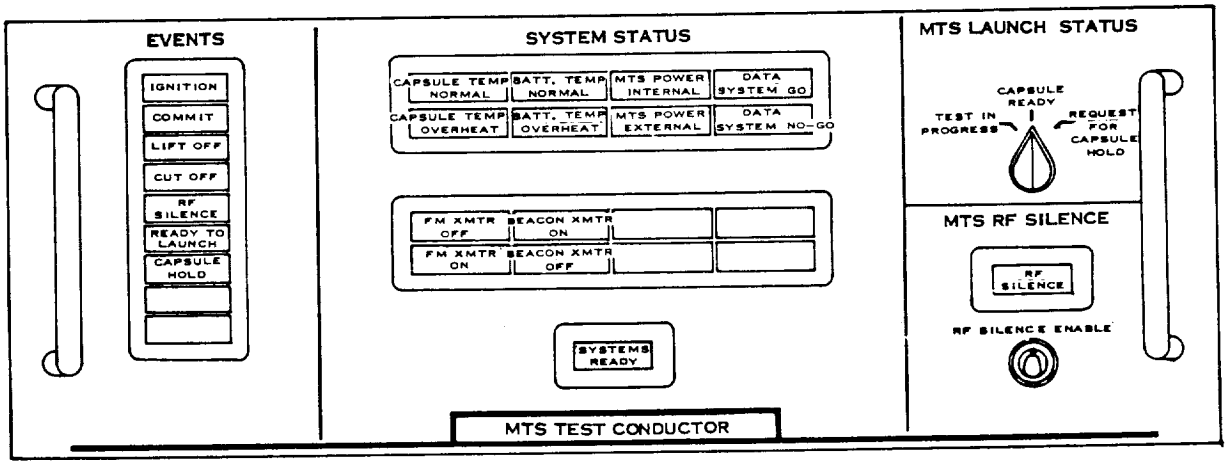

Figure 125. Test Conductor's Panel

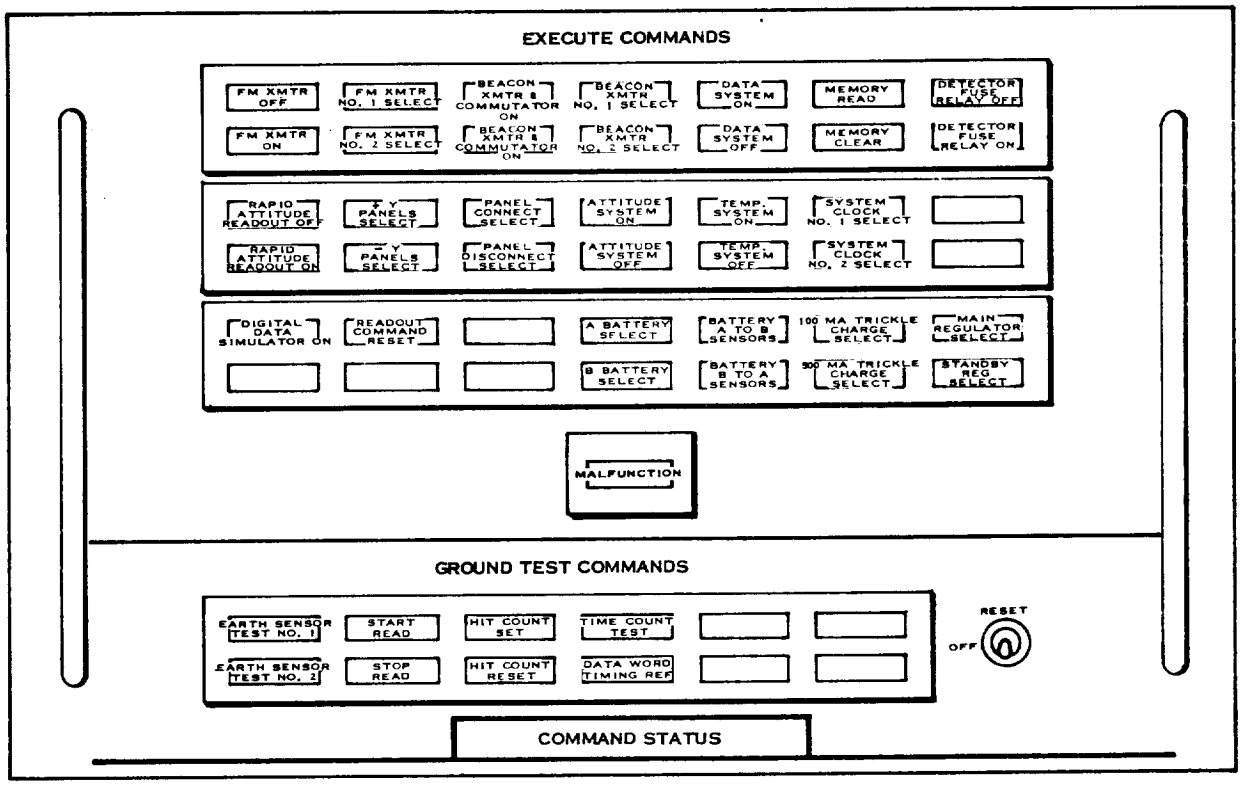

Figure 126. Command Status Panel

(b) CCU-LC Blockhouse Cabling — FHC supplied exterior cabling in Complex 37 is limited to the two interface cables between the CCU-LC GSE racks and Console 33. The major FHC/KSC cable interface is at the base of the CCU-LC racks. From this point KSC cables carry the GSE signal interface to the Saturn umbilical.

2. CCU-M and CCU-LC Design Changes

The following is a description of design changes that were incorporated into the CCU since the initial concept.

1) Originally, FHC contracted to design and build a data word display chassis. Due to design compatibility difficulties and the need for a more complete serial PCM readout system, FHC subcontracted Dynatronics, Inc. to build a complete rack of display and readout equipment consisting of a signal conditioner, beacon PCM display panel, magnetic tape recorder and a digital line printer.

2) Initial air link tests at the KSC blockhouse indicated that an r-f power amplifier was required for sending spacecraft commands from the ground command encoder. Consequently, a Boonton amplifier Model 230-A was procured and installed in Rack B28.

3) Redesign was required to stabilize performance over a wide ambient temperature range within the GSE rack.

4) Addition of "standby regulator select" command to MTS power control panel and command encoder to enable selection of standby regulator during testing.

5) Revised "system ready" indication circuits to remove beacon and f-m transmitter on/off indications from the system's ready interlock circuits because these two indications utilize battery power to furnish indications to the CCU and cause unnecessary current drain.

6) Added a solar bus current sensor in the GSE solar bus ground power line to provide current monitor capability for KSC event recorders.

7) Redesigned PCM detector circuits to eliminate false triggering resulting in erroneous recordings. During the communication subsystem tests, it became apparent that the bi-phase detector in the CCU-M was inadequate. The detector was modified by adding an amplifier on the video input and an NRZ to RZ converter at the output. This revision was sufficient to produce consistently intelligible data throughout the communication subsystem test. However, design efforts were directed toward a better solution immediately using a new concept of a phase detector. This design was integrated into the CCU-M configuration and results show the detector to be reliable with an indicated signal input level at the telemetry receiver of less than 1 microvolt.

8) Added event and analog chart recorders to CCU-LC to obtain permanent recordings of important spacecraft functions.

9) Added an AC filter to encoder and PCM detector B+ supply lines to eliminate noise generated in the encoder from appearing on the B+ line.

10) Added a 20 v zener diode to command encoder B+ circuit to improve operational reliability and improve margins at elevated temperatures.

11) Added make-before-brake wafers to command encoder execute command switches to eliminate a relay chatter causing noise spikes on output.

12) Revised circuits to delete GSE capability to disable spacecraft receivers.

13) Revised wiring of CCU-M IU chassis to allow squib firing with either 115 vac or 28 vdc.

14) Added command "panel 013" to encoder.

15) Deleted solar sensor stimulator control circuit from CCU control panel due to the incorporation of portable stimulators which were utilized for the checkout.

16) Added an interlock circuit to MTS power control chassis to prevent accidental application of ground power to MTS bus when batteries are connected.

17) Added an overvoltage protection circuit to MTS power control panel to prevent damage to the spacecraft.

18) Addition of a lever lock switch to prevent accidental activation of the launch status ready switch.

19) Added a patch panel for CCU-LC DRU tape recorder.

20) Added a spare tape recorder and patch panel to back up the DRU recorder in blockhouse.

21) Added new oscillator crystals to the GSE receivers to accept the new Pegasus C beacon frequency.

22) Revised the command encoder circuits to add two new address commands for Pegasus C due to the frequency change.

23) Added "spectrometer ON/OFF" commands to command encoders.

24) Added Battery A, Battery B and load bus jacks to CCU-LC power control chassis to accurately measure these functions with the digital voltmeter.

25) Deleted encoder commands "Test Gen. ON/OFF" and added "Detector Fuse Relay ON/OFF" commands.

3. SATCON

a. Functional Description

The SATCON installation was designed to derive PCM and PAM telemetry data from data line inputs provided by the KSC, ETR, and STADAN tracking stations servicing the Pegasus mission.

Figure 127 is a functional block diagram of SATCON. The physical arrangement of the equipment is shown in Figures 128 and 129.

The equipment rack, command status display, and the PAM rack appear in Figures 130, 131 and 132, respectively.

(1) Switch and Monitor Panel/Amplifier Panel/Scope Panel

The tracking station receives composite PCM/PAM video signals that are selectable from three input sources: ETR, MANDY, and SCAMA phone lines. The telephone lines are appropriately terminated and fed to three separate automatic gain control amplifiers. The outputs of these amplifiers are monitored by VU meters; compression characteristics are such that an output of 4 to 5 volts is obtained even though the input ranges from 0.25 to 4 volts.

The phone line inputs are continuously monitored by three oscilloscopes which may also be used to view the amplifier outputs if desired. In addition, continuous scope monitoring of the bi-phase demodulator output and the subcarrier discriminator output are provided to the input signal monitor operator. Any of the three phone lines may be audibly monitored through appropriate switch positioning.

The amplified and gain controlled output signal is fed to the input of a bi-phase demodulator for PCM demodulation and to a subcarrier discriminator for PAM subcarrier demodulation.

The PCM output of the bi-phase demodulator drives the DRU. This unit provides a 160 bit lamp display for PCM data in real time. The unit can also provide printed permanent record of the PCM data. The printed record is dated by a date and time stamp machine which roughly indicates the time of reception and printout.

The PAM output of the subcarrier discriminator feeds three strip chart recorders. These recorders indicate the PAM outputs in real time, the data phone line used for reception (ETR, MANDY, or SCAMA) and the time of reception by a time code channel on the chart.

The facility also provides a means to record the video signals on magnetic tape as well as playback of tape recorded signals at a later time.

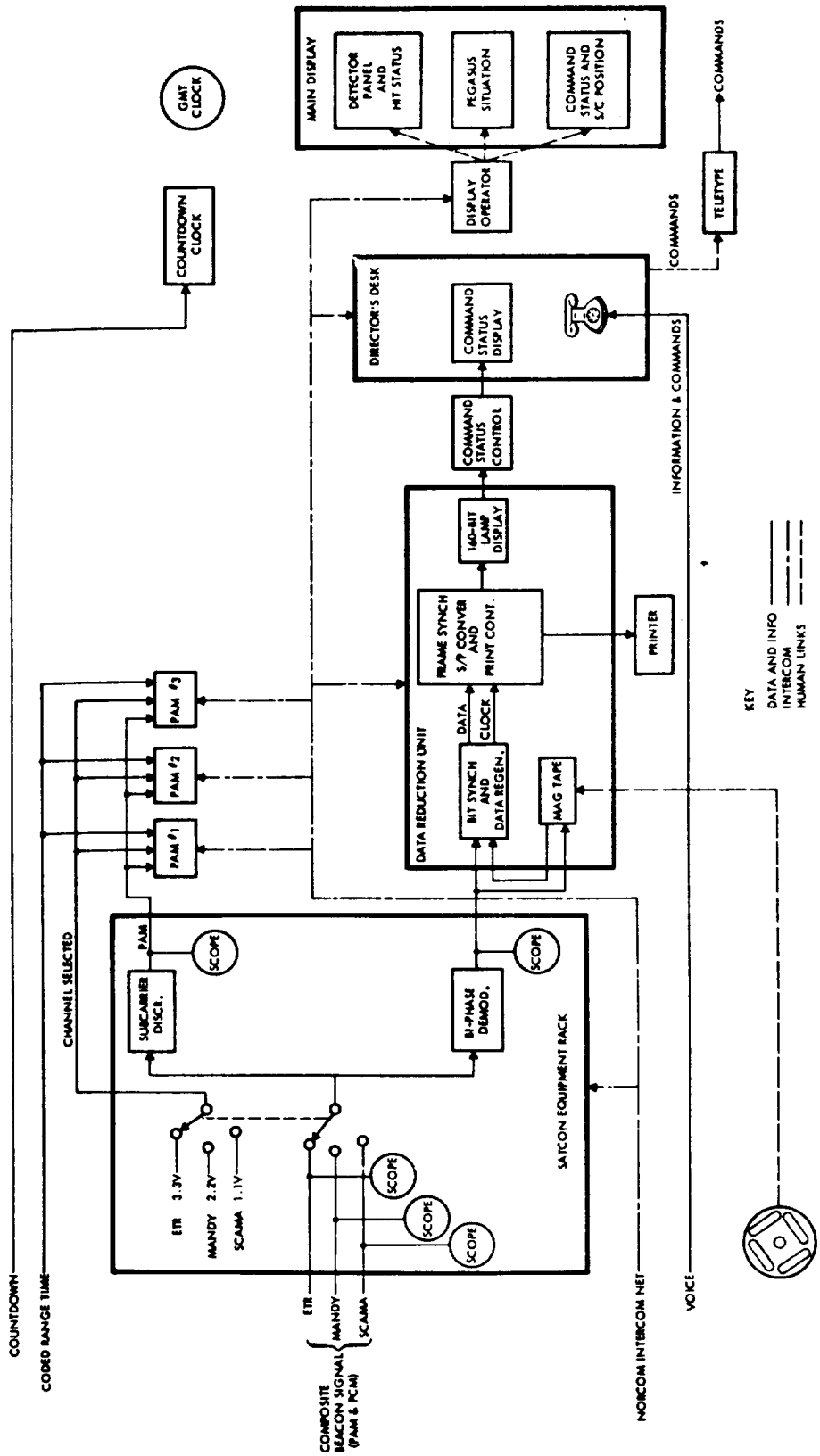

Figure 127. SATCON Functional Block Diagram

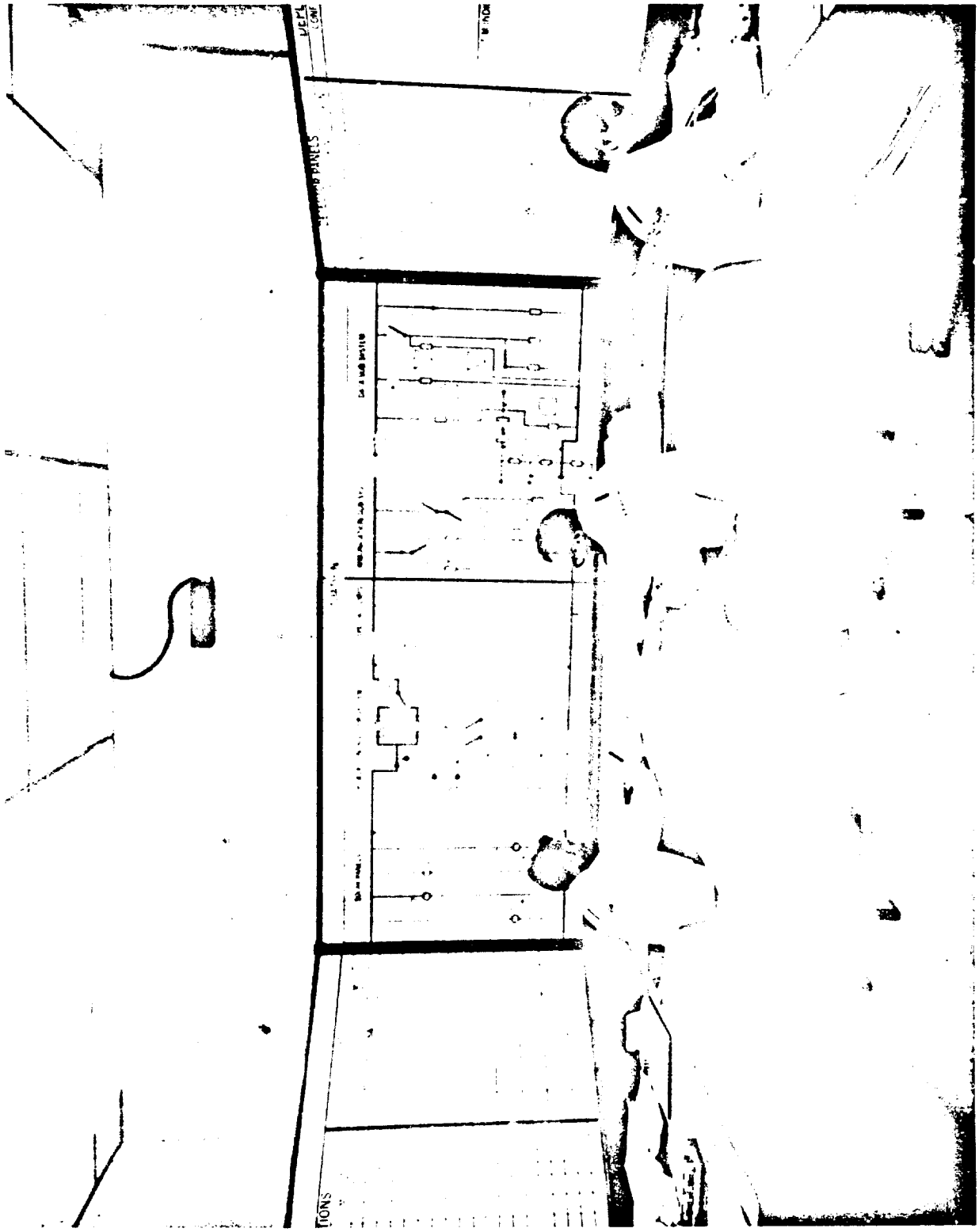

Figure 128. SATCON Facility

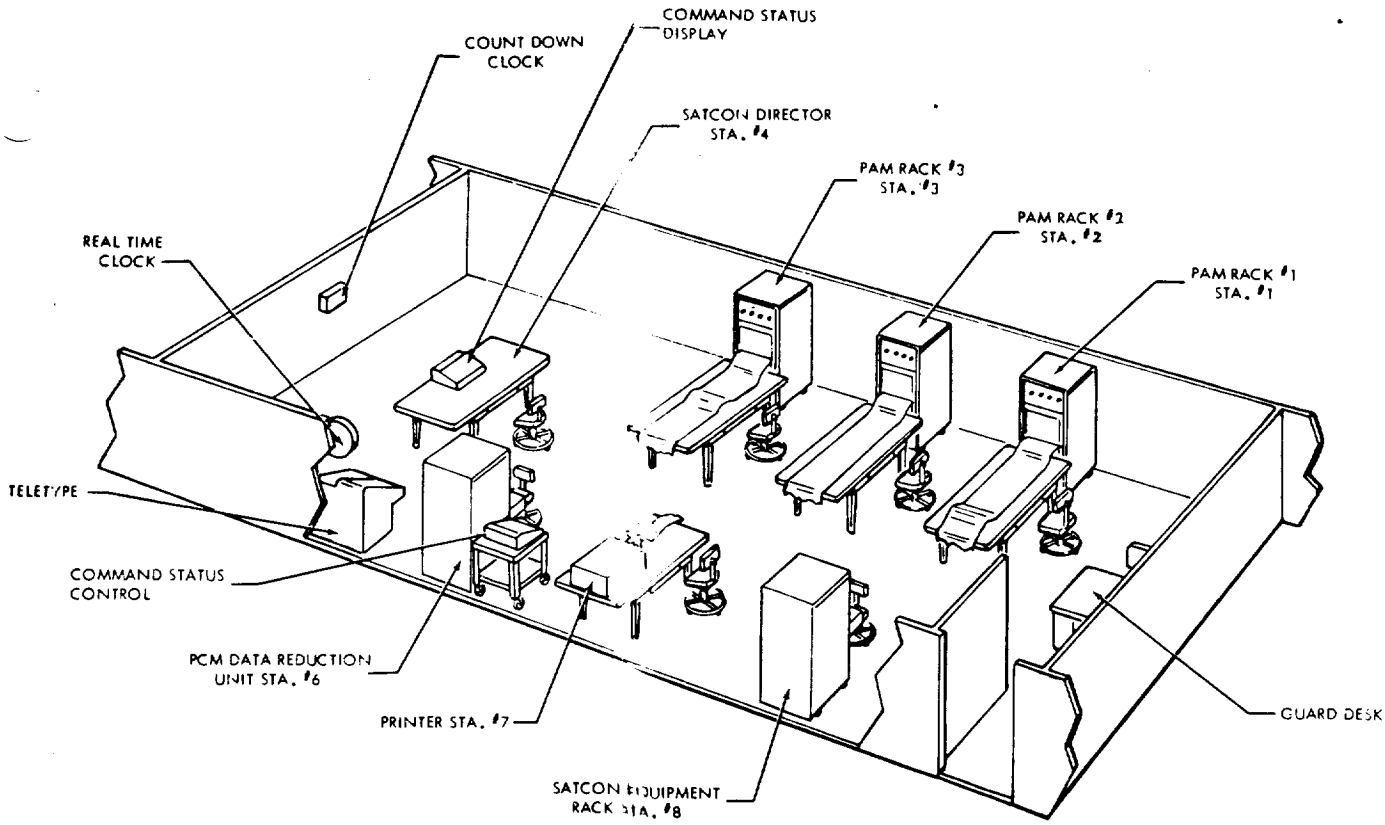

Figure 129. SATCON-Equipment Arrangement

The PCM and PAM outputs as provided by the facility enable SATCON personnel to make quick evaluations of the Pegasus spacecraft status and initiate appropriate commands to the vehicle.

(2) Command Status Panels

These two consoles located at the SATCON Director and PCM operator positions enable simultaneous lamp display of spacecraft status and directed commands. The displays are manually controlled in the following manner: (1) spacecraft system status is set in only by the PCM operator to correspond with PCM telemetry displayed on the DRU, (2) Commands issued by the SATCON Director calling for a change in spacecraft status are set in only by the Director. When the spacecraft status changes in conformance with execution of a directed command, the PCM operator changes the status indicator accordingly which removes the directed command indication and establishes the changed status.

(3) SATCON Communications

The SATCON Communications consists of four types of data:

1) Data Lines

2) Range timing and countdown signal

3) Voice communications

4) Teletype

(a) Data Lines — The data lines are 3 kc lines which provide Pegasus composite

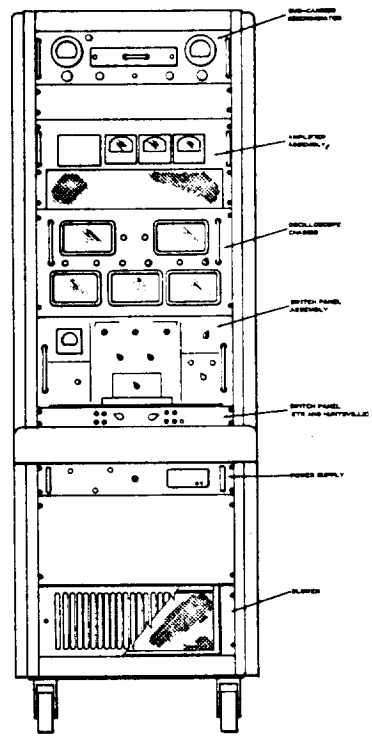

Figure 130. SATCON Equipment Rack

beacon data from the real-time STADAN stations via SCAMA, ETR and MANDY. The real-time STADAN stations include Ft. Myers, Johannesburg and possibly Woomera. Ft. Myers and Johannesburg were selected because of early orbital coverage and proximity to SATCON with Woomera preferred later on due to hard-line communications to GSFC. ETR includes Antigua, Ascension and Pretoria and provides coverage for most stations through the first few orbits. Data arrives by a combination of HF and subcable, exact routing depending upon the time of day and facilities. Mandy is a KSC station and is hard-line direct to SATCON. Other STADAN stations support the mission but do not function as real-time telemetry data source for SATCON. One data line output for composite beacon telemetry is also available direct to MSFC.

(b) Range Timing and Countdown — The timing and countdown signals are provided from the range. One timing signal is displayed on the PAM displays and another recorded on the DRU magnetic tape. The countdown signal is displayed on a digital countdown clock in SATCON which reads down in seconds.

(c) Voice Communications — Voice communications consist of:

- NORCOM
  1) External
  2) Internal

- Station Lines
  1) SCAMA
  2) ETR

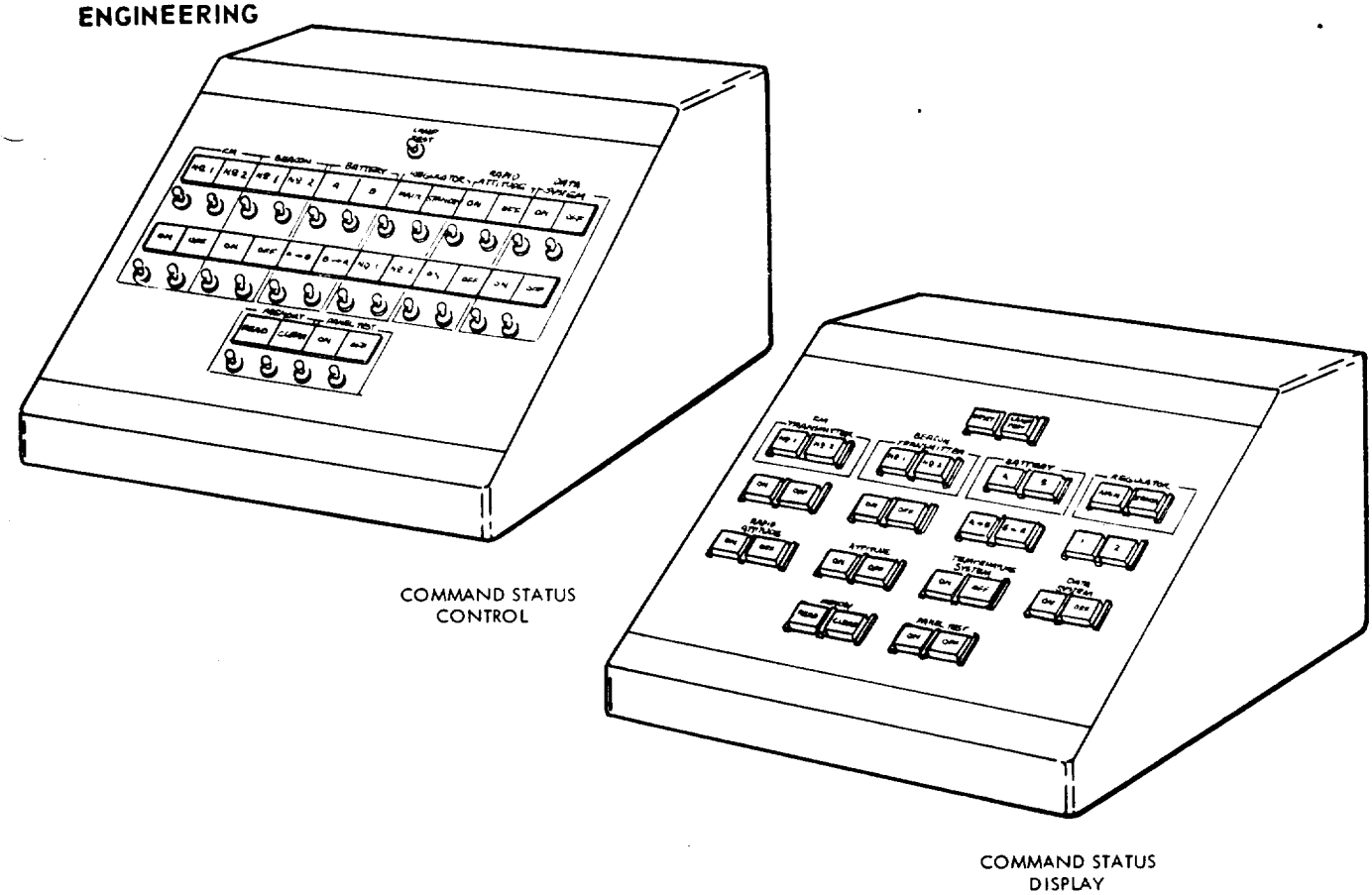

Figure 131. Command Status Display

- Dial Phone
  1) Huntsville
  2) Washington (NASA)
  3) Two Open Lines

(d) SATCON Design Changes

Since initial concept, the following design changes have been incorporated into the SATCON facility.

1) Design of a Director's and Operator's display console to replace large status board as originally conceived.

2) Design of a patch panel for the DRU tape recorder.

3) Added a switch panel to provide switching capability of all input and output signals to either the DRU tape recorder or the standby recorder.

4) Replaced existing 5 amp power supply with 10 amp supply due to additional current requirement of Director's and Operator's consoles.

5) Added data table take up reels for PAM strip chart recorders.

6) Removed phone line attenuator from the equipment rack.

7) Added an amplifier assembly in the equipment rack.

8) Added a Norelco 1/4" tape recorder.

9) Added a line matching transformer assembly on rear of the Norelco Recorder.

10) Added a switch panel (ETR and Huntsville) to the equipment rack.

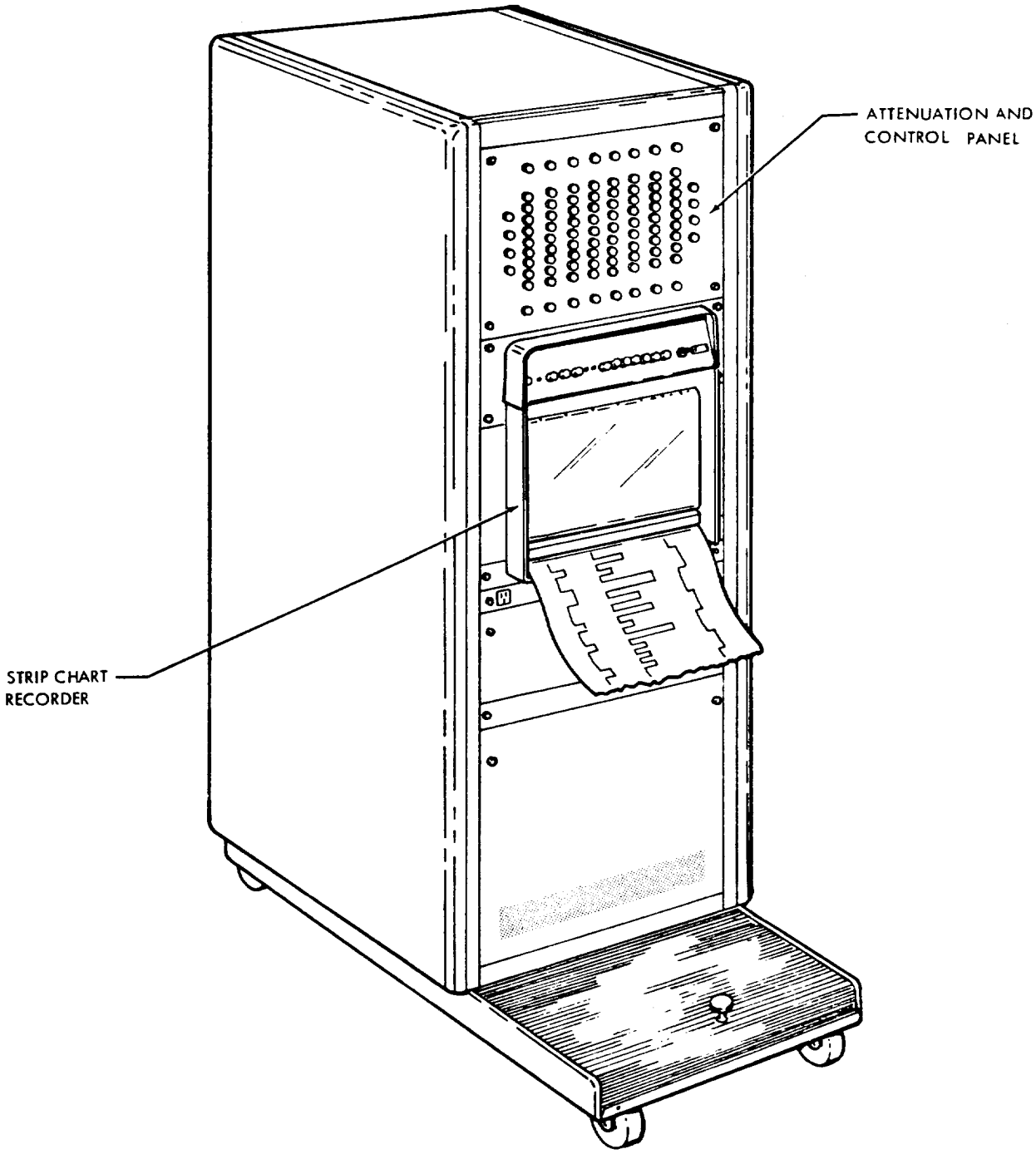

Figure 132. PAM Rack

11) Added Rixon Rack, MOPS Amplifier, and countdown clock timing rack to Equipment Center.

4. Test Sets

a. Circuit Isolation Test Set (CITS)

(1) Functional Description (See Figure 133)

The purpose of the CITS is to troubleshoot the MTS utilizing the test point available and to isolate a malfunction to a single box where possible.

Data subsystem fault isolation is provided by a 40 bit shift register to display the last 40 bit word (data word) of the 160 bit frame. The test set provides the capability of monitoring either the pulse shaper and parity generator outputs or any of the inputs to the parity generator. In addition to monitoring the last 40 bit word of the frame, provisions were made to monitor all available word control, memory and reset signals from the data subsystem.

Test functions in the communication subsystem consist of 7.7 kc tone bursts to be monitored by an oscilloscope accompanying the CITS and dc voltage points to be measured by a high input impedance multimeter which is an integral part of the test set.

Power controller test functions consist of voltage measurements using the multimeter.

In addition to the above mentioned capabilities, the CITS contains self-check circuits to test the 40 bit shift register, lamp drivers and lamp indicators.

(2) Design Changes

Design changes to the circuit isolation test set were numerous during the early phases of the program. This was primarily due to the fact that no engineering test model was made. The bulk of these changes were circuit design changes resulting in redesign of PC cards and rerouting of hardwiring to eliminate noise.

(3) Performance

Due to the highly successful pad testing of Pegasus A, B and C, the requirement did not arise to utilize the CITS. However, a compatibility test between the CITS and the qual canister was run. Test results indicated that:

1) The CITS performs its function as designed.

2) The test set in no way loaded down or distorted the signals being monitored.

3) The CITS would be a useful piece of test equipment to isolate an MTS launch pad malfunction.

b. Deployment Motor Simulator (See Figure 134)

This test set is utilized for verification of the MTS/IU wiring and power control interface to the MTS deployment motors. It incorporates two flight-type motors and simulates limit switch operation.

No design changes have been incorporated and the unit has operated successfully since its initial acceptance.

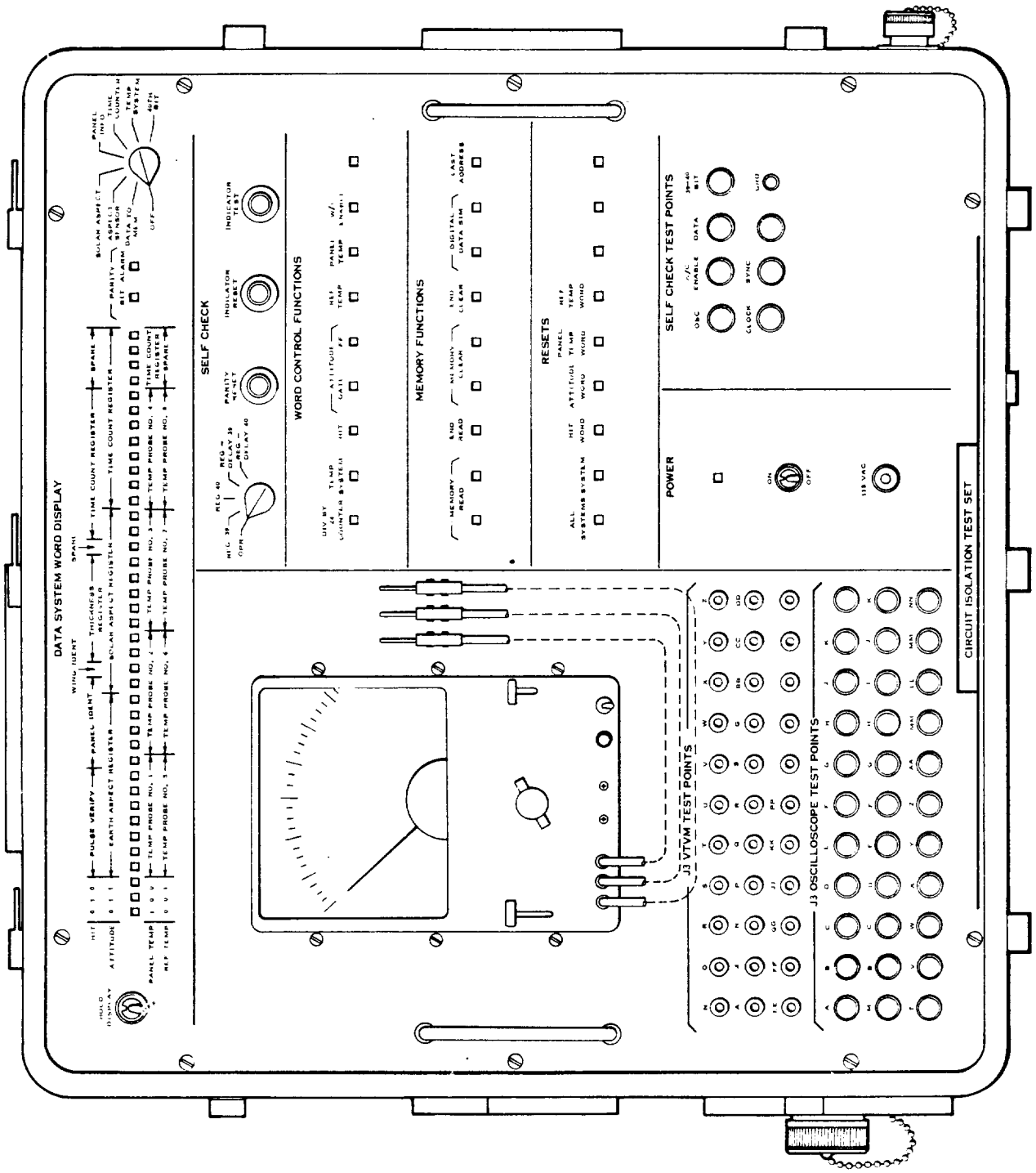

Figure 133. Circuit Isolation Test Set

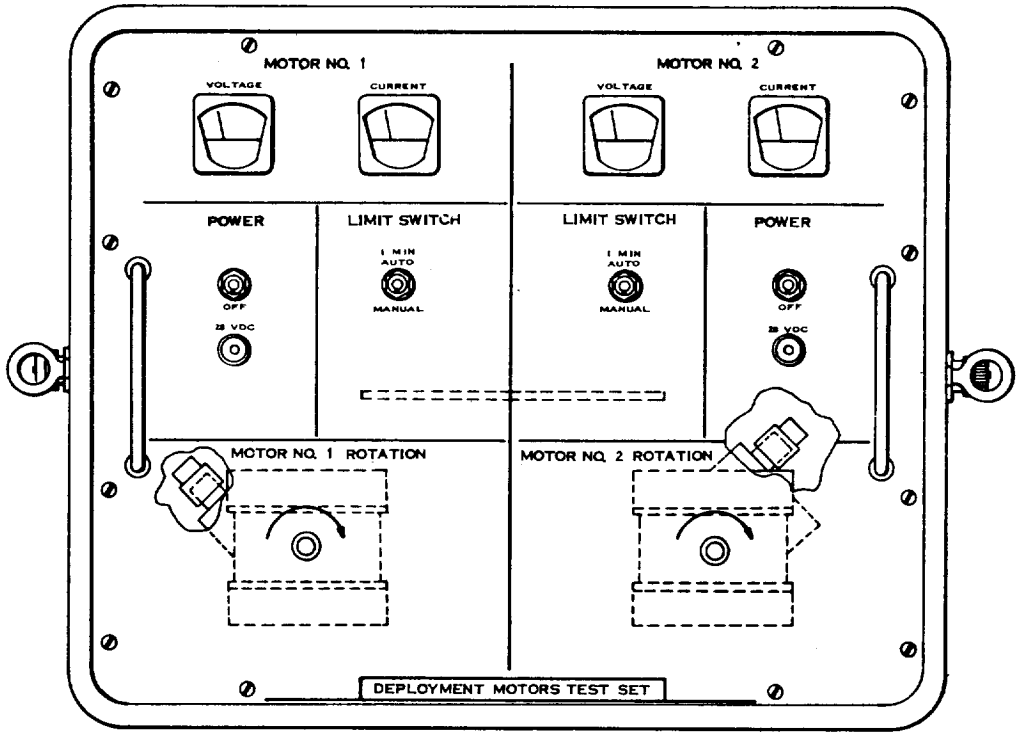

Figure 134. Deployment Motor Test Set

c. Deployment Continuity Test Set (See Figure 135)

This unit is used on the launch complex service tower to perform the following functions:

(1) Provide a continuity check of lines to the 4 separation nut assemblies.

2) Supply 5 volts for telemetry reference and a panel meter for monitoring deployment instrumentation.

3) Provides the capability of a continuity check using shorting connectors on the lines at the deployment motors and/or a functional check using the flight-type motors of the deployment motor simulator in place of the Pegasus deployment motors.

No problems have been encountered with this unit since original release to the field.

d. PAM/PCM Simulator (See Figure 136)

Simulated PAM and PCM signals are generated by this test set to evaluate the CCU-M and CCU-LC data acquisition and display equipment. Early production versions of this test set did not exhibit sufficient PAM deviation to meet test requirement and consequently this portion of the unit was redesigned. Since then all units have successfully performed their function as required.

e. Interface Unit Test Set (See Figure 137)

This equipment is used to verify the CCU J-1 and J-2 hardline interface before

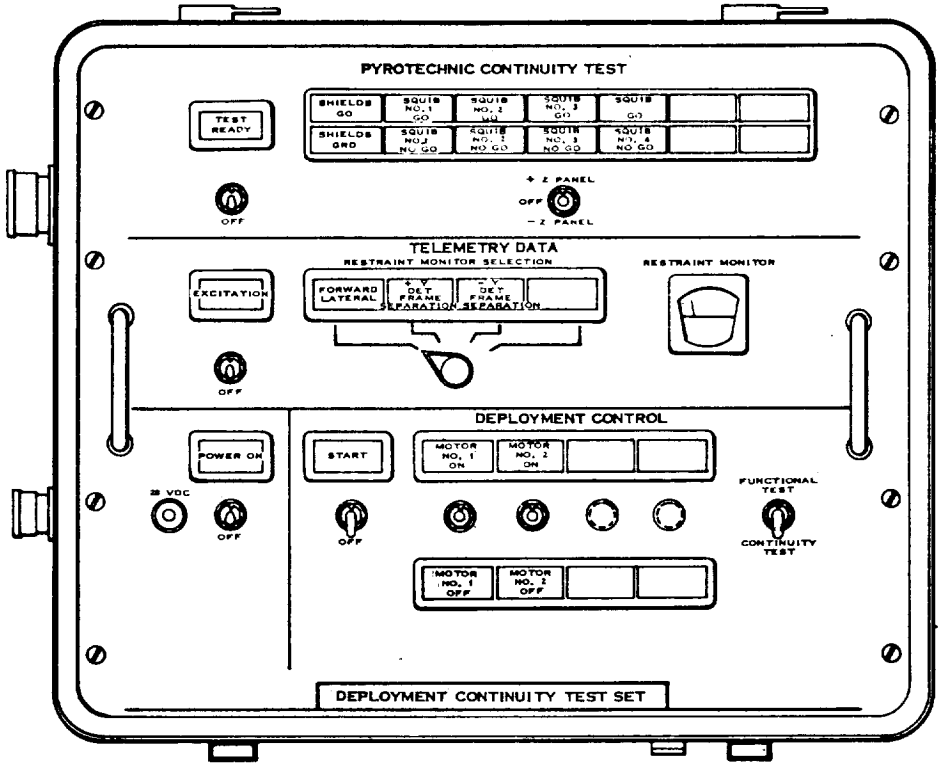

Figure 135. Deployment Continuity Test Set

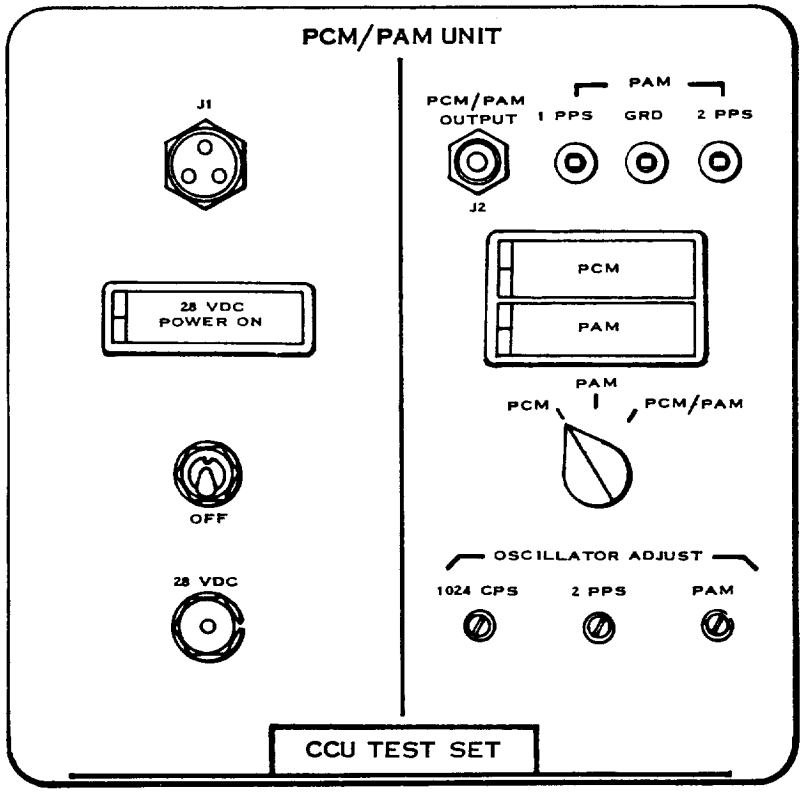

Figure 136. PCM/PAM Unit - CCU Test Set, Front Panel

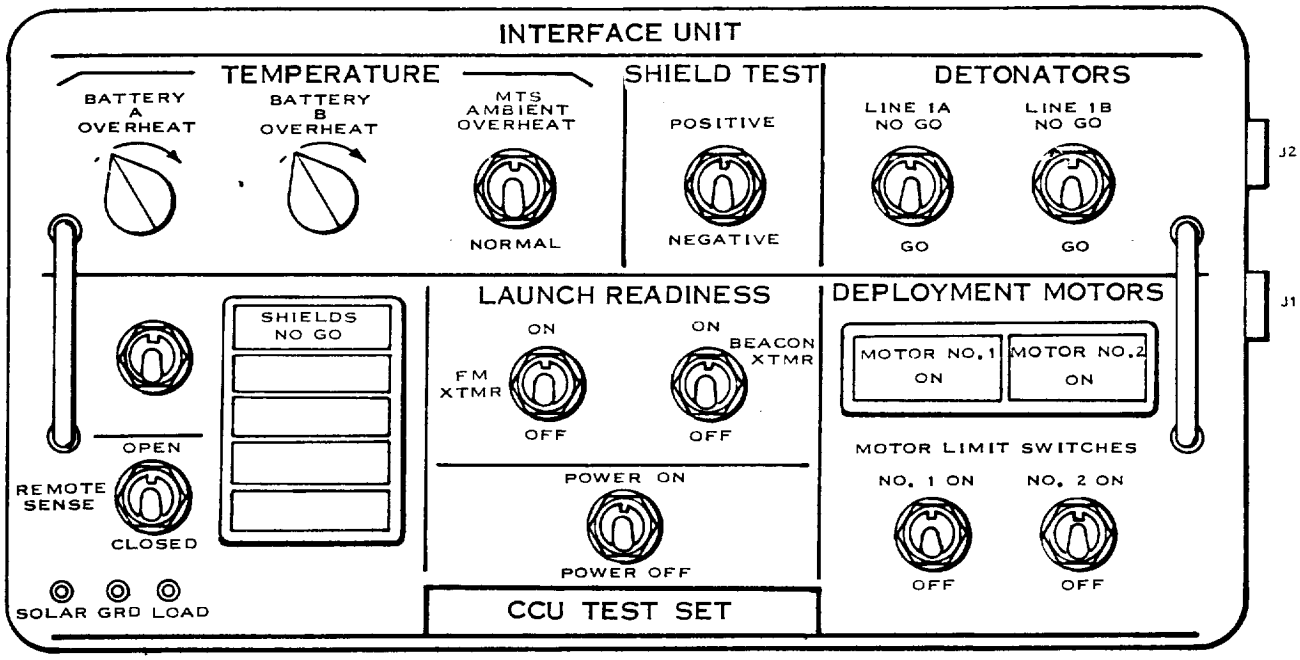

Figure 137. Interface Unit - CCU Test Set, Front Panel

interconnection with the spacecraft equipment. Three units have been manufactured for use with the mobile CCU's and CCU-LC. No problems of any kind have been experienced with this equipment.

f. KSC S.I. Patch Rack and MTS Launch Control Simulator (See Figure 138)

This unit was designed to verify the hardline interface between the KSC S.I. patch rack and MTS launch control rack and the CCU-LC prior to the physical mating of these two units. No design changes or problems have been encountered with this unit.

g. KSC Integrator Distributor and Recorder Simulator (See Figure 139)

This unit is also utilized to verify a CCU-LC hardline interface prior to physical mating with KSC equipment. No design changes or problems of any kind have been encountered with this unit since initial usage.

h. Load Box Simulators

Two load box simulators were designed to simulate the line resistance obtained at the Cape due to the long cable lengths required between the blockhouse and test stand. These boxes were only utilized at FHC for compatibility testing of the CCU-LC prior to shipment to Cape Kennedy.

5. Specifications

During the design and fabrication of the GSE, the following Government and FHC specifications were used as design requirement parameters for the CCU.

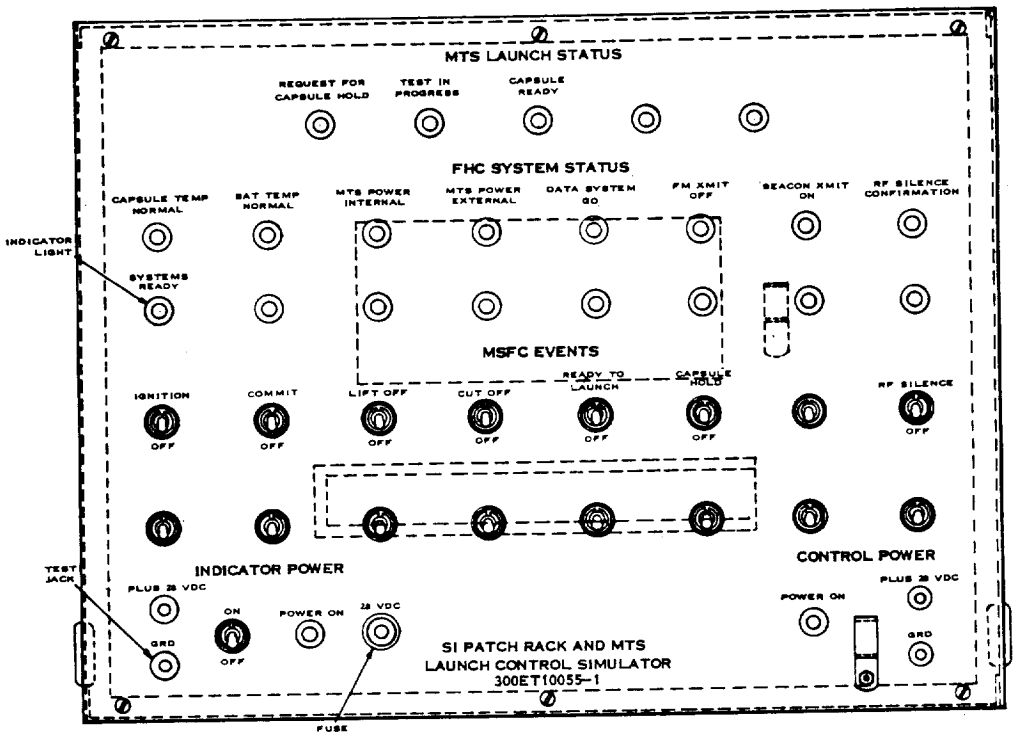

Figure 138. System Integration Patch Rack Panel

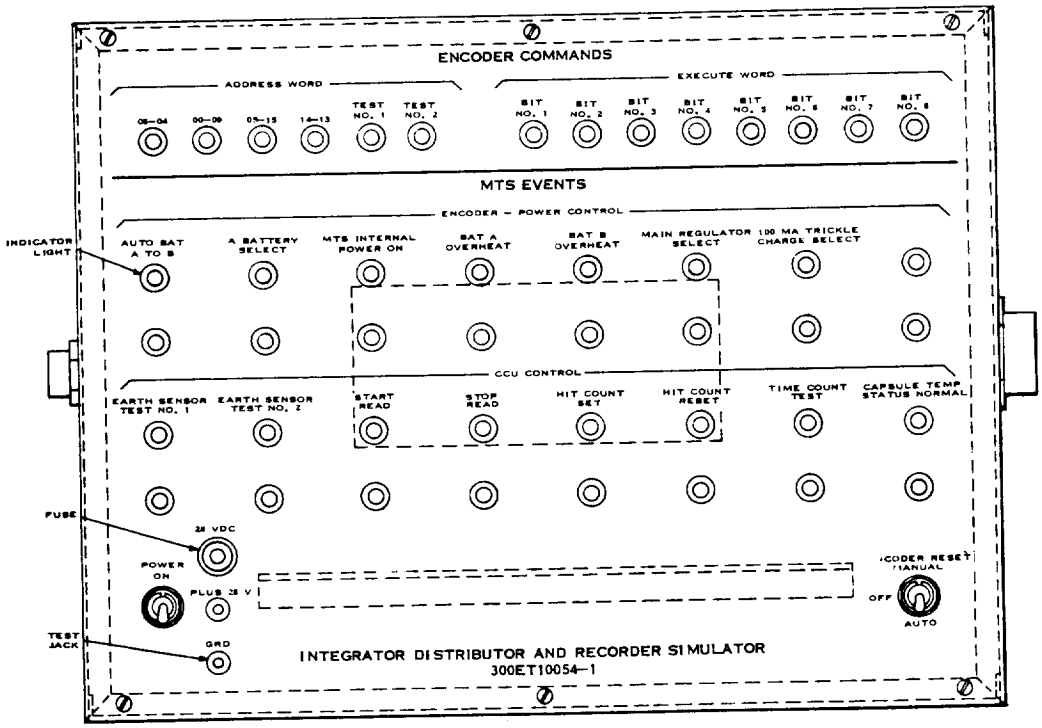

Figure 139. Integrator Distributor Panel

Government Specifications

MSFC-STD-110A	Electrical hardware, equipment, material, and methods used in Saturn ground support equipment.
MSFC-STD-163	Electrical engineering design practice, Standard for
MSFC-PROC-158B	Soldering electrical Connections (High Reliability), Procedure for
MIL-STD-275A	Printed wiring for Electronic Equipment.

Fairchild Hiller Specifications

GS-MMC-8	MMC System Shielding, Bonding and Grounding
GS-MMC-9	MMC Capsule Checkout Unit, Requirements for

Although the original contract dictated that the MSFC specifications were to be used only as a guide, approximately 95% of the CCU design meets these specifications to the letter. All design deviations were approved by NASA.

Due to critical design and fabrication schedules, the SATCON installation was fabricated on "best commercial practices" basis.

L. Launch Operations

This section of the report describes the "in-house" and field support activities performed in association with the successful launch, satellite control, and orbital maintenance of Pegasus spacecrafts A, B and C.

A summary of the scope of work as delineated in contract NAS-8-5615, article II, item 4, issued in February, 1963; contract Mod-31, issued in November, 1963, and Mod-109 issued in June, 1965, is as follows:

- Provide personnel required to support proper installation and support of GSE at ETP.
- Provide personnel required to insure and effect the proper installation and mating of the flight capsule to the vehicle.
- Establish and maintain management, administrative control and coordination of the operations, and personnel assigned thereto.
- Establish and maintain a program of Quality Assurance for the launch operations effort.
- Be responsible for, plan and direct execution of all operations involving modification to, replacement, and repair of the MTS system.
- Provide management and control of FHC personnel within the SATCON facility at KSC.
- Provide technical liaison, integration, and coordination with NASA, interfacing agencies and organizations.
- Perform operation and maintenance of facilities required to provide both data and voice messages between the required facilities.
- Analysis interpretation, assessment, organization and presentation of satellite operational data.
- Preparation, transmittal, and verification of operation commands required to establish and maintain satisfactory satellite status.

A detailed discussion describing the successful completion of the above task and associated activities is contained herein.

This information is categorized under the following major sub-items to the section.

- Planning
- Documentation
- DTM Exercise
- CCU-LC Installation and Activities
- SATCON Activities and Operation; Pegasus Spacecraft Test & Checkout Operations

1. Planning and Facility Activation

Based on the scope of work as outlined heretofore, OP-MMC-2, the "Pegasus (MTS) ETR Requirements" document, was issued in March, 1964. This procedure describes in detail the facilities, operational approach, support,

L. Launch Operations

This section of the report describes the "in-house" and field support activities performed in association with the successful launch, satellite control, and orbital maintenance of Pegasus spacecrafts A, B and C.

A summary of the scope of work as delineated in contract NAS-8-5615, article II, item 4, issued in February, 1963; contract Mod-31, issued in November, 1963, and Mod-109 issued in June, 1965, is as follows:

- Provide personnel required to support proper installation and support of GSE at ETP.
- Provide personnel required to insure and effect the proper installation and mating of the flight capsule to the vehicle.
- Establish and maintain management, administrative control and coordination of the operations, and personnel assigned thereto.
- Establish and maintain a program of Quality Assurance for the launch operations effort.
- Be responsible for, plan and direct execution of all operations involving modification to, replacement, and repair of the MTS system.
- Provide management and control of FHC personnel within the SATCON facility at KSC.
- Provide technical liaison, integration, and coordination with NASA, interfacing agencies and organizations.
- Perform operation and maintenance of facilities required to provide both data and voice messages between the required facilities.
- Analysis interpretation, assessment, organization and presentation of satellite operational data.
- Preparation, transmittal, and verification of operation commands required to establish and maintain satisfactory satellite status.

A detailed discussion describing the successful completion of the above task and associated activities is contained herein.

This information is categorized under the following major sub-items to the section.

- Planning
- Documentation
- DTM Exercise
- CCU-LC Installation and Activities
- SATCON Activities and Operation; Pegasus Spacecraft Test & Checkout Operations

1. Planning and Facility Activation

Based on the scope of work as outlined heretofore, OP-MMC-2, the "Pegasus (MTS) ETR Requirements" document, was issued in March, 1964. This procedure describes in detail the facilities, operational approach, support,

transportation, handling, and service requirements applicable to the field program at ETR.

In May, 1964, OP-MMC-10, the "MMC ETR Operations Plan" was issued. The general operational topics discussed in OP-MMC-2 were defined in detail by this document. OP-MMC-10 was used as the master plan for the Pegasus field operation and thoroughly describes the scope, mission, applicable documents, responsibilities, organization, project implementation, flow of operations, back-up requirements, plans and illustrations.

The pre-planning and associated efforts required to generate the above mentioned documents began shortly after contract award, as a function of the systems engineering and support responsibility. The organization of a Pegasus launch operations group was not officially initiated until June, 1964. A site activation office was established at KSC(ETR) in September, 1964. Facility preparation, staffing, and personnel relocation continued through December, 1964.

The engineering and administrative facilities, consisting of four house type trailers, were positioned and furnished in October.

The SIA (Spacecraft Integration Area), required for spacecraft deployment and final checkout was constructed by NASA/KSC in Hangar D and completed by November, 1964. Several structural, safety and preventive maintenance modifications were deemed necessary and were effected during the first two weeks of December. The lateness of decisions on SIA modifications, combined with the inadequacy of SIA work platforms and the decision to perform a "walk thru" exercise prior to the arrival of Pegasus A, resulted in a two-week crash effort to complete the facility readiness activity.

The SIA facility was a 32' x 140' x 25' clean area completely enclosed by an airtight canvas structure. Inside the enclosure was an assembled wing deployment fixture (WDF) on which the spacecraft was mounted for final assembly and check-out operations prior to being assembled to, and enclosed by the Saturn vehicle service module cylinder. Bonded storage and electrical shop areas were also located inside the SIA.

The facility for mating the spacecraft to the Saturn vehicle service module adapter was located in Hangar AF. Facility preparation in this area consisted of mounting a pedestal for spacecraft storage and providing a work area for spacecraft and SMA handling and assembly. Preparation of this facility was complete in November, 1964.

The preparation at blockhouse and launch complex facilities was an integrated effort between FHC and NASA/KSC. FHC personnel modified rack mounting provisions and installed six racks of GSE required to perform spacecraft launch test. NASA/KSC provided the interconnecting cabling test conductor consoles and communication equipment. The installation and checkout of the launch complex equipment was completed by early January, 1965.

The preparation of the satellite control center facility began in January, 1965. Equipment delivery was completed by late January, and installation and checkout of the SATCON facility completed by mid February.

During the course of the several months of operation, several additions and modifications were made to SATCON equipment system, enhancing the operational capability, flexibility and reliability.

The purpose of the SATCON equipment and operation is to provide the capability of closely monitoring satellite operation by the timely collection, reduction and evaluation of spacecraft data in order to effect proper maintenance and control of the orbiting satellites.

2. Documentation

In order to provide adequate documentation for the launch and checkout of the Pegasus satellites at KSC, documents were generated to aid in satellite checkout and in the same operation, demonstrate compatibility with KSC launch equipment.

To produce a final document, a few basic steps were necessary. These are:

- Determine checkout and operational requirements of each system aboard the spacecraft.
- Determine checkout and operational requirements for the overall or integrated spacecraft systems.
- Determine basic operating requirements for overall spacecraft systems when integrated with KSC launch systems.

After determination of basic spacecraft requirements for checkout, a time schedule was devised in order to accomplish necessary operations on the spacecraft in a time scale which was compatible with the overall checkout of the Saturn Vehicle.

For the launch and checkout of Pegasus A, a document was generated by the Launch Operations Department for each major test on the overall Saturn Vehicle in which Pegasus operation was required. To accomplish this, the following documents were required:

- IU/MTS Electrical Mate (LOD-MTS-554)
- MTS Compatibility and Verification (LOD-MTS-554 B)
- Plug Drop Test (LOD-MTS-572)
- Flight Readiness Test (LOD-MTS-581)
- Countdown Demonstration Test (LOD-MTS-595)
- Launch Countdown (LOD-MTS-596)

During the testing and launch of Pegasus A, the documents were updated and after the launch, the documents were printed to show the "as run" status of testing. Prior to testing and launch of Pegasus B, all documents were reprinted to reflect conditions peculiar to that spacecraft. After the launch of Pegasus B, the documents were again updated to show the "as run" configuration.

For the testing and launch of Pegasus C, documents that were used on the Pegasus B were updated, by memorandum, to reflect changes in spacecraft engineering.

3. DTM Exercise

Due to very strict schedule requirements for checkout and integration of Pegasus A with the SA-9 launch vehicle at KSC, a Program Management decision was reached in late November to conduct a "walk through" of the handling and mechanical checkout operations required at KSC prior to the arrival of Pegasus A. The Dynamic Test Module (DTM) of the spacecraft was to be transported to KSC, installed in the test fixtures, mechanically checked and mated with the SA-9 service module adapter provided by NASA/MSFC.

The DTM unit arrived at KSC on 2 December aboard the Aerospace Lines Pregnant Guppy aircraft. The unit was off-loaded and transported to the SIA. These handling operations resulted in only minor procedural changes. The unit was then installed in the WDF and mechanical checks performed. These operations resulted in rework and/or modification to several handling and alignment tools and fixtures.

On 16 December, the DTM unit was moved to Hangar AF for mating with the SA-9 Service Module Adapter (SMA). At this time, a mismatch of the holes in the SMA/spacecraft mating surfaces was discovered. The master drill template was shipped to KSC and the necessary corrective work was performed on the SMA. Because of other scheduled operations for the SMA, a physical mating of the DTM to the SMA was never performed. The DTM unit was returned to FHC/SSD for other scheduled activities on 29 January 1965.

It is believed that the operational exercises performed with the DTM enabled corrective actions to be taken prior to the actual "need dates," and prevented an undeterminable schedule delay to the Pegasus A checkout and integration efforts at KSC.

4. CCU-LC Blockhouse Activities

The CCU-LC equipment arrived at Cape Kennedy 7 December 1964. The installation of the CCU-LC equipment into the racks at Complex 37 was completed 14 December 1964. A test of the CCU-LC was conducted using IP-501. After a few minor modifications, the IP-501 was satisfactorily completed 9 January 1965.

The Dynatronics digital data processing unit was received 3 January 1965 and the installation of this equipment into the blockhouse racks was completed 5 January 1965.

The CCU-LC/KSC blockhouse compatibility test (OP-516) was conducted on 10 January 1965, and installation of the two blockhouse antennas completed by 11 January 1965.

As a result of the blockhouse activities, the following change requests were originated by the launch team:

1) LO-002 - Wiring change to eliminate the off position during transition between external and internal power.

2) LO-003 - Changed GSE power switch to prevent accidental removal of GSE power from the CCU-LC r-f silence relay string.

3) LO-004 - Add jumper to allow the systems ready light to illuminate when the switch is in either the "Solar" or "Load" positions.

4) LO-005 - Add jumper to prevent the loss of indicator power to the battery temperature meters when r-f silence is on.

5) LO-006 - Wiring change to allow the indicators to reflect the correct MTS power system mode of operation.

6) LO-010 - Changes required to CCU-LC rack to install back-up magnetic tape recorder.

7) LO-011 - Changes were required to install visual countdown time.

8) LO-012 - Change to the wiring surface location to prevent chaffing of a cable.

9) LO-013 - Wiring change to provide 1 pps timing on the optical oscillograph.

10) LO-014 - Wiring change to correct beacon OFF/ON indicator logic.

11) LO-015 - To install KSC furnished blowers to assist in rack cooling.

12) LO-016 - Install 50 amp, 100 mv shunt to monitor solar bus current on a recorder.

13) LO-017 - Remove wire to delete signal ground to PAM discriminator chassis.

14) LO-018 - Replace fuse F1 on power control chassis to correct marginal rating of fuse.

15) LO-023 - Replace HP-524 counter with HP 5245L to provide more reliable command frequency monitoring capabilities.

16) LO-024 - Wiring changes to provide beacon receiver video and encoder outputs to the spare recorder.

17) LO-025 - Add blower to B29 rack and modify B25, B26, B27, B28, B29 and B30 racks to provide additional rack cooling.

18) LO-036 - Change location of digital voltmeter, counter, patch panel, power control chassis and communication panel for acceptable human engineering.

19) LO-037 - Change equipment locations to eliminate cable chaffing.

At the completion of the launch phase of the Pegasus program, the CCU-LC equipment was removed from the blockhouse and stored in Hangar AF.

5. SATCON

The primary purpose of SATCON is to serve as a central point for data and status display, evaluation, and operation control of the Pegasus satellite after launch. It also provides valuable assisttance during Pegasus pre-launch checkout. The ETR and STADAN networks are utilized for the collection of data transmitted via the Pegasus beacon and FM carriers. Display and evaluation of all pertinent information provides a rapid means for data analysis and processing of satellite commands. In addition, SATCON provides MSFC with a central point from which spacecraft data may be disseminated to insure a rapid analysis of the operation status of the spacecraft and collected scientific data.

a. Requirements

A facility was required at KSC to display and evaluate real-time data received from designated tracking locations. This facility, designated as a Satellite Control Center (SATCON), is used to evaluate and to make the appropriate decisions to allow required commands to be transmitted as required. To accomplish this, approximately 15 people were required to analyze data and communicate with the remote telemetry stations.

b. Function

The Satellite Control Center located at KSC provides facilities for the following Pegasus activities:

- Display of spacecraft operational data acquired by telemetry.
- Engineering evaluation of operational data.
- To initiate commands for controlling the Pegasus.

(1) Telemetry Data

Spacecraft telemetry data is supplied to SATCON by the STADAN and ETR data acquisition networks. ETR serves only during the launch and early orbit phase of the mission, while the STADAN network monitors and commands the spacecraft throughout its operational life. Other data inputs are radar tracking information, range time, and MM1 link from Ft. Myers.

Telemetry data supplied to SATCON is classified as spacecraft operational data and scientific data. The operational data is monitored and evaluated by engineering personnel to determine the operating condition of the spacecraft. The scientific data that is analyzed to assess meteoroid flux is of lesser concern to SATCON and is monitored only to the extent that is of significance to spacecraft operation.

Direct voice and data telephone communication lines were provided from the SATCON facility at KSC to the MSFC computation laboratory. All data transmissions arriving at SATCON for spacecraft surveillance and engineering analyses were simultaneously relayed to MSFC.

(a) Operation Data — Operational data is received in analog (PAM) and digital (PCM) form. The digital PCM data is displayed on a 160 bit light display console and simultaneously printed out on a paper tape record in groupings of 20 bits per line. The analog PAM data is recorded in real-time by strip chart pen recorders. These display methods permit rapid evaluation of spacecraft operational condition, performance, and indicated malfunctions which may be corrected by commands.

(b) Scientific Data — Scientific data is included in portions of the operational PCM data received at SATCON. However, all significant scientific data is stored in the Pegasus memory systems. The memory system is commanded to readout and transmit the stored information during favorable acquisition conditions. This data, transmitted by FM carrier, (designated MM1 link) is received from Ft. Myers and recorded on magnetic tape. From these recordings the data is printed out on paper tape record, reduced, and checked for information and deviations that may be corrected by commands.

(c) Commands — Commands are initiated by SATCON to:

- Select and activate modes of spacecraft operation during routine life.
- Take corrective action resulting from a determination and evaluation of a malfunction.
- Test spacecraft systems and subsystems.

Commands initiated by SATCON are relayed via TWX or SCAMA voice link to a STADAN station. The station transmits the required commands to the spacecraft and monitors the resulting MM1 and MM2 data.

(d) Station Coverage Requirements — During the time T-3' through the first two orbits, telemetry acquisition support requirements for the Pegasus was supplied by the following stations:

MANDY	KSC
Fort Myers	STADAN
Antigua Island	ETR
Ascension Island	ETR
Pretoria, South Africa	ETR
Johannesburg, South Africa	STADAN
Woomera, Australia	STADAN
Mojave, California	STADAN
Quito, Ecuador	STADAN
Santiago, Chile	STADAN
Lima, Peru	STADAN

These stations were connected into data acquisition and real-time communications networks as indicated.

MANDY

The Mandy Station at KSC, having been utilized for pre-launch tests of the Pegasus, maintained contact during the launch phase until loss of the spacecraft telemetry signal. The station received and demodulated the MM2 carrier and provided real-time data to display equipment located in the SATCON facility. In addition, magnetic tape data recordings and quick-look reports of spacecraft status and data quality was provided.

Fort Myers

For the first two Pegasus' orbits, Ft. Myers provided backup capability for monitoring the MM1 and MM2 transmissions. Due to command capability, Ft. Myers was considered as a primary station for commanding the Pegasus satellite. In addition, it supplies MM2 demodulated signal in real-time and voice communications to SATCON, and provides quick-look reports of spacecraft status and data quality via TWX

and SCAMA voice communication to SATCON. Ft. Myers provides permanent magnetic tape records of all acquired Pegasus transmissions.

Antigua and Ascension

The Antigua and Ascension stations received the MM2 transmission and provided on-station demodulation and decommutation of the MM2CM and MM2AM data channels. Quick-look reports of spacecraft status and data quality were transmitted via TWX or SCAMA voice communication to SATCON. In addition, magnetic tape recordings of the composite signal were required. Real-time data transmission and voice communications to SATCON were maintained through two orbits.

Johannesburg

Johannesburg is designated as a primary command station for the Pegasus mission. As a result of signal demodulation capability, Johannesburg provides quick-look reports on spacecraft status and data quality via TWX-SCAMA to SATCON. Permanent magnetic tape recordings of all acquired Pegasus transmissions are required. Direct voice communications are maintained between SATCON and the Johannesburg stations for command functions.

Pretoria

For the first two orbits, the Pretoria station received the Pegasus MM2 transmission and transmitted the composite video to SATCON on a real-time basis.

Woomera, Mojave, and Quito, Santiago, and Lima

The Woomera, Mojave, Quito, Santiago and Lima stations complete the STADAN net. They provide Pegasus command capability and receive, demodulate and provide magnetic tape recording of the acquired MM1 and MM2 data signals. In addition, they supply quick-look reports on spacecraft status and data quality via TWX and SCAMA voice communications to SATCON.

(e) Sequence of Events — This section describes chronologically the events and the data monitoring phases from surveillance of pre-launch spacecraft status through launch deployment and two weeks of orbit data acquisition. The periods of interest are designated Phase I, II and III.

Phase I

Pre-launch and launch functions until beginning of deployment involve the time period from approximately T-3 minutes to T + 14', 26". Data monitored at SATCON during pre-launch activities are made available on a back-up basis to the spacecraft controller at the launch facility.

Phase II

Deployment period T + 14', 26" through T + 16', 26". At this time, the data indicating the deployment progress and final deployed status of the detector panels and solar panels was of greatest interest.

Phase III

Orbit Phase T + 16', 26" through the orbital life. The first two orbits after the launch activity were used to evaluate the spacecraft operational status.

c. History

(1) Installation

The SATCON equipment arrived at KSC, Rooms 238 and 240, Hangar AF 18 January 1965.

Installation checkout and sell-off to FHC Quality Assurance per existing FHC documentation was accomplished 13 February 1965.

(2) Modifications and Additions

Since the facility was initially placed in operation, there has been a number of additions and modifications made that greatly enhance the operational capability, reliability, and flexibility of the facility. These modifications are described in Table 18.

6. Operations History

a. Pegasus A

Pegasus A arrived at Cape Kennedy on 29 December 1964. Prior to its arrival, GSE equipment had been assembled and checked out in Hangar D. Preliminary tests were performed to determine the spacecraft's operational condition as received. Fixes and the latest EAI's were incorporated and checked out on the spacecraft. Modified hit amplifiers were installed and adjusted so that a 10-volt delta V at the detector panels produced a hit word.

The remainder of the MTS detector panel diode/resistor was modified during this period. Subsequent testing verified correct installation. However, six detector panels required replacement. One panel was replaced because of a "frog-eye" condition at the terminal board, and the remaining five panels indicated a shorted condition. These panels were returned to SSD Bladensburg for reliability analysis. Several minor repairs were required on the MTS wing limit microswitch and ribbon cable wiring due to damage that possibly occurred during shipment and/or normal deployment testing.

The data readout unit (Dynatronics) was received and installed adjacent to the CCU-M. This unit immediately proved to be a tremendous aid to real-time monitoring of the MTS system and allowed the test data reduction time to be reduced by approximately 90%.

CCU control chassis 300EE10500 S/N 3, containing the latest version of the PCM bi-phase demodulator, was installed in the CCU mobile. The remaining open portion of OP-11 was successfully performed.

The MTS detector matrix and hit amplifier box was replaced with the new configuration, S/N 4, 300ED10042-31, and checked satisfactorily.

Several engineering evaluation tests were performed utilizing the MTS data power distribution unit S/N 1 with the spacecraft system. The test results were unsatisfactory and the S/N 6 DPDU was re-installed on the MTS canister.

Acceptance Test Procedure 501 was successfully completed on 11 January 1965 and Pegasus A was transported to

Hangar AF for mating with the S-IV adapter section. No power was applied to the MTS during this sequence. A noted "failure" of the launch status ready light during Hangar D testing was later determined to be a wiring error in the new CCU control chassis S/N 3.

(1) Launch Complex Area Testing

Acceptance testing of the CCU-LC and interface checks between it and other blockhouse equipment proceeded without difficulty. A data readout unit was installed and interfaced with the CCU-LC receivers, PCM demodulator, and CCU control chassis.

Immediately upon installation of the MTS atop the S-IV adapter, the IU/MTS electrical mate (LOD-MTS-551) procedure was performed, followed by the MTS compatibility verification (LOD-MTS-554) and the MTS electrical systems functional (LOD-MTS-560) tests.

A significant test performed during this period was the r-f compatibility test (LOD-MTS-563) in which all MTS, IU/booster and range stations' receivers and transmitters were in operation for interference checks. Interference was experienced on the MTS command frequency of 148.93 mc, causing difficulty in obtaining commanded responses from the spacecraft. This was found to be due to a range station transmitter which was approximately 70 kc from its assigned frequency. This situation was corrected; no other problems were encountered.

During various testing sequences, it became apparent that certain modifications to the CCU-LC would be desirable. These were incorporated and consisted of the following:

- Filter capacitors (1.0 ufd.) were placed across the battery temperature monitor circuit relay coils and meters to eliminate line noise which caused relay chatter.

- Additional blowers were installed in racks to reduce ambient temperature.

- Interchanged "external" and "off" wiring at switch S1 of the power control chassis to eliminate the "off" position during transition between external and internal modes of MTS operation. This prevents an interruption of system power which causes a data system "lock-up."

- Replace "GSE POWER" toggle switch on power control chassis with a lever-lock type to prevent accidental removal of GSE power from the CCU-LC r-f silence relay string.

- Added jumper between pins 1 and 2 of K13 of the power control chassis to prevent the loss of indicator power to the battery temperature meters and overheat indicators when the r-f silence switch is on.

- Added jumper between D2 and the common terminal of switch S-10 of the power control chassis to allow the "SYSTEMS READY" light to illuminate when the switch is in either the "SOLAR" or "LOAD BUS" positions.

- Range timing marker signals were added to a spare channel of the optical oscillograph.

- Five monitor lines were installed from the CCU-LC to KSC events recorders.

The test procedure, LOD-MTS-572, FHC Support Document for All Systems OAT ... Plugs Out, was performed in conjunction with 7-LSVI-404, All Systems OAT ... Plugs Out, on 26 and 27 January 1965.

During the test sequence, three discrete MTS performance checks were performed. The first, FHC-R-7004, MTS RF Systems Test, established that all MTS systems were operating properly prior to initiating the terminal countdown for simulated launch. At T-5 minutes, the MTS was switched from external to internal power and at T-0 the umbilical was removed, simulating liftoff. At this time, all MTS status monitoring capability transferred to the RF data link only. Oscillograph PAM recordings were made periodically to check power system operation, battery conditions and temperatures. The deployment sequence, as initiated by the I. U. Sequencer, was verified by successful squib firing and operation of the Motor Simulator. At T + 17 minutes, the second MTS performance check, FHC-R-7005, MTS RF Systems Test with Internal Power, was performed. This test verified satisfactory control of the MTS through the RF loop while the umbilical was removed and the system was on internal power. Commands that could normally be expected to be transmitted by ground stations during an orbital pass, such as Data System OFF, Data System ON, Memory Clear, Rapid Attitude OFF, RO Command Reset were sent from the blockhouse with proper MTS response as verified by the PCM readout of the DRU's. At the completion of this test, the umbilical was reconnected.

A third MTS performance test, FHC-R-7006, Post MTS RF System Test, was performed after the umbilical connection was made, primarily to confirm a valid connection and proper system operation.

(2) CCU-LC

All hardline and r-f command control functions of the blockhouse equipment performed perfectly. Previous malfunctions and difficulties as experienced during other tests were corrected. These problems and their solutions were as follows:

PROBLEM	SOLUTION
1) Unable to get MTS to respond to RF Command. Found that the Command Encoder was generating bad Address and Execute "words."	1) Replaced entire set of PC boards so as to have a minimum of down-time. Contact cleaner was applied to all rotary command switches.
2) Difficulty in maintaining the required RF Command Frequency of 148.930 mc with the VHF Signal Generator. Found intermittent switch position in the Electronic Counter Frequency Converter Unit.	2) Replaced Electronic Counter.

PROBLEM

3) Lost output from the PAM Sub-Carrier Discriminator

As a result of experience gained during previous testing, several modifications were incorporated in the CCU-LC Power Control chassis and proved to be an operational improvement during this and subsequent tests.

The test procedure, LOD-MTS-581, FHC Support Document for All Systems Overall Test Plugs In, was performed in conjunction with the KSC procedure, Saturn SA-9, Space Vehicle Systems Test, 7-LSVI-403, on 5 February 1965. MTS performance checks were made during the normal vehicle automatic firing sequence and flight sequence with simulated holddown release, simulated umbilical ejection and simulated lift off. Ordnance checks were performed utilizing MTS squib substitutes P/N 300A67 (supplied by KSC) and the deployment motor circuits were checked with the Motor Simulator P/N 300SEE12500 (FHC furnished).

A complete Pegasus systems performance check, MTS RF Systems Test, FHC-R-7014, was made at T-60 minutes. PAM recordings were made at approximately 2-minute intervals from T-12 minutes to T-0 to monitor the system status during the critical portion of the terminal countdown. MTS power was transferred from external to internal at T-5 minutes. PAM oscillograph recordings were made at approximately 5-minute intervals until T + 22', 20", at which time the MTS System Shutdown Procedure, FHC-R-7013, was performed.

SOLUTION

3) Replaced discriminator.

All MTS systems functioned properly during this test. However, several failures occurred in the CCU-LC rack mounted test equipment during the test, necessitating replacement of the units. Upon completion of all testing and after all power was removed from the MTS and the CCU-LC primary power breakers were placed in the OFF position, smoke was observed emanating from the CCU-LC racks. Investigation revealed that a rack harness wire connected between the -D bus and chassis ground (picked up internally in the PAM sub-carrier discriminator) was completely burned and caused extensive damage to adjacent wires in the harness and terminal distributors. This situation was attributed to a failure in the KSC 28vdc power supply, whereas the +28 volt bus was shorted to the -D bus which was floating at the power supply end, but grounded at the CCU-LC PAM discriminator.

As this failure occurred after all power was removed from the MTS, no damage was inflicted upon the spacecraft. This was verified, after CCU-LC repairs were made, by a complete systems test of the MTS. The CCU-LC was functionally checked, prior to connection to the MTS, utilizing OP-516. Then upon mating of the CCU-LC and the MTS, the system was checked as per LOD-MTS-554, MTS Compatibility Verification Procedure.

(3) Power Subsystem

The MTS power subsystem functions performed normally during these tests, as observed on the CCU-LC power control panel meters and the PAM oscillograph recordings. Due to a failure of the CCU-LC subcarrier discriminator, the PAM oscillograph recordings obtained at the SATCON system were utilized for true records. Voltages, currents, and temperatures were normal during the test.

NOTE

Test batteries were installed on the MTS for this test. The pertinent power subsystem readings obtained during the test are listed below:

Function	Reading
Solar Bus Voltage	37.5 volts
Battery A Current	-500 MA
Battery B Current	-220 MA
Battery A Voltage	30.75 volts
Battery B Voltage	30.75 volts
Power Subsystem Current	1.45 amp
Power Subsystem Voltage	30.75 volts
Battery A Case Temperature	23.00°C
Battery B Case Temperature	23.00°C
Battery A Internal Temperature	22.50°C
Battery B Internal Temperature	21.50°C
Battery Controller Temperature	28.00°C

(4) Data Subsystem

The performance of the data subsystem monitored by means of oscillograph recordings and the DRU printouts, indicated that all system functions were operating correctly. Channel 53 of the PAM oscillograph recordings indicated that the FM Transmitter No. 2 temperature thermister or wiring was open. Post test investigation revealed that the P8B feedthrough connector pins were not making contact due to excessive flux residue. The connector was cleaned and re-test showed that channel 53 was operating properly.

(5) Communications Subsystem

Each component of the MTS communications subsystem functioned properly during test. A modified Communications Process Unit was installed for this test to eliminate the possibility of a ground station tracking problem. Ground station tracking receivers were operated in the phase-lock mode, the MTS beacons being phase modulated, and a carrier deviation in excess of 90° causes the receivers to lock on the signal 180° out of phase. MANDY station measurements and observations of SPU, S/N 3, revealed a modulation index of 2.0 radians or a phase angle of approximately 114°. Modulation index is 1.34 radians for the desired phase angle of 76°. Installation of SPU, S/N 4, produced a modulation index of 9.95 radians or a phase angle of approximately 54°.

The Complex 37 pad/blockhouse parasitic antenna installation was not utilized for this test as they were deemed unnecessary during the previous test, LOD-MTS-572, All Systems Overall Test Plugs Out.

(6) Deployment Simulation

Successful demonstration of the MTS deployment sequence was accomplished during the simulated launch. Ordnance checks were performed utilizing MTS squib substitutes P/N 300A67 (supplied by KSC), and interconnecting cables, P/N 302W27 (supplied by KSC), connected as per FHC-N-7014. The deployment motor circuits were checked with the motor simulator, P/N 300SEE12500 (FHC furnished), connected as per FHC-P-7016. Deployment was initiated at T ∠ 14', 34" by the I. U. sequencer.

(7) Launch Summary

During the Saturn SA-9 launch countdown sequence February 15th and 16th, four complete MTS performance checks were made in addition to continuous monitoring of the spacecraft status. Pegasus testing began on L minus one day at T-935 with the MTS Pre-Closeout Test, FHC-R-7007. This was after the MTS flight batteries were installed and prior to installation of the MTS thermal blanket and louver assemblies. Upon completion of the installation of these assemblies, another complete systems check, MTS RF Post-Closeout Test, FHC-R-7003, was performed. This test included hit simulation checks of each wing detector panel by the panel relay disconnect-connect method. The launch countdown clock was stopped at T-605' and a built-in nine hour and twenty-five minute hold initiated for crew rest purposes.

MTS launch preparation resumed on launch day at T-495' with MTS-RF Functional Test, FHC-R-7009. The final complete performance check of the Pegasus spacecraft prior to launch, MTS RF Systems Test, FHC-R-7010, was initiated at T-145'. Once again, a comprehensive hit simulation check of each detector panel was performed. At T-12' the MTS was verified to be in a launch status, and at T-6' the red line parameters were verified to be in a GO condition. The MTS was placed on internal battery power at T-5' and the batteries condition monitored until the umbilical ejection at launch. All systems operated normally during the countdown and the launch.

With the launch of Pegasus A, the test team personnel supported SATCON in the monitoring of Pegasus A. Also documentation used for Pegasus A was reviewed, corrected and updated for Pegasus B testing. Ground support equipment was reworked to eliminate problem areas that were experienced during testing of Pegasus A. Hangar D spacecraft testing area was refurbished and the wing deployment fixture inspected and made ready for the arrival of Pegasus B.

Support was given to Engineering in the testing of Pegasus B in preparation of shipment to KSC. Schedules were prepared and released to cover activities of Pegasus B at Cape Kennedy from arrival to launch.

b. Pegasus B

Pegasus B arrived at Cape Kennedy on 15 April 1965 from the GE plant at Valley Forge, Pennsylvania, where it had undergone extensive vibration and vacuum testing.

Upon arrival at Cape Kennedy, Pegasus B underwent a short rework cycle. The test procedures, ATP-MTS-501, MTS Systems Test; DTP-MTS-206, Fuse Blowout Test, and OP-MTS-36, Solar Panel Module Short Circuit Current Test, were

performed in the KSC Hangar D test area during the 16th to the 23rd of April, 1965.

ATP-MTS-501 is essentially two complete MTS systems tests, one at nominal voltage and one at low voltage. With the initial application of power to the MTS, a quick check is made to establish that all systems are operating properly prior to the start of more detailed testing and data analysis. The only major problem encountered was the failure of the number 2 beacon transmitter which broke into parasitic oscillations when a Data System On Command was sent from the CCU-M command encoder. Several minor problems, such as blown fuses, occurred and were corrected prior to testing the applicable subsystems. All test objectives were met and the MTS performance was normal.

The Fuse Blowout Test, DTP-MTS-206, verified that the MTS detector panel circuits would perform as designed should the situation occur which would require selected detector panels to be permanently disconnected while in orbit.

The Solar Panel Module Short Circuit Current Test, OP-MTS-36, verified that the solar panels were not damaged in-transit.

(1) Power Subsystem

All MTS power subsystems functions performed normally during tests. In addition, a current load analysis was performed to confirm that the power system was capable of maintaining the batteries with the present spacecraft flight configuration. Initially, all systems were off and were commanded on, one at a time. The readings obtained are listed in Table 18.

The solar panels were not damaged during transit; the Solar Panel Module Short Circuit Current Test, OP-MTS-36, was performed. This test utilized a calibrated light source to illuminate each solar panel module, one at a time, and measuring the resultant current. Figure 140 and 141 illustrate the module location, module serial number, and current output.

(2) Communications Subsystem

During the performance of the MTS Initial Operations Test portion of ATP-MTS-501, a repeatable phenomena occurred that indicated apparent failure of beacon transmitter number two. Each time a Data System On Command signal was sent from the CCU-M command encoder, the beacon output signal would disappear from the telemetry receiver. A voltage check of the relay logic employed to turn on the beacon transmitters revealed that the relays were energized and that 28 volts was being applied to the transmitter. Replacement of the beacon unit produced normal system operation. Apparently, the power transient associated with the turning on of the data subsystem caused the beacon transmitter to break into parasitic oscillations. Also a frequency check revealed that the beacon output frequency was 136.565 mcs instead of 136.890 mcs. No further problems were encountered with the communications subsystem. Each command receiver and its associated decoder were checked, as was each beacon and FM transmitter. Signal levels remained normal throughout the tests, on both nominal and low MTS bus voltages.

TABLE 18. POWER SUBSYSTEM TEST RESULTS

MTS Status	Load Bus Voltage	Load Bus Current
External Solar Power ON	28	0.240 amps
Load Bus Adjusted for Voltage	±1.30	0.250 amps
Main Regulator Utilized	32	0.260 amps
Beacon ON	28	0.640 amps
	30	0.670 amps
	32	0.700 amps
Data System ON	28	1.20 amps
All Systems Reset	30	1.30 amps
	32	1.42 amps
Attitude System ON	28	1.22 amps
	30	1.33 amps
	32	1.45 amps
Temperature System ON	28	1.23 amps
	30	1.34 amps
	32	1.45 amps
Rapid Attitude ON	28	1.48 amps
	30	1.59 amps
	32	1.70 amps
FM Transmitter ON	28	1.80 amps
	30	1.93 amps
	32	2.05 amps

+Y

71 25 ma	154 33 ma	406 30 ma	162 36 ma	91 36 ma	88 37 ma
106 26 ma	202 30 ma	4--* 28 ma	222 35 ma	128 36 ma	342 38 ma
324 24 ma	150 38 ma	183 40 ma	178 40 ma	141 36 ma	165 35 ma
102 32 ma	147 32 ma	133 29 ma	130 28 ma	96 36 ma	287 31 ma
4 28 ma	328 32 ma	194 31 ma	62 31 ma	128 35 ma	341 38 ma

+Z

-Y

118 29 ma	223 32 ma	115 38 ma	34 36 ma	228 40 ma	35 32 ma
13 30 ma	289 34 ma	90 27 ma	77 36 ma	285 31 ma	89 31 ma
75 35 ma	148 36 ma	---* 38 ma	1--* 34 ma	225 37 ma	99 30 ma
110 33 ma	87 34 ma	29 37 ma	271 36 ma	25 34 ma	300 38 ma
84 28 ma	76 36 ma	98 37 ma	80 36 ma	93 38 ma	92 38 ma

-Z

*Serial Number Unreadable

Figure 140. Forward Solar Panel Current Output

+Z

174 38 MA	404 38 MA	124 28 MA
134 40	408 37 MA	191 34 MA
112 38 MA	177 37 MA	123 30 MA
176 36 MA	163 36 MA	83 30 MA
436 30 MA	429 30 MA	121 36 MA
437 32 MA	388 26 MA	107 30 MA
438 42 MA	172 36 MA	198 34 MA
439 40 MA	382 34 MA	343 30 MA
393 36 MA	3-- * 36 MA	146 38 MA
135 30 MA	156 37 MA	384 30 MA

-Z

426 35 MA	153 37 MA	272 34 MA
432	311	421
433 38 MA	264 34 MA	250 31 MA
434 36 MA	363 37 MA	402 34 MA
435 33 MA	262 37 MA	362 30 MA
199 38 MA	312 30 MA	288 32 MA
227 40 MA	237 26 MA	231 30 MA
119 28 MA	260 27 MA	373 32 MA
85 26 MA	15 36 MA	175 30 MA
22 25 MA	256 37 MA	305 32 MA

* Serial Number Unreadable

Figure 141. U/P Lateral Solar Panel Current Output

(3) Data Subsystem

Initial checks of the data subsystem were satisfactory. There was one known discrepancy, inoperative STL experiment due to a blow fuse in the data power distributor unit. This fuse was known to have blown at AMD Hagerstown during the ATP-MTS-201 test and is located in the ∠22 volt power line to the STL. Rated at 100 ma., this fuse is well above the normal operating range of the unit, but because it was felt that an initial power on current surge exceeded this level, the rating was increased to 250 ma.

The STL experiment now functioned properly, responding to a radiation stimulus, and produced its correct data readout.

Prior to conducting delta V tests on the detector panels, the current recharge amplifiers were adjusted for 3 volt sensitivity and the hit amplifiers were adjusted for 4 volt sensitivity to insure that a good pulse verify readout would be obtained.

Occasionally, a "trash" word appears in the memory data. To date, efforts to pin-point the origin have not been successful. The "trash" word appears on the PCM data, but does not print out on the CCU-M data readout unit because it contains no "word identification."

All six earth aspect sensors were replaced and functionally tested to ensure proper operation. The new units have a higher differential (requirement derived from Pegasus A orbital data) and had to have a very hot source (a cigarette lighter was utilized) to trigger them.

(4) Deployment

Three deployment sequences were successfully completed with live pyrotechnics utilized during the last test. The first deployment utilized vise grip devices and no motors; the second, vise grip devices and both motors operating. The third employment was a normal sequence with live ordnance being fired and both motors operating. One of the deployment microswitches on the ∠Z lateral solar panel was determined to be installed incorrectly, as indicated by the CCU-M readout on the I. U. simulator chassis. This switch problem had not been discovered previously because it is an integral part of a pyrotechnic device and may be functionally checked only during a live ordnance test. The switch was reinstalled correctly and tested ok. No other mechanical or electrical problems were encountered.

(5) Fuse Blowout Test

Performance of the Fuse Blowout Test, DTP-MTS-206, determined the design validity of the detector fuse and fuse command system modifications. Six panels on each wing were selected for test, two each of A, B, and C thicknesses. Simulated hits were sent to each group with the detector fuse ON and OFF to obtain pulse verify data prior to and after the fuses were blown. This permitted comparison of the pulse verify data with a full panel group and with one less detector. This pulse verify data was obtained for, and is being utilized by SATCON, to determine the number of detector panels of a group that remain operational after the detector fuse voltage has been applied to clear a shorted detector. The pulse

verify information replaces the test generator operation that utilized on Pegasus A to determine the open panel status. The pulse verify data obtained is listed in Tables 20 and 21. In addition, the line resistance of all panel groups was obtained as well as the voltage present on each panel. The resistance data is given in Table 22.

Upon completion of this test, the blown fuse modules were replaced and electrically checked.

Table 23 presents the pulse verify data obtained from two representative panel groups (of 8 panels each) in four fuse configurations, i.e., all fuses good, one blown fuse, two blown fuses, and three blown fuses.

(6) Delta V Tests

Utilizing the Plasma Simulator test set, delta V hit simulation tests were performed on each of the 416 detector panels. These tests were used to confirm the spacecraft's ability to record valid hits and to compile reference data for analysis. The Plasma Simulator test set was hand-carried and connected to each panel in turn with a pair of short test leads to the capacitor terminals. Each panel was tested at three delta V levels of 4, 12, and as near 40 volts as possible, depending upon the condition of the test tool battery. For those panels which have been de-biased for radiation detection purposed (007, 052, and 061 group on the + Y wing), a 4.5 volt battery was placed in series with the negative lead of the plasma simulator and the ground side of the detector panel under test. In this situation, only the 4 volt delta V hit data is obtained. Hit data was printed out on the DRU for six consecutive hits at each voltage level on every panel and is examined for:

- Correct panel identification
- Correct wing location and panel thickness
- Pulse verify decimal value

In addition, and oscilloscope photograph of the delta V pulse trailing edge was obtained for each panel group at each delta V level tested.

(7) Launch Summary

Pegasus B was transported to Hangar AF and mated with the Saturn Service Module Adapter on April 27. On April 28, the spacecraft was taken to Launch Complex 37 for mating with the Saturn Vehicle. During the mechanical mating process, severe local thunder storm activity allowed a significant amount of water to enter the SMA. A quantity of water penetrated the Pegasus protective cover through the area around the star fitting and forward solar panel hinge joint, flowed downward through the center section of the spacecraft, and onto the area around the top of the electronics canister. In addition, some water ran down through the detector panel area of the first several inboard frames. No water was observed to reach any portion of the canister harness, nor any plugs internal or external to the canister except the plug to the shaft encoder. Upon completion of a clean-up and drying process and a visual inspection, resistance measurements were obtained for the affected detector panels to verify that they were not damaged and

TABLE 19. SATCON MODIFICATIONS

Modified Item	Reason
Bi-Phase Demodulator	The input circuitry of the Fairchild bi-phase demodulator was redesigned to improve its operational characteristics and a Dynatronics Model BPC-11 bi-phase demodulator was added as a redundant unit to improve overall reliability.
Magnetic Tape Recording	An additional magnetic tape recorder and switching panel was added to provide greater operational flexibility in continuous recording and tape dubbing.
28V Power Supply	Replaced existing 28v power supply with higher capacity type to facilitate use of Directors PCM Display Panel.
Huntsville Data Line	Replaced initial Huntsville data line matching network with an amplifier circuit compatible with data line characteristics. Also added a front panel data switch for greater ease in operation.
ETR R-F Capability	An additional r-f link for ETR data was supplied to increase reliability. This necessitated changes in input switching circuit.
Directors Control Console	The directors table was replaced with an operator's type console containing all communication links and directors' PCM Spacecraft Status Display.
PAM Chart Display	The tables that were initially used to display PAM data were replaced with Brush Recorder Chart tables with take-up reels to facilitate data handling.
Rixon Console Installation	Rixon equipment now installed and checked out provided a means of recording MM1 link information directly from Ft. Myers.

TABLE 20. + Y WING PULSE VERIFY INFORMATION

Panel No.	Commanded Hit No. 1	Hit No. 2	Hit No. 3	Hit No. 4	Hit No. 5	Hit No. 6	ATP - 501 40V. Commanded Hit	ATP - 501 Fuse Relay On	ATP - 501 Low Voltage Fuse Relay On	DTP - 206 Fuses Good	DTP - 206 Fuses Good Fuse Relay On	DTP - 206 Fuses Blown	DTP - 206 Fuses Blown Fuse Relay On
103	51	44	42	40	43	114	52	—	44	50		26	
105	42	42	45	43	51	49	43	—	33				
106	41	47	40	43	63	43	41	21	33	43	25	22	9
007	40	39	39	49	36	44	44	16	28				
111	104	105	102	103	103	110	102	—	107	105	77	93	70
112	127	96	96	96	116	97	99	83	111	101	95	85	71
013	67	64	81	74	70	66	65	—	56				
114	127	127	127	127	127	127	127	127	104				
015	127	127	127	127	127	127	127	—	106				
016	127	127	127	127	127	127	96	54	72				
121	127	127	127	126	127	127	126	—	127				
122	127	120	127	125	108	120	110	127	100				
023	110	105	123	111	105	110	110	79	83				
124	125	126	125	124	126	127	124	127	98				
025	127	127	127	127	127	127	127	77	106				
026	127	127	127	127	127	127	127	70	127	127	85	118	64
130	127	127	127	127	127	127	127	—	127				
031	127	127	127	127	127	127	127	94	126				
032	123	121	116	118	117	117	126	—	96	121	73	108	60
034	127	127	127	127	127	127	127	75	127				
141	127	127	127	127	127	127	127	86	122				
142	127	127	127	127	127	127	127	—	127				
043	127	127	127	127	127	127	127	88	109				
144	127	127	127	127	127	127	127	127	127				
045	127	127	127	127	127	90	127	77	105				
046	127	127	127	127	127	127	127	89	109				
150	127	127	127	127	127	127	127	127	127				
051	88	87	88	87	86	106	86	48	118				
052	67	66	63	64	64	61	64	34	46				
054	125	127	127	127	127	127	127	75	103				
161	117	120	119	127	118	127	127	74	127				
061	51	51	50	50	53	69	51	24	49				

TABLE 21. -Y WING PULSE VERIFY INFORMATION

Panel No.	Commanded Hit No. 1	Hit No. 2	Hit No. 3	Hit No. 4	Hit No. 5	Hit No. 6	ATP-501 40V. Commanded Hit	ATP-501 Fuse Relay On	ATP -501 Low Voltage Fuse Relay On	DTP-206 Fuses Good	DTP-206 Fuses Good Fuse Relay On	DTP-206 Fuses Blown	DTP-206 Fuses Blown Fuse Relay On
103	22	42	44	45	42	43	42	21	30				
105	45	47	45	48	50	44	45	22	36	47	21	27	10
106	44		46					22	41				
007	47	49	49	48	47	45	47	22		47	23	28	15
111	100		103			108		120	90	100	95	97	77
112	108	112	103	103	108	104	97	106	90	104	90	98	67
013	-	-	-	-	-	-	-	-	-				
114	127	127	127	127	127	127	127	112	112				
015	127	127	127	127	127	127	127		107				
016	127	127	127	127	127	127	127	81	102				
121	126	127	127	125	124	125	127	73	160				
122	107	104	106	106	105	106	106		83				
023	127	127	127	127	122	127	127	75	102				
124	127	127	127	127	125	127	127	73	98				
025	170	109	109	108	106	111	115	67	85				
026	127	127	127	127	127	127	127	84	104				
130	127	127	127	127	127	127	127	92	127				
031	127	127	127	127	127	127	127	127	124				
032	127	127	127	127	127	127	126	122	116				
034	125	127	127	127	124	124	127	127	117				
141	127	127	127	127	127	127	127	74	104				
142	127	127	127	127	127	127	127	75	110				
043	127	127	127	127	127	127	127	76	105				
144	124	127	124	127	126	127	127	75	102				
045	127	127	127	127	127	127	127	80	108				
046	127	127	127	127	127	127	127	76	102				
150	127	127	127	127	127	127	127	75	102				
051	106	104	105	104	104	105	105	58	82	107		90	50
052	106	106	107	108	106	96	106	60	84	106	63	62	52
054	116	117	116	120	117	117	109	67	98				
160	124	121	122	124	121	125	125	72	96				
061	-	-	-	-	-	-	-	-	-				

TABLE 22. WING RESISTANCE DATA

+ Y Wing		- Y Wing	
Panel	Resistance	Panel	Resistance
103	47.0 ohms	103	45.2
105	46.8	105	42.3
106	47.2	106	45.6
111	45.4	007	42.3
112	46.0	111	42.8
114	48.8	112	43.4
015	46.8	114	45.0
016	46.4	015	46.2
121	46.8	016	44.7
122	47.0	121	45.0
023	47.6	122	44.6
124	46.4	023	44.5
025	47.0	124	44.3
026	44.5	025	43.2
130	47.0	026	44.0
031	46.6	130	42.1
032	45.6	031	43.7
034	46.4	032	44.2
141	46.2	034	43.6
142	44.7	141	42.7
043	44.9	142	42.7
144	45.6	043	44.0
045	44.9	144	42.6
046	44.7	045	42.5
150	44.9	046	43.3
051	43.5	150	42.8
054	47.4	051	42.3
160	45.0	052	43.5
		054	42.7
		160	42.8

TABLE 23. PULSE VERIFY DATA OBTAINED USING VARIOUS FUSE CONDITIONS

Hit No.	31 v Bias	40 v Bias
	Pulse Verify Information — All fuses Good in a group of 8 Panels:	
	+ Y Wing -Panel 016	
1	108	127
2	90	127
3	95	127
4	87	127
5	90	127
6	85	127
	+ Y Wing-Panel 121	
1	79	127
2	111	127
3	91	127
4	99	125
5	76	125
6	80	125
	One Blown Fuse in a group of 8 panels:	
	+ Y Wing-Panel 016	
1	92	122
2	64	126
3	76	122
4	82	127
5	78	121
6	85	123
	+ Y Wing-Panel 121	
1	84	113
2	66	114
3	66	117
4	116	115
5	125	116
6	72	127
	Two Blown Fuses in a group of 8 panels:	
	+ Y Wing-Panel 016	
1	68	110
2	68	127
3	58	126
4	68	127
5	68	110
6	72	111

TABLE 23. PULSE VERIFY DATA OBTAINED USING VARIOUS FUSE CONDITIONS (Continued)

Hit No.	31 v Bias	40 v Bias
	+ Y Wing-Panel 121	
1	57	103
2	66	104
3	92	102
4	85	106
5	88	105
6	65	108
	Three Blown fuses in a Group of 8 panels: + Y Wing-Panel 016	
1	56	100
2	52	103
3	107	101
4	60	97
5	54	101
6	54	127
	+ Y Wing-Panel 121	
1	79	91
2	79	90
3	60	91
4	94	93
5	65	91
6	56	91

the deployment motor gear box was Nitrogen purged as a precautionary measure. Electrical functional tests revealed that the shaft encoder readout via the PCM telemetry was incorrect. Replacement of the unit at this date was impractical, so at the direction of MSFC, the encoder was disabled and electrically disconnected. No other problems were encountered with the spacecraft due to the water exposure.

The test procedures, LOD-MTS-554 B, MTS compatibility verification Test & LOS-MTS-560 B, MTS Electrical Systems Functional Test, were performed on 30 April and served to exercise electrical and r-f control of the MTS to determine compatibility between it, the CCU-LC ground support equipment, the launch vehicle and Complex 37 facility interfaces, and insured proper operation of the MTS systems.

Procedure number LOD-MTS-572B, FHC Support Document for Plug Drop Test 7-LSVI-504, was successfully performed on 3 May 1965. This test demonstrated proper operation of Pegasus B during a simulated launch of the Saturn SA-8 vehicle. Ordnance installed in test chambers, was connected to the vehicle wiring and the FHC Deployment Motor Simulator test set was connected to the deployment junction box to simulate the deployment sequence.

Three MTS performance checks were made during this test. The first, FHC-R-7004, MTS RF Systems Test, confirmed that the MTS systems were functioning properly prior to commitment to the terminal countdown. Upon ejection of the umbilical at T-0, Test number FHC-R-7005, MTS RF Systems Test with Internal Power, was performed to verify satisfactory control of the MTS through the RF loop while the umbilical was disconnected and the systems were on internal battery power. Upon re-insertion of the umbilical, test number FHC-R-7006, Post MTS RF Systems Test was run to confirm a valid umbilical installation.

Test procedure LOD-MTS-581B, FHC Support Document for space vehicle systems flight readiness test, was performed in conjunction with the KSC procedure, Saturn SA-8 Space Vehicle Systems Flight Readiness test No. 7-LSVI-503 on 14 May 1965. Pegasus B performance checks were made during a normal Saturn vehicle automatic firing sequence, including simulated hold-down release, simulated umbilical ejection and simulated liftoff. Ordnance checks were performed utilizing MTS Squib Substitutes P/N 300A67 (KSC furnished) and the FHC Motor Simulator P/N 300SEE12500 connected to the MTS deployment junction box.

A complete system check, FHC-R-7004, MTS RF Systems Test, was performed at T-62 minutes to verify proper operation of the spacecraft and at T-12 minutes the MTS was verified to be in a Launch Status configuration less internal power. The spacecraft was transferred from external power to internal battery power at T-6 and PAM oscillograph recordings were obtained at approximately 2 minute intervals to monitor the power systems operation. The simulated Launch occurred at T-0 and the T + 14'35", the Proper operation of the Deployment Motor Simulator was confirmed.

The Countdown Demonstration Procedure, LOD-MTS-590 B, was performed on the 19th and 20th of May in conjunction with the KSC procedure, Saturn SA-8, Countdown Demonstration Test, 7-LSVI-501. This test was a simulation of all Pegasus B functions normally required to establish flight readiness for Launch minus one day and Launch Day countdown except that ordnance was mechanically installed but not electrically connected. The ordnance was not removed upon completion of this test, requiring connection only during the L-1 day of the actual Launch countdown.

A complete MTS performance check, MTS Pre-closeout Test, FHC-R-7007, was performed prior to installation of the MTS Thermal Blanket and Louver assembly and the MTS ordnance at T-860 minutes. Upon completion of these installations, the MTS post-closeout test, FHC-R-7008, was performed. These tests verified that all MTS systems were functioning normally. At this time, the spacecraft area inside the Launch Vehicle was cleared of all tools and equipment not required for the remainder of the countdown, the Blockhouse Countdown clock was stopped, with testing to resume the following day.

The countdown was resumed at T-540 minutes and Pegasus B testing commenced with MTS RF Functional Test, FHC-R-7009, at T-470 minutes. This test reconfirmed satisfactory operation of the MTS prior to final closeout of the MTS compartment area and removal of the service tower. At T-190 minutes, the final comprehensive system test prior to the simulated Launch was conducted, FHC-R-7010, MTS RF Systems Test, which reconfirmed correct MTS operation. The MTS systems remained in operation during the remainder of the Saturn Countdown.

All MTS tests performed were essentially identical, i.e., they performed a complete systems functional check of the Pegasus B spacecraft. In addition, tests 7008 and 7010 included a comprehensive check of each detector panel and associated circuits by the panel disconnect-connect hit simulation method. All MTS systems functioned properly during this series of tests.

FHC Support Document for Launch Countdown, LOD-MTS-596 B was performed on the 23, 24 and 25th of May 1965 in conjunction with the Saturn I (SA-8) Countdown Manual, Test Number 7-LSVI-500. Four complete MTS performance checks were made in addition to continuous monitoring of the spacecraft status. Pegasus B testing began on L minus one day at T-935' with the MTS Pre-closeout Test, FHC-R-7007. The flight batteries were installed prior to this test. Upon completion of the MTS Thermal Blanker and Louver assemblies, MTS RF Post-Closeout Test, FHC-R-7008, was performed. This test included hit simulation checks of each wing detector panel by the panel relay disconnect-connect method. The Launch countdown clock was stopped at T-605' with testing to resume the following day.

Pegasus B Launch preparations resumed on Launch Day at T-495' with MTS RF Functional Test, FHC-R-7009. The final complete performance check of the Pegasus B spacecraft prior to Launch, MTS RF Systems Test, FHC-

R-7010, was initiated at T-215'. This test included a comprehensive hit simulation check of each detector panel. At T-12' the spacecraft was verified to be in a Launch Status minus internal power. At T-6' the MTS was placed on Internal Battery power with the Red line parameters in a GO condition. The spacecraft systems were monitored until the umbilical ejection at launch. All systems performed perfectly during the countdown and the launch.

After the launch of Pegasus B from Cape Kennedy an extensive effort was directed toward the updating of all ground support equipment to comply with the latest engineering so as to make it compatible with the Pegasus C Spacecraft. Documentation was also changed during this period of time to reflect new methods of testing and incorporate tests that were a direct result of a spacecraft configuration change. Testing support was supplied to engineering in the checkout of Pegasus C spacecraft before delivery to Cape Kennedy.

c. Pegasus C

Pegasus C arrived at Cape Kennedy 22 June 1965. After the installation of the spacecraft in the Wing Deployment fixture in Hangar D, preliminary testing was performed and certain trouble areas were investigated and eliminated. The spacecraft was reworked to the latest configuration before ATP-MTS-501, MTS systems test was performed.

The test procedure, ATP-MTS-501, MTS Systems Test, was performed in the KSC Hangar D test area during the period from the 25th to the 29th of June 1965.

Immediately upon arrival and installation of the spacecraft in the Wing Deployment Fixture, the CCU-M was electrically connected and power was applied to the spacecraft for a quick check of all systems. This verified that no problems developed during transit and that all systems were operating properly prior to the start of more detailed testing and data analysis.

A successful deployment utilizing live pyrotechnics was conducted on 25 June.

The Pegasus VHF antennas, attached to the Saturn Service Module Adapter in Hangar AF, were checked for VSWR readings on 24 June. However, the measurements were lighter than specifications allowed, so the antennas were removed from contacting surface cleaning. Upon re-installation, the VSWR readings showed marked improvement and were down to acceptable levels.

Several modified/updated subsystem boxes were changed and tested prior to the official performance of ATP-MTS-501. Other than minor problems, such as cable connectors requiring cleaning and a GSE P.C. board failure, the systems test progressed smoothly.

(1) Deployment

Rigging of the Zero-G counter balance devices began immediately upon installation of the spacecraft in the Wing Deployment Fixture. Two practice deployments were made to check the rigging prior to the official deployment sequence. The first deployment was made with both motors off. During

the initial portion of the sequence, a top solar panel protective covering hung-up on a detector panel frame momentarily. However, no damage was done and the wings continued to unfold to full deployment. The second deployment was to have been made utilizing one motor. At approximately one fourth of the deployment, one of the WDF wing support "hangars" jumped its track, preventing one wing from traveling further. Power was immediately removed from the deployment motor to prevent excessive torque from building up and the deployment sequence was terminated.

Live pyrotechnics were installed and a successful deployment sequence was completed as per ATP-MTS-501 on 25 June. This concluded deployment testing. The initial WDF type problems did not occur during live deployment test.

Redundant wiring in the pyrotechnic firing circuit was added to the spacecraft after completion of the test to conform to ordnance requirements.

(2) Antenna VSWR Tests

Voltage standing wave ratio measurements were obtained for antenna serial numbers 101 and 107, installed on the Saturn service module adapter in Hangar AF, on the 24th of June. The measurements obtained exceeded specifications so the antennas were removed and all bare metal surfaces were cleaned. The antennas were installed and re-test on 25 June showed that the VSWR measurements were within acceptable limits. The VSWR readings obtained before and after the cleaning process were:

Nominal Frequency	Pre-cleaning VSWR		Post-cleaning VSWR	
	S/N 101	S/N 107	S/N 101	S/N 107
136.5 (Telemetry)	1:1.58	1:1.8	1:1.41	1:1.68
149 (Command)	1:1.38	1:1.35	1:1.29	1:1.30

(3) Communication Subsystem

Pegasus C arrived at the KSC with known discrepancies in the communications subsystem. Beacon No. 1 had low RF output at low bus voltage (24 volts). Beacon No. 2 had no output, due possibly to the unit breaking into parasitic oscillations. Both beacon transmitters and the beacon switching unit (serial no. 9) were removed and beacon serial numbers 12 and 13 and switching unit number 8 were installed. The beacon antenna cables were checked for optimum tuned length but did not require replacement. All tests of the subsystem now were acceptable.

(4) Data Subsystem

Prior to the official performance of ATP-MTS-501 updated and/or modified units were installed on the MTS to bring the system up to the latest configuration. Work select box S/N 002 was removed and S/N 004 was installed. The CRA unit S/N 7 was removed and S/N 4 was installed. Initial checks of the CRA lines with PAM recordings indicated that the analog valves were too low and the CRA's required adjustment.

The hit amplifiers were also adjusted, i.e., the Schmitt Trigger was set for

3 volts and the delta V for 4 volts. Hit amplifier unit S/N 7 was installed temporarily and adjusted with the system so that it can be utilized as a pre-adjusted spare unit.

The Data Power Distributor Unit, S/N 9 was removed and transistors Q9 and Q10 were replaced due to their causing a 4 volt drop in the temperature subsystem switch voltage. With 31.1 volts on the MTS Bus, PAM channel 29 indicated 27.7 volts at the switch. With the bus voltage at 24, the PAM record showed 21.7 volts at the switch. Reinstallation of the DPDU and subsequent rechecks all data subsystem functions, as per the procedure, now produced normal results.

The STL electron spectrometer was installed but tests utilizing the 1 microcuric radiation source produced no PCM probe values and the PAM channels assigned to monitor the STL unit temperatures indicated open circuits. Voltage measurements made throughout the MTS cable harnesses associated with the STL experiment revealed all to be normal. Finally, all the cable connectors at the STL boxes were removed and the pins thoroughly cleaned. Reassembly of the cables revealed the system now functioning normally.

An additional test, as requested by the FHC Electronic Development Group and STL, was conducted wherein the sensor half of the STL experiment was tested for light leaks.

This was accomplished by observing the ambient probe values on the PCM Data Readout Unit for any increase in value while illuminating the external housing of the unit with a 250 watt spotlamp. Results of this test are as follows:

Probe	Decimal Value	Stimulus
2	152	Radiation source installed
4	144	
2	4	Radiation source removed
4	14	
2	4	Spotlamp at 12 o'clock and 45° from center-line
4	15	
2	4	Spotlamp at 12 o'clock and 45°
4	8	
2	4	Spotlamp at 8 o'clock and 45°
4	15	
2	4	Spotlamp at vertical and perpendicular to face of sensor
4	17	

The complete series of tests listed gave a comprehensive functional check of the spacecraft to verify operational validity and calibration of all systems. No problems were evident with any of the MTS systems.

At T-30, all MTS systems were preset for launch configuration. The configuration was verified by PCM data displayed on the DRU.

From T-12 to T + 3 PAM recordings were taken every two minutes to check systems operations. At T-6, the spacecraft was transferred to internal power. Count was continued to T + 3 at which time the spacecraft was transferred back to external power and at which time MTS systems were shut down in a timed sequence by the Launch Vehicle Test conductor to check for any r-f interference between Saturn vehicle systems. No problems were found.

On 28 July 1965, LOD-MTS-596 B, Launch Countdown for Pegasus C was begun in support of Volume 2 of KSC Saturn 1 Countdown Manual for SA-10, Test number 7-LSVI-600.

Test procedure LOD-MTS-596 B, is exact in content to that of LOD-MTS-590 B in tests performed. A timely seven hour built-in-hold began at T-605. The count for MTS systems was picked up again at T-565, at 2200 on 29 July 1965. No MTS problems were encountered during any testing with the spacecraft of GSE.

Terminal count was conducted and the spacecraft was launched at 0800 on 30 July 1965. All systems performed perfectly during final countdown and through the first few minutes of launch as long as the spacecraft was within range of the blockhouse equipment. All test objectives and flight criteria were met and a very successful launch operation was experienced.

One-solar sensor (A-45, serial number 132) produced no output when illuminated. This was replaced with serial number 134 and tested ok.

Delta V testing at 4 volts was successfully conducted on all detector panels. In addition, a series of selected panels were tested at 4, 7, 12, 20 and 36 volts to obtain pulse verify data as requested by FHC Reliability. Pulse verify data as obtained during ATP-MTS-501 is listed in the Appendix.

One minor failure occurred in the CCU-M command encoder which marred the otherwise perfect operation of the GSE. Printed circuit board number 300SEE10962-1, which is the execute command gate circuit apparently suffered a diode failure. The caused the eighth bit of the execute word to be omitted and consequently the spacecraft would not respond to r-f commands. Replacement of the P. C. board corrected the problem.

(6) Launch Summary

Pegasus C was transported from Hangar D to Hangar AF on 1 July 1965 and then to Complex 37 on 2 July 1965.

LOD-MTS-554 B was performed on 7 July 1965. The panel temperature calibration word probe valves were

higher than specifications. The UED Temperature Unit was replaced and no further problems were experienced in this area.

During the performance of LOD-MTS-554 B, the KSC MANDY tracking station measured the phase modulation characteristics of both Pegasus C beacon transmitters. A deviation of 0.75 radians was observed on both beacons. LOD-MTS-560 B, MTS Functional test was performed on July 8th. All MTS systems functioned and checked properly. The Space Vehicle System Plug Drop test LOD-MTS-572 B, was performed on 9 July and LOD-MTS-581 B Flight Readiness test was performed on 20 July 1965. Again, no problems were observed. The power, data and communication subsystems operated properly. All test objectives were met during all tests.

The countdown demonstration procedure, LOD-MTS-590 B, was performed on the 26th and 27th of July, in conjunction with Volume 1 of Saturn 1 Countdown Manual for SA-10, test number 7-LSVI-601. This procedure schedules the numerous sequences of subtasks required to prepare the Space Vehicle for launch. It performs operations which are as close to an actual Launch Countdown as possible.

The spare set of flight batteries were installed for LOD-MTS-590 B. This procedure consists of four functional tests, which are:

FHC-R-7007, MTS RF Pre-Closeout Test

FHC-R-7008, MTS RF Post-Closeout Test

FHC-R-7009, MTS RF Functional Test

FHC-R-7010, MTS RF Systems Test.

MTS Thermal Blanket and Louvers were installed per FHC-P-7001, installation and electrical connection of MTS Ordnance was made per FHC-0-7002.

M. Engineering Support

Engineering support applied to the Pegasus program consisted primarily of the preparation of drawings and reports to control and record the design, test, and evaluation of the Pegasus spacecraft.

1. Drawing System

The satellite and ground handling equipment mechanical and structural drawings were prepared in accordance with military specification MIL-D-70327 and the Fairchild-Hiller Corporation drafting room manual. All electrical and electronic hardware drawing released for the Pagasus and its ground support equipment were prepared in accordance with MIL-D-70327, Marshall Space Flight Center drafting room manual, and FHC drafting room manual.

The MTS top assembly drawing number is 300SD10000. The drawings for the MTS and its ground support equipment were assigned drawing numbers to identify the various MTS subsystems and functions. The first three digits at each drawing number (300), of the drawing number indicates the model number, Pegasus MTS. The letters following the first three digits indicate the MTS subsystem for which the drawings were released. The five digit number following the letters indicates the drawing number.

The following list indicates the function associated with the letters in the drawing part number.

Drawing No. Letters	Function
BT	Ballast Tank
CE	Test Tools
EC	Communication Subsystem
ED	Data Subsystem
EL	Spacecraft Electronic System
EP	Power Subsystem
ET	Electronic Test Equipment
MD	Mechanical Design
MDM	Mechanical Machined Parts
ML	Mechanical Layout
MU	MTS Mockup
SC	General Arrangements - Data Sheets
SD	Structural Design
SDM	Structural Machined Parts
SDT	Structural Tooling and Fixtures

Drawing No. Letters	Function
SE	Shipping and Handling Equipment
SEE	Electronic Ground Support Equipment
SL	Structural Layout
ST	Structural Test Tooling and Equipment
SK	Sketches, Arrangements, Outlines

Advance changes to released engineering drawings were issued on Engineering Advance Information forms. This form, commonly referred to as an EAI, serves as a notice to all affected departments that the indicated drawing will be changed as shown on the EAI; and that, pending the issuance of the drawing revision, the change on the EAI shall be accomplished at the stated effectivity. EAI's were originated by the Engineering Department only and followed the same release procedure as drawings.

Released EAI's were incorporated in the next drawing revision after approximately five EAI's were outstanding or at the project engineer's direction. This procedure prevented the unnecessary cost of releasing drawing revisions for each single design change.

Before the release of new drawings, drawing revisions, or EAI's approval signatures of the cognizant design engineer, functional manager, authorized quality control and reliability representatives, project engineer, and the program office representative were required. In addition, all engineering changes required approval by the Change Control Board before release, and those involving split effectivity required the particular approval of the resident NASA/MSFC representative.

The Change Control Board determined the feasibility, practicability, and necessity of the engineering changes and established the effectivity of the change. The board also established schedules for incorporation of changes and priorities whenever necessary to complete the changes as required. The board consisted of representatives from Contracts, Procurement, Engineering, Product Assurance, Program Control, Manufacturing, Operations and the NASA/MSFC Resident Project Office.

2. Documentation

The documentation necessary to specify the requirements of the MTS include design, test, installation, inspection, and operation specifications. The document numbers were assigned to identify the document function, contract, and number. An example of the document number is "FSS-MTS-1" which is translated:

FSS -	Fairchild System Specification
MTS -	Meteoroid Technology Satellite (Pegasus)
1 -	Document Number

Specifications released early in the program carried the contract identification "MMC", Micrometeoroid Measurement Capsule, which was changed to "MTS" on later documents.

The following list indicates the function associated with the first three digits of the document number:

ATP -	Acceptance Test Procedure
DR -	Design Report
DTP -	Development Test Procedure
FES -	Fairchild Equipment Specification
FSS -	Fairchild Systems Specification
FTR -	Field Test Report
GS -	General Specification
IP -	Installation Procedure
LOD -	Launch Operation Document
OP -	Operational Procedure
RIP -	Receiving Inspection Procedure
RTP -	Reliability Test Procedure
SER -	Special Evaluation Report
SP -	Standard Procedure
TM -	Test Manual
TR -	Test Report
QTP -	Qualification Test Procedure

Following is a brief description of the various documents released for the MTS project.

- Acceptance Test Procedure

  The ATP specifies the test procedure, test set-up, test equipment, and acceptable test limits required for FHC Quality Control and customer acceptance of an assembly, subsystem or system.

- Design Report

  The Design Report contains the results and conclusions of design studies and analysis.

- Development Test Procedure

  The Development Test Procedure specifies the specific test or sequence of tests required to validate a design prior to submittal for official acceptance. The DTP omits the restrictions of specified limits or precise step-by-step procedure.

- Fairchild Equipment Specifications

  The FES specifies the functional characteristics and other design requirements for a specific piece of equipment. Primarily, the FES is a specification for purchased items; however, it can be used to specify requirements for a FHC designed and fabricated item.

- Fairchild Systems Specification

  The FSS establishes the requirements of a system or subystem. It is used to specify the design criteria of the overall system and the specific design requirements of the various subsystems.

- Field Test Report

  The FTR contains the results and conclusions of tests performed at Kennedy Space Center.

- General Specification

  The GS contains specific requirements which are applicable, or

common, to all parts of the MTS System such as "General Environmental Requirements" or "General Structural Requirements."

- Installation Procedure

  The IP provides step-by-step instructions for installation of equipment or parts requiring special instructions which are too elaborate to be added to a drawing.

- Launch Operation Document

  The LOD contains procedures or tests which are performed on the MTS at KSC.

- Operational Procedure

  The OP specifies the procedure to be followed for operation, adjustment, control, or handling of the MTS, the equipment, or ground support equipment.

- Receiving Inspection Procedure

  The RIP specifies the requirements and procedure for inspection and test of certain procured items upon receipt at an FHC facility to assure that the item has not been damaged since passing an ATP at the vendor's facility.

- Special Evaluation Reports

  The SER contains the results and conclusions of tests which are conducted to verify the adequacy of "in-house" fabricated test tooling in accordance with NPC 200-2, Section 9.4.

- Standard Procedure

  The SP specifies the procedure or process to be followed to perform a function which is standard for the Space Systems Division.

- Test Manual

  The Test Manual describes tests and adjustments which are common to many MTS tests and procedures.

- Test Report

  The Test Report contains the results and conclusions of tests which are conducted on the MTS or its equipment.

- Qualification Test Procedure

  The QTP specifies the tests necessary to assure that assemblies, subsystems, and systems meet the qualification environmental requirements specified by the Contract or the Engineering Department.

3. History and Final Tabulation of Effort

The engineering effort for the MTS commenced on 27 February 1963 and the first engineering was released in March of that year. Since the initial release, 1493 drawings and 423 documents have been prepared. A breakdown of engineering drawings by function is as follows:

FUNCTION	NUMBER OF DRAWINGS
MTS Electronic	357
MTS Mechanical	127
MTS Structural	129
Ground Support Equipment	402
Ground Handling Equipment	46
Miscellaneous Layouts & Arrangements	188
Test Tools and Test Equipment	244

The following documents were released for the MTS during the program:

DOCUMENT TITLE	NUMBER OF DRAWINGS
Acceptance Test Procedures	71
Design Reports	20
Development Test Procedures	41
Fairchild Equipment Specifications	30
Fairchild Systems Specifications	5
Field Test Reports	9
General Specifications	11
Installation Procedures	3
Launch Operation Documents	11
Operational Procedures	44
Receiving Inspection Procedures	30
Reliability Test Procedures	2
Special Evaluation Reports	57
Standard Procedures	11
Test Manuals	1
Test Plans	27
Test Reports	30
Qualification Test Procedures	20

SECTION IV. PRODUCT ASSURANCE

A. Quality Control

The Quality Control Program Plan prepared for and executed on the Pegasus program was based on the philosophy that every department, section, group or person contributing to the program had a possible effect on the final quality of the end items. A series of lectures were scheduled for indoctrination of personnel from all departments. These lectures covered the quality goals for Pegasus and emphasized the importance of each individual's contribution. The active cooperation of top management created the quality consciousness and receptive attitude necessary for the success of the program. The lecture series of indoctrination and orientation introduced the invaluable cooperation of all concerned and acquainted every individual with his role in the total quality picture. The advice and cooperation of MSFC personnel, who were thoroughly familiar with the Quality Program provisions of NPC 200-2, was extremely helpful during this phase of the program. Once the quality goals were understood by the people, the application of the program plan became a reality.

1. Quality Program Plan Preparation

The preliminary Quality Program Plan was prepared and submitted to MSFC early in the program. As soon as actual work started on Pegasus, the plan was reviewed. At this phase of the program, representatives from MSFC Quality Section, experienced in quality program planning, were made available for consultation. With the assistance of MSFC representatives, the final Quality Program Plan was prepared, reviewed, revised and submitted to MSFC. Concurrent with the plan preparation, a review of quality documentation was begun. This documentation review was to be continuous throughout the entire Pegasus contract life for the purpose of improving the documentation and initiating new controls where necessary. A system evolved whereby new or revised documents were processed through the resident NASA contract office for immediate review and transmitted to MSFC for formal review and approval. This arrangement helped significantly in eliminating delays in the program and in keeping documentation current. The quick reaction and cooperation of the resident contract office personnel was a key factor in the application of the Program Plan where time was so important. Through this review and revision procedure, the Program Plan was strengthened and tailored to suit the developments in the Pegasus contract. A general flow diagram of the quality activities is shown in Figure 142.

2. Initial Quality Planning

The initial step in planning the Quality program was to review the contract for the quality requirements. Based on the requirements and the scope of work, immediate plans were put into effect to man the program. A careful evaluation of the talents and skills necessary for the particular operations indicated that the emphasis would be concentrated in

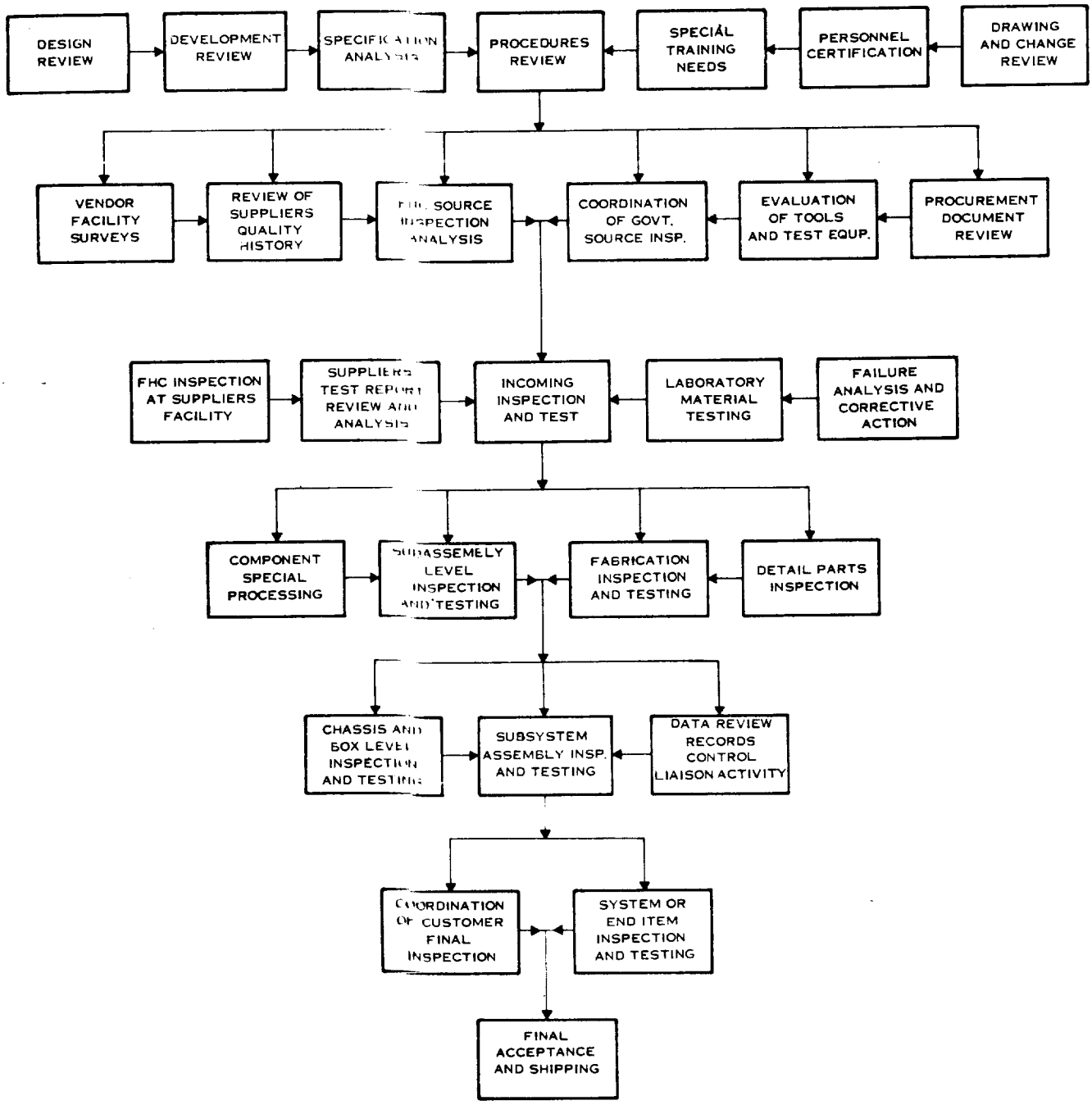

Figure 142. Quality Program Flow Diagram

four main areas. These four areas were supplier controls, in-process fabrication controls, test data controls and training of personnel. Screening and selection of quality personnel was performed with definitive objectivity. By knowing the needs of the program, it was possible to select the most capable personnel for each area of operations. The control of special processes required new skills and certified operators. Plans were made to train people in the skills needed and to evaluate the performance of the operators during the course

of the program. The early stages of development work were particularly fruitful in accumulating quality data for guidance through the progress of the program.

3. Training and Certification of Personnel

The training of personnel was inaugurated by sending Fairchild Hiller employees to the MSFC soldering school at Huntsville. Those employees were trained as instructors and a training school was organized at Fairchild Hiller. A full report of the training school activities appears in paragraph 13 of this section. All special processes were performed by qualified personnel and the quality of the work was evaluated continuously. The work area was airconditioned with dust and humidity controlled. The responsibility for monitoring the work area controls was assigned to Quality Control and procedures were prepared to insure good housekeeping practices. Retraining and recertification were performed periodically. Close coordination of personnel training with MSFC representatives was maintained throughout the Pegasus program. The training school was under the direction of the Manager of Quality Control, and the instructors reported directly to him.

4. Quality Control Participation in Design and Development Phase

The Quality Control participation in the early design and development phase of the Pegasus program afforded an excellent opportunity for Quality Engineering personnel to become familiar with the proposed design. Experienced, well qualified Quality Engineers were assigned to review and evaluate the quality characteristics of the drawings and engineering specifications. A procedure was written to guide the reviewers and point out the quality elements relative to space applications, new techniques, new processes and new materials. It was evident early in the design stage that printed circuits would be utilized extensively in the electronic packaging. Evaluating of printed circuit samples from various vendors was begun and inspection personnel were instructed in the art of printed circuitry, particularly the requirements of specifications such as MSFC-STD-154. Thermal control requirements for space vehicles was an area of new materials and techniques. Working closely with thermal control engineers, the Quality Control personnel became familiar with the development of paint and surface treatments for thermal controls. Methods of measuring emissivity and absorbtivity were developed and operators trained in the use of new measuring devices. Technical information from suppliers and historical data supplied by MSFC were evaluated and quality criteria established for acceptable surface finishes. Capacitor detector panel development introduced new methods and new processes. Depositing of copper film on mylar and adequate bonding of multi-layer construction posed early problems of determining the quality characteristics. Through the trial and error stage of the detector capacitor development, data was accumulated and when the final design was determined, the inspection and testing procedures were promulgated. Conformal coating of printed circuit assemblies was difficult to accomplish on early samples; however, extensive experimentation with samples resulted in mastering the "tricks of the trade" and high quality work was performed on all Pegasus

equipment. The conformal coating met or exceeded the requirements of MSFC-PROC-293.

Potting of connectors and cable assemblies required development of techniques. The procedures and materials of NASA specifications MSFC-PROC-186, MSFC-PROC-196 and MSFC-SPEC-202 were utilized. Methods were devised to inspect the cured potted assemblies, particularly to assure the deletion of air pockets. Personnel from Manufacturing and Quality Control attended the Potting Training School at MSFC and performed or supervised all potting operations. At one point in the program, a quality problem developed with the potting. Representatives of the compound manufacturer, MSFC and Fairchild Hiller investigated and resolved the problem.

5. Documentation Review

The quality review of documentation, prints, procedures and specifications prior to release was performed by Quality engineers during all phases of the program. This review included all drawings for Pegasus materials, tooling, test equipment and fabrication work. The purpose of the review was to assure that the quality characteristics were clearly stated on the documents and that all required information relative to quality data was specified. In order to assure adequate review, procedures were prepared to guide the reviewer and a check list, itemizing the areas of concentration, was used to record the actual performance. This document review prior to release had a major affect on the program quality. Many quality problems were detected early in the design stage and it was possible to prevent the repetition of troublesome areas. The review activity was emphasized very early in the program and necessitated becoming familiar with the NASA and MIL specifications governing the various processes. These Government specifications were also reviewed and evaluated for possible application to space work. Modifications were sometimes necessary and supporting documentation was initiated to supplement or amend the existing specifications. This early evaluation and analysis of the military and commercial specifications provided guidance for the subsequent Quality planning. As documentation became available, it was supplied to vendors and subcontractors for their use and guidance.

The specifications and procedures prepared by suppliers were also reviewed and approved by Fairchild Hiller Quality Engineering prior to release or utilization. The experience accumulated during review of Fairchild Hiller documents was applied to the suppliers documents and technical inputs by Fairchild Hiller were incorporated by suppliers. An important aspect of this document review was the participation of Fairchild Hiller, vendors and MSFC Engineering, Quality and technical personnel. Problems of quality determining facors were numerous but through conference and consultation decisions were made and action quickly taken.

The procurement documents initiated by Fairchild Hiller were reviewed prior to placing the purchase order with the supplier. A material requisition was first prepared and submitted to Quality Engineering. The quality requirements were determined and at this time, Government Source Inspection information was added to the requisition.

All Government Source Inspection requirements were coordinated with and approved by the cognizant MSFC representatives. The purchase orders were prepared from the information on the requisition and the orders were again reviewed and approved by Quality Engineering. The quality information appearing on the purchase orders included process specifications, test report requirements, test procedure numbers, source inspections and the controlling Government specifications, such as NPC 200-2 and NPC 200-3.

6. Procurement Source Controls

Pre-award surveys of suppliers were initiated and quality performance history reviewed wherever possible. Quality activities were concentrated on the control of suppliers during this early phase since this particular area was considered of major concern. Various field trips were made by Quality personnel to survey, review and gather data relative to suppliers' facilities and capabilities. These field surveys were performed by combined teams of Fairchild Hiller personnel. The survey teams prepared comments on each supplier and arranged conferences to discuss the relative merits of the various possible vendors. A decision was eventually reached and purchase orders were placed. Post award surveys were performed on all major suppliers and the review of the suppliers' documents commenced as soon as such documents became available.

All major suppliers were requested to prepare and submit a Quality Program Plan and/or an Inspection Plan. These plans were reviewed and evaluated. Changes in the plans were recommended and coordinated with the suppliers. The governing specifications for major components required the preparation and submittal of an Acceptance Test Procedure by the supplier. These procedures were reviewed and approved by Fairchild Hiller prior to their implementation. The ATP review was performed by Quality Control, Reliability and Engineering with the final approval responsibility assigned to Quality Control. Changes in the vendors' documents were reviewed and approved in the same way. The design of the components was monitored continuously during development by Reliability and Engineering. A final design review conference (which included a Quality Control representative) was scheduled on the major components. The suppliers' capabilities were assessed and arrangements made to have operators trained and certified in the performance of special processes. The training of supplier personnel was closely coordinated with MSFC. NASA facilities at Hunts and several other geographic locations were utilized for this training.

With the start of actual work on hardware, a Quality representative was assigned to the supplier's facility. The initial task of the Quality representative was to monitor every possible element of the supplier's controls to evaluate the effectiveness of the supplier's quality coverage. Based on this on-the-spot audit of the supplier's performance, the extent of Fairchild Hiller source inspection was determined. In most instances, it was possible to perform less than 100 percent inspection by Fairchild Hiller at the suppliers after the initial starting period. However, in some instances, the magnitude and complexity of the product required a full time resident Fairchild Hiller inspector. Close coordination of the supplier's activities, documentation,

Vendors of major components supplied test data identifiable with each article. These data were reviewed and evaluated by Receiving Inspection when received. A Receiving Inspection Procedure (RIP) was prepared by Fairchild Hiller for each major component. The RIP was designed to check the critical functional parameters of the component and to assure that no damage occurred during shipment. The RIP test results were compared with the data furnished by the supplier and the specification requirements. All component test data was continuously reviewed in order to detect any unusual phenomena occurrence or questionable condition. Special laboratory tests were performed on various components by Reliability whenever problems appeared or where suspected. The Receiving Inspection operations were considered a major part of the Quality Program Plan and were instrumental in preventing troubles at higher level assemblies.

8. Inspection

Due to the critical nature and high reliability required of the materials being fabricated or assembled, the normal in-process inspection procedures were modified and each inspector was trained as a qualified operator. The inspectors were first sent to soldering school and then instructed in the fabrication techniques of space age materials. On-the-job training of inspectors continued throughout the entire program. Advancements in the state-of-the-art, changes in processes, and new materials or techniques were continuously fed into the program. Both operations and inspectors were kept well informed of their progress and effectiveness by feed-back information, quality audits and performance analyses. All fabrication operations were inspected 100 percent and usually under high power magnification. The quality level or workmanship was maintained at a high level by constant emphasis on performance, immediate corrective measures, technical assistance to individuals and the cooperation of MSFC representatives, particularly in solving problems.

Each level of assembly was inspected. When components were mounted on printed circuit boards, the assembly was inspected before soldering. After the soldering operation, the final assembly was again inspected. This method of 100 percent inspection at each level of assembly was practiced throughout the program. Inspection personnel worked with an instruction sheet in addition to the prints and specifications. These instructions pointed out the critical areas of inspection and the important quality characteristics of the various processes. Inspection personnel worked with an instruction sheet in addition to the prints and specifications. These instructions pointed out the critical areas of inspection and the important quality characteristics of the various processes. Inspection records were accumulated for each assembly and were reviewed periodically by Quality Engineering in order to detect quality trends or out-of-control conditions. The higher level assemblies were inspected as each item was installed. All inspections were coordinated with Government quality representatives who augmented the Fairchild Hiller activity.

The mechanical assembly of the structural areas such as the center section, detector frames, electronics canister, solar panels, gearbox,

restraint system, and attitude sensing structure was inspected on a "check and go" procedure. Each detail or attachment had to be checked and approved before proceeding to the next installation.

9. Functional Testing

A series of test operations were planned starting with the component level and progressing through printed circuit board assembly, box level, subassembly and system levels. Quality Control personnel performed or monitored every test. An Acceptance Test Procedure was prepared for each test. These procedures were prepared by Engineering and approved by Quality Control and Reliability. Performance data were recorded for every test and reviewed for conformance with the controlling specifications. Test failures or doubtful functional performances were recorded and analyzed. Complete records of failure analysis and corrective action were accumulated to form a quality history of articles tested. Vendor box level assemblies were "married" to the subsystem level stage and their compatibility verified before proceeding to the system level testing. In order to provide the maximum Quality Control protection of the equipment, a management level directive was issued which specified that a Quality Control representative must be present whenever power was applied to any equipment. Power-on time and running time were carefully recorded. This program of testing included operation at high, low, and nominal voltage for all units. Some box level assemblies were also tested at high and low temperatures that simulated the expected orbital environments. All testing media was calibrated for measurement accuracy against instruments whose accuracies were traceable to the National Bureau of Standards. Periodic surveys of test instruments were performed by Calibration Laboratory personnel to assure that all instruments were properly calibrated. A system was established to evaluate all special test equipment prior to its use for acceptance testing. This evaluation was performed by review of the equipment design and by actual performance of the equipment. A calibration approval sticker was attached to acceptable test equipment. All functional test activity was coordinated with Government Quality Control representatives whose approval was required for final acceptance at the various levels of assembly. The final Pegasus assembly tests were performed at the Systems Integration area in Hagerstown, Maryland, and at General Electric Company in Valley Forge, Pennsylvania, prior to shipment to Kennedy Space Center.

10. Correction of Quality Problems

The Reliability Section of the Product Assurance Department screened, evaluated and processed all corrective actions. Since Reliability and Quality Control are both sections of the same department, close liaison was easily maintained. Essentially, there was no time lag between the decisions and the incorporation of necessary action.

Quality Control monitored the implementation of all corrective activity at Fairchild Hiller facilities, at suppliers' plants and at field sites. Technical assistance was made available to all suppliers, particularly in review and incorporation of design changes subsequent to design approval. Design approval and incorporation of revisions were closely coordinated with MSFC representatives and vendors.

The Material Review Board's (MRB) activity was closely controlled by Fairchild Hiller Quality Engineering. All non-conformance problems were thoroughly investigated and action taken to prevent recurrence of discrepant conditions. The total non-conformance history of the program is recorded in approximately 600 Material Review Board reports.

11. Qualification Testing Program

Quality Control personnel participated extensively in the broad scope of qualification testing. The first area of activity was acquisition of suitable facilities for various environments at several locations. Surveys were made, facilities evaluated and eventually approved. In many cases, suppliers leased the environmental facilities and supplied the manpower to do the testing. Quality Control representatives worked closely with vendors and Government representatives to assure adequate coverage of the tests and the collection of certified test data.

The qualification testing of Fairchild Hiller manufactured articles was monitored 100 percent by Quality Control personnel and data was recorded for all functional tests under various environments. The qualification data were compiled into a report for each article tested. These reports were reviewed by Quality Engineering and approved prior to their publication or release.

12. Quality Plan Effectiveness

As the Pegasus program developed, the effectiveness of the Quality Program Plan was measured by random periodic audits and corrective action taken as required. In addition to the above audits, a continuous analysis of all Quality Control operations was performed. Existing procedures were revised and new procedures prepared to fill gaps and tighten controls. Feed-back of quality information from suppliers, MSFC program office, DOD representatives and similar sources was used to identify weak spots and help advance the quality objectives.

The quality data collected at Fairchild Hiller and suppliers' facilities were reviewed and analyzed. When possible, action was taken to prevent recurrence of problems at other vendors performing similar operations. The most important factor in problem solving was immediate analysis and immediate corrective action. The delegation of the Material Review Board's authority to suppliers was severely limited to maintain close control of all non-conformance problems.

13. Pegasus Training Program

In March, 1963, five persons successfully completed the course of instruction in Soldering of Electrical Connections (High Reliability) in accordance with MSFC-PROC-158B at the NASA school in Huntsville, Alabama, and were awarded certificates as Category II instructor/examiners.

The Fairchild Hiller training section for the Space Systems Division was established in May, 1963, under the direction of the Product Assurance Department and under the supervision of the Manager of Quality Control. Equipment, materials and tools were purchased to establish a Fairchild Hiller soldering school. A course outline was formulated to parallel the course of instruction at MSFC, Huntsville.

NASA Quality Representatives and FHC personnel cooperated to create an acceptable soldering school at Fairchild Hiller.

The first class was begun in June of 1963. Classes consisting of ten students, maximum, were conducted at a rate of approximately three per month. Successful completion of these classes, as verified by the company instructor/examiner and the NASA Quality representative, certified those persons as Category III operators or inspectors. In August of 1963 the training classes were moved to the Fairchild Hiller Rockville facility.

Classes continued until August, 1964, at which time a new classroom was completed and made available for use. The move to permanent classroom facilities was accomplished by the purchase of new modular type work benches, additional furniture and new tools. The general attitude and acceptance of new techniques was good and the quality and reliability of soldered assemblies became well established.

Classes continued at a slower rate until June, 1965, during which time the instructor/examiner for Fairchild Hiller Space Systems Division frequently audited the solderers' capabilities, attitudes and practices. Many classes were held for recertifying previously certified persons.

An additional instructor was trained at the Huntsville, Alabama, NASA soldering school in July, 1964. This second instructor assisted the training effort in September, 1964, and has continued to do so since that time.

As of 4 June 1965, the statistics for the solder training classes were as follows: Total persons processed through the school - 202. Of these, 106 were certified to Category III, one was certified to Category V and 63 failed to meet the minimum requirements of the specification for certification. Thirty-two were recertified in Category III.

In addition to the solder training, there were seven persons sent to NASA Huntsville schools for other special processes training. Three persons were trained at the module welding class, three persons trained and certified in potting and molding, and one person was trained as an instructor/examiner in the soldering classes.

Fairchild Hiller personnel conducted training courses at some suppliers' facilities and assisted other suppliers in setting up their own training schools. Qualified Fairchild Hiller personnel monitored the performance of the suppliers' operators to assure continued high quality workmanship. In some instances, suppliers' operators were trained and certified for the specific operation involved. This limited type of certification was approved by MSFC Quality representatives. The training and certification of all personnel was continuously monitored by MSFC.

Operators performing other special processes were trained and qualified in accordance with existing company procedures. These existing procedures included such operations as welding, radiography, magnaflux, dye penetrant, bonding, plating, and chemical treatments. Special processes were evaluated in accordance with the existing procedures which include control of operators, inspectors and equipment.

During fabrication of the satellites, various special solder applications were necessary due to the need to solder the more unconventional types of electrical connections. The training department was called upon to assist in the development of acceptable solder techniques for these unconventional or little used types of soldered connections. Flat multi-conductor cable consisting of flat copper conductors embedded in mylar-like plastic was quite difficult to solder and maintain as an acceptable soldered connection. After many trials in soldering this ribbon cable, its printed circuitry and terminals, a standard method was agreed upon by Fairchild Hiller and NASA Quality representatives. This method proved to be quite satisfactory. The soldering of coaxial cable and shielding was standardized and good results have been attained.

Attachments between the ribbon cables and the aluminum sheet detector panels required that many methods be tried until a flexible joint technique was finally established at junction blocks and terminal installations utilizing flexible, insulated, stranded wire as the connecting link, thereby alleviating the problem of possible breakage of ribbon cable soldered connections due to movement.

Contributions to the solutions of the many problems encountered were made by various individuals. The technical representatives of MSFC helped immeasurably to overcome the problems of new processes applications.

14. Field Test Sites Quality Control Activity

The Pegasus electronics package was assembled and tested at the Fairchild Hiller Bladensburg facility. It was then moved to the Systems Integration Area at Fairchild Hiller's Hagerstown facility. The final assembly of each capsule was accomplished at the SIA. The electronics canister package was "married" to the system and system testing began. A comprehensive log of the assembly operations was maintained where Fairchild Hiller Quality Control and Government representatives carefully recorded the inspection and acceptance of each assembly step. Acceptance Test Procedures were written and approved for each level of assembly testing and Operational Procedures were utilized for the installation operations.

The first system level testing was performed to assure the final assembly integrity of the capsule. After the initial assembly test was approved, the system was subjected to a series of specific functional exercises to prove each particular subsystem, such as power, data, etc. Quality Control personnel participated in each test and approved the data collected during the testing. All tests were witnessed by Government Quality Control representatives. This particular phase of testing was very extensive and demonstrated the ability of the system to function in various modes of failed conditions. Redundant circuits were isolated and individually operated to assure functional performance. Inspection and test data were accumulated and thoroughly reviewed. Operational problems were recorded and investigated by Reliability and Engineering. Quality Control monitored the implementation of all corrective

action and maintained records of all changes.

When testing at the Hagerstown facility (SIA) was completed, the capsule was transported to General Electric's Valley Forge facility. Packaging for shipment was inspected to previously approved prints and procedures. Extreme care was necessary during all handling and shipping. At General Electric Pegasus A was subjected to temperature, altitude and vibration environmental testing, and Pegasus B was subjected to vibration environment. Pegasus C was shipped directly from Fairchild Hiller's Hagerstown facility to Cape Kennedy. The environmental testing at General Electric was monitored 100 percent by Fairchild Hiller and MSFC Quality Control representatives. Around-the-clock testing was performed and each shift was manned by qualified test teams. No serious problems were encountered during this phase and when the General Electric tests were completed, the capsules were shipped to Cape Kennedy.

The field test site activity necessitated the shifting of Quality Control personnel from one area of activity to another. It was possible to have personnel who were thoroughly familiar with the Pegasus system accompany the capsule through each phase of testing. This continuity of test team personnel was an invaluable asset to the test program and a major factor in meeting schedules.

When the Pegasus arrived at Cape Kennedy, the container was immediately inspected for possible damage during transit. An operations procedure was utilized to uncrate the capsule and, following very definitive instructions, the assembly was moved to the test area. After the unwrapping of the capsule and placing it on the deployment fixture, an intensive inspection was performed. For this inspection, a procedure was used (Launch Operations Document LOD-MTS-502) to assure that nothing was overlooked. When the LOD-MTS-502 inspection was complete and acceptable, other Cape activities were permitted to begin.

Quality Control personnel monitored every operation at Hangar D. These operations included friction balance testing of panels, confidence operational test, solar panel deployment, detector panels deployment with simulated release system, live squib deployment, complete system functional test and solar array simulation. Ancillary testing was performed in various phases of final preparations. Prior to removal of the capsule to Hangar AF, all protective coverings were removed and a complete visual inspection was performed. The capsule was united with the service module adapter in Hangar AF and an antenna functional test was performed.

Records and data were accumulated throughout all field test site activities to form a complete Quality Control history. Quality Control personnel were present during the launchings and participated in investigation of any problems encountered with SATCON equipment.

B. Reliability

The principal activity of the Reliability Section during the course of the Pegasus program was the development of techniques to assure that reliability was considered during all phases of the system development cycle.

These techniques included the preparation of reliability models, part stress analyses, failure mode and effect analyses, configuration analyses, material and component evaluations, failure analyses, stringent supplier control, and the conduction of a design review program.

1. Reliability Models and Predicted Reliability

Mathematical reliability models represented, from a reliability point of view, the functional relationship of all the elements of the design to the overall system operation. Critical paths were thus determined and redundancy or alternate approaches recommended. Figures 143 through 150 are the final models and predicted reliabilities of the various Pegasus subsystems for a one-year operation. Table 24 compares the originally apportioned reliability to the predicted reliability of the final design.

2. Reliability Prediction Techniques

Three approaches were considered in predicting the reliability of the subsystems. The first approach consisted of the standard techniques using RADC rates. Because the system design is such that many components are required to perform the logic functions, the theoretical reliability was lower than anticipated. These results were somewhat surprising since experience has shown that similar systems, operating in space environments, have experienced reliable performance. Therefore, effort was expanded to determine methods of obtaining a more realistic reliability prediction for digital circuits.

TABLE 24. COMPARISON OF INITIALLY APPORTIONED AND FINAL PREDICTED RELIABILITY

Subsystem	Initial Reliability Apportionment	Final Reliability Prediction
Deployment	0.9244	
20 cycles		0.9856
60 cycles		0.9749
Electrical Power	0.9832	0.9929
Data	0.9404	0.9373
Communications	0.9404	0.9858
Detector	0.9404	0.8030
Attitude	0.9244	0.9215
Temperature	0.9339	0.9350
Collection and Transmission of Micrometeoroid Hazard Data	—	0.6069

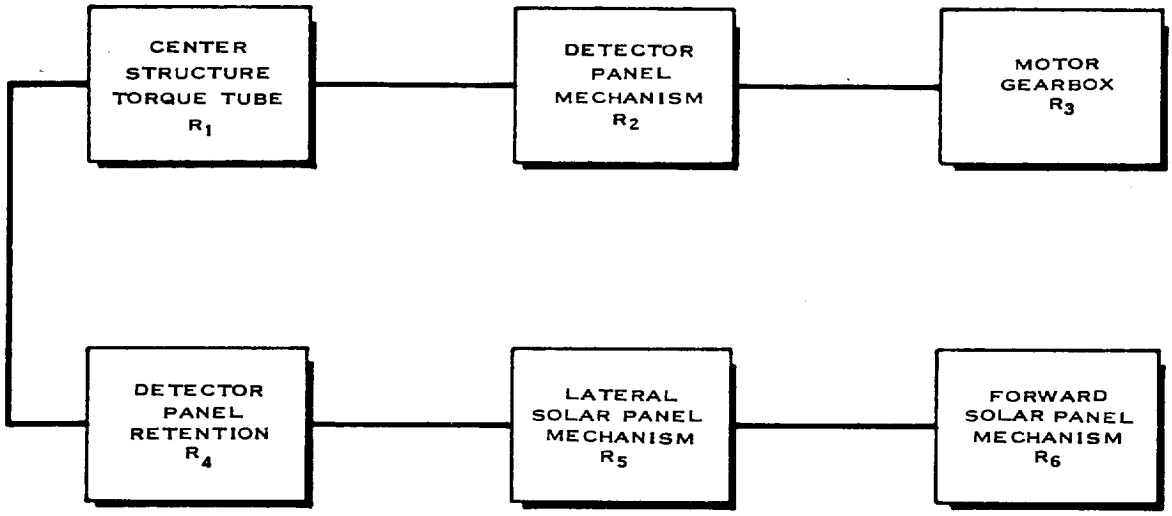

$$R_A = R_1 R_2 R_3 R_4 R_5 R_6$$

	R_A	R_1	R_2	R_3	R_4	R_5	R_6
20 CYCLES	0.9856	0.9989	0.9956	0.9998	0.9944	0.9985	0.9984
60 CYCLES	0.9749	0.9976	0.9903	0.9994	0.9944	0.9955	0.9977

Figure 143. Deployment Subsystem

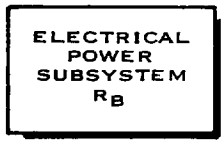

R_B
0.9929

Figure 144. Electrical Power Subsystem

$$R_C = R_7 R_8$$

R_C	R_7	R_8
0.8030	0.9893	0.8117

Figure 145. Detector Subsystem

$$R_D = R_9 \; R_{10}$$

R_D	R_9	R_{10}
.9215	.930	.9909

Figure 146. Attitude Subsystem

$$R_E = R_{11} \; R_{12}$$

R_E	R_{11}	R_{12}
.935	.998	.937

Figure 147. Temperature Subsystem

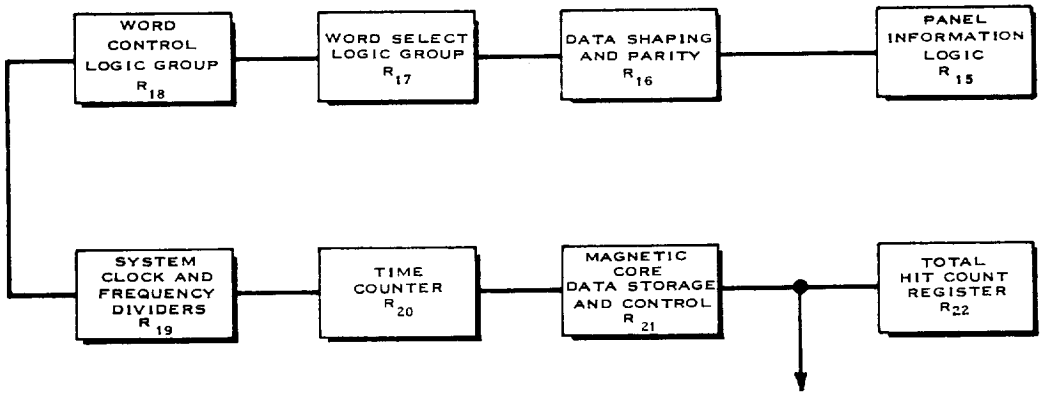

$$R_F = R_{15} \; R_{16} \; R_{17} \; R_{18} \; R_{19} \; R_{20} \; R_{21} \quad R_{22} \quad R_{15} \; R_{16} \; R_{17} \; R_{18} \; R_{19} \; R_{20} \; R_{21} \; R_{22}$$

R_F	R_{15}	R_{16}	R_{17}	R_{18}	R_{19}	R_{20}	R_{21}	R_{22}
0.9373	0.8431	0.9539	0.9010	0.8543	0.9859	0.9507	0.6025	0.9036

Figure 148. Data Subsystem

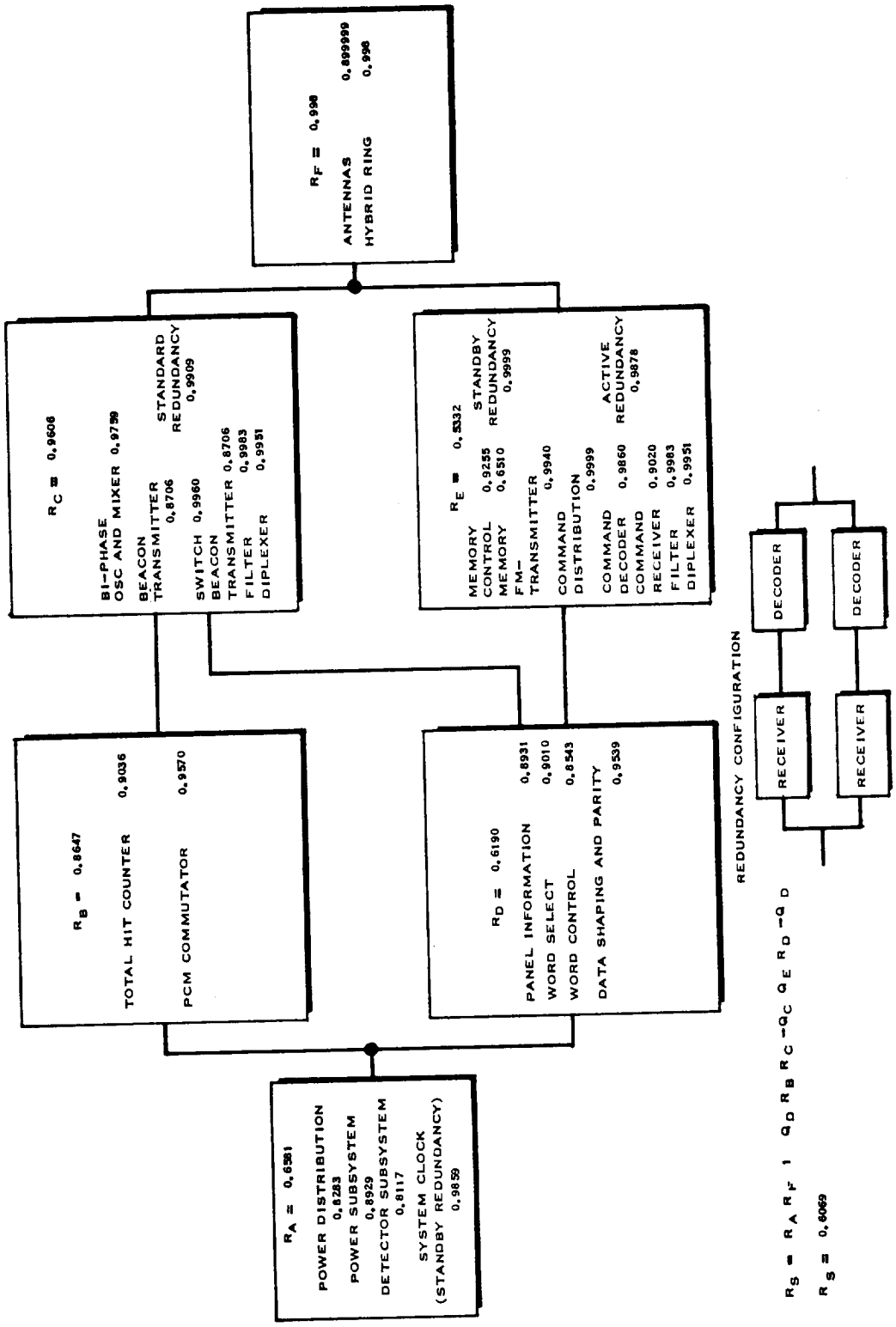

Figure 149. Pegasus C Reliability Model

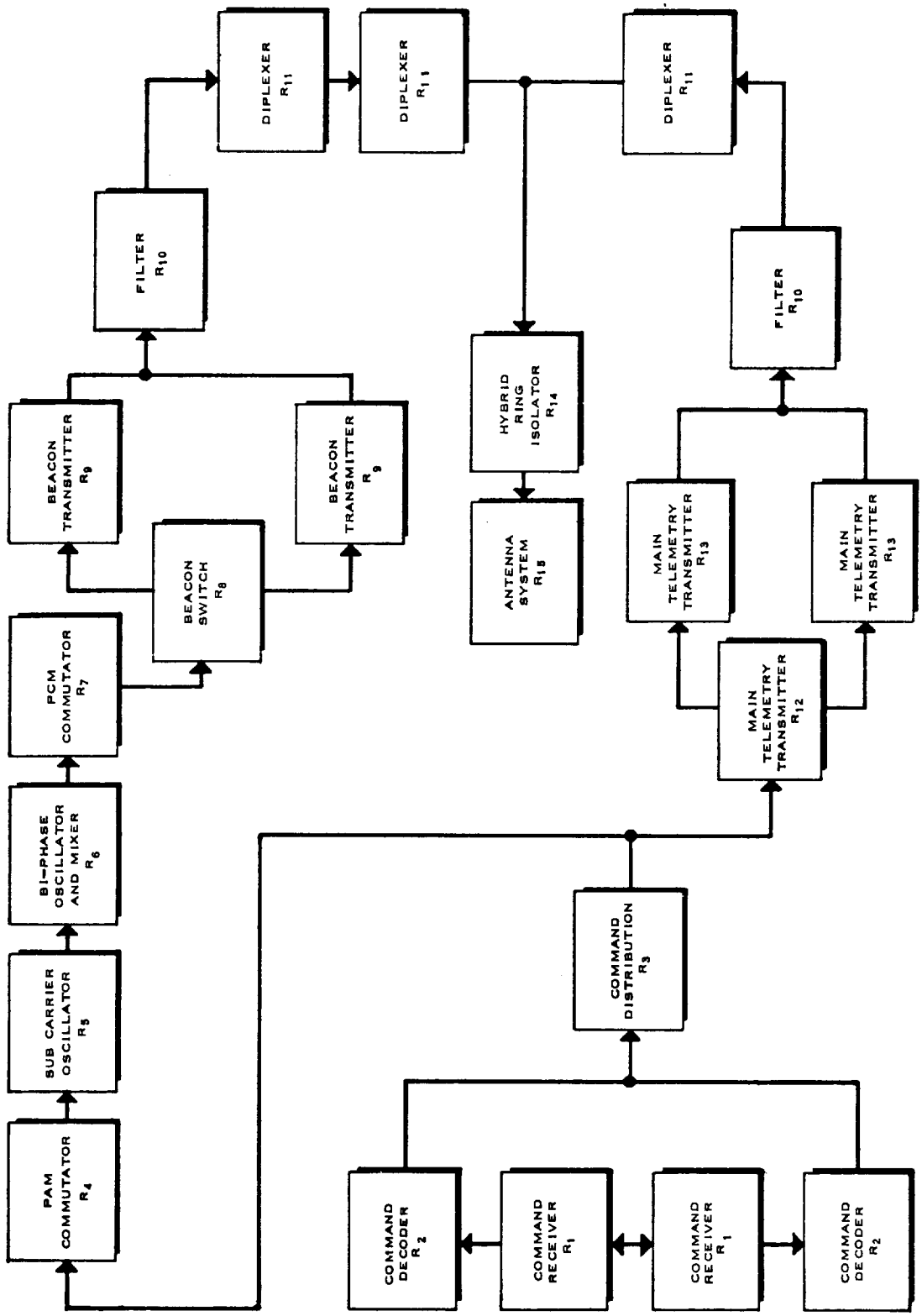

$$R_T = \left\{ \prod_{i=4}^{7} R_i \prod_{i=9}^{11} R_i \left[R_{11}(1+R_8\lambda t_9) + R_{10}R_{11}R_{13}(1+R_{12}\lambda t_{13}) \prod_{i=4}^{7} R_i \prod_{i=9}^{11} R_i R_{10} R_{11}^2 R_{13}(1+R_8\lambda t_9)(1+R_{12}\lambda t_{13}) \right] [2R_1R_2 - (R_1R_2)^2] \right\} R_3 R_{14} R_{15}$$

Figure 150. Communication Subsystem Math Model

A second approach was taken with consideration given to the different types of component stresses resulting at different stages of duty cycles. It was found, however, that although current does not flow at all times, voltage stresses do exist (such as in the case of non-conducting transistors), which can result in eventual failure. While this approach does result in a high reliability figure, it is suspect, and efforts were discontinued in this area.

The reliability obtained from the third approach taken is a result of the basic digital circuit design. Because digital design is such that large variations and drifts in part value may occur with no appreciable effect, and because components used are stressed considerably below the published 10 percent values of RADC, it appeared that a correction factor should be applied to any analysis of digital circuits. A design approach was taken whereby those modes of failure least likely to occur were omitted from the total failure rate. A detailed discussion of this approach was documented and included as part of the Reliability and Failure Effects Analysis for Pegasus Data Subsystem.

3. Failure Mode and Effect Analyses

These analyses were performed by Reliability on all subsystems to determine the failure modes which could result in catastrophic failure or performance degradation. Analyses of subcontracted items were performed by the vendors.

4. Configuration Analyses and Reliability Improvement

Where competing design configurations were being considered, comparative reliability evaluations were performed to arrive at the optimum configuration considering reliability, package size and weight, cost, and other parameters.

Whenever the opportunity for a detailed analysis of the design was presented, such as during review of engineering drawings and drawing changes, design reviews, and monitoring problem report status, means for reducing the chances of catastrophic failures were investigated. Where possible, after considering the above trade-offs, specific design changes were recommended.

5. Improvements Incorporated during the Program

The following improvements were incorporated in the Pegasus Subsystems.

a. Power

- Redundant regulator added.
- Regulators provided with short circuit protection.
- Redundant battery charging system added.
- Increased voltage rating of capacitors in the current sensor.
- The shunt Zener diode pack was split and one Zener network placed at input of each battery charging system.
- An in-flight indication of the redundant regulators being utilized was provided.
- The battery tops were coated with epoxy to provide a secondary sealant.

b. Data

- Standby redundant clocks were incorporated utilizing command switching following evaluation of various active switching methods.

- DC-DC converter circuit in Data Power Distribution Unit was redesigned to prevent permanent damage to transistors in the event of temporary overloads.

- Improved heat sinks on the converter transistors in the DPDU were added.

- The thermal resistance of the Word Select regulator heat sink was reduced in the DPDU for Pegasus B and C.

- An improved 50 volt supply filter was incorporated utilizing series parallel connection to reduce stress on capacitors.

c. Detector

- The ribbon cables to the detector panels were "woven" through the hinge points of the wing panels on Pegasus B and C. On Pegasus A the cable had employed sharp 180° bends.

- Use of multi-strand wire for interconnecting bus, diode module, fuse module and capacitor panel increased the reliability of each solder joint.

- The incorporation of many circuit design changes throughout the Detector Subsystem, while adding to the parts count of the system, is justified by the increased probability of obtaining valid micrometeoroid data and decreasing the effects of accumulated electron irradiation.

Notable in this category are:

(1) The addition of a passive filter network in each detector panel group.

(2) Increased amplification in the Current Recharge Amplifiers.

(3) Increased threshold level of hit amplifiers.

d. Communications

- The inter-connection between command receivers and decoders was changed as shown in Figure 151. This latest configuration has only slightly less theoretical reliability than the previous configuration. The operational reliability is improved, however, by decreasing the input variation that the decoders must handle.

- Each receiver/decoder system is powered from a different regulator rather both systems being powered from the common 28 volt bus. This method prevents the catastrophic results of switching to a "dead" regulator.

- An isolation diode added to the 18 month "beacon-off timer" circuit allows the beacons to be ground commanded on and off should the timer fail in a mode that tends to turn them off.

- A line filter was added between the beacon transmitter output and

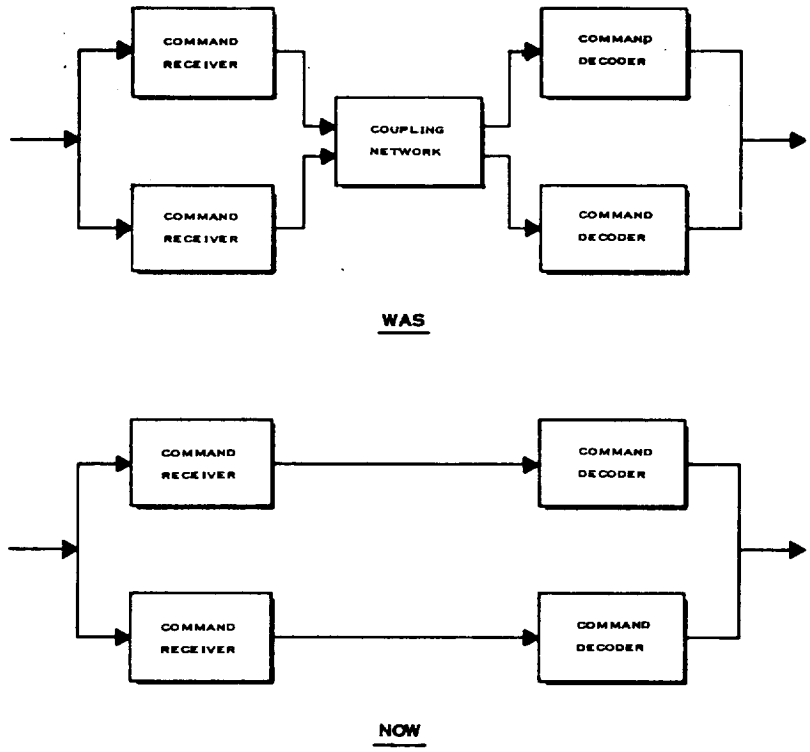

Figure 151. Command Receiver and Decoder Interconnecting Diagram

diplexer input. While resulting in a slight loss of transmitter power due to its insertion loss, the "smoothing out" of the reactive characteristics of the diplexer provides significant added margins for optimum tuning to compensate for such variables as antenna VSWR, power supply voltage variations, and temperature changes.

- Operational reliability of the DC-DC converter in the Communications Processing Unit power supply was improved by circuit redesign which eliminated voltage transients appearing at the transister collectors.

Prompted by failures of three different decoders during various Pegasus B system tests, CSC was visited by Fairchild Hiller and MSFC representatives. During discussion with CSC engineers, Fairchild Hiller learned that the decoders strobe blocking oscillator circuit required the selection of the 2N956 transistor with the characteristic of a low value of saturation voltage at high temperature. This selection process was being done by CSC at the "complete decoder" level and required temperature cycling to verify proper operation. Since flight decoders were not permitted to be operated at temperature extremes exceeding -5° C and +55° C, reliable operation beyond these extremes could not be guaranteed by CSC. The qualification model was permitted to operate at 85° C, and thus its circuits could be adjusted for this temperature.

CSC was directed by Fairchild Hiller to conduct a "worst-case" analysis to determine the required circuit parameters for reliable operation of all decoders over the entire range of qualification temperature. The analysis revealed the critical circuit dependence

upon the saturation voltage of the transistor and indicates that marginal operation of the decoders could occur within ambient temperature with transistors whose characteristics are within tolerance.

6. Design Review

The Pegasus design review program provided a means for appraising and coordinating the design aspects on a planned, continuous basis, assuring an integrated flow throughout the program. Periodic reviews were held which consisted of analyses of the equipments, subsystems, and systems, using test data, and vendor and Fairchild Hiller test results. In addition to the regular periodic reviews held from early design concept, special reviews were held at critical points in the manufacturing cycle. The Reliability engineer served as Chairman/Secretary at design review meetings and was responsible for coordinating follow-up action items as necessary.

Figure 152 shows the occurrence of design approvals given to the major subcontracted subsystems.

a. Part Evaluation and Selection

One of the functions of Reliability was to assist designers in the selection of components and parts to meet the requirements of the design. Vendor parts were investigated and a determination was made relative to their adequacy for the Pegasus program.

Components as listed in M-ASTR-TSR-PPL-1, Preferred Parts List, Electrical, were used as extensively as possible. A preferred parts list specifying all vendors who have

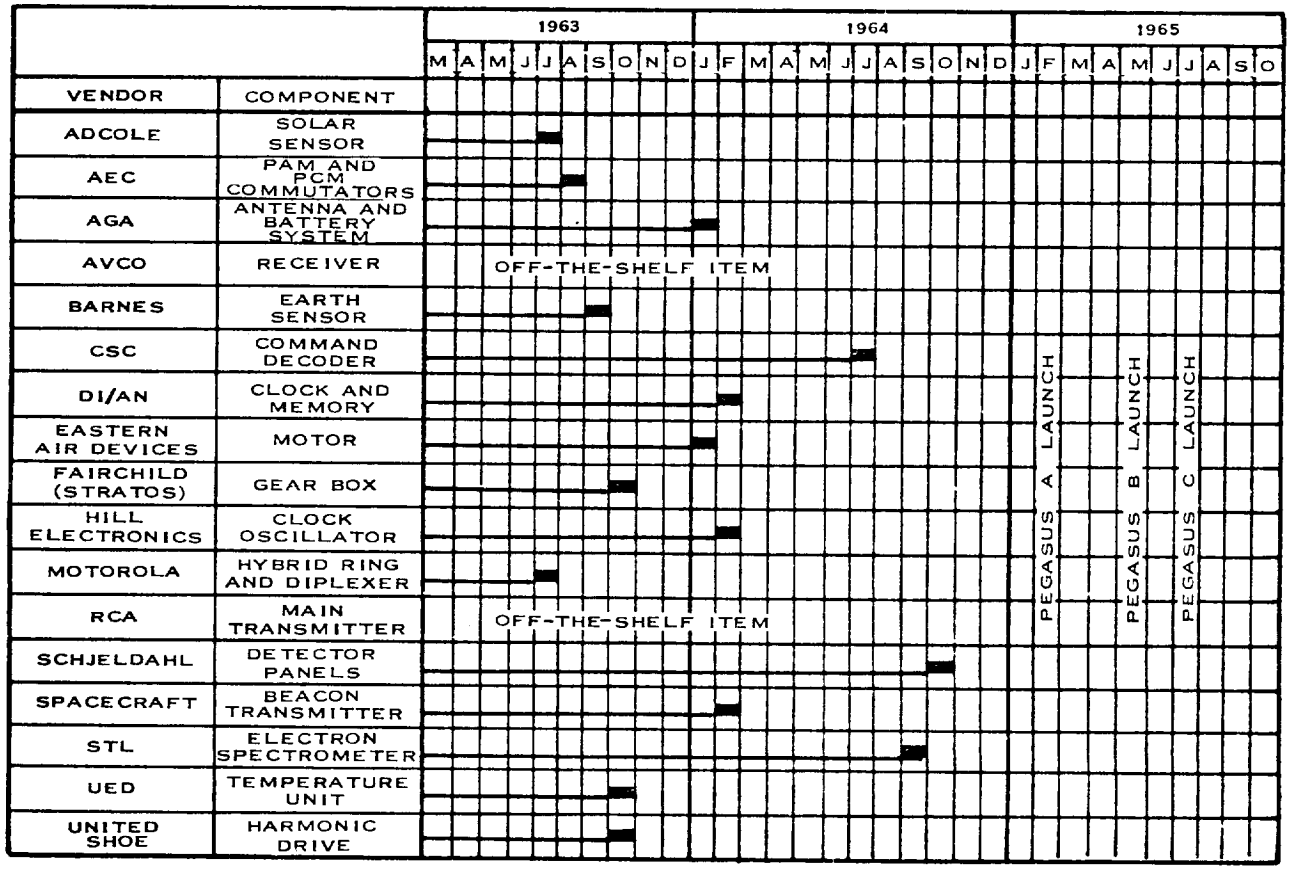

Figure 152. Occurrence of Design Approvals

qualified to Marshall Space Flight Center specifications was generated to assist in the selection of vendors. Where no vendors had qualified to MSFC specifications, vendors who had qualified to other government specifications were recommended.

Arrangements were made with MSFC for exchange of component information. This arrangement was especially useful where parts other than those listed in the preferred parts list were required by the design. Unfortunately, component data such as life test, environmental and failure rate data is not generally available from vendors. In such instances, the component and vendor selection was based on the specific application.

Considerable reliability effort was expended investigating digital modules, bi-stable multivibrators, inverters, and delay circuits which are an integral part of the data subsystem. Because the modules were used throughout the data subsystem, it was imperative that the ultimate in reliability be achieved. The very nature of digital circuits, however, plus the number of component parts required, limit the theoretical reliability. The circuits were designed so that all component parts would be operated at minimum stress levels. Spacecraft, Inc. modules were selected which were currently being tested (over 10,000 hours, including SA-5 environment) by the Astrionics Division, MSFC.

The core transistor logic element supplied by Di/An was another component which was used extensively in the data subsystem. A preliminary analysis was conducted to establish the reliability of this item. Di/An, in their analysis of the system clock, included an analysis of the core transistor logic. A failure rate of 0.01667%/1000 hours, based on 6,000,000 test hours without a failure, was derived and subsequently used throughout the system.

7. Component Evaluations during the Pegasus Program

a. Cable Connector Potting

In order to maintain the height of cabling above several connectors within certain limits, a system was devised to pot the connector cable in two operations. Initially, the wires were potted a short distance above the solder pots. After curing, the wires were bent into their routing pattern and then repotted. Tests run on the potting material in two-step operations have proven satisfactory and design changes have already been made. A Reliability Evaluation Report was issued on this study.

b. 1N645 Diodes

An investigation was performed to determine the ability of 1N645 diodes to withstand temperature shock. This evaluation was made to determine the adequacy for use in detector panel application where these diodes would be subjected to the temperature extremes of direct sunlight and shade. Temperature extremes used in the test were +250° F and -300° F with a transition time of five minutes. Test results proved satisfactory and the parts were incorporated into the design.

c. Space Application Wire

Studies were conducted on several wire constructions introduced for use in space environments. By the use of

these wires, considerable space and weight savings was achieved. As a result of these studies, Spec 44 wire, manufactured by Raychem, was used. Designs were revised to incorporate this wire whenever feasible.

d. Permacel 211 Silicone Varnished Glass Cloth Electrical Tape

The low temperature capabilities of Permacel 211 silicone varnished glass cloth electrical tape were investigated for use in securing wire bundles to the Pegasus structure. The material proved acceptable after being subjected to temperature extremes as low as -95° F. A Reliability Evaluation Report was issued regarding this investigation.

e. RdF Stikons

A new adhesive, RdF 3375, was developed for use with RdF Stikons. Previously, problems were encountered with the adhesive bond between the stikon and the circuit board. A report was prepared on this investigation.

f. Ultrasonic Cleaning of Electrical Connectors

An investigation was made on various cleaning agents and methods to determine the optimum approach for use in cleaning electrical connectors used on Pegasus. Some of the agents and methods investigated were:

- Agents - TF and TMC Freons, alcohol, detergents, etc.
- Methods - Ultrasonic cleaning, vapor degreasing, mechanical agitation, etc.

Upon the conclusion of this investigation, Fairchild Hiller Standard Process SP-0004 was revised accordingly.

All connectors were categorized under two cleaning methods as follows:

Type I - Ultrasonic Cleaning with "TF" Freon
Cannon D ( ) M Series
Amphenol 133 and 144 Series
Winchester WD and JF Series

Type II - Mechanical Agitation with Alcohol
Bendix PT Series
Amp 582546-1

g. Corning Glass Resistors

A meeting was held with Corning representatives to discuss failures of resistors having 0.025 diameter dumet leads. It was decided to replace these resistors with units having 0.025 diameter copper leads in order to preclude further failures. The copper leads, being softer, allowed the required bending to be performed without causing a strain to the glass resistor body.

h. General Electric RTV-11 Sealant

After receiving comments from Marshall Space Flight Center concerning the use of RTV-11 for connector potting, an investigation was undertaken to determine the suitability of the compound for this application. Sample connectors were potted in accordance with Fairchild Hiller's Special Procedure 0002. After curing, the samples were subjected to resistance measurement, temperature cycling, wear and repairability testing. Though results of the

above testing were favorable, further information obtained from General Electric concerning material outgassing and moisture absorption could not be substantiated with test data. Therefore, Fairchild Hiller decided that RTV-11 would not be used for connector potting.

i. RF Connectors

Right angle miniature RF connectors used on receiver units and FM transmitter units were replaced with right angle adapters in conjunction with straight connectors. Because of their miniaturization, the currently used right angle connectors do not provide adequate retention for the center conductor.

j. Type 351 Tantalum Capacitors (High Reliability)

As a result of incomplete internal soldering experienced with the 351D type high reliability non-polarized tantalum capacitors, Sprague revised its manufacturing procedures. The improved capacitors incorporate a slot in the case for visual inspection of the solder joint between the two polarized capacitor halves.

k. Discolored Solder Joints

Mitallographic studies were made on several electrical connector solder joints that had discolored to a lead grey appearance some time after being soldered and wrapped in protective paper prior to encapsulation. Although the exact cause of the discoloration was not established, it was determined by Fairchild Hiller, and confirmed by the manufacturer of the protective paper, that the phenomenon was not deleterious to the surface of the pin or the soundness of the joint.

l. W-2 Harness

Tests on the wire damage by Methyl Ethyl Ketone (MEK) indicated that the center conductor insulation was not seriously affected, and the harness was acceptable for flight use. Scheduling permitted the manufacture of a new harness, however, and therefore, for reliability assurance reasons, the suspect harness was downgraded to prototype use.

m. GLN-1/10 Fuse Tests

A test program was conducted to determine the "blowing" characteristics of the GLN-1/10 Bussman fuses when subjected to Pegasus environments. This information was required in order to develop a fuse for use in the detector panel circuits to remove shorted detector panels from a grouping. A final report was issued upon completion of the test program.

8. Discrepancy Reporting and Analysis

Fairchild Hiller established and implemented a Discrepancy Reporting and Analysis System which integrated the results of inspection and testing activities to provide feedback regarding design and fabrication deficiencies. The system was designed to assure timely and adequate corrective action.

Failure analyses were performed to isolate and define problems and to recommend courses of action to resolve each problem. The number of reported troubles for each major subsystem and for each vehicle is shown in Table 25. Indicated in the figure are the quantity of problems that were defined for each subsystem.

TABLE 25. TROUBLE REPORTS AND PROBLEM NOTIFICATIONS ISSUED

Vehicle / System	Trouble Reports Issued										Problem Modifications Issued
	Proto	Qual	Peg A	Peg B	Peg C	Sp1	Sp2	Sp3	Misc	Totals By System	
Data	433	338	189	140	123	69	22	0	405	1719	237
Power	102	19	68	21	10	8	6	1	67	302	26
Communic.	104	62	89	32	16	10	4	0	113	430	80
Structure & Mechanical	113	20	131	43	52	5	2	0	157	523	44
Misc.	466	30	243	44	56	26	7	0	*	872	14
Totals	1218	469	720	280	257	118	41	1	742	3846	401

*Numerous Trouble Reports – Principally receiving inspection of small parts and components have not been included.

SECTION V. MANUFACTURING

The original manufacturing plan for the Pegasus Program was presented in the proposal. After receipt of the contract, revisions to the plan were made as the program became better defined. During the July, 1963 program orientation meeting at the Marshall Space Flight Center, the total manufacturing plan and concept was presented for review, comments and final approval.

Production milestone schedules were established in accordance with the Pegasus Master Plan. As prototype and flight capsule fabrication commenced the production milestones were supplemented by detail fabrication schedules for the Space Systems Division in Rockville and Bladensburg as well as for the manufacturing operations at the Aircraft Missiles Division and the Systems Integration Area in Hagerstown, Maryland.

Responsibility for the manufacture of the spacecraft was determined on the basis of suitability and capability of each facility. Operations at the Bladensburg and Rockville facilities consisted of manufacturing and assembly of all electronic equipment, electronic subassemblies, wiring harnesses, cables and the assembly of the flight capsule electronic subsystems.

Ground support equipment, the Capsule Checkout Unit-Mobile and Capsule Checkout Unit-Launch Complex were also designated as items to be assembled and manufactured at the SSD facilities.

The Aircraft Missiles Division of Fairchild Hiller was assigned the task of fabricating the structural/mechanical details and subassemblies for all units of the program; the Dynamic Test Model, Water Ballast Tank, Prototype, and three flight capsules. Necessary tools, jigs and fixtures required to manufacture these detail parts and subassemblies as well as the spacecraft final assembly and deployment fixture were also manufactured by AMD.

Final installation of all components and the assembly of subsystems into the spacecraft, became the responsibility of the SIA at Hagerstown, Maryland. Transportation, preservation and packaging of the Pegasus was under the cognizance of the SIA. Also, unloading and unpackaging at the system test facility was supervised by and was the responsibility of SIA.

At the launch site, key manufacturing personnel with mechanical, electronic assembly, certified soldering and potting capabilities were assigned to assist in the launch preparations and the maintenance of the spacecraft in a launch ready condition. Personnel from the Bladensburg facility and SIA were involved.

A. Electronic Fabrication

In accordance with the manufacturing plan, the Space Systems Division provided the equipment and personnel to fabricate the necessary electronic hardware for the Pegasus program, namely:

1) Assembly of Printed Circuit Cards for all spacecraft electronics,

the Mobile Capsule Checkout Unit, the Capsule Checkout Unit-Launch Complex, the Satellite Control Center, and miscellaneous GSE.

2) Wiring and assembly of spacecraft black boxes.

3) Fabrication and assembly of canister and spacecraft wiring.

4) Wiring and assembly of electronic GSE.

5) Fabrication and assembly of miscellaneous spacecraft electronic assemblies; detector fuse modules, diode-resistor modules, etc.

The Space Systems Division fabrication sections were specially equipped to perform all phases of electronic assembly in accordance with Marshall Space Flight Center Process Specification MSFC-PROC-158B, Soldering of Electrical Connections (High Reliability). Personnel and supervision were certified, having successfully demonstrated proficiency at the MSFC approved Soldering Training School.

The work was performed in a clean area with controlled environmental conditions. This room was continuously controlled at a temperature of 75° F ± 10° F with relative humidity of 30% to 50%. Fresh air was introduced into the area through the air conditioning system filter while maintaining a slight positive pressure between the area and adjacent areas to prevent infiltration of dust laden air.

The interior finish of the electronic assembly area; floors, walls, ceilings, benches, storage cabinets, etc., were provided with surfaces that were easily cleaned and resistant to dust, grease, chipping, flaking or powdering.

Lighting in the area was provided to a minimum of 100 foot candles of shadowless illumination on the working surfaces.

In areas for cleaning parts and areas where toxic or volatile vapors were generated, an exhaust system was installed to prevent contamination of parts and provide for personnel safety by removal of the vapors as they were generated.

The following equipment was provided in the electronic assembly area:

1) Thermal wire strippers with variacs.

2) Hand precision cutting type strippers.

3) Thermal shunts (as necessary to protect heat-sensitive components and to prevent wicking of wires.)

4) Lead component cleaning tools.

5) Soldering irons.

6) Plastic bag heat sealing equipment.

7) Terminal staking machines.

8) Flotron benches.

9) Component lead bending tools.

10) Temperature controlled ovens.

11) Refrigerators

12) Vacuum pumps and bell jars.

13) Degreasers.

14) Ultra sonic cleaners.

15) Triple beam balance.

16) 10 power magnifiers.

17) 7 x 30 power magnifiers.

18) Heavy duty vacuum cleaner.

19) Hot air blowers.

20) Little Joe spaghetti cutter.

21) HyRing staking equipment. Hydraulic 1/2" to 1-1/2" capacity.

22) Lugging tools, various.

23) Various connector holders, printed circuit board holding fixtures, and numerous bench fixtures, material storage bins and racks.

Personnel in the electronic assembly area were outfitted with lintless shop coats and white clean nylon gloves to prevent contamination of surfaces prepared for soldering and assembly.

When the electronic assembly area was fully equipped and staffed, the production capabilities entailed the following:

1) Printed circuit assembly line.

2) Harness and cabling section.

3) Conformal coating and potting section.

4) Hardwiring and subassembly section.

5) Electronic box closing section.

Electronic box assembly flow was as follows:

1) Review drawing

a) Prepare material planning action sheet.

b) Submit sheet to material control for review.

c) Material control checks for items in stock.

d) Material control prepares and submits purchase requisition to purchasing for items not on order or in stock.

e) Purchasing prepares purchase order for procurement of open items.

2) Issue work order for detail items.

a) Fabricate detail items and identify.

b) Inspect for conformity and workmanship.

c) Ship to stores.

3) Issue work order for subassembly.

a) Prepare parts list in accordance with drawing bill of material.

b) Draw items from stores in accordance with parts list.

c) Log serial numbers of components withdrawn from stores on parts list for permanent record.

d) Bend wire leads of components, install into printed wiring boards per drawing requirements and solder in accordance with MSFC-PROC-158B and identify.

e) Inspect for conformity with print, specification and for workmanship.

f) Prepot test.

g) Prepare for conformal coating, clean and mask.

h) Conformal coat printed circuit board and components per drawing requirements.

i) Inspect for purity, air bubbles and cracks.

j) Identify with part number and electrical characteristics.

k) Board level test.

l) Ship to stores.

4) Issue work order for box closing.

a) Prepare parts list in accordance with drawing bill of material.

b) Draw items from stores in accordance with parts list.

c) Log serial numbers of components withdrawn from stores on parts list for permanent record.

d) Clean all connectors and contact figures in accordance with Fairchild Hiller Space Systems Division specification SP-0004 (connector cleaning for removal of flux residue).

e) Inspect connectors and contact fingers for cleanliness.

f) Assemble complete item in accordance with drawing requirements. Quality control personnel and customer representatives to witness conformity, torquing of screws, nuts and bolts in accordance with specifications and drawing requirements.

g) Safety wire.

h) Inspect and seal.

i) Log closing date - obtain Quality Control approval and customer approval.

j) Identify and serilize - maintain log.

k) Box level test.

l) Ship to stores.

With some variations, assembly of the subsystems i. e. canister assembly and harness assembly, followed the same rigid workmanship requirements as established for the assembly of the electronic box assemblies.

1. Detector Line

The Aircraft Missiles Division of Fairchild Hiller in Hagerstown is one of the foremost experienced bonding and laminating concerns on the East Coast. Due to this experience the fabrication of the detector panels was initiated at AMD.

For the fabrication of the detector panel, AMD was equipped with the following:

1) Detector assembly environmental control chamber.

2) Foam mixer.

3) Foaming box.

4) Alodine process line and enclosure.

5) Detector laminator.

6) Detector bonding process.

7) Detector panel bonding press.

8) Detector handling racks and inner plant transport enclosures.

The environmental control chamber was designed and constructed to USAF Class III clean room specifications.

Production of the prototype detector panel was released in October of 1963. The detector capacitor was of the gold leaf backface type with indium fastened contactors and a thermal control coating of alodine.

Initial detector panel production problems and solutions were:

1) The alodine coating of the various aluminum alloys proved to be more difficult than anticipated. It was found that each alloy had to have a specific bath immersion time, if the alodine thermal control properties were to be the same for all alloys. Also the higher-than-normal concentrations of additives to the alodine bath required unusually rapid handling of parts between the bath and rinse tank. Additional problems with the production of the detector panels were concerned with achieving satisfactory bond lines between the target sheet and the mylar, the gold leaf to the mylar, and the gold leaf to the foam plate. Also, the problem of attaching a contactor to the gold leaf surface required a solution. The bonding problem was effectively solved by use of a properly designed and adjusted set of punch rollers with a heavy rolling pressure that eliminated all possibility of trapping air bubbles between the bond. Satisfactory performance of the mylar to target sheet adhesive at high temperatures was achieved by using the proper mixture of off the shelf DuPont polyester adhesives.

Application of gold leaf presented little or no problem except when double layers of gold leaf were applied, resulting in a non-bonded area. The contactors were applied with indium solder to the gold leaf, allowing any of several possible contactor attachment methods to be used satisfactorily.

2) The final problem to be encountered and solved was separation of the bond between the capacitor and the form plate, (the problem was discovered during the thermal cylcing test). The cause of separation was traced to the assembly bonding process, which allowed free expansion of the foam plate during the bonding operation. Due to the freedom allowed, the foam plate was expanding with greater linear dimension than the capacitor at bonding temperatures of 300° F to 350° F. The adhesive bondline cured at the high temperature and locked the foam in its expanded state.

During cooling after thermal vacuum tests, the foam exerted compressive loads on the target sheet. The vacuum test conditions removed the restraining atmospheric pressures which tend to compress the target sheet against the foam. The adhesive bond, being predictably weaker at higher temperatures in the thermal vacuum test, are significantly weaker in tension than in shear, with resultant "oil canning" of the capacitor target sheet from the foam. The solution was to tightly restrain the foam plate during the panel assembly bonding operation so that the foam plate would

not expand more than the aluminum target sheet.

Although detector panels were fabricated for the Pegasus prototype at AMD Hagerstown, there were continuing efforts to obtain additional sources for the manufacturing of the panels as a precaution against unanticipated problems.

In the spring of 1964 a major decision was made by NASA and FHSC to use detector panels developed by G. T. Schjeldahl under contract to NASA as flight items instead of those made by AMD Fairchild Hiller at Hagerstown.

B. Spacecraft Structure and Tooling

The Aircraft Missiles Division of Fairchild Hiller in Hagerstown, Maryland had been designated as the manufacturing facility for the structural/mechanical portion of the Pegasus. Items included were the wing frames, center section, canister and all tooling necessary for their fabrication. Specifically AMD was to manufacture all tooling and hardware for the Dynamic Test Model, Prototype and three flight articles.

Major tooling consisted of:

1 ea-Wing Deployment fixture, preliminary assembly.

3 ea-Wing Deployment fixture, flight capsule.

1 ea-Center section - assembly drill jig.

1 ea-Detector frame assembly drill jig (full).

1 ea-Detector frame assembly drill jig (half).

1 ea-Male hinge rail subassembly full detector frame.

1 ea-Female hinge rail subassembly full detector frame.

5 ea-Trunnion fixture, center section assembly.

1 ea-Handling and assembly fixture, electronic canister.

1 ea-Detector panel frame intercostal assembly jig.

1 ea-Center section side panel assembly jig.

1 ea-Center section main assembly jig.

2 ea-Panel frame storage rack and dolly.

3 pr-Detector panel shock mount clip installation jig.

1 ea-Solar paddle sandwich structure bonding assembly jig lateral.

1 ea-Solar paddle sandwich structure bonding assembly jig, forward.

1 ea-Solar paddle sandwich structure drill jig.

1 ea-Solar paddle sandwich structure drill jig forward.

1 set-IR aspect sensors mounts bonding, drill jigs and assembly jigs.

2 ea-Electronics canister dollies.

1 ea-Center section master interface gage.

3 ea-Lifting slings.

2 ea-Container lifting slings.

1 set-DTM test fixtures, including vertical and horizontal vibration drive ring support tower and simulated spring rate assemblies.

The majority of the tooling was completed within the first four months of the program. In May of 1963, a full Pegasus structural/mechanical deployment preliminary assembly and a wing deployment support system was fabricated and demonstrated.

All tooling had been completed by October, 1963, and fabrication of detail parts for the prototype unit was well underway. The DTM center section structure was complete in September, 1963, and static load tested at SSD Rockville with satisfactory results.

By December, 1963, the Pegasus prototype structural/mechanical components were complete and assembled on a wing deployment support system. Solar paddles were fabricated and shipped to the vendor for installation of solar cells. The Water Ballast Tank was completed and shipped to Marshall Space Flight Center.

The fabrication and assembly of the DTM caused certain changes in the spacecraft to be initiated. These include:

1) Complete review of all attaching hardware and recommending specific engineering changes.

2) Ensuring accessibility of electronic components for maintenance and possible replacement.

3) Recommendations of methods for attaching the thermal insulation to the center section structure to reduce the possibility of damage upon final installation.

4) Change in the method of mounting the antenna diplexers, hybrid ring, and the earth aspect sensors for unit replacement purposes.

5) Elimination of folds around wing panel bumpers.

6) Increase in the fold radii at the wing panel hinge points.

7) Installation of a vibration loop at the detector panel terminals.

8) Substitution of mylar for cord ties in attaching ribbon to the wing panel structure.

C. Electronics Canister

The fabrication of the electronics canister structure was accomplished by the Aircraft Missiles Division of Fairchild Hiller, while the installation of the electronic components, fabrication, installation of the canister harnesses, and testing of the unit was the function of Space Systems Division in Bladensburg.

The prototype harnesses were developed on a mockup canister and connected to dummy black boxes to which flight connectors had been attached. This also permitted an accessibility and maintainability study to be conducted in order that the optimal harness design might be obtained. At the completion of the study, final harness layout drawings and wire running tests were generated and released to manufacturing for production of the flight articles.

For the production run of the harnesses, in addition to the canister mockup, potting molds were required. The molds were developed to encapsulate or pot the wires at the junction of the connectors.

To circumvent any problems that may have arisen in the application of the potting compounds, electronic assembly personnel were sent to the Marshall Space Flight Center to attend the potting school. The potting requirement was in accordance with MSFC-PROC-186A and the personnel were certified to have satisfactorily completed the prescribed course.

D. Systems Integration Area

Installation and assembly of the Dynamic Test Model, the Prototype unit and three flight articles was performed at the Systems Integration Area in Hagerstown, Maryland.

An area of 12,000 sq. ft. with head room of 65 ft., was provided and maintained in a clean and orderly condition for the assembly of the spacecraft. The area was frequently and thoroughly cleaned, smoking and eating in the area was not permitted. To prevent infiltration of dust laden air, a positive pressure was maintained relative to adjacent areas. As in the electronic assembly area, the personnel were equipped with lintless shop coats, nylon gloves and head caps to minimize contamination of the assembly items and the flight article.

The following items were manufactured by the Aircraft Missiles Division and transported to the Systems Integration Area for assembly, test, and checkout.

Center Section - Structure

Detector Panel Frames

Scissor Linkage

Detector Support Frame

Wing Panel Frame

Restraint System

Gear box deployment mechanism and installation

Electronics Canister

A full scale structural/mechanical MTS deployment preliminary assembly and wing deployment support system were completed and successfully demonstrated in May 1963. The preliminary assembly, employed for kinematic design studies and for component sizing and location, consisted of a center section - one wing and a hand-cranked wing deployment linkage system.

By October, 1963, the DTM was assembled in the SIA and prepared for shipment to G.E. for vibration tests. During the testing of the DTM, assembly had begun on the prototype unit and the first flight spacecraft. Constraints between the prototype and the first flight capsule were removed so that the flight unit could proceed at its own pace.

The completed flight unit was shipped to Valley Forge, Pa., for testing on 19 December 1964, and after a successful test, was shipped to KSC for final launch preparations and checkout on 25 December 1964.

Assembly operations started on the second flight capsule immediately after the first unit was shipped for test. Assembly of the second unit was practically

cut in half since it was ready for testing within five months after assembly and erection had begun.

Pegasus C took about one-half of the time to assemble as did Pegasus B. This unit was shipped to KSC for launch preparations in June 1965.

Manufacturing effort after launch of Pegasus C consisted of compiling and pricing residual inventory on all test equipment, tooling, purchased parts, subcontract items, spare parts and GSE.

BEST SELLERS

FROM NATIONAL TECHNICAL INFORMATION SERVICE

Government Reports Annual Index—1976
NTISANNI-7601/PAT PC$345.00

Interagency Task Force on Product Liability. Insurance Study
PB-263 600/PAT263p PC$9.00/MF$3.00

Engineering Design Handbook. Metric Conversion Guide
ADA-029 902/PAT146p PC$9.00/MF$9.00

U.S. Technology Policy
PB-263 806/PAT182p PC$9.00/MF$3.00

Interagency Task Force on Product Liability Briefing Report: Executive Summary
PB-262 515/PAT56p PC$4.50/MF$3.00

How to Obtain Information in Different Fields of Science and Technology: A User's Guide
AD-780 061/PAT124p PC$5.50/MF$3.00

Buying Solar
PB-262 134/PAT81p PC$5.00/MF$3.00

Methanol: Its Synthesis, Use as a Fuel, Economics, and Hazards
NP-21727/PAT186p PC$7.50/MF$3.00

Citizens Radio Service Transactions
PB-235 959/PAT PC$100.00 (Mag. Tape)

Saudi Arabia Five Year Plan, 1975-1980
PB-246 572/PAT683p PC$16.25/MF$3.00

Engineering of Wind Energy Systems
SAND-750 530/PAT24p PC$3.50/MF$3.00

Performance Measurement and the Criminal Justice System: Four Conceptual Approaches
PB-262 196/PAT419p PC$11.00/MF$3.00

Outer Continental Shelf Oil and Gas Costs and Production Volume: Their Impact on the Nation's Energy Balance to 1990
PB-262 533/PAT241p PC$8.00/MF$3.00

Operational Influences on Reliability
ADA-035 016/PAT210p PC$7.75/MF$3.00

Reducing Excess Hospital Capacity
HRP-0015 199/PAT236p PC$8.00/MF$3.00

Guide and Checklist for Development and Evaluation of State and Local Government Radiological Emergency Response Plans in Support of Fixed Nuclear Facilities
PB-264 798/PAT82p PC$5.00/MF$3.00

HOW TO ORDER

When you indicate the method of payment, please note if a purchase order is not accompanied by payment, you will be billed an addition $5.00 *ship and bill* charge. And please include the card expiration date when using American Express.

Normal delivery time takes three to five weeks. It is vital that you order by number or your order will be manually filled, insuring a delay. You can opt for *airmail delivery* for $2.00 North American continent; $3.00 outside North American continent charge per item. Just check the *Airmail Service* box. If you're really pressed for time, call the NTIS Rush Handling Service (703) 557-4700. For a $10.00 charge per item, your order will be airmailed within 48 hours. Or, you can pick up your order in the Washington Information Center & Bookstore or at our Springfield Operations Center within 24 hours for a $6.00 per item charge.

You may also place your order by telephone or if you have an NTIS Deposit Account or an American Express card order through TELEX. The order desk number is (703) 557-4650 and the TELEX number is 89-9405.

Thank you for your interest in NTIS. We appreciate your order.

METHOD OF PAYMENT

- ☐ Charge my NTIS deposit account no. _____
- ☐ Purchase order no. _____
- ☐ Check enclosed for $_____
- ☐ Bill me. Add $5.00 per order and sign below. (Not available outside North American continent.)
- ☐ Charge to my American Express Card account number

☐☐☐☐☐☐☐☐☐☐☐☐☐☐☐

Card expiration date_____

Signature_____

☐ Airmail Services requested

NAME_____

ADDRESS_____

CITY, STATE, ZIP_____

Item Number	Quantity		Unit Price*	Total Price
	Paper Copy (PC)	Microfiche (MF)		
			Sub Total	
			Additional Charge	
			Enter Grand Total	

All prices subject to change. The prices above are accurate as of 8/77

Foreign Prices on Request.

Clip and mail to:

NTIS

National Technical Information Service
U.S. DEPARTMENT OF COMMERCE
Springfield, Va. 22161
(703) 557-4650 TELEX 89-9405