LS006-002-2H

NATIONAL AERONAUTICS AND SPACE ADMINISTRATION

NAS 8-25145

LRV OPERATIONS HANDBOOK APPENDIX A (PERFORMANCE DATA)

(NASA-CR-143282) LRV OPERATIONS HANDBOOK, APPENDIX A (PERFORMANCE DATA) (Boeing Co., Huntsville, Ala.) 110 p

N75-75810

Unclas

00/98 16311

REVISION 2

JUNE 10, 1971

MANNED SPACECRAFT CENTER

HOUSTON, TEXAS

PREFACE

This document is the second revision issue of the Appendix A (Performance Data) to the LRV Operations Handbook. This appendix will be maintained on a controlled basis by the Systems Engineering Division of the Apollo Spacecraft Program Office, with change pages issued as required.

It is requested that any comments to the data content, requirements for additional data, and distribution changes be sent to PD4/ Mr. J. W. Mistrot, extension 4667.

LS006-002-2H

LUNAR ROVING VEHICLE
OPERATIONS HANDBOOK
CONTRACT NAS8-25145

APPROVED: Albert F. Fields

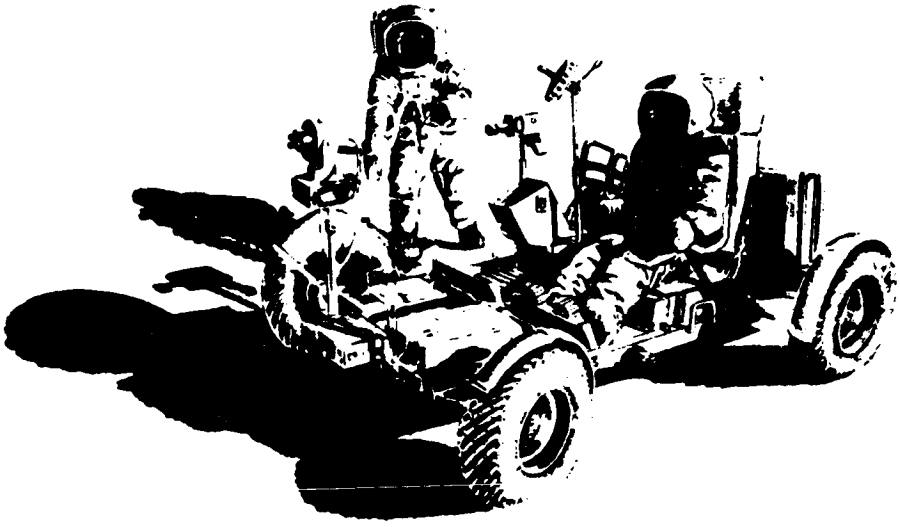

PREPARED BY THE BOEING COMPANY
LRV SYSTEMS ENGINEERING
HUNTSVILLE, ALABAMA

REVISIONS

REV LTR	AMEND NO.	DESCRIPTION	DATE	APPROVED

TABLE OF CONTENTS

SECTION		PAGE
1.0	INTRODUCTION	A-1
1.1	PURPOSE	A-1
1.2	CONTENTS	A-1
1.3	AMENDMENTS	A-1
1.4	SELECTED ABBREVIATIONS AND ACRONYMS	A-1
2.0	CONFIGURATION	A-2
2.1	CHASSIS CONFIGURATION	A-2
2.2	SUSPENSION SYSTEM CONFIGURATION	A-2
2.3	STEERING SYSTEM CONFIGURATION	A-2
2.4	TRACTION DRIVE CONFIGURATION	A-2
2.5	WHEEL CONFIGURATION	A-2
2.6	DRIVE CONTROL	A-2
2.7	CREW STATION CONFIGURATION	A-2
2.8	POWER SYSTEM CONFIGURATION	A-3
2.9	NAVIGATION SYSTEM CONFIGURATION	A-3
2.10	THERMAL CONTROL CONFIGURATION	A-3
2.11	PAYLOAD INTERFACES	A-3
3.0	CONSTRAINTS AND OPERATIONAL LIMITATIONS	A-23
3.1	CHASSIS SUBSYSTEM CONSTRAINTS	A-23
3.2	SUSPENSION SUBSYSTEM CONSTRAINTS	A-23
3.3	MOBILITY SUBSYSTEM CONSTRAINTS	A-23
3.4	ELECTRICAL POWER SUBSYSTEM CONSTRAINTS	A-23
3.5	NAVIGATION SUBSYSTEM CONSTRAINTS	A-25
3.6	DISPLAY AND CONTROLS SUBSYSTEM CONSTRAINTS	A-25
3.7	CREW STATION SUBSYSTEM CONSTRAINTS	A-26
3.8	VEHICLE DYNAMIC OPERATION CONSTRAINTS	A-26
3.9	PARKING CONSTRAINTS	A-26
3.10	THERMAL CONSTRAINTS	A-26
4.0	SUBSYSTEM PERFORMANCE DATA	A-46
4.1	MOBILITY SUBSYSTEM PERFORMANCE	A-46
4.2	ELECTRICAL SUBSYSTEM PERFORMANCE	A-59
4.3	NAVIGATION SUBSYSTEM PERFORMANCE	A-67
4.4	DISPLAYS AND CONSTROLS SUBSYSTEM PERFORMANCE	A-75
5.0	VEHICLE PERFORMANCE DATA	A-79
5.1	VEHICLE DYNAMIC RESPONSE	A-79
5.2	RANGE, SPEED, LURAIN CAPABILITY	A-82
5.3	THERMAL PERFORMANCE	A-83
5.4	CONTROLLABILITY	A-83
6.0	SPECIFIC VEHICLE DATA	A-93
6.1	LRV-1	A-93

LIST OF FIGURES

FIGURE NO.		PAGE
2-1	LRV CONFIGURATION WITHOUT STOWED PAYLOAD	A-4
2-2	LRV DIMENSIONS	A-5
2-3	LRV CHASSIS	A-6
2-4	LRV SUSPENSION SYSTEM	A-7
2-5	LRV STEERING SYSTEM	A-8
2-6	LRV TRACTION DRIVE	A-9
2-7	LRV WHEEL	A-10
2-8	LRV WHEEL DEFLECTION VS LOAD	A-11
2-9A	LRV DRIVE CONTROL - HAND CONTROLLER	A-12
2-9B	LRV DRIVE CONTROL - DRIVE CONTROLLER ELECTRONICS	A-13
2-10A	LRV CREW STATION COMPONENTS	A-14
2-10B	LRV CREW STATION COMPONENTS - CONTROL & DISPLAY CONSOLE	A-15
2-11	LRV BATTERY AND DUST COVER ASSEMBLY	A-16
2-12	LRV NAVIGATION COMPONENTS	A-17
2-13	LRV FORWARD CHASSIS COMPONENTS THERMAL CONTROL	A-18
2-14A	PAYLOAD INTERFACES, LCRU, HIGH GAIN ANTENNA, TV CAMERA INTERFACES	A-19
2-14B	PAYLOAD INTERFACE, LCRU/TV/LRV CABLE STOWAGE	A-20
2-14C	PAYLOAD INTERFACE, LOW GAIN ANTENNA AND 16 MM DAC INTERFACE	A-21
2-14D	PAYLOAD INTERFACE, LRV REAR PAYLOAD PALLET ADAPTERS	A-22
3-1	CREW STATION LIMIT LOADS (HANDHOLDS & TOEHOLDS)	A-28
3-2	CREW STATION LIMIT LOADS (SEATS & FOOTRESTS)	A-29
3-3	GROSS WEIGHT ALLOWABLE C.G. ENVELOPE	A-30
3-4	VEHICLE STATIC STABILITY	A-31
3-5	LATERAL LIMIT VELOCITY FOR OVERTURNING FROM COLLISION WITH IMMOVABLE OBSTACLE	A-32
3-6	LRV SLIDING LIMIT VELOCITY AS A FUNCTION OF TURNING RADIUS AND SLOPE ANGLE FOR A 0.8 COEFFICIENT OF FRICTION	A-33
3-7	LRV SLIDING LIMIT VELOCITY AS A FUNCTION OF TURNING RADIUS AND SLOPE ANGLE FOR A 0.6 COEFFICIENT OF FRICTION (NOMINAL)	A-34
3-8	LRV OVERTURNING LIMIT VELOCITY AS A FUNCTION OF TURNING RADIUS AND SLOPE ANGLE	A-35
3-9	MAXIMUM BUMP HEIGHTS WHICH CAN BE ENCOUNTERED WITHOUT CAUSING OVERTURN AS A FUNCTION OF VELOCITY AND SLOPE	A-36
3-10	TURNING RADIUS REQUIRED TO PREVENT OVERTURN ON 0° SLOPE	A-37
3-11	TURNING RADIUS REQUIRED TO PREVENT OVERTURN ON 10° SLOPE	A-38

LIST OF FIGURES
(Continued)

FIGURE NO.		PAGE
3-12	TURNING RADIUS REQUIRED TO PREVENT OVERTURN ON 20° SLOPE	A-39
3-13	TURNING RADIUS REQUIRED TO PREVENT OVERTURN ON 0° SLOPE	A-40
3-14	TURNING RADIUS REQUIRED TO PREVENT OVERTURN ON 10° SLOPE	A-41
3-15	TURNING RADIUS REQUIRED TO PREVENT OVERTURN ON 20° SLOPE	A-42
3-16	SAFE DRIVING CORRIDOR IN CASE OF STEERING FAILURE	A-43
3-17	PARKING ORIENTATION CONSTRAINTS	A-45
4-0	TOTAL BATTERY CURRENT VS VELOCITY	A-46.1
4-1	VEHICLE POWER CONSUMPTION VS SPEED - 0° SLOPE	A-47
4-2	VEHICLE POWER CONSUMPTION VS SPEED - 5° SLOPE	A-48
4-3	VEHICLE POWER CONSUMPTION VS SPEED - 10° SLOPE	A-49
4-4	LRV TRACTION DRIVE PERFORMANCE	A-50
4-4.1	HARMONIC GEAR TORQUE CHARACTERISTICS	A-50.1
4-5	BATTERY CURRENT VS SPEED	A-51
4-6	TRACTION DRIVE-RATE OF TEMPERATURE INCREASE VS SOLAR ELEVATION ANGLE	A-52
4-7	TRACTION DRIVE-RATE OF TEMPERATURE INCREASE VS ZENITH ANGLE (LEFT FRONT WHEEL)	A-53
4-8	TRACTION DRIVE-RATE OF TEMPERATURE INCREASE VS ZENITH ANGLE (LEFT REAR WHEEL)	A-54
4-9	TRACTION DRIVE-RATE OF TEMPERATURE INCREASE VS ZENITH ANGLE (RIGHT FRONT WHEEL)	A-55
4-10	TRACTIONDDRIVE-RATE OF TEMPERATURE INCREASE VS ZENITH ANGLE (RIGHT REAR WHEEL)	A-56
4-11	TRACTION DRIVE-RATE OF TEMPERATURE INCREASE VS SPEED	A-57
4-12	TRACTION DRIVE-RATE OF TEMPERATURE INCREASE VS SLOPE	A-58
4-13	VOLTAGE VS CURRENT DRAW PER BATTERY	A-60
4-14	BATTERY VOLTAGE VS STATE OF CHARGE	A-61
4-15	RIGHT BATTERY-RATE OF TEMPERATURE INCREASE VS CURRENT	A-62
4-16	LEFT BATTERY-RATE OF TEMPERATURE INCREASE VS CURRENT	A-63
4-17	LEFT BATTERY-RATE OF TEMPERATURE INCREASE VS BATTERY TEMPERATURE (DUST COVERS OPEN)	A-64

LIST OF FIGURES
(Continued)

FIGURE NO.		PAGE
4-18	RIGHT BATTERY-RATE OF TEMPERATURE INCREASE VS BATTERY TEMPERATURE (DUST COVERS OPEN)	A-65
4-19	DISTRIBUTION LOSSES	A-66
4-20	DGU POWER CONSUMPTION	A-68
4-21	DGU DRIFT RATE VS TEMPERATURE	A-69
4-22	NAVIGATION BEARING ERROR AS A FUNCTION OF DGU DRIFT	A-70
4-23	NAVIGATION SYSTEM UPDATE EQUATIONS	A-71
4-24	NOMOGRAM FOR A_1°	A-72
4-25	NOMOGRAM FOR A_2°	A-73
4-26	EXAMPLE OF NAVIGATION SYSTEM UPDATE	A-74
4-26.1	EFFECTS OF ROLL, PITCH AND SUN SHADOW READING ERRORS ON HEADING	A-74.3
4-27	TORQUE REQUIRED TO ROTATE HAND CONTROLLER FOR THROTTLE CONTROL	A-76
4-28	TORQUE REQUIRED TO ROTATE HAND CONTROLLER FOR STEERING CONTROL	A-77
4-29	BRAKE CONTROL FORCE VS DISPLACEMENT	A-78
5-1	VERTICAL ACCELERATION OF CHASSIS CG AS A FUNCTION OF VELOCITY AND LURAIN TYPE	A-80
5-2	LRV DAMPING POWER LOSSES	A-85
5-4	EFFECT OF WEIGHT CHANGE ON RANGE	A-87
5-5	EFFECT OF LRV OPERATIONAL WEIGHT ON MAXIMUM VELOCITY	A-88
5-7	STOPPING DISTANCE VS INITIAL VELOCITY FOR VARIOUS SLOPES	A-90
5-8	POWER SPECTRAL DENSITY FOR LUNAR SURFACE ROUGHNESS	A-91
6-1	TRACTION DRIVE CHARACTERISTICS FOR LF DRIVE UNIT	A-94
6-2	TRACTION DRIVE CHARACTERISTICS FOR RF DRIVE UNIT	A-95
6-3	TRACTION DRIVE CHARACTERISTICS FOR LR DRIVE UNIT	A-96
6-4	TRACTION DRIVE CHARACTERISTICS FOR RR DRIVE UNIT	A-97
6-5	METER CALIBRATION - MOTOR TEMPERATURE	A-102
6-6	METER CALIBRATION - BATTERY TEMPERATURE	A-103
6-7	LRV-1 METER CALIBRATION - AMP HOUR	A-104
6-8	METER CALIBRATION - VOLTS/AMPS	A-105

LIST OF TABLES

TABLE NO.		PAGE
3-I	PAYLOAD LIMITATIONS	A-24
3-II	COMPONENT TEMPERATURE LIMITS	A-27
3-III	SPEED RESTRICTIONS	A-44
5-I	VIBRATION ENVIRONMENT AT LRV PAYLOAD INTERFACES	A-81
5-II	LRV STEADY STATE POWER CONSUMPTION	A-82
5-IV	LRV CONTROLLABILITY SPEED LIMITS	A-84
6-I	LRV-1 NAVIGATION SYSTEM POWER CONSUMPTION	A-98
6-II	LRV-1 WEIGHT, C.G. AND MOMENTS OF INERTIA	A-99
6-III	LRV-1 LUNAR OPERATIONAL WEIGHT DISTRIBUTION - STATIC, LEVEL LURAIN CONDITION	A-100
6-IV	SUMMARY OF LRV-1 MOBILITY PARAMETERS	A-101

1.0 INTRODUCTION

1.1 PURPOSE

This document is intended to supply LRV performance data necessary for mission planning and flight control personnel to adequately plan and control operation of the LRV on the lunar surface. The data contained herein is to be used in conjunction with the LRV Operations Handbook which contains crew operating procedures, timelines and system description.

1.2 CONTENT

This Appendix A contains data on LRV configuration and defines constraints and operational limitations of the various vehicle subsystems. In addition subsystems performance data are provided as well as overall vehicle performance data. The final section of the Appendix contains data defining constraints and performance data unique to each individual LRV.

1.3 AMENDMENTS

Amendments to data contained in the appendix will be issued as additional data becomes available from LRV test programs and/or as more refined data becomes available from updated analyses. When such amendments are issued, they will be approved and signed by the MSFC LRV Program Manager. MSFC will then transmit one printing master of each amendment to MSC. Reproduction and control of amendment distribution at MSC will be accomplished by MSC.

1.4 SELECTED ABBREVIATIONS AND ACRONYMS

The following abbreviations and acronyms are used throughout this document:

DCE	-	Drive Controller Electronics
DGU	-	Directional Gyro Unit
GCTA	-	Ground Commanded Television Assembly
IPI	-	Integrated Position Indicator
KPH	-	Kilometers per Hour
LCRU	-	Lunar Communications Relay Unit
LRV	-	Lunar Roving Vehicle
NSS	-	Navigation Subsystem
PSD	-	Power Spectral Density
PWM	-	Pulse Width Modulator
SPU	-	Signal Processing Unit
TBD	-	To be Determined

2.0 CONFIGURATION

The illustrations included in this section describe the configuration of the Lunar Roving Vehicle, details and locations of major vehicle subsystems, and important dimensions of the vehicle elements. Figure 2-1 describes the basic LRV configuration and identifies and locates the principal LRV subsystems. Stowed payload is not shown installed on the vehicle but payload mounting interfaces are identified. Important LRV overall dimensions are shown on Figure 2-2.

2.1 CHASSIS CONFIGURATION

The configuration details and principal dimensions of the LRV chassis are shown on Figure 2-3. The floor panels are shown removed to provide details on the primary and secondary structural members.

2.2 SUSPENSION SYSTEM CONFIGURATION

Major components of the LRV Suspension System are shown and identified on Figure 2-4. The torsion bars serve to unfold the wheels during the deployment operations and to provide both contour following and chassis resiliency during operation on the lurain.

2.3 STEERING SYSTEM CONFIGURATION

Major components of the LRV Steering System are shown and identified on Figure 2-5. Only one decoupling ring is provided for each steering system, fore and aft. The aft decoupling ring is located on the right side of the vehicle; the front decoupling ring is located on the left side of the vehicle.

2.4 TRACTION DRIVE CONFIGURATION

Internal configuration of the LRV Traction Drive is shown on Figure 2-6.

2.5 WHEEL CONFIGURATION

The LRV Wheel construction details and critical dimensions are shown on Figure 2-7. The decoupling devices are actuated to provide free-wheeling capability in the event of drive seizure. Wheel deflection characteristics are shown in Figure 2-8.

2.6 DRIVE CONTROL

The major components of the LRV Drive Controls, the Hand Controller, and DCE, are shown in Figures 2-9A and 2-9B, respectively.

2.7 CREW STATION CONFIGURATION

The major components comprising the LRV Crew Station are identified and located on Figure 2-10A. The layout and dimensional characteristics of the control and display console portion of the Crew Station are shown on Figure 2-10B.

2.8 POWER SYSTEM CONFIGURATION

The configuration of the typical LRV Battery and Dust Cover Assembly is defined in Figure 2-11. Battery dimensions are provided on this figure.

2.9 NAVIGATION SYSTEM CONFIGURATION

The components comprising the LRV Navigation System are identified and located on Figure 2-12. Control and Display Console mounted items included in the Navigation System are shown on Figure 2-10B.

2.10 THERMAL CONTROL CONFIGURATION

The major components of the LRV Thermal Control System are identified and located on Figure 2-13. The dust covers are raised between sorties to permit radiation of heat from the space radiators.

2.11 PAYLOAD INTERFACES

The Payload Interfaces with the LRV are shown on Figures 2-14A, 2-14B, 2-14C, and 2-14D. Portions of the interface connectors which are not part of the basic LRV system but which are permanently installed on the LRV are identified on these figures.

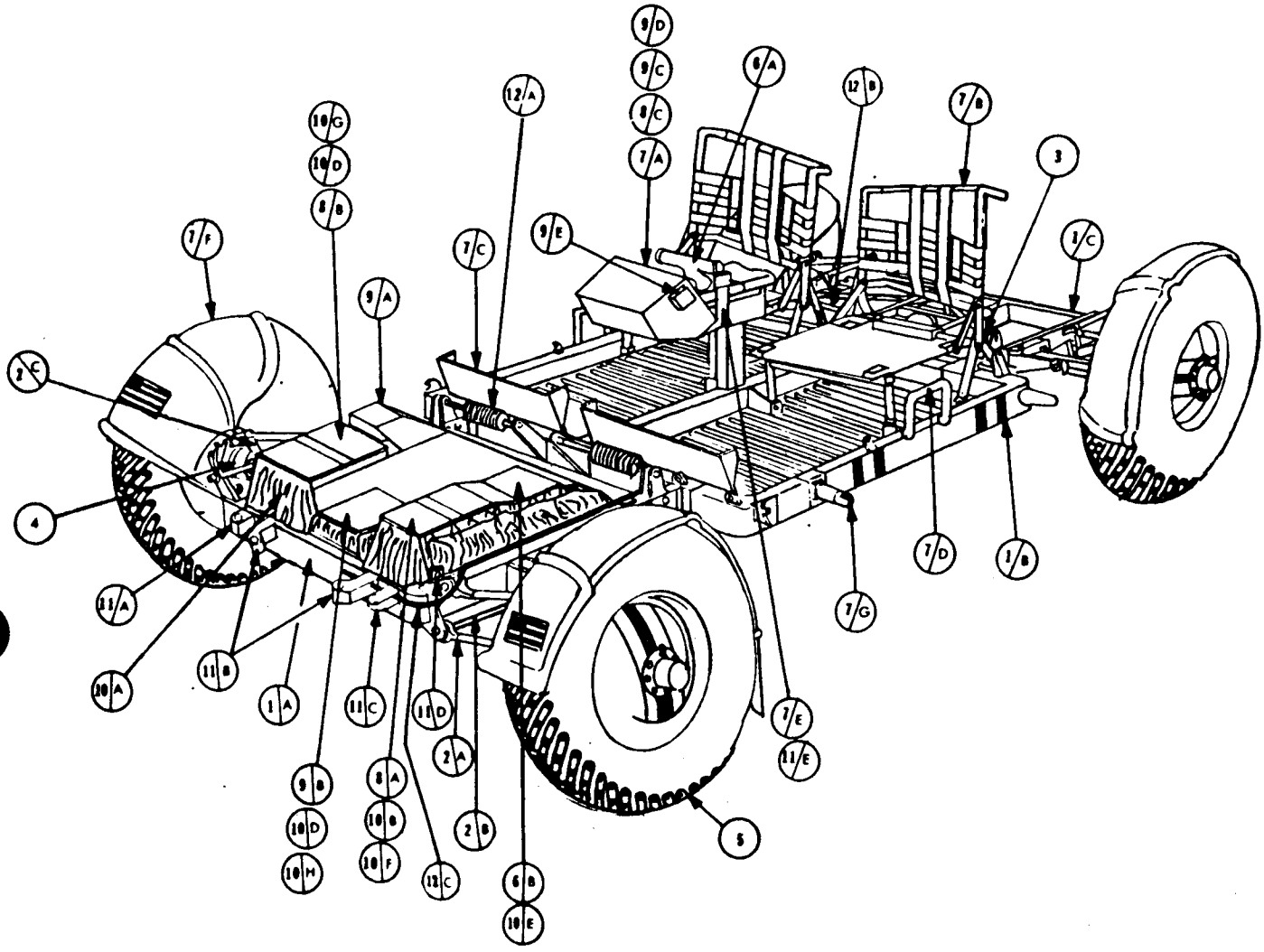

① CHASSIS

A. FORWARD CHASSIS
B. CENTER CHASSIS
C. AFT CHASSIS

② SUSPENSION SYSTEM

A. SUSPENSION ARMS (UPPER AND LOWER)
B. TORSION BARS (UPPER AND LOWER)
C. DAMPER

③ STEERING SYSTEM (FORWARD AND AFT)

④ TRACTION DRIVE

⑤ WHEEL

⑥ DRIVE CONTROL

A. HAND CONTROLLER
B. DRIVE CONTROL ELECTRONICS (DCE)

⑦ CREW STATION

A. CONTROL AND DISPLAY CONSOLE
B. SEAT
C. FOOTREST
D. OUTBOARD HANDHOLD
E. INBOARD HANDHOLD
F. FENDER
G. TOEHOLD

⑧ POWER SYSTEM

A. BATTERY #1
B. BATTERY #2
C. INSTRUMENTATION

⑨ NAVIGATION

A. DIRECTIONAL GYRO UNIT (DGU)
B. SIGNAL PROCESSING UNIT (SPU)
C. INTEGRATED POSITION INDICATOR (IPI)
D. SUN SHADOW DEVICE
E. VEHICLE ATTITUDE INDICATOR

⑩ THERMAL CONTROL

A. INSULATION BLANKET
B. BATTERY NO. 1 DUST COVER
C. BATTERY NO. 2 DUST COVER
D. SPU DUST COVER
E. DCE THERMAL CONTROL UNIT
F. BATTERY NO. 1 RADIATOR
G. BATTERY NO. 2 RADIATOR
H. SPU THERMAL CONTROL UNIT

⑪ PAYLOAD INTERFACE

A. TV CAMERA RECEPTACLE
B. LCRU RECEPTACLE
C. HIGH GAIN ANTENNA RECEPTACLE
D. AUXILIARY CONNECTOR
E. LOW GAIN ANTENNA RECEPTACLE

⑫ DEPLOYMENT COMPONENTS

A. FWD CHASSIS DEPLOYMENT TORSION SPRINGS
B. REAR CHASSIS DEPLOYMENT TORSION BARS
C. SADDLE RELEASE CABLE

FIGURE 2-1 LRV CONFIGURATION WITHOUT STOWED PAYLOAD

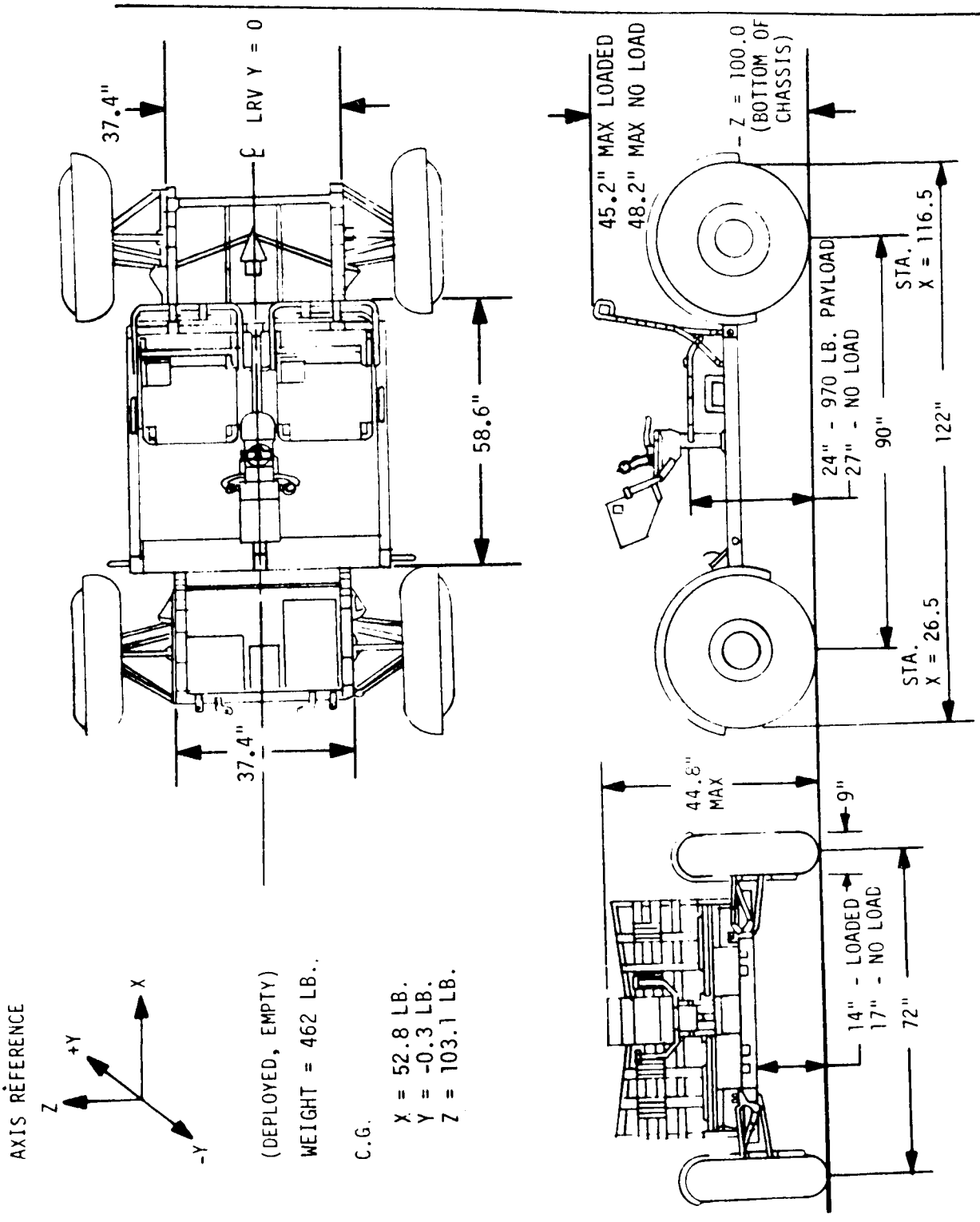

FIGURE 2-2 LRV DIMENSIONS

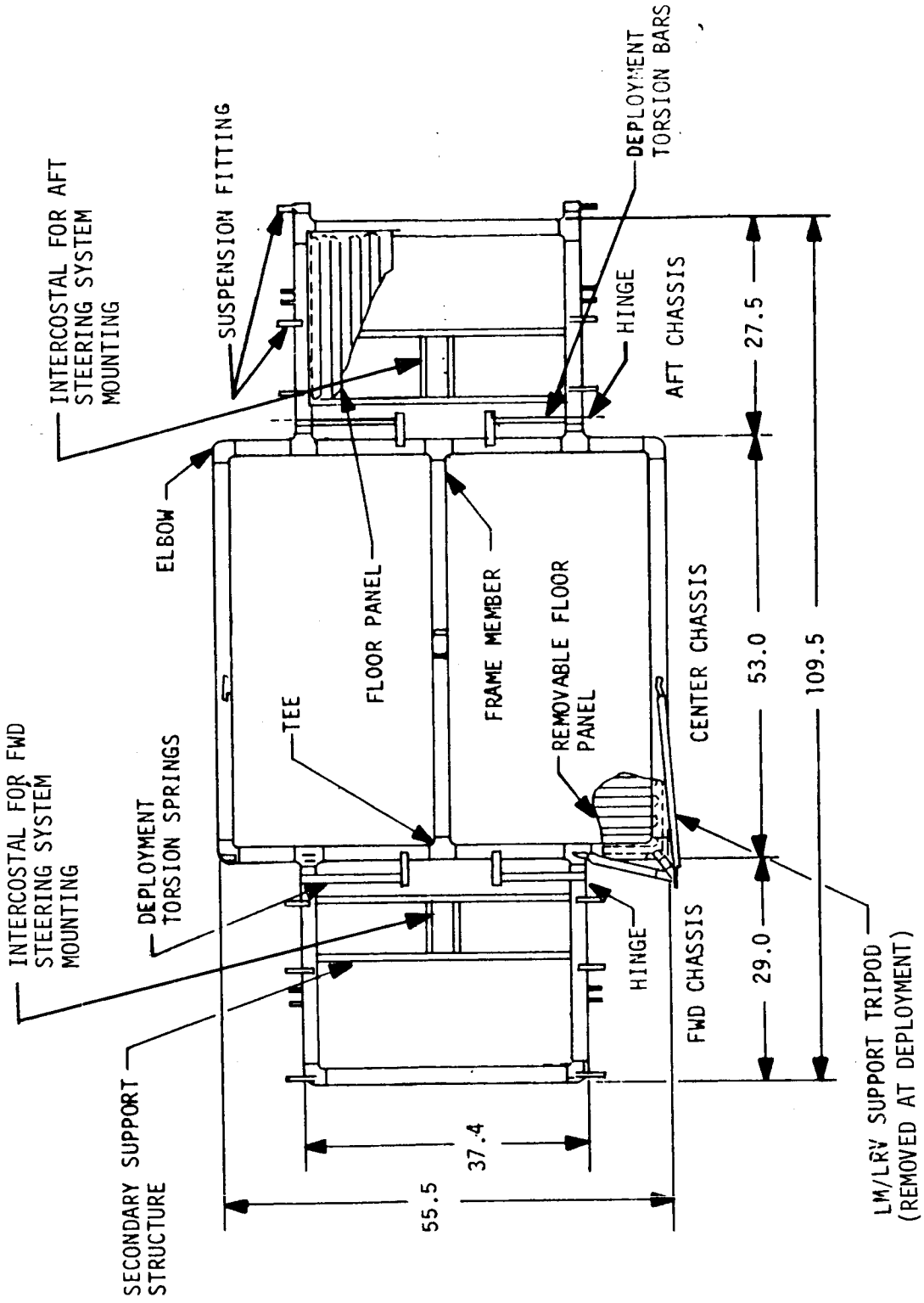

FIGURE 2-3 LRV CHASSIS

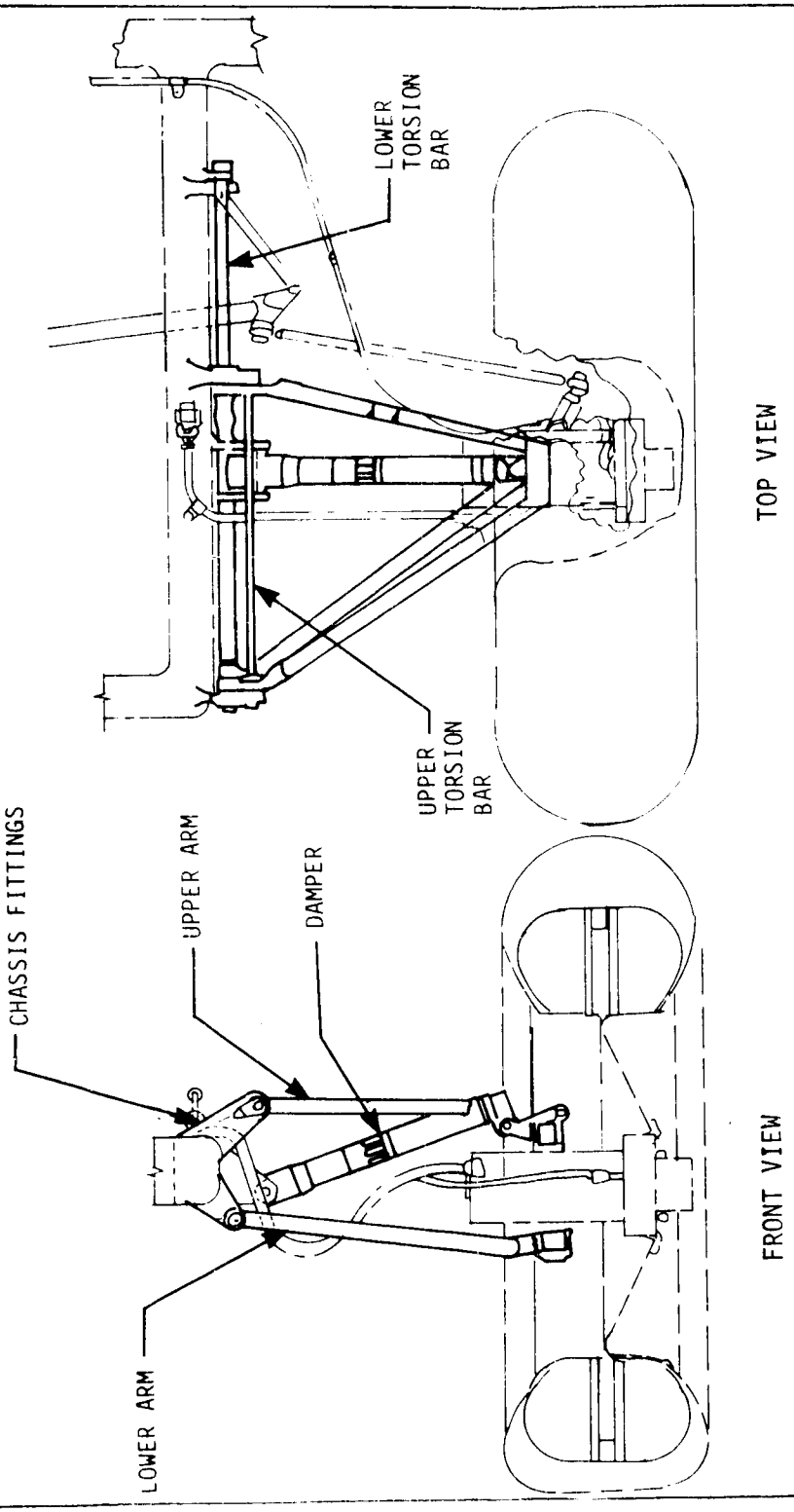

FIGURE 2-4 LRV SUSPENSION SYSTEM

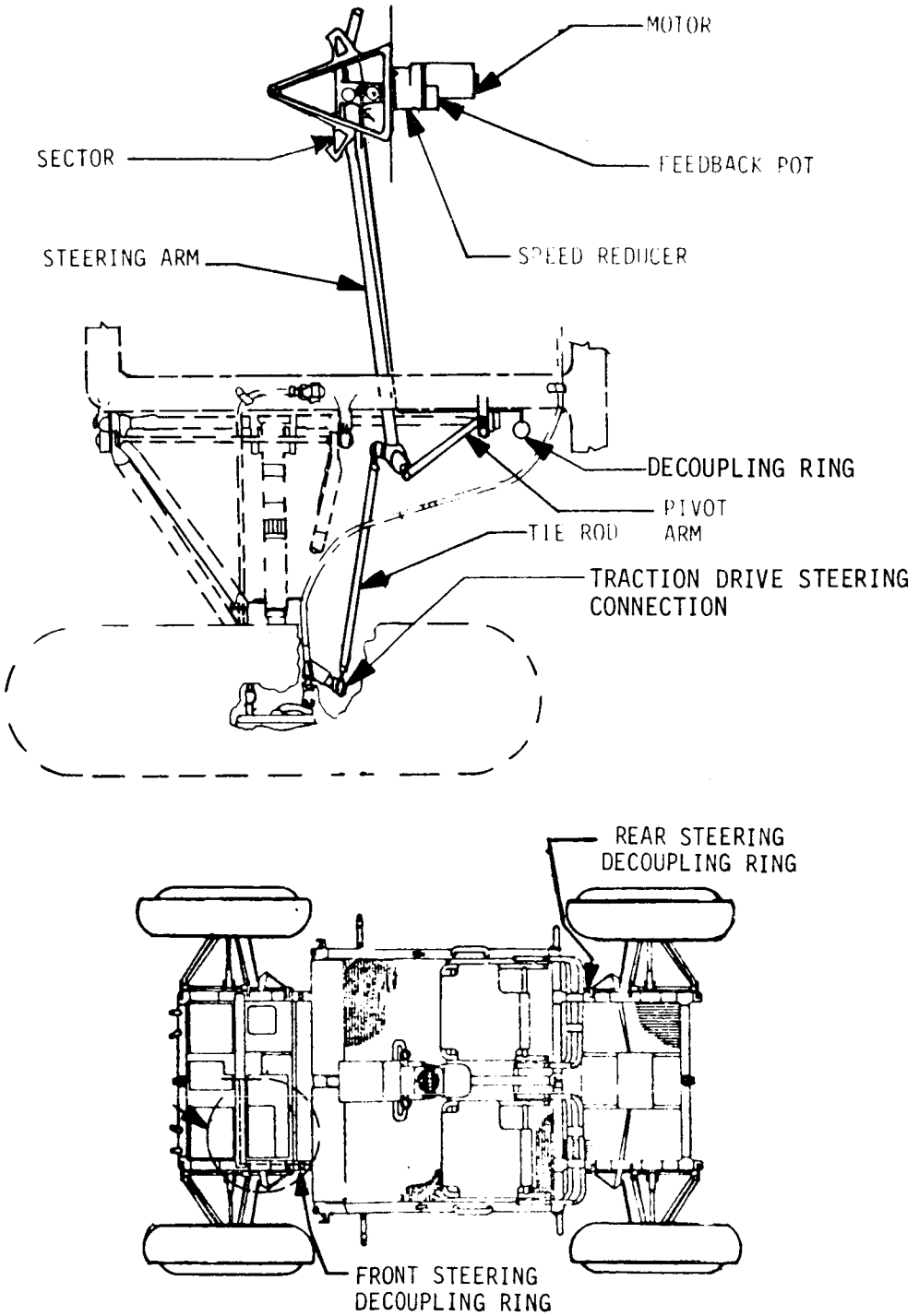

FIGURE 2-5 LRV STEERING SYSTEM

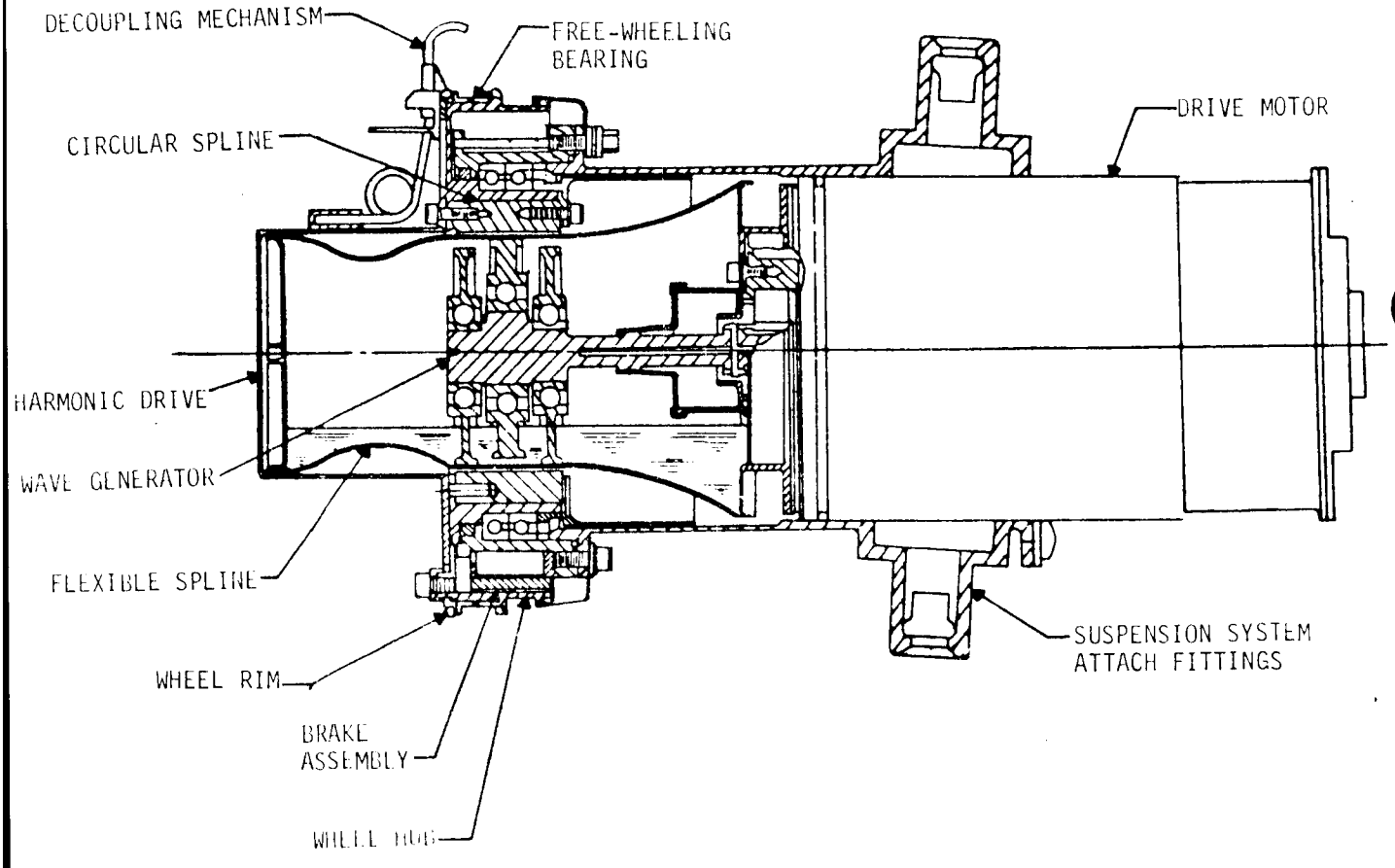

FIGURE 2-6 LRV TRACTION DRIVE

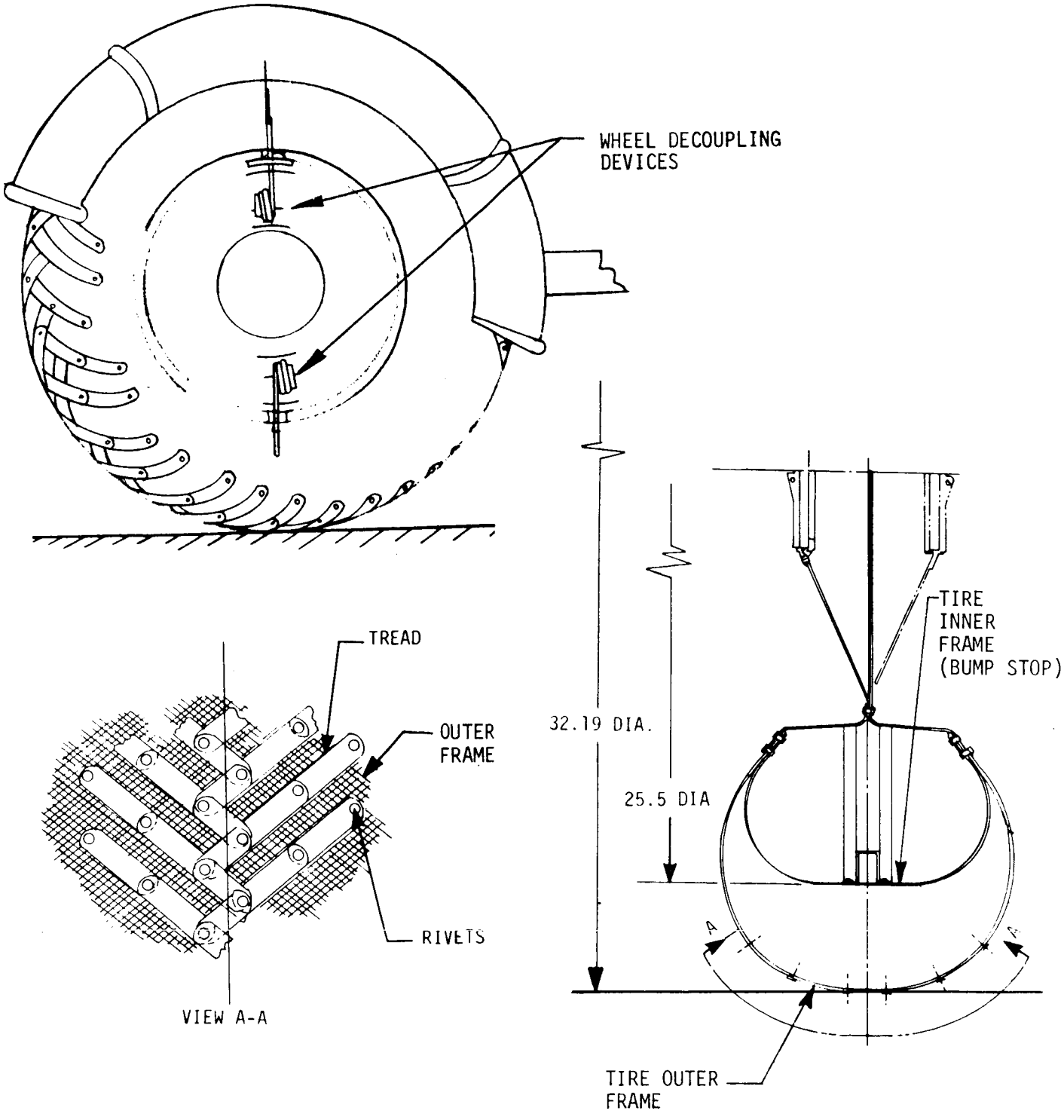

FIGURE 2-7 LRV WHEEL

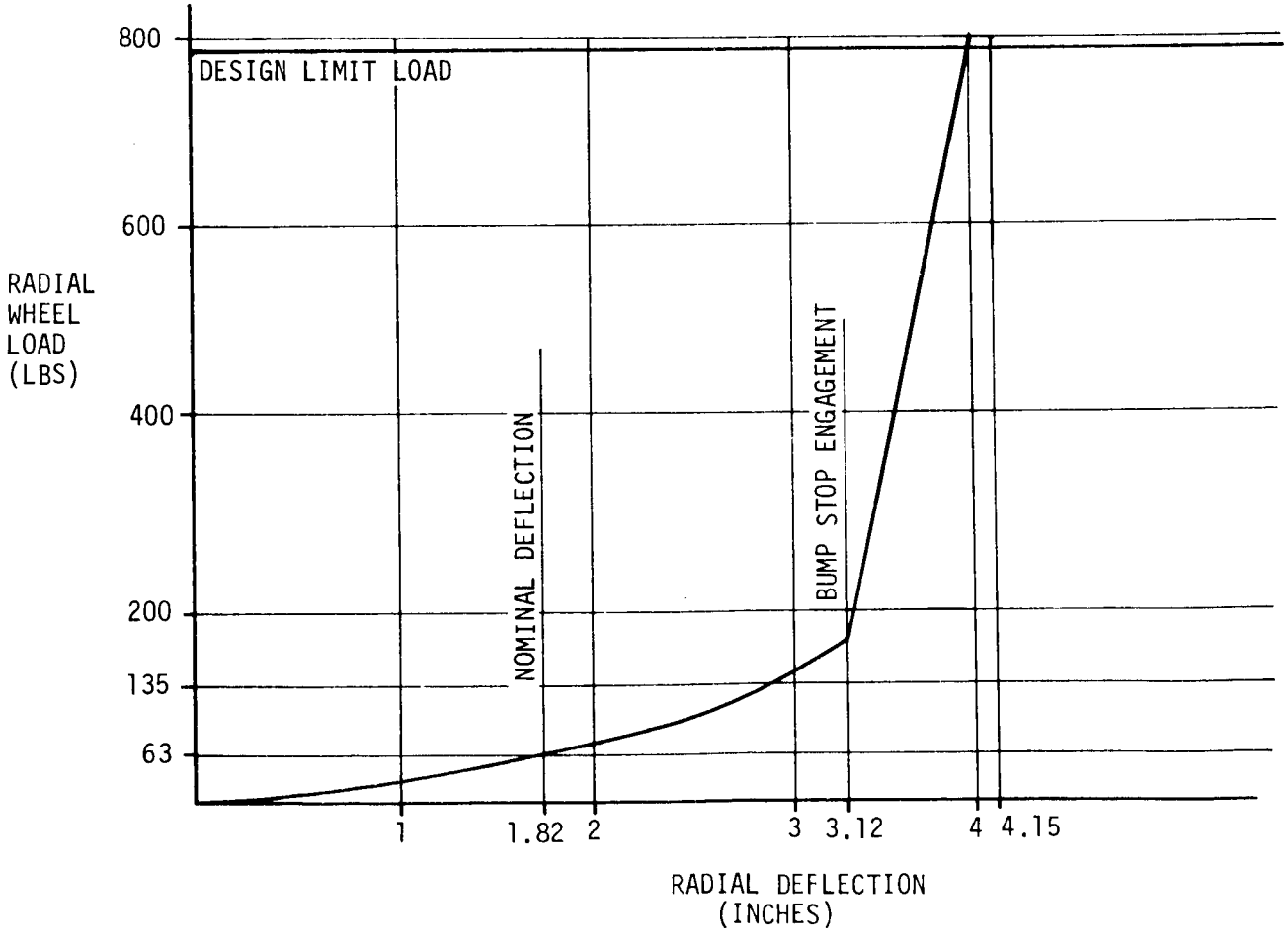

FIGURE 2-8 LRV WHEEL DEFLECTION VS LOAD

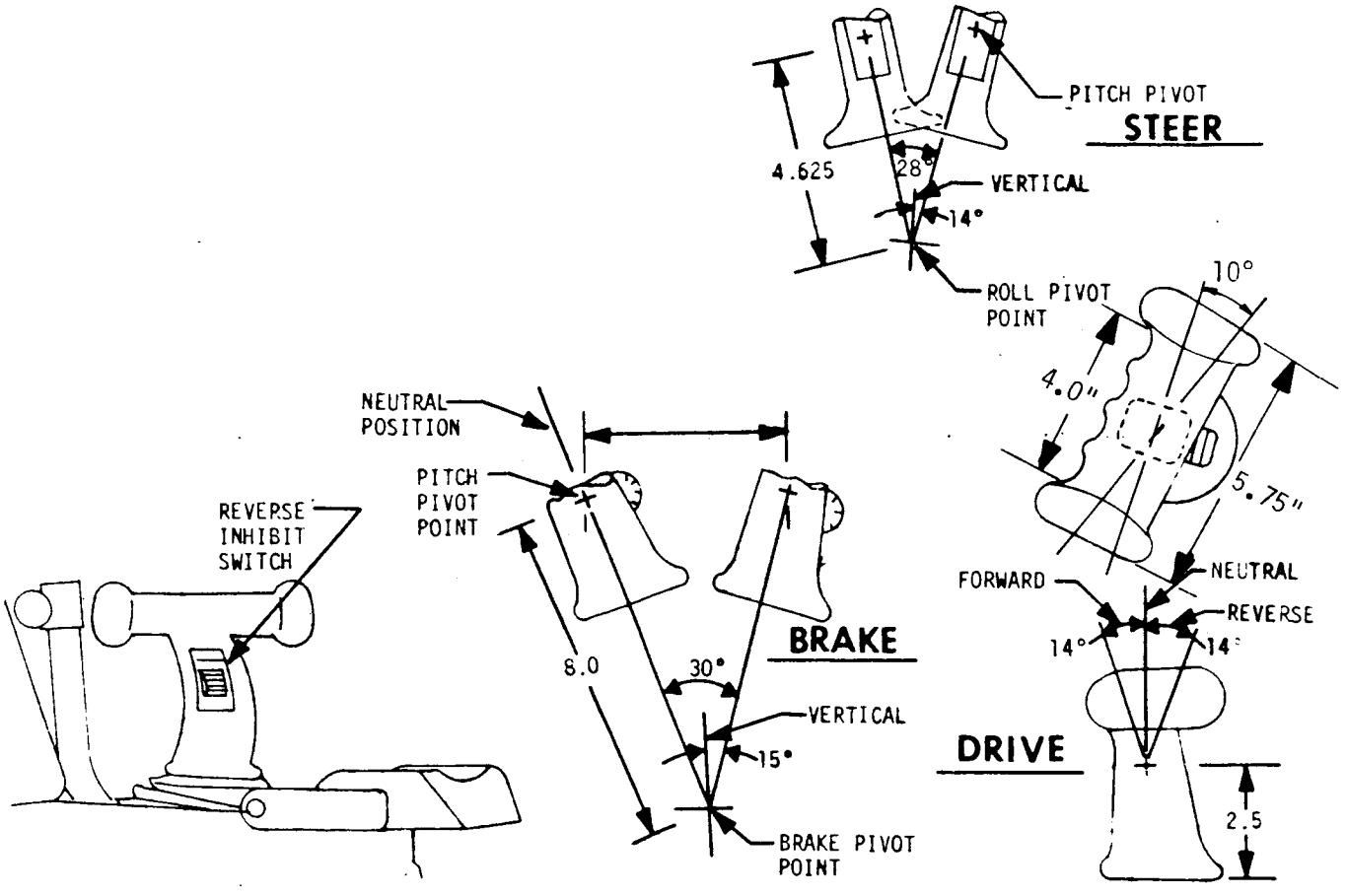

FIGURE 2-9A LRV DRIVE CONTROL - HAND CONTROLLER

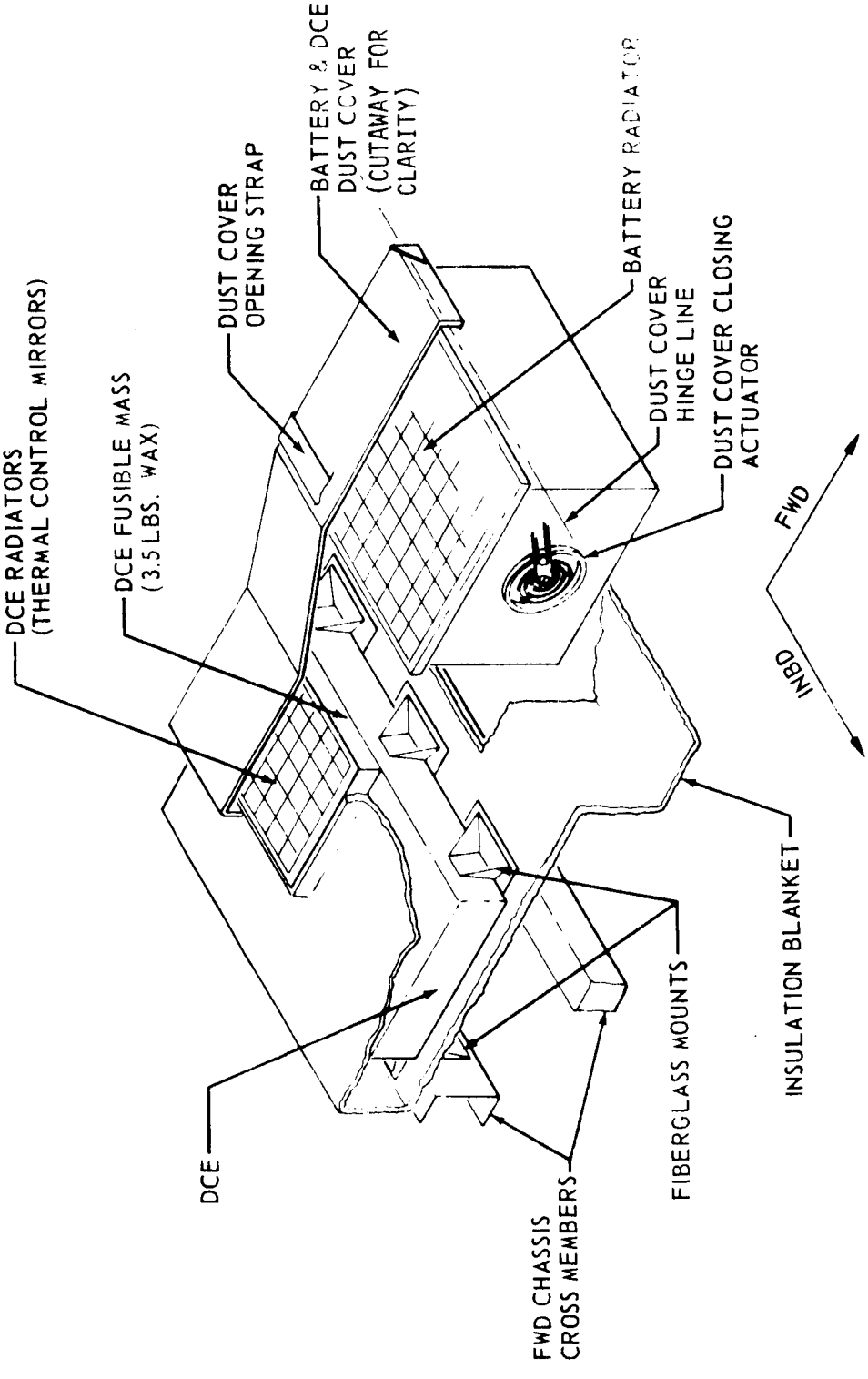

FIGURE 2-9B LRV DRIVE CONTROL - DRIVE CONTROL ELECTRONICS

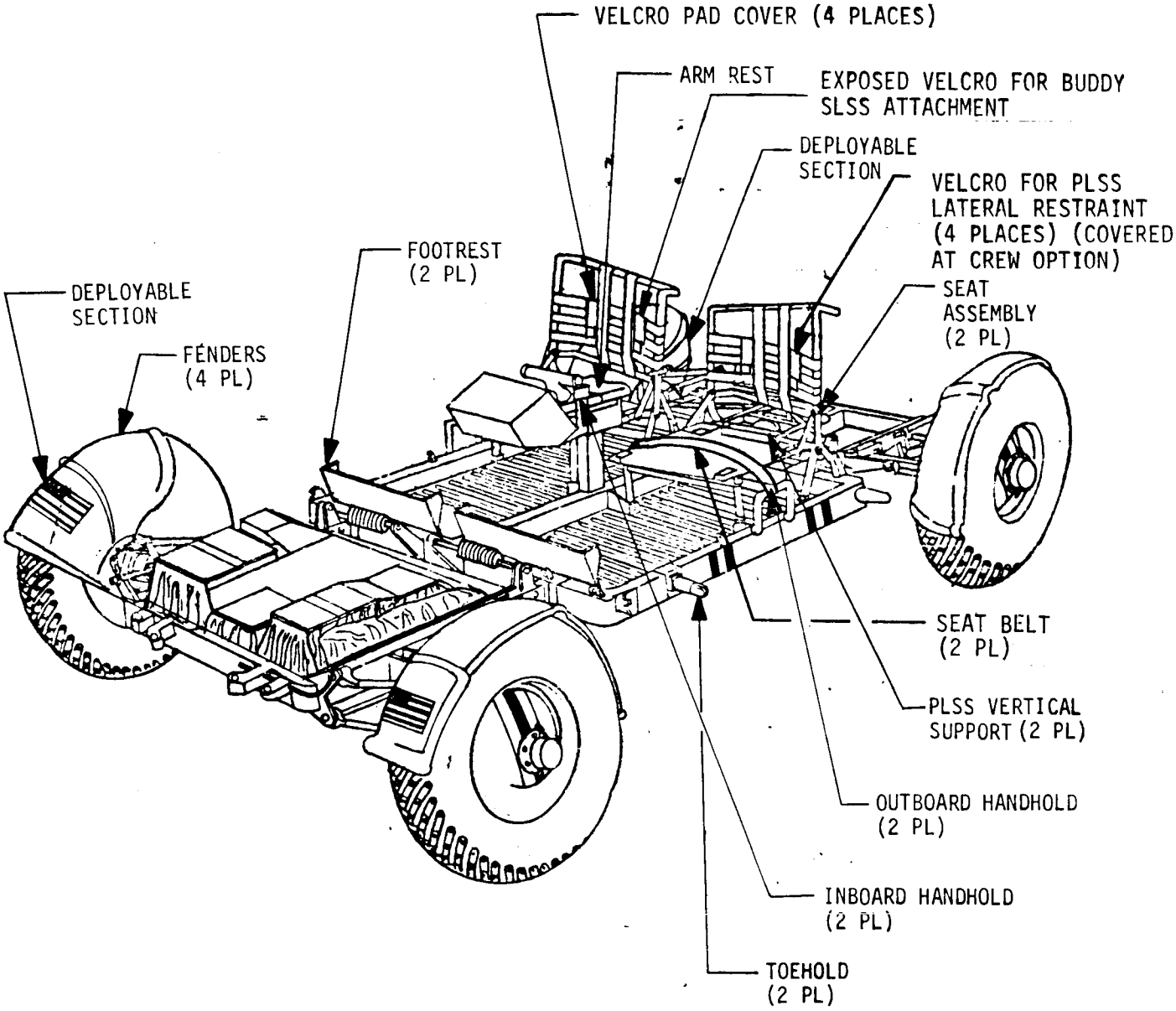

FIGURE 2-10A LRV CREW STATION COMPONENTS

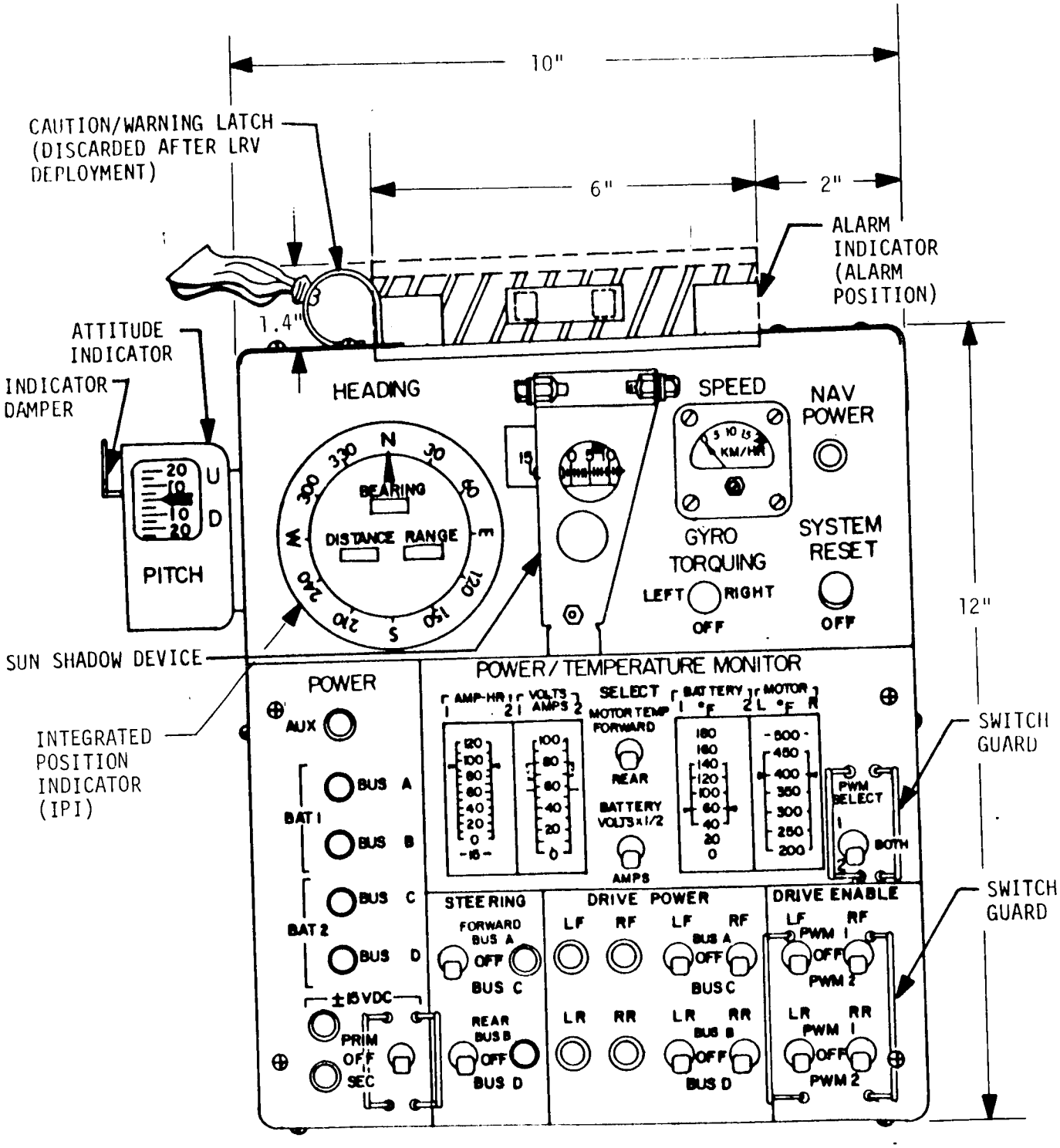

FIGURE 2-10B LRV CREW STATION COMPONENTS-CONTROL AND DISPLAY CONSOLE

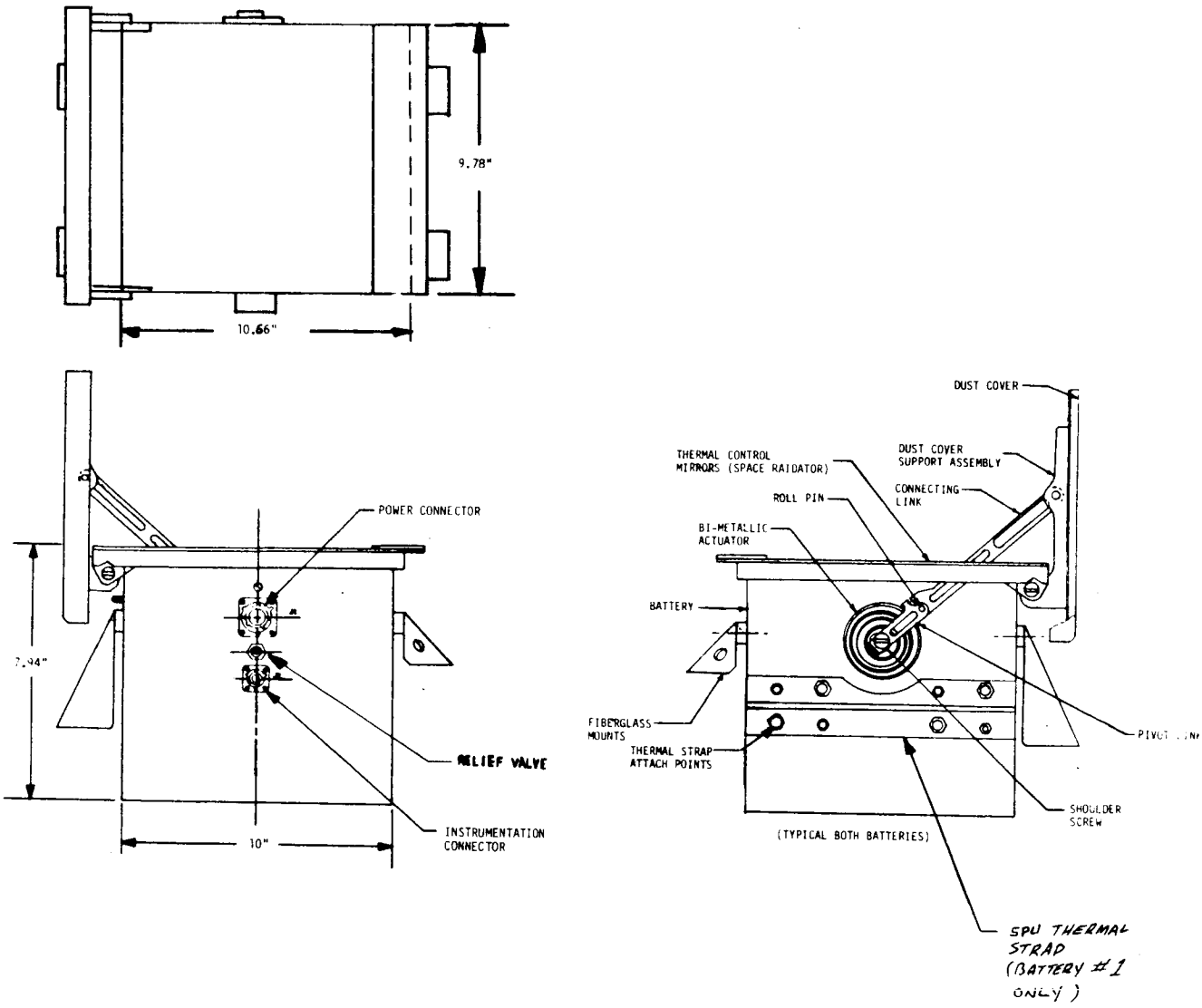

FIGURE 2-11 LRV BATTERY AND DUST COVER ASSEMBLY

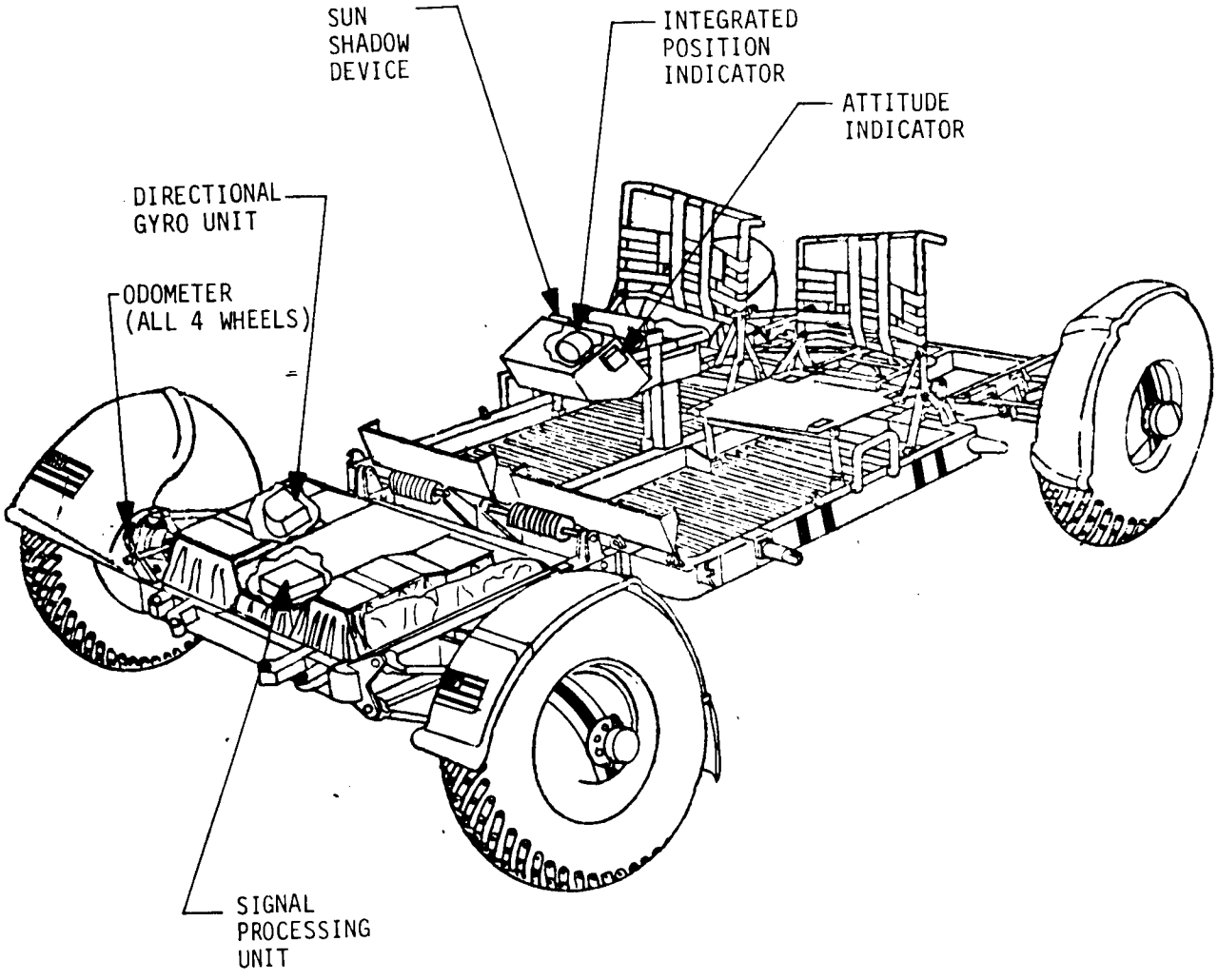

FIGURE 2-12 LRV NAVIGATION COMPONENTS

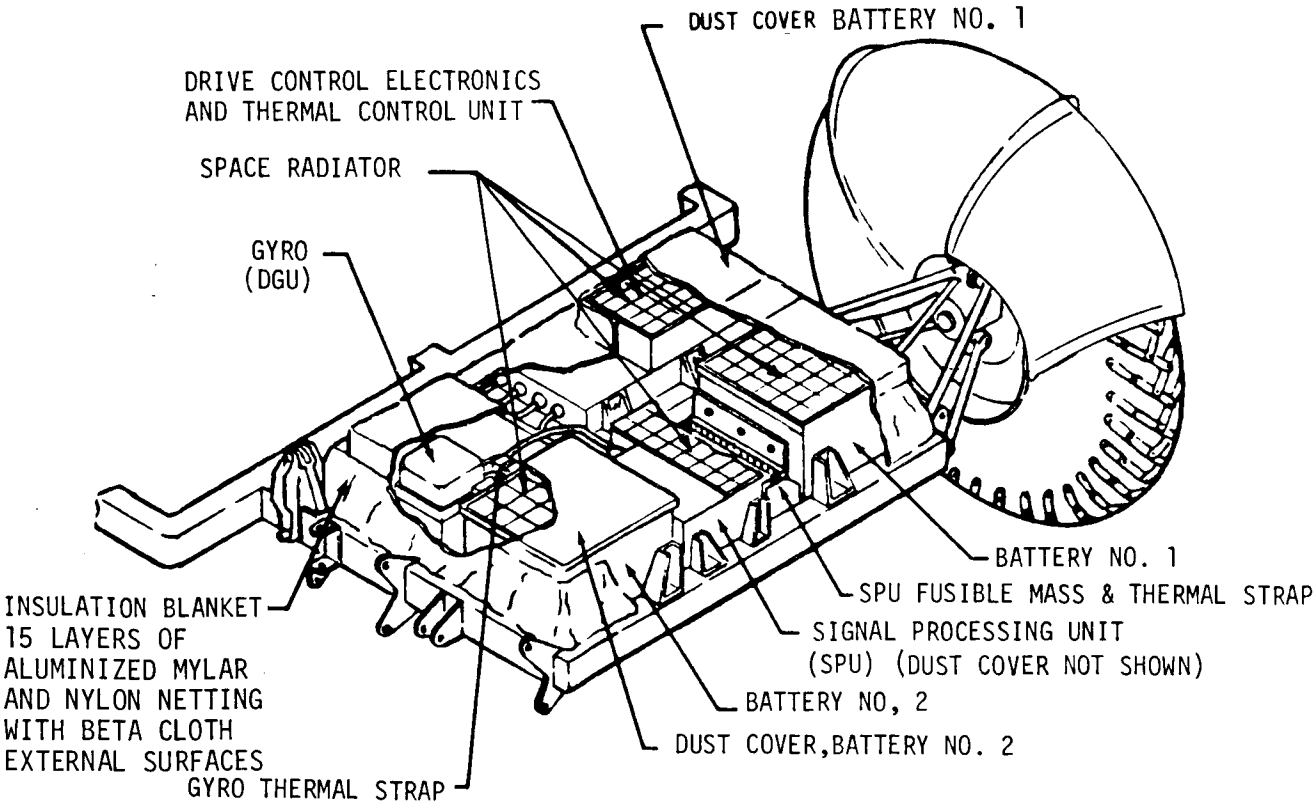

FIGURE 2-13 LRV FORWARD CHASSIS COMPONENTS THERMAL CONTROL

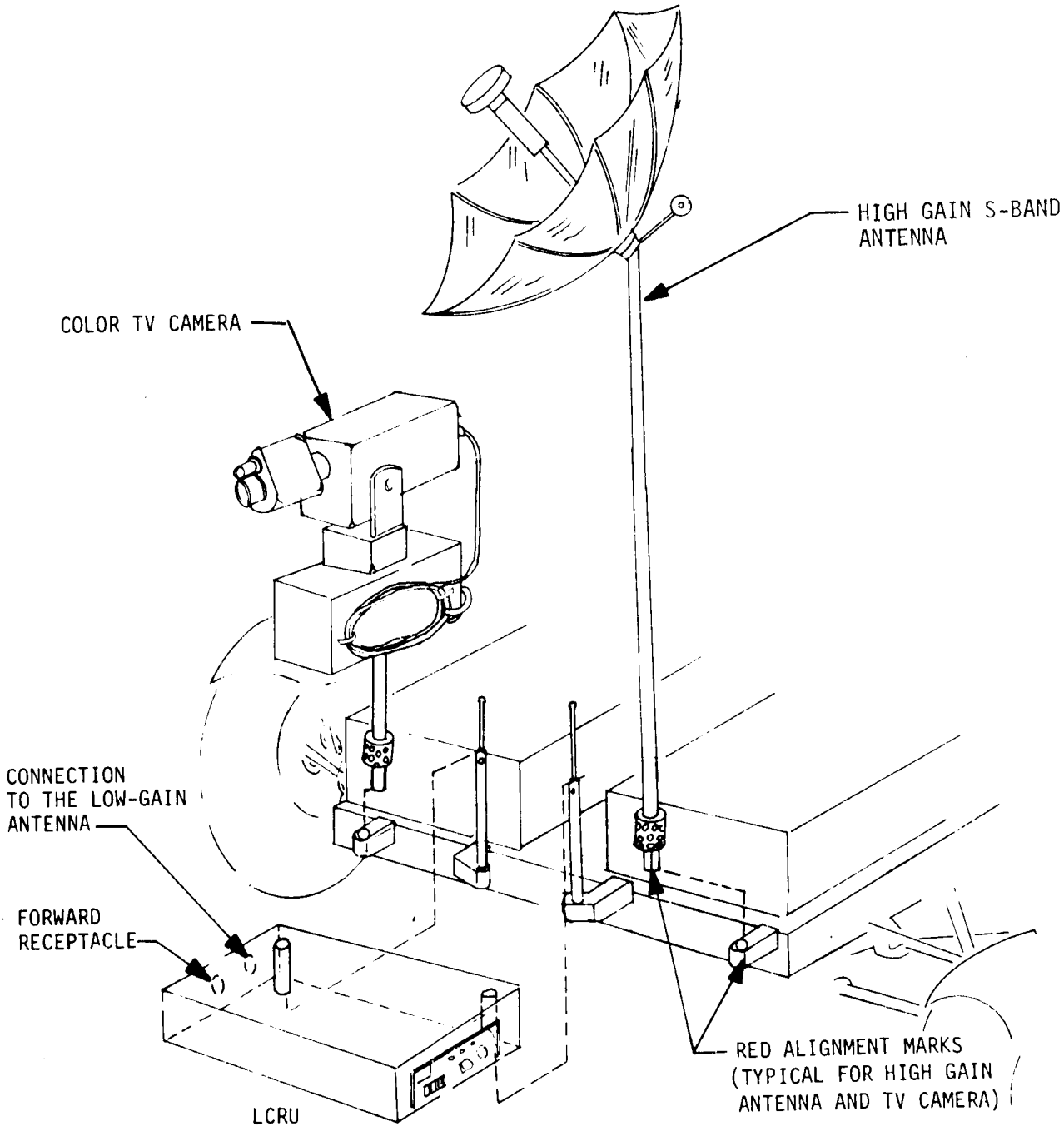

FIGURE 2-14A PAYLOAD INTERFACE-LCRU, HIGH GAIN ANTENNA, TV CAMERA INTERFACES

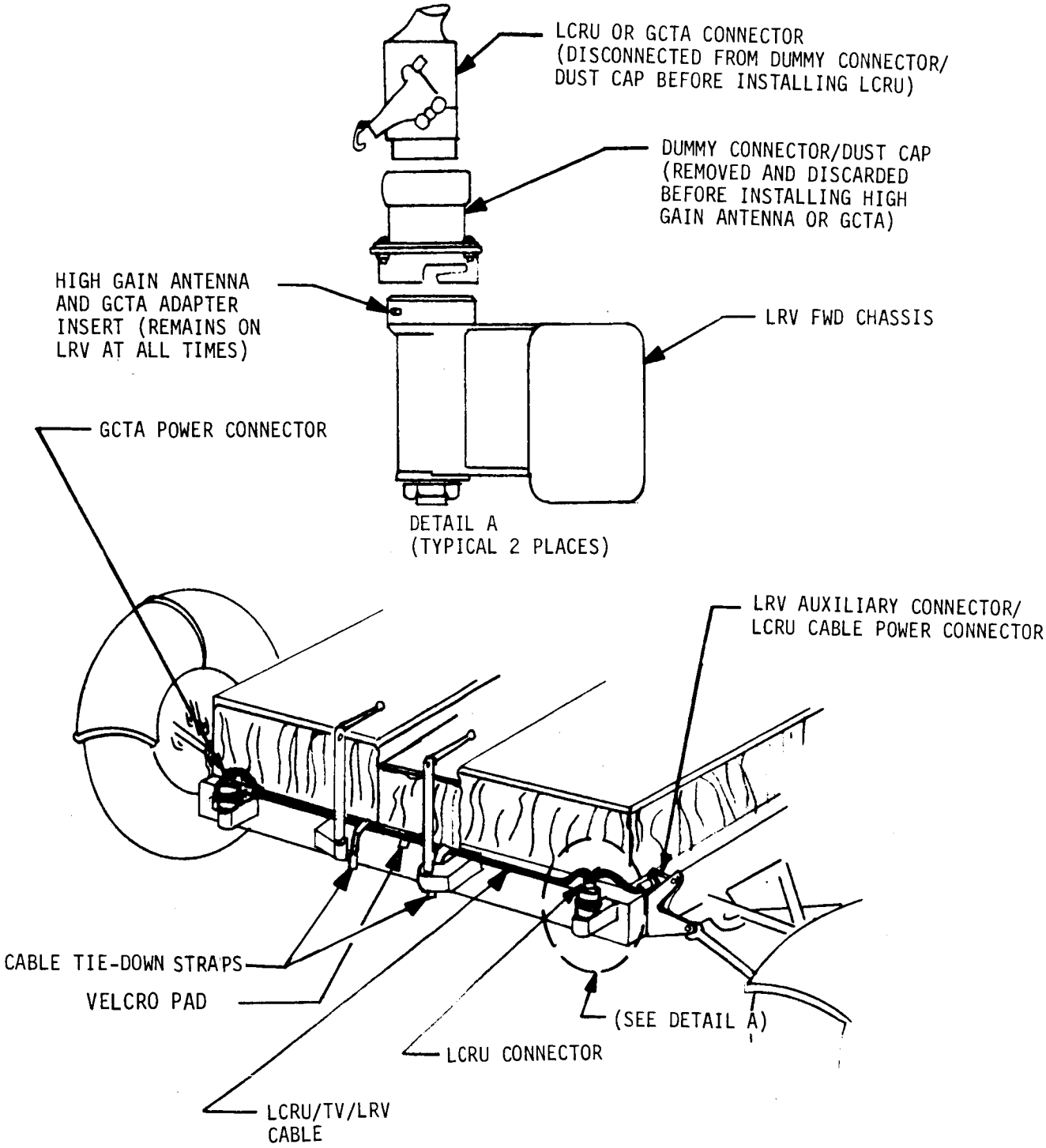

FIGURE 2-14B PAYLOAD INTERFACE - LCRU/TV/LRV CABLE STOWAGE

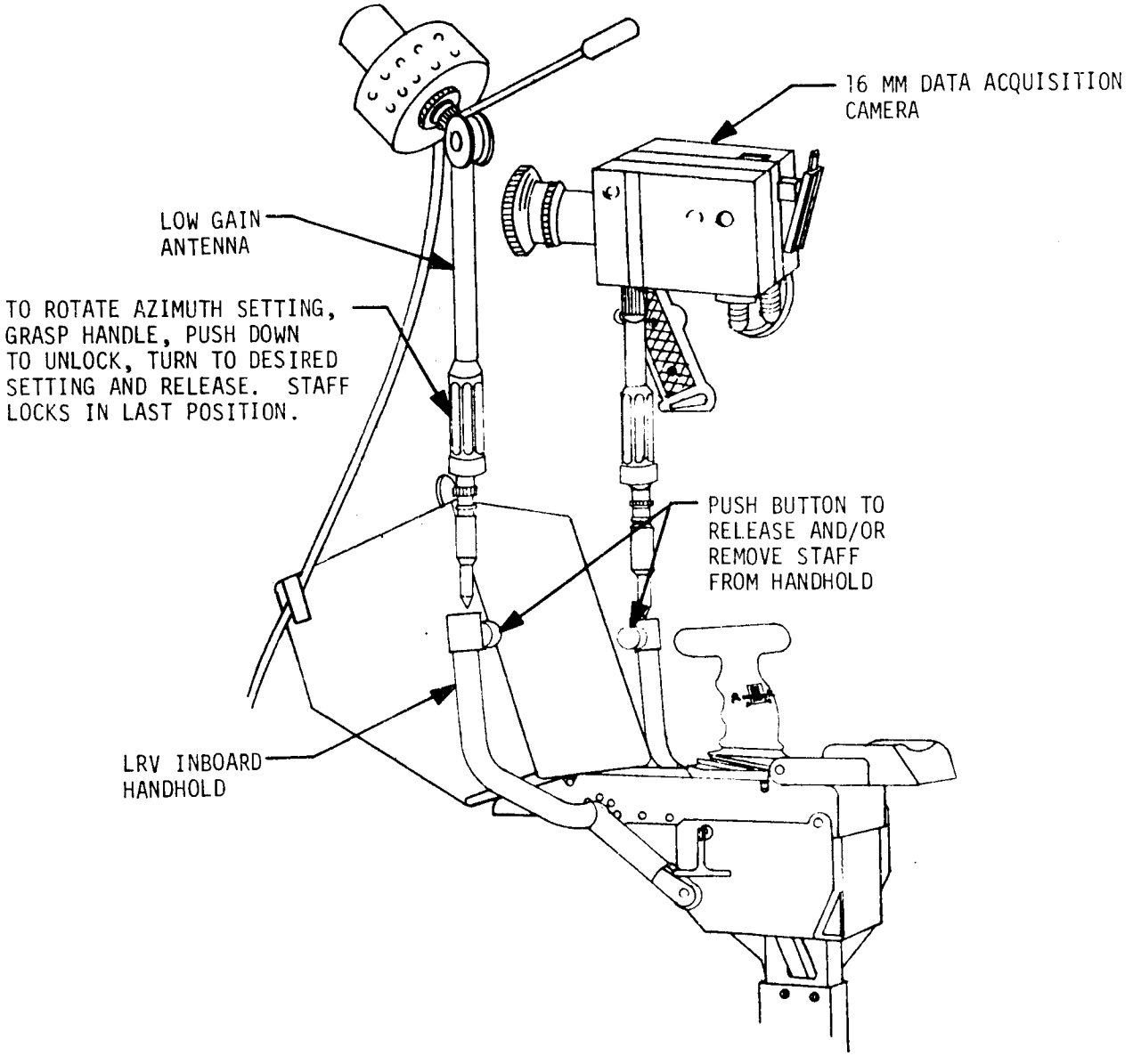

FIGURE 2-14C PAYLOAD INTERFACE - LOW GAIN ANTENNA AND 16 MM DATA ACQUISITION CAMERA INTERFACE

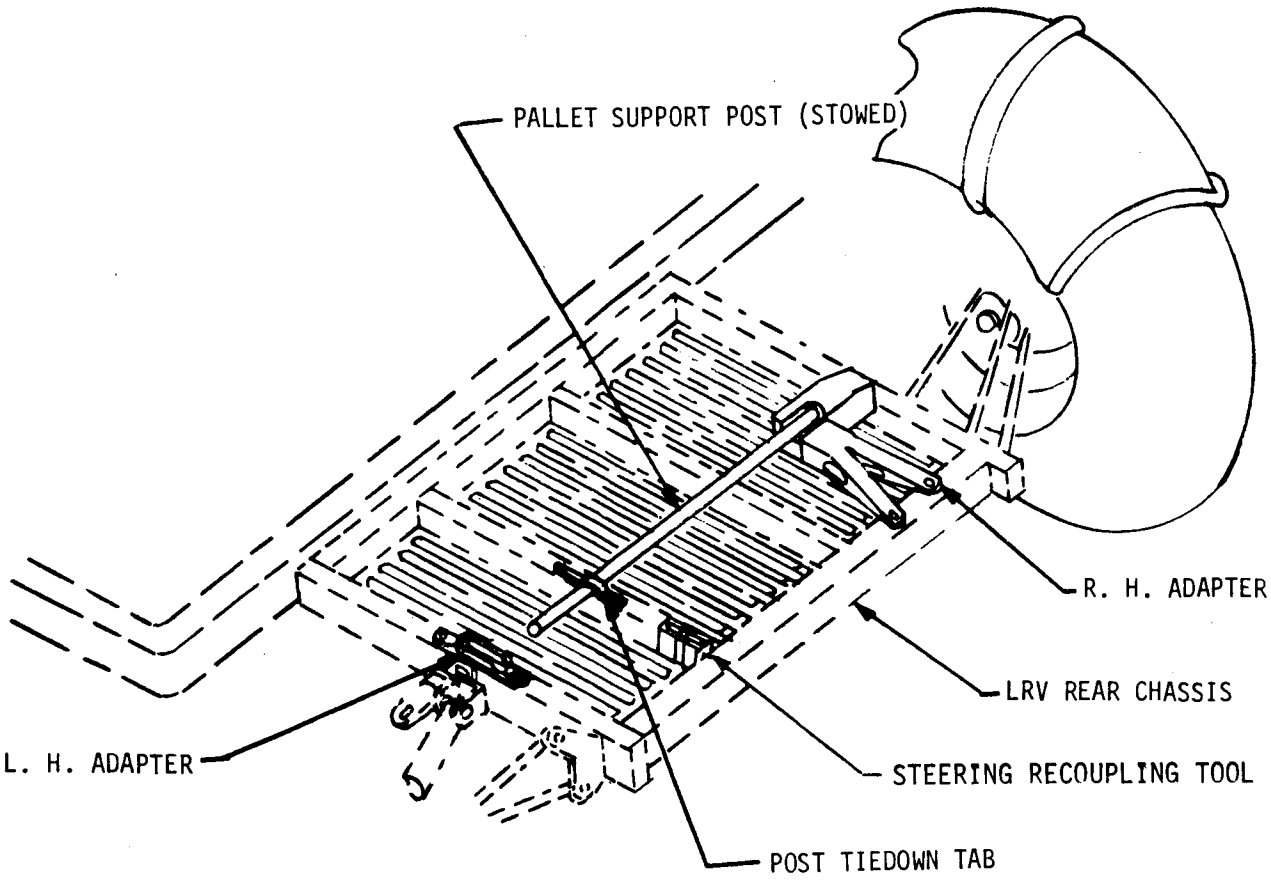

FIGURE 2-14D PAYLOAD INTERFACE - LRV REAR PAYLOAD PALLET ADAPTERS

3.0 CONSTRAINTS AND OPERATIONAL LIMITATIONS

The LRV must be operated in such a manner as not to exceed the constraints and operational limitations of the following subsystems:

3.1 CHASSIS SUBSYSTEM CONSTRAINTS

The constraints which apply to the chassis are concerned with loads imparted to the various chassis members. In order to control these loads, limitations are imposed on location of stowed payload items. To preserve the factor of safety of 1.5 the LRV shall be loaded such that the loads in the chassis payload zones do not exceed the maximum loads shown in Table 3-I. Overloading the vehicle beyond the total 1035 lb. payload limit will require a reassessment of structural integrity and will result in performance degradation as shown in Section 5.

The chassis frame is constructed of thin wall aluminum rectangular tubes which are scalloped in certain areas for weight saving. These thin wall areas are subject to damage from high-impact loads beyond the designed-for conditions. Therefore, the chassis should not be subjected to such use as supporting rock samples for breaking apart the rocks with geologic tools wherein the geologic tools could strike the chassis.

3.2 SUSPENSION SUBSYSTEM CONSTRAINTS

The suspension system is designed for a factor of safety of 1.5 based on a maximum gross weight LRV of 1500 lbs. Overloading the suspension system beyond this limit will require a reassessment of structural integrity.

Suspension system thermal constraints are identified in paragraph 3.10.

3.3 MOBILITY SUBSYSTEM CONSTRAINTS

The only constraints concerned with the wheels, traction drives, steering and hand controller are limitations caused by component capability discussed in Section 4 and by thermal limitations discussed in paragraph 3.10.

3.4 ELECTRICAL POWER SUBSYSTEM CONSTRAINTS

3.4.1 Batteries

The power subsystem is designed to use both batteries simultaneously on an approximate equal load basis, i.e. one front and one rear traction drive should be operated from one battery and the other front and other rear traction drives operated from the other battery. Likewise the front steering motor should be operated from one battery and the rear steering motor from the other battery. Only in a contingency mode should all loads be transferred to one battery, since battery heat rise increases with increase in battery current. This consideration is discussed in 4.2.

PAYLOAD ZONE *	ZONE LOCATION ON LRV	TOTAL ALLOWABLE LOAD IN ZONE
A	AFT CHASSIS	170 LBS.
B	UNDER LEFT SEAT	30 LBS.
C	UNDER RIGHT SEAT	30 LBS.
D	CENTER CHASSIS - BETWEEN ℄ AND RIGHT SEAT	30 LBS.
E	CENTER CHASSIS - BETWEEN ℄ AND LEFT SEAT	30 LBS.
F	CENTER CHASSIS FLOOR PANEL RIGHT OF ℄ . ZONE FORMED BY STOWING SEAT, CREATING CLEAR FLOOR AREA FOR ONE-ASTRONAUT DRIVING CASE.	400 LBS.
G	TOP OF INBOARD HANDHOLDS	12 LB. PER HANDHOLD, BUT TOTAL NOT TO EXCEED 15 LB. FOR BOTH HANDHOLDS COMBINED.
H	ON BACK OF RH SEAT	12 LBS.
J	ON BACK OF LH SEAT	1.5 LBS.
TOTAL LRV		1035 LBS MAXIMUM INCLUDING CREW, LCRU, TV AND ALL OTHER STOWED EQUIPMENT

* Specific locations of payload zones are defined by ICD 13M07391.

TABLE 3-I PAYLOAD LIMITATIONS

3.0 Continued

3.4 2 Switches and Circuit Breakers

To provide maximum crew safety in event of undetected failure of drive logic components, the following restrictions should be adhered to in sequential selection of switch positions:

a. The two STEERING and four DRIVE POWER switches should be in the OFF position when changing position of the ±15VDC switch.

b. The ±15VDC PRIM or ±15VDC SEC circuit breaker should be closed and the ±15VDC switch in PRIM or SEC position, respectively, before operating the two STEERING and four DRIVE POWER switches.

Proper order for selection of all circuit breakers and switches is given in Section 2 of the basic LRV Operations Handbook.

3.5 NAVIGATION SUBSYSTEM CONSTRAINTS

a. The GYRO TORQUING switch is not to be kept in the LEFT or RIGHT position for more than two minutes of any seven minute period.

b. The navigation subsystem input voltage must not be allowed to be less than 30 VDC to prevent excessive computation and display errors. The VOLTS indicator should be checked periodically (at least each 15 minutes) to verify readings of not less than 60.

NOTE

Navigation readings should be reported and recorded by MCC before closing the NAV POWER circuit breaker. Reapplication of power will cause loss of display retention.

c. NAV POWER should be on for at least 90 seconds before driving the LRV to allow the directional gyro to reach operating spin speed.

d. The LRV must be level within ± 6° in pitch and roll and parked downsun within ± 3° during navigation initialization and update to achieve required system accuracy.

e. System reset switch must be returned to OFF to allow SPU to function.

3.6 DISPLAY AND CONTROLS SUBSYSTEM CONSTRAINTS

Crew procedures for operating the displays and controls are contained in the basic LRV Operations Handbook.

No constraints exist other than those already listed in 3.4 and 3.5.

3.7 CREW STATION SUBSYSTEM CONSTRAINTS

No constraints to crew station operation exist when operated in accordance with the crew procedures in Section 2 of the basic LRV Operations Handbook.

These procedures are based on the crew station structural capability. To maintain the safety factor of 1.5 the loads imposed on crew station components should not exceed the values shown in Figures 3-1 and 3-2. This requires care in pushing against footrest and back of seat simultaneously.

3.8 VEHICLE DYNAMIC OPERATION CONSTRAINTS

The LRV is designed with inherent stability characteristics of wide wheel track and low center of gravity. Static stability limits are shown in Figure 3-4. Overturn of the vehicle is a remote possibility, occurring only under severe conditions of extremely tight turns at high speeds on steep slopes or collision with immovable objects. Speeds, slopes, turning radii limits, and obstacle height to prevent overturn and sliding are shown in Figures 3-5 thru 3-9. These curves are based on the C.G. of the loaded vehicle falling within the envelope shown on Figure 3-3. The required increase in turning radius for preventing overturn caused by locating the loaded LRV C.G. outside the Figure 3-3 envelope is shown in Figures 3-10 through 3-15. Maximum allowable speeds to prevent exceeding structural design loads are shown in Table 3-III. The safe driving corridor for driving with one steering assembly failed is shown in Figure 3-16.

3.9 PARKING CONSTRAINTS

3.9.1 During-Traverse Parking

There are no orientation constraints imposed on parking in sunlight during traverses. The LRV must not be parked in shadow for longer than 2 hours to prevent display and control console electronics damage.

Switch and circuit breaker positions for short-term parking are given in the basic LRV Operations Handbook.

3.9.2 Between-Traverses Parking

To prevent thermal damage to the control and display console instruments and to be compatible with LCRU thermal requirements the LRV must be parked in sunlight oriented relative to the sun azimuth in accordance with Figure 3-17 when parking the LRV between sorties.

3.10 THERMAL CONSTRAINTS

The LRV is designed for operation in the lunar day at sun elevation angles of greater than five degrees. All qualification tests have been conducted to the lunar environment temperature levels expected to be encountered by the LRV. Operations on the moon should be restricted to maintain components within these temperature limits. Temperature limits for specific components are defined in Table 3-II.

Component	Maximum Operating Temperature Limit °F	Survival Upper Temperature Limit °F	Minimum Operating Temperature Limit °F	Minimum Survival Temperature Limit °F
*Battery	125	140	40	-15
DCE	159	180	0	-20
*Traction Drive	400	450	-25	-50
Wheel	250	250	-200	-250
SPU	130	185	30	-65
DGU	160	200	-65	-80
IPI	185	185	-22	-65
Suspension Damper	400	450	-65	-70
Steering Motor	360	400	-25	-50

*Analog Display on LRV Panel

TABLE 3-II COMPONENT TEMPERATURE LIMITS

3.10.1 Shadow Constraints

The LRV must not be parked in lunar shadow for longer than two hours to prevent low temperature damage to the electronics in the control and display console.

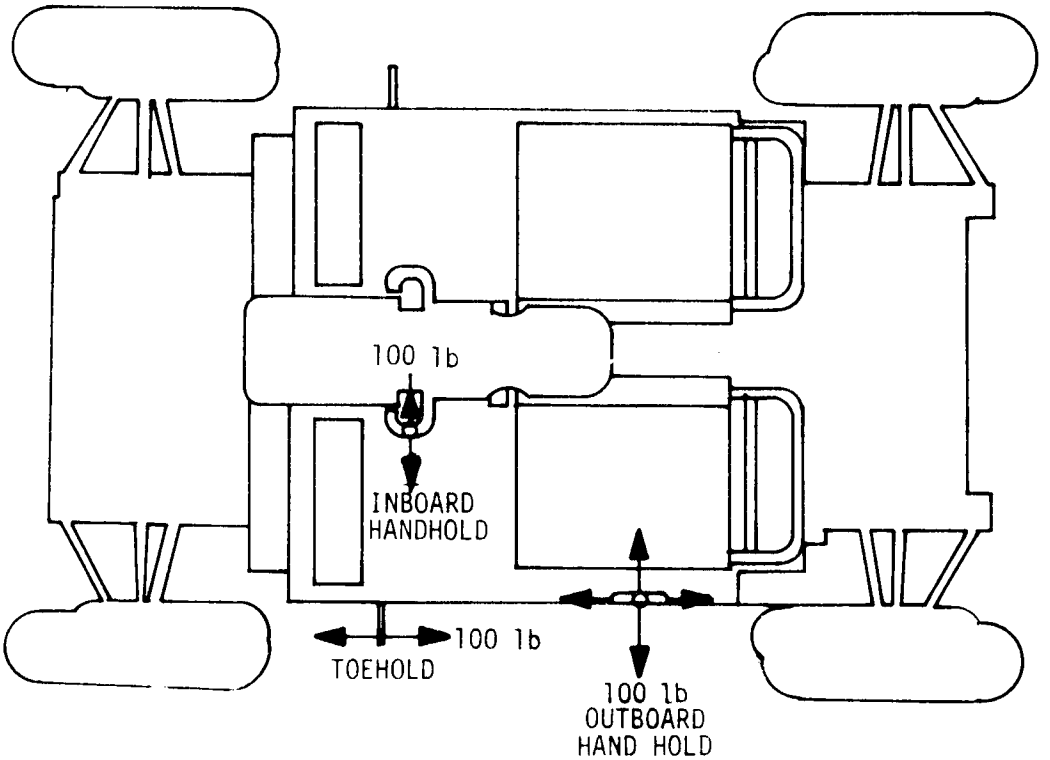

ALL LOADS ARE LIMIT LOADS

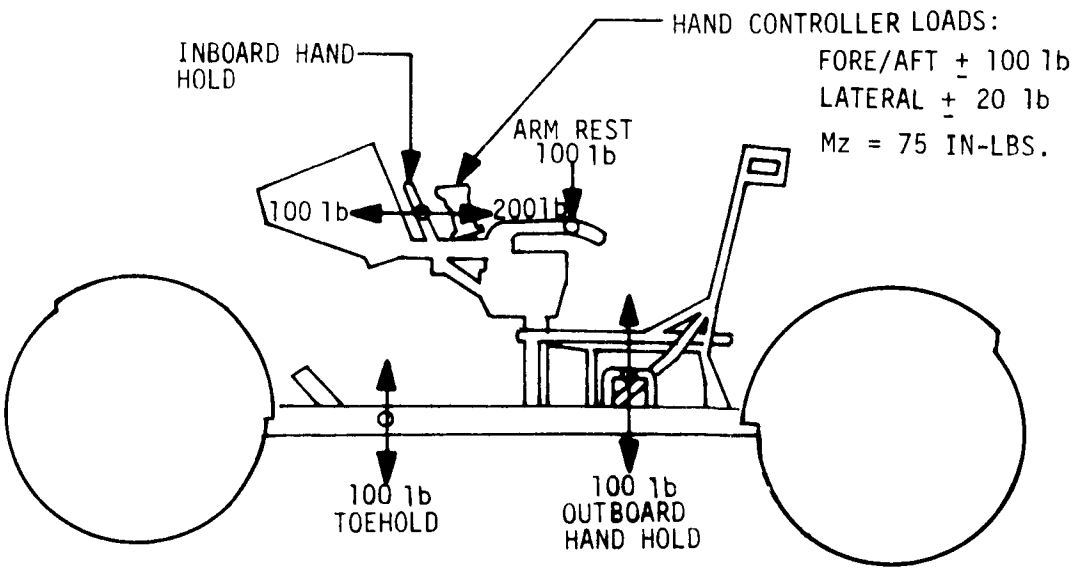

FIGURE 3-1 CREW STATION LIMIT LOADS (HANDHOLDS AND TOEHOLDS)

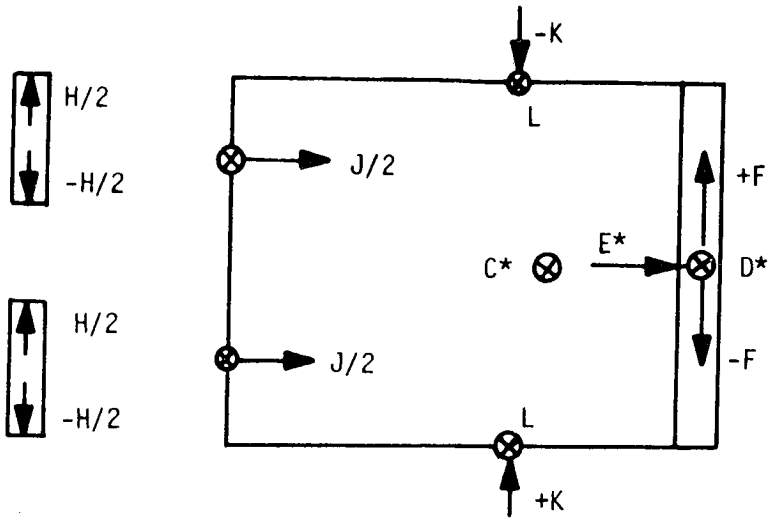

L AND K DO NOT ACT ON BOTH SIDES OF SEAT SIMULTANEOUSLY

* DISTRIBUTED LOADS ACTING OVER THE APPLICABLE AREA

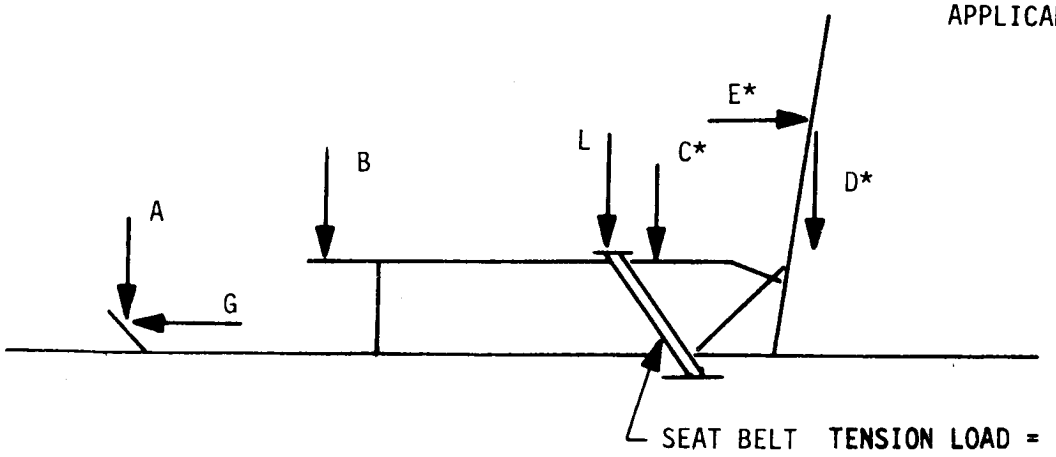

LOAD CONDITION	A	B	C	D	E	F	G	H	J	K	L
1	27	51	326	175	92	70	23	17	9	113	113
2	11	21	254	70	43	198	17	0	0	0	0
3**	142	0	0	0	200	200	142	50	0	0	0

ALL LOADS ARE LIMIT LOADS

** CONDITION 3 LOADS DO NOT ACT SIMULTANEOUSLY

FIGURE 3-2 CREW STATION LIMIT LOADS (SEATS AND FOOTRESTS)

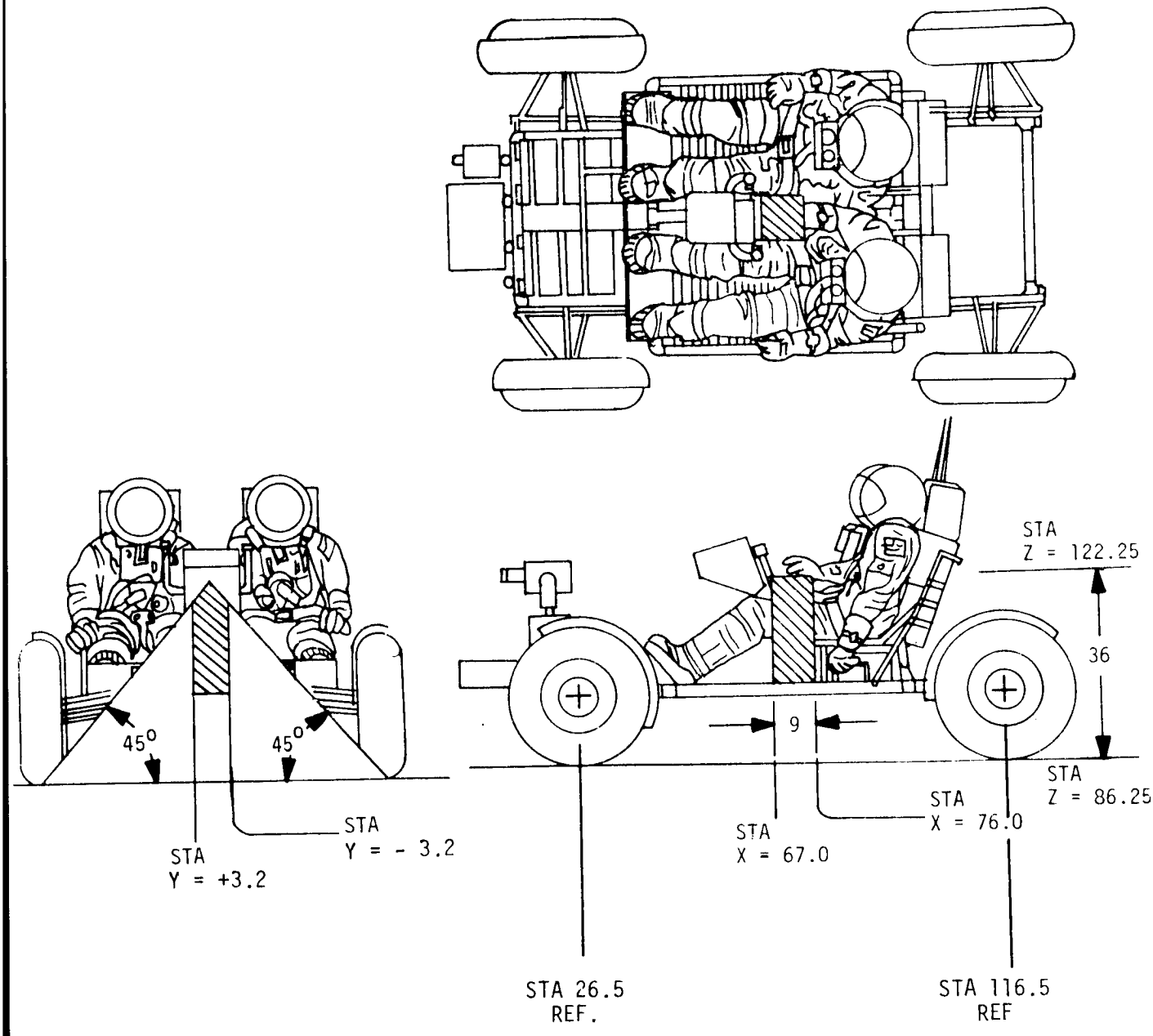

FIGURE 3-3 GROSS WEIGHT ALLOWABLE C.G. ENVELOPE

	EMPTY	1 ASTRO	2 ASTRO
PITCH DOWN	56.5	57.6	55.8
PITCH UP	75.1	58.1	55.0
ROLL	64.7	47.6	49.3

STABILITY ANGLES

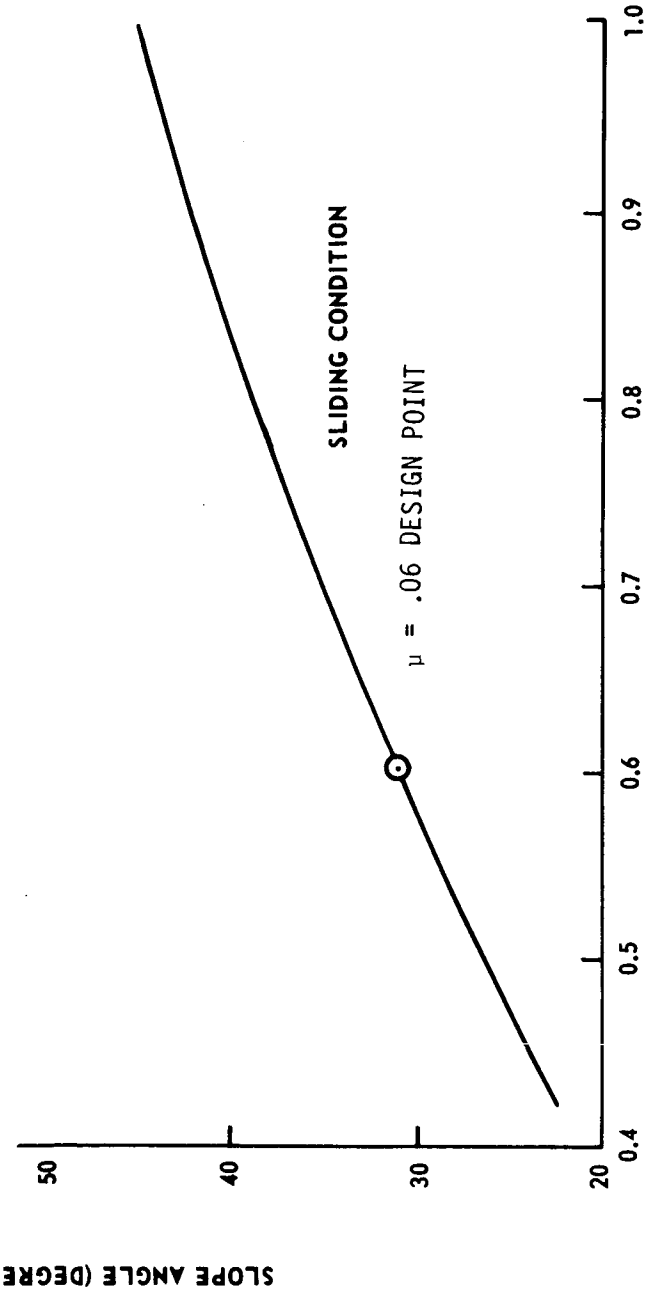

COEFFICIENT OF FRICTION
VEHICLE STATIC STABILITY
FIGURE 3-4

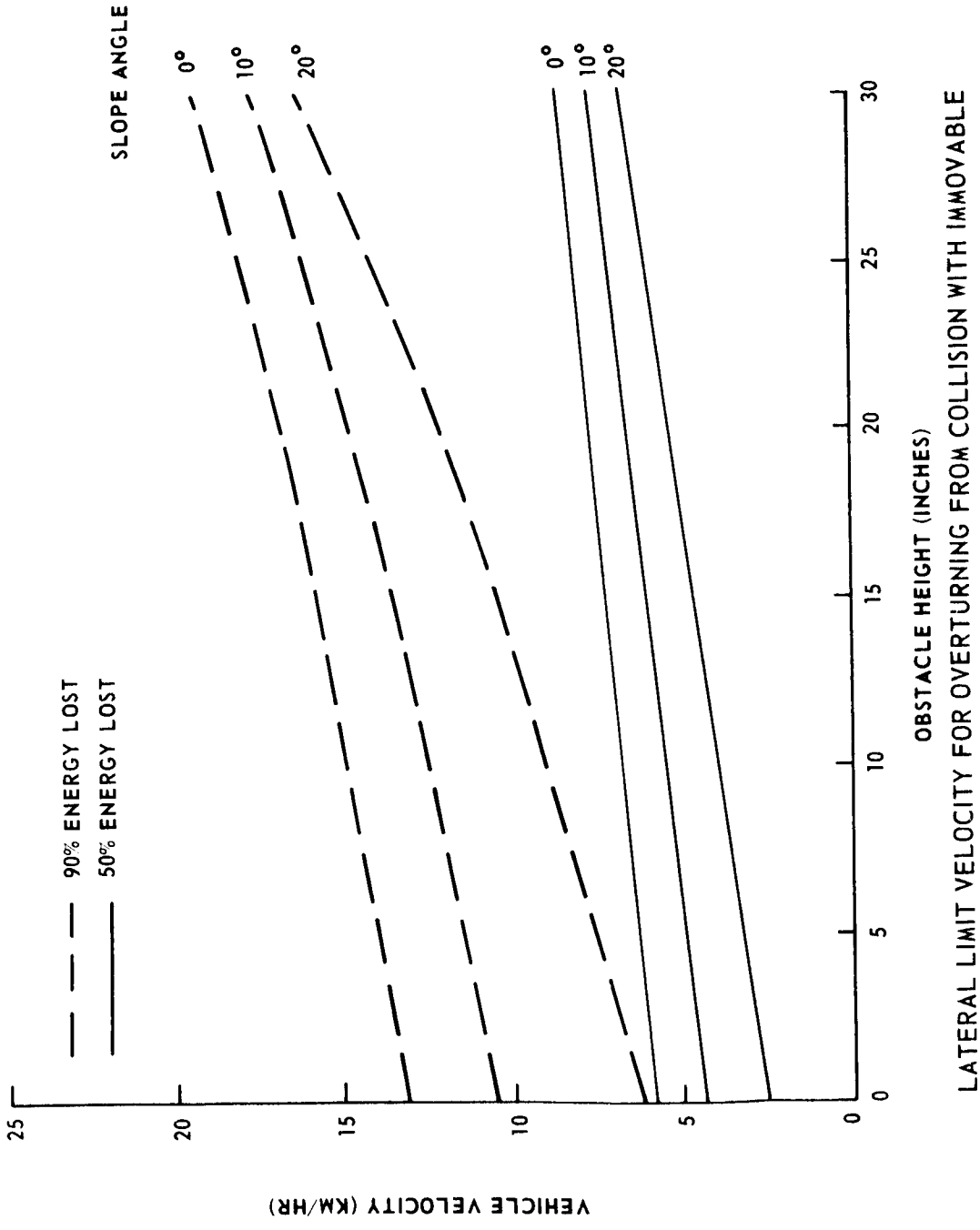

LATERAL LIMIT VELOCITY FOR OVERTURNING FROM COLLISION WITH IMMOVABLE OBSTACLE

FIGURE 3-5

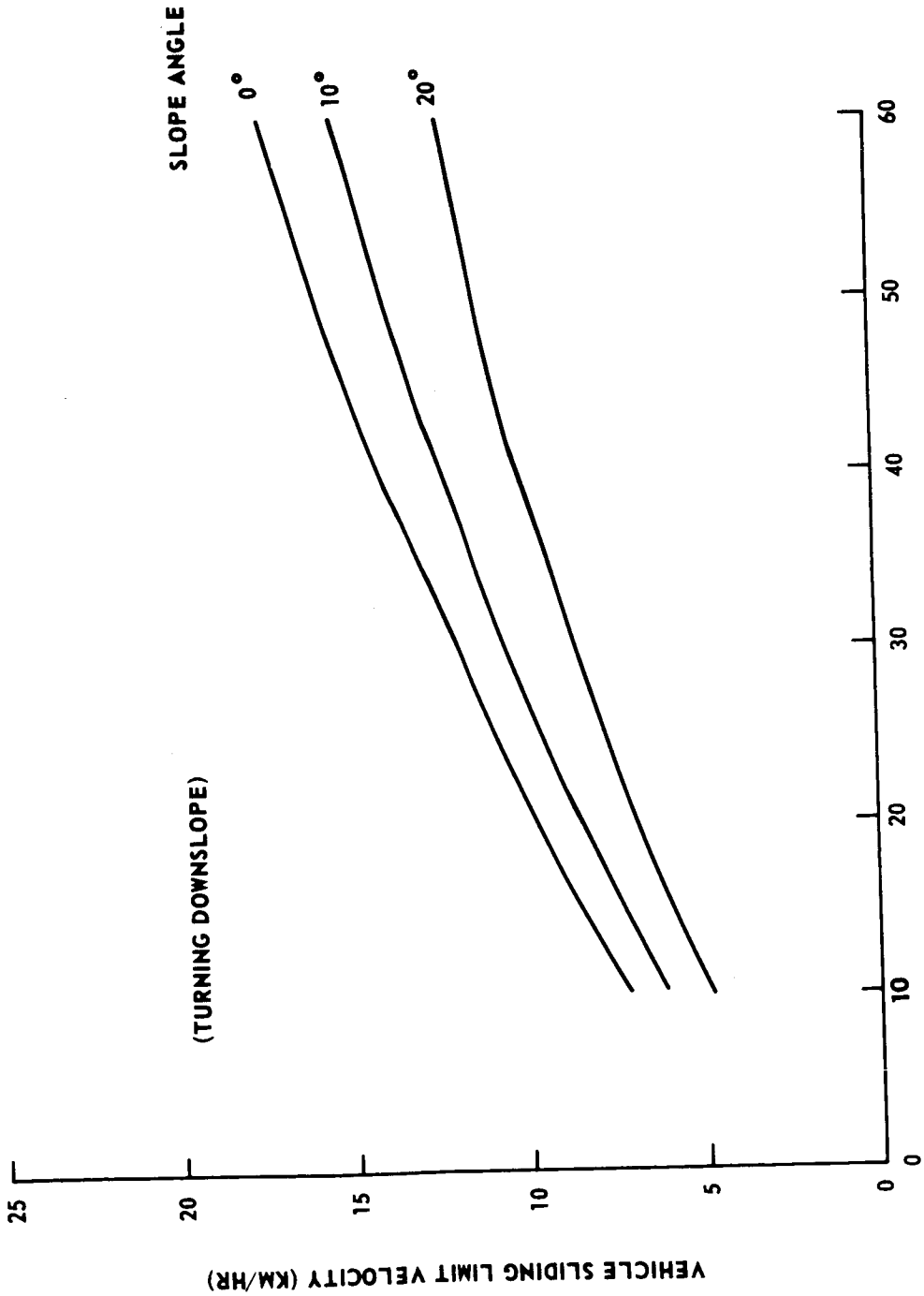

LRV SLIDING LIMIT VELOCITY AS A FUNCTION OF TURNING RADIUS AND SLOPE ANGLE FOR A 0.8 COEFFICIENT OF FRICTION

FIGURE 3-6

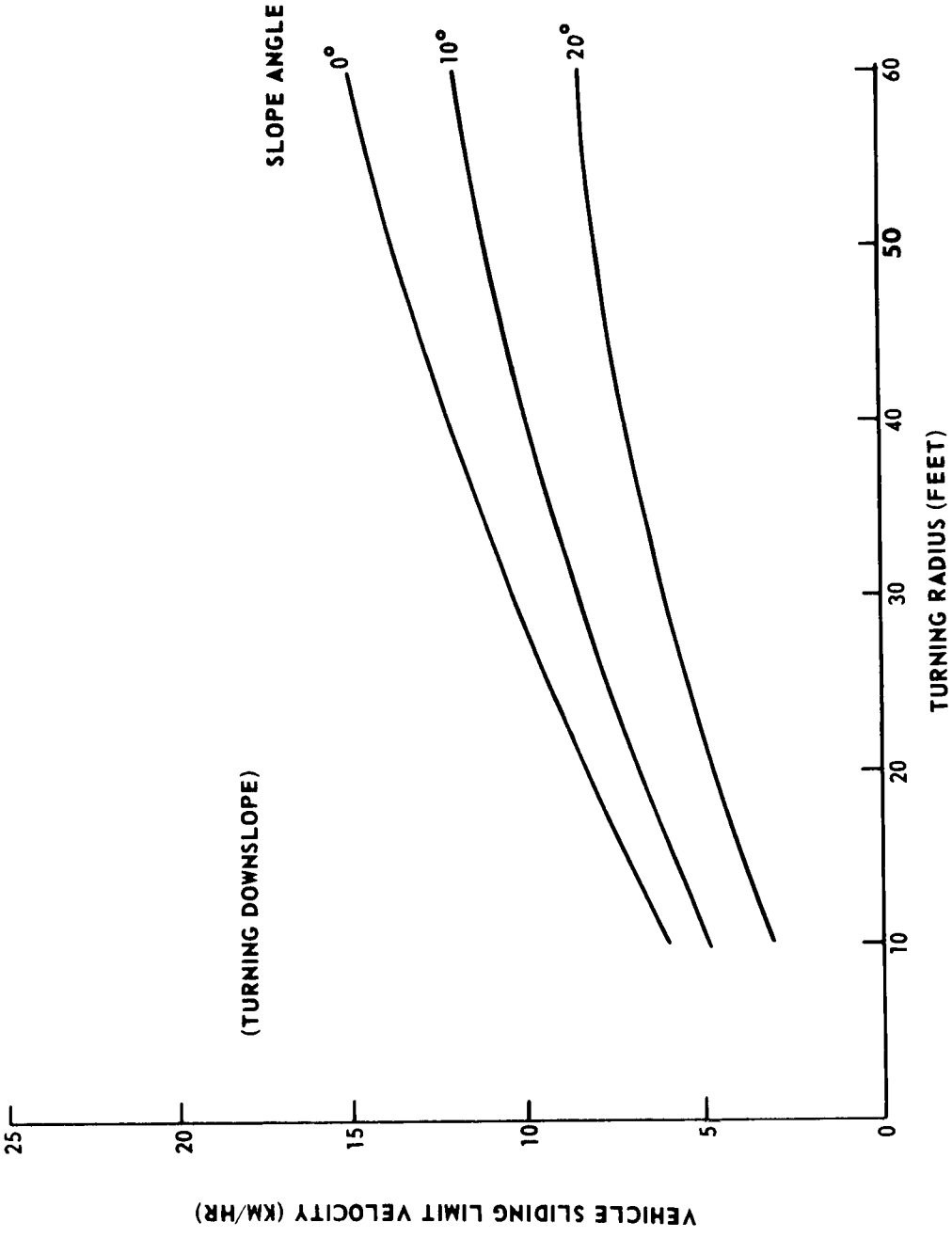

LRV SLIDING LIMIT VELOCITY AS A FUNCTION OF TURNING RADIUS AND SLOPE ANGLE FOR A 0.6 COEFFICIENT OF FRICTION (NOMINAL)

FIGURE 3-7

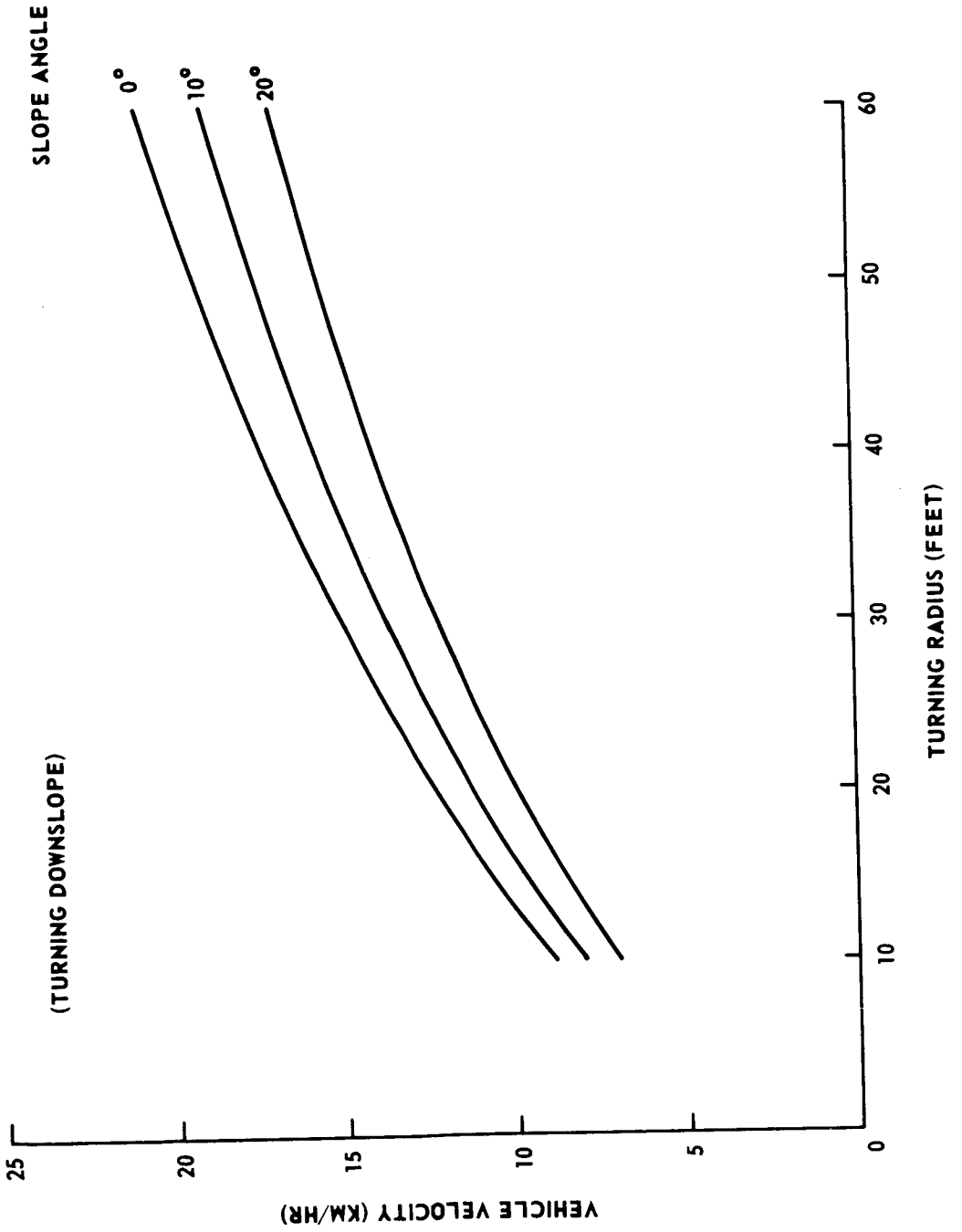

LRV OVERTURNING LIMIT VELOCITY AS A FUNCTION OF TURNING RADIUS AND SLOPE ANGLE

FIGURE 3-8

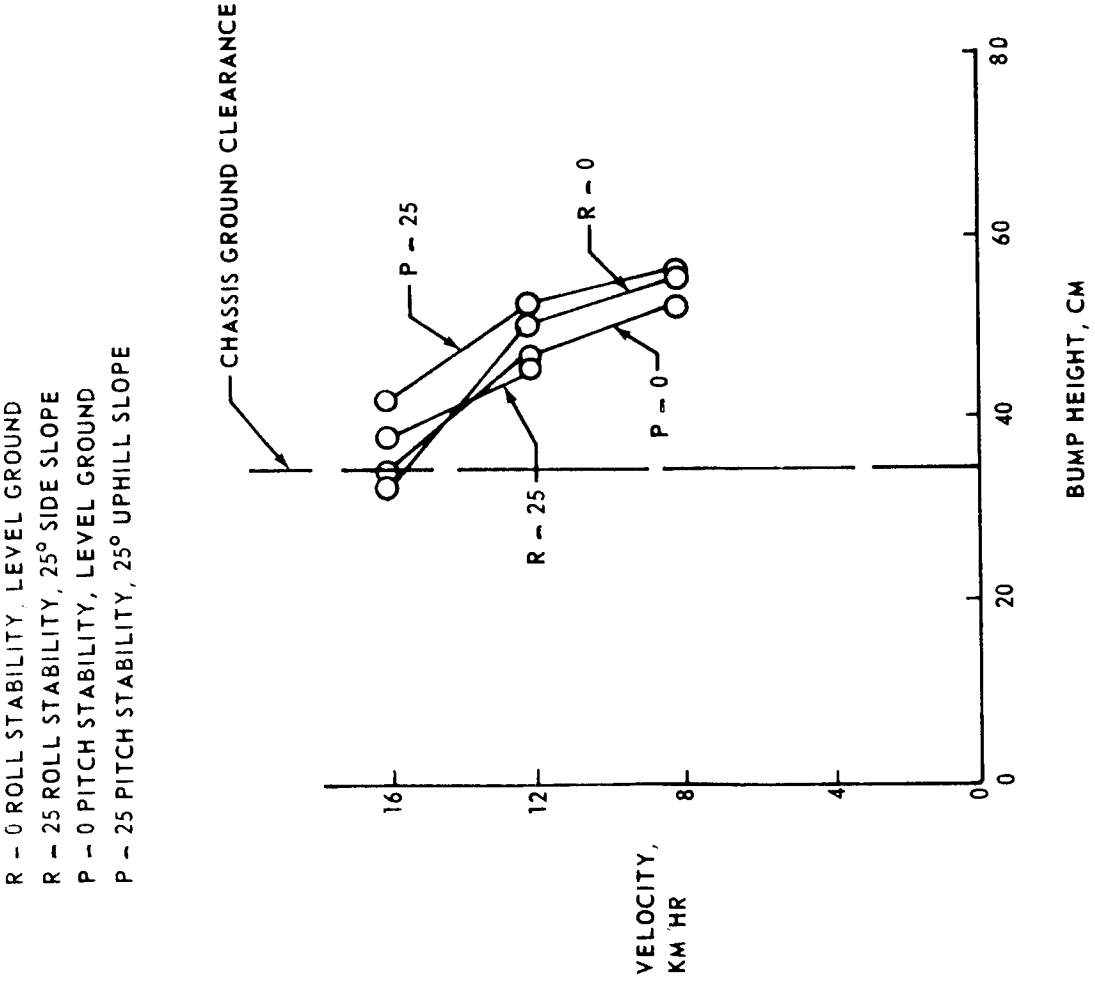

MAXIMUM BUMP HEIGHTS WHICH CAN BE ENCOUNTERED WITHOUT CAUSING OVERTURN AS A FUNCTION OF VELOCITY AND SLOPE

FIGURE 3-9

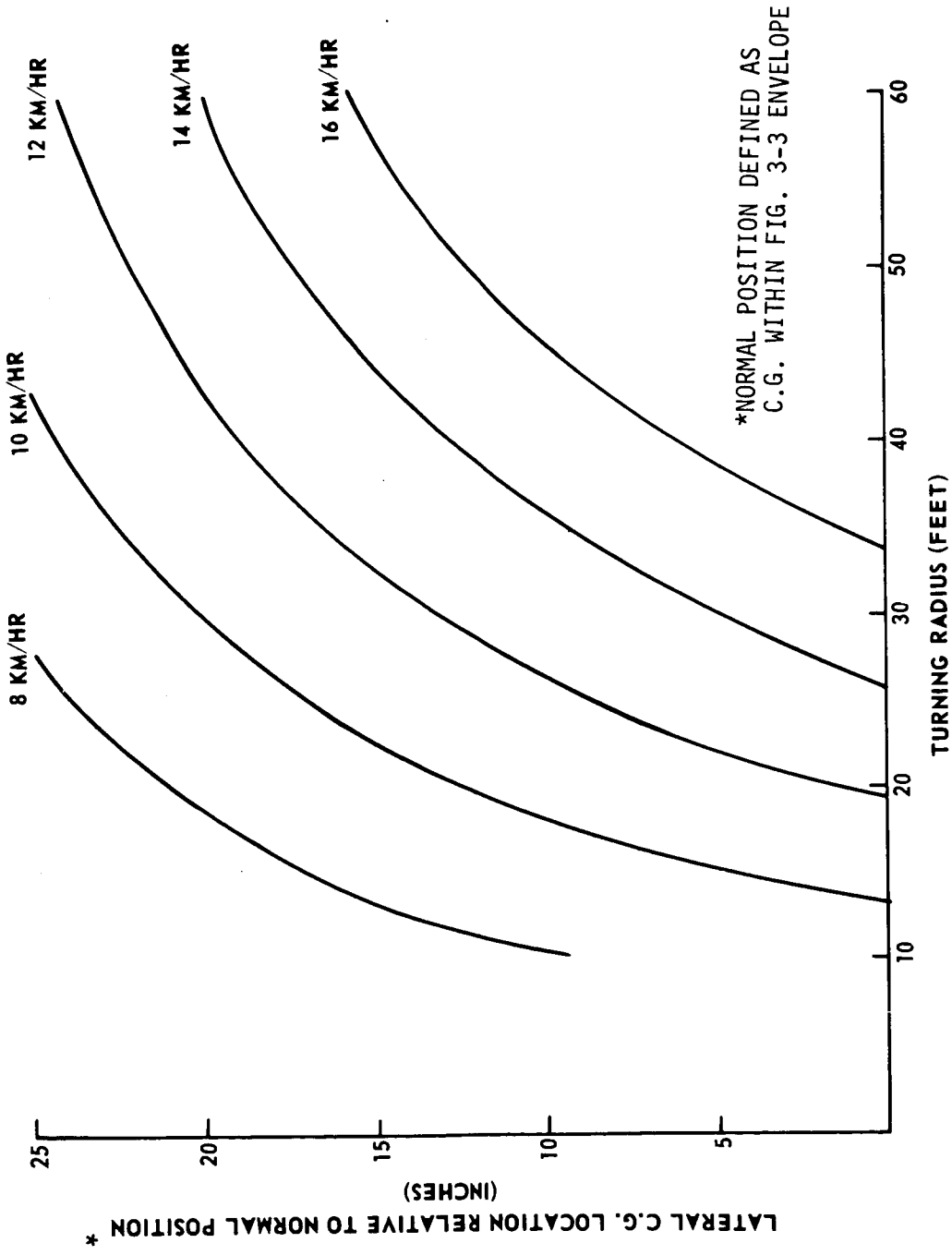

TURNING RADIUS REQUIRED TO PREVENT OVERTURN ON 0° SLOPE

FIGURE 3-10

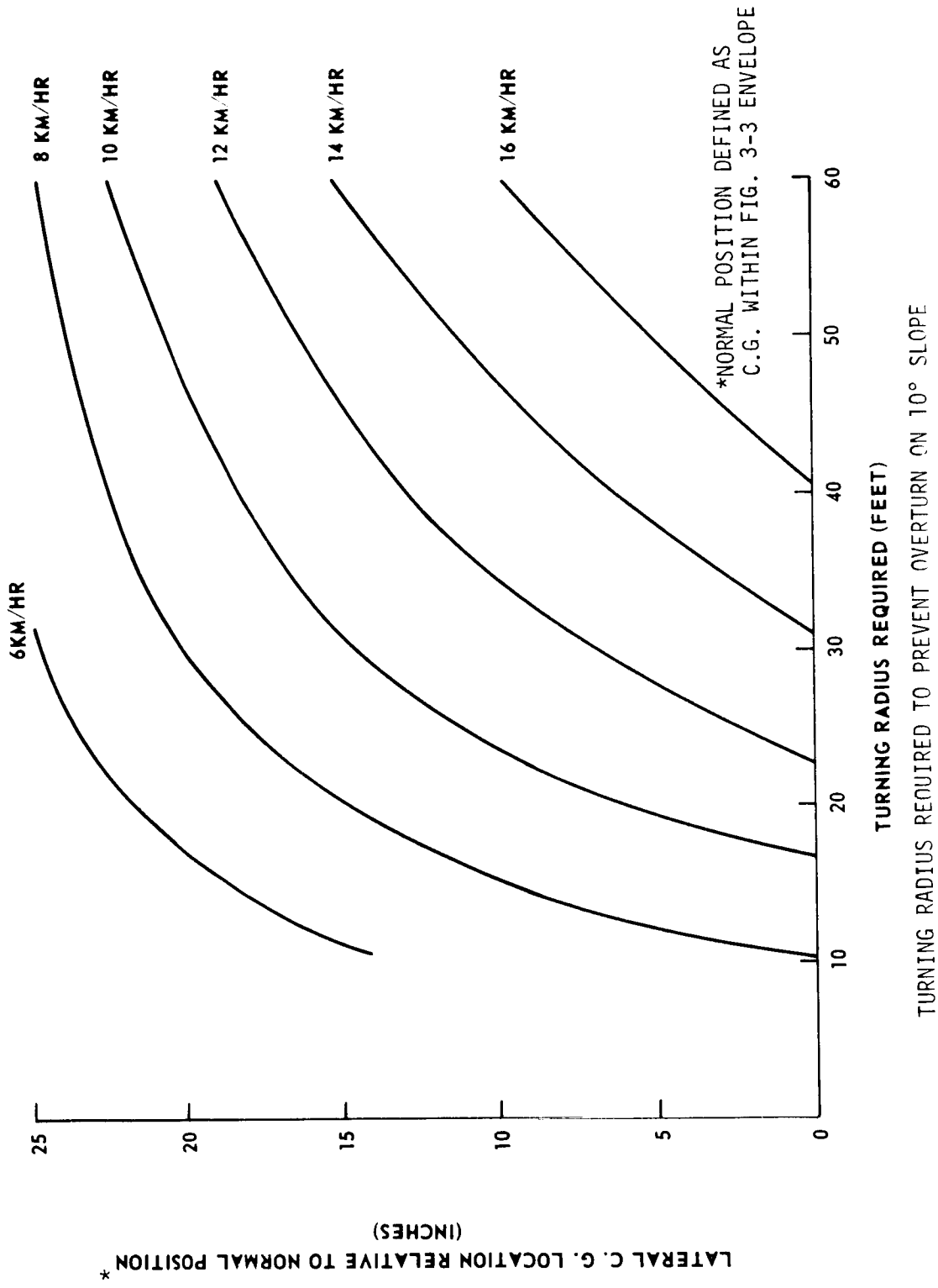

TURNING RADIUS REQUIRED TO PREVENT OVERTURN ON 10° SLOPE

FIGURE 3-11

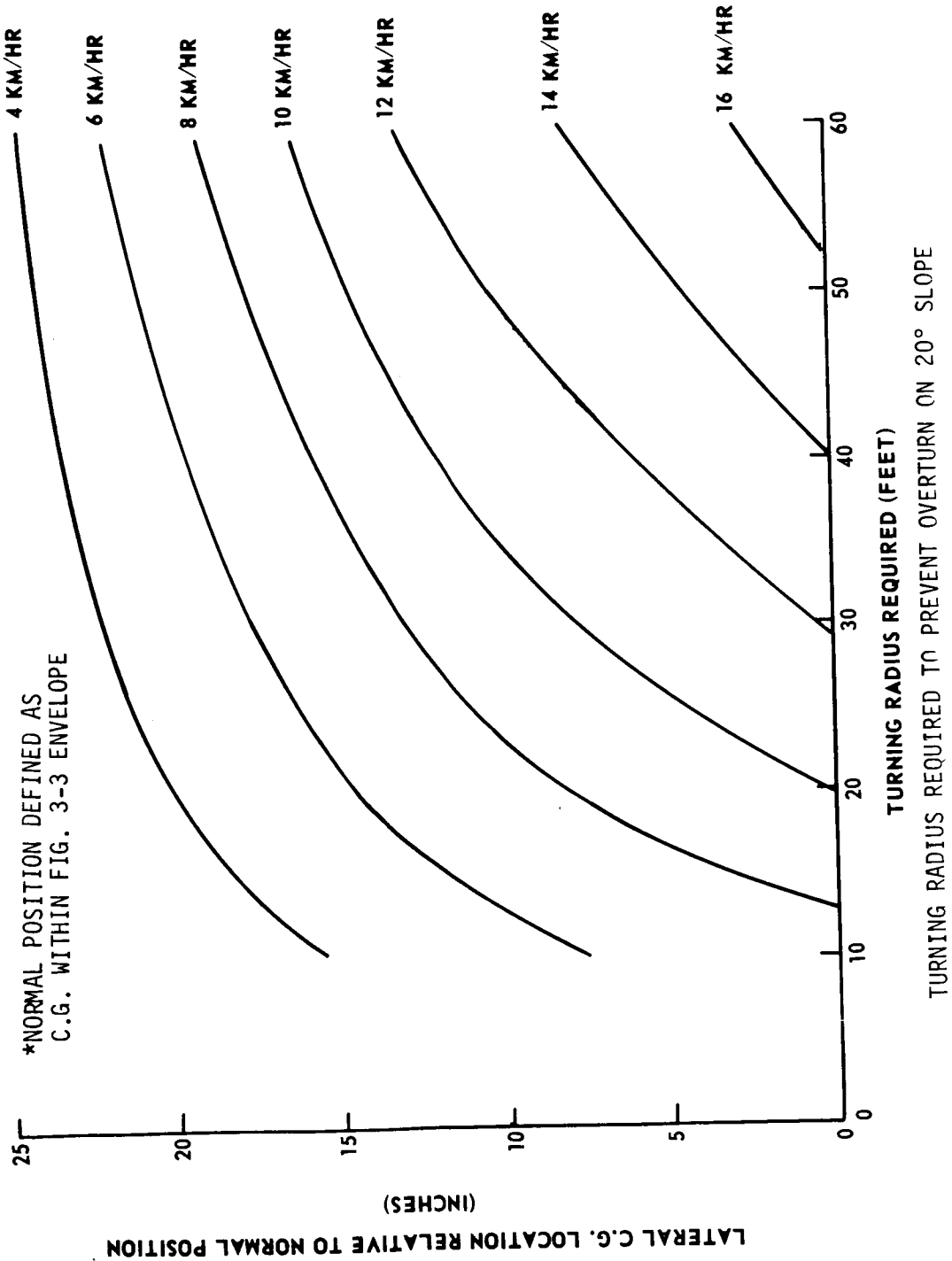

TURNING RADIUS REQUIRED TO PREVENT OVERTURN ON 20° SLOPE

FIGURE 3-12

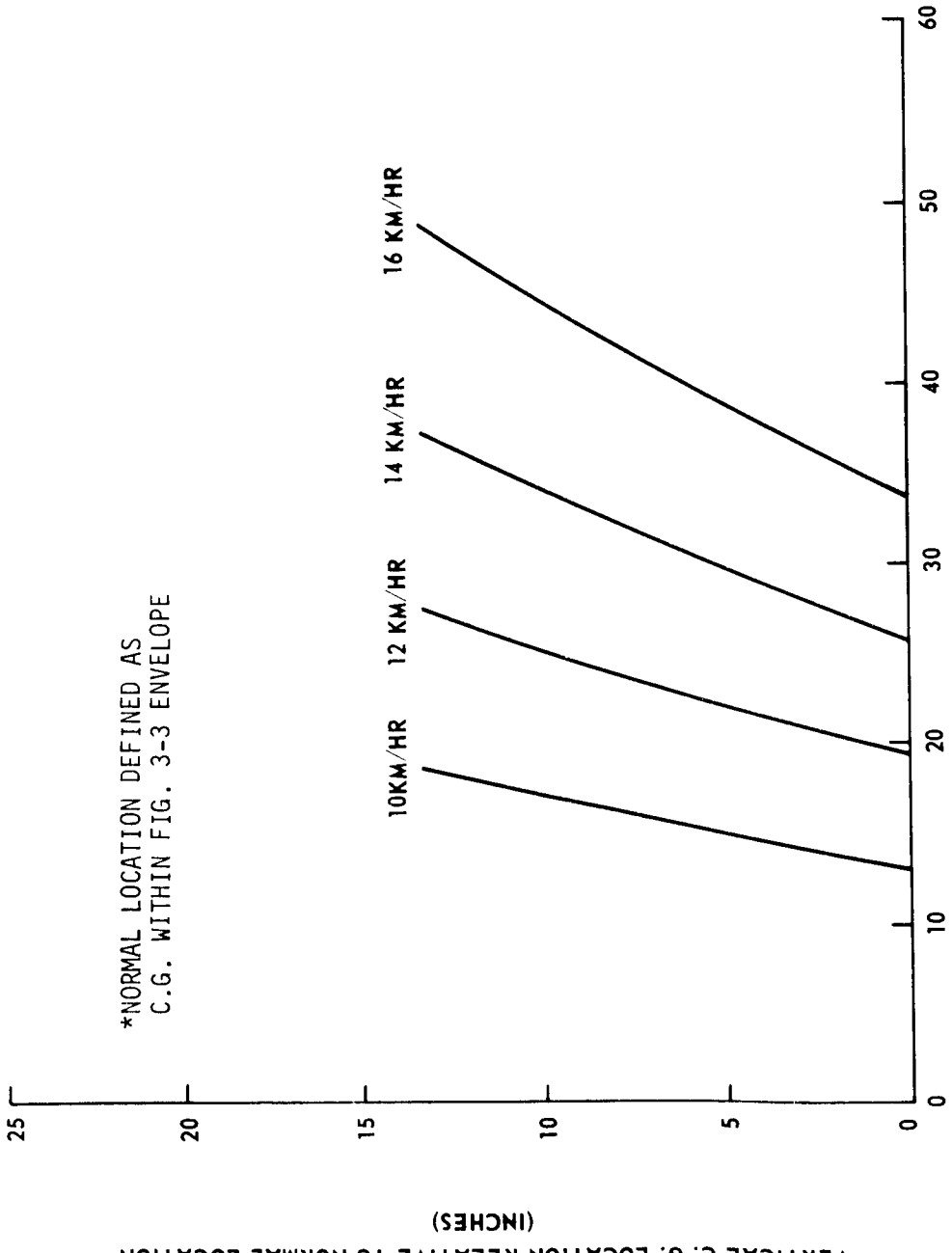

TURNING RADIUS REQUIRED TO PREVENT OVERTURN ON 0° SLOPE

FIGURE 3-13

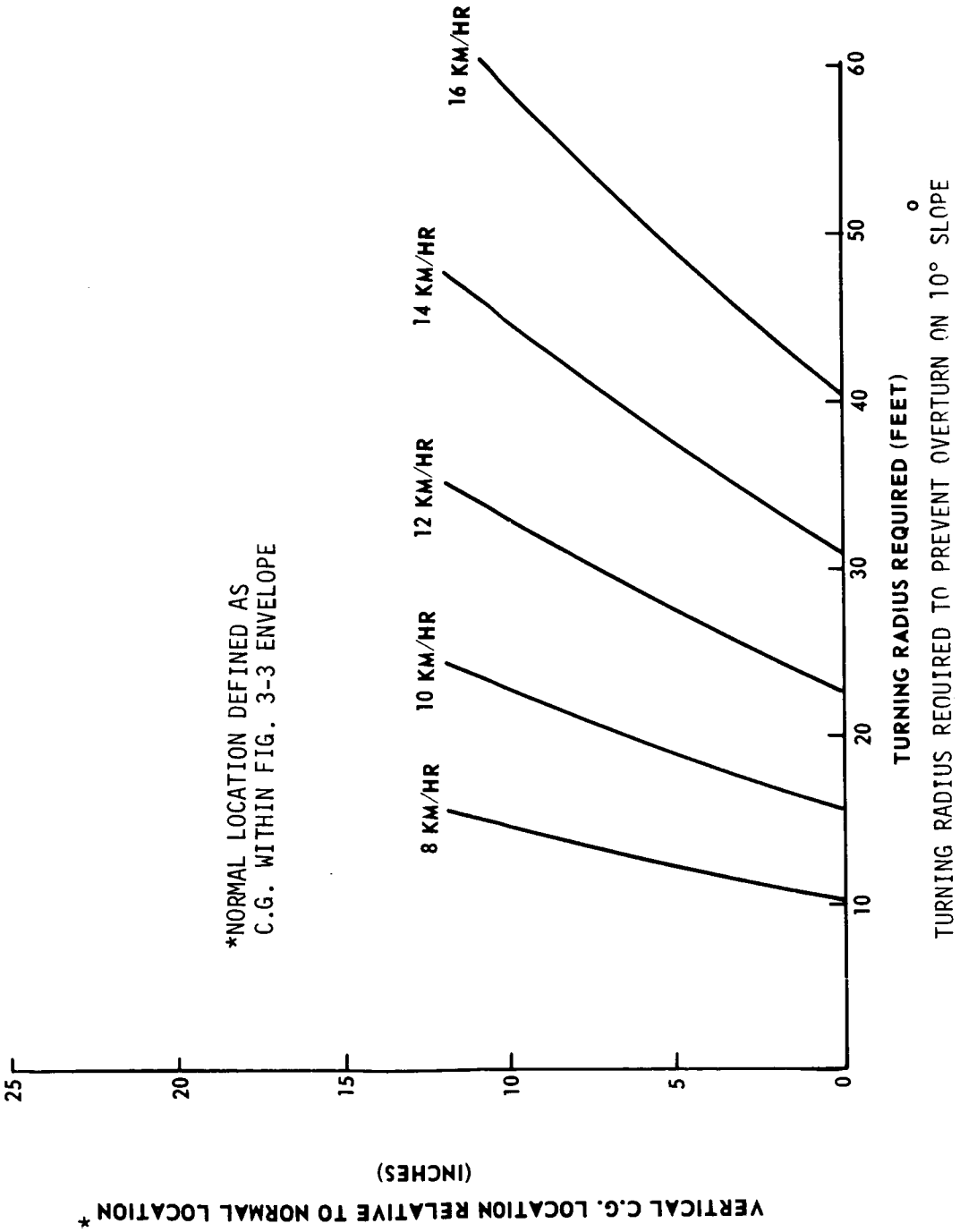

TURNING RADIUS REQUIRED TO PREVENT OVERTURN ON 10° SLOPE

FIGURE 3-14

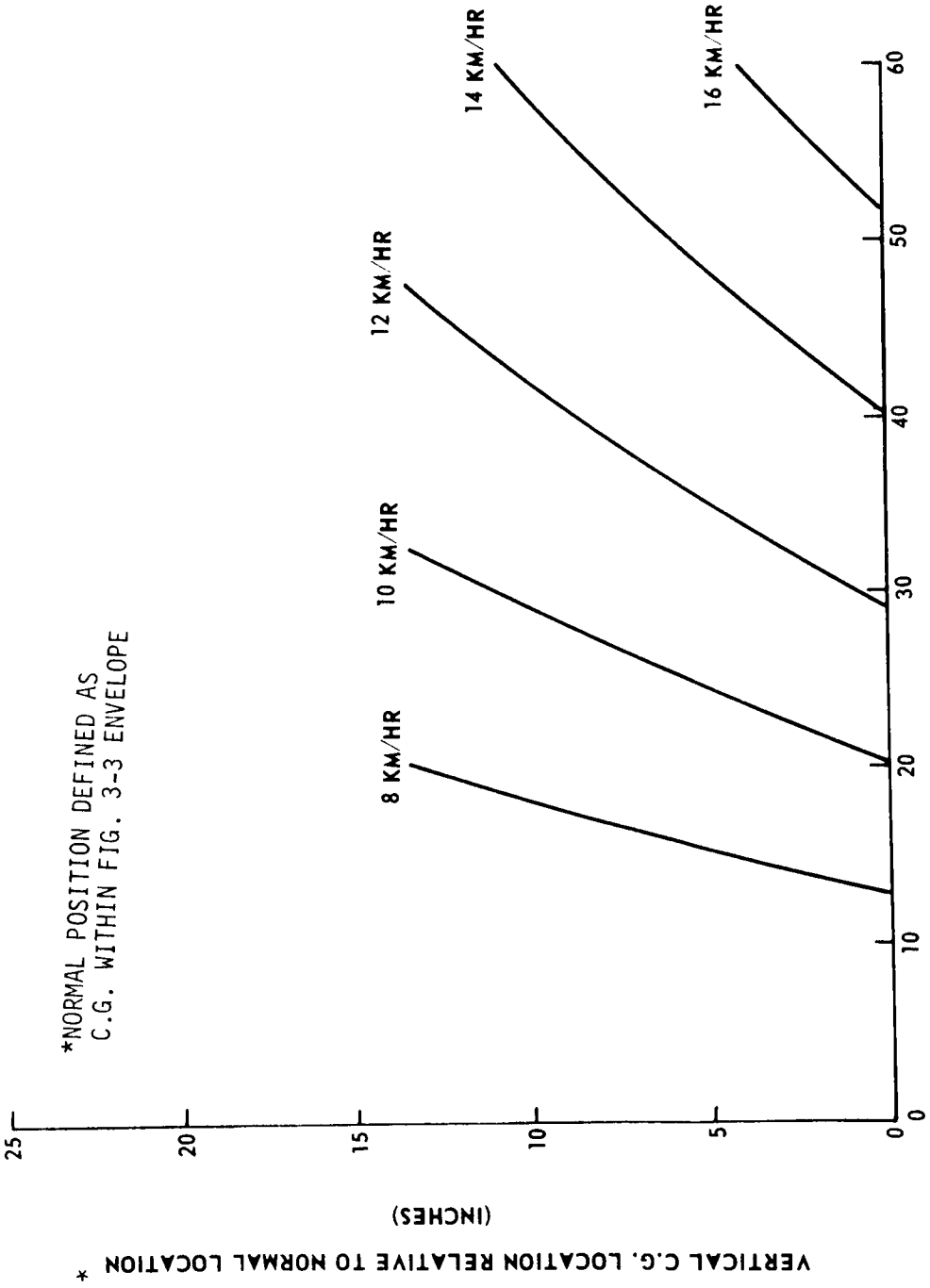

TURNING RADIUS REQUIRED TO PREVENT OVERTURN ON 20° SLOPE

FIGURE 3-15

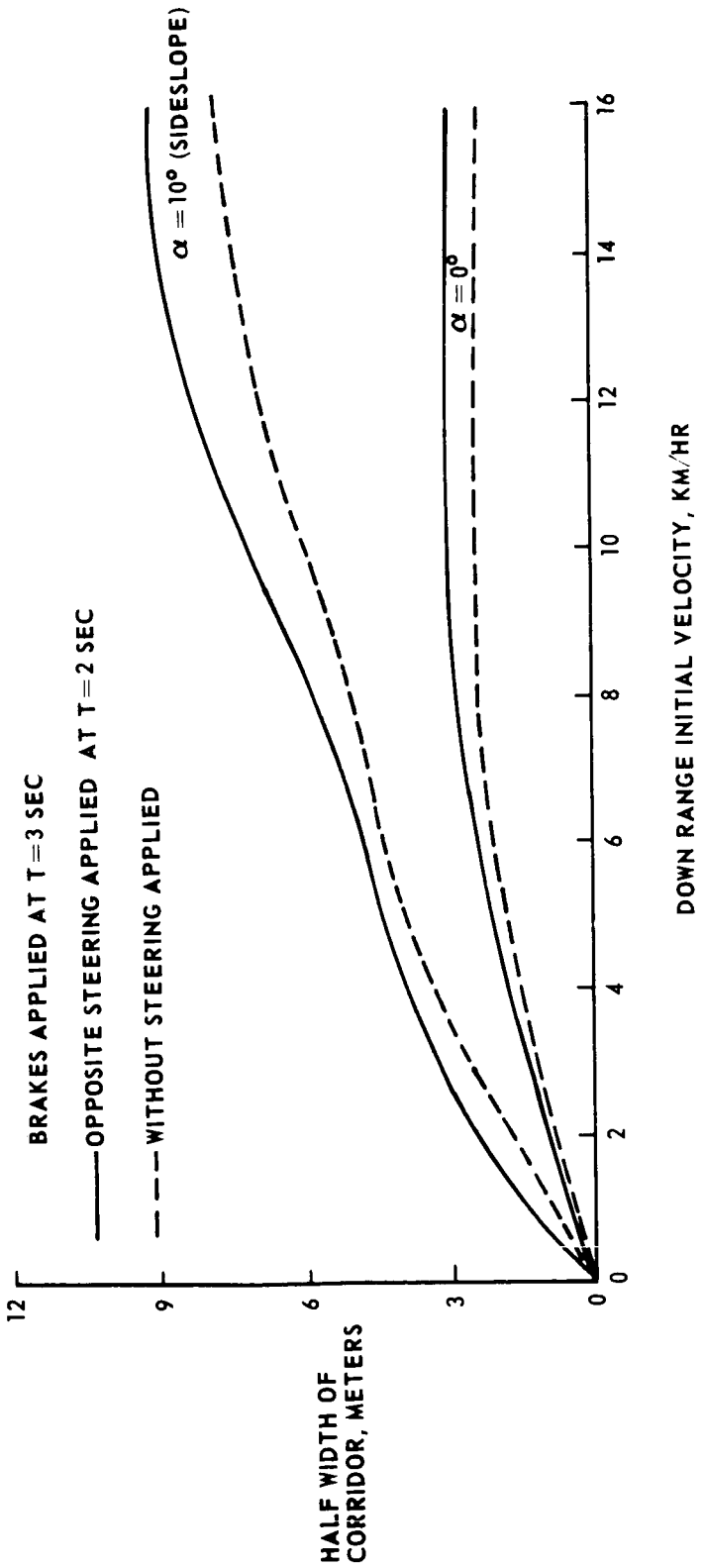

SAFE DRIVING CORRIDOR IN CASE OF STEERING FAILURE

FIGURE 3-16

APOLLO 15 LRV VELOCITY CONSTRAINTS (KPH)

CONSTRAINTS	SLOPE	SMOOTH MARE	ROUGH MARE	HUMMOCKY UPLAND	ROUGH UPLAND
SPEED CAPABILITY	0°	9.2	8.6	9.05	8.6
TORQUE LIMITED	5°	7.6	7.3	7.6	7.2
	10°	5.8	5.5	5.8	5.6
SUSPENSION		> 16	10	> 16	10
LIMIT LOADS		12" BUMP AT 14 KPH			
WHEEL FATIGUE LOADS		>16	>16	>16	>16
CONTROLLABILITY 13° SIDE SLIP ANGLE		6m TURN AT 5.5 KPH			
		12m TURN AT 10 KPH			

NOTE: MIDRANGE P.S.D.
1.5 FACTOR OF SAFETY ON SUSPENSION LOAD
1.65 LIFE FACTOR ON FATIGUE
AVERAGE SLOPE 0-1 2 DEGREES

TABLE 3-III SPEED RESTRICTIONS

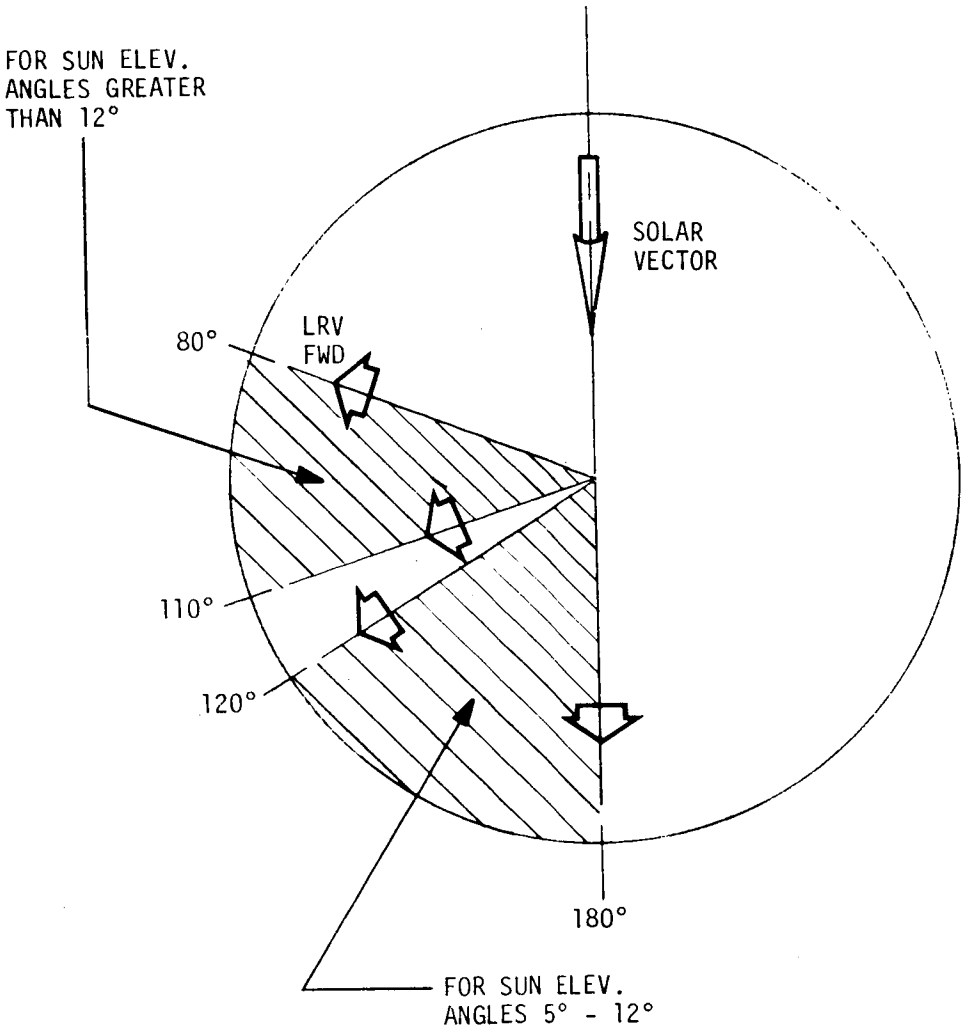

SHADED AREAS INDICATE THE PARKING ATTITUDES ACCEPTABLE TO THE LRV AND TO THE PAYLOAD.

FIGURE 3-17 PARKING ORIENTATION CONSTRAINTS

4.0 SUBSYSTEM PERFORMANCE DATA

This section defines the performance characteristics of the various LRV subsystems. Thermal performance characteristics are included for those subsystems having thermal limitations.

4.1 MOBILITY SUBSYSTEM PERFORMANCE

Total LRV battery current vs velocity is shown in Figure 4-0.
LRV power consumption per kilometer of travel as functions of speed, lurain slope and soil type is defined in Figures 4-1, 4-2, and 4-3. A constant speed was considered in the preparation of these curves. The effect of vehicle acceleration through the indicated velocity was not evaluated but the curves do include wheel slippage effects. Power consumption shown on these curves is based on traction drive characteristics shown in Figure 4-4.

Battery current provided to the traction drives as a function of speed and hand controller throttle position is defined on Figure 4-5.

The rate of traction drive temperature increase as a function of solar elevation angle and drive temperature is defined on Figures 4-6. A zero degree slope was considered in the preparation of these curves.

The effects of zenith angle and traction drive temperature upon the wheel temperature increase for a solar elevation angle of 60° are shown in Figures 4-7 through 4-10.

The rate of traction drive temperature increase as a function of vehicle speed and traction drive temperature under zero degree slope and 60 degree solar angle conditions is shown in Figures 4-7 through 4-10.

The rate of traction drive temperature increase as a function of vehicle speed and traction drive temperature under zero degree slope and 60 degree solar angle conditions is shown in Figure 4-11.

The rate of traction drive temperature increase for a solar angle of 60° and as a function of lurain slope and drive temperature is defined in Figure 4-12.

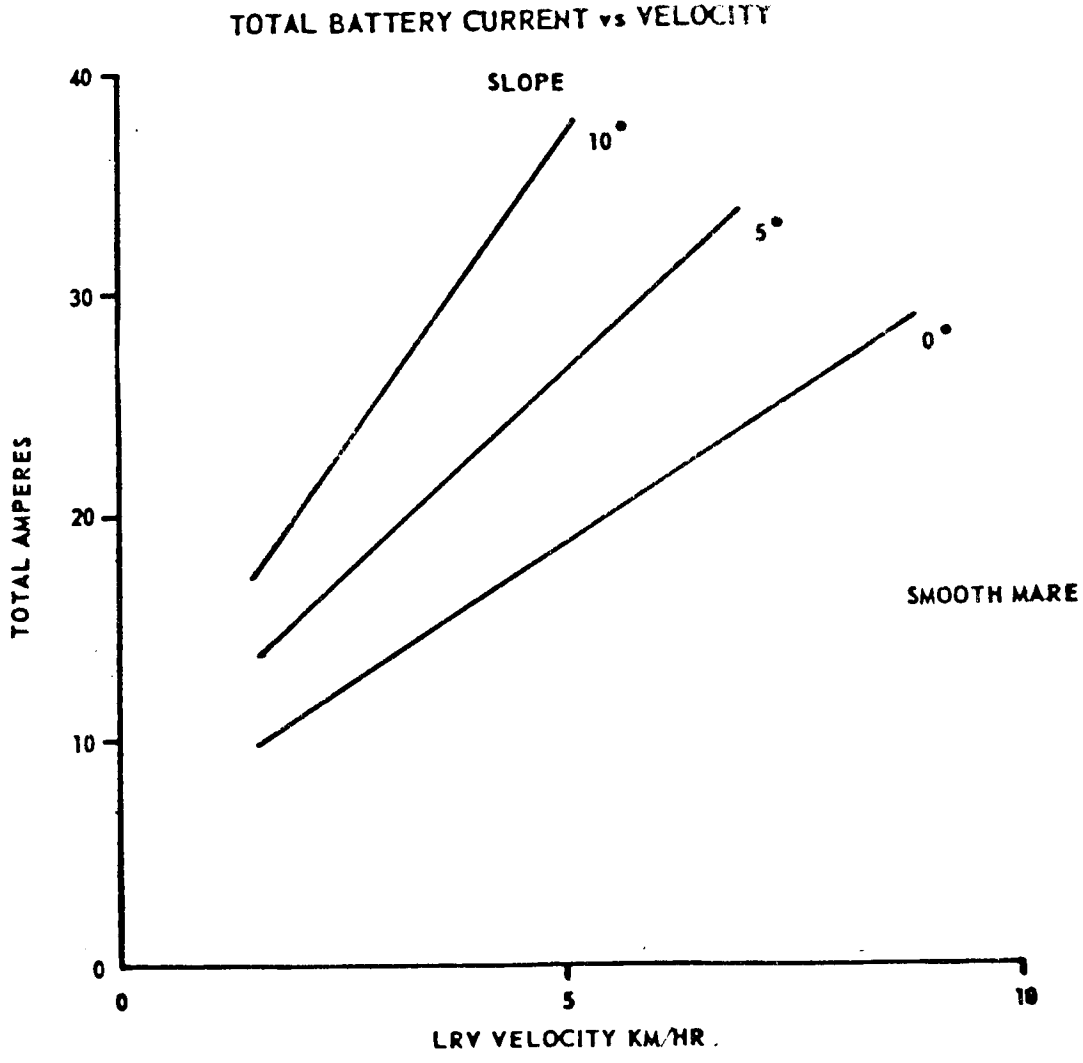
TOTAL BATTERY CURRENT vs VELOCITY
SLOPE
10°
5°
0°
SMOOTH MARE
TOTAL AMPERES
40
30
20
10
0
0
5
10
LRV VELOCITY KM/HR.

FIGURE 4-0

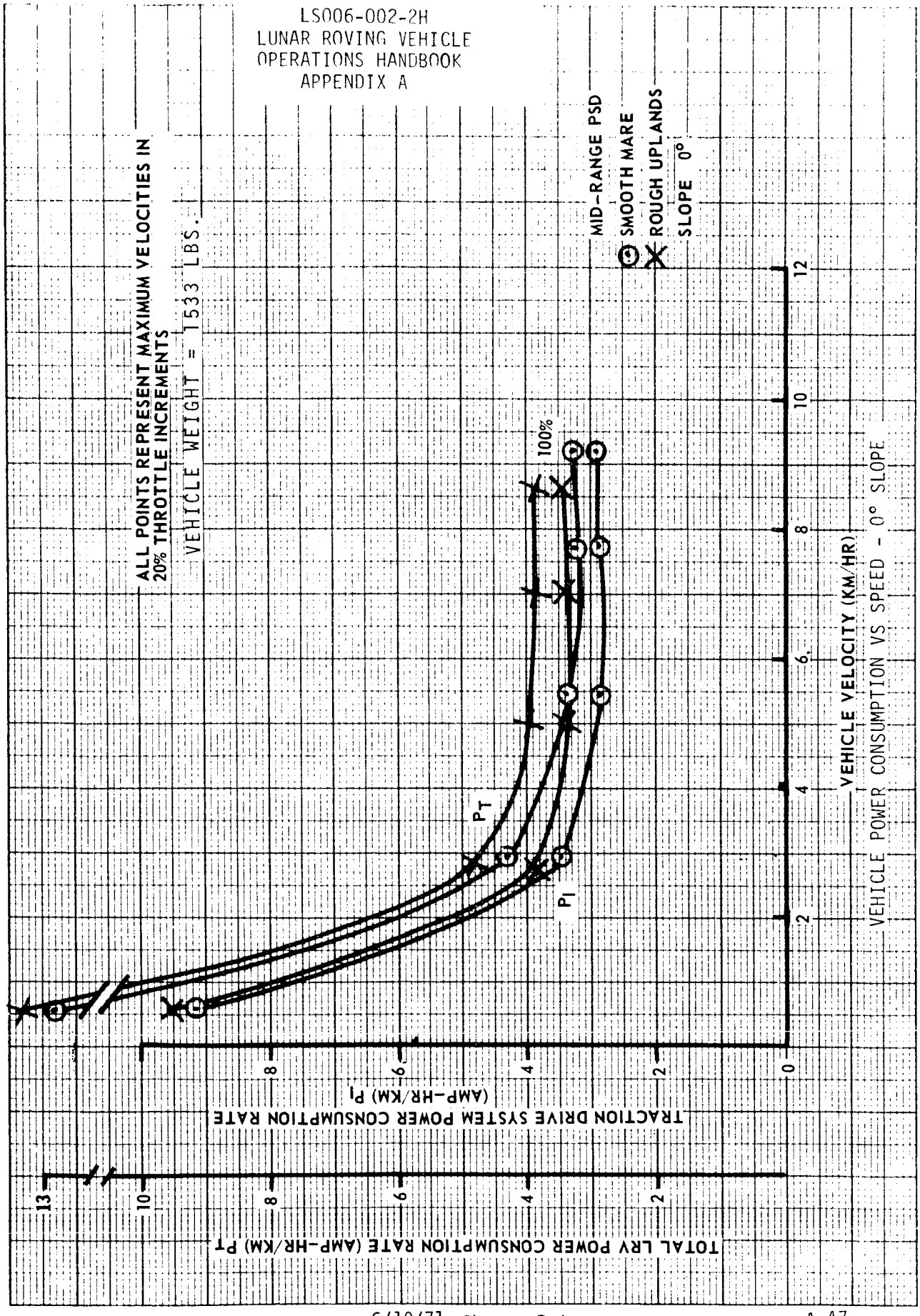

VEHICLE POWER CONSUMPTION VS SPEED - 0° SLOPE

FIGURE 4-1

K+E 10 X 10 TO ½ INCH 46 1523
7 X 10 INCHES MADE IN U.S.A.
KEUFFEL & ESSER CO.

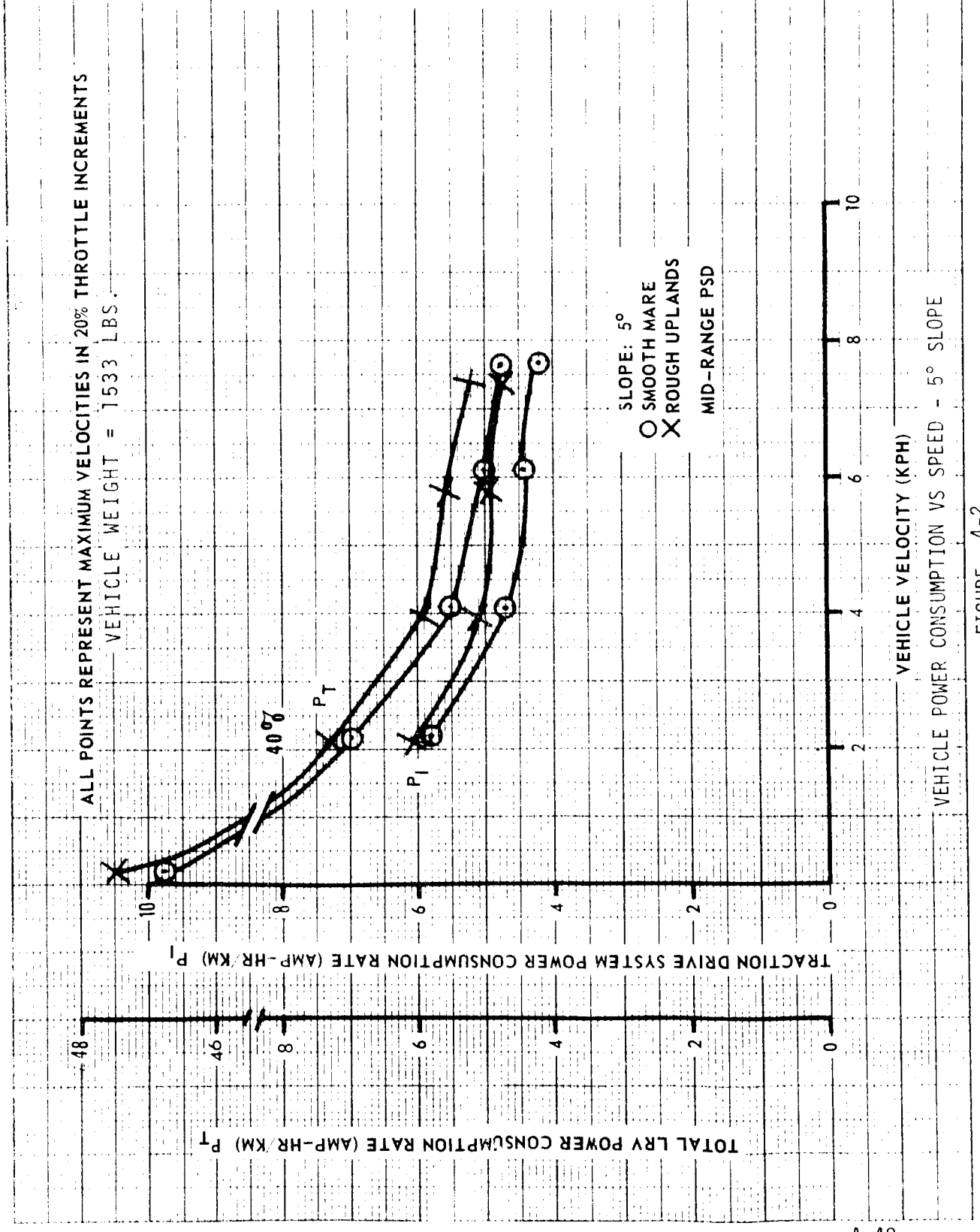

VEHICLE POWER CONSUMPTION VS SPEED - 5° SLOPE

FIGURE 4-2

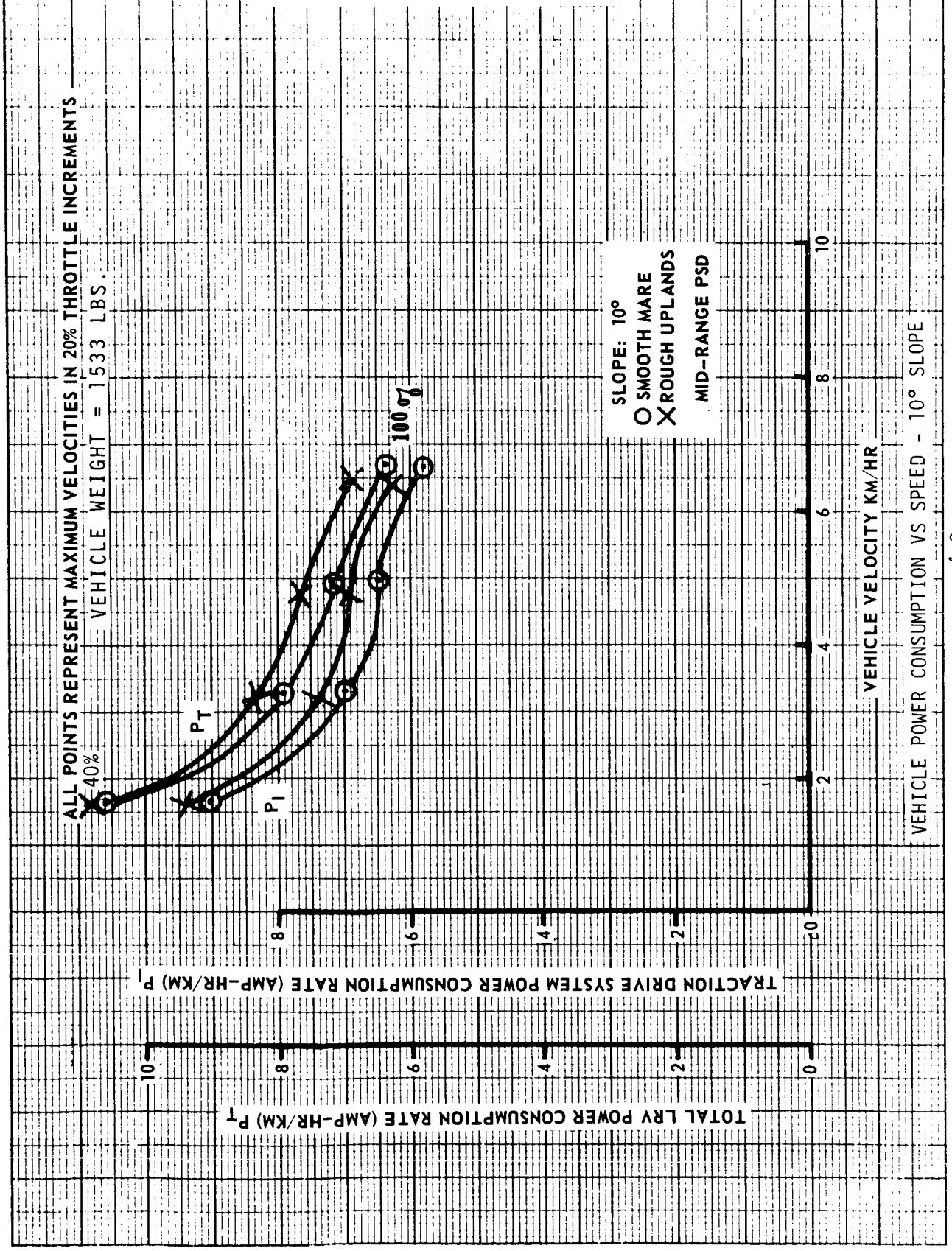

VEHICLE POWER CONSUMPTION VS SPEED - 10° SLOPE

FIGURE 4-3

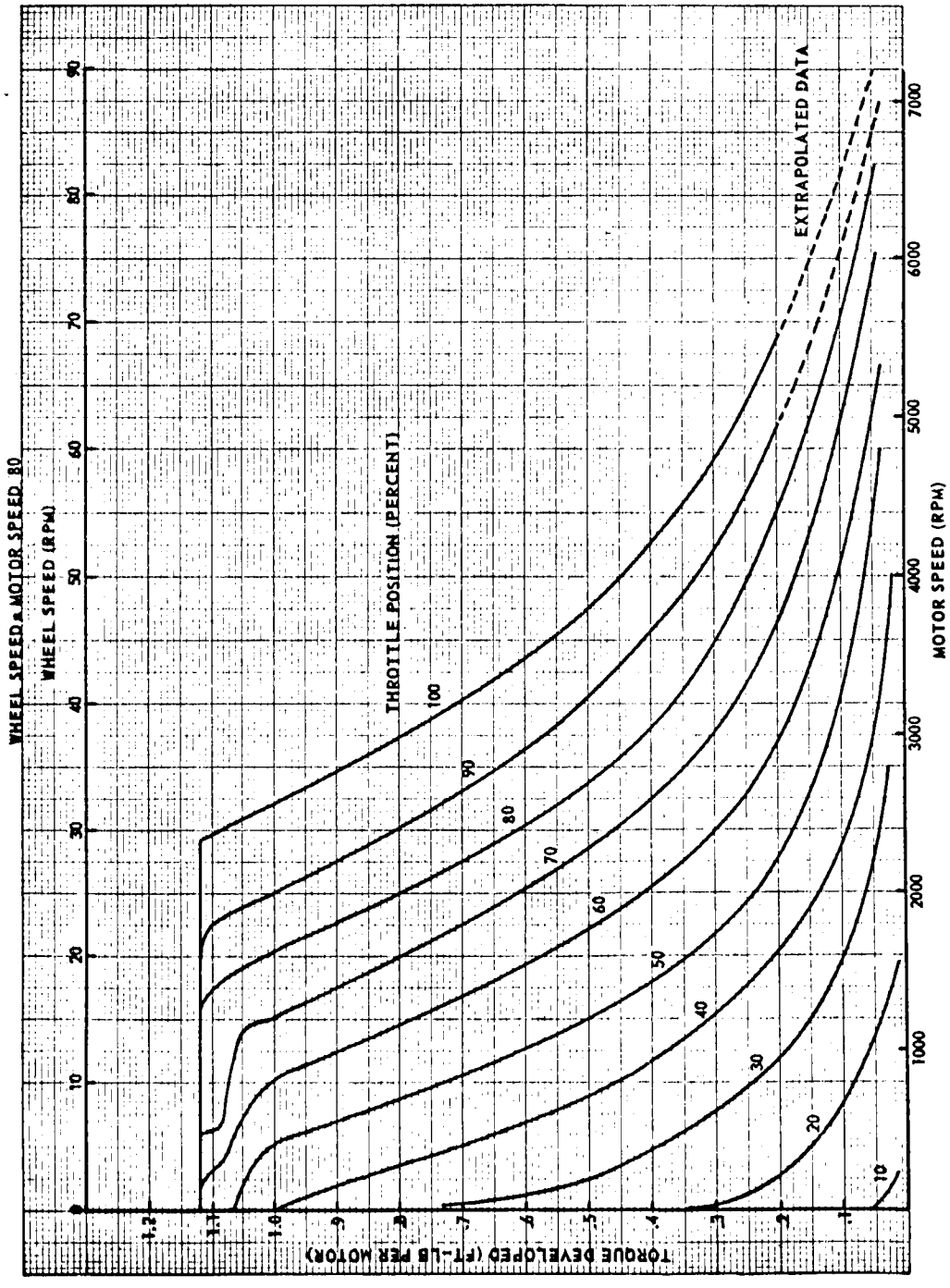

FIGURE 4-4 LRV TRACTION DRIVE PERFORMANCE

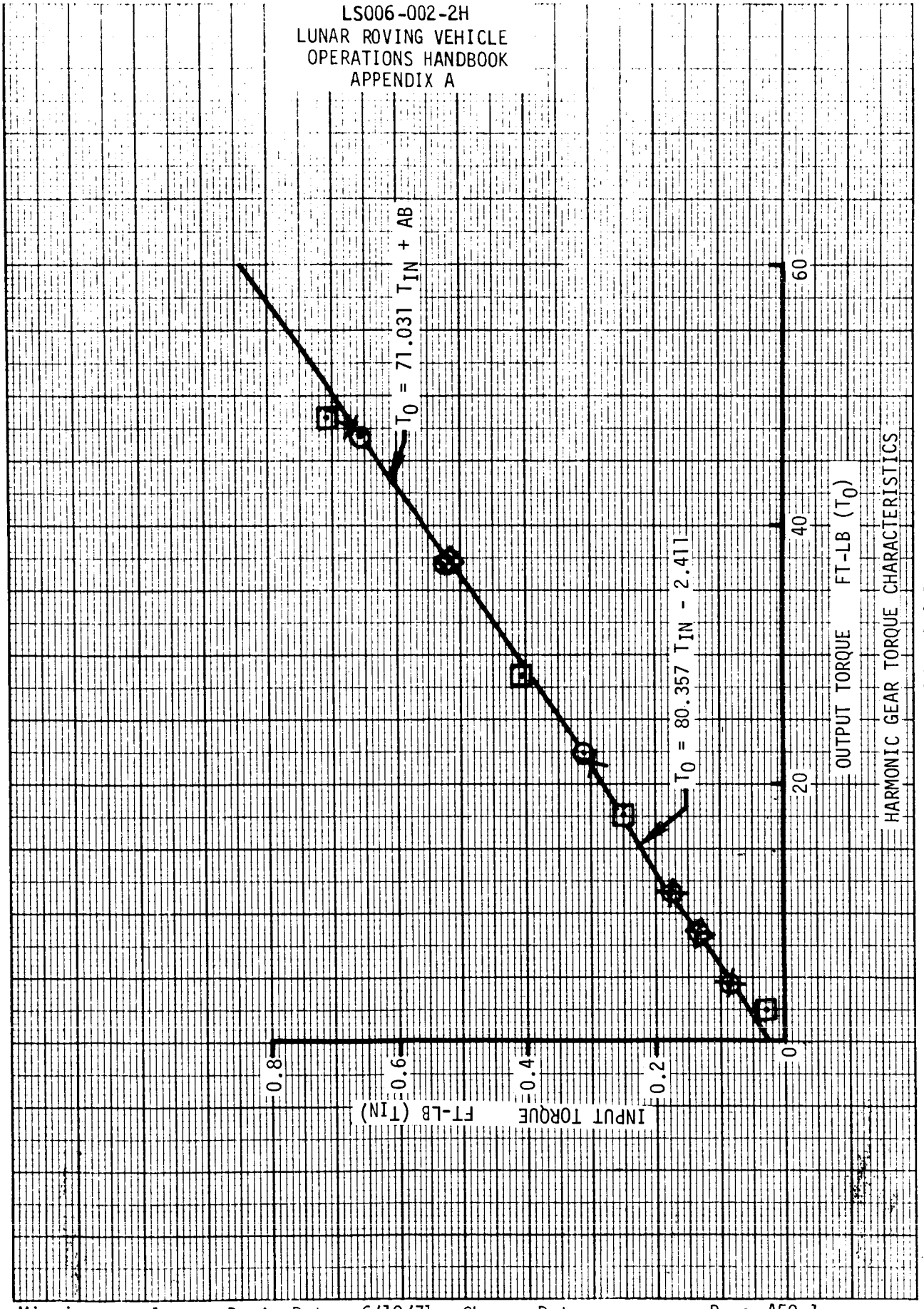

HARMONIC GEAR TORQUE CHARACTERISTICS

FIGURE 4-4.1

K+E 10 X 10 TO ½ INCH 46 1323
7 X 10 INCHES MADE IN U.S.A.
KEUFFEL & ESSER CO.

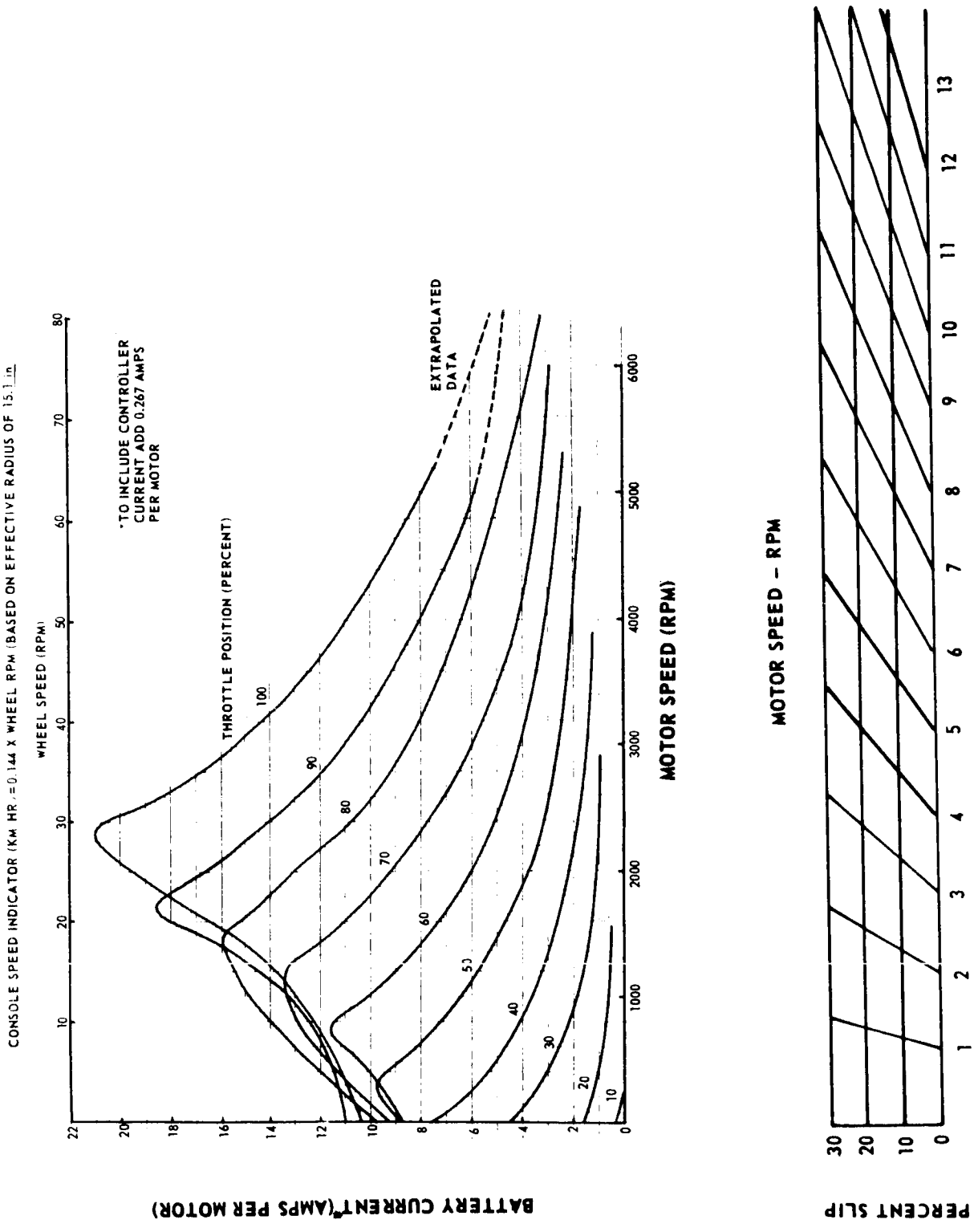

BATTERY CURRENT VS SPEED

FIGURE 4-5

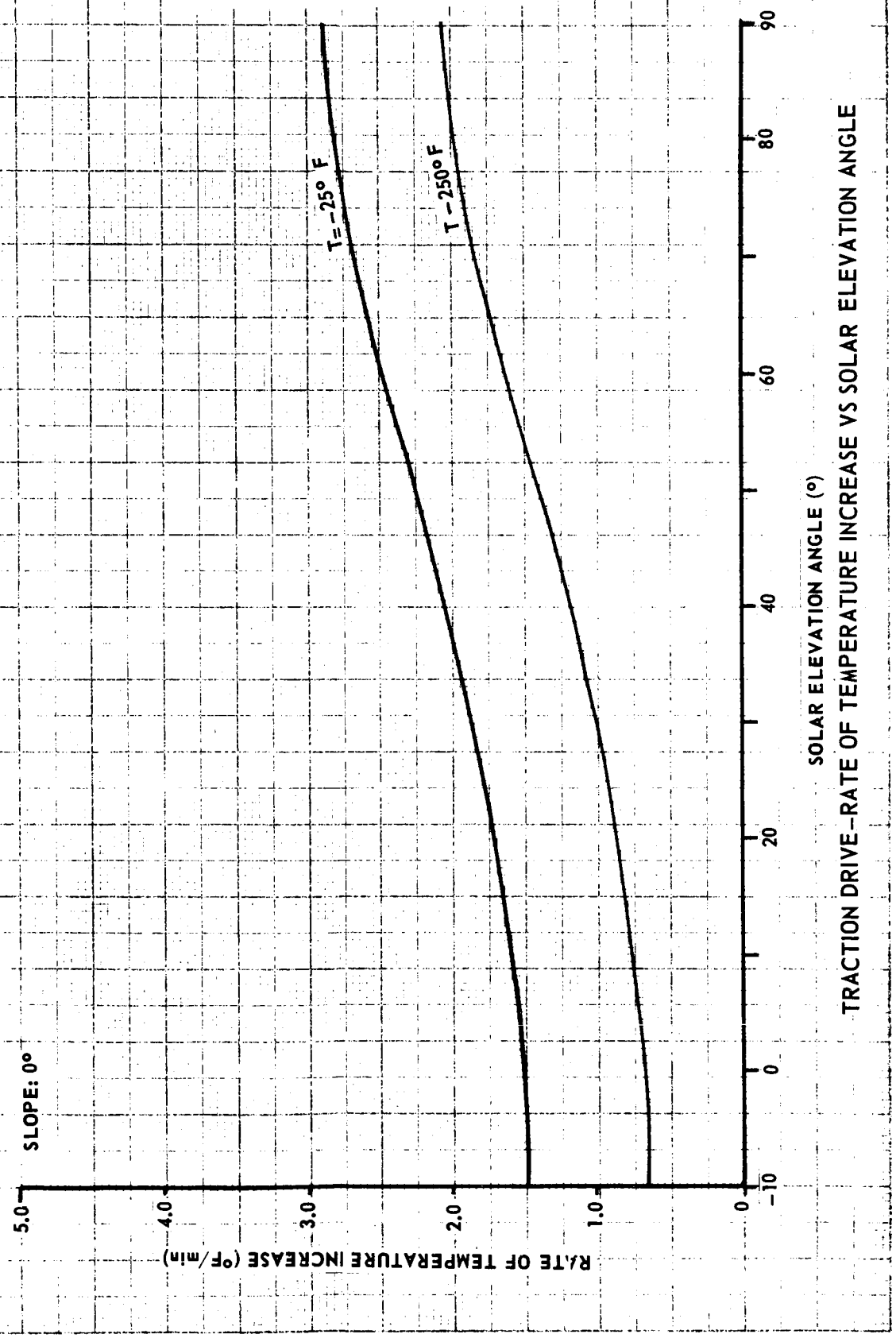

TRACTION DRIVE-RATE OF TEMPERATURE INCREASE VS SOLAR ELEVATION ANGLE

FIGURE 4-6

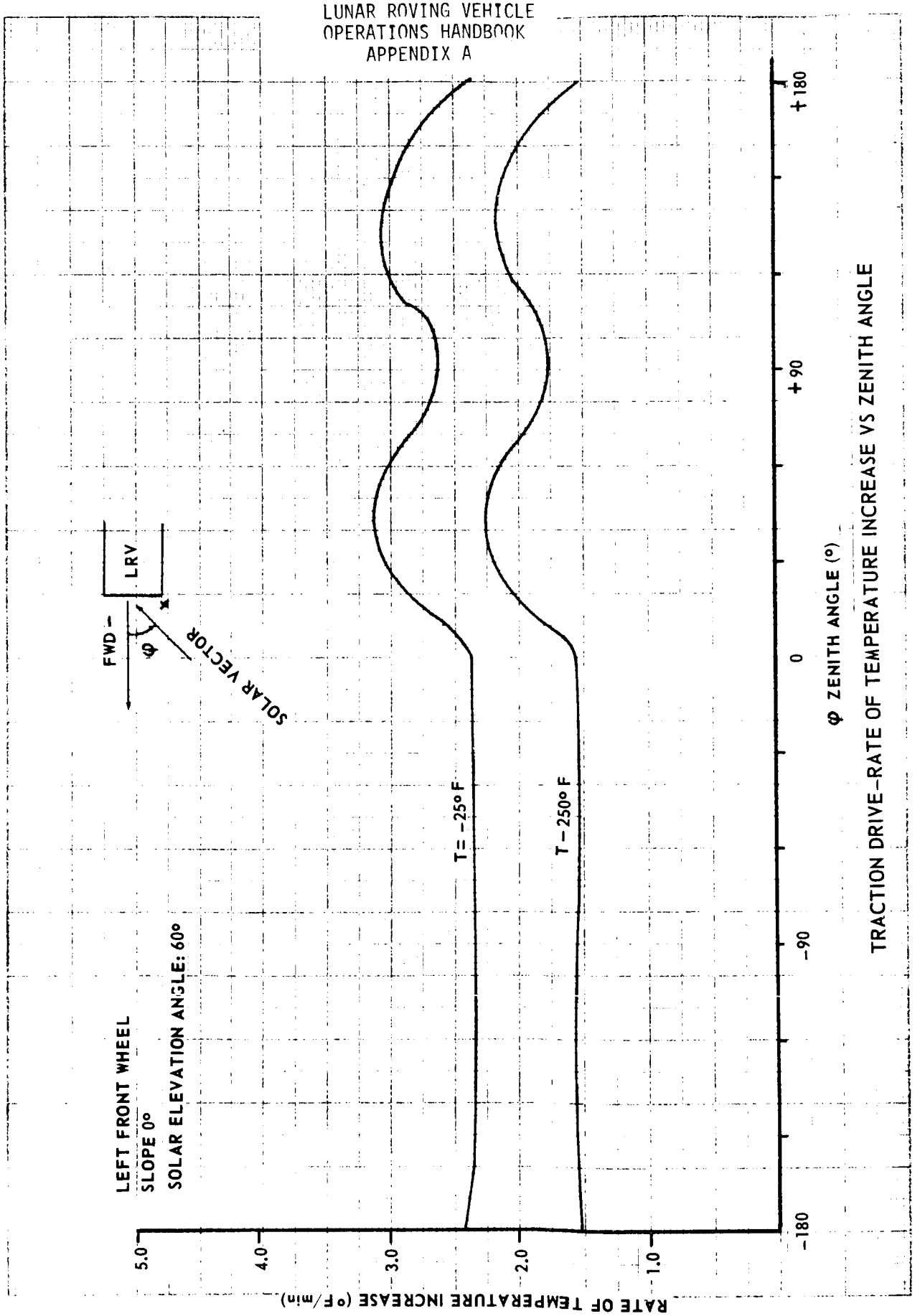

TRACTION DRIVE-RATE OF TEMPERATURE INCREASE VS ZENITH ANGLE

FIGURE 4-7

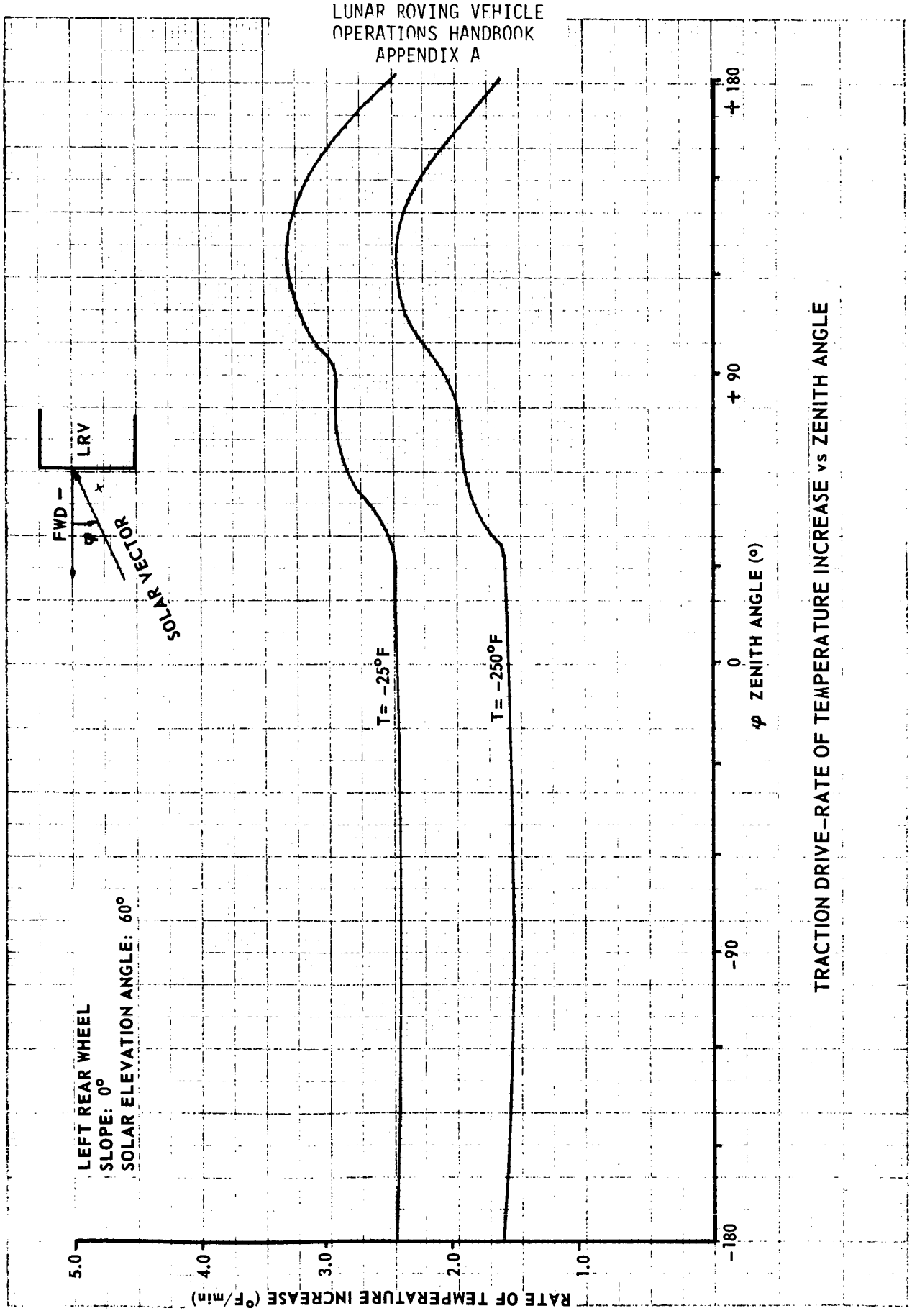

TRACTION DRIVE-RATE OF TEMPERATURE INCREASE vs ZENITH ANGLE

FIGURE 4-8

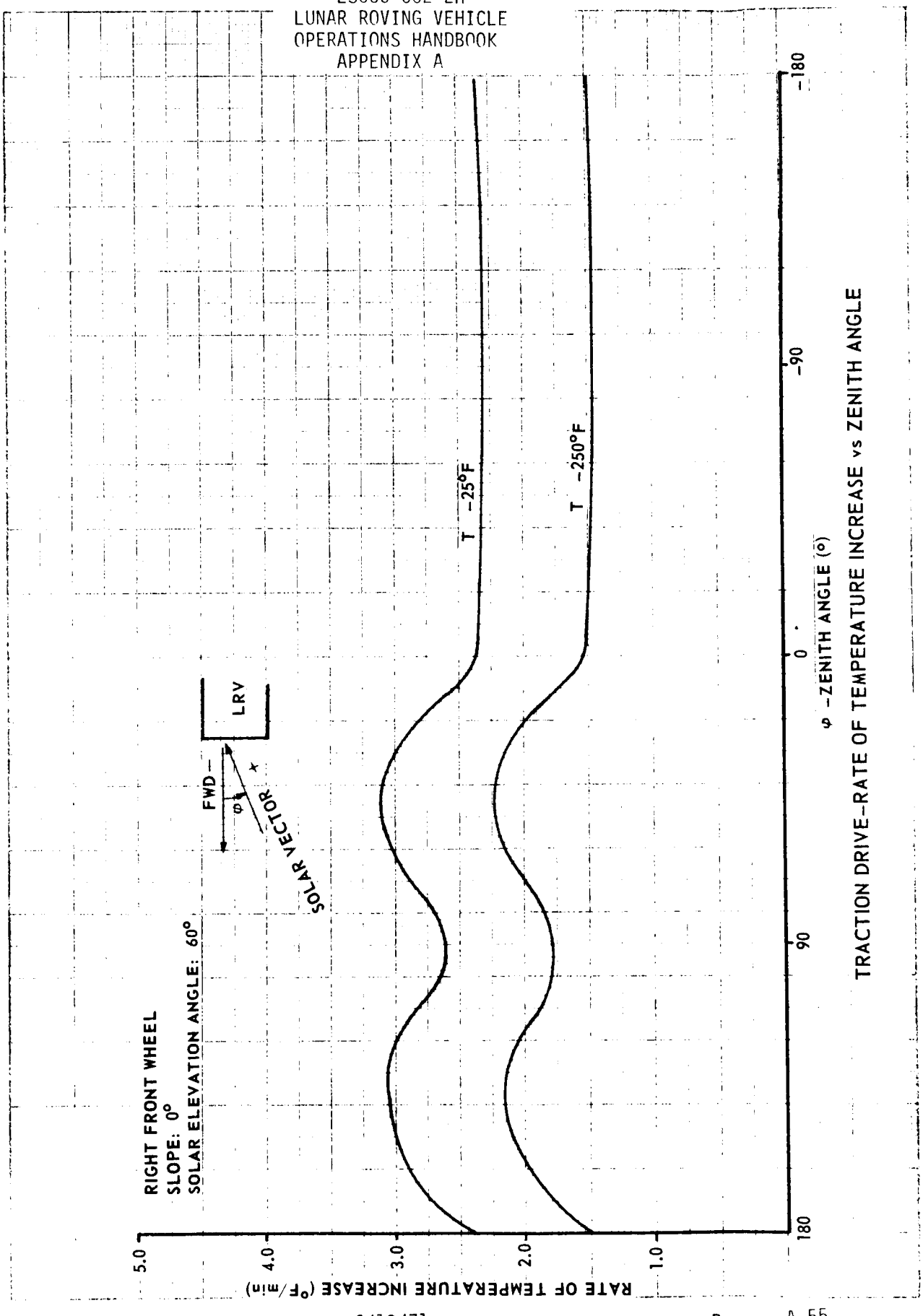

TRACTION DRIVE-RATE OF TEMPERATURE INCREASE vs ZENITH ANGLE

FIGURE 4-9

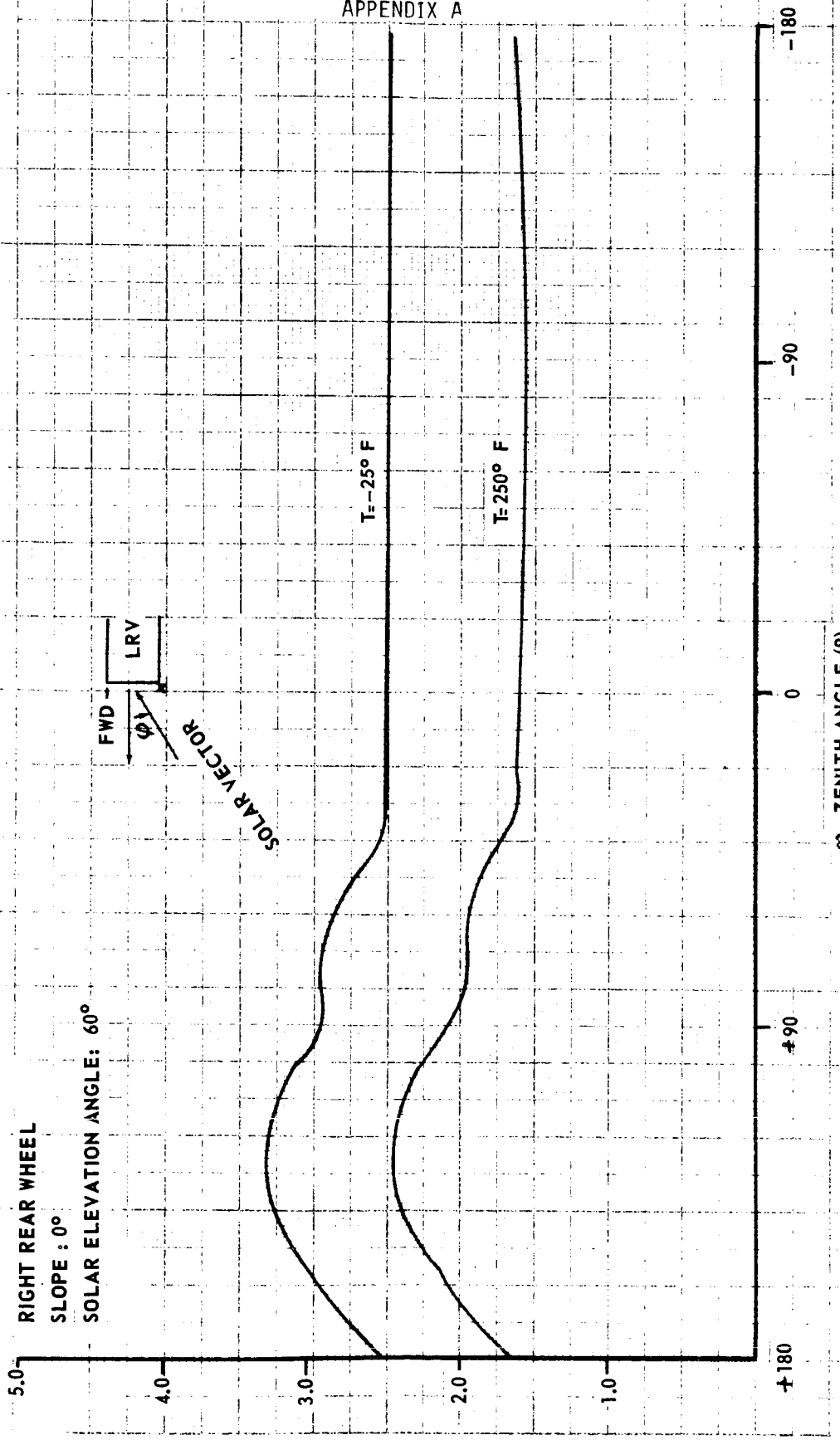

TRACTION DRIVE-RATE OF TEMPERATURE INCREASE VS ZENITH ANGLE

FIGURE 4-10

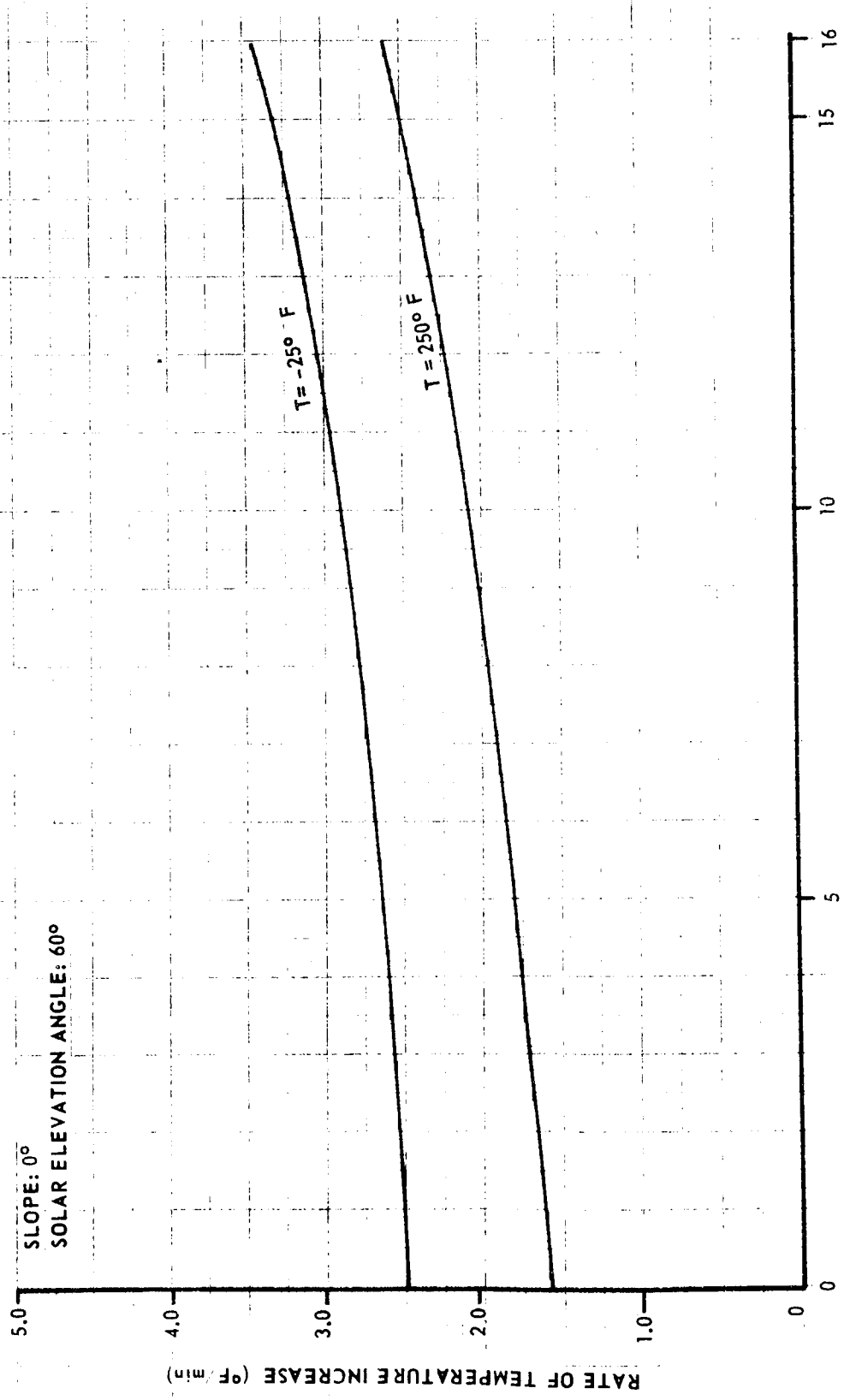

TRACTION DRIVE-RATE OF TEMPERATURE INCREASE VS SPEED

FIGURE 4-11

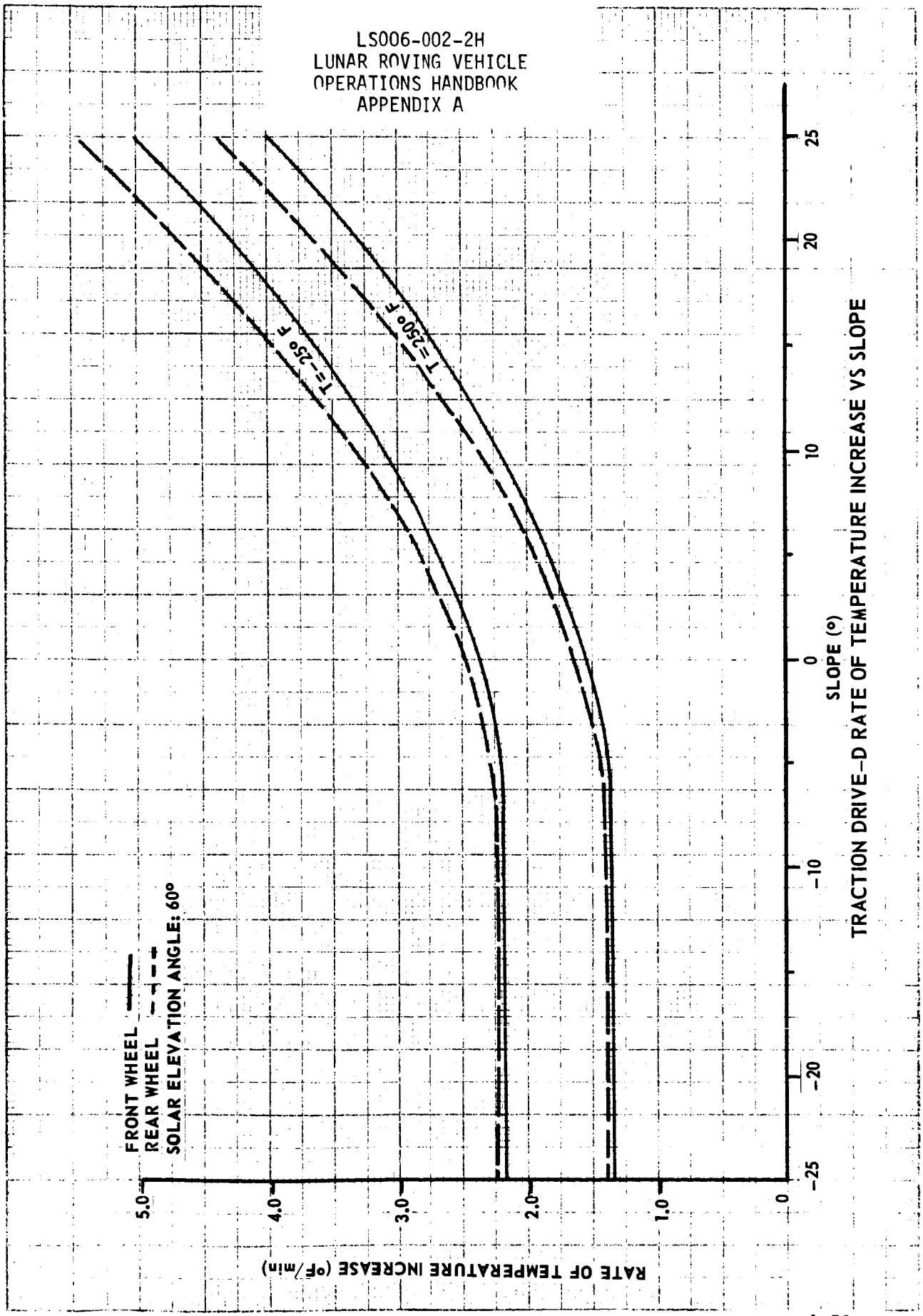
TRACTION DRIVE–D RATE OF TEMPERATURE INCREASE VS SLOPE
SLOPE (°)
-25
-20
-10
0
10
20
25
RATE OF TEMPERATURE INCREASE (°F/min)
0
1.0
2.0
3.0
4.0
5.0
T = 250° F
T = -250° F
FRONT WHEEL
REAR WHEEL
SOLAR ELEVATION ANGLE: 60°

FIGURE 4-12

4.2 ELECTRICAL SUBSYSTEM PERFORMANCE

The battery nominal voltage is 36 $^{+5}_{-3}$ VDC. Voltage for various current drains between 0 and 62 amperes is shown in Figure 4-13. Voltage vs. state of charge at a final discharge rate of 47 amperes is shown in Figure 4-14. The rate of battery temperature increase as a function of current flow and battery temperature is defined on Figures 4-15 and 4-16. Separate curves are provided for both left and right battery positions. The effect of battery temperature and solar reflector dust coverage upon battery temperature change for both left and right battery positions is defined on Figures 4-17 and 4-18. Rates of battery temperature increase with one battery providing all the required LRV power can be obtained from Figures 4-15 and 4-16.

Distribution losses in the power distribution system are shown in Figure 4-19. The 36 volt losses (I_E) are shown totaled for all four traction drive motors using the motor current scale. Motor controller cable losses (I_m) are shown in Figures 4-19 using the total battery current scale.

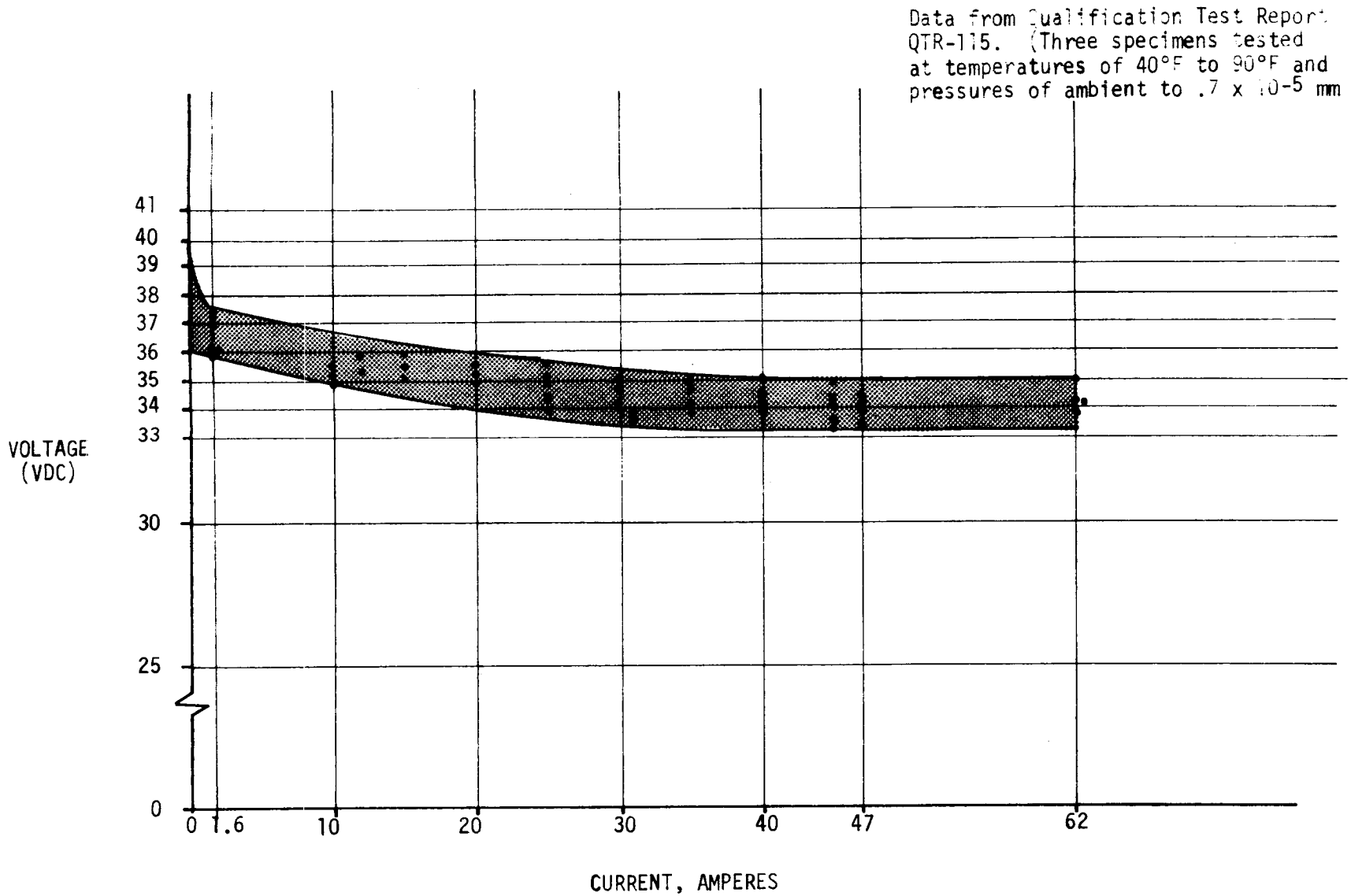

FIGURE 4-13 VOLTAGE VS CURRENT DRAW PER BATTERY

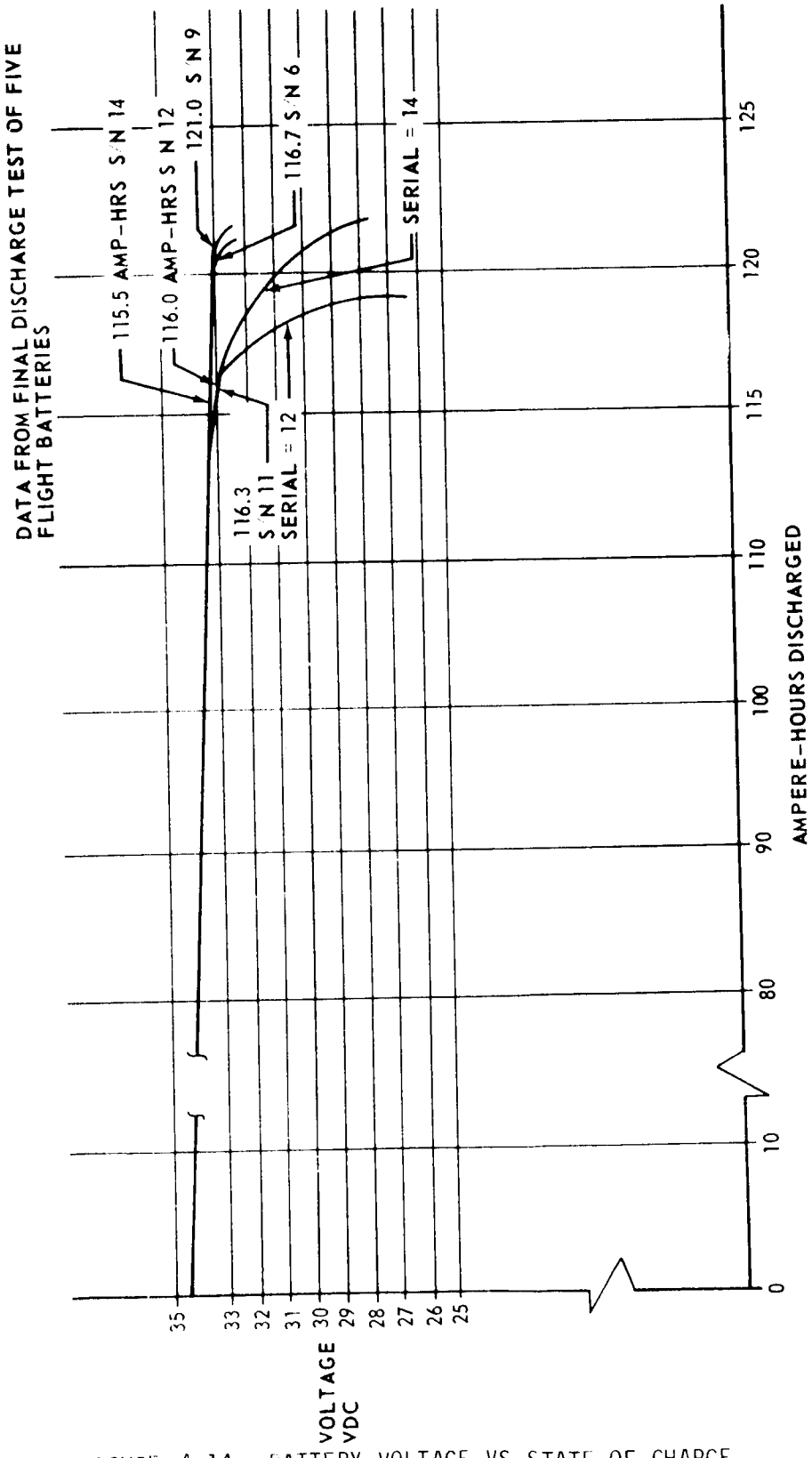

FIGURE 4-14 BATTERY VOLTAGE VS STATE OF CHARGE

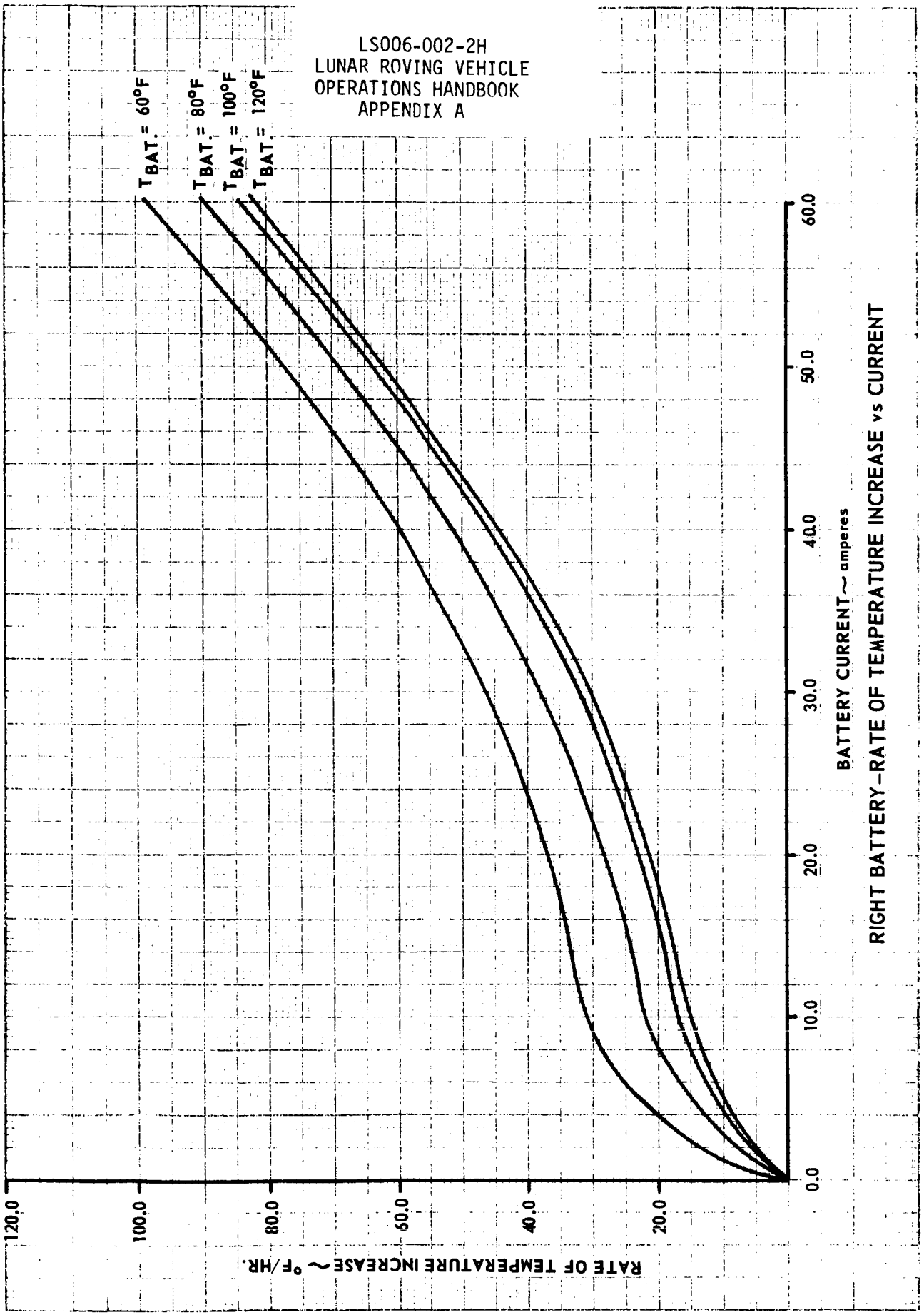

RIGHT BATTERY–RATE OF TEMPERATURE INCREASE vs CURRENT

FIGURE 4-15

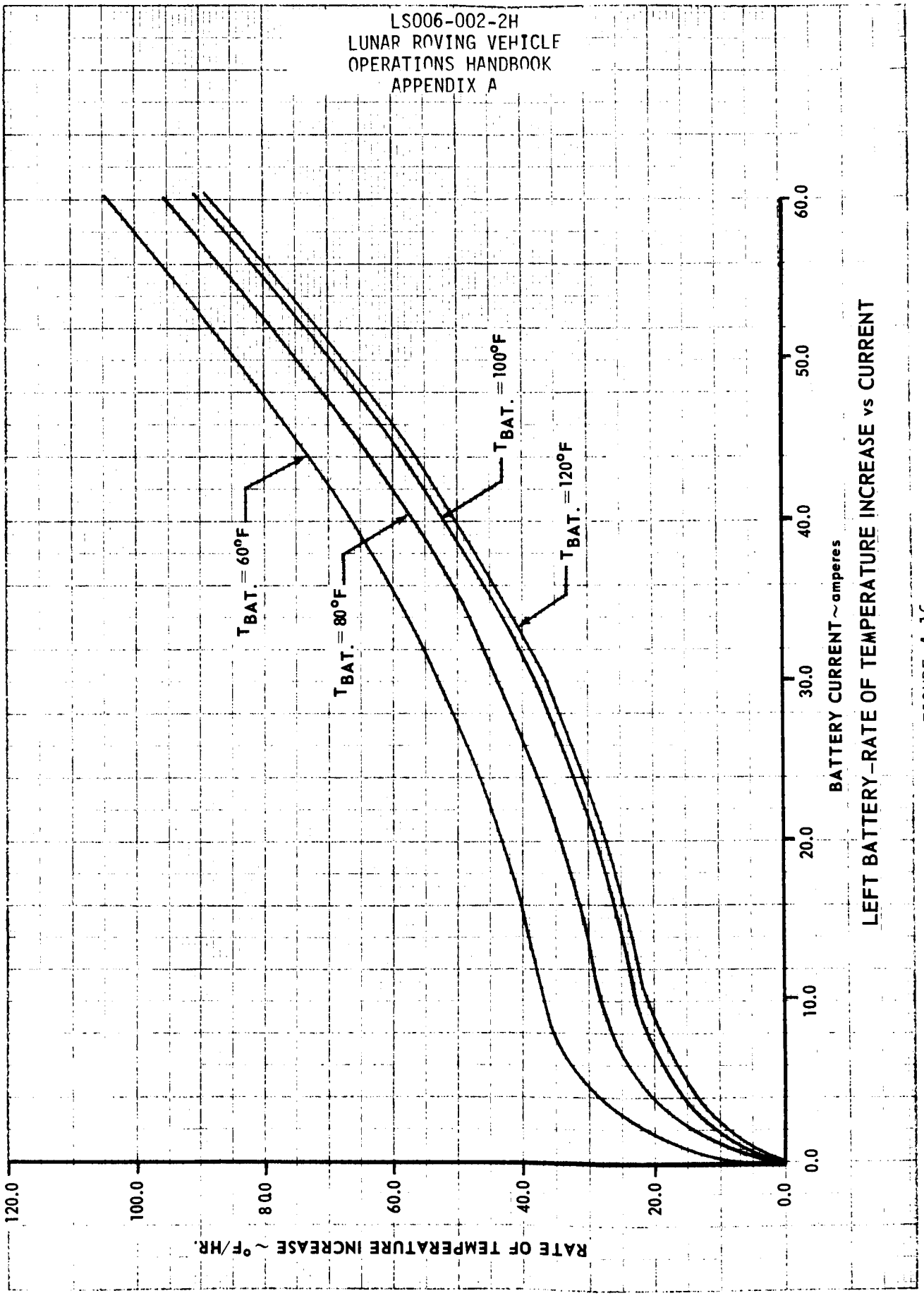

LEFT BATTERY–RATE OF TEMPERATURE INCREASE vs CURRENT

FIGURE 4-16

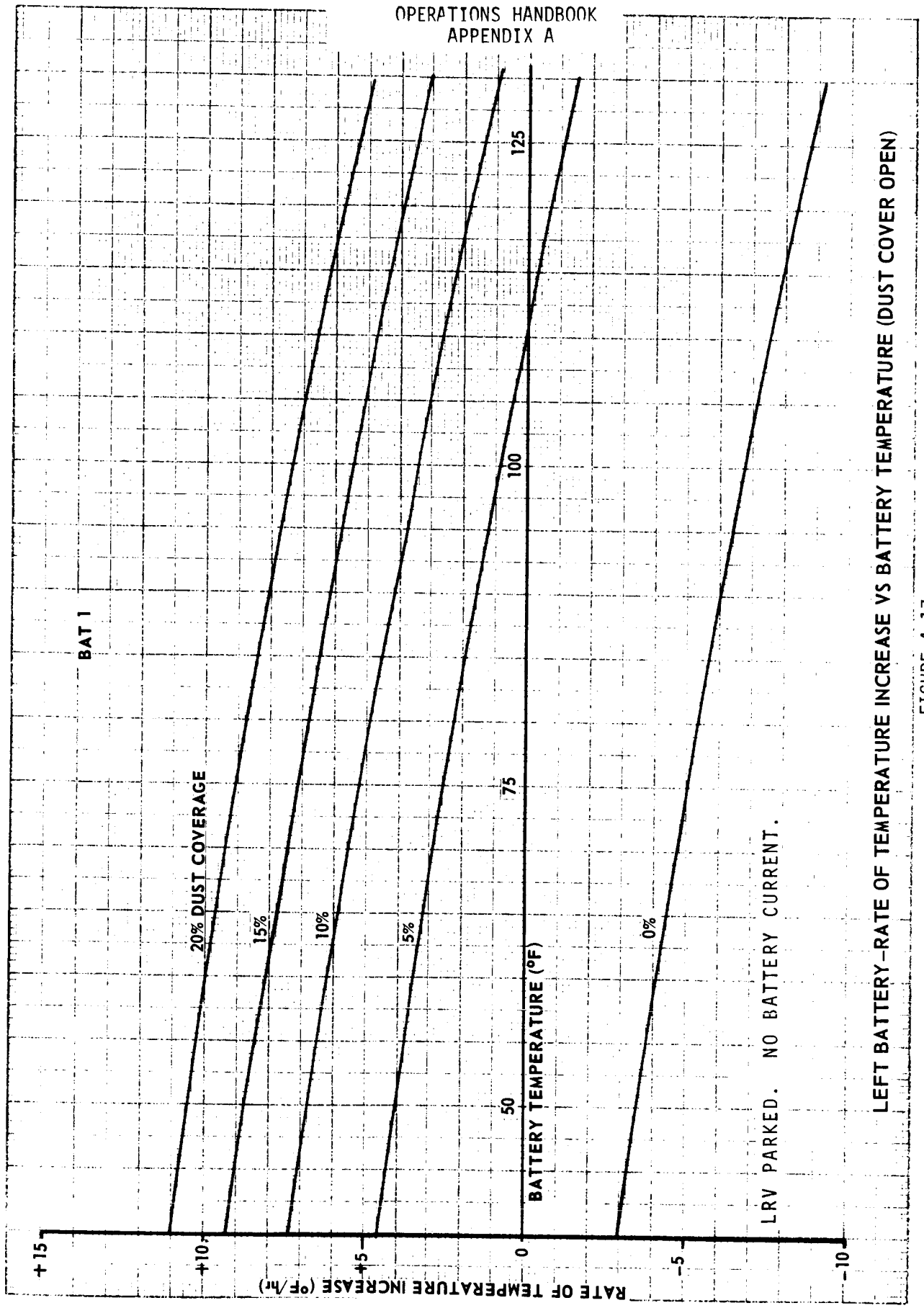

LEFT BATTERY-RATE OF TEMPERATURE INCREASE VS BATTERY TEMPERATURE (DUST COVER OPEN)

FIGURE 4-17

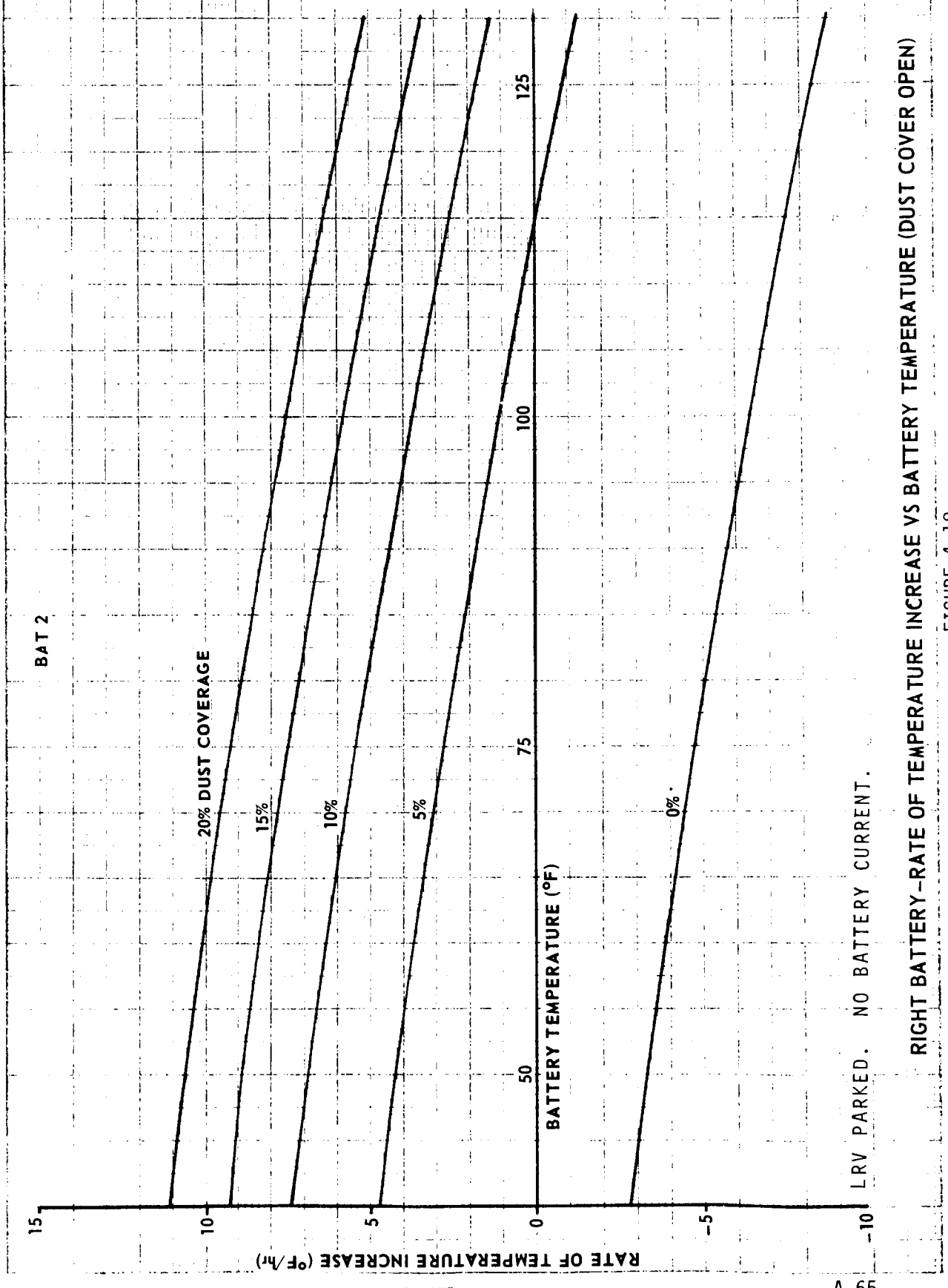

LRV PARKED. NO BATTERY CURRENT.

RIGHT BATTERY–RATE OF TEMPERATURE INCREASE VS BATTERY TEMPERATURE (DUST COVER OPEN)

FIGURE 4-18

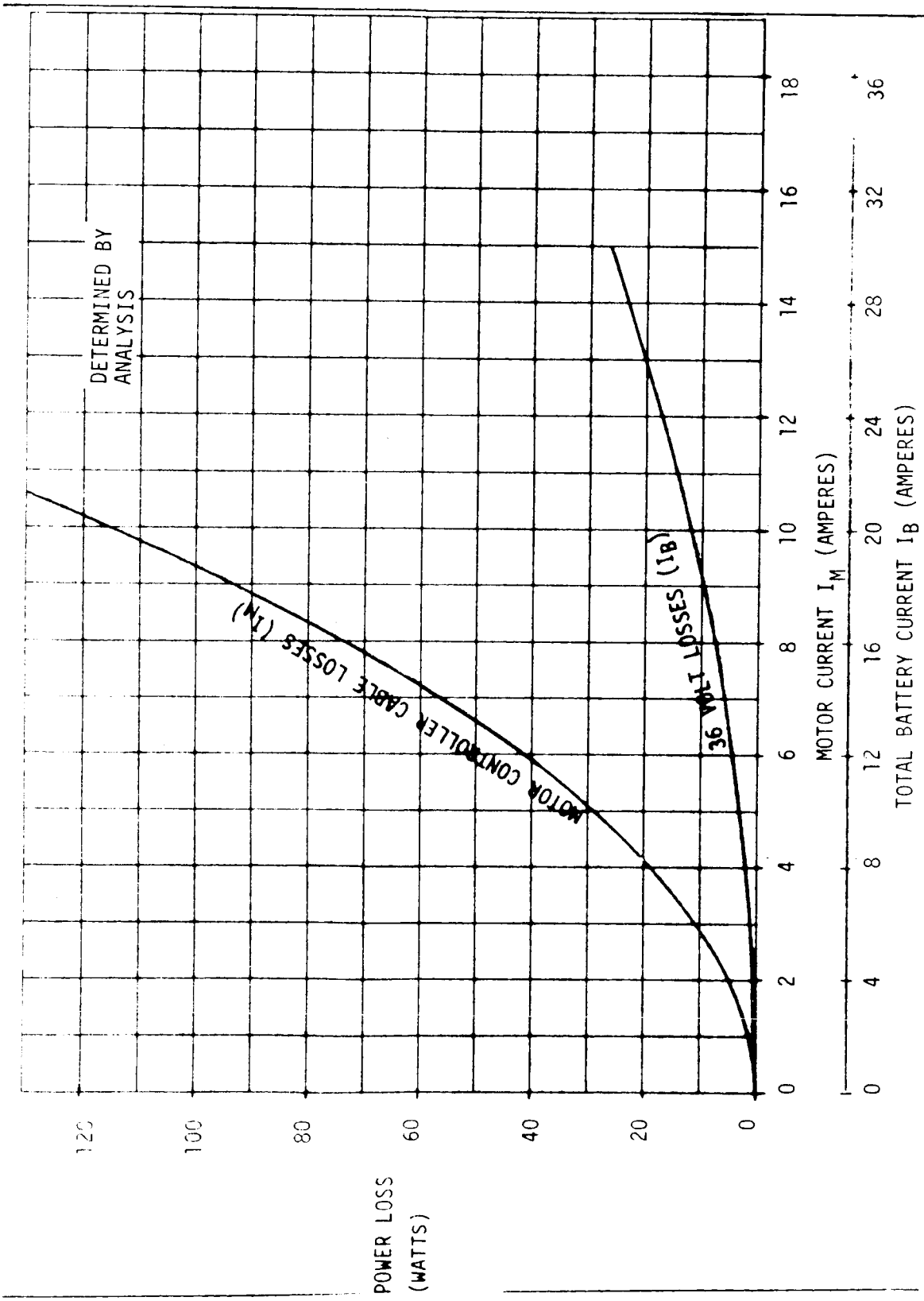

FIGURE 4-19 DISTRIBUTION LOSSES

4.3 NAVIGATION SUBSYSTEM PERFORMANCE

Directional Gyro Unit power consumption as a function of temperature is defined on Figure 4-20.

Directional Gyro Unit drift rate as a function of temperature is shown in Figure 4-21.

Bearing error as a function of gyro drift rate and navigation subsystem update period is shown on Figure 4-22.

The equations required for a navigation system heading update are contained in Figure 4-23. Nomograms for use in obtaining Sun Shadow Device corrections affected by pitch and roll are shown on Figures 4-24 and 4-25.

These nomograms are reproduced to scale and can be used in calculating SSD connections. Data from Ephemeris Table for landing site, time and data, required for use with these nomograms, is not contained in this document.

An example of a navigation system heading update is contained in Figure 4-26.

The example and nomograms are based on making accurate roll, pitch and sun shadow readings. Figure 4-26.1 shows the effects of a 1° error in making these readings for a sample sun elevation of 75°.

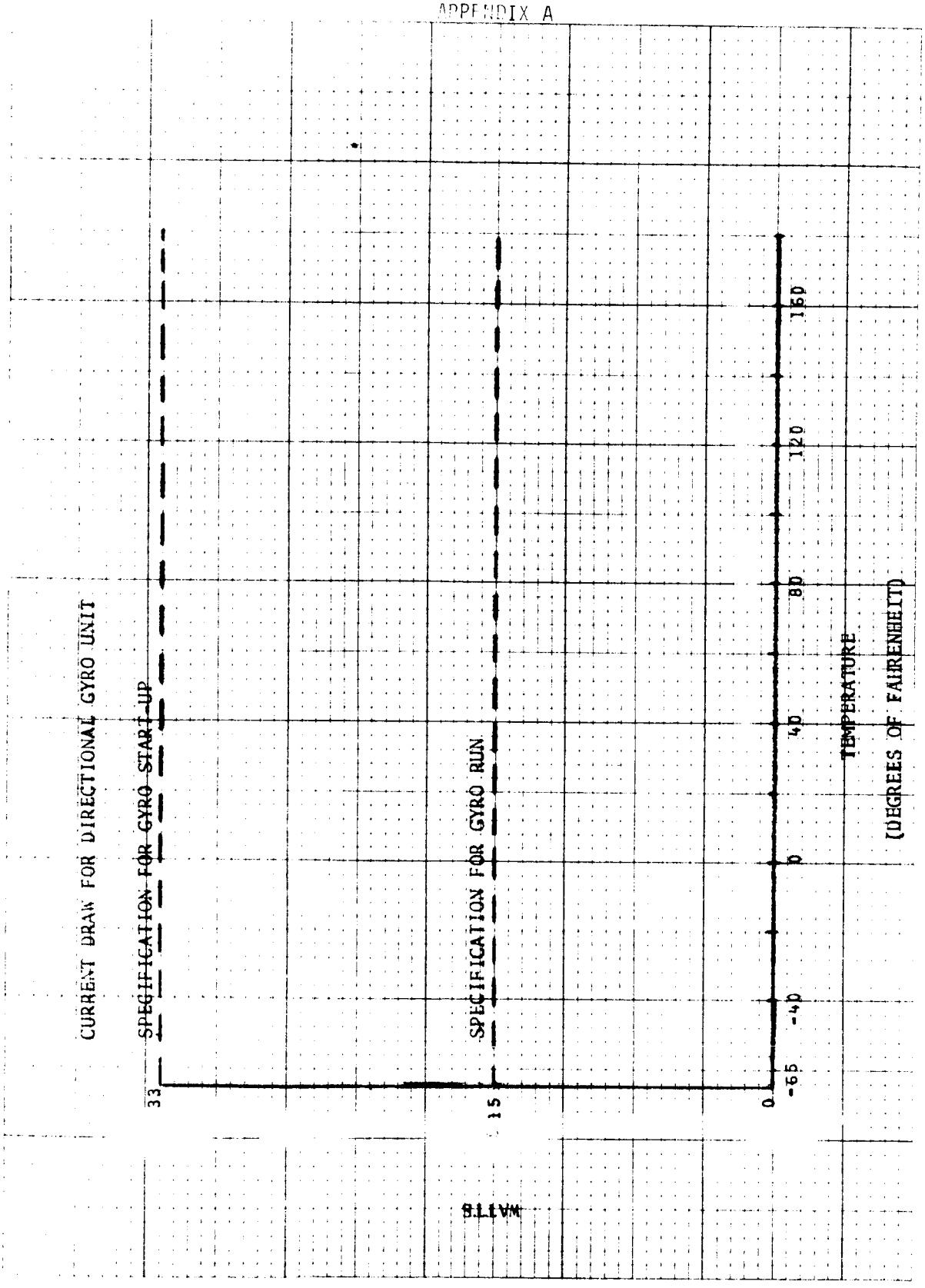

FIGURE 4-20 DGU POWER CONSUMPTION

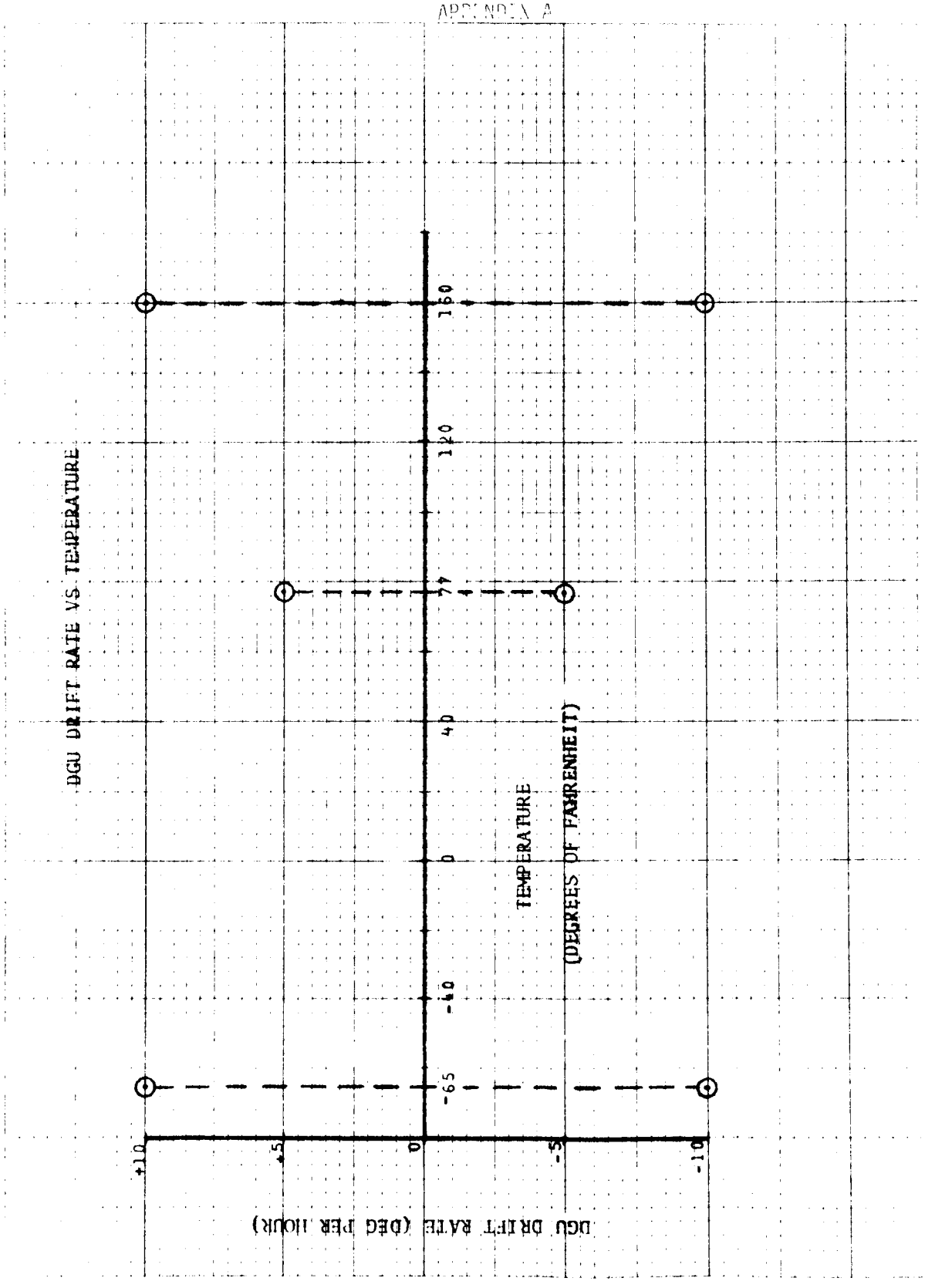

FIGURE 4-21 DGU DRIFT RATE VS TEMPERATURE

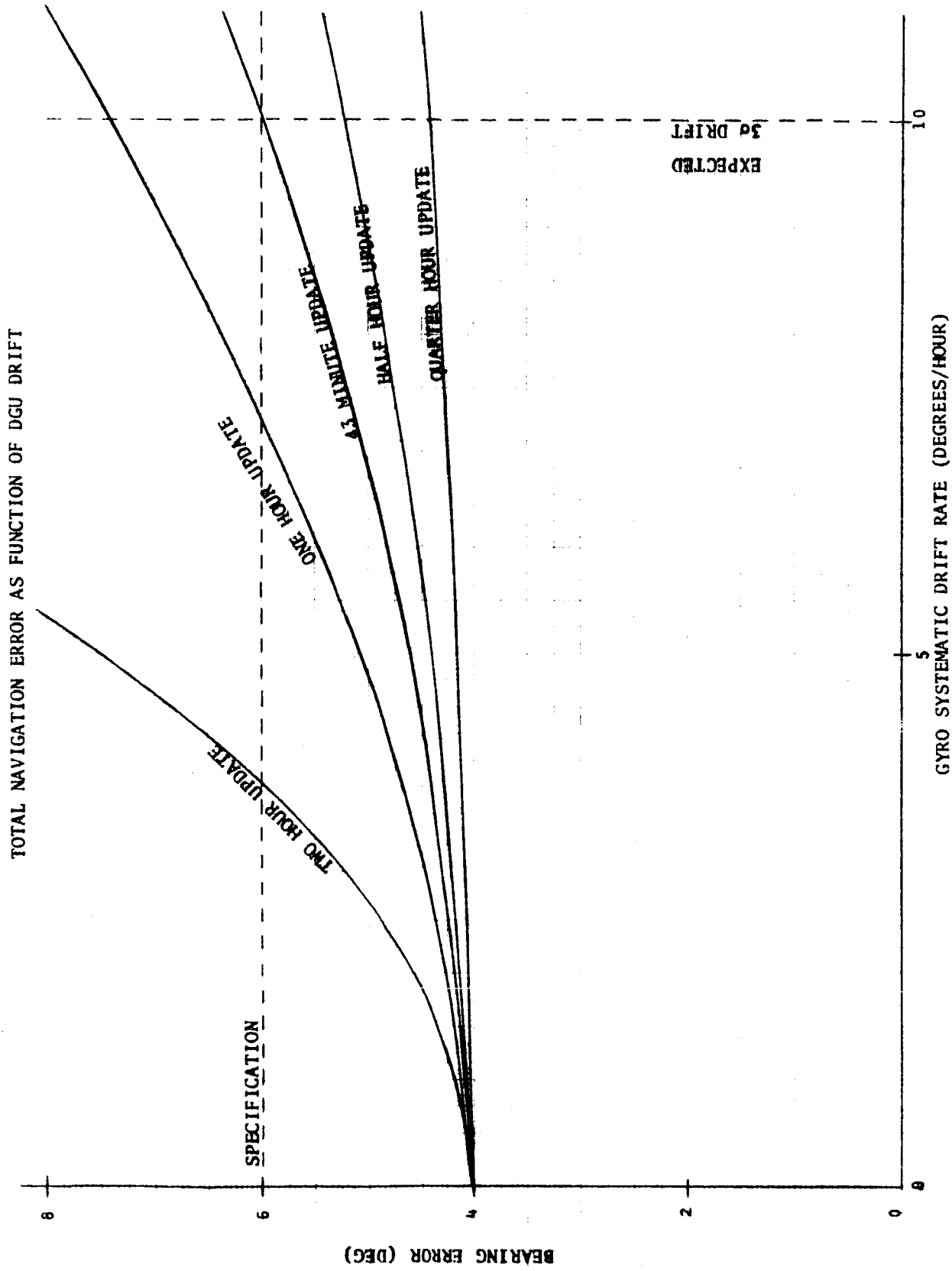

FIGURE 4-22 NAVIGATION BEARING ERROR AS A FUNCTION OF DGU DRIFT

VEHICLE HEADING ($H°$) = ($\psi° \pm 180°$) - SSD CORRECTION ($A°$)

SSD CORRECTION ($A°$) = $A_1° + A_2°$

SYMBOLS

$A°$	SSD CORRECTION (SOLVE FROM EQUATION). POSITIVE WHEN VEHICLE IS YAWED LEFT FROM STRAIGHT DOWN SUN. (DEGREES)
$A_1°$	SSD READING CORRECTED FOR EFFECT OF PITCH (FROM NOMOGRAM FOR $A_1°$). POSITIVE WHEN SHADOW IS ON RIGHT SIDE OF SCALE. (DEGREES)
$A_2°$	ADJUSTS SSD READING TO ACCOUNT FOR VEHICLE ROLL (FROM NOMOGRAM FOR $A_2°$). SIGN IS OPPOSITE ROLL'S SIGN. ROLL TO RIGHT IS POSITIVE. (DEGREES)
$H°$	VEHICLE HEADING (SOLVE FROM EQUATION). 0 TO 360 DEGREES FROM NORTH. (DEGREES)
$\psi°$	SUN AZIMUTH (FROM EPHEMERIS TABLES). 0 TO 360 DEGREES FROM NORTH. (DEGREES)
$R°$	VEHICLE ROLL (FROM VEHICLE ATTITUDE INDICATOR). (DEGREES)
$D°$	SSD READING (FROM VEHICLE SSD). POSITIVE WHEN SHADOW IS ON RIGHT SIDE OF SCALE. (DEGREES)
$\theta°$	SUN ELEVATION ANGLE (FROM EPHEMERIS TABLES). (DEGREES)
$P°$	VEHICLE PITCH (FROM VEHICLE ATTITUDE INDICATOR). NOSE UP IS POSITIVE. (DEGREES)

NAVIGATION SYSTEM UPDATE EQUATIONS

FIGURE 4-23

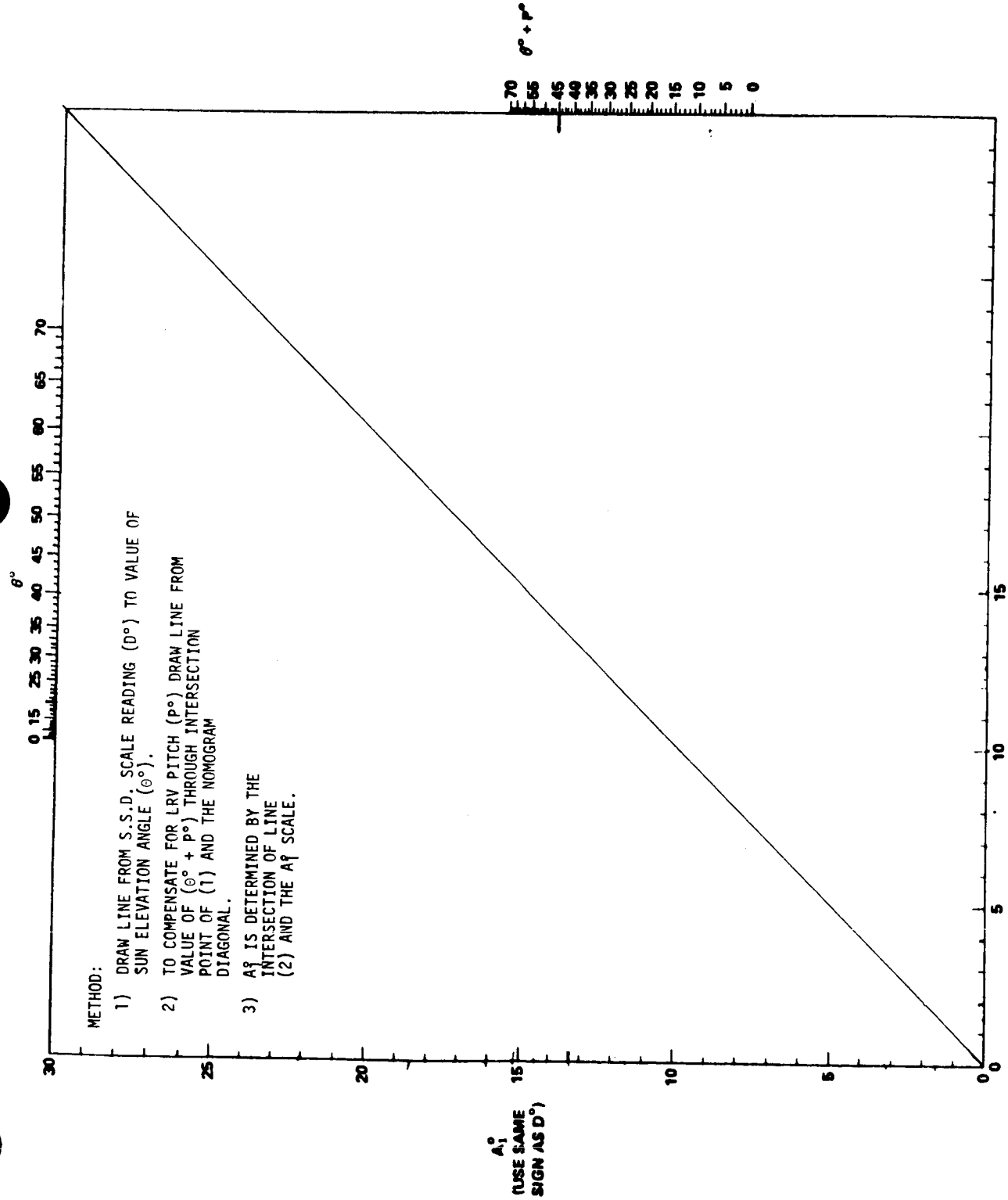

NOMOGRAM FOR A_1°

FIGURE 4-24

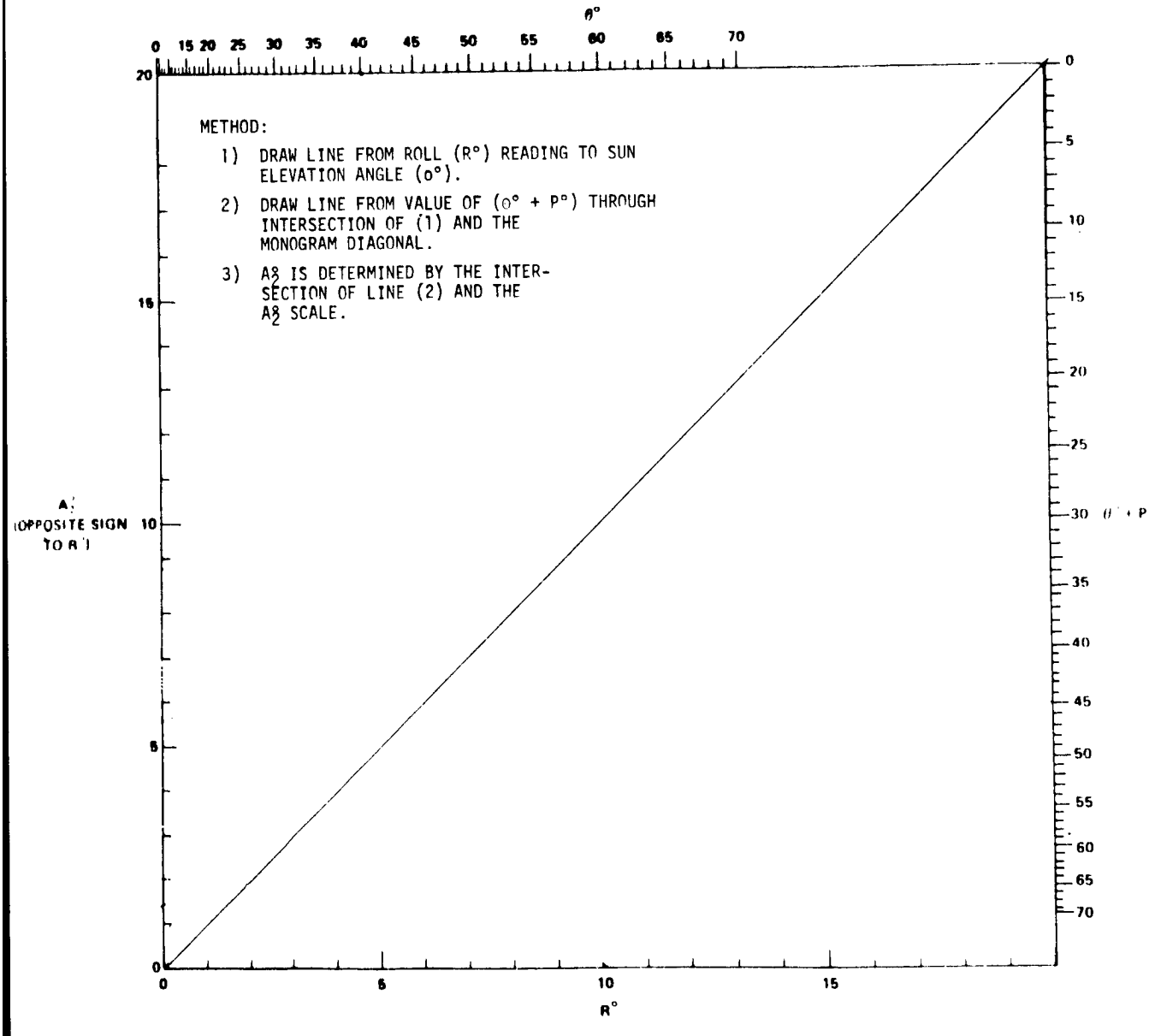

NOMOGRAM FOR A_2°

FIGURE 4-25

DATA

SSD READING : 3° LEFT ($D° = -3°$)
PITCH : 6° DOWN ($P° = -6°$)
ROLL : 6° RIGHT ($R° = +6°$)
TIME : X:00 AM
DATE : JULY 20, 1971

FROM EPHEMERIS TABLE FOR LANDING SITE, TIME AND DATE

SUN AZIMUTH: - 87° ($\psi = +87°$)
SUN ELEVATION: - 30° ($\theta = +30°$)

FROM NOMOGRAMS

SOLVE FOR $A_1°$:

1) DRAW LINE FROM SSD SCALE READING ($D° = -3°$) TO VALUE OF SUN ELEVATION ANGLE ($\theta = +30°$).
2) DRAW LINE FROM VALUE OF ($\theta° + P°$) = [+30° + (-6°)] = 24°, THROUGH INTERECTION OF POINT OF (1) AND THE NOMOGRAM DIAGONAL.
3) $A_1° = -3.1$

SOLVE FOR $A_2°$:

1) DRAW LINE FROM ROLL ($R° = +6°$) TO VALUE OF SUN ELEVATION ANGLE ($\theta = +30°$).
2) DRAW LINE FROM VALUE OF ($\theta° + P°$) = [+30° + (-6°)] = 24° THROUGH INTERSECTION POINT OF (1) AND THE NOMOGRAM DIAGONAL.
3) $A_2° = -2.9$

CALCULATIONS

SSD CORRECTION ($A°$) = $A_1° + A_2°$ = -3.1 -2.9 = -6.0
VEHICLE HEADING ($H°$) = ($\psi \pm 180$) - $A°$ = 87° + 180° - (-6.0) = 273°

EXAMPLE OF NAVIGATION SYSTEM UPDATE
FIGURE 4-26 (Sheet 1 of 3)

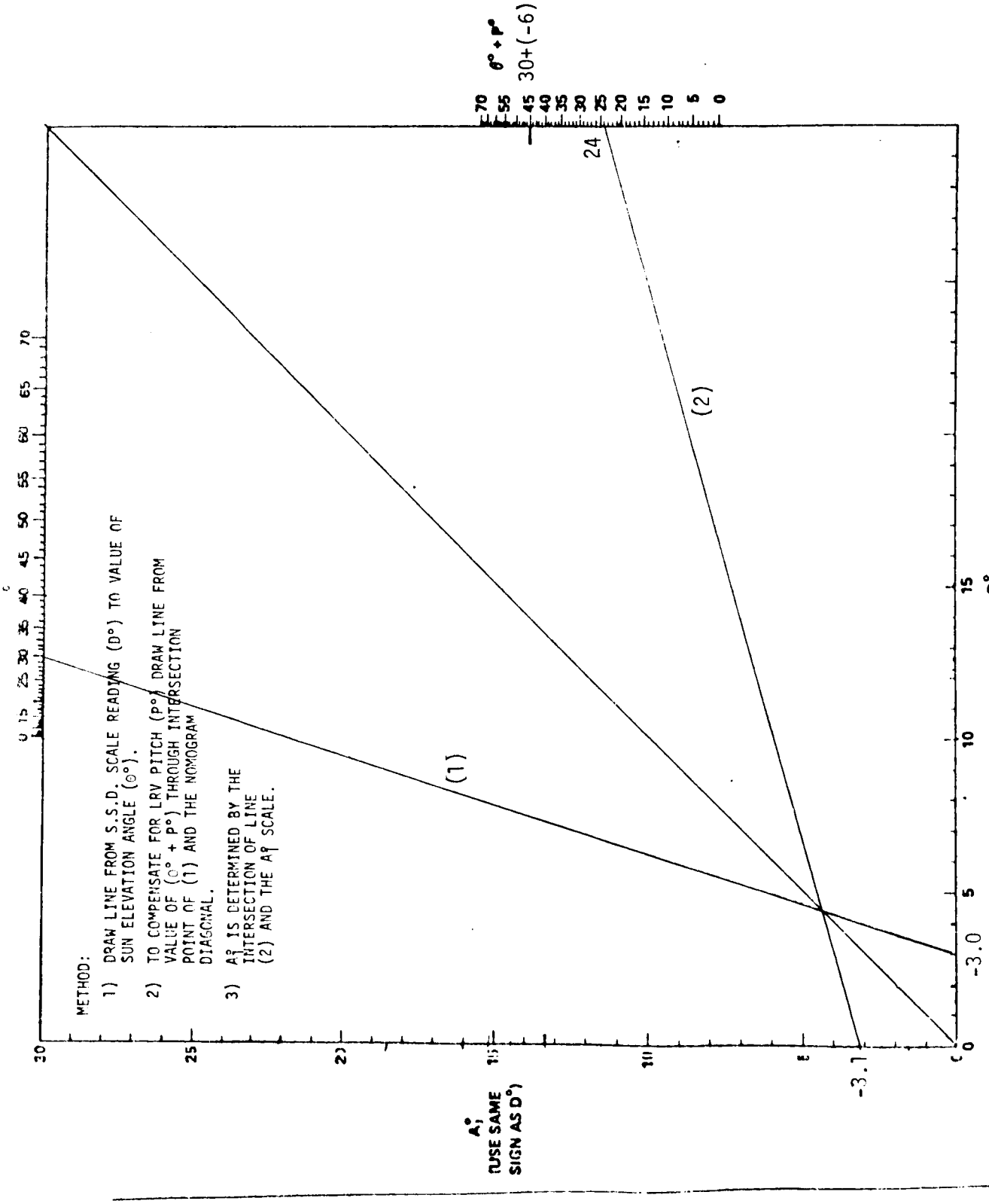

NOMOGRAM FOR A_i°

FIGURE 4-26 (Sheet 2 of 3)

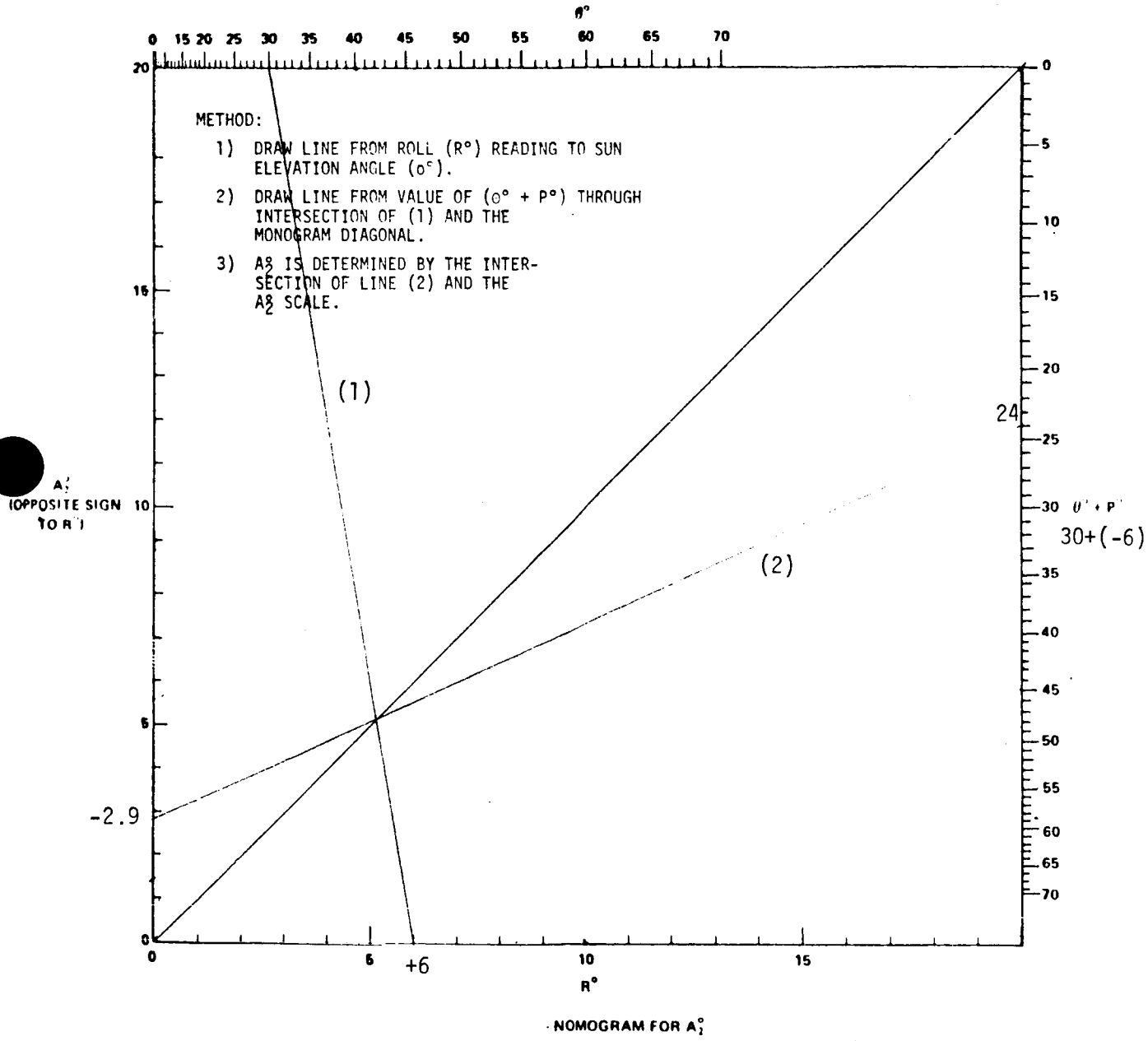

NOMOGRAM FOR A$_2^3$

FIGURE 4-26 (Sheet 3 of 3)

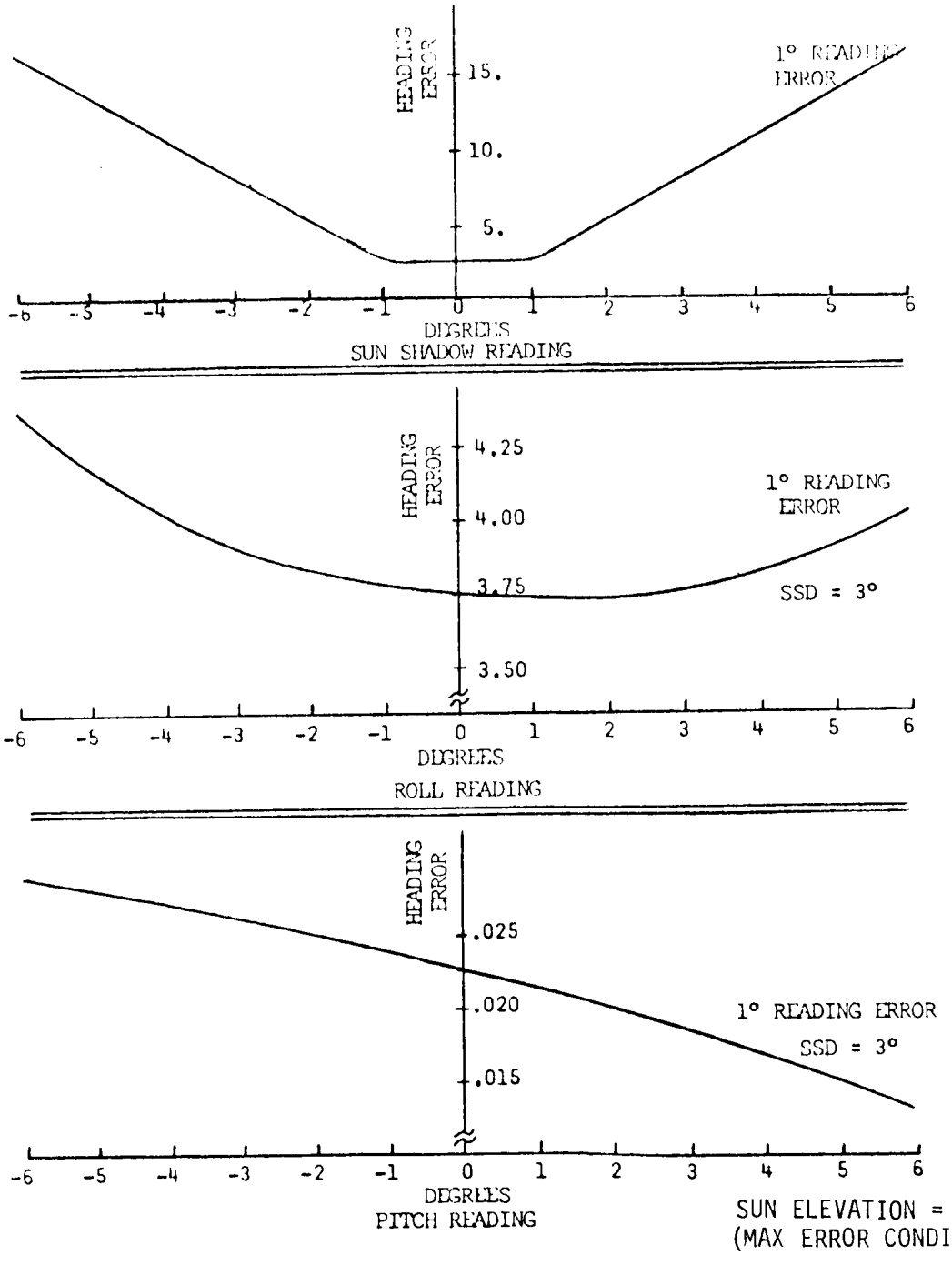

FIGURE 4-26.1 EFFECTS OF ROLL, PITCH AND SUN SHADOW READING ERRORS ON HEADING,

4.4 DISPLAYS AND CONTROLS SUBSYSTEM PERFORMANCE

Torque required to provide throttle control at various hand controller angular displacements is defined on Figure 4-27.

Torque required to effect steering control at various hand controller angular displacements is defined on Figure 4-28.

Hand controller forces to accomplish vehicle braking as a function of hand controller linear and angular displacement is defined on Figure 4-29.

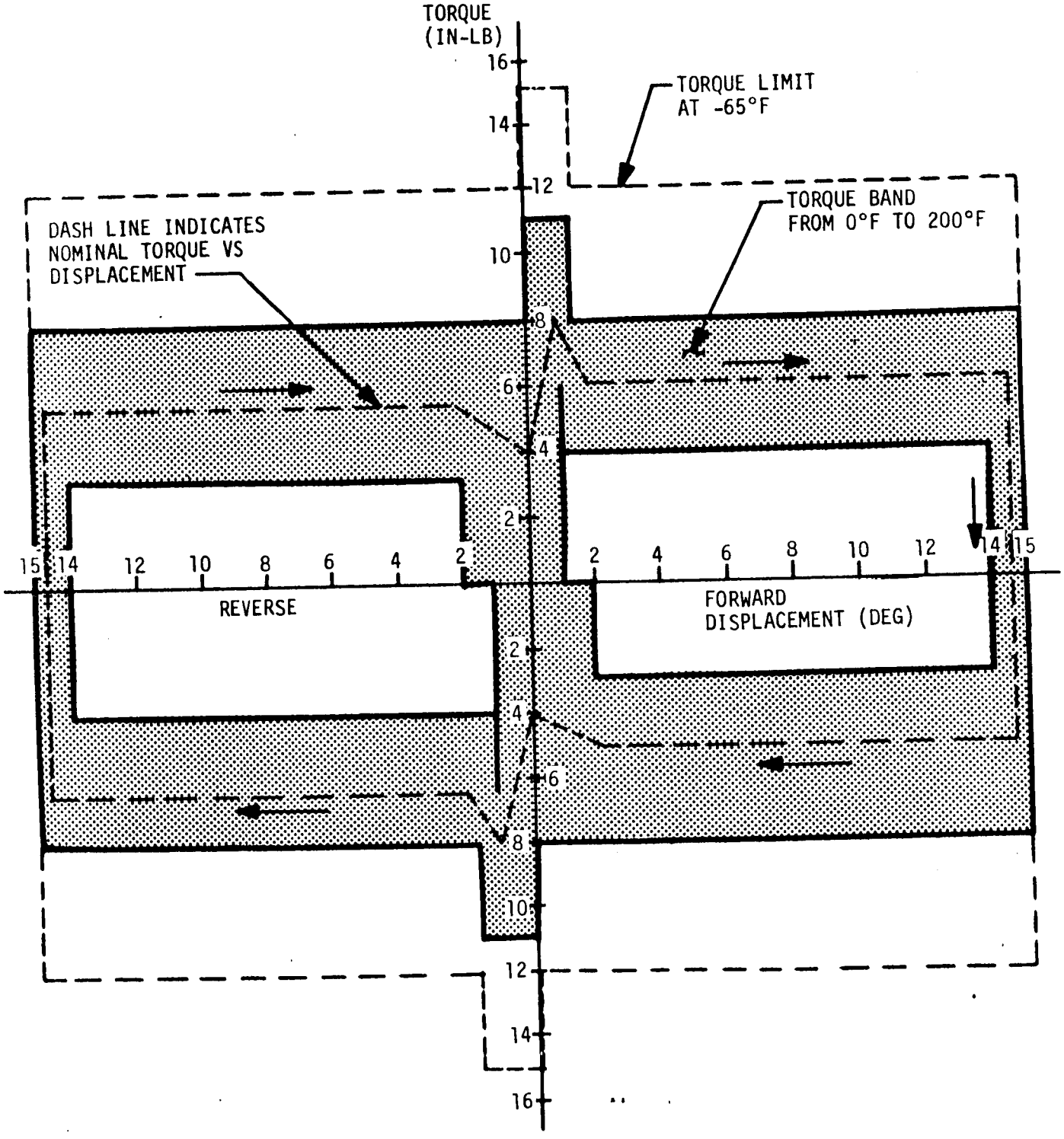

FIGURE 4-27 TORQUE REQUIRED TO ROTATE HAND CONTROLLER FOR THROTTLE CONTROL

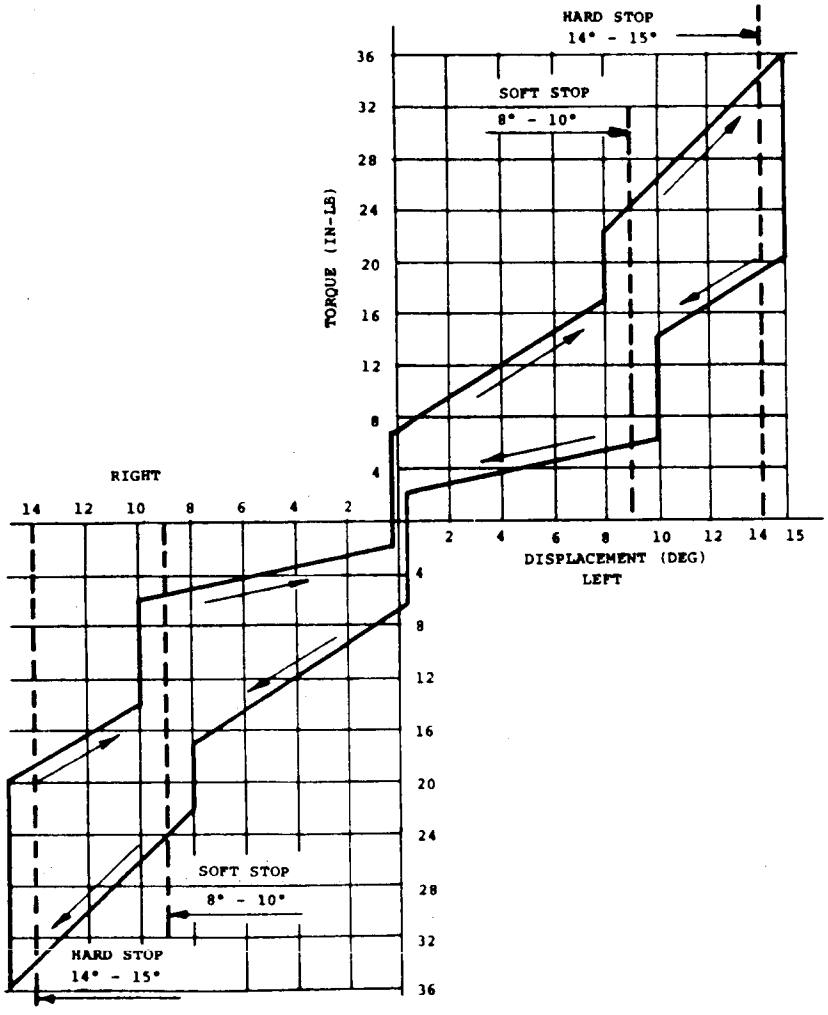

FIGURE 4-28 TORQUE REQUIRED TO ROTATE HAND CONTROLLER FOR STEERING CONTROL

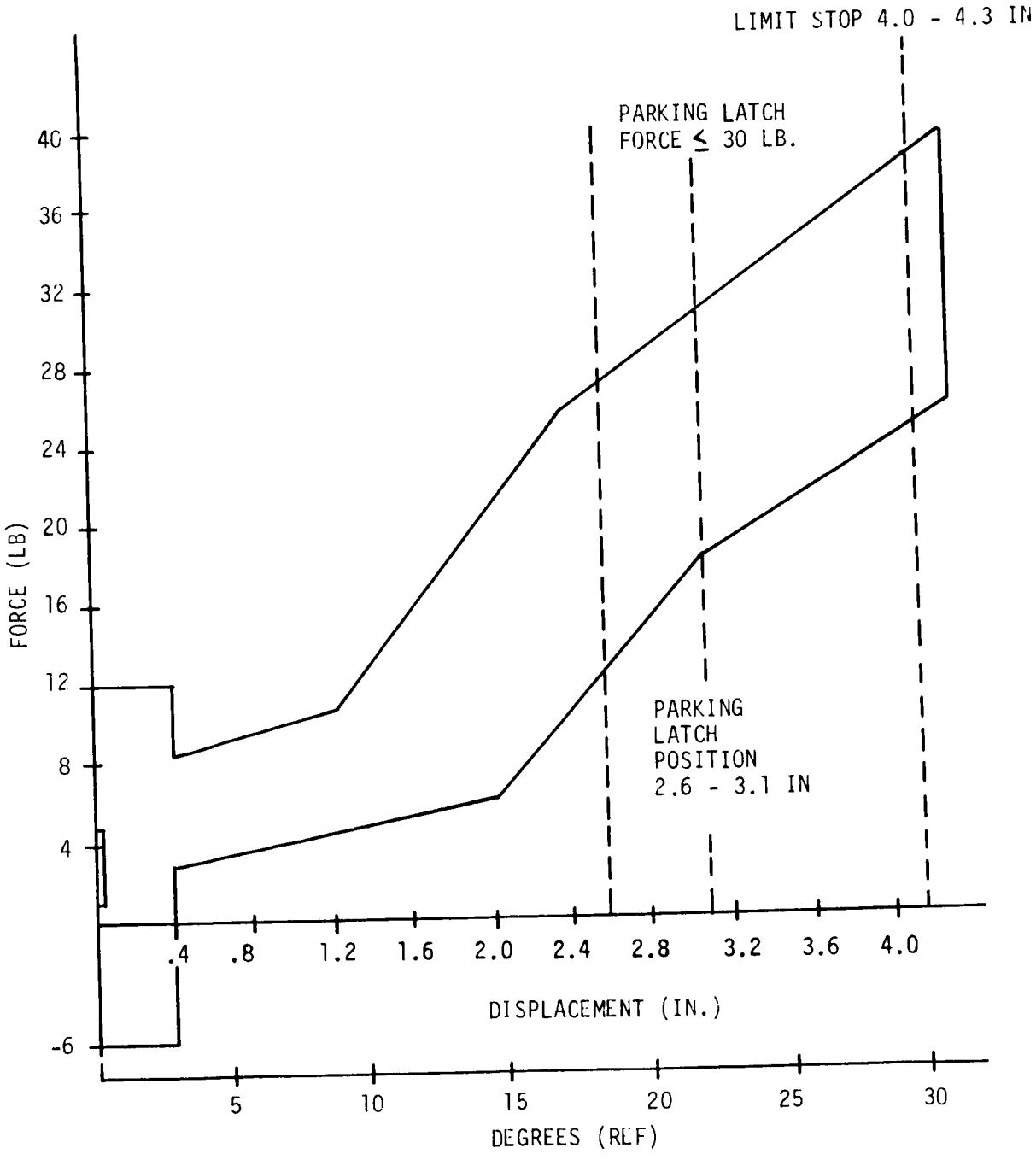

FIGURE 4-29 BRAKE CONTROL FORCE VS DISPLACEMENT

5.0 VEHICLE PERFORMANCE DATA

5.1 VEHICLE DYNAMIC RESPONSE

The LRV will exhibit dynamic characteristics dependent on the surface traversed and the speed at which the surface is traversed.

The vertical acceleration at the LRV seats for various speeds over various surface types is shown in Figure 5-1.

The vibration environments induced into the various LRV payload zones as a result of traversing the lunar surface are shown in Table 5-I.

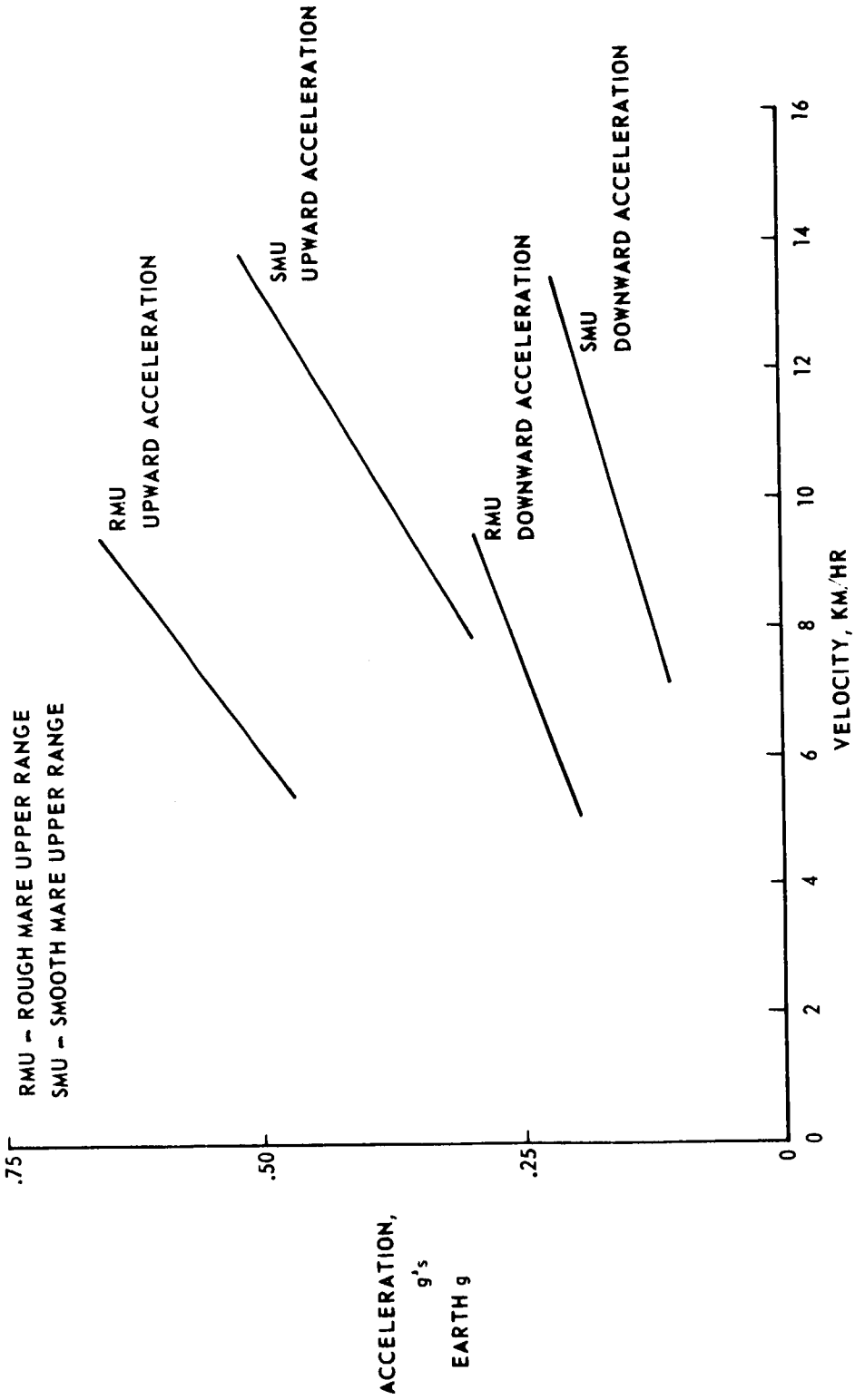

VERTICAL ACCELERATION OF CHASSIS CG AS A FUNCTION OF VELOCITY AND LURAIN TYPE

FIGURE 5-1

RANDOM VIBRATION

PAYLOAD ZONE	VERTICAL	FORE/AFT & LATERAL
FORWARD CHASSIS AT LCRU, TV, HI-GAIN ANTENNA MOUNTS	0.2 to 0.5 Hz @ 9 db/oct 0.5 to 1.0 Hz @ 0.3 g^2/Hz 1.0 to 10.0 Hz @ -6 db/oct Overall RMS Accel = 0.67g	0.2 to 0.5 Hz @ +9 db/oct 0.5 to 1.0 Hz @ 0.042 g^2/Hz 1.0 to 10.0 Hz @ -6db/oct Overall RMS Accel = 0.25 g
AFT CHASSIS AT PALLET ADAPTER ATTACH POINTS	0.2 to 0.5 Hz @ +9 db/oct 0.5 to 1.0 Hz @ 0.21 g^2/Hz 1.0 to 10.0 Hz @ -6 db/oct Overall RMS Accel = 0.56 g	0.2 to 0.5 Hz @ +9 db/oct 0.5 to 1.0 Hz @ 0.042 g^2/Hz 1.0 to 10.0 Hz @ -6 db/oct Overall RMS Accel = 0.25 g
CENTER CHASSIS FLOOR	0.2 to 0.5 Hz @ 9 db/oct 0.5 to 1.0 Hz @ 0.072 g^2/Hz 1.0 to 10.0 Hz @ -6 db/oct Overall RMS Accel = 0.33 g	0.2 to 0.5 Hz @ +9 db/oct 0.5 to 1.0 Hz @ 0.042 g^2/Hz 1.0 to 10.0 Hz @ -6 db/oct Overall RMS Accel = 0.25 g
TOP OF INBOARD HANDHOLDS AT 16 MM DAC AND LO-GAIN ANTENNA CONNECT POINTS	0.2 to 0.5 Hz @ 9 db/oct 0.5 to 1.6 Hz @ .072 g^2/Hz 1.6 to 2.0 Hz @ 9 db/oct 2.0 to 5.0 Hz @ .15 g^2/Hz 5.0 to 10.0 Hz @ -9 db/oct Overall RMS Accel =.93g	SAME AS VERTICAL

TABLE 5-I VIBRATION ENVIRONMENT AT LRV PAYLOAD INTERFACES

5.2 RANGE, SPEED, LURAIN CAPABILITY

5.2.1 Range

Power for the LRV is supplied by two 36 VDC primary batteries having a total capacity of 8280 watt-hours. LRV range is dependent on the way these watt-hours are consumed; e.g., the ratio of driving time to standby time, the length of time the LCRU is operated from LRV power, the length of time spent traversing slopes and speed selected.

To calculate range, all power consumption must be determined, including both variable and constant power levels. The variable power consumption for motor/gear box inefficiencies, steering motor inefficiency and drive controller losses can be calculated from the data presented in Section 4.1. Variable power use due to electrical distribution losses are contained in Figure 4-19. Variable damping power losses are shown in Figure 5-2.

The other power users operate independent of the mobility subsystem and have constant power levels regardless of LRV mobility activities. These constant power levels are defined in Table 5-II.

Range sensitivity to speed and weight are shown on Figure 5-4.

COMPONENT	AMPS	POWER (WATTS)	TIME
CONTROL & DISPLAY	0.278	10	ENTIRE SORTIE
NAVIGATION (WARMUP)	2.5	90	1.5 MINUTES
(STEADY STATE)	1.1	40	ENTIRE SORTIE
DRIVE CONTROLLER (STANDBY)	0.64	23	PARKED WITH POWER ON
STEERING	1.66	60	DOUBLE ACKERMAN
DAMPER 8Km/Hr (S.M.)	0.025	9	MID RANGE PSD
(R.M.)	0.83	30	

TABLE 5-II LRV STEADY STATE POWER CONSUMPTION

5.2.2 Speed

LRV maximum speed capability is dependent on the slope being traversed, the type of soil encountered, the surface roughness of the lurain and the LRV gross weight. PSD for lunar surface roughness is shown in Figure 5-8. Maximum speed capability is shown in Table 3-III. Effects of weight on maximum speed is shown in Figure 5-5.

5.2.3 Lurain Capability

The LRV is designed with the following capabilities of traversing the lunar surface:

Crevasse Crossing Capability	70 cm width
Step Obstacle Climbing Capability	35 cm high
Clearance Under Chassis	35 cm

5.3 THERMAL PERFORMANCE

Thermal performance characteristics of the LRV are defined in Section 4 under the appropriate subsystem performance paragraph.

5.4 CONTROLLABILITY

5.4.1 Steering

The LRV has a turning radius of 3.1 meters utilizing the four wheel steering capability. The steering rate is such that lock-to-lock steering angle change can be accomplished in 6 seconds. Crewman forces required to control steering by use of the hand controller are shown in Figure 4-28.

5.4.2 Braking

Stopping distances for various initial speeds and different slopes are shown in Figure 5-7.

Hand Controller forces required to effect braking are shown in Figure 4-29.

5.4.3 Speed

At high speeds the LRV can become uncontrollable. The controllability speed limit is based on wheel slip angle considerations and tends to be independent of lurain type. The controllability speed limit listed in Table 5-IV should be utilized for mission planning purposes. Double Ackerman steering was used.

Actual driving experience on the moon's surface should dictate the final controllability speed restrictions.

CONTROLLABILITY SPEED LIMIT	
ALL LURAIN TYPES	10 KM/HR

TABLE 5-IV LRV CONTROLLABILITY SPEED LIMITS

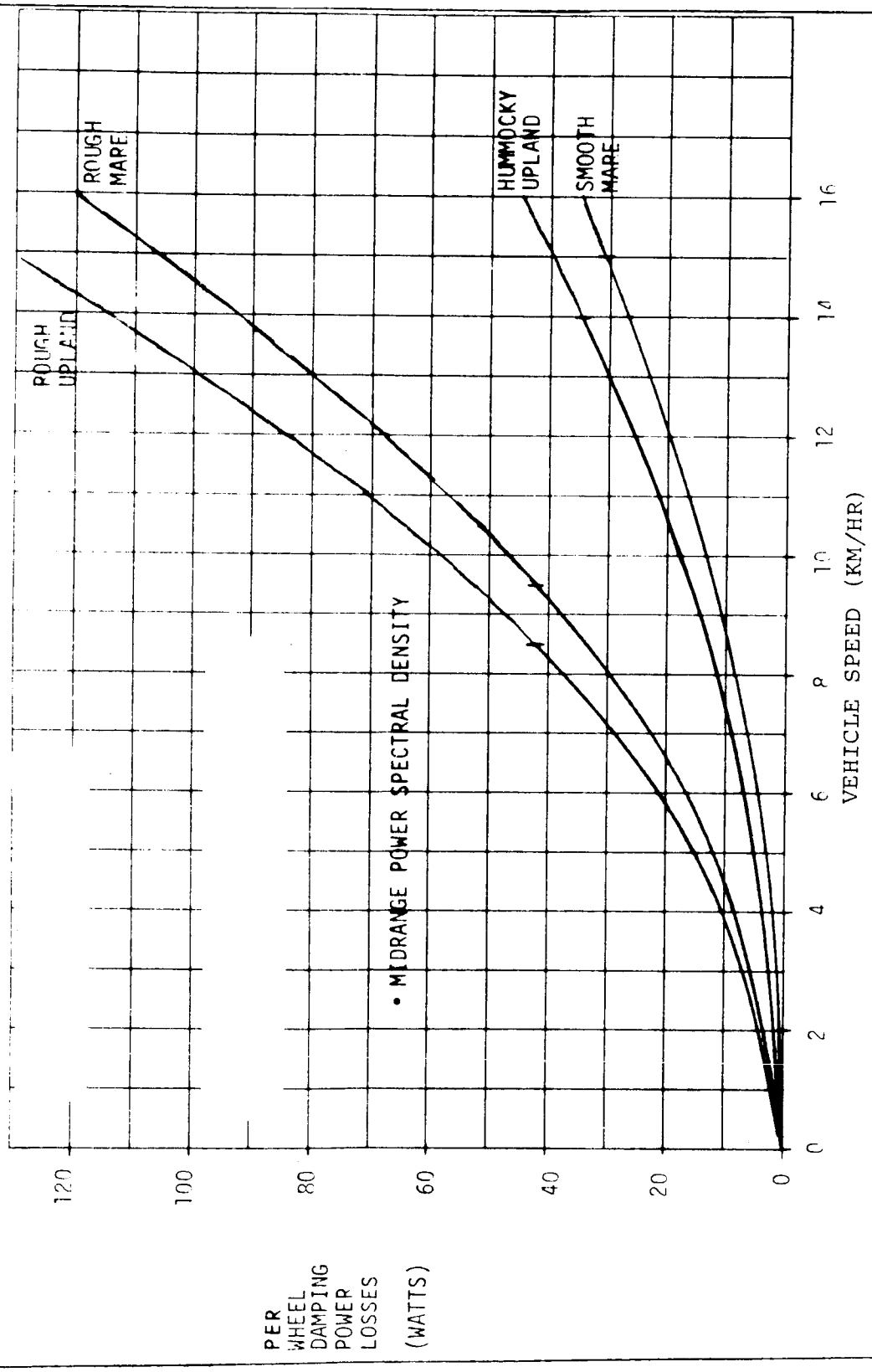

FIGURE 5-2 LRV DAMPING POWER LOSSES

THIS PAGE INTENTIONALLY LEFT BLANK

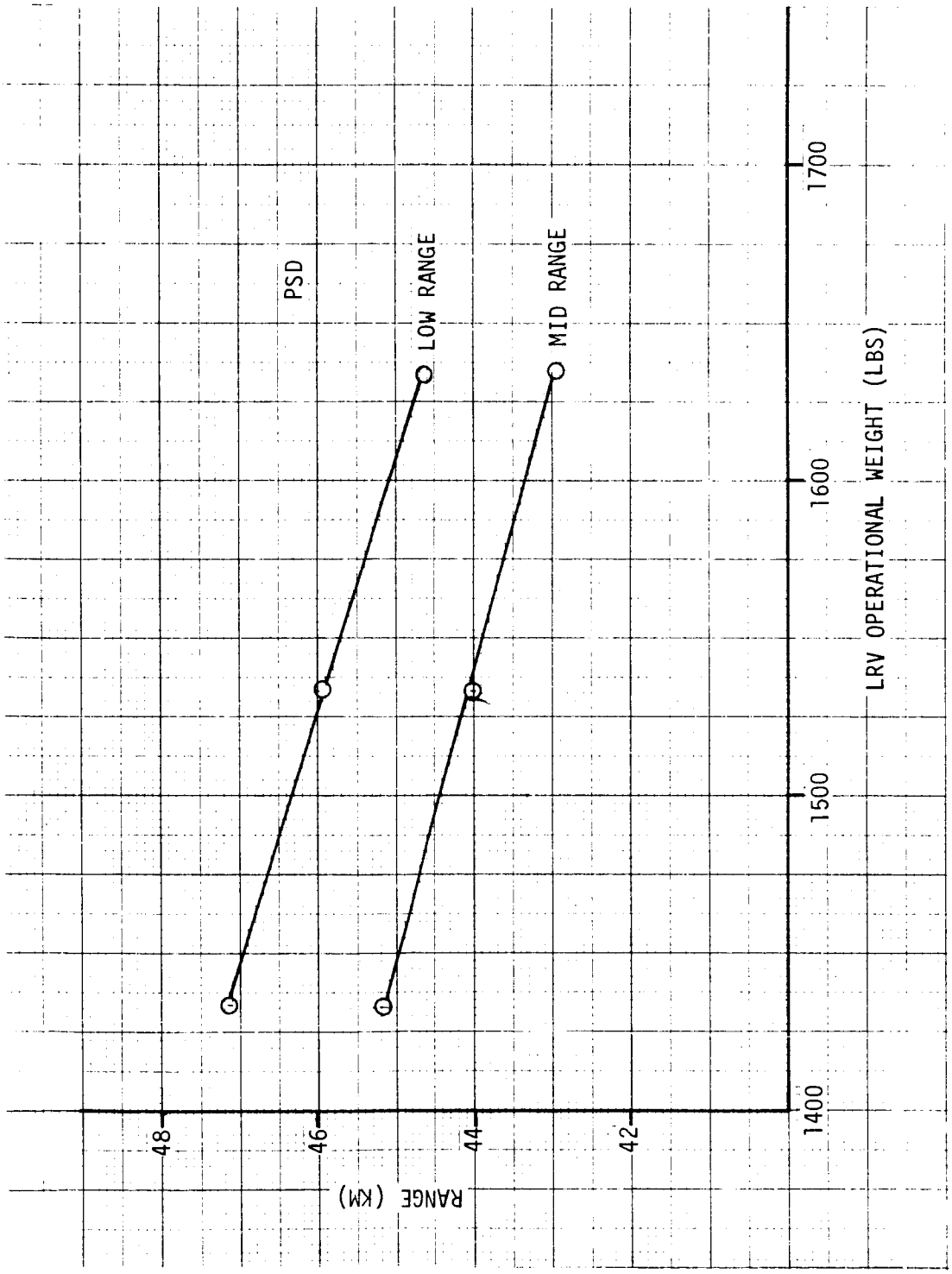

EFFECT OF LRV WEIGHT ON RANGE
FIGURE 5-4

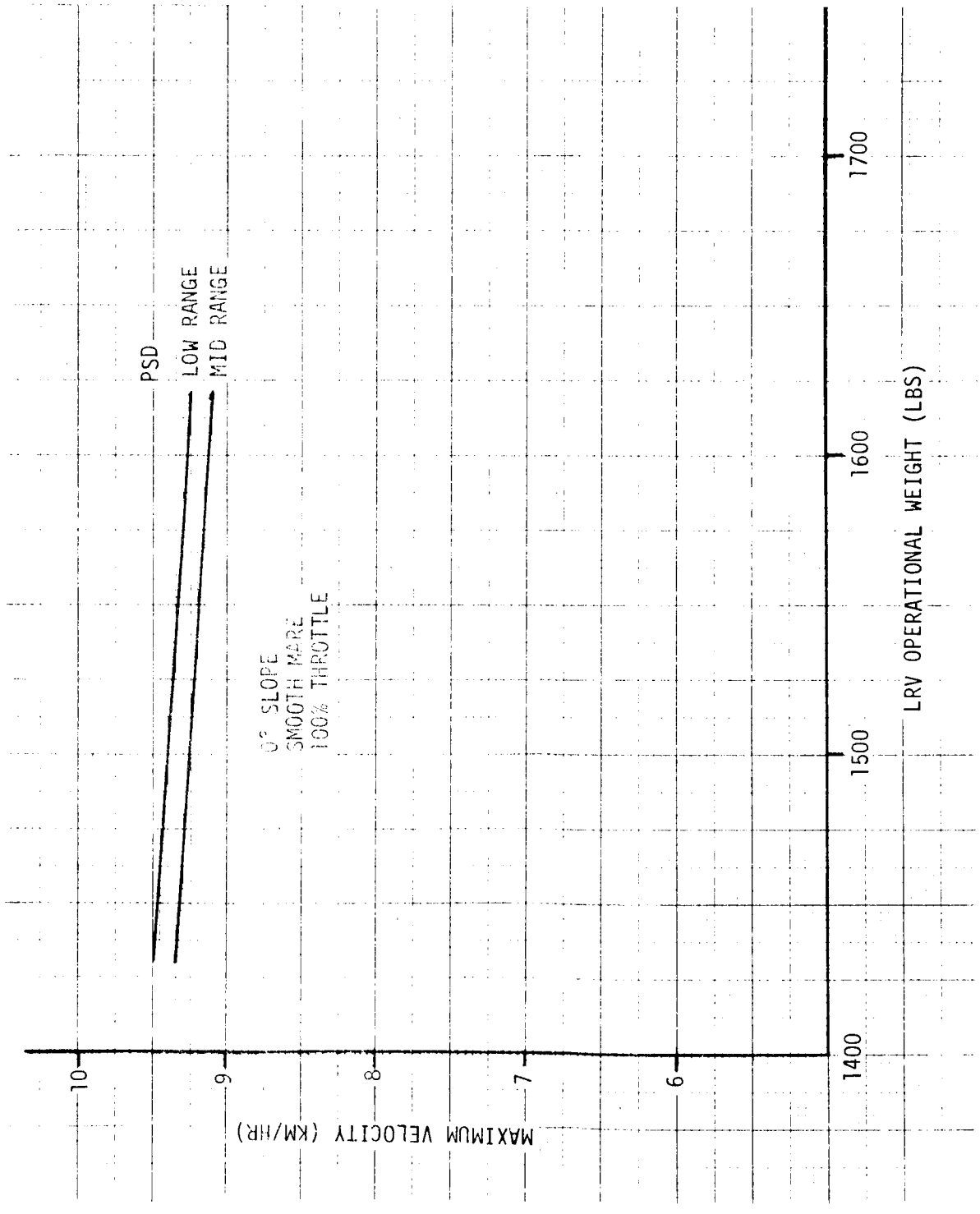

EFFECT OF LRV OPERATIONAL WEIGHT ON MAXIMUM VELOCITY
FIGURE 5-5

THIS PAGE INTENTIONALLY LEFT BLANK

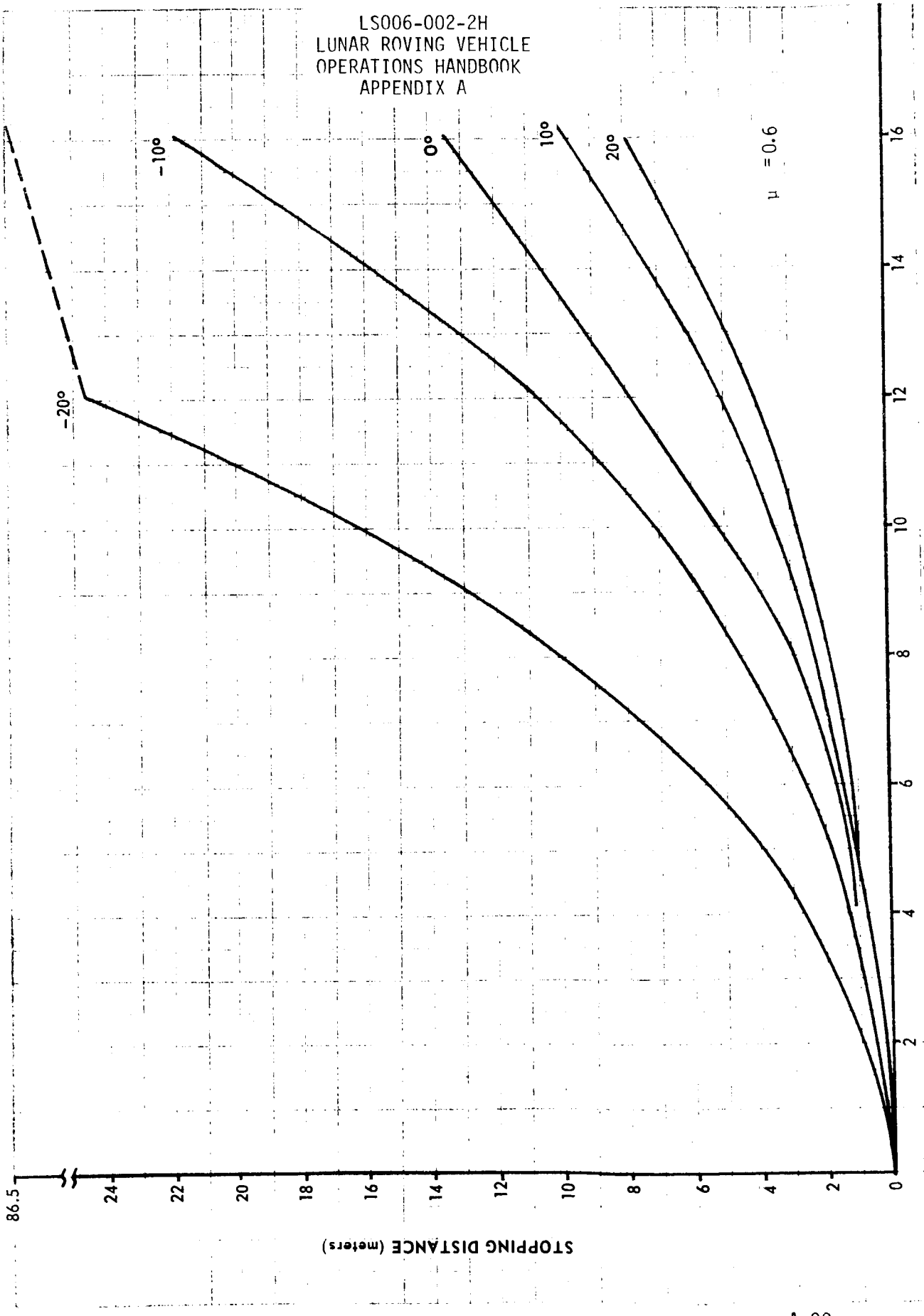

STOPPING DISTANCE VERSUS INITIAL VELOCITY FOR VARIOUS SLOPES
FIGURE 5-7

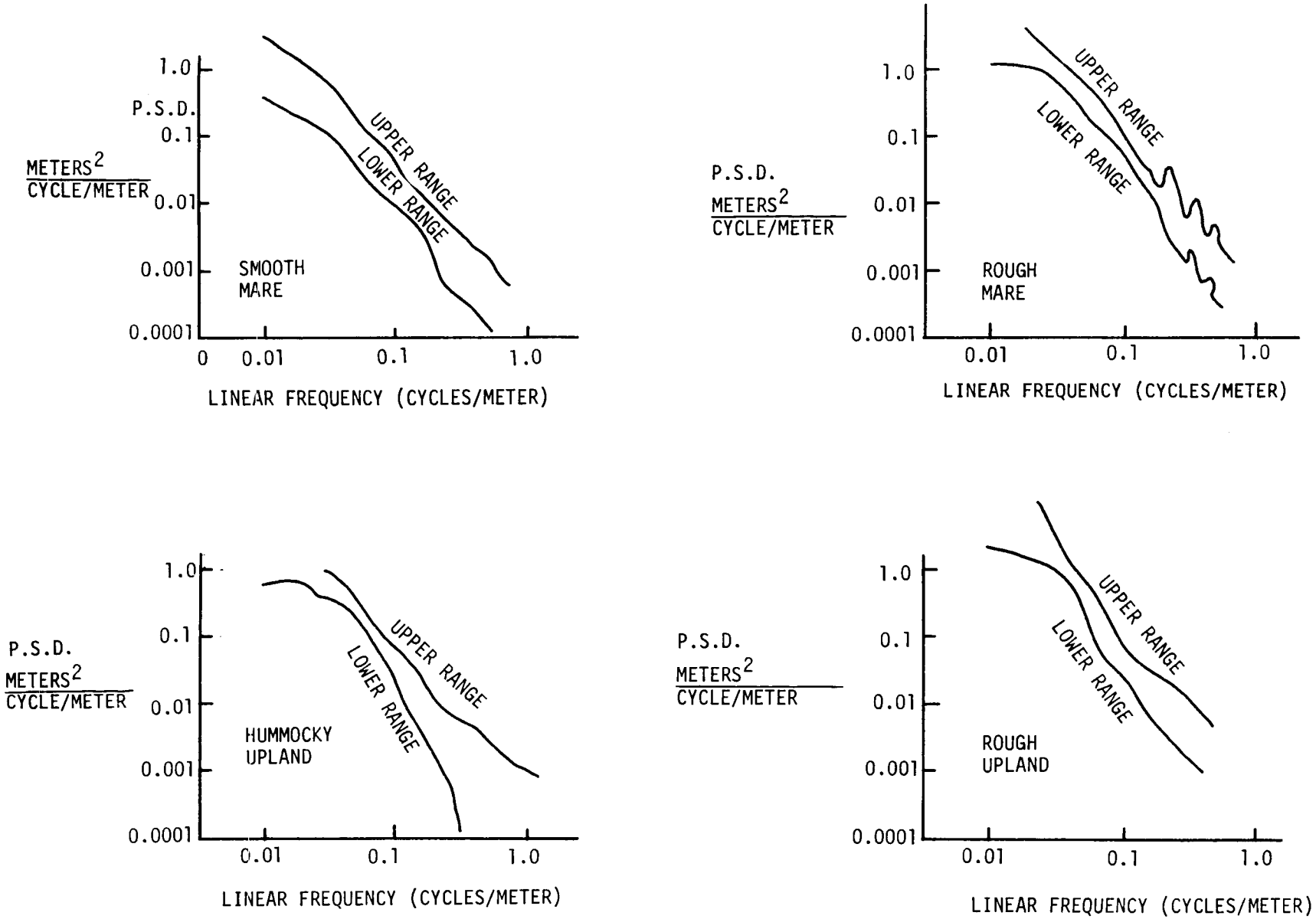

FIGURE 5-8 POWER SPECTRAL DENSITY FOR LUNAR SURFACE ROUGHNESS

THIS PAGE INTENTIONALLY LEFT BLANK

6.0 SPECIFIC VEHICLE DATA

6.1 LRV-1

6.1.1 Constraints

No constraints other than those shown in Section 3 are applicable.

6.1.2 Subsystem Performance

The traction drive characteristics for each of the four traction drives on LRV-1 are shown in Figure 6-1 through 6-4.

Forward and rear steering motor maximum current measured during acceptance test was 1.50 amps for the front and 1.45 amps for the rear against a torque of 200 in-lbs.

6.1.3 Vehicle Performance Data (Acceptance Test Data)

Power consumption characteristics of the Navigation System are shown on Table 6-I. A summary of LRV-1 mobility parameters is contained in Table 6-IV.

Chassis ground clearance under full load (1520 lbs.) is 35.1 cm.

6.1.4 Controllability (Acceptance Test Data)

The turning radius measured during acceptance test is 3.1 meters.

Lock-to-lock steering required $5.0 \begin{smallmatrix} + .1 \\ - 0 \end{smallmatrix}$ seconds, against a torque of 200 in-lbs.

6.1.5 Weight and Center of Gravity

The weight and C.G. of LRV-1 in all flight and deployed configurations is shown in Tables 6-II and 6-III.

6.1.6 Navigation Odometer Factor

The LRV-1 navigation system is set up such that the odometer will register 0.245 meters per count. There are 9 counts per wheel revolution.

6.1.7 Meter Calibration

The final meter calibration curves for each of the four meters on LRV-1 are shown in Figures 6-5 through 6-8 .

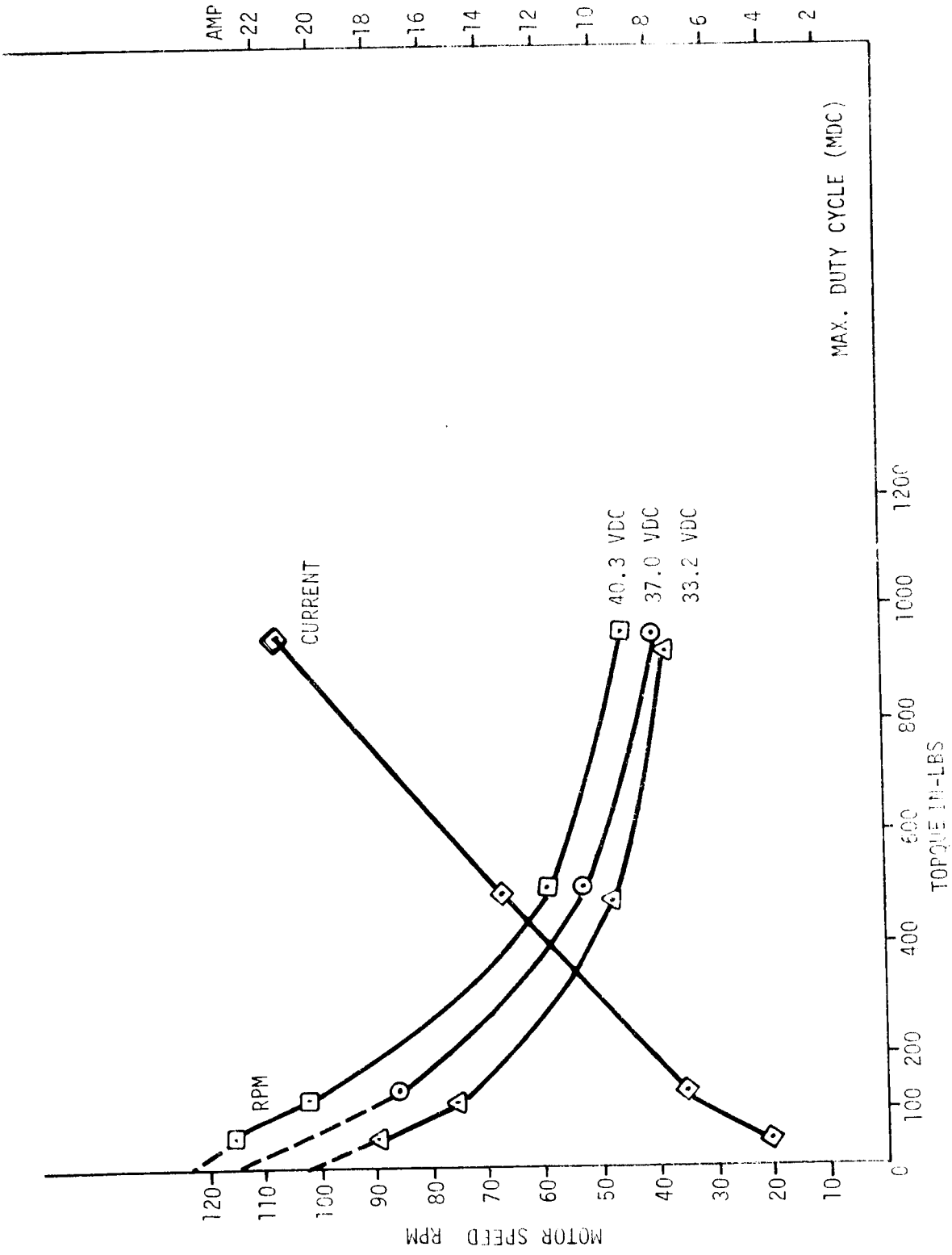

TRACTION DRIVE CHARACTERISTICS FOR LF DRIVE UNIT
SERIAL NO. 022
FIGURE 6-1

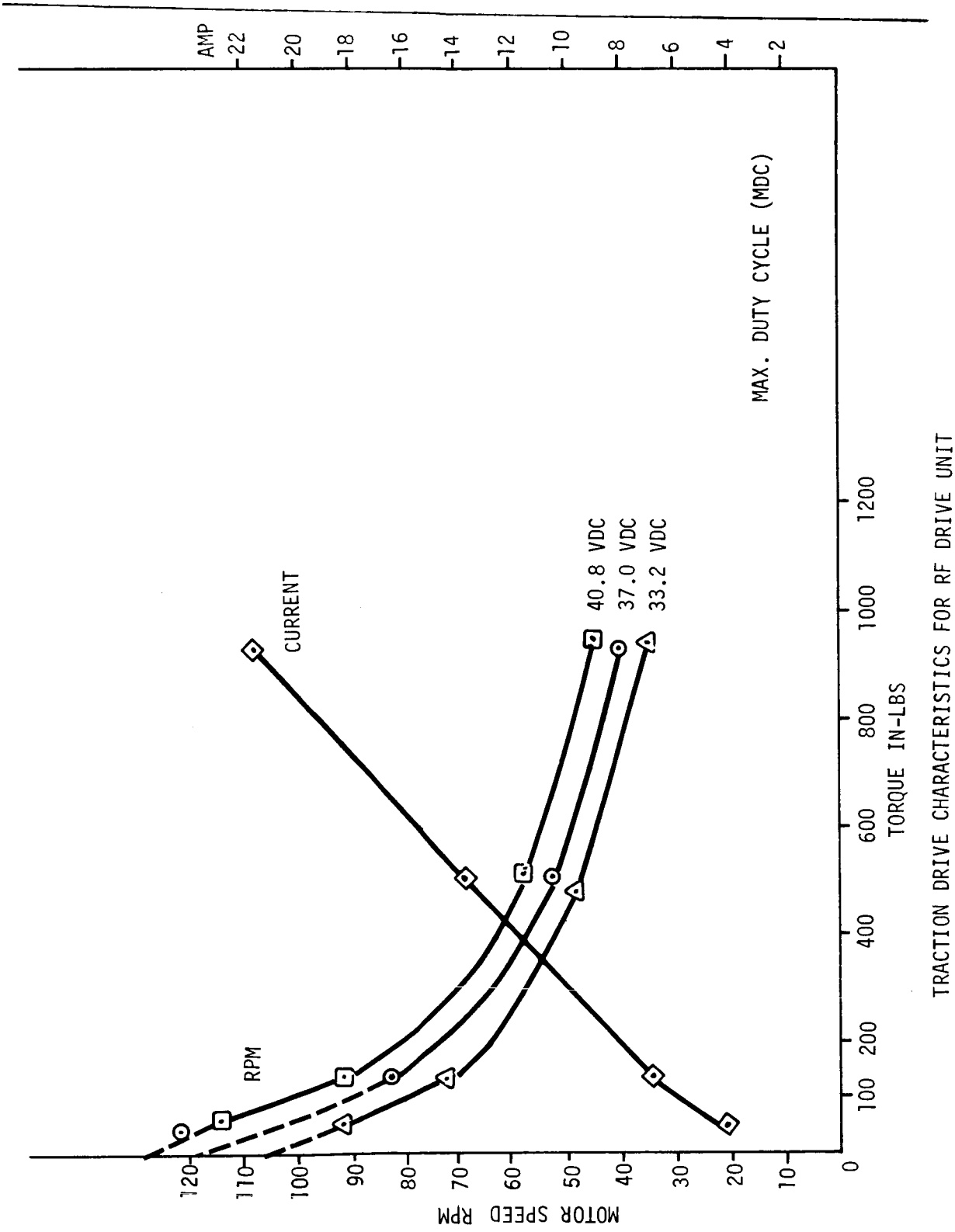

TRACTION DRIVE CHARACTERISTICS FOR RF DRIVE UNIT
SERIAL NO. 024
FIGURE 6-2

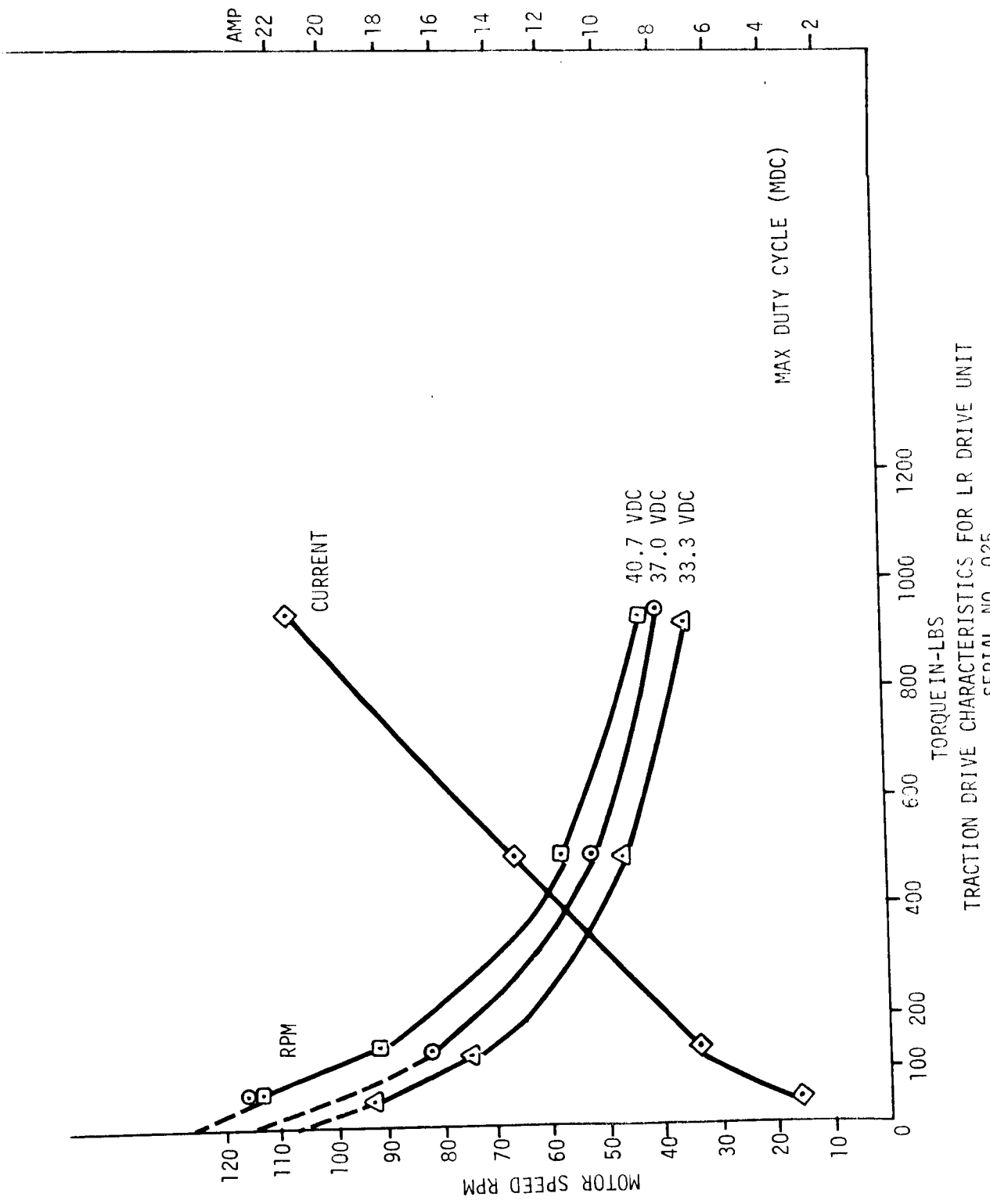

TRACTION DRIVE CHARACTERISTICS FOR LR DRIVE UNIT
SERIAL NO. 025
FIGURE 6-3

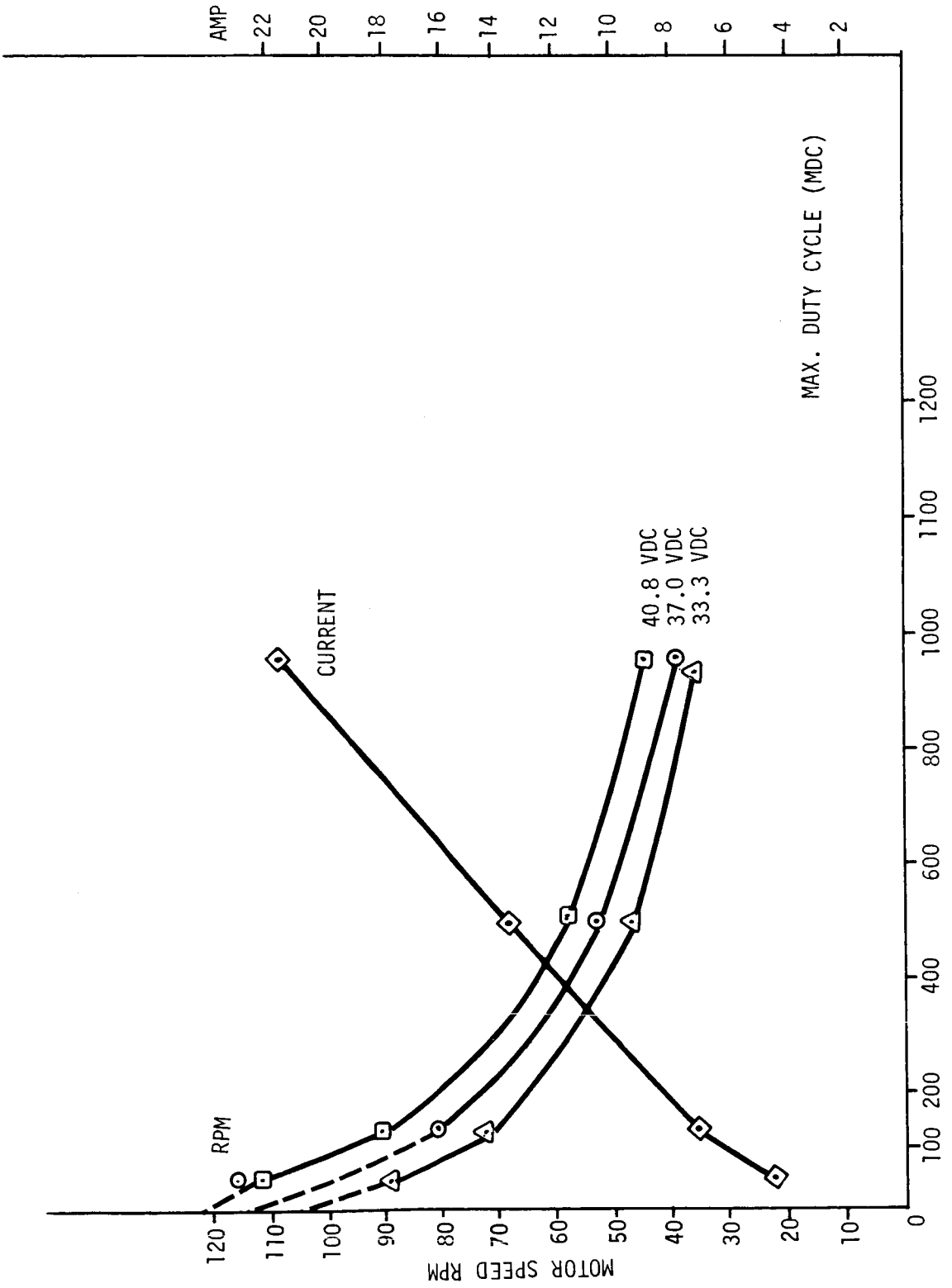

TRACTION DRIVE CHARACTERISTICS FOR RR DRIVE UNIT
SERIAL NO. 023
FIGURE 6-4

NAVIGATION SYSTEM RESET AND WARMUP

NSS CURRENT (AMPS)	BATTERY VOLTAGE TO SPU (VOLTS)	NSS POWER CONSUMED (WATTS)
2.36	34.8	82.1

LRV-1 NAVIGATION SYSTEM POWER CONSUMPTION

TABLE 6-I

CONFIGURATION	WEIGHT (POUNDS)	CENTER OF GRAVITY (LRV STATIONS)			MOMENT OF INERTIA ($LB\text{-}IN^2$)		
		X	Y	Z	Ix	Iy	Iz
BASIC LRV WITH SSE (FOLDED)	494.25	66.74	-0.54	111.34	149,745	171,079	231,426
LCRU SUPPORT FITTINGS	+3.00						
INBOARD HANDHOLD	+1.00						
UNDERSEAT ITEMS	+2.60						
AFT PALLET SUPPORT STRUCTURE	+3.10						
LCRU POWER CABLE, LCRU SUPPORT LEGS, ANTENNA & TV ADAPTERS	+3.80						
INSTALLED LRV IN LM	508.75	66.95	-0.42	111.21	151,167	173,662	223,771
SSE ATTACHED TO LM	-37.88						
WHEEL LOCK STRUTS	-0.97						
LRV SUPPORT TRIPODS	-3.56						
LRV DEPLOYMENT FITTING	-1.03						
SSE THERMAL PROTECTION	-0.60						
LRV DEPLOYED (EMPTY OPERATIONAL)	464.71	53.69	-0.24	104.33	209,476	645,261	799,786
SCIENCE EQUIPMENT	41.70						
PHOTOGRAPHIC EQUIPMENT	35.20						
SUPPORTING EQUIPMENT	116.60						
CREW SYSTEMS	802.20						
LUNAR SAMPLES	60.00						
LRV OPERATIONAL - LOADED	1520.41	72.96	-0.21	116.99	687,279	1,901,693	2,037,460

TABLE 6-II LRV-1 WEIGHT, C.G., AND MOMENTS OF INERTIA

LRV-1 LOADED WEIGHT DISTRIBUTION:	FRONT WHEELS	48.4%
	REAR WHEELS	51.6%

LRV-1 LOADED WHEEL LOADING:	RIGHT FRONT	365.5 LBS (24.0%)
	LEFT FRONT	369.9 LBS (24.3%)
	RIGHT REAR	390.2 LBS (25.7%)
	LEFT REAR	394.8 LBS (26.0%)

TABLE 6-III LRV-1 LUNAR OPERATIONAL WEIGHT DISTRIBUTION - STATIC, LEVEL LURAIN CONDITION

PARAMETER	
1. GROSS VEHICLE MASS	47.2 SLUGS (1520 LBS)
2. SUSPENDED VEHICLE MASS	44.2 SLUGS (1424 LBS)
3. WHEEL MASS	.745 SLUG (24 LBS)
4. WHEEL ROTATIONAL MOMENT OF INERTIA	2.2 SL-FT^2
5. VEHICLE MOMENTS OF INERTIA	See Table 6-I
6. CG LOCATION	See Table 6-I
7. VERTICAL SUSPENSION RATE	14 LB/IN (0-9 INCHES) 500 LB/IN ($<$ 0 OR $>$ 9 IN)
8. VERTICAL DAMPING RATE	17.3 LB-SEC^2/FT^2
9. HORIZINTAL SUSPENSION RATE	51,000 LB/FT
10. HORIZONTAL SUSPENSION DAMPING RATE	2420 LB/(FT/SEC)
11. WHEEL RADIAL SPRING RATE	400 LB/FT (0-1.5 IN) 680 LB/FT (1.5-3 IN) 7300 LB/FT (3 IN)
12. WHEEL DAMPING RATE	2.5 LB/(FT/SEC)
13. WHEEL DIAMETER	32 INCHES
14. VEHICLE WHEEL BASE	90 INCHES

TABLE 6-IV SUMMARY OF LRV-1 MOBILITY PARAMETERS

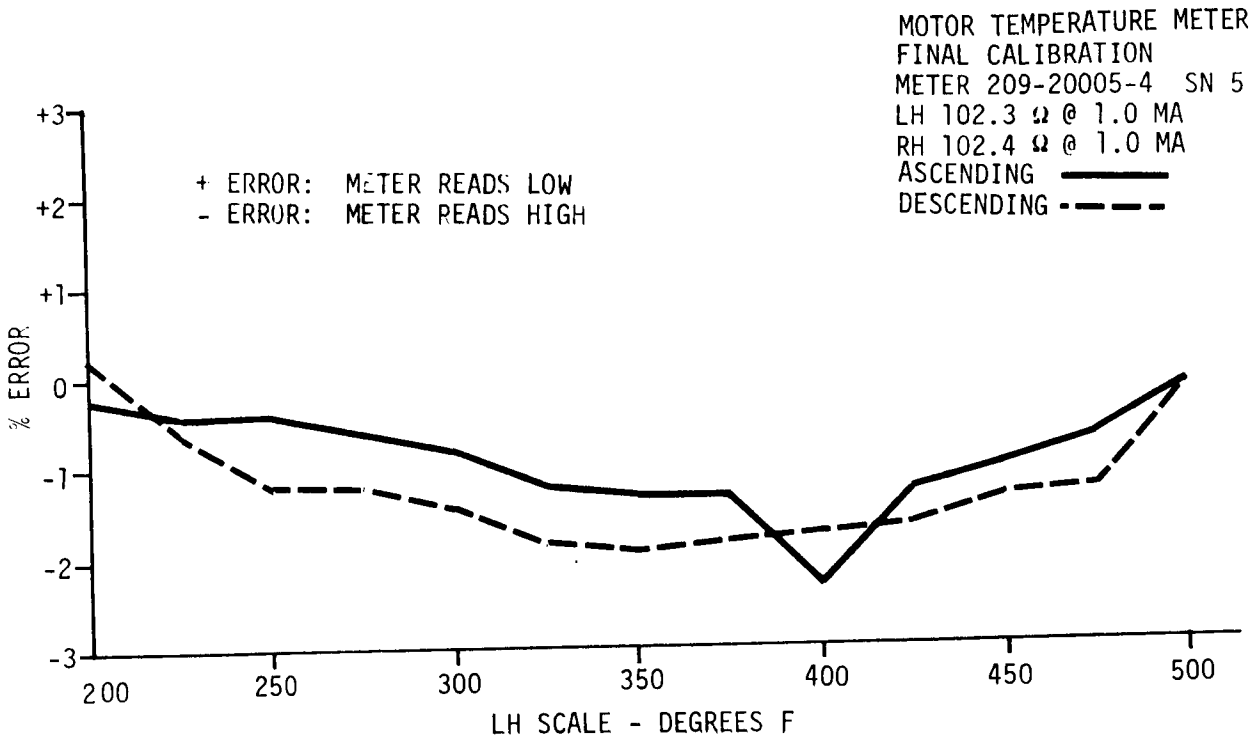
MOTOR TEMPERATURE METER
FINAL CALIBRATION
METER 209-20005-4 SN 5
LH 102.3 Ω @ 1.0 MA
RH 102.4 Ω @ 1.0 MA
ASCENDING
DESCENDING
+ ERROR: METER READS LOW
- ERROR: METER READS HIGH
% ERROR
+3
+2
+1
0
-1
-2
-3
200
250
300
350
400
450
500
LH SCALE - DEGREES F

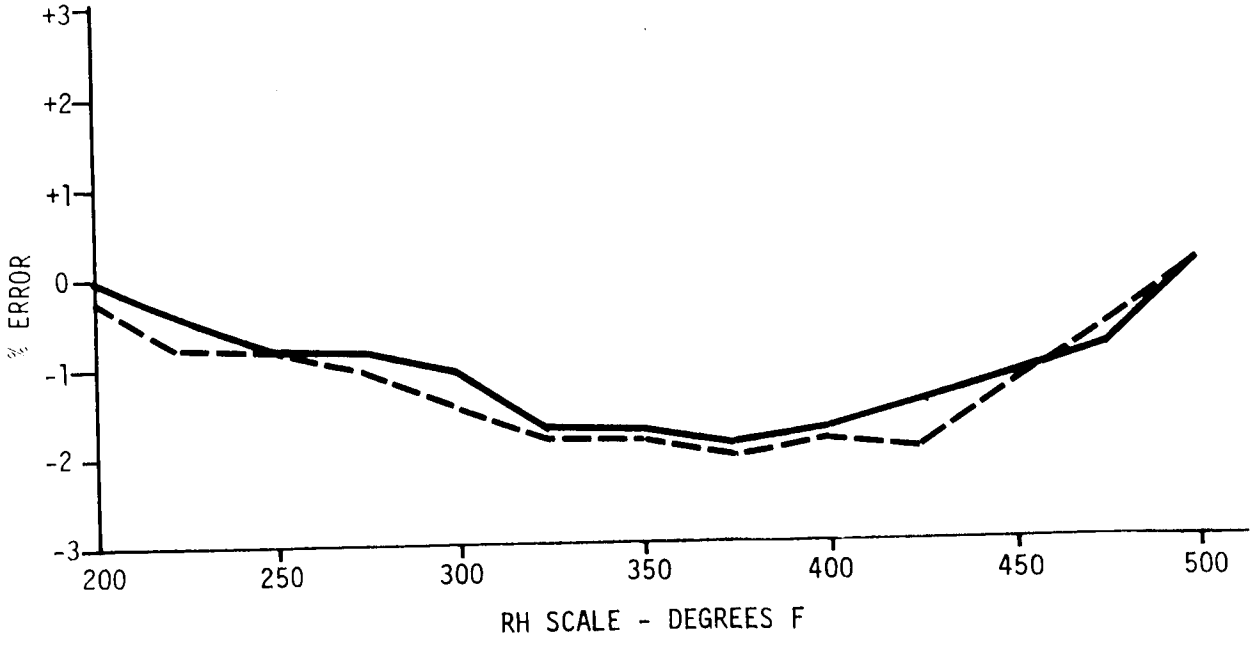
% ERROR
+3
+2
+1
0
-1
-2
-3
200
250
300
350
400
450
500
RH SCALE - DEGREES F

FIGURE 6-5

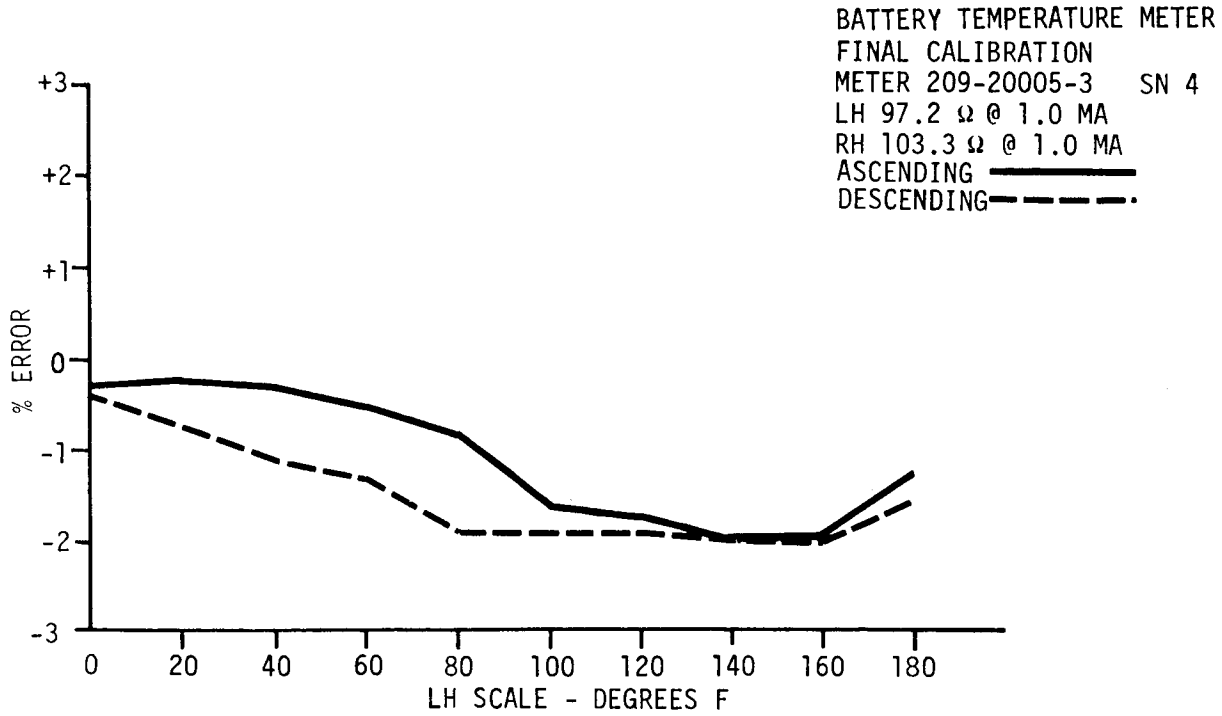
BATTERY TEMPERATURE METER
FINAL CALIBRATION
METER 209-20005-3 SN 4
LH 97.2 Ω @ 1.0 MA
RH 103.3 Ω @ 1.0 MA
ASCENDING
DESCENDING
% ERROR
+3
+2
+1
0
-1
-2
-3
0
20
40
60
80
100
120
140
160
180
LH SCALE - DEGREES F

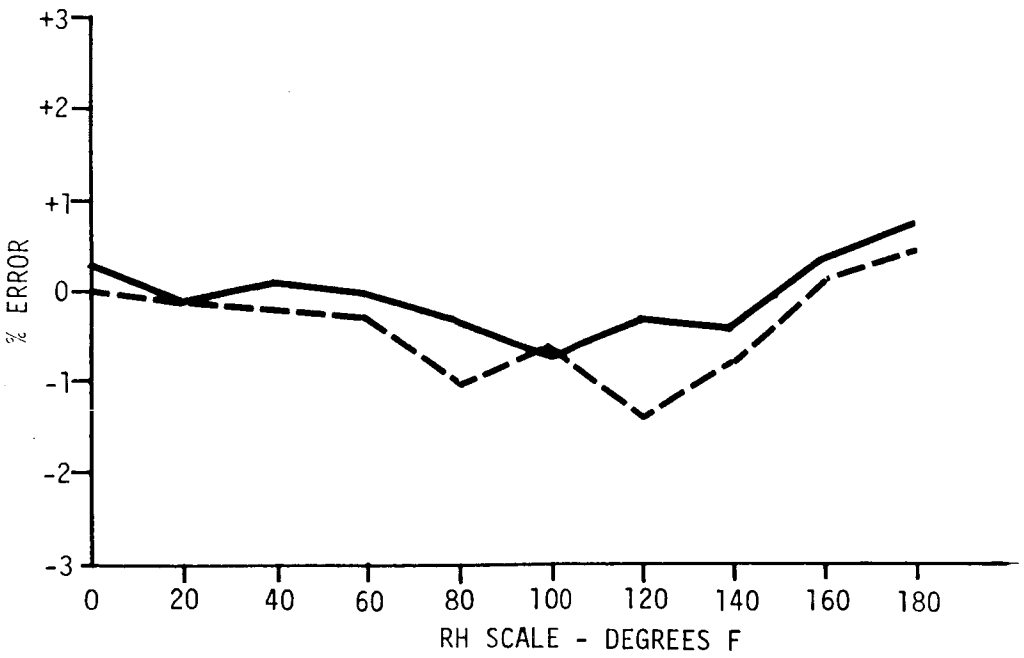
% ERROR
+3
+2
+1
0
-1
-2
-3
0
20
40
60
80
100
120
140
160
180
RH SCALE - DEGREES F

FIGURE 6-6

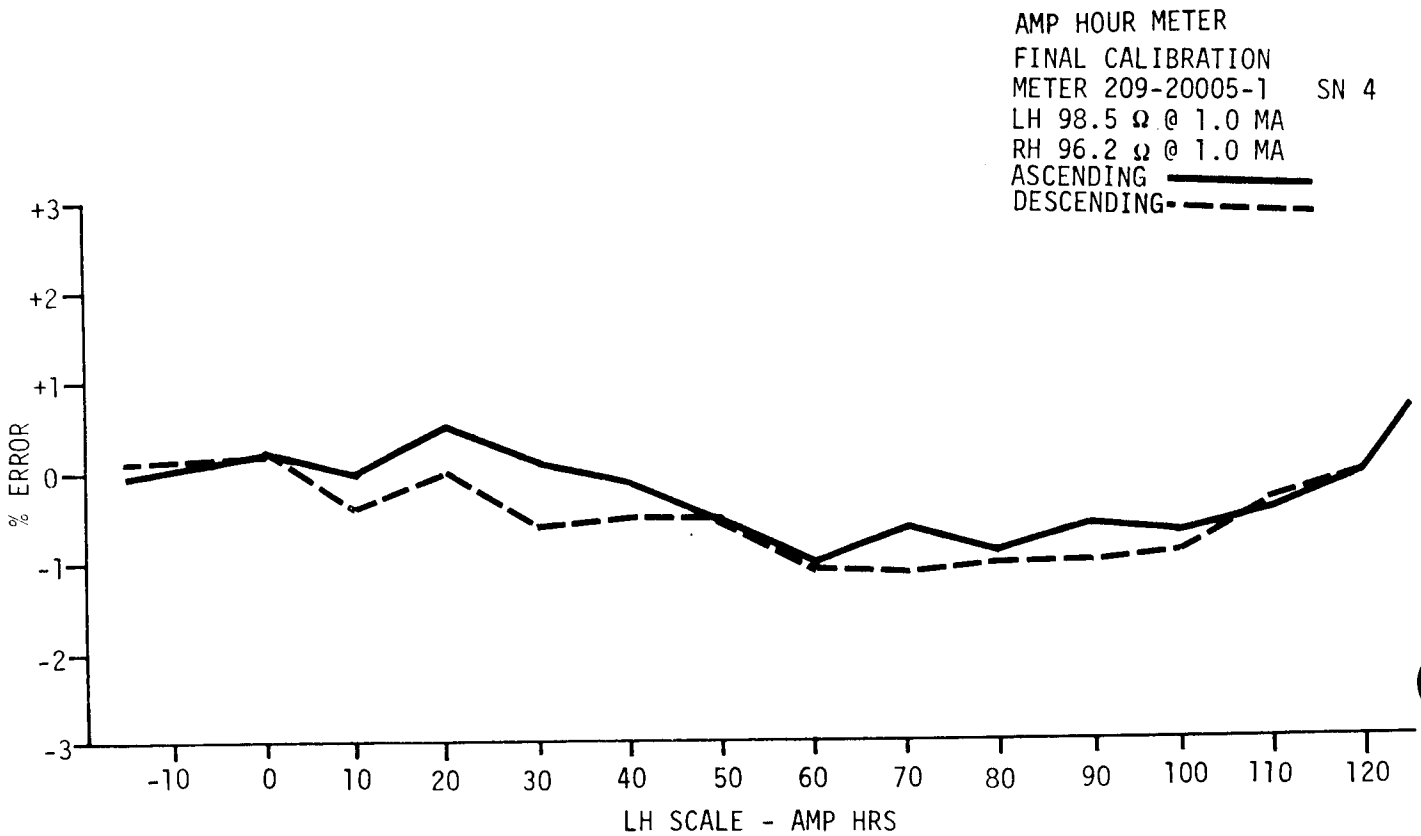
AMP HOUR METER
FINAL CALIBRATION
METER 209-20005-1 SN 4
LH 98.5 Ω @ 1.0 MA
RH 96.2 Ω @ 1.0 MA
ASCENDING
DESCENDING
+3
+2
+1
0
-1
-2
-3
% ERROR
-10
0
10
20
30
40
50
60
70
80
90
100
110
120
LH SCALE - AMP HRS

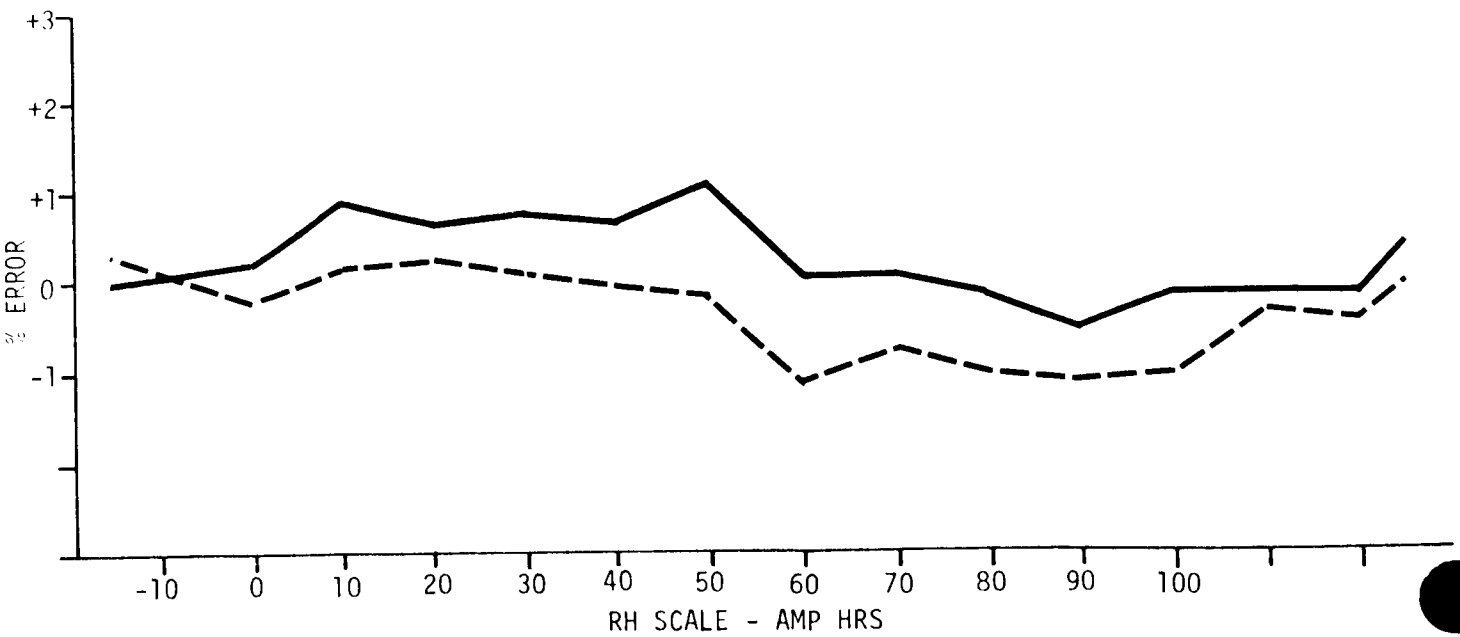
+3
+2
+1
0
-1
% ERROR
-10
0
10
20
30
40
50
60
70
80
90
100
RH SCALE - AMP HRS

FIGURE 6-7

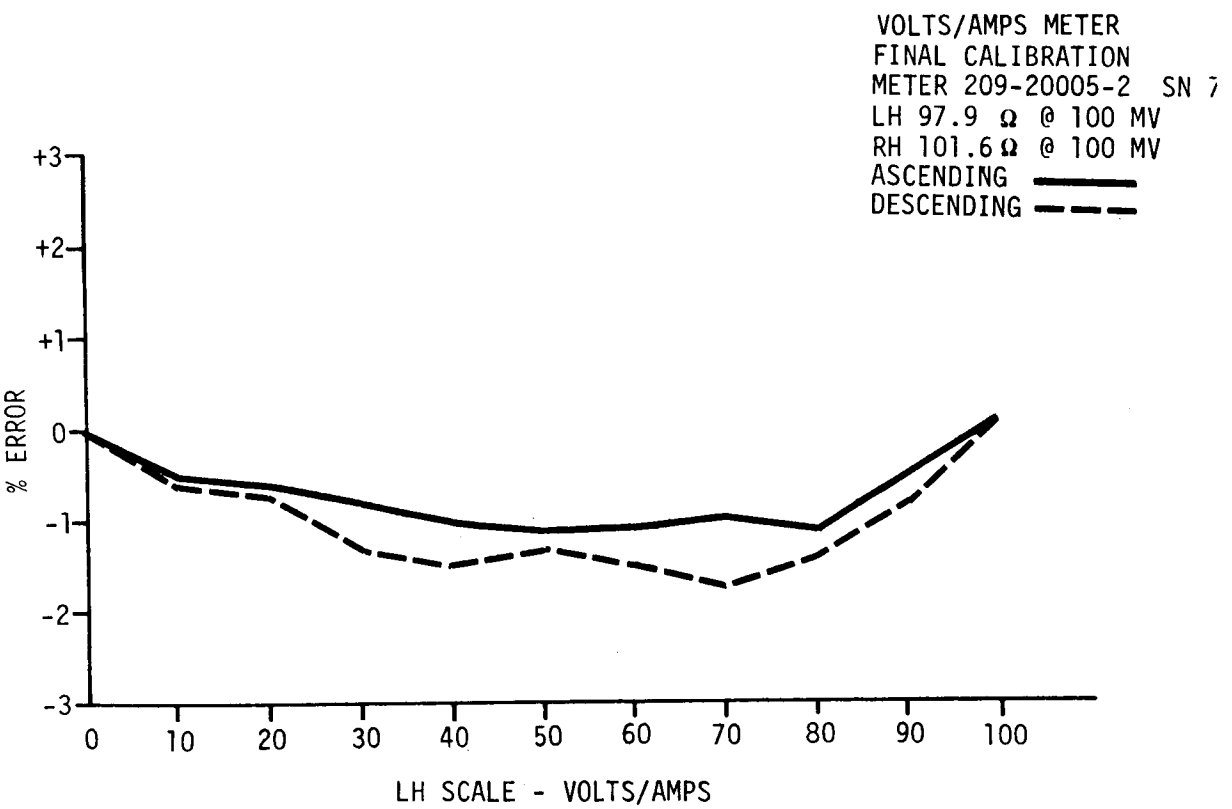
VOLTS/AMPS METER
FINAL CALIBRATION
METER 209-20005-2 SN 7
LH 97.9 Ω @ 100 MV
RH 101.6 Ω @ 100 MV
ASCENDING
DESCENDING
% ERROR
+3
+2
+1
0
-1
-2
-3
0
10
20
30
40
50
60
70
80
90
100
LH SCALE - VOLTS/AMPS

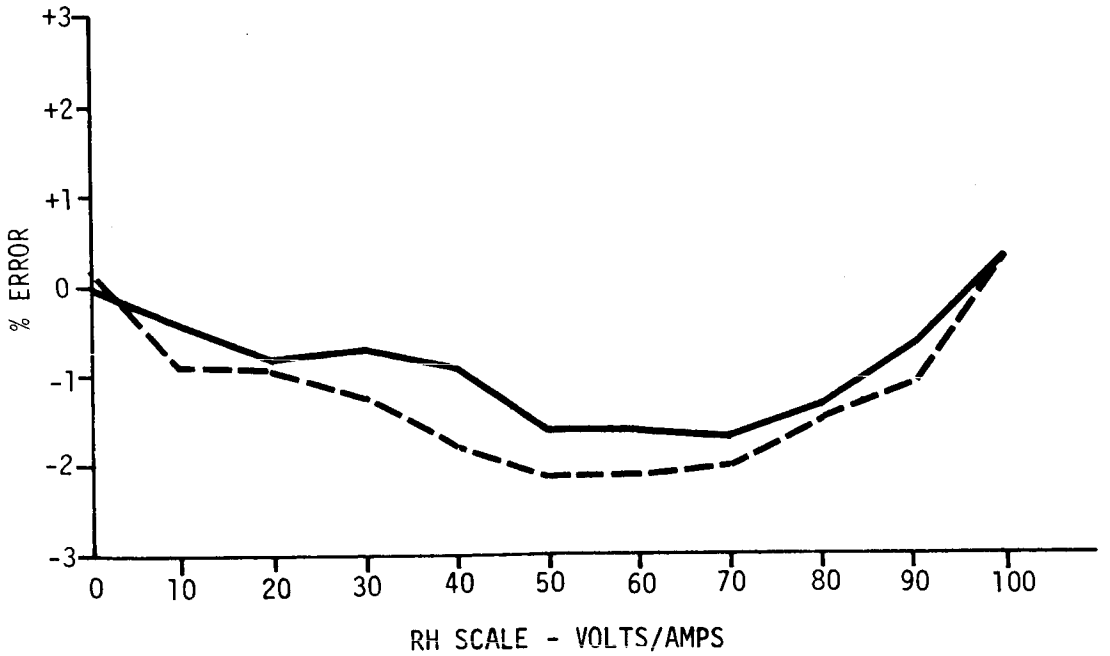
% ERROR
+3
+2
+1
0
-1
-2
-3
0
10
20
30
40
50
60
70
80
90
100
RH SCALE - VOLTS/AMPS

FIGURE 6-8