(NASA-CR-119275) LRV LUNAR TRAVERSE OBSTACLE AVOIDANCE STUDY (Bellcomm, Inc.) 22 p

N79-73356

Unclas
00/91 12072

FF No. (NASA CR OR TMX OR AD NUMBER) (CATEGORY)

[redacted]

Bellcomm
L'Enfant Plaza North, S.W.
Washington, D. C. 20024

date: June 4, 1971

to: Distribution

B71 06006

from: H. F. Connor, D. M. Duty, J. D. Richey

subject: LRV Lunar Traverse Obstacle Avoidance Study - Cases 310, 320

MEMORANDUM FOR FILE

The attached charts (1-20) were used to present results of the LRV Lunar Traverse Obstacle Avoidance Study to the Lunar Surface Operations Planning meeting at MSC on May 12, 1971. The purpose of the study was to evaluate the effects of lunar surface obstacle avoidance on the speed and wander factor of the LRV. This information is needed by mission planners to enable safe and realistic mission planning.

The study was begun by generating a scale model of expected lunar surface features which are not large enough to be above the recognition threshold of existing site photography for Hadley.* The flat scale model of the lunar surface represented an area of 100 meters by 200 meters. The crater sizes and densities were based on numbers developed from Ranger and Orbiter photography and on crater counts from high resolution photography near Hadley.

Next, a scale model LRV which left a trace of its path was driven across the crater field on nine different courses. The vehicle was driven according to driving rules shown on charts 16 and 17. All craters larger than one meter in diameter were avoided, and the vehicle was driven without speed adjustment through all craters less than one meter. Stopping or backtracking was not permitted and whenever the vehicle left the straight line course to avoid an obstacle, it was driven so as to return it to the original course in the most reasonable manner. After the nine vehicle paths were established with only craters for obstacles, boulders were placed on the surface model according to random distributions based on MSFC data for smooth mare intercrater

AUG 1971
RECEIVED
NASA STI FACILITY
INPUT BRANCH

---

*"Development of a Lunar Surface Model for Hadley-North," H. F. Connor, to be published.

blocks. Results indicated that the boulders caused very little change in the paths, so they were not considered any further in the study.

The final step was an analysis of the vehicle paths, which were measured to determine wander factor. Vehicle acceleration, deceleration, turning and controllability characteristics (charts 14 and 15), as provided at the LRV DCR, were applied to the vehicle paths to determine average speed and speed made good (as defined on chart 19). It was found from the study that the average wander factor was 5.2% and the vehicle average speed was 7.7 km/hr, a 23% reduction from the highest speed (10 km/hr controllability limit) used during the traverses. The average speed made good was 7.4 km/hr which is a 26% reduction from the 10 km/hr maximum.

The results also show that wander factor and speed made good are not necessarily inversely proportional. For example, traverses 1 and 9 (chart 19) have wander factors of 8.4% and 10.6% respectively, and the associated speeds made good are 5.5 and 6.9 km/hr; traverses 6 and 7 have wander factors of 1.9% and 1.8% respectively, and the associated speeds made good are 6.9 and 9.1 km/hr.

As shown on the final chart, many factors that could affect the performance of the astronauts and the LRV were not considered in the study. It is likely that vehicle speeds may well decrease even more when those factors are considered.

H. F. Connor

D. M. Duty by JAL

J. D. Richey

2013-HFC
2032-DMD-slr
JDR

Attachments

LRV LUNAR TRAVERSE OBSTACLE AVOIDANCE STUDY

H. F. CONNOR
J. D. RICHEY

CHART 1

PREVIOUS SPEED STUDIES HAVE ASSUMED

- 10% WANDER FACTOR
- VEHICLE SPEEDS
  - 10.5 KM/HR MAXIMUM SPEED AVAILABLE
  - 10.0 KM/HR CONTROLLABILITY LIMIT
  - 8.0 – 14.0 KM/HR STRUCTURAL LIMITS
  - UPHILL LIMITS
- NO INTERMEDIATE STOPS BETWEEN SCIENCE STATIONS
- NO TURNING (SO, NO DECELERATION OR ACCELERATION RESULTING FROM TURNS)

CHART 2

LRV LUNAR TRAVERSE OBSTACLE AVOIDANCE STUDY

OBJECTIVE: EVALUATE EFFECTS ON WANDER FACTOR AND SPEED MADE GOOD* OF CRATER AND BOULDER AVOIDANCE AT THE HADLEY SITE

$$*\text{SPEED MADE GOOD} = \frac{\text{PLANNED MAP DISTANCE BETWEEN TWO POINTS}}{\text{ELAPSED TRAVERSE TIME}}$$

CHART 3

TOOLS NEEDED FOR STUDY

- A REASONABLE MODEL OF CRATER AND BOULDER DISTRIBUTION ON A LEVEL LUNAR SURFACE
- SCALE MODEL OF LRV
- VEHICLE ACCELERATION AND DECELERATION CHARACTERISITICS
- VEHICLE CONTROLLABILITY SPEED CONSTRAINTS
- SOME RATIONAL RULES FOR DRIVING THE LRV OVER THE LUNAR SURFACE MODEL

CHART 4

CRATER DISTRIBUTIONS (CUMULATIVE)

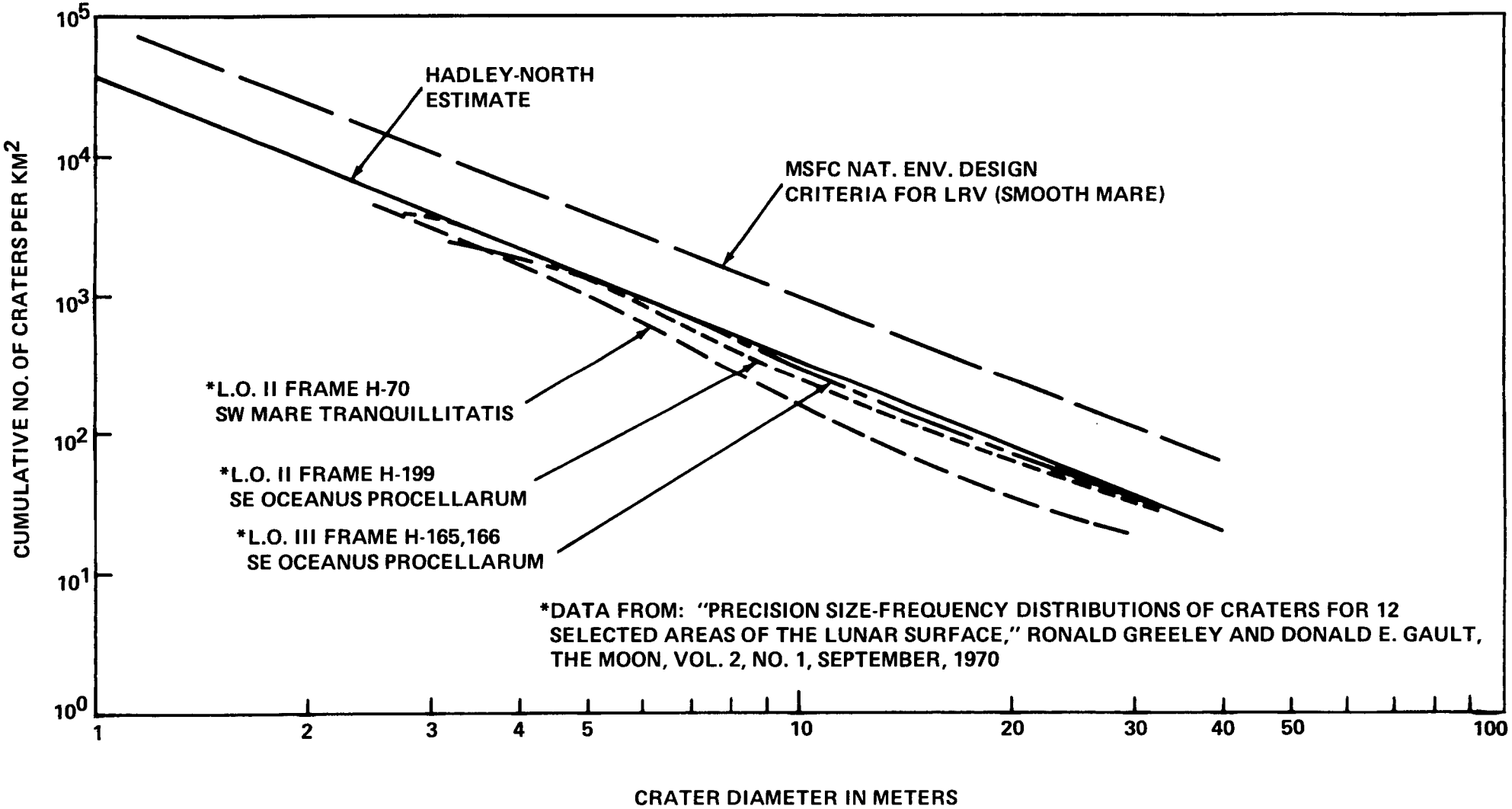

CHART 5

CRATER DISTRIBUTIONS (INCREMENTAL)

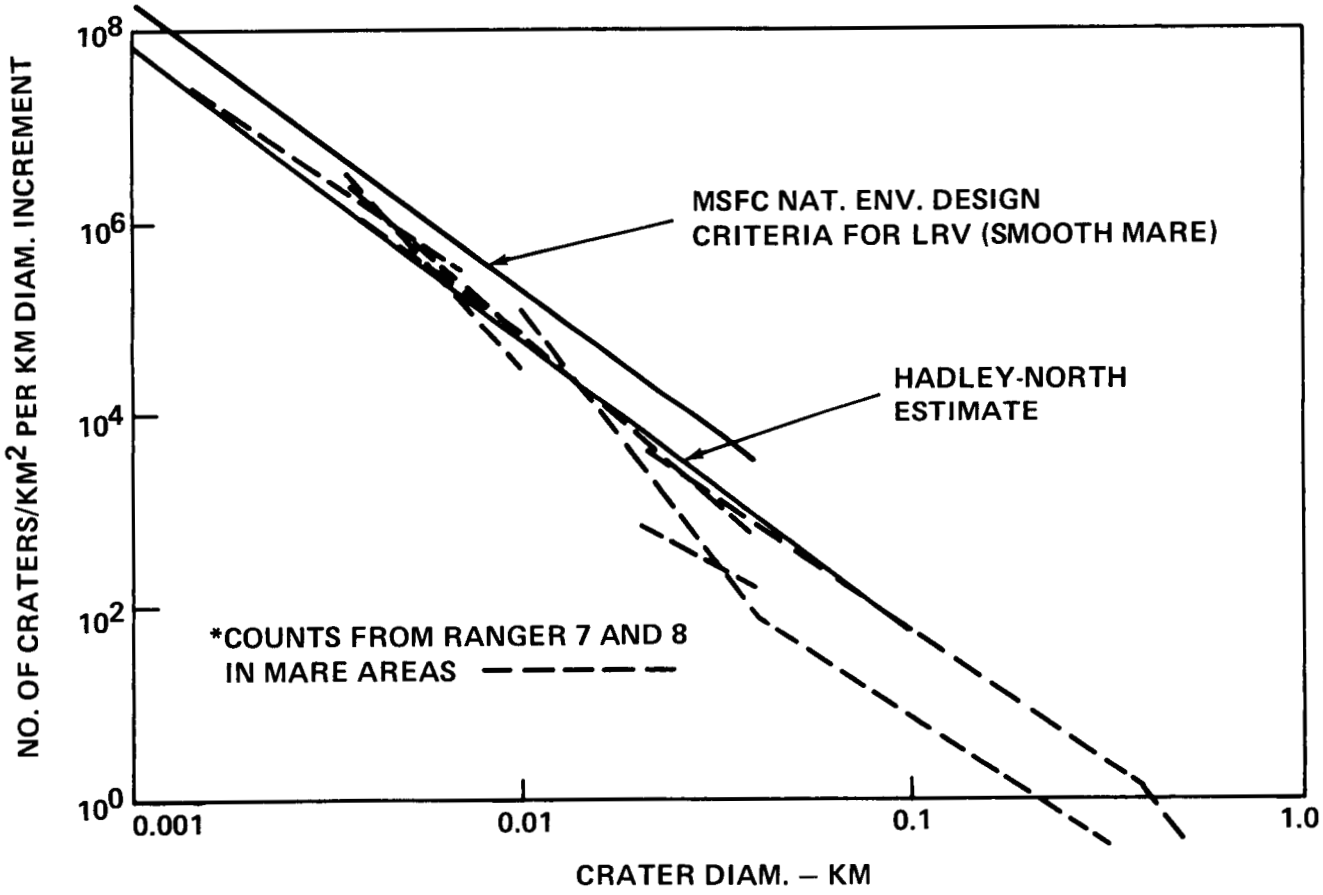

*DATA FROM: "INTERPRETATION OF THE DIAMETER – FREQUENCY RELATION FOR LUNAR CRATERS PHOTOGRAPHED BY RANGERS VII, VIII AND IX", CLARK R. CHAPMAN, ICARUS 8, 1-22 (1968)

CRATER DISTRIBUTION FORMULAE

	HADLEY-NORTH ESTIMATE	MSFC CRITERIA SMOOTH MARE; D < 40 M
CUMULATIVE	$N_c = .024\ D^{-2.06}$	$N_c = 0.1\ D^{-2}$
INCREMENTAL	$N_i = 0.05\ D^{-3.06}$	$N_i = 0.2\ D^{-3}$

CHART 7

MINIMUM CRATER DIAMETER FOR AVOIDANCE PLANNING

- VEHICLE DISTURBANCE
- VISIBILITY
- EVASION ROUTES

CHART 8

EVASION ASSESSMENT FOR ½ TO 1 METER CRATERS

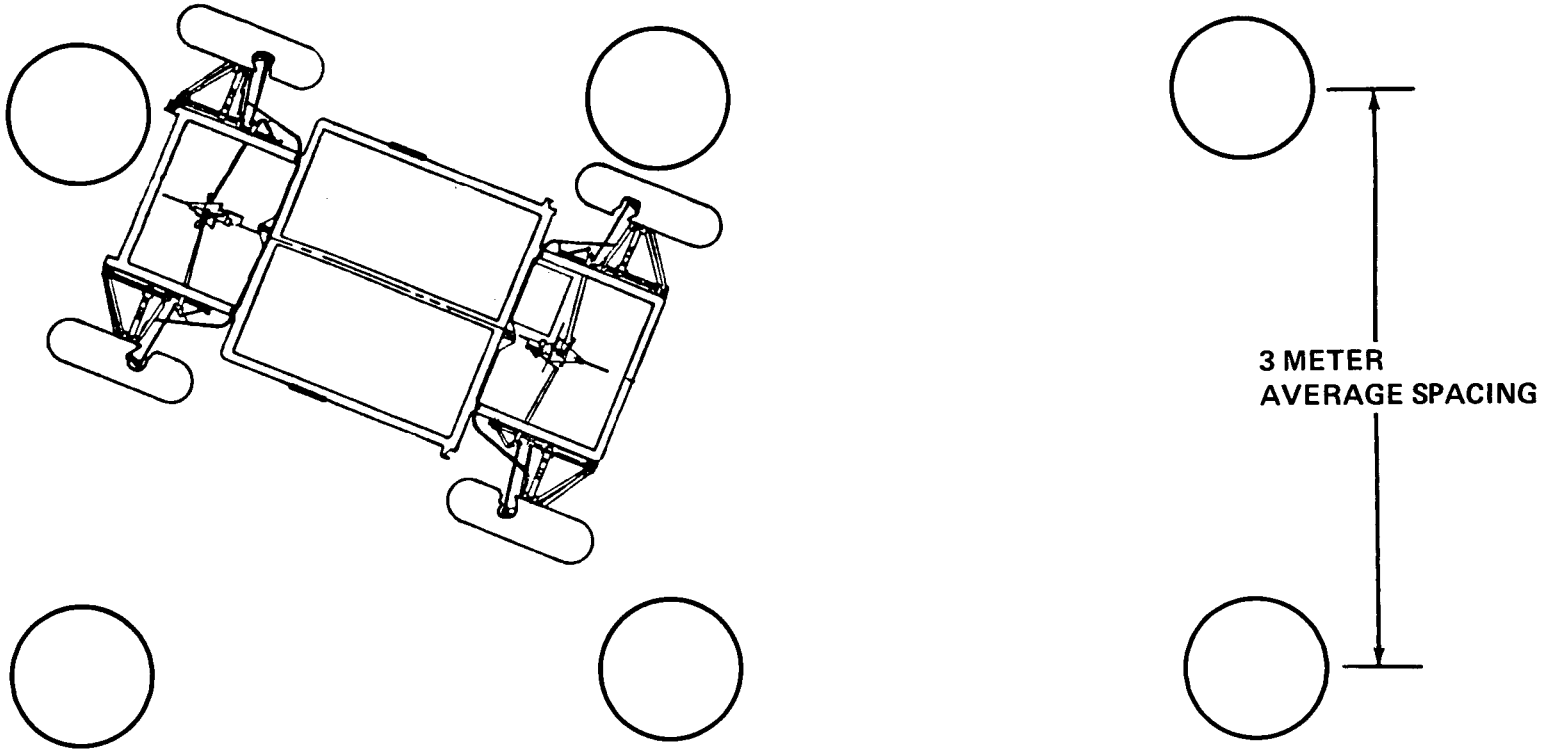

CHART 9

EVASION ASSESSMENT FOR ¼ TO ½ METER CRATERS

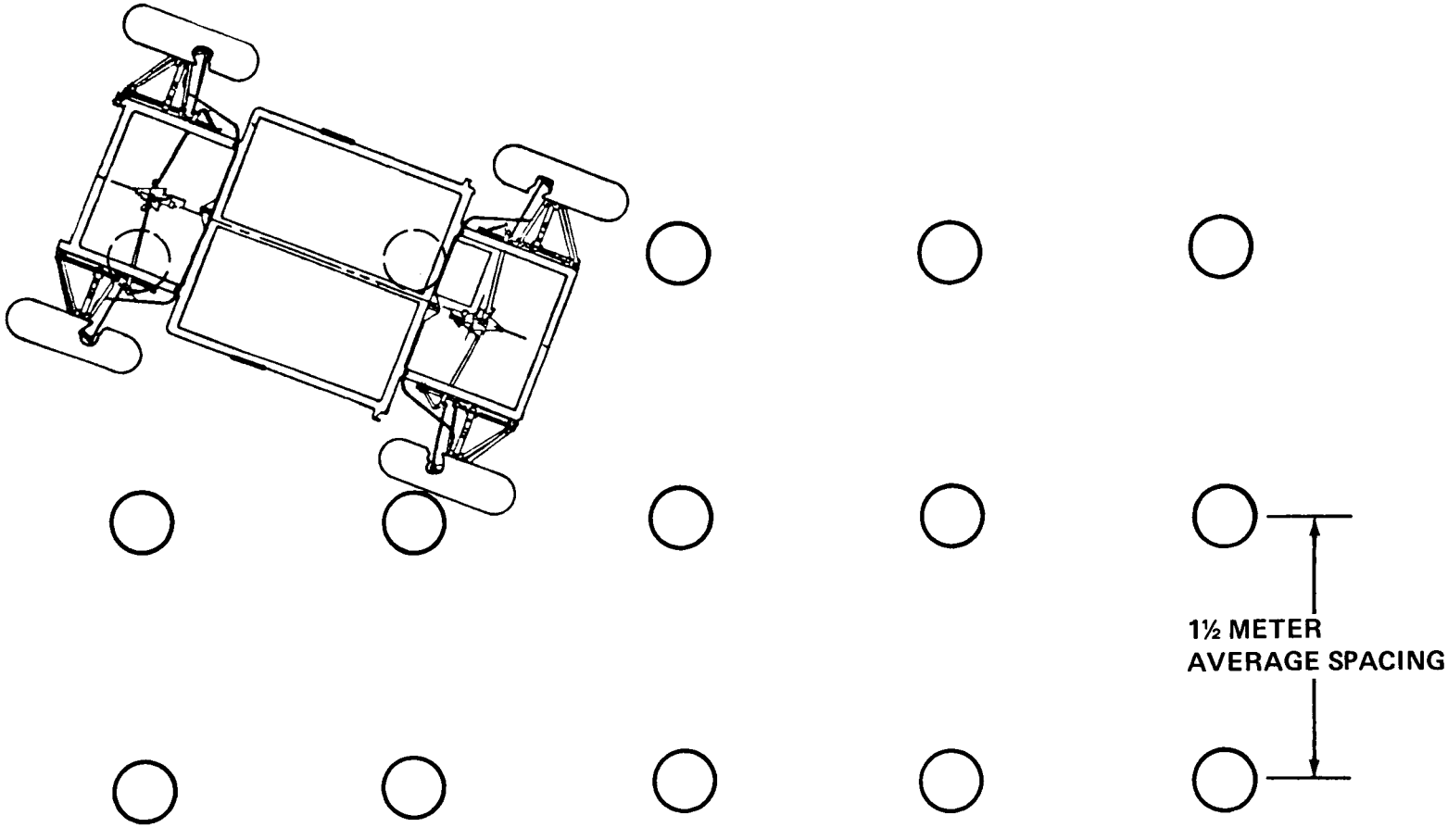

CHART 10

MAXIMUM CRATER DIAMETER FOR STATISTICAL WANDERING

- CHART LIMIT (32 M)

- TRAVERSE PLAN (20 M?; 100M?)

CHART 11

PREPARATION OF CRATER CHART

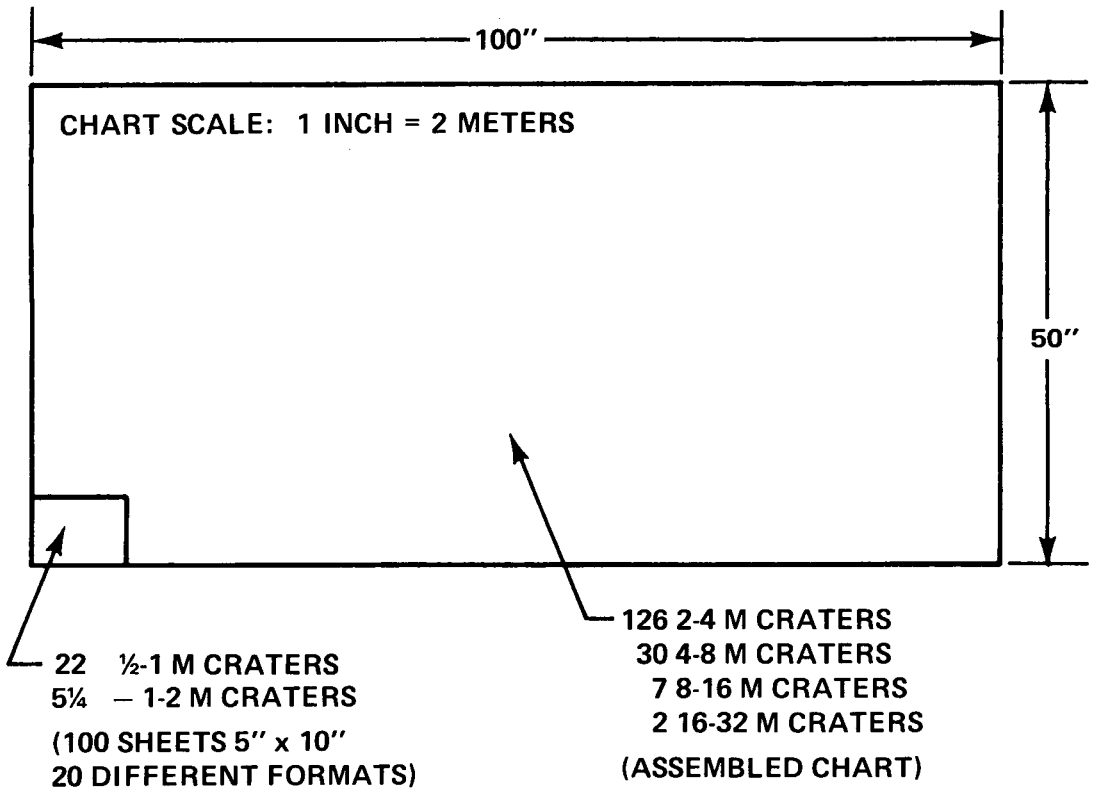

(LOCATION COORDINATES
DETERMINED BY A
TABLE OF RANDOM NUMBERS)

CHART 12

CUMULATIVE DISTRIBUTIONS FOR CRATERS
AND INTERCRATER BLOCKS

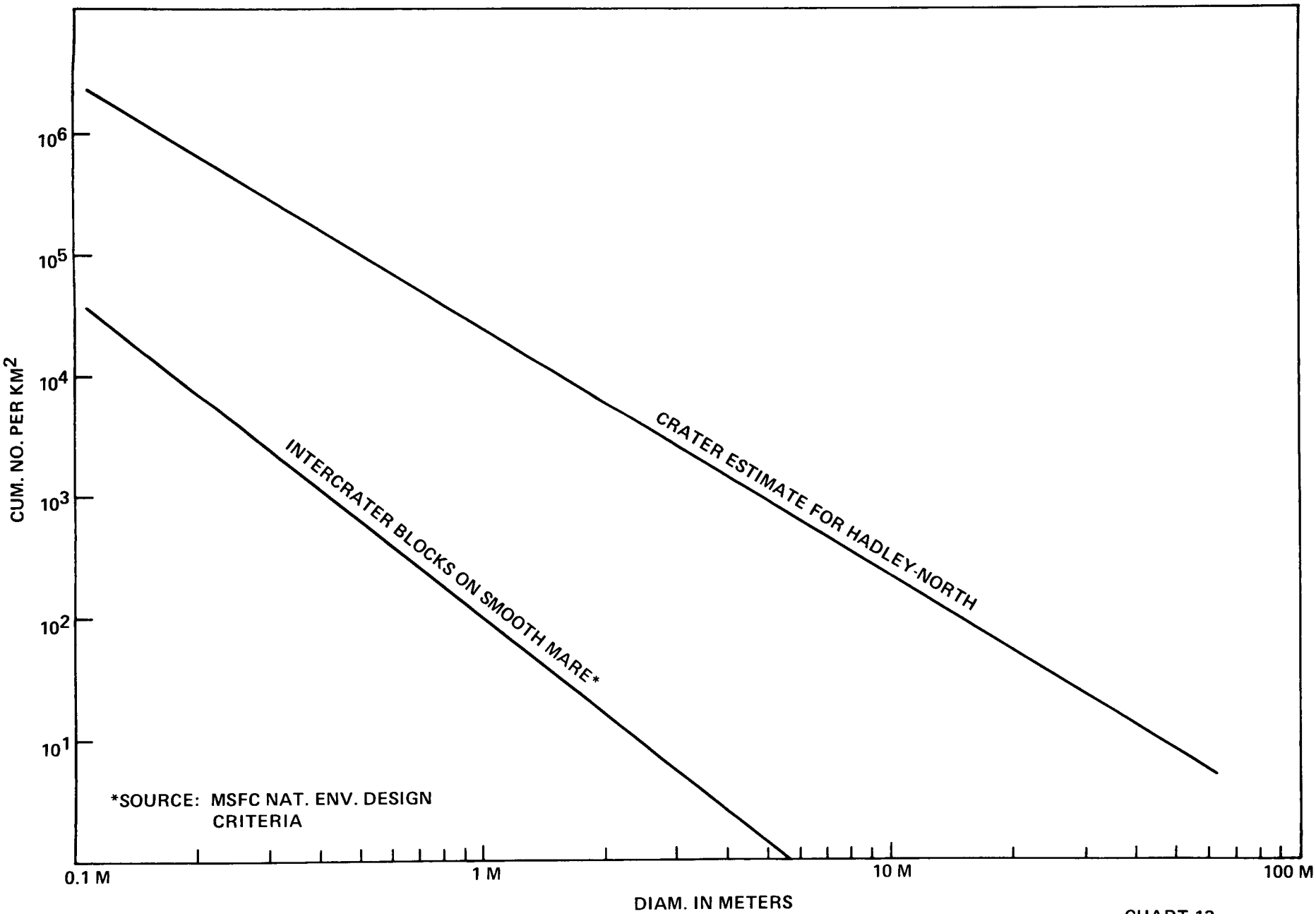

CHART 13

ACCELERATION/BRAKING CAPABILITY

VEHICLE MASS = 1500 LBS.

ACCELERATION DISTANCES
MAXIMUM OUTPUT MOTOR CHARACTERISTICS
SOIL B WORST CASE DAMPER POWER
COEF. = 0.58594 WATT/(KM/HOUR)^2/WHEEL

MINIMUM BRAKING DISTANCE
WITHOUT WHEEL LOCK

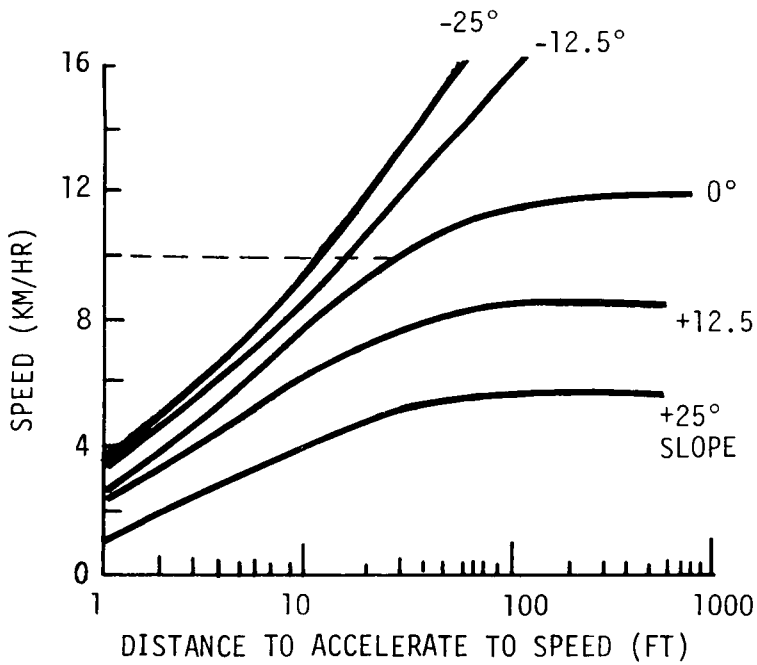

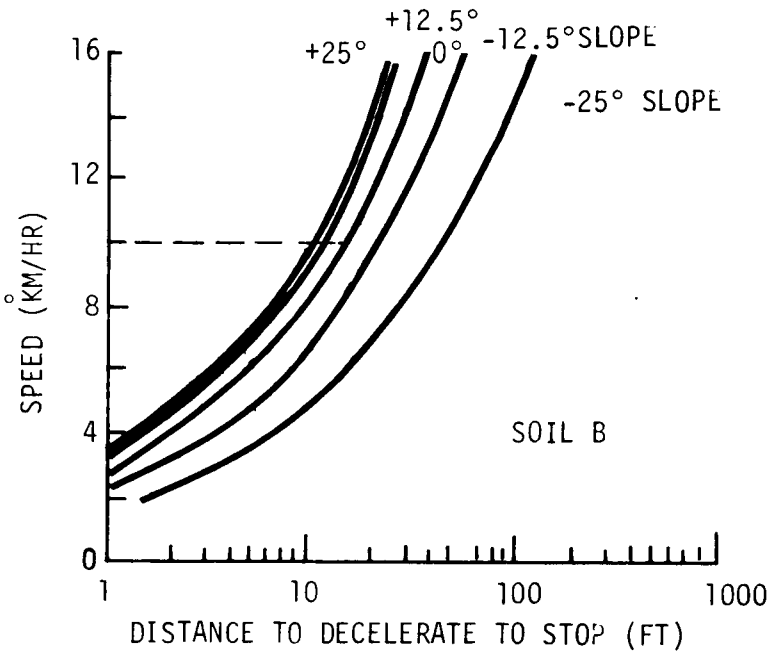

D209-10074-1

TURN RADIUS VS SPEED @ ψ = 13°

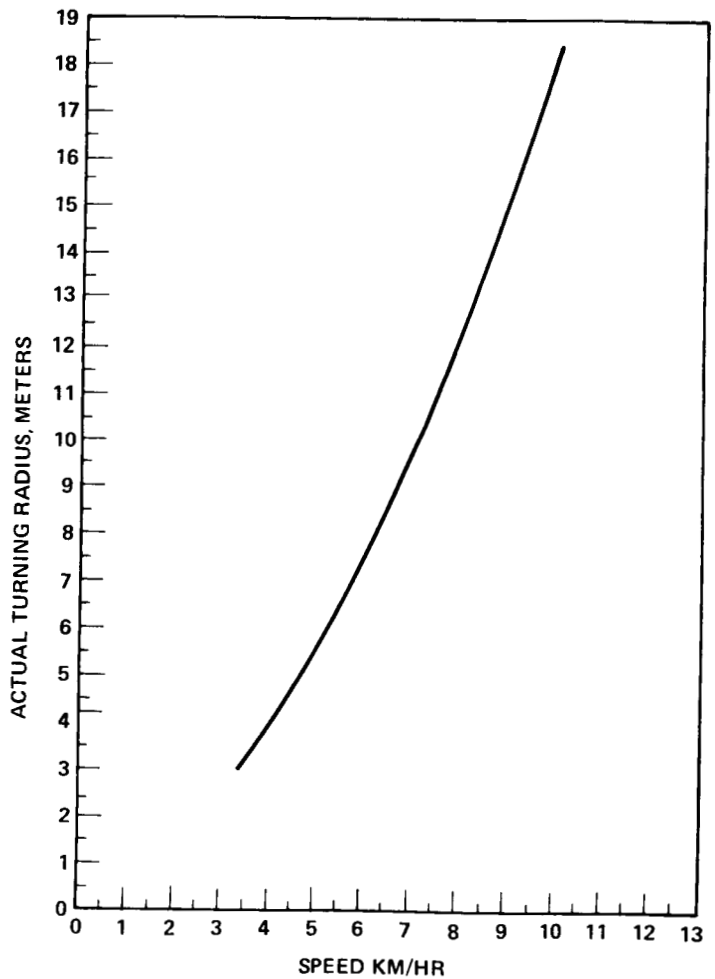

CHART 15

DRIVING RULES

- DRIVE THROUGH CLASS A CRATERS WITHOUT REDUCING SPEED
- AVOID ALL CLASS B-F CRATERS

CLASS	CRATER SIZE (METERS)	MAP REPRESENTATION (METERS)
A	.5–1	.7
B	1–2	1.4
C	2–4	2.8
D	4–8	5.6
E	8–16	11.3
F	16–32	22.6

DRIVING RULES (CONTINUED)

- DRIVE OVER CLASS 1 BOULDERS WITHOUT REDUCING SPEED
- AVOID ALL CLASS 2 AND 3 BOULDERS

CLASS	SYMBOL	BOULDER SIZE (METERS)
1	△	1/8 – 1/4
2	⊠	1/4 – 1/2
3	⊠	1/2 – 1

- VEHICLE SPEEDS

  MAXIMUM SPEED 10 KM/HR (CONTROLLABILITY LIMIT)

  LIMITS FOR 13° MAXIMUM ψ ANGLE DURING TURNS

  DECELERATION/ACCELERATION REQUIRED FOR TURNING DICTATED BY LRV CHARACTERISTICS

- NO BACKTRACKING
- NO STOPPING

SPEED PROFILE FOR TRAVERSE NO. 1

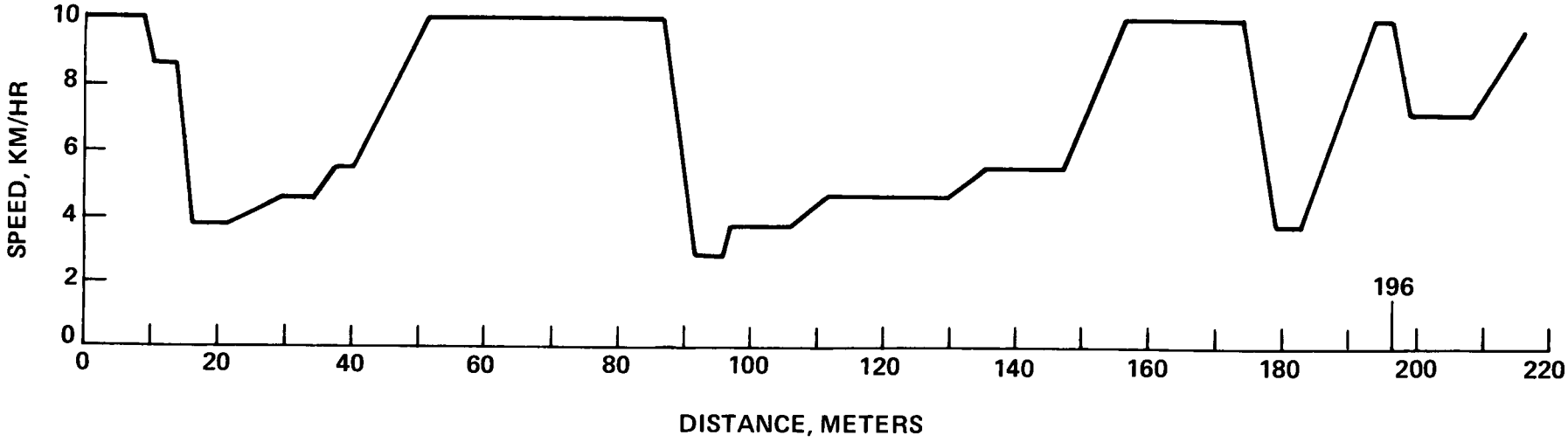

CHART 18

STUDY RESULTS

TRAVERSE PARAMETER \ TRAVERSE NO.	1	2	3	4	5	6	7	8	9	AVERAGE
MAP DISTANCE (METERS)	196	196	196	196	196	196	196	196	196	196
ACTUAL DISTANCE (METERS)	212.5	207.5	205.8	201.9	203.9	199.8	199.6	208.7	216.7	206.26
WANDER FACTOR (%)	8.4	5.9	5.0	3.0	4.0	1.9	1.8	6.5	10.6	5.2
AVERAGE SPEED* (KM/HR)	6.0	8.1	7.5	8.4	8.2	7.0	9.2	7.3	7.7	7.7
SPEED MADE GOOD** (KM/HR)	5.5	7.7	7.2	8.1	7.9	6.9	9.1	6.9	6.9	7.4
NO. OF TURNS	14	6	10	12	10	13	3	12	13	10.3

MAXIMUM VELOCITY = 10 KM/HR
SLOPE = 0°
CONTROLLABILITY ψ ANGLE = 13°

$$*\text{AVERAGE SPEED} = \frac{\text{ACTUAL TRAVELED DISTANCE}}{\text{ELAPSED TRAVERSE TIME}}$$

$$**\text{SPEED MADE GOOD} = \frac{\text{PLANNED MAP DISTANCE BETWEEN TWO POINTS}}{\text{ELAPSED TRAVERSE TIME}}$$

CONCLUSIONS

- PRESENT 10% WANDER FACTOR APPEARS REASONABLE
- SPEED REDUCTION DUE TO OBSTACLE AVOIDANCE MAY APPROACH 23%
- MISSION PLANNING SPEEDS OF 8.0 KM/HR AND 8.4 KM/HR MAY BE HIGH
- THE FOLLOWING ITEMS THAT WERE NOT INCLUDED IN THIS ANALYSIS COULD TEND TO FURTHER REDUCE DRIVING SPEED

  SLOPES
  SUN ANGLE
  MAN/SUIT/MACHINE (VISIBILITY & COMFORT)
  NAVIGATION UPDATES
  LOCAL DECISION MAKING
  POINT OF INTEREST STOP OR SLOWDOWN
  LEARNING FACTOR

- THE FOLLOWING WILL TEND TO INCREASE SPEED

  FAVORABLE CRATER DISTRIBUTION
  CAPABILITY TO DRIVE LARGER CRATERS WITHOUT ADVERSELY AFFECTING SPEED
  BETTER THAN PREDICTED LRV SPEED PERFORMANCE

Subject: LRV Lunar Traverse Obstacle Avoidance Study - Case 320

From: H. F. Connor. D. M. Duty, J. D. Richey

Distribution List

NASA Headquarters

R. J. Allenby/MAL
D. A. Beattie/MAL
D. S. Diller/MAE
J. K. Holcomb/MAO
E. W. Land/MAO
C. M. Lee/MA
A. S. Lyman/MR
B. Milwitzky/MAE
W. T. O'Bryant/MAL
R. A. Petrone/MA
L. R. Scherer/MAL
D. Senich/MAL
R. B. Sheridan/MAO
W. E. Stoney/MAE

Bellcomm, Inc.

A. P. Boysen, Jr.
F. El-Baz
W. G. Heffron
J. J. Hibbert
N. W. Hinners
S. Kaufman
M. Liwshitz
K. E. Martersteck
R. K. McFarland
J. Z. Menard
J. J. O'Connor
P. E. Reynolds
P. F. Sennewald
R. V. Sperry
R. L. Wagner
All Members Department 2013
All Members Department 2032
Department 1024 File
Central Files
Library

Bellcomm, Inc.
(Without Attachments)

J. P. Downs
D. R. Hagner
D. P. Ling
J. W. Timko
M. P. Wilson