Z65·11208

~~CONFIDENTIAL~~

117

CLASSIFICATION CHANGE

UNCLASSIFIED

Authority of GDS-Eg 11652 Date 12/31/72

by [illegible]

Authorized Document Master Control Station, NASA

Scientific and Technical Information Facility

PROJECT APOLLO

SPACECRAFT DESCRIPTION (U)

(NASA-TM-X-61962) PROJECT APOLLO SPACECRAFT DESCRIPTION (NASA) 238 p

N79-76325

Unclas

00/18 11147

238 (PAGES)

NASA-TMX-61962 (NASA CR OR TMX OR AD NUMBER)

(CODE)

(CATEGORY)

FF No. 602(A)

[redacted]

~~GROUP 4~~
~~Downgraded at 3-year intervals, declassified after 12 years~~

AVAILABLE TO NASA HEADQUARTERS ONLY

September 1, 1963

[redacted]

This material contains information affecting the national defense of the United States within the meaning of the espionage laws, Title 18, U.S.C., Sections 793 and 794, the transmission or revelation of which in any manner to an unauthorized person is prohibited by law.

NATIONAL AERONAUTICS AND SPACE ADMINISTRATION

MANNED SPACECRAFT CENTER, HOUSTON, TEXAS

~~CONFIDENTIAL~~

FOREWORD

The Apollo Spacecraft Description describes a typical Apollo spacecraft lunar landing mission and the current Apollo spacecraft systems.

This document is not intended for use as a specification. It does not set forth existing or contemplated requirements, nor does it in any way modify or affect any existing design, contract or subcontract.

This document was compiled by the Systems and Mission Requirements Branch in the Systems Integration Office of the Apollo Spacecraft Project Office.

[redacted]

SECTION I

		Page
1.0	INTRODUCTION	1.1
1.1	PURPOSE	1.1
1.2	SCOPE OF REPORT	1.1

SECTION II

		Page
2.0	SPACECRAFT OPERATIONS	2.1
2.1	NORMAL OPERATIONS	2.1
2.1.1	PRELAUNCH	2.1
2.1.2	LAUNCH	2.4
2.1.3	EARTH PARKING ORBIT	2.4
2.1.4	TRANSLUNAR INJECTION	2.5
2.1.5	TRANSLUNAR	2.6
2.1.6	LUNAR ORBIT INJECTION	2.7
2.1.7	LUNAR ORBIT	2.7
2.1.8	LUNAR DESCENT AND LANDING (LEM OPERATIONS)	2.8
2.1.9	LUNAR SURFACE OPERATIONS (LEM OPERATIONS)	2.9
2.1.10	LUNAR ASCENT (LEM OPERATIONS)	2.10
2.1.11	LUNAR RENDEZVOUS AND DOCKING (LEM OPERATIONS)	2.11
2.1.12	TRANSEARTH	2.12
2.1.13	ENTRY AND LANDING	2.13
2.1.14	RECOVERY OPERATIONS	2.14
2.1.15	POST FLIGHT	2.15
2.2	CONTINGENCY OPERATIONS	2.16
2.2.1	CONTINGENCY CLASSIFICATION	2.16
2.2.2	ALTERNATE MISSIONS	2.17
2.2.3	MISSION ABORT	2.18
2.3	CREW OPERATIONS	2.29

Page

2.3.1 NORMAL CREW ACTIVITY---------- 2.29

2.3.2 CREW TRAINING---------- 2.31

SECTION III

		Page
3.0	COMMAND MODULE	3.1
3.1	FUNCTION	3.1
3.2	DESCRIPTION	3.1
3.2.1	POSITION IN SPACECRAFT	3.1
3.2.2	REFERENCE AXES	3.1
3.2.3	CONFIGURATION	3.1
3.2.4	WEIGHTS	3.4
3.3	MAJOR COMMAND MODULE SYSTEMS	3.14
3.3.1	STRUCTURAL SYSTEM	3.14
3.3.2	FLIGHT CREW SYSTEM	3.21
3.3.3	CREW SYSTEM	3.23
3.3.4	COMMUNICATIONS SYSTEM	3.37
3.3.5	INSTRUMENTATION SYSTEM	3.50
3.3.6	RECOVERY AIDS	3.56
3.3.7	ELECTRICAL POWER SYSTEM	3.61
3.3.8	GUIDANCE AND NAVIGATION SYSTEM	3.72
3.3.9	STABILIZATION AND CONTROL SYSTEM	3.86
3.3.10	ENVIRONMENTAL CONTROL SYSTEM	3.92
3.3.11	REACTION CONTROL SYSTEM	3.98
3.3.12	LAUNCH ESCAPE SYSTEM	3.106
3.3.13	EARTH LANDING SYSTEM	3.114
3.3.14	INFLIGHT TEST SYSTEM	3.119

SECTION IV

		Page
4.0	SERVICE MODULE	4.1
4.1	FUNCTION	4.1
4.2	DESCRIPTION	4.1
4.2.1	POSITION IN SPACECRAFT	4.1
4.2.2	REFERENCE AXES	4.1
4.2.3	CONFIGURATION	4.1
4.2.4	WEIGHTS	4.1
4.3	MAJOR SERVICE MODULE SYSTEMS	4.4
4.3.1	STRUCTURAL SYSTEM	4.4
4.3.2	SERVICE PROPULSION SYSTEM	4.11
4.3.3	PROPELLANT SUPPLY SUBSYSTEM AND COMPONENTS	4.15
4.3.4	ENGINE SUBSYSTEM AND COMPONENTS	4.20
4.3.5	REACTION CONTROL SYSTEM	4.24
4.3.6	SUPERCRITICAL STORAGE SYSTEM	4.33
4.3.7	ENVIRONMENTAL CONTROL SYSTEM	4.34
4.3.8	ELECTRICAL POWER SYSTEM	4.36
4.3.9	COMMUNICATIONS SYSTEM	4.39

SECTION V

		Page
5.0	LUNAR EXCURSION MODULE	5.1
5.1	FUNCTION	5.1
5.2	DESCRIPTION	5.1
5.2.1	POSITION IN SPACECRAFT	5.1
5.2.2	REFERENCE AXES	5.1
5.2.3	CONFIGURATION	5.3
5.2.4	WEIGHTS	5.3
5.3	MAJOR LUNAR EXCURSION MODULE SYSTEMS	5.4
5.3.1	STRUCTURAL SYSTEM	5.4
5.3.2	FLIGHT CREW SYSTEM	5.5
5.3.3	CREW SYSTEM	5.5
5.3.4	COMMUNICATIONS SYSTEM	5.7
5.3.5	INSTRUMENTATION SYSTEM	5.9
5.3.6	ELECTRICAL POWER SYSTEM	5.12
5.3.7	GUIDANCE AND NAVIGATION SYSTEM	5.13
5.3.8	STABILIZATION AND CONTROL SYSTEM	5.15
5.3.9	ENVIRONMENTAL CONTROL SYSTEM	5.16
5.3.10	REACTION CONTROL SYSTEM	5.19
5.3.11	LUNAR EXCURSION PROPULSION SYSTEM	5.21
5.3.12	LUNAR TOUCHDOWN SYSTEM	5.26
5.4	LUNAR EXPLORATION	5.27

SECTION VI

		Page
6.0	ADAPTER	6.1
6.1	FUNCTION	6.1
6.2	DESCRIPTION	6.1
6.2.1	POSITION IN SPACECRAFT	6.1
6.2.2	REFERENCE AXES	6.1
6.2.3	CONFIGURATION	6.1
6.2.4	WEIGHTS	6.1
6.3	MAJOR ADAPTER SYSTEMS	6.6
6.3.1	STRUCTURAL SYSTEM	6.6
6.3.2	SEPARATION SYSTEM	6.6

SECTION I

1.0 INTRODUCTION

1.1 PURPOSE

The purpose of this document is to describe a typical Apollo Spacecraft Lunar Landing Mission and the current Apollo spacecraft systems. It should be recognized, that the spacecraft mission and equipments are continually changing as the mission and systems requirements are better defined and that this document represents current status.

1.2 SCOPE

Section II of this document presents a typical Apollo lunar landing mission description. The major mission events and typical times associated with each mission phase is presented. This section also discusses the various contingency classifications and outlines, by mission phase, the recommended mission if a contingency were to occur. A brief description of crew operation is also contained in this section.

Sections III, IV, V and VI describe the Apollo spacecraft systems. The Apollo spacecraft is composed of the Command Module (CM), the Service Module (SM), the Lunar Excursion Module (LEM), the Launch Escape System (LES), and the Adapter as shown on Figure 1-1.

The CM is the inflight control center, crew living quarters and reentry module of the spacecraft. It houses the three man crew during all mission phases except those in which the LEM is active. During LEM operations, two of the crew members man the LEM while the third remains in the CM. The CM systems are described in detail in Section III.

The SM contains the service propulsion system plus selected equipment which service the equipment and crew of the CM. It is unmanned, does not require in-flight crew access and remains with the CM during lunar operations. It is separated from the CM prior to reentry and is non-recoverable. The SM provides propulsion capability for the CSM combination and its reaction control systems provides stabilization and attitude control for the spacecraft. The SM systems are described in detail in Section IV.

The LEM serves as the vehicle for carrying two of the three-man crew and a scientific payload from the CSM in lunar orbit to the lunar surface and back. The LEM also provides a base for lunar operations and crew exploration in the vicinity of the lunar touchdown point. The LEM systems are described in detail in Section V.

The Spacecraft Adapter performs the physical mating of the launch vehicle to the SM, encloses the thrust chamber of the service propulsion system and the LEM, and provides load bearing points for LEM support. The Adapter systems are described in Section VI.

The Launch Escape System (LES) provides abort capability for the CM during the period including final countdown, launch vehicle first stage burning, and for approximately the first twenty seconds of second stage burning. A detailed description of the LES is contained in Section III.

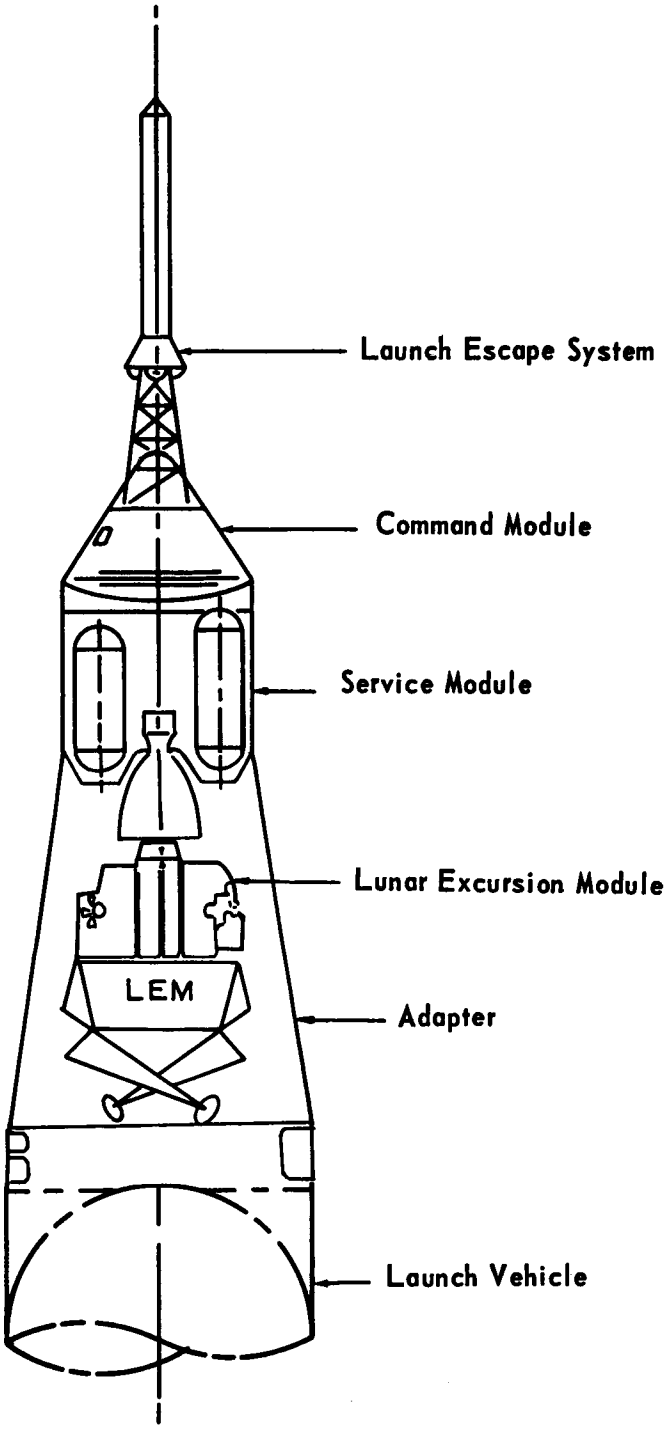

Figure 1-1 - Lunar Mission Configuration

SECTION II

2.0 SPACECRAFT OPERATIONS

2.1 NORMAL OPERATIONS

A typical Lunar Landing Mission time line summary is shown on Table 2-1. The table lists the major mission events and typical times associated with the various mission phases. A more detailed listing of the events that occur in each mission phase is discussed in the following paragraphs.

2.1.1 PRE-LAUNCH

The Preflight Operations Division (POD) of the Manned Spacecraft Center (MSC) is responsible for the overall planning and supervision of the preparation, checkout, and assembly of the Apollo Spacecraft in the MSC Apollo Industrial Complex at the Atlantic Missile Range (AMR).

Launch Complex 39, under the management of the Launch Operations Center (LOC) provides the facilities and equipment necessary to receive, final assemble, check out, and launch the Apollo Space Vehicle.

The pre-launch phase begins with delivery of the spacecraft modules to the launch site and ends with lift-off of the space vehicle. Major events of the pre-launch phase include the following:

At the MSC Apollo Industrial Complex:

a. Receiving and inspection of spacecraft components.

b. Spacecraft assembly and compatability tests.

c. Spacecraft systems test and checkout.

CONFIDENTIAL

TABLE 2-1 - TYPICAL LUNAR LANDING MISSION TIME LINE SUMMARY

Mission Time	Phase	Phase Time	Mission Event
T = 0	Boost ET=706 Sec		S-IC Propulsion System Ignition (Space Vehicle Lift-Off)
		12 Sec	Space Vehicle Pitchover
		143 Sec	S-IC 1 Engine Cut-Off
		148 Sec	S-IC 4 Engine Cut-Off
			S-IC Separation
			S-II Ullage Rocket Ignition
		150 Sec	S-II Propulsion System Ignition
		170 Sec	Launch Escape System Jettison
		544 Sec	S-II 5 Engine Cut-Off
			S-II Separation
			S-IVB Ullage Rocket Ignition (3 Sec)
		547 Sec	S-IVB Propulsion System Ignition
T = 0.196 Hr	Earth Parking Orbit ET=163.7 Sec		S-IVB Engine Cut-Off Post Injection Check (15 Min)
		10 Min	Systems Checkout (15 Min)
		25 Min	Earth Orbit Parameters Check (75 Min)
		100 Min	Preparation for Translunar Injection (30 Min)
		135 Min	Translunar Injection Countdown
T = 2.92 Hr	Translunar Inj. ET=314 Sec		S-IVB Ullage Rocket Ignition (4 Sec)
		2 Sec	S-IVB Propulsion System Ignition
T = 3.01 Hr			S-IVB Engine Cut-Off

ET=Elapsed Time

CONFIDENTIAL

TABLE 2-1 (Continued)

Mission Time	Phase	Phase Time	Mission Event
T = 3.01 Hr			S-IVB Engine Cut-Off Post Injection Check (15 Min)
		0.50 Hr	LEM Transposition (30 Min) Adapter Separation S-IVB Separation
		1.00 Hr	Preparation for Coast (20 Min)
		1.31 Hr	Systems Checkout (50 Min) Navigation for 1st Midcourse Correction (5 Hr, 10 Sightings) SM RCS Ullage Acceleration
		6.31 Hr	Service Propulsion System Ignition
	Translunar Coast ET=64.75 Hr	7.00 Hr	Navigation for 2nd Midcourse Correction (5 Hr, 10 Sightings) SM RCS Ullage Acceleration
		12.00 Hr	Service Propulsion System Ignition
		17.00 Hr	Navigation for 3rd Midcourse Correction (30 Hr, 10 Sightings) SM RCS Ullage Acceleration
		47.00 Hr	Service Propulsion System Ignition
		52.00 Hr	Navigation for 4th Midcourse Correction SM RCS Ullage Acceleration
		62.00 Hr	Service Propulsion System Ignition
		63.75 Hr	Preparation for Lunar Orbit Injection (1 Hr)
T = 67.76 Hr			SM RCS Ullage Acceleration
	Lunar Orbit Inj. ET=322 Sec	2 Sec	Service Propulsion System Ignition
T = 67.85 Hr			Service Propulsion System Cut-Off

ET -- Elapsed Time

CONFIDENTIAL

CONFIDENTIAL

CONFIDENTIAL

TABLE 2-1 (Continued)

T=67.85 Hr		Service Propulsion System Cut-Off Post Injection Check (15 Min)
Lunar Orbit (Prior to LEM Departure) ET=289 Min	15 Min	Systems Checkout (15 Min) Lunar Orbit Parameters Check (180 Min) (Velocity Vector Change if Necessary)
	30 Min	Scientific Observation (110 Min)
	145 Min	Preparation for LEM Separation (120 Min)
T=72.66 Hr		LEM Separation Initiation
Lunar Orbit (LEM Departure to LEM Docking) ET=24.0 Hr		Record LEM Progress (Cont) Photograph LEM Progress (Cont) Communicate LEM Progress to GOSS (Cont) Lunar Surveillance (Cont) Navigational Data Processing for Rendezvous Verification of Rendezvous Preparations
	23.50 Hr	Rendezvous and Docking Initiation (30 Min)
T=96.66 Hr		CM - LEM Docking Completed LEM Propulsion Cut-Off Post Docking Check (25 Min)
Lunar Orbit (Subsequent to LEM Docking) ET=203.4 Min	25 Min	LEM Separation (5 Min)
	30 Min	Systems Checkout (20 Min) Preparation for Transearth Injection (160 Min)
	188 Min	Transearth Injection Countdown (15 Min)
T=100.05 Hr		CM - LEM Docking Completed

LEM OPERATIONS for this phase are shown on Page 2.6

ET=Elapsed Time

CONFIDENTIAL

TABLE 2-1 (Continued)

T=100.05 Hr			SM RCS Ullage Acceleration
	Transearth Inj. ET=128 Sec	1 Sec	Service Propulsion System Ignition
T=100.09 Hr			Service Propulsion System Cut-Off
			Post Injection Check (15 Min)
		0.3 Hr	Systems Checkout (30 Min)
			Navigation for 1st Midcourse Correction (5 Hr, 10 Sightings)
		5.3 Hr	Service Propulsion System Ignition
			Navigation for 2nd Midcourse Correction (5 Hr, 10 Sightings)
			SM RCS Ullage Acceleration
	Transearth Coast ET=82.41 Hr	10.3 Hr	Service Propulsion System Ignition
		11 Hr	Navigation for 3rd Midcourse Correction (30 Hr, 10 Sightings)
			SM RCS Ullage Acceleration
		41 Hr	Service Propulsion System Ignition
		68 Hr	Navigation for 4th Midcourse Correction (10 Hr, 10 Sightings)
			SM RCS Ullage Acceleration
		78 Hr	Service Propulsion System Ignition
		78.41 Hr	Preparation for Atmospheric Entry (4 Hr)
		80.50 Hr	Service Module Jettison
T=182.5 Hr			Begin Atmospheric Entry (Arrival at 400,000 Ft)
		100 Sec	Initial Range Control Maneuver (300 Sec)
	Entry ET=900 Sec	400 Sec	Final Range Control Maneuver (270 Sec)
		670 Sec	Glide to Parachute Descent
T=182.75 Hr			Drogue Chute Deployment
	Parachute Descent	30 Sec	Main Chute Deployment (15,000 Ft)
T=			Earth Touchdown, South Texas

ET=Elapsed Time

CONFIDENTIAL

CONFIDENTIAL

CONFIDENTIAL

TABLE 2-1 (Continued)

LUNAR ORBIT (LEM DEPARTURE TO LEM DOCKING)

LEM OPERATIONS

72.66 HR			LEM Propulsion Ignition
	Equal Period Orbit Injection		
72.67 Hr		ET 35 Sec	LEM Propulsion Cut-Off
	Equal Period Orbit Coast	0	
75.25 Hr		ET 155 Min	LEM Propulsion Ignition (Arrival at 50 K Ft Perilune)
	Perilune Retro		
75.34 Hr		ET 336 Sec	Landing Maneuver Initiation (Hover, Translation, Descent)
	Landing Maneuver		
75.37 Hr		ET 127 Sec	Lunar Touchdown
	Lunar Stay	14.10 Hr	Lunar Launch Countdown
95.09 Hr		ET 19.72 Hr	LEM Propulsion Ignition (Lunar Lift-Off)
	Ascent to Transfer Ellipse		
95.19 Hr		ET 356 Sec	LEM Propulsion Cut-Off
	Transfer Ellipse Coast		
96.16 Hr		ET 58.1 Min	Initiate Rendezvous Maneuver
	Lunar Orbit Injection & Rendezvous		
96.66 Hr		ET 30 Min	CM - LEM Docking Completed

ET = Elapsed Time

CONFIDENTIAL

d. Flight readiness and acceptance tests.

At Launch Complex 39:

e. Spacecraft/Launch Vehicle mate.

f. Space Vehicle Checkout.

g. Pre-launch preparation and servicing.

h. Pre-launch inspection and review.

i. Countdown operations to launch.

2.1.2 LAUNCH

The launch phase begins with S-IC first stage ignition and ends with S-IVB third stage first-burn engine cutoff as the spacecraft and the S-IVB are inserted into an earth parking orbit. Guidance for the ascent phase is under the control of the Launch Vehicle Guidance and Control System. During ascent there is no requirement for any astronaut control. The approximate duration of the ascent phase is twelve minutes.

2.1.3 EARTH PARKING ORBIT

The earth parking orbit phase begins with the S-IVB first-burn cutoff, as the spacecraft and S-IVB are inserted into the parking orbit, and ends with the S-IVB second-burn ignition signal for trans-lunar injection. The duration of the earth parking orbit is dependent on the following trajectory considerations:

a. Lunar declination

b. Launch azimuth

c. Launch window selection

Parking orbits of one revolution, or less, are sufficient to satisfy the constraints imposed by these trajectory considerations. The following additional factors, however, will also affect the duration of the parking orbit:

a. Spacecraft systems checkout will require at lease one orbit.

b. GOSS coverage.

c. Degradation of inertial guidance system accuracy with time due to gyro drift.

d. Orbit decay properties.

e. S-IVB boil-off.

Based on the above considerations, the earth parking orbit duration will be not less than one and not more than three revolutions. Injection will nominally occur during the second revolution.

During the earth parking orbit, the spacecraft maintains communications and data exchange with the Near Earth Instrumentation Facilities (NEIF) and is under the command control of the Integrated Mission Control Center (IMCC). Spacecraft stabilization during this phase is provided by the S-IVB Stabilization Control System. The Apollo Guidance System (AGS) monitors the launch vehicle guidance and has the capability of displaying spacecraft velocity, attitude and other parameters on the guidance computer display panel.

2.1.4 TRANSLUNAR INJECTION

The translunar injection phase begins with the S-IVB second

burn ignition signal and ends with the S-IVB engine second cutoff signal.

The injection-point latitude and longitude depend upon:

a. Time of month or lunar declination

b. Launch azimuth

c. Launch window selection

d. Number of parking orbits

The duration of the injection phase is approximately five minutes. The spacecraft is controlled during this phase by the S-IVB Guidance System and is monitored by the Apollo Guidance System.

2.1.5 TRANSLUNAR

The translunar phase begins with S-IVB second engine cutoff and ends with the SM Propulsion System ignition signal for injection into the lunar orbit. The duration of the translunar phase is dependent upon the following major parameters:

a. The earth-moon relationship at injection

b. Injection parameters

c. Lunar orbit altitude

d. Midcourse correction maneuvers

e. Translunar trajectory selection

From the above considerations the translunar transit time can vary from 60 to 110 hours. A nominal circumlunar trajectory with an 80 nautical mile lunar altitude approximates 80 hours transit time.

Repositioning the Command Service Module (CSM) is expected

to require approximately thirty minutes and occurs within two hours after translunar injection. The first midcourse correction could be applied as early as reliable ground computed data are obtained, or it might be delayed until reliable on-board navigation data are available. The last midcourse correction will generally be applied approximately an hour prior to pericynthion.

2.1.6 LUNAR ORBIT INJECTION

The lunar orbit injection phase begins with SM ignition for lunar orbit injection and ends at SM cutoff signal after injection into lunar orbit. The retrovelocity required to establish an orbit around the moon will be a function of the following parameters:

a. Pericynthion altitude

b. Translunar injection plane inclination

c. Earth-moon distance

d. Return inclination of free-return trajectory

e. Translunar flight time

f. Location of lunar landing site

g. Day of lunar month

The duration of this phase is approximately five minutes.

2.1.7 LUNAR ORBIT

The lunar orbit phase starts with the SM cutoff signal after injection into lunar orbit and ends at the ignition of the SM propulsion system for transearth injection. During this phase the LEM separates from the CSM and descends to the lunar surface where exploration takes

place. At a specified time, the LEM is launched from the lunar surface and subsequently performs the rendezvous and docking maneuver with the CSM. Meanwhile, the CSM operations continue. Some of the major operations are communication with the LEM while in range, storage of pertinent CSM information while the CSM is behind the moon, and communications with the Ground Operational Support System (GOSS) (including stored information) while on the near-earth side of the moon. In conjunction with these operations, the computation of trajectory and navigation data is accomplished and verified by IMCC. All of these operations are directed toward accomplishing successful rendezvous, keeping cognizant parties aware of progress in the lunar mission and transmitting information about the lunar exploration.

2.1.8 LUNAR DESCENT AND LANDING (LEM OPERATIONS)

The lunar descent and landing phase starts with LEM descent stage first ignition signal and ends at lunar touchdown. The duration of this phase is approximately eight minutes.

The descent to the lunar surface will have five distinct maneuvers as shown in the following table.

MANEUVER	ALTITUDE RANGE, FEET
Equal Period Orbit	CSM altitude to 50,000
Braking	50,000 to 10,000 $\pm$ 5,000
Flare to 1,000 ft.	10,000 $\pm$ 5,000 to 1,000
Translation and Descent to 200 ft.	1,000 to 200
Touchdown from 200 ft.	200 to surface

Upon reaching an altitude of approximately 200 feet with zero velocity, the controlled thrust of the engine maintains the hover altitude while the crew visually locates the most acceptable landing point. The descent or touchdown from an altitude of 200 feet is completely pilot controlled and is to be accomplished in a nominal time of 45 seconds.

2.1.9 LUNAR SURFACE OPERATIONS (LEM OPERATIONS)

After the LEM has completed the descent and landing maneuvers, the crew makes preparations and checkout for launch. A post-landing systems check is completed, and the landing and launch stage disconnects are actuated. One crewman then proceeds to perform observations, scientific investigations and collection of selected samples of the lunar surface. One crewman normally remains in the vehicle and maintains communications with the commander, the orbiting CSM while it is within his communication range, and the earth based control center through GOSS. For certain periods, the roles of the crewmen in these activities may be interchanged.

The initial lunar landing mission is designed for a nominal stay time on the surface of twenty-four hours. Extra-vehicular life support equipment provides for a total of 24 man-hours of separation from the LEM life support system without logistics support. Maximum duration of continuous separation from the LEM is initially limited to four hours, which is the life of a portable life support system charge. In later missions the total lunar stay time may be increased by the use

of logistic vehicles.

Operations and scientific investigations on the lunar surface will be dictated by individual mission requirements, and will be conducted in accordance with a planned development schedule that will factor in information and research data obtained from unmanned flights, other space programs, and previous lunar landing missions.

2.1.10 LUNAR ASCENT (LEM OPERATIONS)

The lunar ascent phase begins with ascent stage first ignition signal.

Ideal conditions for launch from the lunar surface provide for minimum velocity transfer within the LEM trajectory plane and require zero transfer between the LEM trajectory and CSM orbital planes. As the LEM proceeds toward rendezvous, its trajectory follows a Hohmann transfer ellipse. Normally, for about a 24 hour stay time, the LEM launches during the thirteenth CSM orbit and proceeds directly toward rendezvous.

A normal launch requires that the orbiting CSM lead the LEM by a predetermined orbit angle. This angle is a function of the ascent time and range traversed by the LEM during boost, the boost burnout altitude and CSM orbit altitude. The CSM is in line-of-sight and remains so through boost, coast and the actual rendezvous maneuver.

"Anytime" launch capability may be provided by using a parking orbit for late launch or an "overshoot" orbit for early launch. For the late launch, the procedure would be to boost to approximately

a 50,000 foot circular parking orbit and wait until the phase relationship is right to affect a Hohmann transfer. The early launch can be compensated by utilizing an "overshoot" orbit. In this event, the burnout velocity would be more than required for a Hohmann transfer; the orbit would have an apocynthion higher than the CSM altitude; and rendezvous would take place at the second intersection of the orbits. The duration of the nominal powered ascent is approximately six minutes.

2.1.11 LUNAR RENDEZVOUS AND DOCKING (LEM OPERATIONS)

The basic guidance requirement for rendezvous will be to maneuver the LEM into close proximity with the CSM, at which point visual reference will be initiated to perform the docking maneuver. The LEM is nominally required to perform all maneuvers necessary to complete rendezvous with the CSM. However, the CSM will have the capability to rendezvous with the LEM under certain contingency situations. The rendezvous portion of the mission is considered to begin at the injection into the Hohmann transfer orbit and end when the LEM is in close proximity to the CSM and ready for docking. The rendezvous portion can be divided into two distinct phases: (1) The coast phase and (2) the terminal phase.

During the coast phase, velocity corrections are made periodically, having been computed from relative vehicle measurements and the CSM orbit ephemeris data. Using this scheme, accumulated errors will be reduced, the LEM will be placed in a better position for the terminal rendezvous phase, and an overall reduction in the energy

requirements for rendezvous will result.

During the terminal rendezvous phase, continuous control of the line-of-sight is maintained so that the LEM flight path is directed toward an intercept with the CSM. As the LEM gets closer to the intercept point, a range and range-rate control takes over and guides the LEM to final rendezvous.

Astronaut window observation augments the terminal guidance instruments with the astronaut assuming manual control and employing the RCS to effect final docking at the forward docking hatch.

The CSM systems have the capability of performing the rendezvous and docking maneuvers as a backup mode of operation.

After the rendezvous and docking are completed, the LEM crew members (along with the scientific samples and data) are transferred into the CM and the LEM is then separated. Final checkout and countdown procedures are then completed prior to the transearth injection maneuver. The duration of the rendezvous and docking phase is approximately two hours.

2.1.12 TRANSEARTH

The transearth phase starts at the ignition of SM propulsion for transearth injection and ends with atmospheric reentry at about 400,000 feet altitude. The timing and flight conditions to be obtained are precomputed to yield a safe return trajectory and entry to achieve landing at the preselected earth landing site. Flight time will vary from 60 to 110 hours.

Injection into the transearth trajectory is possible at least once during each revolution in the lunar circular orbit. The position in the orbit, velocity, and out-of-plane velocity component at transearth injection control the flight path angle, inclination, and time at earth entry.

Shortly before reaching the entry interface, the SM is jettisoned and the CM is oriented to the proper entry attitude.

2.1.13 ENTRY AND LANDING

This phase starts at atmospheric entry and ends at touchdown. The duration of this phase is approximately 40 minutes.

The location of the entry point on the earth transfer orbit is determined by the declination of the moon at time of transearth insertion, the transit time, the transfer orbit inclination, and the earth landing location desired.

Locus of entry points for a landing site in Southern Texas and for one in Australia are presently anticipated for several lunar declinations. The track of an entry orbit that has a 30 degree inclination to the equator indicates that a range up to approximately 8,000 nautical miles after entry is required to return to Southern Texas from all lunar declinations. The Australia site reduces this range requirement to about 5,300 nautical miles.

Following entry, when the Mach number of the CM has become subsonic, the pilot arms a sequence control subsystem and events proceed as follows:

a. At 25,000 feet a barometric switch electrically initiates forward compartment heat shield jettison by firing gas generator powered thrusters which break two tension bolts and thrust the heat shield away from the Command Module.

b. One second after heat shield jettison a mortar is fired which deploys the two drogue parachutes to correctly orient the Command Module.

c. Approximately 35 seconds later, at 15,000 feet, a barometric switch initiates firing of mortars which simultaneously deploys three pilot parachutes and releases the drogue parachutes.

d. The pilot parachutes deploy the three main parachutes which are dereefed by reefing cutters approximately eight seconds after pilot mortar fire. The main parachutes are reefed for six seconds.

e. Normal parachute descent begins and the VHF antenna is erected.

f. The landing point is determined by a combination of ground tracking and ground and on-board computation . Data is transmitted to the recovery forces.

g. At landing the main parachutes are disconnected, and the high intensity flash beacon is activated.

2.1.14 RECOVERY OPERATIONS

(To be supplied)

2.1.15 POST FLIGHT

The post-flight mission phases begins with the completion of the retrieval and recovery operation. As soon after touchdown as possible, the CM electrical checkout is performed at the primary recovery area to record the status of all subsystems. The test data will be correlated with previously recorded checkout data.

At the recovery support area each crew member is interrogated by a standardized procedure to obtain and identify all technical data and evaluate flight experience. Crew members undergo thorough physical examinations and a planned program of complete psychological testing to evaluate physical condition and the effects of the flight on sensory, motor, and cognitive functions. If necessary, a series of tests are performed over a period of time to evaluate physiological and psychological trends.

2.2 CONTINGENCY OPERATIONS

In order to achieve the crew safety probability of 0.999, it is essential that, early in the program, every conceivable contingency affecting crew safety be anticipated, analyzed, and considered in the basic design of both the primary and backup systems. In addition, since it will be chiefly the responsibility of the spacecraft commander to take appropriate action if a contingency arises, it is essential that contingency operations comprise a significant portion of the training program for the spacecraft crew.

The crew will be aided in their decision-making function by the Crew Safety System (CSS) as well as the Integrated Mission Control Center. The CSS consists of the necessary sensors, test equipment, and displays onboard the spacecraft and launch vehicle to detect and diagnose malfunctions and to enable the crew to make a reasonable assessment of the contingency. The Integrated Mission Control Center (IMCC) will also supply information useful in this regard and will work in conjunction with the spacecraft commander to decide the best course of action. For emergency conditions and abort mode time requirements which are not within crew reaction time, the crew safety system will have the capability of initiating aborts automatically.

The following paragraphs describe, in somewhat general terms, contingency operations during various mission phases.

2.2.1 CONTINGENCY CLASSIFICATION

Contingencies will be classified as:

a. Rectifiable, if the crew is able to isolate and repair or replace the faulty component.

b. Tolerable, if an alternate mission can be performed without endangering the crew.

c. Mission abort, if either the main objective or an alternate mission cannot be achieved without further endangering the crew. Following an event of this nature, the crew shall normally follow the prescribed abort procedure and land in one of several preselected landing areas; however, emergency conditions may exist in which the crew must take immediate action to land anywhere on earth in the shortest time, consistent with acceptable reentry conditions.

2.2.2 ALTERNATE MISSIONS

If a tolerable contingency occurs, the alternate mission will depend upon the nature of the contingency as well as the time at which it occurs. However, in any event, because of the large investment and effort involved in each Apollo launch, it is important that maximum systems qualification and scientific research be conducted during alternate missions when systems malfunctions preclude the completion of the planned mission. These alternate missions should be as productive as possible consistent with crew safety.

The large performance capability of the upper propulsion stages, together with possible failure modes of lower stages, suggests

that an earth orbital mission is possible in the event a malfunction occurs in the S-II or S-IVB stages. However, the contingencies which could occur during this phase of the mission would be, to some extent, time critical and would therefore not provide much opportunity for reflection and decision making by the crew. For this reason, then, it is clear that alternate missions during this phase would need to be preprogrammed into the guidance and sequence systems but with the command being initiated by the crew.

Another type of alternate mission is a lunar orbit reconnaissance flight which could be conducted in the event a major failure is discovered within the LEM at any time prior to its transfer orbit.

2.2.3 MISSION ABORT

Many factors must be considered in the event of an abort, and the specific requirements vary somewhat depending on the flight phase. However, the more important factors to be considered are the loads that the spacecraft and crew must undergo during the abort maneuver, miss distances between the launch vehicle and the spacecraft, the determination of recovery areas, and the earth return times. This section of the document will outline the abort sequence of events and general requirements for aborts during the various mission phases.

2.2.3.1 Aborts Using the Launch Escape System

All aborts modes using the LES follow generally the same scheme, with a few exceptions. The sequence of events for the pad abort will be presented subsequently and the exceptions for aborts at a later

time will be noted. The launch escape system is jettisoned approximately 20 seconds after successful ignition of the S-II.

Since no range control is possible during this type of abort, a relatively large landing area is required. However, coverage will be extensive during this period and recovery should be rapid.

Launch Pad Abort - The sequence of events for the launch pad abort is as follows:

a. Abort sequence starts; timers are activated.

b. Command Module is released from Service Module.

c. Launch escape motor ignites.

d. Pitch motor ignites.

e. Launch escape motor burns out.

f. Tower release is actuated and the jettison motor ignites.

g. Forward compartment heat shield is jettisoned.

h. Mortar fires, deploying drogue parachutes. Drogue parachutes reorient the CM to the proper attitude for main parachute deployment.

i. Mortar fires, deploying all three pilot parachutes; pilot parachutes deploy main parachutes.

j. Main parachutes are disreefed; normal descent begins.

The requirements for this type of abort are to remove the crew to a safe distance from the launch pad with a sufficient altitude to employ the landing system and in such a manner that the load limits of the crew or the Command Module are

not exceeded.

Aborts from Lift-Off to LES Jettison - During this period (lift-off to LES jettison), the abort sequence would be the same as that of Launch Pad Abort, described above, with the following exceptions:

a. If the abort occurs above the altitude at which the earth landing system sequence is initiated in the normal mission, then the deployment of landing devices would be initiated by barometric switches rather than timers.

b. During approximately the first 45 seconds after lift-off, range safety considerations would preclude a shutdown of the launch vehicle. However, the crew safety system will be designed so that a crew escape will be initiated as a result of any range safety action, with an appropriate time delay between escape of the crew and destruction of the vehicle.

The general requirement for the LES during this period is that it must provide a safe distance between the CM and the launch vehicle.

2.2.3.2 Aborts Prior to Translunar Injection

From: LES jettison

To: Initiation of translunar injection

Suborbital Aborts - After LES jettison, the preferred abort mode will be to continue on into earth orbit and subsequently to descent from earth orbit to a preferred landing site. The advantages of this

mode are: (1) The available recovery forces are not required to be spread over the entire earth, but can be concentrated in preferred areas. By eliminating certain remote areas from all the possible impact areas, recovery time should be reduced. (2) This mode provides an opportunity for maximizing mission objectives; for example, if the malfunction occurs in the launch vehicle, then the capability of the spacecraft to achieve an alternate mission should not be degraded; if the malfunction occurs in the spacecraft, then the earth orbit affords an opportunity to correct the trouble and the possibility to continue on an alternate mission.

Means of achieving an earth orbit after LES jettison are available in the S-IVB and SM propulsion system. Failures during the early part of the S-II burn would require the use of both the S-IVB and SM to reach an earth orbit; however, approximately halfway through the S-II burn, the S-IVB alone is capable of placing the entire spacecraft into earth orbit. After approximately 85 percent through the S-II burn, the SM alone is capable of placing the CSM into orbit, with sufficient propellant remaining for subsequent de-orbit.

If the contingency during boost precludes the possibility of reaching an earth orbit, then the recommended procedure is to use the S-IVB and/or the SM to reach a preferred landing site, thus reducing recovery time.

If neither the earth orbit abort mode nor the controlled landing site mode is possible, then the alternative is to separate the

CSM from the launch vehicle, separate the CM from the SM, and coast to entry by using the CM lifting capability to reduce the entry accelerations and to provide limited control of landing site.

Aborts During Earth Orbit - Aborts during this phase will require only one landing site per orbit unless an emergency exists. Even if an emergency were to exist, the decision to de-orbit immediately should be carefully weighed against the possibility of landing in remote areas where landing would be hazardous and recovery slow. Such a decision would, of course, depend upon the type of emergency.

The procedure for the earth orbital abort would be as follows:

a. Release the CSM from the S-IVB and LEM.

b. Separate by using the SM RCS.

c. Use the SM propulsion system for de-orbit impulse.

d. Jettison the SM immediately after "c".

e. Follow the normal entry and landing procedures.

Three problems associated with this phase of operation are: The SM trajectory after separation from the CM could approximate the CM trajectory thus leading to possible recontact with the CM; the possibility that the SM will explode during entry, which could be serious if it happened in the vicinity of the CM; the present unpredictability of the SM impact point such that if the CM lands at the primary site in southern Texas, there is a possibility that the SM will impact inhabited areas.

A possible solution to these problems is to provide attitude control and sufficient fuel to put the SM on a trajectory which would not come near the CM and would insure an impact in the ocean. Studies are currently being conducted to investigate this solution, and other solutions are being explored.

2.2.3.3 Abort Prior to LEM Transposition

From: Initiation of translunar injection

To: Completion of LEM transposition

During approximately the first 75 percent of the S-IVB burn for translunar injection, the capability exists for staging S-IVB/SM and using the SM propulsion for an immediate return to earth orbit. For example, for an abort at 230 seconds after beginning of injection, a SM engine burn for eight minutes will result in placing the CSM in a 325-nautical-mile circular orbit with sufficient propellant remaining for subsequent de-orbit to a preferred landing site.

If the malfunction is such that the possibility of continuing the mission is precluded, yet an immediate return to earth is not required, then the recommended abort is to return to earth orbit, for the same reasons discussed in suborbital aborts. If the situation demands an immediate return, then the procedure will be to use the SM propulsion to reduce the return time and to provide acceptable entry conditions.

After a certain point in the injection phase, there will no longer be sufficient energy available to abort back to an earth orbit.

The procedure in this phase will be similar to the immediate return case where the SM propulsion will be used to reduce the return time, provide acceptable entry conditions, and reach preferred landing sites. Typical return times for abort during this phase are as follows: At 244 seconds after beginning of injection, a return through a 10g entry can be made in 1.8 hours, by burning the SM engine in the retroattitude for 326 seconds; for the same SM burning time and entry conditions, an abort occurring at the end of injection (312 sec) will require four hours to return the spacecraft to earth.

Aborts occurring after translunar injection will be accomplished in the same manner as described in the preceding paragraph but will require correspondingly longer return times.

2.2.3.4 Translunar Aborts

From: LEM transpositioning

To: Initiation of lunar orbit retrofire

Detailed abort procedures during this phase will depend markedly upon the time and reason for abort. In general, the same abort procedures will be followed in this phase as in the previous one; namely, the SM propulsion will be used to reduce the return time. However, during this phase, there is the additional possibility of using the LEM propulsion as well. Even so, return times begin to get rather long as this phase progresses, until at some point, it is no longer possible to make the emergency return in any shorter time than that required to continue on in the circumlunar trajectory. After such time (and possibly

before, depending on the contingency), the recommended abort procedure will be to continue on the normal mission, omitting the lunar operations portion.

2.2.3.5 Aborts Prior to LEM Separation

From: Initiation of retro to lunar orbit

To: LEM separation

Lunar Orbit Insertion - The free return type of translunar trajectory will be the first half of a circumlunar trajectory that returns within the reentry corridor with no additional impulse applied to the spacecraft. If a partial or full retro-impulse were applied prior to the emergency, the abort procedure would be to apply an impulse of proper magnitude in the opposite direction to achieve an acceptable transearth trajectory, if practical. If the emergency were a result of SM propulsion failure, it would be necessary for the SM RCS or the LEM propulsion system to supply the required impulse. Studies are currently being conducted to determine to what extent this is possible.

Lunar Orbit - If an abort becomes necessary after the spacecraft has established a lunar orbit, the procedure will be to omit the LEM operations portion of the mission, continue to the planned transearth injection point, and return to earth.

2.2.3.6 Aborts During LEM Descent

Coasting Descent - In order to abort from the equal-period transfer orbit with the minimum incremental velocity, the LEM will simply coast to the rendezvous zone (where the transfer orbit was initiated)

and then apply the velocity increment required to rendezvous. In case of LEM propulsion failure, it will be necessary for the CSM to perform a pickup maneuver by transferring into the LEM orbit; such a propulsive capability is being included in the SM propellant budget.

Although the abort mode described previously is the simplest and the most economical to accomplish, it also requires as much as two hours to rendezvous; however, it is expected that most aborts would follow this mode since two hours is not an excessive amount of time to operate with LEM emergency systems, if required. However, with the large propulsive capability of both the LEM descent and ascent engines, it is possible to rendezvous much sooner with the use of an intermediate transfer maneuver. For example, a direct abort from pericynthion can result in a rendezvous in eleven minutes for an incremental velocity of 6,000 ft/sec (assuming $T/W_o = 0.47$). The corresponding time to rendezvous when the LEM continues on the equal-period orbit would be $1\frac{1}{2}$ hours.

As in the previous case of aborts during coasting descent, direct (short time) aborts are available during most of the powered descent phase, if required. In addition, there is the possibility of using both the ascent and descent propulsion stages for abort situations.

2.2.3.7 Lunar Surface Abort

The lunar launch technique which offers considerable flexibility with little or no performance penalty is the technique in which the LEM ascends into a low circular parking orbit (nominally with zero parking time), and then performs a Hohmann transfer to the rendezvous

zone.

The angular relationship between the LEM and the CSM which determines the instant for initiation of the Hohmann transfer is a unique value dependent upon the LEM and CSM orbital altitudes. As a result of the periodic nature of the orbits, the unique angular relationship for Hohmann transfer occurs at periodic intervals, called the synodic period. The synodic period is also a function of the orbital altitudes. For the particular case of a 50,000-foot LEM orbit and an 80-nautical-mile CSM orbit, the synodic period is slightly less than 18 hours.

Thus, the consequence of an "anytime" launch capability from the lunar surface (to accommodate "anytime" contingency situations) is that launch may take place at a time when a poor phase relationship exists between the LEM and CSM, thus requiring long times in the parking orbit before a minimum energy transfer can be made. These situations for early or late launch can be minimized to some extent, as shown in the following discussion.

From the standpoint of countdown holds, the late launch seems to be the most likely situation, and fortunately is the case resulting in the least penalty in time to rendezvous, including parking orbit time.

Because of the cyclic character of the orbits, the dividing line between the late launches and early launches will be somewhat arbitrary. A slightly early launch will correspond to a very late launch. In general, the discussion herein will pertain to slightly early launches.

Early launches can be accomplished in two ways: (1) By

ascending into a low parking orbit and waiting for the proper phase relationship for transfer, as in the late launch case, or (2) By launching into an overshoot orbit, which effectively places the LEM in a slower orbit, so that it loses the required amount of "early time" and arrives at the rendezvous zone on schedule. Neither alternative is particularly desirable: The first method will result in long parking orbit times, particularly for slightly early launches; and the second method demands a ΔV capability of the LEM ascent stage in excess of that required for the Hohmann transfer.

2.2.3.8 Postlunar Operation Aborts

During postlunar operation aborts, return to earth has already been initiated; so little more can be done except to change the landing area or to decrease the return time.

2.3 CREW OPERATIONS

2.3.1 NORMAL CREW ACTIVITY

The flight crew consists of three men who are selected from a group of astronauts. The three crewmen are trained to be capable of manning any of the duty stations in the CM. One crewman, the commander normally has a position at the left hand or control station. The second crewman, the navigator is normally located at the navigation station. During launch and reentry he takes a position at the center station. The third crewman is the systems manager, and he is normally located at the right hand or system management station. The CM commander has also been assigned as the LEM commander. Preliminary study indicates that the navigator may complete the LEM crew for lunar operations.

2.3.1.1 CM Control Station

The crewman in this position monitors all flight displays, operates all flight controls, and makes all flight mode selections. He also monitors booster operation, monitors conditions for safe flight versus abort, and operates the abort control. This position is manned during launch, earth parking orbit, translunar orbit injection, CM and LEM mating, midcourse corrections, lunar orbit injection and reentry. During the lunar parking orbit the CM crewman divides his time between this station and the System Management Station.

2.3.1.2 CM Center Station

The crewman in this position assists the commander in all of his functions except flight mode selection and operation of abort control.

He is capable of performing all of the commander's functions if required. He assists the crewman in the System Management Station and is capable of performing his functions. This position is manned during launch and reentry.

2.3.1.3 CM System Management Station

The crewman in this position monitors the status of all spacecraft systems and controls the operating conditions of all systems. This position is manned at all times except during portions of the lunar parking orbit.

2.3.1.4 CM Navigation Station

The crewman in this position aligns the Inertial Measuring Unit, makes navigational fixes, and monitors delta velocity maneuvers. He also monitors the In-Flight Test System panel and performs maintenance for the Guidance and Navigation System. Ground based information is utilized as a check on the on-board test system. This position is manned during delta velocity maneuvers and just prior to and during scheduled navigational fixes.

2.3.1.5 CM Sleep Position

This position is utilized in accordance with the work-rest schedule and as required.

2.3.1.6 CM Food and Hygienic Position

This position is utilized as required.

2.3.1.7 LEM Commander Station

The crewman in this position monitors all flight displays,

operates all flight controls, and makes all flight mode selections. He also monitors LEM engine performance, monitors conditions for safe flight versus abort, and initiates abort if necessary. This position is manned during LEM checkout, lunar descent and lunar ascent.

2.3.1.8 LEM Co-Pilot Station

The crewman in this position assists the commander in all of his functions except making flight mode selections and operation of abort control. He is capable of performing all of the commander's functions if required. In his own duties, the co-pilot monitors the status of all LEM systems including control and operating conditions, aligns the LEM inertial measuring unit, makes navigational fixes, and performs on-board maintenance. This position is manned during all LEM operations.

2.3.2 CREW TRAINING

The astronaut training program for Apollo requires careful planning and programming to make the most effective use of the training time available within the tight scheduling of the manned lunar landing mission. This program is supported by the development of plans, personnel, facilities, and by training equipment, devices, aids, manuals, and simulation exercises. The training program exhibits a flexibility to incorporate changes that may occur in mission goals, systems design, and operational philosophy resulting from research and other space program developments.

The training includes the scientific and technical

preparation to reinforce, as required, each crew member's individual experience and knowledge. This is accomplished through review, academic study, exercise and practice. Some of the training areas are:

a. Familiarization with the Apollo program mission objectives and spacecraft and crew performance requirements.

b. Training under exposure to anticipated stress environments.

c. Physical conditioning to maintain overall physical fitness and coordination.

d. Specific simulated mission and mission training for development of proficiency in procedures. This includes participation in test and checkout of the spacecraft, practice of abort procedures, and simulation of operational methods in the tracking and communication networks.

e. Spacecraft systems training for the attainment of proficiency in performance of required systems tasks. The flight crew is trained in the operation, inflight maintenance, and management of all spacecraft systems.

f. Recovery and survival training for normal and emergency situations.

SECTION III

3.0 COMMAND MODULE

3.1 FUNCTION

The Command Module (CM) is the inflight control center, crew living quarters and reentry module of the spacecraft. It houses the three man crew during all mission phases except those in which the LEM is active. The CM systems, described in paragraphs 3.3.1 through 3.3.14, support the crew in the operation of the spacecraft.

3.2 DESCRIPTION

3.2.1 POSITION IN SPACECRAFT (SC)

The positions of the CM, SM and LEM in the spacecraft for various phases of the lunar landing mission are shown on Figure 3-1.

3.2.2 REFERENCE AXES

The reference axes of the CM are orthogonal as identified on Figure 3-2. Reference is to the crew members in their normal earth launch position in the CM and remains unchanged for all missions, flight phases and modes. The X-axis is parallel to the nominal launch axis of the space vehicle and is positive in the direction of initial flight. The Y-axis is positive to the right of a crewman when he is facing positive X. The Z-axis is positive toward the crewman's feet.

3.2.3 CONFIGURATION

3.2.3.1 Outboard Profile

The outboard profile with typical dimensions is shown on Figure 3-3.

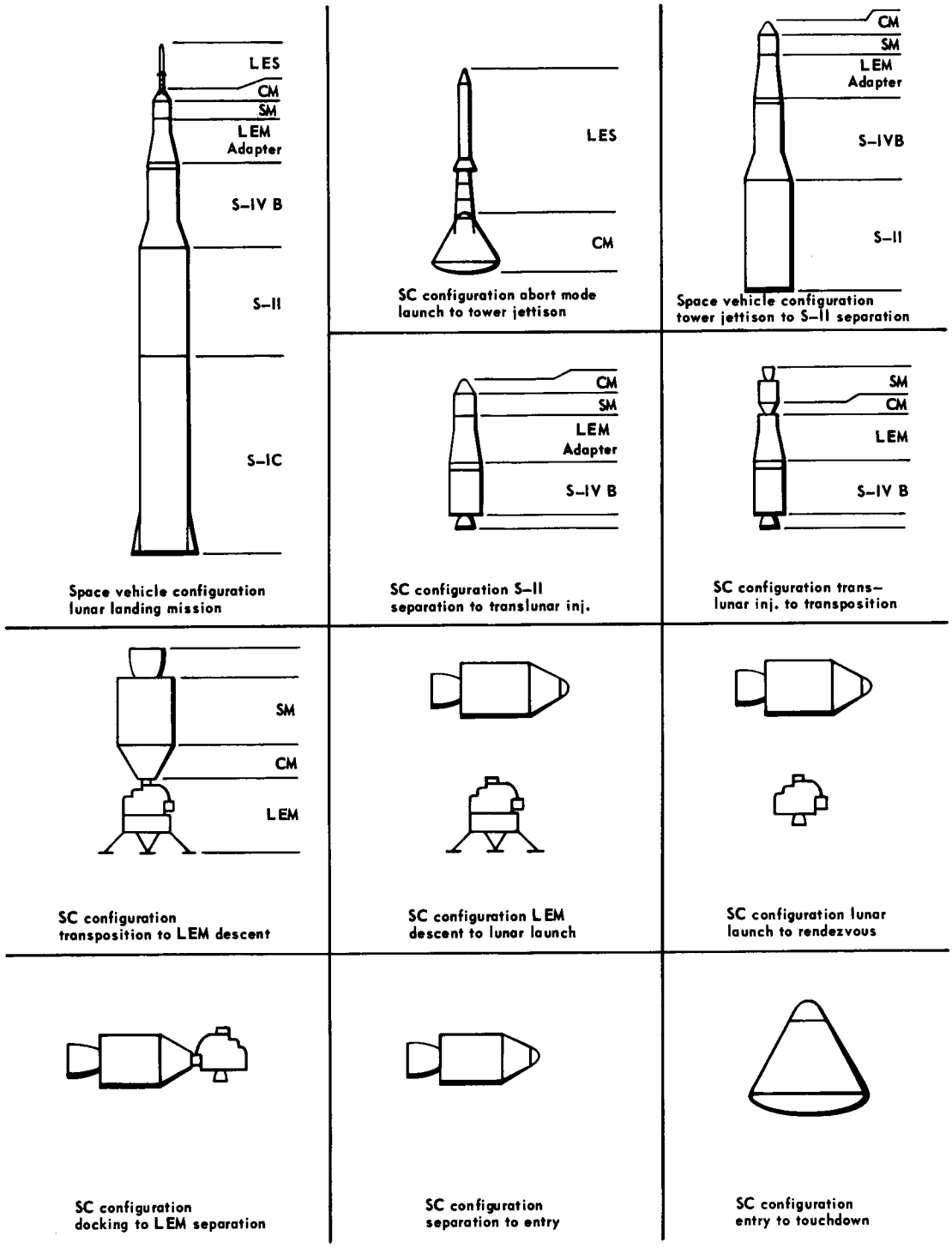

Figure 3-1 - Spacecraft Configurations

FIGURE 3-2 - REFERENCE AXES SPACECRAFT

Positive direction of axes and angles (forces and moments) are shown by arrows. (When launch vehicle is at a launch angle of 90°, the positive "X" direction is vertically upwards.)

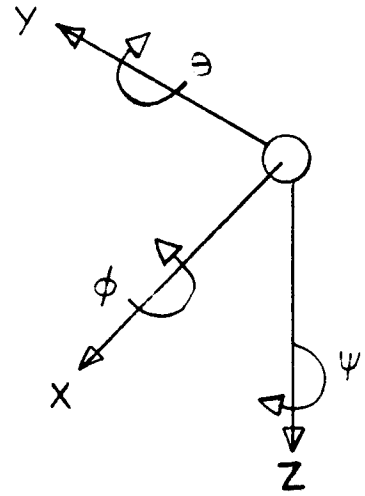

Axis		Moment About Axis		
Designation	Symbol	Designation	Symbol	Positive Direction
Longitudinal	X	Rolling	L	Y → Z
Lateral	Y	Pitching	M	Z → X
Normal	Z	Yawing	N	X → Y

Force	Angle		Velocities	
(Parallel to Axis Symbol)	Designation	Symbol	Linear (Components along Axis)	Angular
X	Roll	ϕ	U	p
Y	Pitch	θ	V	q
Z	Yaw	ψ	W	r

3.2.3.2 Inboard Profile

Inboard regions are indicated on Figures 3-4 through 3-10. Within the free regions duty stations are defined as follows:

Control Station - This is the left hand seat facing + X. Equipment location is designed for piloting and flight control.

Center Station - This is the middle seat. Equipment is designed for a co-piloting and co-managing function particularly during launch and reentry. This station will normally be unmanned for other flight phases.

Systems Management Station - This is the right hand seat from which system status is monitored.

Navigation Station - This station, from which navigation sightings and trajectory computations are made, is located in the lower equipment bay at the foot of the center couch.

3.2.4 WEIGHTS

3.2.4.1 Control Weight

The control weight is used to determine critical design conditions for systems whose functions or performance margins may be reduced by increasing CM weight. In general, the control weight is a maximum value which cannot be exceeded without compromising the overall performance. The presently established control weight of the CM is 9500 pounds. This figure is applicable for all flight phases.

3.2.4.2 Design Goal Weight

The design goal weight is a more stringent requirement than

the control weight. It may be regarded as an optimistic value or working goal toward which weight-reduction efforts are directed. The present design goal weight for the CM is 8500 pounds.

CONFIDENTIAL

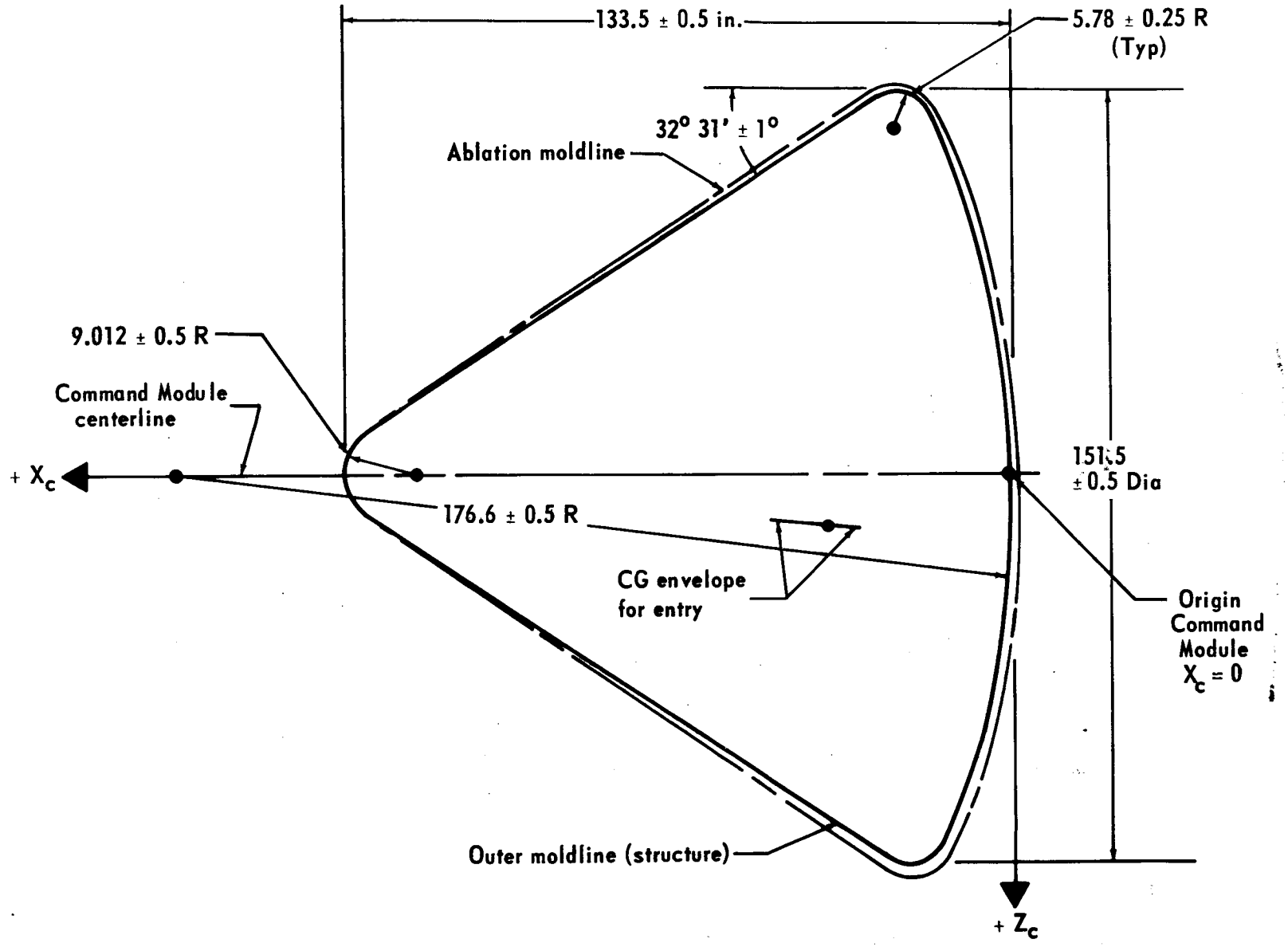

Figure 3-3 - Command Module External Geometry

CONFIDENTIAL

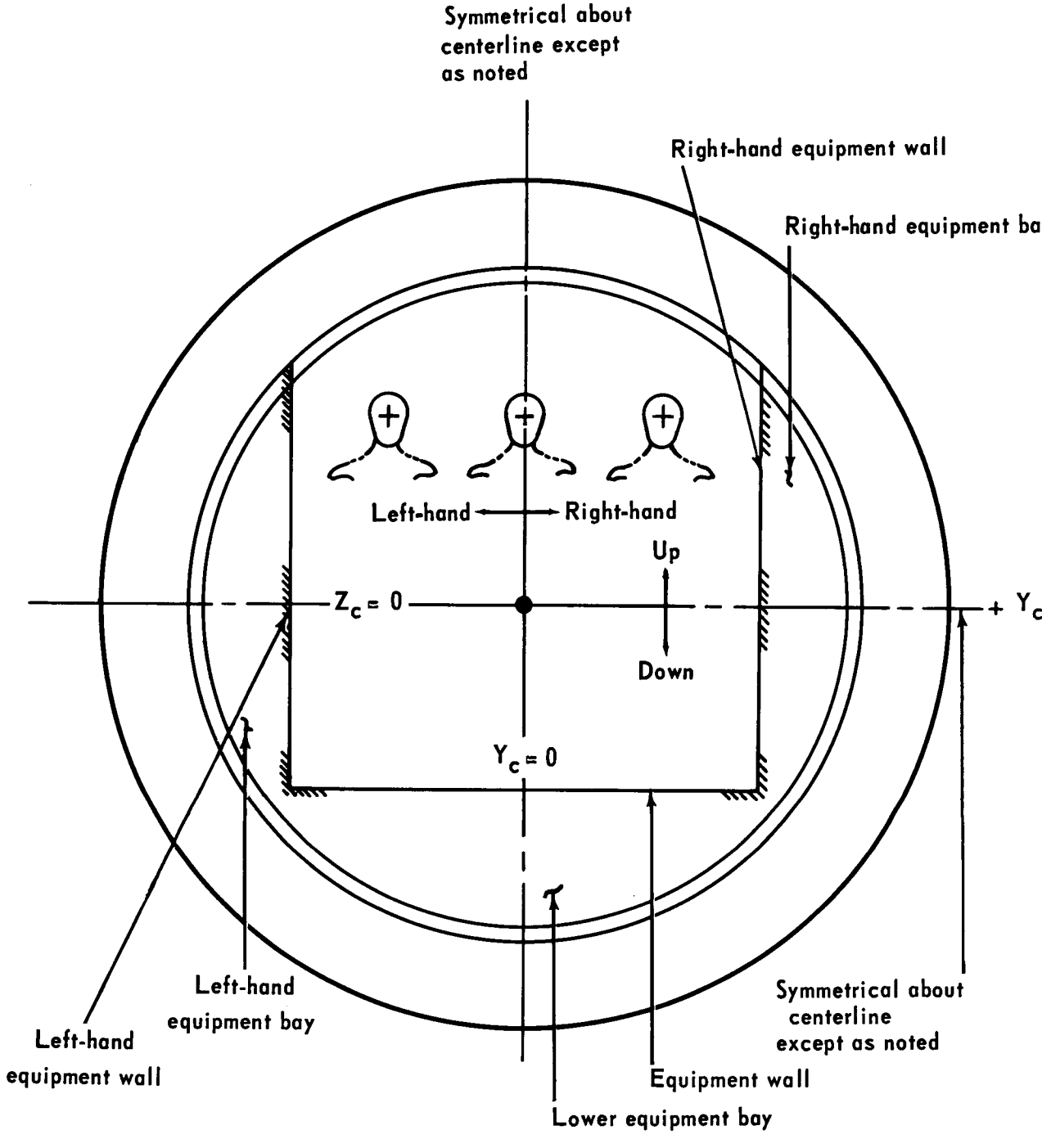

Figure 3-4 - Area Designations - View Looking Forward

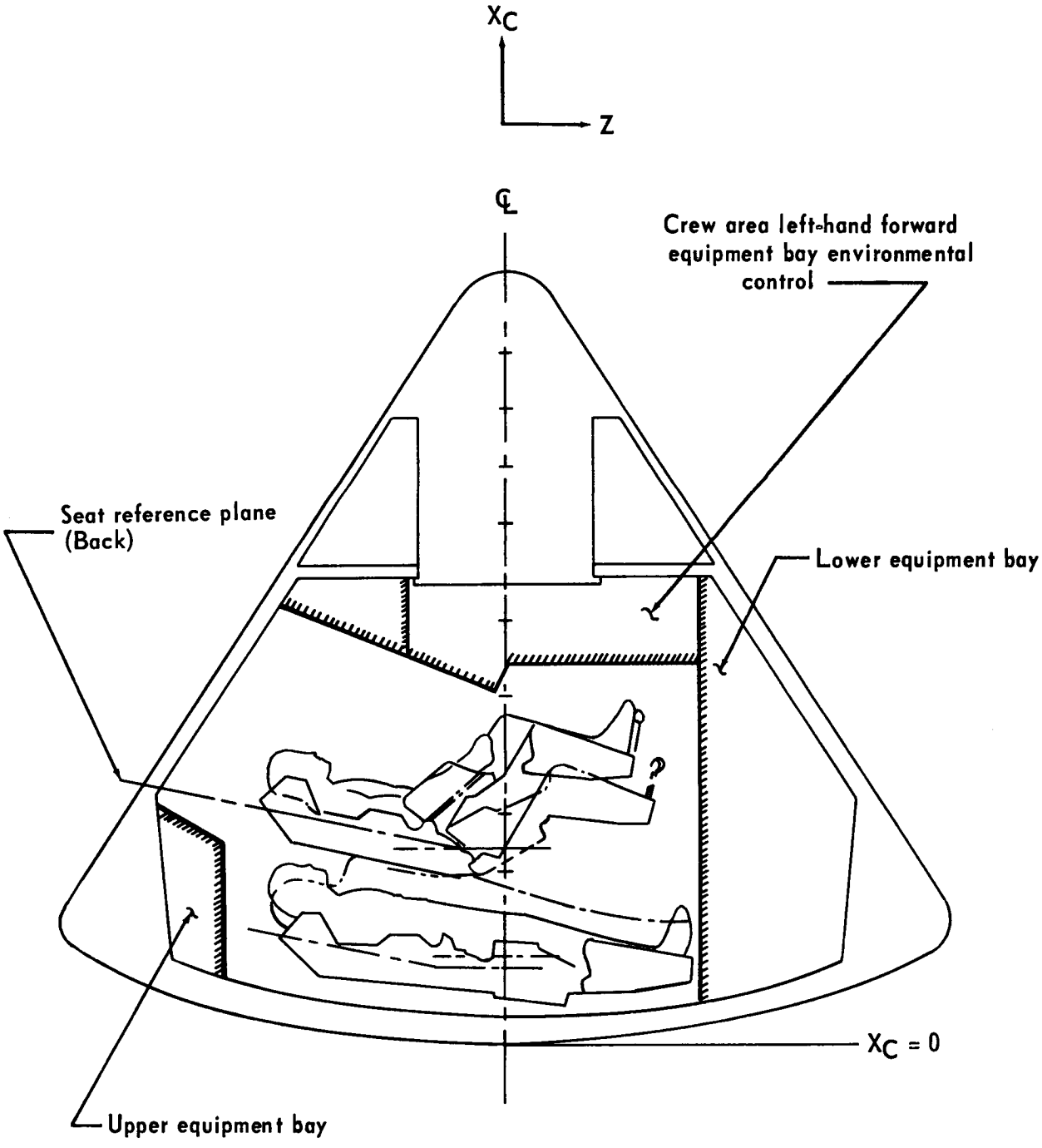

Figure 3-5 - Area Designations - Side View

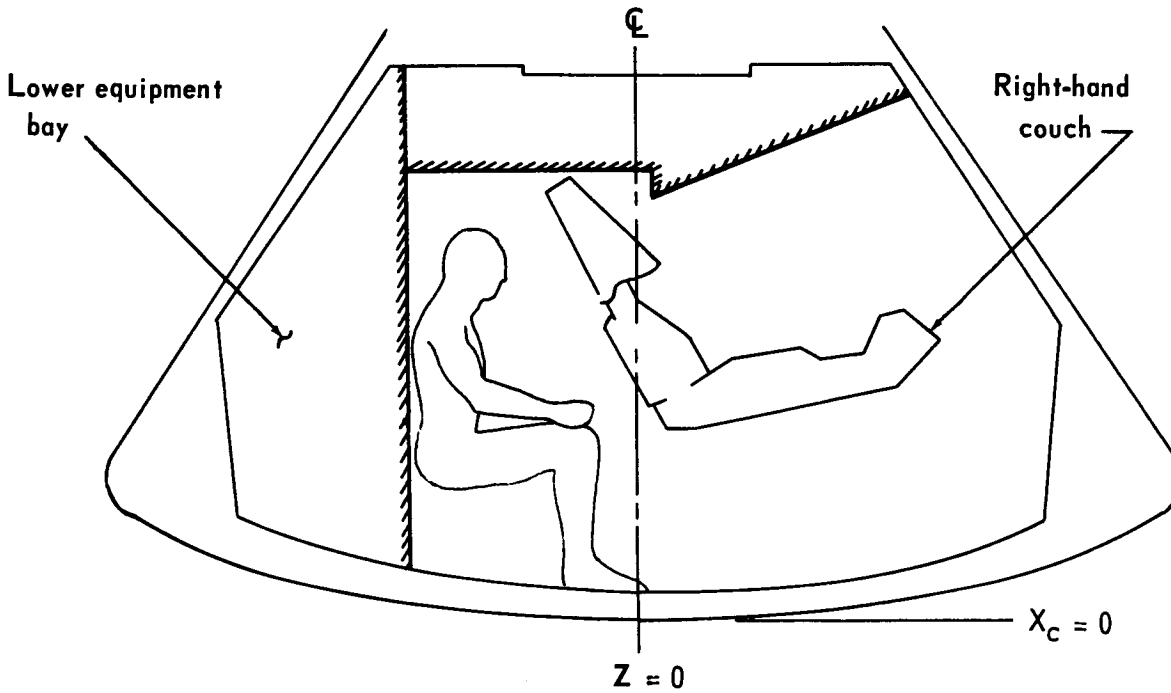

Figure 3-6 - Area Designations - Sanitation Area

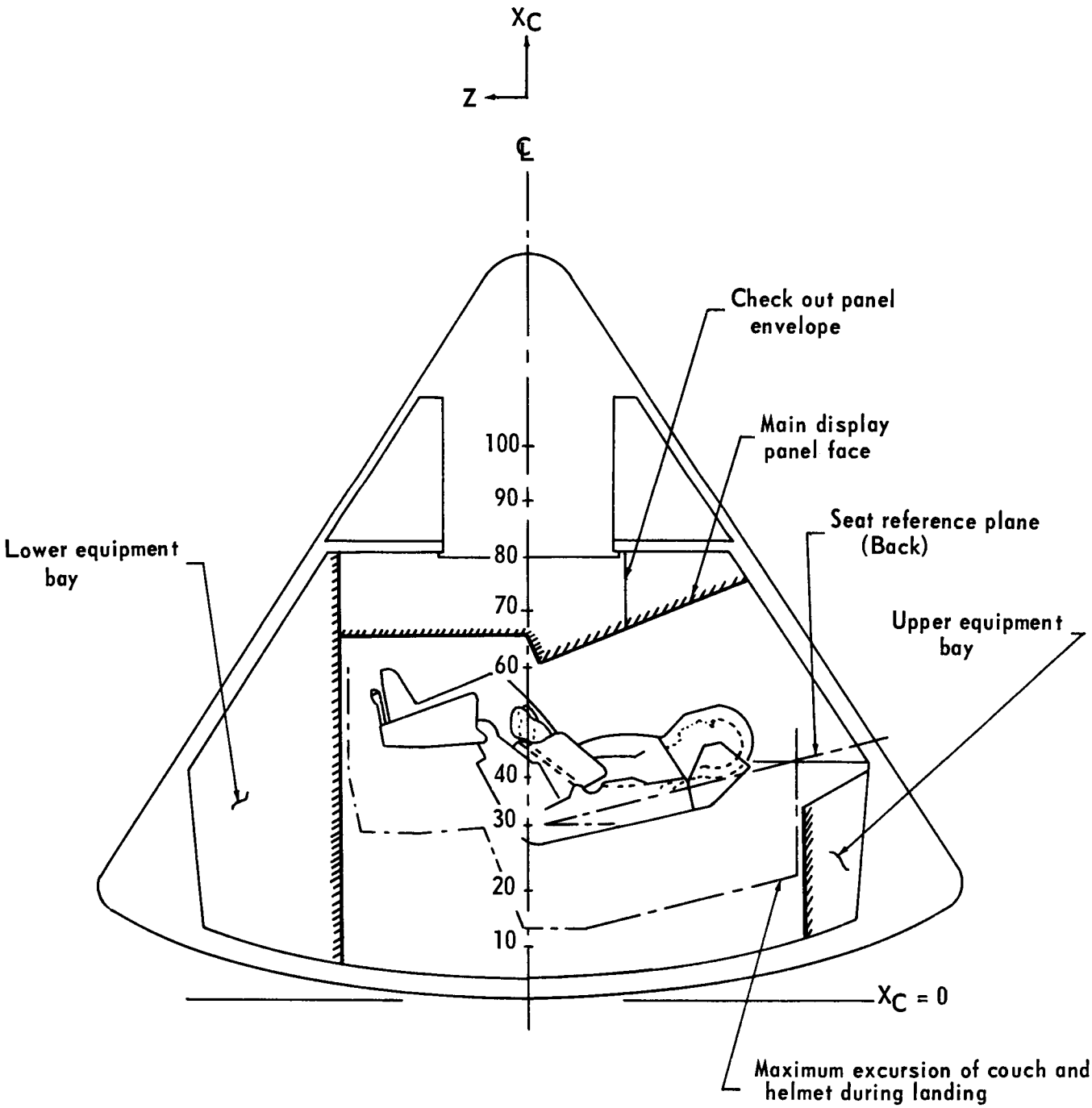

Figure 3-7 - Area Designations - Couch Excursion

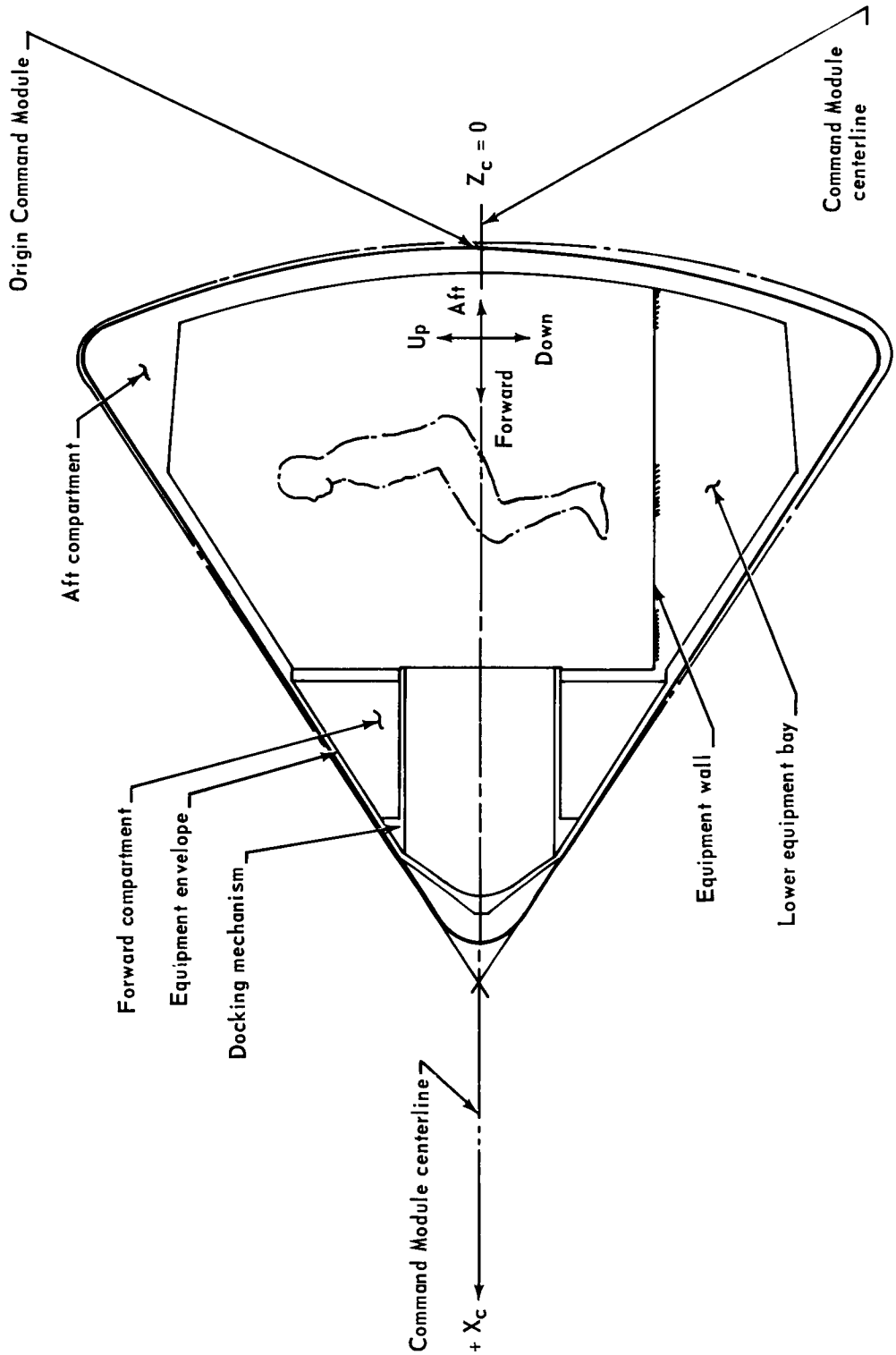

Figure 3-8 - Area Designations - Side View

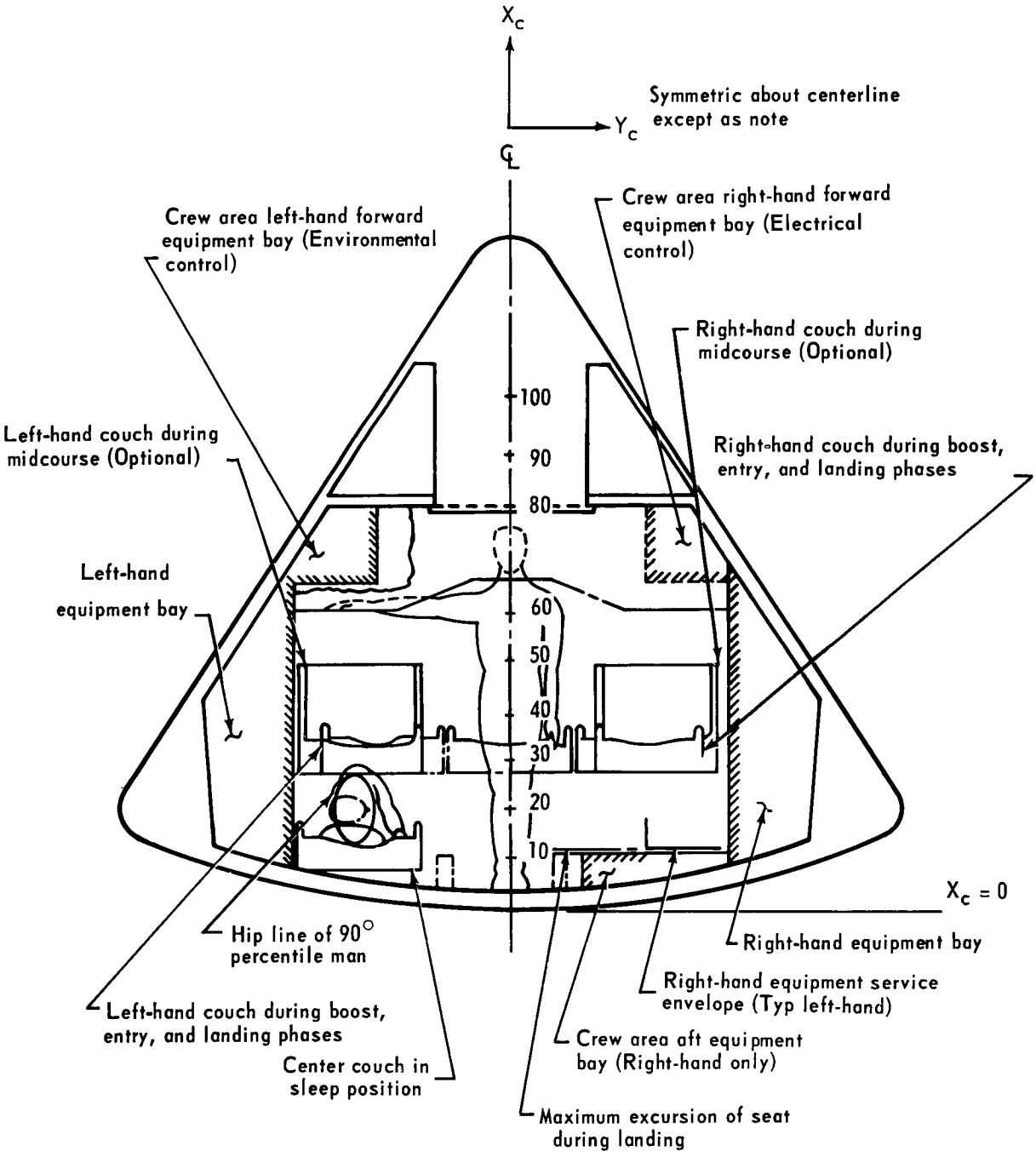

Figure 3-9 - Area Designations - View Looking Toward Lower End of Crew Area

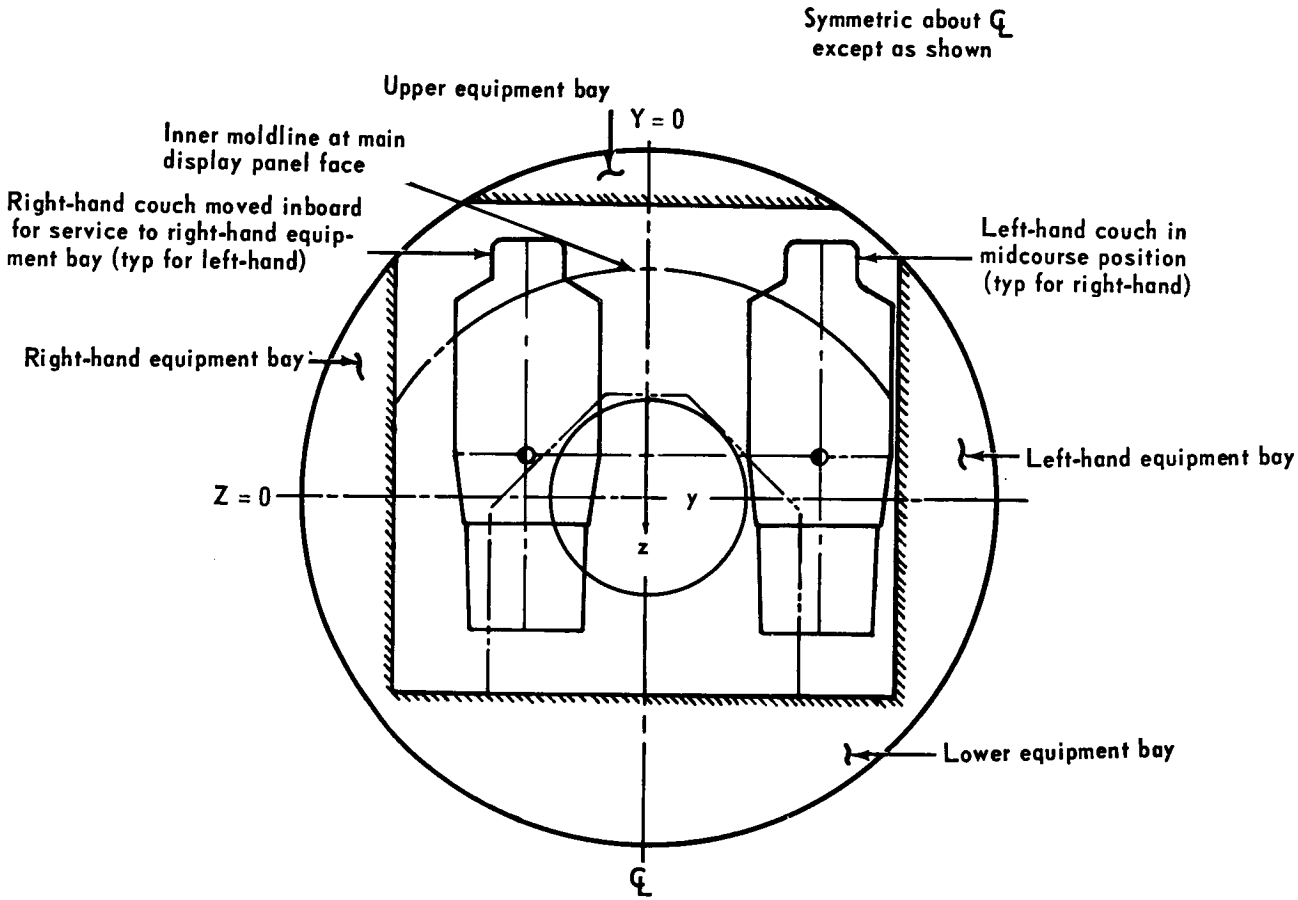

Figure 3-10 - Area Designations - View Looking Aft

3.3 MAJOR COMMAND MODULE SYSTEMS

3.3.1 STRUCTURAL SYSTEM

The functions of the CM structural system are to sustain normal ground and flight loads, maximum abort loads and landing impact loads; provide a mounting surface for all CM systems, provide a vessel for pressurization, decrease the flux density due to radiation, provide some protection against the damaging effects of meteoroids, provide crew living quarters for all missions, and provide thermal protection during reentry for the primary structure and the crew. A pictorial representation of the CM Structural System is shown on Figures 3-11 through 3-14. The structural and thermal protection features of the CM consist of the following:

a. A primary load-carrying inner structure

b. A heat shield structure

c. Insulation

d. Ablation shield

e. Hatches and windows

f. Attachments and disconnects

3.3.1.1 Inner Structure

The inner structure is the primary load-carrying structure of the CM. It is pressurized to 5 psi as the pressure cabin for the crew. Adhesive bonded aluminum alloy honeycomb sandwich construction is used with aluminum face sheets and with the inside face sheet fusion welded to provide a pressure seal. The honeycomb core depths are

CONFIDENTIAL

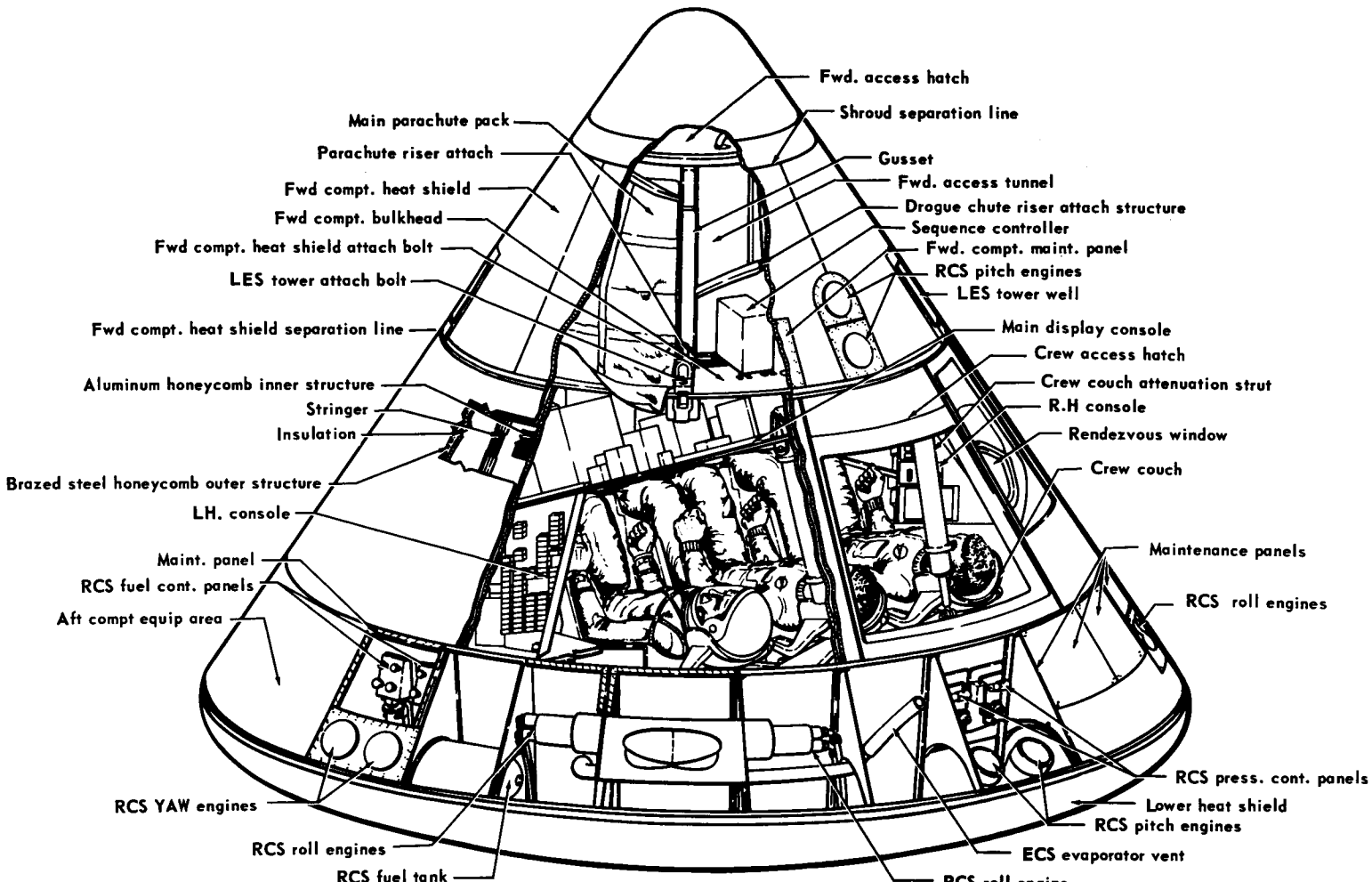

Figure 3-11 - Command Module Configuration

CONFIDENTIAL

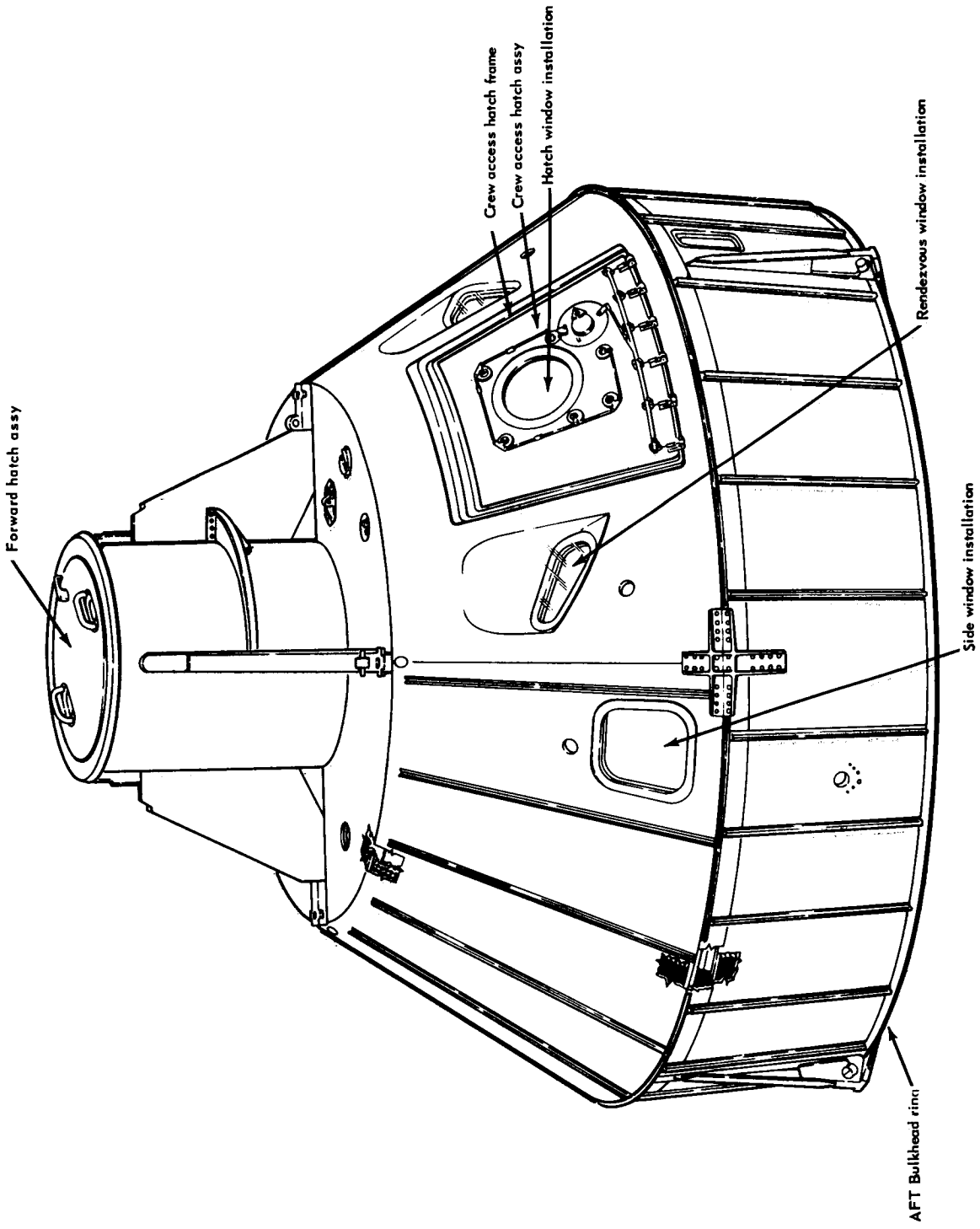

Figure 3-12 - Command Module Inner Structure

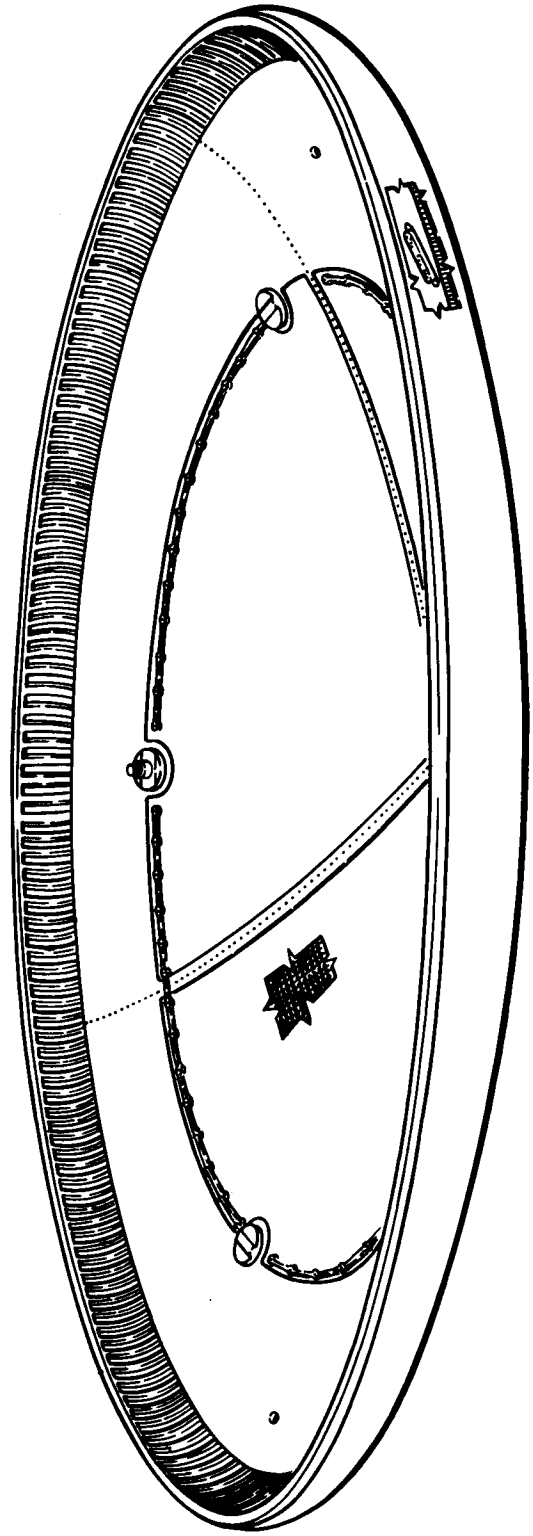

Figure 3-13 - Command Module Ablation Shield

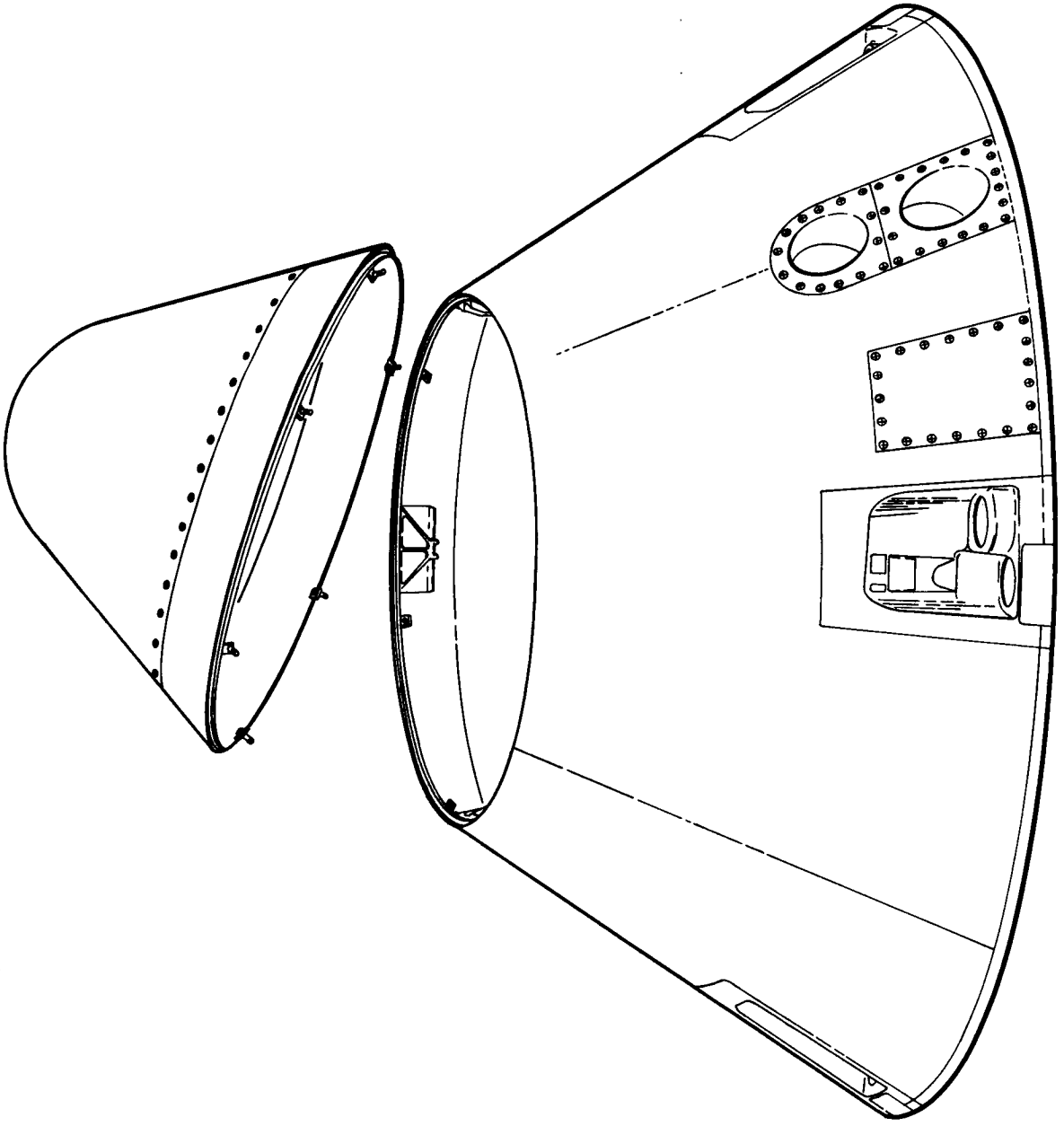

Figure 3-14 - Command Module Forward Heat Shield

1.50 inches on the spherical aft bulkhead, 0.75 inch on the side walls, 0.92 inch on the conical walls, and 0.75 inch on the forward bulkhead. Aluminum longerons are bonded into the sandwich for distribution of point loads at the four LES tower leg attachments and the six CM supports to the SM.

3.3.1.2 Heat Shield Structure

The heat shield structure is brazed honeycomb sandwich construction and is the primary support for the ablative material. The facing sheets and core are stainless steel. The aft compartment heat shield is a spherical segment with a 2.0 inches core depth. The crew compartment heat shield is a truncated cone of 0.50 inch core depth, and is attached to the inner structure by means of fiberglass laminate longerons.

3.3.1.3 Insulation

The inner structure and equipment are insulated from the heat shield by a layer of batt type insulation.

3.3.1.4 Ablation Shield

The ablation shield is made of 3/8 inch cell size fiberglass matrix bonded to a brazed stainless steel backup structure. The fiberglass is filled with ablative material.

3.3.1.5 Hatches and Windows

Top Hatch - This hatch is located forward of the upper equipment bay and symmetrical about the Z axis. The hatch is sized to pass crewmen equipped with pressurized suits and will be utilized for normal

pad egress and post-landing egress.

Docking Hatch - This hatch is located at the CM apex and it is symmetrical about the X-axis. The hatch is large enough to pass a crewman with a pressurized suit. The hatch will be used for LEM ingress and egress when docked and may be used for access to free space when LEM is not attached.

Windows - A total of five windows, each optically suitable for general observation, are located in the CM. Each window has an inside shade for interior lighting and thermal control.

One forward viewing window and one side viewing window are provided for both the Control Station and the System Management Station. A single window in the top hatch will be used for general observation and photography.

3.3.2 FLIGHT CREW SYSTEM

3.3.2.1 Crew Duties

Mission task apportionment is designed to make maximum usage of the complete crew. The crew will be provided with information and means of control making possible a maximum contribution to the overall system reliability and flexibility. Automatic sequencing operations will utilize the crew in an alternate or backup mode. The crew will have the capability to terminate or inhibit functioning of the automatic sequence operations prior to completion of the normal program (e.g., shutdown of booster stages, inhibit ignition of S-IVB engine, etc.). Crew member performance capabilities will be similar and assigned mission tasks interchangeable. Each will stand watch during non-critical mission phases and perform all command and system functions during such watches.

3.3.2.2 Specific Duties

Crew duties as a function of required mission activity are as follows:

a. Checkout - The crew will participate in all checkout operations.

b. Control - The crew will have control over critical system functions for all phases of powered flight.

c. Watch - During non-critical flight phases, the crew will monitor all spacecraft systems and regulate them as necessary.

3.3.2.3 Duty Stations

Of the four defined duty stations, three are concerned with the launch and reentry phases. These duty stations are the control station, the center or control-management station, and the right-side systems management station. Two of the crew members are normally stationed at the control station and the right side systems management station. The fourth duty station provides controls and displays for navigation and equipment for maintenance and food preparation.

3.3.3 CREW SYSTEM

The Crew System of the Apollo Spacecraft is considered to be that group of subsystems and components which support the operation and needs peculiar to the presence of human beings.

Examples of the crew system and cabin arrangement are indicated on Figures 3-4 through 3-10. There are two duty stations from which primary operation of the spacecraft can be controlled. These stations are side-by-side, with sufficient space between them to allow a third station to be occupied during acceleration flight phases. The center station is inactive during non-accelerated flight, and its supports and restraints are retracted into a stowed position. A support couch and restraint system are provided at each duty station; these are adjustable manually to allow free interchange of crewmen.

There are specific cabin areas assigned for sleeping and sanitation. Both areas accommodate a single crewman and are capable of being temporarily partitioned. Facilities are provided for waste disposal and control of infectious organisms.

Provisions for food and water include hot and cold water supplied by the Environmental Control System. In addition, sufficient water is on board at launch to provide for a 72-hour landing and recovery time period in the event of an early abort.

Impact attenuation and vibration attenuation devices are incorporated into the support and restraint systems. Each crewman wears a full pressure suit during launch, reentry, and similar critical flight

phases. The same suits are used for extravehicular operations in the space environment and for spacecraft operations in the event of cabin decompression. These suits are worn over a shirtsleeve type garment, and are of the quick-don type. Their inflation pressure is 3.5 psia. When suits are worn inside the spacecraft, ventilation and communication are supplied via umbilicals to the spacecraft system. Self-contained environmental and wireless communication systems are used for extra-vehicular operation.

The Crew System consists of the following sub-systems and components:

a. Controls and Displays

b. Restraints, Support Equipment and Couches

c. Sleeping Facilities

d. Food and Water Management

e. Waste Management

f. Optical Subsystem

g. Lighting Subsystem

h. Storage Cabinets

i. Survival Equipment

j. Personal Hygiene and Bio-medical Equipment

k. Space Suit Assembly

l. Communication and Aural Equipment

3.3.3.1 Controls and Displays

Controls and displays are provided to permit the crew to

control the spacecraft and monitor parameters critical to mission performance. The following subsections describe the required controls and displays.

Primary Panel - The primary panel has three physical segments and is arranged to support the three duty stations as follows:

a. Control Panel - The control panel is located above the left-hand couch. It contains controls and displays required for inflight control.

   The system displays and controls consist of:

   1. Stabilization and Control system displays and controls.
   2. Flight commander controls and indicators.
   3. Crew safety controls and displays.

b. Center Panel - The center panel is located above the center couch and provides the displays and controls required by the navigator during launch and reentry. The systems displays and controls consist of:

   1. Reaction Control System
   2. Environmental Control System
   3. Computer read out
   4. Cryogenic displays and controls
   5. Computer keyboard
   6. High Gain Antenna

7. Warning and caution lights

c. Systems Management Panel - The systems management panel is located above the right-hand couch and provides the controls and displays required for spacecraft systems management. Systems displays and controls consist of:

1. Electrical power distribution
2. Communication
3. Fuel cells

Left-Hand Console - The left-hand console provides additional space to support the control requirements for the commander. Located on this console are:

a. Lighting controls
b. Audio controls
c. Circuit breakers

Right-Hand Console - The right-hand console provides additional space to support the control requirements for the systems manager. Located on the console are:

a. Lighting controls
b. Audio controls
c. Circuit breakers
d. Electrical power distribution controls

In-Flight Test Panel - This panel is located beneath the right side of the forward hatch and contains:

a. In-limits/out-of-limits lights

b. A test and control panel

c. A test meter

The test meter can be used to monitor any of the inputs to the In-Flight Test Panel and to probe secondary test points which are located at the lower equipment bay modules. The status lights are visible from the commander's couch.

Guidance and Navigation Panel - This panel is located in the lower bay at the foot of the center couch. It contains controls and displays for navigation operations including:

a. Scanning telescope

b. Sextant

c. Coupling display units

d. Power controls

e. Clock

f. Viewer

g. Condition lights

h. Caution and warning lights

i. Lighting controls

j. Attitude controls

3.3.3.2 Restraints, Support Equipment, and Couches

Each crewman is provided with a couch for support during acceleration loads. A couch provides full body support during all nominal and emergency acceleration conditions. The couches are adjustable to

permit changes in body and leg angles thereby improving comfort during the coasting phases of the mission.

Couches are constructed to permit crewmen to interchange positions. Interchange requirements are accomplished by use of simple couch adjustment devices.

A restraint system is provided with each couch. The system allows the interchange of crewmen with simple attachment and adjustment for comfort and sizing. The restraint system provides adequate restraint for all nominal and emergency flight phases.

Impact attenuation beyond that required to maintain general spacecraft integrity is obtained through use of discrete shock mitigation devices for individual crew support and restraint systems. Attenuation devices provide for lateral as well as transverse acceleration loads.

3.3.3.3 Sleeping Facilities

The center couch can be repositioned for use as a sleeping area. The area is located on the floor beneath the commander's couch and accommodates one crew member. An adjustable cover attached along three edges of the couch and the wall isolates the area. A two-way stretch, open mesh coverlet, when drawn over the crewman, holds him in place against an inflated mattress. The isolation cover closes out cabin light and reduces noise level. A manually operated light and a manually adjustable air supply are available to the resting crewman.

3.3.3.4 Food and Water Management

Food management includes provisions for food storage,

preparation, and disposal of waste food bags, and operation and cleaning of a heating probe. Food storage is accomplished in the lower equipment bay, left section. Retainers cover the individually packaged freeze-dried food products to prevent them from floating out of open drawers. Reconstitution is accomplished with hot water injected by probe into the individual containers. Empty bags are compressed and stored in the waste disposal area of the lower equipment bay.

3.3.3.5 Waste Management

Collection and Storage of Liquid Human Waste - A urine cuff is supplied for each crew member.

One or three (to be determined) relief tubes will be supplied. Each tube is connected to a vacuum through an appropriate valve so that urine can be vented overboard without chance of backup.

Collection and Storage of Solid Human Waste - Defecation-Emesis bags are supplied for crew use and are stored in empty food lockers in the lower equipment bay.

3.3.3.6 Optical Subsystem

Cameras are provided and controls are mounted on the instrument panel. The cameras permit pictorial recording of crew reactions, spacecraft interior, and equipment functioning during all mission phases.

3.3.3.7 Lighting Subsystem

The CM is illuminated by indirect floodlighting of the primary and secondary duty station panels and general areas, integral

illumination incorporated within the displays, a rest area light and portable lights.

Indirect Illumination - The indirect illumination consists of multiple lamps located to provide even lighting with a minimum of glare. Intensity variation and control is provided for illumination of each functional crew station.

Integral Illumination - Light sources located within the displays provide contrast between indices and background when low luminance levels are desired and intensity is varied.

Portable Lights - Independent portable lights are provided in the CM to permit the crew members to view areas or equipment not normally lighted.

Rest Area Light - A small light in the rest station permits reading or writing.

3.3.3.8 Storage Cabinets

Storage space is available in lower, upper, right-hand, and left-hand equipment bays.

Lower Equipment Bay - The lower equipment bay has storage cabinets and drawers with recessed drawer pull latches. The sextant is located in the upper center of the bay with food storage cabinets directly below. Other inertial measuring equipment is located to the left of the food storage area and other Guidance and Navigation equipment is located to the right of the food storage area. Electronics, Guidance and Navigation, communications and scientific equipment is

stored below the food storage area. Space is provided for tools on the left side and waste storage on the right side of the lower equipment bay.

Upper Equipment Bay - The upper equipment bay is considered as a storage area for pressure suits, back packs, helmets, and survival equipment.

Right-Hand Equipment Bay - Cabinets on the upper left are for electronic modules and other spares. The lower left area contains cabinets with recessed pull latches for tools, medical and surgical supplies, toiletries, and hygiene supplies. The lower right-hand area contains cabinets for cleansing pads and clothes storage.

Left-Hand Equipment Bay - This bay contains some components of the Environmental Control System. The remainder of the bay is available for spare parts and instrument storage.

3.3.3.9 Survival Equipment

The following equipment and provisions are carried aboard the spacecraft for post earth landing use:

a. One three-man life raft

b. Location aids - dyes, markers, signal mirrors and distress signals

c. Desalting kits

d. Whistle

e. Nylon cord

f. Radiation dosimeters

g. Pressure suits

h. Knives

i. Matches

j. Food

k. Plastic tarp

l. First aid kit

3.3.3.10 Personal Hygiene and Bio-Medical Equipment

Oral Hygiene Supplies - Individually multiple use toothbrushes and digestible dentrifices in air-tight sealed containers provide for adequate cleansing of teeth and gums by each crew member.

Razor - To provide well being and general cleanliness, a complete portable, battery operated, vacuum filtered razor is provided. It is designed to hold all hair fragments obtained from 3 men for 14 days. The razor is stored in the same drawer as oral hygiene equipment, with a dividing partition and separate, transparent, retractable cover.

Toiletries (Defecation-Emesis Bags, Toilet Tissue) - The defecation-emesis bags for adequate storage of human waste material are interchangeable for defecation or emesis purposes. A maximum of 40 bags is provided. Toilet tissue also is provided.

Cleansing and Deodorizer Pads - Individual cleansing pads impregnated with lotion cleanser, disinfectant, and deodorizer provide for all-purpose washing needs. Deodorizer pads provide control of bacteria and noxious odors from armpits and groin regions. Wrapping material serves to preserve pads before use, act as a towel or wiping

cloth during use, and act as a disposable container for used cleansing pads.

Blood Pressure Cuff - A standard clinical blood pressure arm cuff with aneroid (non-mercury) pressure sensor is provided. The cuff is designed to be used in measurement of arm systolic and diastolic blood pressure in conjunction with the stethoscope.

Stethoscope - A standard clinical model stethoscope having both a bell and diaphragm head is provided.

Oral Drugs - Oral drugs are supplied in pill form to be mixed with water in a spare drinking water bag prior to consumption. This includes drugs to combat pain, nausea, fatigue, allergic reactions, and infections. Water purification tablets and tranquilizers are included.

Injectible Drugs - Injectible drugs include the same array as the oral drugs with the addition of drugs to combat shock. Syringes are disposable.

Antiseptics - Antiseptics are provided in individual absorbent cotton pad form with sealed bags similar to those of the deodorizer pads. Pads are used for cleansing around abrations, lacerations and contusions. After use each pad is replaced in its bag, sealed and stored in the waste disposal area.

Surgical Supplies - Surgical supplies include gauze, dressings, a small Velcro cuff tourniquet, a scalpel, a self-retaining retractor, suture with cutting needle, a tracheomoty tube, and a drainage

and ventilation requirements for the space suit along with removal of carbon dioxide, water vapor, body contaminants, and thermal control for a minimum of four hours continuous operation without recharge. Two PLSS units may be temporarily attached to a single suit, or two suits to a single PLSS.

Constant Wear Garment - The CWG is a closefitting undergarment which is worn by the crewman at all times and which constitutes primary clothing. These garments are comfortable and free of areas that would snag on spacecraft equipment. Each crewman is provided with a light weight cap, separate from the pressure suit helmet, to protect his head from injury as a result of collison with spacecraft equipment. Two changes of clothes per man per mission are provided.

3.3.3.12 Communications and Aural Equipment

Command Module, Intermodule and Spacecraft to Ground Communications - Two-way voice communication capability between individual crew members, between the spacecraft and earth-based stations, and between each module in a rendezvous maneuver is provided. Audio-controls consist of off-transmit-receive, VHF/DSIF, and intercom selections. Thumb knobs are provided for frequency selection and a switch is provided for "push-to-talk". Each crew station has its own audio control panel.

Extravehicular Communications - A suit-contained personal communications system consists of a headset, microphone and transceiver. The transceiver is located in the PLSS and is used only for

extravehicular operations. Full duplex voice communication, with voice backup capability, between two extravehicular crewman and with the CM, LEM, and earth is provided. Positive identification of transmitting crewman is provided. The system is capable of transmission of physiological and suit environmental data simultaneously with voice without interference. Manual switching for transmission of physiological data may be accomplished by any extravehicular crew member.

3.3.4 COMMUNICATIONS SYSTEM

The Communications System of the Command Module performs the following functions during the lunar mission:

a. Transmits voice, telemetry, Data Storage Equipment (DSE) playback and TV signals to the GOSS stations.

b. Receives and demodulates voice transmission from the GOSS stations and the Lunar Excursion Module.

c. Receives and retransmits in phase coherence Deep Space Instrumentation Facility (DSIF) - type pseudo random noise codes to enable the GOSS stations to track the spacecraft in angle, velocity, and range during deep space phases.

d. Receives and responds to interrogating radar signals for tracking purposes during near-earth phases.

e. Provides antennas to transmit and receive electro-magnetic radiation.

f. Assembles and encodes, in suitable form for transmission, the data required by the Mission Control Center during spacecraft missions.

g. Provides for voice communication between crew members, and provides for the transfer of audio signals to and from transmitters and receivers.

h. Provides two-way voice communication between crew members and the CM via a direct r-f link to the space suit

personal communications equipment or LEM-CM relay.

i. Provides for reception, conditioning, and relaying of physiological and environmental data from the space suit personal communication equipment or LEM-CM relay.

j. Provides capability for receiving, demodulating and decoding of GOSS transmitted digital data.

3.3.4.1 Equipment Description

A communications system block diagram is shown on Figure 3-15. The components of the system are listed and described functionally in Table 3-1 in which it should be noted that several components are physically located in the Service Module.

3.3.4.2 Performance

The performance of the communications system components is given in Table 3-2.

3.3.4.3 Interfaces

Command Module/GOSS Communication - Communication between the CM and the GOSS is in the VHF band during the near-earth phase of all missions and the UHF/S-Band during translunar and lunar-orbital mission phases. In the near-earth phase, amplitude modulation is employed for voice communication and PCM/FM is employed for transmission of CM telemetry data. The CM GOSS UHF/S-Band carrier frequency is either phase-modulated or frequency-modulated according to the transmission mode being employed.

Command Module/GOSS Tracking - Spacecraft tracking during

near-earth mission phases is accomplished by AN/FPS-16 C-Band radar equipment operating in conjunction with a radar transponder in the CM. Transponder electrical characteristics are optimized for operation with the AN/FPS-16. During translunar and lunar orbital mission phases, the UHF/S-Band transponder is capable of receiving, demodulating, remodulating and retransmitting the pseudo-noise-coded ranging signal from the GOSS.

CONFIDENTIAL

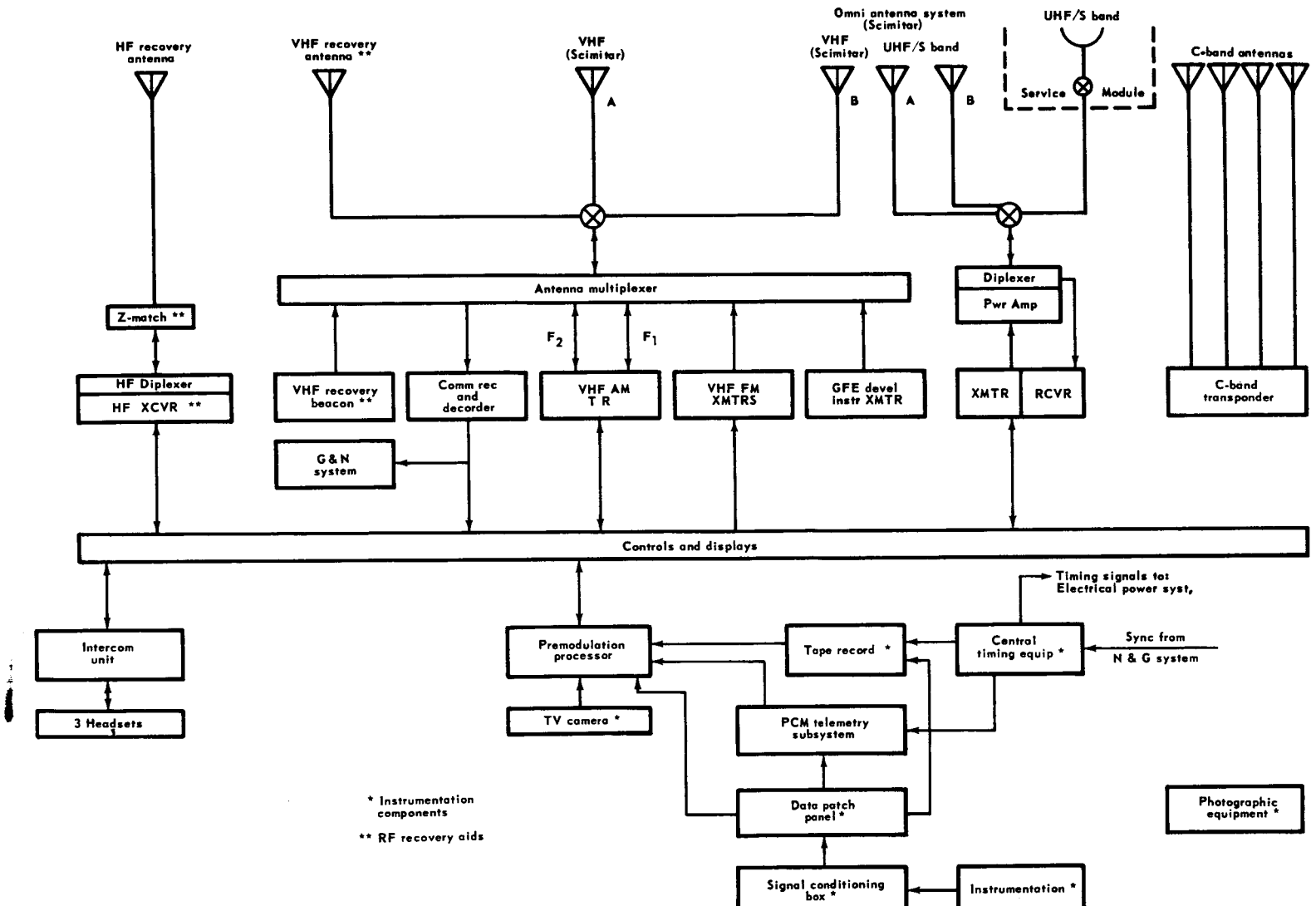

Figure 3-15 - Command Module Communications System

CONFIDENTIAL

TABLE 3-1

COMMUNICATIONS SYSTEM COMPONENTS, FUNCTIONS AND DESCRIPTION

Component	Function and Description
VHF FM Transmitter Equipment	The VHF FM Transmitters provide transmission of telemetry data during near-earth mission phases. The VHF broad-band antenna is shared between this transmitter, the VHF AM transceiver and up data receiver by means of the VHF multiplexer.
VHF AM Transceiver Equipment	Provides two-way voice communication between the CM and earth during near-earth mission phases, between the CM and space-suit personal communications system transceiver, and between the CM and the LEM. It is also used for two-way voice contact with recovery aircraft during the post-landing phase. This equipment uses the VHF broad-band antenna (via multiplexer) except for recovery and post-landing. During recovery, the transceiver is switched to the VHF recovery antenna.
UHF/S-Band Transponder Equipment	DSIF transponder provides data and television transmission, ranging, two-way voice, and coherent doppler tracking during translunar mission phases. It is used for transmission during earth orbital missions. The UHF high-gain antennas are used with the transponder for normal translunar operations. For emergency and earth orbital operations, the UHF omni antenna system is used.
(1) UHF/S-Band Receiver (2 each)	Two phase-lock, double conversion superheterodyne receivers are supplied. The second receiver is for redundancy. A diplexer is used to provide single-antenna operation of DSIF receiver and DSIF transmitter.

TABLE 3-1 (Continued)

Component	Function and Description
UHF/S-Band Transponder Equipment (Continued)	
(2) UHF/S-Band Transmitter (2 each)	Serves as a driver for the S-Band power amplifier. This transmitter derives its excitation from either the receiver's local oscillator or from an auxiliary crystal oscillator. Two units are supplied; second transmitter is for redundancy.
(3) UHF/S-Band Power Amplifier	A power amplifier provides amplication or transmitter output for transmission from lunar ranges.
C-Band Transponder	Provides radar tracking capability during near-earth mission phases; compatible with the AN/FPS-16 radar system. The transponder includes four spaceborne superheterodyne receivers, pulse modulated transmitter, antenna multiplexer, and power supply. Input signals are coded one or two pulse interrogations; outputs are single pulse replies.
C-Band Antenna Equipment	Provided to supply antenna requirements for C-Band radar tracking function.
(1) C-Band Flush-mounted Antennas (4 each)	Four flush-mounted antennas are equally spaced around the periphery of the CM to provide essentially omni-directional pattern coverage.
(2) Comparator	An amplitude comparator is used to minimize nulls in the C-Band antenna pattern.
(3) Associated Components	These associated parts include an RF solid state switch and coaxial transmission lines.

TABLE 3-1 (Continued)

Component	Function and Description
VHF Omni Antenna Equipment	Provides antenna requirements for the following equipment: (a) VHF FM transmitters (b) VHF AM transceivers (c) NASA R&D transmitters (d) Digital Up-Data System
(1) VHF Broadband/UHF Omni Antenna	Scimitar antennas mounted on $\pm$ Z axes of spacecraft, provide omni-directional coverage. Used with VHF FM transmitters and VHF AM transceivers.
(2) VHF Multiplexer	Allows simultaneous connection and operation of equipment listed above with the VHF antenna.
(3) Associated Components	These include power dividers, switches, and cables.
UHF High Gain Antenna Equipment*	Provides spacecraft antenna requirements for normal translunar communications. Equipment is located on the side of the SM. The antenna is extended for operation by a deployment mechanism.
(1) UHF Higain Antenna	The antenna is used with the UHF/S-Band transponder equipment.
(2) Gimbal Drive	Provides pointing capability for the antenna.
(3) Associated Components	This equipment includes switches, cables and earth sensor.
Intercommunication Equipment	Provides crew intercommunication for both pressure-suit and shirt-sleeve environments, and voice transmission mode selection.

* Located in Service Module

TABLE 3-1 (Continued)

Component	Function and Description
Intercommunication Equipment (Continued)	
(1) Audio Control Units (3 each)	One unit is provided on display panel for each crew member, fourth unit is at work station. Each unit contains earphone amplifiers, microphone amplifiers, and switches for selection of various modes of voice transmission. Earphone amplifiers AVC capability; microphone amplifiers have AVC as well as peak clipping. VOX or PTT operation is selectable.
(2) Headsets	Headsets containing dual microphones and dual earphones are provided at each crew station for use in shirt-sleeve environment.
(3) Personal Communications System Demultiplexing Unit	Demultiplexes voice signals in the AM receiver and presents them to the autio control unit.
Premodulation Processor	Consists of subcarrier oscillators and electronic controls required to multiplex and condition the various data channels to modulate the UHF transmitter.
Telemetry Equipment	Processes data into forms suitable for radio transmission to earth. During deep-space operations, conditioned analog data will be encoded for transmission via the DSIF transponder. During near-earth mission phases, the VHF FM transmitter will be used.
(1) Analog Commutator	Suitable electronic commutation of analog signals allows flexible repetitive selection of inputs to the analog-to-digital converter.
(2) Analog-to-Digital (A-D) Converter	Digitizes the output of the analog commutator.

TABLE 3-1 (Continued)

Component	Function and Description
Telemetry Equipment (Continued)	
(3) Digital Commutator	Suitable electronic commutation of digital signals allows flexible repetitive selection of inputs to the programmer.
(4) Programmer	Controls the operation of analog and digital commutators, A-D converter, and calibrator. Encodes digital data to PCM (NRZ) format for storage or transmission.
(5) Calibrator	Introduces selected calibration voltages into PCM data format on continuous basis.
Control and Display Panels	Provides capability to control and monitor the Communications System in all operating modes.

TABLE 3-2

COMMUNICATIONS SYSTEM PERFORMANCE VALUES

Component	Performance Values
VHF FM Transmitter Equipment	Frequency----------237.8 mc (Preset) Frequency stability---0.003 percent Modulation Type----------FM Deviation---------- ±125 kc Modulation capability-50 to 100 kilobits/sec. Linearity---------- ±1% max deviation Power Output----------10 watts
VHF AM Transceiver Equipment	
(1) Transmitter	Frequency----------296.8 mc Frequency stability---0.005 percent Modulation Type----------AM Information band width-15,000 cps Power Output----------5 watts
(2) Receiver	Frequency----------296.8 and 259.7 Noise Figure----------8 db Predetection bandwidth-40 kc
UHF/S-Band Transponder Equipment	
(1) UHF/S-Band Receiver	Type----------Phase locked, double conversion super heterodyne Frequency----------2100-2130 mc Signal Modulation-----PM Noise Figure----------To be supplied Bandwidth(s)----------To be supplied Image rejection-------40 db Spurious rejection----60 db

TABLE 3-2 (Continued)

Component	Performance Values
UHF/S-Band Transponder Equipment (Continued)	
(2) UHF/S-Band	Frequency----------2280-2310 mc Excitation *Mode 1----------PM oscillator with provision for phase-locking to receiver frequency *Mode 2----------Crystal oscillator ±0.001 percent frequency tolerance Modulation Type *Mode 1----------PM *Mode 2----------PM Deviation *Mode 1---------- $\pm\pi/2$ radians *Mode 2----------To be supplied Frequency response---To be supplied Power Output---------200 mw
(3) UHF/S-Band Amplifier	Power Output---------20 watts or 5 watts (selectable) Frequency----------2280-2310 mc RF Bandwidth---------10 mc
C-Band Transponder Equipment	
(1) C-Band Transponder	Frequency----------Receive 5690 mc Transmit 5765 mc Frequency stability Transmitter-------- ±4 mc Receiver---------- ±2 mc Modulation----------Pulse Pulse width----------0.5 ± 0.05 microsecond Recovery time--------140 microseconds max. Interrogation code---Capable of operation in accordance with IRIG recommendation 106-59 Receiver sensitivity-70 dbm for 100% response to interrogation

* Mode definition to be supplied.

TABLE 3-2 (Continued)

Component	Performance Values
C-Band Transponder Equipment (Contd)	
(1) C-Band Transponder (Contd)	Image rejection---------60 db minimum Transmitter power-------2.5 kw (peak)
(2) Comparator	Utilizes the output of four superhet receivers to control switching of transmitter output to most favorable antenna, on a pulse-to -pulse basis.
C-Band Antenna Equipment	General----------Transmit and receive Frequency----------5400 - 5900 mc Pattern coverage--------Omni-directional in Y - Z plane Polarization----------Right hand circular VSWR----------1.5 to 1 Power handling capability 2500 watts pulse, duty cycle 0.002 Switching capability----Controlled by comparator
VHF Omni-Antenna Equipment	General----------Transmit and receive Frequency----------(a) 225 to 300 mc (b) 400 to 450 mc Pattern coverage--------Omni-directional mounted in the Z plane 10 db ± 3 db 10 db beamwidth 140 deg. Polarization----------To be supplied VSWR----------2 to 1 System insertion loss---To be supplied Power handling capability-20 watts cw
UHF High Gain Antenna Equipment	General----------Transmit and receive Frequency----------2280 - 2310 mc Pattern coverage--------6 degrees beamwidth-Steerable up to 40 deg. Polarization----------Right hand circular VSWR----------1.5 to 1

TABLE 3-2 (Continued)

Component	Performance Values
UHF High Gain Antenna Equipment (Contd)	System insertion loss----2.5 ± 0.7 db Power handling capability-20 watts cw Gain----------26 db nominal
UHF Omni Antenna Equipment	General----------Transmit and receive Frequency----------2280 - 2310 mc Pattern coverage---------Omni-directional in Y - Z plane Polarization----------Vertical linear VSWR----------1.5 to 1 System insertion loss----4 ± 1.25 db Power handling capability-20 watts cw
Intercommunications Equipment	All inputs and outputs balanced, 600 ohms impedance. Headset microphone output 0 dbm. Headset earphone output 20 dbm. Frequency response (excluding earphones) 300 to 3000 cps; ± 3 db.
Telemetry Equipment	
(1) Analog Commutator	Input level - 0 to 5 volts Input impedance-500k ohm Source impedance-5000 ohm PCM (output) Specifications:
(2) A-d Converter	Quantization to 8-bit words (256 levels) Accuracy - 0.5%
(3) Digital Commutator	Input impedance-500k ohm Bit rate (fixed) - to be supplied
(4) Programmer	PCM/NRZ format Sync. - from on board clock
(5) Calibrator	15 and 85 percent of full scale for high and low level channels

3.3.5 INSTRUMENTATION SYSTEM

The Instrumentation System detects, measures, and displays all parameters required by the crew for monitoring and evaluating the integrity and environment of the spacecraft, performance of the spacecraft systems, and crew safety. It provides data for transmission to earth to facilitate ground assessment of spacecraft performance and failure analysis. It provides the crew with the necessary information if required for abort decision. In addition, the capability is provided for documenting the mission. The Instrumentation System:

a. Converts to electrical signals those physical parameters which must be displayed, recorded, or transmitted.

b. Provides an optical means of observing events external to the spacecraft.

c. Conditions electrical signals to a common level to allow convenient display, recording and transmission.

d. Stores for future readout that data which cannot be transmitted to the ground in real time.

3.3.5.1 Equipment Description

The Instrumentation System consists of physical and biomedical transducers, tape recorder, central timer, special radiation instruments, gas analysis components, signal conditioners, data patch panels, and a television camera. A list of the instrumentation components with their functional description is given in Table 3-3.

3.3.5.2 Performance

The performance capabilities of the Instrumentation System components are presented in Table 3-4.

TABLE 3-3

INSTRUMENTATION SYSTEM COMPONENTS - FUNCTION AND DESCRIPTION

Component	Function and Description
Transducers	Accept physical parameters of spacecraft systems; convert to electrical signals for telemetry, data storage, or display to crew. The parameters include
(1) Vehicle	(a) Temperature (b) Pressure (c) Flow (d) Volume (e) Leak rate (f) Acceleration (g) Force (h) Vibration (i) Displacement (j) Angular velocity (k) Gas partial pressure (l) Acoustic noise (m) Strain (n) Char and ablation
(2) Bio-medical	To be supplied
Data Storage Equipment	Provides on-board storage and playback capability for analog and digital data. Data can be recorded during critical periods or communication blackouts and played back for later transmission or stored for playback after recovery.
(1) Tape Deck	Consists of tape transport unit and record and playback heads. This unit holds magnetic tape and reels and contains tape drive mechanism.
(2) Recorder Electronics	This unit is connected to tape heads to provide recording, erase, playback of magnetic tape.
Spacecraft Central Timing Equipment	Times various operations in spacecraft; consists of stable oscillator reference and dividers to supply various desired frequencies. Redundancy is incorporated for reliable operation. Sync input is obtained from the Guidance and Navigation System. Sync and timing signals are provided for the following systems or equipments: (a) Electrical Power System

TABLE 3-3 (Continued)

Component	Function and Description
Spacecraft Central Time Equipment (Contd)	(b) Telemetry equipment (c) Data storage equipment
Radiation Detection Equipment	Measures radiation rates and total dosage of various types of particles.
Scientific Instrumentation Equipment	Information to be supplied.
Signal Conditioning Equipment	Conditions all analog signals to a standard level and form prior to commutation in the telemetry equipment.
Television Equipment	Provides GSE accessibility to telemetry, and displays and controls panel inputs.
Television Equipment	
(1)	The television camera provides real-time video earth-based receiving stations. Video is transmitted directly to earth via DSIF transmitter for observation of crew and flight operations. Camera is capable of operation external to spacecraft for observing lunar surface operations.
(2) Associated Components	Permit operation of camera by the crew on the lunar surface and external to spacecraft.

TABLE 3-4

INSTRUMENTATION SYSTEM - PERFORMANCE

Component	Performance	
Transducers	Sensor performance parameters such as accuracy, resolution, etc., are optimized for each measurement. Where possible, sensors will have an output voltage of 0 to 5 volts dc and an output impedance no greater than 5000 ohms.	
Data Storage Equipment		
(1) Tape Decks (2)	Recording Speed	3.75 inches per second
	Playback Speed	15 inches per second
	Tape format:	1 timing track, 4 digital tracks (Single serial PCM channel tracks), 9 analog tracks
	Tape capacity:	2300 feet (Minimum) of 1 mil tape
(2) Recorder Electronics	Digital channels capable of 1700 bits/inch NRZ digital data. Analog channels capable of 50 to 10,000 cps analog at tape speed of 15 inches/second.	
Spacecraft Central Timing Equipment	Frequency standard accuracy of[]over 14 day period. Timing input from Guidance and Navigation System, 1024000 pps. (Outputs to be supplied). Parallel output of PDM time code for display.	
Radiation Detection Equipment	a. Personal Dosimeter - Description to be supplied. b. Radiation Warning Instrument - A device operating on r-f principle. Description to be supplied.	
Scientified Instrumentation Equipment	To be supplied.	
Signal Conditioning Equipment	Outputs 0 to 5 vdc, output impedance not greater than 5000 ohms. Accuracy to be supplied.	

TABLE 3-4 (Continued)

Component	Performance	
Data Distribution Panel	Provides 1700 accessible test points.	
Television Equipment	Frame rate Line rate	10-15 frames/second 200-300 lines/frame

3.3.6 RECOVERY AIDS

The Recovery Aids System provides the necessary equipment to accomplish the following objectives:

a. Locate and maintain a position plot of the CM after landing.

b. Establish and maintain voice communication between the CM and recovery forces.

3.3.6.1 Equipment Description

The components of the Recovery Aids System and their function and description are given in Table 3-5.

3.3.6.2 Performance

The description of performance is the same as for the Instrumentation System given in paragraph 3.3.5. Details are given in Table 3-6.

TABLE 3-5

RECOVERY AIDS - COMPONENTS, FUNCTIONS, AND DESCRIPTION

Components	Description and Function
VHF AM Transmitter/Receiver	Described previously as part of Communications System. Used for voice communications between CM and rescue aircraft after earth landing. Also provides direction-finding capability in event of VHF Recovery Beacon failure.
VHF Recovery Beacon Equipment	Provides aid to rescue aircraft in locating the spacecraft during post-landing phase. Compatible with radio direction finding systems including ITT and SARAH receivers. Manually actuated on impact during water landing.
VHF Recovery Antenna Equipment	Provides spacecraft antenna requirements for VHF radio recovery operations during the recovery and post-landing mission phases.
(1) VHF Recovery Antenna	Consists of an extendable HF/VHF antenna which extends automatically after main parachute deployment. The output from the VHF multiplexer is switched to the VHF antenna after it is extended.
(2) Associated Components	This equipment includes switches, deployment mechanism, and cables.
Backup Recovery Antenna	A manually erectable antenna for post-landing phase. Handles outputs of VHF multiplexer and HF transceiver in the event of damage to the HF/VHF recovery antenna.
HF Transceiver Equipment	Provides direction finding, keyed CW, and voice communication during post-landing phase. Transceiver is single sideband, operating on one frequency. Operates into HF recovery antenna.

TABLE 3-5 (CONTINUED)

Components	Description and Function
HF Recovery Antenna Equipment	Provides spacecraft antenna requirements for HF operation.
(1) HF Recovery Antenna	Consists of an HF/VHF whip antenna that is extended after main parachute deployment.
(2) Associated Components	This equipment includes switches, deployment mechanism, and cables.

TABLE 3-6

RECOVERY AIDS - PERFORMANCE

Components	Performance
VHF AM Transceiver	See Table 3-4.
VHF Recovery Beacon Equipment	Frequency----------243 mc Frequency stability----0.005 percent Modulation----------Tone 15% AM Power Output----------3 watts Duty Cycle----------2 seconds on, 3 seconds off
VHF Recovery Antenna Equipment	General----------Transmit and receive Frequency----------225 to 260 mc, 300 mc Pattern coverage-------Omni-directional in Y - Z plane Beamwidth 90 degrees Polarization----------Vertical linear VSWR----------2 to 1 System insertion loss--1 db Power handling capability - 40 watts CW
Backup HF/VHF Recovery Antenna	Extendable; deployed manually after landing.
HF Transceiver Equipment	Frequency----------One preset frequency in the band 2 to 20 mc Frequency stability----To be supplied Modulation Type----------SSB; KCW, voice or tone Tone Modulation------1000 cps Voice frequency response----------300 to 3000 cps at ± 3 db Power Output Voice----------20 watts peak envelope power Tone----------20 watts peak

TABLE 3-6 (Continued)

Components	Performance
HF Recovery Antenna Equipment	General----------Transmit and receive Frequency----------To be supplied Pattern coverage-------Omni-directional in Y - Z plane Polarization----------Vertical linear VSWR----------2 to 1 System insertion loss--1 db Power handling capability----------20 watts peak envelope power

3.3.7 ELECTRICAL POWER SYSTEM

The Electrical Power System (EPS) has major components in both the CM and the SM. For clarity, the entire system will be discussed in this section and the components housed entirely in the SM will again be briefly discussed in the SM section.

3.3.7.1 Equipment Description

The major components of the EPS are located as shown in Table 3-7.

TABLE 3-7

LOCATION OF ELECTRICAL POWER SYSTEM (EPS) COMPONENTS

Components	Location
Fuel cells and controls	Service Module
Tanks, radiators, heat exchangers, piping valves	Service Module
Total reactants plus reserve	Service Module
Zinc-silver oxide batteries	Command Module
Battery chargers, inverters, power system display and control panels	Command Module
Command Module lighting	Command Module

Fuel Cell Subsystem and Modules - The Apollo fuel cell subsystem consists of three independent modules containing a number of non-regenerative hydrogen - oxygen fuel cells with their reactant tankage components.

Fuel cell modules are of a low pressure, intermediate temperature, Bacon type, employing dual-porosity nickel electrodes and operating at temperatures up to 500° F. Aqueous potassium hydroxide is used as the electrolyte. The fuel cell provides direct current electric power, employing hydrogen and oxygen as the reactants.

Reactant Tankage and Flow Arrangement - Sufficient tankage is provided to store all reactants for the fuel cell modules and environmental requirement for a 14-day mission. Reactants are kept in the supercritical form and storage provisions consist of two equal volume storage vessels for each reactant. The main oxygen storage vessels supply both the Environmental Control System and fuel cells, as shown in Figure 3-16.

Radiator Subsystem - The EPS space radiator subsystem is used to dissipate waste heat generated in the fuel cells. Condensed water is separated and supplied to the Environmental Control System in potable form. The radiator subsystem is designed to be compatible with random radiator orientation in space. The radiator is fixed and located at the outer surface of the SM.

Auxiliary Power Subsystem - The auxiliary power subsystem is composed of the following components:

Reentry and Recovery Batteries - Two zinc-silver oxide batteries are provided to supply all CM electrical power requirements during reentry and recovery flight phases. The capacity of each battery is sufficient to supply essential loads in the event of failure of the other battery. Reentry batteries are also used to supply peak system

CONFIDENTIAL

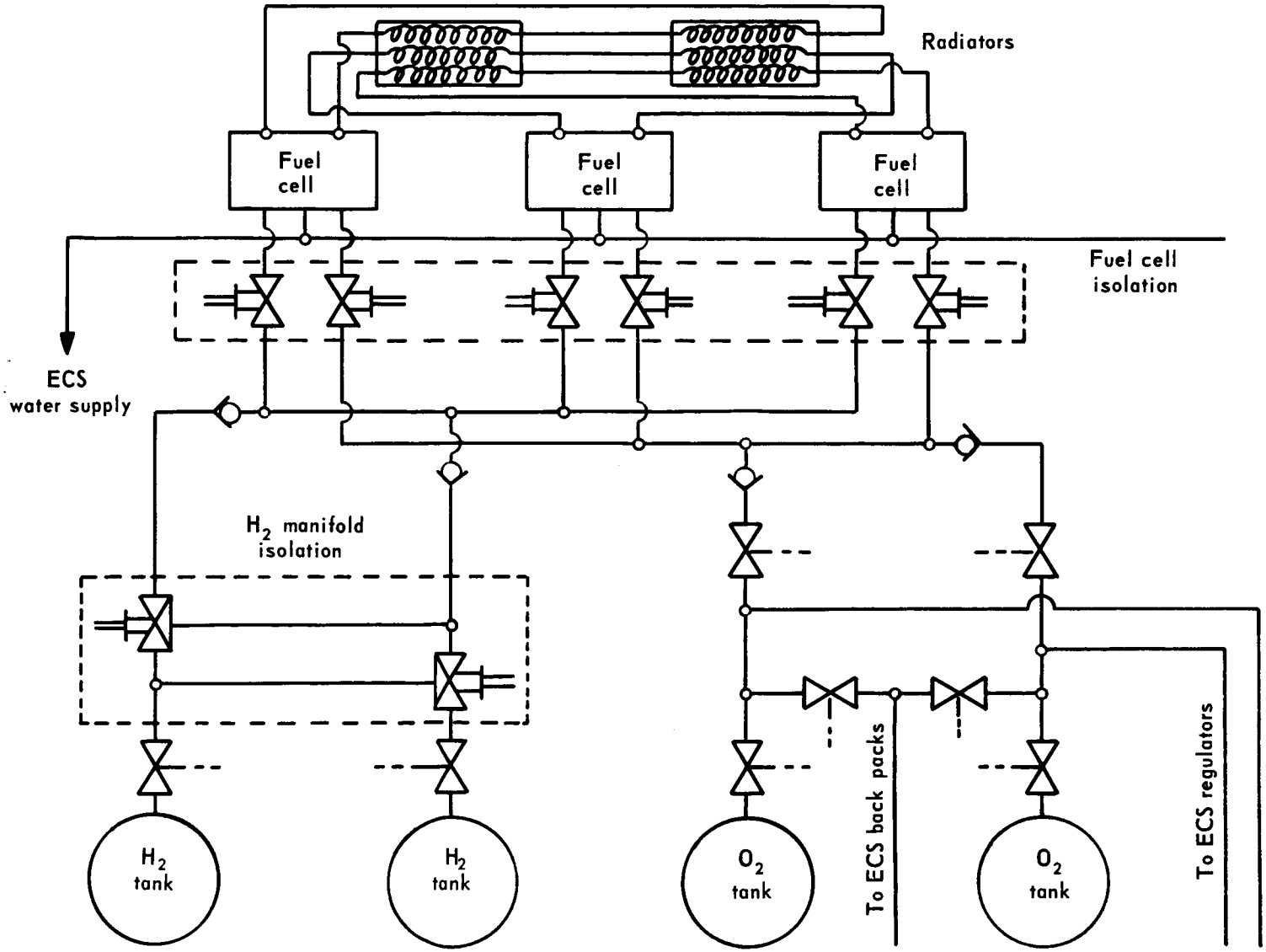

Figure 3-16 - Command Module Electrical Power System Flow Diagram

CONFIDENTIAL

load demands during earlier flight phases. One battery charger is provided to recharge the reentry batteries from fuel cell subsystem power after such use.

Post-Landing Battery - One zinc-silver oxide battery is provided to supply essential loads during the post landing phase. This battery is normally fully charged and isolated from the main electrical power equipment. Provision is made to recharge the post-landing battery in flight from the battery charger.

Pyrotechnic Batteries - Two zinc-silver oxide batteries are provided to supply redundant pyrotechnic loads.

Load Classification and Power Source Operating Modes - All electrical loads supplied by the distribution system are classified as Essential, Non-essential, Pyrotechnic, or Post-Landing. Essential loads are defined as those loads, except for pyrotechnic firing circuits, which are mandatory for safe return of the CM from any point in any mission. Non-essential loads are defined as those which are not necessary for successful completion of the mission. Pyrotechnic loads are those imposed by the bridgewire circuits of pyrotechnic devices but do not include pyrotechnic system logic that are essential in employing pyrotechnic devices. Post-landing loads are those required after earth landing. Table 3-8 defines the load classification and the provisions for power-source operating modes.

DC Power Distribution - The output of all three fuel cell modules and both reentry batteries is fed to each of two isolated

CONFIDENTIAL

TABLE 3-8

Load Classifications Supplied for Different Power-Source Operating Modes

Flight Phase	Pre-Launch		Entry and Recovery		Post-Landing	
Power-Source Operating Mode	Normal	Emergency	Normal	Emergency	Normal	Emergency
Power-Source equipment operating	Two or three fuel cells	One fuel cell	Two entry batteries	One entry battery	One entry battery and post-landing battery	Post-landing battery
Load classes supplied	Essential Pyrotechnic, Non-Essential	Essential, Pyrotechnic	Essential, Pyrotechnic Non-Essential	Essential, Pyrotechnic	Essential, Non-Essential, Post-Landing	Essential, Post-Landing

CONFIDENTIAL

redundant essential busses, A and B as shown in Figure 3-17. Redundant essential loads are connected alternately to essential buss A or B and non-redundant essential loads are connected to both essential busses, with isolation diodes used to retain isolation of essential busses A and B. Redundant pyrotechnic busses fed by pyrotechnic batteries are also provided and supply only pyrotechnic loads.

All essential loads are thus connected to the two essential busses so that loss of power to either buss will not cause interruption of power to any essential load system.

The non-essential loads are connected to the non-essential buss and provision is made for manually disconnecting these loads as a group under contingency conditions. The non-essential buss is connected to both essential busses through isolating diodes.

Post-landing loads are supplied by the post-landing buss.

Inversion and Distribution of AC Power - Three static inverters are provided to supply 400 cps, 115/200 volts, 3-phase a-c power by inversion from the spacecraft primary d-c power sources. One inverter has capacity for supplying all spacecraft primary 400 cps power, with the other two inverters acting as redundant idle standby units. Transfer relays provide for manually switching loads to one of the other inverters in event of inverter failure. Inverters supply a-c busses No. 1 and No. 2 as shown in Figure 3-17.

Power Returns and System Grounding - Power distribution from the power sources is accomplished by a two-wire system for d-c loads

CONFIDENTIAL

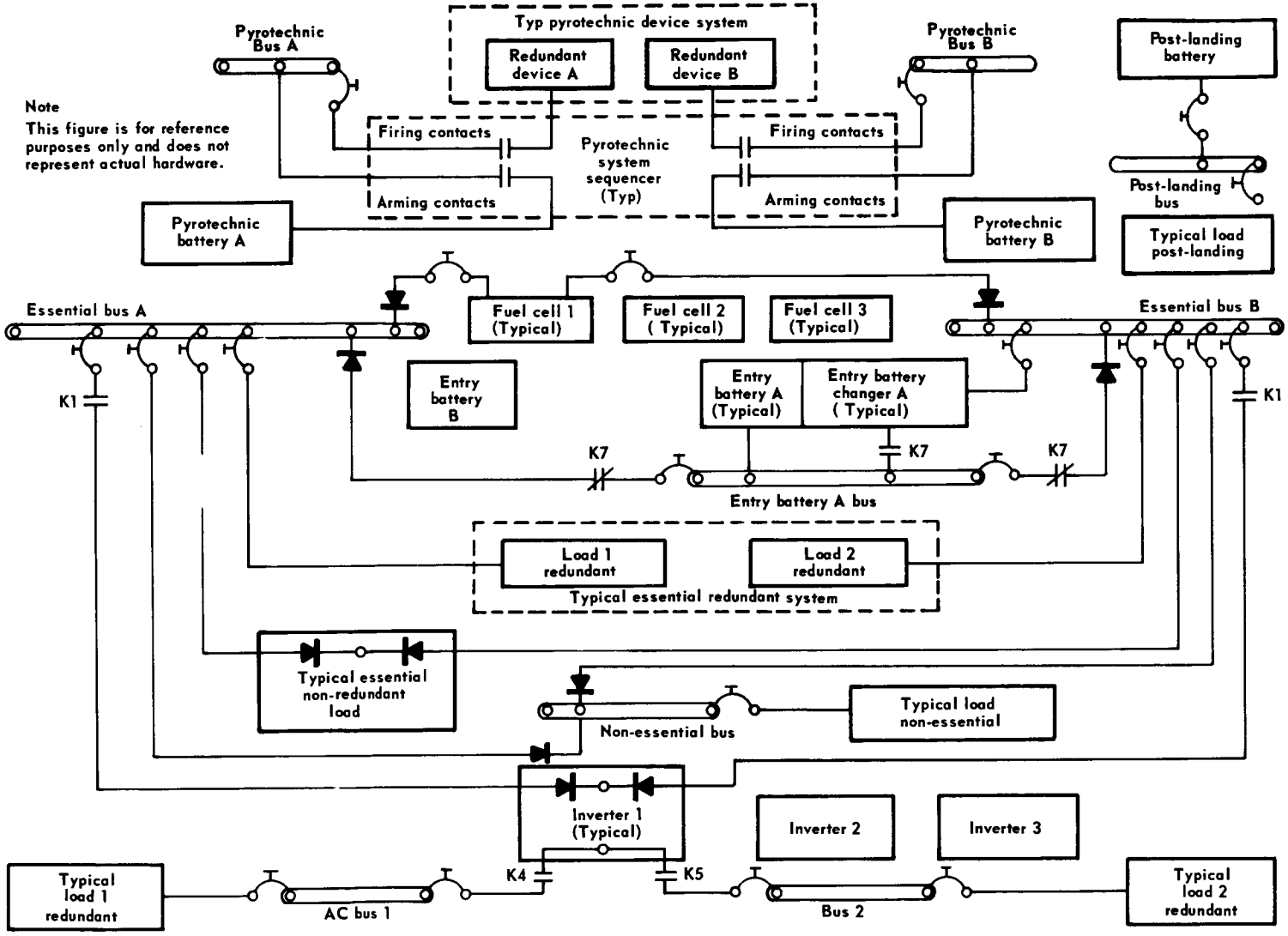

Figure 3-17 - Command Module Electrical Power System Schematic

CONFIDENTIAL

and single-phase a-c loads, and a four-wire system for three-phase a-c loads. The power return current passes through the second d-c wire (or single-phase a-c wire), or the fourth a-c wire for unbalanced three-phase a-c loads, to a negative d-c buss and a neutral a-c buss. These two busses have the only ground connection to spacecraft structure in the spacecraft primary a-c and d-c power system.

Circuit Protection - Circuit protection for the primary power system is provided by system circuit breakers and diodes shown in Figure 3-17. Circuit breakers are provided for each feeder from every buss for the following purposes:

a. To clear the busses of ground faults in the load system feeder wiring, or in other busses.

b. To protect feeder wiring from deterioration caused by faults or overloads.

c. To prevent production of smoke or toxic fumes in the CM.

Wiring, Control and Display - The power distribution subsystem includes all necessary connectors, wiring, switching, relays, controls, and indicating devices and interconnections between modules of various systems. Those are used for controlling electrical power sources, indicating source and line status and supplying and controlling power to all electrical systems.

External Power - Provision is made to energize the spacecraft Electrical Power System from an external 28-volt d-c power source through an umbilical connector. No provision is made for energizing the spacecraft

a-c power distribution subsystem from an external a-c power source. The spacecraft inverter is used to perform this function using external d-c power.

3.3.7.2 Operation

Operating Conditions - Nominal fuel cell operating pressure and temperatures are approximately 60 psia and 425° F to 500° F respectively.

Normal Operation - During all mission phases, from launch until reentry, the normal electrical power requirements of the spacecraft are supplied by all three fuel cell modules.

Emergency Operation - In the event of failure of any one fuel cell module the failed unit will be electrically and mechanically isolated from the subsystem and the remaining modules will supply the power demand. In the event two fuel cell modules fail, the remaining module will be capable of providing emergency levels of power. The spacecraft electrical power loads will be immediately reduced by the crew and manually scheduled to hold within the generating capabilities of the one remaining fuel cell module.

Terminal Voltage - The subsystem voltage in all phases of normal operations varies between the limits of 27 to 31 volts. In the emergency mode, with one module operating, voltage limits are the same.

Fuel Consumption - Under normal conditions of operation, the specific fuel consumption does not exceed 0.9 pound of reactants per kw-hr.

Water Generation - The water generated by each fuel cell module is potable and is separated from the reactants. The water generation rates lie between 1.3 and 2.3 pounds per hour for normal operation and between 0.8 and 2.7 pounds per hour for contingency operation.

Start Up Heaters - Self-sustaining reaction in the fuel cells is initiated at a temperature of approximately 300° F. Internal heaters are provided to facilitate ground starting only. These heaters are not capable of heating modules to excessive temperatures with the fuel cell and its cooling system inoperative.

3.3.7.3 Interfaces

Pre-launch Power Distribution - Ground Support Equipment d-c electrical power is received by the SM Electrical Power System to replace the use of fuel cells and batteries during system preflight checkout. The ground power source is capable of supplying demands from zero to 4,000 watts. External d-c power is provided to the SM through two separate feeders to essential busses A and B. Each feeder is capable of alternately being energized to check the spacecraft essential buss isolation diode system. However, both feeders operating in parallel are used during maximum load conditions. External a-c power is not required for system preflight checkout. External d-c power is used for this purpose, a-c power being supplied by the spacecraft inverter system.

Umbilical Connectors - Umbilical connectors are provided at the interface of separable modules. Two umbilicals connectors provide a redundant electrical interface between the CM and the LES. The

interface cable between the CM and the SM contains electrical connectors, coaxial connectors, coolant lines, oxygen lines, and water line. The CSM umbilical connector is provided with a linear shaped charge separation mechanism, is designed to prevent heat transfer, and is sealed for corpuscular radiation protection. The CSM interface cable is separated with a linear shaped charge. Critical interface electrical circuits are isolated by a dead face switch in the CM.

Sequencer - A sequencer is provided to arm and energize pyrotechnic devices and cause sequential operation of the Launch Escape and the Earth Landing Systems. The sequencer has redundant circuitry to provide for dual inputs to each pyrotechnic device.

3.3.8 GUIDANCE AND NAVIGATION SYSTEM

The CM Guidance and Navigation (G&N) System performs measurement, data processing, and the guidance and navigation control functions. As shown on Figure 3-18, the control functions are interrelated but distinguishable. Although not shown on the figure, the astronauts are in complete control of the spacecraft during all phases of any mission and can make decisions and take action to assure their safety and success of the mission.

The system provides guidance and navigation for the spacecraft during the translunar, lunar orbit, transearth injection and the transearth phases of flight. In addition, the navigation subsystem is used to determine ephemeris data during earth orbit and the guidance subsystem is used during reentry. The system also monitors the launch vehicle navigation and guidance system during earth launch and earth parking orbit for the purpose of initiating an abort, if required.

The guidance subsystem utilizes information from gyroscopes, accelerometers, clocks, and for certain mission phases is augmented by line-of-sight and radar data. This subsystem generates steering signals which accomplish desired changes in trajectory through control of rocket firings. Similar signals indicating steering changes are transmitted to the navigation subsystem.

The navigation subsystem employs optical line-of-sight data as well as tracking data communicated from earth-based facilities. This subsystem provides information on position, velocity and trajectory

CONFIDENTIAL

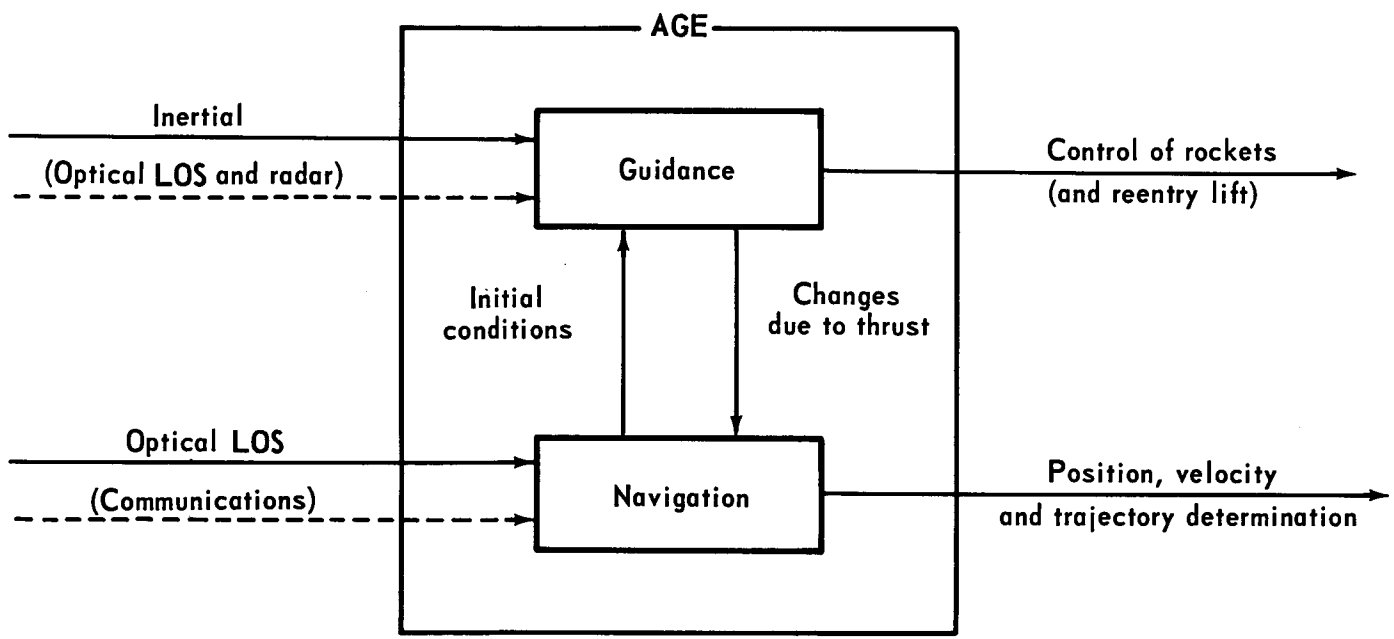

CONFIDENTIAL

Figure 3-18 - Command Module Guidance and Navigation Control Functions

to the guidance subsystem.

In addition to its connection with the SM Propulsion System in starting or stopping engines and modulating thrust levels, the G&N System has its functions integrated with those functions of the Stabilization and Control and the Reaction Control Systems. For example, guidance steering error signals are sent to the autopilot to control rocket direction or lift forces during reentry.

Guidance and Navigation equipment is located in the lower equipment bay as shown on Figure 3-19.

3.3.8.1 Equipment Description and Operation

The major components of the CM Guidance and Navigation system are:

a. Inertial measurement unit (IMU)

b. Apollo guidance computer (AGC)

c. Scanning Telescope (SCT)

d. Sextant (SXT)

e. Coupling display unit (CDU)

f. Map and data viewer (MDV)

g. Navigation base (NVB) - IMU, SXT, and SCT mounting platform

h. Power servo assembly (PSA)

i. Displays and controls (D&C)

j. Rendezvous radar (RR)

k. Transponder (TX)

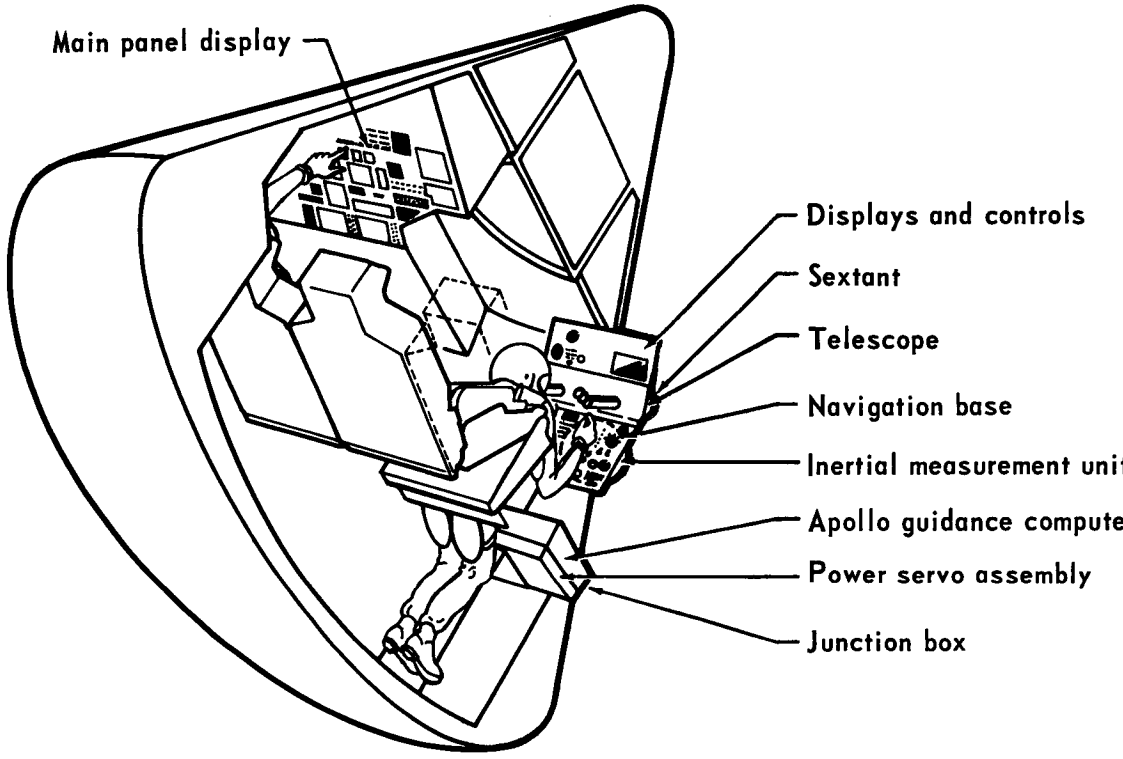

Figure 3-19 - Command Module Guidance and Navigation Equipment Location

IMU - The IMU is the primary inertial sensing device. Its operation is based on acceleration and orientation measurements obtained from accelerometers and gyroscopes. The IMU consists of a three-degree-of-freedom gimbal system in which the outer gimbal axis is along the re-entry roll axis of the CM. The gimbal order of the IMU is outer-roll, middle-yaw, and inner pitch. The accelerometers are carried on the innermost gimbal, called the stabilized member, which is held non-rotating with respect to inertial space by the action of error signals from three gyroscopes, also mounted on this stabilized member. These gyro error signals are fed back to achieve the space stabilization by means of servos that drive the IMU gimbal servo motors. There are two major IMU outputs. First the IMU produces signals from gimbal-angle transducers corresponding to the attitude of the spacecraft. Second, the IMU also produces, for use by the computer, velocity increments from the accelerometers. The stabilized member gyros can be torqued from the computer to process the stable member for initial alignment. During control phase these gyros are not torqued.

The IMU in the CM is turned on prior to launch, is aligned on the launch pad, and remains on during earth orbit, translunar injection, transposition, and initial docking. The IMU is aligned once each earth orbit. After docking the IMU is turned off. It is turned on and aligned during midcourse prior to each velocity correction and after each velocity correction, it is again turned off except the last velocity correction. The IMU remains on after the last midcourse

velocity correction and is realigned prior to lunar orbit insertion. The IMU remains on while in lunar orbit and is realigned prior to lunar orbit insertion. The IMU remains on while in lunar orbit and is aligned once each orbit. During the LEM descent, the IMU in the CM remains on as does the IMU in the LEM. Once the LEM is on the lunar surface the IMUs in the LEM and the CM are turned off, if the mission is long duration. The IMUs in the LEM and CM are turned on prior to lunar launch, however, if the lunar stay time is short, the IMUs in the LEM and the CM will remain on. The IMUs in the LEM and the CM remain on during the rendezvous phase of the mission through the transearth injection phase. The IMU is turned on and aligned prior to each midcourse correction and after the last correction, the IMU is left on through entry.

AGC - The AGC is the central data processing core of the guidance and navigation system. It is a general-purpose digital computer having a large quantity of wired in memory (24,500 words) and programs and sufficient erasable memory to meet all requirements. The AGC uses three types of memory circuits; one is for a permanent storage of instructions and constants. The second type is for the temporary storage of intermediate results, modified instructions, and input data. Both of these types of memory are relatively economical and dense in terms of the number of words per unit volume. But they also require a comparatively long read-write time (about 12 u sec). The third type of memory, consisting of 16 registers has a read-write time of about 2 u sec and is about 1000 times larger in volume than the other two types of memory.

This group contains input and output registers which communicate between the computer and the rest of the Apollo system. The central registers participate in the instructions and cause the desired mathematical transformation to be effected. The permanent memory requires, very few active components, very little power to operate, and has properties that make it indestructible short of mechanical damage. The central registers and the input-output registers are made using semiconductor networks (micrologic NOR gates). These gates are the same as those used throughout the computer for decoding operation codes and addresses, generating control signals, pulse forming networks and translating networks.

The AGC in the CM is turned on prior to launch and remains on in the normal operating mode during the boost phase, insertion into earth orbit, while in earth orbit, and during translunar injection. After the first velocity correction is made, the AGC is placed in the idle mode and remains in this mode until the second velocity correction is made. After second correction the AGC is placed in the idle mode until the third velocity correction is made. The AGC remains in the normal operating mode until the CM-LEM configuration is inserted into a lunar orbit. The AGC in the CM remains operating in the normal mode while in lunar orbit. One-half hour prior to the LEM equi-period orbit insertion, the AGC in the LEM is turned on and remains in the normal operating mode during equal period orbit coast and powered descent. Once the LEM is on the lunar surface, the AGC in the LEM and CM are placed in the idle mode. One-half hour prior to lunar launch the AGC in the LEM

and the CM are placed in the normal operating mode until docking of the LEM with the CM has been achieved. The LEM AGC is then shut down and the AGC in the CM remains in the normal mode until after the first midcourse velocity correction is made. Prior to the second midcourse velocity correction the AGC is placed in the CM normal operating mode until completion of the correction. The AGC remains in the normal mode after the third velocity correction and remains in this mode until touchdown.

SCT - The scanning telescope is a panoramic sighting device of low variable power having two degrees of freedom. It is used during midcourse navigation to scan, locate targets, and direct the sextant for finer measurements. When in orbit, the scanning telescope is used to determine the position and direction of the vehicle by observing and measuring reference angles to landmarks. The SCT is mounted on an optics base in the lower equipment bay with the SXT. The optics base is in turn mounted to the navigation base.

The telescope optics are of unit power, with magnifications of IX and 3X afforded by turret-mounted dual eyepieces. A single rotatable dove prism is mounted in the SCT head which rotates through 360 degrees about the shaft axis and can sweep through a 60 degree line of sight angle from the shaft axis. The mechanization provides a viewing cone of 120 degrees line of sight. The instantaneous field of view is 60 degrees at IX power and 20 degrees at 3X power. Positioning of the SCT is accomplished by automatic motor drive or by manual control.

SXT - The sextant, used only on the command module, provides midcourse angle measurements, star elevation measurements, and star tracking for IMU alignment. It is a two line-of-sight, narrow field, two-degree-of-freedom instrument. A fixed line of sight, parallel with the shaft axis, is obtained by positioning the entire vehicle. The other line of sight is variable and is positioned by rotating a moveable scanning mirror. A beam splitter is used in conjunction with the mirror to measure the elevation angle between two targets. The SCT has a magnification of 28X with a two degree instantaneous field of vision, and can simultaneously sight two targets having angular separation of up to 59 degrees. The trunnion axis is capable of traversing an angle of 57 degrees from the shaft axis or vertical. Rotation may take place about the shaft axis to 27 degrees in either direction from a zero reference, and two rotations permit a total coverage comprising a cone of 114 degrees for any vehicle orientation. The SXT is mounted 57 degrees from the roll axis of the command module.

Two speed servo loops employing the crew as the loop closing element are used to position the SXT shaft and trunnion axes.

An optics control stick provides velocity commands to the shaft and trunnion axes either directly or through a resolver which produces viewed up-down and right-left control instead of shaft centered polar motion when the resolver is by-passed. The SXT and SCT follow the commanded shaft angle. The SCT trunnion drive may be set to follow the SXT trunnion angles, may be set to zero to look along the SXT shaft,

or may be fixed at 25 degrees from the shaft axis. The trunnion and shaft angles are transmitted to the AGC and are displayed digitally at the AGC.

CDU - The Coupling Display Unit is an angular coupling device connecting the IMU, AGC, stabilization and control system, and the Command Module optics with the AGC. The CDU is an assembly of electro magnetic transducers and gears with a servo motor drive and display read out. It is basically a servo repeater which accepts digital and analog inputs and provides outputs in terms of shaft position and digital read out of shaft position. The unit acts as a comparator between IMU position and AGC commanded position and is capable of supplying the AGC, IMU, and optics with orientation information. One CDU is required for each of the three IMU gimbals and two CDUs are used for the optics shaft and trunnion axes in the Command Module. The Command Module CDU assembly is composed of five CDUs and the LEM CDU assembly contains three CDUs.

Each CDU is made up of 16 and 1 speed resolver repeaters and $\frac{1}{2}$ and $\frac{1}{4}$ speed resolver transmitters. The three CDUs associated with the IMU use only the two resolver receivers. Each CDU has a digital readout, a manual slewing switch, and a manual positioning wheel. The mode of operation of the three CDUs connecting the IMU and AGC may be manually selected by six push buttons. The modes of operation are:

a. Zero Encoder - This mode drives the CDUs to the zero position.

b. CDU Manual - This mode allows manual CDU positioning.

c. Coarse Align - This mode produces IMU alignment by causing the IMU gimbals to follow the CDU angles generated by the AGC or manually.

c. Fine Align - This mode causes the CDUs to follow the IMU gimbals, providing the AGC with IMU position during the period the AGC is torquing the IMU gyros.

e. Attitude Control - This mode provides the stabilization and control system with a CDU output which represents the difference between the AGC attitude command and the IMU attitude.

f. Entry - This mode increases the speed capability of the roll CDU from 17.6 deg/sec to 281.6 deg/sec by the disconnection of the 1 speed resolver repeater.

MDV - The Map and Data Viewer is a film viewer for the display of maps, star charts, details for navigational sightings, date for abort trajectories, check lists, and inflight maintenance procedures. The unit is mounted on the control panel of the lower equipment bay of the command module and the unit with one film cartridge has a weight of 8.5 pounds.

Each film cartridge contains 50 feet of 16 mm film, producing a capacity of 2000 frame/cartridge. The grid lines of the viewer screen are a vernier for the grid lines that will be on maps and charts. The MDV manual controls consist of a wheel for positioning film, a knob for

positioning the screen vernier against the projected map scale, and a switch for placing the lamp filaments in parallel for viewing under high ambient light levels. The manual controls are all located on the MDV panel. The automatic controls consisting of a two directional slew switch, a two directional single frame advance are located on the G&N indicator and control panel. The MDV power switch and the switch for selecting low and medium levels of screen illumination are also on this panel.

PSA - The Po wer and Servo Assembly contains special power supplies, servo amplifiers for the optics and IMU drives, signal conditioning for telemetry and inflight test equipment, and miscellaneous electronics. The unit is used in the LEM and command module. The CM PSA, with stored spares and signal conditioning tray has a weight of approximately 57 pounds with loose spares of the PSA weighing 9 pounds. The PSA is composed of 10 trays classified as follows:

a. Gimbal Servo, 10 modules

b. Power Supply, 9 modules

c. Gyro-Accelerometer, 12 modules

d. Gyro-Accelerometer, 12 modules

e. CDU and Gyro accelerometer, 9 modules

f. CDU and Power Supply, 7 modules

g. Miscellaneous, 5 modules

h. Optical, 8 modules

i. Optical, 9 modules

j. Power Diodes and Signal Conditioning

Displays and Controls - The guidance and navigation system displays provide the crew monitoring and control capability. The total weight of the displays is 37.5 pounds and require a panel area of 260 in^2.

The displays common to the Command Module and LEM are grouped as follows:

a. AGC group

b. IMU group

c. SCT and SXT group

d. CDU group

e. Gyro Torquer group

f. Clock group

g. G&N Power Controls

h. Conditional, caution, and abort lights

i. IMU gimbal angles display

j. Attitude error signals

Rendezvous Radar - The rendezvous radar is a low power, long range instrument which provides tracking data to the guidance system and displays. The radar operates in conjunction with a Target Transponder to provide range, range, rate, and angular information to the AGC and to displays independent of the primary navigation and guidance system. The radar variables will also be displayed by means of the AGC display system when selected by the crew. The radar is mounted by two gimbals on

the LEM vehicle to function with a transponder located in the CM or on the lunar surface. An identical radar is mounted by two gimbals on the CM to operate with a Transponder located in the LEM. Both systems may operate simultaneously. The radar is a solid state, coherent, X-band device utilizing an 18 inch gimballed dish antenna having a 4 degree beam width. The radar may be placed in an automatic tracking mode, an AGC generated position or search mode, or be manually positioned.

3.3.9 STABILIZATION AND CONTROL SYSTEM

The Stabilization and Control System (SCS) performs the following functions essential to spacecraft operation:

a. Rate damping after tower jettison to stabilize the CM prior to and during reentry from high altitude abort.

b. Angular orientation and stabilization of the spacecraft about three axes under command of the crew, the guidance system, or the self-contained standby inertial reference system.

c. Translational control along three axes as a result of manual commands for ullage maneuvers, and small velocity corrections during translunar docking and during backup to LEM controlled rendezvous and docking.

d. Manual control for engine thrust and spacecraft angular and linear motion.

e. Propulsion engine thrust vector control during midcourse corrections and lunar-orbital mission phases.

f. Displays for visual indication of necessary control parameters.

3.3.9.1 Equipment Description

The SCS consists of the following basic components:

a. Attitude reference

b. Body rate gyro package

c. Control electronic assembly

d. Manual controls

e. Displays

Attitude Reference - The SCS attitude reference provides angular displacement signals in three axes for spacecraft control and crew display during the periods the G&N IMU is not operating. The SCS attitude reference consists of three body-mounted gyros which have the capability of being replaced in flight without the use of precision alignment equipment. Provision is made to display the measured body angular displacement in terms of an inertial reference frame.

Rate Gyro Package - The SCS rate gyros provide the necessary spacecraft angular rate information for stabilizing the spacecraft in all modes of operation. The rate sensor package consists of three body-mounted rate gyros which are replaceable in flight without the use of precision equipment.

Electronic Control Assembly - The electronic control assembly contains all the electronics associated with the SCS and is packaged to facilitate the inflight repair capability concept. The electronic assembly accepts attitude and steering commands from the Guidance and Navigation System when it is operating. Attitude information is accepted from the SCS attitude reference at all other times. The electronic assembly contains the necessary electronic circuitry to allow the crew to command changes in attitude, when required, from the manual controller. The electronic assembly contains the driver circuits for the SM engine gimbal actuators and for the Reaction Control System control valves.

The circuitry provides the electrical signal to furnish the minimum impulse required during the navigation sightings and to maintain attitude stability. The electronic circuitry contains the necessary logic circuitry to allow any commanded translation maneuvers while maintaining attitude control and stability of the spacecraft.

Manual Controls - The crew's manual controls consist of stick type controllers; translation commands and rotation commands are on separate controllers. The controllers are designed for use with a pressure suit gloved hand. Rotational manual commands are in the form of rate commands to the SCS. The crew is provided the capability of positioning the SM engine such that the thrust vector is aligned through the predicted spacecraft center of gravity upon ignition of the SM engine.

Displays - The SCS displays are designed to give the crew instantaneous visual information concerning the spacecraft attitude, attitude error, angular rate, incremental velocity, propulsion engine gimbal position and reentry deceleration. Attitude is displayed on an all-attitude ball-type indicator and is obtained from the Guidance and Navigation System when it is operating. Displayed attitude is obtained from the SCS at all other times. During velocity change maneuvers, velocity to be gained is displayed to the crew for monitoring the velocity change and shutting down the SM engine in the event the G&N System fails to do so. The actual velocity change information is the integrated output of a body-mounted accelerometer. Body rates as

measured by the SCS rate gyro package are displayed on three rate meters. Propulsion engine gimbal angles are displayed by a measure of pitch and yaw actuator position.

During the reentry phase, spacecraft deceleration and roll position is displayed in the crew's zone of vision to enable the crewman to manually control the spacecraft in the event the G&N System in inoperative.

Mode Selection - The SCS is designed to operate in various modes during a mission. Selection of the modes such as navigation sighting, velocity correction, and reentry is controlled by the crew. A mode selectro is provided to enable the crew member to switch to the desired mode of operation by a single control. SCS modes, in general, are a backup to the corresponding G&N (primary) modes.

3.3.9.2 Operation

The SCS performs such functions as CM stability augmentation, spacecraft attitude control and stabilization, and provides signals for manual control of the spacecraft during the following mission phases:

a. Atmospheric abort

b. Post-atmospheric abort

c. Translunar and transearth

d. Rendezvous and docking

e. Reentry

Atmospheric Abort - The SCS provides stability augmentation for the CM after launch escape system separation. The SCS operates in

a rate mode for an atmospheric abort condition. Provisions are made for the insertion of vehicle rotational commands by the crewman through use of a manual rotation controller.

Post-Atmospheric Abort - The SCS provides attitude control and stabilization of the spacecraft by position control of the SM Propulsion System thrust vector for aborts occuring after the LES has been jettisoned and by use of the Reaction Control System. The SCS is capable of accepting attitude and steering commands from the G&N System for path control.

Translunar and Transearth - The SCS provides attitude stabilization and control in all modes of operation during the translunar and transearth phases of the mission. The SCS satisfies the navigational sighting requirements for angular rates and orientation. It accepts attitude and attitude change information from the Guidance and Navigation System when the G&N System is operating. The SCS also provides attitude, control, and velocity change information for display to enable the crew to accomplish transearth injection and velocity change maneuvers in the event of an inoperative guidance system.

Rendezvous and Docking - The SCS provides attitude and rate information for display and CM and SM control and statilization during the docking maneuver in the translunar phase. The required rotation and translation maneuvers are commanded from the crew hand controllers. The primary rendezvous and docking mission in the lunar orbit phase rests with the LEM. The spacecraft SCS provides maneuver capability for

backup completion of the rendezvous and docking maneuver in the event the LEM is unable to complete the rendezvous and docking maneuver.

Reentry - The SCS provides rate stabilization of the CM in the pitch and yaw planes during the reentry phase of the mission. The SCS provides rate stabilization and accepts attitude and attitude change commands from the G&N System about the roll axis in the reentry phase. The SCS provides roll attitude spacecraft deceleration for display to enable the crew member to manually control the spacecraft roll attitude.

3.3.10 ENVIRONMENTAL CONTROL SYSTEM

The control components of the Environmental Control System (ECS) are located in the CM, with the system controlling the environment of the Command Module only. Additional components of the system such as the space radiators are located in the SM. The entire ECS is discussed herein with a brief reference description in the SM section. A schematic is shown on Figure 3-20.

The ECS accomplishes the following functions for a three-man space flight of two weeks duration:

a. Provides a "shirtsleeve" environment in the CM.

b. Provides a conditioned atmosphere for pressure suit operation under normal and contingency conditions.

c. Provides waste management and odor control.

d. Provides thermal control of all equipment in the CM and SM under normal and contingency conditions.

e. Provides a habitable environment in the CM for the crew for a period of 24 hours after landing on land or water.

3.3.10.1 Equipment Description

The major equipment divisions of the ECS include the following subsystems:

a. Pressure suit circuit

b. Water-glycol circuit

c. Command Module pressure and temperature control

d. Oxygen supply

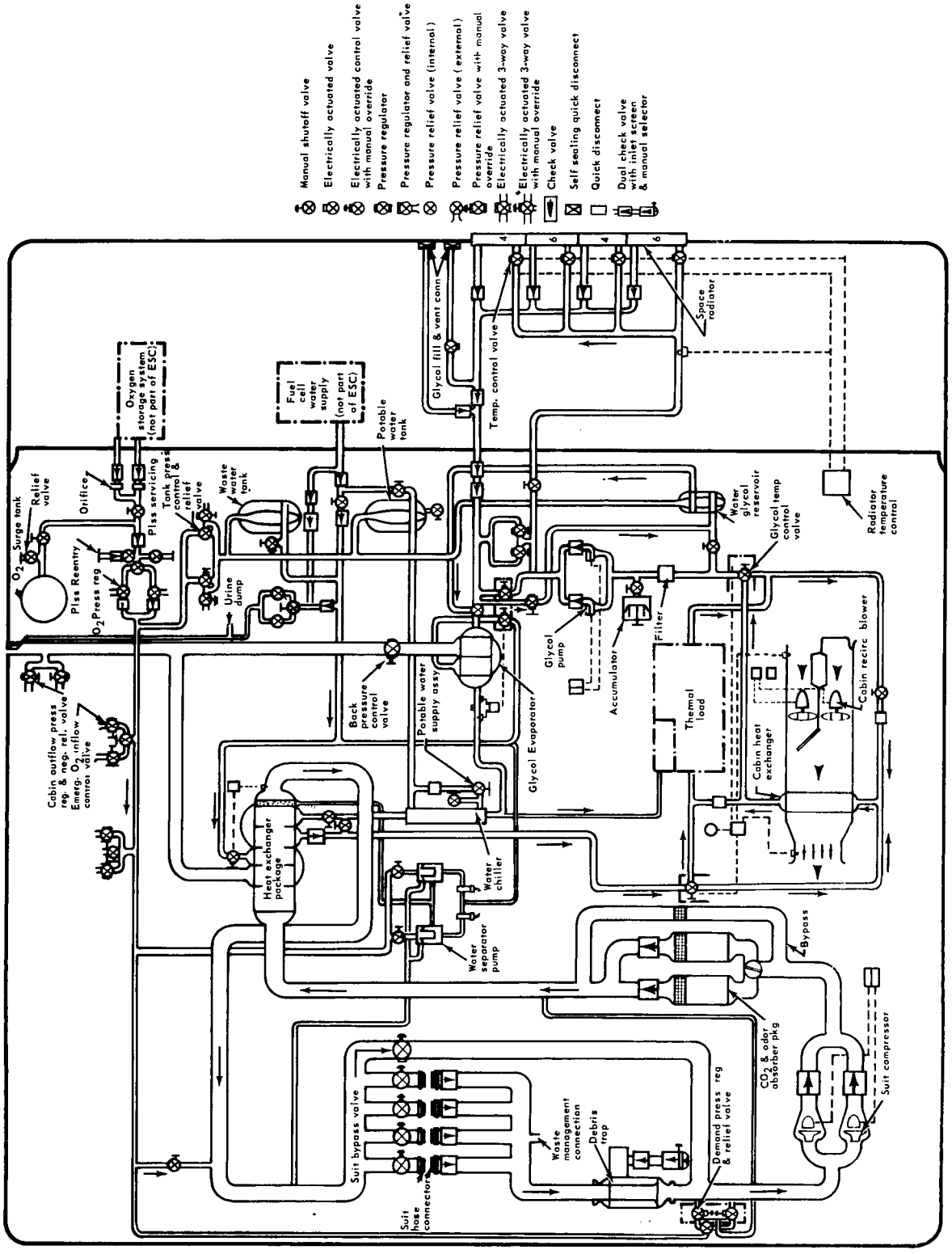

Figure 3-20 - Command Module Environmental Control System

e. Water management

f. Waste management

These subsystems are integrated so as to provide life support and environment control both in flight and on the launch pad. ECS equipment arrangement is shown on Figure 3-21.

Pressure Suit Circuit Subsystem - The pressure suit circuit automatically controls the flow, pressure, temperature, and composition of the pressure suit gas. This subsystem in conjunction with the CM pressure and temperature control subsystem, also controls the environmental conditions in the CM when any of the crew are out of their pressure suits. To provide these functions, the following equipment is used: Water separators, oxygen demand regulators, a debris trap, air compressors, carbon dioxide and odor absorbers, valves, and heat exchangers. Component redundancies are provided to obtain the reliability required for missions.

Water-Glycol Circuit Subsystem - The water-glycol circuit subsystem is a closed, intermediate, heat-transfer loop which permits heat to be delivered from the space vehicle interior to two space radiator panels. This subsystem provides cooling for electronic and electrical equipment in the CM by means of pumps, heat exchangers, radiators, valves, and controls.

Command Module Pressure and Temperature Control Subsystem - This subsystem automatically maintains the pressure and temperature of the CM interior within prescribed limits. This function is accomplished,

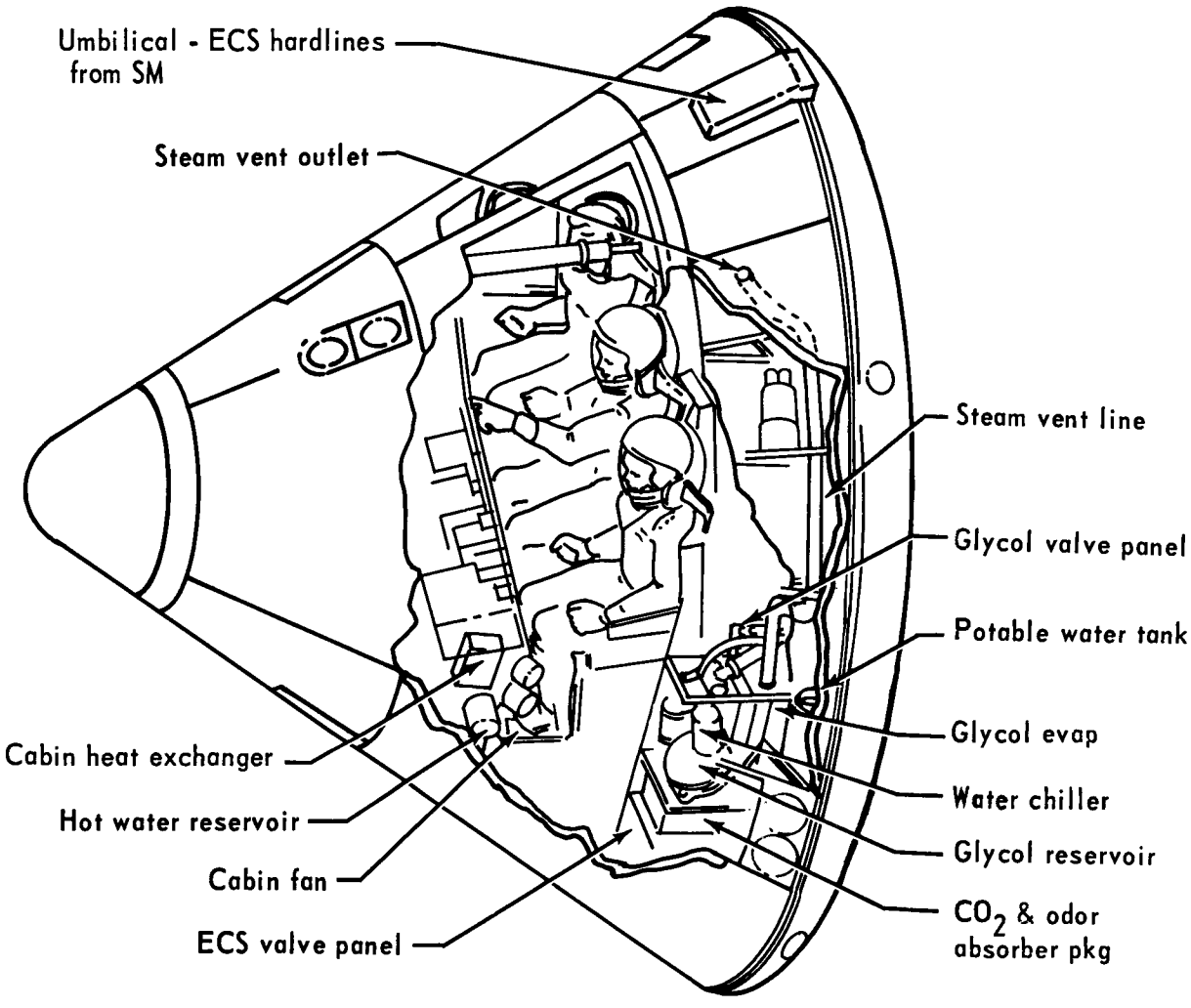

Figure 3-21 - Command Module Environmental Control System Equipment Location

in conjunction with the pressure suit circuit subsystem, by means of recirculation blowers, a heat exchanger, temperature control sensors and valves, CM pressure relief and regulator valves, and various other valves and controls.

Oxygen Supply Subsystem - The oxygen supply subsystem is subdivided as follows:

a. Normal oxygen supply

b. Reentry oxygen supply

The normal oxygen supply is capable of supplying all of the required oxygen for the entire mission up to the reentry phase. The supply functions by reducing the pressure of the space vehicle oxygen supply to the nominal working pressure of the suit circuits and potable water tank pressure controls. This is accomplished by suitable valves and regulators.

Reentry oxygen is furnished by a surge tank which also maintains cabin pressure in event of meteroid puncture. Redundant entry O_2 supply is furnished by the Portable Life Support System (PLSS) O_2 tank connected to the O_2 supply system. The reentry oxygen supply supplies the oxygen for mission completion after separation of the SM from the CM. During operation, the high pressure is reduced to the nominal working pressure of the suit circuit pressure controls. Oxygen storage tanks, high and low pressure regulators, and valves are used in the subsystem.

Water Management Subsystem - In addition to supplying potable

water for consumption by the crew members, the water supply subsystem provides supplementary cooling of the water-glycol heat transfer loop in the event of insufficient heat dissipation by the space radiators, and it provides contingency cooling of the suit loop. Potable water is stored prior to takeoff and is replenished from the fuel cell. These functions are accomplished utilizing water tanks, water accumulators, pressure controls, and valves. The system also collects water from the suit circuit and utilizes it for supplemental cooling as described above.

3.3.11 REACTION CONTROL SYSTEM

The complete CM Reaction Control System (RCS) consists of two identical systems identified as system A and system B which are operated simultaneously during normal control operation. These systems are interconnected as shown on Figure 3-22. Each system consists of a pressurized helium storage and distribution subsystem, an oxidizer storage and distribution subsystem, a fuel storage and distribution subsystem and six rocket engine subsystems.

In the event of a failure of either system, the remaining system provides adequate control to complete the mission safely. Malfunction detection permits isolation of a failed system. Each system incorporates features for facilitating preflight servicing, checkout, and deactivation. The oxidizer and fuel subsystems are pressurized just prior to CM separation from the SM, at which time the RCS System is activated.

After separation and prior to application of aerodynamic moments, the RCS provides the CM with three-axis control for reentry orientation. During reentry, the system provides roll control and pitch and yaw rate damping. The roll control engines are employed for CM orientation prior to touchdown. The remaining propellant is jettisoned just prior to touchdown.

During the boost phase, post maximum dynamic pressure aborts require the Reaction Control System to orient the CM for landing system deployment.

CONFIDENTIAL

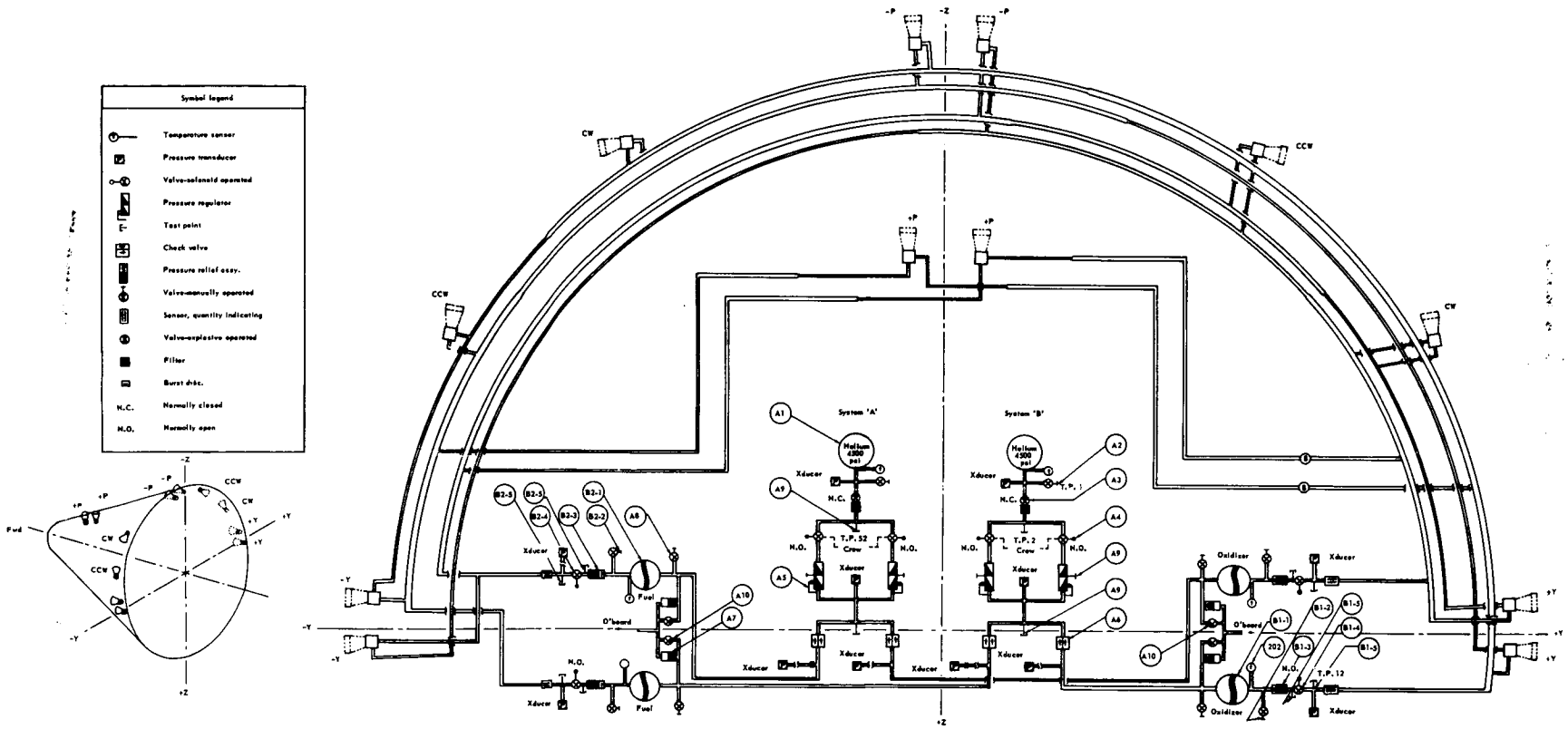

CONFIDENTIAL

Figure 3-22 - Command Module Reaction Control System

3.3.11.1 Equipment Description

The CM Reaction Control System consists of various components which are listed in Table 3-9 and shown on a schematic diagram on Figure 3-22. Each of these components is categorized into one of the three major categories depending on the unit's function and location in the overall system.

Category A - Components comprising the helium pressurization subsystem.

Category B.1 - Components comprising the liquid oxidizer subsystem.

Category B.2 - Components comprising the liquid fuel subsystem.

Category C - Components comprising the rocket engine subsystem.

Pressurized Helium Subsystem - The pressurized helium subsystem is composed of the Category A components. Each helium supply is contained within one spherical tank which is cradle-mounted to minimize detrimental tank flexures. During ground service operations and prior to initial subsystem pressurization, the high pressure helium is confined to the storage tanks by means of the normally closed electro-explosive valve. The electro-explosive valve contains an integral helium filter to protect the downstream regulators and check valves from harmful foreign particles. The manually controlled normally open solenoid valve provides the means of isolating the storage tank from

TABLE 3-9

COMMAND MODULE REACTION CONTROL SYSTEM COMPONENTS

CATEGORY	FIGURE CODE NO.	COMPONENT TITLE	FUNCTION
A	A-1	Vessel - Helium Pressure	Storage of high-pressure helium.
A	A-2	Valve-Helium Fill, Manual	Fill point during ground servicing operations
A	A-3	Valve-Helium Electro-explosive	Confine high-pressure helium to storage area during ground servicing operations.
A	A-3	Valve-Helium, Solenoid Operated	Isolate the storage area in the event of a downstream failure.
A	A-5	Regulator-Helium Pressure	Maintain the required constant downstream pressure.
A	A-6	Check Valve-Helium Pressure	Prevent oxidizer and/or fuel from backing up into helium system.
A	A-7	Relief Valve-Helium Pressure	Prevent overpressurization of fuel and oxidizer system.
A	A-8	Valve-Vent, Helium Pressure	Depressurizes low pressure side of helium system.
A	A-9	Coupling-Check, Helium Pressure	Provide pressure check point.
A	A-10	Valve-Helium, Electro-explosive	Connect helium system of systems A and B.
B.1	B.1-1	Tank-Oxidizer	Storage of nitrogen tetroxide (N_2O_4)

TABLE 3-9 (Continued)

CATEGORY	FIGURE CODE NO.	COMPONENT TITLE	FUNCTION
B.1	B.1-2	Valve-Oxidizer Fill Manual	Fill point during ground servicing operation.
B.1	B.1-3	Burst Diaphragm-Oxidizer	Confine N_2O_4 to storage area until it is pressurized.
B.1	B.1-4	Valve-Oxidizer, Solenoid Operated	Isolate storage area in the event of downstream failure.
B.1	B.1-5	Coupling-Check, Oxidizer	Provide pressure check point.
B.2	B.2-1	Tank - Fuel	Storage of monomethyhydrazine (MMH)
B.2	B.2-2	Valve-Fuel Fill, Manual	Fill point during ground servicing operation.
B.2	B.2-3	Burst Diaphragm - Fuel	Confine fuel to storage area until it is pressurized.
B.2	B.2-4	Valve - Fuel, Solenoid	Isolate storage area in the event of downstream failure.
B.2	B.2-5	Coupling - Check, Fuel	Provide pressure check point.
C	C-1	Propellant Valves(2)	The valves are electrically actuated solenoid valves matched to provide simultaneous propellant injection to the thrust chamber.

TABLE 3-9 (Continued)

CATEGORY	FIGURE CODE NO.	COMPONENT TITLE	FUNCTION
C	C-2	Thrust Chamber	The thurst chamber combines the hypergolic propellants resulting in an exothermic reaction. The resulting high pressure gases are ejected through a nozzle and the gas momentum is converted into thrust.

the downstream components in the event of downstream leakage or component failure. Upon command, the electro-explosive valve opens the helium supply to two individual pressure regulators connected in series. The check valves downstream of the regulators prevent the propellants from entering the helium subsystem in the event of failure of a propellant tank positive-expulsion device. The relief valve contains an integral helium filter and prevents detrimental pressure buildup in the propellant storage tanks. The vent valve provides means for venting the helium subsystem downstream of the check valves during propellant servicing and helium depressurization operations. The solenoid valves which connect the high pressure and regulated pressure areas of systems A and B provide an alternate path for pressurized helium in the event that a regulator fails closed in either subsystem.

Oxidizer Subsystem - The oxidizer subsystem is composed of Category B.1 components. The fill valve provides for servicing the oxidizer subsystem during ground operations. The oxidizer supply is contained within a hemispherically domed cylindrical tank which is cradle-mounted and equipped with a positive-expulsion device. Pressurized helium from the helium subsystem acts on the opposite side of the positive-expulsion device forcing the oxidizer through the distribution system to the rocket engine at the required feed pressure. During ground service operations and prior to actuation of the helium subsystem electro-explosive valve, the oxidizer is confined to the storage tank by means of the burst diaphragm assembly. This assembly contains an

integral filter to protect the rocket engines from harmful foreign particles. Upon initial pressurization of the subsystem, the pressurized oxidizer ruptures the burst diaphragm and flows to the normally closed oxidizer injector valves of the rocket engines. The manually controlled, normally open solenoid valve provides the means of isolating the oxidizer storage tank from the rocket engines in the event of a leak in the oxidizer distribution system or malfunction of a rocket engine.

Engine Subsystem - Each rocket engine subsystem is composed of Category C components. Activation of the propellant feed subsystem supplies propellant to the normally closed solenoid inlet valves mounted on the rocket engines. Electrical commands from the Stabilization and Control System (SCS) open the oxidizer and fuel valves simultaneously. In the event of a failure in the SCS, the crewman commands the engines on a separate manual circuit. The propellants, under subsystem pressure, flow through their corresponding injectory passages at high velocity, impinge in the combustion chamber and react exothermically. The expanded high temperature gases flow through the chamber and nozzle, and exhaust through ports faired into the CM skin producing the required thrust.

3.3.11.2 Operation

The operational characteristics of the various portions of the RCS are as follows:

Pressurization Subsystem Components - All pressurization subsystem (Category A) components are compatible with high-grade oil-

free commercial helium for long periods of exposure and intermittent exposures of short duration. Helium source pressure for the pressurization subsystem is approximately 4500 psig. Propellant is distributed to the engine at an approximate operating pressure of 280 psig.

Liquid Oxidizer Subsystem Components - All oxidizer subsystem (Category B.1) components are compatible with nitrogen tetroxide (N_2O_4) for long periods of exposure and intermittent exposures of short duration.

Liquid Fuel Subsystem Components - All fuel subsystem (Category B.2) components are compatible with monomethyhydrazine (MMH).

Rocket Engine Subsystem - The rocket engine is a pressure-fed, pulse-modulated, ablation-cooled, thrust generator with a dry weight of 8.5 pounds and has the following characteristics:

Fluid Compatibility - The rocket engine subsystem (Category C) components are compatible with nitrogen tetroxide and MMH.

Thrust - During continuous operation the rocket engine develops a vacuum thrust of 93 pounds.

Specific Impulse - The rocket engine develops a specific impulse of at least 286 seconds when operating for periods in excess of 800 milliseconds and not less than 160 seconds when operating at pulse widths of 20 milliseconds.

3.3.12 LAUNCH ESCAPE SYSTEM

The CM is fitted with a Launch Escape System (LES) as shown on Figure 3-23. The LES provides abort capability for the

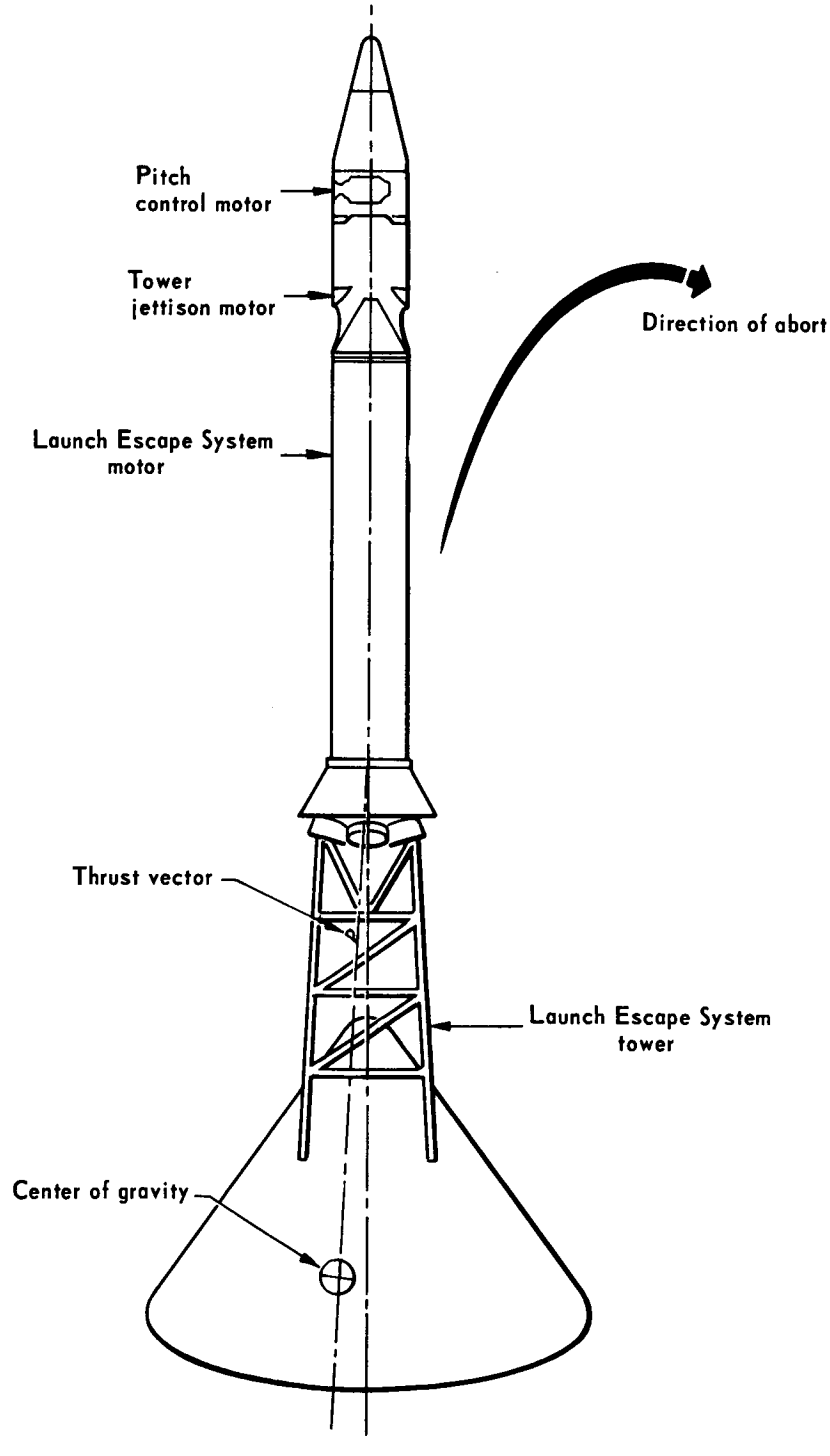

Figure 3-23 - Launch Escape System

CM during the period including final countdown, launch vehicle first stage burning, and for approximately 20 seconds of second stage burning. The pad abort requires a minimum altitude of 4000 feet and a range at apogee of 3000 feet. The LES carries the CM away from the thrusting launch vehicle during the period immediately after launch when range safety consideration precludes terminating booster thrust. Subsequent to this period, booster thrust is terminated before abort initiation. The LES is jettisoned after second stage ignition during a normal mission, or shortly after launch escape motor burnout during an aborted mission.

3.3.12.1 Equipment Description

The LES contains the following subsystems and components:

a. Launch escape tower

b. Electrical control subsystem

c. Separation subsystem

d. Launch escape motor subsystem

e. Jettison motor subsystem

f. Pitch control motor subsystem

g. Wire bundle fairing

h. Launch escape motor structural skirt

i. Jettison rocket motor adapter

j. Pitch control rocket motor adapter

k. Ballast enclosure

l. Nose cone

The rocket motors are provided with hot wire initiator systems. Ballast is used to stabilize the launch escape configuration.

Launch Escape Tower - The launch escape tower is a four-legged truss structure connecting the launch escape rocket motors to the CM structure. The tower is made of titanium alloy. The four longitudinal members are attached at their lower ends to the CM by explosive bolts used for jettisoning the escape system, and, at their upper ends, to the structural skirt of the escape motor. The tower's thermal protection provides 400 +°F thermal protection prior to tower jettison.

Electrical Control Subsystem - A sequencer provides sequential operation commands for all phases of an escape and provides outputs to activate the SM-CM separation initiator, tower separation mechanism initiator, escape motor ignition, tower jettison motor ignition, pitch motor control initiator, telemetry signals, and recovery system initiators. Complete redundant circuitry is provided. The LES electrical wiring is routed up the tower legs and through the wire bundle fairing attached to the rocket motors.

Separation Subsystem - This subsystem consists of an explosive bolt attaching each tower leg to the command module. Each bolt contains an internal explosive charge designed to fracture the bolt at the inner structure forward bulkhead. For redundancy, each bolt has a dual linear shaped charge cartridge designed to

cut a flattened section of the bolt slightly above the forward bulkhead. Each internal and linear shaped charge cartridge is independently initiated by a detonator. The firing pulse to each of the eight detonators is applied simultaneously with that of the tower jettison motor.

Launch Escape Motor Subsystem - The escape motor is 26 inches in diameter, 186 inches long and contains a case bonded, internal burning 8 point-star propellant grain consisting of polysulfide fuel-binder and ammonium perchlorate oxidizer. The nozzle assembly consists of 4 nozzles each canted 35° to the motor centerline. The motor is ignited with a head-end pyrogen type ignition utilizing two hot wire initiators. The thurst level is defined as 155,000 pounds average during the first 1.5 seconds of burning at 70°F and 36,000 feet altitude and is directed along a line at an angle of 2 degrees 45 minutes with the motor centerline in the pitch plane. The total burning time is 8 seconds. The total weight of 4,826 includes 3,170 pounds of propellant.

Tower Jettison Motor Subsystem - The tower jettison motor is 26 inches in diameter and 47 inches long with 2 nozzles canted 30 degrees to the motor centerline. The propellant grain is a polysulfide/ammonium perchlorate, case bonded, internal burning star configuration. The motor utilizes an aft-mounted pyrogen type igniter. The resultant thrust of 33,000 pounds for a burning time of one second is directed along a line canted 2.5 degrees from the motor centerline.

The total weight including interstage structure is 533 pounds with a propellant weight of 204 pounds.

Pitch Control Motor Subsystem - The pitch motor is 9 inches in diameter and 22 inches long and uses a polysulfide/ammonium perchlorate internal burning propellant grain with a minimum burning time of 0.5 seconds. It is oriented along the pitch axis. Depending on the mission, performance may be varied between 1,200 pound second and 3,000 pound second of total impulse by adjusting propellant loading and nozzle thrust area during manufacturing. Total weight for the maximum impulse motor is 55 pounds with 17 pounds of propellant.

Wire Bundle Fairing - The fairing is a V-shaped metal tube attached to and running longitudinally along the exterior of the ballast enclosure, pitch control motor adapter, jettison motor adapter, and launch escape motor. This fairing protects the rocket motor ignition and "Q-ball" wiring.

Launch Escape Motor Structural Skirt - The skirt is a metal truncated cone with four longitudinal members which transmit the load from the tower legs to the thrust ring of the launch escape motor.

Jettison Rocket Motor Adapter - The adapter is a sheet steel cylinder which supports and attaches the tower jettison motor to the launch escape motor. There are elliptical openings in the lower portion of the adapter to permit the exit of the jettison motor exhaust gas.

Pitch Control Rocket Adapter - This adapter is a sheet steel cylinder having an internal load bearing structure for supporting the pitch control motor. The adapter has a circular opening for the pitch rocket exhaust exit.

Ballast Enclosure - This enclosure is a sheet metal truncated cone having provisions for internal mounting of solid ballast.

Nose Cone - The nose cone is a sheet metal cone with an internal structure for supporting the Nortronic F 16 "Q" ball.

3.3.12.2 Operation

The variation of the required mission performance as a function of abort timing is shown on Figure 3-24. The three critical mission abort phases are:

a. Pad abort (4000 feet apogee altitude and 3000 foot range at apogee)

b. Maximum dynamic pressure abort

c. High altitude abort

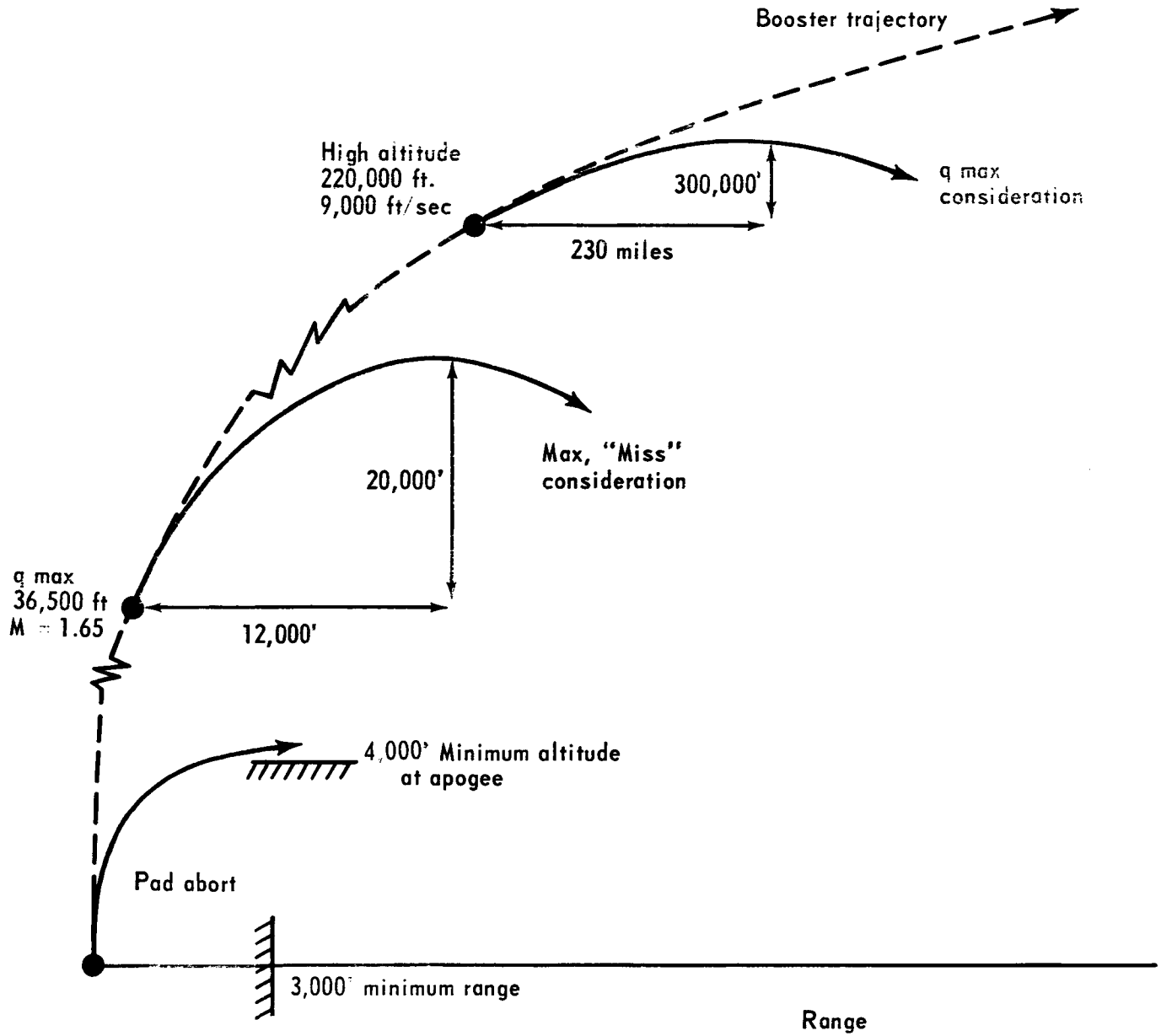

Figure 3-24 - Launch Escape System Abort Missions

3.3.13 EARTH LANDING SYSTEM

The CM includes a parachute-type Earth Landing System (ELS) to be used under all flight conditions for earth-landing requirements. The ELS satisfies the following requirements after normal reentry or during abort:

a. Post-entry stabilization

b. Velocity control (maximum vertical velocity at 5000 feet of 33 fps).

c. Impact attenuation

The landing system reduces the CM velocity to 33 feet per second at 5,000 feet altitude for a normal or abort landing mode, and for either land or water touchdown under the following dynamic conditions.

a. Equilibrium horizontal drift with a 30 knot wind

b. CM attitude not more than 8 degrees off the nominal descent attitude

c. CM fully stabilized with no pitch or yaw rates

3.3.13.1 Equipment Description

The ELS consists of the following major assemblies:

a. Drogue parachute assembly

b. Main parachute pack assembly

c. Pilot parachute assembly

d. Main parachute disconnect assembly

e. Harness assembly

f. Sequence Controller

g. Heat shield separation assembly

Drogue Parachute Assembly - This assembly consists of two 25 degree conical FIST-ribbon-design parachute, a deployment bag for protection and orderly deployment, a ballistic mortar for ejection, and a riser of sufficient length to place the parachute canopy in a favorable position with respect to module wake. The riser attach points are favorable to CM stability. In addition, a drogue disconnect assembly connects the drogue parachute riser to the CM.

Main Parachute Pack Assembly -The main parachute pack assembly consists of the main parachutes, designed to operate in a cluster of three, and a parachute riser all packed in the main parachute deployment bag which protects the assembly and insures orderly deployment. The three individual main parachutes are simultaneously deployed by three individual ballistic-mortar-deployed pilot parachutes.

Pilot Parachute Assembly - Each pilot parachute assembly consists of a ring slot-type canopy designed to control the deployment and inflation of one main parachute, pilot parachute deployment bag, pilot parachute ballistic mortar assembly for ejection upon signal from the sequence controller, and a pilot parachute riser to restrain the pilot parachute during deployment and operation. The riser is of sufficient length to place the pilot parachute in a favorable position with respect to airflow around the CM and main canopy during inflation.

Main Parachute Disconnect Assembly - This unit connects the three main parachute risers to the spacecraft main harness assembly and disconnects upon crew command signal after impact.

Harness Assembly - The harness attaches to the parachute attach fittings and extends to the main parachute risers.

Sequence Controller - The controller contains necessary time delay relays and baroswitches to sequence properly the following operations:

a. Jettison of the forward compartment heat shield

b. Firing of the drogue mortar

c. Firing of the pilot parachute mortar and drogue release

d. Arming of the main parachute disconnect impact switch

The sequence control system also provides conversion of crew command signals to equipment actuation signals.

Heat Shield Jettison System - The forward compartment heat shield jettison system consists of two gas generators and four thrusters for jettisoning the heat shield from the CM so that the parachute deployment sequence can be initiated. The heat shield is retained by two tension bolts which are failed by operation of the thruster system.

3.3.13.2 Operation

The purpose of the ELS is to return the CM safetly to earth

whether it be following reentry from a normal mission or following any one of the abort modes. Specifically, it provides (1) retardation of the CM by means of a drogue parachute for normal flights, (2) reorientation of the CM by means of a drogue parachute for pad and other abort situations, and (3) reduction of the vertical landing velocity by means of a cluster of three main parachutes sized such that any two will satisfy the vertical landing velocity requirement.

Normal Mission - Following reentry the crew arms the system and the normal sequence of operations proceed as follows:

a. At 25,000 feet a barometric switch initiates forward compartment heat shield jettison.

b. One second later the mortar which deploys the drogue parachute to retard the CM is fired.

c. Approximately 35 seconds later, at 15,000 feet, a barometric switch initiates firing of mortars which simultaneously deploy three pilot parachutes. The drogue parachute is released at the same time.

d. Pilot parachutes pull out the three main parachutes which are in the reefed condition.

e. Main parachutes are dereefed by reefing cutters approximately 8 seconds after pilot mortar fire. The main parachutes are reefed for six seconds. Normal descent begins and the VHF antenna is erected.

f. Main parachute is disconnected by a signal from a

crewman.

Alternate Mission - In the event of a contingency, at low altitudes, the landing sequence will be armed by the abort signal. Since all barometric switches are closed, operation of the landing sequence is controlled entirely by time delays as follows:

Time (Seconds)	Events
0	Abort signal; CM-SM separation; LES Motor fires separating CM from launch vehicle.
15.5	LES tower separation and jettison.
18.0	Forward heat shield jettison.
19.0	Drogue parachute deployed. Drogue opens and reorients CM to attitude for main parachute deployment.
23.5	Pilot parachutes deployed. Landing sequence continues as normal.

The performance of the sequence control subsystem is such that the failure of critical components does not result in a failure of the entire system. This is accomplished by incorporating two parallel sequence control circuits. In the event of failure of both circuits, the landing sequence can be initiated by a crewman.

3.3.14 INFLIGHT TEST SYSTEM

The Inflight Test System (IFTS) provides the crew with the means for isolating certain malfunctions. The system provides a centralized panel with an in-limits/out-of-limits readout showing which system and subsystem failed. A means for manual testing and maintenance instructions are also supplied.

3.3.14.1 Equipment Description - A block diagram of a typical inflight test system is shown on Figure 3-25. The IFTS consists of a (1) voltage comparator assembly, (2) switch and readout assembly, (3) test and control assembly, (4) power supply and reference assembly, and (5) stimulus test assembly.

Voltage Comparator Assembly - This assembly consists of 225 comparators which monitor inputs to the IFTS and provide in-limits/out-of-limits outputs to the switch and readout assembly.

Switch and Readout Assembly - This assembly provides 225 lamp and lamp driver circuits, and appropriate switching to transfer stimuli to the spacecraft systems and IFTS inputs to the test meter (A.C./D.C.) and to PCM telemetry.

Test and Control Assembly - The test and control assembly provides an IFTS self-test capability.

Power Supply and Reference Assembly - This assembly provides all regulated supply voltages required by the IFTS.

Stimulus Test Assembly - This stimulus test assembly provides these signals to the spacecraft systems upon command through

CONFIDENTIAL

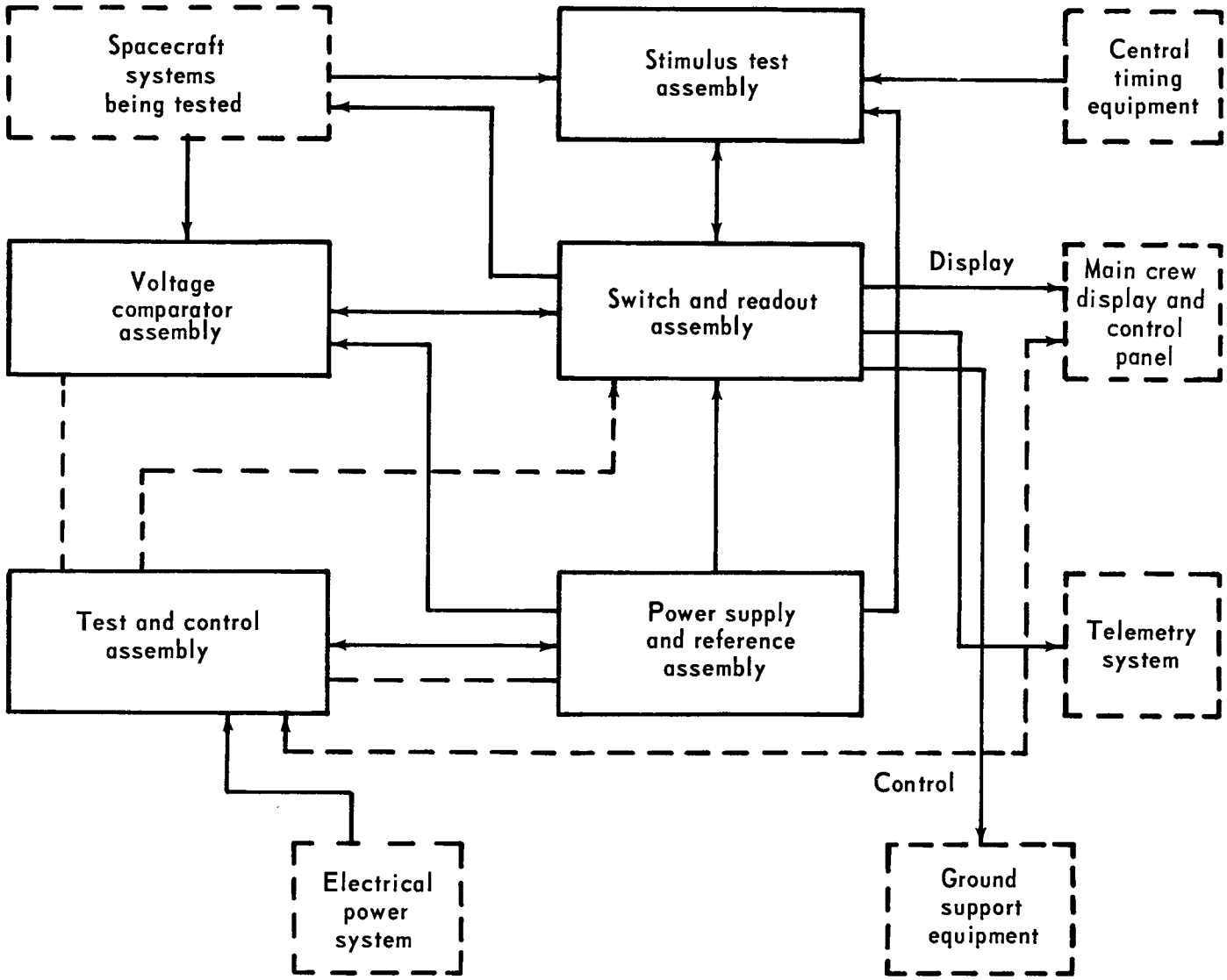

Figure 3-25 - Command Module In Flight Test System

CONFIDENTIAL

the switch and readout assembly.

3.3.14.2 Operation

An on-board manual provides test procedures, system data, identification of in-limits displays, manual testing methods and maintenance procedures.

Automatic Monitoring - System and subsystem gross status are monitored and displayed to the crew on a qualitative basis by automatic in-limits/out-of-limits interrogation of gross system test points. Every out-of-limits parameter is individually displayed on a separate light. Provisions are made for control of automatic monitoring by the crew. A coded display indicates which system is out of the tolerance level.

Manual Testing - In addition to the gross test points, subsystem test points can be monitored by a voltmeter in order to perform diagnostic testing of certain spacecraft systems. Manual testing may be employed as a verification or touble-shooting procedure.

SECTION IV

4.0 SERVICE MODULE

4.1 FUNCTION

The Service Module (SM) contains the Service Propulsion System plus selected equipment and stores which service the equipment and crew of the Command Module (CM). It is unmanned, does not require in-flight crew access and remains with the CM during lunar operations. It is separated from the CM prior to re-entry and is nonrecoverable. The SM provides propulsion capability for the Command-Service Module combination and its reaction control system provides stabilization and attitude control for the spacecraft. The SM systems described in sections 4.3.1 to 4.3.9 support the crew in the operation of the spacecraft.

4.2 DESCRIPTION

4.2.1 POSITION IN SPACECRAFT (SC)

The position of the SM in the spacecraft for various phases of the lunar landing mission is shown on Figure 3-1.

4.2.2 REFERENCE AXES

The reference axes of the Service Module are orthogonal and correspond to the respective axes of the Command and Lunar Excursion Modules as defined in Section 3.2.2.

4.2.3 CONFIGURATION

The SM schematic is shown on Figure 4-1.

4.2.4 WEIGHTS

4.2.4.1 Control Weight

The control weight of the SM is 10,500 pounds.

4.2.4.2 Design Goal Weight

The design goal weight of the SM is 9,500 pounds.

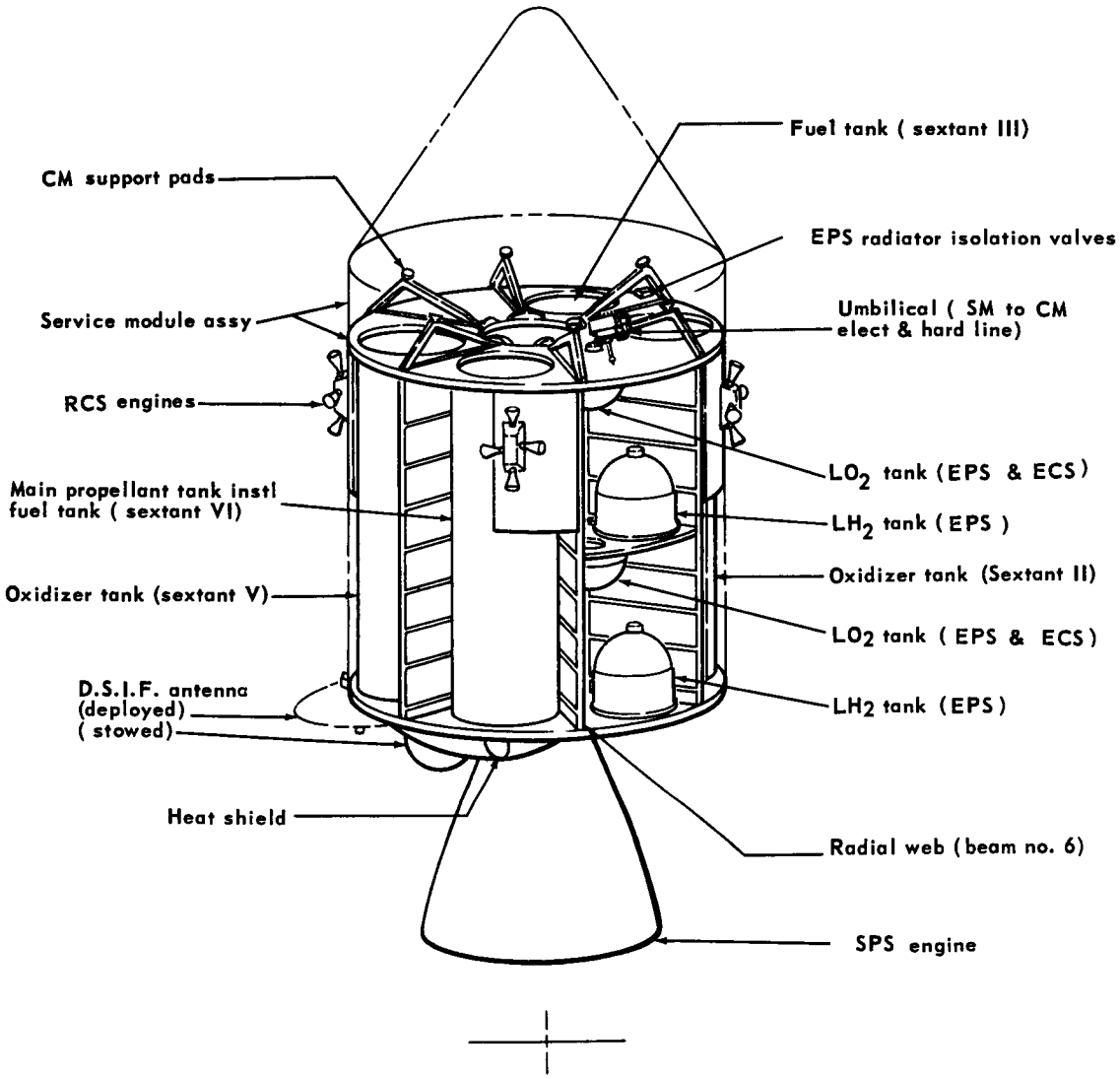

Figure 4-1 - Service Module Configuration

4.3 MAJOR SERVICE MODULE SYSTEMS

4.3.1 STRUCTURAL SYSTEM

The SM structure accommodates all ground handling and flight loads including those listed as follows:

a. Boost - The external shell resists loads during the boost phase of flight.

b. Launch Escape - The SM structure is not impaired by actuation of the launch escape abort sequence in the launch pad position. Launch escape system aborts within the flight envelope do not impose catastrophic loads on the separation components or tankage.

c. Separation - Separation from the Adapter is accomplished with no subsequent recontact and resulting dynamic load input to the SM. Separation is not impaired by tolerances on spacecraft symmetry and assymmetrical thrusting of the launch vehicles. Separation mechanisms do not release parts which may damage critical components.

d. Jettison - Jettison of the SM is accomplished with no subsequent recontact and resulting dynamic load input to the CM. The disconnect mechanisms do not release parts which may result in danger to the CM.

The structure withstands the variation of thermal environment during transportation, storage, prelaunch, and the launch and mission flight phases without impairment of structural integrity relative to

subsequent loading conditions.

The configuration of the SM is shown on Figure 4-1 through 4-4 and is described as follows:

4.3.1.1 External Shell

The external cylindrical shell consists of six structural panels of adhesive bonded aluminum honeycomb sandwich structure. Except for the radiator areas of the Electric Power and Environmental Control Systems, the panels are one-inch thick sandwich with 0.017 inch faceplates and 3/8-inch hexagonal core of 0.002-inch foil thickness. The radiator panels are integral parts of the structural panels. The external shell provides protection against meteroids and is the primary load path from the SM internal structure to the adapter.

4.3.1.2 Aft Bulkhead

The aft bulkhead is an adhesive bonded aluminum honeycomb sandwich structure. Its total thickness is 3 inches, with 0.020-inch faceplates and a 1/4-inch hexagonal core of 0.002-inch foil thickness. The aft bulkhead covers the aft end of the SM. It provides primary support for the propellant tanks and service propulsion engine and transfers loads from these components to the external shell.

4.3.1.3 Forward Bulkhead

The forward bulkhead is an adhesive bonded aluminum honeycomb sandwich structure. Its total thickness is one inch, with 0.010 faceplates and 1/4-inch hexagonal core of 0.001-inch foil thickness. In addition to closing the forward end of the SM, the forward bulkhead

transfers lateral propellant tank loads to the external shell and aids the external shell in taking the transverse loads of the radial beams.

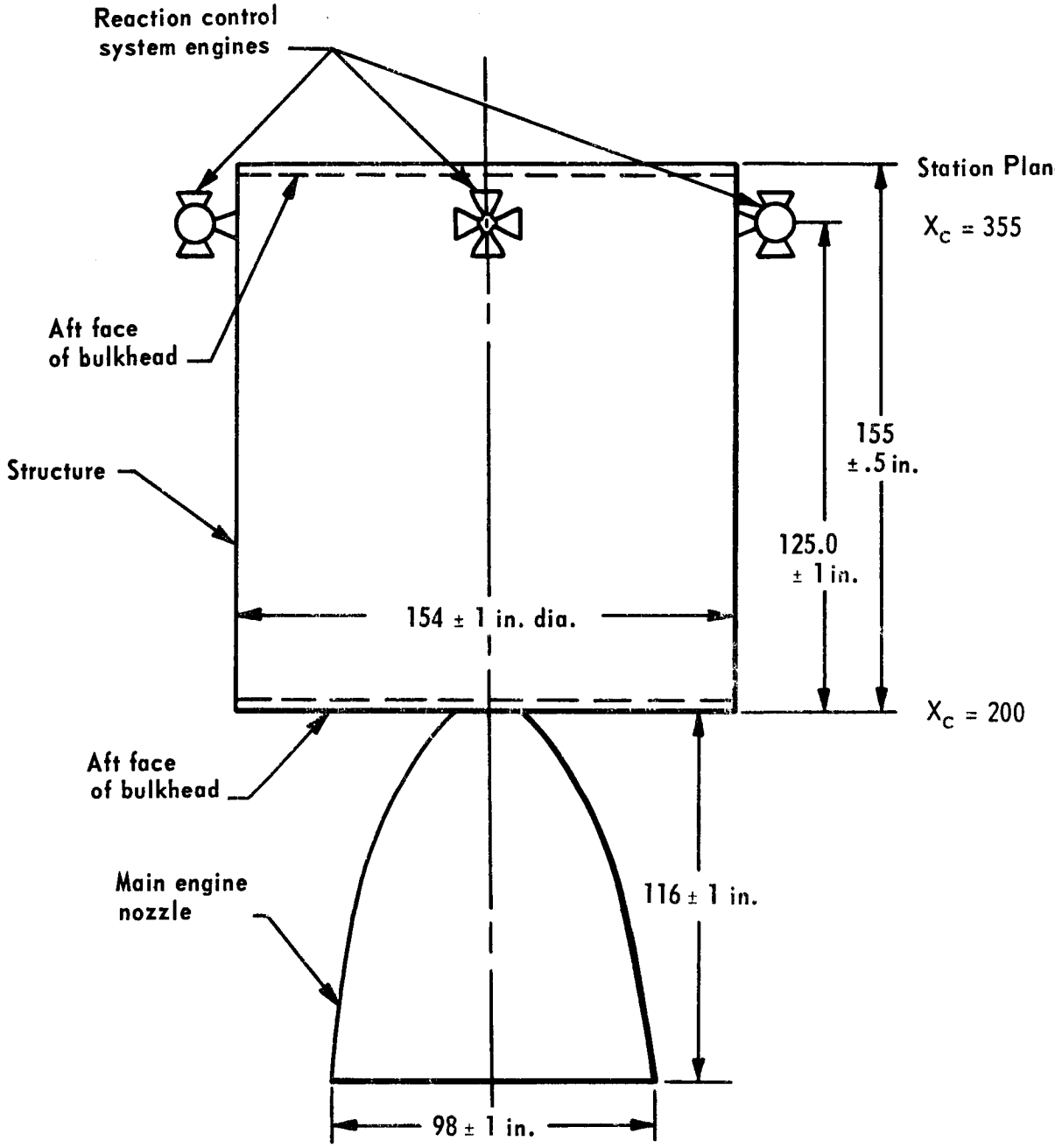

Figure 4-2 - Service Module External Geometry

CONFIDENTIAL

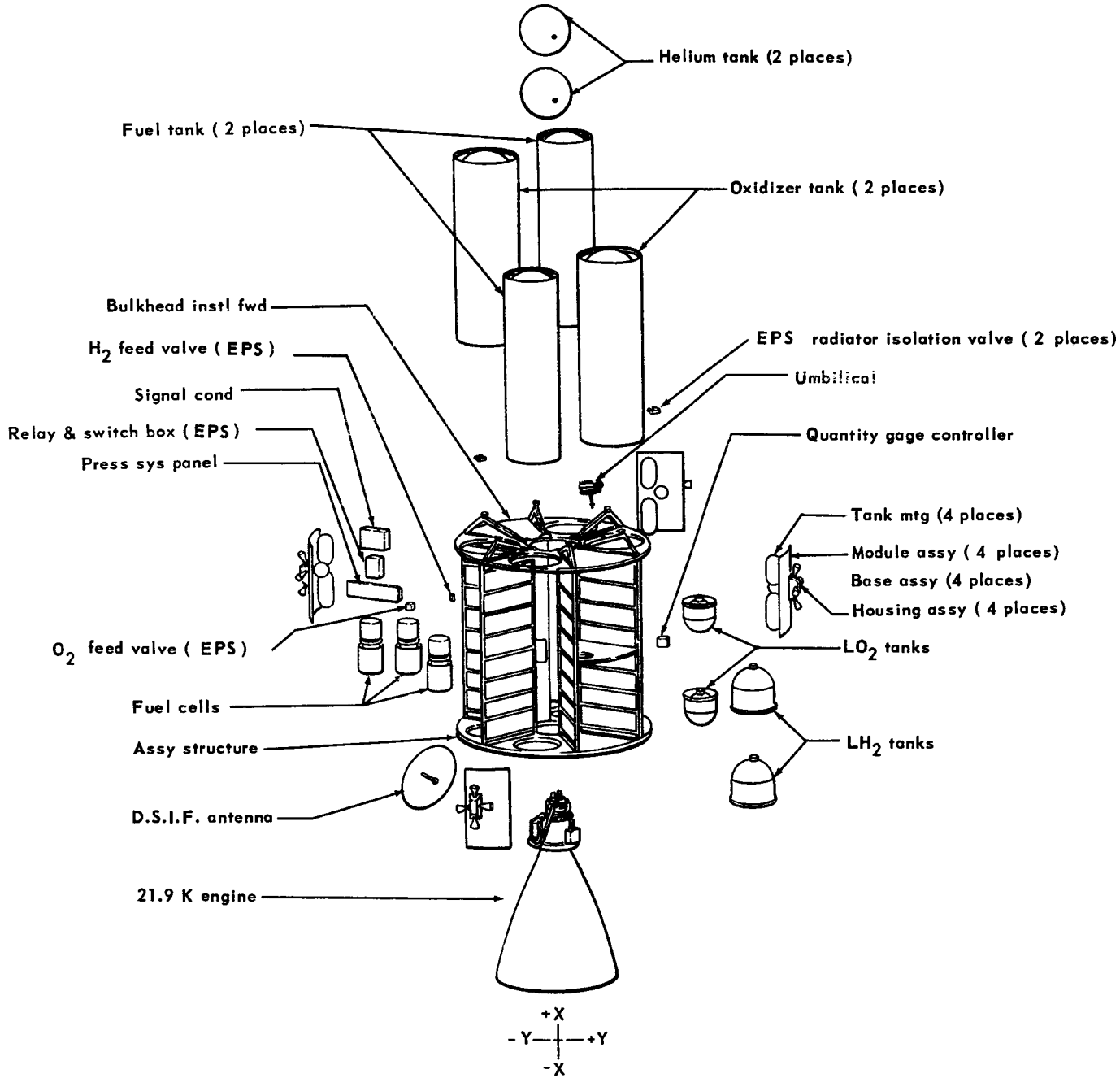

Figure 4-3 - Service Module Exploded View

CONFIDENTIAL

CONFIDENTIAL

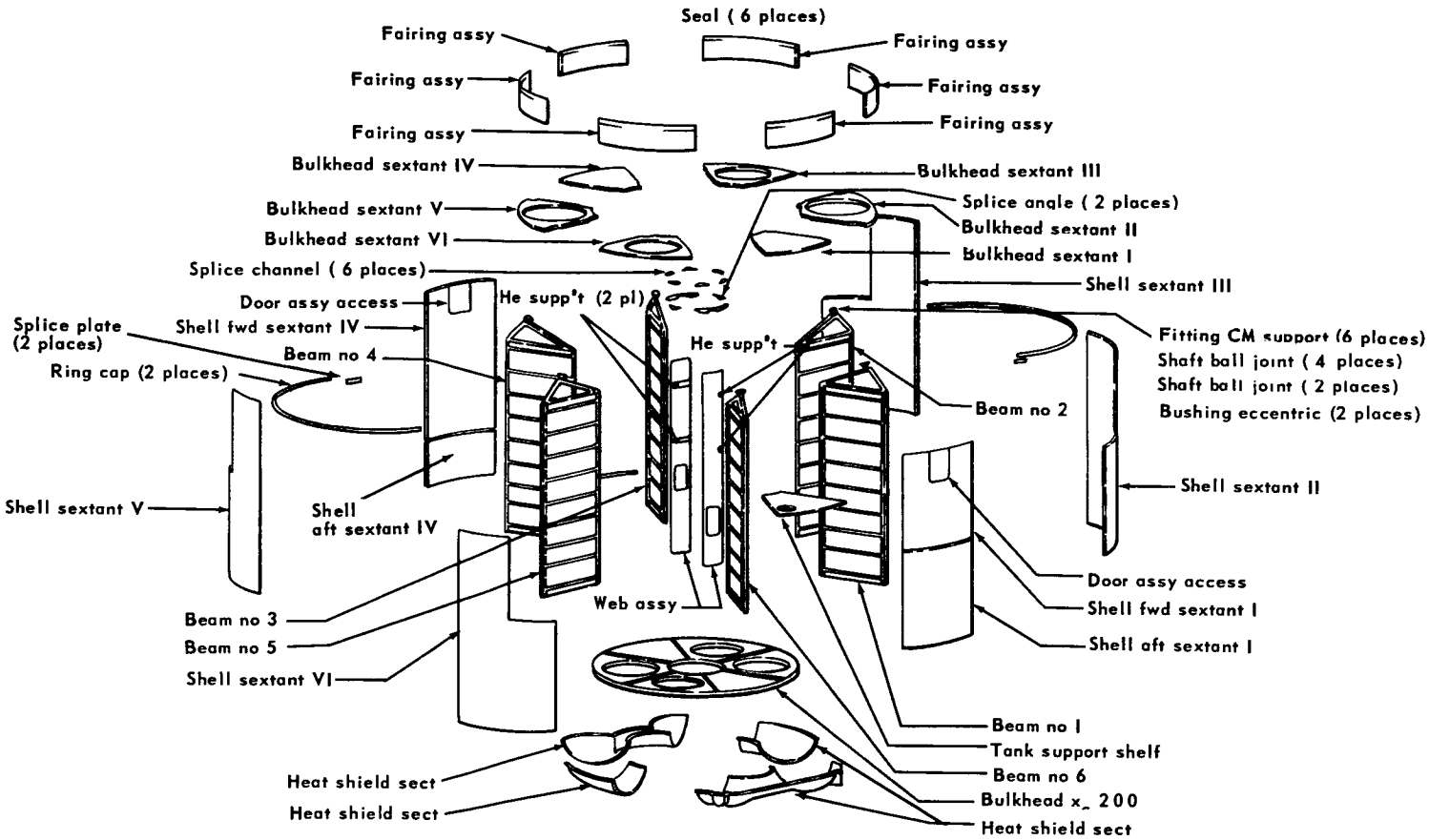

Figure 4-4 - Service Module Structure Exploded View

CONFIDENTIAL

.4 Radial Beams

Six full-length beams are radially oriented within the cylindrical shell, joining the external shell structure at the panel junction lines. These radial beams are milled from aluminum plate. The radial beams assist the forward and aft bulkhead in transferring loads to the external shell and provide primary load paths from the CM attachment points to the external shell.

4.3.1.5 Attachment Points

The Command-Service Module attachment points are located on the forward ends of the radial beams and loads are transferred through the radial beams to the external shell of the SM. Six loading points, three of which can take tension, compression, and shear and three of which can take compression and shear only are provided for the CM. Release of the CM from the SM occurs at the tension points. The SM-Adapter attachment consists of tension straps bolted to each module. Linear shaped charges are used for releasing the SM from the Adapter.

4.3.1.5 Access Provisions

The SM structure provides access for ground servicing of all integral system components. Equipment bays are accessible by removal of the structural panels of the external shell. In other areas partial panels may be removed.

4.3.1.6 Command Module to Service Module Fairing

An aluminum honeycomb sandwich cylindrical shell provides a smooth aerodynamic fairing between the CM and SM.

4.3.2 SERVICE PROPULSION SYSTEM

During lunar orbit missions, the Service Propulsion System provides propulsion for translunar and transearth midcourse velocity corrections, and for lunar orbit injection and transearth injection. During earth orbit missions, the system provides propulsion for earth orbital transfer and correction, and orbit ejection. The system provides thrust for post-atmospheric abort following jettison of the Launch Escape System.

4.3.2.1 Equipment Description

The Service Propulsion System consists of the propellant supply and the engine subsystems, as shown schematically on Figure 4-5. A list of components and their functions is shown in Table 4-1.

CONFIDENTIAL

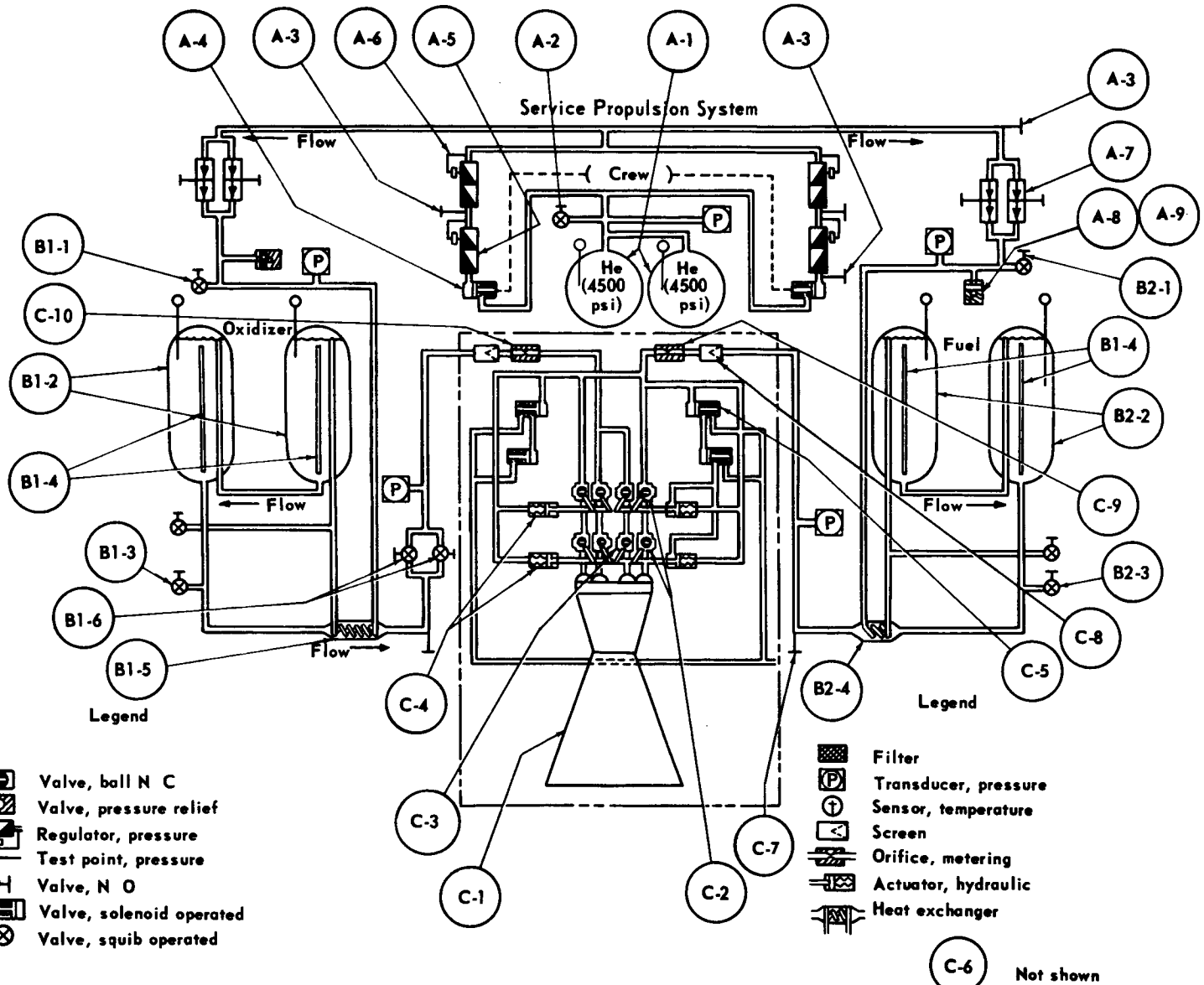

Figure 4-5 - Service Module Service Propulsion System

CONFIDENTIAL

Table 4-1 SERVICE PROPULSION SYSTEM COMPONENTS

Figure Code No.	Component Title	Quantity Reqd.
A-1	Vessel - Helium Pressure	2
A-2	Disconnect - Helium Fill and Drain, Manual	1
A-3	Coupling - Helium Pressure, Check	2
A-4	Valve - Solenoid Operated, Normally Closed Helium Pressure	2
A-5	Regulator - Primary, Helium Pressure	2
A-6	Regulator - Secondary, Helium Pressure	2
A-7	Valve - Helium Pressure Check	8
A-8	Valve - Helium Pressure Relief	2
A-9	Diaphragm - Helium Pressure Burst	2
B1-1	Disconnect - Oxidizer Vent, Manual	1
B1-2	Tank - Oxidizer	2
B1-3	Disconnect - Oxidizer Fill and Drain, Manual	1
B1-4	Propellant Quantity Gaging	4
B1-5	Heat Exchanger - Oxidizer-Helium	1
B1-6	Flow Control Valve - Oxidizer	1
B2-1	Disconnect - Fuel Vent, Manual	1
B2-2	Tank - Fuel	2
B2-3	Disconnect - Fuel Fill and Drain, Manual	1
B2-4	Heat Exchanger - Fuel - Helium	1
C-1	Thrust Chamber Assembly	1
C-2	Valve Assembly - Fuel	4
C-3	Valve Assembly - Oxidizer	4
C-4	Actuator Assembly - Hydraulic	4
C-5	Valve Assembly - Solenoid	4
C-6	Valve Assembly - Check	
C-7	Disconnect Assembly	2
C-8	Filter, Fuel and Oxidizer	2
C-9	Metering Orifice, Fuel	1
C-10	Metering Orifice, Oxidizer	1

Table 4-1 (Continued)

Figure Code No.	Component Function
A-1	Storage tank for high pressure helium gas.
A-2	Helium Fill and drain point during ground servicing operations.
A-3	Provides pressure check point during checkout operations.
A-4	Isolates the helium storage tank in the event of downstream leakage or component failure.
A-5	Maintains the required downstream pressure.
A-6	Maintains the required downstream pressure.
A-7	Prevents the contact of fuel and oxidizer.
A-8	Maintains structural integrity of propellant tanks in the event of pressure rise in tankage system.
A-9	Prevents propellant from entering relief valve, prior to rupture.
B1-1	Provides venting of propellant tanks during ground servicing operations.
B1-2	Storage tank for N_2O_4 oxidizer supply.
B1-3	Oxidizer fill and drain point during ground servicing operations. Positively seals oxidizer supply in storage tanks prior to initial system pressurization.
B1-4	Senses remaining fuel and oxidizer level-transmitted visually to crew.
B1-5	Maintains desired helium temperature.
B2-1	Provides venting of propellant tanks during ground servicing operations.
B2-2	Storage Tank for 50% N_2H_4 and 50% UDMH fuel supply.
B2-3	Fuel fill and drain point during ground servicing operation. Positively seals fuel supply in storage tanks prior to initial system pressurization.
B2-4	Maintains desired helium temperature.
C-1	Combustion chamber.
C-2	Serves as main propellant valve to control fuel flow to the combustion chamber.
C-4	Controls position of gates in fuel and oxidizer main propellant valves.
C-5	Controls fuel flow to the hydraulic actuators.
C-6	Assures maintenance of pressure in actuator overboard feeder lines.
C-7	Servicing point for applying fuel pressure for ground checkout of engine valving.
C-8	Prevents foreign particles from entering injector.
C-9	Meters fuel flow to control O/F ratio.
C-10	Meters oxidizer flow to control O/F ratio.

4.3.3 PROPELLANT SUPPLY SUBSYSTEM AND COMPONENTS

The propellant supply subsystem is a pressure-fed, series-connected, free flow system which provides usable propellant to the engine at the specified engine inlet conditions. The fuel is a mixture of 50% unsymmetrical dimethylhydrazine (UDMH) and 50% hydrazine (N_2H_4) by weight. The oxidizer is nitrogen tetroxide (N_2O_4). The propellant tanks are pressurized with gaseous helium to provide propellant flow.

4.3.3.1 Equipment Description

All components are compatible with high-grade, oil-free, commercial helium for long periods of exposure. Fuel system components are compatible with a mixture of 50% hydrazine and 50% unsymmetrical dimethylhydrazine for long periods of exposure, and oxidizer system components are compatible with nitrogen tetroxide.

The propellant is stored in four hemispherically domed, cylindrical tanks. Two of the tanks contain fuel in the amount of 15,000 pounds and two contain oxidizer in the amount of 30,000 pounds. The paired tanks are connected in series and contain the necessary baffling and anti-vortexing devices to prevent sloshing and vortexing of propellant.

Each tank contains liquid level sensing devices which sense the level of either the fuel or oxidizer remaining. This information is presented in a visual display to the crew.

The helium supply is contained in two spherical tanks.

Two pressure regulation units, connected in parallel, are located downstream of the helium storage tanks. Each contains a primary and secondary pressure regulator, connected in series. The upstream or primary regulator reduces the tank pressure of 4500 psig to a value slightly greater than the required downstream pressure. The secondary downstream regulator in the series reduces the output of the primary regulator to the required downstream pressure of 175 psig. If the primary regulator fails open, the secondary regulator is capable of maintaining the required downstream pressure when subjected to the resulting increase in inlet pressure. Conversely, if the secondary regulator fails open, the outlet pressure of the primary regulator is within the permissible operating range of the engine.

Manually controlled, "normally closed" solenoid valves are installed upstream of each pressure regulation unit. These provide a means of isolating the helium tanks in the event of downstream leakage or component failure.

A pressure relief valve and a burst diaphragm-integral filter component are provided for each of the dual oxidizer and fuel tankage systems. The pressure relief valve maintains the structural integrity of the propellant tanks in the event of an excessive pressure rise within the tanks. The burst diaphragm is utilized to prevent propellant from entering the relief valves at normal operating pressure. The integral filter prevents foreign particles from entering the relief valve after rupture of the burst diaphragm. The normal operating

pressure is 175 psig and the diaphragm burst pressure is 240 psig.

Two check-valve assemblies are located downstream of the pressure regulators. One is located in the fuel tank pressurizing line and the other in the line to the oxidizer tanks. Each assembly consists of two units connected in parallel and each unit consists of two check valves installed in series. This provides a redundant check-valve system to prevent contact of fuel and oxidizer due to back-flow through the pressurizing lines.

4.3.3.2 Operation

Propellant supply subsystem operating pressures are as shown in Figure 4-6. During both steady state operation and the starting modes, the fuel and oxidizer pressures are within 2 psi of each other. The fuel temperature at the engine inlet is maintained within 40°F to 145°F and the oxidizer within 30°F to 135°F.

Following the helium pressure regulators, the helium path is split with one path directed through a check valve assembly into one of two oxidizer tanks. Fuel and oxidizer from the pressurized tanks are then forced through a standpipe into the corresponding tank of each of the dual tank assemblies. Fluids from the second tank are filtered and fed directly to the engine fuel and oxidizer valves.

During a zero "g" condition, the initial acceleration to force the propellant to the bottom of the tanks is provided by the Service Module Reaction Control System.

Redundant flow control valves are provided in order that

CONFIDENTIAL

1st stage regulator outlet	
Lock up	207 psi (max)
Operating	198 ± 4 psi
2nd stage regulator outlet	
Lock up	182 psi (max)
Operating	175 ± 4 psi
Propellant tank pressure	
Normal lock up	182 psi (max)
2 nd stage reg failed	207 psi (max)
In open mode	212 min to
Relief	240 max psi

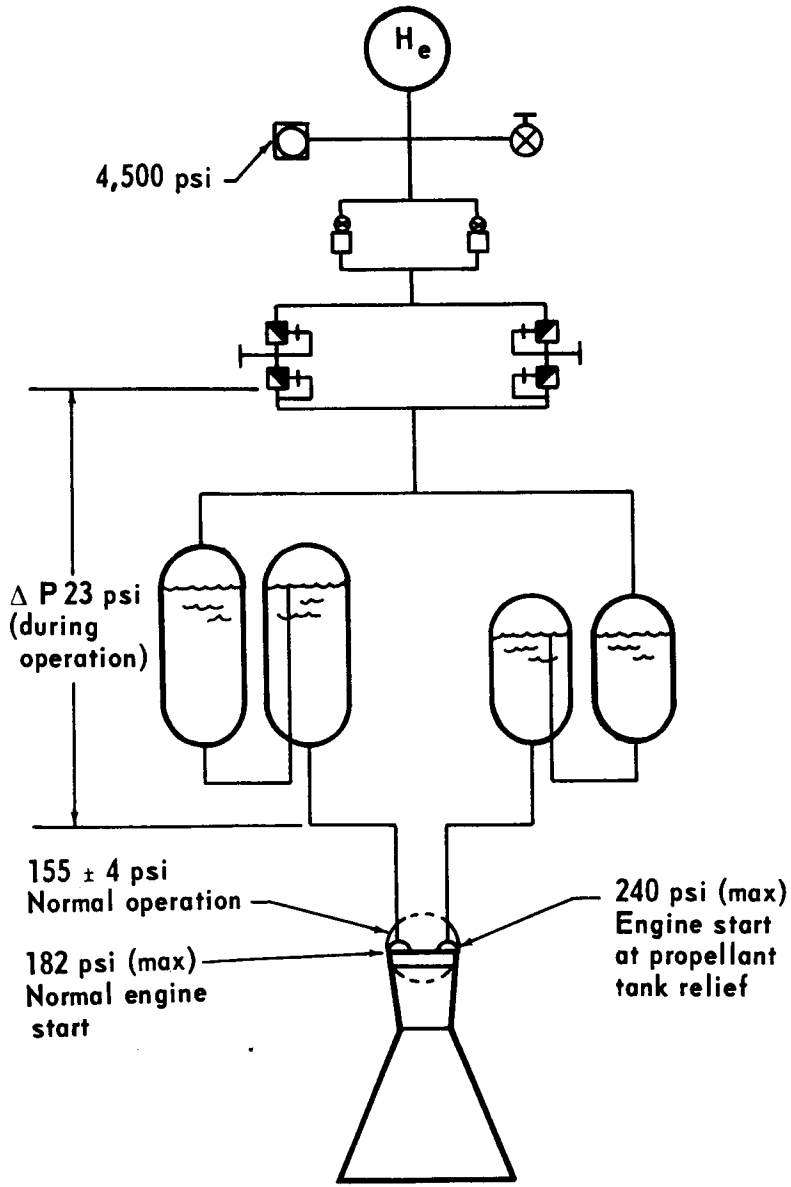

Figure 4-6 - Service Module Service Propulsion System Operating Pressures

CONFIDENTIAL

optimum propellant utilization may be achieved. The valves are crew operated devices installed in either the fuel or oxidizer line and are operable within the specified engine inlet limits.

A propellant quantity indicating device senses the level of both fuel and oxidizer remaining and transmits this information as a visual display to the crew.

4.3.4 ENGINE SUBSYSTEM AND COMPONENTS

The service propulsion system engine is a liquid propellant rocket engine employing nitrogen tetroxide as the oxidizer and a mixture by weight of 50% hydrazine and 50% unsymmetrical dimethylhydrazine as the fuel. Combustion results from hypergolic ignition of the two propellants. The engine is pressure-fed, restartable, non-throttleable, and contains gimbal provisions for thrust vector control. Chamber cooling is accomplished by use of an ablative combustion chamber. A radiation-cooled nozzle extension is used to increase propulsion efficiency.

The rocket engine is designed and constructed to withstand all strains, shocks, vibration, and other conditions incident to shipping, storage, handling, installation, and operational service. In service the design provides for zero leakage throughout the range of operating pressures.

The principle of physical and functional interchangeability is employed for the nozzle extension, combustion chamber, thrust mount, gimbal, gimbal actuator assemblies, the engine-mounted propellant lines, and the propellant valve assembly which consists of the main propellant valves, valve actuators, pilot control valves, the actuator fluid check valves. The injector is physically replaceable with interchangeable units.

The materials of construction are such that the function and performance of all engine components are not degraded when exposed

to propellants. This exposure includes contamination with particles of a size limited to 250 microns.

The engine contains attaching pads or lifting lugs for the attachment of ground handling equipment for installation of the engine into the spacecraft or static facility, and for general ground handling and maintenance.

Combustion Chamber - The combustion chamber has an exit throat area ratio of 6:1. The chamber includes an integral metal flange on each end for mechanical attachment of the injector and nozzle extension, and supports for mounting the gimbal assembly. The inner chamber wall is constructed of ablative material and is designed to minimize the transmission of heat to the outer wall.

Injector - The injector has the necessary propellant volume and volume ratio to attain optimum propellant utilization during start and shutdown transients. Fuel and oxidizer passages are separated by parent metal or redundant weld joints. Fabrication procedures assure the absence of chips in injector passages and deburring of injector orifices after drilling operations. The injection pattern has optimized ignition characteristics, combustion stability, and temperature distribution on the inner wall of the combustion chamber.

Nozzle Extension - The nozzle extension terminates at an effective area ratio of 60:1 and is mechanically attached to the combustion chamber. The radiation cooled nozzle is contoured to produce maximum thrust and does not suffer performance degradation due to

mechanical and thermal stresses during its life.

Propellant Valve Assemblies - Propellant flow is controlled by mechanically linked main propellant valves furnished in a redundant series-parallel arrangement as shown in Figure 4-5. The valves are controlled by hydraulic-type actuators and application of fuel pressure to the actuators is controlled by normally closed solenoid valves. The valving system ensures continued or subsequent engine operation in the event of a valve failure in the closed position and to prevent propellant loss for a valve failure in the open position.

Thrust Mount - The thrust mount is compatible with the airframe structural mounting attachments. The gimbal-thrust mount combination provides an accurate means of aligning the gimbal bearing axes in the spacecraft reference system. The thrust mount design, through selection of a suitable natural frequency, does not amplify the basic combustion frequencies of the thrust chamber-injector or induce divergent vibratory characteristics.

Gimbals - The gimbals provide $\pm$ 8.5° in pitch and $\pm$ 6.0° in yaw with respect to a line perpendicular to the engine mounting plane and turn the engine assembly at a rate of 0.30 to 0.35 radians per second in either direction. Electromechanical actuators for the gimbals incorporate redundancy to achieve the prescribed engine reliability level.

Instrumentation - The engine is provided with the following instrumentation:

a. Redundant position potentiometers on each inter-linked fuel oxidizer propellant valve.

b. Redundant gimbal angle position sensors for measurement of both pitch and yaw angles.

c. Two temperature sensors on the outside surface of the combustion chamber.

d. Propellant valve position indicator.

4.3.5 REACTION CONTROL SYSTEM

The SM Reaction Control System (RCS) consists of four identical and independent reaction control units located at 90° intervals around the circumference of the SM as indicated on Figure 4-7. Each unit consists of a storage and distribution system, for helium, oxidizer, and fuel, and four rocket engine systems. The propellants are a combination of 50-50 N_2H_4/UDMH and nitrogen tetroxide (N_2O_4).

The RCS provides stabilization and attitude control about three axes of the spacecraft in all phases of flight subsequent to booster separation and prior to CM separation from the SM. It contains the flexibility to satisfy functional requirements of all missions. The system performs additional functions as follows:

a. Docking Maneuvers - The RCS provides three axis orientation and translational velocity increments necessary to accomplish initial docking with the LEM. This involves the maneuvering of the CSM to effect the joining of the LEM to the forward portion of the CM. The RCS is used as an emergency or back-up means of docking with the LEM after lunar landing and launch have been effected.

b. Velocity Corrections - The RCS provides ullage acceleration and minor velocity increments for the Service Propulsion System. The RCS provides spacecraft orientation while major velocity corrections are accomplished by the

CONFIDENTIAL

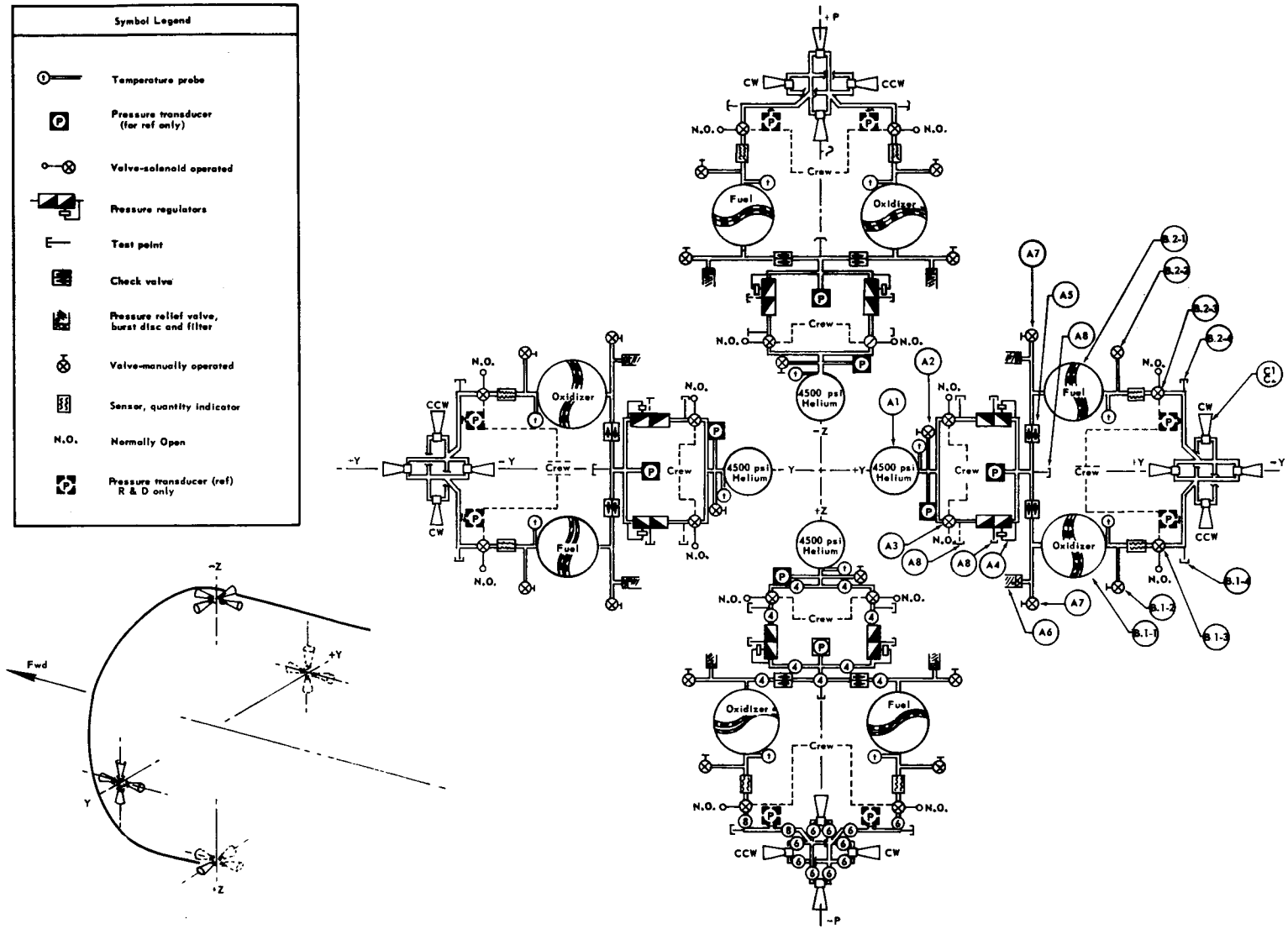

Figure 4-7 - Service Module Reaction Control System

CONFIDENTIAL

Propulsion System during translunar flight, the RCS provides translational velocity increments up to a maximum of 100 feet per second to bring the spacecraft to an earth return trajectory.

c. Separations - The RCS provides translational acceleration for normal mode separation of the spacecraft from the launch vehicle. It also supplies a sustained acceleration of the SM for separation from the CM prior to re-entry.

4.3.5.1 Equipment Description and Operation

Pressurized Helium Subsystem - This subsystem is composed of Category A components listed in Table 4-2 and Figure 4-7. The helium supply is contained within four spherical tanks which are cradle mounted to minimize detrimental skin flexures. A system of four pressure regulators connected in a parallel-series arrangement is located downstream of each helium storage tank. The first regulator in a parallel path reduces the upstream pressure of about 4500 psia to a value slightly higher than the required downstream pressure. The second regulator, in series with the first, reduces the pressure to about 170 psia. If the upstream regulator fails open, the second regulator is capable of maintaining the required down-stream pressure. Conversely, if the second regulator fails open, the first regulator maintains the pressure within the permissible operating range. The parallel arrangement permits continued operation in the event either of the series regulators fail

closed. A manually-controlled, normally-open solenoid valve is installed upstream of the pressure regulation system and actuation of this valve provides the means of isolating the helium tank in the event of down-stream leakage or component failure. Check valves downstream of the regulators prevent propellants from entering the helium subsystems in the event of failure of propellant tank positive-expulsion devices. Relief valves contain integral helium filters which prevent excessive pressure buildup in the propellant storage tanks. Vent valves provide means for releasing helium downstream of the check valves during propellant servicing operations and helium depressurization operations.

Oxidizer Subsystem - The oxidizer subsystem is composed of Category B1 components listed in Table 4-2. The fill valves provide for servicing the oxidizer subsystem during ground operations. Four hemispherically-domed cylindrical tanks for the oxidizer supply are cradle mounted. Pressurized helium acts on a positive expulsion device in each tank and this forces oxidizer to the rocket engines at the required feed pressure. A manually-controlled, normally-open solenoid valve provides the means of isolating the oxidizer storage tank from the rocket engine in the event of a leak in the oxidizer subsystem or a malfunction of a rocket engine.

Fuel Subsystem - The fuel subsystem is composed of Category B2 components listed in Table 4-2. The fill valves provide for servicing the fuel subsystem during ground operations. The fuel supply is

Table 4-2 SERVICE MODULE REACTION CONTROL SYSTEM COMPONENTS

Category	Figure Code No.	Component Title	Function
A	A-1	Vessel - Helium Pressure	Storage of high pressure helium
A	A-2	Valve - Helium Fill, Operated	Fill point during ground servicing operations
A	A-3	Valve - Helium, Solenoid Operated	Isolate the storage area in the event of a downstream failure
A	A-4	Regulator - Helium Pressure	Maintains the required constant downstream pressure
A	A-5	Check Valve Helium Pressure	Prevents oxidizer and/ or fuel from backing up into helium system
A	A-6	Relief Valve Helium Pressure	Prevents overpressurization of the fuel and oxidizer system
A	A-7	Valve - Vent Helium Pressure	Depressurize low pressure side of helium system
A	A-8	Coupling - Check Helium Pressure	Provide pressure check points
B	B1-1	Tank Oxidizer	Storage of nitrogen tetroxide (N_2O_4)
B	B1-2	Valve - Oxidizer Fill, Manual	Fill point during servicing operation
B	B1-3	Valve, Oxidizer Solenoid Operated	Isolate storage area in the event of downstream failure

Table 4-2 (Continued)

Category	Figure Code No.	Component Title	Function
B	B1-4	Coupling - Check Oxidizer	Provide pressure check point
B	B2-1	Tank - Fuel	Storage of MMH
B	B2-2	Valve - Fuel Fill, Manual	Fill point during ground servicing operation
B	B2-3	Valve - Fuel Solenoid	Isolate storage area in the event of down-stream failure
B	B2-4	Coupling - Check Fuel	Provide pressure check point
C	C-1	Propellant Valves (2)	Control propellant flow to the engine on demand
C	C-2	Thrust Chamber	Provides impulse for spacecraft control

contained within four hemispherically-domed cylindrical tanks which are cradle mounted. Other provisions for control of fuel flow include helium pressurization, and are like those described for the oxidizer subsystem.

Rocket Engine Subsystem - Each rocket engine subsystem is composed of Category C components listed in Table 4-2. Activation of the propellant feed system supplies propellant to the normally-closed solenoid inlet valves mounted on the rocket engines. Electrical signals from the Stabilization and Control System open the oxidizer and fuel valves simultaneously. In the event of failure in the SCS, the engine valves may be operated on a separate manual circuit.

The RCS employs sixteen rocket engines mounted in clusters of four on the external surface of the SM. Eight rocket engines are for roll control, four are for pitch control, and four are for yaw control. Control for each axis is supplied by pairs of engines arranged to provide rotation without translation. One engine of each pair is supplied by one of the independent propellant supply systems.

Each rocket engine is a pulse-modulated, pressure-fed, radiation-cooled thrust generator and has the following characteristics:

a. Thrust - It develops a vacuum thrust during continuous operation of 100 pounds plus or minus 5 percent.

b. Specific Impulse - Under vacuum conditions and continuous operation, the engine develops a specific impulse of 300 seconds when operating for periods in

excess of one second. The engine system achieves a minimum total impulse bit, demonstrated by repeatability within plus or minus 15 percent, of not more than 0.65 pound-seconds.

c. Weight - its dry weight does not exceed 3.75 pounds.

d. Reliability - It has a numerical reliability of no less than 0.994 over an operating life of 1000 seconds after completion of acceptance testing.

e. Pressures - Helium source pressure for the pressurization system is approximately 4500 psig. Propellant is provided to the engine at an approximate operating pressure of 170 psia.

f. Operation - The four independent units of the system may be used simultaneously during normal reaction control operation. The normal mode of operation for roll, pitch, or yaw control consists of firing two opposite engines to result in a couple about the appropriate axis.

Any three of the control units are capable of performing the maneuvers required for safe return of the CSM following failure of a single unit at any time during this mission. In the event of Stabilization and Control System malfunction, the crewman may assume manual control over operation of any

combination of the 16 rocket engines through use of a separate control circuit. Means for identifying and isolating a failed unit and engine are provided.

The complete system incorporates features to facilitate preflight servicing, checkout, and deactivation.

4.3.6 SUPERCRITICAL STORAGE SYSTEM

This system stores hydrogen and oxygen as supercritical fluids, supplies gaseous oxygen for the CM cabin and pressure suit atmosphere and LEM pressure suit atmosphere, and supplies gaseous hydrogen and oxygen for fuel-cell operation. The system provides: A sufficient quantity of oxygen and hydrogen for safe return of the three-man crew from a 14-day lunar landing mission; minimum, normal and contingency flow requirements; negligible loss of operating fluids; and storage in a supercritical state.

4.3.6.1 Equipment Description

Cryogenic Storage Tanks - Four spherical tanks are mounted on tubular flanges. 320 pounds of oxygen are stored in each of two hydrogen tanks.

Insulation - The maximum allowable heat leak per tank is about 1.09 watts (3.75 BTU/Hr.).

Electrical Heaters - Maximum flow rate conditions require 370 watts for oxygen and 30 watts for hydrogen. Redundant heaters are provided.

Quantity Gaging - Mass quantity sensors are provided.

4.3.6.2 Operation

The Supercritical Storage System functions according to the following conditions:

a. Cool down and fill time - 40 minutes

b. Pressure buildup time - 50 minutes

c.	System flow response	- 0.45 to 16.4 lb/hr in 45 seconds and return in 60 seconds
d.	Standby time, tanks full	- 30 hours
e.	Control Pressure range	- Oxygen: 875 to 925 psi about -280°F Hydrogen: 240 to 260 psi at about -415°F
f.	Relief pressure	- Oxygen: Open 1020 psia, reseat 1005 psia Hydrogen: Open 295 psia, reseat 280 psia

4.37 ENVIRONMENTAL CONTROL SYSTEM

The Environmental Control System is described in Section III, Paragraph 3.3.10.

4.3.8 ELECTRICAL POWER SYSTEM

The Electrical Power System is included in the Command Module section of this document (III). However, the fuel cell modules, which provide the main d-c power source are located in the SM and the equipment is described briefly here.

4.3.8.1 Equipment Description

Fuel cell modules are of the intermediate temperature Bacon-type, utilizing dual porosity nickel electrodes and aqueous potassium hydroxide electrolyte. Electrode construction consists of fine pore, screen, coarse pore, and expanded metal plate, electron beam welded to a current collector backup plate. The active area electrode thickness is approximately 0.070 inches. A module stack consists of 31 Bacon-type cells, series connected, and hermetically sealed in a module tank. The hydrogen regeneration circuit is complete with pump, water separator, condenser, valves, controls, and piping. The module secondary cooling circuit consists of coolant regenerator, pump, accumulator, valves, reactant preheaters, and controls. The reactant supply is complete with regulators, filters, and inert gas system for control and pressurization. Module weight does not exceed 215 pounds, excluding mounting structure to the spacecraft. Instrumentation and other devices necessary for normal and contingency operation are included in the modules.

4.3.8.2 Operation

The general operating characteristics are as follows:

a. Modules are operated in a closed cycle.

b. Output Power - Each module has a nominal capacity of 1500 watts (net power) at an output voltage from 27.0 to 31.0 volts d-c. Modules have the capability of 35 percent overload continuously applied at 27.0 volts.

c. Nominal Pressure and Temperature - These are approximately 60 psia and 460°F respectively.

d. Specific Reactant Consumption - Normally, at a power output of 1500 watts per module, the specific reactant consumption does not exceed 0.8 pounds per KW hour.

e. Water Generation - Potable water generated by the fuel cells is stored with a pH of approximately 7.0. A detection and control system is provided with each module to prevent contamination of collected water supply.

f. Start Up - Self-sustaining reaction within each module is initiated at a temperature of approximately 275°F. Integral heaters are provided with each module to facilitate ground start only. Flight operation is continuous.

4.3.9 COMMUNICATIONS SYSTEM

The UHF/S-Band directable antenna, used with a UHF transponder, consists of one parabolic antenna to maintain GOSS/CM communication during normal maneuvers in translunar and lunar orbital mission phases. The antenna is mounted on a retractable arm which is extended after lunar injection. A gimbal mount operated either automatically or manually permits antenna rotation to provide spherical coverage.

SECTION V

5.0 LUNAR EXCURSION MODULE

5.1 FUNCTION

The Lunar Excursion Module (LEM), shown on Figure 5-1, serves as the vehicle for carrying two of the three-man crew and a scientific payload from the Command and Service Module (CSM) in lunar orbit to the lunar surface and back. The LEM also provides a base for lunar operations and crew exploration in the vicinity of the lunar touchdown point. The LEM systems, described in sections 5.3.1 to 5.3.12 support the crew in the operation of the spacecraft.

5.2 DESCRIPTION

5.2.1 POSITION IN SPACECRAFT (SC)

The position of the LEM in the spacecraft for various phases of the lunar landing mission is shown on Figure 3-1.

5.2.2 REFERENCE AXES

The reference axes of the LEM are orthogonal, remain unchanged for all flight phases, and are identical with those of the CSM as assembled in the earth launch configuration (reference paragraph 3.2.2). However, for flight and crew reference following LEM separation, the direction of flight is parallel to the positive Z-axis which becomes the "roll axis", and the X-axis becomes the "yaw axis".

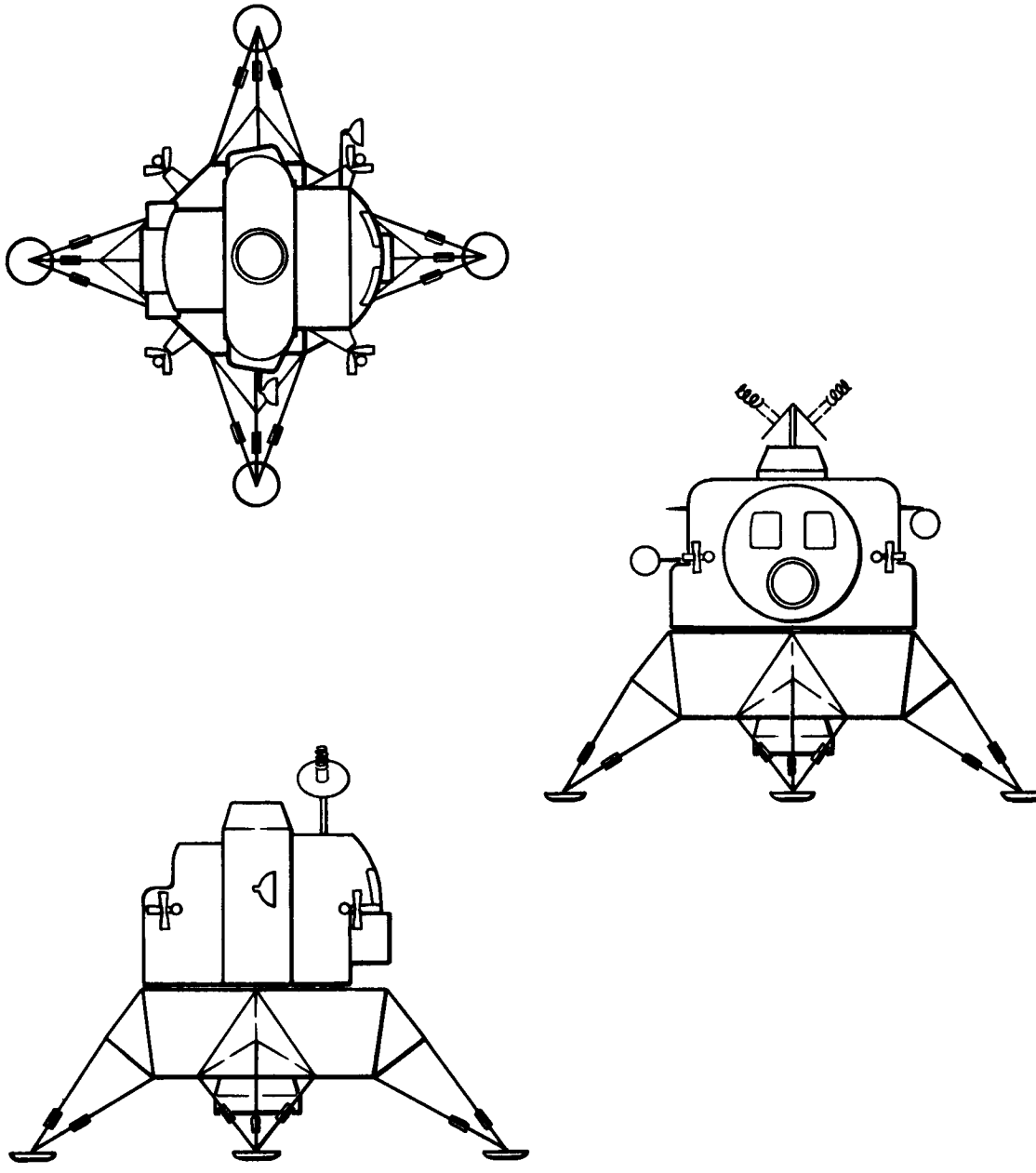

Figure 5-1 - Lunar Excursion Module Configuration

5.2.3 CONFIGURATION

The LEM three view configuration is shown on Figure 5-1.

5.2.4 WEIGHTS

5.2.4.1 Control Weight

The control weight of the LEM is 26,370 pounds. The ascent stage has a weight allotment of 18,360 pounds, of which 14,720 pounds are propellant, and the descent stage has a weight allotment of 8,010 pounds, of which 4,110 pounds are propellant.

5.2.4.2 Design Goal Weight

The design goal weight of the LEM is 24,500 pounds.

5.3 MAJOR LUNAR EXCURSION MODULE SYSTEMS

5.3.1 STRUCTURAL SYSTEM

The LEM structure consists of two stages, the ascent and the descent stage.

5.3.1.1 Ascent Stage

The ascent stage structure is a welded aluminum shell, externally stiffened, and capable of providing a pressurized environment for the LEM crew. A docking ring and crew transfer tunnel with hatch is located on the X axis above the ascent stage rocket engine. Transparent windows are provided in the forward bulkhead with sufficient area to provide adequate crew visibility for performing all LEM maneuvers.

The ascent stage propellant tanks are spherically shaped and located on the Y axis outside the pressurized compartment. They are stacked vertically and protected from space environment with an external shield.

5.3.1.2 Descent Stage

The descent stage structure consists of two pairs of beams crossed to a cruciform shape. The beams support the descent propulsion tanks, landing gear and the descent rocket engine. The ascent and descent stages are supported in the spacecraft adapter by the previously described beams.

The four descent propulsion tanks are located symetrically on the Y and Z axes. They are cylindrically shaped with spherical ends.

5.3.2 FLIGHT CREW SYSTEM

This is discussed in Section 3.3.2.

5.3.3 CREW SYSTEM

The crew system of the LEM is considered to be that group of subsystems and components which support the operation and needs peculiar to the flight crew.

5.3.3.1 Equipment Description

Controls and Displays - Controls and displays are designed and located to provide for maximum crew effectiveness in consideration of the division of crew tasks and responsibilities. During lunar landing and launch the crewmen are not required to be mobile. Although designed for two-man operation, controls and displays permit one crew member to return the LEM to the CSM safely. Manual controls are designed with safety devices which prevent inadvertant actuation without degradation to normal operation.

Restraints, Support Equipment, and Seats -Each crewman is provided with a seat capable of supporting against acceleration loads during landing and launching. Seats are adjustable to provide for comfortable rest positions and for visibility during rendezvous and docking. Restraints are provided with each seat.

Food and Water Management - Food and Water is provisioned in the LEM prior to separation from the CM. Food is not refrigerated. It is of the dehydrated or freeze dried type constituting a low bulk diet.

Radiation Dosimeter - Each crew member is provided with an accurate, simply read, personal dosimeter which is worn or placed immediately adjacent to the crew member at all times. Each dosimeter measures cumulative dose, contains a warning device, and has an output plug for telemetry connection.

First Aid Equipment - The LEM is equipped with first aid supplies and preventive medicine for dealing with various human injuries and disorders.

Space Suits - Space suits are worn by each crew member at all times during the LEM mission. They may be employed as unpressurized garmets in the LEM cabin, as pressurized suits in conjunction with the LEM Environmental Control System during cabin decompression, or as pressurized suits in conjunction with the Portable Life Support System during extravehicular operations.

Portable Life Support Subsystems - The portable life support subsystems, of a recirculating type, are used in conjunction with the space suits during extravehicular operations. A separate system for each crew member is capable of supporting a crewman for four hours independent of the LEM, and can be recharged by the LEM. The subsystem includes the personal communications equipments which provide for two-way voice communications and for transmission of suit and biomedical telemetry data while outside the spacecraft.

5.3.4 COMMUNICATIONS SYSTEM

The communications system provides the capability for data and television transmission, voice communication, coherent two-way doppler tracking, and ranging signal turn around.

5.3.4.1 Operation

Voice Communication - The system has the capability for voice communication between:

a. The LEM and CM when within approximately 300 nautical miles of each other.

b. The LEM and earth. This augments the communications link between the CM and earth.

c. The LEM and a crew member at a radial distance of up to 5 nautical miles from the LEM.

d. The crew members within the LEM.

By manual switching the LEM provides the capability of relaying voice transmissions between an astronaut outside the LEM and the CSM, and the earth, and vice-versa. It also provides for relay of suit telemetered data while outside the LEM to the earth.

Telemetry - The PCM Telemetry Equipment provides for data transmission during flight and simultaneously with voice and television after erection of the S-band erectable antenna while on the lunar surface. It is used as required to process the data obtained from the operational instrumentation system for transmission.

Television - The system includes a portable, near-commercial

quality television subsystem capable of real time picture transmission.

5.3.5 INSTRUMENTATION SYSTEM

The Instrumentation System is comprised of the following subsystems:

a. Operational Instrumentation Subsystem

b. GFE Flight Research and Development Instrumentation Subsystem

c. GFE Scientific Instrumentation Subsystem

5.3.5.1 Equipment Description

Operational Instrumentation Subsystem - The operational instrumentation subsystem detects, measures, and displays all data required by the crew for monitoring the LEM environment and evaluating the integrity and performance of the LEM systems. It provides data for transmission to earth, to facilitate ground assessment of LEM performance and failure analysis. It also provides data for pre-launch checkout of the LEM. The capability is also provided for documenting the mission through data recording. The data storage equipment is provided by the PCM Telemetry Equipment.

GFE Flight Research and Development Instrumentation Subsystem - The flight research and development instrumentation subsystem provides for the measurement, recording, and telemetering of data required in the development of the LEM. The subsystem shall consist of sensors, signal conditioning, modulation packages, transmitters, recorders, timers, cameras, command receiver/decoders and radar transponders as required.

GFE Scientific Instrumentation Subsystem - The scientific instrumentation subsystem is designed primarily for selenologic research. The subsystem includes tools and instruments necessary to perform the scientific experiments. Data, samples, and scientific packages are returned in the LEM to the CSM and nonessential equipment is discarded prior to lunar launch. Typical equipments being considered for the scientific payload are as follows:

a. Lunar Atmosphere Analyser - This instrument provides the capability of determining the qualitative and quantitative chemical composition of the lunar atmosphere. It may be used as a backup component for determining the cabin atmosphere partial pressure.

b. Gravitometer - This instrument provides the capability for determining the direction and magnitude of the moon's gravitational field at the lunar surface.

c. Magnetometer - This instrument provides the capability for determining the direction and magnitude of the lunar magnetic field.

d. Radiation Spectrometer - This instrument provides the capability of determining the radiation spectrum at the lunar surface.

e. Specimen Return Container - This is a small container

to be filled with lunar material. The container is sealed in a manner so that no material or bacteria can enter the container on the return flight.

f. Rock and Soil Analysis Equipment - This equipment provides for obtaining samples of the lunar surface material, for obtaining core samples, and for the analysis of these samples. A microscope is included for direct use or with the still camera provided as part of the scientific payload. Coring equipment may be employed with the seismographic equipment.

g. Seismographic Equipment - This instrument provides the capability for investigating the subsurface structure of the moon by measurements taken after placing and exploding a charge below the lunar surface.

h. Soil Temperature Instrument - This instrument provides the capability for measuring lunar surface and subsurface temperatures.

i. Cameras - Movie and still cameras provide the capability for obtaining high resolution color, infra-red, and ultra-violet photography of the lunar surface.

5.3.6 ELECTRICAL POWER SYSTEM

The Electrical Power System supplies, regulates, controls, and distributes all electrical power required by the Lunar Excursion Module. The Electrical Power System consists of a fuel cell power source with its associated cryogenic reactant storage and supply, an auxiliary battery system, pyrotechnic battery system, RCS battery system, command destruct battery system, battery charger, main d.c. buses, pyrotechnic buses, RCS buses, command destruct bases, a.c. buses, inverter system, circuit protectors, d.c. distribution system, a.c. distribution system, and connectors, switches, relays, control, and indicating devices. All Lunar Excursion Module electrical power loads are classified as Essential, Non-Essential, Pyrotechnic, RCS, or Command Destruct. Essential loads are defined as those loads (except pyrotechnic circuits) which are mandatory for safe return of the Lunar Excursion Module to a docked position with the Command Module. Non-Essential loads are defined as those loads which are necessary for the successful completion of the Lunar Excursion Module mission. Pyrotechnic loads are those loads associated with the RCS system. Command Destruct loads are those loads associated with the Command Destruct System.

5.3.7 GUIDANCE AND NAVIGATION SYSTEM

The LEM G&N System components and their operation is similar to the CM G&N System discussed in Section III. The components are designed to be interchangeable when possible.

5.3.7.1 Equipment Description

The LEM G&N System consists of the following basic components. The description and operation of these components are contained in paragraph 3.3.8. A discussion of differences between CM & LEM components is included in this section.

a. Inertial measurement unit (IMU)

b. Apollo Guidance computer (AGC)

c. Scanning Telescope (SCT)

d. Coupling Display Unit (CDU)

e. Map and Data Viewer (MDV)

f. Navigation base (NVB) - IMU and SCT mounting platform

g. Power Servo Assembly (PSA)

h. Displays and Controls (D&C)

i. Rendezvous Radar (RR)

j. Lunar Landing Radar (LLR)

k. Transponder (TR)

IMU - The CM and LEM IMU's are identical.

AGC - The LEM AGC has approximately $\frac{1}{2}$ the storage capability of the CM AGC.

SCT - Similar to CM SCT, however it is fixed.

CDU - Similar to CM CDUs except that CM has five CDUs and the LEM has three.

MDV - Similar to CM MDV.

PSA - Similar to CM PSA.

D&C - Similar to CM D&C.

RR - Identical to CM RR.

TR - Identical to CM TR.

Lunar Landing Radar - The lunar landing radar is a three-beam doppler radar which measures altitude and horizontal velocity. The radar serves to correct the LEM AGC-IMU altitude and velocity uncertainties during the final phase of lunar descent. Also, radar derived altitude, altitude rates, and horizontal velocities are displayed to the crew independent of the primary navigation and guidance system. The three-beam antenna is two position with the axis of symmetry at angles of 50 degrees and zero degrees from the thrust axis. The antenna position actuating time is 2 seconds maximum. The radar is an X-Band, coherent, solid state device and each beam of the system has 6 degrees beam width.

5.3.8 STABILIZATION AND CONTROL SYSTEM

The Stabilization and Control System is employed in the same LEM mission events as the Guidance and Navigation System.

5.3.8.1 Equipment Description

The Stabilization and Control System consists of the following major components which are similar to the CM systems discussed in Section III.

a. Attitude reference

b. Rate sensors

c. Control electronics assembly

d. Manual controls

e. Displays

5.3.9 ENVIRONMENTAL CONTROL SYSTEM

The LEM Environmental Control System (ECS) maintains a conditioned oxygen atmosphere for unpressurized space suit operations within the closed LEM cabin, provides for thermal protection of LEM equipment where required, and supplies expendables for charging the portable lift support subsystems. Initial pressurization of the LEM will be accomplished by the CSM Environmental Control System. During normal operation the ECS provides the following cabin conditions:

a.	Total cabin pressure (oxygen)	5 ± 0.2 psia
b.	Relative Humidity	40 - 70%
c.	Carbon Dioxide Partial Pressure (Maximum)	7.6 mm Hg
d.	Temperature	$75^{\circ} \pm 5^{\circ}F$

The ECS is capable of maintaining a cabin pressure of at least 3.5 psia for 2 minutes following a single 1/2 inch diameter puncture in the pressurized compartment. When the cabin is decompressed, a conditioned oxygen atmosphere is supplied at 3.5 psia to the space suits. Space suits with portable life support systems are employed for ingress and egress to space or the lunar surface.

5.3.9.1 Equipment Description

The LEM Environmental Control System consists of the following major sections:

Water Management - This section of the system provides for storage and delivery of all drinking, food preparation, and cooling

water required aboard the LEM. Provisions are included for delivery of the water output of the centrifugal separators to the water evaporators.

Cryogenic Oxygen Storage - The primary source of oxygen for the ECS is a super critical storage assembly.

Cold Plates - Active thermal control of LEM equipment will be provided by cold plates supplied with liquid coolant by the Heat Transport Section.

Atmosphere Revitalization - This section of the system provides for the control of flow, temperature, and composition of oxygen supplied to the space suits and/or to the cabin. Circulation is maintained by parallel isolated compressors, any one of which will provide 12 cfm at 3.5 psia to each of the space suits simultaneously. CO_2 is removed by passing the cabin and/or suit exhaust gases through lithium hydroxide. Noxious gases and odors are controlled by activated charcoal. Condensed water vapor is removed by either of two parallel centrifugal separators.

Heat Transport - Temperature of the atmospheric revitalization section of the system is controlled by a gas to glycol heat exchanger, or, in the event of failure of the glycol circuit, by an evaporative type heat exchanger. In addition, suit inlet temperature control is provided by a regenerative heat exchanger. The cabin atmosphere is separately heated, or cooled by heat exchange with a part of the glycol circuit, and is circulated by blowers. The liquid

circuit also accommodates the distribution of glycol to LEM equipment requiring cooling. The glycol is circulated by parallel pumps through an evaporative heat exchanger which accounts for all heat rejection.

Oxygen Supply and Cabin Pressure Control - This section maintains cabin pressure during normal operations or maintains space suit pressure during decompressed cabin operations. A gaseous oxygen accumulator is provided for those operations requiring high oxygen flow rates.

5.3.10 REACTION CONTROL SYSTEM

The Reaction Control System provides thrusts about three axes to accomplish control and provides vernier translational thrusts for terminal rendezvous and docking.

5.3.10.1 Equipment Description

The LEM Reaction Control System is pulse modulated, using the hypergolic propellant combination of N_2O_4 (oxidizer) and 50/50 blend hydrazine and UDMH (fuel). The system consists of two identical interconnectable units, each capable of performing the maneuvers required for safe return to the CM in the event of failure of one unit at any time during the mission. The system is connectable with the ascent propulsion system to permit supply of propellants from the main tanks in case of emergency. The complete system is located in the ascent stage of the module and includes a total of sixteen thrusters. Each unit of the system consists of the following component assemblies:

a. Helium pressurization supply and distribution

b. Oxidizer supply and distribution

c. Fuel supply and distribution

d. Eight thrust chamber assemblies

5.3.10.2 Operation

The two units of the system may be operated simultaneously during normal control operation. The normal mode of operation for roll, pitch, and yaw control consists of firing two engines to result

in a torque couple about the appropriate axis. Translational maneuvers may be performed using a combination of engines along the desired axis. Either of the two units, using additional propellants from the ascent propulsion tanks where practical, is capable of providing the total impulse required for safe return and docking with the CM following a single failure at any time during the mission. Malfunction detection means are provided to permit isolation of a unit or selected critical components at the option of the crew. In the event of Stabilization and Control System malfunction or at the crew's option, manual control may be assumed over operation of any combination of the sixteen rocket engines through use of a separate isolated control circuit.

5.3.11 LUNAR EXCURSION PROPULSION SYSTEM

5.3.11.1 Ascent Propulsion System

The ascent propulsion system provides the thrust level and total impulse required for LEM ascent from the lunar surface to CSM orbit altitude, orbit plane changes, and rendezvous with the CSM. The system also provides propulsion for LEM abort at points in the mission following initiation of the lunar descent maneuver but prior to rendezvous with the CSM. The propellants and pressurant used are the same as those used in the descent propulsion system.

Propellant Tanks - Propellants are contained in four equal size spherical tanks, two containing oxidizer and two containing fuel. The tanks contain the necessary devices to prevent propellant sloshing and vortexing. Propellant positioning and ullage control will be provided by internal tank configuration and/or use of the RCS for propellant settling.

Propellant Flow Control - A parallel feed system is used from the two fuel and two oxidizer tanks. Burst discs in the fuel and oxidizer feed lines prevent propellants from reaching the engine inlet until the propellant tanks are pressurized.

Pressurization Subsystem - Helium for pressurization of the propellant tanks is contained in two high pressure tanks at ambient temperature. Prior to use, the helium in the tanks is isolated by redundant squib valves. Upon opening of the squib valves, the high pressure helium reaches parallel, two stage regulators, which maintain

the working pressure in the propellant tanks. In case of a regulator failure, the failed regulator may be isolated by use of a solenoid valve provided upstream of each regulator. Downstream of the regulators, helium flows to the propellant tanks, with a system of check valves provided to prevent mixing of propellant vapors. Relief valves, protected by burst discs, are provided on the fuel and oxidizer tanks to prevent failure due to overpressure.

Rocket Engine - Thrust is provided by a pressure fed, fixed thrust liquid rocket engine employing ablative thrust chamber cooling with a radiation cooled nozzle extension. The nominal vacuum thrust is 3500 pounds. Propellant flow control is provided by series-parallel redundant shutoff valves, which are fuel actuated and solenoid piloted.

The engine operates at a nominal chamber pressure of 100 psia, and a 1.6:1 mixture ratio. Nominal vacuum specific impulse is 303 lb sec/lb. The engine is capable of 35 starts during its 430 second operating life.

5.3.11.2 Descent Propulsion System

The descent propulsion system provides the thrust levels and total impulse required for LEM descent from lunar orbit to a hover altitude above the lunar surface, hover, translation, and lunar landing. The oxidizer used is nitrogen tetroxide, and the fuel is a mixture of 50% hydrazine and 50% unsymmetrical dimethylhydrazine. Propellant tanks are pressurized by gaseous helium.

Two descent engines are under parallel development, one employing a helium injection throttling technique, and the other employing a variable area injector for thrust control. One of these engines will be selected for final development, qualification, and production.

Propellant Tanks - Propellants are contained in two fuel tanks and two oxidizer tanks. All tanks are cylindrical with spherical end caps, and are of equal size. The tanks contain the necessary devices to prevent propellant sloshing and vortexing. Propellant positioning and ullage control will be provided by internal tank configuration and/or use of the reaction control system for propellant settling.

Propellant Flow Control - A parallel propellant feed system is used from the two fuel and two oxidizer tanks. Burst discs in the fuel and oxidizer lines allow propellants to flow to the engine valves when the tanks are pressurized.

Pressurization Subsystem - Helium for pressurization of the propellant tanks and throttling of the helium injection engine is stored in two high pressure bottles at ambient temperature. Electrically actuated, normally closed, redundant squib valves isolate the helium supply until required in the mission. Helium pressure is reduced to tank working pressure by two parallel, two-state regulators. In case of failure, either regulator can be isolated by use of a solenoid valve. Helium flows through check valves to the fuel

and oxidizer tanks, the check valves preventing mixing of vapors from the two sets of tanks. Downstream of the check valves, helium is tapped off for use in the engine during throttling, and relief valves, protected by burst discs, are provided to prevent tank failure due to overpressure.

Rocket Engine, Helium Injection - Thrust is provided by a pressure fed liquid rocket engine, employing an ablatively cooled thrust chamber, and continuously throttleable over a range of 10,500 to 1050 lb thrust. A radiatively cooled nozzle extension is attached to the thrust chamber by means of a mechanical joint at an area ratio of 20:1, and extends to an area ratio of 53:1. The engine is capable of gimballing $\pm 6^{\circ}$ in both the pitch and yaw axes.

An aluminum injector is attached to the forward end of the combustion chamber by means of a mechanical joint. Throttling is accomplished by parallel, linked, variable valves in the propellant lines upstream of the injector, with helium introduced between the valves and the injector to provide engine stability at low thrust levels. Helium flow is controlled by redundant solenoid valves. Propellant flow is controlled by the variable flow control valves, which are capable of complete shutoff, and parallel, linked shutoff valves in series with the variable valves.

The engine operates at a nominal chamber pressure of 145 psia and a nominal mixture ratio of 1.6:1. Nominal vacuum specific impulse is 305 lb/sec/lb. The engine is capable of 20 starts during

its 730 second operating life.

Rocket Engine, Variable Area Injector - Thrust is provided by a pressure fed liquid rocket engine, employing an ablatively cooled thrust chamber, and continuously throttleable over a range of 10,500 to 1050 lb thrust. A radiatively cooled nozzle extension is attached to the thrust chamber by means of a mechanical joint at an area ratio of 20:1, and extends to an area ratio of 49:1. The engine is capable of gimballing $\pm 6^{\circ}$ in both the pitch and yaw axes.

A variable area injector is attached to the forward end of the combustion chamber by means of amechanical joint. The variable area injector controls propellant injection velocities and flow rates at high thrust levels. At lower thrust levels propellant flow rate is controlled by variable venturi valves in the engine propellant lines. Propellant shutoff is accomplished by use of linked series - parallel redundant shutoff valves downstream of the venturi valves.

The engine operates at a nominal chamber pressure of 110 psia and a nominal mixture ratio of 1.6:1. Nominal vacuum specific impulse is 305 lb sec/lb. The engine is capable of 20 starts during its 730 second operating life.

5.3.12 LUNAR TOUCHDOWN SYSTEM

This system is designed to land the LEM safely on an essentially unknown lunar surface with a horizontal velocity limited to 5 feet per second and vertical velocity limited to 10 feet per second. The Lunar Touchdown System satisfies the general conditions of operation described below.

5.3.12.1 Equipment Description

Structure - The Lunar Touchdown System is attached to the LEM by hard points which accommodate variations of landing gear geometries. It has load distribution capabilities which provide impact attenuation and a near vertical position satisfactory for egress, ingress and lunar launch. LEM release from the adapter - S-IVB is also provided at these four attach points. The gear is a four-legged, triped configuration, retracted under the descent stage in the earth-launch condition with the fixed upper portion of the gear truss providing LEM support to the adapter. In all positions of stowage and deployment it does not interfere with the use of the Lunar Excursion Propulsion or Reaction Control Systems. The Lunar Touchdown System is normally deployed from within the LEM but deployment may be performed manually by the crew in space suits outside the LEM.

Lunar Landing Aids - Provision is made for the deployment of landing aids from the LEM at near the hover altitude.

5.4 LUNAR EXPLORATION

The LEM provides the necessary support for the operation and control of scientific and exploration equipment and for processing and transmitting of scientific data to earth.

Each crewman's extravehicular life support equipment provides for 4 hours for each excursion outside LEM vehicle with a six-excursion or 24-hour capability by recharging the portable life support system from the LEM. One or both crewmen may be absent from the LEM but normally one will remain inside the LEM at all times.

SECTION VI

6.0 ADAPTER

6.1 FUNCTION

The Spacecraft Adapter performs the physical mating of the launch vehicle to the Service Module and encloses the thrust chamber of the Service Propulsion System. Present plans call for two types of Spacecraft Adapters; namely, the Saturn I Spacecraft Adapter shown on Figure 6-1, and the LEM Spacecraft Adapter shown on Figure 6-2.

6.2 DESCRIPTION

6.2.1 POSITION IN SPACECRAFT (SC)

The position of the adapter in the spacecraft is shown on Figures 6-1 and 6-2. For the lunar landing mission, the spacecraft adapter is jettisoned after the final S-IVB thrusting and prior to transposition of the CSM/LEM.

6.2.2 REFERENCE AXES

The reference axes of the adapter are orthogonal and correspond to the respective axes of the CSM as assembled in the earth launch configuration. (Reference paragraph 3.2.2).

6.2.3 CONFIGURATION

The Saturn I adapter configuration exploded view is shown on Figure 6-3. The LEM adapter configuration will be supplied.

6.2.4 WEIGHTS

6.2.4.1 Control Weight

The control weight of the LEM adapter is 3,200 pounds.

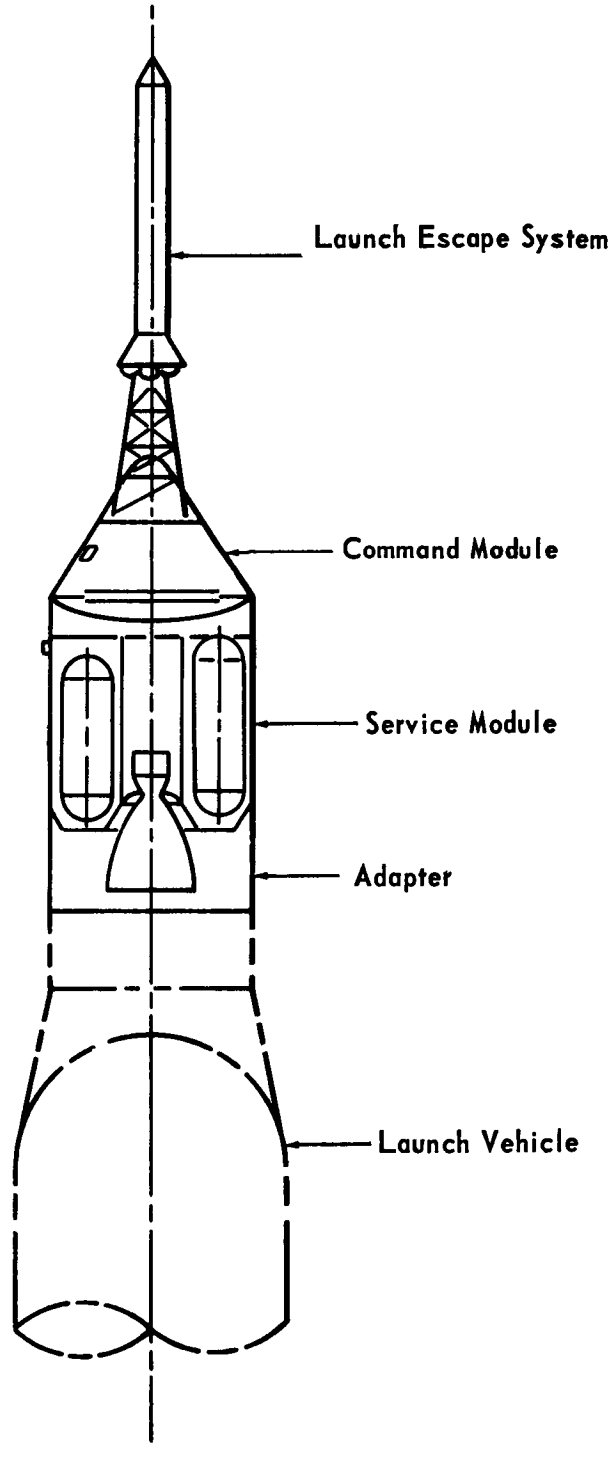

Figure 6-1 - Saturn I Adapter Configuration

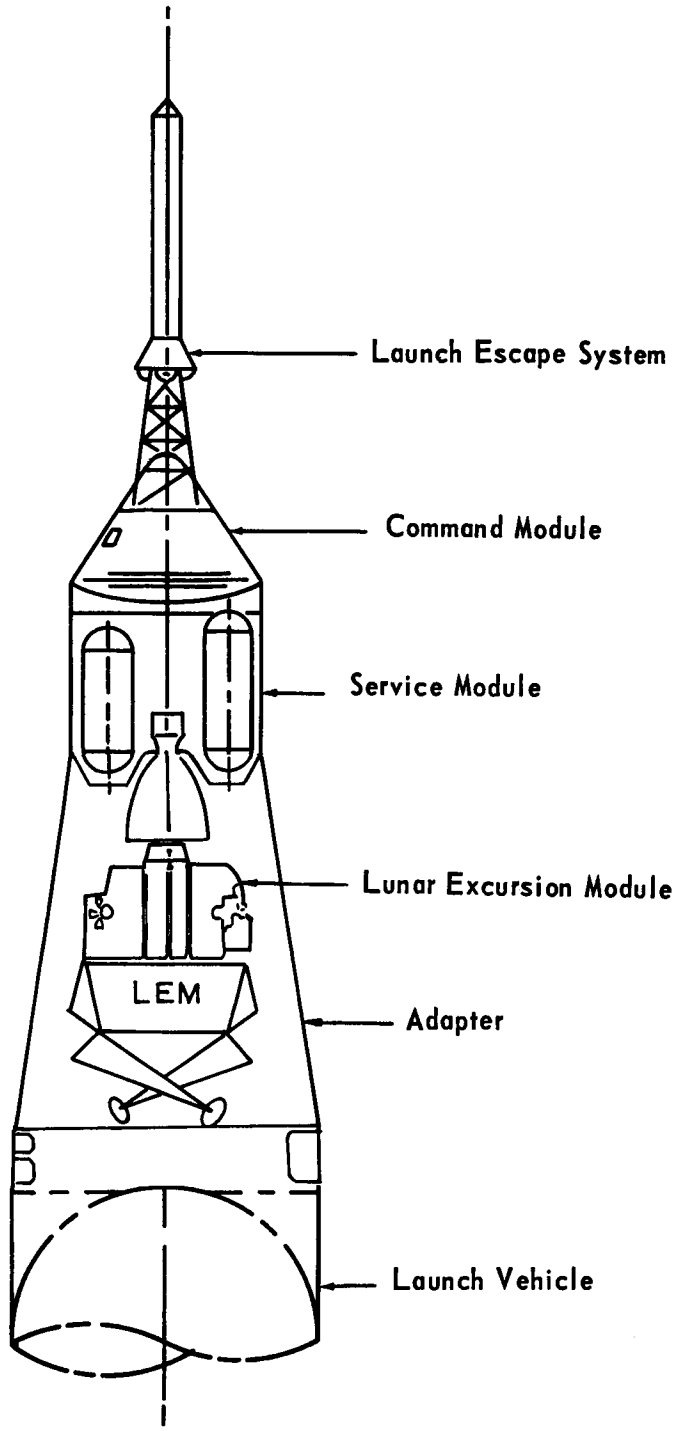

Figure 6-2 - Lunar Excursion Module Adapter Configuration

CONFIDENTIAL

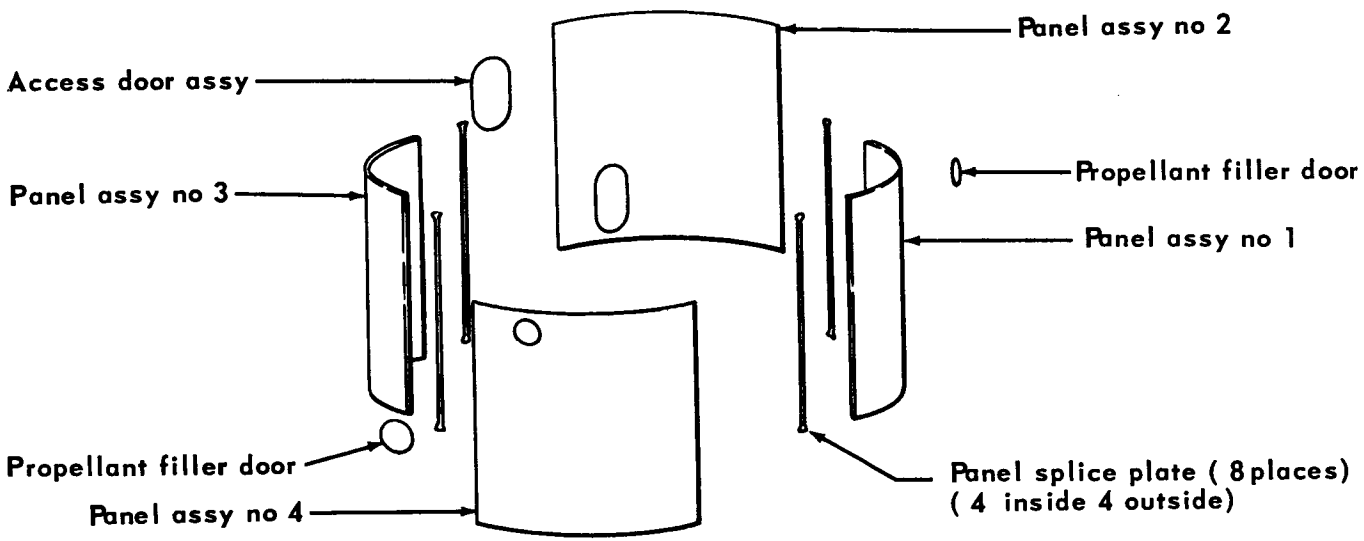

Figure 6-3 - Saturn I Adapter Exploded View

CONFIDENTIAL

6.2.4.2 Design Goal Weight

The design goal weight of the LEM adapter is 3,000 pounds.

6.3 MAJOR ADAPTER SYSTEMS

6.3.1 STRUCTURAL SYSTEM

The Spacecraft Adapter is formed from adhesive bonded aluminum honeycomb sandwich. The required mechanical disconnects, the adapter blow-off system, and the electrical umbilical and associated disconnects are an integral part of the structure.

6.3.2 SEPARATION SYSTEM

(To be supplied)