CONTROL NO. C-49069

COPY NO.

[redacted]

~~AVAILABLE TO NASA HEADQUARTERS ONLY~~

BRIEFING
OCTOBER 3, 1962

GROUP 4
Downgraded at 3 year intervals; declassified after 12 years.

DIRECT FLIGHT APOLLO STUDY

[U]

CLASSIFICATION CHANGE
To UNCLASSIFIED
By authority of GDS - EO 11652
Changed by L. Shirley Date 12/31/72
Classified Document Master Control Station, NASA
Scientific and Technical Information Facility

MCDONNELL

THIS DOCUMENT CONTAINS INFORMATION AFFECTING THE NATIONAL DEFENSE OF THE UNITED STATES WITHIN THE MEANING OF THE ESPIONAGE LAWS, TITLE 18 U.S.C., SECTIONS 793 AND 794. THE TRANSMISSION OR REVELATION OF WHICH IN ANY MANNER TO AN UNAUTHORIZED PERSON IS PROHIBITED BY LAW

[redacted]

DOWNGRADED AT 3 YEAR INTERVALS;
DECLASSIFIED AFTER 12 YEARS
DOD DIR 5200.10

[redacted]

DIRECT FLIGHT STUDY FOR PROJECT APOLLO

CONCEPTUAL DESIGN STUDY OF: -

PART I - LUNAR LANDING SPACECRAFT WITH TWO-MAN APOLLO TYPE COMMAND MODULE

PART II - LUNAR LANDING SPACECRAFT WITH SUITABLY MODIFIED GEMINI AS COMMAND MODULE

PART III - MODIFICATIONS REQUIRED TO BOTH PART I AND PART II SPACECRAFT TO PROVIDE CAPABILITY FOR USE IN LUNAR RESCUE OPERATIONS

[redacted]

[redacted]

EQUIPMENT SUMMARY

- GUIDANCE & NAVIGATION:
  MIT APOLLO ADAPTATION
- STABILIZATION & CONTROL ELECTRONICS:
  MINNEAPOLIS-HONEYWELL APOLLO ADAPTATION
- COMMUNICATIONS:
  COLLINS APOLLO ADAPTATION
- ENVIRONMENTAL CONTROL:
  AIRESEARCH GEMINI ADAPTATION
- ELECTRICAL POWER:
  G.E. GEMINI FUEL CELLS
- EARTH LANDING:
  THREE SIMULTANEOUSLY DEPLOYED 71 FT. DIA. PARACHUTES

[redacted]

[redacted]

DESIGN PHILOSOPHY

- STATE-OF-THE-ART MATERIALS AND MANUFACTURING TECHNIQUES
- MAXIMUM USE OF DEVELOPED AND PROGRAMMED EQUIPMENT
- CONSERVATIVE SUBSYSTEM CRITERIA EXAMPLES:

  LUNAR LANDING GEAR STABILITY MARGINS BASED ON 15° SLOPE AND 0 TO ∞ FRICTION COEFFICIENT

  FUEL CELL ELECTRICAL SUPPLY SIZED FOR FULL LOAD WITH TWO STACK FAILURES

  BATTERIES BASED UPON GEMINI DESIGN WITH SEPARATE SQUIB SUPPLY TO PREVENT TRANSIENT VOLTAGE FLUXUATIONS

  ~40lb weight penalty

  RE-ENTRY HEAT PROTECTION DESIGNED FOR 90° INCLINATION

  ECS DESIGNED FOR MOST ADVERSE LUNAR HEATING CONDITION

[redacted]

[redacted]

MCDONNELL
67A-10625

WEIGHT MARGIN, CONFIDENCE AND GROWTH

- MARGINS - COMMAND MODULE AND EQUIPMENT

  O_2/H_2 AND N_2O_4/MMH - 20%

  O_2/H_2 AND OF_2/MMH - 52%

- DESIGN WEIGHT

  87-92% PROBABILITY WILL NOT BE EXCEEDED BY MORE THAN 3%

- GROWTH THROUGH NECESSARY DESIGN CHANGES

  80-85% PROBABILITY WILL NOT EXCEED 8%

- OVERALL WEIGHT GROWTH

  93-96% PROBABILITY CAN BE LESS THAN 20%

- 85% of weight good data & background for
- 20% of weight curvature estimate

[redacted]

Total weight more good within 3%

[redacted]

WEIGHT GROWTH HISTORY OF MCDONNELL VEHICLES

MCDONNELL
67-10625

TOTAL GROWTH OF VEHICLE

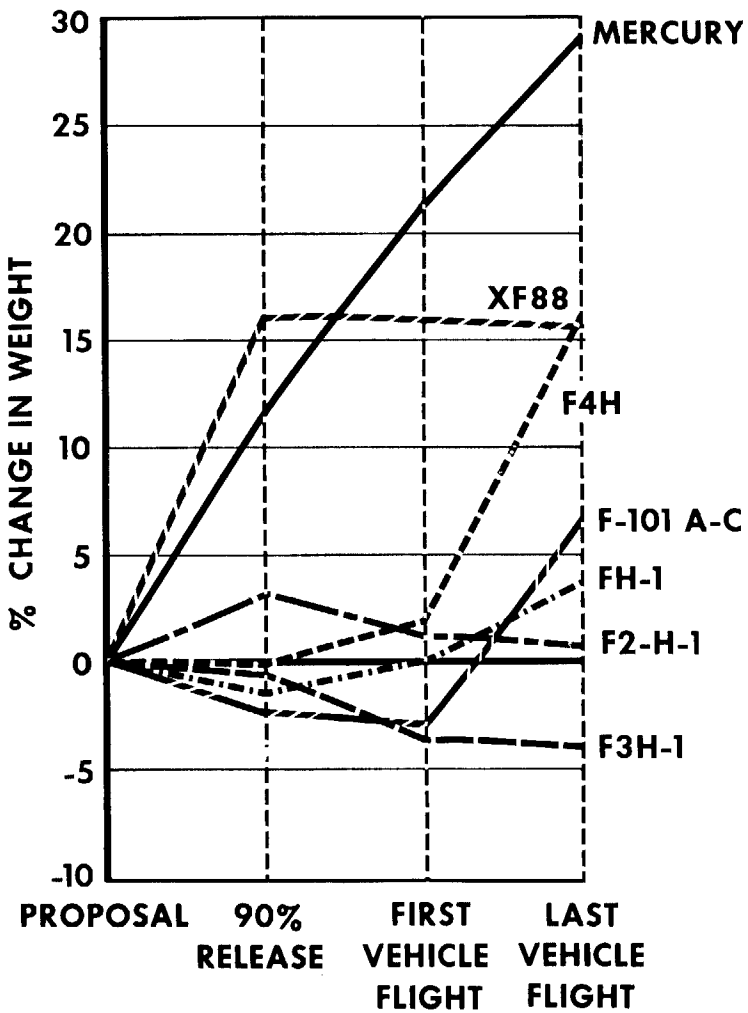

WEIGHT GROWTH OF VEHICLE EXCLUDING CAPABILITY INCREASES

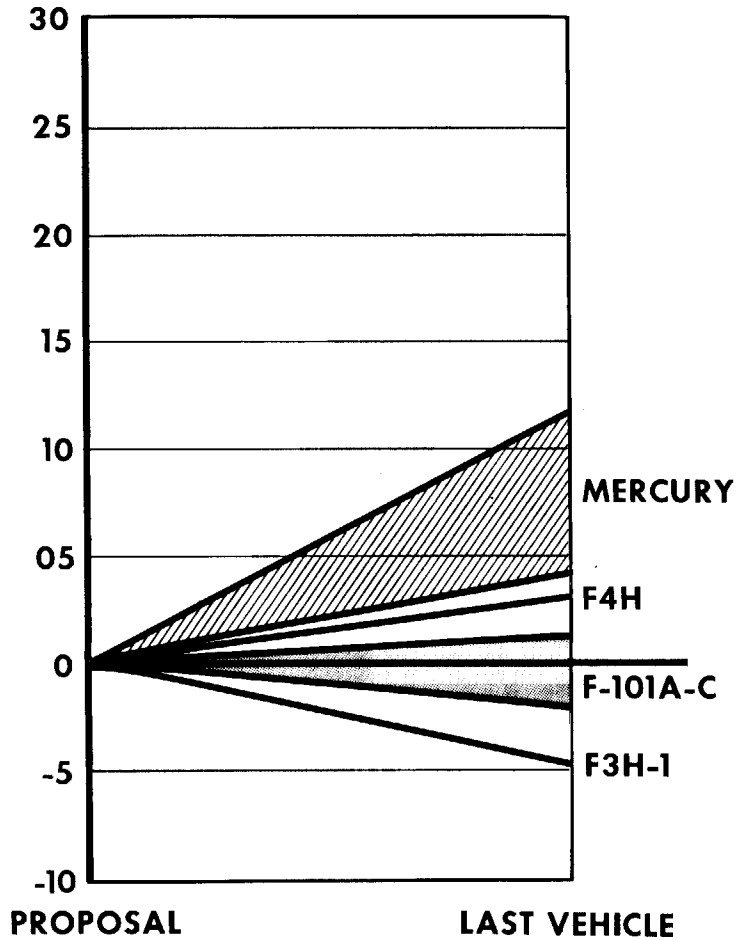

[redacted]

[redacted]

ΔV MARGIN ALLOTMENT-%

	RETROGRADE MODULE	TERMINAL LANDING MODULE	SERVICE MODULE
PROPULSION: SPECIFIC IMPULSE	2.38	2.33	2.18
PROPELLANT UTILIZATION	2.94	4.09	6.71
GUIDANCE & CONTROL	1.31	—	.68
MAN-IN-LOOP	.97	10.00	.97
INERT WEIGHT	1.04	1.19	1.72
TOTAL - INCLUDING INTERACTION EFFECTS	8.92	18.56	12.74

TOTAL VEHICLE NET ΔV MARGIN 11.1%

[redacted]

[redacted]

COMMAND MODULE
ALTERNATE ARRANGEMENTS

MCDONNELL
9-10625

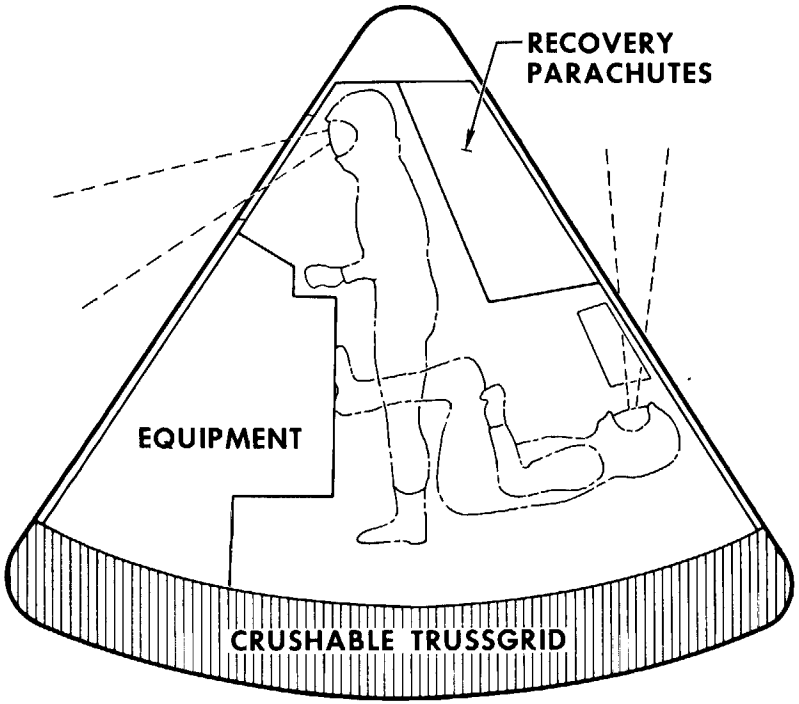

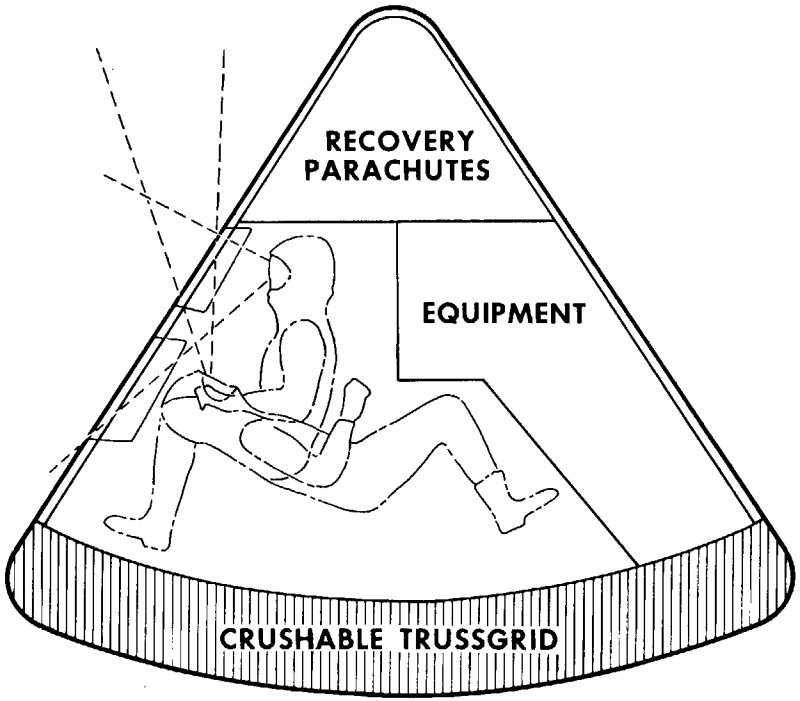

STAND-UP ARRANGEMENT

1. SINGLE CREWMAN STAND-UP CAPABILITY
2. SINGLE CREWMAN IN LUNAR LANDING POSITION
3. STRETCH-OUT CAPABILITY FOR SLEEPING
4. NO SIT-UP CAPABILITY ON MOON
5. WINDOWS ON BOTH SIDES
6. POOR FOR OBTAINING C.G. OFFSET
7. POOR RECOVERY SYSTEM INSTALLATION

SIT-UP ARRANGEMENT

1. NO STAND-UP CAPABILITY
2. GOOD LUNAR LANDING POSITION FOR BOTH CREWMEN
3. STRETCH-OUT CAPABILITY FOR SLEEPING
4. SIT-UP CAPABILITY FOR BOTH CREWMEN
5. WINDOWS ON LEEWARD SIDE ONLY
6. BEST FOR OBTAINING C.G. OFFSET
7. OPTIMUM RECOVERY SYSTEM INSTALLATION

[redacted]

[redacted]

MCDONNELL
16-1062S

CREW SUPPORT COUCH ARRANGEMENT

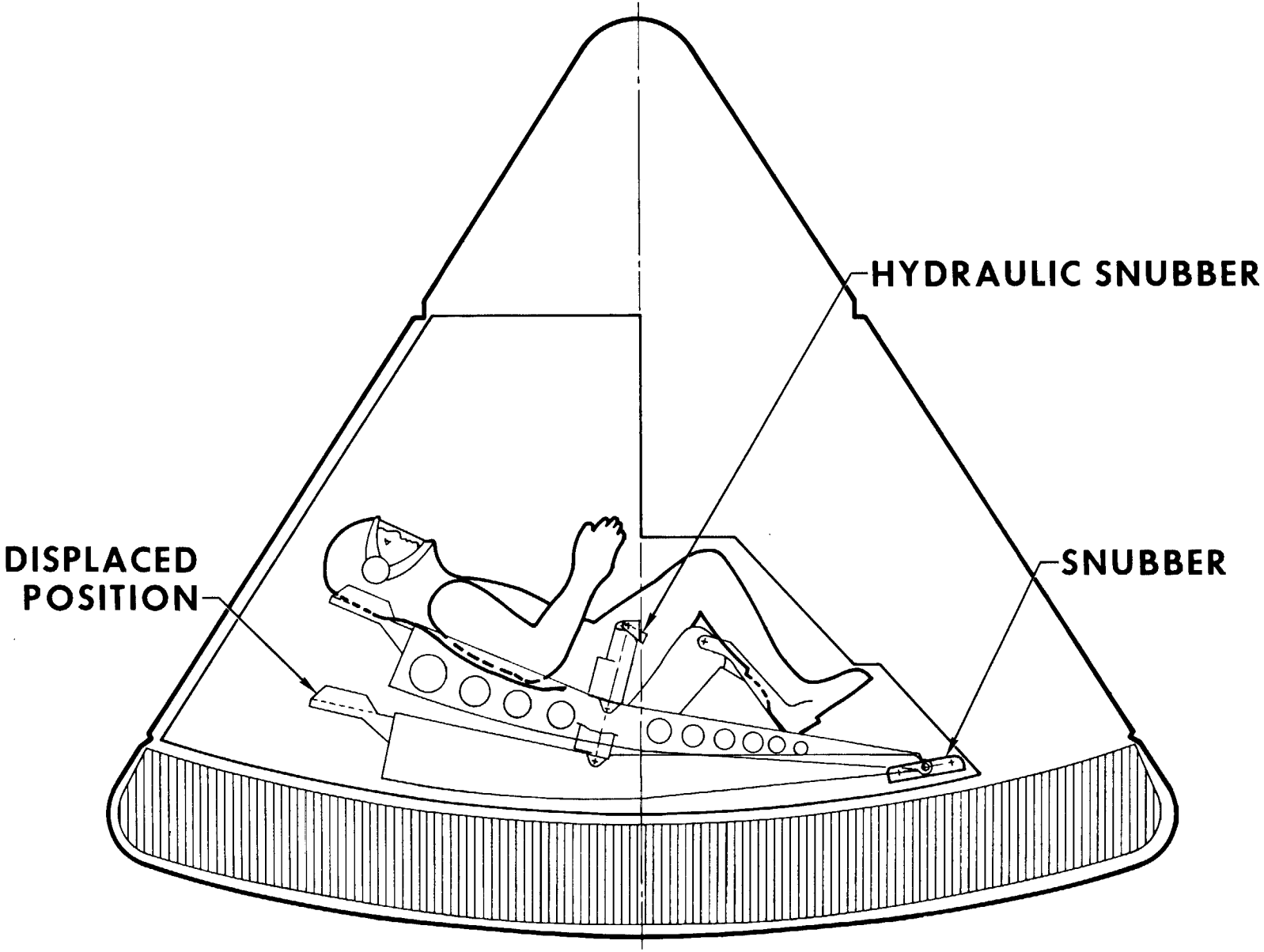

[redacted]

[redacted]

COMMAND MODULE STRUCTURAL ARRANGEMENT

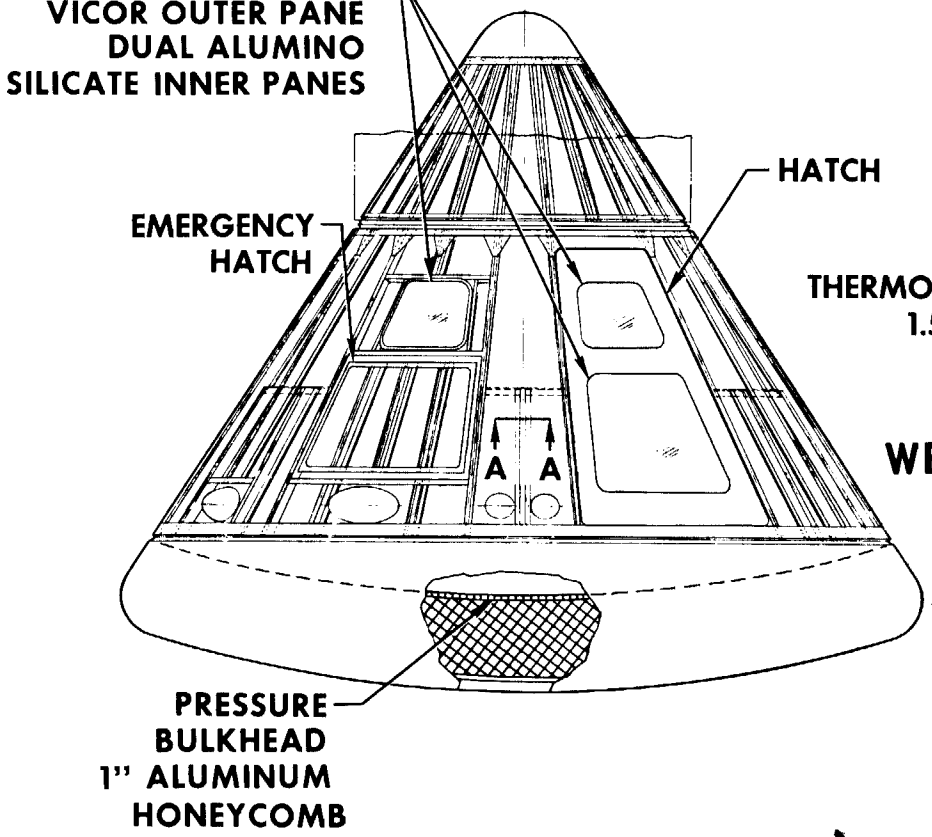

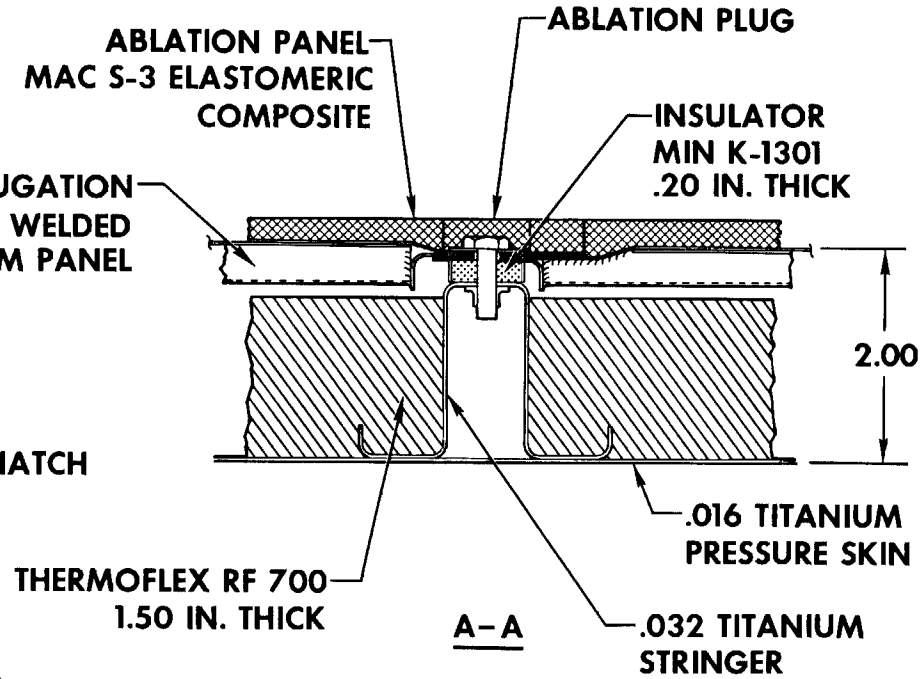

WEIGHT

LAUNCH	5,134 LBS.
STRUCTURE AND HEAT PROTECTION	1,656 LBS.
EQUIPMENT	2,613 LBS.
CREW AND CREW SYSTEMS	865 LBS.

[redacted]

[redacted]

MCDONNELL
10-1062S

LAUNCH AND RE-ENTRY POSITION

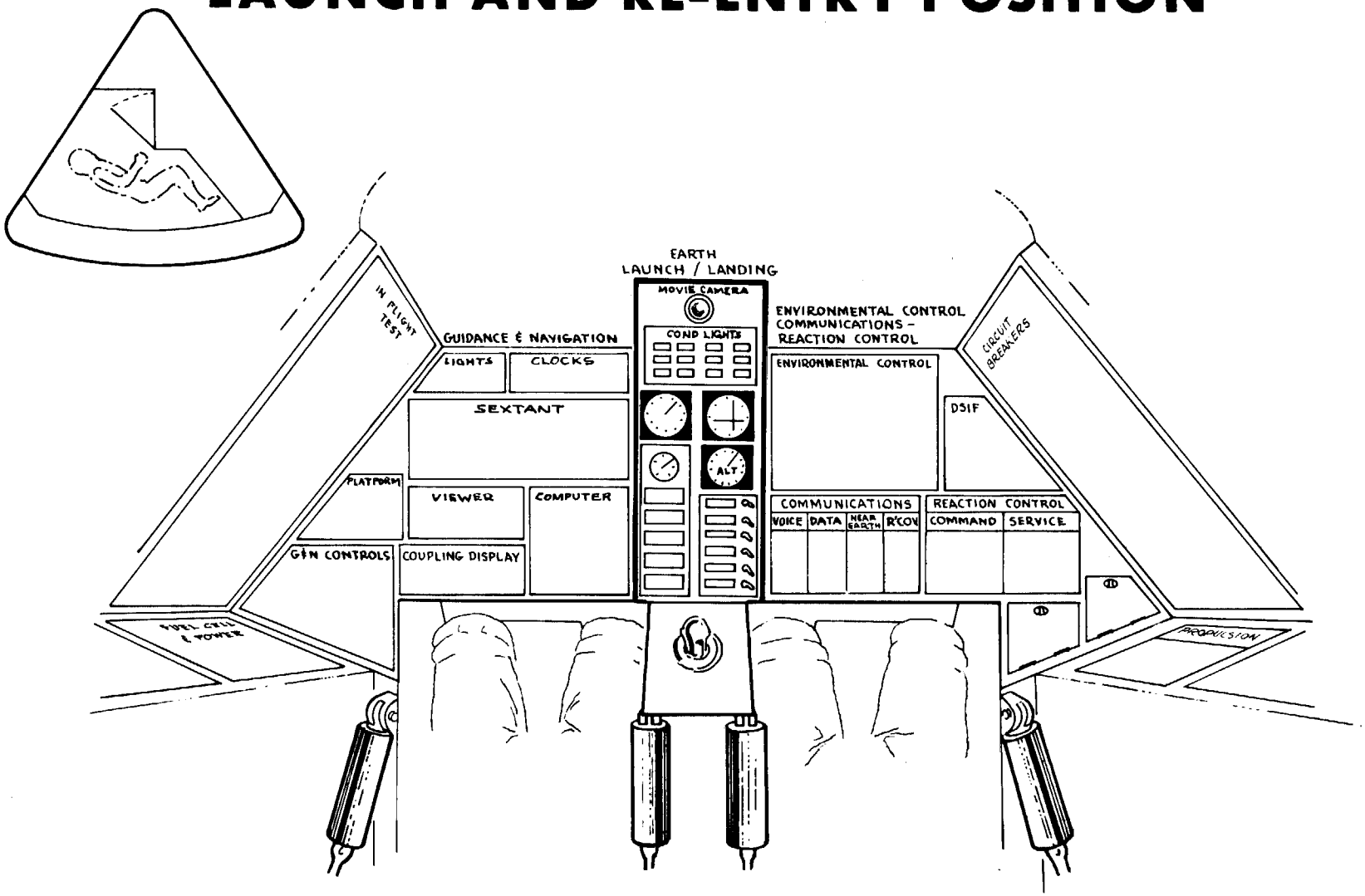

[redacted]

[redacted]

MCDONNELL
12-1062S

NAVIGATION POSITION

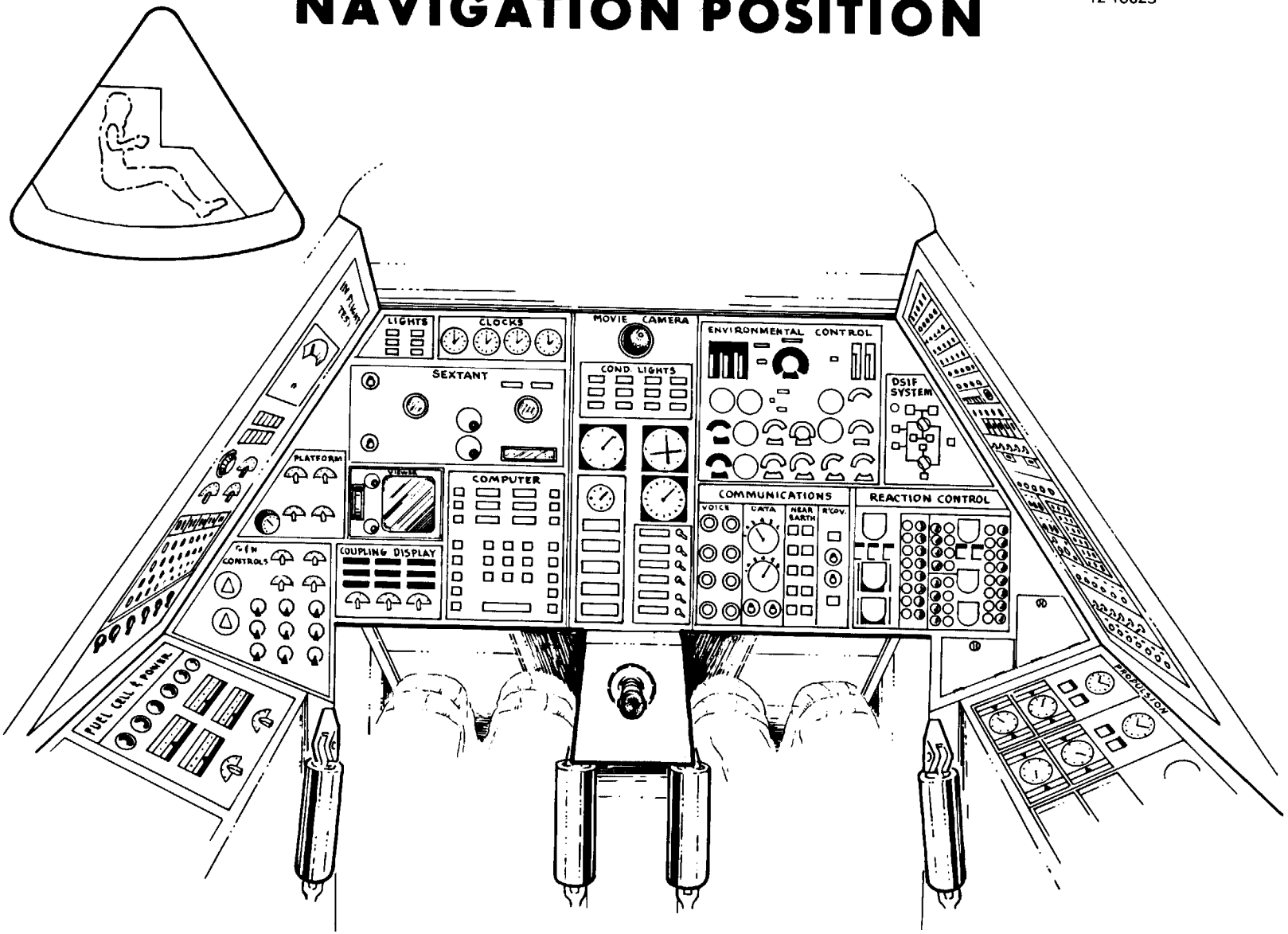

[redacted]

[redacted]

MCDONNELL
11-1062S

LUNAR LANDING POSITION

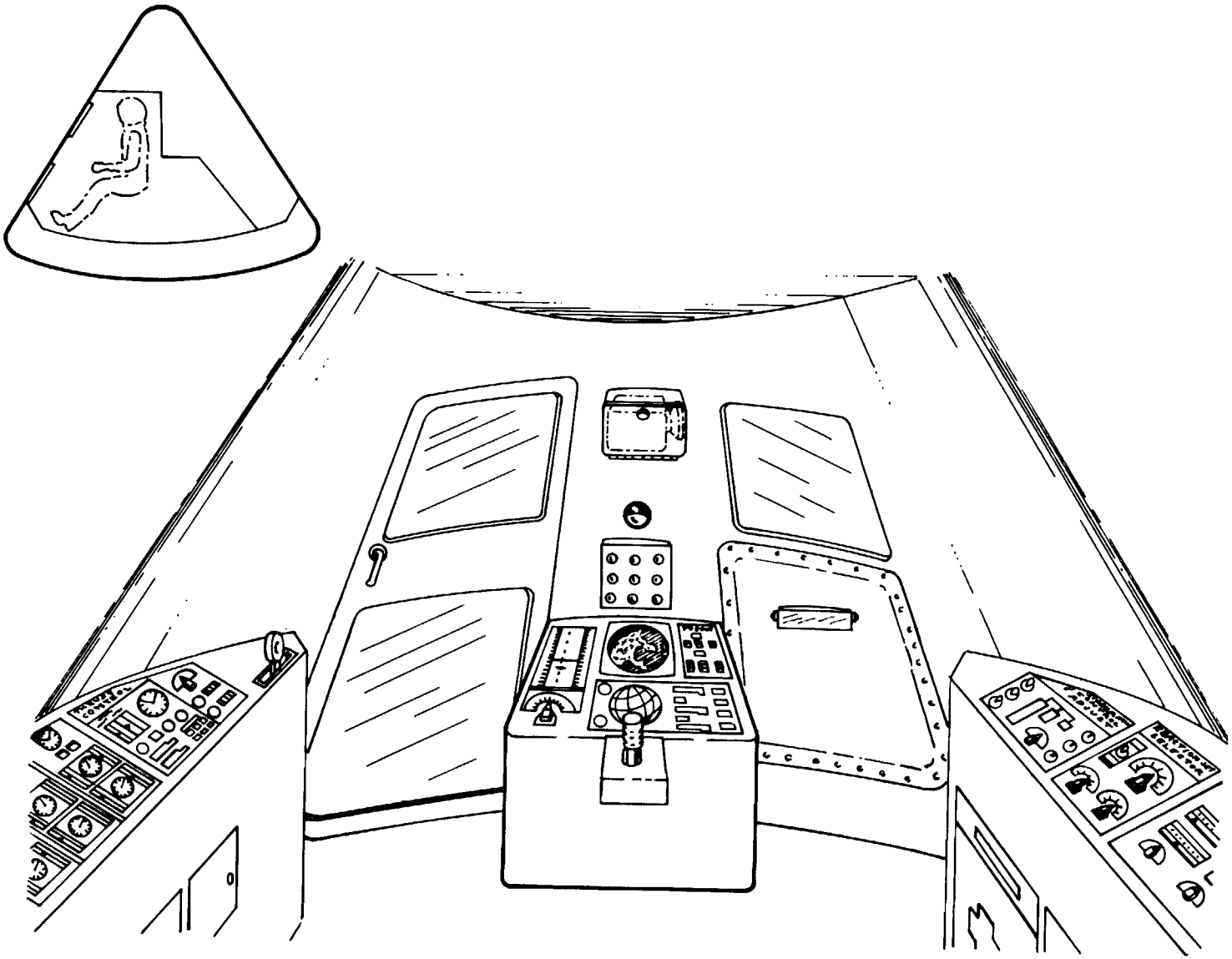

[redacted]

[redacted]

MCDONNELL
14-10625

COMMAND MODULE INTERIOR ARRANGEMENT

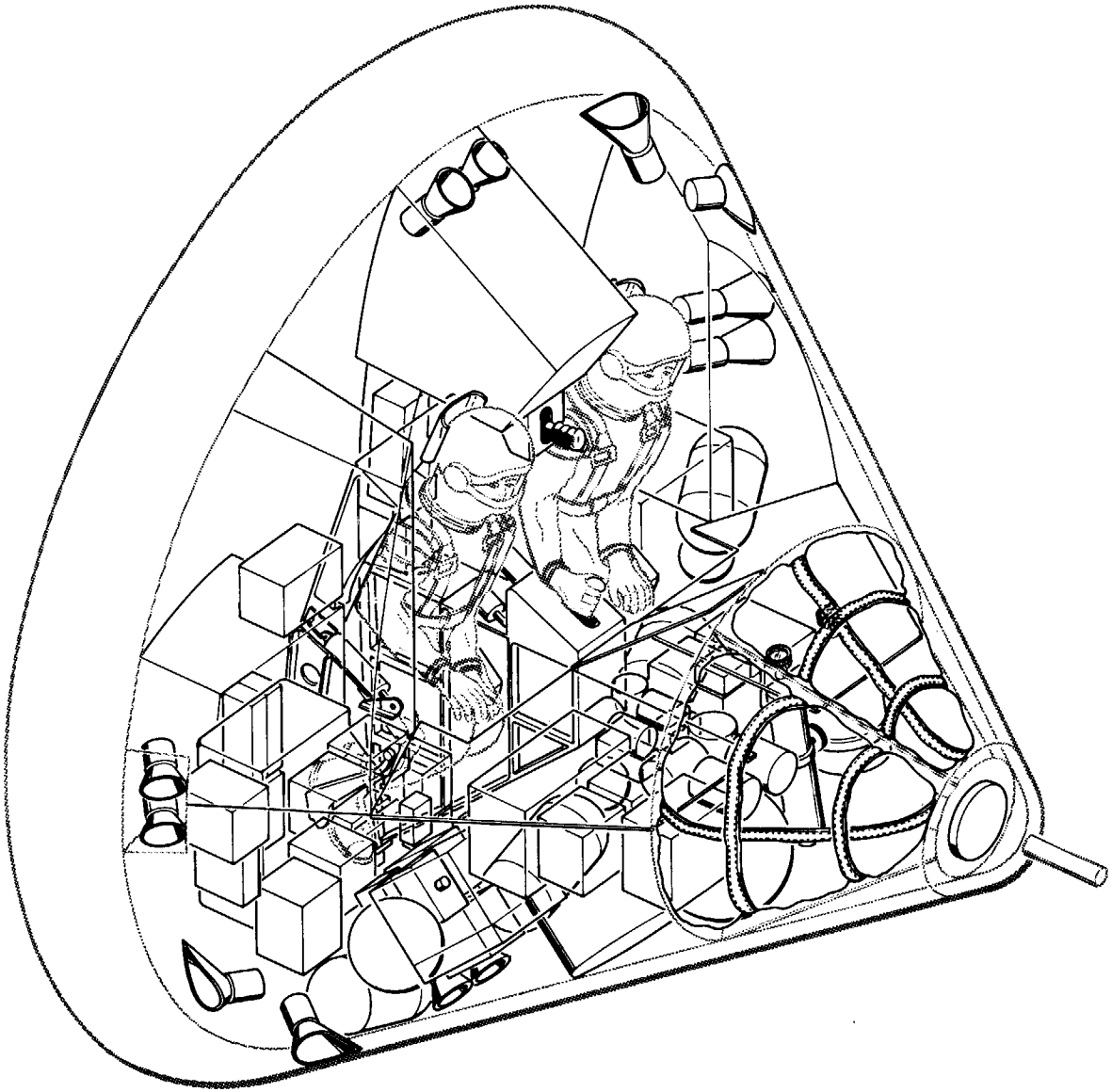

[redacted]

COMMAND MODULE INTERIOR ARRANGEMENT

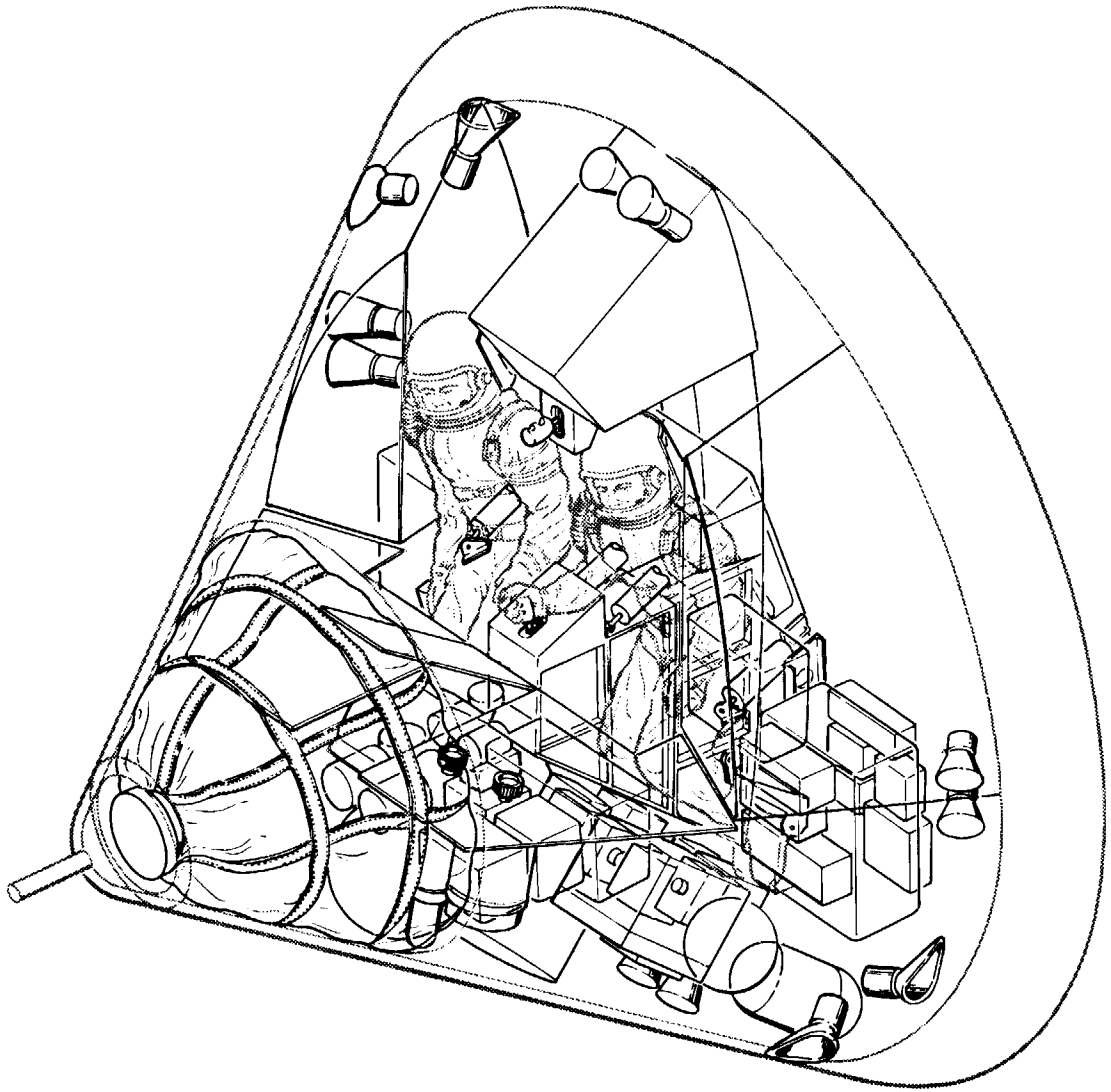

[redacted]

AIRLOCK CONSIDERATIONS

1. AIRLOCK VOLUME = 25 FT.^{3}
2. TOTAL PRESSURIZED CABIN VOLUME = 130 FT.^{3}
3. WEIGHT OF AIRLOCK = 50 LBS.
4. WEIGHT ADDED DUE TO INCREASE IN CABIN SIZE = 300 LBS.

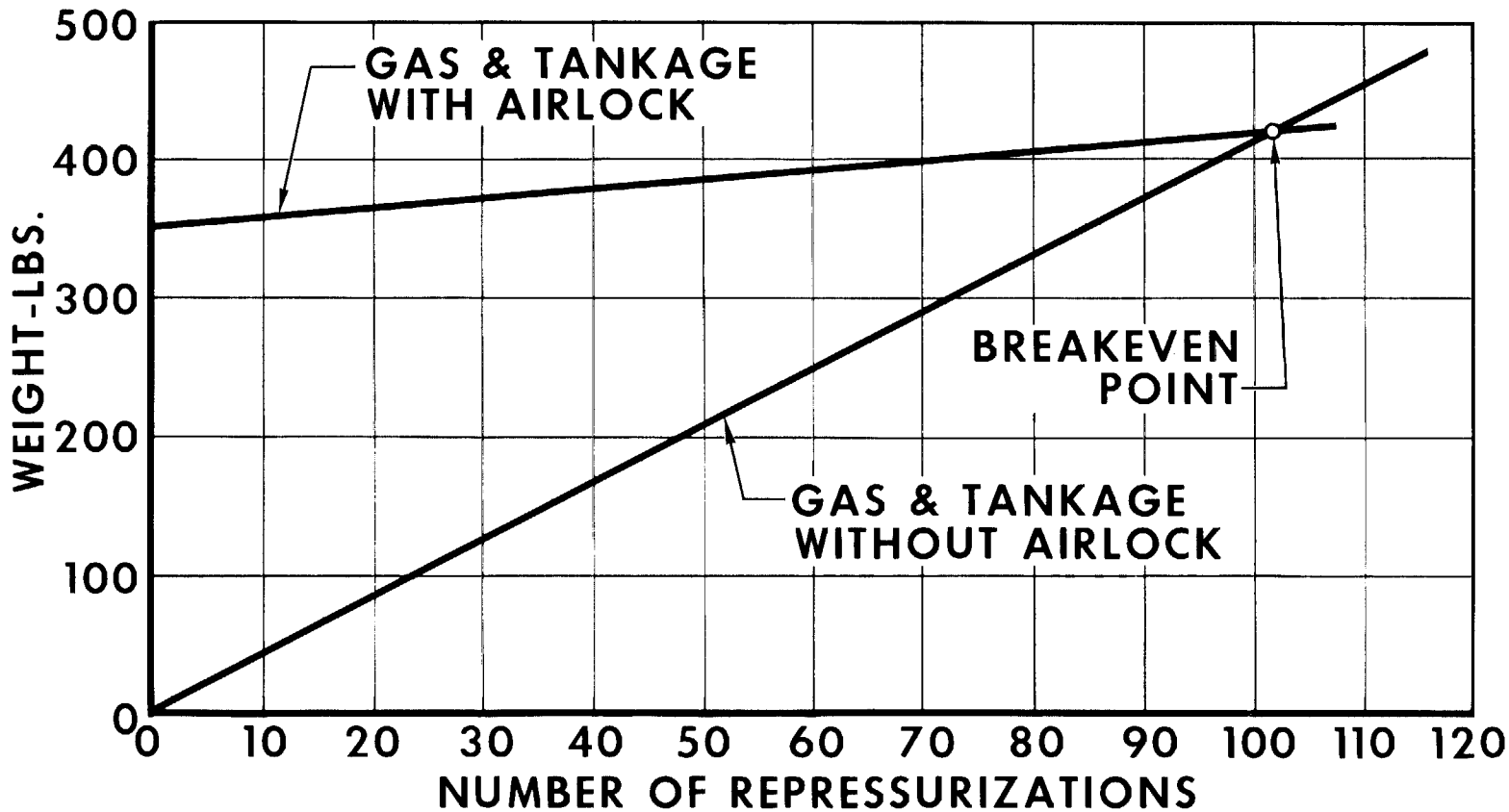

[redacted]

[redacted]

C.G. OFFSET CONSIDERATIONS

MCDONNELL
18-10625

33° CONE ANGLE
0.5 L/D
.32 Z/D

--------- BALLAST REQUIRED - CREW RELATIONSHIP TO WINDOW MAINTAINED

——— BALLAST REQUIRED - CREW RELATIONSHIP TO SIDE OPPOSITE WINDOW MAINTAINED

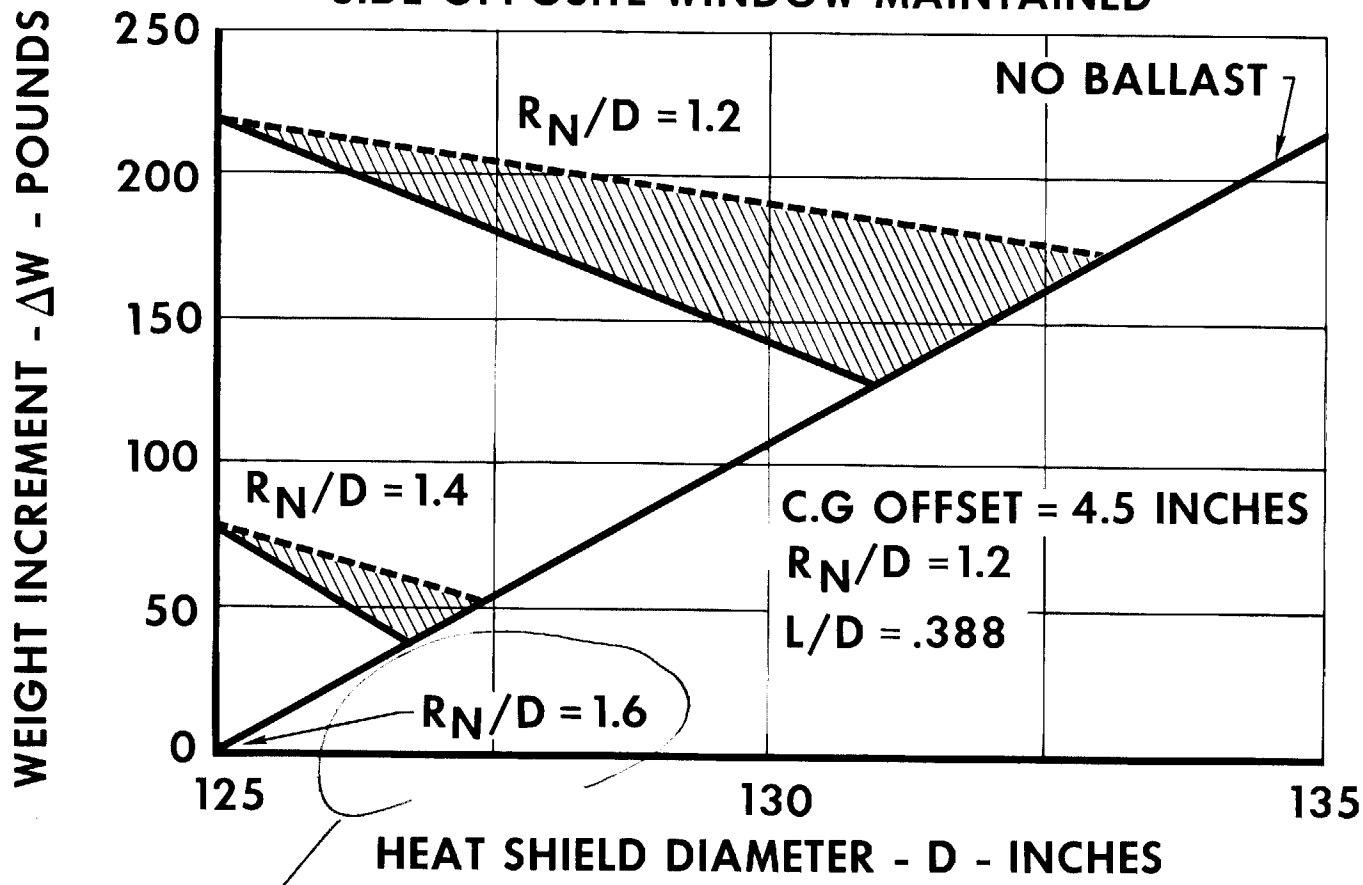

Sketch

[redacted]

[redacted]

SENSITIVITY OF LIFT TO DRAG RATIO (L/D) TO C. G. OFFSET AND HEAT SHIELD FACE RADIUS (R_N/D)

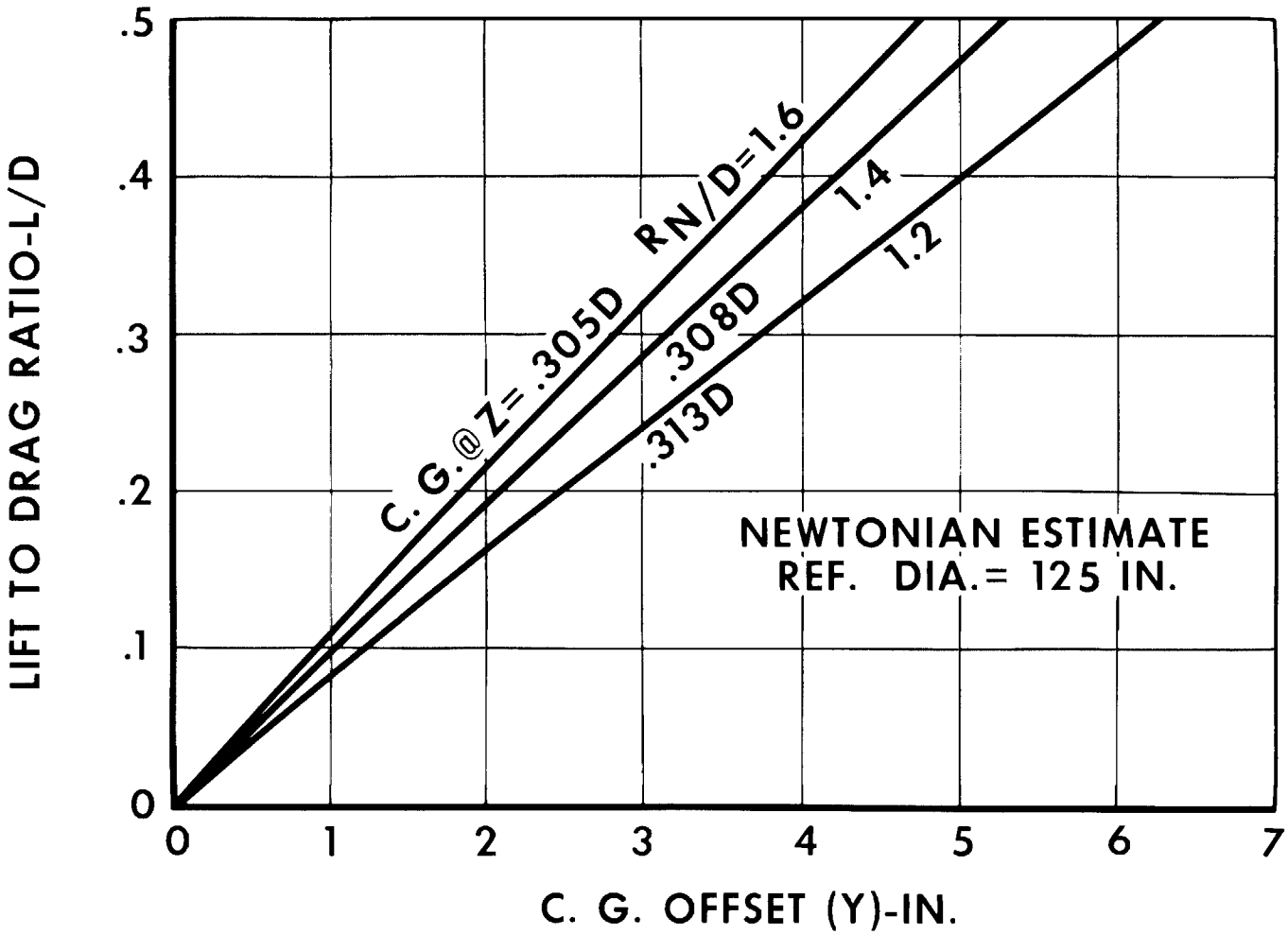

[redacted]

[redacted]

COMMAND MODULE WEIGHT SUMMARY

		WEIGHT, LBS.
STRUCTURE		1656
BASIC STRUCTURE	1013	
HEATSHIELD	643	
CREW SYSTEMS		865
COMMUNICATIONS AND INSTRUMENTATION		759
DISPLAYS	348	
COMMUNICATIONS	160	
TELEMETRY AND INSTRUMENTATION	251	
GUIDANCE AND NAVIGATION		299
STABILIZATION AND CONTROL		204
REACTION CONTROL		210
ELECTRICAL POWER		326
ENVIRONMENTAL CONTROL		309
EARTH LANDING		421
SCIENTIFIC EQUIPMENT		85
COMMAND MODULE TOTAL		5134

[redacted]

[redacted]

MCDONNELL
21-1062S

WEIGHT VS. VOLUME

(33° CONE ANGLE)

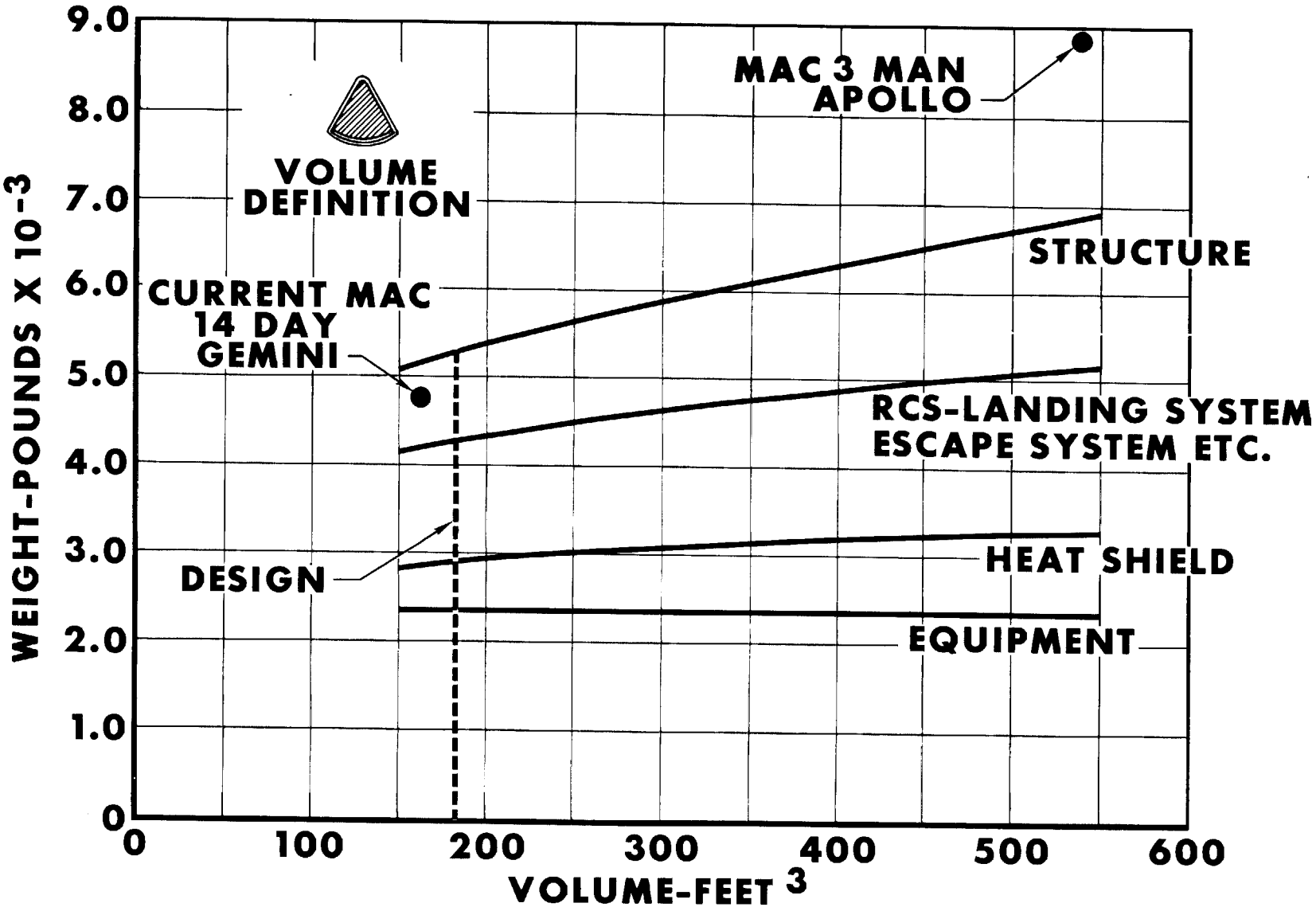

[redacted]

WEIGHT CONSIDERATIONS
3 MAN TO 2 MAN APOLLO

	ΔW LBS.	WEIGHT LBS.
COMMAND MODULE-3 MAN APOLLO MAC PROPOSED		8889
MAINTAIN VEHICLE SIZE		
SIMPLER HATCH-WINDOW SYSTEM	−50	
REMOVE AIRLOCK	−82	
REDUCTION WITH LOWER LANDING WEIGHT	−456	
REDUCED T.V. & CAMERA COVERAGE	−100	
REDUCED ELECTRICAL POWER & SYSTEMS	−219	
REDUCED C-BAND POWER	−40	
REDUCED - FOOD, WATER & ECS REQUIREMENTS	−242	
REMOVE 1 CREWMAN, GEAR & SEAT	−332	
REMOVE RADIATION PROTECTION	−356	
REDUCED SCIENTIFIC GEAR	−165	
MISCELLANEOUS	−48	
COMMAND MODULE-2 MAN APOLLO (13' DIA.)		6799

~85 lb
or
3 ft³

to 4
from
moon
s/E "
c/M

[redacted]

EQUIPMENT COMPARISON

	APOLLO *		2 MAN APOLLO		GEMINI EARTH ORBITAL	
	VOLUME FT. 3	WEIGHT LBS.	VOLUME FT. 3	WEIGHT LBS.	VOLUME FT. 3	WEIGHT LBS.
TOTAL	186.71	6389.70	166.60	3991.14	89.34	3694.64
CREW SYSTEMS	86.17	1420.30	37.30	864.80	33.75	942.06
COMM. & INST.	7.32	491.00	6.35	451.25	2.50	174.22
CONTROLS AND DISPLAYS	6.72	364.00	6.37	278.00	3.26	102.90
GUIDANCE & NAVIGATION	7.15	415.00	6.55	359.00	5.60	282.00
STABILIZATION & CONTROL	2.63	204.00	2.63	198.00	.90	64.00
ELECTRICAL POWER	28.30	1544.00	11.20	531.50	13.30	608.00
ENVIRONMENTAL CONTROL	19.32	1037.50	13.12	666.29	13.41	657.91
EARTH LANDING & RECOVERY	19.10	664.00	73.08	392.30	16.62	863.55
SCIENTIFIC GEAR	10.00	250.00	10.00	250.00	NONE	NONE

* ADJUSTED TO 8 DAYS MISSION TIME

[redacted]

[redacted]

MCDONNELL
37-10625

COMMAND MODULE EQUIPMENT

PACKING DENSITY

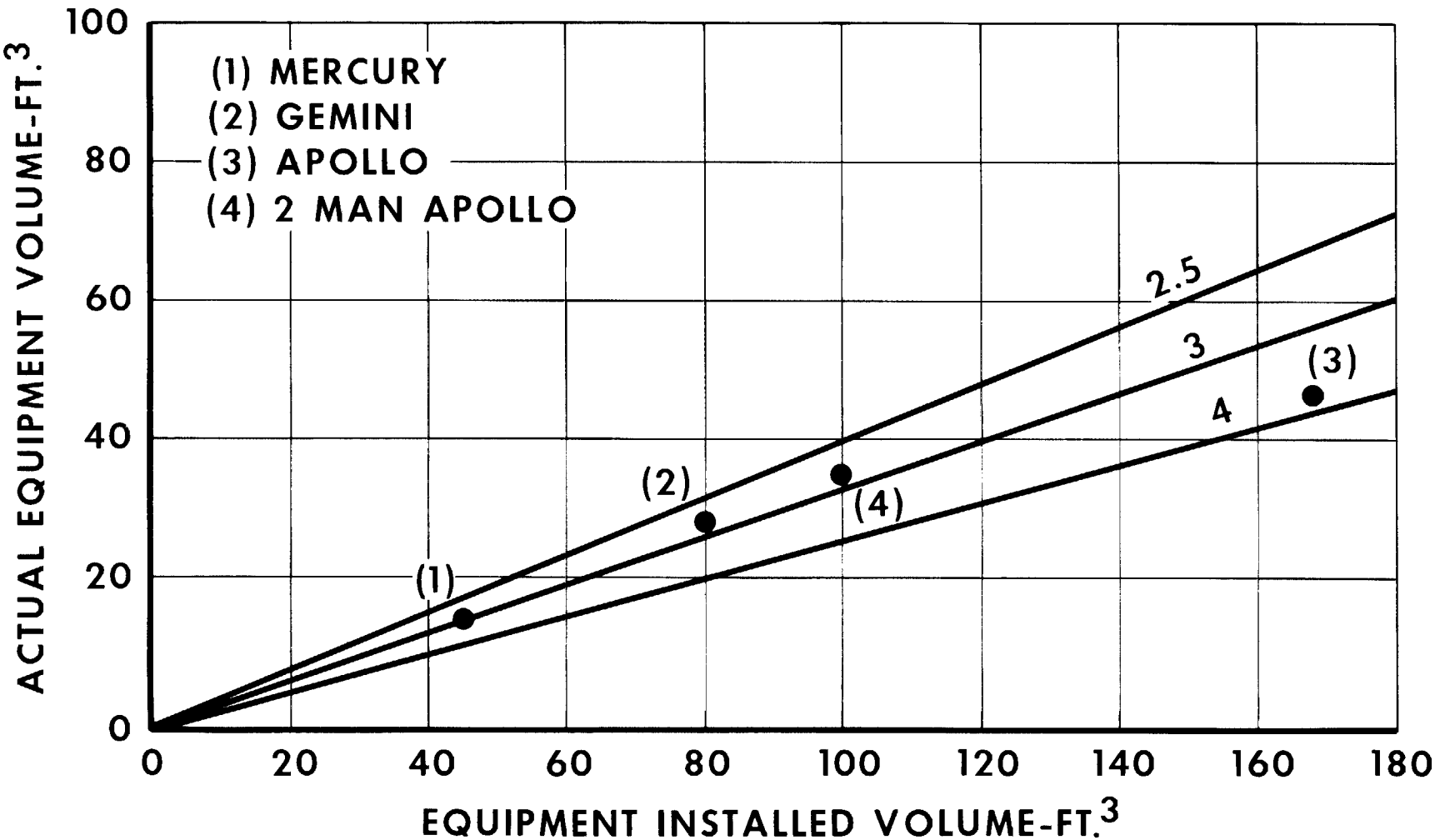

[redacted]

[redacted]

ENVIRONMENTAL CONTROL SYSTEM

DESIGN CRITERIA

• METABOLIC	
O_2 CONSUMPTION	1.8 LB/MAN DAY
CO_2 PRODUCTION	2.3 LB/MAN DAY
HEAT PRODUCTION	11,300 BTU/MAN DAY
DRINKING H_2O REQUIRED	12.5 LB/MAN DAY
• H_2O PRODUCTION	
PERSPIRATION & RESPIRATION	10.0 LB/MAN DAY
URINE	3.0 LB/MAN DAY
FECES	0.5 LB/MAN DAY
• CABIN LEAKAGE	**.15 LB/HR**
• PRIMARY O_2 STORAGE	**SUPERCRITICAL**
• SECONDARY O_2 STORAGE	**HIGH PRESSURE GASEOUS**
• CABIN ATMOSPHERE	**O_2 AT 5 PSI (NOM.)**
• CABIN TEMPERATURE	**70°F TO 80°F**

MCW Roman
Suits

[redacted]

[redacted]

ECS DESCRIPTION

- CREWMEN IN PARALLEL IN CLOSED LOOP CIRCUIT
- 100% O_2 AT 5 PSIA (NOMINAL)
- CLOSED LOOP AND CABIN WALLS PROVIDE REDUNDANT PRESSURIZATION
- VENTILATION FLOW OF 10 CFM AT 5 PSIA THRU EACH SUIT
- COMFORT LEVEL SELECTED BY INDIVIDUAL FLOW THROTTLING AND COMMON TEMPERATURE CONTROLS.
- CO_2 AND ODORS REMOVED BY LiOH AND ACTIVATED CHARCOAL
- WATER REMOVED BY WICK-TYPE SEPARATOR
- COOLING BY SPACE RADIATOR SUPPLEMENTED BY WATER BOILER.
- ELECTRONIC EQUIPMENT MOUNTED ON COLD PLATES
- COOLANT FLUID CIRCULATED THROUGH DUAL CIRCUITS IN HEAT EXCHANGERS, COLD PLATES AND SPACE RADIATOR.

[redacted]

[redacted]

ECS EQUIPMENT WEIGHTS

SYSTEM CIRCUIT	VEHICLE	
	GEMINI	2 MAN APOLLO
COMMAND MODULE:	(326.26)	(309.06)
SUIT CIRCUIT	172.76	135.76
CABIN CIRCUIT	9.65	9.65
COOLING CIRCUIT	43.00	43.00
O_2 SUPPLY & PRESSURIZATION CIRCUIT	74.85	94.65
POWER SUPPLY & WIRE	26.00	26.00
SERVICE MODULE	(372.55)	(383.13)
COOLING CIRCUIT	202.25	209.25
O_2 SUPPLY & PRESSURIZATION CIRCUIT	170.30	173.88
TOTAL SYSTEM WEIGHT	(698.81)	(692.19)

[redacted]

[redacted]

MCDONNELL
86-1062S

PRIMARY COMPONENTS OF THE ENVIRONMENTAL CONTROL SYSTEM

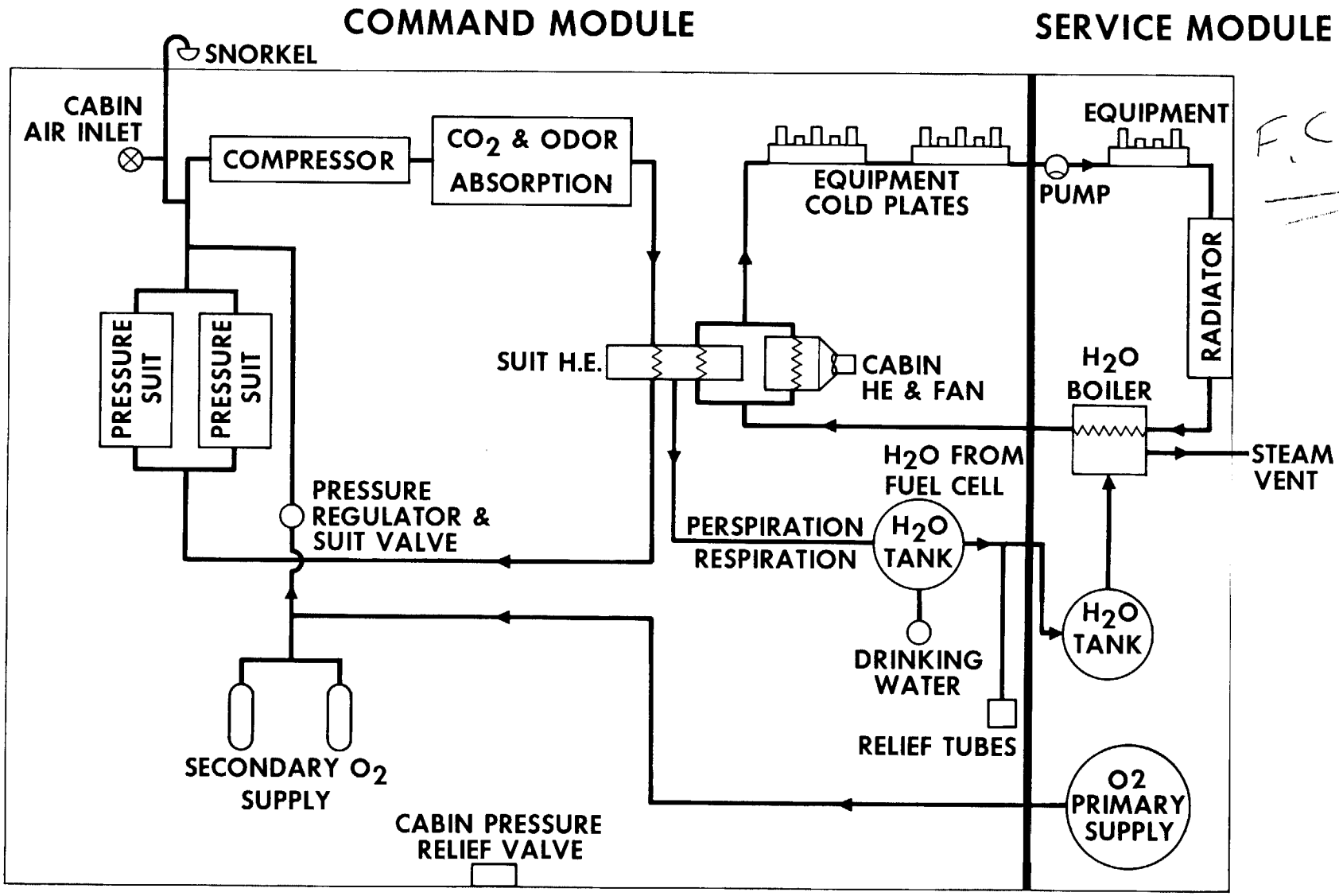

[redacted]

[redacted]

EFFECT OF RADIATOR CONICAL HALF ANGLE ON COOLING WATER WEIGHT AT LAUNCH

48 HOUR LUNAR STAY

COLLECTED H_2O REQUIRED TO SUPPLEMENT RADIATOR ON LUNAR SURFACE

FUEL CELL OUTLET TEMPERATURE = 175°F 180°F IS GEMINI

RADIATOR AREA 163 FT.^{2}

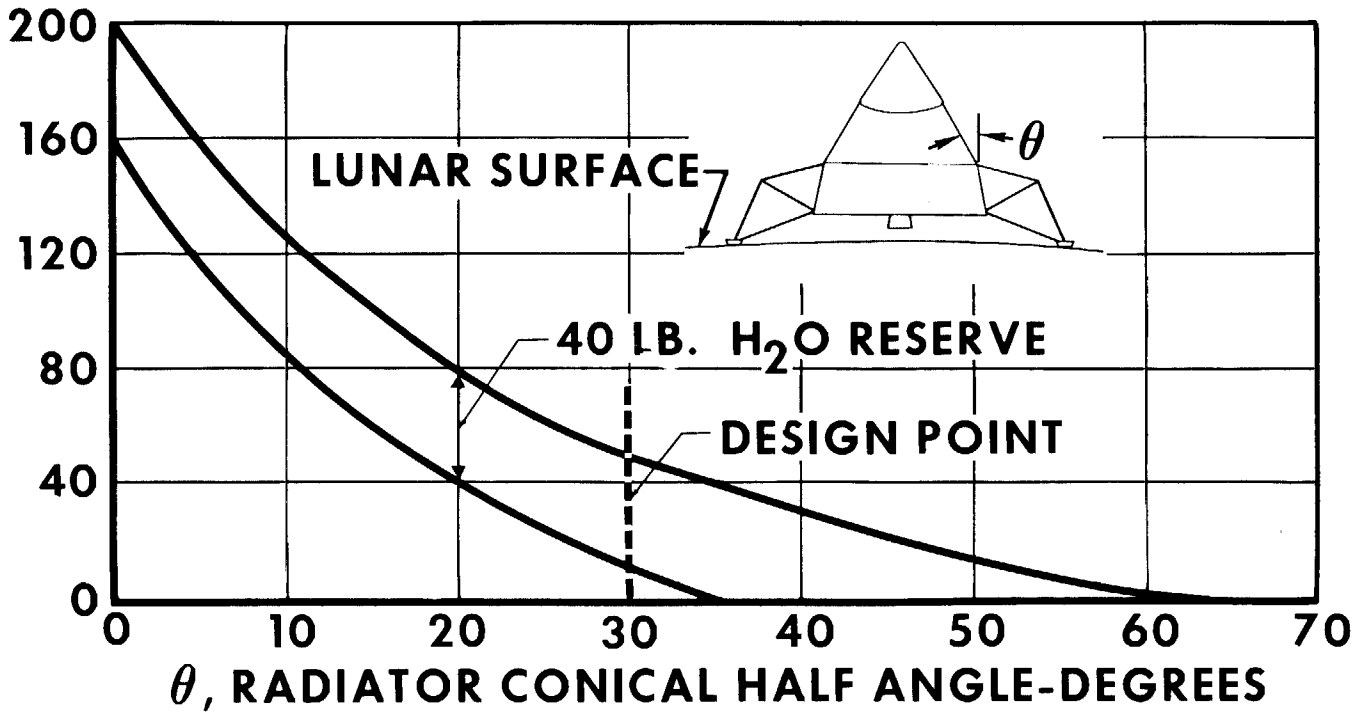

[redacted]

[redacted]

WATER INVENTORY

- LUNAR LANDING AT SITE REQUIRING MAXIMUM H_2O USAGE
- TWO DAY LUNAR STAY
- 30 DEG. CONICAL HALF ANGLE ON RADIATORS

MISSION PHASE *	COMMAND MODULE WATER TANK (LBS.)	SERVICE MODULE WATER TANK (LBS)
EARTH LAUNCH	40	11
TRANS LUNAR	29	0
LUNAR ORBIT	40	37
LUNAR REST	40	40
LUNAR LAUNCH	0	0
TRANS EARTH	2	0
POST LANDING	40	0

* QUANTITIES SHOWN ARE AT START OF EACH INDICATED MISSION PHASE

[redacted]

[redacted]

MCDONNELL
29-10625

EFFECT OF SELECTION OF LUNAR LANDING SITE ON INITIAL WATER REQUIREMENT

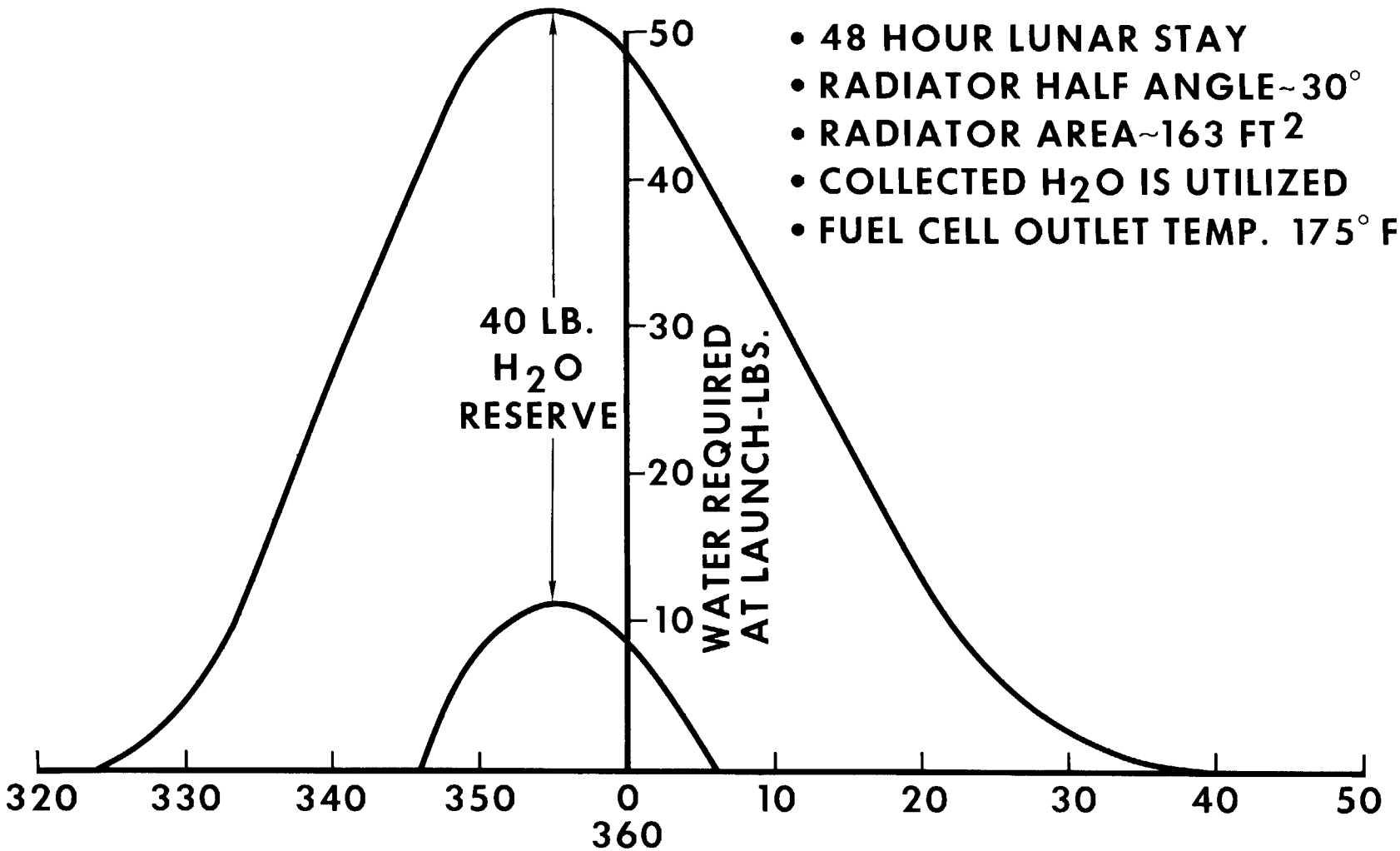

- 48 HOUR LUNAR STAY
- RADIATOR HALF ANGLE~30°
- RADIATOR AREA~163 FT^2
- COLLECTED H_2O IS UTILIZED
- FUEL CELL OUTLET TEMP. 175° F

[redacted]

[redacted]

MCDONNELL
31-1062S

ELECTRICAL LOAD PROFILE

1.7 KW PEAK, 172.5 KW-HR@900 WATT AVERAGE

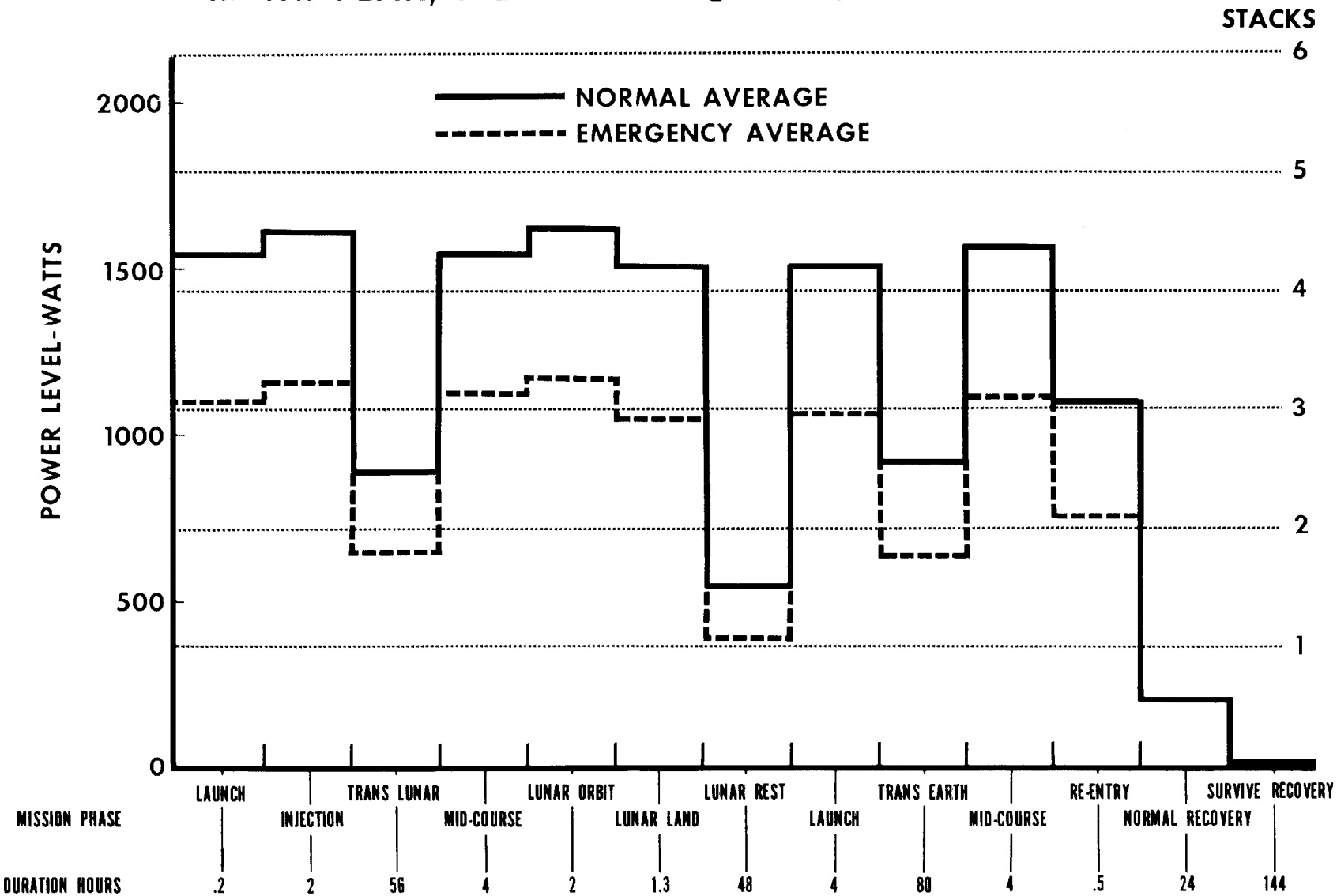

[redacted]

[redacted]

ELECTRICAL POWER SYSTEMS

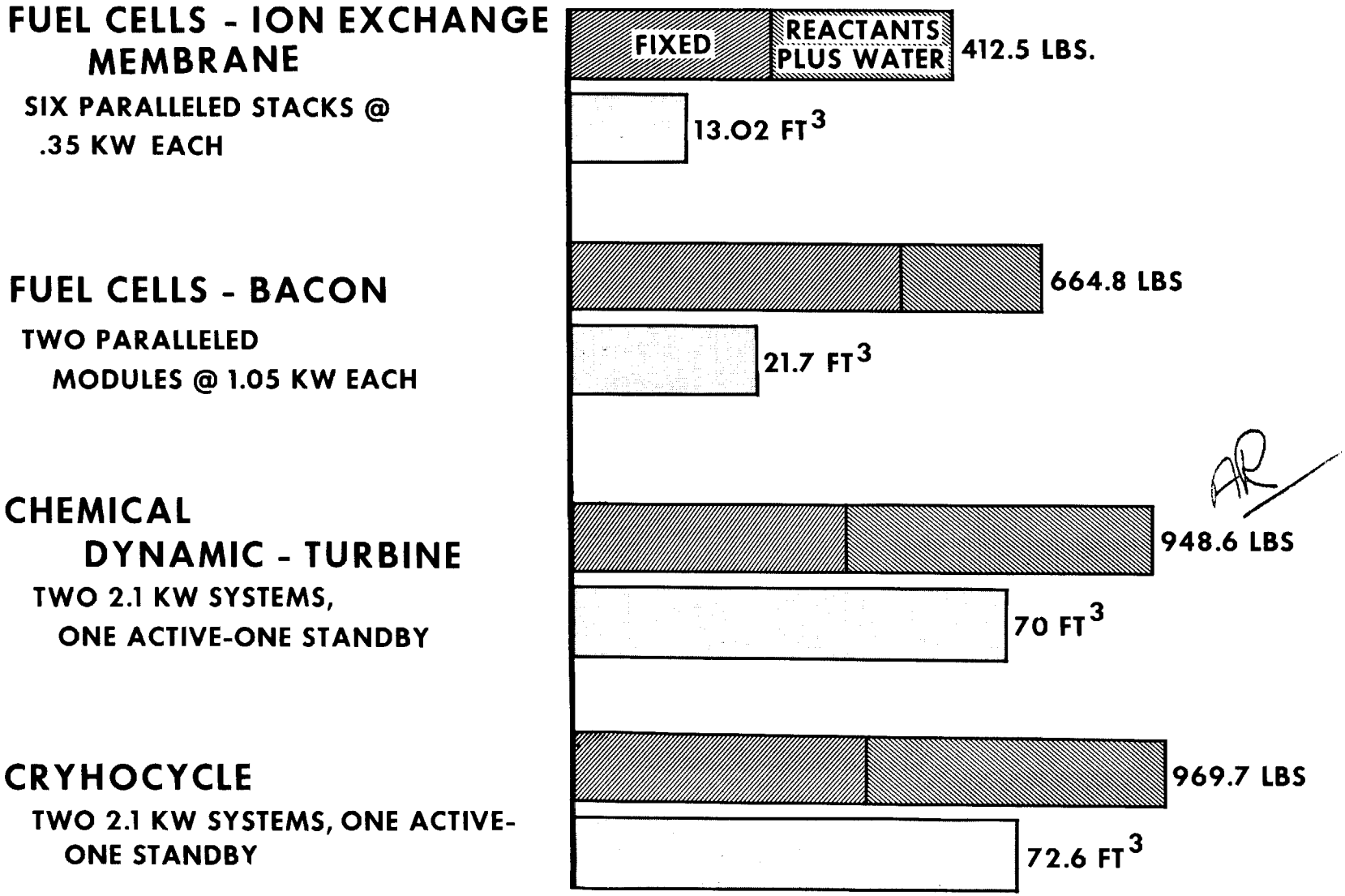

AR

[redacted]

[redacted]

BATTERY PERFORMANCE

BATTERY CAPACITY TOTAL 7510 W-H

THREE GEMINI SQUIB-CONTROL BATTERIES 1260 W-H TOTAL	FIVE GEMINI MAIN BATTERIES 6250 W-H TOTAL

138.5 POUNDS

MARGIN 585 W-H

BATTERY LOAD TOTAL 6925 W-H

PRE RE-ENTRY 398 W-H	RE-ENTRY 538 W-H	POST LANDING - NORMAL 3970 W-H	POST LANDING SURVIVAL 2019 W-H

[redacted]

CONTROLS AND DISPLAYS SYSTEM COMPARISON

3 MAN APOLLO SYSTEM		2 MAN APOLLO SYSTEM
WEIGHT 490 LBS.		WEIGHT 348 LBS.
VOLUME 9.51 FT.^{3}		VOLUME 7.77 FT.^{3}

- DELETE OPTICAL VIEW PLATE (-30)
- CHANGE RADAR CONTROLS (RENDEZVOUS TO LANDING) (-8)
- USE GEMINI STABILIZATION AND CONTROL (-33)
- SIMPLIFY UTILITY CONTROLS/DISPLAYS (-15)
- REDUCE WIRING (REDUCED ROUTING DISTANCE) (-41)
- DELETE ENVIR. CONTROL PROVISION (-15)

[redacted]

CONTROLS AND DISPLAYS

SUBSYSTEM	WEIGHT, LBS.
COMMUNICATIONS AND INSTRUMENTATION	26
GUIDANCE AND NAVIGATION	58
STABILIZATION AND CONTROL	57
LAUNCH, RE-ENTRY, AND ABORT	25
UTILITY CONTROLS AND DISPLAYS	27
IN-FLIGHT TEST	85
ELECTRICAL PROVISIONS	70
TOTAL WEIGHT =	348
TOTAL VOLUME =	7.8 CU. FT.

[redacted]

[redacted]

GUIDANCE AND NAVIGATION SYSTEM COMPARISON

3 MAN APOLLO SYSTEM		2 MAN APOLLO SYSTEM
VOLUME 7.95 FT.^{3} WEIGHT 445 LBS. *	REDUCE DISPLAYS (-33) REDUCE PLATFORM SUPPORT STRUCTURE (-36) ADD ROLL MOMENTUM WHEEL (+13)	VOLUME 7.35 FT.^{3} WEIGHT 389 LBS.

*INCLUDES TRACKING AND LANDING RADARS FROM LEM

[redacted]

GUIDANCE AND NAVIGATION SYSTEM WEIGHTS

SUBSYSTEM	WEIGHT-LBS.
INERTIAL SYSTEM	84
OPTICAL MEASUREMENT UNIT	35
COMPUTER	110
RADARS	89
VIEWER AND COUPLING DISPLAY UNIT	15
MISCELLANEOUS	56
TOTAL VOLUME 7.35 CU. FT.	TOTAL WEIGHT 389

[redacted]

OPERATION WITH STRAPDOWN IMU

(FAILURE OF PRIMARY IMU)

PHASE	OPERATION
LUNAR LANDING	ABORT TO LUNAR ORBIT
LUNAR LAUNCH	BOOST INTO HIGHER-ALTITUDE LUNAR ORBIT USE DSIF INFORMATION FOR TRANSEARTH INJECTION
EARTH LANDING	RE-ENTER USING "g" -PROGRAM (ACCEPT LARGE LANDING DISPERSIONS)

NOTES:

1) STRAPDOWN IMU CONSISTS OF 3 STRAPPED-DOWN GYROS AND ONE LONGITUDINAL ACCELEROMETER.

[redacted]

[redacted]

TELECOMMUNICATION SYSTEM COMPARISON

3-MAN APOLLO 563 LB.

- USE SURVEYOR DSIF TRANSPONDER ..... -21 LB
- USE GEMINI PCM COMPONENTS ..... -17 LB
- REMOVE PERISCOPE & ADD PORTABLE TELESCOPE ..... -49 LB
- ADD SIGNAL CONDITIONING, INVERTERS, PATCH PANELS & TIMING ..... +61.8 LB
- MODIFY ANTENNA CONFIGURATION ..... -15.55 LB

2-MAN APOLLO 523.25 LB.

[redacted]

[redacted]

TELECOMMUNICATION WEIGHT SUMMARY

DSIF SUBSYSTEM	39.0 LB
NEAR-EARTH SYSTEMS	42.0
INTERCOM	5.0
RECOVERY	6.8
DATA PROCESSING	50.0
SPARES	20.0
INSTRUMENTATION	166.0
ANTENNAS	114.45
MISCELLANEOUS	80.0
TOTAL WEIGHT	523.25 LB
TOTAL VOLUME	7.816 FT^3

[redacted]

[redacted]

POTENTIAL TELECOMMUNICATION WEIGHT REDUCTION

	WEIGHT-LBS	
2-MAN APOLLO WEIGHT ESTIMATE		523.25
REMOVE NEAR-EARTH VOICE & TELEMETRY USE DSIF SUBSYSTEM FOR ALL PHASES	-48	
REMOVE TELEVISION CAMERAS & DISPLAY	-37	
REMOVE PATCH PANELS	-17	
REMOVE ONE TAPE RECORDER	-23	
TOTAL REDUCTION		-125
SYSTEM WEIGHT WITH ALL CHANGES		398.25

[redacted]

[redacted]

STABILIZATION AND CONTROL SYSTEM COMPARISON

3 MAN APOLLO SYSTEM

VOLUME
3.1 FT.^{3}

WEIGHT
220 LBS.

REDUCE CONTROL ELECTRONICS (-10)

ADD 2 CANOPUS SENSORS (+10)

REDUCE DISPLAYS (-6)

2 MAN APOLLO SYSTEM

VOLUME
3.1 FT.^{3}

WEIGHT
214 LBS.

[redacted]

[redacted]

STABILIZATION AND CONTROL SYSTEM WEIGHTS

SUBSYSTEM	WEIGHT-LBS.
IMU STRAPDOWN	17
RATE SENSORS	13
CONTROL ELECTRONICS	122
SUN-HORIZON-CANOPUS SENSORS	12
DISPLAY MODULAR PACKAGE	34
MISCELLANEOUS	16
TOTAL VOLUME 3.1 CU. FT. TOTAL WEIGHT	214

[redacted]

[redacted]

MCDONNELL 24-10625

COMMAND MODULE TO SERVICE MODULE SEPARATION DEVICES

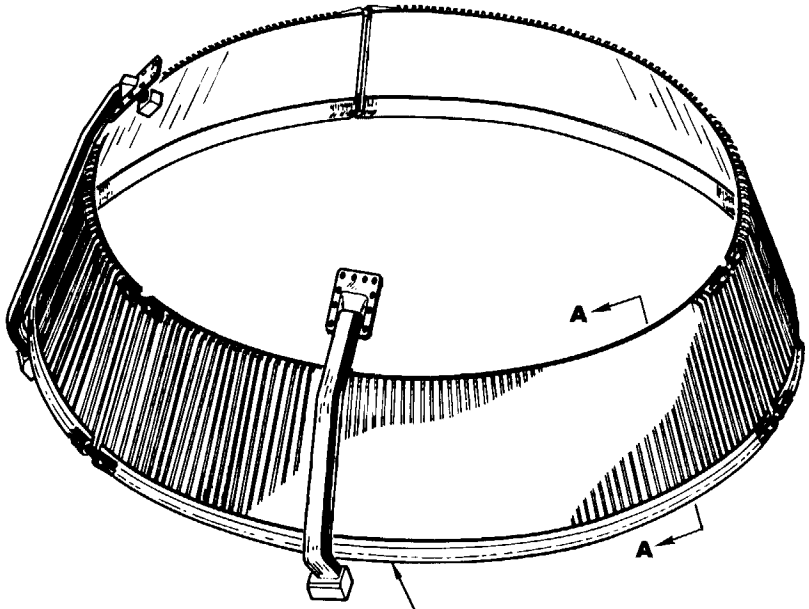

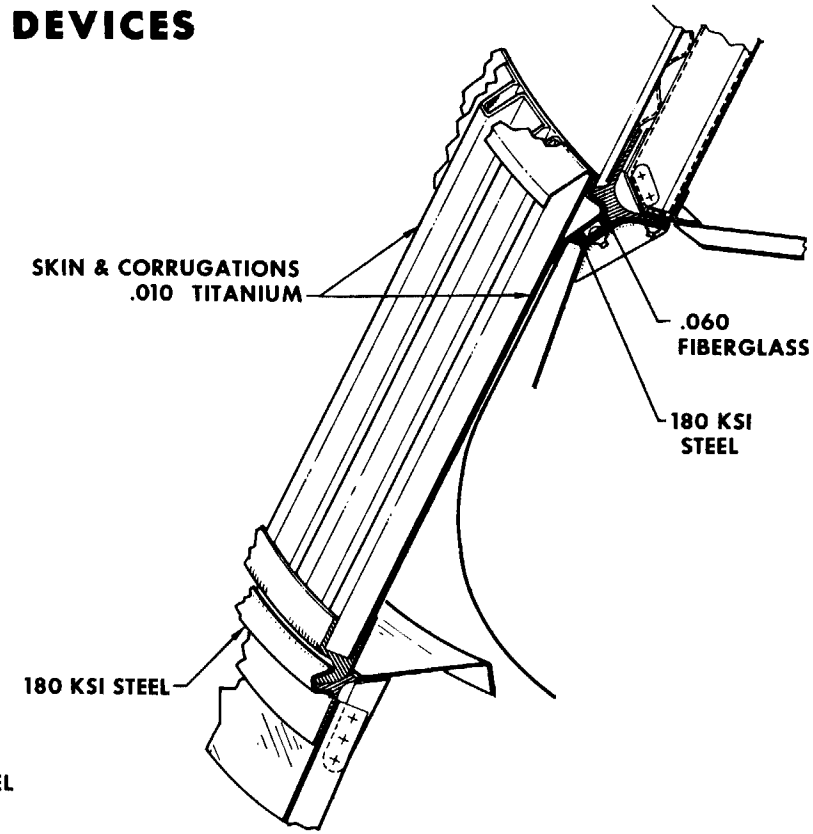

A-A

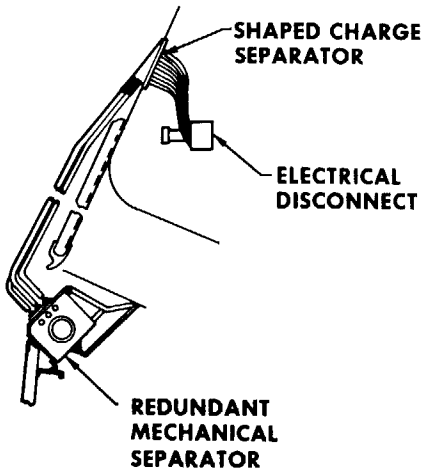

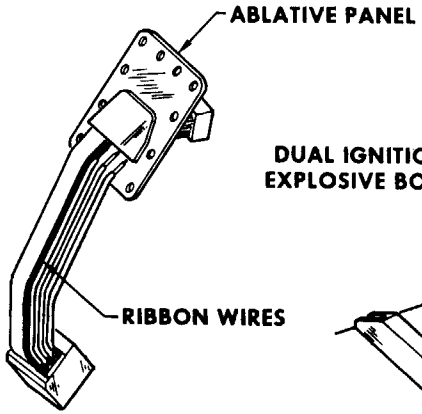

UMBILICAL ASSEMBLY

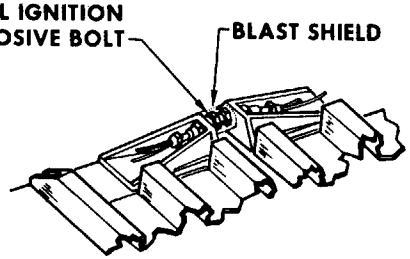

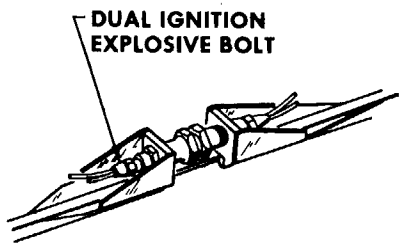

[redacted]

[redacted]

SERVICE MODULE EQUIPMENT AND STRUCTURE

MCDONNELL
23-10625

EQUIPMENT WT. ~~1,750~~ 1837 LBS.
STRUCTURAL WT. 1,135 LBS.

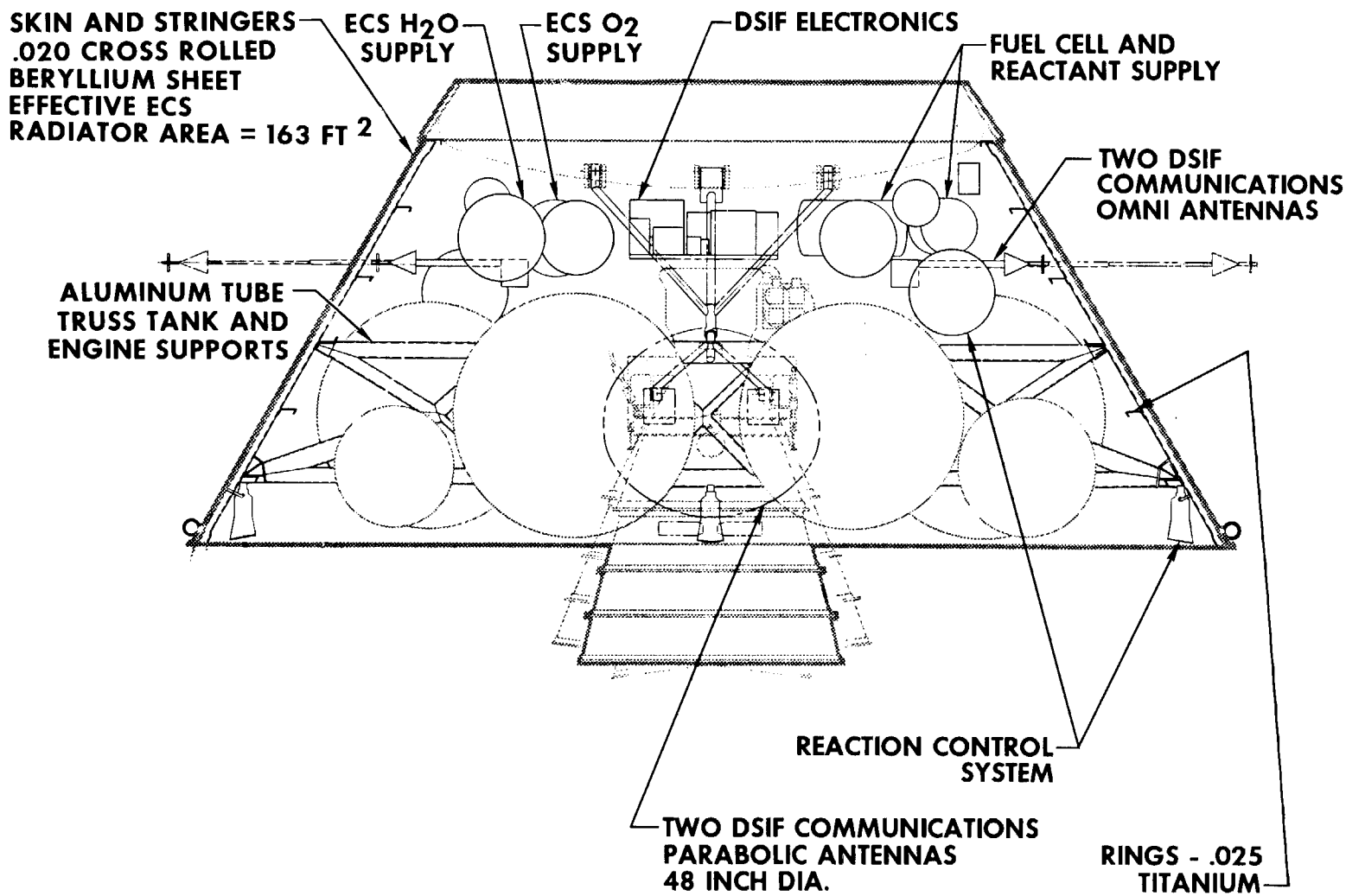

[redacted]

[redacted]

SERVICE MODULE EQUIPMENT WEIGHT SUMMARY

	WEIGHT, LBS.
STRUCTURAL SUPPORTS	102
COMMUNICATIONS AND INSTRUMENTATION (243+13)	256
REACTION CONTROL	634
ELECTRICAL POWER	462
ENVIRONMENTAL CONTROL	383
SERVICE MODULE EQUIPMENT TOTAL	1837

[redacted]

[redacted]

MCDONNELL
3-10625

TERMINAL LANDING CRAFT

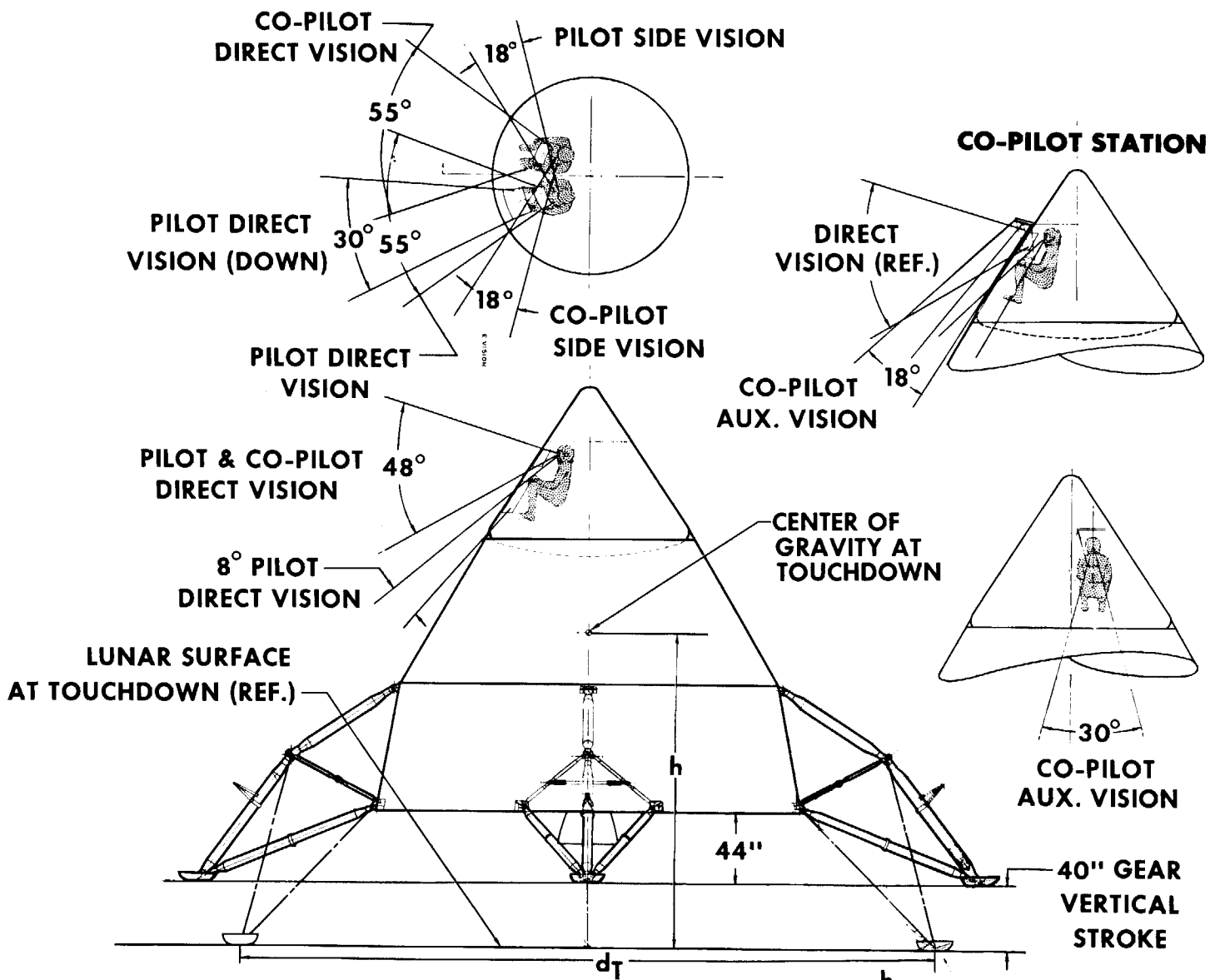

NOTE: GEAR STATIC STABILITY FACTOR UNCOMPRESSED $\frac{h}{d_T} = .49$

[redacted]

[redacted]

LUNAR LANDING DESIGN CRITERIA

SINK SPEED	V_V	10	FPS	MAX
DRIFT SPEED	V_H	5	FPS	MAX
PITCH ATTITUDE	θ	10	DEGREES	MAX
LUNAR SLOPE	α	15	DEGREES	MAX
SURFACE FRICTION	μ	0-∞		

SPACECRAFT SHALL BE STABLE UPON LUNAR IMPACT FOR ANY COMBINATION OF ABOVE PARAMETERS. PARAMETERS ARE COMBINED ELLIPTICALLY FOR EXTREME CONDITIONS.

[redacted]

[redacted]

MCDONNELL
38A-10625

TERMINAL LANDING GEAR
AND BACK-UP STRUCTURE

GEAR SHOWN FULLY COMPRESSED

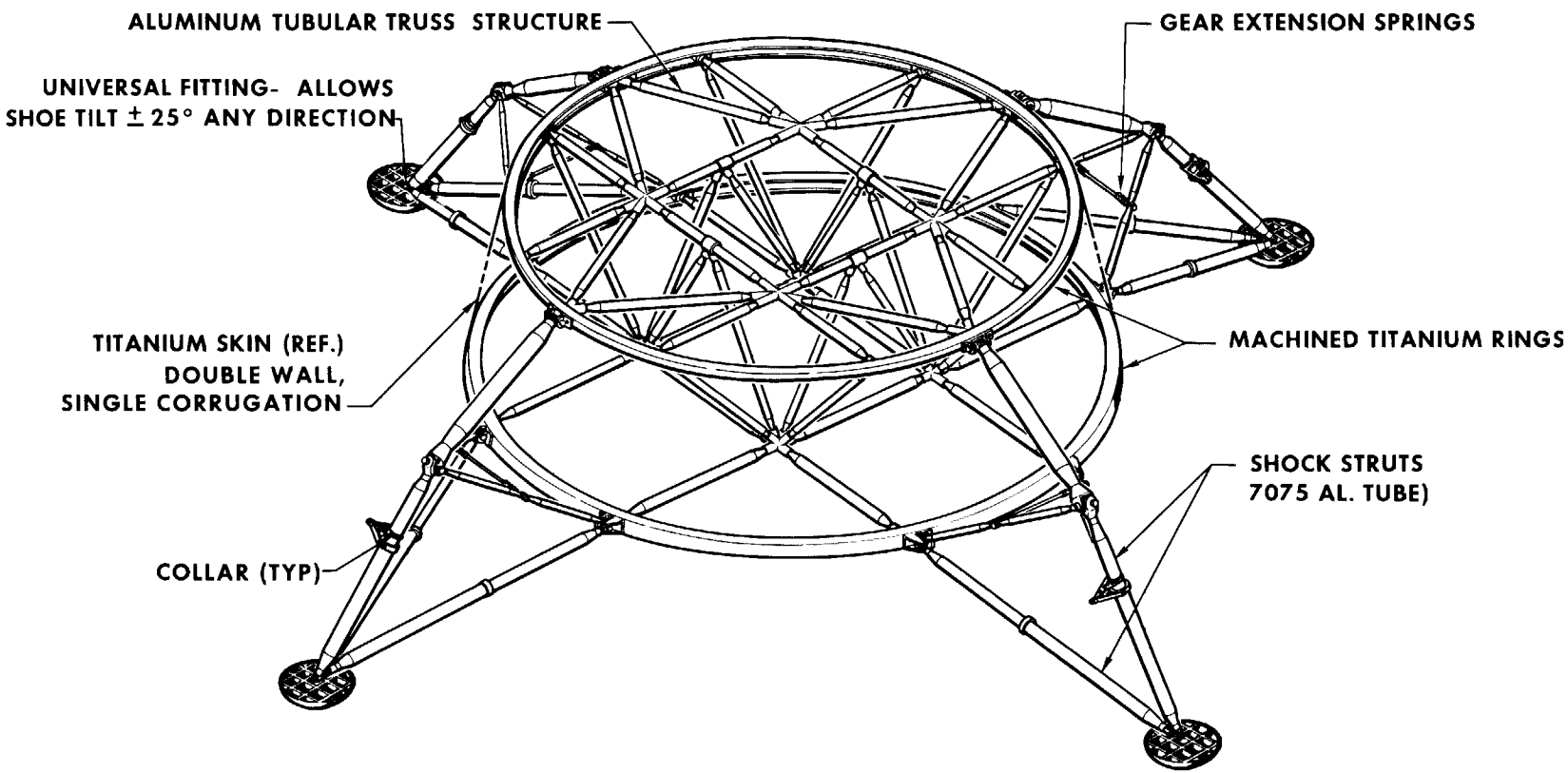

- VERTICAL STROKE 40 INCHES
- SURFACE-SURFACE CLEARANCE, GEAR COMPRESSED- 44 INCHES
- ALL SHOCK STRUTS HAVE REBOUND STOPS

[redacted]

[redacted]

MCDONNELL
388-10625

MAIN STRUT ASSEMBLY DETAIL

(SHOWN FULLY COMPRESSED)

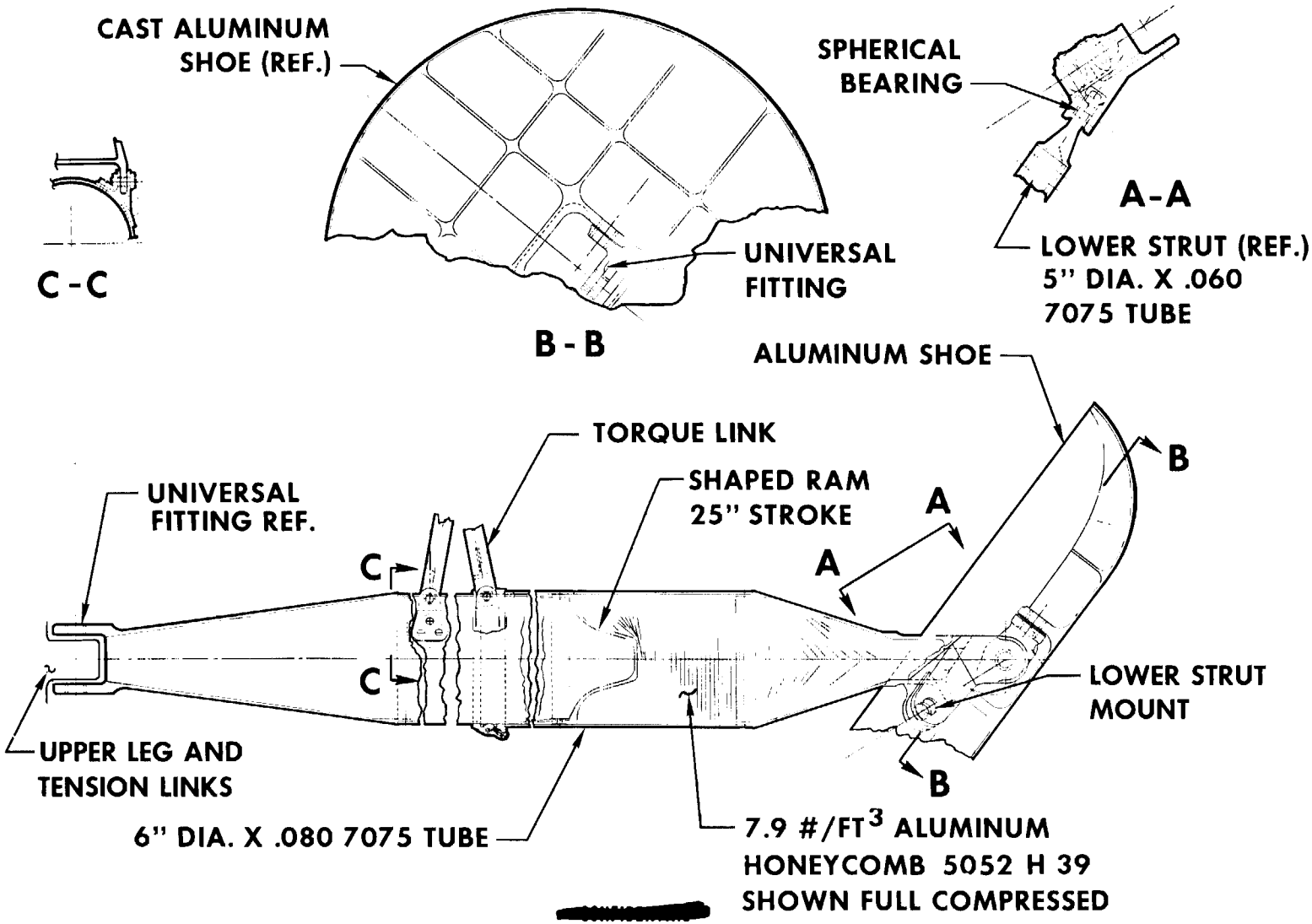

[redacted]

[redacted]

RE-ENTRY HEAT LOADS

TRAJECTORIES BASED ON $W/C_DA = 50.9$ PSF & $L/D = .5$ (ROLL MODULATED)

HEAT LOAD BASED ON STAGNATION POINT OF 16.7 FT. RADIUS HEMISPHERE

i=INCLINATION ANGLE OF RE-ENTRY

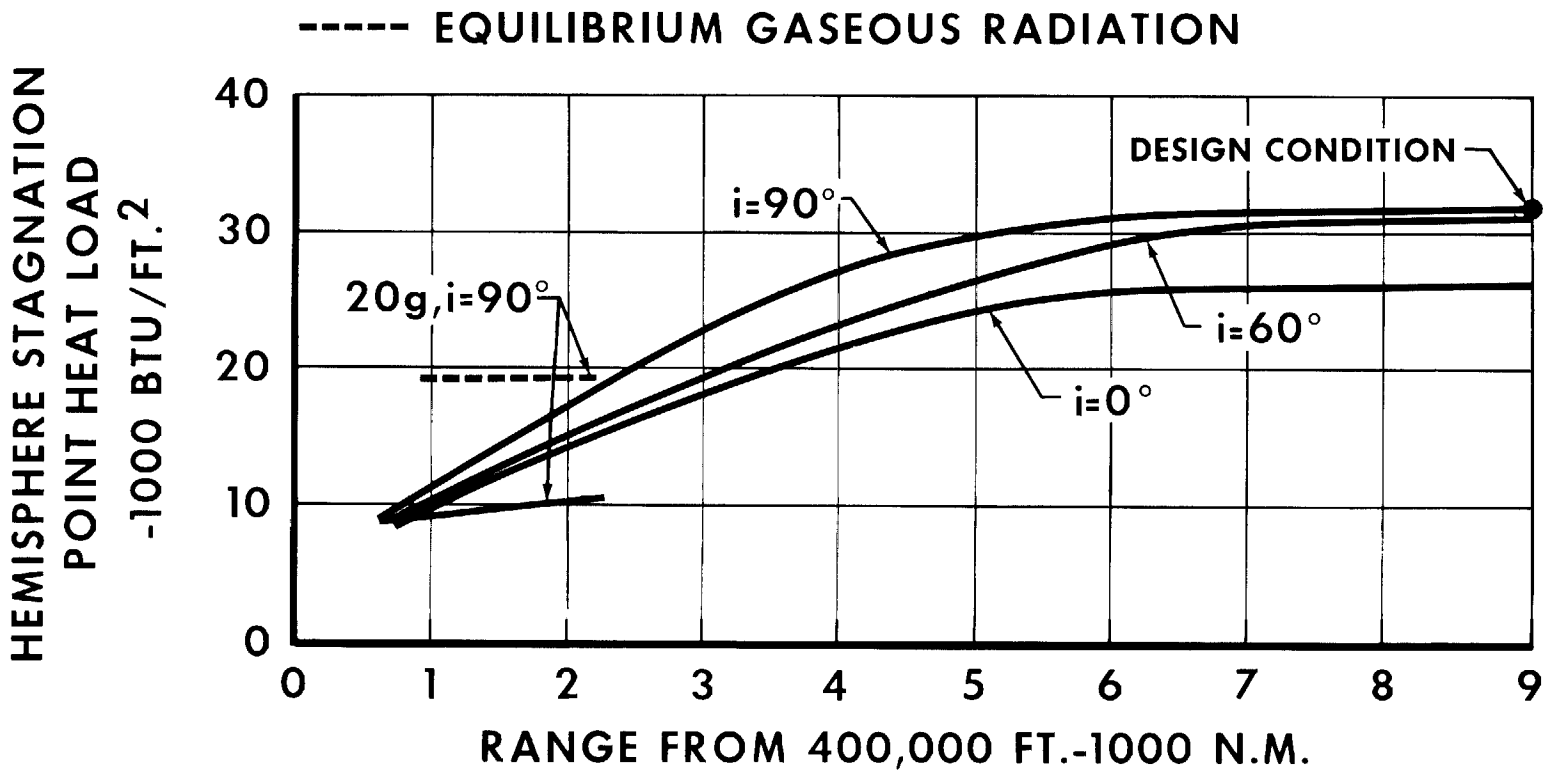

[redacted]

HEATING RATE HISTORIES
RANGE = 9000 NA.MI.

- TRAJECTORIES BASED ON $W/C_DA = 50.9$ PSF & $L/D = .5$ (ROLL MODULATED)
- HEATING RATES BASED ON STAGNATION POINT OF 16.70 FT. RADIUS HEMISPHERE
- 90° INCLINATION ANGLE OF RE-ENTRY

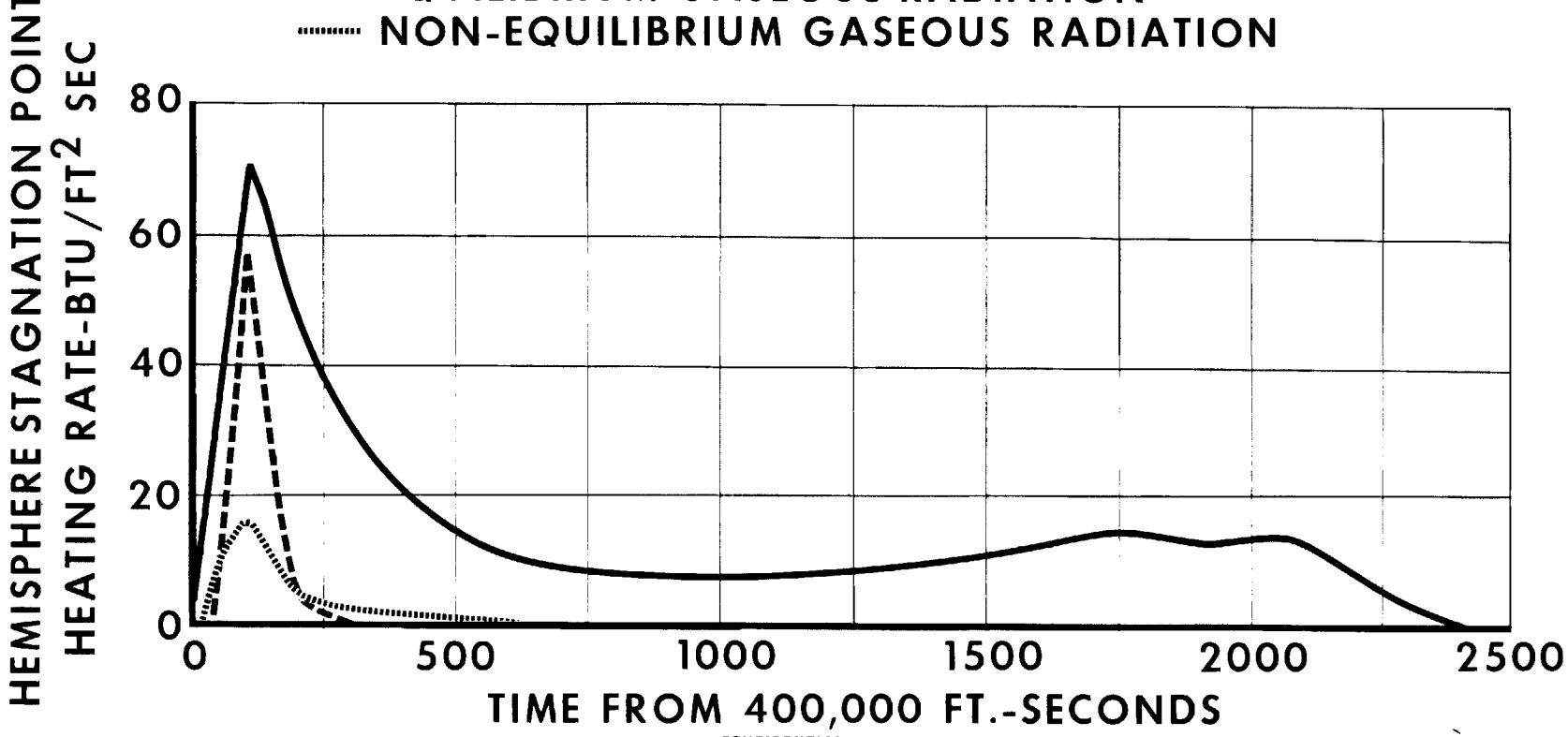

[redacted]

MCDONNELL
41-10625

HEATING RATE HISTORIES
20_g RE-ENTRY

- TRAJECTORIES BASED ON $WC_DA = 50.9$ PSF, & $L/D = .5$
- HEATING RATES BASED ON STAGNATION POINT OF 16.7 FT. RADIUS HEMISPHERE
- 90° INCLINATION ANGLE OF RE-ENTRY

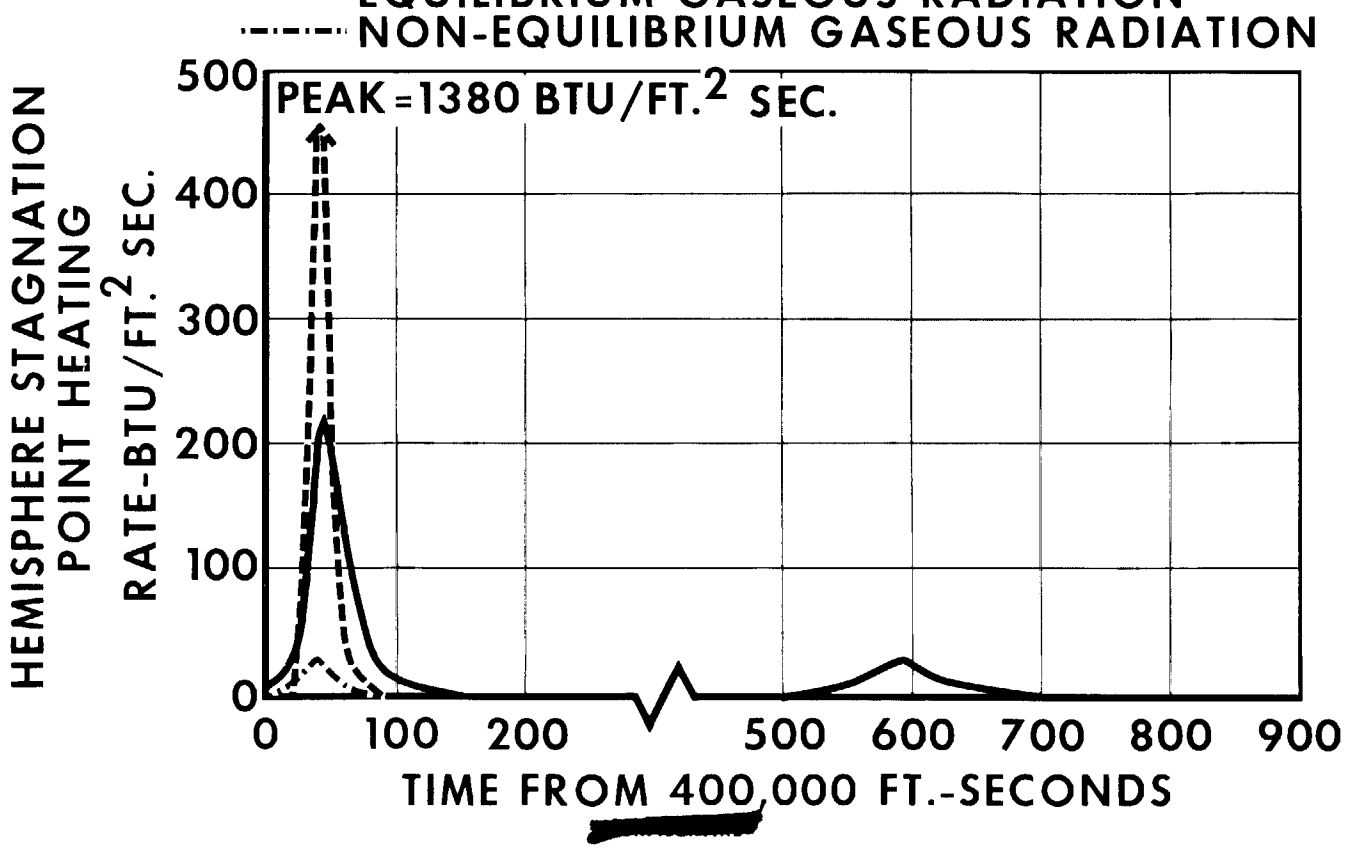

[redacted]

[redacted]

MCDONNELL
42-10625

CONVECTIVE HEATING DISTRIBUTION

q'' REF. - BASED ON STAGNATION POINT OF HEMISPHERE (RADIUS = R_N)

$R_N/D = 1.6$

$\alpha = -30°$

$R_C/D = .05$

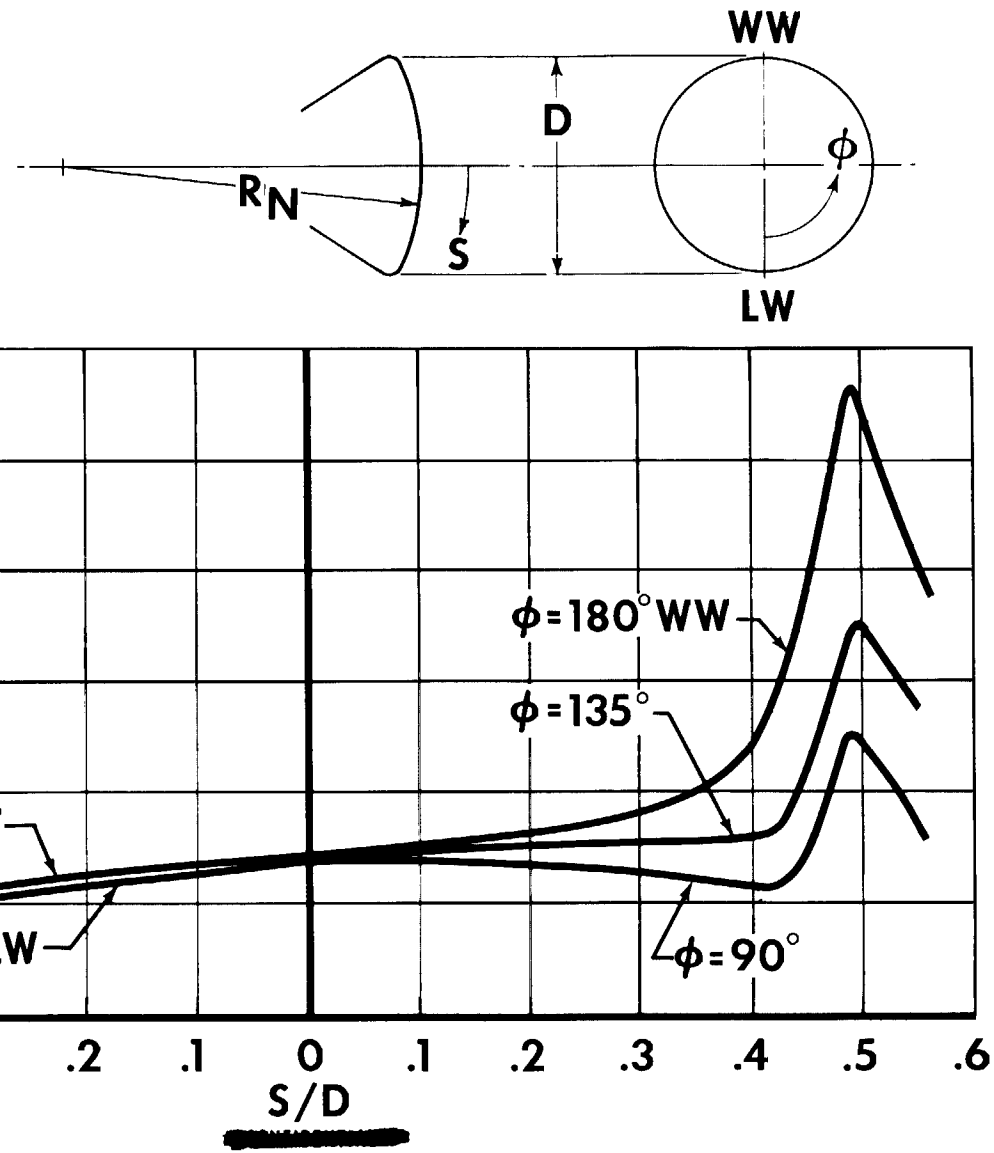

[redacted]

[redacted]

EQUILIBRIUM RADIATIVE HEATING DISTRIBUTION

$R_N/D = 1.6$

$\alpha = -30°$

$R_C/D = .05$

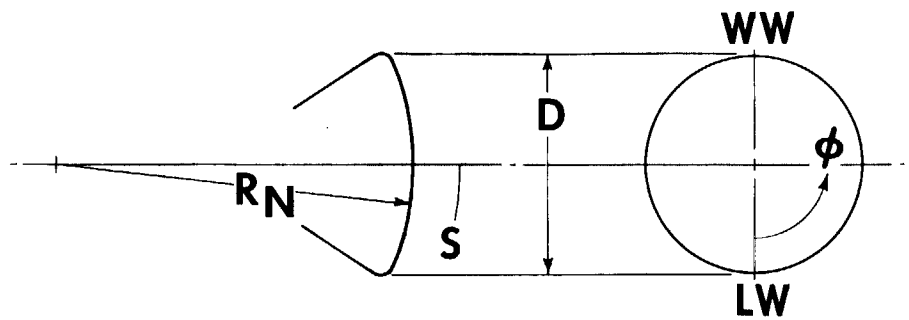

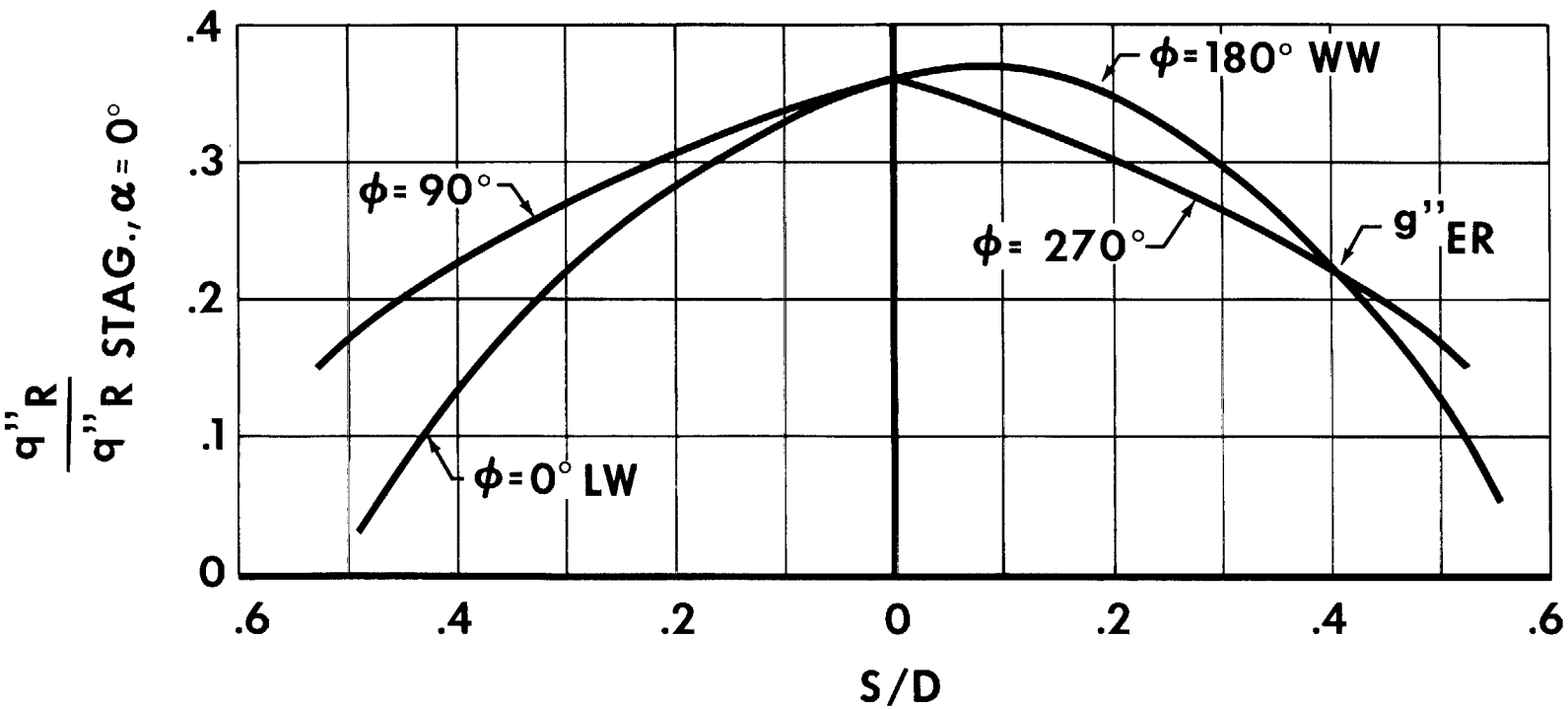

[redacted]

[redacted]

ESTIMATED AFTERBODY CONVECTION DISTRIBUTION

q''_{REF} BASED ON STAGNATION POINT OF HEMISPHERE (RADIUS=R_N)

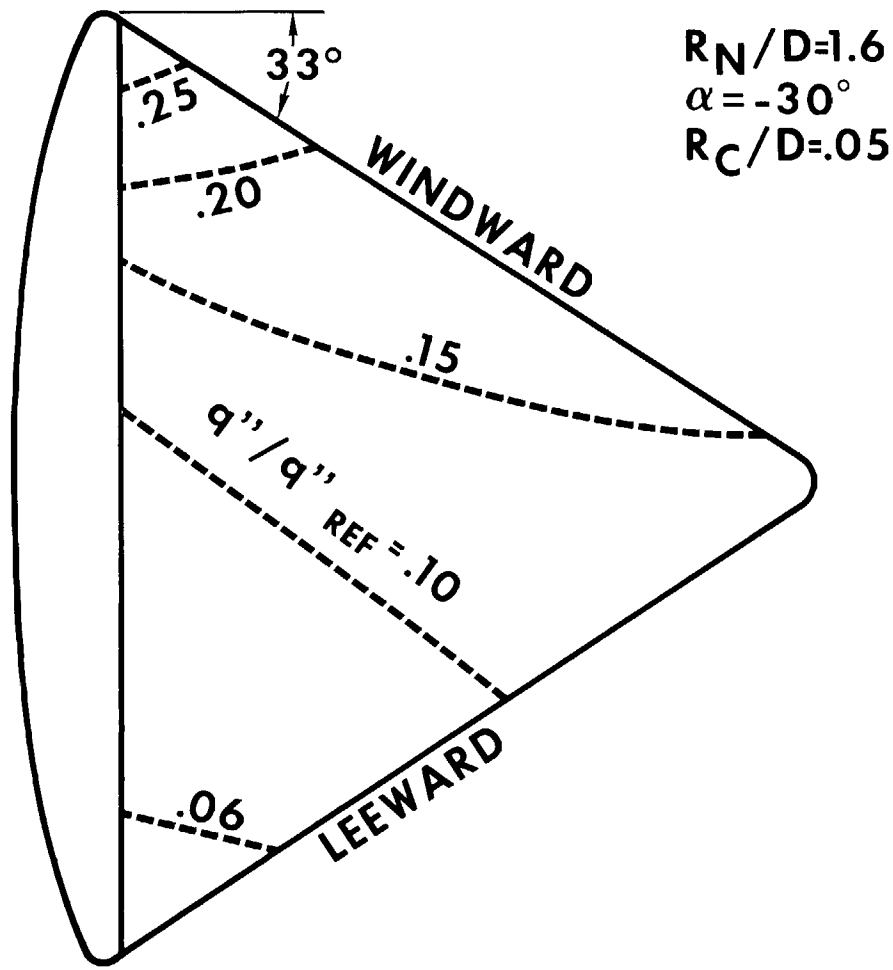

$R_N/D=1.6$
$\alpha=-30°$
$R_C/D=.05$

[redacted]

[redacted]

REQUIRED FRONT FACE ABLATIVE MATERIAL

MCDONNELL 44-1062S

MAC THERMORAD SHIELD S-3 ELASTOMERIC COMPOSITE
800° F MAXIMUM BOND TEMPERATURE

$R_N/D = 1.6$ W = 5000 LBS.

$\alpha = -30°$ CD = 1.21

$R_C/D = .05$ L/D = .5

D = 10.4 FT. RANGE = 9000 N.M.

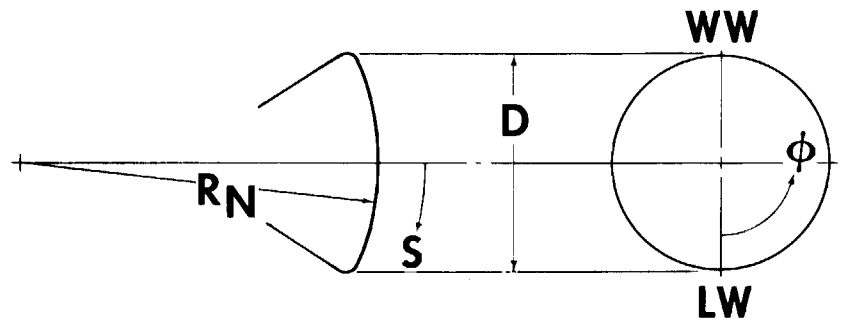

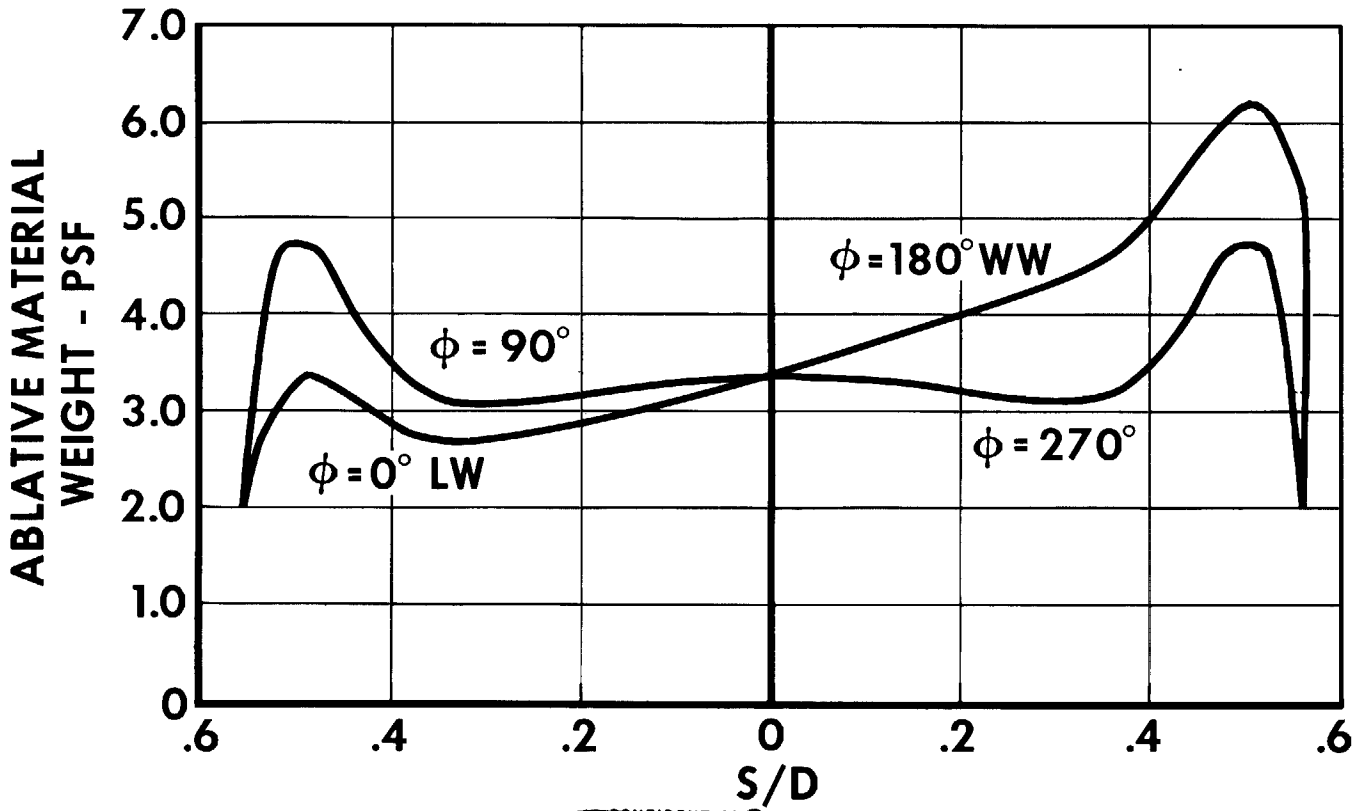

[redacted]

[redacted]

HEAT PROTECTION WEIGHT SUMMARY

COMMAND MODULE

ABLATIVE MATERIAL DESIGN

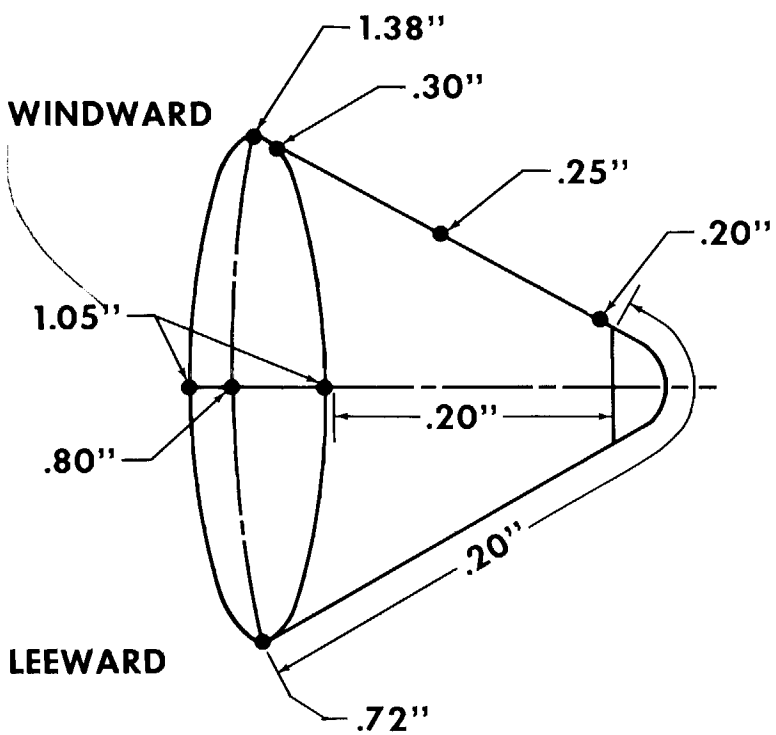

WEIGHT SUMMARY

FRONT FACE

ABLATIVE MATERIAL (MAC THERMORAD SHIELD S-3,	420 LB.
INSULATION (.5" MIN-K 1301, 20 PCF)	85 LB.

AFTERBODY

ABLATIVE MATERIAL (MAC THERMORAD SHIELD S-3, 55 PCF)	140 LB.
INSULATION (1.5" RF 700, 7 PCF)	124 LB.
TOTAL	769 LB.

[redacted]

[redacted]

MCDONNELL
46-10625

BONDLINE TEMPERATURE RISE FOR SEVERAL ABLATIVE MATERIALS

INITIAL WEIGHT = 4 PSF
MEAN HEATING RATE = 56.1 BTU/FT.^{2} SEC.
MEAN ENTHALPY = 3444 BTU/LB.

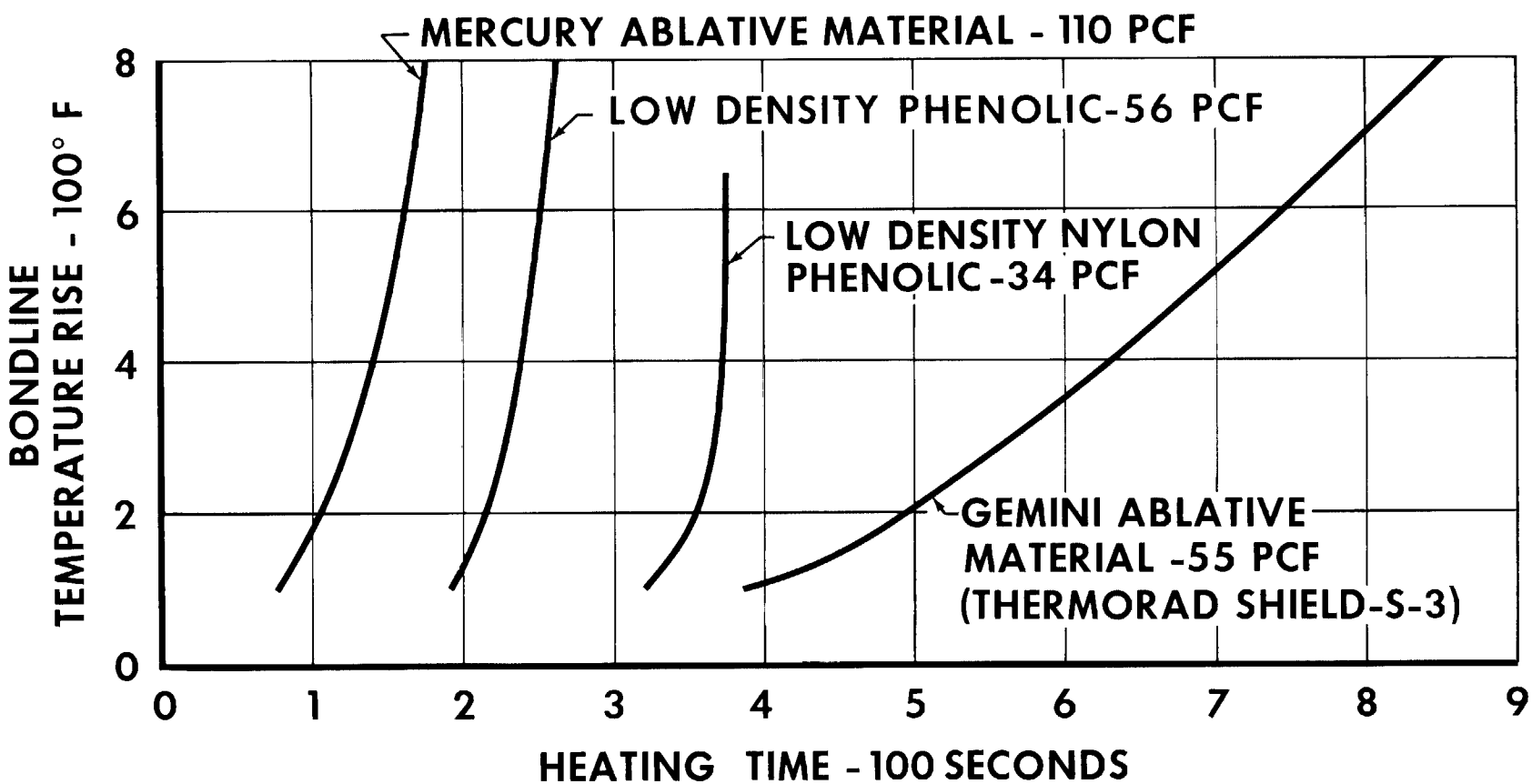

[redacted]

[redacted]

MCDONNELL
47-10625

HEATING RATE AND ENTHALPY OF ABLATIVE MATERIAL TESTING

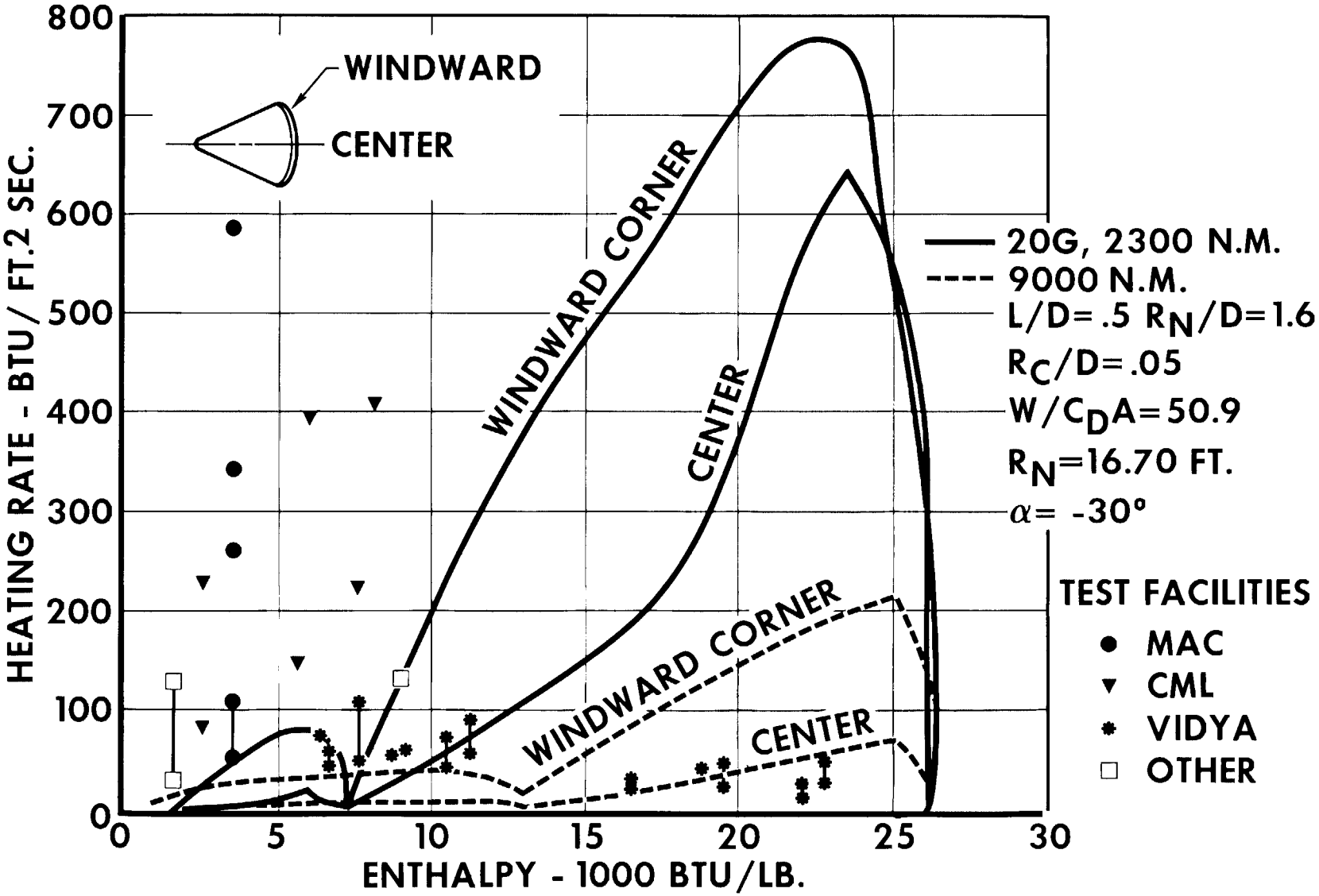

[redacted]

[redacted]

MCDONNELL
49-10625

REACTION CONTROL SYSTEMS SUMMARY

COMMAND MODULE

SERVICE MODULE

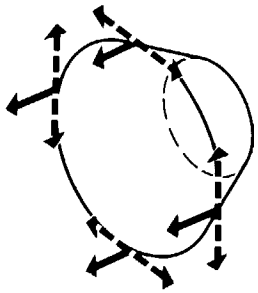

← 25 LBS. THRUST RE-ENTRY PITCH AND YAW

←- - 50 LBS. THRUST RE-ENTRY ROLL

← 100 LBS. THRUST TRANSEARTH ULLAGE CONTROL, MIDCOURSE CORRECTIONS AND REDUNDANCY FOR PITCH AND YAW

←- - 25 LBS. THRUST TRANSEARTH PITCH, YAW AND ROLL

TERMINAL LANDING MODULE

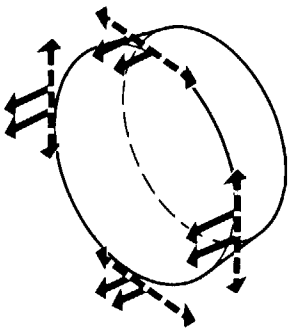

ALL CHAMBERS 100 LBS. THRUST

← TRANSLUNAR PITCH, YAW AND ULLAGE CONTROL

←- - TRANSLUNAR ROLL EARTH ORBIT PITCH, YAW AND ROLL

[redacted]

RCS JET SIZE DESIGN CRITERIA

- MIN. ANG. ACCELERATION, DEG./SEC.^{2}

	ROLL	PITCH	YAW
TRANSLUNAR	1.0	0.2	0.2
TRANSEARTH	2.0	1.0	1.0
RE-ENTRY	10.0	5.0	5.0

- ROLL DURING HOVER: 180 DEG. IN 15 SEC.
- ROLL AT LUNAR TAKE-OFF: 90 DEG. BEFORE 1000 FT. ALT.
- MAX. RATE CHANGE FOR SINGLE PULSE IN TRANSIT PHASES:
  .1 DEG./SEC.
- LINEAR ACCELERATION FOR MIDCOURSE ΔV, FT./SEC.^{2}:
  1.0 MIN. ; 5.0 MAX.
- NO VARIABLE OR DUAL-LEVEL RCS JETS

RCS PROPELLANT LOADING CRITERIA

ANGULAR MANEUVERS:

PHASE	NUMBER	AXIS	RATE, DEG/SEC.
EARTH PARKING ORBIT	1	PITCH	0.25
TRANSLUNAR	40	COMBINATION	0.5
LUNAR ORBIT	20	ROLL	1.0
NEAR MOON	3	ROLL	10.0
TRANSEARTH	40	COMBINATION	5.0
PRE RE-ENTRY	10	ALL	2.0
RE-ENTRY	40	ROLL	20.0

VELOCITY CHANGES:

TRANSLUNAR	5 FPS	(FINE CONTROL)
TRANSEARTH	300 FPS	(TOTAL)
ULLAGE	6.5 FPS FOR EACH OF 7 STARTS	

[redacted]

RCS PROPELLANT LOADING CRITERIA

MCDONNELL
54A-1062S

LIMIT CYCLING: 20 MSEC. PULSES; 5 DEG. MAX. DEADBAND; 5 MIN. MAX SPACING

EARTH PARKING ORBIT: 3 HRS

TRANSLUNAR & TRANSEARTH: 72 HRS EACH

PRE RE-ENTRY: 2 HRS

MISCELLANEOUS: ROLL TRIM FOR .6 IN C.G. OFFSET & 5 DEG. AVERAGE GIMBAL DEFLECTION

RE-ENTRY PITCH AND YAW DAMPING: 30 LBS. BASED ON SIMULATOR STUDIES

PERFORMANCE MARGIN: 30 PERCENT PLUS ARBITRARY ALLOWANCE FOR UNSPECIFIED MANEUVERS; 60 LB. TRANSLUNAR; 20 LB. TRANSEARTH

TRAPPED PROPELLANT: 1 PERCENT FOR TERMINAL LANDING & SERVICE MODULES; 4 PERCENT FOR COMMAND MODULE

[redacted]

[redacted]

REACTION CONTROL SYSTEM PROPELLANT BREAKDOWN

	TERMINAL LANDING MODULE	SERVICE MODULE	COMMAND MODULE
STABILIZATION & CONTROL			
PARKING ORBIT	53	-	-
MIDCOURSE COAST	288	98	-
LUNAR ORBIT	27	5	-
THRUSTING PHASES	44	16	-
PRE-REENTRY	-	-	12
REENTRY	-	-	81
	412	119	93
MIDCOURSE ΔV	-	354	-
ULLAGE CONTROL	326	10	-
TOTAL	738 LB.	483 LB.	93 LB.

[redacted]

[redacted]

COMMAND MODULE REACTION CONTROL SYSTEM INSTALLATION

MCDONNELL
51-1062S

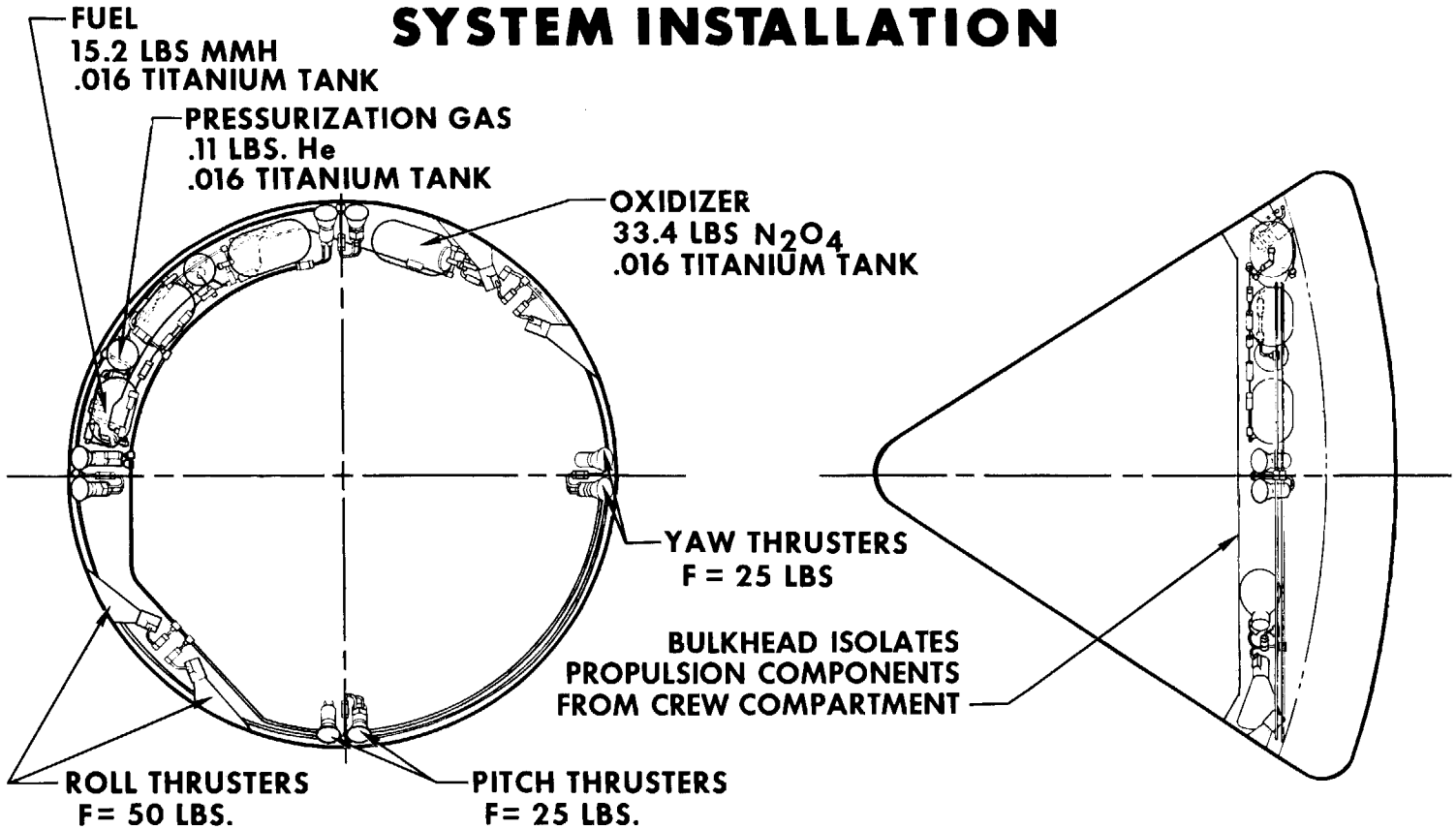

NOTES:
1. POSITIVE EXPULSION TANKS
2. DUAL SYSTEMS FOR RELIABILITY
3. SYSTEM WEIGHT 185 LBS.
   USEABLE PROPELLANT 93 LBS.
   TRAPPED PROPELLANT 4 LBS.
4. THRUST CHAMBER CHACTERISTICS
   ABLATIVE COOLED
   ϵ 40:1
   Pc 100 PSIA
   Isp STEADY STATE 300 SEC.
   Isp PULSING 260 SEC.

[redacted]

[redacted]

MCDONNELL
82-10625

COMMAND MODULE REACTION CONTROL SYSTEM SCHEMATIC

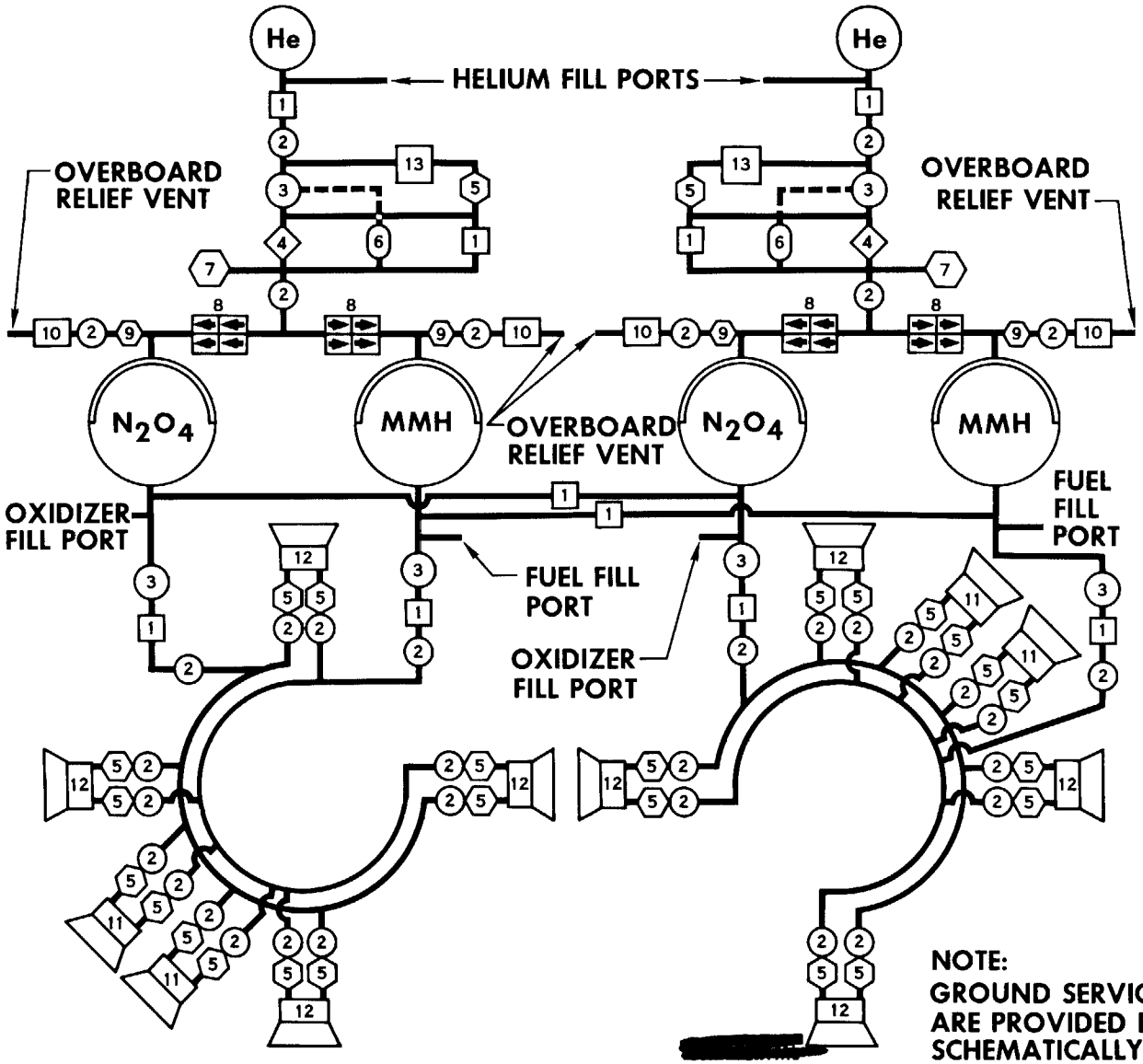

1. NORMALLY CLOSED SQUIB VALVE
2. STAINLESS STEEL FILTER
3. NORMALLY OPEN SQUIB VALVE
4. PRESSURE REGULATOR
5. NORMALLY CLOSED SOLENOID OPERATED VALVE
6. OVERPRESSURE SENSOR AND SWITCH
7. PRESSURE INDICATOR SENSOR
8. SERIES-PARALLEL CHECK VALVE ASSEMBLY
9. BURST DIAPHRAGM
10. RELIEF VALVE
11. 50 LB. THRUST ROLL CONTROL CHAMBER
12. 25 LB. THRUST PITCH & YAW CONTROL CHAMBER
13. FLOW RESTRICTOR

NOTE:
GROUND SERVICE AND CHECK CONNECTIONS ARE PROVIDED BUT NOT SHOWN SCHEMATICALLY

[redacted]

[redacted]

SERVICE MODULE REACTION CONTROL SYSTEM INSTALLATION

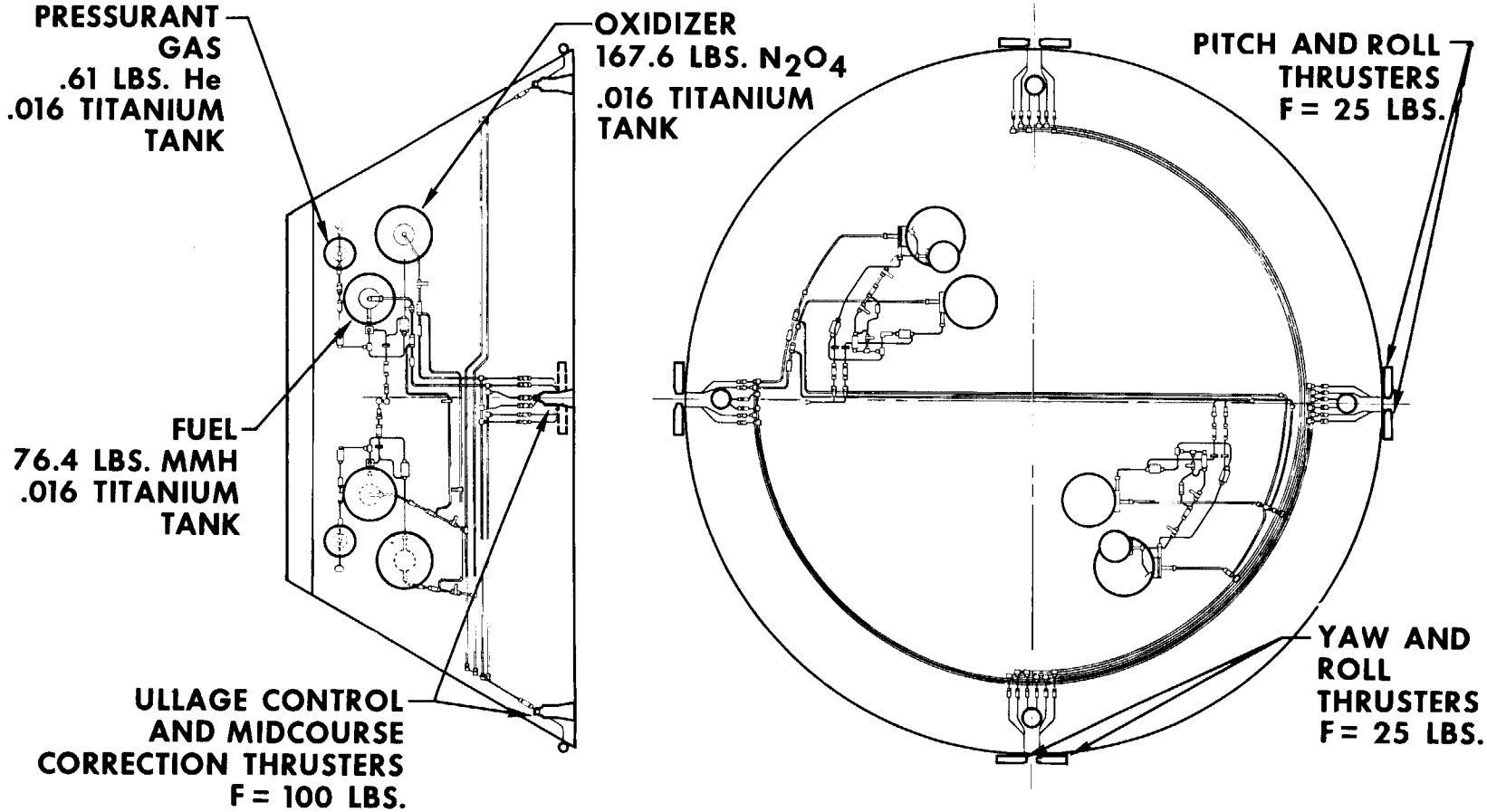

NOTES:

1. POSITIVE EXPULSION TANKS
2. DUAL SYSTEMS FOR RELIABILITY
3. SYSTEM WEIGHT 647 LBS.
   USEABLE PROPELLANT 483 LBS.
   TRAPPED PROPELLANT 5 LBS.
4. THRUST CHAMBER CHARACTERISTICS
   ABLATIVE COOLED
   ϵ 40:1 Pc 100 PSIA
   Isp STEADY STATE 300 SEC
   Isp PULSING 260 SEC

[redacted]

[redacted]

MCDONNELL
95-1062S

SERVICE MODULE REACTION CONTROL SYSTEM SCHEMATIC

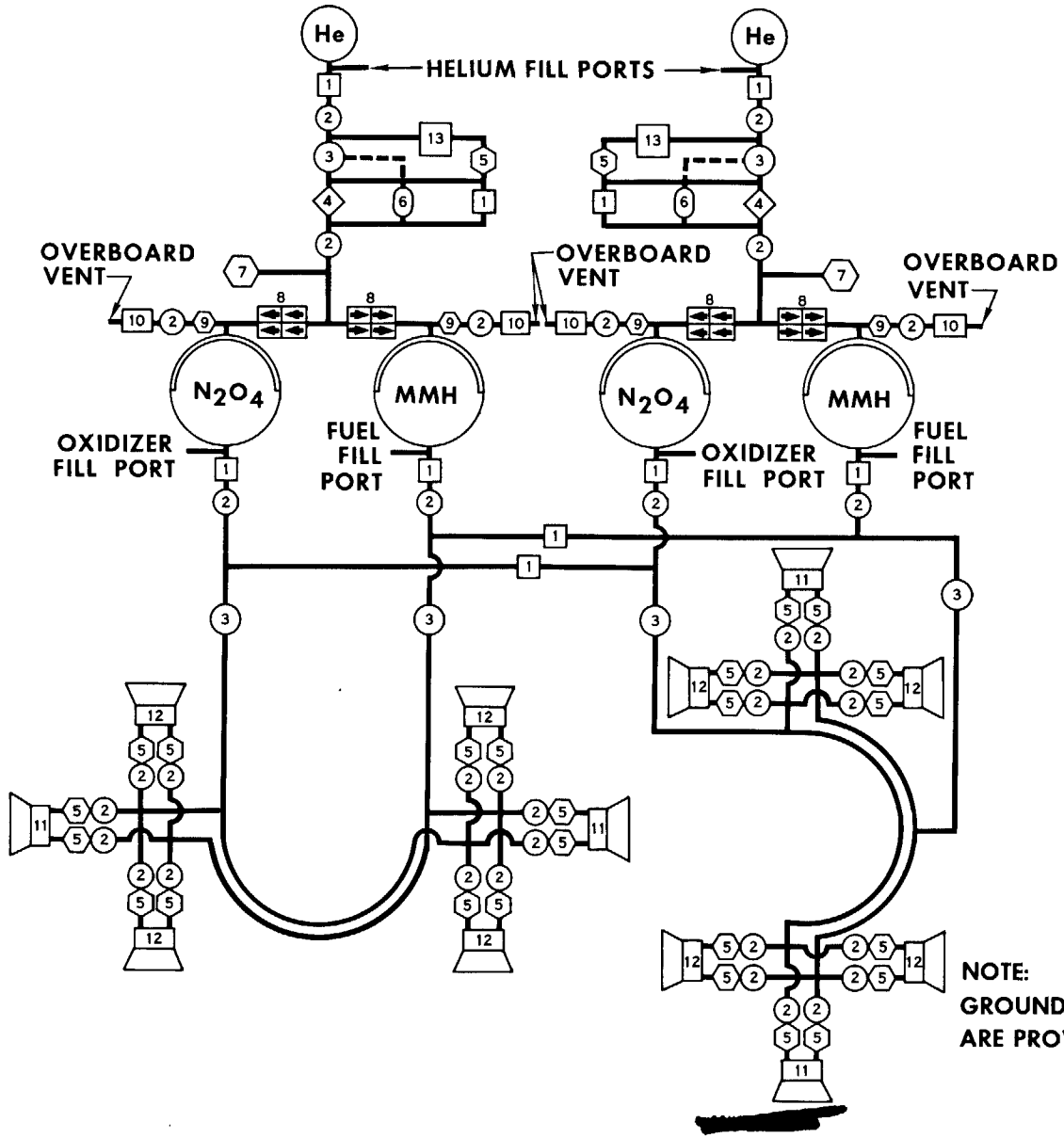

1. NORMALLY CLOSED SQUIB VALVE
2. FILTER (STAINLESS STEEL)
3. NORMALLY OPEN SQUIB VALVE
4. PRESSURE REGULATOR
5. NORMALLY CLOSED SOLENOID OPERATED VALVE
6. OVERPRESSURE SENSOR & SWITCH
7. PRESSURE INDICATOR SENSOR
8. SERIES-PARALLEL CHECK VALVE
9. BURST DIAPHRAGM
10. RELIEF VALVE
11. 100 LB. THRUST PITCH AND YAW CONTROL CHAMBERS
12. 25 LB. THRUST ROLL CONTROL CHAMBERS
13. FLOW RESTRICTOR

NOTE:
GROUND SERVICE AND CHECK CONNECTIONS ARE PROVIDED BUT NOT SHOWN SCHEMATICALLY

[redacted]

[redacted]

MCDONNELL
53-10625

TERMINAL LANDING MODULE REACTION CONTROL SYSTEM INSTALLATION

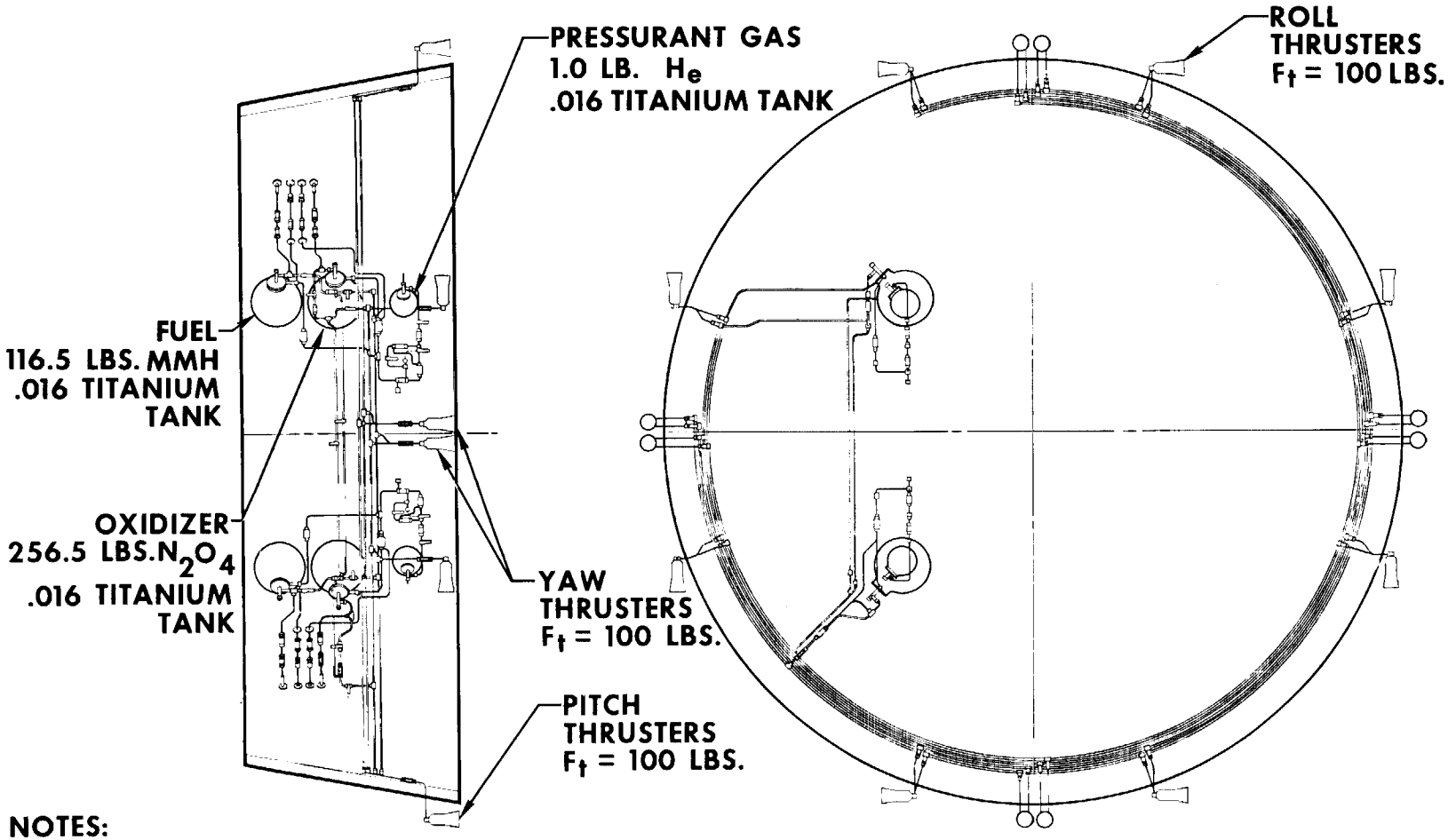

NOTES:

1. POSITIVE EXPULSION TANKS
2. DUAL SYSTEMS FOR RELIABILITY
3. SYSTEM WEIGHT 1035 LBS.
   USEABLE PROPELLANT 738 LBS.
   TRAPPED PROPELLANT 8 LBS.
4. THRUST CHAMBER CHARACTERISTICS
   ABLATIVE COOLED
   ϵ 40:1 I_{sp} STEADY STATE 300 SEC.
   P_c 100 PSIA I_{sp} PULSING 260 SEC.
5. ROLL THRUSTER USED IN PITCH AND YAW DURING EARTH HOLDING ORBIT

[redacted]

TERMINAL LANDING MODULE REACTION CONTROL SYSTEM SCHEMATIC

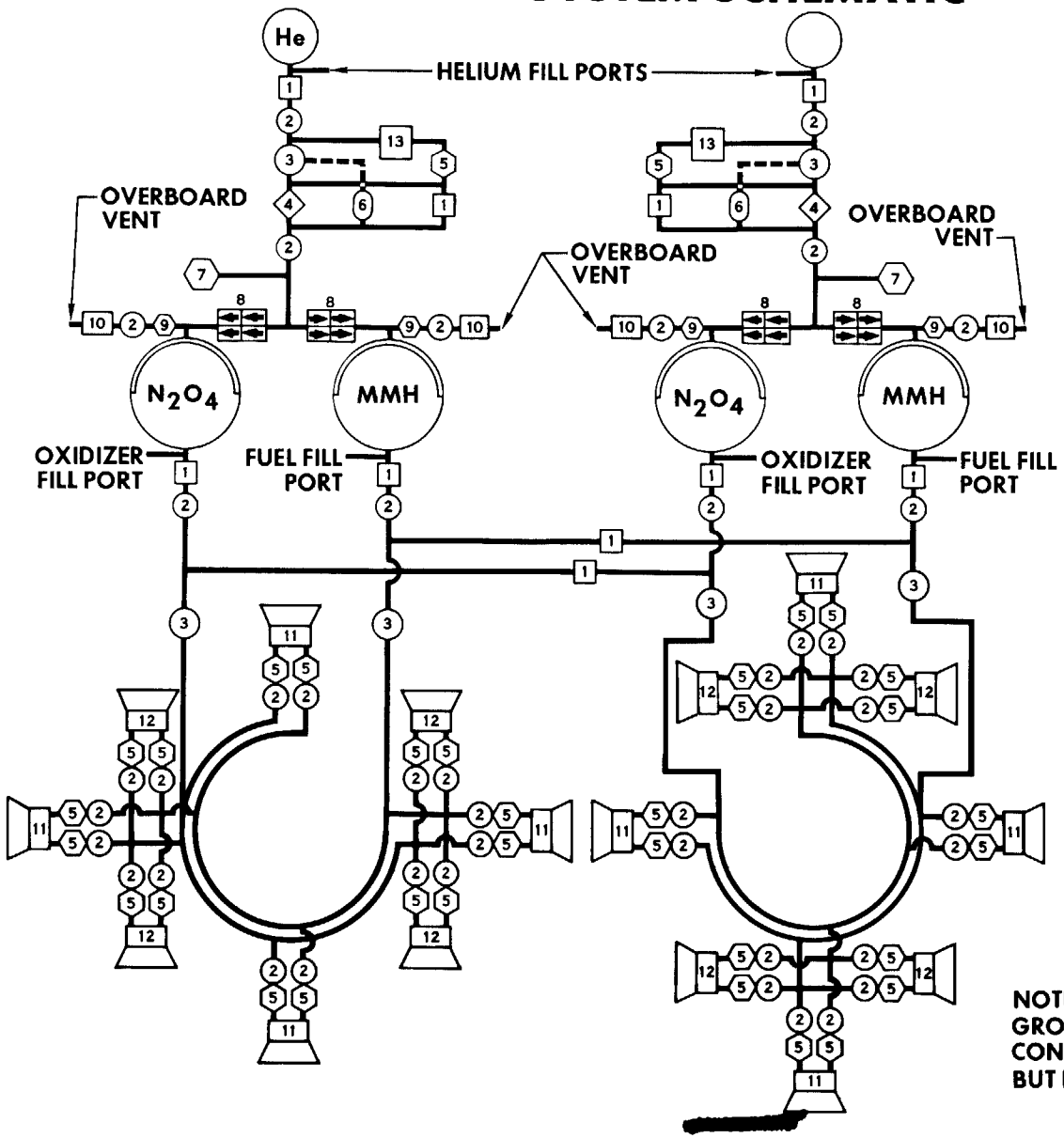

1. NORMALLY CLOSED SQUIB VALVE
2. FILTER (STAINLESS STEEL)
3. NORMALLY OPEN SQUIB VALVE
4. PRESSURE REGULATOR
5. NORMALLY CLOSED SOLENOID OPERATED VALVE
6. OVERPRESSURE SENSOR & SWITCH
7. PESSURE INDICATOR SENSOR
8. SERIES PARALLEL CHECK VALVE
9. BURST DIAPHRAGM
10. RELIEF VALVE
11. AFT FIRING 100 LB. THRUST PITCH AND YAW CONTROL CHAMBERS
12. 100 LB. THRUST ROLL CONTROL CHAMBERS
13. FLOW RESISTOR

NOTE
GROUND SERVICE AND CHECK CONNECTIONS ARE PROVIDED BUT NOT SHOWN SCHEMATICALLY

ATTITUDE CONTROL LOGIC

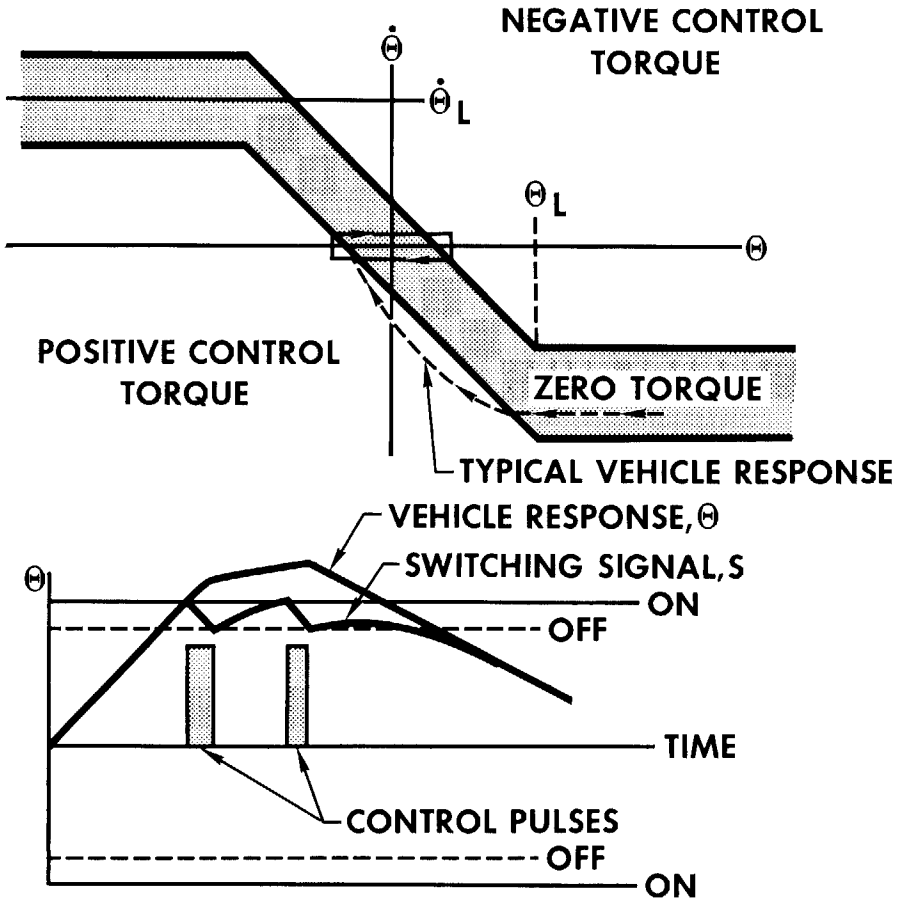

LOGIC FOR RCS MODES USING SENSED RATE

$\dot{\Theta}$ = RATE ERROR

Θ = ATTITUDE ERROR

$\dot{\Theta}_L, \Theta_L$ AND WIDTH OF ZERO TORQUE BAND ARE PILOT ADJUSTABLE.

LOGIC FOR DERIVED RATE MODES

S IS COMBINATION OF Θ AND LAGGED TORQUE SIGNAL.

WHEN S REACHES "ON" LEVEL, LATCHING CIRCUIT HOLDS TORQUE COMMAND ON FOR MIN. PULSE TIME.

SWITCHING LEVEL, GAIN, AND LAG TIME CONSTANT ARE PILOT ADJUSTABLE

LOGIC FOR GIMBALED ENGINE MODES

GIMBAL DEFLECTION = $K_1\Theta + K_2\Theta$ (LINEAR SYSTEM)

K_1 AND K_2 ARE PILOT ADJUSTABLE

STAGING STUDY ASSUMPTIONS

- ENGINES ARE PRESSURE FED
- MIDCOURSE CORRECTIONS MADE WITH N_2O_4/MMH
- PROPELLANTS STORED IN SPHERES
- O_2/H_2 AND F_2/H_2 SYSTEMS BASED ON 70 PSIA CHAMBER PRESSURE AND 105 PSIA TANK PRESSURE
- OF_2/MMH AND N_2O_4/MMH SYSTEMS BASED ON 100 PSIA CHAMBER PRESSURE AND 140 PSIA TANK PRESSURE
- ABLATIVE COOLED THRUST CHAMBERS WITH RADIATION SKIRTS FROM AN EXPANSION RATIO OF 15

PROPELLANT CHARACTERISTICS

PARAMETER \ PROPELLANT COMBINATION	F_2-H_2	O_2-H_2	OF_2-MMH	N_2O_4-MMH
OXIDIZER/FUEL MIXTURE RATIO	13	4.5	2.5	2.2
PROPELLANT BULK SPECIFIC GRAVITY	.621	.309	1.26	1.21
FLAME TEMPERATURE, °F	≈ 8000	5380	6670	5640
THEORETICAL VACUUM SPECIFIC IMPULSE (ε=40:1, SHIFTING EQUILIBRIUM) ~ I_{SP}, ~ SEC.	467	455	406	336
THEORETICAL DENSITY IMPULSE ~ I_D ~ LB-SEC/FT.^{3}	18,150	8,772	31,919	25,368
DELIVERED VACUUM SPECIFIC IMPULSE (ε=40:1, STEADY STATE OPERATION) ~ I_{SP}, SEC.	449	430	387	320
OXIDIZER FREEZING POINT, °F	-365	-362	-371	+12
FUEL FREEZING POINT, °F	-435	-435	-63	-63
ALLOWABLE OXIDIZER TEMPERATURE AT TANK DESIGN PRESSURE	-263°F @ 105 PSIA	-255°F @ 105 PSIA	-168°F @ 140 PSIA	+172°F @ 140 PSIA
ALLOWABLE FUEL TEMPERATURE AT TANK DESIGN PRESSURE	-407°F @ 105 PSIA	-407°F @ 105 PSIA	+350°F @ 140 PSIA	+350°F @ 140 PSIA
PROPELLANT VOLUME REQUIRED FOR ΔV=10,575, FPS AND INITIAL WEIGHT=88,867 LBS., FT.^{3}	1467	3079	767	894

[redacted]

MCDONNELL
57-1062S

PROPULSION SYSTEM STAGING

TOTAL ΔV = 22,100 FPS

1 selected configuration 8/8 MRC

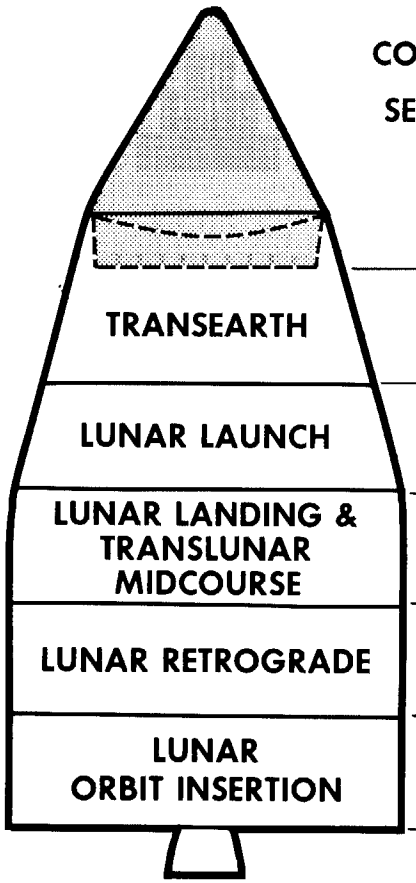

WT.-LBS.	I	II	III	IV	V
COMMAND MODULE	5937	5907	5735	5746	6265
SERVICE EQUIPMENT	2118	2118	2118	2118	2118
EFF. TOWER	165	165	165	165	165
TOTAL	8220	8190	8018	8029	8548
TRANSEARTH	19,854	5,172	19,567	28,594	20,489
LUNAR LAUNCH		13,871			
LUNAR LANDING & TRANSLUNAR MIDCOURSE	8,914	8,928	8,576		
LUNAR RETROGRADE	27,894	52,347	52,347	51,882	35,645
LUNAR ORBIT INSERTION	23,271				23,471

□ N_2O_4/MMH ▨ O_2/H_2

[redacted]

[redacted]

EFFECT OF PROPELLANT COMBINATIONS CONFIGURATION III

TOTAL ΔV 22,100 FPS

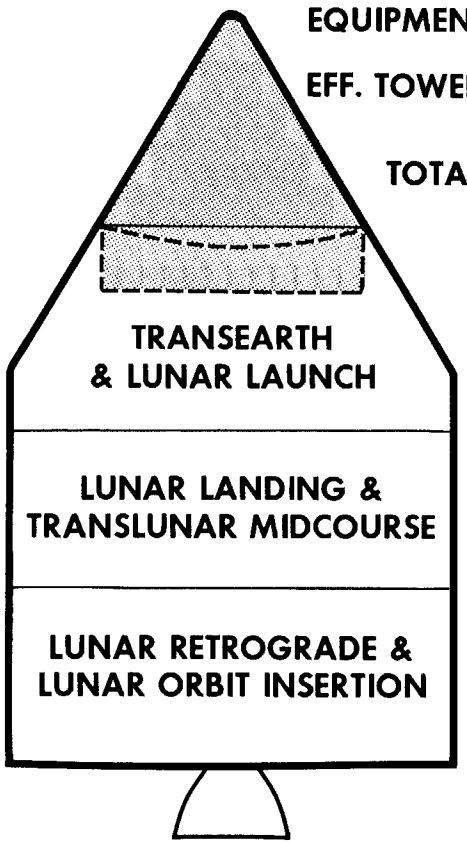

WT.-LBS.	III	III-a	III-b	III-c	III-d	III-e	III-f
COMMAND MODULE	5735	4285	5967	7825	7882	7284	6436
SERVICE EQUIPMENT	2118	2118	2118	2118	2118	2118	2118
EFF. TOWER	165	165	165	165	165	165	165
TOTAL	8018	6568	8250	10108	10165	9567	8719
TRANSEARTH & LUNAR LAUNCH	N_2O_4/ MMH	N_2O_4/ MMH	N_2O_4/ MMH	N_2O_4/ MMH OF_2 /MMH	N_2O_4/ MMH OF_2 /MMH	N_2O_4/ MMH O_2/H_2	N_2O_4/ MMH
LUNAR LANDING & TRANSLUNAR MIDCOURSE	N_2O_4/ MMH	N_2O_4/ MMH	N_2O_4/ MMH	N_2O_4/ MMH OF_2/ MMH	OF_2/ MMH N_2O_4/ MMH	O_2/H_2 N_2O_4/ MMH	N_2O_4/ MMH
LUNAR RETROGRADE & LUNAR ORBIT INSERTION	O_2/H_2	N_2O_4/ MMH	OF_2/ MMH	O_2/H_2	OF_2/ MMH	O_2/H_2	F_2/H_2

[redacted]

[redacted]

MCDONNELL
59-1062S

EFFECT OF SUBSTITUTING OF_2/MMH IN RETURN STAGE OF CONFIGURATION III

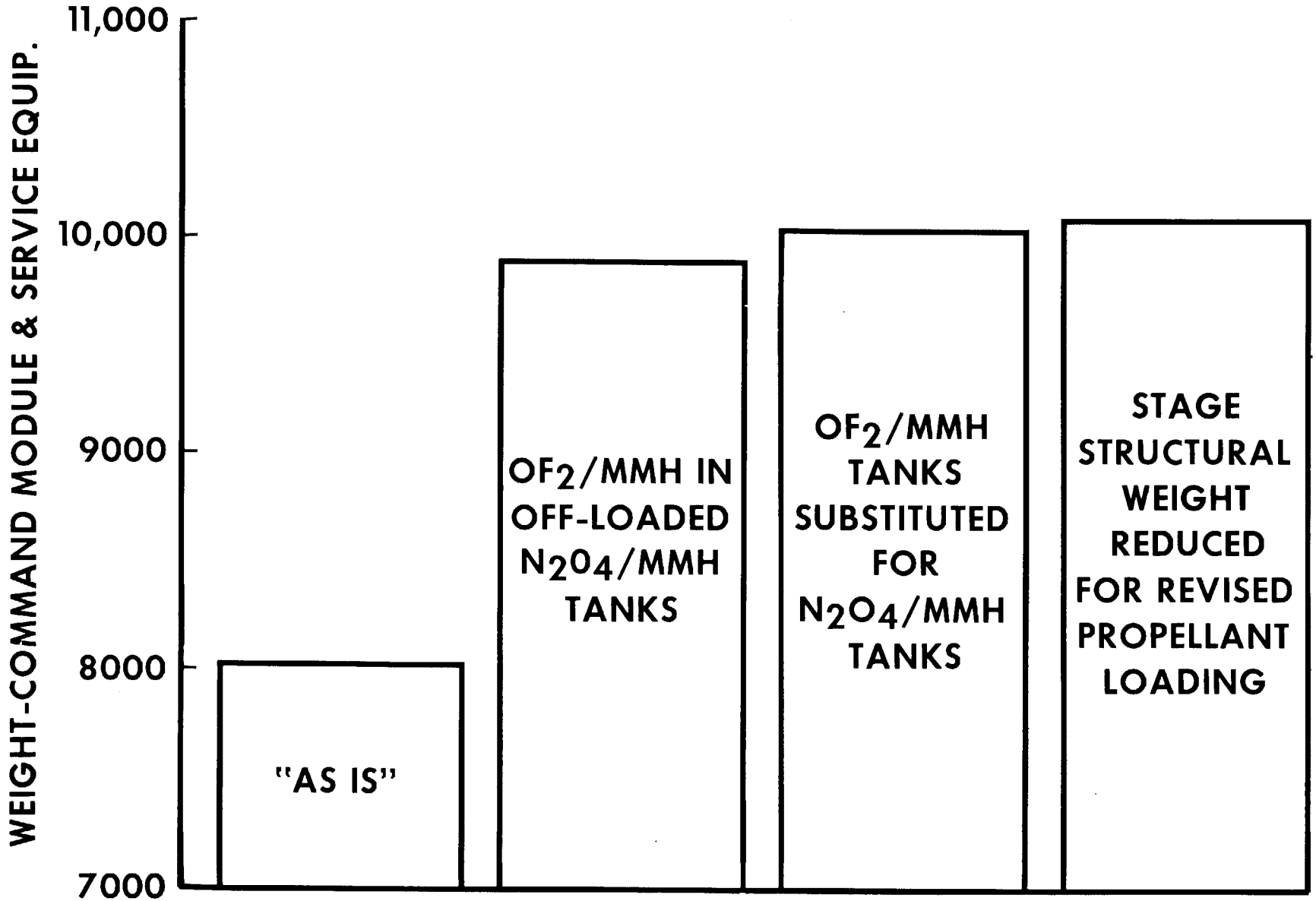

[redacted]

[redacted]

SERVICE MODULE DETAILS

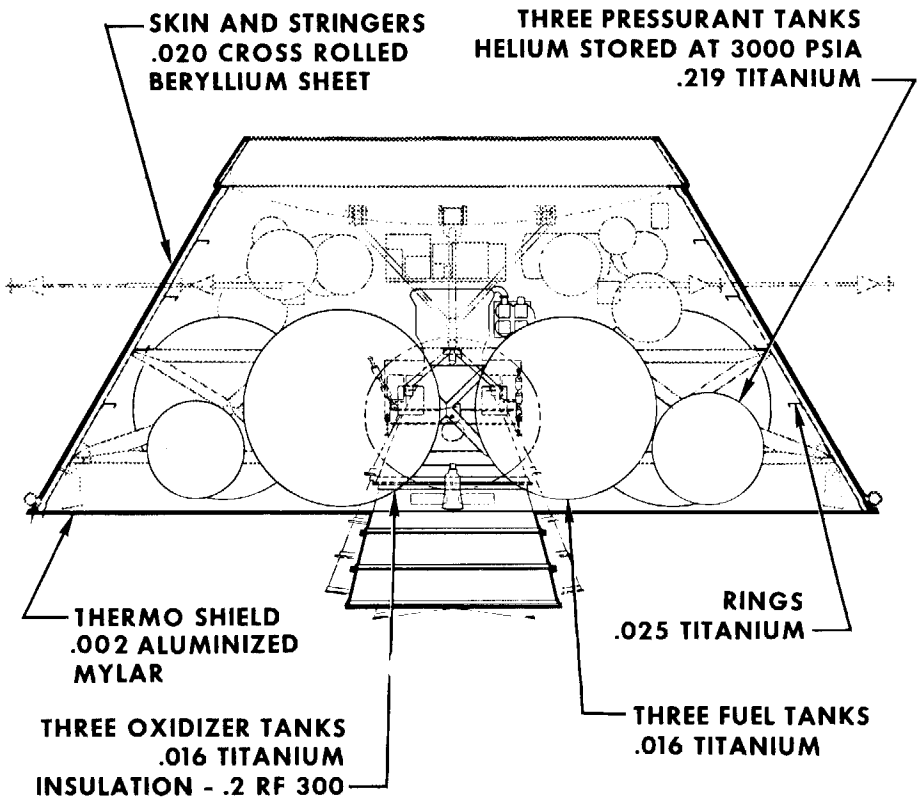

FUNCTION

LUNAR LAUNCH
TRANSEARTH INJECTION
TRANSEARTH ULLAGE POSITIONING
TRANSEARTH MIDCOURSE
ATTITUDE CONTROL FOR LAUNCH AND TRANSEARTH

WEIGHT

LOADED GROSS WT.	22,889 LBS.
BURNOUT WT.	4,136 LBS.
USABLE PROPELLANTS	18,753 LBS.
TRAPPED PROPELLANTS	191 LBS.
EQUIPMENT	~~1,750~~ 1,837 LBS.
STAGE MASS FRACTION	.890*

*EXCLUDES SERVICE EQUIPMENT

ENGINE DATA

THRUST	11,700 LBS.
COOLING METHOD	ABLATIVE AND RAD.
PC	100 PSIA
ε	40:1
I_{SP} (VAC)	320 SEC.
O/F	2.2
WEIGHT	373 LBS.
GIMBAL ANGLES	$\pm$ 7.5°

[redacted]

[redacted]

SERVICE MODULE
PROPULSION SYSTEM SCHEMATIC

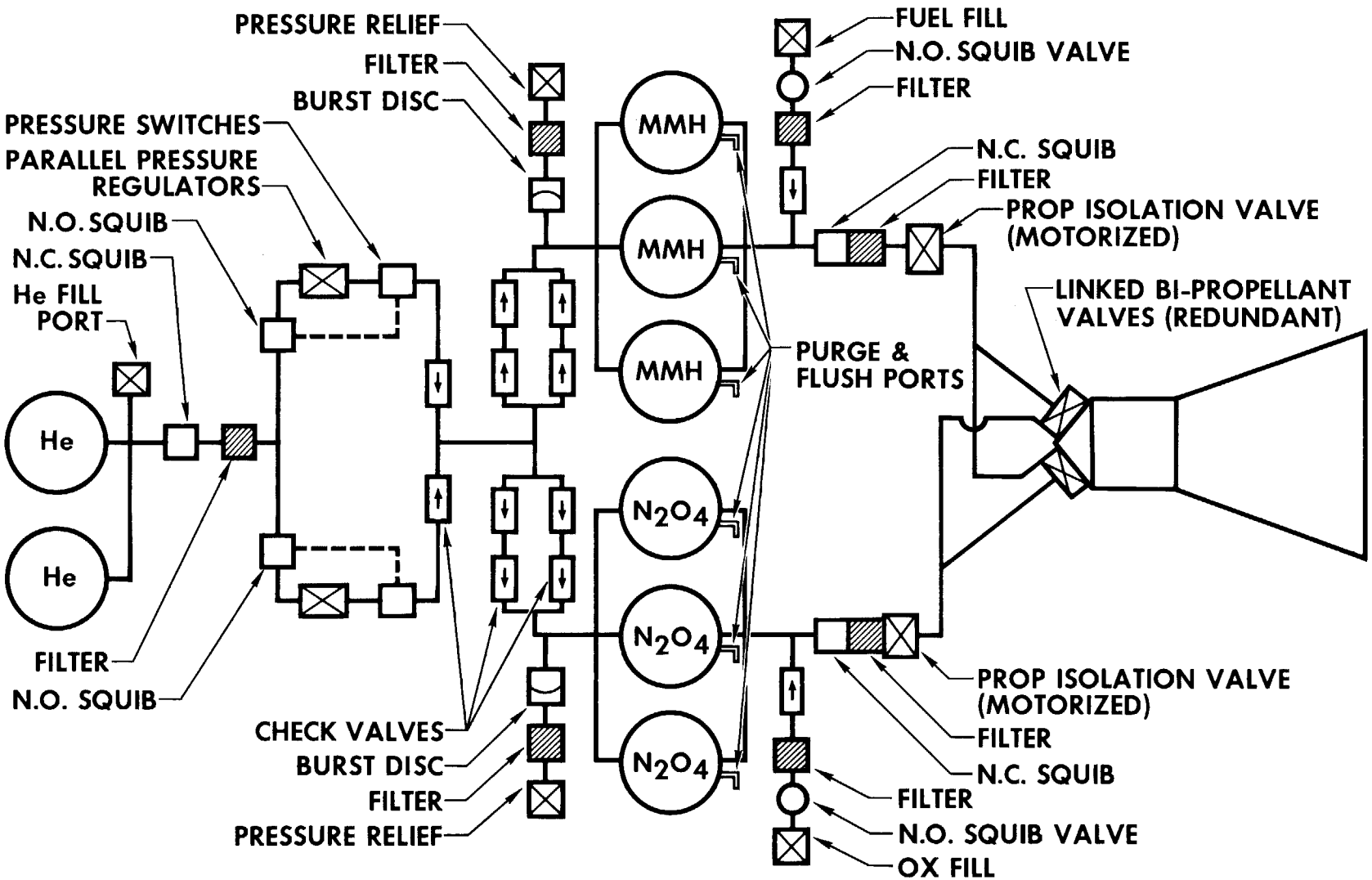

GROUND SERVICE CHECKOUT CONNECTIONS ARE PROVIDED, BUT NOT SHOWN SCHEMATICALLY

[redacted]

[redacted]

TERMINAL LANDING MODULE DETAILS

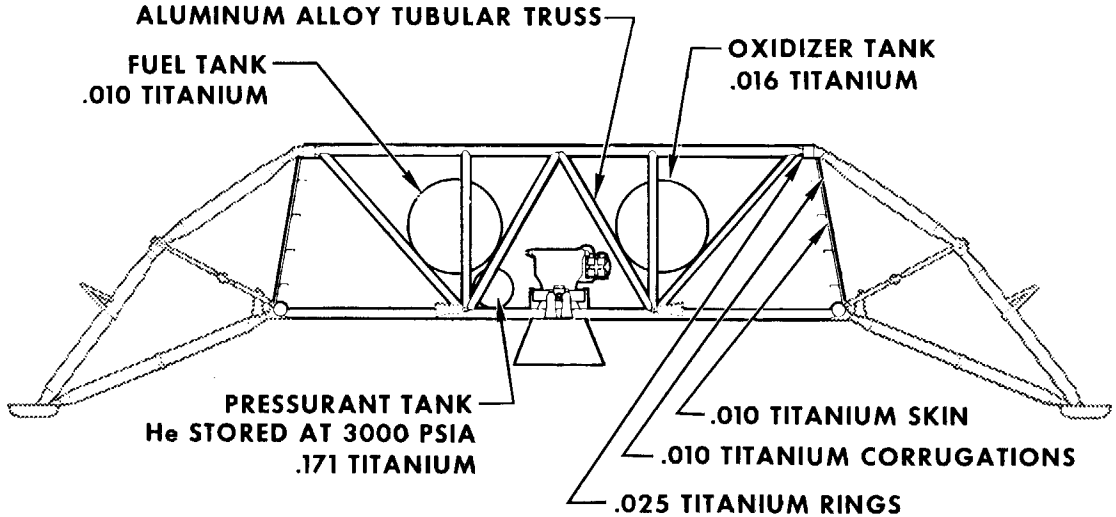

FUNCTION

TRANSLUNAR ULLAGE POSITIONING

TRANSLUNAR ATTITUDE CONTROL

FINAL DESCENT, HOVER AND TRANSLATION

WEIGHT

LOADED GROSS WEIGHT	5,515 LBS.
BURNOUT WEIGHT	2,234 LBS.
USABLE PROPELLANTS	3,281 LBS.
TRAPPED PROPELLANTS	34 LBS.
LANDING GEAR CARRY-THROUGH	494 LBS.
STAGE MASS FRACTION	.661*

*EXCLUDES LANDING GEAR AND GEAR SUPPORTS

ENGINE DATA

THRUST (MAX.)	11,270 LBS.
THRUST (MIN.)	3,410 LBS.
COOLING METHOD	ABLATIVE
P_C	100 PSIA
ε	20:1
I_{SP} (VAC.)	308 SEC.
O/F	2.2
GIMBAL ANGLE	± 6°
WEIGHT	266 LBS.

[redacted]

[redacted]

MCDONNELL
80-10625

TERMINAL LANDING MODULE
PROPULSION SYSTEM SCHEMATIC

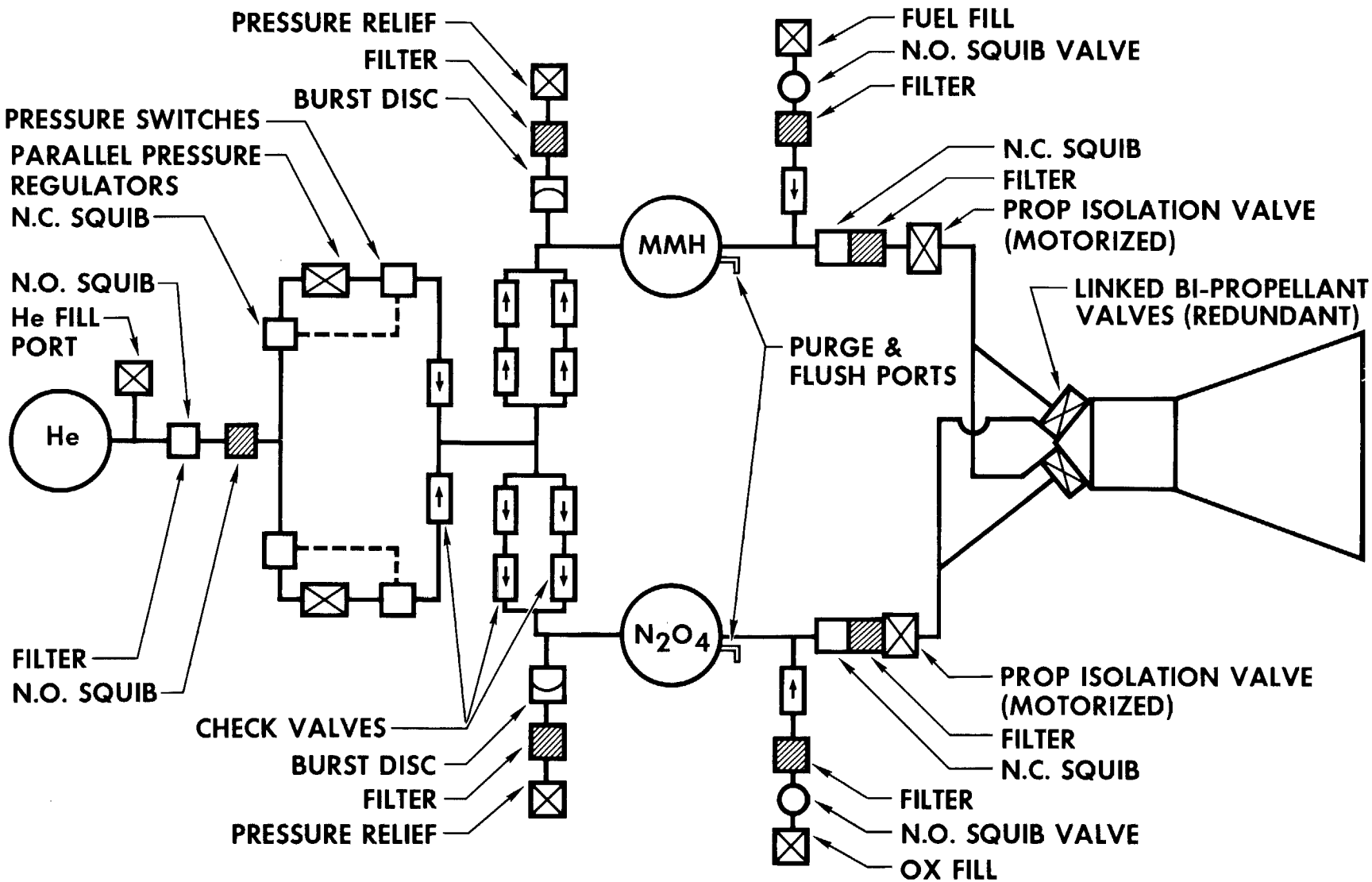

GROUND SERVICE CHECKOUT CONNECTIONS ARE PROVIDED, BUT NOT SHOWN SCHEMATICALLY

[redacted]

[redacted]

RETROGRADE MODULE DETAILS

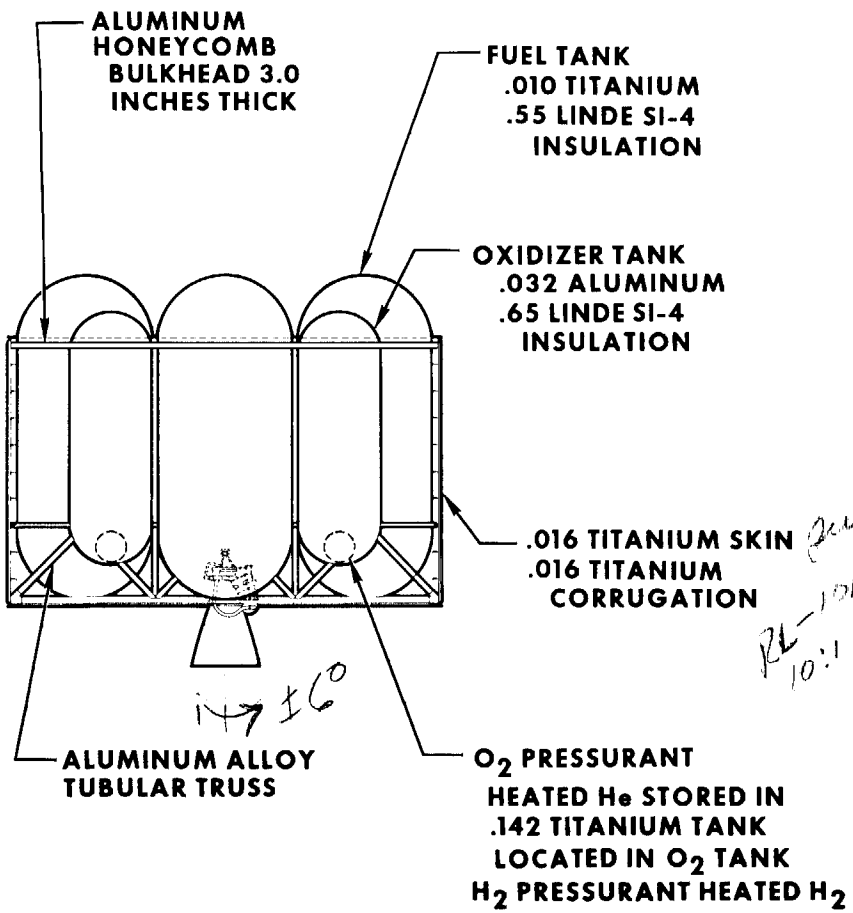

FUNCTION

- TRANSLUNAR MIDCOURSE CORRECTIONS
- LUNAR ORBIT INJECTION
- MAIN LUNAR LANDING RETROGRADE

WEIGHT

LOADED GROSS WEIGHT	54916 LBS
BURNOUT WEIGHT	7378 LBS
USEABLE PROPELLANTS	47538 LBS
TRAPPED PROPELLANTS	480 LBS
STAGE MASS FRACTION	.874

ENGINE DATA

RL-10A 10:1

THRUST (MAX.)	26500 LBS
THRUST (MIN.)	2650 LBS
COOLING METHOD	REGENERATIVE
P_C	535 PSIA
ϵ	40:1
I_{SP} (VAC.)	430 SEC
O/F	5
GIMBAL ANGLE	± 6°
WEIGHT	370 LBS

[redacted]

[redacted]

MCDONNELL
81-1062S

RETROGRADE MODULE
PROPULSION SYSTEM SCHEMATIC

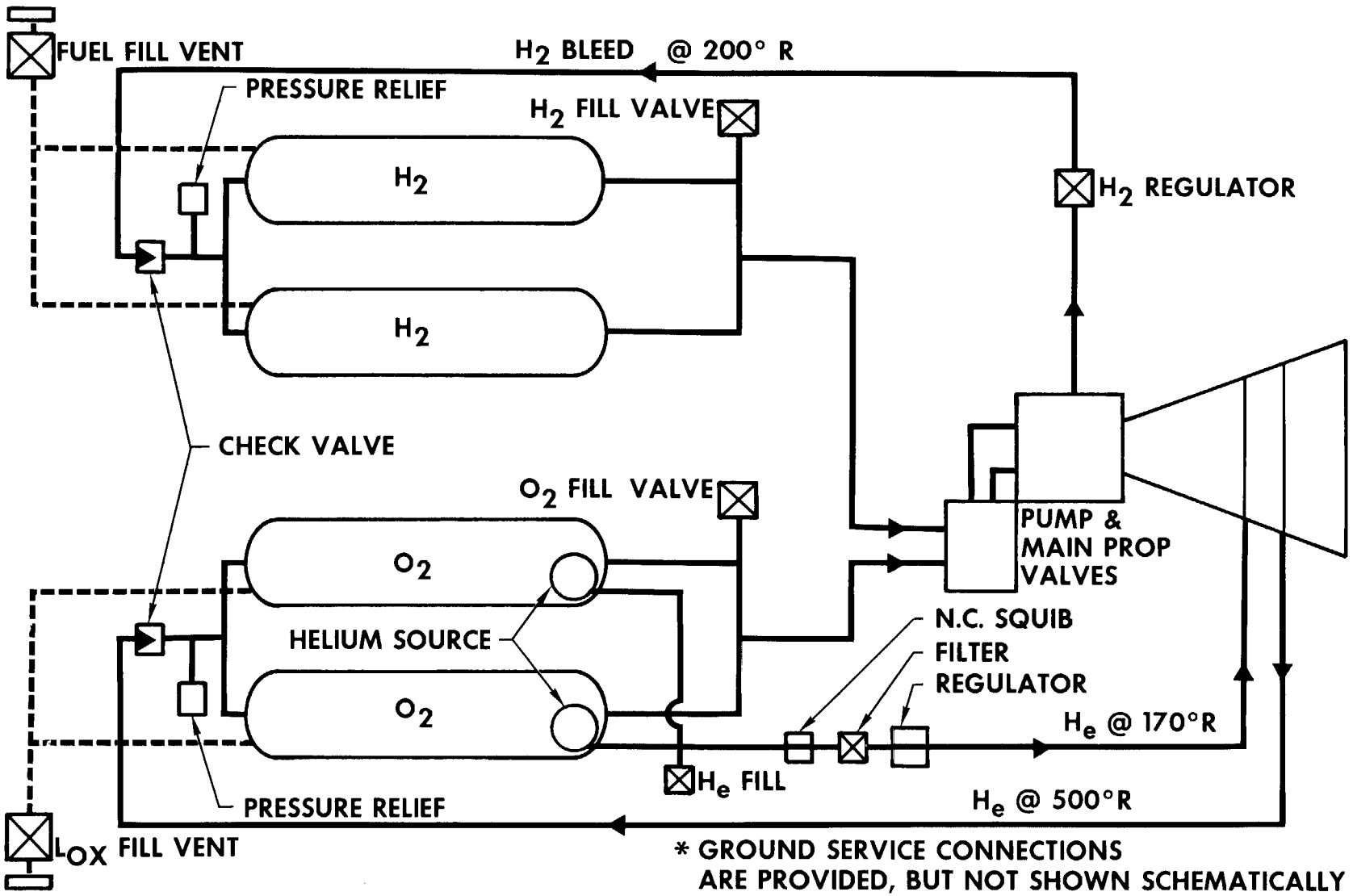

* GROUND SERVICE CONNECTIONS ARE PROVIDED, BUT NOT SHOWN SCHEMATICALLY

[redacted]

[redacted]

CONFIGURATION III-1
PROPELLANT CHARACTERISTICS

MCDONNELL
92-1062S

PARAMETER	PROPELLANT COMBINATION	
	O_2 - H_2	N_2O_4 - MMH
OXIDIZER/FUEL MIXTURE RATIO	5.0	2.2
PROPELLANT BULK SPECIFIC GRAVITY	0.325	1.196
FLAME TEMPERATURE - °F	5435	5293
THEORETICAL VACUUM SPECIFIC IMPULSE, I_{SP} - SEC. SHIFTING EQUILIBRIUM		
$\varepsilon = 40$	456 (Pc = 535 PSI)	339 (Pc = 100 PSI)
$\varepsilon = 20$	—	326 (Pc = 100 PSI)
THEORETICAL DENSITY IMPULSE, I_D - LB-SEC/FT^3	9227	25300
DELIVERED VACUUM SPECIFIC IMPULSE, I_{SP} - SEC. STEADY STATE		
$\varepsilon = 40$	430	320
$\varepsilon = 20$	—	308
OXIDIZER FREEZING POINT - °F	−362	+12
FUEL FREEZING POINT - °F	−435	−63
OXIDIZER BOILING POINT - °F	−297	+70
FUEL BOILING POINT - °F	−423	+189
ALLOWABLE OXIDIZER TEMPERATURE AT TANK DESIGN PRESSURE	−284°F @ 30 PSIA	172°F @ 140 PSIA
ALLOWABLE FUEL TEMPERATURE @ TANK DESIGN PRESSURE	−418°F @ 30 PSIA	350°F @ 140 PSIA

[redacted]

[redacted]

PROPULSION MODULE MASS FRACTION COMPARISON

OPEN SYMBOLS ARE FROM THIS STUDY
SOLID SYMBOLS ARE OTHER PROPULSION STAGES

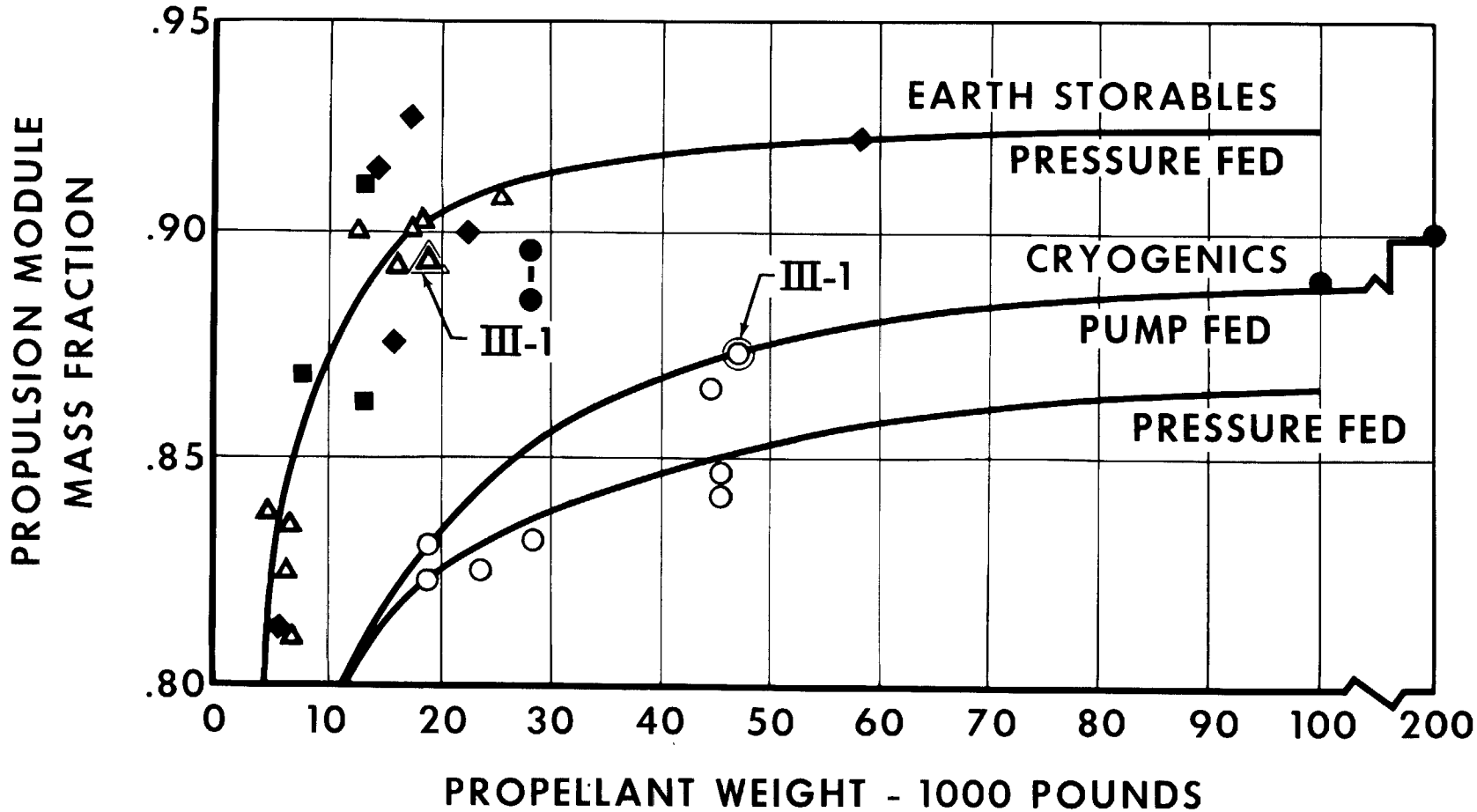

[redacted]

TERMINAL STAGING ALTITUDE DETERMINATION

ASSUMPTIONS:

1. VERTICAL VELOCITY AT STAGING POINT = 0 FT/SEC
2. MAIN RETRO ENGINE THROTTLED 10/1 : $T/W_{o_{max}} = .4$
3. LUNAR LAUNCH ENGINE $T/W_o = .4$
4. ABORT CONDITION CAN BE ANALYZED AND CORRECTIVE ACTION TAKEN IN 20 SECONDS

SUMMARY:

1. DESIRED MINIMUM ALTITUDE DURING ABORT		1000
2. Δh TO ARREST VEHICLE VELOCITY AFTER 20 SECOND TIME DELAY		1800
3. GUIDANCE & CONTROL SYSTEM DISPERSIONS		
A. ACCELEROMETER ERROR (.1% & .03 FPS^2)	1641	
B. PLATFORM ALIGNMENT ERROR (.1 DEG.)	1742	
C. INITIAL POSITION AND VELOCITY ERRORS (2000 FT. & 2 FPS)	2370	
D. LUNAR GRAVITY UNCERTAINTY (.1%)	354	
RSS		3440
TERMINAL STAGING ALTITUDE		6240

[redacted]

SELECTION OF LUNAR LANDING PROPULSION THRUST-TO-WEIGHT RATIO

VERTICAL VELOCITY = 0 FT./SEC.
THROTTLING RATIO = 3
I_{SP} = 320 SEC.

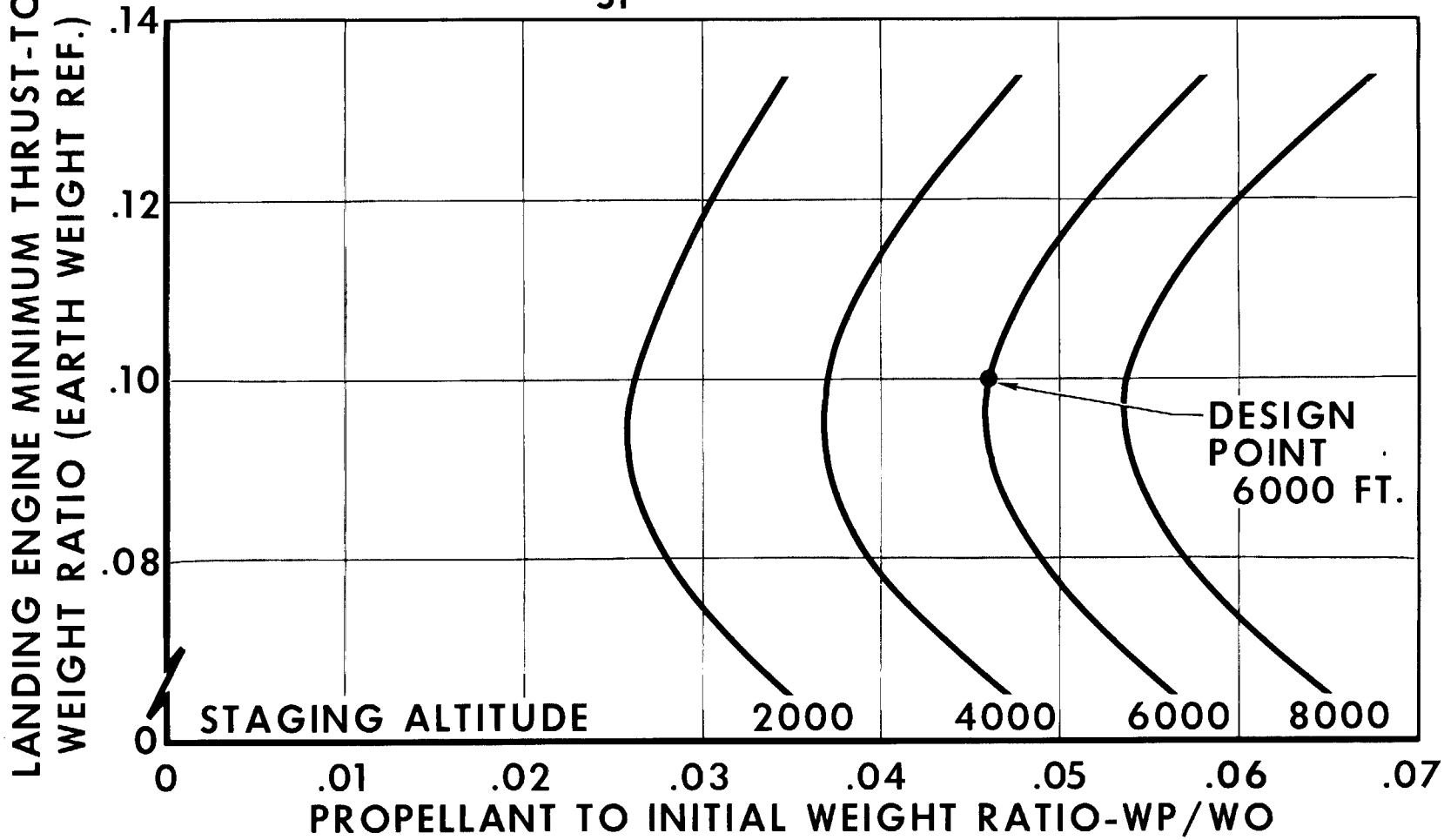

[redacted]

[redacted]

MCDONNELL
62-1062S

TERMINAL LANDING WINDOW
PROPELLANT QUANTITY FOR 6000 FT. ALT., $V_1 = 0$

$I_{SP} = 320$

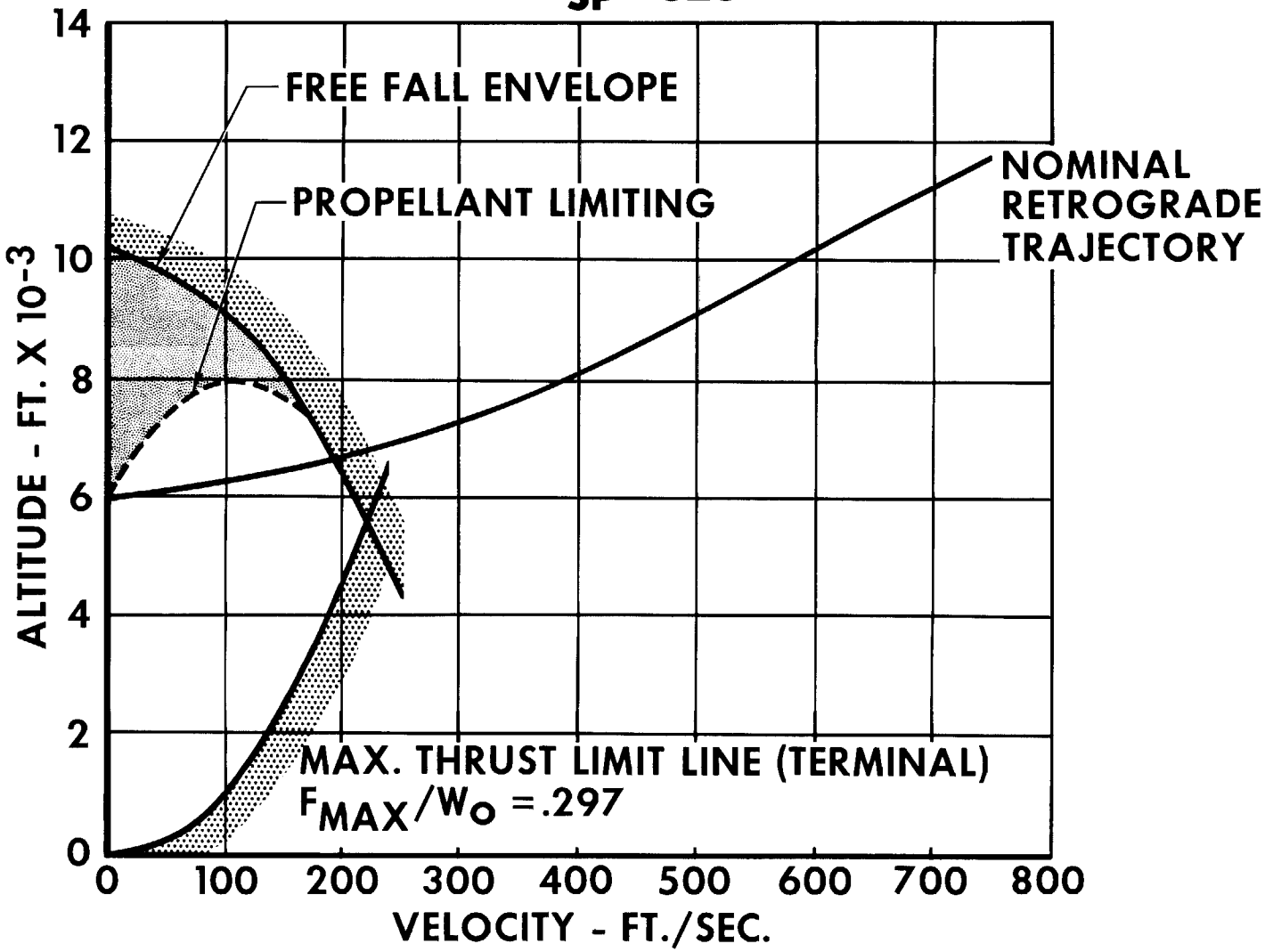

[redacted]

LAUNCH ESCAPE PROPULSION SYSTEM

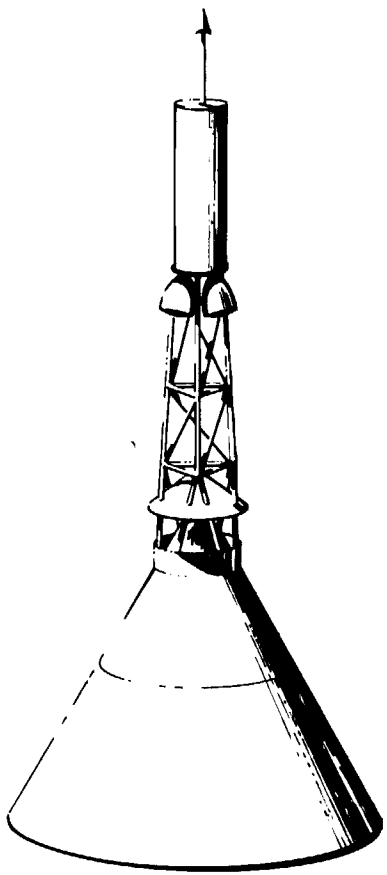

ROCKET MOTOR CHARACTERISTICS

PROPELLANT:	POLYBUTADIENE /AMONIUM PERCHLORATE/ALUMINUM
I_{SP}:	242 LB.-SEC/LB. (SEA LEVEL)
W_F:	1204 LB.
I_{TOTAL}:	274,500 LB.-SEC. (AXIAL)
T_1:	116,400 LB.
T_2:	70,000 LB.

THRUST ECCENTRICITY FOR LATERAL RANGE: ..... 0.3 IN.

LOAD FACTOR TIME HISTORY (SEA LEVEL):

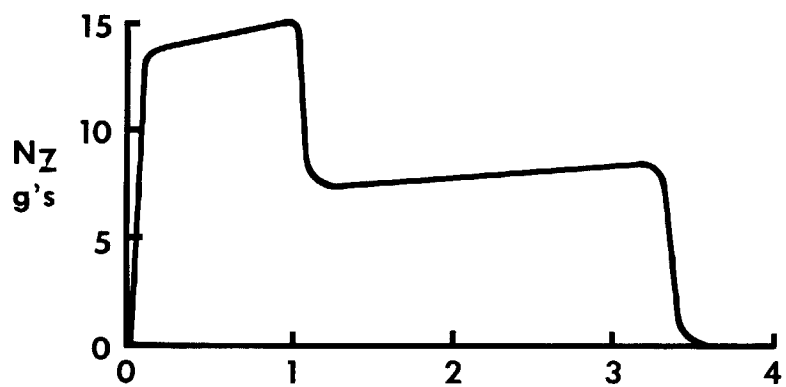

[redacted]

EFFECT OF T/W_o ON LUNAR LAUNCH VELOCITY REQUIREMENTS

CIRCULAR ORBIT ALTITUDE-50,000 FT.

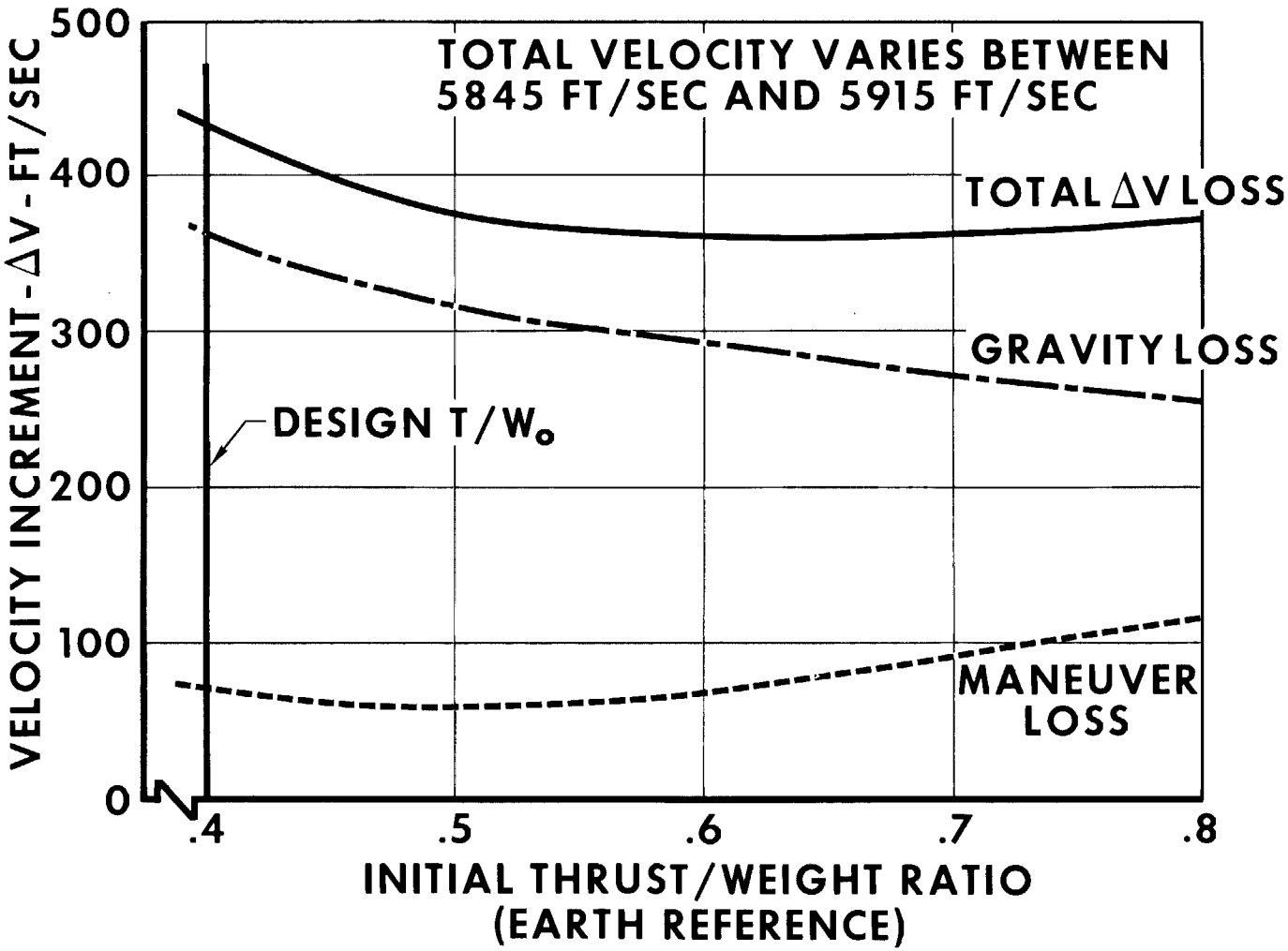

[redacted]

INHERENT RADIATION SHIELDING

ASSUMPTIONS

1. PERSONAL PARACHUTES OVER EMERGENCY HATCH
2. ASTRONAUTS IN SPACE SUIT WITH VISOR CLOSED
3. ASTRONAUT SLEEPS FACING HEAT SHIELD
4. 1/3 OF MISSION TIME SPENT IN SLEEPING POSITION

NOTE: SELF SHIELDING BY BODY INCLUDED

POINT CONSIDERED	NAVIGATION POSITION		SLEEPING POSITION	
	FRACTION SOLID ANGLE	SHIELDING g/cm^2 ALUMINUM	FRACTION SOLID ANGLE	SHIELDING g/cm^2 ALUMINUM
OUTBOARD EYE	.204	2.2	.051	2.6
	.081	7.7	.259	7.6
	.466	19.4	.529	16.7
	.157	37.4	.121	40.5
	.092	>50.0	.040	>50.0
SKIN ON CENTER OF BACK	.146	2.1	.186	1.9
	.134	6.7	.194	9.1
	.231	16.5	.207	22.5
	.237	34.0	.399	32.5
	.252	> 50.0	.014	>50.0

[redacted]

METEOROID PROTECTION

CRITERIA

FREQUENCY DISTRIBUTION PER
F. WHIPPLE - ARS PAPER 499 - 57

PENETRATION EQUATION

$$\frac{P}{d} = \gamma \left(\frac{\rho_p}{\rho_t}\right)^{1/3} \left(\frac{V_p}{C_t}\right)^{1/3}$$

WHERE

P = DEPTH OF PENETRATION
d = PROJECTILE DIAMETER
γ = A CONSTANT = 4
ρ_p = PROJECTILE DENSITY
ρ_t = TARGET DENSITY
V_p = PROJECTILE VELOCITY
C_t = SPEED OF SOUND IN TARGET MATERIAL

PROTECTION

ITEM	PROBABILITY OF NO PENETRATION
COMMAND MODULE - CREW	.99911
PRESSURE WALL	.9978
SERVICE MODULE TANKAGE	.9717
TERMINAL LANDING MODULE TANKAGE	.99733
RETROGRADE MODULE TANKAGE	.99825

[redacted]

[redacted]

MCDONNELL
74-1062S

LUNAR GEMINI
MIRROR AUGMENTED VISION

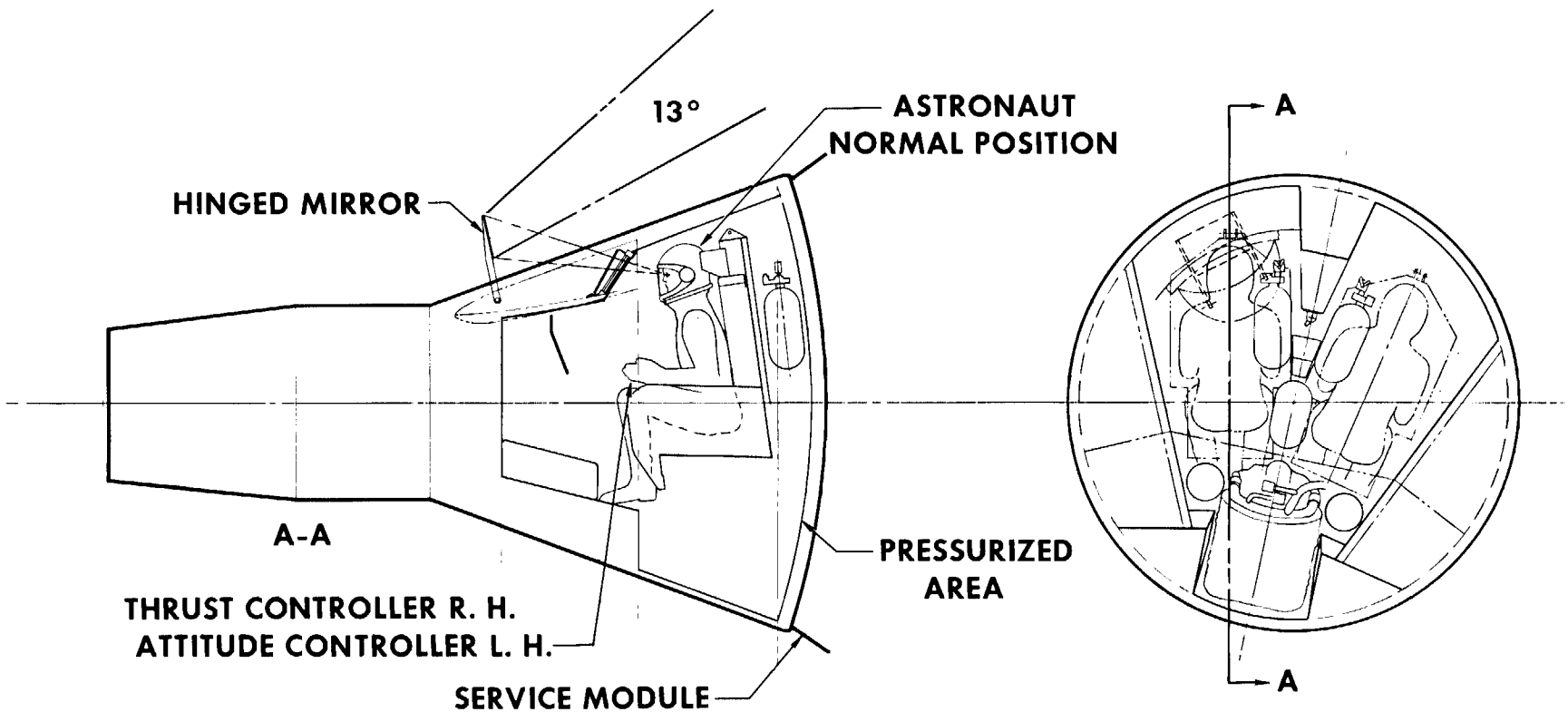

[redacted]

[redacted]

MCDONNELL
76-1062S

LUNAR GEMINI
PRESSURIZED CANOPY

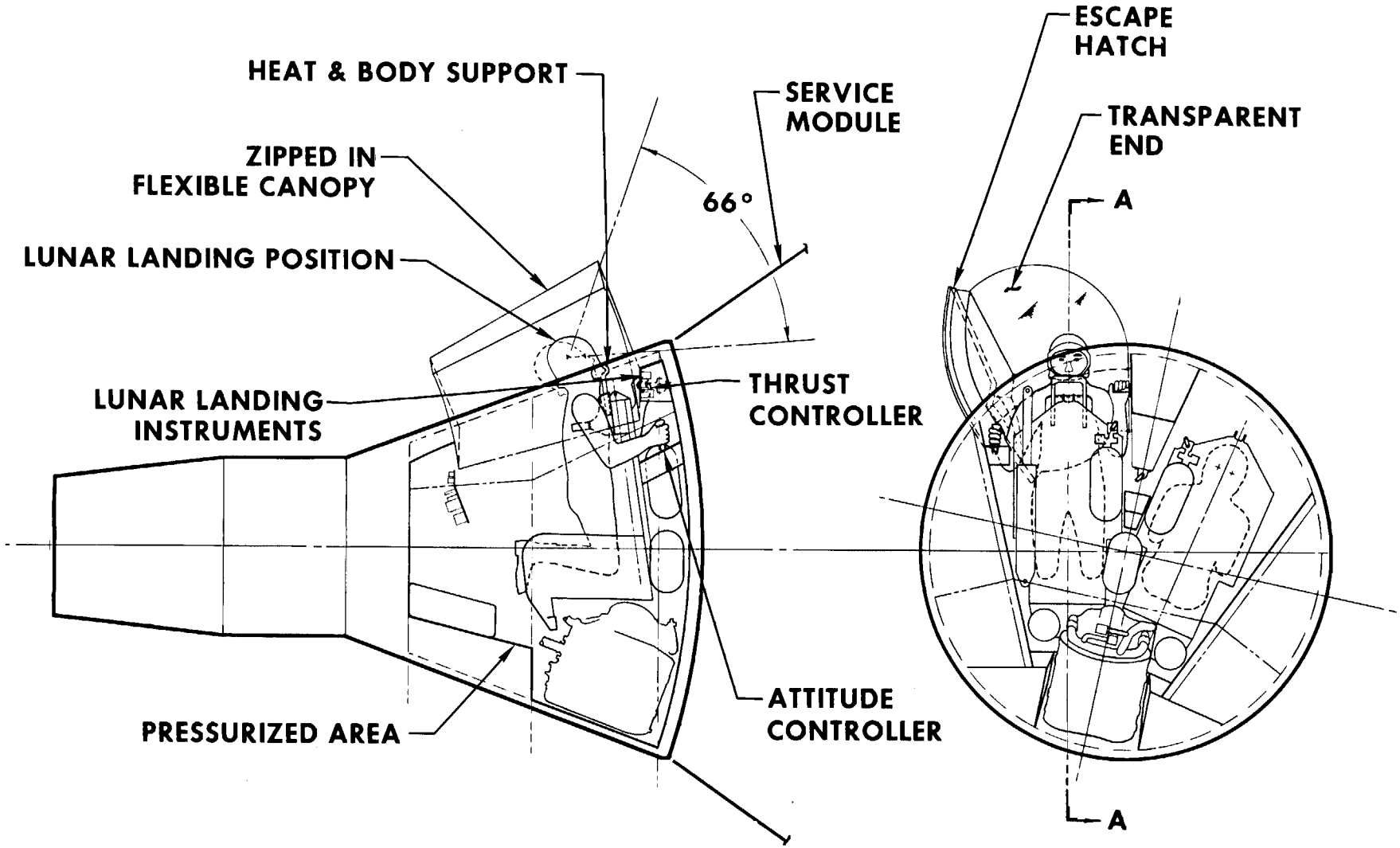

[redacted]

[redacted]

MCDONNELL
75-1062S

LUNAR GEMINI
PRESSURIZED BUBBLE

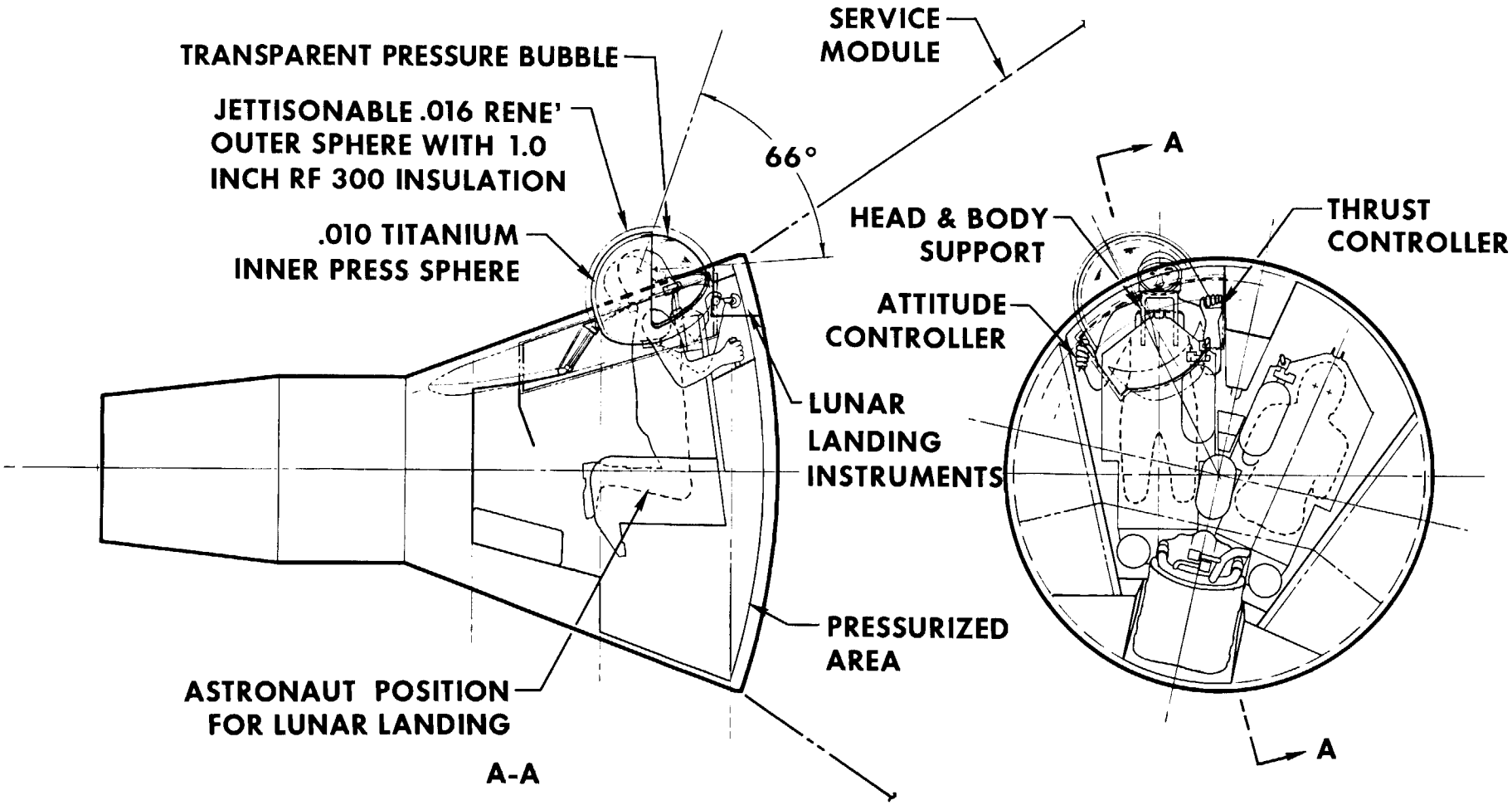

[redacted]

[redacted]

LUNAR GEMINI
COMMAND MODULE WEIGHT SUMMARY

	WEIGHT - LBS.			
	14 DAY		LUNAR	
STRUCTURE		1539		1651
BASIC STRUCTURE	1312		1177	
HEAT SHIELD	227		474	
CREW SYSTEM		936		999
COMMUNICATIONS AND INSTRUMENTATION		286		374
DISPLAYS	103		123	
COMMUNICATIONS	53		56	
TELEMETRY AND INSTRUMENTATION	130		195	
GUIDANCE AND NAVIGATION		241		244
STABILIZATION AND CONTROL		64		64
REACTION CONTROL		188		217
ELECTRICAL POWER		290		326
ENVIRONMENTAL CONTROL		326		339
EARTH LANDING		904		904
SCIENTIFIC EQUIPMENT				85
TOTAL COMMAND MODULE		4474		5203

[redacted]

[redacted]

LUNAR GEMINI
SERVICE EQUIPMENT WEIGHT SUMMARY
MINIMUM CHANGE

	WEIGHT, LBS.
STRUCTURAL SUPPORTS	102
COMMUNICATIONS AND INSTRUMENTATION	203
GUIDANCE AND NAVIGATION	100
REACTION CONTROL	634
ELECTRICAL POWER	462
ENVIRONMENTAL CONTROL	354
SERVICE MODULE EQUIPMENT TOTAL	1855

[redacted]

[redacted]

MODIFICATIONS TO GEMINI GUIDANCE AND CONTROL

GEMINI

WEIGHT
385 LBS.

VOLUME
7.0 FT. ^{3}

- ADD IMU BACK-UP (+21)
- ADD SEXTANT TELESCOPE (+40)
- CHANGE DISPLAYS (+1)
- REPLACE RENDEZVOUS RADAR WITH ALTITUDE RADAR (−14)
- ADD LANDING RADAR (+30)

GEMINI-DERIVED SYSTEM

WEIGHT
463 LBS.

VOLUME
8.7 FT. ^{3}

[redacted]

RESCUE SPACECRAFT DESIGN MODIFICATIONS
30 DAY UNMANNED STAY TIME

PROPULSION

CHANGE N_2O_4 TANKS IN SERVICE MODULE FROM TITANIUM TO STAINLESS STEEL	+82 LBS.

ENVIRONMENTAL CONTROL

OFF-LOAD PRIMARY O_2 SUPPLY	-52 LBS.
OFF-LOAD LiOH	-25 LBS.
TEMPERATURE CONTROL	
• CONTINUOUS OPERATION OF FUEL CELL AT A LEVEL OF 260 WATTS WHILE ON DARK SIDE OF MOON (5.7 LBS/DAY OF REACTANTS)	+86 LBS.
• ELECTRICAL POWER UTILIZED TO HEAT COMMAND MODULE AND PREVENT FREEZING OF WATER & PROPELLANTS	
• COMMAND MODULE AND EQUIPMENT COOLING WHILE ON THE LIGHT SIDE OF MOON 6.5 LBS/DAY OF COOLING WATER	+98 LBS.
TOTAL WEIGHT CHANGE	+ 189 LBS.

[redacted]

AUTOMATIC GUIDANCE AND CONTROL SYSTEM

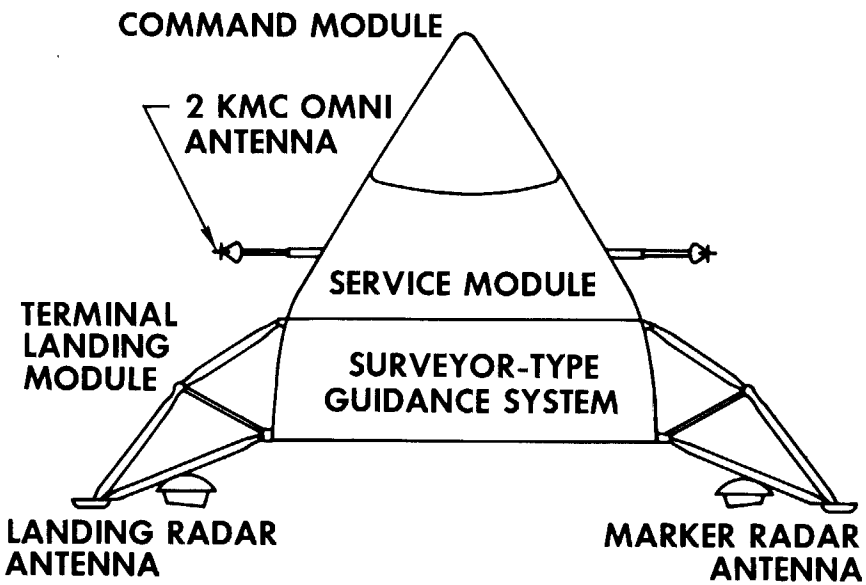

EQUIPMENT LIST

EQUIPMENT	WEIGHT-LBS.
OMNI ANTENNAS (2)	1.00
TRANSPONDERS (2)	18.80
COMMAND & DATA PROCESS (1)	15.45
SUN SENSOR PAIR (COURSE-FINE) (1)	0.50
STAR SENSOR (CANOPUS) (1)	4.25
RATE INTEGRATING GYROS (3)	6.00
ACCELEROMETER (1)	2.10
ELECTRONICS PACKAGE (& CLOCK) (1)	19.00
MARKER RADAR (PULSE) & ANTENNA (1)	8.30
PRECISION FM DOPPLER RADAR AND ALTIMETER (INCLUDES ANTENNA) (1)	25.70
TOTALS	101.10

[redacted]

[redacted]

DIRECT LUNAR LANDING PROPULSION REQUIREMENTS

NOTE: 1. SPECIFIC IMPULSE = 430 SEC.
2. THRUST DIRECTED ALONG VELOCITY VECTOR
3. IMPACT SITE: SEA OF TRANQUILITY
4. TRANSLUNAR TRANSIT TIME 58 HRS.

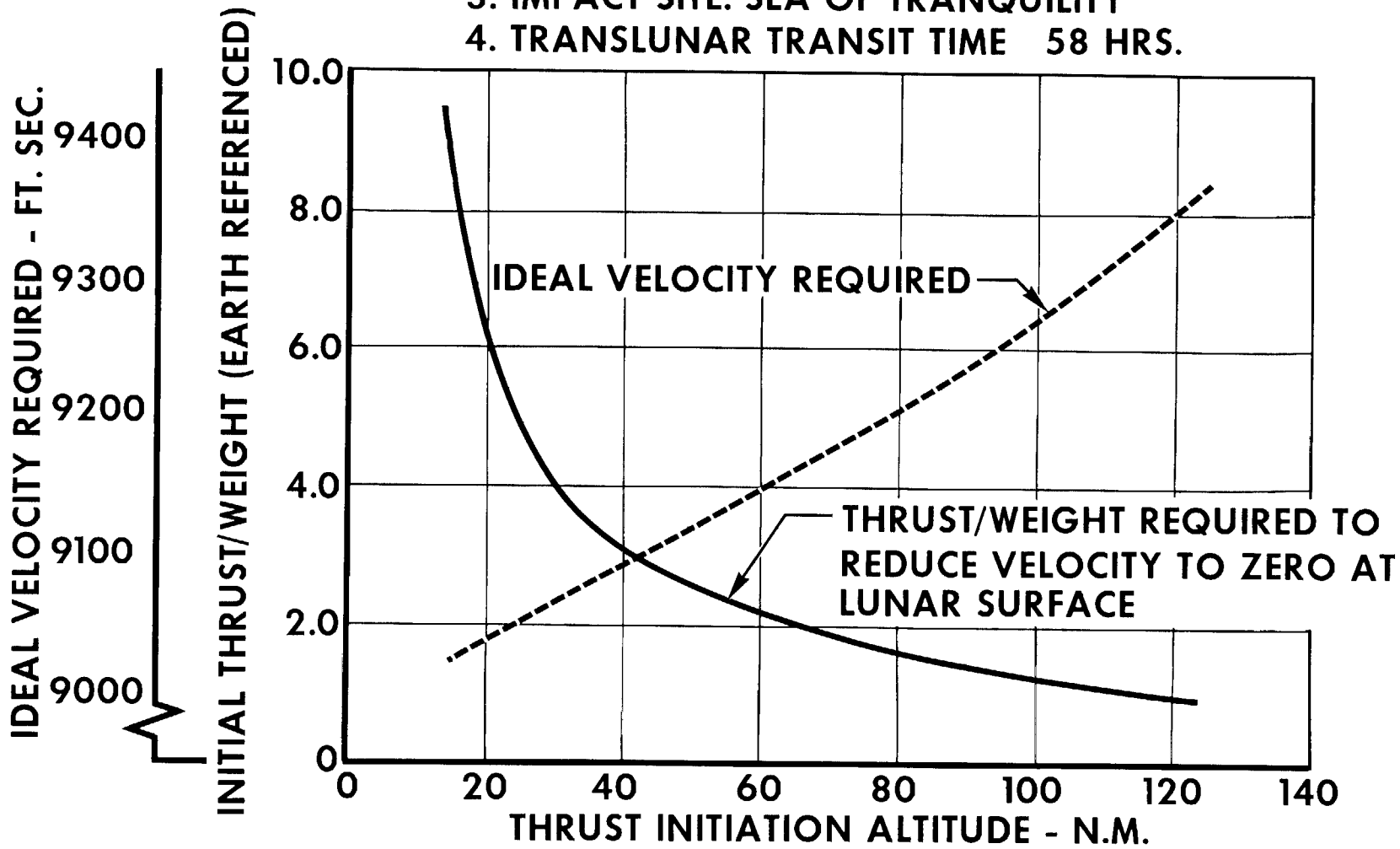

[redacted]