~~CONFIDENTIAL~~

RESEARCH MEMORANDUM

Hard copy (HC) $1.00
Microfiche (MF) .50

USE OF HIGHLY REACTIVE CHEMICAL ADDITIVES TO IMPROVE AFTERBURNER PERFORMANCE AT ALTITUDE

By John P. Wanhainen and Joseph N. Sivo

Lewis Flight Propulsion Laboratory
Cleveland, Ohio

N65-24056	
(ACCESSION NUMBER)	(THRU)
25	1
(PAGES)	(CODE)
	28
(NASA CR OR TMX OR AD NUMBER)	(CATEGORY)

UNCLASSIFIED: Effective 2-5-65
Authority: F.G. Drobka (ATSS-A)
memo dated 3-25-65; AFMDC-5197

[redacted]

NATIONAL ADVISORY COMMITTEE
FOR AERONAUTICS

WASHINGTON
September 30, 1958

[redacted]

DECLASSIFIED

[redacted]

5118

NATIONAL ADVISORY COMMITTEE FOR AERONAUTICS

RESEARCH MEMORANDUM

USE OF HIGHLY REACTIVE CHEMICAL ADDITIVES TO IMPROVE AFTERBURNER PERFORMANCE AT ALTITUDE*

By John P. Wanhainen and Joseph N. Sivo

SUMMARY

24056

An investigation was conducted in an altitude test chamber to evaluate the use of highly reactive chemicals injected into a turbojet afterburner to promote the combustion process, which was inhibited by water vapor from compressor-inlet injection. The chemicals evaluated were commercial hydrogen and aluminum trimethyl. The aluminum trimethyl was used as an additive to the afterburner hydrocarbon fuel, and the hydrogen was injected separately into the piloting zones of the afterburner. Engine-inlet water-air ratio and hydrogen fuel flows were systematically varied to determine the effects of the degree of contamination by water vapor and the amount of chemical additive on afterburner operating limits and combustion efficiency. The afterburner-inlet conditions simulated flight at a 98,000-foot altitude and a Mach number of 3.0.

Addition of small amounts of hydrogen increased the combustion efficiency over the entire operating range of the afterburner with more pronounced effects at the low equivalence ratios. Afterburner operating limits were greatly extended by the injection of hydrogen. Stable operation of the afterburner was obtained to an equivalence ratio of 0.26 with a hydrogen flow of 3 percent and no water vapor present in the afterburner-inlet air. A 14-percent concentration of aluminum trimethyl in the afterburner hydrocarbon fuel resulted in only marginal improvement in afterburner performance.

author

INTRODUCTION

The military services are currently interested in the application of compressor-inlet water injection as a means of thrust augmentation to provide substantial increases in both flight Mach number and maximum altitude capabilities of turbojet aircraft. However, in order to realize the full potential of precompressor evaporative cooling, good afterburner

---

*Title, Unclassified.

[redacted]

performance must be sustained at reduced pressures in the presence of water vapor diluent in the afterburner-inlet air. The performance of even the best current-design afterburners deteriorates at extreme altitudes because of the combined effects of low pressure and contamination or dilution of the afterburner-inlet air with combustion products of the primary burner. The problem of sustaining good performance greatly increases in severity when water vapor is present in the afterburner-inlet air, especially in the region of low afterburner equivalence ratios.

The experimental program discussed herein was conducted to investigate the possibility of counteracting the adverse effects of afterburner-inlet air contamination on performance by injecting small quantities of highly reactive chemicals into the afterburner to stabilize the combustion reaction. The chemicals used were commercial hydrogen and aluminum trimethyl. National Bureau of Standards studies have indicated that flame stabilization can be obtained by the injection of highly reactive chemicals such as hydrogen into the piloting zones of the combustor (ref. 1). Aluminum trimethyl, a highly flammable liquid that ignites spontaneously in air and reacts violently with water vapor, also appeared to be promising as a combustion promoter in a hydrocarbon - oxygen reaction inhibited with water vapor. 5118

The primary objective of this investigation was to evaluate the use of these two highly reactive chemicals to improve afterburner stability limits and combustion efficiency at altitude. The program consisted of experimental tests of an NACA-designed afterburner operated at an inlet total pressure of 1000 pounds per square foot absolute, an inlet total temperature of 1200° F, and equivalence ratios ranging from lean blowout to near stoichiometric. The afterburner operating conditions correspond to operation of a typical current-design turbojet engine at a 98,000-foot altitude and a Mach number of 3.0, with precompressor water injection in sufficient quantity to reduce the compressor-inlet air temperatures to 250° F. The effects of the amount of highly reactive chemical additive and the degree of contamination or dilution of the afterburner-inlet air with water vapor were determined for afterburner lean stability limits and combustion efficiency. Contamination of the afterburner-inlet air with water vapor was accomplished by injecting steam into the inlet airflow of the engine.

APPARATUS AND INSTRUMENTATION

Installation

An altitude test chamber (fig. 1) that consisted of a tank 10 feet in diameter and 60 feet long divided into two compartments by a bulkhead was used for the engine installation. The bulkhead, which incorporated a labyrinth seal around the engine-inlet air duct to prevent flow of inlet air directly into the exhaust system, provided a means of maintaining a ram pressure ratio across the engine. A bellmouth cowl and Venturi were attached to the engine to provide a means for measuring engine mass flow. The engine was mounted on a thrust-measuring platform in the rear compartment.

Engine

The engine consisted of an axial-flow compressor with moderate pressure ratio, an annular combustor, and a two-stage turbine. The maximum allowable turbine-outlet total temperature for this engine is 1200° F. The engine fuel was MIL-F-5624A, grade JP-4, with a lower heating value of 18,700 Btu per pound.

Afterburner

A schematic diagram of the afterburner used in this investigation is shown in figure 2. The afterburner incorporated a corrugated, louvered cooling liner, a conventional two-ring V-gutter flameholder (fig. 3), and an automatically controlled variable-area iris-type exhaust nozzle. The gutter width was $1\frac{5}{8}$ inches, and the blockage was approximately 30 percent of the total flow area. The nominal afterburner-inlet velocity was 480 feet per second.

Afterburner Fuel System

The main afterburner-fuel-injection system consisted of 24 equally spaced radial spray bars located approximately 27 inches upstream of the flameholder. The spray bars had eight 0.0225-inch-diameter holes per bar, four on each side, located to provide uniform fuel-air-ratio distribution. The fuel injection system conforms to the design criteria presented in reference 2. The main afterburner fuel was the same as the engine fuel: MIL-F-5624A, grade JP-4, with a lower heating value of 18,700 Btu per pound.

An aluminum trimethyl additive concentration of 14 percent in the hydrocarbon afterburner fuel was selected because it appeared to be a concentration that was stable, in that the mixture would not ignite spontaneously upon contact with air. The 14-percent concentration of aluminum trimethyl was injected through the main fuel spray bars of the afterburner. This fuel-additive mixture was stored under an inert atmosphere, and helium pressure was used to transport the fuel to the injectors. The purge system used hydrocarbon fuel before and after each test to make the system inert. The aluminum trimethyl fuel had a lower heating value of 18,977 Btu per pound.

The hydrogen fuel injection system was incorporated into the basic afterburner flameholder (fig. 3) and consisted of two manifolds fitted into the V-gutters. The manifolds were drilled with 0.0625-inch-diameter orifices injecting downstream, spaced approximately 0.23 inch apart. Figure 4 shows the installation of the flameholder incorporating the hydrogen fuel injector in the afterburner. The hydrogen fuel, which was supplied as a gas in pressurized containers, was commercial grade with a purity of 99 percent and a lower heating value of 51,570 Btu per pound.

5118

Water Vapor Injection System

Steam was metered into the engine-inlet airflow through a fixed-area conical nozzle operating at or above critical pressure ratio. Introduction of the steam into the combustion air line was approximately 75 feet upstream of the altitude test chamber to ensure thorough mixing of the steam and air. The quality of the steam was determined with a throttling calorimeter.

Instrumentation

Location of the major instrumentation stations throughout the engine is shown in figure 5. All probes were placed on centers of equal areas at each measuring station. Engine-inlet airflow was determined from pressure and temperature measurements at station 1 (fig. 5). Afterburner-outlet total pressure was measured with a water-cooled rake installed at the exhaust-nozzle inlet (station 9). Exhaust pressure in the altitude test chamber was measured in the plane of the exhaust-nozzle exit (station 10). The engine and afterburner fuel flows were measured with vane-type remote-reading flowmeters. Jet thrust was measured with a null-type thrust cell.

PROCEDURE

Engine Operation

The engine was operated at rated speed, and the turbine discharge temperature was held constant at 1200° F by modulating the exhaust-nozzle area. The compressor-inlet total temperature was maintained at 150° F, and the compressor-inlet total pressure was set to provide an afterburner-inlet total pressure of 1000 pounds per square foot absolute. The various water-air ratios were simulated by injecting steam into the engine-inlet airflow. The exhaust pressure was maintained at a value sufficient to ensure critical flow through the exhaust nozzle.

Afterburner Operation

With hydrogen injection, the engine-inlet water-air ratio was varied from 0 to 6.5 percent by the injection of steam into the inlet airflow. At each engine-inlet water-air ratio and at a fixed afterburner hydrocarbon fuel-air ratio, the hydrogen fuel flow was varied from 0.2 to 4.0 percent by weight of afterburner fuel flow. Data were obtained over a range of afterburner total equivalence ratios from approximately lean blowout to stoichiometric at each water-air ratio.

With aluminum trimethyl fuel additive, the compressor-inlet water-air ratio was varied from 0 to 6.0 percent. At each engine-inlet water-air ratio, data were obtained over a range of afterburner equivalence ratios from near lean blowout to stoichiometric.

The range of afterburner equivalence ratios covered at each water-air ratio with both additives represents, in general, the practical operating range for the afterburner. The rich operating limit of the afterburner was determined by the afterburner-shell temperature limit. The lean limit of operation was indicated by blowout of the flame. The afterburner performance parameters with hydrogen injection are presented in terms of total afterburner equivalence ratio generated from cross plots of the original experimental data. Data obtained with aluminum trimethyl were plotted directly. The symbols and methods of calculation are presented in appendixes A and B, respectively.

RESULTS AND DISCUSSION

In order that the experimental results might have the greatest applicability and might best demonstrate the use of chemical additives to increase afterburner performance, the investigation was conducted at a low pressure level to simulate a severe afterburner operating condition. The results of the investigation are presented in terms of afterburner combustion efficiency, afterburner-outlet total temperature, afterburner stability limits, and afterburner equivalence ratio.

Effects of Hydrogen Injection on Afterburner Performance

Afterburner efficiency. - Combustion efficiency and stability limits as a function of equivalence ratio are presented in figure 6 for both 0 and 6.5 percent of water vapor diluent in the afterburner-inlet air. Afterburner equivalence ratio is defined as the ratio of the actual fuel-air ratio (including the hydrogen), based on unburned air entering the afterburner, to the stoichiometric fuel-air ratio. Addition of small amounts of hydrogen increased the combustion efficiency over the entire operating range of the afterburner with more pronounced effects at the low equivalence ratios, especially when water vapor was present in the afterburner-inlet air. With no hydrogen injection, increasing the water vapor diluent to 6.5 percent resulted in a reduction of approximately 12 percent in combustion efficiency at an equivalence ratio of 0.7 (figs. 6(a) and (b)). At the same equivalence ratio and afterburner-inlet air contamination, injection of hydrogen in an amount equal to 1 percent by weight of afterburner hydrocarbon fuel flow resulted in an increase of approximately 18 percent in combustion efficiency over that obtained with no hydrogen injection (fig. 6(b)). Hydrogen injection in amounts in excess of 2 percent by weight of hydrocarbon fuel flow resulted in no further significant increase in combustion efficiency.

Afterburner stability limits. - Stability limits were greatly extended in the region of lean blowout by the injection of small amounts of hydrogen, as can be seen by the lean blowout limits indicated in figure 6. Stable operation of the afterburner was extended from an equivalence ratio of 0.51 to 0.26 with a hydrogen flow of 3 percent by weight of hydrocarbon fuel flow and with no water vapor diluent in the afterburner-inlet air. With 6.5 percent of water vapor diluent and with a hydrogen flow of 2 percent by weight of hydrocarbon fuel flow, afterburner operating range was extended from an equivalence ratio of 0.68 to 0.43 without encountering lean blowout. It is believed that the increase in afterburner stability resulted primarily from the hydrogen burning intensely in the wakes of the flameholder gutters and thereby strengthening the piloting zones of the afterburner.

Afterburner-outlet total temperature. - Total temperature is shown in figure 7 for several percentages of hydrogen flow. At a given afterburner equivalence ratio, the increase in afterburner-outlet total temperature reflects the increase in combustion efficiency obtained with hydrogen injection.

Effects of Aluminum Trimethyl Afterburner Fuel Additive on Performance

Afterburner efficiency and stability limits. - Combustion efficiency and stability limits with a 14-percent concentration of aluminum trimethyl in the afterburner hydrocarbon fuel are presented in figure 8 for both 0 and 6 percent of water vapor diluent in the afterburner-inlet air.

As with hydrogen, the effect of aluminum trimethyl became less effective as the afterburner equivalence ratio was increased above 0.75. At the low equivalence ratios, a slight improvement in combustion efficiency was obtained. Also, afterburner stability in the lean operating region was slightly improved with the use of aluminum trimethyl as a fuel additive. For example, the lean operating range of the afterburner with no water vapor diluent in the afterburner-inlet air was extended from an equivalence ratio of 0.51 to 0.43 with the fuel additive. However, the aluminum trimethyl was not nearly as effective as was the hydrogen in raising the combustion efficiency and extending the stability limits.

Afterburner-outlet total temperature. - Total temperature is shown in figure 9 for both 0 and 6 percent of water vapor diluent in the afterburner-inlet air. At a given afterburner equivalence ratio, only a small increase in afterburner-outlet total temperature was obtained with the addition of a 14-percent concentration of aluminum trimethyl to the afterburner hydrocarbon fuel.

Afterburner operational problems. - The afterburner hydrocarbon fuel mixture containing a 14-percent concentration of aluminum trimethyl was unstable and required special handling techniques. The fuel-additive mixture was stored under an inert atmosphere because it reacted on contact with air to release heat and form a deposit of aluminum oxide. The fuel system was made inert before and after each test in an attempt to prevent the decomposition of the fuel-additive mixture in the lines. Flushing out the fuel lines with dry JP-4 fuel after each test was unsuccessful, in that small quantities of the fuel-additive mixture in the fuel lines decomposed during shutdown. To prevent the spray bar plugging with aluminum oxide, an extensive cleansing operation of the fuel system was required after each test in which aluminum trimethyl additive was used.

APPLICATION OF RESULTS

The results of the investigation show that altitude performance of afterburners can be improved by the use of highly reactive chemical additives, such as hydrogen or aluminum trimethyl. Furthermore, these results show that separate injection of hydrogen into the piloting zones of the afterburner is more effective than using aluminum trimethyl as an additive to the hydrocarbon fuel.

To provide some concept of how a hydrogen system might be assembled for use in an aircraft employing water injection and afterburning, a flight-type installation of a hydrogen supply, metering, and injection system is considered in the following discussion. For the purpose of this discussion, it was assumed that 10 pounds of hydrogen would be required to provide 4 to 44 minutes of flow in the afterburner of a 10,000-pound-thrust engine, depending on the altitude and on the percent of hydrogen used (fig. 10). The hydrogen possibly could be carried as a gas in high-pressure fiberglass containers (5000 lb/sq in.). The total weight of the bottles for a 10-pound capacity would be approximately 150 pounds and would occupy about 7 cubic feet.

The hydrogen flow could be metered at a fixed quantity with a sonic orifice and a pressure regulator; however, this would result in varying percentages of flow as the altitude or Mach number were increased. A more elaborate device might better be used so as to maintain a constant-percentage flow of hydrogen to hydrocarbon afterburner fuel flow as the altitude is varied. The hydrogen injection system would, of course, consist of tube manifolds mounted in the V-gutters of the flameholder, similar to the ones used for this investigation.

If a sonic-orifice, constant-weight-flow system were used, the total weight of a 10-pound-capacity hydrogen injection system would be approximately 165 pounds. The significance of the system weight can be appreciated by relating it to the afterburner fuel flow saved by the increase in combustion efficiency realized with hydrogen injection. For example, as discussed previously, figure 6(b) shows that hydrogen injection in an amount equal to 1 percent by weight of afterburner fuel flow resulted in an efficiency increase of 18 percent at an afterburner equivalence ratio of 0.7. At a flight Mach number of 3.0 and an altitude of 70,000 feet, the reduction in afterburner fuel flow rate for an 18-percent efficiency increase would amount to approximately 35 pounds per minute for a 10,000-pound-thrust engine. Furthermore, the additive, by extending lean blowout limits, permits afterburner operation at lean equivalence ratios shown by analysis to be necessary above Mach 2.0 for most Mach number and altitude flight conditions with precompressor water injection.

SUMMARY OF RESULTS

The results of the investigation show conclusively that altitude performance of afterburners can be improved by counteracting the adverse effects of afterburner-inlet air contamination with small quantities of hydrogen injected into the piloting zones of the afterburner. Addition of small quantities of hydrogen increased the combustion efficiency over the entire operating range of the afterburner with more pronounced effects at the low equivalence ratios. Hydrogen injection in amounts in excess of 2 percent by weight of hydrocarbon fuel flow resulted in no further increase in combustion efficiency. Afterburner stability limits were greatly extended with the addition of hydrogen. Stable operation of the afterburner was obtained to an equivalence ratio of 0.26 with a hydrogen flow of 3 percent by weight of afterburner hydrocarbon flow and with no water vapor present in the afterburner-inlet air.

The aluminum trimethyl additive to the hydrocarbon fuel resulted in only marginal improvement in afterburner performance. Combustion efficiency and stability limits at low afterburner equivalence ratios were slightly improved. However, the aluminum trimethyl additive presented difficult operational problems because the fuel-additive mixture was unstable and reacted on contact with air. A purge system was required to make the fuel system inert before and after each test, and the fuel additive mixture had to be stored under an inert atmosphere.

Lewis Flight Propulsion Laboratory
National Advisory Committee for Aeronautics
Cleveland, Ohio, July 15, 1958

DECLASSIFIED

[redacted]

5118

CC-2

APPENDIX A

SYMBOLS

C_V	effective velocity coefficient
F_j	measured jet thrust
f/a	fuel-air ratio
(f/a)'	stoichiometric fuel-air ratio
g	acceleration of gravity, ft/sec^2
h	enthalpy
H_f	lower heating value of fuel, Btu/lb
R	gas constant, ft-lb/(lb)($^{\circ}$R)
T	total temperature
V	velocity
W	weight flow
η	combustion efficiency
φ	equivalence ratio

Subscripts:

a	airflow
ab	afterburner
e	engine
eff	effective
f	fuel
g	exhaust gas
mx	fuel mixture
t	total

[redacted]

x	main afterburner fuel
y	additive fuel
w	water
1	airflow measuring station
5	turbine outlet
9	exhaust-nozzle inlet
10	exhaust-nozzle discharge

Superscript:

'	stoichiometric

5118

5118

CC-2 back

APPENDIX B

METHODS OF CALCULATION

Equivalence Ratio

The afterburner equivalence ratio based on unburned air entering the afterburner is defined as follows:

$$\varphi_{ab} = \frac{\varphi_t - \varphi'_{e,5}}{1 - \varphi'_{e,5}}$$

where φ_t is the total equivalence ratio and is defined:

$$\varphi_t = \frac{W_{f(ab),t}/W_{a,9}}{(f/a)'_{ab,t}} + \frac{W_{f(e)}/W_{a,9}}{(f/a)'_e}$$

and $\varphi'_{e,5}$ is the ideal engine equivalence ratio required to obtain the actual temperature rise across the engine with ideal efficiency.

Stoichiometric Fuel-Air Ratio

The stoichiometric afterburner fuel-air ratio for the fuels used is

$$\frac{1}{(f/a)'_{ab,t}} = \frac{W_{f,x}}{W_{f,t}} \frac{1}{(f/a)'_x} + \frac{W_{f,y}}{W_{f,t}} \frac{1}{(f/a)'_y}$$

Afterburner-Outlet Total Temperature

The actual combustion temperature T_9 was calculated from gas flow rate, the measured thrust, and a pressure survey of station 9 by using the jet-thrust equation as follows:

$$T_9 = \frac{(F_j^2)}{\left(\frac{C_V W_{g,9}}{g} \frac{V_{eff}}{\sqrt{g R_{g,9} T_9}} \sqrt{g R_{g,9}}\right)^2}$$

[redacted]

Values of the effective velocity parameter $V_{eff}/\sqrt{gRT}$ were obtained from reference 3 with appropriate values for γ_9.

5118

Afterburner Combustion Efficiency

Afterburner combustion efficiency was calculated with the following equation:

$$\eta_{ab} = \frac{h_a\Big]_1^9 + \Big[(f/a)_{e,5} + (f/a)_{ab,t,9}\Big]\lambda_9 + \frac{W_w}{W_{a,9}}\, h_w\,{}_1^9 - \Big[h_a\Big]_1^5 + (f/a)_{e,5}\lambda_5 + \frac{W_w}{W_{a,9}}\, h_w\Big]_1^5}{(1 - \eta_e)(f/a)_{e,5}H_f + (f/a)_{ab,t,9}H_{f,mx}}$$

where λ_5 and λ_9 are defined in reference 4.

REFERENCES

1. Ruegg, F. W., and Klug, H. J.: Fourth Report of Progress on the Studies of Jet Engine Combustors. Rep. 4797, NBS, June 30, 1956.

2. Lundin, Bruce T., Gabriel, David S., and Fleming, William A.: Summary of NACA Research on Afterburners for Turbojet Engines. NACA RM E55L12, 1956.

3. Turner, L. Richard, Addie, Albert N., and Zimmerman, Richard H.: Charts for the Analysis of One-Dimensional Steady Compressible Flow. NACA TN 1419, 1948.

4. Turner, L. Richard, and Bogart, Donald: Constant-Pressure Combustion Charts Including Effects of Diluent Addition. NACA Rep. 937, 1949. (Supersedes NACA TN's 1086 and 1655.)

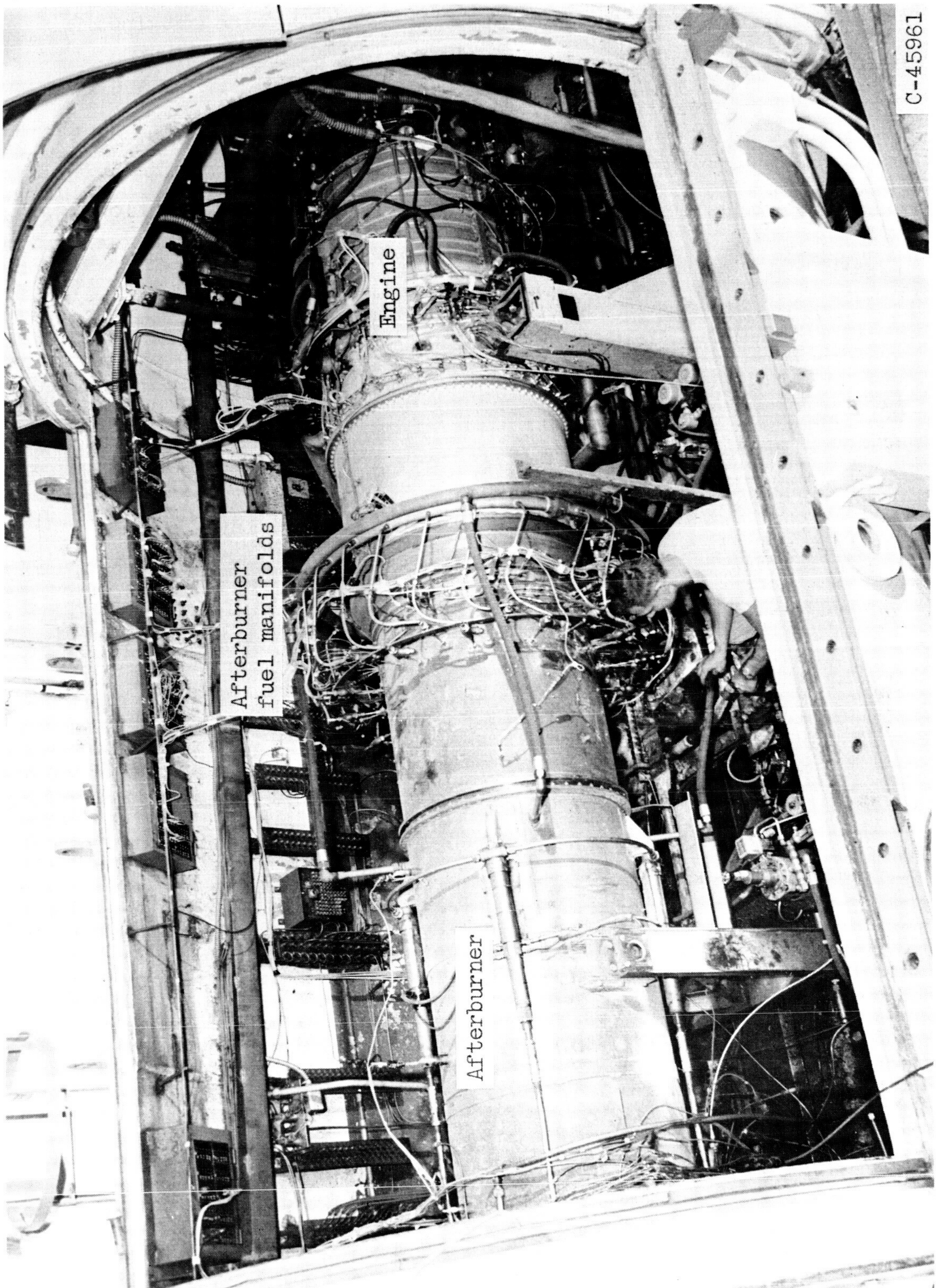

Figure 1. - Installation of engine with afterburner in altitude test chamber.

[redacted]

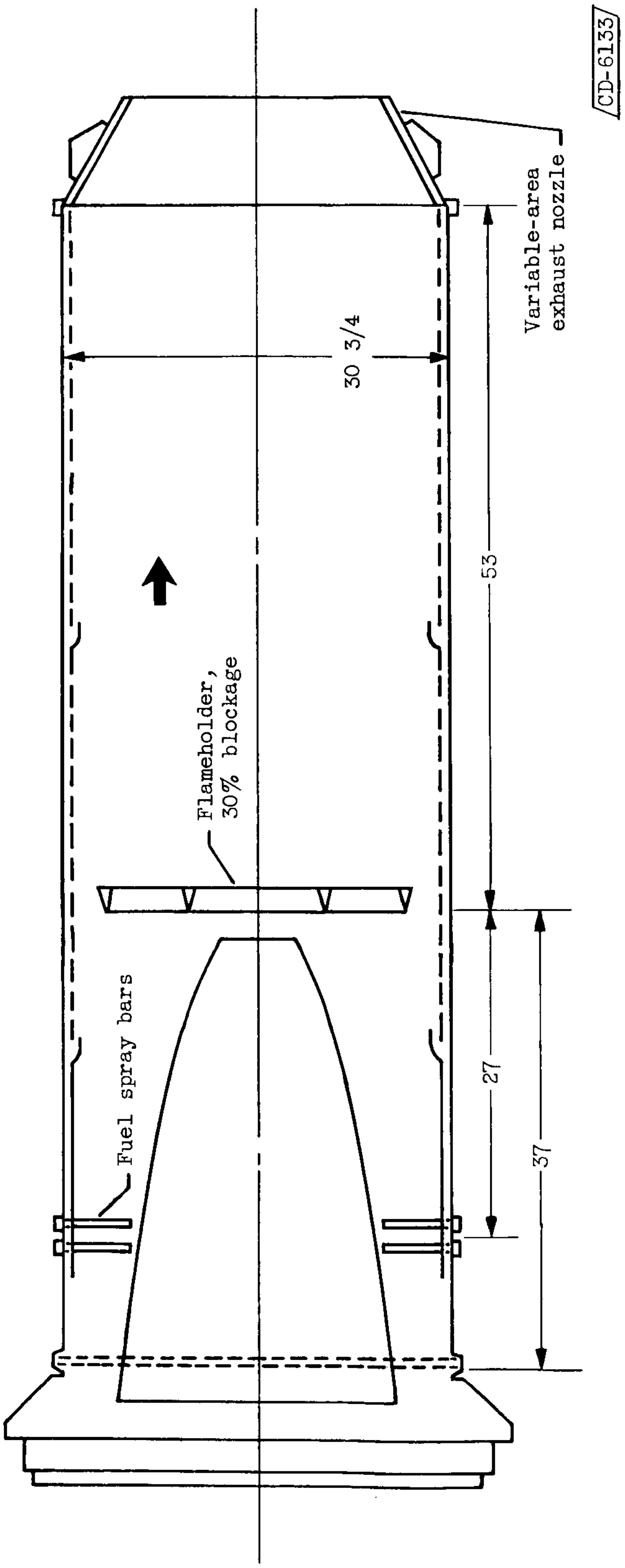

Figure 2. - Afterburner. (All dimensions in inches.)

[redacted]

5118

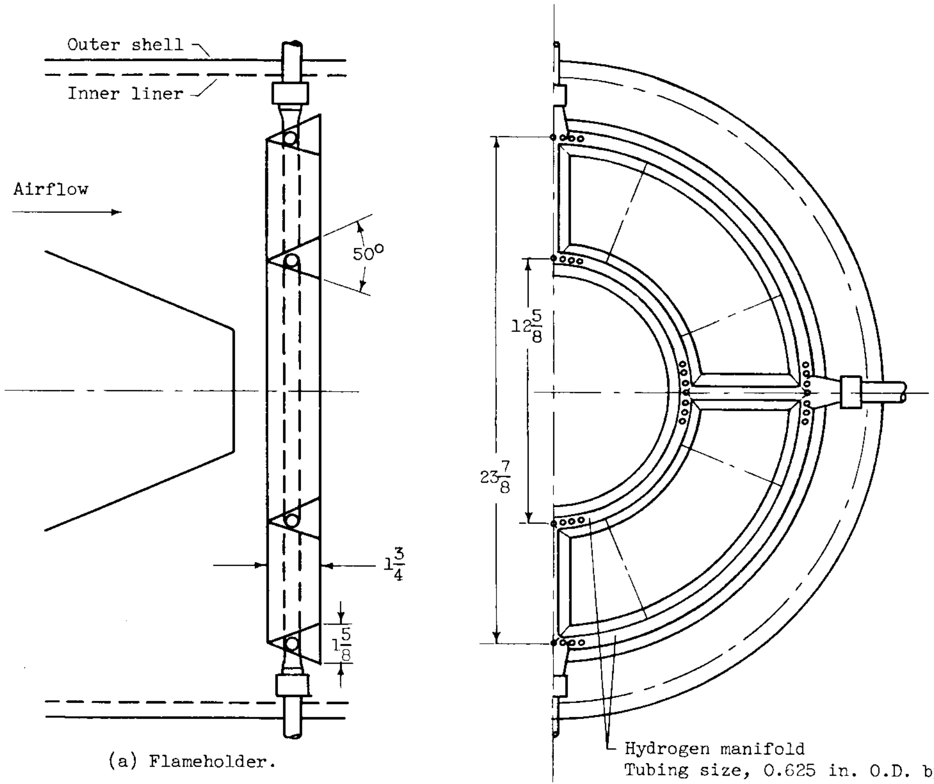

Hydrogen manifold
Tubing size, 0.625 in. O.D. by 0.031 in. wall
Orifice diameter, 0.0625 in.
Number of orifices in outer ring, 328
Number of orifices in inner ring, 173
Orifice spacing, 0.23 in.

(a) Flameholder.

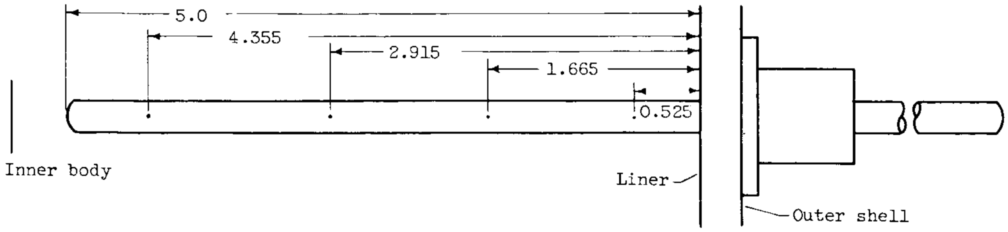

(b) Spray bar.

Figure 3. - Flameholder and fuel spray bar. (All dimensions in inches.)

[redacted]

[redacted]

Figure 4. - Installation of flameholder incorporating hydrogen fuel system in V-gutters.

[redacted]

[redacted]

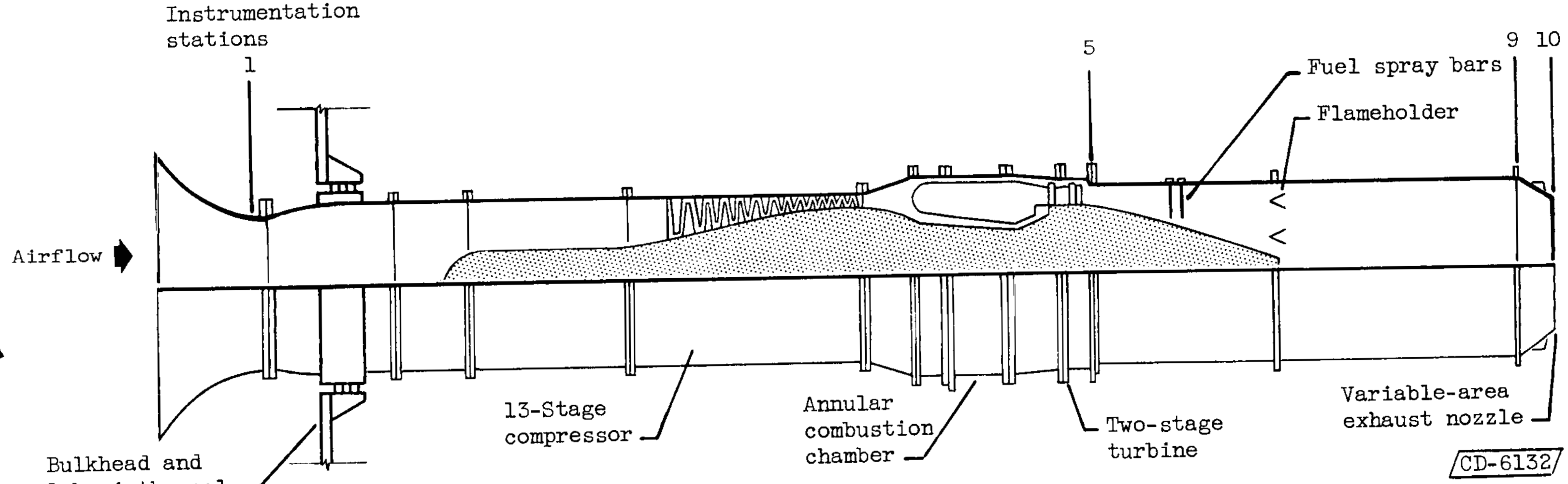

Figure 5. - Engine and afterburner showing location of instrumentation stations.

5118

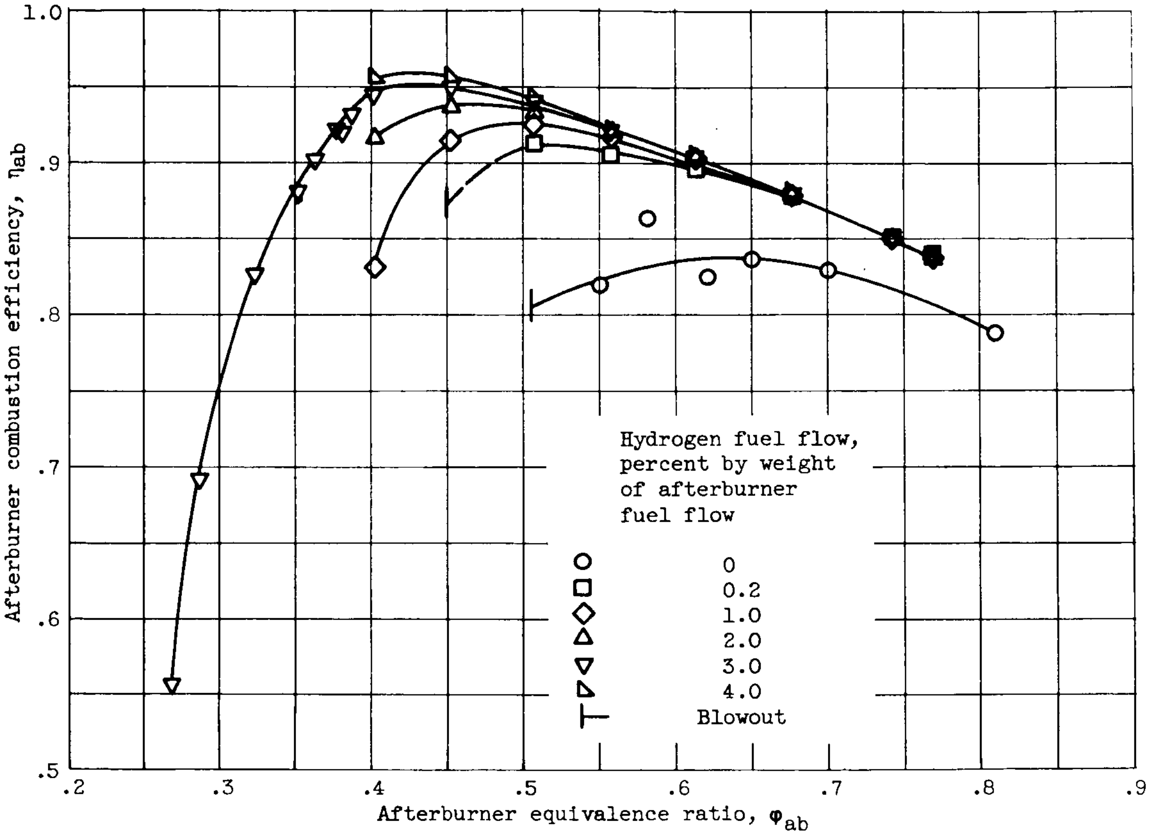

(a) No water vapor diluent.

Figure 6. - Effect of hydrogen fuel additive on afterburner combustion efficiency with and without water vapor diluent in afterburner-inlet air.

[redacted]

[redacted]

5118

CC-3 back

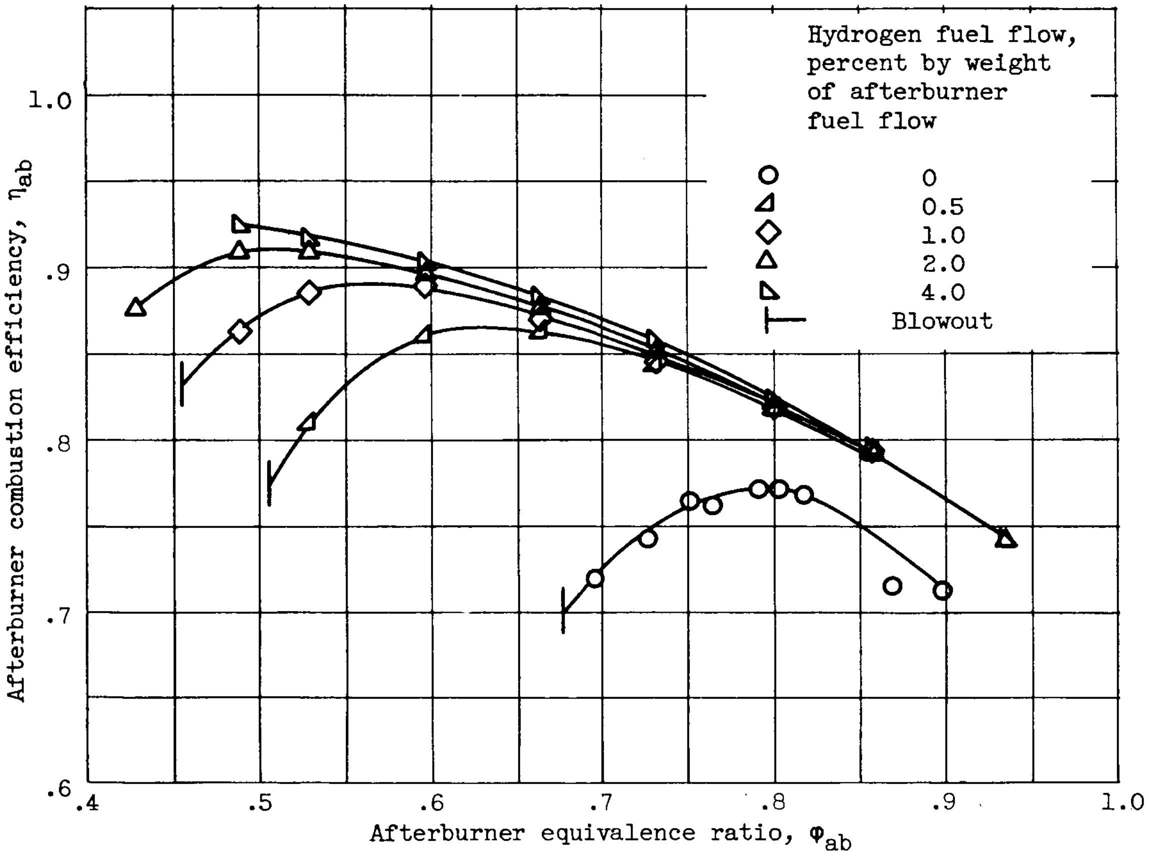

(b) Water vapor diluent, 6.5 percent.

Figure 6. - Concluded. Effect of hydrogen fuel additive on afterburner combustion efficiency with and without water vapor diluent in afterburner-inlet air.

[redacted]

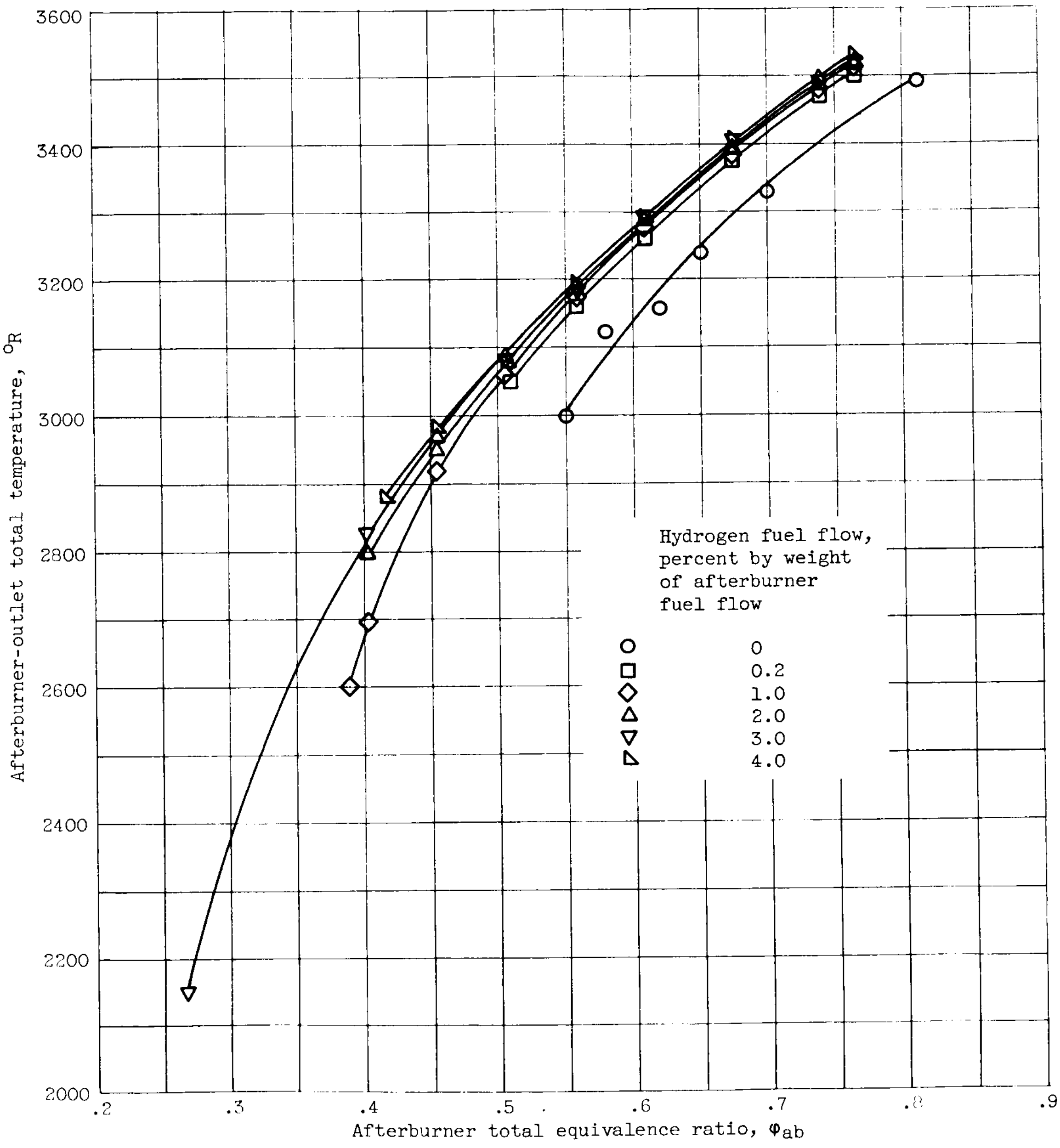

(a) No water vapor diluent.

Figure 7. - Effect of hydrogen fuel additive on afterburner-outlet total temperature with and without water vapor diluent in afterburner-inlet air.

5118

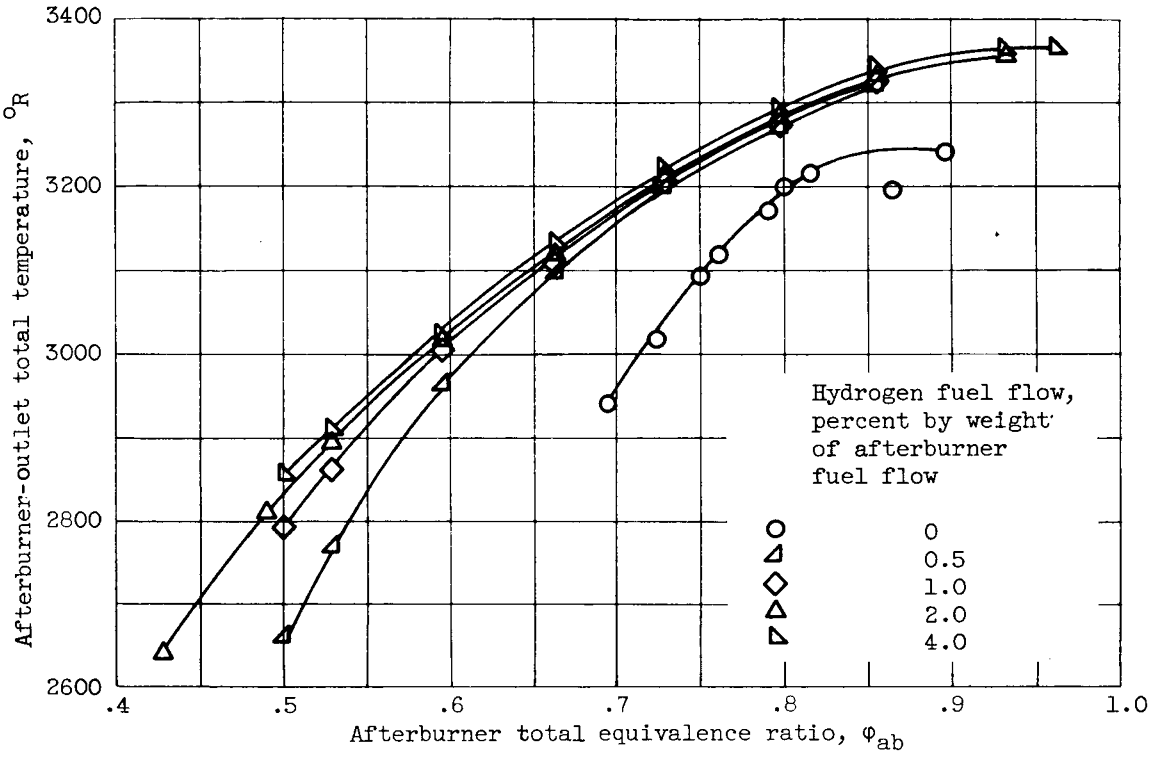

(b) Water vapor diluent, 6.5 percent.

Figure 7. - Concluded. Effect of hydrogen fuel additive on afterburner-outlet total temperature with and without water vapor diluent in afterburner-inlet air.

[redacted]

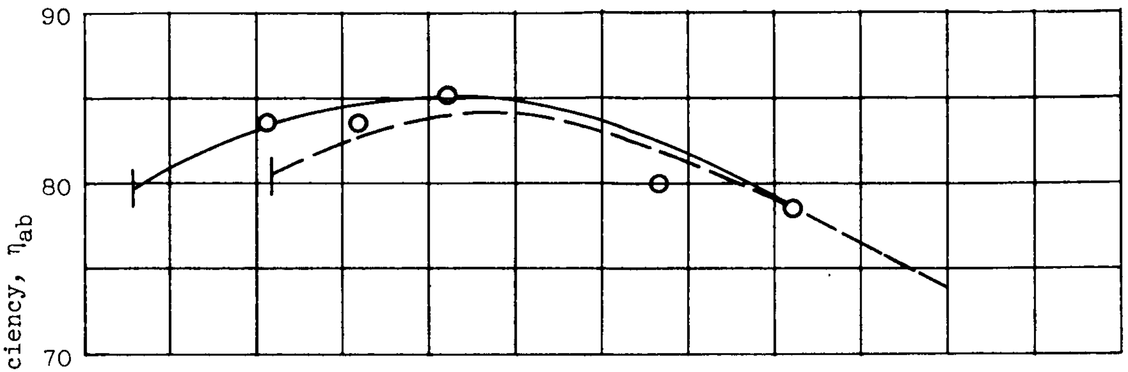

(a) No water vapor diluent.

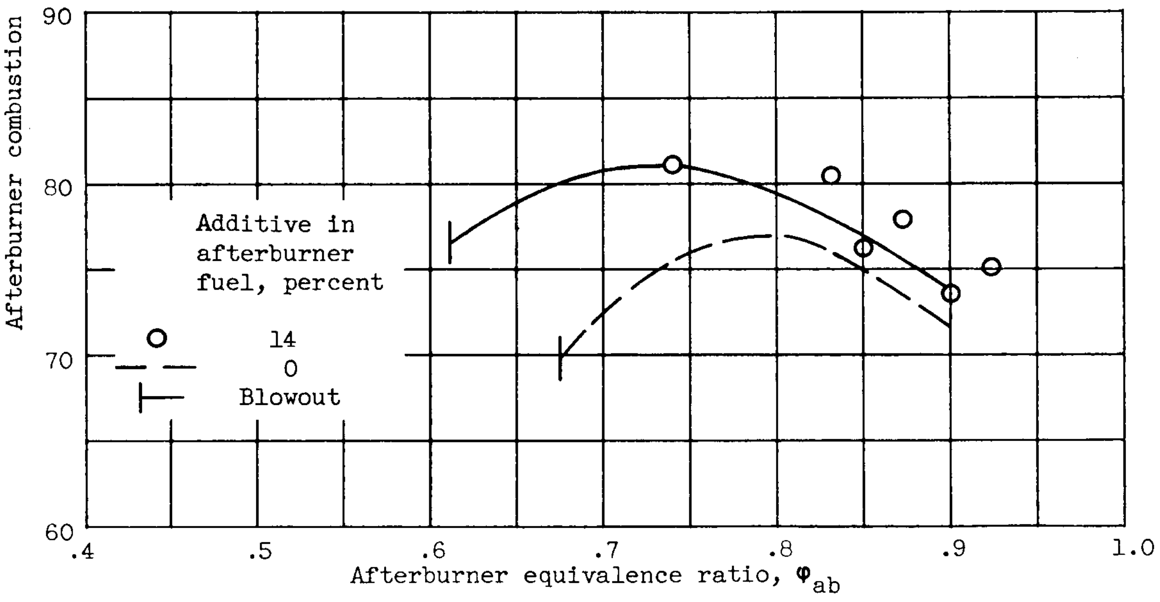

(b) Water vapor diluent, 6 percent.

Figure 8. - Effect of aluminum trimethyl additive in afterburner fuel on combustion efficiency with and without water vapor diluent in afterburner-inlet air.

5118

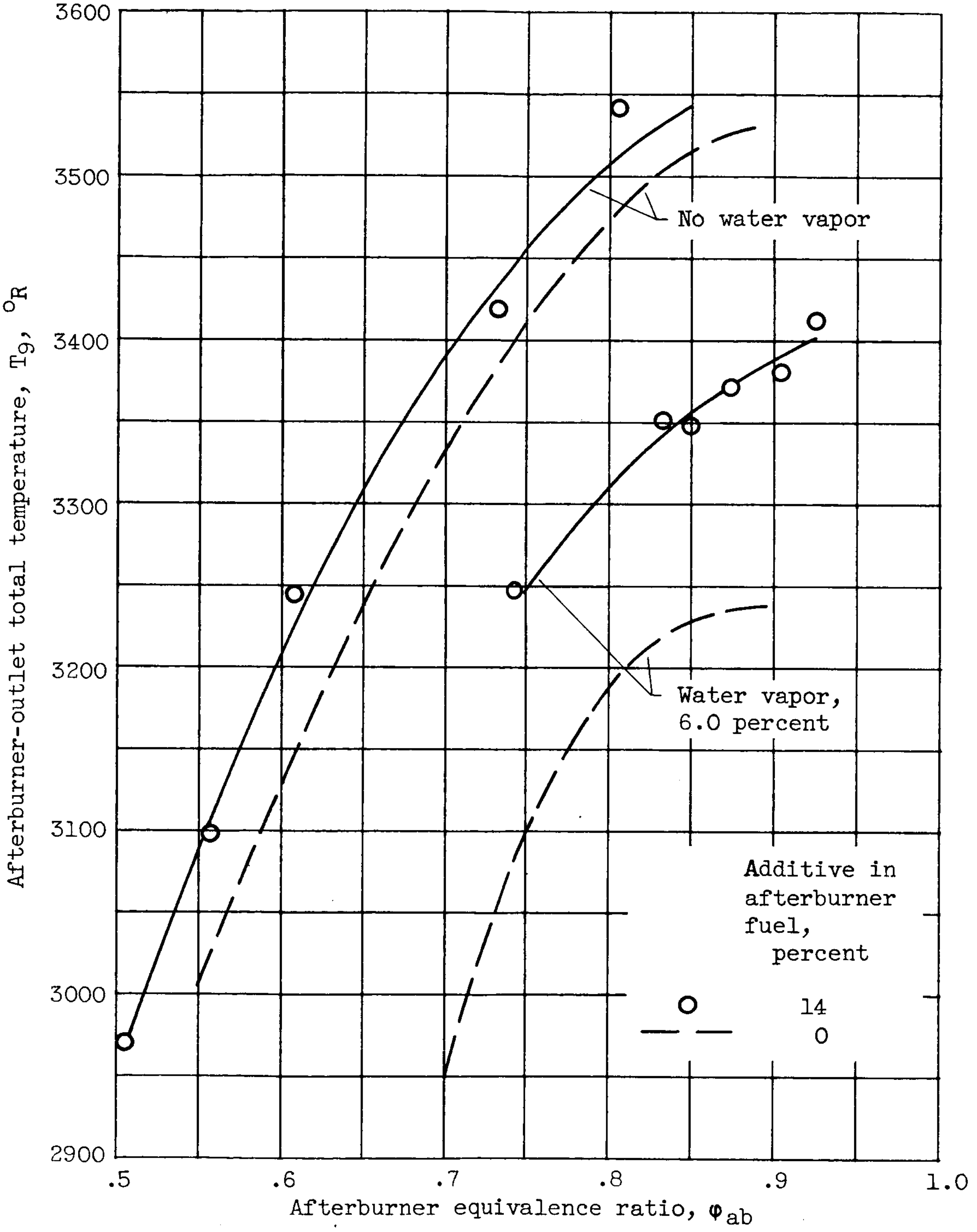

Figure 9. - Effect of aluminum trimethyl additive in afterburner fuel on afterburner-outlet total temperature with and without water vapor diluent in afterburner-inlet air.

[redacted]

[redacted]

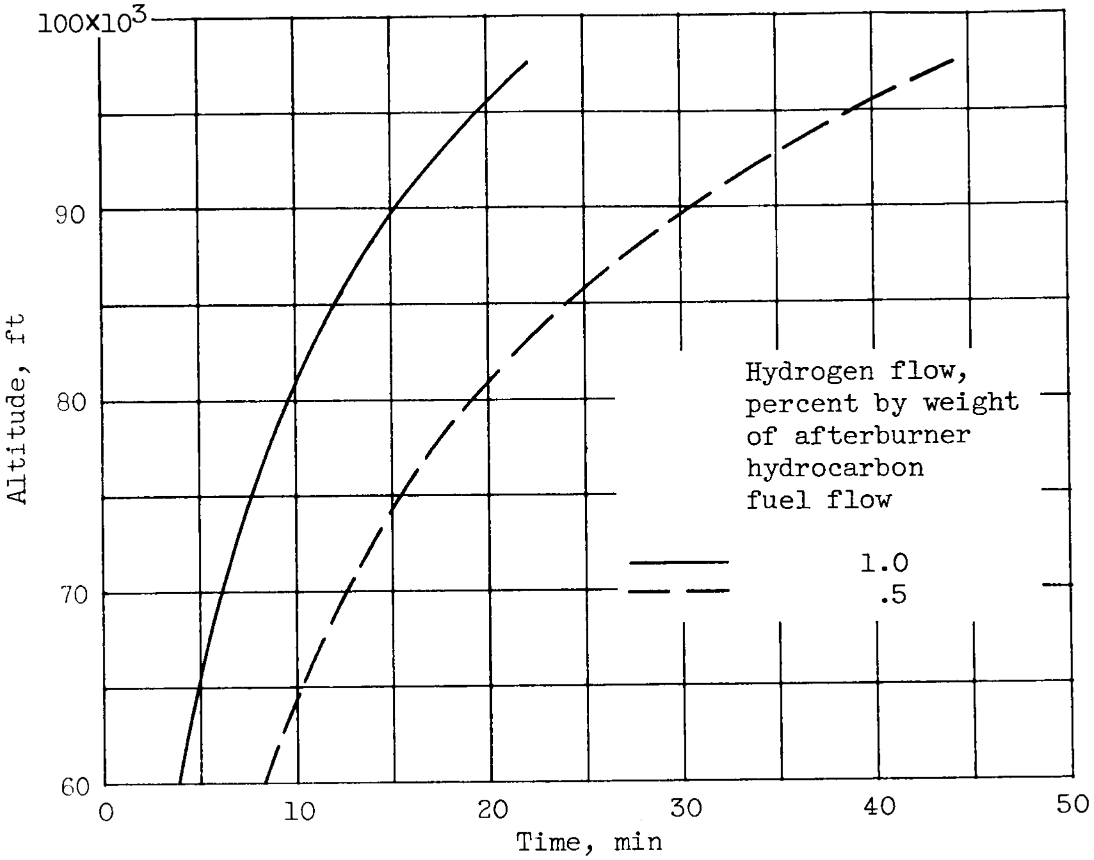

Figure 10. - Hydrogen injection time for current-design afterburner operating at equivalence ratio of 0.5.

[redacted]

NACA - Langley Field, Va.