GRAVITY GRADIENT STABILIZATION SYSTEM for the

APPLICATIONS TECHNOLOGY SATELLITE

DOCUMENT NO. 64SD4390
10 DECEMBER 1964

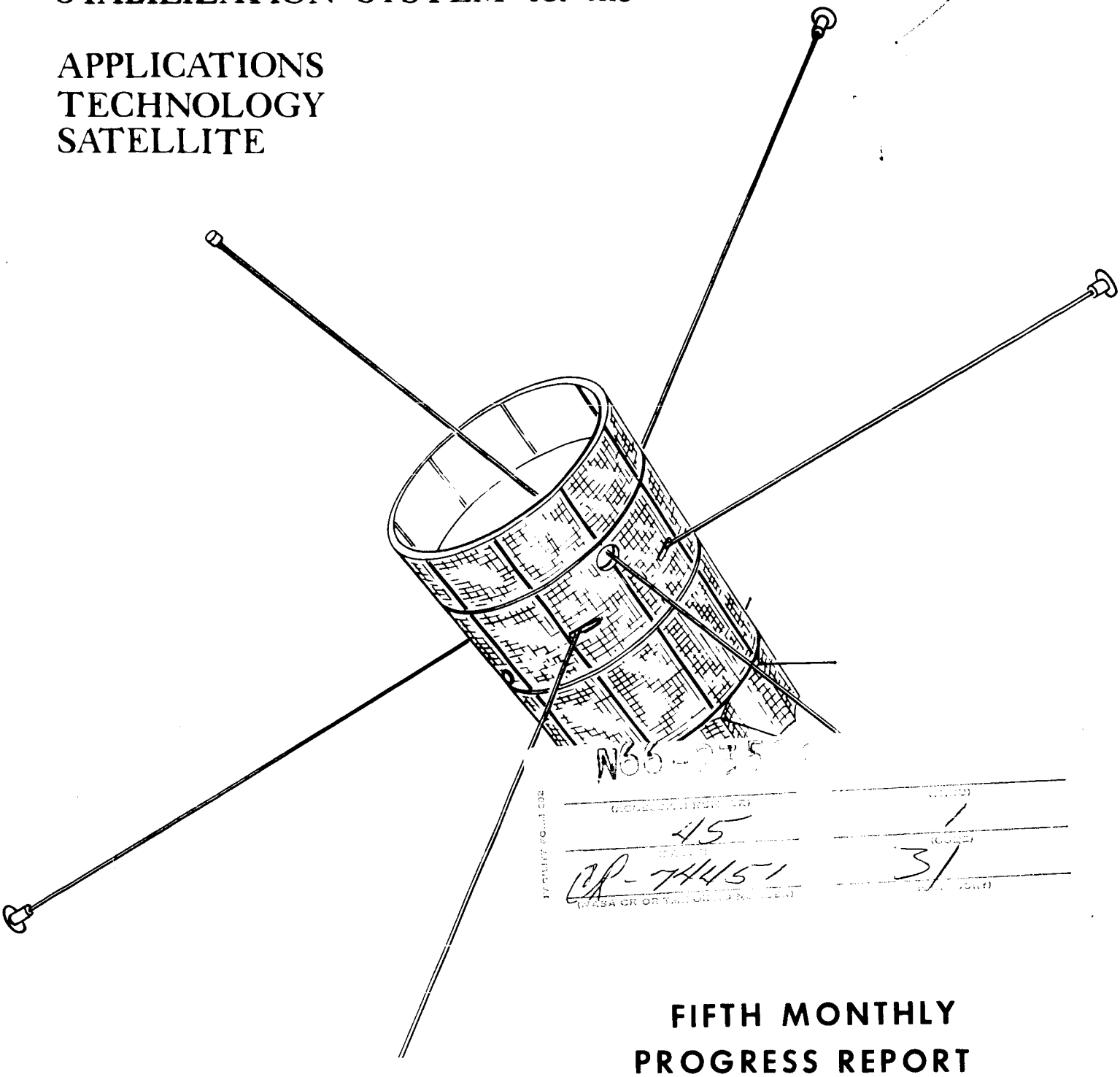

N66-[illegible]

45 (PAGES) 1 (CODE)

CR-74451 (NASA CR OR TMX OR AD NUMBER) 31 (CATEGORY)

FIFTH MONTHLY PROGRESS REPORT

NASA CONTRACT NAS 5-9042

GENERAL ELECTRIC
SPACECRAFT DEPARTMENT

GPO PRICE $ _____

CFSTI PRICE(S) $ _____

Hard copy (HC) 2.00

Microfiche (MF) .50

ff 653 July 65

DOCUMENT NO. 64SD4390
10 DECEMBER 1964

GRAVITY GRADIENT STABILIZATION SYSTEM
FOR THE
APPLICATIONS TECHNOLOGY SATELLITE
FIFTH MONTHLY PROGRESS REPORT

1 NOVEMBER THROUGH 30 NOVEMBER

CONTRACT NO. NAS 5-9042

FOR THE

NATIONAL AERONAUTICS AND SPACE ADMINISTRATION

JOHN M. THOLE
ATS TECHNICAL OFFICER

Approved By: R. J. Katucki, Manager
Passive Attitude Control Program

GENERAL ELECTRIC
SPACECRAFT DEPARTMENT
A Department of the Missile and Space Division
Valley Forge Space Technology Center
P.O. Box 8555 • Philadelphia, Penna. 19101

TABLE OF CONTENTS

Section		Page
1	INTRODUCTION	1
	1.1 Purpose	1
	1.2 Program Objectives	1
	1.3 Report Summary	1
	1.4 Program Redirection	2
2	WORK PERFORMED	3
	2.1 Analysis and Integration	3
	2.1.1 Mathematical Model Development	3
	2.1.2 Studies and Results	5
	2.2 Boom System	6
	2.2.1 Present System	6
	2.2.2 Lubrication Techniques	7
	2.2.3 Boom System Design Review	10
	2.3 Combination Passive Damper	13
	2.3.1 Design Status	13
	2.3.2 Angle Indicator Status	15
	2.3.3 Test Results	16
	2.4 Attitude Sensor Subsystems	18
	2.4.1 RF Attitude Sensor	18
	2.4.2 TV Camera Subsystem	20
	2.4.3 Power Control Unit (PCU)	24
	2.4.4 Solar Aspect Sensor (SAS)	24
	2.4.5 Component Coatings	25
	2.4.6 Ordnance Devices	25
	2.4.7 Subcontract Activities	27
	2.5 Testing, GE Component Alignment Requirements	29
	2.6 Manufacturing	32
	2.7 Quality Control	32
3	SCHEDULE	34
4	RELIABILITY AND PARTS & STANDARDS	36
5	PROGRAM FUNDING AND MANPOWER	38

SECTION 1. INTRODUCTION

1.1 Purpose

This report documents the fifth month of progress toward the design of the ATS Gravity Gradient Stabilization System. The report covers the period from November 1 to November 30, 1964. Beginning with reports issued for November, the former designation of Advanced Technological Satellite is changed to the Applications Technology Satellite to comply with the current NASA designation for the ATS Program.

1.2 Program Objectives

The Gravity Gradient Stabilization System is applied to three vehicles: one at a 6000-nautical mile inclined orbit, and two at synchronous-equatorial. The objective of the experiment at 6000 nm is to verify a previously developed mathematical model so that model can be employed for the design and dynamic performance predictions of gravity gradient stabilized vehicles at other altitudes and conditions. It is also an objective to demonstrate compatibility between gravity gradient stabilization systems and other equipments, such as communication and meteorological.

1.3 Report Summary

Progress during November was directed toward further implementation of the stabilization system and vehicle attitude sensing system. A new damper clutch was developed that eliminates the complexity of the former system without sacrificing the requirements placed on the damper. Testing continued with the objective of evaluating the properties of the eddy current damper. A magnetic mockup was constructed of the damper which will be used for magnetic dipole evaluation.

Decisions were made concerning a number of pending design items in the primary boom system as a result of a design review held at deHavilland and the technical meetings at NASA/GSFC during the month. One of the important items was finalization of the lubricant to be used for the boom mechanism.

Evaluation and testing was carried on for the electronic packages that comprise the Attitude Sensing System. Vendor surveillance was maintained for suppliers of the electrical parts in order to implement the items required by the Preferred Parts List.

Evaluation of the tasks comprising the Work Statement for the Gravity Gradient Stabilization System was conducted during November between NASA/GSFC and General Electric in preparation for final contract negotiations.

The ATS Coordinating Meeting scheduled for November was held at the General Electric Space Technology Complex at Valley Forge, Pennsylvania from the 17th to the 19th of November. Attendees included ATS Program Officers from the Goddard Space Flight Center, the Hughes Aircraft Company, deHavilland Aircraft limited and interested experimenters in the ATS Program.

1.4 Program Redirection

On December 2, 1964, General Electric received redirection from NASA/GSFC to change the scope of Contract NAS 5-9042. The effects of this redirection on the overall program are being evaluated.

SECTION 2. WORK PERFORMED

2.1 Analysis and Integration

2.1.1 Mathematical Model Development

The most significant activity in the area of Mathematical Model Development has been the effort directed towards establishing a better definition of the end objectives of the Math Model and the establishment of ground rules for the Math Model Acceptance Test Specification.

Verification of the ATS Mathematical Model has been the stated primary objective of MAGGE. The orbit test plan, presented in the First Quarterly Report, was devised with this in mind. Requirements for orbit eccentricity changes, magnetic torque amplification (using magnetic torquing coils) and solar torque amplification (using a center-of-pressure relocation boom) were included. A partially redundant array of attitude sensors (including a magnetometer, RF sensor, earth IR sensor, and solar aspect sensor) were included to insure the reliability and adequacy of the orbit attitude data deemed necessary for a valid verification of the ATS Math Model. All of these things were felt to be essential to the accomplishment of a Math Model goal which included a sophisticated and highly accurate capability for 3-axis attitude angle envelope and phase predictions a week or more in advance.

Redirection was received from NASA on December 2, 1964 to de-emphasize the original goal of the Math Model. The new model (called G^2S/ATS Program) will be less complex than the original model and will have a greater flexibility than the current GE/GAPS-III program in that the following capability will be included:

(a) Mathematical simulation of hysteresis damping. (This will provide G^2S/ATS with the dual capability of simulating hysteresis and/or eddy current damping).

(b) Flexible rod geometry. (GAPS-III has all rods through the satellite C.M.; G^2S/ATS will allow an evaluation of the effects of non-symmetrical, non-planar rod geometries).

(c) Improved rod thermal bending model. (GAPS-III includes planar bending only; the possibility of adding the effects of out-of-plane components will be investigated).

(d) Improved orbital eclipse subroutine (GAPS-III has a cylindrical earth shadow; G^2S/ATS will more closely simulate the umbra/penumbra effect).

(e) Improved model of the earth's magnetic field. (The GAPS-III model will be updated to incorporate the latest data from other satellite and probe projects).

(f) Improved solar torque subroutine to more closely simulate the ATS geometry.

(g) Momentum wheel simulation. (G^2S/ATS will have the capability for simulation of flywheel turnover maneuvers and impulsive and cyclic forced disturbance maneuvers).

(h) Simulation of rod retraction and extension effects.

(i) Provision of a rod scissoring option.

(j) Provision of an on-off magnetic dipole simulation relative to all 3 satellite axes.

(k) Provision of a miscellaneous torque option to simulate, for example, pressurized component leakage rates or outgassing effects.

The de-emphasis on Math Model verification implicitly eliminates the requirement for a sophisticated Data Correlation Program and an acceptance test specification which requires the meeting of rigorous prediction criteria. In lieu of a Data Correlation Program, it is proposed that a team of 3 men (1 controls engineer, 1 mathematician, and 1 OEE) be provided for evaluation and analysis of the reduced flight data. The responsibilities of this group would be as follows:

(a) Evaluate the accuracy of G^2S/ATS as a prediction program.

(b) Establish the limitations of G^2S/ATS as a prediction program.

(c) Recommend techniques for improving G^2S/ATS as a design tool and as a prediction program.

(d) Provide written inputs to flight test reports and quarterly progress reports.

2.1.2 Studies and Results

2.1.2.1 Solar Torque Studies

Numerically integrable equations for main body solar torques have been derived and documented as PIR 4422-GG2-315, dated 11/16/64. The complete report will be included in the Second Quarterly Report. Equations include all shadowing effects due to discontinuous cylindrical radii, "scalloped" solar panel extensions, recessed ends of the cylinder, and the protruding nozzle of the apogee rocket engine. N - multiple specular reflections can be simulated over the entire geometry. Diffuse reflections are limited to singular reflections. A technique for including the effect of changes in reflection coefficients with angle of incidence is proposed.

2.1.2.2 Attitude Sensor Evaluation Studies

Analysis of the RF sensor/earth IR sensor combination has been completed and documented as Flight Dynamics Data Memorandum 4143-FD-007. The complete report will be included

in the Second Quarterly Report. Equations for three-axis attitude determination are presented as well as an evaluation of errors. Pitch and roll errors are essentially the same as those for the earth sensor (3σ error = 3°); yaw errors vary widely depending on orbital position relative to the ground stations. For the MAGGE orbit, yaw errors can range from 3° to 44°; for the SAGGE orbit, yaw errors can range from 16° to 32°. Thus, as might reasonably be expected, this combination of sensors is very poor for yaw attitude determination. Work in progress considers the RF sensor/solar aspect sensor combination and is expected to yield a much better definition of attitude in all three axes.

2.2 Boom System

2.2.1 Present System

The specification for the Boom System (GE Specification SVS-7316) was released during the reporting period. The requirements cover the design, fabrication and testing of the Gravity Gradient Boom System. The system includes the primary booms (X-booms) the damper booms, the erection unit required to extend all the booms and the mechanism required to "scissor" the primary booms. Also included are the torque transmission system for primary boom drive, the emergency clutch, the motors and reducers for erection and scissoring power, the housing and support structure to integrate the scissor and transmission mechanisms with the primary boom erection units, and the instrumentation for monitoring boom extension and scissor angles.

The specification implements all of the requirements placed on the boom system as detailed in the Work Statement for the ATS Gravity Gradient Stabilization System.

2.2.2 Lubrication Techniques

The use of lubrication for the boom mechanism is required to protect the equipment from the phenomenon of cold welding when exposed to a spacial vacuum. Persuant to the use of the best lubricants, a joint meeting was held at the deHavilland Aircraft Company, which was attended by representatives from NASA, deHavilland and General Electric. Three avenues of approach were proposed by deHavilland; these are the use of liquid lubricants, self-lubricating materials, and dry film lubricants. Each scheme has advantages, so the solution might well include the use of a combination of these methods.

Lubricants were further defined as a result of later discussions at the Goddard Space Flight Center. The meeting was attended by Mr. R. L. Johnson of the NASA Lewis Research Center, deHavilland and General Electric. Materials chosen as promising lubricant selection suggested at the meeting are summarized in Table 1.

Results of these meetings on the lubrication recommendations were studied by General Electric during the current reporting period to establish a design philosophy relevant to the use of lubricants with recommendations for the optimum lubricant for use in the boom system mechanism. The two guidelines used in the selection are:

1. Lubrication of the open unit by liquid lubricants is prevented by the possibility of forming polymerized films on the booms, thereby drastically changing its thermal radiative properties.

2. Slow speed and/or intermittent operation bearing applications generally require some dry film or boundary lubricant to be applied to all surfaces in relative contact. Therefore, the bearing races and balls should be coated with MoS_2, either as a burnished film or bonded as in the Molykote X-15 coating. Bearing elements should be finished by precision grinding techniques (4 to 6 microinch) surface finish) followed by a thorough cleaning before the dry film lubricants are applied.

Table 1. Promising Lubricant Selection

Application	Basic Material	Lubrication Liquid	Dry Film
Sealed Unit		F-50, MIL-L-6085 Depending on Design Requirements	
Bearings			
Races	440 C (Corrosion Resistant Stainless Steel-CRS)		
Separator	Duroid 5813		
Balls	440 C (CRS)		
Open Unit			
Bearing			
Races	440 C (CRS), Cobalt alloy Star J or Haynes 6B[1]		Alpha Moly Kote X-15[2]
Separator	Duroid 5813[3]		
Balls	440 (CRS) Cobalt alloy Star J or Haynes 6B		
Gears	Polycarbonates, Epoxy Teflon, Polymides		Idler gears of the self-lubricating mtl driver of 2024 aluminum
Spring			Burnished film of MoS_2
Tape Guide	1. Fiberglass Laminated 2. Electroformal Material		Teflon coatings (fused or epoxy bonded)

1. Due to the short delivery time of engineering hardware, bearing races made of Star J or 6B cobalt alloys may be unobtainable therefore 440C races should be used. If the cobalt alloys are obtainable they should be heat treated at 800 - 850°F for 48 hours to stabilize the hexagonal structure necessary to prevent mass material transfer during boundary friction operation.
2. Alpha Molykote X-15 is a MoS_2 dry film which uses a sodium silicate binder.
3. Duroid 5813 - The material is an extruded composite consisting of Teflon filled with 15% glass and 10% MoS_2.

The recommendations made in the GE investigation include lubricants for sealed units and open units. These are:

1. Sealed Unit

   a. Erection Motor Bearings - 440C CRS, lubricated by F-50 or MIL-L-6085 diester fluid.

2. Open Unit

   a. Bearings - 440C, Duroid 5813 separator, dry film lubricated by Alpha Molykote X-15

   b. Gears - Teflon and glass filled polycarbonates idler gears.

   c. Tape Guide - Teflon coated fiberglass laminate or electroformed material.

These recommendations were presented at the latest design review held at deHavilland late in November. They will form the basis for the lubrication techniques for the ATS boom system mechanics.

2.2.3 Boom System Design Review

A design review was held at the deHavilland Aircraft, Limited on November 23 through 25. Representatives from NASA/GSFC, GE and deHavilland attended the discussions. The objective of the meeting was a review of the total boom system. Some items discussed were resolved while others require further investigation. These are summarized in the following paragraphs.

A list of the number of microswitches required in the boom electrical system was compiled.

NASA would like to have a pressure transducer in each pressure sealed box. An analog telemetry output is required from each transducer with an output of 2 milliwatts. deHavilland will investigate the possibility of this method of pressure sealed monitoring and GE will incorporate the requirement into appropriate specifications in the boom system. Engineering units will be built with F-50 lubricant in the pressure sealed box, and deHavilland will investigate the possibility of using Apiezon "K".

NASA would like to know the total possible travel of boom tip due to backlash, assuming no anti-backlash effect from the bellows. The effect of backlash in the scissors gear train and linkage will be calculated by deHavilland.

It was decided that the tip target configuration would be 9 inches in diameter. The targets will not be stowed inside the solar array, and each target will be externally removable. The targets will rest on the solar cells by means of a suitably designed cushion.

NASA requested that a caluclation be made of the total variation in possible erection speed, assuming both a series-wound and shunt-wound drive motor. The calculations are to include all variables such as voltage, temperature, vehicle spin, etc. deHavilland will make these calculations as soon as possible.

Adjustment of the position of a boom center of gravity in the direction parallel to the drum centerline cannot be accomplished without skewing the drive gears at the point of mesh. This precludes "trimming" out of misalignment between the cg's of a pair of booms. GE will investigate the maximum misalignment that can be tolerated between the scissoring planes of the two cg's of a boom pair, and deHavilland is to investigate the possible tolerance that can be held.

Since certain areas within the boom system may be sensitive to large pressure differentials with respect to ambient, it is required that rate of pressure change as a function of time be determined for the boost profile, in order to provide proper venting. NASA promised this information.

In general, NASA approved the clutch design with the exception of the bistable spring and the current requirements for the solenoids. It was requested that deHavilland look into the design with the following objectives:

1. Less current drain (approximately 4 amperes)
2. "Fail Safe" design to hold clutch engaged (in place of spring)
3. Close to right-angle system for locking in engaged position

GE will provide copies of the range safety specification for the Atlantic Missile Range (AMR) as a guide for the design of the pyrotechnic devices to be used in the system initiation functions. General Electric will look into the use of the adequacy of the pyrotechnics used to release the damper boom system. deHavilland was asked to look into the use of redundant explosive cable cutters and ejectable connectors, rather than ejecting cable cutter.

A threshold detector for each half system will be designed by GE as a method for stopping the boom when it is extended to 100 feet initially, if each of the primary booms is to be 150 feet long. The threshold detector will be installed in the Power Control Unit and sense the output of the potentiometer.

The use of a series-wound motor versus the shunt-wound has been decided in favor of the shunt motor because of the requirement that the primary booms are to be extended as speed from 1.5 to 3 feet/sec, and a shunt-wound motor will provide the required control. The shunt-wound motors might require the use of relays and will necessitate the rewiring of the breadboard model, but these are problems that can be solved.

It was recommended that springs be used as the ejection device for extension of the damper booms. The only drawback to using springs seems to be a low temperature problem. GE will calculate the worst case temperatures and check with materials specialists for a determination of the behavior of spring material at low temperatures. deHavilland has promised additional information concerning the spring material and additional information on A-30.

The problem of the use of lubrication for the exposed components in the primary boom system was settled in favor of dry film lubricants and self-lubricating materials as discussed in paragraph 2.2.3. The maximum resistance of all potentiometers used in the electrical system for the primary boom is fixed at 10,000 ohms.

2.3 Combination Passive Damper

2.3.1 Design Status

In response to a NASA request for a re-evaluation of the clutching mechanism, several layouts were prepared as part of a study that had the following objectives:

1. Reducing the complexity of the clutching mechanism by eliminating certain requirements including (1) the ability to clutch at any point within the $\pm 45^{\circ}$ boom rotation range, and (2) alignment of the damper to be engaged with the instantaneous boom position at the time of clutching.

2. Obtaining a bistable clutch, i.e., one that never allows a "no damping" condition should an actuator failure occur during the clutching motion.

3. Reducing the number of moving parts for improved reliability through elimination of pivots, levers, rollers, etc.

4. Improvement of overall reliability.

Based on an evaluation of the layouts resulting from this study, NASA concurred that GE should continue to define the two-lever concept in the interest of schedule, but still strive to simplify the arrangement for an increase in reliability. An operating model of the two-lever concept was manufactured that demonstrated the feasibility of this approach including kinematic stability, indexing capability, and smoothness of the clutch operation. This model was demonstrated at a meeting at NASA Goddard on November 6, and although it operated in a satisfactory manner, objections to its apparent complexity were reiterated.

A new, simplified approach to the clutching problem was conceived and this new concept was presented to NASA on November 13. The new system utilized a simple diaphragm similar to a Belleville washer with radial pleats, that will "pop" through center and exert forces sufficient to clamp the boom to the selected damper. The diaphragm concept was tacitly approved by NASA, and all design effort was diverted to this system. Figure 1 (GE Drawing SK56130-808-37) presents a preliminary layout utilizing the diaphragm clutch,

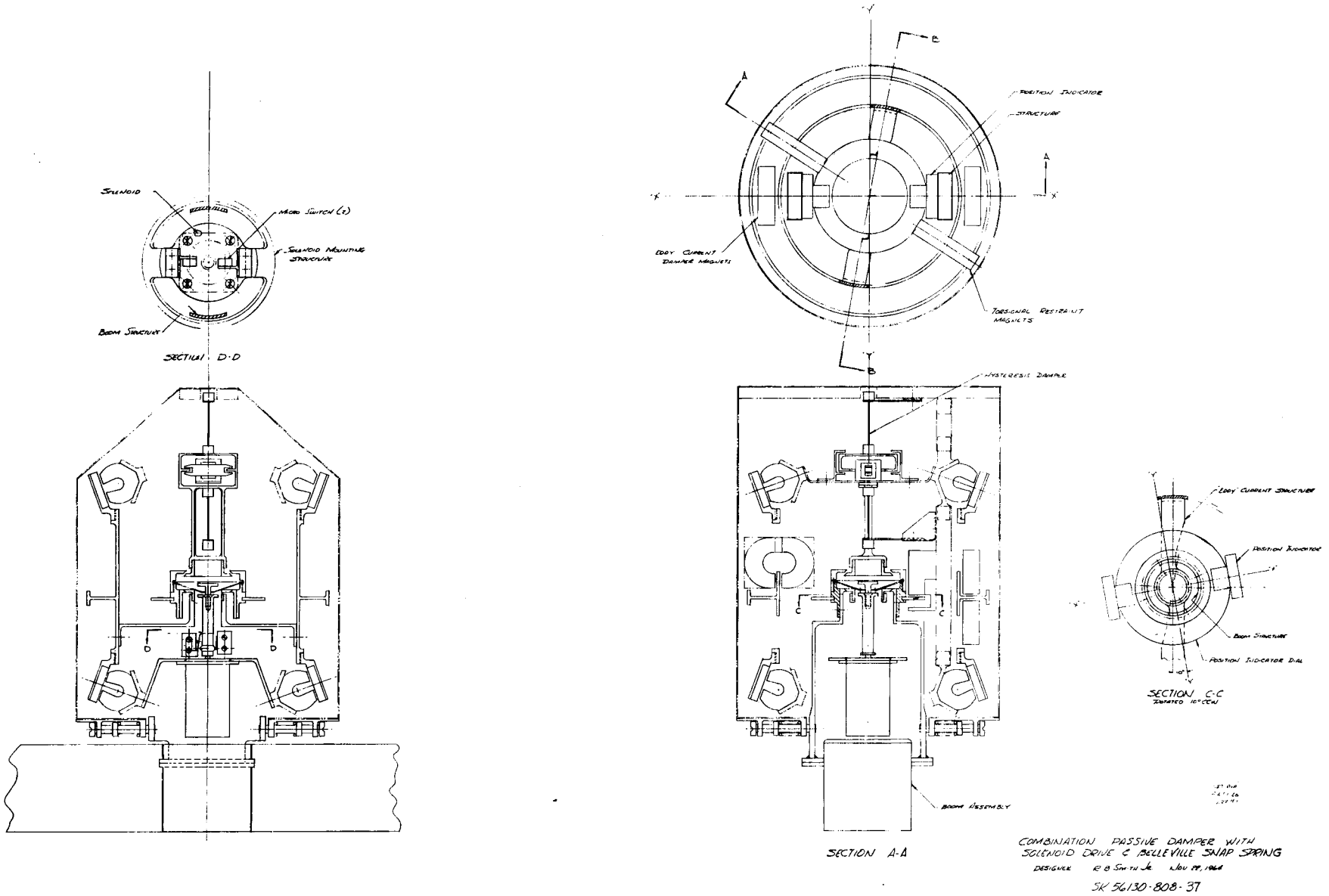

Figure 1. Combination Passive Damper with Solenoid Drive and Belleville Snap Ring

a solenoid actuator, and several design improvements to the overall CPD arrangement. The design improvements include:

1. Redesign of the boom attach member to eliminate high stress concentrations which were present in the previous concept. The boom interface remains the same.

2. Relocation of the boom lock pins to the exterior of the CPD "can" so as to be more accessible during testing and transporting.

3. Enlargement of the diameter of the pyrolytic graphite cones on the diamagnetic suspension to obtain the desired thickness of graphite with a single mandrel. This was necessary due to a limiting ratio of thickness to diameter for a single mandrel deposition of pyrolytic graphite.

Suppliers have been contacted in search of a double-acting solenoid with a one-half inch stroke which would meet the CPD specification requirements. Their replies have been favorable to such a design, and further contacts will be made when final requirements have been fully defined. Belleville washer suppliers have also been contacted, and diaphragms generally similar to our application have been made, but development work is required to produce a diaphragm to the CPD requirements. Design and analytical effort is continuing on the diaphragm to determine the desired characteristics.

A tentative agreement was reached with HAC during the interface meetings held at GE as to the CPD/vehicle interface. A truss arrangement (similar to the classical aircraft engine mount) will be utilized. HAC is to prepare a layout showing this general arrangement for GE concurrence.

2.3.2 Angle Indicator Status

Final quotes for the boom angle indicator were recieved from Dynamics Research Corporation, Stoneham, Mass, Giannini Controls Corporation, Duarte, Cal., and Marx Polarized Corporation, Whitestone, N.Y. More cost details were requested from Dynamics Research Corporation (DRC) prior to entering final negotiations. The question of who would be responsible for ordering high reliability parts has been resolved, but was a source of delay

in the preliminary negotiations. A final specification and work statement will be released for NASA approval and final negotiations are expected to be finished by mid December.

2.3.3 Test Results

Hysteresis Damper test data to date have indicated extensive and possibly unacceptable variations in torque (ripples) with angle of rotation. Several approaches have been attempted and are continuing in an effort to reduce this variation. These approaches thus far, have consisted of using different thicknesses of magnetic damping discs, "stacking" discs to cancel out anisotrophy effects, using both annealed and cold worked discs, deliberately cocking the discs with respect to the magnets, using plastic disc holders in lieu of the original stainless holders, etc. A satisfactory solution has not been found to date. In addition, a "hang off" angle has been noted in the hysteresis tests. This phenomena occurs as the damper approaches the theoretical null point, but is stopped at a point where the torque in the wire suspension equals the damping torque in the hysteresis damper. This "hang off" angle is apparent as the damper approaches null from either direction, and is approximately equally offset for the null position in either direction. "Hang off" angle has been mentioned in the literature, and is not serious in most applications; however, in the ATS application, it could affect the vehicle pointing accuracy significantly especially when coupled with gravity gradient torques. An analysis is being performed to check these effects.

Tests have been performed to ascertain the effects of magnet spacing on the diamagnetic suspension forces. Preliminary results indicate that diamagnetic forces vary to a slight extent, about 10 percent, within the spacing limits currently being considered. Pyrolytic graphite was used in these tests.

Tests on pyrolytic graphite compared to bismuth on a magnetic susceptibility basis have been completed, and it is concluded that pyrolytic graphite is from 2 to 2 1/2 times better than bismuth in this respect.

An alternate approach to torsional restraint for the eddy current damper is being considered as a back-up to the ferromagnetic crescent approach. These studies are deemed desirable because of some inherent disadvantages of the ferromagnetic crescent approach. These disadvantages include (1) Lateral forces are created by the ferromagnetic material which must be reacted by the diamagnetic suspension (2) the ferromagnetic material creates some hysteresis losses in the eddy current system, and (3) because of the potential problems created by the use of common magnets for both damping and torsional restraint. Analysis and test efforts are continuing on a diamagnetic approach to torsional restraint for the eddy current damper.

A test of the pyrotechnic device (pin pullers) considered for boom uncaging revealed that the device emitted an undesirable amount of burnt residue upon firing. Such residue may cloud the glass used in the boom angle indicator system, or it might degrade thermal coatings. A sealed pyrotechnic bellows motor is under consideration for the uncaging function; however, studies of thermal coating degradation effect if the device is mounted outside the CPD case are also in progress. It appears that an outside mounting may provide the solution.

2.4 Attitude Sensor Subsystem

2.4.1 RF Attitude Sensor

2.4.1.1 Interface Requirements

The Hughes Aircraft Company interface specification requirement that no internal circuits be connected to the component case is not acceptable in the design of the RF Attitude Sensor. The Radio Guidance Operation (RGO) is fabricating circuit modules that are completed enclosed in nickel cans using an established packaging technique. The circuits are grounded to the can and each can forms a complete shield around its internal circuit. These modules are then stacked together and enclosed in an outer case. The modules are bonded to the outer case, which will be grounded to the vehicle structure.

2.4.1.2 Physical Requirements

Hughes Aircraft Drawing 297570, defining the space envelope and mounting provisions for the RF Sensor has been examined and discovered to differ radically from GE/SD Specification Control Drawing No. 47-207012. RGO is in the process of laying out the mechanical configuration and, although every effort is being made to stay within the 6-inch cubical outline, some modification of this shape may be required. Before this can be done, however, it is imperative that more details about the physical location, available space, and mounting provisions in the satellite be obtained from HAC.

The accessibility of the RF test connectors when the unit is installed in the satellite also must be determined. Based on the wooden mock-up, it appears that the edge of a solar panel will overlap the test connector access panel. The test connectors can be moved, but the question is how much movement is needed to provide clearance. Here again, details on the satellite structure in the vicinity of the RF Sensor are required.

2.4.1.3 Thermal Requirements

The thermal environment of the RF Sensor also requires further definition with respect to such factors as the emissivity of surrounding structure and components, and the rigidity of HAC's requirement to thermally isolate the component from the structure. RGO is concerned about the apparent lack of means for controlling the temperature of the component. The surface treatment of the component also enters into the problem, of course. The ability of the radome and antenna assembly to survive the extreme low temperature they will experience if the satellite stabilizes upside down is also being investigated.

2.4.1.4 Breadboard Development

Two IF receivers, limiters, a phase comparison circuit, and multiplier chains to VHF have been breadboarded. Multipliers to C-band will be obtained from suppliers. The VCO will be breadboarded as soon as the crystals are received. The buffer storage circuits are being designed. All circuits presently available have been interconnected and operated with IF test signals.

2.4.1.5 Boom Interference Simulation Tests

The effect that the gravity gradient booms and satellite structure will have on the performance of the RF Attitude Sensor is not known. It is possible that the angular accuracy of the sensor may be serously impaired by RF currents in the structure and booms, which could distort the phase of the signals appearing at the antenna terminals. Preliminary measurements (Reference 1) have indicated that simulated gravity-gradient booms produce significant perturbations in the sum and difference patterns of a pair of Archimedes spiral antennas. For this reason, it was felt to be highly desirable to make a more detailed investigation of the relative phase of the antenna output signals, using structural models that more nearly resemble the RF Attitude Sensor and the satellite.

Reference 1 Gravity Gradient Stabilization System for ATS, First Quarterly Report, Document No. 64SD4361, 16 October, 1964.

2.4.1.6 December Activity

No further work on the RF Attitude Sensor will be performed in December in view of the recent decision to eliminate this component from the program. A summary of the error analysis already performed will be included in the Second Quarterly Report.

2.4.2 TV Camera Subsystem

2.4.2.1 Summary of the Status of the TV System

Analysis of procurement difficulties and data reduction capabilities has generated a re-evaluation of the requirements placed upon the TV Camera Subsystem (TVCS). Certain limitations of the overall chain of information handling from on-board the satellite, to the ground, through NASA data collection and storage, up to delivery of stored information to GE, and the capacities of data reduction equipment have made it questionable that the overall chain can supply the kind of data needed for analysis of Gravity Gradient Stabilization System results.

This decision has been hampered by a lack of definition of the range of measurement values needed so that the telemetered data will have significance to the results being anticipated or to be proven. It is recognized that this situation stems from the parallel efforts in component, system and ground support areas at this time. The general direction of effort on the TVCS has been to provide a maximum of readout resolution and accuracy based upon the original TVCS specification by Hughes and NASA. On this premise, a resolution of roughly 4 inches and an accuracy of roughly 2 inches was predicted. These were apparently acceptable values although it was evident that a little better resolution would have been preferred.

A series of events followed the prediction of TVCS readout tolerances which are now culminating in a worsening of these predictions after data reduction. Briefly, these are

1. NASA indicated a bandwidth of 5 instead of 8 mc/s

2. Hughes indicated 2.5 and 5 mc/s bandwidth were available and made strong preference that the TVCS use the 2.5 mc/s bandwidth

3. Consultation with NASA indicated ground station capabilities do not presently extend beyond 4 mc/s

4. Inquiry into ground recording equipment and the necessary methods of data transfer to General Electric indicates that further reduction in bandwidth must be expected

5. And finally, it has been calculated that only one of the three NASA ground receiving locations could provide adequate signal to noise for the TV information.

Throughout these events a continuous possibility of solution has been to abandon the standard TV scan and employ some form of slow scan. This use of slow scan was informally reviewed with NASA at the time the request for quotations was being made to the preliminary TVCS specification. At that time, it was indicated that the standard scan could be accommodated by the satellite communication equipment and would, in fact, be a good test of its performance capabilities.

The use of slow scan offers an excellent solution to the present difficulties. In slow scan operation, the frame rate is reduced from the standard of 30 frames per second to a slower rate, down to as low as 1/2 frame per second. The immediate result is that equal or improved resolution is available with a smaller bandwidth. For example, the Nimbus AVCS is a slow scan system that has realized close to 800 lines horizontal resolution in reduced data in a bandwidth of 62.5 kc/s. The lesser bandwidth also enables better signal to noise at the ground station receiver. The obvious disadvantages are the lower information rate and the loss of continuous motion observation in real time. In this regard, it is felt that the standard scan system would have provided a superabundance of data most of the time when the booms are in motion due to orbital and gravity gradient torques. Standard scan would only be of any advantage for observing boom deployment and the immediate reaction to vehicle thrusting. For most of the time the booms will flex slowly during stabilization damping.

The optimum scan rate should be one that is fast enough to provide many frames per amplitude excursion of the booms, and one that is slow enough to allow the desired accuracy and resolution in the final recording to be made available by NASA for analysis by General Electric. With these conditions as boundary limitations, a video bandwidth between 50 kc/s and 2.5 mc/s is indicated.

This report is intended to summarize the status of the TVCS-System-Data Reduction tradeoffs and to point out the broad aspects of slow scan possibilities. The technical evidence continues to mount to the conclusion that the two-inch accuracy of final readout and recording is, at best, a highly technical risk for the standard scan TVCS because it has been modified by the limitations of HAC transponder and NASA ground station facilities. On the other hand, a changeover to a slow scan, high resolution, narrower bandwidth system entails a redetermination of TVCS parameters, including the HAC transponder interface, and modifications to the NASA ground recording equipment.

2.4.2.2 TV Camera Boom Targets

Polished and black anodized aluminum samples were prepared by the Materials Laboratory and evaluated by Engineering using a vidicon camera with various lighting conditions and sun angle. Based on these initial results, it was apparent that a uniform high diffuse reflectance was needed from the target at various sun angles.

Polymethyl methacrylate blanks were roughened and aluminized to form irregular back surface mirrors. These performed moderately well under the two extreme lighting conditions and different sun angles. To improve these targets, present acrylic samples have transparent blue or red dye and will have a simulated frosted front surface with a thin vapor deposited aluminum coating on the back surface. It is expected that a tinted (red) plastic or glass will be used as a target for the flight model with similar properties to the present targets.

2.4.2.3 TV Data Reduction

The basic decision regarding the data reduction for locating boom tip coordinates on TV is whether to measure distances on a picture taken of the TV screen or whether to utilize the inherent timing associated with the TV scanning and measure the time displacement for determining coordinate locations.

The time displacement approach inherently is capable of the better accuracy because fewer indirect measurements must be taken to correct for nonlinear monitor scans and picture offset in the film camera. The affects of the film camera optics, picture registration, film distortion in processing and the nonlinearities in the TV monitor scans are all eliminated in the error analysis of coordinate location measurement errors with the time displacement technique.

A first look at the economics of both methods may make it appear that the film method is less expensive because, for one thing, film handling equipment may be available and video tape

equipment may not be available. Video recording and reproducing equipment is expensive, but the cost of lost or poor data can be even higher. The merits of video storage versus film storage should be seriously considered in reliability, equipment operation, storage medium supply, and future data reduction potential. A study into the utilization of the direct video and time code for coordinate measurement shows that it can be done with only one addition to the existing reduction facility in addition to the video tape equipment. Further consideration to this semi-automatic technique for reducing the TV information should certainly be undertaken.

2.4.3 Power Control Unit (PCU)

The decision to use shunt rather than series motors to operate the booms has resulted in a redesign of the control circuits in the PCU. In addition to these circuits, the telemetry monitors, temperature measurements and proposed pressure measurements were discussed at deHavilland during the design review on November 24. The squib firing circuit has been redesigned to incorporate protection against spurious execute pulses of less than one second duration as recommended by NASA and HAC and as required by the AFMTC General Range Safety Plan 80-2. The -10 volt reference from the two HAC telemetry encoders will be employed, eliminating the need for an internal power supply which had already been designed. A new requirement is under consideration to deploy the damper booms either during or immediately after the initial X-boom deployment.

2.4.4 Solar Aspect Sensor (SAS)

A comprehensive error analysis has been issued. More detailed thermal studies have verified that three of the five detectors will be subjected to extreme cold (-260 degrees F) when they are not operating. Three solutions appear possible:

1. Test the detector assembly at the extreme low temperature to determine the effects
2. Thermally tie the detector to the spacecraft structure to prevent the cold extreme from being reached.
3. Install small heaters in the three detectors which see the extreme.

All three solutions are being investigated.

2.4.5 Component Coatings

A low emissivity component coating is required for use on ATS components. Samples from previous projects with spectrographic results have been checked for the α_s/ϵ_n* ratio and values to prevent additional sample preparation and test. Vapor deposited aluminum with a thin over-coat is the present choice for the desired optical properties.

Vapor deposited gold also has the required low emissivity value (0.02 - 0.04) and the desirable handling and environmental resistance. However the solar absorptance value ranges from 0.25 to 0.4 which is an α_s/ϵ_n ratio of approximately 10 versus a desired ratio value of 2 to 2.5. Vapor deposited aluminum over-coated with a thin coating of SiO2 has the apparent desired optical properties but requires close control of the SiO_2 coating thickness for optimization.

Samples of both aluminum and mu-metal (for the damper) are being over-coated with this composite and will be evaluated for the optical properties. Also, since titanium dioxide has been successfully vapor deposited, a thin over-coat will also be used to check optical values.

At present, the RF antenna material copper and polyolefin is also being evaluated for solar absorptivity and emissivity values.

2.4.6 Ordnance Devices

Pyrotechnic devices will be employed for the initiation of some events in the ATS Gravity Gradient System. Squibs will be used to uncage the dampers and release the damper boom. GE recently made an investigation of ordnance requirements to ensure that squibs will meet safety regulations at the Atlantic Missile Range.

*α_s/ϵ_n = solar absorptivity - emissivity ratio

All ordnance devices used at AMR are either Category A or Category B, as defined in AFMTC General Range Safety Plan 80-2. Devices included in Category A are those that may cause injury to personnel and/or property damage, either by themselves or by initiating a chain of events. Minimum no-fire requirements for devices in Category A are:

a. 1 amp for 5 minutes (d-c)

b. 1 watt for 5 minutes (d-c)

c. Shielding must provide a minimum of 40 db attenuation from 150 kc/s to 10,000 mc/s (r-f requirement).

In lieu of requirement c., the devices should meet the following r-f requirement:

c-1. 2 watts per sq meter (28 volts per meter) from 150 kc/s up to and including 50 mc/s, 100 watts per sq meter (194 volts per meter) above 50 mc/s (r-f requirement).

These requirements must be met with a 0.001 probability at a confidence level of 95 percent.

Category B devices are those which will not cause injury to personnel or property damage either by themselves or by initiating a chain of events. Category B devices must comply only with the r-f requirements.

In order to reduce induction, conductors of all firing circuits and ordnance devices must be isolated from electrical circuits and must be twisted and shielded with no discontinuity or gaps in the shields. Firing circuits to the ordnance devices must meet the r-f requirements of c-1, and must be balanced to and isolated from the case of the ordnance devices. If the circuit is grounded, there must be only one interconnection with other circuits. Static discharge resistors connected to firing circuits must be at least 100K ohms. A connector to the ordnance bridgewire must be provided and must not contain any other leads such as power and event monitoring lines. The ordnance devices must remain shorted at all times, except when under test or armed for launching. A positive mechanical short by connector or shorting bar is required. Shorting by relay action is unacceptable.

According to information from the Field and Flight Operations at AMR, the category of a specific ordnance device is actually described by the appropriate range safety officer. His decision is based on an evaluation of a drawing, submitted through the Missile Handling Branch, of the satellite which indicates the location of the ordnance device and associated firing circuits together with a description of the extent of damage that is likely to occur in case the device is accidentally triggered. It is emphasized that classification of an ordnance system is not determined solely by the device, but also on the firing circuit associated with it, fail-safe features, accessibility, etc.

The following general information has been assembled in connection with squib-initiated devices:

1. Wire cutters occasionally pinch both ends of the wire after they are energized and thus cause malfunctions.

2. Shorts may occur across a bridgewire after the charge is detonated.

Emphasis will be placed on the selection of Category B ordnance devices for squibs used to initiate gravity gradient functions with the concurrence of the cognizant AMR range safety officer. It shall be a design goal to provide a positive fail-safe feature for each function performed by ordnances devices. Two individually separate circuit breakers will be provided to increase reliability in case of a bridgewire short, and two separate squibs to increase reliability in the event of a wire cutter malfunction. Since two commands are available, either of these commands can be applied to both firing circuits.

2.4.7 Subcontract Activities

An extensive series of meetings has been held with the major subcontractors of the Attitude Sensor components. Negotiations hold with Adcole on 16 November resulted in a slight reduction in their quotation and served to clarify several items in the specification and work statement. RGO has requoted the design of the RF Attitude Sensor using the Hughes Aircraft Company high reliability parts, and Lear Siegler has prepared a similar quotation on the TV

Camera Subsystem. Each of these subcontractors has also submitted a list of parts which are not presently covered by high reliability specifications for consideration and possible qualification by GE/SD.

Further contract discussions with RGO will not be conducted, considering the elimination of this component from the program. Partial funding of Adcole to complete their electrical and mechanical design of the Solar Aspect Sensor and to procure the parts for the engineering models is presently being negotiated.

2.5 Testing, GE Component Alignment Requirements

To provide an acceptable alignment technique for GE components during system assembly and test, the following information is submitted for the Sun Sensors, Magnetometer, RF Attitude Sensor, and TV Cameras.

The satellite reference/component transfer accuracy is $\pm .05^{\circ}$ (3') as referenced in HAC Report of Experimenters Meeting of 22-23 September 1964.

The normal method of aligning components to these accuracies requires the attachment to the component of a target with two reflective surfaces exactly 90° apart. By autocollimating on each of these faces, the misalignment of the component can be determined.

Although the alignment measurements to these accuracies are readily attainable using existing autocollimation equipment and techniques, there are certain aspects of the ATS Vehicle that prevent use of a straight forward approach.

1. The nature of most of the sensors prohibits machining of the sensor body after installation and adjustment of the electrical parts

2. The use of metal targets, especially steel, is not desirable on the Magnetometer or RF Attitude Sensor.

The use of a removable target was considered but because of Item 2 above and the extreme machining tolerances required to minimize inaccuracies, this approach is not practical.

Mention has also been made to the use of scribed lines or marks on the sensor case. In addition to the fact that two faces of the sensor case, 90° apart, would have to be scribed and viewed; this method is also impractical in that these scribed lines would have to be applied as accurately as the lines of the target in Figure 2.

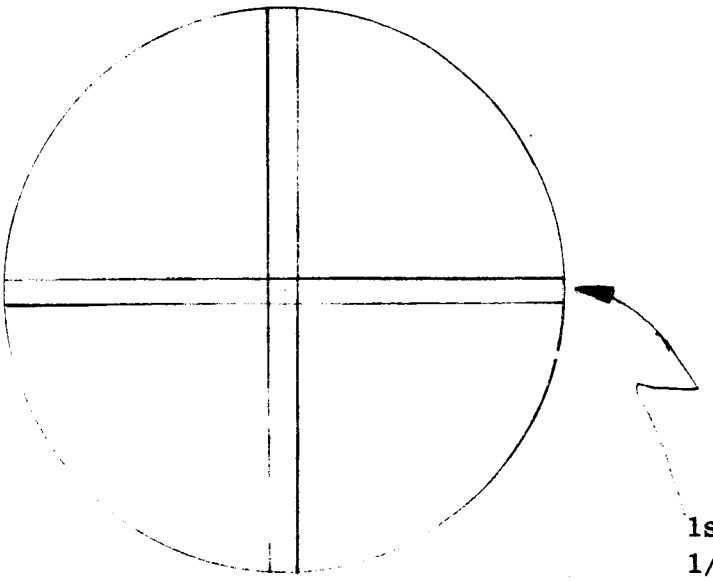

Figure 2. Special Alignment Target

At present, the recommended approach is the use of a special reflective target bonded to the face of each sensor that will be optically accessible at installation into the spacecraft.

Implementing this will require the installation on each sensor of a first surface mirror target as shown in Figure 2. The techniques and materials for bonding of the targets to the sensors has been defined.

Alignment of the target on the component and subsequently the component into the spacecraft also requires the use of the following alignment equipment or its equivalent.

1. Brunson #83 Alignment Scope
2. Brunson #89 Mounting Base
3. Brunson #187-S Striding Level
4. Some means of referencing the electrical null axis or performance axis to the Alignment Scope.

Less than 2 ounces would be added to the weight of each component by the addition of this target.

Alignment of the component on the spacecraft would be accomplished by viewing the component target with the alignment scope after the component has been attached to the spacecraft. Using autocollimation techniques, misalignment of the two component axis perpendicular to the line of sight of the scope could be observed. Then, after refocusing the scope and sweeping the scope across the target, rotational misalignment of the target about the scope line of sight can be observed. What is actually observed is the single line portion of the reticle in the scope sweeping through between the two horizontal lines of the target. If any rotational misalignment exists, it can be readily observed. Resolution of this misalignment is approximately .001 inch. Using a 1-1/2 inch diameter target, a .001 inch error is equivalent to 2 minutes 16 seconds of arc.

2.6 Manufacturing

Member of the Manufacturing Engineering Operation participated in vendor surveillance at the Dynamics Research Corporation relative to the damper rod position indicator. Assistance was provided to design engineering efforts in support of design activities that included test fixtures, damper and electronic equipment. Technical support was furnished to the shop operation during the fabrication of equipment hardware.

2.7 Quality Control

2.7.1 Solar Aspect Sensor

Work has continued on the design and procurement of the hardware for the 6 inch solar simulator. Discussion with the Willey Optical Research and Development Service were held for the proposed optical fabrication work for the simulator and to evaluate their capability to perform the needed work. Brightness measurements were made on the xenon light source for the simulator.

A work statement was issued requesting quotes on a gray to decimal converter for the SAS instrument rack.

2.7.2 ATS Boom Package

The complete test equipment design was reviewed to determine whether the work could be accomplished while meeting program requirements. With this in mind, the rod deployment track was designed and is now being built to test both the primary and secondary boom systems. The requirements were defined to design an electronic console to actuate the deployment mechanism and monitor all telemetry.

The alignment requirements are now being defined to interface with deHavilland to insure that the component can be aligned on the vehicle and that the scissor calibration can be accomplished at GE. The scissor rate test will be accomplished using capacitance gaging techniques which were also checked with regard to its feasibility over the rates of the packages.

Test fixturing was also defined to deploy the booms under TV environments. A work statement was prepared covering this area. A work statement was also prepared to define the requirements for a trolley used in the deployment test.

SECTION 3. SCHEDULE

The schedule for the deliverable hardware items is shown in Table 2. This schedule is a summary of the detailed PERT networks which have been established and are maintained for program control.

The thermal and dynamic models (T2 and T3 respectively) are approximately six weeks behind the original schedule. The balance of the hardware items are eight to ten weeks behind schedule.

The schedule extension for the thermal and dynamic models was caused by the deferment in placing the purchase orders for vendor items. The deferment resulted from: 1) the late definition of the electronic piece parts program (qualification and procurement); 2) the evaluation of the electronic piece part program to determine the cost savings associated with the placement of the contractor's orders as a follow-on to the spacecraft contractor's orders; and 3) the need for contractual coverage to proceed beyond the end of the negotiated Phase 1 portion of the program.

In the case of the Engineering Unit (T4) and the prototype and flight models, the schedule extension is the result in the delay in placing the purchase orders plus the added requirement to conduct a system function test on these items prior to delivery.

It was assumed in the preparation of the schedule in Table 2 that the electronic piece part program will be defined and the required contractual coverage will be available by January 4, 1965 to permit the placement of purchase orders. Any improvement or extension of the January 4, 1965 date will correspondingly affect the delivery dates.

TABLE 2. CURRENT SCHEDULE FOR THE GRAVITY GRADIENT STABILIZATION SYSTEM

	1964						1965												1966								
	J	A	S	O	N	D	J	F	M	A	M	J	J	A	S	O	N	D	J	F	M	A	M	J	J	A	S
Thermal Model (T2)								○	△																		
Dynamic Model (T3)								○	△																		
Engineering Unit No. 1 (EU1)										○		△															
Engineering Unit No. 2 (T4)										○		△															
Prototype No. 1																○		△									
Prototype No. 2																○		△									
Flight No. 1 (F1)																				○		△					
Flight No. 1 (F4)																					○		△				
Flight No. 3 (F5)																							○		△		

○ = Original Contract Date

△ = Estimated Shipping Date

SECTION 4. RELIABILITY AND PARTS & STANDARDS

4.1 Reliability

The following report of progress is presented in the area of reliability for the ATS Gravity Gradient Stabilization System for the month of November.

Specification SVS 7325, "Use of Standard Parts, Materials and Processes" was revised during the reporting period and issued as Revision A. Manufacturers of solenoids were contacted for historical data to determine solenoid life and use information which will be applied to the ATS program. Design review procedures and schedules are being prepared for ATS components. A reliability design analysis of the Power Control Unit is in progress; completion of the analysis will depend on a final definition of input-output parameters from NASA.

New tasks for reliability were prepared for incorporation into the Program Work Statement as a result of the Reliability presentation made to NASA during November.

4.2 Parts & Standards

Technical consultation was provided by HAC at the Interface Meeting held at GE, November 17th and 19th regarding all parts specifications. These include life test degradation analysis, qualification test program planning, and parts application. A review of subcontractors' requests for "EXCEPTED" parts was conducted to determine whether the existing Approved Parts List (490L106) could be used in their place. The subcontractors in the following list were contacted to determine the status of the parts they will supply to the ATS program.

SUBCONTRACTOR	PARTS DISCUSSED	STATUS
Lear Sigler	Connectors, crystals transistors.	Follow-up meeting required to complete
	Review of transformers, inductors, RFI filters currently underway	Review was completed week of November 9. Follow-up meeting required
GE Radio Guidance Operation (RGO)	Resistors, diodes, transistors, capacitors, connectors	Follow-up meeting required
	Review of chokes, RFI filter microcircuits required	Review scheduled for December

Additional requests were received for additions to the "EXCEPTIONS" list as follows

COMPONENT	PARTS REQUESTED
Boom Angle Detector	Special DC-AC transformer Transistor 3N70
Power Conditioning	Transformer R4077 Transformer R4175 Transformer (Tresco) YS124

SECTION 5. PROGRAM FUNDING AND MANPOWER

Total expenditures and commitments for the program as of November 29, 1964 were $1,119,300. Equivalent manpower for the reporting period was 64, based on a 40-hour week. The month included a 2-day plant holiday.

20 APR 66 40018

Progress Is Our Most Important Product

GENERAL ELECTRIC