NASA CR-66134

VOLUME IV

# STERILIZATION

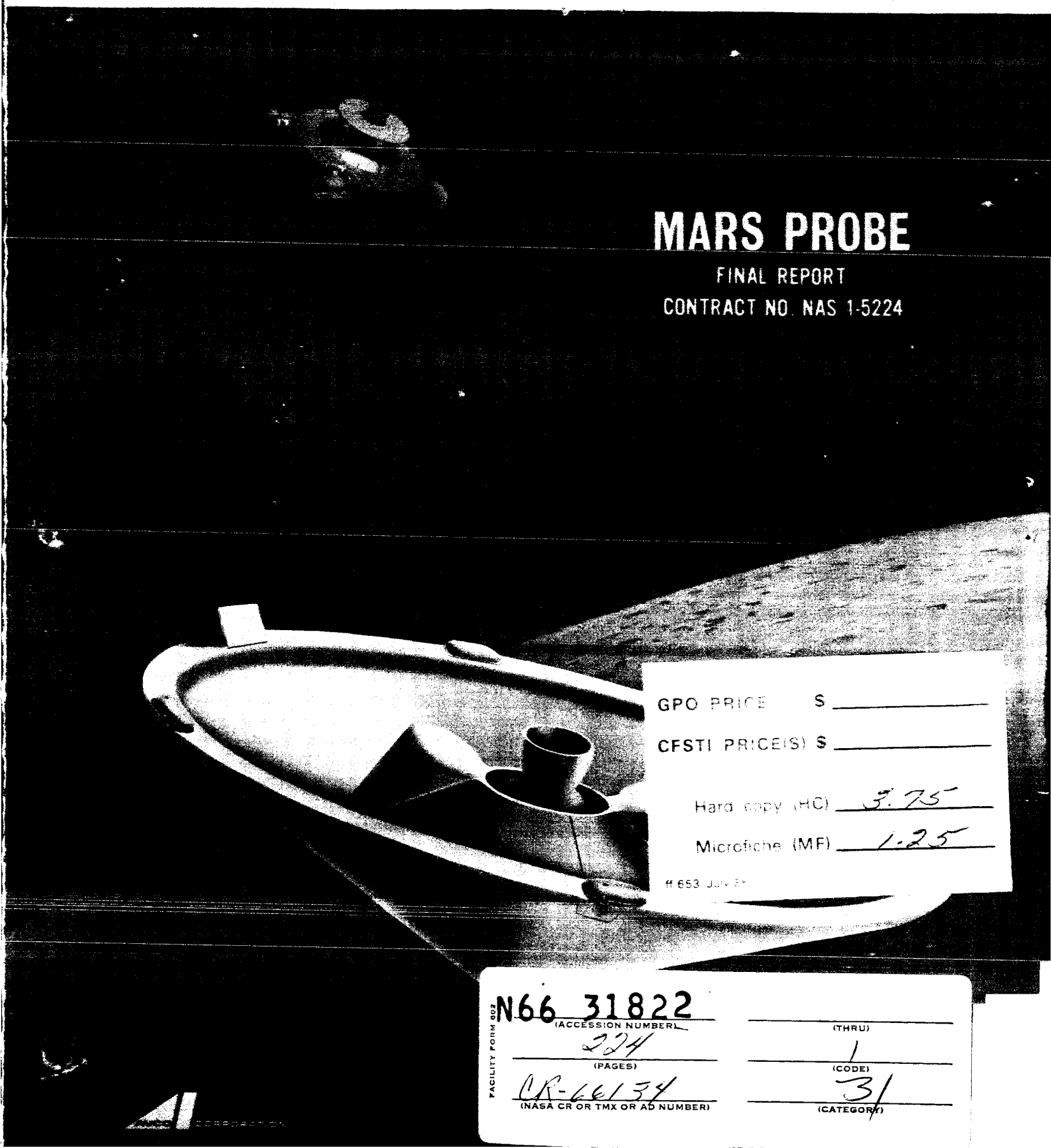

# MARS PROBE

FINAL REPORT

CONTRACT NO. NAS 1-5224


GPO PRICE $ _____

CFSTI PRICE(S) $ _____

Hard copy (HC) 3.75

Microfiche (MF) 1.25

ff 653 July 65

FACILITY FORM 602

N66 31822 (ACCESSION NUMBER)

(THRU)

224 (PAGES)

1 (CODE)

CR-66134 (NASA CR OR TMX OR AD NUMBER)

31 (CATEGORY)

## BOOK INDEX


VOLUME I SUMMARY

VOLUME II PROBE/LANDER, ENTRY FROM THE APPROACH TRAJECTORY

- Book 1 System Design
- Book 2 Mission and System Specifications

VOLUME III PROBE, ENTRY FROM ORBIT

- Book 1 System Design
- Book 2 Mission, System and Component Specifications
- Book 3 Development Test Programs

VOLUME IV STERILIZATION

VOLUME V SUBSYSTEM AND TECHNICAL ANALYSES

- Book 1 Trajectory Analysis
- Book 2 Aeromechanics and Thermal Control
- Book 3 Telecommunications, Radar Systems and Power
- Book 4 Instrumentation
- Book 5 Attitude Control and Propulsion
- Book 6 Mechanical Subsystems

NASA CR-66134

# COMPARATIVE STUDIES OF CONCEPTUAL DESIGN AND QUALIFICATION PROCEDURES FOR A MARS PROBE/LANDER

## FINAL REPORT

## VOLUME IV - STERILIZATION

Prepared by

SPACE SYSTEMS DIVISION
AVCO CORPORATION
Lowell, Massachusetts

AVSSD-0006-66-RR
Contract NAS 1-5224

11 May 1966

Prepared for

NATIONAL AERONAUTICS AND SPACE ADMINISTRATION
LANGLEY RESEARCH CENTER
LANGLEY STATION
Hampton, Virginia 23365

# PREFACE

The results of Mars Probe/Lander studies, conducted over a 10-month period for Langley Research Center, NASA, are presented in detail in this report. Under the original contract work statement, studies were directed toward a direct entry mission concept, consistent with the use of the Saturn IB-Centaur Launch Vehicle, wherein the landing capsule is separated from the spacecraft on the interplanetary approach trajectory, some 10 to 12 days before planet encounter. The primary objectives of this mission were atmospheric sampling by the probe/lander during entry and terrain and atmosphere physical composition measurement for a period of about 1 day after landing.

Studies for this mission were predicated on the assumption that the atmosphere of Mars could be described as being within the range specified by, NASA Mars Model Atmospheres 1, 2, 3 and a Terminal Descent Atmosphere of the document NASA TM-D2525. These models describe the surface pressure as being between 10 and 40 mb. For this surface pressure range a payload of moderate size can be landed on the planet's surface if the entry angle is restricted to be less than about 45 degrees.

Midway during the course of the study, it was discovered by Mariner IV that the pressure at the surface of the planet is in the 4 to 10 mb range, a range much lower than previously thought to be the case. The results of the study were re-examined at this point. It was found that retention of the direct entry mission mode would require much shallower entry angles to achieve the same payloads previously attained at the higher entry angles of the higher surface pressure model atmospheres. The achievement of shallow entry angles (on the order of 20 degrees), in turn, required sophisticated capsule terminal guidance, and a sizeable capsule propulsion system to apply a velocity correction close to the planet, after the final terminal navigation measurements.

Faced with these facts, NASA/LRC decided that the direct entry from the approach trajectory mission mode should be compared with the entry from orbit mode under the assumption that the Saturn 5 Launch Vehicle would be available. Entry of the flight capsule from orbit allows the shallow angle entry (together with low entry velocity) necessary to permit higher values of $M/C_DA$, and hence entry weight in the attenuated atmosphere.

It was also decided by LRC to eliminate the landing portion of the mission in favor of a descent payload having greater data-gathering capacity, including television and penetrometers. In both the direct entry and the entry from orbit cases, ballistic atmospheric retardation was the only retardation means considered as specifically required by the contract work statement.

Four months had elapsed at the time the study ground rules were changed. After this point the study continued for an additional five months, during which



PRECEDING PAGE BLANK NOT FILMED.

period a new design for the substantially changed conditions was evolved. For this design, qualification test programs for selected subsystems were studied. Sterilization studies were included in the program from the start and, based on the development of a fundamental approach to the sterilization problem, these efforts were expanded in the second half of the study.

The organization of this report reflects the circumstance that two essentially different mission modes were studied -- the first being the entry from the approach trajectory mission mode and the other being the entry from orbit mission mode -- from which two designs were evolved. The report organization is as follows:

Volume I, Summary, summarizes the entire study for both mission modes.

Volume II reports on the results of the first part of the study. This volume is titled Probe/Lander, Entry from the Approach Trajectory. It is divided into two books, Book 1 and Book 2. Book 1 is titled System Design and presents a discursive summary of the entry from the approach trajectory system as it had evolved up to the point where the mission mode was changed. Book 2, titled Mission and System Specifications, presents, in formal fashion, specifications for the system. It should be understood, however, that the study for this mission mode was not carried through to completion and many of the design selections are subject to further tradeoff analysis.

Volume III is composed of three books which summarize the results of the entry from orbit studies. Books 1 and 2 are organized in the same fashion as the books of Volume II, except that Book 2 of Volume III presents component specifications as well. Book 3 is titled Development Test Programs and presents, for selected subsystems, a discussion of technology status, test requirements and plans. This Book is intended to satisfy the study and reporting requirements concerning qualification studies, but the selected title is believed to describe more accurately the study emphasis desired by LRC.

Volume IV presents Sterilization results. This information is presented separately because of its potential utilization as a more fundamental reference document.

Volume V presents, in six separate books, Subsystem and Technical Analyses. In order (from Book 1 to Book 6) they are:

Trajectory Analysis
Aeromechanics and Thermal Control
Telecommunications, Radar Systems and Power
Instrumentation
Attitude Control and Propulsion
Mechanical Subsystems

Most of the books of Volume V are divided into separate discussions of the two mission modes. Table of Contents for each book clearly shows its organization.

CONTENTS


1.0 Introduction and Summary ..... 1

1.1 Basic Spacecraft Sterilization Philosophy ..... 1
1.2 Implications of the Sterilization Requirement ..... 3

1.2.1 Parts Qualification ..... 3
1.2.2 Subsystem Testing ..... 3
1.2.3 Heat Sterilization Techniques ..... 4
1.2.4 Surface Sterilization Techniques ..... 4
1.2.5 Assay Techniques ..... 4
1.2.6 Burden Deposition and Die-off Rates ..... 4
1.2.7 Manufacturing and Assembly Techniques ..... 4
1.2.8 Recontamination ..... 5
1.2.9 Checkout and Calibration Techniques ..... 5
1.2.10 Tradeoff Analyses ..... 5
1.2.11 Sterilization Control ..... 5

1.3 Areas of Emphasis in Study ..... 6
1.4 Results and Conclusions ..... 9

1.4.1 Basic Burden Factors ..... 9
1.4.2 Burden Estimates ..... 13
1.4.3 Burden Sensitivity ..... 21
1.4.4 Assay Requirements ..... 23
1.4.5 Terminal Sterilization ..... 25
1.4.6 Post-Sterilization Maintenance ..... 29
1.4.7 Recommended Additional Studies ..... 29

2.0 Factors Governing the Selection of a Sterilization Plan ..... 33

2.1 General Considerations ..... 33

2.1.1 Reliability ..... 33
2.1.2 Schedule ..... 33
2.1.3 Program Cost ..... 33
2.1.4 Methods and Controls ..... 34
2.1.5 The Physical Nature and Characteristics of the Design ..... 34
2.1.6 Analogy between Sterilization Assurance and Product Assurance ..... 34

2.2 Methods of Assembly of a Sterilizable Spacecraft ..... 35
2.3 Important Factors Bearing on Presterilization Burden Control ..... 36

CONTENTS (Cont'd)


2.3.1 System Physical Characteristics ..... 36
2.3.2 Contamination Factors ..... 39
2.3.3 The Role of Flight-Acceptance Tests in Spacecraft Decontamination ..... 39
2.3.4 Decontamination ..... 40

2.4 Terminal-Heat Sterilization Cycle ..... 40
2.5 Maintenance of Sterility after Terminal-Heat Sterilization ... 42

3.0 Biological Burden Estimates ..... 43

3.1 Burden Sources ..... 43

3.1.1 Initial Values ..... 43
3.1.2 Contamination Factors in the Assembly Process .... 45
3.1.3 Decontamination Factors in the Assembly Process .. 46

3.2 Techniques of Burden Estimates ..... 47
3.3 Implication of Assay Requirement ..... 50
3.4 Burden Estimate for the Probe Designed for Entry from Orbit (EFO) ..... 51
3.5 Burden Estimate for the Probe/Lander designed for Entry From the Approach Trajectory (EFAT) ..... 66

4.0 Biological Burden Control and Certification ..... 78

4.1 Methods of Assays ..... 78

4.1.1 Hardware Breakdown Techniques ..... 79
4.1.2 Recovery of Surface-Burden Samples ..... 81
4.1.3 Basic Assay Techniques ..... 83
4.1.4 Assay Procedures ..... 85
4.1.5 Assay Accuracies ..... 85

4.2 Number of Assays Required ..... 85
4.3 Burden Monitoring ..... 92
4.4 Documentation ..... 93

5.0 Terminal Sterilization ..... 98

5.1 Techniques of Heat Application ..... 98
5.2 Verification of Kill Effectiveness ..... 106

CONTENTS (Concl'd)


6.0 Sterility Maintenance ..... 108

6.1 Prelaunch Operations ..... 108

6.1.1 Storage and Shipping ..... 108
6.1.2 Post-sterilization Repair and Addition of Equipment .. 108
6.1.3 Instrument Calibration ..... 110

6.2 Launch and Cruise ..... 110
6.3 Canister Opening and Vehicle Deployment ..... 110
6.4 Sterilization Monitoring ..... 111

7.0 Training ..... 113

8.0 Outline of Sterilization and Implementation Plan for Probe (Designed for Entry from Orbit) ..... 115

8.1 System ..... 115
8.2 Factory Operations ..... 115
8.3 Field Operations ..... 117
8.4 Burden Control ..... 120
8.5 Facility, Time, and Manpower Requirements ..... 120

9.0 Outline of Sterilization and Implementation Plan for a Probe/Lander (Designed for Entry from the Approach Trajectory) ..... 122

9.1 System Description ..... 122
9.2 Basic Assembly/Test Cycle ..... 122
9.3 Facility Requirements ..... 127
9.4 Space, Manpower, and Time Requirements ..... 130

References ..... 133

Appendixes ..... A-1

A. Effects of the Sterilization Process on Materials and Components ..... A-3
B. Burden Calculation Techniques ..... B-1

## ILLUSTRATIONS


| | | | |
|---|---|---|---|
| Figure | 1 | Considerations in Selection of Sterilization Plan | 7 |
| | 2 | Computer Program Schematic Diagram | 14 |
| | 3 | Burden as a Function of Activities | 19 |
| | 4 | Contamination Sensitivity Nomogram | 22 |
| | 5 | Number of Assays Required to Demonstrate that the Assayed Burden is Below $10^8$ Organisms with a Confidence of 99.99% | 24 |
| | 6 | Terminal Sterilization Configuration | 27 |
| | 7 | Post-Sterilization Maintenance | 30 |
| | 8 | Electronic Integrated Circuit | 38 |
| | 9 | Computer Program | 48 |
| | 10 | Burden as a Function of Activities | 55 |
| | 11 | Contamination Sensitivity Nomogram - No Process Controls | 56 |
| | 12 | Contamination Sensitivity Nomogram - ETO Control Only | 57 |
| | 13 | Contamination Sensitivity Nomogram - ETO and Clean-Room Controls | 59 |
| | 14 | Contamination Sensitivity Nomogram - FA Control Only | 60 |
| | 15 | Contamination Sensitivity Nomogram - FA and ETO Controls | 61 |
| | 16 | Contamination Sensitivity Nomogram - All Controls Applied | 63 |
| | 17 | Contamination Sensitivity Nomogram - No Process Controls and Internal Burden Reduced | 64 |
| | 18 | Contamination Sensitivity Nomogram - No Process Controls and Internal Burden Increased | 65 |




PRECEDING PAGE BLANK NOT FILMED.

ILLUSTRATIONS (Cont'd)


Figure 19 Initial Flight Capsule Burden Estimates ..... 68

20 Initial Flight Capsule Burden Estimates - Sterilization Canister ..... 69

21 Initial Flight Capsule Burden Estimates - External Payload ..... 70

22 Initial Flight Capsule Burden Estimates - Impact Attenuator..... 71

23 Initial Flight Capsule Burden Estimates - Flotation.... 72

24 Initial Flight Capsule Burden Estimates - Landed Payload..... 73

25 Initial Flight Capsule Burden Estimates - Shell Assembly ..... 74

26 Number of Assays Required to Demonstrate that the Assayed Burden is Below $10^8$ Organisms with a Confidence of 99.99% ..... 91

27 Assay Data Recording Form ..... 95

28 Assay Data Recording Form ..... 96

29 Summary Assay Data Recording Form ..... 97

30 Thermal Model of a Typical Mars Capsule ..... 99

31 Effect of Internal Heating on Time to Reach Sterilization Temperature ..... 100

32 Effect of External Heating Rates ..... 102

33 Effect of Variation of Emissivity of Internal Surface on Internal Heat Transfer..... 103

34 Typical Cooldown History..... 104

35 Comparison of Component Response for Various Heating Techniques ..... 105

ILLUSTRATIONS (Concl'd)


Figure 36 Probe-Entry from Orbit - Flight Capsule Launch Configuration ..... 116

37 Probe-Entry from Orbit - Factory-to-Launch Flow Sequence ..... 118

38 Blunt Cone--Oblate Spheroid Launch Configuration.... 123

39 Probe/Lander-Entry from the Approach Trajectory - Factory-to-Launch Flow Sequence..... 124

40 Probe/Lander-Entry from the Approach Trajectory - Suspended Capsule Assembly and Test - Block Diagram ..... 125

B-1 Probe/Lander-Entry from Approach Trajectory - Block Diagram ..... B-2

B-2 Probe/Lander-Entry from Approach Trajectory - Part Areas and Burden..... B-6

B-3 Probe/Lander-Entry from Approach Trajectory - Factory Area Assembly Calculation ..... B-7

B-4 Probe/Lander-Entry from Approach Trajectory - Class 100 Clean-Room Assembly Calculations ..... B-8

B-5 Probe-Entry from Orbit - Assembly Flow Chart ..... B-10

B-6 Probe-Entry from Orbit-Level, and Control Point Definition ..... B-14

B-7 Probe-Entry from Orbit - Flight Capsule Entry Configuration..... B-20

B-8 Probe/Lander-Entry from Approach Trajectory - Inboard Profile..... B-26

## TABLES


| | | | |
|---|---|---|---|
| Table | I | Part and Material Internal Burden Ranges | 10 |
| | II | Biological Burden Contamination and Decontamination Factors | 11 |
| | III | Physical Characteristics of Capsules | 15 |
| | IV | Computer Program Inputs | 16 |
| | V | Initial Burden Estimate Probe/Lander EFAT | 17 |
| | VI | Burden Sensitivity to Contaminating Factor Variations | 21 |
| | VII | Reported Assay Recoveries | 25 |
| | VIII | Overall Assay Accuracies | 26 |
| | IX | Acceptable Terminal Sterilization Cycles | 41 |
| | X | Part and Material Burden Ranges | 44 |
| | XI | Burden Sensitivity Analysis Cases | 52 |
| | XII | Burden Sensitivity Analysis Process Variations | 53 |
| | XIII | Initial Flight Capsule Burden Estimates Summary | 67 |
| | XIV | Estimate of Added Burden if Suspended Payload is Assembled in a Non-Clean-Room | 75 |
| | XV | Burden Impact of Design Changes (values in thousands of microorganisms) | 76 |
| | XVI | Assay Procedures | 86 |
| | XVII | Assay Recoveries | 87 |
| | XVIII | Overall Assay Accuracies | 88 |
| | XIX | Values of "t" for $\gamma = 0.9999$ | 90 |

TABLES (Cont'd)


Table XX Factory-to-Launch Flow Sequence for Probe ..... 119

XXI Facility and Manpower Summary for Probe ..... 120

XXII Facility Requirements for Probe ..... 121

XXIII Manpower Requirements for Probe ..... 121

XXIV Approach Trajectory -- Assembly and Test Sequence for Probe/Lander ..... 126

XXV Facility and Manpower Summary for Probe Lander ..... 128

XXVI Special Facilities ..... 129

XXVII Space Requirements for Probe/Lander ..... 130

XXVIII Manpower Requirements for Probe/Lander ..... 130

XXIX Field Assembly Time for Probe/Lander ..... 131

A-1 Mechanical Properties of Materials Exposed to Sterilant Gas and Heat Cycling ..... A-5

A-2 Heat-Shield Material Evaluation Summary ..... A-9

B-1 Assumptions for Manual Burden Estimate ..... B-3

B-2 Probe/Lander -- Entry from Approach Trajectory -- Part and Material Burden Ranges ..... B-4

B-3 Probe -- Entry from Orbit -- Computer Program Inputs ..... B-12

B-4 Inputs for Parts and Components ..... B-13

B-5 Inputs for Electronic Parts ..... B-15

B-6 Parameters Defining Assay Requirements ..... B-15

TABLES (Concl'd)


Table B-7 Parameters Defining Assay Requirements ..... B-16

B-8 Computer Program Output Format ..... B-18

B-9 Flight Capsule Weight Summary for Probe (EFO Case)... B-22

B-10 Component Physical Characteristics of Probe (EFO Case) ..... B-23

B-11 Electronics Parts Count for Probe (EFO Case) ..... B-25

B-12 Weight Summary for Probe/Lander (EFAT Case)..... B-27

B-13 Electronics Parts Summary for Probe/Lander (EFAT Case) ..... B-28

B-14 Electronics Parts Configurations of Probe/Lander (EFAT Case) ..... B-29

B-15 Component Physical Characteristics for Probe/Lander (EFAT Case) ..... B-30

## GLOSSARY

| | |
|---|---|
| Assay | Determination of the number of viable organisms on or in hardware elements by recovery and culture methods. |
| Assembly, Handling and Shipping Equipment (AHSE) | Lifting, holding and positioning fixtures and other items required in the assembly, transportation, and testing of the Flight Capsule and its OSE (in various stages of assembly). |
| Clean Room | An enclosed area wherein the particular matter in the air, as well as the temperature, humidity and pressure of the air are controlled. In a Class 100 clean room, which is the type considered herein, the particle count does not exceed a total of 100 particles per cubic foot, 0.5 microns in size and larger. |
| Component | An assembly of parts mounted together to perform a design function ( a "black box"). |
| Decontamination | The reduction of the biological burden prior to final sterilization by the use of dry heat or cleaning with ethylene oxide. |
| Die-Off | Reduction of microorganisms due to natural causes, expressed as a percentage of total population present. |
| Electrostatic Factor | A number used to indicate the increase in burden accumulation due to the electrostatic attraction developed by plastic (non-conducting) surfaces compared with the accumulation on a normal conducting surface. |
| Entry Shell | A honeycomb structure having the surface exposed to entry heating, protected by a coating of ablative material. This structure is used to support the Suspended Capsule and Attitude Control and Spin-Despin systems during vehicle entry into the planetary atmosphere. |
| Entry Vehicle | That portion of the Flight Capsule containing the Entry Shell, Suspended Capsule, Attitude Control and Spin-Despin Systems. |
| Ethylene Oxide (ETO) Decontamination | The reduction of microbial burden (on exposed surfaces) through the use of an appropriate gaseous mixture, of which one ingredient is ethylene oxide. |

| | |
|---|---|
| Facilities | Buildings that house test areas and chambers, manufacturing and assembly equipments, and storage areas, as well as engineering and administrative personnel. |
| Factory Support Equipment (FSE) | Equipment required to fabricate, assembly and check-out the Flight Capsule and its support equipment in the plant. |
| Fallout | The settling of microorganisms on a surface, expressed in various units, such as organisms per square inch per day or per square foot per hour. |
| Hepa Filters | High efficiency particulate air filter characterized by having particle efficiencies better than 99.97 percent for 0.3 micron particles as determined by MIL-STD-282, Dioctyl Phthalate tests. |
| Flight Acceptance Tests | Tests designed to ascertain that an item of hardware meets specific environments and conditions which confirm that the unit is flightworthy. |
| Flight Capsule (Probe) | A vehicle containing an instrumented entry vehicle mounted in a pressurized sterilization canister having provisions for attachment to a spacecraft. |
| Flight Capsule to Flight Spacecraft Adapter | Mechanical mounting provision of Flight Capsule and/or its sterilization canister to the spacecraft. |
| Internal Burden | Viable organisms confined within the material making up a part. |
| Laminar Flow Clean-Room | An enclosed area in which the entire body of air moves with uniform velocity along parallel flow lines, with a minimum of eddies, and with the incoming air contamination controlled by use of H filters. |
| Launch Window | The duration of time each Earth day, when space vehicle launch is practical to achieve desired planetary vehicle transfer orbit orientation and characteristics depending on mission objectives and launch-vehicle constraints. |

## GLOSSARY (Cont'd)

| | |
|---|---|
| Microbial Burden, Biological Burden or Burden | The quantity of microorganisms of all types on or in equipment. |
| Module (or Subassembly) | Collection of components into a discrete assembly, such as the payload assembly, or a significant part of it, or the complete sterilization canister. |
| Occluded Burden | The viable organisms trapped between mating surfaces, or otherwise contained, so that they are not accessible to surface cleaning techniques. |
| Operational Support Equipment (OSE) | Equipment and facilities required to support assembly, checkout, acceptance testing, sterilization and servicing of subsystems or a complete Flight Capsule. |
| Particle Size | The apparent maximum linear dimension or diameter of the particle. |
| Planetary Vehicle | The Planetary Vehicle (PV) is defined as the composite Flight Spacecraft and Flight Capsule integrally attached and operated up to separation in the vicinity of the selected planet. |
| Quality Assurance | Includes the plans, activities and associated controls which contribute to the ultimate quality of the system hardware and parts throughout the design, procurement, manufacturing, packaging, storage, shipping, and field operations. |
| Separated Vehicle | That portion of the Flight Capsule remaining after separation from Sterilization Canister, containing the Entry Vehicle and propulsion system. |
| Space System | A system consisting of launch vehicle, spacecraft, ground support equipment, and test hardware, used in launching, operating, and maintaining a space vehicle in space. |
| Space Vehicle | The Space Vehicle (SV) is the combined Launch Vehicle and Planetary Vehicle or Vehicles which physically leave the launch pad in the conduct of the mission. |

| | |
|---|---|
| Sterility | The absence of viable organisms. |
| Sterilization | The killing of microorganisms on and in a Flight Capsule (through the use of dry heat, unless specifically stated otherwise). |
| Sterilization Canister | A pressurized container which encapsulates the Entry Vehicle to maintain biological isolation. |
| Subassembly | See Module. |
| Surface Burden | Viable organisms existing on the exterior, or exposed surface of a part. |
| Suspended Capsule | That portion of the Entry Vehicle which when separated from the Entry Shell lands or impacts on the Planet surface. It contains a descent retardation (parachute) system, an impact attenutation system (in the case of a soft-landed capsule), and the required acquisition and transmission systems to complete the functions of the Capsule System mission. |
| System | One of the principal functioning entities comprising the project hardware, and the related operational services within a project or flight mission. |
| Systems Integration | The process by which the systems of a project (for example, the launch vehicle, the spacecraft, and its supporting ground equipment and operational procedures) are made compatible in order to achieve the purpose of the project or the given flight mission. |
| Van der Waals Forces | The relatively weak forces operative between neutral atoms or molecules, arising from the interaction of dipoles or stray electric fields. |

## ACKNOWLEDGMENT

The conduct of the study and technical preparation of this report involved the participation and close coordination of many people, all of whose contributions were important to the end results.

It is impractical to single out each individual, but the major contributors to the study, reflected in the material presented in this Volume, are as follows:

### Responsible Manager

W. J. Schafer

### Major Contributors

| Name | Sections |
|---|---|
| E. Botan | 3, 4 |
| G. Kropa | 5 |
| J. Lopez | 6, 8, 9; Appendix A, B |
| S. Marvin | Appendix B |
| T. Rider | 2, 3, 4; Appendix B |
| B. Wasdyke | 6, 7, 8; Appendix B |
| Wilmot Castle Company | 3.1, 4.1, 9.3 |

### Approved by

| Signature | Title |
|---|---|
| W. J. Schafer | Project Manager<br>Advanced Space Systems<br>Directorate |

# 1.0 INTRODUCTION AND SUMMARY

## 1.1 BASIC SPACECRAFT STERILIZATION PHILOSOPHY

The basic requirement for spacecraft sterilization has been outlined by Dr. Homer E. Newell, Associate Administrator for Space Science and Applications, National Aeronautics and Space Administration:*

"Space exploration has posed the likelihood of the transfer of living forms between planets. An unsterile planetary-landing capsule with an array of scientific instruments could contaminate our experiments for the detection of extraterrestrial life and thus confuse this scientific issue. Further analysis of the problem shows that the advent of terrestrial life, particularly microorganisms, to a previously barren but hospitable planet or to one that has a slowly evolving form of primitive life could result in the growth of the implant with consequences that might affect the total character of the planet being explored. The sterilization of unmanned planetary-landing spacecraft will protect future scientific investigations of the planets and aid in the determination of the infective potential of any extraterrestrial life to the Earth's ecology."

Based on the anticipated duration of this planetary quarantine and the estimated number of landings in this time period, the policy has been established that the probability of any one lander depositing a viable organism on the planetary surface be less than 0.0001. The general approach to the implementation of this policy was outlined by Dr. Newell in the same statement:

"Flight trials by both the United States and the Soviet Union have verified theoretical and ground-based data that microorganisms would survive exposure to deep space conditions. Spacecraft cannot be sterilized by low temperatures, vacuum, ultraviolet light, or solar radiation. The two sterilants that will kill organisms on surfaces as well as in the interior of solids are dry heat and ionizing radiation. Although each of these agents are equally damaging to spacecraft parts, dry heat is inexpensive and easier to handle than ionizing radiation."

"The spacecraft sterilization program is based on four major steps:

1. Development of spacecraft materials, piece parts, components, and subassemblies that will yield a total landing capsule capable of tolerating dry heat sterilization at a cycle [i.e., at a temperature] between 105 and 160°C.

*In a statement before the Subcommittee on Space Science and Applications, of the House of Representatives, February, 1966.

2. Control of biological loading limits during capsule assembly so that not more than $10^8$ microorganisms will be present on the capsule before terminal sterilization.

3. Encapsulation of the landing capsule in a biocanister to be followed by terminal sterilization in an inert atmosphere at 135°C for 22 hours [or at 125°C for 53 hours] or any other specified cycle between 105 and 160°C [which reduces the biological burden by a factor of $10^{12}$].

4. Protection of the sterilized capsule during launch operations and the prevention of recontamination during ejection of the flight capsule from the spacecraft bus or orbiter.

"The first priority in this sterilization development program is the development of heat-tolerant materials and parts that will not vary, in resistance to heat, from mission to mission. Many present off-the-shelf items used in spacecraft manufacture cannot tolerate the dry heat treatments required for sterilization. In general, however, component quality and reliability are being upgraded so that they will withstand dry heat sterilization.

"The control of the number and species of microorganisms on or in the spacecraft during assembly must be accomplished if a nondestructive sterilization cycle is to be effective, for the larger the initial population the longer the heat must be applied to reduce the population to zero. A systems analysis of the problem shows that many of the techniques used by aerospace engineers to increase the reliability of sterilized flight hardware also reduce or destroy the microbial contamination in or on that hardware. The biologist is now investigating the extent of this microbial destruction so that the need for elaborate facilities for control of microbial contamination can be held to a minimum. It will still be necessary to control the number of microorganisms in the final assembly environment immediately prior to terminal dry heat sterilization.

"The type of final assembly environment that will meet biological specifications is called a downward laminar flow clean room. Because the number of microorganisms in these clean rooms can be limited, the fully assembled spacecraft will contain fewer microorganisms that can be killed by the terminal heat sterilization cycle.

"The heating cycle will be accomplished in an oven containing an inert gas [dry nitrogen]. If the size of the spacecraft prevents the penetration of the heat into the center of the load [or if certain instruments cannot withstand heat sterilization and must be sterilized by another technique], it may be necessary to heat large portions of the spacecraft in an oven equipped with tunnel suits. After the oven cools, technicians can enter the suits at the end of the tunnel and perform final assembly operations before enclosing the spacecraft in its canister.

"A hermetically sealed canister will protect the sterile spacecraft from recontamination during the period before launch and its exit through the atmosphere. After reaching outer space the canister would be opened by explosive devices, the landing capsule would be propelled outward, and the canister would be deflected from the planetary trajectory."

## 1.2 IMPLICATIONS OF THE STERILIZATION REQUIREMENT

The implementation of such a program for a complex spacecraft poses a number of problems in the areas of engineering, biology, manufacturing/assembly, and program management*. Some of the more significant of these are discussed below.

### 1.2.1 Parts Qualification

Very few of the types of parts required to assemble a landing capsule have been qualified to the required sterilization environment(s), -dry heat of the specified levels and durations and, where applicable, decontamination with ethylene oxide. A parts qualification program is now in progress under the sponsorship of the Jet Propulsion Laboratory to qualify the required parts and components and, in some instances where present parts cannot withstand these environments, develop parts which can be qualified. This work will ultimately lead to a Qualified Parts List for landing capsule applications.

### 1.2.2 Subsystem Testing

In addition to parts and components, subsystems comprised of these elements have to be qualified eventually to the sterilization environment. Long before that, however, prototypical subsystems will have to be tested under simulated sterilization conditions to identify any adverse interactions of the individual constituents under these environments. In a mechanical system, for instance, thermo-structural interaction may occur in an assembly which would not exist in the individual parts; similarly, outgassing in one part, which may not degrade the performance of that part, may damage another part if the released gas is corrosive. These tests should cover not only the subsystems of the capsule itself, but also the sterilization canister, which is subjected to the same sterilization process. This work will result in a backlog of experience which may serve as the basis of a set of design guidelines and criteria for sterilizable subsystems.

*Many of these problems have been treated in some depth in the NASA National Conference on Spacecraft Sterilization Technology at the California Institute of Technology, November 16/18, 1965, proceedings of which are to be published shortly.

### 1.2.3 Heat Sterilization Techniques

Although the basic burden-reduction rates at various temperatures have been established, certain areas, such as the kill rate of certain resistant organisms, may require further work. Additionally, in the engineering area, techniques have to be developed for subjecting the components in the interior of a capsule to the required cycle without subjecting the exterior to excessively high temperatures for excessively long periods of time. This may require the use of internal heaters and the development of design guidelines for the incorporation of the required degree of thermal control during the sterilization process. Alternatively, it may require the further development of tunnel-suit and other sterile-assembly techniques.

### 1.2.4 Surface Sterilization Techniques

The basic principles of surface sterilization with ethylene oxide have been established, but detailed process specifications have yet to be written in some areas to insure that the process results in the required degree of decontamination with minimum risk to the parts undergoing the process and the personnel performing it.

### 1.2.5 Assay Techniques

Much work has been done on various assay techniques suitable for the verification of the kinds of decontamination and sterilization under consideration here. Essentially, this work permits the selection of the most appropriate techniques. Additional work, however, will have to be done on the selected techniques to facilitate their reliable use in the relatively large number of routine assays that will have to be used in a spacecraft sterilization program.

### 1.2.6 Burden Deposition and Die-Off Rates

Two factors which must be known in setting up a spacecraft-sterilization-control program are the burden deposition and the die-off rate. The burden deposition depends on the area of a given part, the fall-out rate and the degree of retention of particles on the surface of the part; the latter is governed by electrostatic effects, which presently are not too well established. Some work has been done on the rate of die-off of organisms deposited on a surface, but additional work is required in this area.

### 1.2.7 Manufacturing and Assembly Techniques

A great deal of work has been done, is now in process, and remains to be done on the various techniques of manufacturing and assembling an

ultimately sterile spacecraft. This includes work on sterile assembly techniques which may not be required in the initial assembly, but which might be indispensable in some instances for the repair, replacement, or rework of parts found to be defective in a post-sterilization checkout, and which also might be required for the insertion of separately sterilized instruments into the capsule after the latter has been sterilized, if it turns out to be necessary to use this concept.

### 1.2.8 Recontamination

Recontamination of parts which are decontaminated during the manufacture/assembly process can take place in subsequent stages of assembly, and is then subject to the burden-deposition and die-off factors discussed previously. However, an additional possibility of recontamination exists after the capsule is released from the sterilization container upon approach to the planet. The areas of concern here are the impingement on the capsule of parts of the separation system or of the gases used for the attitude control or retropropulsion of the flight spacecraft.

### 1.2.9 Checkout and Calibration Techniques

Techniques have to be devised for checking out the several subsystems of the capsule during the assembly process, prior to launching, and in-flight, without interfering with the decontamination and sterilization process. Factors relevant to sterilization, such as internal temperatures and pressures, will have to be monitored as part of the check-out process. An especially complex problem is the calibration of the several scientific instruments included in the payload after the capsule has been inserted in a sterilization canister and sterilized. Any sensors built into the capsule must, of course, be qualified to the sterilization environments.

### 1.2.10 Tradeoff Analyses

In many areas of the design, the manufacturing process, the decontamination/sterilization process, and the flight-qualification and acceptance processes, there are alternative means of achieving a given objective. These alternatives have to be evaluated on the basis of considerations of size, weight, reliability, risk, and economics and before these factors can be traded off against each other, the required information must be available to make such an analysis meaningful.

### 1.2.11 Sterilization Control

To be sure that the sterilization requirements are met, a sterilization-control program must be instituted. Such a program consists basically of an apportionment of the biological burden to the various parts and

subsystems, conduct of the required assays, and monitoring of the final sterilization process as well as any parameters (such as the fall-out rate during the manufacturing/assembly process) which affect the pre-sterilization burden. These primary activities are supported by others, such as participation of sterilization-control personnel in design reviews (for compliance with Qualified Parts List and with the established design criteria and guidelines), and documentation of the findings. Such a program leads ultimately to a certification of the spacecraft as sterile within the established requirements.

## 1.3 AREAS OF EMPHASIS IN STUDY

The sterilization investigations conducted as part of the study of conceptual designs and qualification procedures for a Mars probe/lander, have addressed themselves primarily to the definition of a plan for an integrated sterilization control and management program (see Figure 1). The results of these studies are described in this volume. The remaining sterilization efforts have been in the nature of support to the design studies and show up in the results discussed in the other volumes, but will not be discussed any further in this volume (except for the material presented in Appendix A).

The basic objective of a sterilization program is to assure sterility ( as defined herein) with minimum impact on system reliability and performance, and on program schedule and cost. Such a program has much in common with a reliability program and a quality-assurance program. Many of the lessons learned from these programs can be applied to sterilization. For instance, most of the progress in reliability engineering has come not from a better understanding of the physical causes and mechanisms of failure, but from learning to live without this knowledge by relying on:

1. qualification programs for high-reliability parts

2. good design practice

3. extensive test programs

4. thorough quality-control programs

5. program-management techniques which effectively tie these activities together (through quick-reaction failure-reporting/analysis/control systems, etc.) and which, while being based on the existing state of the art in relevent areas at any given time, provide for incorporation of new knowledge as it is generated.

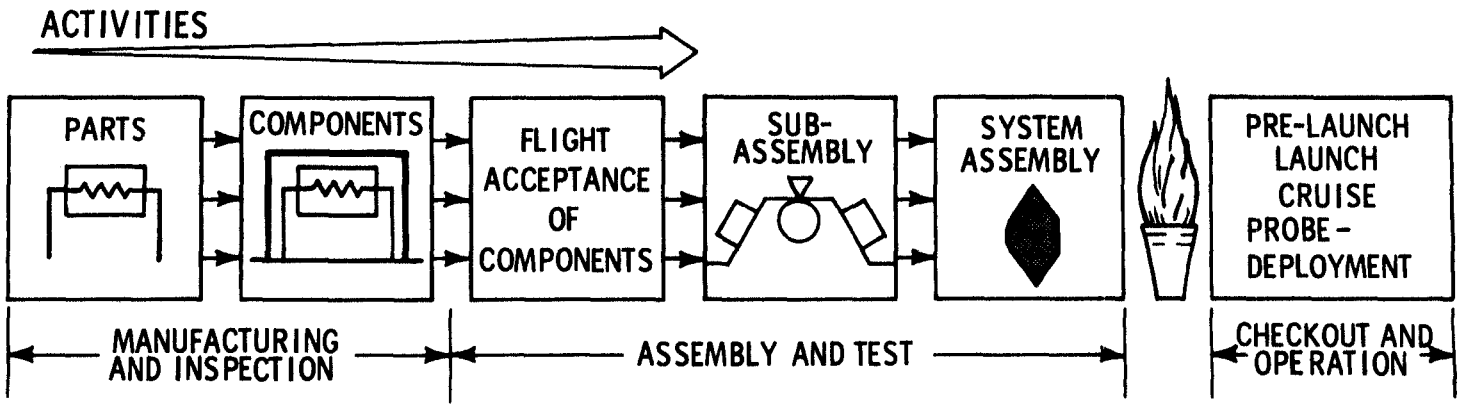


- CAUSES OF CONTAMINATION
- DECONTAMINATION FACTORS
- SYSTEM PHYSICAL CHARACTERISTICS
- METHODS OF BIOLOGICAL BURDEN ANALYSIS
- BURDEN CONTROL AND CERTIFICATION METHODS
- PROOFS OF STERILIZATION
- REPAIR
- STERILIZATION MAINTENANCE

Logistics • Economics • Safety • Sterility Risk • Performance Risk

760131P

Figure 1 CONSIDERATIONS IN SELECTION OF STERILIZATION PLAN

Similarly, a sterilization program can be set up in a directly analogous fashion, despite the fact that present knowledge is deficient in many of the areas discussed in the preceding section; it has to be based on existing knowledge (some of which is summarized herein) while providing for modification in the light of subsequently generated new knowledge.

The basic considerations in defining such a plan are outlined in Section 2.0. The design and manufacturing/assembly factors relevant to sterilization control are discussed in paragraph 2.1 and 2.2, respectively; the basic elements of burden control are defined in paragraph 2.3; sterilization and the maintenance of sterility subsequent to sterilization are discussed in paragraphs 2.4 and 2.5.

The techniques of performing biological burden estimates are presented in Section 3.0. The sources of contamination and decontamination are discussed in paragraph 3.1. Techniques for performing burden estimates are outlined in paragraph 3.2, and some of the complications of the assay requirement on burden estimates are indicated in paragraph 3.3. Estimates of the burden at various stages of assembly of the probe designed for entry from orbit (EFO) and the probe/lander designed for entry from approach trajectory (EFAT) are presented in paragraphs 3.4 and 3.5 respectively. Also discussed in these sections are the implications of changes in various system and program parameters (i.e., techniques of handling, decontamination and assembly) on the burden, and the sensitivity of the results to the assumptions made concerning some of these parameters (e.g., die-off rates).

The problems involved in burden monitoring are discussed in Section 4.0. The types and number of assays required are described in paragraphs 4.1 and 4.2; the general monitoring problems are outlined in paragraph 4.3; and the documentation aspects of the problem are discussed briefly in paragraph 4.4.

The sterilization-control problems during and after terminal sterilization are outlined in Sections 5.0 and 6.0. Techniques of heat application are described in paragraph 5.1, and verification of kill effectiveness is discussed in paragraph 5.2 Sterility maintenance during the pre-launch, launch/cruise, and vehicle-deployment phases is discussed in paragraphs 6.1, 6.2, and 6.3 respectively, and approaches to sterilization monitoring are outlined in paragraph 6.4.

An outline of training problems brought about by the sterilization requirement is given in Section 7.0.

The specific implementation plans for the two systems are presented in Sections 8.0 and 9.0, respectively. They spell out the activities that have to be undertaken and the time, manpower, and facilities needed to comply with the sterilization requirement, and reflect the general considerations presented in the remainder of this volume.

In support of the conceptual design studies, a brief survey was made of the effects of dry-heat sterilization on capsule materials and components. The results of the survey are summarized in Appendix A of this volume. Appendix B contains some additional information relevant to burden estimates.

## 1.4 RESULTS AND CONCLUSIONS

### 1.4.1 Basic Burden Factors

The biological burden on a spacecraft prior to sterilization can be considered to consist of two parts, the initial internal burden of the constituent materials and parts, and the burden added or subtracted by the handling, assembly and decontamination processes.

The range of internal burdens of representative capsule parts and materials is given in Table I. In general, they range from essentially 0 to 100,000 microorganisms, depending on the particular manufacturing process involved and the nature of the acceptance-test procedures employed. Thus, metallic structural components and heat shield elements, for instance, experience such high temperatures for prolonged periods of time during their manufacturing processes that they are internally sterile. Similarly, some high-reliability electronic components, such as transistors, are burned in and stabilized for long periods of time at temperatures higher than those encountered in the internal sterilization cycle and, as a result, are essentially sterile internally. On the other hand, some parts, such as transformers, are normally manufactured under conditions which result in very high biological loadings.

The contaminating and decontaminating factors associated with the handling, assembly/checkout flight-acceptance test and decontamination processes are shown in Table II.

Experiments have shown that microbial fallout in existing aerospace assembly and test facilities is on the order of 30 to 50 organisms/in$^2$/day depending on the number of workers present and the degree of worker activity. The high values shown in Table II for normal fallout are extremes that may be present in low-quality facilities, with poor environmental controls and with a great deal of particle generation by machining and grinding processes. Other tests in bio-clean facilities (high-efficiency filtered, vertical laminar-down-flow clean-rooms, per Federal Specification 209, Class 100) provide an improvement over normal fallout conditions of at least two orders of magnitude.

The burden attributable to handling depends on the number of individual hand contacts; in a bio-clean room, if proper clothes and gloves are worn, it will be nearly zero, but a conservative value two orders of magnitude below that for normal conditions is assumed in burden estimate calculations.

The burden on plastic surfaces may be magnified manyfold above that of normal fallout if they are electrostatically charged. Accurate values for this factor are not available, and estimates vary widely. Experiments

## TABLE I

## PART AND MATERIAL INTERNAL BURDEN RANGES

| Type | Estimated Internal Burden Range |
|---|---|
| Balsa wood | 1-10/in.$^3$ |
| Battery cell | 0 |
| Capacitor | 10-1000 |
| Coaxial cable | 0-100/ft. |
| Connector | 100-10000 |
| Crystal | 0-10 |
| Diode | 0 |
| Duplexer | 0 |
| Evacuation bellows | 0 |
| Explosive | 1000/gm |
| Explosive trains | 0-200/ft. |
| Fiberglass | 0 |
| Foam | 1/ml |
| G-M tube | 0 |
| Inductor | 1000-10,000 |
| Magnetic core | 0 |
| Magnetron | 0-10 |
| Metal | 0 |
| Nylon, Dacron | 0 |
| Optical system | 10-100 |
| PbS detector | 0 |
| Photomultube | 0 |
| Relay | 100-1000 |
| Resistor | 0-10 |
| Silicone int'd circuit | 0-10 |
| Silicone oil | 1/ml |
| Silicone rubber | 0 |
| Teflon insulation | 0 |
| Thermal control | 0 |
| Transformer | 10,000-100,000 |
| Transistor | 0 |
| TWT | 0 |

## TABLE II

## BIOLOGICAL BURDEN CONTAMINATION AND DECONTAMINATION FACTORS

| Contamination Factors | Consensus Value |
|---|---|
| Fallout on surfaces | |
| Normal facilities | 32 - 128 org/in.$^2$/day |
| Bio-clean facilities | 0.32 - 1.28 org/in.$^2$/day |
| Handling | |
| Normal facilities | 1900 org/in.$^2$ of contacted surface |
| Bio-clean facilities | 19 org/in.$^2$ of contacted surface |
| Electrostatic factor | 1 - 10 |
| **Decontamination Factors** | **Consensus Value** |
| ETO effectiveness | 4D ($10^{-4}$) |
| Flight acceptance heat test effect | 12D ($10^{-12}$) |
| Die-off | |
| Normal facilities | 30 - 99 percent |
| Bio-clean facilities | 30 - 99 percent |

under artificially severe conditions have reported results as high as 13, but 5 appears to be a conservative value under realistic conditions.

The effectiveness of ETO as a surface decontamination process has been substantiated by experiment. However, ETO cleaning will not reach and decontaminate occluded capsule surfaces nor the interiors of sealed components. The decision of whether or not to seal a component against ETO penetration involves a tradeoff between the relative burden contributions and effects on system reliability.

Flight acceptance tests are conducted on each item of hardware that is to go into a flight version of the flight capsule in order to eliminate potentially defective components and to confirm that the unit is flightworthy. These tests involve exposure to environments at least as severe as those which are to be encountered in the mission, and are generally conducted in the order in which the environments are actually experienced in the flight. For a planetary landing capsule, these tests should include heat-cycle tests and ETO-exposure tests at the beginning of the flight-acceptance cycle.

Exposure to sterilization temperature conditions should be first in the flight-acceptance sequence, and the heat cycle should be equal to or higher than the terminal sterilization cycle. This will obviously result in sterile or near-sterile component interiors, and if the components are sealed, the interiors will remain in the sterile or near-sterile condition throughout the remainder of assembly. To minimize reliability and performance degradation, the flight-acceptance and the terminal-sterilization heat cycles (specifically, the temperature and duration of each) should be optimized simultaneously. This optimization is as important to sterility maintenance as it is to performance, as it will also reduce post-sterilization repair requirements and, consequently, recontamination risk. Flight acceptance tests should also be performed for susceptibility to ETO exposure; these tests could be conducted after the flight acceptance tests for the heating environment, if it is desired to eliminate early those elements failing the heat testing, thereby reducing the number of elements requiring subsequent testing.

Biological organisms on or in aerospace components (i.e., under nonnutritive conditions) tend to die off gradually from natural causes. The extent of die-off depends on the time and the rate, and the latter depends somewhat on the nature of the surface as well as the temperature and humidity of the environment, i.e., the season and geographical location. The die-off rate is typically in the order of 1 percent a day, which is equivalent to about 30 percent a month and 99 percent over the period of a year.

### 1.4.2 Burden Estimates

The physical characteristics which are of significance to presterilization burden loadings are summarized in Table III for the two capsules designed in this study for the entry-from-orbit (EFO) and entry-from-approach-trajectory (EFAT) cases, with their different requirements and constraints. Also included in this table, for comparison, is a small capsule in the 100-pound class (the Ames Atmospheric Probe concept).

With the large number of parts and the wide variety of contamination and decontamination factors, it is convenient to perform a burden analysis by means of a simple computer program of the type shown schematically in Figure 2. Five types of inputs are used to define the system and assembly/sterilization program, as indicated in Table IV. The program is designed to cycle completely for each assembly process, during which new parts may be added, or two or more assemblies may be put together without the addition of new parts. The number of parts are specified by the system, and the number of handling operations are determined by the assembly process.

A biological burden analysis for the EFAT case was performed early in the study (before the aforementioned computer program was available) and the results are summarized in Table V. In this analysis it was assumed that all operations, with the exception of the assembly of the suspended capsule, would be conducted under conventional aerospace environmental conditions. The suspended capsule was considered to be assembled in a Class 100 vertical downward-laminar-flow clean-room, with a biological fallout reduction effectiveness of 90 percent. Viable organisms on exposed surfaces are destroyed upon application of ETO just prior to terminal sterilization, leaving only the burden internal to parts and occluded within components and on mated surfaces to be killed during the terminal heating process.

A review of these results indicates that the bulk of the total burden accumulation is caused by fallout on the parachute. If the parachute is decontaminated by ETO before it is packaged within a container, its contribution to burden can be reduced significantly, resulting in a total Probe/Lander loading of $27 \times 10^6$. The reduction in burden attributable to utilizing a clean-room during payload assembly was estimated to be only $10 \times 10^6$, indicating that if it had not been used, the total count would still be manageable although it would exceed the required limit by about 5 percent.

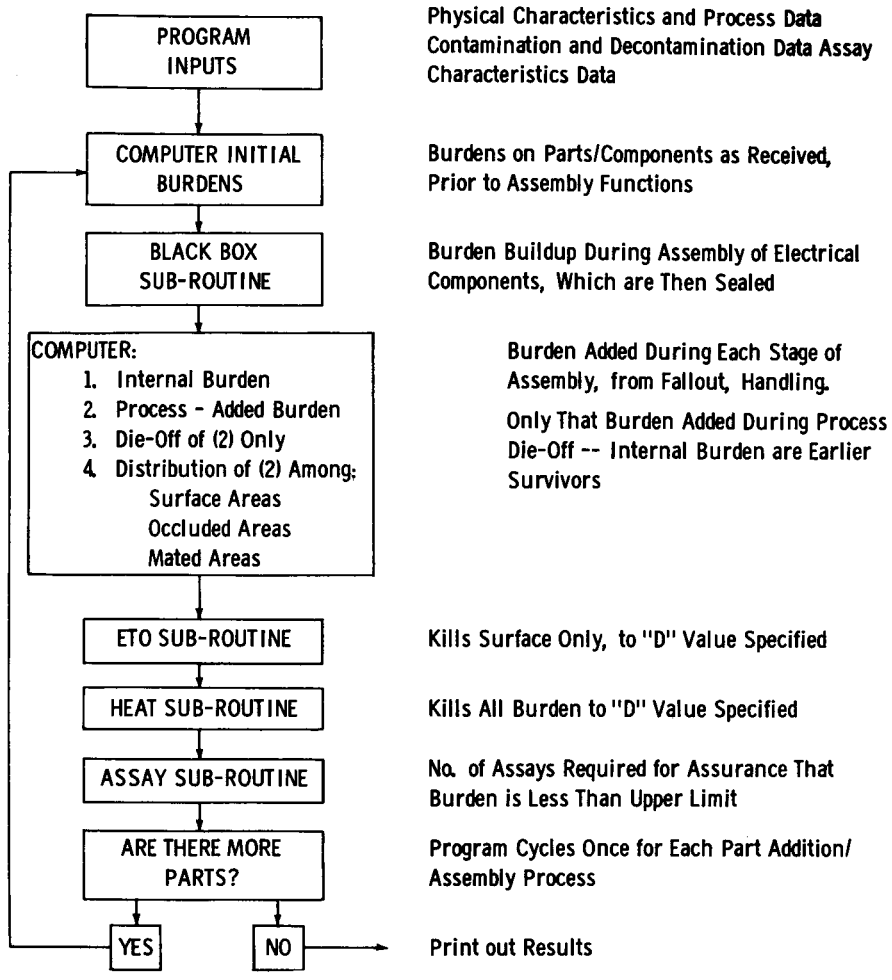


760135P

Figure 2 COMPUTER PROGRAM SCHEMATIC DIAGRAM

## TABLE III

### PHYSICAL CHARACTERISTICS OF CAPSULES

| | Probe (Entry From Orbit) | Probe/Lander (Entry From Approach Trajectory) | 100-Pound Class (Ames) Capsule |
|---|---|---|---|
| Weight | 3,000 pounds | 2,500 pounds | 107 pounds |
| Diameter | 15 feet | 15 feet | 30.5 inches |
| Components | 140 | 165 | 60 |
| Electronic parts | 15,000 | 33,000 | 1,500 |
| Magnetic cores | $8 \times 10^5$ | $30 \times 10^5$ | $6 \times 10^3$ |
| Volume: (In.$^3$) | | | |
| Heat shield | 20,000 | 16,500 | 84 |
| Impact attenuator | 15,000 (4 Penetrometers) | 168,000 | --- |
| Propellant | 12,000 | 1,260 | 20 |
| Plastic (sterilization container, foam padding) | 18,000 | 22,000 | 1,500 |
| Surface area: (In.$^2$) | | | |
| Occluded | 479,000 | 505,000 | 24,000 |
| Component interiors | 420,000 | 430,000 | 20,000 |
| Electronic | 110,000 | 112,000 | 19,000 |
| Other | 310,000 | 318,000 | 1,000 |
| Mated | 59,000 | 75,000 | 4,000 |
| Exposed | 260,000 | 325,000 | 15,000 |
| Parachute | 2,660,000 | 2,440,000 | --- |

## TABLE IV

### COMPUTER PROGRAM INPUTS

| (1) Part/Component Inputs | (2) Electronic Part Input/Part | (3) Constants for Given Run | (4) Assay Requirements | (5) General Inputs |
|---|---|---|---|---|
| Level<br>Control point<br>Part number<br>Facility code<br>Percent plastic<br>Initial surface area<br>Initial occluded area<br>Initial volume<br>Assembly mated area<br>No. personal contacts<br>Area contacted<br>ETO "D" value<br>Heat "D" value<br>Assay technique | Level<br>Control point<br>Part number<br>Facility code<br>Part area<br>No. parts<br>Internal burden<br>Percent plastic | Subroutines:<br>Black box<br>Assay<br>Die-off<br>ETO use<br>Heat application<br>Die-Off rate<br>Heat subroutine:<br>Growth rate<br>Death rate<br>ETO subroutine:<br>Growth rate<br>Death rate<br>Initial burden levels<br>Metal, surface<br>Metal, occluded<br>Plastic, surface<br>Plastic, occluded<br>Plastic, internal<br>Electrostatic factor<br>Personnel contamination rate<br>Fallout rate<br>Duration exposed factor<br>Master facility code | No. of assay types<br>Upper burden limit<br>Confidence level code<br>Assay accuracy for subassemblies<br>Confidence level required | Table of assay types and accuracies<br>Table of "t" Distribution values for different confidence levels |

TABLE V

INITIAL BURDEN ESTIMATE PROBE/LANDER, EFAT
(number of viable organisms x $10^{-3}$)

| | Surface Burden | Internal Burden | Occluded Burden |
|---|---|---|---|
| Entry Vehicle | 8225 | 7426 | 94, 723 |
| Entry shell | 6, 161 | 771 | 5185 |
| Suspended capsule | 1, 036 | 6, 655 | 89, 538 |
| External payload | 147 | 2, 042 | 86, 273 |
| Science | 1 | 1, 571 | 289 |
| Propulsion A. C. | 16 | 459 | 193 |
| Parachute | 3 | 0 | 85, 823 |
| Other | ---- | 12 | 18 |
| Impact attenuation | 76 | 1, 617 | 246 |
| Flotation | ---- | 69 | 286 |
| Landed payload | 168 | 2, 927 | 2, 738 |
| Science | 34 | 301 | 390 |
| Communication | 2 | 2, 250 | 414 |
| Sequencing and data handling | 1 | 89 | 1, 381 |
| Other | ---- | 289 | 848 |

Although this analysis was preliminary in nature and prepared for the capsule designed for the Probe/Lander case, it indicated several trends which are generally valid and which influence the development of the sterilization plans for both capsules. They are:

1. The total burden can be maintained within the required limits.

2. The parachute, under normal conditions, is a major burden contributor and deserves special handling; if it is pre-cleaned, decontaminated by a surface agent, and sealed in a container prior to assembly, the capsule loading is reduced significantly.

3. The principal source of remaining organisms which must be destroyed during terminal processing is on occluded surfaces encapsulated while mating components during system assembly, rather than within basic parts. The packaging design should, therefore, allow cleaning by ETO.

4. Assembly operations conducted in clean rooms reduce the system burden substantially, but may not be necessary, because there are more effective burden-limiting techniques.

As part of an effective sterilization-control plan, the burden must be defined at every step of the assembly/test process. Such an analysis has been performed for the Probe case using the aforementioned computer program, based on the internal contamination values for piece parts and materials indicated in Table I, and on the premise that all manufacturing, assembly and test operations are carried out in conventional facilities with an average continuous fallout rate of 32 organisms per square inch per day. The burden accumulation on the surfaces of plastic parts is assumed to be five times this value due to the electrostatic effects, and it was assumed that 90 percent of the population dies off due to natural causes during the time taken for the manufacturing cycle.

Under these conditions, the burden on and within the equipment at various stages of the process is shown in Figure 3. At the completion of the manufacture of components, it is 778 million organisms. At this stage, major items, such as the parachute assembly, are subjected to ETO cleaning before encapsulation within their containers. Also, all components are subjected

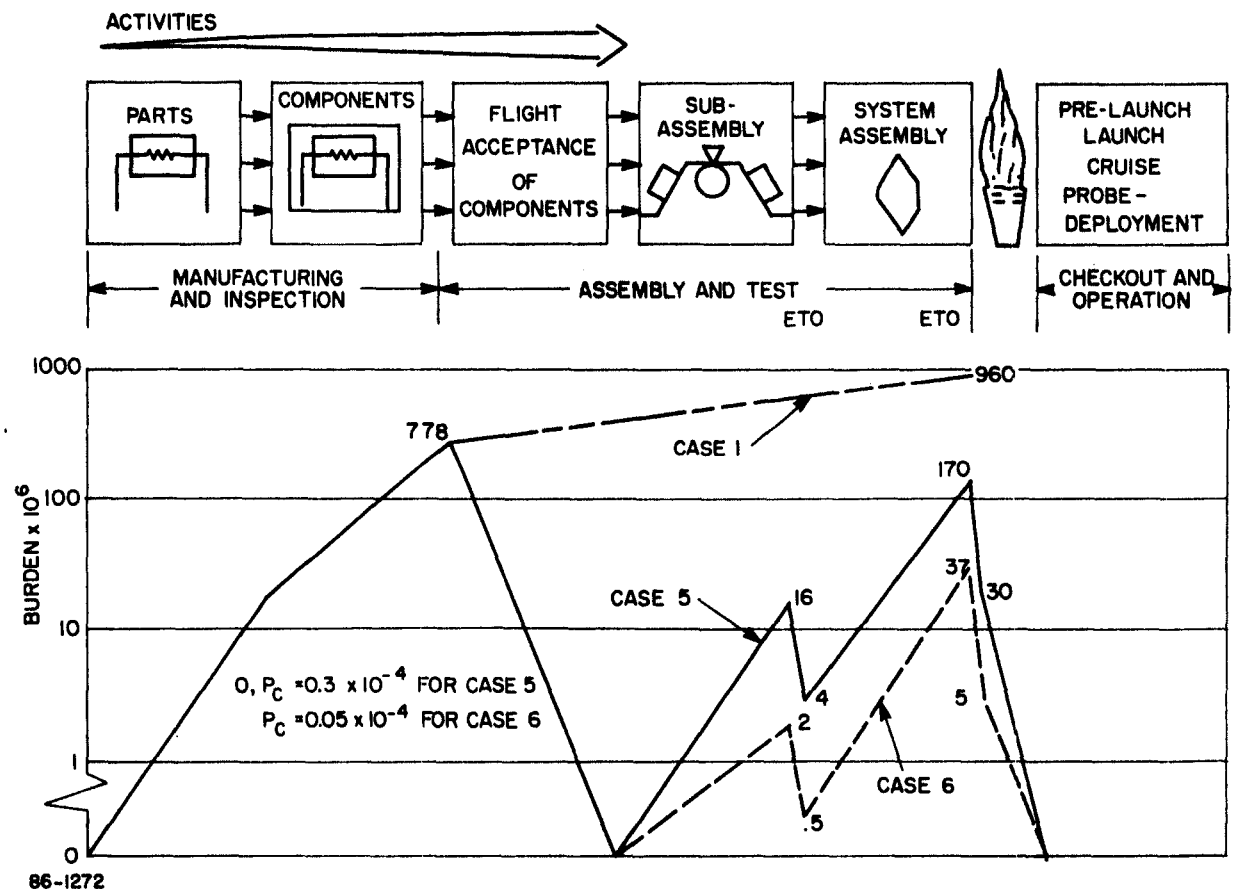


Figure 3 BURDEN AS A FUNCTION OF ACTIVITIES

to a thermal soak at least as severe as the thermal-sterilization soak which is part of the flight-acceptance process. Similarly, all parts are subjected to an ETO-exposure flight-acceptance test. As indicated previously, whether electronic components are left unsealed and subsequently cleaned with ETO inside and out, or whether they are sealed and cleaned on the external surface only, has to be resolved in each individual instance; generally, the flight acceptance sequence is sufficient to reduce all internal burdens of electronic components to an acceptable level.

The next step consists of the assembly of the three major electronic subsystems (modules). This assembly and check-out process takes place under conventional environmental conditions and results in a load of 16 million organisms. Prior to sealing, the modules are exposed to ETO, thereby reducing the burden to about 4 million organisms, assuming a burden reduction of 4D for this process, which is conservative. If the flight-acceptance-test process is delayed until after the subassemblies are complete, the heat exposure of the test would reduce the burden essentially to zero even without the ETO cleaning process indicated in the preceding paragraph. The decision as to whether to perform the flight acceptance test before or after completing the subassemblies has to be made on the basis of an evaluation of the risk of success against schedule, logistics, and cost, and depends heavily on the detail design as well.

The final and major viable organism buildup occurs during the assembly of the modules and structures to form a complete capsule and during its encapsulation in the sterilization container. This burden, 170 million organisms, is reduced to 30 million organisms by flushing the system with ethylene oxide. The remaining organisms are, for the most part, on the surfaces of modules which are mated during the final assembly process and cannot be reached by the ETO. (Quite clearly, this burden would be lower if the design is changed to reduce these mated surfaces. However, it is quite low and well within the prescribed kill tolerance of the terminal heat sterilization cycle.) The probability of an organism surviving after application of the specified 12D terminal heating process is then $0.3 \times 10^{-4}$, which is less than the specified value of $1 \times 10^{-4}$.

If all operations, from the inception of component assembly to final assembly, were conducted in clean rooms, the biological loading would obviously be much lower. This condition is represented by the dashed line of Figure 3. Operating under such conditions would also tend to result in higher system reliability, but the cost of such an operation would be much higher. Inasmuch as this approach is not necessary to the control of burden, it has not been selected in the reference plan.

### 1.4.3 Burden Sensitivity

A brief analysis has been performed to determine the sensitivity of the burden to some of the contamination/decontamination parameters, as well as to variations in the sterilization plan. The results for the variations in the contamination factors are shown in Table VI. The two most important factors are fallout, where an increase from 32 to 128 organisms per square inch per day increases the burden by 60 percent, and natural die off, where an increase from 30 to 99 percent die off reduces the burden 80 percent. On the other hand, the system can increase in complexity (in terms of number of piece parts) by a factor of 10 with only a 40 percent increase in the burden, which is of the same order as an increase in the electrostatic factor from one (no electrostatic effect) to 10. In Section 3.0 of this volume many possible variations are discussed, and a series of nomograms are presented which summarize the results of the analysis. A typical one is shown in Figure 4; tolerable limits are shown for the contamination factors of concern which yield an acceptable presterilization burden; and for the sake of comparison, the conservative values used in the preceding section are shown as well.

**TABLE VI**

**BURDEN SENSITIVITY TO CONTAMINATING FACTOR VARIATIONS**

| Parameter | Variation range | Percent Variation of Total Burden |
|---|---|---|
| 1. Internal burden | ± Order of magnitude | 38.5 |
| 2. Fallout | 32 to 128 org/in.$^2$/day | 59.5 |
| 3. Electrostatic factor | 1 to 10 | 33.3 |
| 4. Die-off | 30 to 99 percent | 80 |

Conditions: Each parameter varied holding others constant
no FA heat test, ETO or Clean-Room

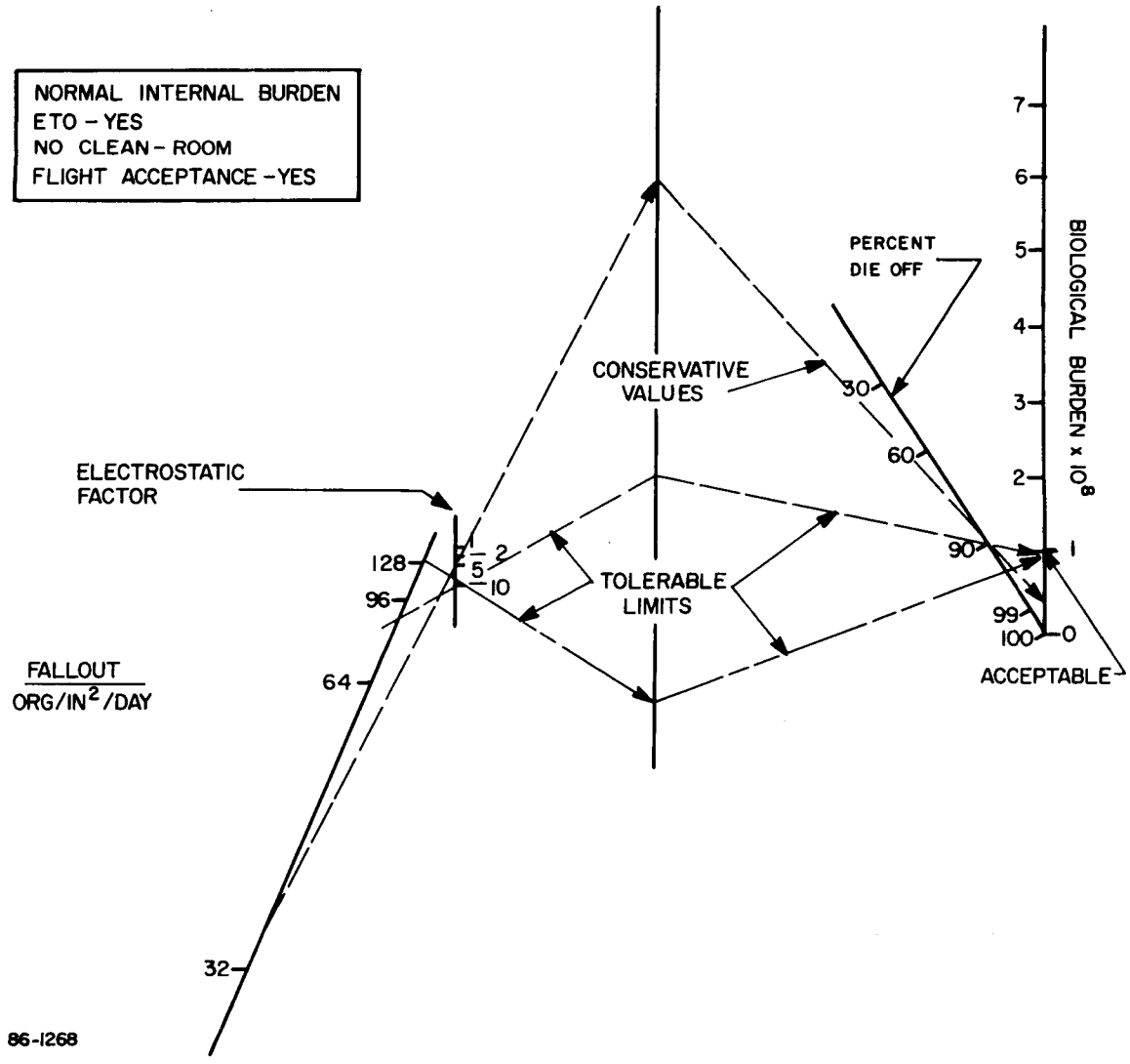


Figure 4 CONTAMINATION SENSITIVITY NOMOGRAM

A number of alternative sterilization plans have been analyzed in addition to the reference plan, one of these being indicated by the dashed lines in Figure 3. It may be of interest, that in the extreme case of no controls and no flight acceptance heat soaks, the total presterilization loading would be 960 million for the design and conditions discussed in the preceding section, rather than 30 million.

### 1.4.4 Assay Requirements

Once the permissible burden on each part of the flight capsule at each stage of the assembly/test process has been established, it is essential to verify during the program that these burdens are not exceeded. The basic tool for this verification is the biological assay, which consists essentially of two parts: the recovery of the sample and the determination of the number of viable organisms in the sample.

Recovery of organisms from the interior of a part can be done in a number of ways, each suited for certain applications, but all destructive in nature. Methods would include disassembly, fracturing, sawing, crushing, grinding, and others. For exterior surfaces, a number of non-destructive sample-collection methods are available. These include swabbing, impression techniques, agitation, rinse methods, immersion and ultrasonic release.

After a sample has been collected, the basic technique for determining the number of vital organisms is culturing in various media. A direct count is generally impractical for the applications of interest here.

With these recovery techniques it is never possible to recover all the viable organisms, and with culture techniques not all the viable organisms will reproduce in a given medium. These factors limit the accuracy of assay techniques. The currently accepted recovery rates are shown in Table VII, and conservative accuracies based on these recovery rates are shown in Table VIII.

The number of assays required to furnish a given degree of assurance that the burden on a given part is not greater than a given control (specified) value depends on the control value, the assayed value, the desired degree of assurance, and the accuracy of the assays. An estimate of this number can be made by conventional statistical techniques (e.g., using the Student's "t" distribution). The aforementioned computer program contains a subroutine which performs the required simple calculation. Some typical results are shown in Figure 5 for a control burden limit of $10^8$, a desired degree of assurance of 0.9999, and for several assay accuracies, bracketing the range indicated in Table VIII.

With the better accuracies, two or three assays are required to establish that the burden is no more than 10 times that assayed, and about 8 are required to demonistrate that is no more than twice that assayed. With the poorer accuracies, many more assayed are required or; conversely, with a reasonable number of assayed (say 10) one can only establish that the burden is no more than 2.5 to 10 times that assayed.

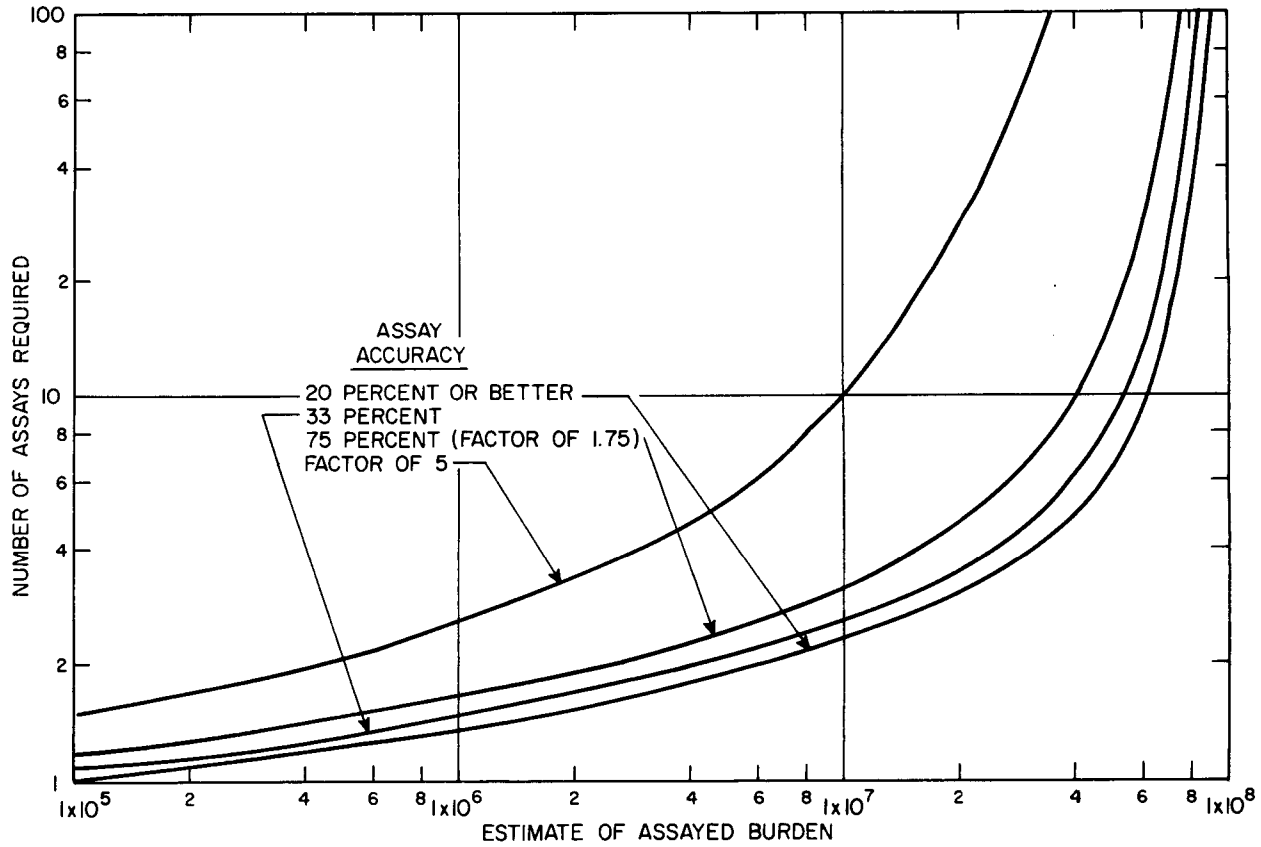


86-5692

Figure 5 NUMBER OF ASSAYS REQUIRED TO DEMONSTRATE THAT THE ASSAYED BURDEN IS BELOW $10^8$ ORGANISMS WITH A CONFIDENCE OF 99.99%

## TABLE VII

## REPORTED ASSAY RECOVERIES

| Surface Burden | Precision | Recoveries (percent) | Reference |
|---|---|---|---|
| Swabs | Poor | 52 to 90 | Angelotti, '58[4] |
| Rinse or spray rinse | Fair | 80 | Buchbinder, '47[3]<br>Angelotti, '58[4] |
| Agitation | Fair | 80 | Wilmot Castle Co.* |
| Immersion with ultrasonics | Excellent | 90 to 99 | Wilmot Castle Co.* |
| Rodac | Good | 41 | Angelotti, '64[5] |
| Internal burden | | | |
| Size reduction techniques | Very poor | 1 | Reed, '65[6] |
| Filtration (for assay of liquids) | Excellent | 99 to 100 | Wilmot CastleCo.[1] |

*Based on Unpublished Data

Assays of the interior and exterior of the parts and subassemblies must be performed initially to verify the estimated burden, and the burden values must then be monitored continuously to preclude the possibility of deterioration of the processes used. In addition, measurements are also required of the basic contamination/decontamination factors (fallout, die off, etc.) in the assembly process, again to verify the estimated values initially and then to monitor them in order to catch any deterioration of the process.

### 1.4.5 Terminal Sterilization

In the final step in the assembly process, the flight capsule with its biological burden controlled to less than $10^8$, is inserted into the sterilization canister. (The permissible value of $10^8$ includes the burden on the interior surface of the canister, which may therefore have to be decontaminated by cleaning with ETO). This assembly is then subjected to dry heat applied externally by a forced-convection oven (see Figure 6). If heat is applied only externally, the rise time for a system of this size is about 60 hours. This long period of time is undesirable because it may degrade the system reliability somewhat without any appreciable

## TABLE VIII

## OVERALL ASSAY ACCURACIES

| | (percent) |
|---|---|
| Swab | 60 |
| Rinse | 20 |
| Agitation | 20 |
| Immersion | 15 |
| Rodac | 75 |
| Filtration | 10 |
| Internal | factor of 5 |
| Black boxes | 33* |
| Subassembly, general | 75(factor of 1.75)** |

* Mixture of Swab, immersion and internal (fracturing, drilling, etc.)

** Mixture of Rodac, some swab

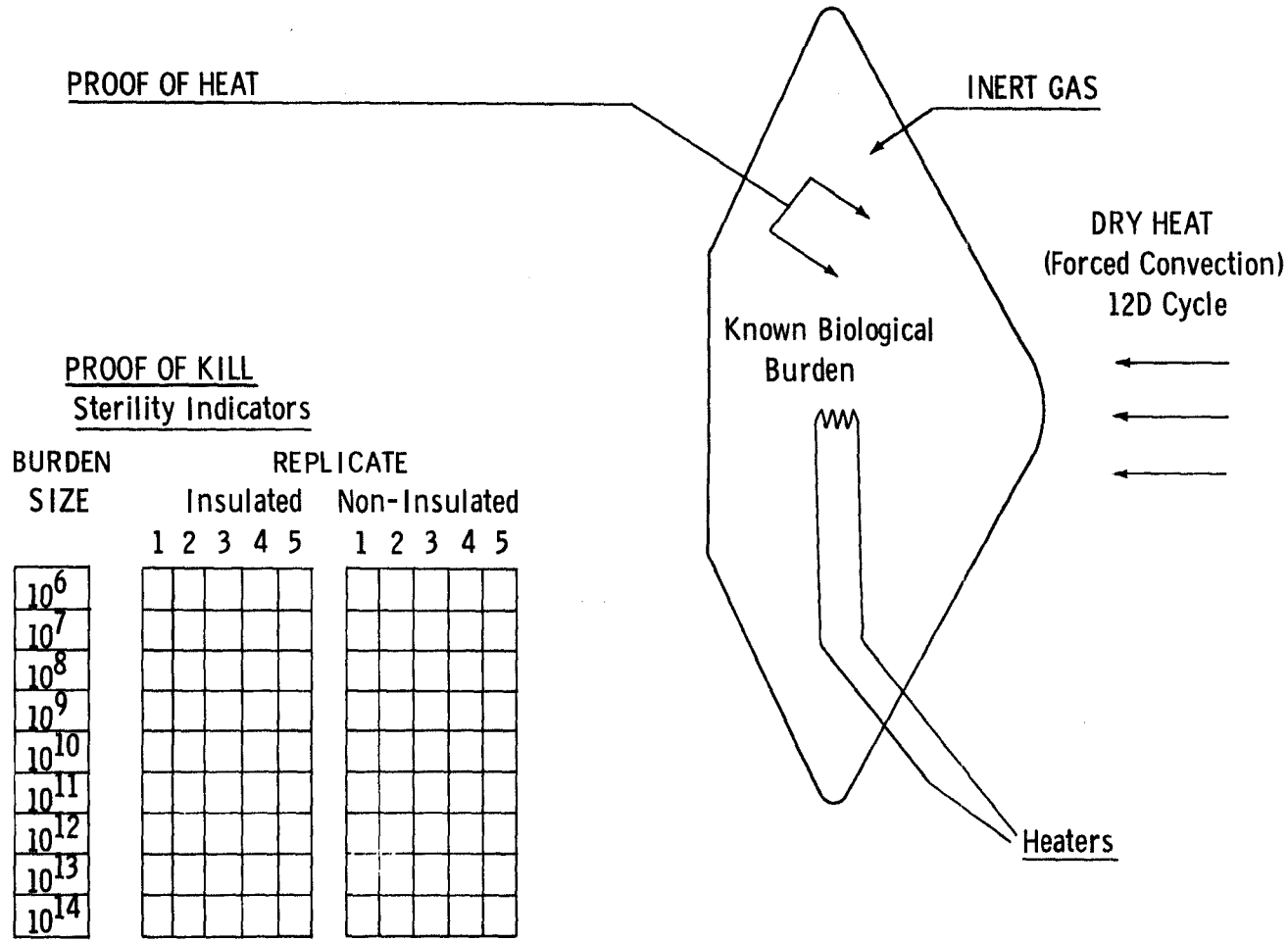


Figure 6 TERMINAL STERILIZATION CONFIGURATION

improvement in the sterilization process. External-temperature overshoot provides little improvement in this situation, in that the relaxation in the temperature cycle experienced by components in the interior of the capsule is bought at the expense of a more severe cycle for components on the exterior of the capsule and on the sterilization canister. Forced convection of inert gases in the interior of the capsule can speed up the heating-up process considerably, but at the expense of complicating the system by the introduction of active mechanical devices (the blowers) which add to the weight of the system and must themselves be sterilizable and highly reliable. Internal heaters, however, can decrease the heat-up time by an order of magnitude with little additional weight and complexity, and are therefore recommended at this time.

In principle, the capsule can be sterilized in the form of several major subassemblies, which furnish relatively better exposure of the interior parts to externally applied heat, and these subassemblies can then be assembled into the complete capsule/canister assembly under sterile conditions (i.e., within the oven, using tunnel suits). At present this concept appears less attractive than the aforementioned one, because of lack of engineering experience in this type of facility. For reasons of post-sterilization repair and insertion of heat-sensitive components, it may be necessary to develop this capability, but even so, it will probably be best to utilize it sparingly and to perform the basic assembly process under unsterile (although possibly bio-clean) conditions.

After the dwell at maximum temperature, the cool-down also takes about 60 hours to reach ambient conditions for the most highly insulated elements, although the external capsule surface reaches ambient conditions in only a few hours. Although this period of time could be shortened by external-temperature under-shoot and/or internal convection of cold gases, these steps are probably not worth while.

Thermocouples are installed within the capsule to verify heat application. In order to get a true picture of the temperatures throughout the interior with a reasonable number of thermocouples, they must be located at all critical points. The selection of these points requires a very detailed knowledge of the heat paths and other thermal-control characteristics of the capsule. This information can be generated in the very extensive thermal-control test program which will have to be conducted on the capsule.

The kill effectiveness of the cycle may be verified by means of sterility indicators in the form of known organism populations which are exposed to the heat cycle in the same oven as the capsule. These indicators can be designed to have the same insulation characteristics as remote capsule interiors. Non-insulated indicators furnish an indication of the basic kill-effectivity of the cycle. By using indicators with a range of population sizes, one can obtain a quantitative measure of the probability of capsule sterility.

### 1.4.6 Post-Sterilization Maintenance

Subsequent to terminal sterilization and prior to launch, the capsule experiences extensive testing and integration with other systems. (See Figure 7). Sterility during these phases can be verified only indirectly, by measuring any leakage of a pressurized inert gas stored within the system; traces of helium can be detected and helium may be the proper gas to use. However, this does not guarantee sterility if a large leak develops, because evidence indicates that organisms can flow "up stream" if the hole is large enough. Other protection can be provided by storing the capsule/container system in a handling container filled with ETO.

Repairs, or at least adjustments, may be required for a complex system during the time from terminal sterilization to launch. This requires either technique (design features, equipments, facilities and procedures) for such repairs under sterile conditions or the capability on the part of the capsule of tolerating additional sterilization heat cycles, which represents a severe penalty for some components. A combination of these approaches, with a limited repair capability and a limited capacity for additional heat cycles may be the best choice.

Little is known about the possible recontamination risk that may be encountered by the capsule during and after canister-lid opening prior to orbit injection; this area therefore requires some additional investigation.

The risk can be minimized by use of the appropriate design techniques, possibly at the expense of complexities in the system. A similar problem area is the meteoroid bumper, if one is used on the outside of the sterilization canister; by making such a bumper of metal, which is internally sterile, rather than fiberglass, the possibility of contaminating the capsule as a result of puncture of the bumper is greatly reduced.

### 1.4.7 Recommended Additional Studies

A great deal of work remains to be done in virtually all areas of the spacecraft sterilization problem (see paragraph 1.2). The following are a few items which suggest themselves as a result of the investigations carried out under this study.

In the areas of basic contamination factors, the most significant outstanding question appears to be that of electrostatic effects on the surface accumulation and retention of biological burdens, which appears to have a fairly significant effect on the total burden. Additionally, it may be worth while to investigate the possibility of reducing the internal burden of some of the relatively "dirty" parts, such as transformers and the material used in parachutes. Lastly, the existing information on fallout in bio-clean facilities is based on studies of relatively small clean-rooms,

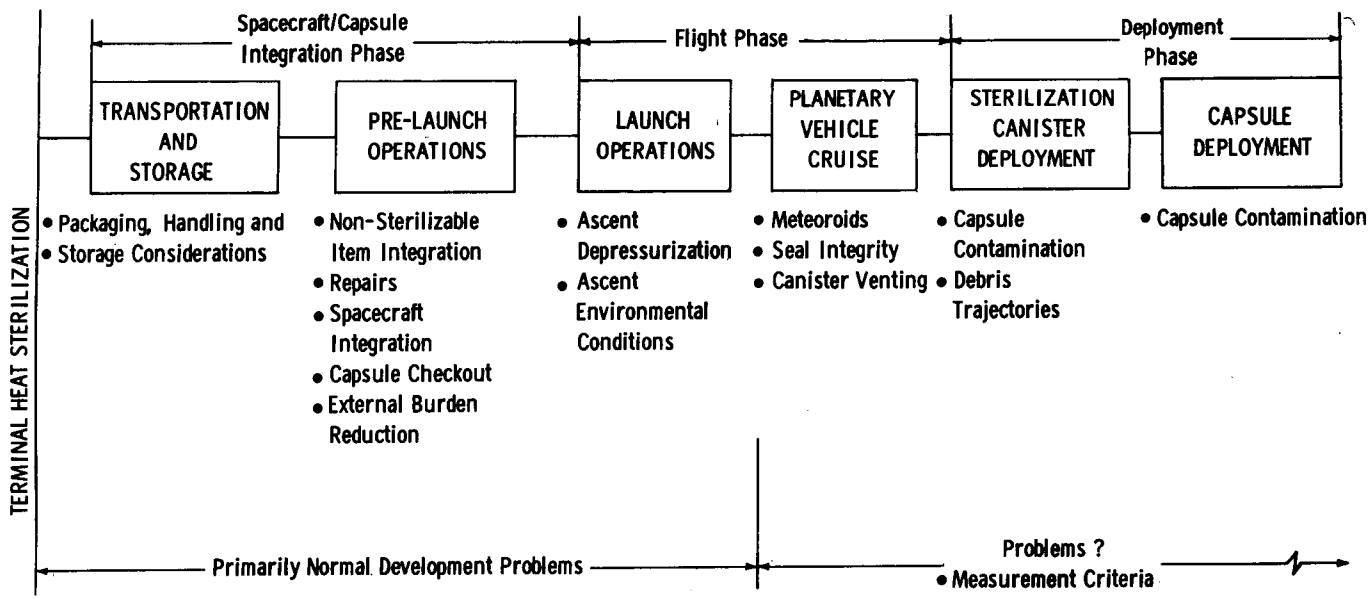


760125P

Figure 7 POST-STERILIZATION MAINTENANCE

in the order of 20 x 20 feet, and it would be useful to establish by a survey of existing facilities and extrapolation of the results what the fallout might be in similar facilities scaled up considerably and used for the typical assembly and test operations of a spacecraft.

The accuracy of assays has a significant bearing on the number of assays required and is at present not too well established. Perhaps the present-day assay concepts are characteristically incapable of furnishing results with much better accuracies than the ones quoted herein. This should be investigated, and if it is determined that there are no inherent limiting factors, attempts should be made to improve the accuracy of these techniques.

As a result of the somewhat conflicting requirements of sterility and reliability, heat-cycle optimization is an area which should be investigated thoroughly. The two most promising areas are:

1. Joint optimization of the flight-acceptance and thermal-sterilization heat soaks.

2. Effective utilization of the heat-up and cool-down periods, particularly in the thermal-sterilization heat soak, which requires a definition of the die-off rates at temperatures below that of the basic soak cycle.

Post-sterilization repair represents a major problem. The tentative Voyager operational plan calls for field-sparing at the capsule level, in order to allow gross substitution if failures occur. With the enormous investment involved in such a program, with the severe launch-window constraints, and because of the degree of complexity of the system, sound logistic planning should allow for capsule repairs or at least adjustments. Repeating the sterilization cycle to repaired capsules (several times, if necessary) may degrade the reliability of the system severely. Therefore, efforts to incorporate design features and to provide a sterile facility in which repairs can be undertaken could well make the difference between mission success and failure.

Another major problem area is post-sterilization calibration of scientific instruments. In some instances, sterilizable calibration devices can be built into the capsule; in other areas it may be necessary to accept partial or indirect results of presterilization calibrations.

Perhaps the main problem area associated with post-sterilization re-contamination is the possibility of impingement of contaminated particles from the separation system or the exhaust products of the attitude-control and propulsion systems of the flight spacecraft on the sterile capsule. The likelihood of this occurence can be established with ground-test programs,

and if such a likelihood exists, design studies can be performed to minimize it. Additionally, it may be worth while to develop a means for establishing whether or not an impingement takes place before (by a meteoroid), during and after canister opening.

The type of burden-sensitivity analysis described herein forms a useful tool for guiding future work in many aspects of the sterilization problem, by highlighting areas where the greatest gains are potentially available as a result of additional work. Therefore, it would be useful to expand the present results by further studies of the effects of variations in the several contamination and decontamination factors, handling concepts, ETO decontamination effectiveness, fallout in the assembly area, etc. Also, it would be possible to establish the significance of mated areas, the implications of conducting the flight-acceptance heat soak later rather than earlier in the assembly sequence, etc. Lastly, it would be useful to extend these results to other design concepts and to capsules designed for basically different (i.e., more or less sophisticated) mission requirements and, consequently, with substantially different physical sizes and complexities; this would furnish an insight into the sensitivity of the basic conclusions reached herein to specific design features and the size/complexity of the system.

# 2.0 FACTORS GOVERNING THE SELECTION OF A STERILIZATION PLAN

## 2.1 GENERAL CONSIDERATIONS

The object of a sterilization plan is to furnish assurance that the probability of a probe/lander depositing a viable organism on the surface of a planet is no greater than 0.0001. Definition of such a plan requires selection of assembly techniques, burden-control concepts, terminal-sterilization techniques (within the framework of the dry-heat concept), and of techniques of maintaining sterility afterwards, as well as a detailed description of the selected techniques, and an identification of facility, schedule, manpower and funding requirements. The selection among the several approaches available in each area is governed by the following factors.

### 2.1.1 Reliability

The most significant impact of the sterilization requirement is in the area of system reliability, because extensive heating tends to damage many elements of a spacecraft. Prevention of this damage, i.e., maintenance of high reliability in the face of the sterilization requirement, then leads to additional impacts in other program areas (schedule and costs) in at least two ways. First, there is the direct requirement for the development and qualification of a system for a more hostile environment; second, there is the difficulty of correcting failures in (i.e., repairing) a flight article without affecting the ultimate sterility, and/or resterilizing a repaired and thereby contaminated spacecraft without degrading the reliability.

### 2.1.2 Schedule

Another area on which the sterilization has a major impact, both directly and (through reliability) indirectly, is the schedule. The programming of a planetary mission is rigidly fixed by the planetary motions, so that launch windows are essentially fixed for any given opportunity, some small flexibility being available if the available energy exceeds that associated with a minimum-energy trajectory for the given system weight. When programming a mission, therefore, launch dates must be met, and the sterilization plan must be compatible with this requirement; it must allow intermediate dates to be met, and must assure that a sterilized vehicle is available when required.

### 2.1.3 Program Cost

Yet another area on which the sterilization requirement has a major direct and indirect impact is the cost of the program. Sterilization, which is a

mandatory requirement, may as much as double the cost of the program in some instances, and therefore has a major bearing on the economic acceptance of the program.

The primary elements of potential cost increases are special assembly facilities, hardware requirements for assay, assay and assay laboratory costs, the added cost of developing hardware for the more hostile environment, the cost of implementation of sterilization-monitoring procedures and controls, and the cost of performing the actual sterilization and decontamination operations. A sterilization plan should identify these costs and demonstrate that the selected approach has been optimized in the light of cost consideration, consistent with sterility, reliability and schedule requirements.

### 2.1.4 Methods and Controls

The methods by which the presterilization burden is held to below $10^8$, fall into the categories of environmental control (such as the use of clean rooms), special handling and decontamination techniques (such as ETO cleaning), taking advantage of the flight-acceptance cycle, and of the normal die-off of organisms. In a sterilization plan, these types of methods must be specified in detail and their effectiveness must be identified quantitatively; also, controls must be set up to verify their effectiveness, while also preventing their excessive application (with adverse results on the system reliability, etc.).

### 2.1.5 The Physical Nature and Characteristics of the Design

The sterilization requirement has, of course, many far-reaching effects on the design, most of them associated with the reliability and post-sterilization maintenance requirements. One of the less obvious implications is that the design should be such as to minimize the extent of mated or occluded surfaces, which cannot be reached with ethylene oxide for contamination during the assembly process. If these areas are minimized, ETO application just prior to terminal heat will be most effective, and the only burdens remaining will be those of mated or occluded surfaces,and those internal to nonmetallic parts.

### 2.1.6 Analogy Between Sterilization Assurance and Product Assurance

The disciplines of sterilization assurance and product assurance (reliability and quality assurance) have many similarities. They involve:

1) Basic science (microbiology versus physics of failure)

2) A body of applicable test data and other experience; including qualified parts lists

3) Statistical and probabilistic techniques for prediction, and for interpretation of test results

4) Systems-analytical techniques for apportionment and for performing failure-mode/consequence analyses, and utilizing the results in the system-definition process

5) A body of good design practice

6) Program-management techniques for assurance, including:

a) Test-program definition

b) Methods of measurement (assay)

c) Techniques of control.

Sterilization is now roughly where reliability was about 10 years ago, and a great deal of work is now being done and planned which will furnish much of the information and improvements in the techniques required in Items (1),(2),(6) b), and others. However, most of the advances in the field of reliability have not come from increases in the relevant basic scientific knowledge, but from developments in the art of achieving reliability in the absence of such knowledge, based on empirical data (2) and the development of special techniques and experience in their use (3), (4), (5), and (6). Most of these techniques are directly transferable to the field of sterilization (although (5) can be transferred by analogy only, that is, by codification and dissemination of the results of successful practice). With this approach, once some of the very basic problems are at least empirically resolved (in the next year or two), the field of sterilization should reach a degree of maturity sufficient for working purposes.

It is, therefore, possible to plan a program at this time, despite the fact that certain decisions have to be made somewhat arbitarily for lack of sufficient information, recognizing that basic scientific and technical information brought to light subsequently may require modification to the program. (Improved methods of assay, for instance, may simplify some aspects of the problem). The sterilization program should, therefore, incorporate sufficient flexibility to permit the incorporation of such changes with minimum impact on the remainder of the program.

## 2.2 METHODS OF ASSEMBLY OF A STERILIZABLE SPACECRAFT

There are three basically different approaches to the assembly of a sterilizable spacecraft. The first, sterile assembly of sterile parts, requires sterilization of the materials which make up the parts. Assembly of these materials into

parts and all subsequent assembly and checkout operations are carried out under sterile conditions. This concept appears impractical for the large number and types of components likely to be used in a capsule, and it was decided not to consider it in the study.

The second approach, assembly of sterile components, requires sterilization of parts (which have been manufactured, essentially, under normal aerospace assembly conditions), which are then assembled into components under sterile conditions, with subsequent assembly and checkout also under sterile conditions. This concept also appears relatively unattractive as a general approach, although it may be useful to subject some parts to a presterilization process, and was not considered further in this study.

The third approach, assembly of capsule elements under controlled environmental conditions, followed by terminal-heat sterilization, involves assembly of parts, components, subsystems, modules, and the complete system under conditions which range from normal non-clean conditions to bio-clean* conditions; the required level being determined by the need to hold down the occluded burden to permissible values (i. e., those which, together with reasonable internal and external burdens, result in a total presterilization burden of less than $10^8$ organisms). Following assembly, the complete capsule is heat sterilized according to existing NASA specifications. This approach was identified as the most practical, provided assurance can be furnished that the final presterilization burden is less than $10^8$ viable organisms.

## 2.3 IMPORTANT FACTORS BEARING ON PRESTERILIZATION BURDEN CONTROL

There are three factors of major importance in burden control: 1) system physical characteristics, 2) contamination factors, and 3) decontamination factors (including heat soaks conducted as part of the flight-acceptance test program).

### 2.3.1 System Physical Characteristics

The capsule system design has a significant effect on burden. If, for example, mated and occluded surfaces are kept to a minimum, the effectiveness of ETO decontamination is maximized, and the final burden following an ETO cycle can be very low. If large modules have to be sealed during assembly, it is advisable to make provisions for having their constituent elements decontaminated prior to sealing so that occluded burden can be minimized.

In general, because of the sterilization and high-reliability requirements, strict discipline and controls are necessary in the design. The following paragraphs discuss some specific guidelines.

*Federal Specification 209, Class 100, Vertical Downward Laminar Flow Clean-Rooms.

The complex nature of the system demands the use of large quantities and types of electronic parts. Their contribution to biological burden can be reduced considerably (and the reliability enhanced) by minimizing their quantity and individual sizes by specifying solid-state integrated-circuit components which permit several elements to be packaged into one compact sealed unit. Typically, at least six resistors, four transistors, or six diodes may be formed on the basic element, a monolithic circuit die, as shown in Figure 8. In the probe design for entry from orbit considered herein, the application of these devices allows a reduction from 80,000 electronic piece parts, which would otherwise be required, to 15,000. Manufacturers presently deliver such devices guaranteed to operate for long durations, at a temperature of 125°C; this is well within the kill range of organisms, so that these parts can be heat-sterilized without damage. Therefore, the use of these devices facilitates the control of burden, protects the parts from continuing fallout, and makes the design less susceptible to damage in the final thermal-sterilization process.

The large amount of data that are stored and handled by the system requires either a large-capacity tape recorder or, as used in the designs treated in this report, a large-capacity solid-state memory system. Such a memory uses millions of magnetic cores (each a piece part), but they are identical, minute and made of ferrites which, due to the high temperature sintering process used in manufacturing them, are internally sterile.

High-reliability parts are subjected to burn-in and stabilization acceptance tests, at temperatures and for durations which exceed the terminal-sterilization heat cycle, so that they are essentially sterile internally. The general use of such parts, therefore, also serves to minimize the internal burden.

There are several adhesively bonded mating surfaces, within the multiwall structure of the entry shell which, collectively, add up to several hundred square feet of area, all exposed in the course of construction to biological fallout. The fabrication operations involved are generally conducted in relatively dirty environments; consequently, a high biological loading is occluded in the assembly. The heat shield, which forms the outer segment of the entry shell, is a composite of various fibers and resins with a relatively large volume, so that it tends to entrap large quantities of organisms. Therefore, in its raw, unprocessed form, the entry shell encapsulates a very large burden. However, the adhesives and resin systems used are of a thermosetting type which require application of heat for prolonged periods of time to cure them and form a monolithic assembly. The particular resin systems considered in the designs treated in this study require, typically, 350°F for 16 hours, which is in excess of the thermal sterilization cycle.

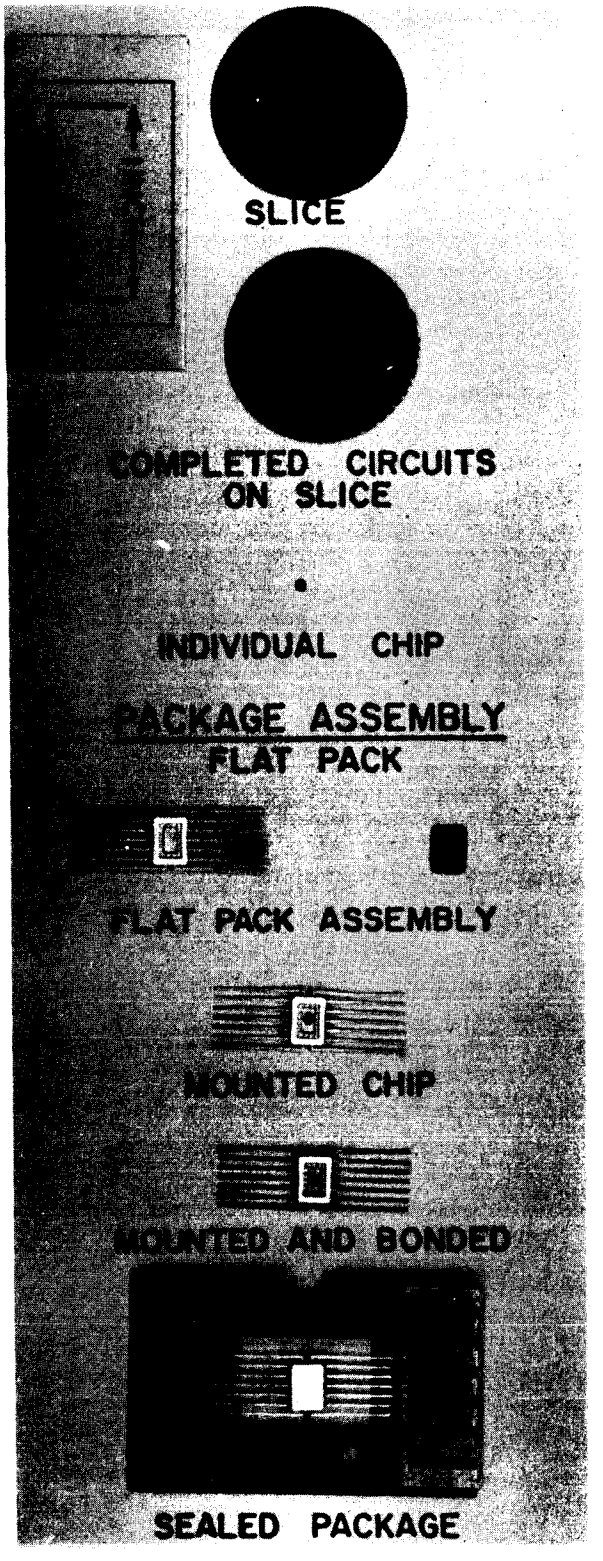


Figure 8 ELECTRONIC INTEGRATED CIRCUIT

The cure cycles are repeated after machining, prior to the application of surface coatings, in order to dehydrate the system prior to sealing. Coatings are subsequently applied to the surface (to seal it and to control the absorptivity and emissivity), and the entire assembly is subjected to a final baking process for dimensional stabilization. Therefore, the assembly is likely to be subjected to a temperature of 350°F for more than 48 hours with a total kill effectivity (burden reduction) substantially greater than $10^{12}$, so that the assembly winds up being essentially sterile internally.

Other plastic components which employ thermo-setting resin systems usually undergo similar processes. Their use should be emphasized and the use of low-temperature-curing (cold-setting) resin systems should be discouraged.

### 2.3.2 Contamination Factors

Environmental contamination during the manufacturing/assembly process occurs as a result of the biological fallout of organisms contained in the atmosphere on exposed surfaces of the parts under assembly. Handling contamination is a function of physical handling (number of contacts and area contacted per manipulation), as well as the number of organisms deposited per unit area per contact. Quantitative estimates of these parameters have been given in paragraph 1.4.1, and the manner of controlling these parameters as well as the implications of various degrees of control will be discussed in Section 3.0.

### 2.3.3 The Role of Flight-Acceptance Tests in Spacecraft Decontamination

Flight-acceptance tests are conducted on spacecraft to demonstrate flight worthiness and to eliminate defective items before the subassembly and system-integration activities. They consist of exposing the components to the environments anticipated in the mission profile and the tests usually are sequential, applied in the order in which the hardware will experience the environments during a mission. Heat sterilization and ethylene-oxide cleaning represent environments to which the hardware will be exposed during its life cycle (although not during its mission, properly speaking), so that corresponding tests must be incorporated in the test spectrum, along with the other environments, such as vibration, shock, etc. These heating and ETO-exposure acceptance tests have the most pronounced burden reduction effect of all processes and procedures imposed, except for the terminal sterilization cycle itself.

Exposure to sterilization-temperature conditions should be first in the sequence, and should be equal to or higher than the specified terminal cycle. The implication is that the flight-acceptance cycle is applied at the component level, which is the approach which has been taken in the studies described in this volume. As discussed in Section 3.0, however, these tests could be applied at a subassembly level, with the result that kill effectivity

would be higher, but at the risk of incurring higher costs as a result of failures found later in the assembly operations. This will obviously result in sterile component interiors; if the components are sealed, the hardware will remain in the internally decontaminated (i.e., sterile) state throughout the assembly process. To minimize reliability and performance degradation, the flight-acceptance and the terminal-sterilization heat cycles should be optimized simultaneously; that is, the final heat-sterilization cycle may be reduced in severity if, as a result of the flight-acceptance tests, the total capsule burden can be demonstrated to be substantially (by one or more orders of magnitude) below $10^8$. This optimization is as important to sterility maintenance as it is to system reliability and performance, because it will tend to reduce post-sterilization repair requirements and thereby the risk of recontamination.

ETO exposure should normally be the first environment for which tolerance must be established, because ETO decontamination (where used) precedes heat sterilization. However, in view of the acceptance heat soak, sealed components need have a tolerance to ETO only on their exterior surfaces. Therefore, designers can be given the option of either sealing components against ETO penetration, if this course of action will result in higher system reliability, or leaving them unsealed, in which case they must be subjected to an ETO acceptance cycle and, at a later stage in the assembly, to an ETO decontamination process. If ETO acceptance testing is last in the sequence, it also serves as the surface decontamination process prior to assembly; the hardware is then exposed to this potentially degrading environment only once.

### 2.3.4 Decontamination

Other than certain manufacturing and test processes, which by their nature tend to be decontaminating (see paragraphs 2.3.1 and 2.3.3), decontamination can occur either naturally as a result of die-off, or artificially as a result of ETO cleaning or heating. The magnitude of these effects has been indicated in paragraph 1.4.1 and is discussed further in Section 3.0.

## 2.4 TERMINAL-HEAT STERILIZATION CYCLE

The present sterilization requirement calls for a terminal-heat cycle which results in a 12D burden reduction. The range of cycles which are considered acceptable for this purpose are shown in Table IX. The choice among these cycles is governed by considerations of reliability, etc., which are extraneous to sterilization.

The 12D requirement is premised on a presterilization burden of $10^8$. If a capsule can be manufactured/assembled relatively easily with a demonstrably substantially lower burden (possibly as a result of flight-acceptance-test heating cycles at one or more levels of assembly), it may be possible to ease the

## TABLE IX

## ACCEPTABLE TERMINAL STERILIZATION CYCLES

| Temperature (° C) | Sterilization Time | |
|---|---|---|
| | Hours per D | Hours for 12D |
| 160 | 0.21 | 3 |
| 155 | 0.31 | 4 |
| 150 | 0.46 | 6 |
| 145 | 0.73 | 9 |
| 140 | 1.1 | 14 |
| 135 | 1.8 | 22 |
| 130 | 2.8 | 34 |
| 125 | 4.4 | 53 |
| 120 | 7.0 | 84 |
| 115 | 11.0 | 132 |
| 110 | 17.5 | 210 |
| 105 | 28.0 | 336 |

terminal-sterilization requirement accordingly, say 7 hours per D value if the presterilization burden if 120°C is the selected temperature. It may also be acceptable to count some of the warm-up time required to bring the most insulated points of the spacecraft up to the sterilization temperature, as well as some of the corresponding cool-down time.

## 2.5 MAINTENANCE OF STERILITY AFTER TERMINAL-HEAT STERILIZATION

Inasmuch as the sterility requirement calls for delivery of a sterile vehicle to the surface of the planet, measures must be taken to maintain sterility, once the capsule has been sterilized, throughout all future mission activities, namely prelaunch, launch, cruise, and canister-opening/capsule deployment.

For the prelaunch operations controls have to be specified for packaging, handling and storage, and for the following other prelaunch operations: capsule checkout, spacecraft integration, repair or sterile insertion of special items (if required), and external burden reduction of the sterilization canister and flight spacecraft, if required.

Similarly, for the launch and cruise phase, controls have to be defined for the assurance of sterility maintenance during ascent depressurization, during the other ascent environments, and during cruise, in which phase the system is subjected to solar radiation, vacuum, meteoroids, and where special attention has to be paid to seal integrity and canister venting.

In the canister opening and capsule deployment phase, possible recontamination processes must be identified and safeguards against their occurrence must be defined. The processes to be considered are impinging gas plumes, structural loads (leading to structural failure or opening of gaps), elastic release of energy, electrostatic factors, electromagnetic forces, mass attraction, solar radiation, simple collision, solar wind and pressure, and van der Waals forces.

## 3.0 BIOLOGICAL BURDEN ESTIMATES

Biological burden estimates are a key element in any sterilization plan. They are needed to make decisions concerning the design of the system and concerning the assembly/test/sterilization approach used to manufacture it. Also, once the design and assembly approach have been selected, estimates of the burden on the various elements of the system at various stages in the assembly process become the means of exercising sterilization control; in essence, the estimated (apportioned) values become control values with which the assayed values are compared to assure that the presterilization burden (and therefore, by implication, the post-sterilization probability of contamination) does not exceed the permissible value.

In this section, the basic factors governing the burden and the techniques of making burden estimates are outlined, and burden estimates are presented for the reference assembly approach and several variations thereof for the two designs considered in this study (for the entry-from-approach trajectory (EFAT) and entry-from-orbit (EFO) cases).

### 3.1 BURDEN SOURCES

#### 3.1.1 Initial Values

Initial burdens are those on and inside capsule parts and components prior to final assembly. Since most elements will have been stored for some time, these values represent burdens which are the surviving population after the deposition of some larger number of organisms during the manufacture or component-assembly of these elements. Initial burdens fall, basically, into two categories: internal and surface burdens. The most significant internal-burden contributors are nonmetallic materials, which are used in the heat shield, rocket motor fuel, cables and parachutes, miscellaneous pieces of foam, etc. A somewhat smaller contribution stems from electronic piece parts and other small non-metallic elements. These elements carry an internal burden entrapped in the material of which they are made. The best current information concerning the magnitude of internal burden values is summarized in Table X.* In each case, the internal burdens used are considered to be steady-state values, and not subject to further die-off.

*It may be noted that the burden for rocket fuel is high relative to that for other materials. This has recently been established by experiments which indicate that the fuels considered are not bactericidal, as had been supposed.

## TABLE X

## PART AND MATERIAL BURDEN RANGES

| Type | Estimated Internal Burden Range |
|---|---|
| Balsa wood | 1 to 10/in.$^3$ |
| Battery cell | 0 |
| Capacitor | 10 to 1000 |
| Coaxial cable | 0 to 100/ft |
| Connector | 100 to 10,000 |
| Crystal | 0 to 10 |
| Diode | 0 |
| Duplexer | 0 |
| Evacuation bellows | 0 |
| Explosive | 1000/gm* |
| Explosive trains | 0 to 200/ft. |
| Fiberglass | 0 |
| Foam | 1/ml** |
| G-M tube | 0 |
| Inductor | 1000 to 10,000 |
| Magnetic core | 0 |
| Magnetron | 0 to 10 |
| Metal | 0 |
| Nylon, dacron | 0 |
| Optical system | 10 to 100 |
| PbS detector | 0 |
| Photomultube | 0 |
| Relay | 100 to 1000 |
| Resistor | 0 to 10 |
| Silicon Integ. Circuit | 0 to 10 |
| Silicone oil | 1/ml |
| Silicone rubber | 0 |
| Teflon insulation | 0 |
| Thermal control | 0 |
| Transformer | 10,000 to 100,000 |
| Transistor | 0 |
| TWT | 0 |

*Weight of solid fuel 0.059 lb/in$^3$ = 26,800 org/in$^3$
**Foam = 16.2 org/in$^3$

The surfaces of metallic and non-metallic elements will collect viable organisms during final assembly, as a result of fallout during manufacturing and component assembly processes, subject to some degree of subsequent die-off while in storage. A somewhat conservative steady-state (post-die-off) value for metallic surfaces is 100 organisms/in$^2$, equivalent to almost 15,000/ft$^2$, which is twice the value expected by Portner[1]. Plastic surfaces tend to accumulate and retain more particles as a result of electrostatic attraction, which may serve to increase the normal surface-burden value by a factor of up to 13 under certain adverse conditions. Based on present information, a factor of 5 (i.e., 500 particles/in$^2$) appears to be representative for the surface burden on parts subject to electrostatic action.

### 3.1.2 Contamination Factors in the Assembly Process

Contamination during assembly, occurs principally from two sources, -- fallout and handling. The fallout of microorganisms on a metallic surface is principally a function of the number of such organisms in the atmosphere at the time of the fallout. For normal assembly operations, a value of 32 organisms/in$^2$/day ($\sim$200 organisms/ft$^2$/hr) represents a relatively clean condition, and 128 organisms/in$^2$/day ($\sim$ 800/ft$^2$/hr) represents a relatively dirty area. Where clean-room conditions are considered to prevail, fallout is essentially zero, but a conservative estimate is 1 percent of these values, i.e., 2 to 8 organisms/ft$^2$/hr.

There is evidence[1] that fallout on nonmetallic surfaces can be substantially larger than these values as a result of static electrical charges on the surface which can attract particles, including microorganisms, as discussed in the preceding paragraph.

During an assembly process, the components of the capsule are subjected to considerable handling, which serves to increase the burden on the surfaces by an amount which is a function of the number of physical contacts and the cleanliness of the personnel doing the manipulating (which is partly a function of the cleanliness of the environment). A typical electronic component, for example, might be handled 50 to 100 times during physical assembly activities and during component testing, - with each contact involving an average surface area of 5 in$^2$.

An estimate of burden deposited per square inch of contact was made using the following rationality: The minimum number of organisms, which is expected to be deposited per square inch by a freshly washed hand, is estimated on the basis of general assay experience, to be about 100. On the other hand, a person with poor personal hygiene who is biologically highly contaminated (a situation which should occur very rarely in view of the

controls which will be imposed on this type of a program) could deposit as many as 10,000 organisms per square inch per contact. The average number deposited under normal conditions should be around 300. A somewhat conservative weighted average value* is 1900 organisms/contact/in$^2$ for normal (non-clean-room) conditions. Where assembly processes take place in a clean room, with some controls over the cleanliness and health of the assembly personnel, one percent of this non-clean-room value appears to be reasonable.

### 3.1.3 Decontamination Factors in the Assembly Process

There are three decontamination factors of importance that occur during assembly -- one natural (die off) and two artificial (ethylene-oxide cleaning, and heat soaks for flight-acceptance purposes).

Work by Portner[2] and others indicates that die-off over a period of 52 weeks can be over 99 percent. A value of 99 percent per year translates into about one percent per day, or 30 percent per month (assuming exponential die-off). The major variable is therefore the length of storage, which may range from a month to a year, so that die-off values ranging from 30 to 99 percent should bracket the true situation.

Ethylene oxide (ETO) and other chemical decontaminants can have varying effects on surface burden depending on concentration, temperature, humidity, and duration of exposure. Burden reductions of 6D to 8D (i.e., by factors of $10^6$ to $10^8$) can readily be achieved in this manner. However, in order to minimize the possibility of material degradation, it is best not to use excessively high concentrations nor durations. For reasonable combinations of these factors, a conservative kill (burden-reduction) value is 4D, i.e., 99.99 percent. ETO is, of course, only effective on that burden which it contacts, and is ineffective for organisms occluded on mated surfaces or within materials (except, to a limited extent, if the given material is permeable).

As mentioned previously, the flight-acceptance cycle includes a heat-soak test to certify that the element evaluated is capable of withstanding the terminal-heat-sterilization cycle without failure. The exposure conditions must be at least as severe as the terminal cycle, which is intended to effect a burden reduction of 12D. Thus, although the main purpose of this test is not decontamination, it will completely kill the entire burden on a given element (provided it does not exceed $10^{12}$ organisms -- far more than likely to be found on any element in the capsule, including the parachute

*Obtained by the PERT averaging formula—one sixth of the most optimistic value, plus two-thirds of the most likely value, plus one sixth of the most pessimistic value—considering 300 to be the most likely value.

and rocket motor). Therefore, any part subjected to this test will be sterile immediately following the cycle, and will remain internally decontaminated in the subsequent assembly processes if it is sealed.

As indicated previously, it was assumed for this study that this flight-acceptance test is applied at the component level, prior to the start of final assembly; later in-process application of acceptance testing would destroy more organisms, yielding a lower total system burden, but at the expense of a greater scrap risk. A cost-effectiveness analysis is therefore necessary to establish the best time of application.

## 3.2 TECHNIQUES OF BURDEN ESTIMATES

In view of the many parts of many different types used in a capsule, and in view of the numerous trade-off studies involving biological burden that have to be performed to define the system and the program, a simple computer program is a great convenience in making burden estimates, although certainly not a necessity. The following discussion of the basic technique used to perform burden estimates will therefore be oriented to computer application, although it will be fairly general in nature. The specific details of the computer program are discussed in Appendix B.

Figure 9 represents a simplified flow diagram of a data handling system for burden calculations, and indicates generally the order in which the computer operations are carried out. The general program technique is to identify inputs based on an assembly flow chart with level control-point, and part-number codes, thus identifying each new element to be added during assembly, and each subassembly in whatever state of manufacture it happens to be at the point when each new element is added. The program cycles this information through all operations for each distinct assembly process (identified on the assembly flow chart) whether it involves adding an element or simply joining subassemblies which have been developed up to that point.

The first calculation establishes the magnitude of initial burden level prior to assembly, based on the defined part configurations and the inputed values for initial individual burden levels on metals and plastics, and within plastic materials (and piece parts).

The next step in the program is the black box subroutine which calculates the burden in and on the electronic parts and the burden on the external and internal surfaces of the housing in which the electronic component is contained. If elements are electronic components, the program input information will have identified the types and numbers of parts which comprise the unit. In the event that some of these parts are plastic, the subroutine accounts for whatever electrostatic factor has been applied to the run. The subroutine also takes into account the time estimates for component assembly. At the end of this calculation, the total burden on an electronic component is identifiable as being

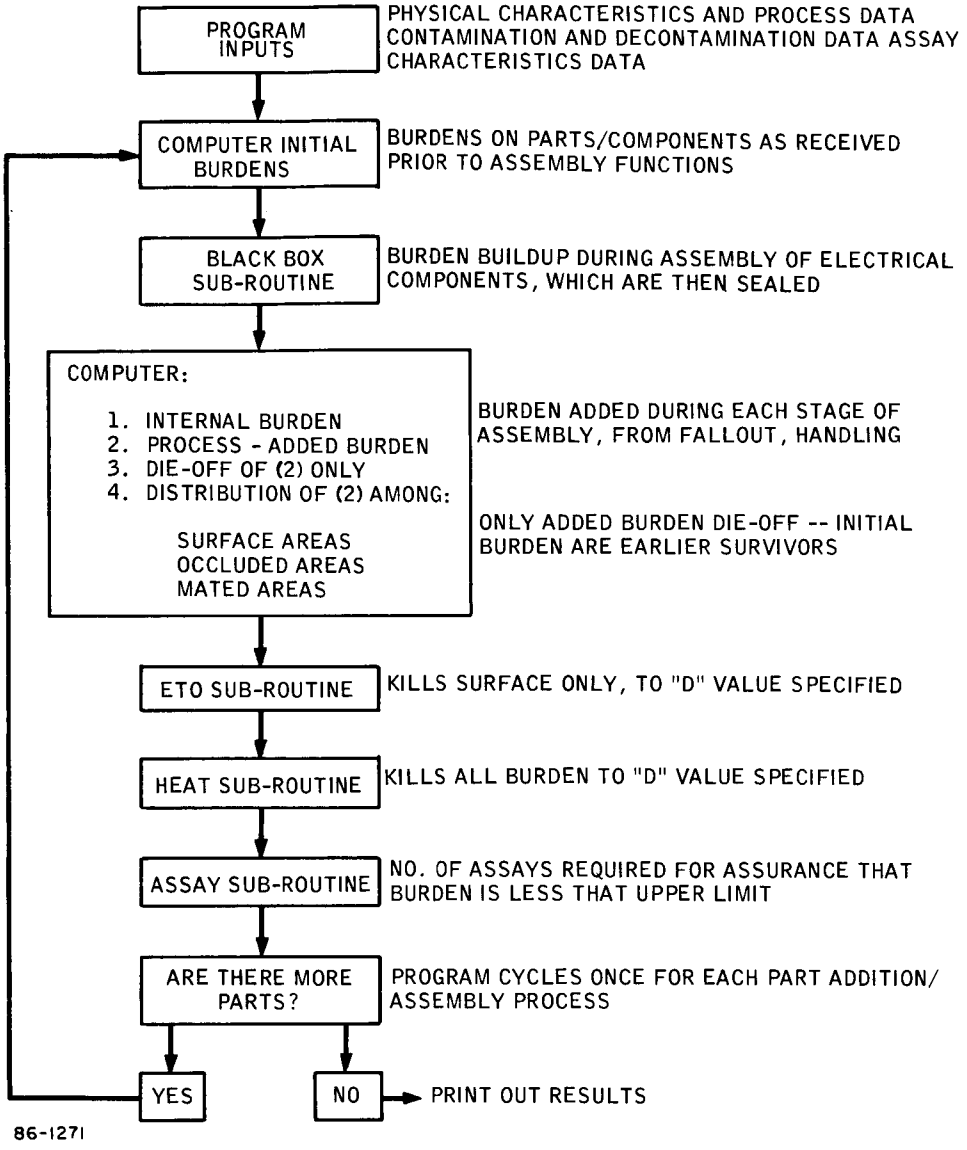


Figure 9 COMPUTER PROGRAM

internal burden within nonmetal materials of which electronic parts may be made, external burden on the surface of the component, occluded burden on the internal surfaces of the component box, or surface burdens of the parts which comprise the component.

The basic calculation performed at each assembly step consists of computing internal burden, process-added burden, and die-off, and the distribution of the surviving organisms into the appropriate categories of surface, occluded, and mated burden. The internal burden of any elements being added at a given assembly point which are composed partly or completely of nonmetals is calculated using the appropriate volume of non-metal material and the burden rate per unit volume.

The calculation of process-added burden encompasses burden adhering to the assembly as a result of fallout from the atmosphere and of handling by the personnel involved in the assembly process. The value added by fallout is a function of the surface areas of the part being assembled, the fallout rate in the room in which they are being assembled, the electrostatic factor (which applies only to non-metal exposed surfaces), and the duration of time for which any added elements will be exposed to the prevailing environmental conditions. The value added by handling is a function of the number of times that the elements are actually handled by people, the area of contact by their hands each time a handling operation takes place, and the expected amount of biological contribution per square inch every time a contact is made. After this basic calculation has been made, that portion of the burden which is expected to be subject to die off is identified separately in preparation for the next step.

The die off due to natural causes is calculated by applying the die-off rate to that portion of the burden which is subject to this phenomenon.

During any assembly process where two or more elements or assemblies are joined together, whether it be by bolting, bonding, or any other means, some of the surface area on each element will become mated. Thus, for a cover installed on a container, there is a mating of portions of the cover and container surfaces; additionally, the cover occludes the surfaces of any elements within the container after it is closed. In general, after an assembly process, all areas which were originally surface areas of the elements before assembly fall into one of three categories: surface, occluded, and mated. The calculation of these areas makes use of the information originally inputted which identified mated and occluded areas as a function of each assembly point. Once these values have been calculated the process-added burden (that is, after die off) can be apportioned among the three categories.

A subroutine can be activated for any particular assembly process, which accounts for the ETO-decontamination of surface burden by the amount (D value) specified as an input. ETO will not reduce burdens present that are internal to nonmetals, or burdens which are encapsulated by mating, and therefore inaccessible to ethylene oxide, and this is taken into account in the calculation.

A heat-soak subroutine is used to calculate the effect of heat soaks, where used, and serves to reduce all burden present by the specified D value, because heat can reach all burden contributions regardless of whether they are located on exposed or mated surfaces, within materials, or on occluded elements.

As an adjunct to these calculations, it is useful to calculate some information relevant to assay requirement (see Section 4.0). This can be done with a subroutine which identifies the number of assays of a given hardware element which would be required to establish the burden level of that element. The calculation takes into account the total burden in and on the element, an assigned value for the upper burden limit against which this expected burden is to be measured, the expected accuracy of the assay technique used for that particular type of element, and the desired degree of confidence. With this information, the subroutine furnishes the number of assays required to assure (with the required confidence) that the predicted burden on the element is less than the upper control limit.

The program then recycles and goes to the next assembly process (except in the case where the assembly process calculated is the final one in a series), repeating the complete set of calculations involving either the addition of a new element or the assembly of two or more subassemblies which have been created up to that point, until the final assembly operation is reached and the results are printed out.

## 3.3 IMPLICATION OF ASSAY REQUIREMENT

One of the purposes of a burden estimate is to furnish a base line to which the sterilization program can be controlled by performing assays and other monitoring operations. Inasmuch as all the factors contributing to burden, and therefore the burdens themselves, are somewhat random in nature, and inasmuch as all assay techniques involve a measure of uncertainty, one must allow for the difference in the assayed (or best estimate) values and the control values. Thus, with a given assayed estimate $X_e$ obtained from $n$ tests, one can state with a level of confidence $\gamma$ that, based on an assumed standard deviation $\sigma$ in the burden, the true burden does not exceed an upper-limit value $X_u$ (see paragraph 4.2). Therefore, in performing burden estimates for control purposes, it is necessary to make two separate calculations for the selected system and assembly/test/decontamination program, one involving conservative estimates to obtain control values, and the other using upper-limit values defined in the following.

The calculation of the control values utilizes conservative values for the internal burdens and the process-induced contamination and decontamination factors. The burden value obtained in this manner for every element of the capsule at every point in the process can then be used for control (go/no go) decisions.* A greater value (by a factor of two to five, generally, selected on the basis of the considerations indicated in the next paragraph) is then used as the upper-limit value. The total presterilization burden calculated on the basis of the selected upper-limit values must not exceed $10^8$ organisms (or such lesser value as it may be desired to achieve prior to terminal sterilization).

The number of assays required for any element at any time can then be determined from the control value and the upper-limit value using the guide lines indicated in paragraph 4.2. If this number is considered excessive in any instance, the upper-limit value must be increased. This may require a decrease in the upper-limit values on other elements in order to maintain the total presterilization control value to the specified value ($10^8$ or less). If such a juggling is impossible, it will be necessary to tighten up the process in some area to decrease the contamination (or internal burden) or increase the decontamination; this will lower the control values and, for the same upper-limit values, yield a lowered assay requirement.

It should be noted that a total presterilization burden based on the control values is then much less than the specified value (by a factor of two or more). Furthermore, a third set of burden estimates calculated on the basis of best estimates rather than conservative assumptions would yield a still lower total presterilization burden (again, by a factor of two, typically). Therefore, this approach inherently includes two elements of conservatism.

## 3.4 BURDEN ESTIMATE FOR THE PROBE DESIGNED FOR ENTRY FROM ORBIT (EFO)

A total of 22 burden estimates were made for the probe designed for the EFO case, varying the parameters to which results were considered to be sensitive. In this manner, the effect of the contamination and decontamination factors, on the burden can be established, and proper controls for a sterilization plan can be selected. The factors which were varied are listed in Table XI, and the ranges over which the factors were varied are given there as well.

The results of fifteen of the more significant runs are given in Table XII. The final burden varies from a low value of about $0.04 \times 10^8$ organisms to an unrealistically high value of $83 \times 10^8$. Case 5 is considered to represent the most

*The basic decision criterion for any test involves the control value $X_c$ and the assay estimate $X_e$ obtained by dividing the microbial count (or average of several counts) $\overline{X}_a$, as corrected for the growth in the culturing process, by the recovery factor R (see paragraph 4.1.5). The test is passed if $\overline{X}_a/R \leq X_c$.

## TABLE XI

## BURDEN SENSITIVITY ANALYSIS CASES

| Variations | Range |
|---|---|
| Internal burden | ± Order of magnitude |
| Fallout | 32 to 128 org/in$^2$/day |
| Electrostatic factor | 1 to 10 |
| Die-off | 30 to 99 percent |
| E. T. O.* | Yes/no |
| Clean-room** | Yes/no |
| Flight acceptance heat*** | Yes/no |

*Applied during subassembly to the modules containing electronic equipment, and at the end of final assembly to the entire capsule system after insertion into the sterilization canister.

**Encompasses the entire final assembly facility, and also the facilities in which electronic components are assembled.

***Applied at the component level to all functioning components.

## TABLE XII

### BURDEN SENSITIVITY ANALYSIS PROCESS VARIATIONS

| Case | Internal Burden (per part) | Fallout Rate (per in. $^2$/day) | Electrostatic Factors | Die-Off (percent) | F. A. (1) | E. T. O. (2) | C. R. (3) | Burden x $10^8$ |
|---|---|---|---|---|---|---|---|---|
| 1 | Normal | 32 | 5 | 90 | No | No | No | 9.6 |
| 2 | Normal | 32 | 5 | 90 | Yes | No | No | 4.7 |
| 3 | Normal | 32 | 5 | 90 | No | Yes | No | 5.2 |
| 4 | Normal | 32 | 5 | 90 | No | No | Yes | 9.3 |
| 5 | Normal | 32 | 5 | 90 | Yes | Yes | No | 0.27 |
| 6 | Normal | 32 | 5 | 90 | Yes | Yes | Yes | 0.05 |
| 7 | -O. M. (4) | 32 | 1 | 99 | Yes | Yes | Yes | 0.04 |
| 8 | +O. M. (4) | 128 | 10 | 30 | Yes | Yes | Yes | 0.12 |
| 9 | Normal | 128 | 10 | 30 | Yes | Yes | Yes | 0.12 |
| 10 | Normal | 128 | 10 | 30 | Yes | Yes | No | 6.5 |
| 11 | Normal | 128 | 10 | 30 | No | No | Yes | 42.5 |
| 12 | Normal | 128 | 10 | 30 | No | Yes | No | 12.6 |
| 13 | Normal | 128 | 10 | 30 | Yes | No | No | 47.6 |
| 14 | Normal | 128 | 10 | 30 | No | No | No | 53.7 |
| 15 | +O. M. (4) | 128 | 10 | 30 | No | No | No | 83.0 |

(1) Flight Acceptance Heating of Components (12D)
(2) Chemical Decontamination of Surface (4D)
(3) Clean-Room, Class 100 per Federal Specification 209 (2D)
(4) Order of Magnitude Less or Greater than Normal

practical sterilization plan in light of the present understanding of the various factors involved. The breakdown of the results of Cases 1, 5, and 6 as a function of activities is shown in Figure 10.

The results of these estimates have been presented in the form of nomograms in Figures 11 through 18. These nomograms allow the reader to vary the several parameters and thus compare their importance.

In Figure 11, for example, where the internal burden is normal and where no decontamination, clean-room, nor flight-acceptance tests are used, one can evaluate the effects of variables in the following manner: consider the condition where fallout is 128 organism/in$^2$/day, the electrostatic factor is 10, and die-off is 30 percent; a line drawn through the first two of these values intersects the vertical dividing line, and a line drawn from this new point through the percent die-off value (30 percent) defines the total biological loading, namely 54 x $10^8$ organisms. The example shown considering fallout rate to be 40, electrostatic factor 5, and die-off to be 90 percent, resulting in a burden of 10 x $10^8$, is the burden expected on the reference physical system if no controls of any kind were exercised. (These values do not stem from realistic conditions, and the entire series of estimates was made solely for the purpose of evaluating the sensitivity of the final burden levels to certain variables).

In general, Figure 11 represents the situation in which all internal burdens are considered normal (that is, when internal burdens of nonmetallic elements are considered to be as shown in Table X) and where no ETO, clean-rooms, nor flight-acceptance tests are used; the vehicle is therefore simply assembled under normal aerospace conditions, which could range from fairly good to quite poor. In this no control condition, the total burden is heavily dependent on contamination variables and sensitive to electrostatic factor only at higher levels of fallout. It is interesting to note that if die-off were 100 percent, the remaining burden would still be on the order of 7 to 8 x $10^8$ organisms. Since no ETO nor flight-acceptance tests have been used, all of the internal burden of nonmetallic parts and all of the initial surface and occluded burdens of components and other elements (as received prior to the final assembly) have remained on the capsule and have not been reduced in any way. The bulk of this residual burden is the internal burden of the rocket motor and the occluded burden of parachutes and cables.

Figure 12 represents a situation which is similar to that discussed in the preceding paragraph, except for the application of ethylene oxide as a decontamination control to modules 1 and 2 prior to their being sealed, to the main drogue parachutes before being packed, and to the final system after its insertion onto the sterilization canister. The total biological burden on the vehicle is less than in the preceding case, because of the application of ETO. A considerable

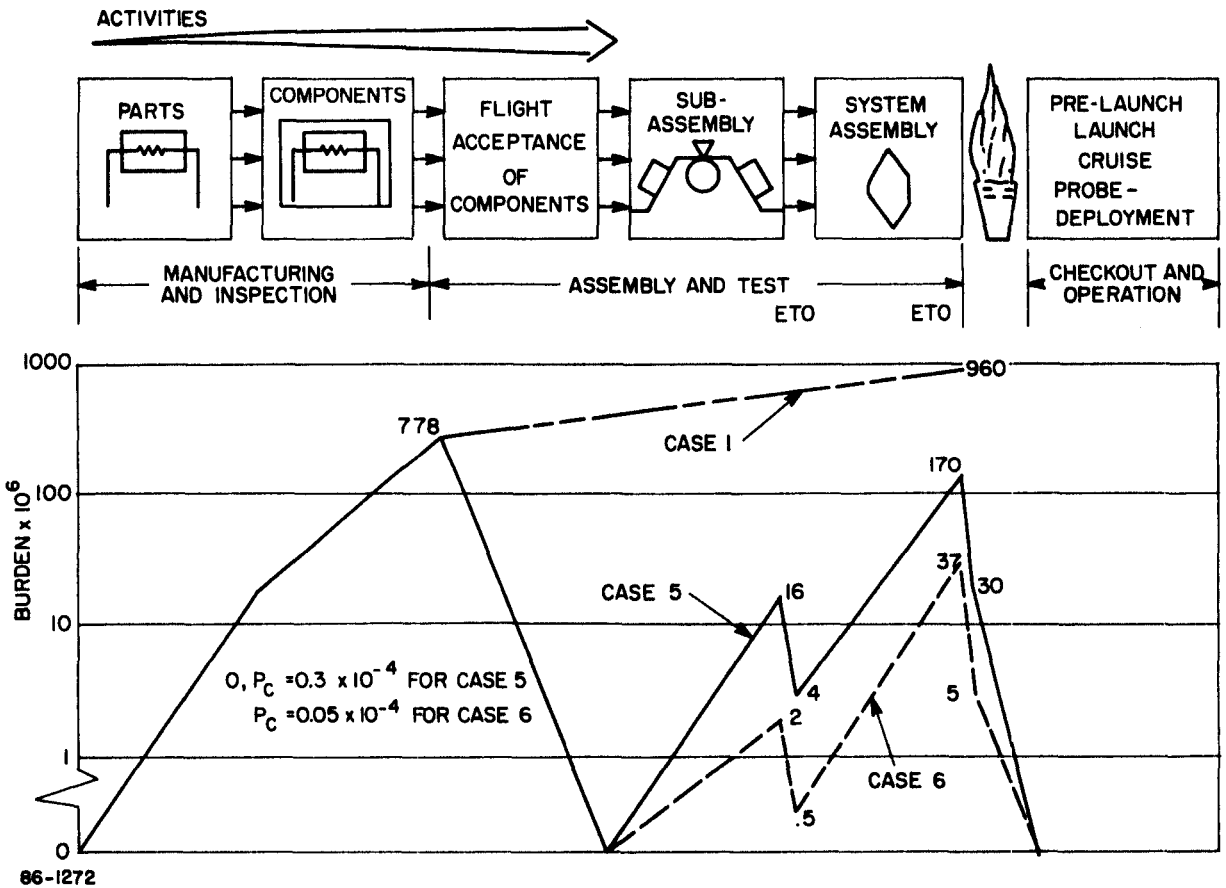


Figure 10 BURDEN AS A FUNCTION OF ACTIVITIES

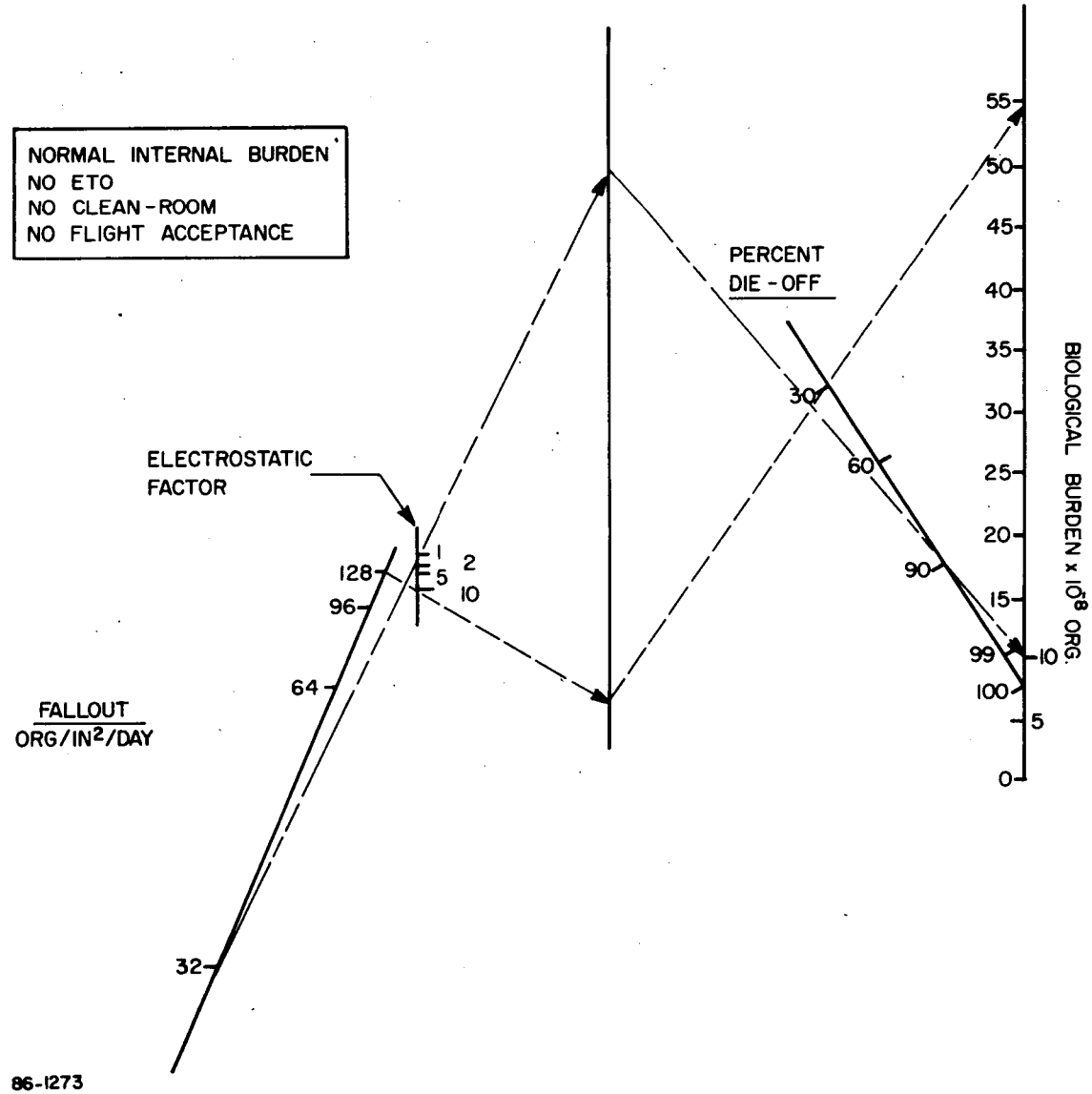


Figure 11 CONTAMINATION SENSITIVITY NOMOGRAM - NO PROCESS CONTROLS

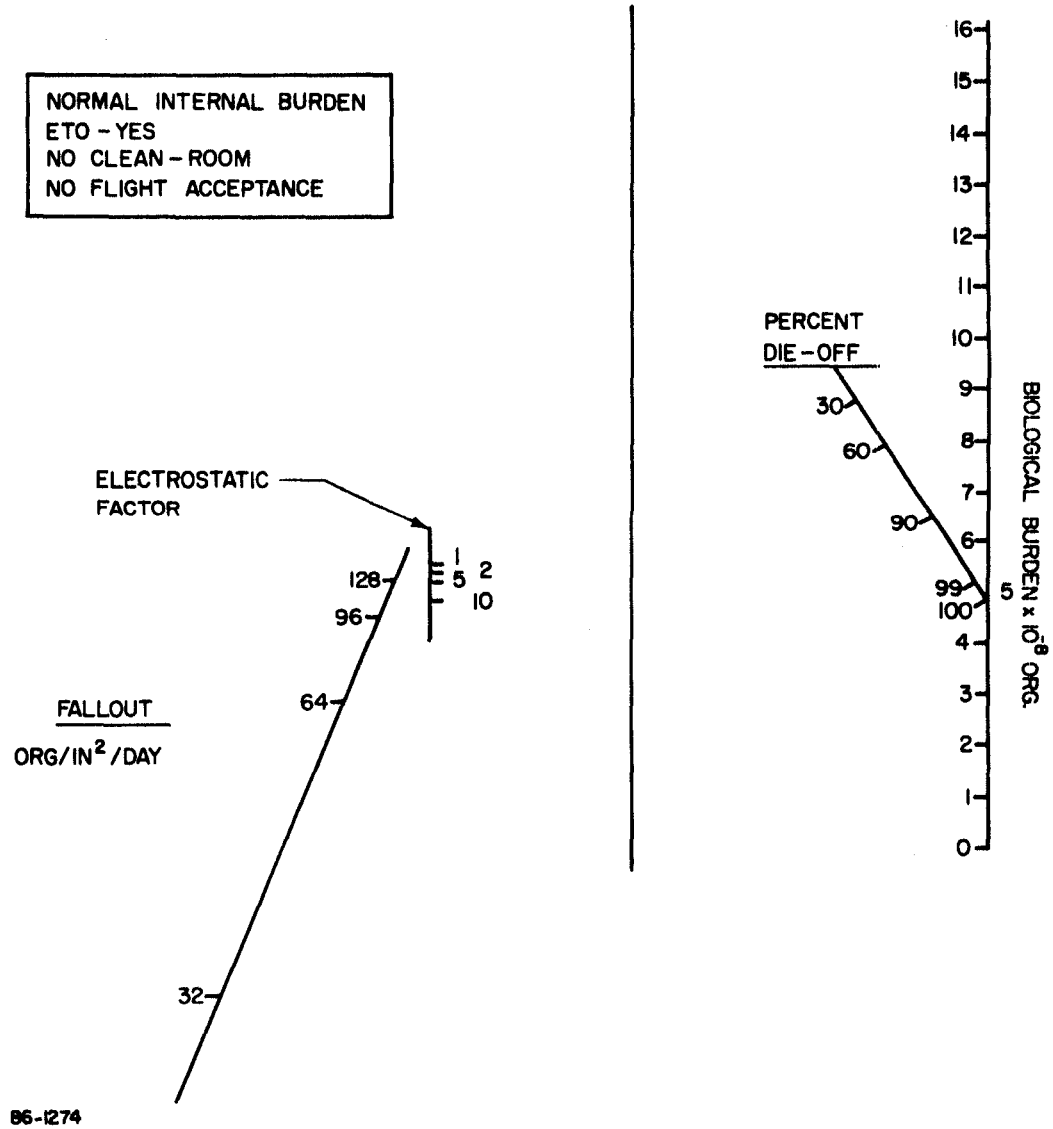


Figure 12 CONTAMINATION SENSITIVITY NOMOGRAM - ETO CONTROL ONLY

amount of residual burden would now exist even if die-off were 100 percent, because the burden internal to the rocket motor and that occluded and internal to cabling is not susceptible to surface decontamination. The variation in total burden due to extreme variations in the fallout, electrostatic factor, and die-off is not as great as it was previously; under these conditions the burden would fall between 5 and 12 x $10^8$ organisms, the variation being on the order of 60 to 70 percent, compared with a factor of 5 in the previous case.

Figure 13 represents the case where the situation is improved by the addition of assembly in clean rooms. As in the previous case, the residual burden, even with 100 percent die-off, is still on the order of 5 x $10^8$ organisms, again, because the clean room has not affected the burden internal to the rocket motor nor those organisms internal to or occluded by cabling. In this case the impact of clean-room use has essentially been to reduce still further the percentage variation in total biological burden as a function of maximum changes in fallout, electrostatic factor, and die-off to 20 to 30 percent when comparing worst and best cases of contamination factors.

If flight-acceptance heat tests (applied at the component level) are the only decontaminating factor, the results are as shown in Figure 14. The residual biological burden has now been reduced significantly, to about 2 x $10^8$ organisms, and exists only on those elements which were not subjected to the flight-acceptance tests. A ground rule of this particular study was that only those components considered functional (e.g., electronic components or mechanical actuating devices) would be subjected to the flight acceptance cycle; therefore, the parachutes and other passive components, such as sheet-metal structures, are not decontaminated by the flight-acceptance tests. Since ethylene oxide is not used, either, in this case, all of the initial burden on the surfaces of the main and drogue parachutes has remained in the system throughout final assembly, and is principally responsible for the residual burden. In this case of no flight-acceptance tests, no ETO cleaning, and no use of clean rooms, the presterilization burden is quite sensitive to variations in fallout, electrostatic factor, and die-off.

In the case represented in Figure 15, use is made of both ethylene oxide and flight-acceptance heat-soak decontamination, but not of clean rooms. The total biological burden can vary from essentially zero to as much as about 5 x $10^8$, depending on variations in fallout, electrostatic factor, and percent die-off. For example, if the fallout is 128 organisms/in.$^2$/day, the electrostatic factor is 10, and the die-off is 30 percent, then the biological burden on the capsule exceeds 6 x $10^8$ organisms; this represents the worst combination considered, which is actually unrealistic. Under this high fallout condition, the total burden is reduced from approximately 6 x $10^8$ organisms to around 1.5 x $10^8$ if the die-off is increased to an expected value of 90 percent, which represents approximately 6 months storage under representative conditions and is considered

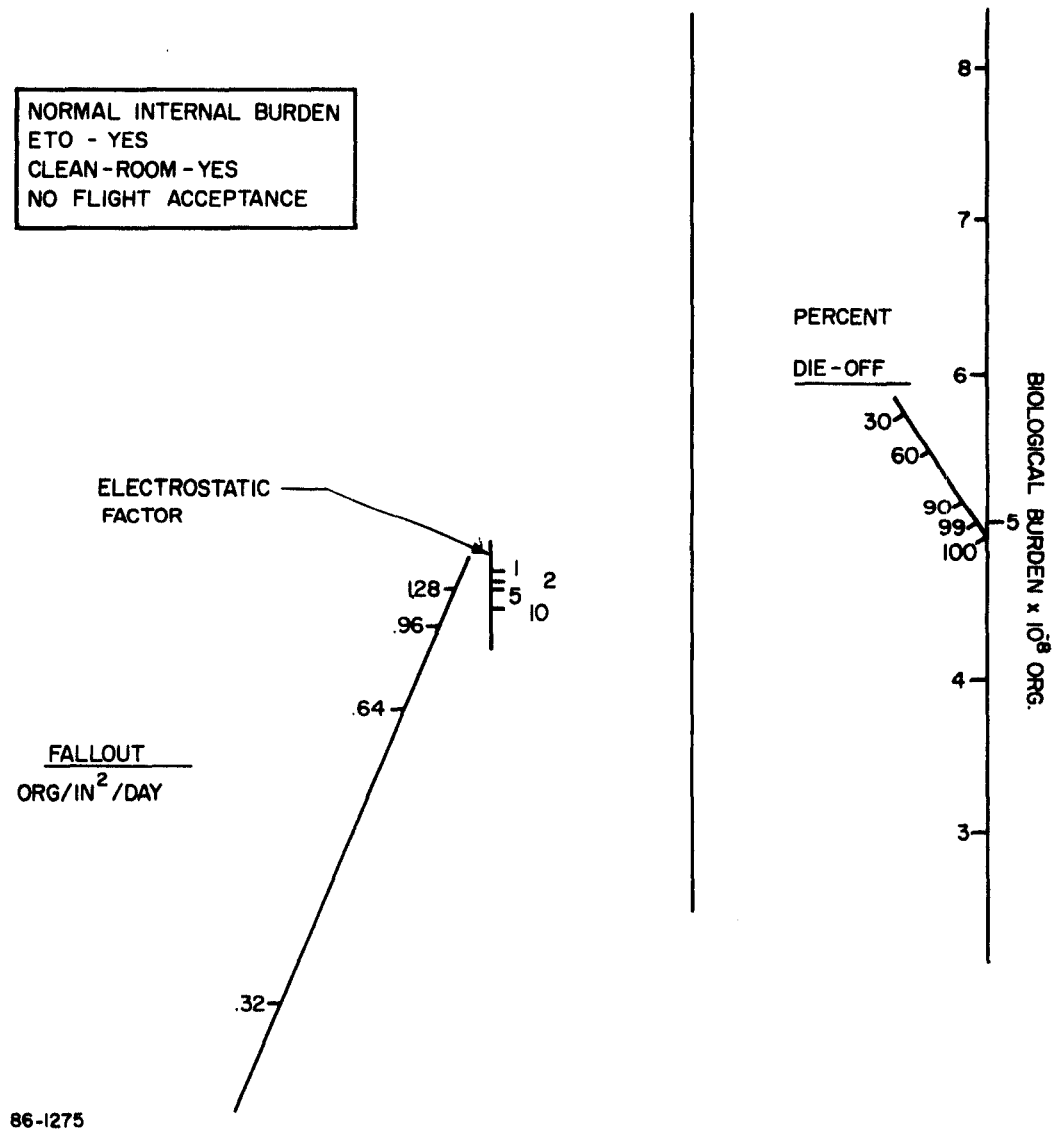


Figure 13 CONTAMINATION SENSITIVITY NOMOGRAM - ETO AND CLEAN-ROOM CONTROLS

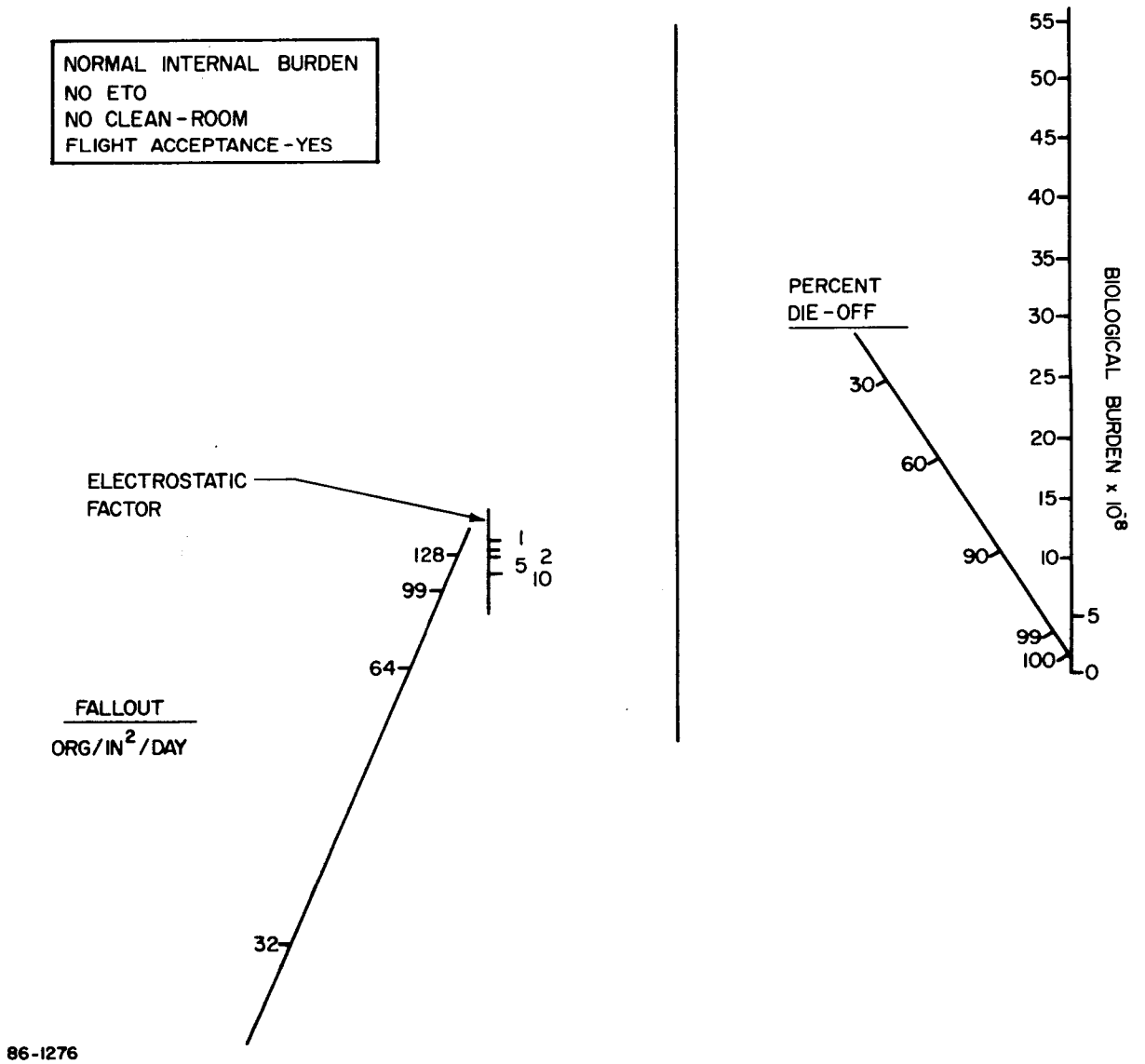


Figure 14 CONTAMINATION SENSITIVITY NOMOGRAM - FA CONTROL ONLY

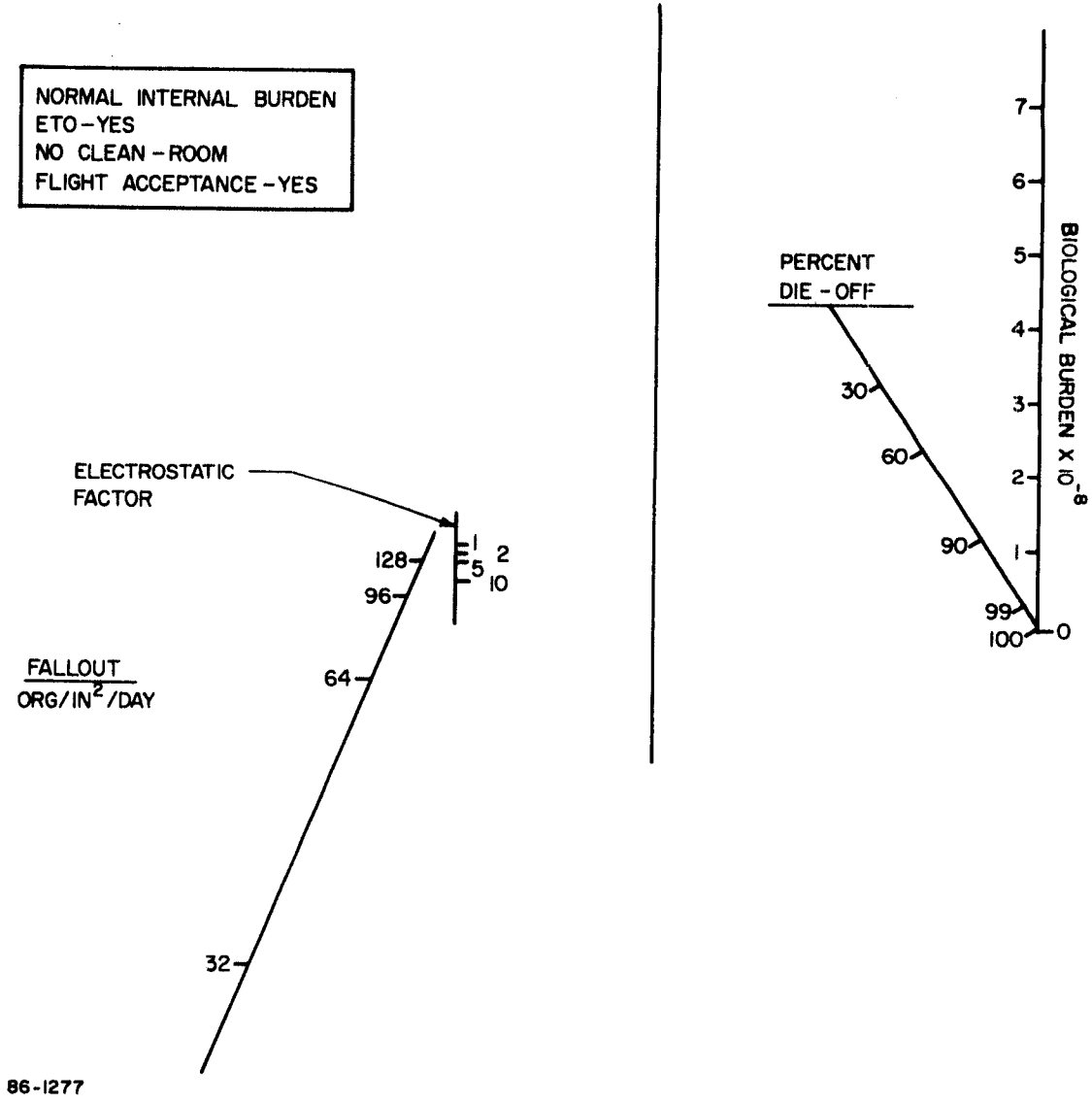


Figure 15 CONTAMINATION SENSITIVITY NOMOGRAM - FA AND ETO CONTROLS

to be more realistic. If, additionally, the fallout is 40/in$^2$/day, and the electrostatic factor is 5 (both of which represent more reasonable values), then the total burden is further reduced to about $0.5 \times 10^8$ organisms. Therefore, under these reasonable conditions, the capsule could be assembled in a normal non-clean area and still have a total burden prior to terminal-heat sterilization half of that permissible.

Figure 16 represents the situation where all controls are applied. The resulting biological burden is quite low, the maximum being on the order of $0.1 \times 10^8$, although even with all these controls some residual burden remains. This burden is principally located on those surfaces of the capsule which have become mated during assembly, thereby trapping organisms that are not accessible to the final ETO decontamination process. If ETO were used at additional points of assembly, this mated burden could be reduced. If it is decided not to reduce the 12D terminal heat sterilization cycle, final assembly operations can be simplified and costs reduced by backing off from these controls and exercising only those necessary to assure a final presterilization burden of less than $10^8$ organisms.

The implication of reducing the burden internal to nonmetallic materials and parts by one order of magnitude from the originally assumed values (for the no-control case, i.e., no clean rooms, no ETO and no flight-acceptance heat tests) is demonstrated by the results shown in Figure 17. The principal reduction in burden is nearly $3 \times 10^8$ organisms, most of which are accounted for in the reduction of burden internal to the rocket motor. Otherwise these values are essentially the same as those shown in Figure 11. Similarly, if the internal burden is increased by an order of magnitude (for the same case) the results are as shown in Figure 18. The residual burden now increases by nearly $30 \times 10^8$ organisms, principally due to the increase in burden of the rocket motor, which is again by far the single largest contributor to the burden in the system.

It should be emphasized again that the sensitivity analysis performed here, with the results shown in these nomograms, had as its sole purpose an understanding of the relative significance of changes in certain parameters. Only cases 1 through 6 (the results given in Figure 13) represent values expected for the particular approaches considered in the reference sterilization program. The other estimates do not necessarily reflect realistic nor expected values. Nonetheless, a point of major significance indicated by these results is that even in a complex system such as the capsule considered in this study (and even with the conservative contamination factors used in Cases 1 to 6), the total burden prior to terminal heat sterilization can be controlled and kept to a value less than $10^8$ organisms very effectively without the use of clean-room facilities. Even so, the use of clean rooms is still highly desirable for purposes of reliability and for facilitating the management of the burden, i.e., for achieving the burden margin implied by the assay requirement (see paragraph 3.3), etc.

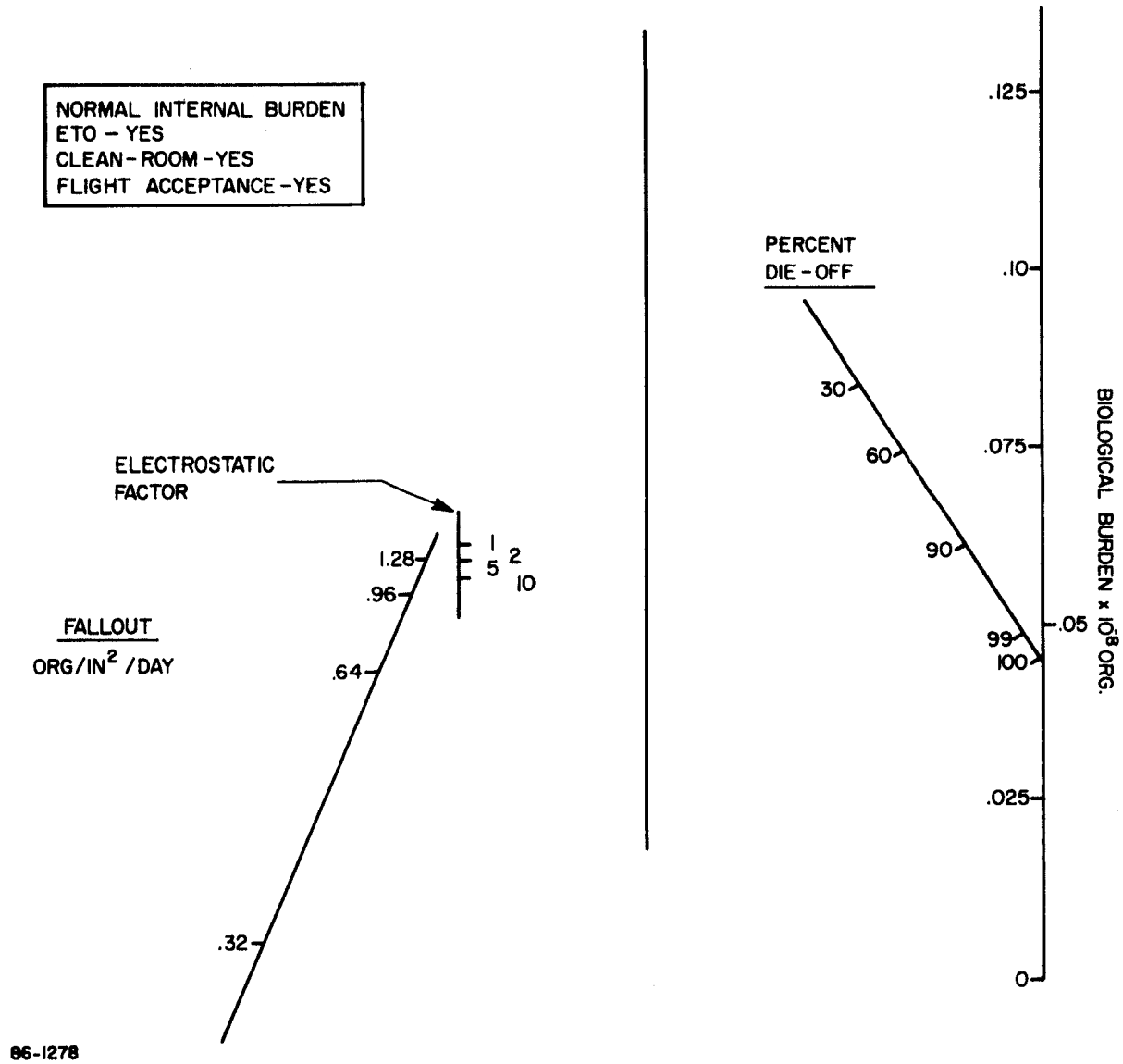


Figure 16 CONTAMINATION SENSITIVITY NOMOGRAM - ALL CONTROLS APPLIED

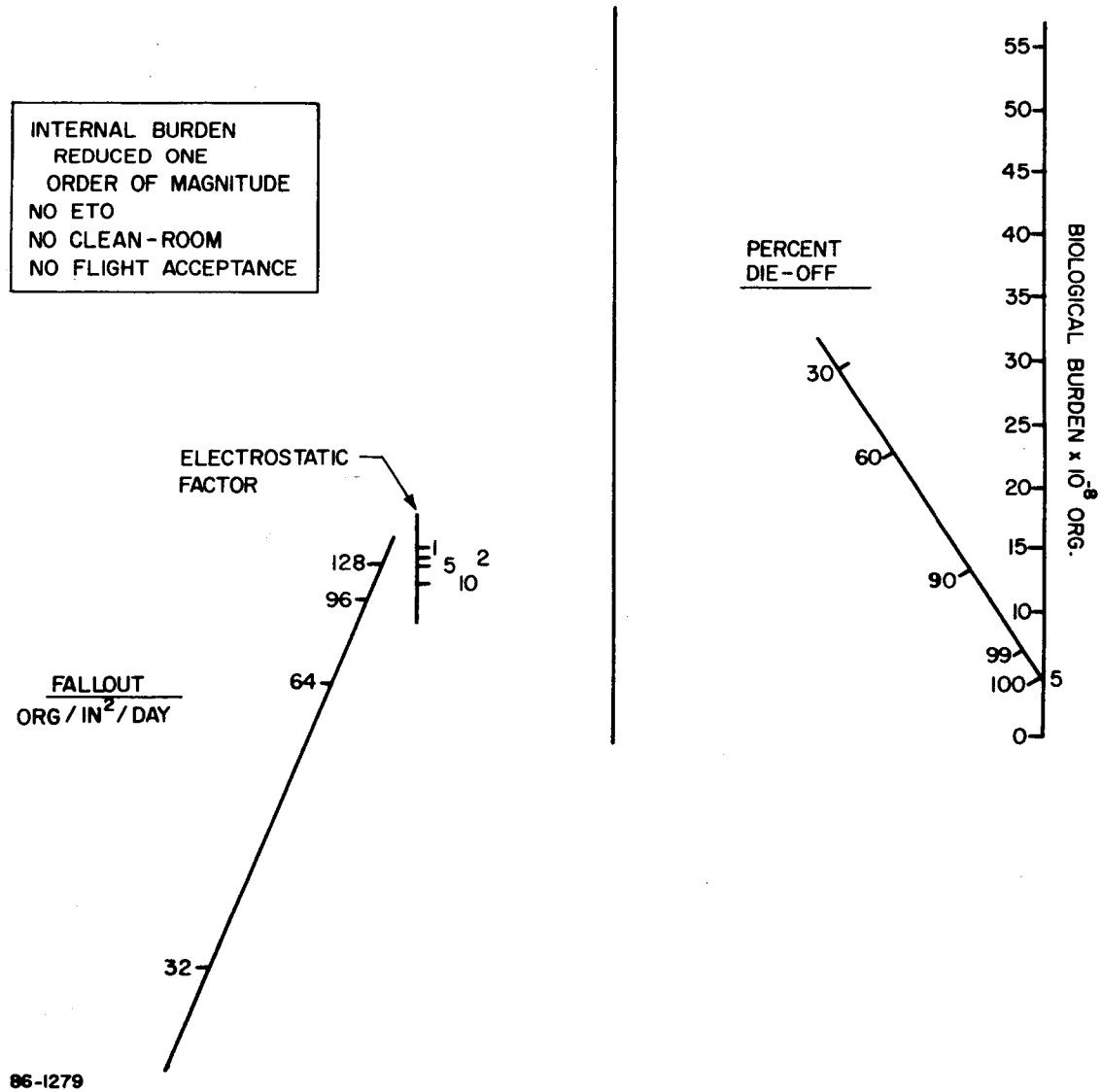


Figure 17 CONTAMINATION SENSITIVITY NOMOGRAM - NO PROCESS CONTROLS AND INTERNAL BURDEN REDUCED

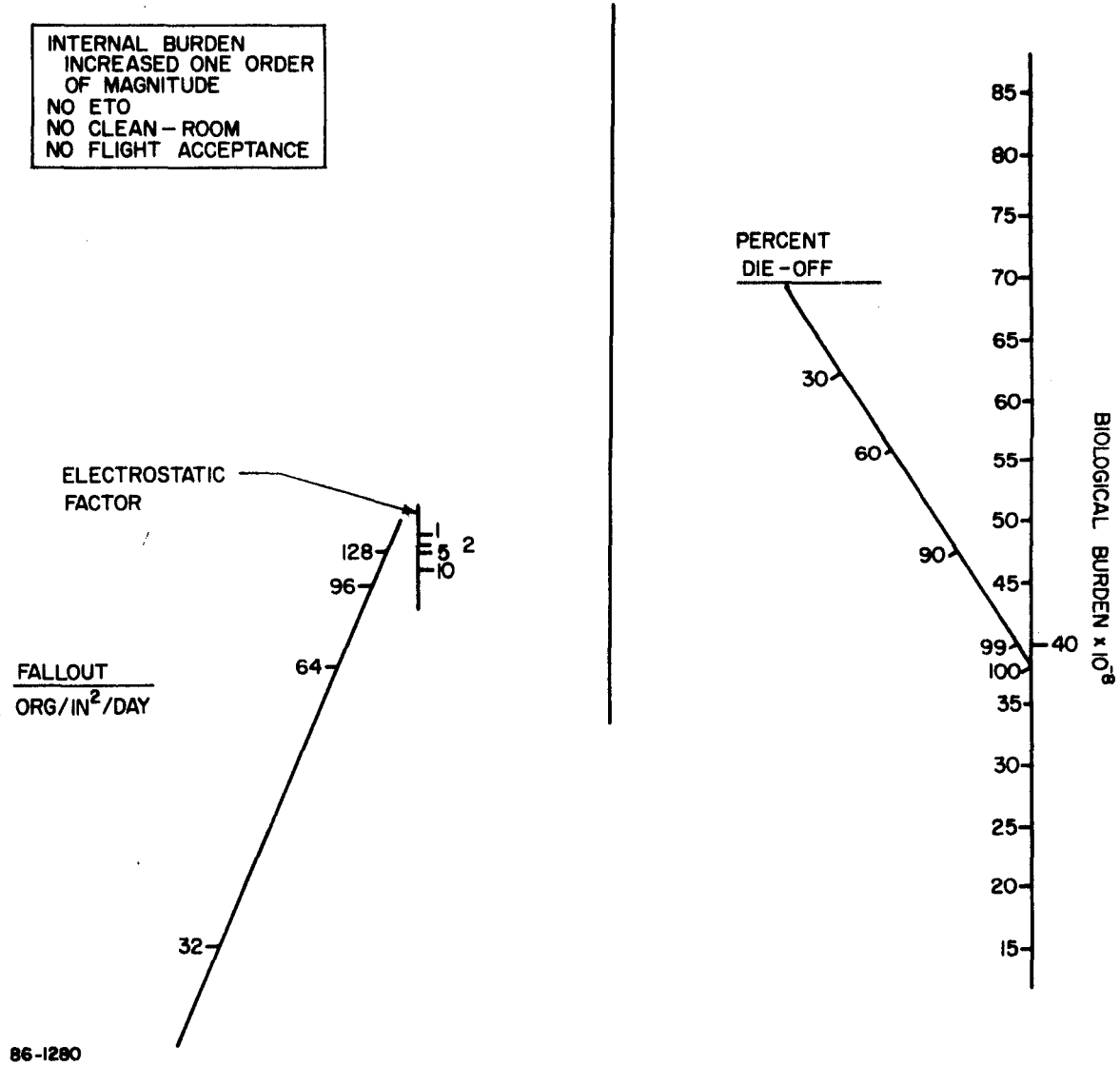


Figure 18 CONTAMINATION SENSITIVITY NOMOGRAM - NO PROCESS CONTROLS AND INTERNAL BURDEN INCREASED

## 3.5 BURDEN ESTIMATE FOR THE PROBE/LANDER DESIGNED FOR ENTRY FROM THE APPROACH TRAJECTORY (EFAT)

Similar calculations were performed for the probe/lander designed for the EFAT case as for the probe designed for the EFO case, except that the calculations were performed manually, using the identical approach in all other respects, and using the information concerning the capsule and assembly process given in Appendix B. The results of these calculations are summarized in the following paragraphs. The burdens are presented in Table XIII. The total predicted burden may be seen to range from a low of $4.7 \times 10^7$ organisms to a high of $1.84 \times 10^8$ organisms. A breakdown of the burden within the various components of the systems is given in Figures 19 through 25.

An estimate of the burden which would be added to the suspended payload if it were assembled in a non-clean area instead of a Class 100 Clean-Room is shown in Table XIV, the underlying assumption being that the clean-room operation results in a burden deposition 10 percent of that in the factory operation, which is probably high for the clean-room operation.

It may be of interest to compare the results for the burden levels of the capsule designed for the EFAT case with those for the EFO case, despite the fact that the two capsules were designed not only for different entry modes but also under different ground rules in other respects. The most significant design differences are that the system for the EFO case uses a solid instead of a sterile liquid propulsion system on the flight capsule, that a cone-sphere shape is used instead of the tension shape, that the shell is made of beryllium honeycomb instead of fiberglass, and that the sterilization canister for the EFO case does not incorporate a meteoroid bumper. The effect in burden brought about by these differences is summarized in Table XV. The bases for these estimates are as follows:

The casing for the solid-propulsion case is 12 inches in diameter and has a volume of 1083 in.$^3$; since the casing is one half the diameter of the fuel tank for the liquid-propulsion system, the surface and occluded burden on the casing are one-quarter of the value on the tank. The estimated burden for the solid fuel, if explosive, is 10 microorganism/in.$^3$, so that the total internal burden is approximately 10,000 organisms, which is substantially lower than the values for propellant contamination used in the EFO case. The nozzle has the same burden in either case.

In the heat-shield/structural composite, the preliminary designs for the compression ring were quite different, but the circular flange for the EFO case will have about the same burden as the ring for the EFAT case. The forward and rear beryllium faces for the EFO case will have about one-twelfth of the burden of the combination of the surfaces of the skirt and cap of the EFAT case; the fiberglass has to be subjected to an additional electrostatic factor

## TABLE XIII

### INITIAL FLIGHT CAPSULE BURDEN ESTIMATES SUMMARY
(All Numbers Are $\times 10^{-3}$)

| | Surface Burden | Internal Burden | Occluded Burden | Internal Plus Occluded Burden | Special Handling for Parachute | Non Bio-Clean Assembly |
|---|---|---|---|---|---|---|
| Flight Capsule | 20748 | 7417 | 129325 | 136742 | | |
| Canister | 13496 | ---- | 34571 | | | |
| Adapter | 27 | ---- | 38 | | | |
| Probe Lander | 8225 | 7417 | 94716 | 102133 | 27,000 | 37,000 |
| | | 21 | 109 | | | |
| Separated vehicle | 6161 | 771 | 5185 | | | |
| Suspended capsule | 1036 | 6655 | 89531 | | | +10,000 |
| External payload | 147 | 2042 | 86273 | | | |
| Science | 1 | 1571 | 289 | | | |
| Propulsion and A. C. | 16 | 459 | 193 | | | |
| Descent (parachute etc.) | 3 | 0 | 85823 | | -75,000 | |
| Other | | 12 | 18 | | | |
| Impact attenuation | 76 | 1617 | 246 | | | |
| Flotation | | 69 | 286 | | | |
| Landed payload | 168 | 2927 | 2738 | | | |
| Science | 34 | 301 | 390 | | | |
| Communication | 2 | 2250 | 414 | | | |
| Sequencing and data handling | 1 | 89 | 1381 | | | |
| Other | --- | 289 | 848 | | | |

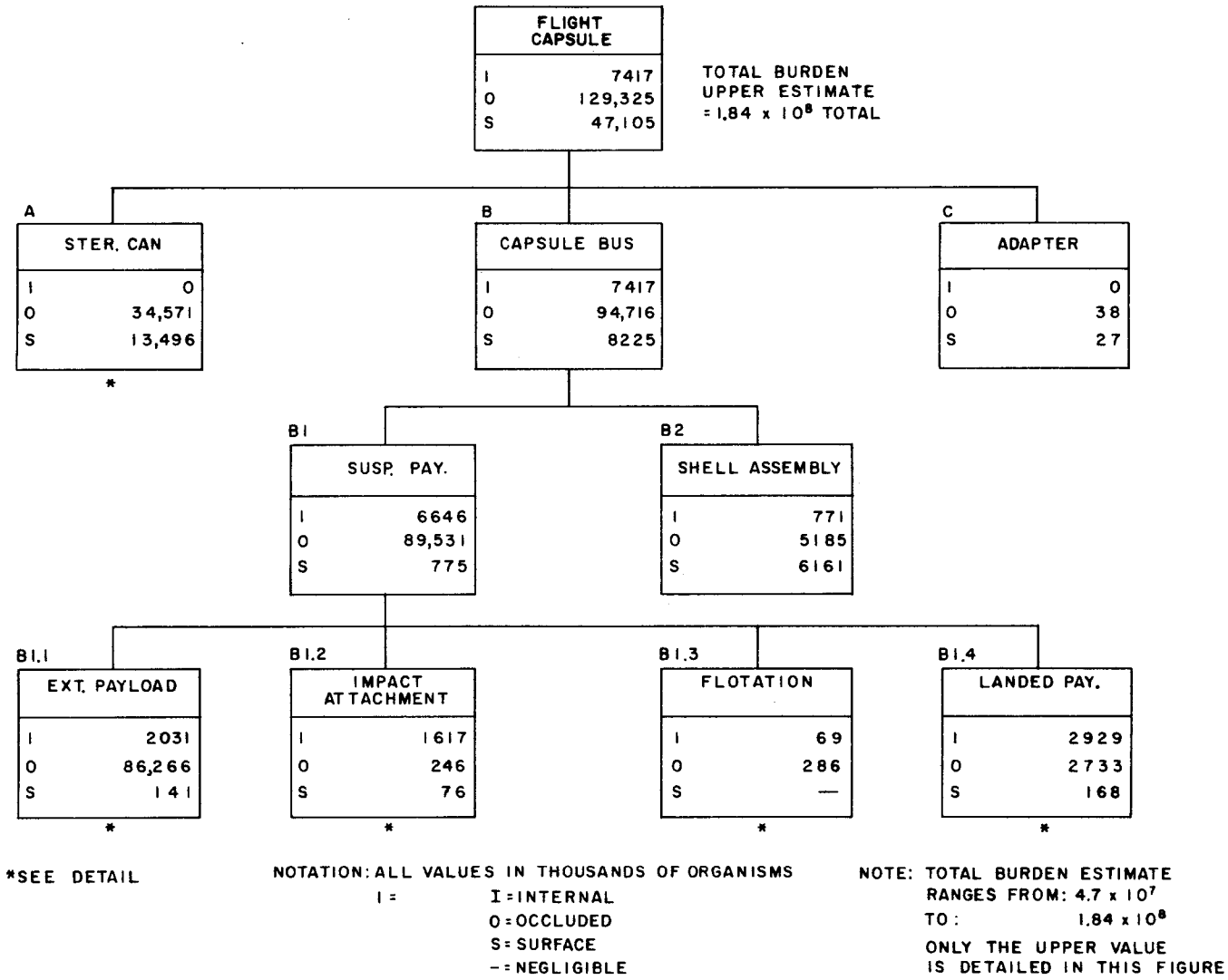


*SEE DETAIL

NOTATION: ALL VALUES IN THOUSANDS OF ORGANISMS
I = I = INTERNAL
O = OCCLUDED
S = SURFACE
– = NEGLIGIBLE

NOTE: TOTAL BURDEN ESTIMATE RANGES FROM: $4.7 \times 10^7$ TO: $1.84 \times 10^8$
ONLY THE UPPER VALUE IS DETAILED IN THIS FIGURE

85-0393

Figure 19 INITIAL FLIGHT CAPSULE BURDEN ESTIMATES

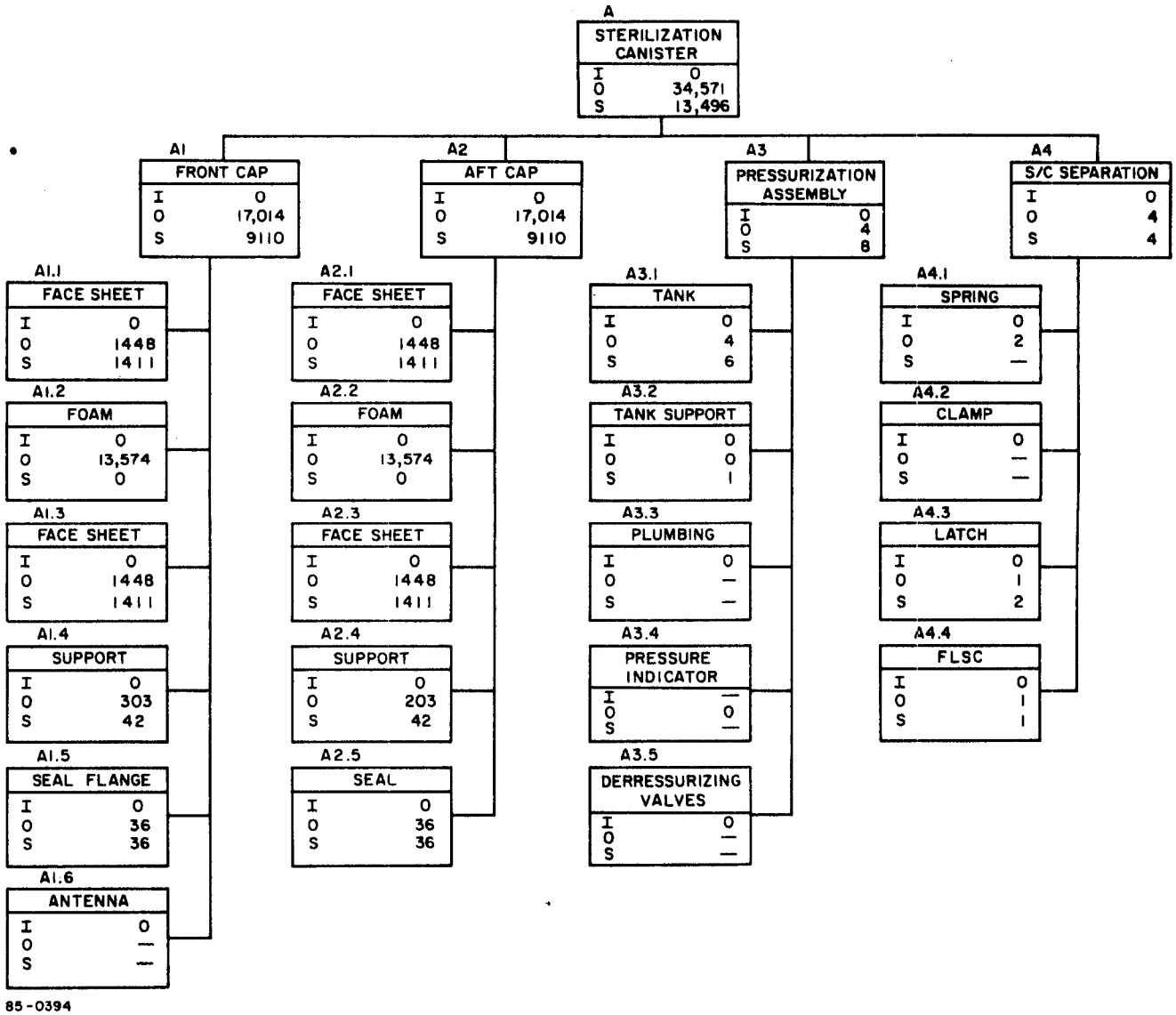


Figure 20 INITIAL FLIGHT CAPSULE BURDEN ESTIMATES- STERILIZATION CANISTER

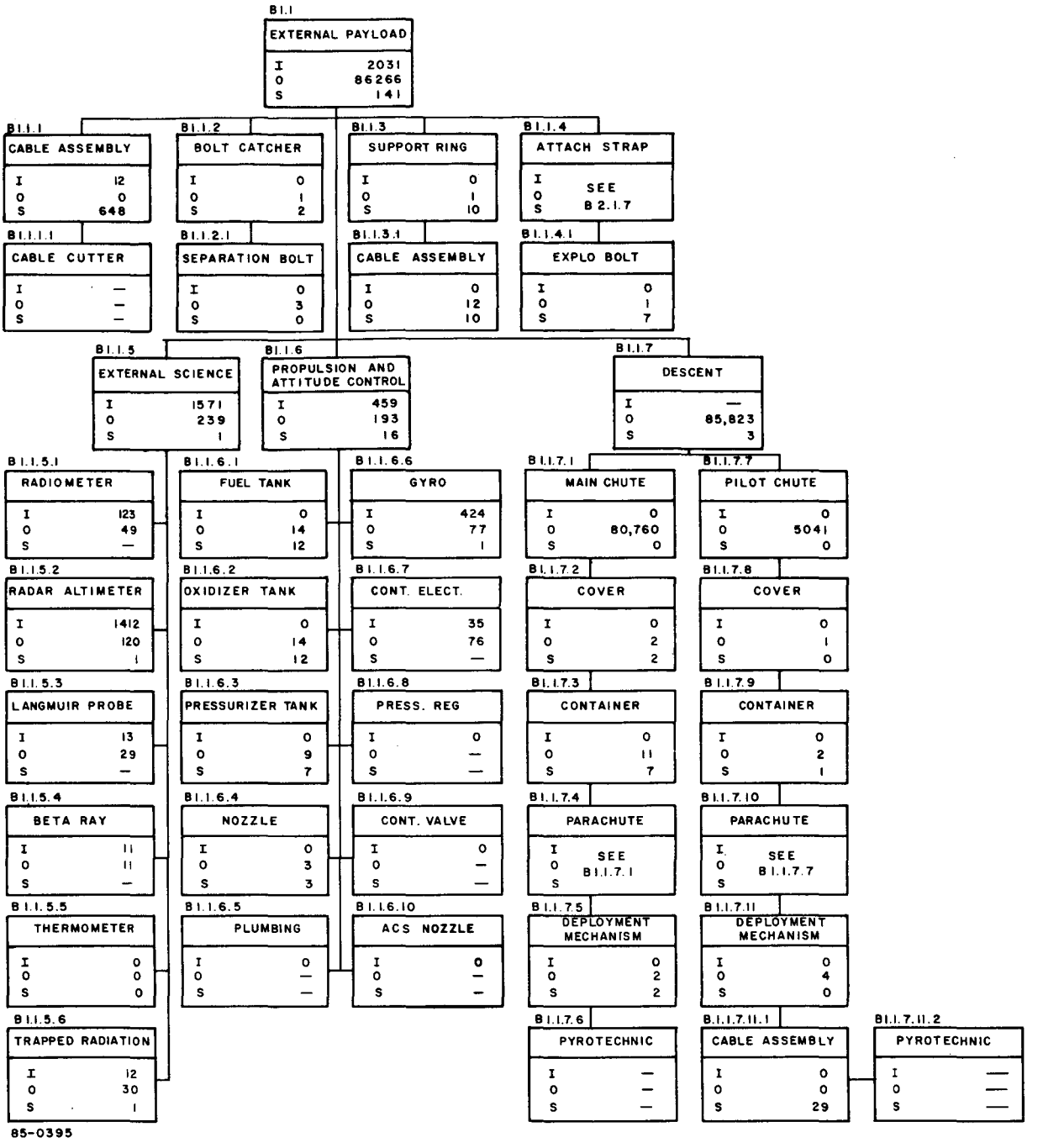


Figure 21 INITIAL FLIGHT CAPSULE BURDEN ESTIMATES - EXTERNAL PAYLOAD

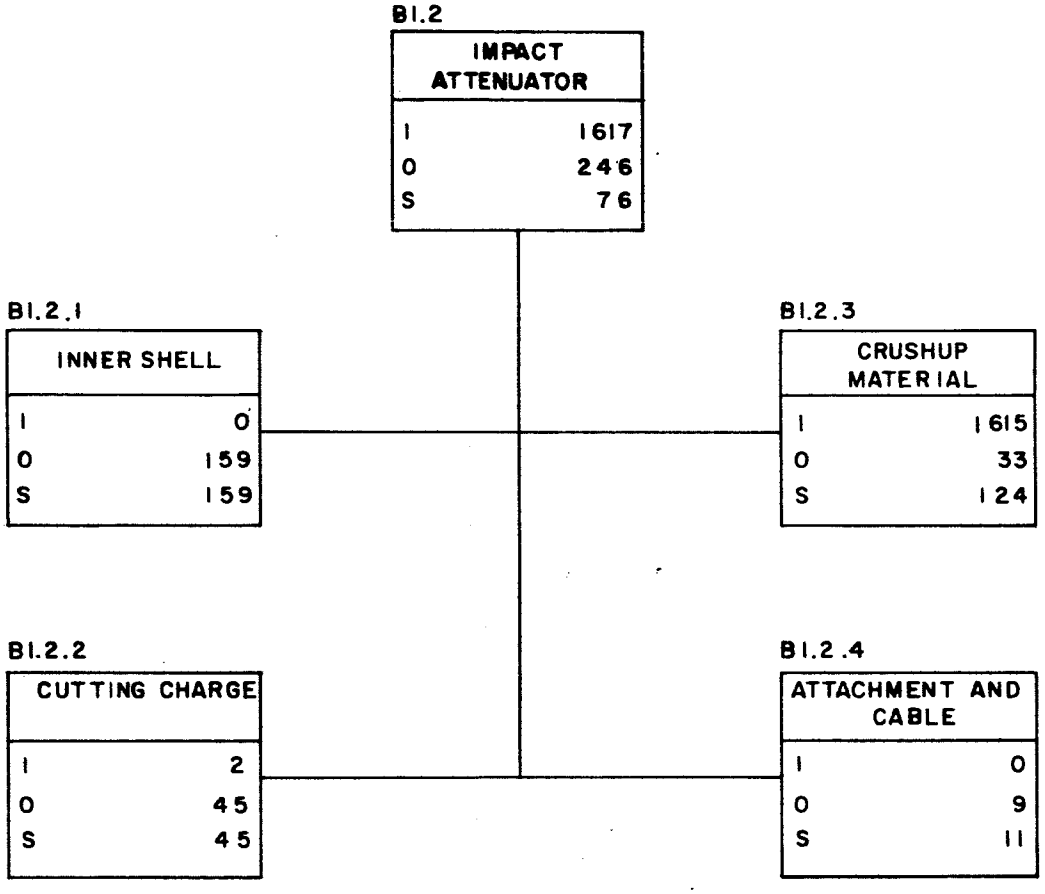


85-0396

Figure 22 INITIAL FLIGHT CAPSULE BURDEN ESTIMATES - IMPACT ATTENUATOR

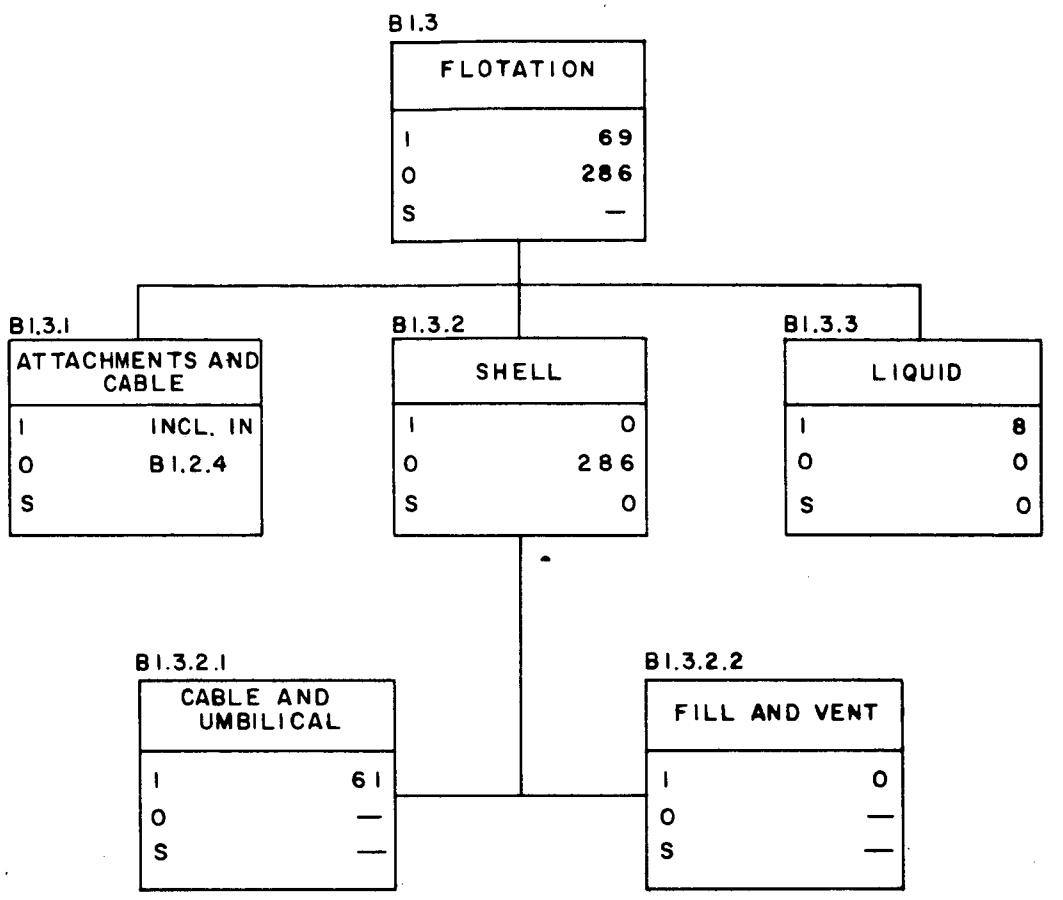


85-0397

Figure 23 INITIAL FLIGHT CAPSULE BURDEN ESTIMATES - FLOTATION

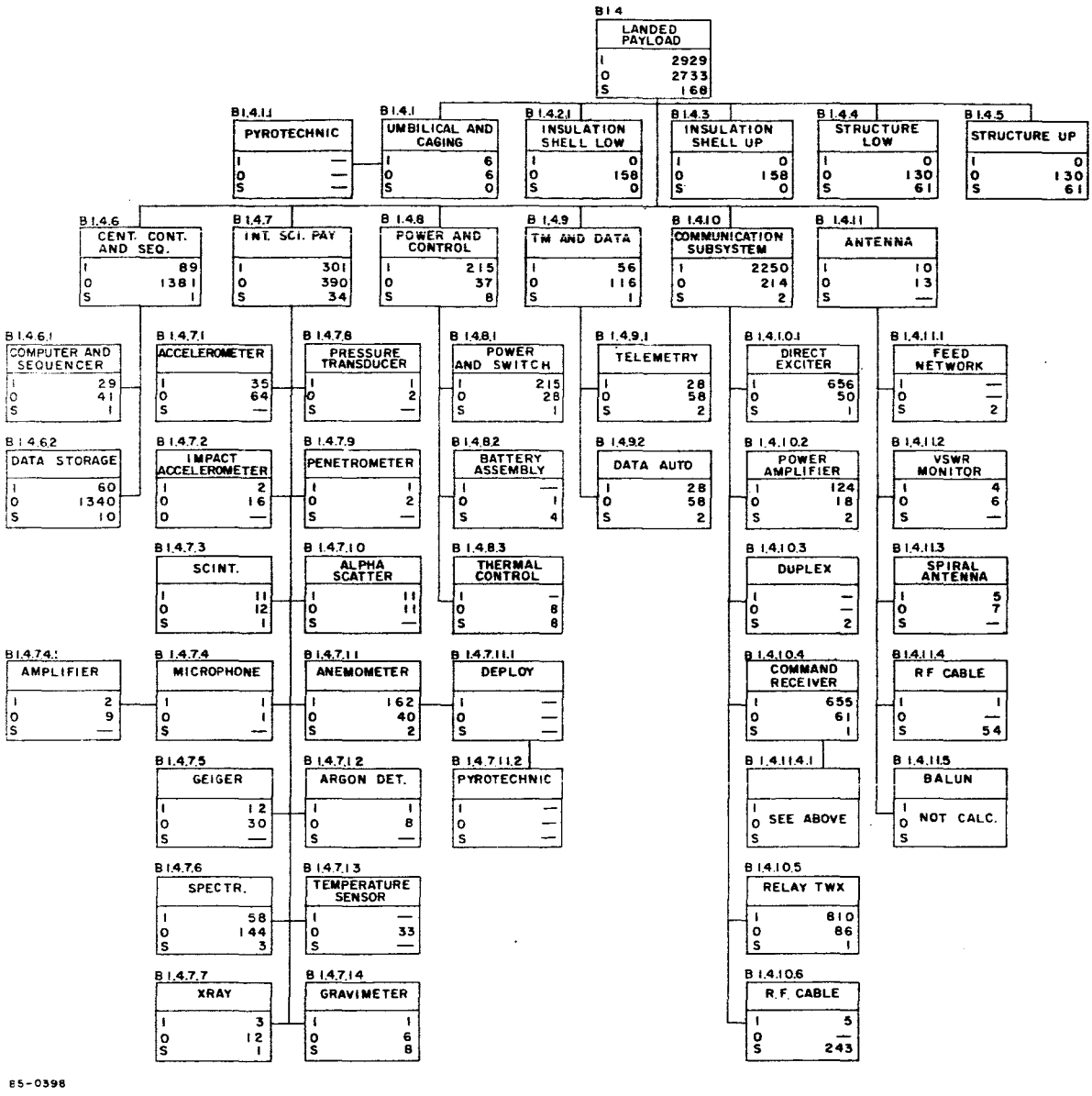


Figure 24 INITIAL FLIGHT CAPSULE BURDEN ESTIMATES - LANDED PAYLOAD

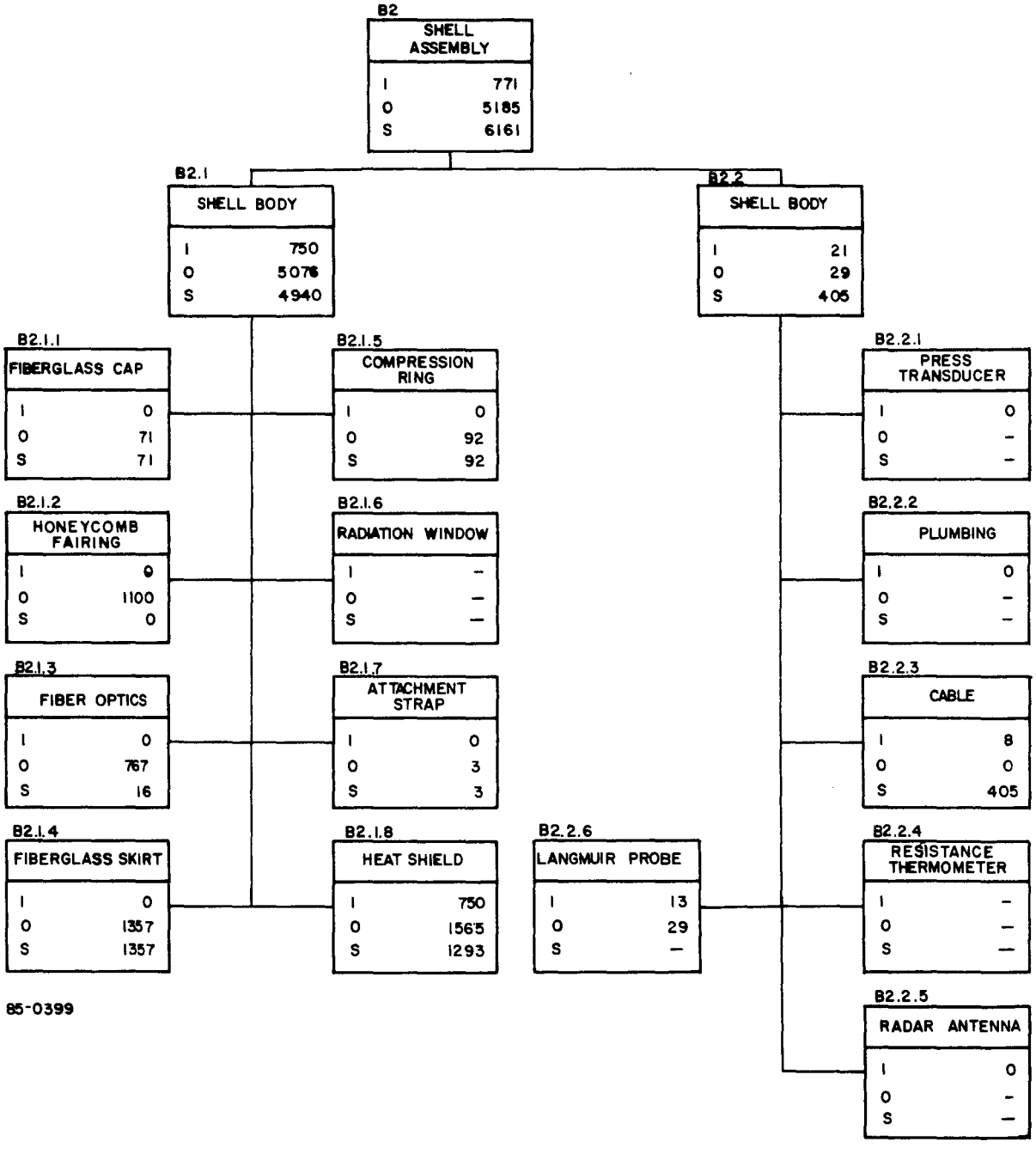


Figure 25 INITIAL FLIGHT CAPSULE BURDEN ESTIMATES - SHELL ASSEMBLY

## TABLE XIV

### ESTIMATE OF ADDED BURDEN IF SUSPENDED PAYLOAD IS ASSEMBLED IN A NON-CLEAN-ROOM

(Values in thousands of viable organisms)

| | Initial Surface Burden (1) | Clean Room Added Burden (2) | Non-C. R. Added Burden (10 x No. 2) (3) | Net Added Burden, Non-Clean Room (1 + 3) | Sub-Total |
|---|---|---|---|---|---|
| Canister | | | | N/A | |
| Adapter | | | | N/A | |
| Probe/Lander | | | | N/A | |
| Separated vehicle | | | | N/A | |
| Suspended capsule | 3199 | 610 | 6100 | 9299 | 9299 |
| External payload | | | | | |
| Science (B1. 1. 5) | 2 | 1 | 10 | 12 | |
| Propulsion and A. C. (B1. 1. 6) | 33 | 17 | 170 | 203 | |
| Descent (B1. 1. 7) | 12 | 3 | 30 | 42 | |
| Other | 161 | 33 * | 330 | 491 | 748 |
| Impact attenuation (B1. 2) | 143 | 75 | 750 | 893 | 893 |
| Flotation (B1. 3) | 0 | 0 | 0 | 0 | 0 |
| Landed payload | | | | | |
| Science (B1. 4. 7) | 6 | 70 | 700 | 706 | |
| Communication (B1. 4. 10) | 4 | 1 | 10 | 14 | |
| Sequence and data (B1. 4. 6) | 2 | 0. 4 * | 4 | 6 | |
| Other | 122 | 71 | 710 | 832 | 1558 |
| | | | | | 3199 |

* None shown in initial estimate -- this estimate is 20% of initial burden.

## TABLE XV

### BURDEN IMPACT OF DESIGN CHANGES
(values in thousands of microorganisms)

| Change | Elements Affected | Element Names | Original Burden | | | Approx. Revised Burden | | |
|---|---|---|---|---|---|---|---|---|
| | | | Int. | Occl. | Surf. | Int. | Occl. | Surf. |
| Solid propulsion | B1.1.6.1 | Fuel tank | 0 | 14 | 12 | | | |
| | B1.1.6.2 | Oxidizer tank | 0 | 14 | 12 | | | |
| | B1.1.6.3 | Pressure tank | 0 | 9 | 7 | | | |
| | B1.1.6.4 | Nozzle | 0 | 3 | 3 | 0 | 3 | 3 |
| | B1.1.6.5 | Plumbing | 0 | Negl. | Negl. | | | |
| | New | Casing | | | | 0 | 4 | 4 |
| | New | Solid fuel | | | | 10 | 0 | 0 |
| | | Totals | 0 | 40 | 34 | 10 | 7 | 7 |
| Beryllium H/S structure | B2.1.1 | Fiberglass cap. | 0 | 71 | 71 | | | |
| | B2.1.2 | Honeycomb fairing | 0 | 1,100 | 0 | | | |
| | B2.1.4 | Fiberglass skirt | 0 | 1,357 | 1,357 | | | |
| | B2.1.5 | Comp. ring | 0 | 92 | 92 | 0 | 100 | 100 |
| | New | Fwd. be face | | | | 0 | 0 | 120 |
| | New | Steel honeycomb | | | | 0 | 0 | 0 |
| | New | Aft Be face | | | | 0 | 0 | 120 |
| | | | 0 | 2,620 | 1,520 | 0 | 100 | 340 |
| Meteroid bumper removal | A1.1 | Face sheet | 0 | 1,448 | 1,411 | 0 | 240 | 240 |
| | A1.2 | Foam | 0 | 13,574 | 0 | | | |
| | A1.3 | Aft face sheet | 0 | 1,448 | 1,411 | | | |
| | A2.1 | Face sheet | 0 | 1,448 | 1,411 | 0 | 240 | 240 |
| | A2.2 | Foam | 0 | 13,547 | 0 | | | |
| | A2.3 | Aft face sheet | 0 | 1,448 | 1,411 | | | |
| | | | 0 | 32,940 | 5,644 | 0 | 480 | 480 |

(5 being the number used), unlike the beryllium, and half the fiberglass burden is on the backface, which in the case of the beryllium structure for the EFAT case is internal to the sandwich and sterile because of the curing operation, as are the internal steel honeycomb elements of the sandwich.

The EFO case has no meteoroid bumper, so that there is neither the second face sheet nor the foam-sandwich separator. In addition, the corresponding materials are metal rather than plastic.

Because of these factors, there is a difference in the total burden as follows:

(values in thousands of microorganisms)

| | Probe/Lander Design | Probe Design |
|---|---|---|
| Propulsion | 74 | 24 |
| Structure | 4140 | 440 |
| Meteoroid bumper | 38,584 | 960 |
| Total | 42,798 | 1424 |

Of the difference in burden, about 90 percent stems from the canister, and only 10 percent from the flight-capsule itself. Since only the interior of the canister must be sterilized (although the outside should be kept as clean as possible to prevent the possibility of recontamination during deployment), the 90 percent reduction in canister burden has essentially no effect on that burden which must be destroyed during the terminal cycle (which is still low enough so that the total burden does not exceed $10^8$).

## 4.0 BIOLOGICAL BURDEN CONTROL AND CERTIFICATION

Burden certification for acceptance by NASA requires a completely documented history of burden accumulation and control, as related to the specific vehicle for which certification is being made.

The burden associated with the capsule prior to final assembly is that on and within each major component as it is received at the assembly site. This burden has been accumulated during the manufacture and assembly of each component and has been reduced by die-off due to natural causes during the time the component has been stored awaiting further use. This initial burden is therefore a relatively static value for each different type of component used; its level being dependent on the environment condition existing at the point of manufacture and assembly. Specific control of these burdens is impractical for economic reasons, and the burden-sensitivity analysis indicates that they do not contribute a significant amount to the final burden. However, a general knowledge of these burden values is required, so that a standard burden can be assigned to each type of part, and to be sure that each component is capable of being decontaminated during the flight-acceptance heat cycle. This information can be obtained by performing assays of components.

During final assembly, burden accumulates on the vehicle as a result of fallout and handling by personnel within the facility. These elements must be controlled during assembly to the extent that the levels of burden are below those specified. Control of fallout is achieved by filtration and, if necessary, the use of special clean rooms, and control of handling burden is achieved by special handling procedures (the use of gloves, if necessary, for instance). The effectiveness of these procedures must be established by continued monitoring of the environment, the procedures, and the biological burden on the various elements of each flight capsule. The basic tool for this monitoring process in the biological assay.

### 4.1 METHODS OF ASSAYS

There are as yet only preliminary procedures for the microbiological evaluation of spacecraft parts and materials. It is unlikely that a practical test will completely recover all viable microbial contamination from within spacecraft solids or from large surfaces; present methods for determining surface and internal burdens are therefore subject to restrictions in accuracy and ease of application.

Internal and occluded burden determinations involve destruction of the hardware to be assayed or, at the very least, a significant disassembly. For this reason this type of assay requires additional hardware and/or schedule allowances. Surface-burden determinations can be performed with nondestructive assays, such as the swabbing of surfaces, which can be performed at any time without affecting hardware quantities or introducing major schedule perturbations. Samples used in making assays must be from operational hardware which is completely representative of all fabrication, assembly and handling experience, and must be selected at random from stores, production, or test areas.

### 4.1.1 Hardware Breakdown Techniques

The following are the techniques used to break down hardware* for assays of internal burden; generally, they are irreversibly destructive.

a) Unbolting -- for disassembly of electronic component cases, plumbing, explosive bolt assemblies, etc.

b) Unscrewing -- in cases where plugs or parts must be removed, such as a temperature-probe assembly, which may be screwed into its mounting.

c) Drilling rivets -- for riveted assemblies.

d) Cutting -- for sealed containers (where the container material may be cut away using shears, tin snips, or a saw), for wires (in order to separate parts which are wired together rather than unsoldering, or uncrimping), etc.

e) Potting removal -- for potted elements, where it is necessary to remove the compound to expose surfaces and to liberate the compound itself. (Potting compounds may be removed chemically or mechanically. Chemicals must dissolve the potting compound, but in so doing neither kill nor promote uncontrolled growth of the burden. If the compound is removed mechanically by cutting and/or pulling it out, care must be taken to get it completely away from the surface to be assayed).

f) Liquid removal -- of liquid lubricants in sealed components, oil in transformers, etc.(one potential flight capsule design contains the landed payload in a liquid sphere); it may be possible to valve liquid off, or it may be necessary to disassemble or cut away the component to get at it.

g) Gas removal -- from gas-containing tanks; since the gas will be under pressure, one can attach plumbing to a suitable gas analyzer and valve off enough gas to obtain a representative sample.

h) Insulation removal -- from wires and wiring harnesses, in order to assay the burden on the bare wire; in the case of a complicated harness not all the insulation would have to be stripped off, only a reasonable sample; it might also be desirable to dissolve the insulation and to assay the resulting solution, which would serve to measure both the internal insulation burden and the wire surface burden.

*The hardware considered here does not include metallic or nonmetallic elements which are internally sterile as a result of the processes used to manufacture them.

i) Pin removal -- for items like electrical connectors, where it may be necessary to remove the pins as well as disassemble the plug.

j) Glass cutting -- for access to elements sealed in glass (electronic parts, diodes, etc.), where it will be necessary to cut or fracture the glass.

k) Paint removal -- for analysis of paint itself or the underlying surface; the paint may be removed by dissolution or mechanical scraping; scraping is the best method if only a small sample of paint is required, but dissolution is better if the underlying surface is to be assayed; care must be taken to assure that the paint and its internal burden is completely removed, and that the burden on the surface of the part is not removed. (It may be necessary to perform a surface assay in two steps -- first assaying just the paint, then the paint and surface together, attributing the difference in burden to that which was initially on the surface of the part).

l) Fracturing -- to perform assays of internal burden on encapsulated parts (such as resistors and capacitors) and in plastic materials (such as the heat-shield material, foam pads, and insulation), where it is necessary to expose the interior of the part or material *.

m) Drilling -- a common technique for exposing internal burden of material, creating finely broken chips which are then assayed; the burden recovered from the chips then has to be related to the total internal burden of the part, based on the relative amount of material drilled and the estimated percent recovery of the microorganisms in the drilling.

n) Sawing -- a technique which can be used to assay either the sawdust or the surfaces exposed by sawing; the burden recovered by cutting has to be related back to the total internal burden of the part in either case; in the former case, the technique is similar to drilling, and in the latter case, it is similar to fracturing.

---

*The technique of fracturing can be explained by the following example: Assume that a component consists of some uniform crushable matrix, one centimeter cubed in size, that contains a uniformly dispersed burden of $10^6$ viable spores one micron (i.e., $10^{-3}$ millimeter) in diameter, and that the external surfaces are sterile. If the component were divided into micron-sized particles, there would be $10^{12}$ particles, of which $10^6$ would be bacterial spores, so that the probability of choosing one particle and finding it viable would be $10^{-6}$. However, if this block were instead cleaved into two sections, an additional area of $2 \times 10^8$ square microns would be exposed, and it can be assumed that some number of spores would be exposed on the two new surfaces. The chances are high that the total number of exposed particles would be $2 \times 10^8$ or higher, because at least $10^8$ 1-micron particles are exposed on each of the two surfaces, producing the situation in which 100 (i.e., $10^8 \times 10^{-6}$) microorganisms would probably be available for culture on that section. If either or both of the two pieces are then cultured, the resulting growth could be statistically related to the total contamination, thus yielding an estimate of the internal burden, namely $10^6$ spores in this case.

o) Grinding -- to expose internal burden and generate smaller particles than can be obtained by either drilling or sawing, thereby exposing a greater area and consequently offering a larger burden sample for recovery.

p) Crushing -- where parts to be assayed are small, and internal burden can best be exposed by crushing (comminuting) the part completely. An advantage of crushing is that the burden throughout the part is sampled, and the assay results are not influenced by the probability of sampling a nonrepresentative element of volume; a disadvantage is that for progressively fine crushing, more and more of the microorganisms are crushed and either killed or damaged, so that they are no longer viable).

### 4.1.2 Recovery of Surface-Burden Samples

The principal methods for collecting surface burden samples are swabs, impression techniques, agitation, rinse methods, immersion, and ultrasonic release.

Swabs are useful for checking large flat or curved surfaces. The size of the area swabbed and the methods used must be standardized for repeatable results, as demonstrated by the work of the Subcommittee on Food Utensil Sanitation, American Public Health Association[5]. Cotton swabs on wooden applicators give significantly higher counts than cotton swabs on stainless steel wire; changing the method of removing the cotton swabs from the wire lessens this difference. The same work indicates that the use of nonabsorbent or absorbent cotton also affects the results, and that the burden counts increase progressively with the number of strokes used in swabbing; the mean count with 5 strokes was about 20 percent greater, and with 10 strokes, 30 percent greater, than the count obtained with three strokes applied slowly and firmly in one direction. Reversing the direction between strokes increased the count 5 to 15 percent. Three times as many organisms were recovered using ten strokes, reversing direction between strokes, than with 10 single strokes in one direction.

Impression techniques are also of value in surface burden sampling, but do not possess the flexibility of swabbing methods. Direct impression methods do not differentiate clumps of cells from single isolated organisms as the generators of a visible colony. The accuracy of contact methods can be improved by utilizing a secondary contact rotation against a fresh agar surface in an effort to separate clumps of cells mechanically. All impression methods possess inherent limitations with respect to precision and accuracy.

The direct surface agar plate method utilizes a thin essentially flat agar surface to remove organisms from surfaces. This method has the advantage

that microcolonies may be differentiated by tetrozolium staining, but has the disadvantage of not being standardized, and requires at present home-made applicators for holding the agar surface. This technique was found[4] to detect 88.5 to 99.3 percent of the bacillus globigii spore contamination on nonporous surfaces. Recovery of micrococcus pyogenes variation aureus 209 varied over a wider range; this variation was attributed to death during drying.

The Rodac plate, a plastic contact plate for detection of microorganisms on surfaces, is readily available commercially as a disposable item. The plate covers a 4 in.$^2$ surface and contains an agar layer with a high convex meniscus that may be applied to flat or contoured surfaces. Eugonagar was indicated as the medium of choice for determining total microbial populations, while selective media can be used for special studies.

The agar syringe method, utilizes an open cylinder syringe filled with solidified agar medium. A layer of medium is pushed out of the cylinder with the plunger and held against the contaminated surface for 5 seconds; it is then sliced off with a sterile spatula and incubated in a petri dish.

The pressure tape method offers potential advantages of simplicity, quantitative accuracy, and rapidity of performance. It has been applied with limited success using transparent mending tape. A concept under study at the Wilmot Castle Company is aimed at developing a soluble tape with a nontoxic soluble adhesive that would lift organisms off surfaces.

Agitation is one of the elementary methods for removing organisms from the surface of small objects. The object can be placed in a stopped bottle of diluent or culture medium and agitated. A manual application of this method suffers from variation in the number of shakes and the length of arc for shaking. Mechanical agitation would have to be utilized for uniformity. The tenacity with which organisms may adhere to a surface can be weakened by incorporating surfactants (such as Tween 20 and 80, Sodium Lauryl Sulfate, or Triton X-100) in the liquid. Dispersing agents may promote separation of bacterial clumps. Agitation methods are useful as qualitative indications of surface sterility, and can be made quantitative by coupling them with membrane filtration and subsequent incubation of the membrane filters on agar media.

The rinse method is an excellent nondestructive procedure for surface burden determination. On advantage of this method is that it is adaptable to irregular surfaces and can be modified to accommodate a wide range of area sizes. In one technique, 100 ml of liquid is cascaded over the object or surface held at a 45 degree angle above a reservoir on a membrane filter apparatus. A spray gun can also be used for more effective dislodging and collecting of surface organisms. One device utilizes a self-contained pressurized spray and liquid collection system particularly well

suited for large surfaces. Plane and curved surfaces can be accommodated with some equipment modifications. A less elegant rinse method utilizes a rubber policeman to wet the surface with diluent. The surface and the policeman can be flushed and the liquid incubated directly for qualitative sterility checks, or passed through membrane filters for a quantitative determination of the microbial population on a given surface area.

The simplest method for detecting the presence of viable contaminants consists of immersing the specimen in a culture tube or bottle of a nutrient medium, such as trypticase soy broth. Proper controls must be employed to establish whether an inhibitor is eluted from the material being cultured.

Ultrasonic release and dispersion, when properly utilized, is extremely useful in burden sampling. Although high-frequency ultrasonic waves can sterilize a microbial suspension, low-frequency ultrasonic waves are used routinely in the Wilmot Castle Laboratory to disperse organisms in suspension without introducing lethal vibrations. An ultrasonic generator with an output of 180 watts at 21 kc has been used for this purpose. Ultrasonics can be used in conjunction with other culture methods to disperse microorganisms and are certainly effective for cleaning surfaces. Should a hydrophobic film be present on spacecraft parts in a sterility test program, organisms within the film may not grow if the culture medium does not include agents which disrupt such films. Ultrasonics would tend to increase the reliability of these culture techniques. Comminuted particles may have partially exposed viable cells which do not encounter the nutrient environment because of thin air films. Ultrasonics would strip such films from the particle, and enhance the opportunity for the cell to grow.

It should be obvious from the preceding discussion that selection of a particular assay technique will require careful evaluation of the nature, shape, size, and composition of the item to be assayed, and of the constraints and limitations of the various assay methods. Whichever technique is used, the assays must be conducted by trained, qualified personnel, within sterile isolated system (to eliminate exterior contamination), and with detailed compliance with the specified procedures.

### 4.1.3 Basic Assay Techniques

Culture methods are the most reliable means for demonstrating the presence of viable microorganisms on surfaces or within solids. These methods depend on multiplication of the organisms after a suitable incubation period, to the extent that visible colonies are formed on solid culture media, or that initially clear liquid media develop turbidity; they require culture media that favor proliferation of the cells, and appropriate incubation temperatures and incubation periods.

The cultural techniques for these items (disassembled parts, components, etc.) can be divided into groupings which would encourage the growth of aerobic bacteria, anaerobic bacteria, and fungi. The medium to be used for each of these techniques should be of such a composition that it produces significant growth for the largest variety of organisms in each grouping. Incubation temperature for the cultures should be room temperature, 37 to 45°C. When cultures of the aerobic and anaerobic bacteria are being made, aliquotes should be removed and subjected to heat shock to encourage germination of the possible spores present in the samples. The heat-shocked aliquotes would then be cultured in the same way as the aerobic and anaerobic bacterial samples. Incubation periods for the samples should be 24, 48 and 72 hours, at which times the cultured samples are examined for growth. The number of the microorganisms present in each of the items assayed will be made by plate count or membrane filter count techniques.

Organisms associated with spacecraft parts and materials may have nutritional or environmental requirements that differ sufficiently from the laboratory stock culture of that species so that growth does not occur, despite the fact that viable organisms are present in the culture medium. The parts may contain materials that are toxic to organisms present in the solid. Particles of comminuted (crushed or pulverized) materials inoculated into culture media may become dissolved sufficiently to kill or prevent the growth of bacteria encountering toxic solutes.

Assay procedures for organisms exposed to elevated temperatures are subject to similar limitations, and are further complicated by the recovery problem associated with thermally injured organisms. There are no general solutions to these recovery problems; each species investigated appears to have requirements that may or may not be similar to those of another organism.

The lack of homogeneity in a microbial population introduces other problems in assessing the level of contamination. Liquid media assays are useful only for qualitative detection of viability, since significant numbers of viable cells may not find the particular set of growth conditions suitable for their development. The analogous situation occurs on solid media, since a colony may develop from one or more cells in a clump of cells rather than from a single discrete cell, unless appropriate separation and dispersion methods are available.

Solvents are available that may readily dissolve nonmetallic materials. However, they may be toxic to bacteria on a total or selective basis; acetone, for example, may dissolve certain plastics and kill vegetative cells, while spores would survive even extended exposure to this solvent. The variety of materials used in spacecraft will require a wide range of solvents and a study of the activity of each solvent against a spectrum of microorganisms.

### 4.1.4 Assay Procedures

Procedures for each technique are presented in Table XVI; they are typical and indicate some of the discrete steps required; for actual application they would be detailed further, identifying all equipment utilized by serial number, etc., and spelling out in great details all necessary environments, times, and data logging requirements.

### 4.1.5 Assay Accuracies

The assay accuracies vary greatly among the various techniques and depend primarily on two factors, the inherent repeatability of the results obtained with a given technique, and the recovery factor associated with that technique. The recovery factors R (expressed as percent of organisms recovered) and a qualitative judgment concerning the accuracy are given in Table XVII, based on published results[3, 4, 5, 6] and unpublished data obtained in the Wilmot-Castle Company.

For the purposes of the study the accuracies shown in Table XVIII were used. Generally they are based conservatively on recovery factors which are 75 percent of those shown in Table XVII. For electronic components assays are performed by several techniques, so that the value given in Table XVIII is a composite of the accuracies of the several methods. For cases where an assay must be performed on a subassembly without the requirement for disassembly, an accuracy of 75 percent has been assumed, based on the fact that only surface assays are possible and that occluded, mated, and internal burdens must be estimated, thereby reducing the accuracy of relating organisms recovered to the total population. The accuracy listed for internal assays take into account the fact that for internal assay techniques such as fracturing, the recovery factor, although small, can be corrected for relatively reliably. All accuracies listed in Table XVIII are, essentially, one sigma values.

## 4.2 NUMBER OF ASSAYS REQUIRED

The purpose of this section is to indicate a means of estimating the number of assays which must be performed on hardware of each type in order to be able to assign it a burden value with a given level of confidence. This determination requires in each instance a knowledge of:

a) The control burden $X_c$ is that which is predicted in the burden estimate for the given part at the given stage in the assembly process, using conservative estimates for the various burden factors (see paragraph 3.3); the average of the assayed values $\bar{X}_a$ divided by the recovery factor R for the given assay technique, should be less than $X_c$.

## TABLE XVI

## ASSAY PROCEDURES

| | |
|---|---|
| Swabbing | Rinse |
| Step 1. Use one swab -- calcium alginate type, per assay. area. Moisten prior to use with sterile water containing one percent Tween 80. | Step 1. Cascade sterile TGYE broth over part. |
| Step 2. Ten strokes total; five strokes in one direction and five strokes in the opposite direction -- alternate directions of each stroke. Tip of swab is not to be lifted from surface until completion of pickup. A two in.$^2$ template may be useful in delineating the assay area. | Step 2. Collect wash broth. |
| Step 3. Break off tip into 10 ml percent sodium hexametaphosphate and allow tip to dissolve. Shake intermittently. | Step 3. Pipet one ml aliquote into three separate petri dishes. |
| Step 4. Pipet one ml into each of three petri dishes. | Step 4. Pipet one ml broth into each of three petri dishes and overlay with 15 ml TGYE agar. |
| Step 5. Overlay and mix aliquote with 15-17 ml tryptone glucose yeast extract (TGYE) agar. | Step 5. Incubate at 37°C for 24 hours. |
| Step 6. Incubate at 37°C for 24 hours. | Step 6. Count colonies with a Quebec colony counter. |
| Step 7. Count with Quebec colony counter. | |
| Immersion with Ultrasonics | Rodac |
| Step 1. Place item into 10 ml of broth in test tube. | Step 1. Remove protective cover. |
| Step 2. Sonicate at 21 kc for 10 minutes. | Step 2. Press agar surface against area to be assayed; be firm and avoid rotation and sliding forces. |
| Step 3. Pipet one ml into each of three petri dishes. | Step 3. Remove plate and replace cover. |
| Step 4. Overlay with nutrient agar, TGYE. | Step 4. Incubate at 37°C for 24 hours. |
| Step 5. Incubate at 37°C for 24 hours. | Step 5. Count colonies with a Quebec colony counter. |
| Step 6. Count colonies with a Quebec colony counter. | |
| Size Reduction | Filtration |
| Step 1. Use pliers, mortar and pestle, drill or file to reduce item to fine particles. | Step 1. Pass aliquote through sterile membrane filter, 0.2 micron size. |
| Step 2. Check average size by microscopic examination of largest dimension of a suitable sample. | Step 2. Flush filter by passing sterile water over filter to remove liquid residue of sampled material. |
| Step 3. Place particles into 10 ml broth in test tube. | Step 3. Place filter, collection-side down, upon a nutrient agar formulated with TTC. |
| Step 4. Sonicate at 21 kc for 10 minutes. | Step 4. Incubate at 37°C for 24 hours. |
| Step 5. Pipet one ml into each of three petri dishes. | Step 5. Count colonies with a Quebec colony counter. |
| Step 6. Overlay with nutrient agar, TGYE. | |
| Step 7. Incubate at 37°C for 24 hours. | |
| Step 8. Count colonies with a Quebec colony counter. | |

## TABLE XVII

## ASSAY RECOVERIES

| Surface Burden | Precision | Recoveries (percent) | Reference |
|---|---|---|---|
| Swabs | Poor | 52 to 90 | Angelotti, '58 (4) |
| Rinse or spray rinse | Fair | 80 | Buchbinder, '47 (3)<br>Angelotti, '58 (4) |
| Agitation | Fair | 80 | Wilmot Castle Company* |
| Immersion with ultrasonics | Excellent | 90 to 99 | Wilmot Castle Company* |
| Rodac | Good | 41 | Angelotti, '64 (5) |
| Internal burden | | | |
| Size reduction techniques | Very poor | 1 | Reed, '65(6) |
| Filtration for assay of liquids | Excellent | 99 to 100 | Wilmot Castle Company*(1) |

*Based on unpublished data

## TABLE XVIII

## OVERALL ASSAY ACCURACIES

| | (percent) |
|---|---|
| Swab | 60 |
| Rinse | 20 |
| Agitation | 20 |
| Immersion | 15 |
| Rodac | 75 |
| Filtration | 10 |
| Internal | factor of 5 |
| Black boxes | 33* |
| Subassembly, general | 75(factor of 1.75)** |

* Mixture of Swab, immersion and internal (fracturing, drilling, etc.)

** Mixture of Rodac, some swab

b) An assumed standard deviation $\sigma$ in this value; for lack of any better information a value of $\sigma$ equal to one-third the expected burden value has been used in this study; the expected value Xe should be less than the control value, as pointed out in paragraph 3.3.

c) As assigned upper burden control limit $X_u$, which represents the value one will expect to guarantee not be exceed, and which must be larger than the value specified in a)

d) The desired level of confidence $\gamma$.

The number of assays required can then be calculated using the Student's "t" distribution technique, which is frequently used in small-sample statistics to test the differences between two means.* It is given by the equation

$$\left(\frac{n}{t^2}\right) = \left(\frac{\sigma}{X_u - X_c}\right)^2$$

where the values on the right side of the equation are those defined in the preceding listing, and those in the left side are the values in the standard 't' table for the given confidence value $\gamma$; see, for instance, the values listed in Table XIX for a confidence level of 0.9999, which are those used in the calculations for this study. The right side of the equation can be calculated from the values specified for any given case, resulting in a value for $n/t^2$, from which the value of a n can be determined using the table. The assay accuracy tends to increase the value of $\sigma$ to an equivalent value $\sigma_e$ given, approximately, by

$$\sigma_e = \sqrt{\sigma^2 + \epsilon^2}$$

where $\epsilon$ is the estimated range of error in the number $\bar{X}_a/R$. Inasmuch as $\sigma$ itself is obtained by an educated guess (say one-third of $\bar{X}_a/R$), any error less than about 20 percent of $\bar{X}_a/R$ can be ignored.

The variation of the number of assays required as a function of the expected burden is shown in Figure 26 for a control burden of $10^8$. Based on these arguments and for this choice of control limit, parts which assay at a burden of less than about $10^5$ require only one assay, and those which are known to contain fewer than $10^4$ organisms probably none. Conversely, where the predicted (or assayed) burden of an element is close to $10^8$, a very large number of assays or a raising of the control limit would be required.

*There are other tests, but for the present purpose only a rough indication can be obtained, as a result of the uncertainties involved, and such an indication is entirely adequate. The "t" test is, therefore, satisfactory, and no more sophisticated approach is warranted.

## TABLE XIX

VALUES OF "t" FOR $\gamma = 0.9999$

| n | t | $n/t^2$ | n | t | $n/t^2$ |
|---|---|---|---|---|---|
| 1 | 3183.099 | $0.9870 \times 10^{-7}$ | 21 | 4.493 | 1.040 |
| 2 | 70.700 | $0.0004 \times 10^{-3}$ | 22 | 4.452 | 1.110 |
| 3 | 22.204 | $0.0061 \times 10^{-2}$ | 23 | 4.415 | 1.180 |
| 4 | 13.034 | $0.0236 \times 10^{-1}$ | 24 | 4.382 | 1.250 |
| 5 | 9.678 | $0.0534 \times 10^{-1}$ | 25 | 4.352 | 1.320 |
| 6 | 8.025 | $0.0932 \times 10^{-1}$ | 26 | 4.324 | 1.391 |
| 7 | 7.063 | 0.1403 | 27 | 4.299 | 1.461 |
| 8 | 6.442 | 0.1928 | 28 | 4.275 | 1.532 |
| 9 | 6.010 | 0.2492 | 29 | 4.254 | 1.603 |
| 10 | 5.694 | 0.3084 | 30 | 4.234 | 1.673 |
| 11 | 5.453 | 0.3699 | 35 | 4.153 | 2.029 |
| 12 | 5.263 | 0.4332 | 40 | 4.094 | 2.387 |
| 13 | 5.111 | 0.4977 | 45 | 4.049 | 2.745 |
| 14 | 4.985 | 0.5634 | 50 | 4.014 | 3.103 |
| 15 | 4.880 | 0.6299 | 55 | 3.986 | 3.462 |
| 16 | 4.791 | 0.6971 | 60 | 3.962 | 3.822 |
| 17 | 4.714 | 0.7650 | 70 | 3.926 | 4.541 |
| 18 | 4.648 | 0.8332 | 80 | 3.899 | 5.262 |
| 19 | 4.590 | 0.9018 | 90 | 3.878 | 5.984 |
| 20 | 4.539 | 0.9708 | 100 | 3.862 | 6.705 |
| | | | $\infty$ | 3.719 | $\infty$ |

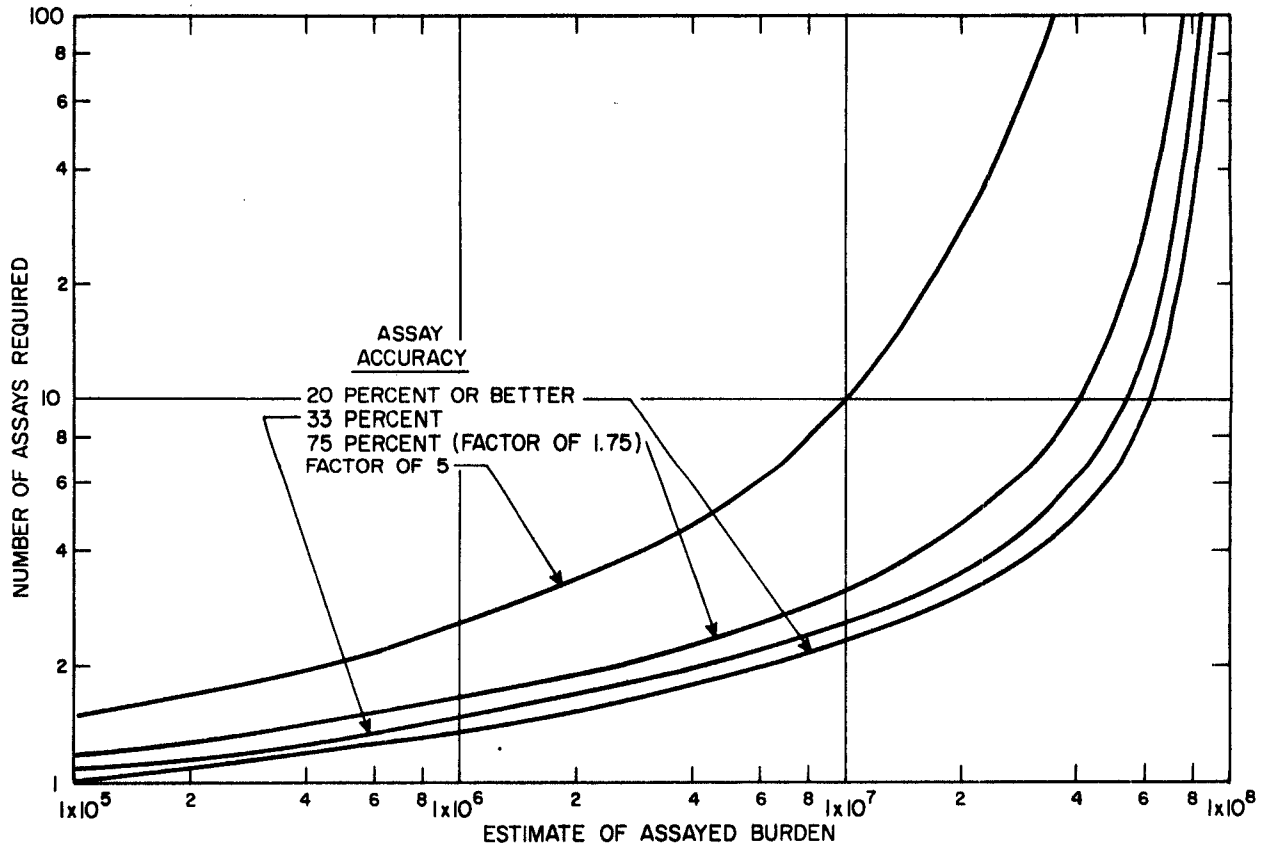


86-5692

Figure 26 NUMBER OF ASSAYS REQUIRED TO DEMONSTRATE THAT THE ASSAYED BURDEN IS BELOW $10^8$ ORGANISMS WITH A CONFIDENCE OF 99.99%

It should be noted that as a result of the uncertainties involved in this estimate (such as the assumed $\gamma$ values, the poorly defined assay accuracies, and the arbitrariness involved in the choice of a confidence level) the calculated number of assays need not be taken too literally and should be regarded only as a guide line. In general, if flight-acceptance heat soaks are used, it should be possible to assign control values sufficiently high as to require only one or two assays for every element, without penalizing the program.

## 4.3 BURDEN MONITORING

A burden measurement is of necessity downstream of the situations which resulted in that burden level, so that if the level exceeds the allowable value much hardware may have to be scrapped, much effort may have been made in vain, and there may be a delay in at least part of the program. Therefore, it is essential to take preventative measures, and one of the most important of these is the constant monitoring of the process and the environment in the formative periods of activity and afterwards. Effective burden monitoring requires active monitoring of all phases of activity -- design, manufacturing, vendor control, etc. -- which have a potential impact on the microbial burden of the flight capsule, from the inception of the program virtually to its completion.

The prescribed design of the flight capsule determines to a large extent how effective burden control will be and if, in fact, the burden can be kept within the allowable maximum figure. The packaging of electronics, the size of rocket engines, and the type and size of parachutes, are a few of the more obvious areas of design decision that have a serious impact on burden levels.

Even the kinds and qualities of surface finish, as well as the number of recesses, crevices or other surface anomalies which may facilitate micorbic hiding, may have a significant effect on the burden associated with a system as large and complex as a flight capsule. Burden monitoring must therefore start by influencing the design in the early stages and must continue with design-approval control for all subsequent changes. Examples of possible design changes that would affect burden control are: 1) those which would impede heat flow during sterilization or make it impossible to monitor sterilization temperatures at a critical point, 2) unsealing a previously sealed assembly, making it liable to increased handling and fallout burdens, 3) changes in material which could outgas excessively through heating, resulting in contamination, etc.

Variations in the manufacturing/assembly/test process may also have significant impact on the burden levels. Manufacturing procedures must therefore be developed in conjunction with sterilization personnel, and all subsequent modifications to these procedures must be approved from the point of view of burden impact, and any change must be reflected in the burden allocation. This includes, for instance, changes in cleaning methods, finishing processes, curing and bonding cycles. Similarly, any change in the assembly or the test program (which, like the assembly process, involves handling, fall-out contamination, die-off, etc.) must be evaluated with its impact on the biological burden in mind; of particular significance are ETO-exposure and thermal-sterilization tests, as discussed previously.

Vendor selection and control will be difficult for many reasons. Vendors normally considered qualified to deliver reliable hardware will be hardpressed to comply with the stringent requirements for controlling manufacturing and engineering processes and satisfying the procedural documentation vital to successful execution of this program for the relatively few items they (individually) will furnish for use in a planetary/lander program.

Since enforcement of clean-up procedures and standards often requires a time-consuming educational process, and new facilities or equipment may be required, potential suppliers must be identified as early in the program as possible; also, parts and components furnished by the vendors typical of those to be used on the flight capsule must be assayed as early as possible, so that any problem areas can be identified in time to avoid constraining the program schedule.

As the program proceeds into the hardware stage, all materials, parts and components being received into the assembly facility will have to be assayed thoroughly to determine actual burdens. It is possible, although unlikely, that certain types of components being supplied by specific vendors turn out to have an excessively large burden. In this event, either the supplier will have to be changed, or a specific control applicable to the particular situation at hand will have to be exercised. These controls may involve the introduction of new or better cleaning methods or environments, and/or modified handling or storage practices. Based on the burden-estimate studies, however, it would appear that few, if any, vendors would have to resort to Class 100 clean-room environments.

## 4.4 DOCUMENTATION

The results of the assays of hardware and environment, as well as the results of all monitoring actions (including that of the terminal-sterilization process and any post-sterilization actions) have to be recorded; the compilation of these records represents the documentation of the burden-control (and therefore, by implication, sterilization) process, whereby a spacecraft can ultimately be

certified as sterile. The specific purpose of the documentation system required for burden control is therefore to demonstrate in an orderly fashion incremental-burden compliance leading up to a certifiable total burden lower than the pre-sterilization maximum level of $10^8$ (or any lesser value) viable organisms, and to document actual successful application of the proper thermal sterilization cycle.

A simple system which contains all the basic elements required for complete continuing burden control is based on three forms, as shown in Figures 27, 28, and 29. These forms account for the burden on each component or part and also for the burden-contributing effect of handling and exposure. Figure 27 records the raw assay observations, and Figure 28 documents characteristics of the environment where the assay and/or assembly process takes place. Figure 29 is a summary form which relates the specific assay being performed to the configuration of the element being assayed, thus permitting a direct comparison with a maximum allowable or assigned burden for that element. In some cases an assay will result in the total part burden, such as in a small part which only has surface burden which has been completely recovered; in others, where surfaces and volumes may be large, the assay measures only a portion of the total burden, and this value must be factored to reflect total (by the factor R). This assay documentation provides for aerobic, anaerobic and fungi organisms, which generally covers all the burden found in the flight capsule. Provisions are made for replication of ten of each of a series of five dilutions, each diluted by an order of magnitude from the next, for each assay, so that the form can be used for air sampling and for surface, internal or occluded burden.

PART NAME _____ NUMBER _____ EXPERIMENT NUMBER _____ EXPERIMENTER _____

VENDOR _____ DATE RECEIVED IN HOUSE _____ DATE RECEIVED FOR CULTURE _____ INCUBATION TEMPERATURE _____

INCUBATION TIME [24 HRS] [48 HRS] [72 HRS]

SWAB ☐ GRIND ☐ SAW ☐ DRILL ☐ DISSOLVE ☐ SECTION ☐ UNWRAP ☐ UNBOLT ☐

CUT ☐ UNSCREW ☐ SCRAPE ☐ FRACTURE ☐ GAS REMOVAL ☐ LIQUID REMOVAL ☐ OTHER TECHNIQUE ☐

**AIR SAMPLE BURDEN** ☐ AIR SAMPLE REPLICATES OF 10

NUMBER _____

| AEROBIC BACTERIA DILUTION | a | b | c | d | e | f | g | h | i | j |
|---|---|---|---|---|---|---|---|---|---|---|
| 1/1 | | | | | | | | | | |
| 1/10 | | | | | | | | | | |
| $1/10^2$ | | | | | | | | | | |
| $1/10^3$ | | | | | | | | | | |
| $1/10^4$ | | | | | | | | | | |
| TOTAL | | | | | | | | | | |
| AVERAGE | | | | | | | | | | |

| ANAEROBIC BACTERIA DILUTION | a | b | c | d | e | f | g | h | i | j |
|---|---|---|---|---|---|---|---|---|---|---|
| 1/1 | | | | | | | | | | |
| 1/10 | | | | | | | | | | |
| $1/10^2$ | | | | | | | | | | |
| $1/10^3$ | | | | | | | | | | |
| $1/10^4$ | | | | | | | | | | |
| TOTAL | | | | | | | | | | |
| AVERAGE | | | | | | | | | | |

| FUNGI DILUTION | a | b | c | d | e | f | g | h | i | j |
|---|---|---|---|---|---|---|---|---|---|---|
| 1/1 | | | | | | | | | | |
| 1/10 | | | | | | | | | | |
| $1/10^2$ | | | | | | | | | | |
| $1/10^3$ | | | | | | | | | | |
| $1/10^4$ | | | | | | | | | | |
| TOTAL | | | | | | | | | | |
| AVERAGE | | | | | | | | | | |

**SURFACE BURDEN** ☐

| AEROBIC BACTERIA DILUTION | a | b | c | d | e | f | g | h | i | j |
|---|---|---|---|---|---|---|---|---|---|---|
| 1/1 | | | | | | | | | | |
| 1/10 | | | | | | | | | | |
| $1/10^2$ | | | | | | | | | | |
| $1/10^3$ | | | | | | | | | | |
| $1/10^4$ | | | | | | | | | | |
| TOTAL | | | | | | | | | | |
| AVERAGE | | | | | | | | | | |

| ANAEROBIC BACTERIA DILUTION | a | b | c | d | e | f | g | h | i | j |
|---|---|---|---|---|---|---|---|---|---|---|
| 1/1 | | | | | | | | | | |
| 1/10 | | | | | | | | | | |
| $1/10^2$ | | | | | | | | | | |
| $1/10^3$ | | | | | | | | | | |
| $1/10^4$ | | | | | | | | | | |
| TOTAL | | | | | | | | | | |
| AVERAGE | | | | | | | | | | |

| FUNGI DILUTION | a | b | c | d | e | f | g | h | i | j |
|---|---|---|---|---|---|---|---|---|---|---|
| 1/1 | | | | | | | | | | |
| 1/10 | | | | | | | | | | |
| $1/10^2$ | | | | | | | | | | |
| $1/10^3$ | | | | | | | | | | |
| $1/10^4$ | | | | | | | | | | |
| TOTAL | | | | | | | | | | |
| AVERAGE | | | | | | | | | | |

**INTERNAL BURDEN**

| AEROBIC BACTERIA DILUTION | a | b | c | d | e | f | g | h | i | j |
|---|---|---|---|---|---|---|---|---|---|---|
| 1/1 | | | | | | | | | | |
| 1/10 | | | | | | | | | | |
| $1/10^2$ | | | | | | | | | | |
| $1/10^3$ | | | | | | | | | | |
| $1/10^4$ | | | | | | | | | | |
| TOTAL | | | | | | | | | | |
| AVERAGE | | | | | | | | | | |

| ANAEROBIC BACTERIA DILUTION | a | b | c | d | e | f | g | h | i | j |
|---|---|---|---|---|---|---|---|---|---|---|
| 1/1 | | | | | | | | | | |
| 1/10 | | | | | | | | | | |
| $1/10^2$ | | | | | | | | | | |
| $1/10^3$ | | | | | | | | | | |
| $1/10^4$ | | | | | | | | | | |
| TOTAL | | | | | | | | | | |
| AVERAGE | | | | | | | | | | |

| FUNGI DILUTION | a | b | c | d | e | f | g | h | i | j |
|---|---|---|---|---|---|---|---|---|---|---|
| 1/1 | | | | | | | | | | |
| 1/10 | | | | | | | | | | |
| $1/10^2$ | | | | | | | | | | |
| $1/10^3$ | | | | | | | | | | |
| $1/10^4$ | | | | | | | | | | |
| TOTAL | | | | | | | | | | |
| AVERAGE | | | | | | | | | | |

**OCCLUDED BURDEN**

| AEROBIC BACTERIA DILUTION | a | b | c | d | e | f | g | h | i | j |
|---|---|---|---|---|---|---|---|---|---|---|
| 1/1 | | | | | | | | | | |
| 1/10 | | | | | | | | | | |
| $1/10^2$ | | | | | | | | | | |
| $1/10^3$ | | | | | | | | | | |
| $1/10^4$ | | | | | | | | | | |
| TOTAL | | | | | | | | | | |
| AVERAGE | | | | | | | | | | |

| ANAEROBIC BACTERIA DILUTION | a | b | c | d | e | f | g | h | i | j |
|---|---|---|---|---|---|---|---|---|---|---|
| 1/1 | | | | | | | | | | |
| 1/10 | | | | | | | | | | |
| $1/10^2$ | | | | | | | | | | |
| $1/10^3$ | | | | | | | | | | |
| $1/10^4$ | | | | | | | | | | |
| TOTAL | | | | | | | | | | |
| AVERAGE | | | | | | | | | | |

| FUNGI DILUTION | a | b | c | d | e | f | g | h | i | j |
|---|---|---|---|---|---|---|---|---|---|---|
| 1/1 | | | | | | | | | | |
| 1/10 | | | | | | | | | | |
| $1/10^2$ | | | | | | | | | | |
| $1/10^3$ | | | | | | | | | | |
| $1/10^4$ | | | | | | | | | | |
| TOTAL | | | | | | | | | | |
| AVERAGE | | | | | | | | | | |

TOTAL AVERAGE SURFACE BURDEN
TOTAL AVERAGE INTERNAL BURDEN
TOTAL AVERAGE OCCLUDED BURDEN
ENTIRE AVERAGE BURDEN

AIR SAMPLE
AEROBIC BACTERIA AVERAGE _____
ANAEROBIC BACTERIA AVERAGE _____
FUNGI AVERAGE _____
AVERAGE POPULATION OF AIR SAMPLE

55-0404

Figure 27 ASSAY DATA RECORDING FORM

DATE AND TIME

AREA LOCATION

AIR SAMPLE NUMBER

HOW AIR SAMPLE TAKEN

EXPERIMENT NUMBER

EXPERIMENTER

TYPE OF ASSAY

DESCRIPTION OF PART, COMPONENT, SUBASSEMBLY, OR ASSEMBLY ASSAYED

DESCRIPTION OF AREA SAMPLED

FT.$^3$ _____

TEMP. _____

RELATIVE HUMIDITY _____

AIR FLOW _____

FLOORS _____

WALLS _____

CEILINGS _____

ACTIVITY IN AREA AND NUMBER OF PERSONAL TASKS PERFORMED

| | NUMBER OF PEOPLE |
|---|---|
| MACHINING | |
| GRINDING | |
| CUTTING | |
| WIRING | |
| ASSEMBLING | |
| SOLDERING | |
| DRILLING | |
| FILING | |
| BOLTING | |
| WELDING | |
| OTHER | |

85-0405

Figure 28 ASSAY DATA RECORDING FORM

TOTAL AVERAGES (FROM FIG. II.3-8)

| | 1) SURFACE | 2) INTERNAL | 3) OCCLUDED |
|---|---|---|---|
| AEROBIC | _____ | _____ | _____ |
| ANAEROBIC | _____ | _____ | _____ |
| FUNGI | _____ | _____ | _____ |
| TOTAL | | | |

| | | | |
|---|---|---|---|
| 4) TOTAL SURFACE/VOLUME APPLICABLE | _____ | _____ | _____ |
| 5) SURFACE /VOLUME ASSAYED | _____ | _____ | _____ |
| 6) PERCENT SURFACE/VOLUME ASSAYED (5/4) | _____ | _____ | _____ |
| 7) TOTAL BURDEN RECOVERED (1,2 OR 3) | _____ | _____ | _____ |
| 8) ESTIMATED TOTAL BURDEN (1,2 OR 3/6 | _____ | _____ | _____ |
| 9) NOMINAL BURDEN ALLOCATED TO THIS PART BY BURDEN CONTROL SYSTEM | _____ | _____ | _____ |
| 10) EXCESSIVE BURDEN INDICATED (8-9) | _____ | _____ | _____ |

* IF POSITIVE NUMBER, INITIATE RED FLAG REPORT

85-0406

Figure 29 SUMMARY ASSAY DATA RECORDING FORM

## 5.0 TERMINAL STERILIZATION

As indicated previously, the basic sterilization approach that has been selected for space vehicles is the use of dry heat [7], supported by presterilization burden control techniques which include the use of ETO as a decontaminant*. The aspects of terminal sterilization which are discussed in this section are methods of heat application and methods of verifying kill effectiveness.

### 5.1 TECHNIQUES OF HEAT APPLICATION

One of the potential problems in the application of the terminal heat cycle is the length of time it takes to elevate the thermally insulated elements in the interior of the capsule to the required temperature. In some cases this time is long enough that the heat applied to the less remote elements may greatly exceed that required for sterilization. Figure 30 shows a thermal model of a typical Mars capsule in a sterilization canister. This model was used to investigate analytically the thermal response of a complete system. The temperature rise at a thermally remote location within the capsule is shown in Figure 31, curve 1. The time required for this location to reach sterilization temperature is approximately 120 hours.

The application of electric heaters to thermally remote components as a means of reducing this time was investigated. A heat rate of 30 watts was considered to be applied in the payload area (node 17), in addition to the external heat. The time constant for this case is about 24 hours. This was still considered too long, and heaters were added to the center layer of the crushable material (nodes 13 and 14), with 5 and 10 watt heating rates. The results are shown as curves 3 and 4 in Figure 31.

---

*Some other sterilization techniques which, for various reasons, are not acceptable for terminal sterilization of spacecraft are the following; some of them may in some situations be useful for spacecraft decontamination (pre-sterilization burden control), singly or in combination with each other and/or with dry heat, although the only presently approved decontamination technique is cleaning with ETO.

Chemical decontamination is a technique which is primarily useful for burden reduction. It can be accomplished with liquid, vapor, or gaseous germicides, but is applicable to surfaces only, although some subsurface burden can be affected depending on the penetration capabilities of the fluid and the permeability or porosity of the surface. Care must be taken when applying the chemicals to determine their corrosive effects on vehicle components, which are determined by exposure times and concentration. In the case of vapor or gaseous decontaminants, temperature and humidity controls are also essential to obtain controlled results. Some of the more common liquid decontaminants are the hypochlorites, formalin, caustic sodium hydroxide, and lysol[8]. Some of the common vapors or gaseous decontaminants are Ethylene Oxide (ETO), Formaldehyde, and Beta-propiolactone. The exposure time of a vehicle to germicidal environment is selected by trading off the desired reduction of the surface burden against, primarily, the damage which may be done to the surface.

A number of the radiative techniques can provide internal sterilization, such as X-rays and Gamma rays, but they are not as desirable from a proof-of-kill or application point of view as is heat; neutron bombardment, for example, will produce artificial activity in materials. Ultra-violet radiation can be used for surface-burden reduction. Sonic cleaning can be used for decontamination, but its effect is limited to the reduction of surface burden, and only on those elements physically small enough to be subjected to sonic cleaning.

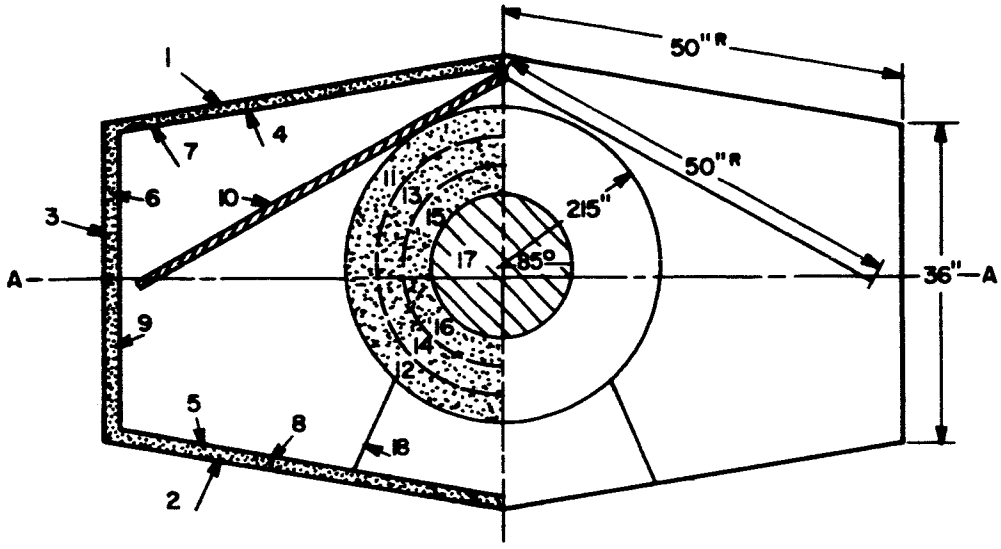


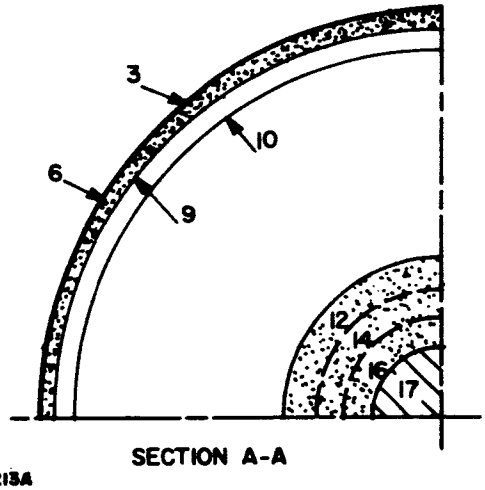


| Node | Structural Part |
|---|---|
| 1, 2, 3 | Meteoroid bumper |
| 4, 5, 6 | Foam filler |
| 7, 8, 9 | Inner facesheet |
| 10 | Heat shield |
| 11, 12 | Crushable material outer layer |
| 13, 14 | Crushable material center layer |
| 15, 16 | Crushable material inner layer |
| 17 | Payload |
| 18 | Support Cone |

65-6213A

Figure 30 THERMAL MODEL OF A TYPICAL MARS CAPSULE

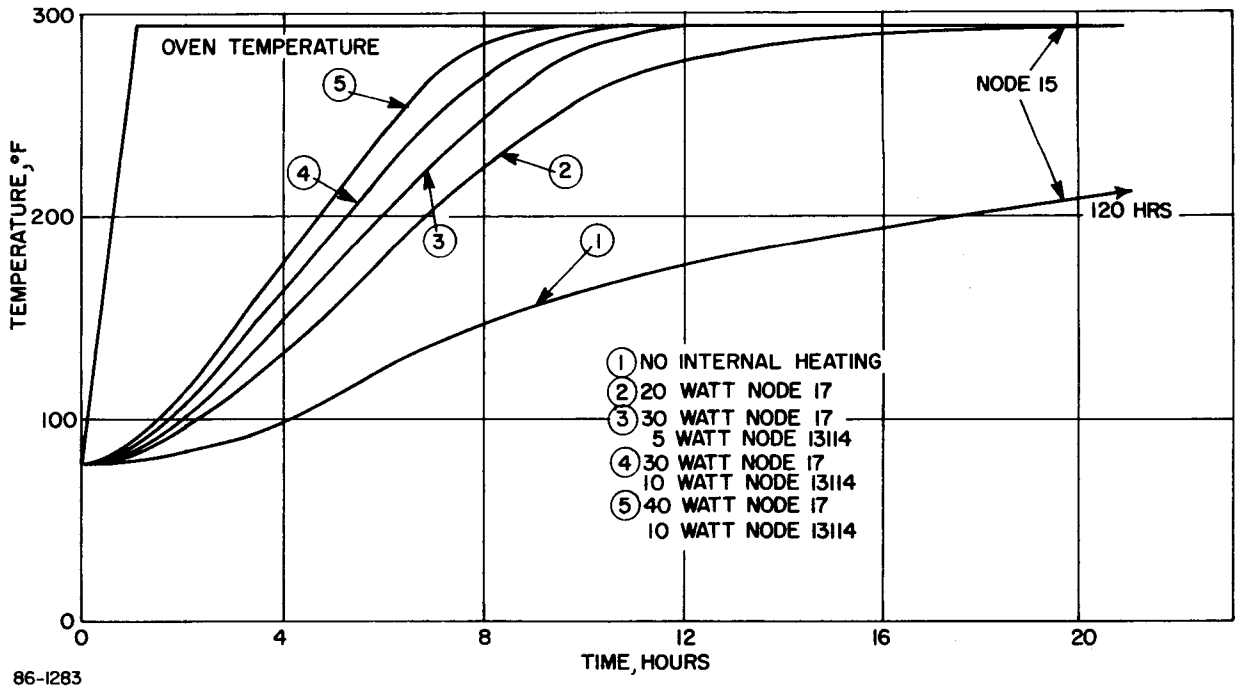


Figure 31 EFFECT OF INTERNAL HEATING ON TIME TO REACH STERILIZATION TEMPERATURE

These additional heaters effectively reduce the time constant to a few hours. (The internal heaters would be thermostatically controlled, so that the elements of concern would not exceed the sterilization temperature at any time).

The effect of external heating rates on temperature gradients across the container wall is shown for the upper wall (Node 1) in Figure 32; representative temperature-rise rates of 1, 2, 4 and 8°F/min were used in the analysis. This information is useful for selecting the maximum heating rates beyond which detrimental effects can occur to the container structure. (It should be kept in mind that the gradient across the wall is sensitive to the assumption made regarding internal and external convection coefficients).

The effect of the variation of internal surface emissivity on internal heat transfer was also investigated, with the results shown in Figure 33. The surface emissivity values of the inner face sheet, outer crush-up-material surface, and heat-shield outer surface were increased from 0.1 to 0.9.

Cooling of the system was also investigated. Illustrated in Figure 34 is a typical cool-down history from the sterilization temperature to room temperature. Despite the fact that the time constant for the payload cool-down is 120 hours, the container itself is at handling temperatures within a few hours, and even the payload has cooled to 125°F within 48 hours. Faster cool-down of the payload can be accomplished only by forced convection within the payload itself, which is difficult to achieve under sterile conditions; nor is it really required.

Alternate heating techniques utilize nitrogen or helium pressurizing gas in the sterilization canister under free or forced convection, and controlled oven overshoot. A heat cycle with oven rise time of one hour between room temperature and 145°C was used to determine the effects of nitrogen and helium under free and forced convection [9]. Figure 35 shows a comparison of component response for the various heating techniques. Under free convection with nitrogen in the sterilization canister the internal heat transfer coefficient is 0.9 Btu/hr-ft$^2$-°F. The component with the slowest response time (Item 22) requires 6.3 hours to reach soak temperature (curve 5). Under forced convection with nitrogen in the sterilization container and a heat transfer coefficient of 4.6 Btu/hr-ft$^2$-°F the same component requires 3 hours to reach soak temperature (curve 2). Using helium in the sterilization container under free convection, item 22 requires 4.5 hours to stabilize (curve 3), and under forced convection it requires 3 hours to stabilize (curve 1).

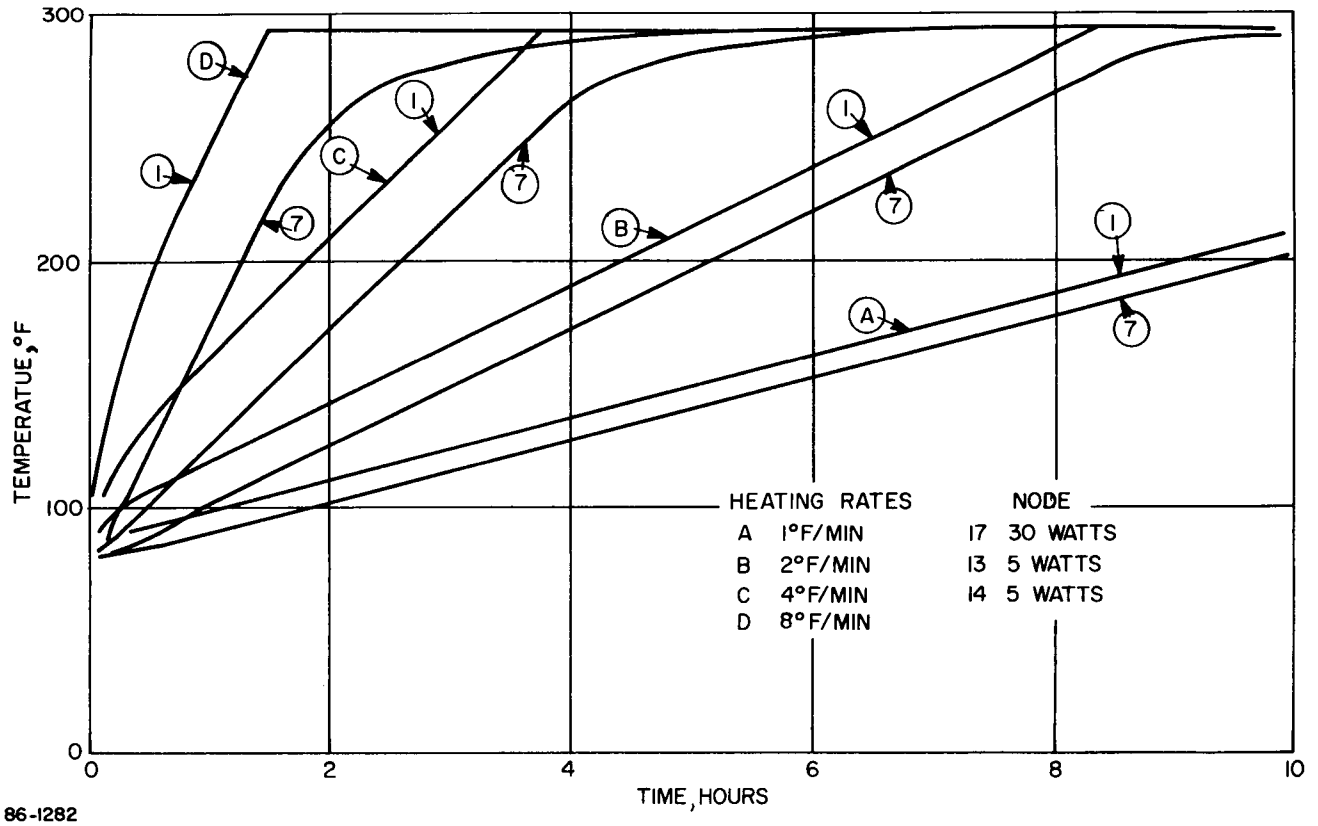


Figure 32 EFFECT OF EXTERNAL HEATING RATES

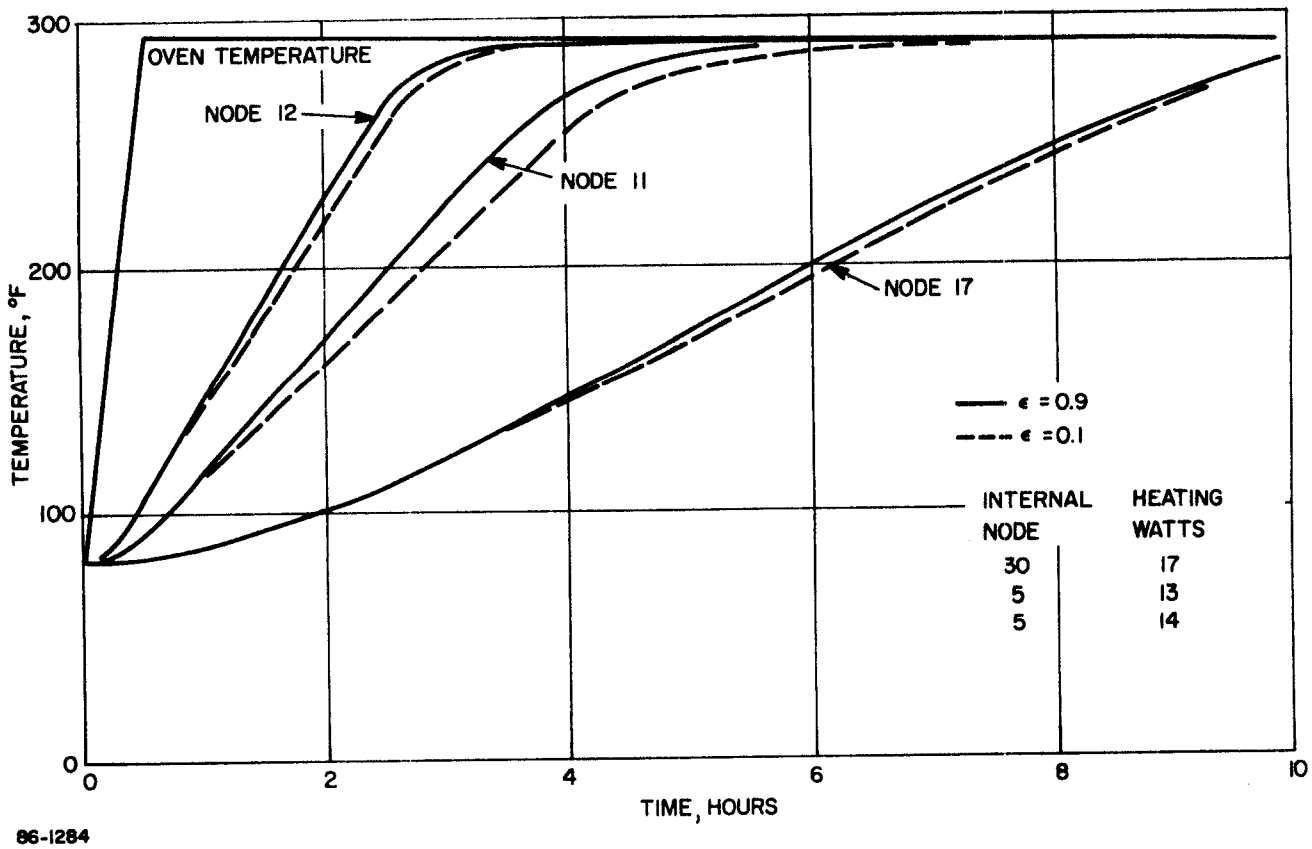


Figure 33 EFFECT OF VARIATION OF EMISSIVITY OF INTERNAL SURFACE ON INTERNAL HEAT TRANSFER

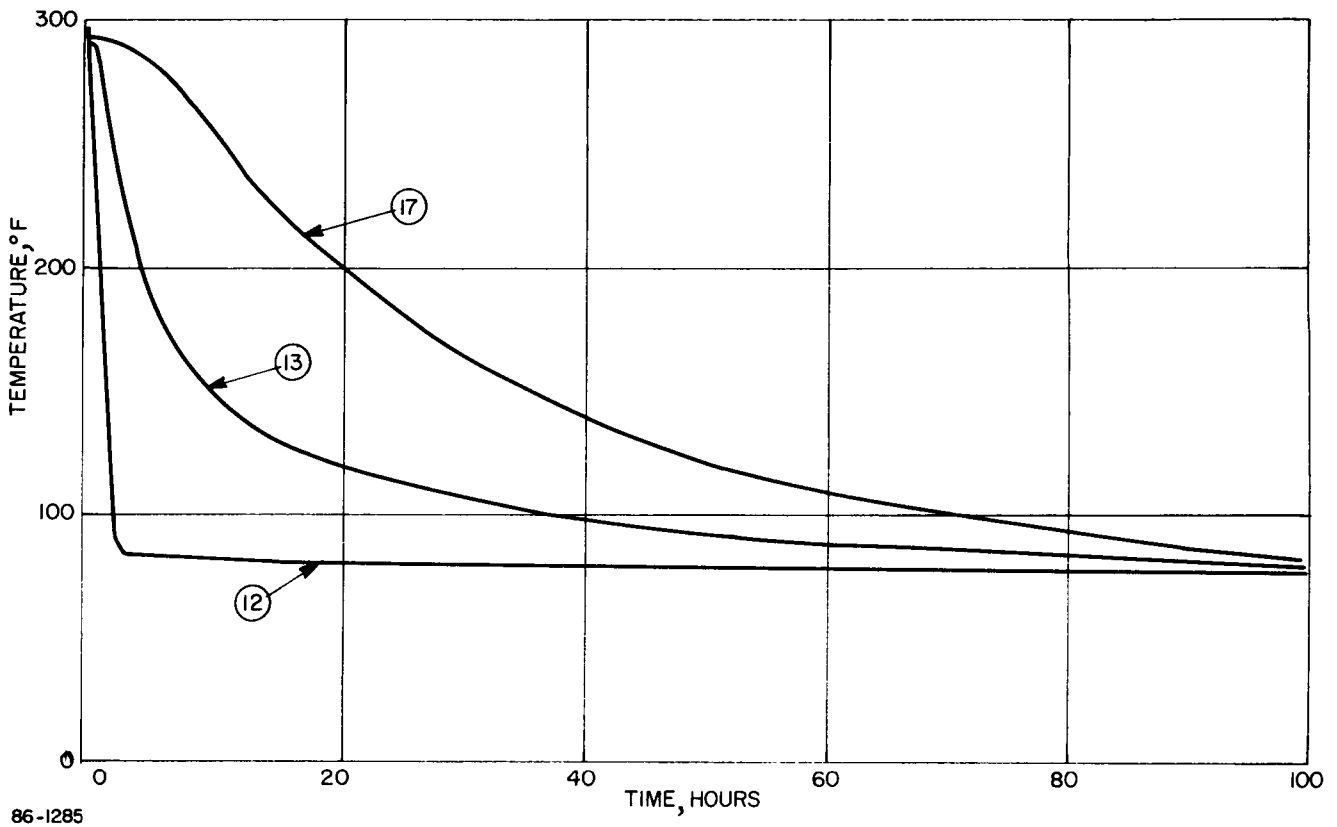


Figure 34 TYPICAL COOLDOWN HISTORY

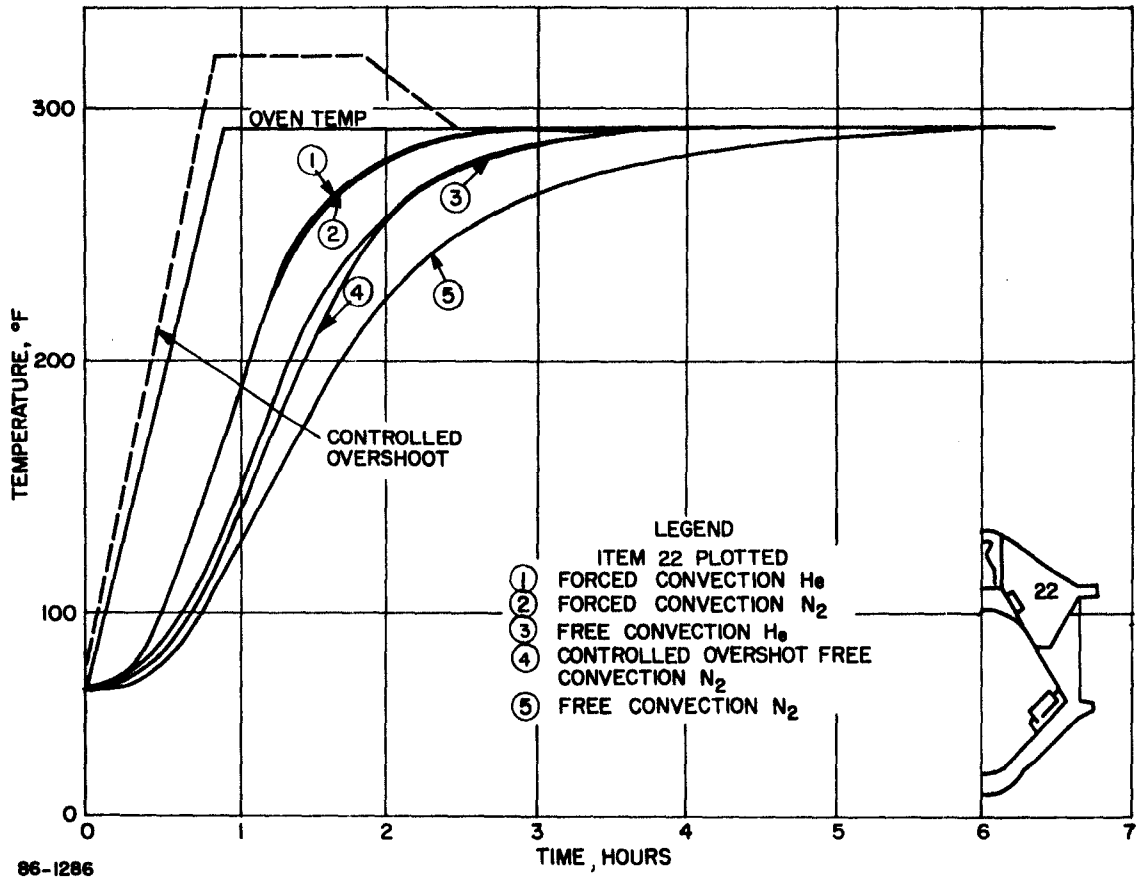


Figure 35 COMPARISON OF COMPONENT RESPONSE FOR VARIOUS HEATING TECHNIQUES

In the controlled oven-overshoot heat-sterilization cycle, temperature levels in certain areas were allowed to exceed the specified sterilization temperature level (145°C, 293°F) in order to investigate the possibility of shortening the eat-up time of the slower responding items.[9] The oven temperature was increased from room temperature to 171°C in 1 hour, held at 171°C for 1 hour, and then decreased to 145°C in 0.5 hour. The results of this temperature cycle are shown in curve 4, Figure 35. The slowest response item (Item 22) stabilized in 4.5 hours with nitrogen pressurizing gas under free convection in the sterilization container. Under the same conditions, but with no oven overshoot, this item required 6.3 hours to reach the stabilization temperature. Only the exterior metallic surfaces and support structure exceeded the 145°C heat sterilization cycle. This overshoot should have little effect on the performance of the assembly.

The most effective means of reducing the heat-sterilization time cycle is, therefore, the addition of internal heaters to the thermally most remote components, forced convection, although potentially capable of producing similar results, requires the use of active mechanical elements (blowers) within the capsule/canister system, which therefore have to be sterilizable and highly reliable and tend to be heavier than a number of small heaters distributed to the most thermally remote points, so that this approach appears to be less desirable at this time.

## 5.2 VERIFICATION OF KILL EFFECTIVENESS

The kill effectiveness of the cycle is verified by two independent complementary approaches. One is the measurement of temperatures inside the capsule and on the sterilization canister, to verify that the prescribed temperature cycle was followed. The second is the direct measurement of the biological kill by means of biological monitors mounted on the outside of the canister.

As part of the extensive thermal-control test program to which the capsule will have to be subjected, it will be established what the temperature response to a thermal sterilization heat cycle is at many points (up to 1000) of the capsule, first with an engineering model and then (probably with less instrumentation) on each flight article. From the measurements on the engineering test unit, it will be possible to select the best locations and the appropriate power inputs for heaters to be placed inside the capsule to reduce the heat-up time at the thermally remote points inside the capsule. The correctness of this selection should then be verified in a repeat of the thermal tests with heaters installed and operating. Also, tests on the engineering test unit will indicate which relatively few points of the many used in the engineering test program should be monitored on the flight articles to obtain the required definition of the thermal situation with the least instrumentation. The temperature sensors installed at these points of the flight articles will then furnish the desired

information during the terminal-sterilization cycle (as well as other phases of the mission where internal temperature information is of interest).

The biological monitors used for the direct determination of the biological kill are located on the outside of the sterilization canister and are assayed after the sterilization cycle. They should contain organisms which are resistant to dry heat in order to generate conservative data and they should contain numbers of organisms from $10^6$ to $10^{14}$ in steps of one decade, in order to furnish a quantitative measure of killing effectiveness. In order to avoid ambiguities stemming from the improper performance of the monitors, they should be used in replicates of five. Therefore, the primary set of monitors should consist of 45 containers of known burden.

The effectiveness of the heat cycle for the thermally most remote elements can be ascertained by using a second set of 45 monitors also located on the outside of the sterilization canister, but thermally insulated in such a way as to simulate the response of the thermally most remote element. (Even with internal heaters, there will be some points in the interior which are relatively isolated, although in that case, the temperature profiles at these points may not differ enough from those elsewhere to warrant the use of a separate set of monitors).

# 6.0 STERILITY MAINTENANCE

The sterility of the Probe/Lander must be maintained and monitored after terminal sterilization until the completion of its mission. For the following discussion, the post-sterilization portion of the life cycle of the capsule is divided into three phases: the prelaunch phase, the launch/cruise phase, and the separation/deployment phase.

## 6.1 PRELAUNCH OPERATIONS

In the prelaunch phase, the capsule undergoes storage, shipping, systems integration, and check-out tests, and final mating and checkout. Insofar as sterilization considerations are concerned, the key requirements are for shipping and storage provisions, means of post-sterilization repair and replacement, means of calibrating some of the scientific instruments, and means of monitoring the sterility of the capsule. The first three items are discussed in this section, and monitoring is discussed in paragraph 6.4.

### 6.1.1 Storage and Shipping

It is desirable to store the capsule/sterilization canister system after sterilization in a special chamber with metallic walls, with electrical connectors on its interior and exterior surfaces,to allow checkout of the capsule without removal from the chamber. Provisions should be made for flushing the inside of the chamber with ETO, for reduction of the external surface burden of the capsule.

If the sterilization facility is not adjacent to the assembly building where the launch vehicle is erected and where the flight spacecraft is mated to it, so that the capsule/canister system has to be transported for some distance, it may be advisable to furnish a combination shipping and storage container along the lines indicated in the preceding paragraph, with the additional requirements that the chamber now be portable and that it incorporate shock-isolation and other provisions to protect the capsule/canister system against any adverse transportation environment.

### 6.1.2 Post-Sterilization Repair and Addition of Equipment

The most serious problem of post-sterilization handling is that concerned with replacement or addition of components. If any element fails, the entire flight capsule can be replaced with a backup unit. The faulty component in the prime capsule can then be replaced, and this unit can serve as a backup. On the other hand, if a radioisotope thermal electric generator (RTG) is used, it will be necessary to insert the unit in the flight capsule shortly before launch to reduce personnel hazard and to minimize

the loss of available energy through decay of the radiation source. Similarly, if a critical component is characteristically incapable of withstanding heat sterilization, it must be sterilized by some other approved technique, and provisions must be made to add it to the assembly after vehicle sterilization.

Four methods of aseptic entry into the sterilization canister and the Flight Capsule are possible in principle, although all still require detailed study. First, general access could be achieved in an ETO chamber large enough to accommodate the component replacement operation. The capsule would be installed in the chamber in such a way as to provide working area between itself and the floor of the chamber; all necessary tools and components would also be brought into the chamber. ETO would then be introduced. Technicians in clean isolated atmosphere suits, slightly pressurized for personnel safety, would enter through air locks. Special handling equipment would, of course, be required to install an RTG in order to ensure personnel protection.

As another approach, the flight capsule could incorporate sealed compartments which isolate payload elements in replaceable modules. After installation of the presterilized component(s), the hatch would be sealed, flushed with ETO and pressurized through appropriate hatch valves. (This procedure requires a waiver to the present policy of accepting only heat as a means for final sterilization, because in this instance ETO would be the means of resterilizing the previously sterilized inside surfaces of the compartments, the outside of the capsule, and the inside of the canister.) In the case of an RTG unit, the required remote handling capabilities or special personnel protection would complicate the design and the mechanics of this operation.

As a third approach, access to small hatch covers could be provided by a suitable plastic or metal enclosure sealed around the hatch opening and equipped with work-through gloves.

A fourth alternative would be the use of tunnel suits, which are large flexible plastic enclosures mounted in openings in the walls of the chamber, which would permit personnel located in the outside of the enclosures to enter the chamber and work on the capsule through the flexible plastic built-in arm/glove extensions. In practice, this particular method might prove cumbersome because of the large suits, and the difficulty of achieving a good compromise between flexibility and assurance against rupture. Nonetheless, it combines some of the advantages of the first and second approaches, and may turn out to be the most practical alternative.

In all of these approaches, the required fixutres, remote handling equipment, tools, and ETO decontamination equipment have to be located in the sterile chamber, i.e., the working area.

### 6.1.3 Instrument Calibration

The requirement to calibrate instruments after sterilization creates another very difficult problem. For some measurements it is possible to enclose calibrating devices, say radiation sources, within the canister but external to the capsule. For others, such as temperature measurements, it is relatively simple to apply a stimulus inside the canister but difficult to measure its intensity by a means more accurate than the basic instrument itself. For still others, such as pressure measurements, even the application of a stimulus represents a non-trivial problem. All devices used to apply stimuli or to measure them must themselves be qualified to the sterilization environment and installed either in the canister (in such a way that they do not interfere with the deployment of the capsule), or within the capsule itself.

Very little work appears to have been done in this area (none as a part of this study) so that it represents one of the most significant essentially unresolved problem areas associated with the development of a planetary lander.

## 6.2 LAUNCH AND CRUISE

During the launch and cruise phase, the capsule/canister system is subjected to a number of environments which may cause a break of sterility -- launch loads and vibration, separation shock, meteoroid impact, etc. At this stage, no means for remedial action is available, but the monitoring system must be capable of detecting any actual or potential break of sterility.

## 6.3 CANISTER OPENING AND VEHICLE DEPLOYMENT

The final critical phase where a capsule can become recontaminated is during sterilization canister opening and Probe/Lander deployment, which includes the depressurization of the canister, the opening of the canister lid, and then the deployment of the Probe/Lander.

Although the external surfaces of the spacecraft and sterilization container may have been decontaminated prior to launch, viable organisms may still be on the system. During attitude control or during canister opening and venting, for example, additional organisms could be released with the gases expelled from the rockets and actuating devices, respectively. Also, gas plumes impinging on external surfaces, structural loads, and vibrations can all shake loose any viable organisms present on the various unsterile surfaces into the surrounding space, from where they could be attracted to the Probe/Lander by electrostatic or electromagnetic fields, mass attraction, or as a result of simple random collision, solar wind and pressure, or van der Waals forces.

The probability of recontamination depends on the presence of viable organisms and their behavior in these environments. Additional work in this area must be performed to determine the magnitude of the problem and, if necessary, develop means for avoiding it. Also, techniques should be developed for flight-qualifying the relevant subsystems specifically against these conditions, i.e., for demonstrating that no recontamination via the above-mentioned mechanisms can occur.

## 6.4 STERILIZATION MONITORING

A monitoring system will be required to indicate whether flight-capsule sterility has been violated. Probably the most practical method of doing this during most of the mission is to use an indicator to show if pressure within the canister has been maintained above ambient at all times. If pressure is lost, it must be assumed that sterilization has been violated.

During flight-vehicle storage there are two possible approaches to maintain pressure above ambient. One is to pressurize the sterilization canister initially to a high enough pressure that for a specified storage life with nominal leakage rates the internal pressure will always remain above ambient. The other is to supply a reservoir of sterile gas that will maintain the internal pressure at a prescribed level above ambinet. For the first approach, with an external surface area of the sterilization canister of 1165 $ft^2$, with a volume of 3700 $ft^3$, and with an assumed molecular leakage area of $2.5 \times 10^{-15}$ $in.^2/in.^2$ of surface area, the initial pressure required in the sterilization container for 300 days storage would be 19.7 psia for nitrogen, 37.1 psia for helium. These amounts would also be sufficient to monitor the assembly subsequently through a 300 day flight time to the planet. For the other approach, if the differential pressure across the sterilization container were maintained at 1 psi through 300 days of storage and a 300 day flight to Mars, 43 pounds of nitrogen or 16 pounds of helium would be required as make-up gas.

There are a number of approaches for detecting leaks in the system. In the case of the pressurized sterilization container with replenishable tank supply, the pressure decay itself is a measure of the leakage. Other means which can be used with either of the two approaches, depending on the gas used, are halogen and helium leak detectors, and gas analyzers.* (Such simple tests as detection of bubbles formed either from a soap film or as a result of immersion, are appropriate only for the prelaunch phase and not very reliable nor practical even then).

*It should be pointed out that no off-the-shelf systems are available today for pressurization nor for leak detection under conditions comparable to those encountered during the sterilization cycle, so that these systems would have to be developed for this application.

After the venting process which precedes canister opening and capsule deployment, pressure loss ceases to be an indication of possible recontamination. It would therefore be desirable to have another means available to detect any impingement of particles on the capsule. Although the impingement of a single organism would clearly not be detected, sensitive impact sensors can detect the impingement of relatively small amounts of matter at relatively low speeds, and any such impact could be construed to represent a potential recontamination situation. At present, however, it appears unlikely that much is to be gained by any concerted effort in this area, and that this effort could be spent more fruitfully to determine the likelihood of recontamination and, if necessary, devise means of avoiding it.

## 7.0 TRAINING

The requirement for sterilization and burden control adds a new dimension to the design and manufacture of high reliability systems. To arrive at this new performance objective it will be necessary to reorient and train personnel, so that burden control and sterilization requirements can be satisfied in all phases of design, manufacturing, inspection, check-out, and test assembly.

The inherent capability for sterilization must be designed into the system. The designers are responsible for selecting materials, components, finishes, and specifying processes which are compatible with the sterilization objectives. A study of the design manuals and the recommended-part/material lists will be part of the overall training, as will preferred processes recommended by sterilization and manufacturing specialists. The safety implications of the sterilization requirement must also be recognized during design phases. (For instance, pyrotechnic devices and rocket engines will have to be installed at the last moment to permit safe access to the system until the latest possible time.)

A Sterilization Control Board consisting of high-level management personnel with Government participation, must be established to evaluate and rule in matters associated with burden control and sterilization. It must approve allocated burden levels, assay routines, all procedures related to burden, as well as disposition of burden discrepancies and the necessary corrective actions associated with them. The personnel of this board will have to undergo a brief indoctrination program to acquire a proper understanding of the sterilization requirement and its implications.

Quality control personnel must be educated to understand that burden control is another vital function which has a bearing on the inherent ability of a component or system to satisfy its intended purpose. They must monitor the necessary documentation and the performance of individuals for adherence to methods and procedures, as they would for any other vital characteristic. New controls will have to be devised for monitoring any degradation in performance through the sterilization environments. A separate group of personnel will probably be charged solely with the responsibility for burden control. Sterilization-control personnel will presumably be skilled in the biological sciences and techniques, but will have to be indoctrinated briefly into the other aspects of the program. The duties of the two groups will have to be defined clearly and explained to them.

Manufacturing will require an unusually clear definition of detailed procedures, and a strict compliance with these procedures to ensure that they are not deviated from, with a potential increase in the allocated burden. Design of tooling and handling fixtures must have as objectives the minimization and control

of burden. Handling methods must be regulated to ensure that material flow and storage is so arranged as to minimize burden accumulations. All this will require indoctrination of all personnel involved in these procedures. Clean-room assembly and handling, where required, will necessitate a new area of procedures development, extensive training, and continuing reindoctrination in order to realize the maximum benefit from this expensive process.

Vendors will have, in some instances, to be instructed in the need and methods for burden control. Assistance and training must be provided so that they will recognize the importance of contamination and be capable of monitoring burden contributing factors. They must also be educated to the required documentation. As a rule, however, it will be desirable to design the system and shape the program in such a way as to minimize and, if possible, eliminate all unique requirements on piece-part vendors (other than normal aerospace high-reliability requirements with which the vendors are already familiar).

The assembly and test process represent major sources of contamination. The personnel in assembly and test will therefore have to be instructed in the manner of handling material with a minimum of contamination to the equipment. This will include development of techniques for providing equipment exposure of minimum duration, and for the development of OSE that will reduce contact with the system during test to a minimum. Personnel must be instructed in the importance of documenting every handling experience and recording assembly and other exposure times in various areas.

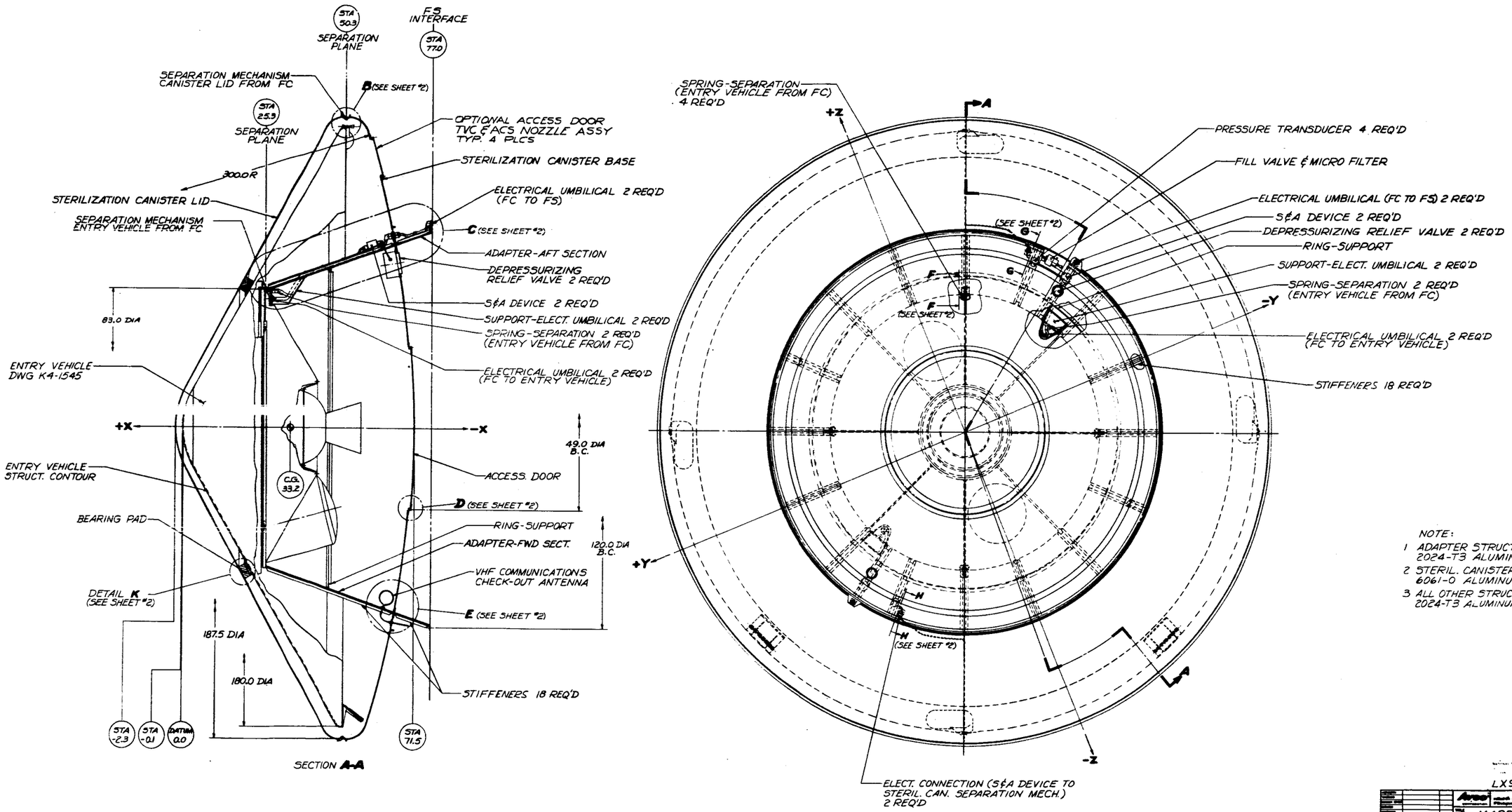


NOTE:
1 ADAPTER STRUCTURAL MAT'L 2024-T3 ALUMINUM
2 STERIL. CANISTER MAT'L 6061-0 ALUMINUM
3 ALL OTHER STRUCTURAL MAT'L 2024-T3 ALUMINUM

LX923207 SHEET 1 OF 2

| | |
|---|---|
| TITLE | MARS PROBE FLIGHT CAPSULE LAUNCH CONFIGURATION |
| CODE IDENT NO. 04614 | DWG NO. K4-1544 |
| SCALE 1/8 | SHEET 1 OF 2 |

Figure 36 PROBE-ENTRY FROM ORBIT - FLIGHT CAPSULE LAUNCH CONFIGURATION

## 8.0 OUTLINE OF STERILIZATION AND IMPLEMENTATION PLAN FOR A PROBE (DESIGNED FOR ENTRY FROM ORBIT)

Various alternative sterilization procedures and controls and the associated considerations have been considered earlier (see Sections 2.0, 3.0, 4.0, and 5.0). The recommended sterilization plan for the probe designed for the EFO case is outlined in the following.

### 8.1 SYSTEM

The Mars probe considered here is intended to collect and transmit scientific and engineering data concerning the Mars atmosphere down to impact after entering from planetary orbit. A drawing of the probe, shown in Figure 36, can serve as a reference for the following discussion. The instrumentation and power supply, together with the associated telecommunications equipment, the inertial reference subsystem, the television cameras, and the parachute system, are mounted on an eight-truss spider payload structure and covered with an afterbody heat shield which protects the mounted payload during entry. This entire assembly is identified as the suspended capsule and is shown mounted on the inside of the entry shell. The entry shell is a 15-foot diameter cone-sphere consisting of a honeycomb core faced on the inner and outer surfaces with an aluminum skin. The forward exterior surface of the entry shell is covered with a protective ablation heat shield.

Attitude and thrust-vector control systems are shown mounted on the entry shell and are connected electrically to the suspended capsule. This entire assembly, together with a system to permit separation of the entry shell and the suspended capsule, are identified as the entry vehicle. The entry vehicle, then, together with the necessary propellants and with its sterilization canister, comprise the flight capsule. (Since the landed capsule is nonsurvivable, there is no need for the impact-attenuation nor self-righting features which are part of the Probe/Lander designed for the EFAT case (see Section 9.0)).

### 8.2 FACTORY OPERATIONS

All fabrication and assembly can be conducted in conventional factory areas, with the exception of the parachute, which should be subjected to ETO during its packaging. All components should undergo complete flight acceptance tests, including all mission-experienced environments, as well as ETO-cleaning and thermal-sterilization environments, in accordance with the requirements of JPL specification VOL-50503-ETS[10]. Since the heat cycle is the most severe environment, this will be conducted first, eliminating marginal parts at the earliest possible opportunity. The remaining tests are then conducted, and ETO cleaning is performed last.

The complete suspended capsule is assembled as shown in Figure 37. Cabling harnesses are installed on the payload structure; the three major modules are assembled separately and concurrently, and are subsequently assembled to the structure. After all componentry is mounted and interconnected, the modules are subjected to ETO and sealed. Since the individual components had been sterilized previously by the flight acceptance test, the internal burden of the sealed module will be extremely low.

Table XX details the processes shown in Figure 37, and also shows the accumulated burden corresponding to each significant assembly level and the time required for each activity (which includes associated subsystem testing inspection, etc.). The cure cycle of the entry-shell heat shield, which is quite severe (equivalent to a kill of up to 22D), series as the heat cycle for flight acceptance of that component.

The completed flight capsule is subjected to the following factory acceptance tests.

| Test | Time (weeks) |
|---|---|
| Mass Parameter Determinatio | |
| Vibration | 3.0 |
| Thermal Vacuum Functional (Space Simulation) | 4.0 |
| RFI, Safety and Compatibility | 3.5 |

## 8.3 FIELD OPERATIONS

Subsequent to assembly and factory acceptance, the flight capsule is shipped to the field, where validation checks are conducted at the receiving inspection site to ensure that no performance degradation has occurred since factory testing. The flight capsule now undergoes its final acceptance tests in the following sequence:

| Test | Time (weeks) |
|---|---|
| Mass Parameter Determination (Flight Capsule) | 2.0 |
| Thermal Vacuum Functional Check (Space Simulation) | 4.0 |
| ETO - Sterilization | 3.5 |
| Vibration | 3.0 |
| Thermal Vacuum Functional Check (Space Simulation) | 4.0 |
| RFI, Safety, Compatibility Check | 3.5 |
| Total | 20.0 |

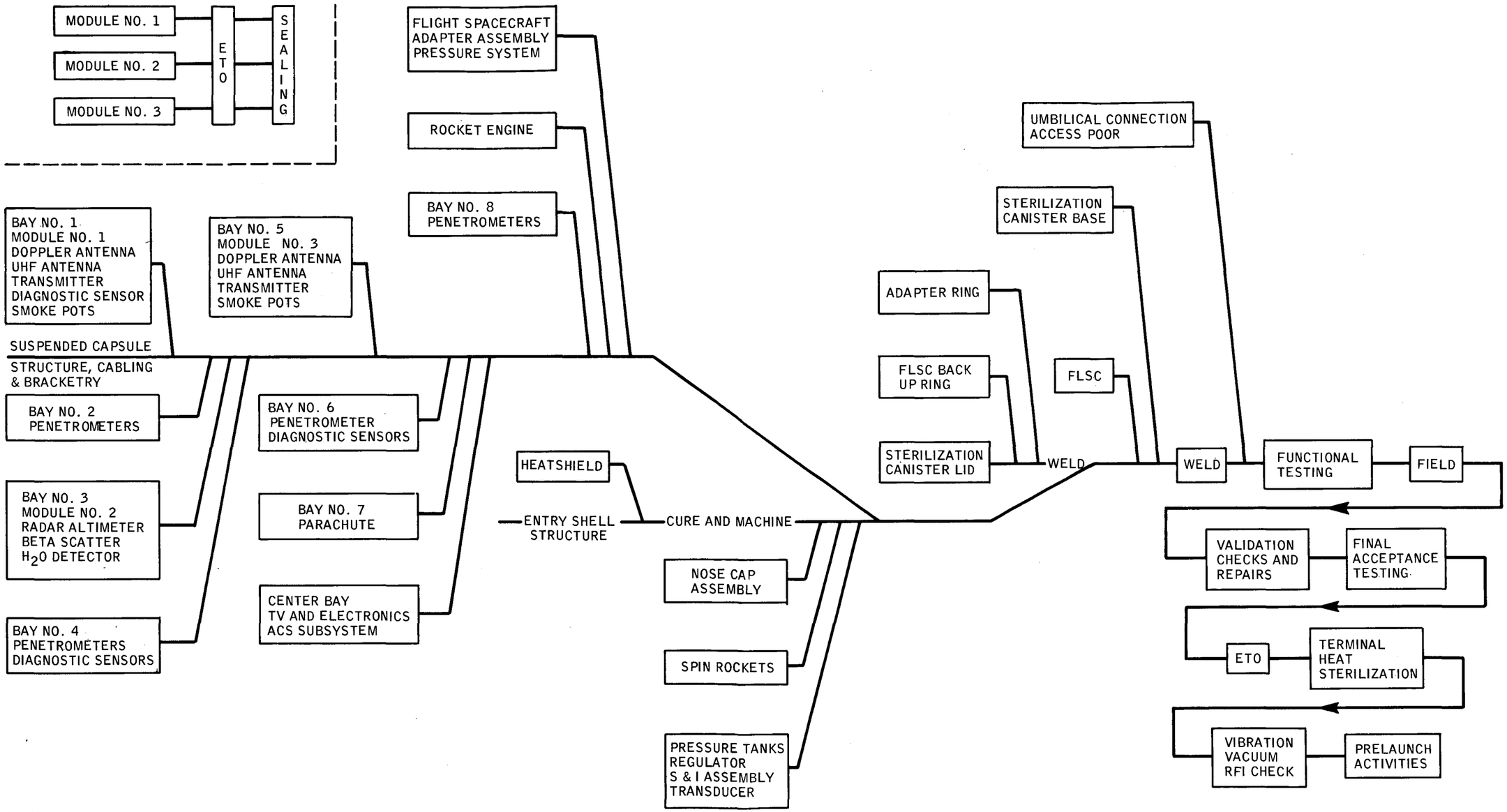


Figure 37 PROBE-ENTRY FROM ORBIT - FACTORY-TO-LAUNCH FLOW SEQUENCE



118-2

## TABLE XX

### FACTORY-TO-LAUNCH FLOW SEQUENCE FOR PROBE

| Title | Functions | | Time-Weeks | | Cumulative Burden $X10^{-8}$ | |
|---|---|---|---|---|---|---|
| | Assembly | Test | Per Activity | Cumulative | Surface | Occluded |
| Payload Structure Cabling & Bracketing | Installation of brackets snaking, forming and clamping of cables | Visual, dimensional, continuity and isolation | 2.0 | 2.0 | 0.311 | 0.005 |
| Module 1<br>Module 2<br>Module 3 | Similar for all modules<br>. Mechanical mounting of electronic components<br>. cabling and interconnecting<br>. ETO<br>. Module sealing | . Visual dimensional<br>. Continuity & isolation<br>. Functional<br>. Vibration<br>. Thermal cycle<br>Functional compatibility (Simulation) | 1.5 (per Module) | 2.0 | 0.20<br>0.20<br>0.20<br>See Note 1 | 0.015<br>0.010<br>0.013 |
| Bay 1 | Doppler antenna<br>VHF antenna<br>Transmitter cabling<br>Diagnostic sensors<br>Module-smoke pots | Visual<br>. Continuity & isolation<br>. Functional<br>. Compatibility<br>. Pattern<br>. Dimensional<br>. Vibration<br>. Compatibility | 1.0 | 3.0 | 0.345 | 0.034 |
| Bay 2 | Penetrometer cabling & bracketry | . Visual<br>. Continuity & isolation<br>. Functional<br>. Dimensional | 0.25 | 3.0 | 0.371 | 0.038 |
| Bay 3 | Radar altimeter<br>Beta scatter<br>$H_2O$ detector<br>Module 2 | . Visual<br>. Continuity & isolation<br>. Functional<br>. Vibration | 1.0 | 4.0 | 0.371 | 0.054 |
| Bay 4 | Penetrometer cabling and bracketry<br>Diagnostic sensors | . Visual<br>. Continuity & isolation<br>. Dimensional<br>. Functional | 0.25 | 4.0 | 0.412 | 0.061 |
| Bay 5 | Doppler antenna<br>VHF antenna transmitter cabling smoke pots<br>Module 3 | . Visual<br>. Dimensional<br>. Continuity & isolation<br>. Functional<br>. Pattern<br>. Vibration | 1.0 | 5.0 | 0.465 | 0.090 |
| Bay 6 | Penetrometer cabling and brackets<br>diagnostic sensors | . Visual<br>. Dimensional<br>. Continuity & isolation<br>. Functional | 0.25 | 5.0 | 0.498 | 0.095 |
| Bay 7 | Parachute assembly | . Visual<br>. Continuity & isolation | 1 | 6.0 | 0.520 | 0.124 see note 1 |
| Center bay | T. V. ACS subsystem | Alignment check continuity & isolation functional simulation | 1 | 7.0 | 0.530 | 0.127 |
| Bay 8 | Penetrometer cabling and bracketry<br><br>Rocket Engine Umbilical cabling | . Visual<br>. Continuity & isolation<br>. Functional<br><br>. Visual<br>. Alignment<br>. Continuity & isolation | 0.25<br><br>0.5 | 7.0<br><br>7.0 | 0.555<br><br>0.581 | 0.133<br><br>0.136 |
| Complete payload | | System vibration mass parameters space simulation functional<br>R. F. I. safety | 8-15 | 15-22 | | |
| Payload adapter | Mechanical fastening cabling & bracketry disconnect umbilical lanyard & separation assy. | . Mating & Alignment<br>. Dimensional<br>. Functional continuity<br>. Pressure checks<br>. Compatability<br>. Mass parameters | 0.5 | 15-22 | 0.691 | 0.150 |
| Entry body | Mechanical fastening cabling and bracketry suspended capsule to entry shell | . Functional<br>. Continuity and compatibility<br>. Mass parameters | 2 | 17-22 | 1.116 (See note 2) | 0.302 (See note 2) |
| Sterilization canister lid | Pyrotechnics<br>Mechanical fastening cabling and bracketry | . Visual<br>. Pressure<br>. Dimensional<br>. Continuity & isolation | 0.8 | 17-22 | -- | |
| Sterilization ring Assembly to canister lid | Weld | . Visual<br>. Dimensional | 1.0 | 18-23 | -- | |
| Sterilization canister base shell and door | Mechanical installation weld cabling | . Visual<br>. Dimensional<br>. Pressure | 1.0 | 19-24 | -- | |
| Final burden configuration | ETO<br><br>Sterilize, see note 3 | . Visual<br>. Continuity & isolation<br>. System<br>. Vibration<br>. Mass parameters<br>. R. F. I. and safety<br>. Space simulation<br>. Functional | 19-30 | 38-54 | 0<br><br>0 | 0.314 see note 3<br><br>0 |

Note 1 - After ETO application
Note 2 - After curing of heatshield
Note 3 - Zero burden shown is considered as a probability of $0.3 \times 10^{-4}$

## 8.4 BURDEN CONTROL

Sufficient assays will be conducted early in the program in accordance with the established criteria to verify that the component burden allocations are not exceeded. Subsequently, burden control is accomplished by monitoring the manufacturing and handling environments to assure that they do not deteriorate to the point where they lead to excessive burden accumulation (see Sections 3.0 and 4.0). Burden control during and after terminal sterilization will be effected in the manner described in Section 5.0 and 6.0.

## 8.5 FACILITY, TIME, AND MANPOWER REQUIREMENTS

The facility and manpower requirements are summarized in Tables XXI, XXII, and XXIII. (In keeping with the study ground rules, the facility requirements have been treated in somewhat more detail for the probe/lander designed for the EFAT case; the discussion in paragraph 9.3 of the type of unique facilities required is equally valid for the probe (designed for the EFO case).

TABLE XXI

FACILITY AND MANPOWER SUMMARY FOR PROBE

SPACE

| Location | Area (sq. ft.) |
|---|---|
| Factory | 162, 000 |
| Field | 43, 800 |
| total | 205, 800 |

NUMBER OF ASSEMBLY LINES*

| Factory | Quantity |
|---|---|
| Suspended capsule assembly and test | 7 |
| Flight capsule assembly and test | 3 |
| Entry shell assembly and test | 3 |

| Field | Quantity |
|---|---|
| Disassembly and test | - |
| Assembly and test | - |
| Acceptance testing | 3 |

OVERALL TIME

| Location | Time (weeks) |
|---|---|
| Factory | 33.5 |
| Field | 25.5 |
| total | 59.0 |

MANPOWER REQUIREMENTS

| Location | Man Years |
|---|---|
| Factory | 253 |
| Field | 62 |
| total | 315 |

*For assumed delivery requirements of one capsule per month for a total of 12 units.

## TABLE XXII

### FACILITY REQUIREMENTS FOR PROBE

| FACTORY | | FIELD | |
|---|---|---|---|
| Activity | Area (sq ft) | Activity | Area (sq ft) |
| Receiving and stores | 42, 000. | Receiving inspection and verification | 10, 000. |
| Receiving inspection | 33, 000. | Testing | |
| Suspended capsule assembly | 38, 600. | ETO and sterilization | 4, 000. |
| Flight capsule assembly | 15, 600. | Acceptance testing | 27, 800. |
| Entry shell assembly | 5, 000. | Assay laboratory | 2, 000. |
| Combined test area | 27, 800. | | |
| Total | 162, 000. | Total | 43, 800. |

Note: 1. Environmental conditions are conventional unless otherwise specified.

2. Fabrication areas not included.

## TABLE XXIII

### MANPOWER REQUIREMENTS FOR PROBE

| FACTORY | | FIELD | |
|---|---|---|---|
| Activity | Quantity | Activity | Quantity |
| Receiving and stores | 20 | Receiving inspection and verification testing | 25 |
| Receiving inspection | 70 | ETO and sterilize | 5 |
| Suspended capsule assembly | 140 | Acceptance testing | 65 |
| Flight capsule assembly | 35 | Assay laboratory | 20 |
| Entry shell assembly | 20 | | |
| Combined test area | 75 | | |
| Total | 360 | Total | 115 |

## 9.0 OUTLINE OF STERILIZATION AND IMPLEMENTATION PLAN FOR A PROBE/LANDER DESIGNED FOR ENTRY FROM THE APPROACH TRAJECTORY

### 9.1 SYSTEM DESCRIPTION

The Probe/Lander (Flight Capsule) shown in Figure 38 is intended to land a payload on the surface of Mars after entering the atmosphere from an approach trajectory. Scientific and engineering observations are made during descent and on the surface.

The landed assembly consists of a payload housed in an impact attenuator that permits the payload to survive landing forces. The landed capsule, the parachute system, the electronics, and the associated structure make up what is defined as the suspended capsule. This assembly is mounted on an entry shell consisting of a beryllium-faced honeycomb structure covered by an ablative shield for protection against entry heating; some elements of the attitude-control system are also mounted on the shell. The entire assembly with a $\Delta V$ propulsion system is encapsulated in a sterilization canister to make up the flight capsule.

### 9.2 BASIC ASSEMBLY/TEST CYCLE

The sterilization plan provides for suspended capsule assembly and test in a Class 100 Clean Room. All other operations are conducted in conventional facilities with normal environments. After final assembly operations at the field site, the flight capsule surfaces are decontaminated with ETO, and it is then subjected to thermal sterilization (dry heat). The flow of activities is described by Figure 39. All suspended capsule components are decontaminated by ETO following receiving inspection, prior to introduction into the Class 100 Clean-Room. After assembly and test, the landed capsule is subjected to another ETO cleaning prior to sealing.

The long-duration high-temperature cure cycle required to manufacture the entry shell substantially exceeds sterilization requirements and serves to decontaminate its interior. Only surface burden will accumulate on this unit during the installation of auxiliary equipment of the attitude-control and spin-rocket systems and during handling and shipment to the final-assembly site in the field.

At the field site all systems are subjected to rigiorous environmental testing as part of the receiving inspection. After assembly, the completed capsule is cleaned with ETO, sealed, sterilized in the prescribed manner, subjected to system acceptance tests, and is then ready for launch-integration activities.

A block diagram of the details of the suspended capsule assembly is shown by Figure 40. Table XXIV lists the assembly and test functions and presents an estimate of the time required to perform them.

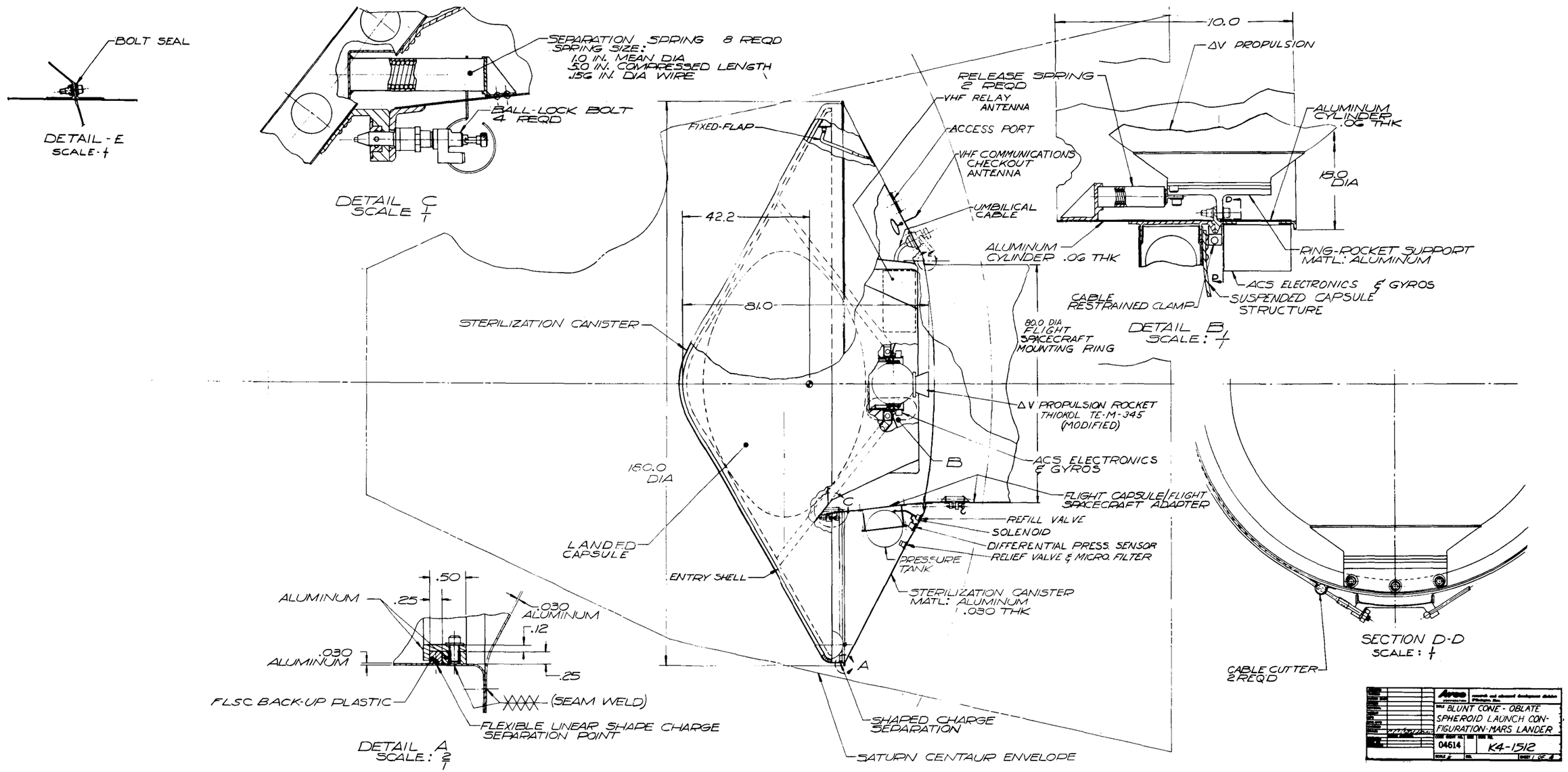


123-1

Figure 38 BLUNT CONE -- OBLATE SPHEROID LAUNCH CONFIGURATION

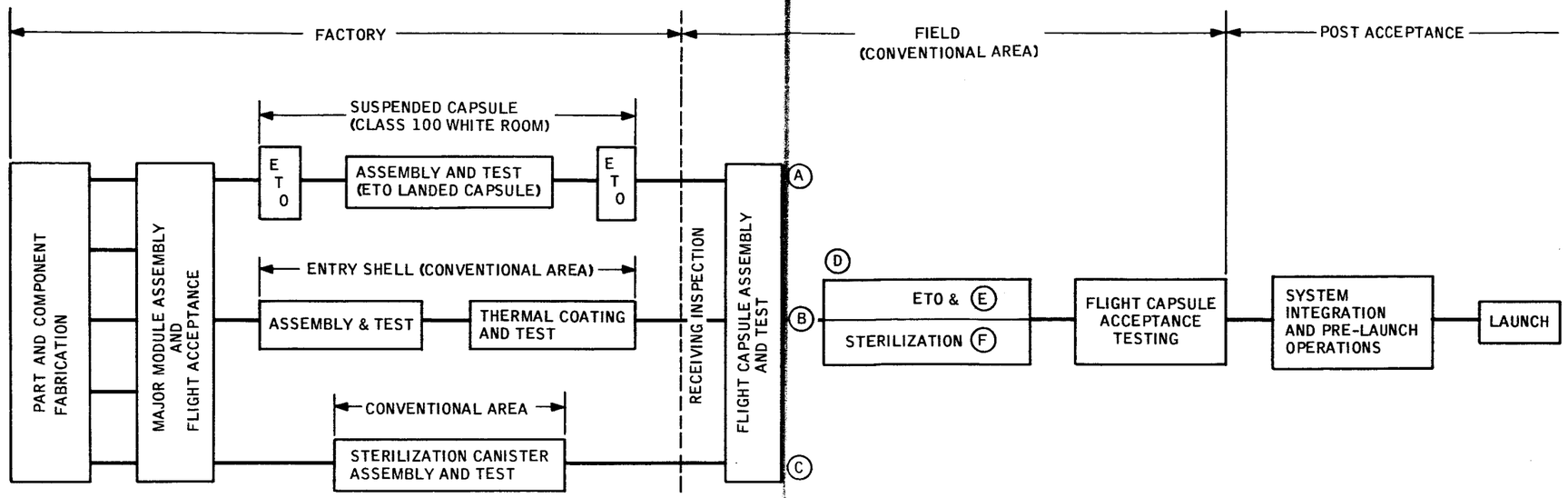


| | LEVEL OF ASSEMBLY | TIME - WEEKS | | BURDEN X $10^6$ | |
|---|---|---|---|---|---|
| | | PER ACTIVITY | CUMUL. | S | I + O |
| A | SUSPENDED CAPSULE | 21.5 | 21.5 | 1.04 | 21.1(1) |
| B | ENTRY SHELL (ASSEMBLY) | 3.0 | 21.5 | 6.16 | 5.96 |
| C | STERILIZATION CANISTER | 1.0 | 21.5 | 13.52 | 34.6 |
| | RECEIVING INSPECTION | 1.5 | 23.0 | INCLUDED ABOVE | INCLUDED ABOVE |
| D | FLIGHT CAPSULE ASSY. AND TEST | 6.0 | 29.0 | 20.72(2) | 61.7 |
| E | ETO | 1.0 | 30.0 | 0 | 61.7 |
| F | STERILIZATION | 2.5 | 32.5 | 0 | 0(3) |
| | FLIGHT CAPSULE ACCEPTANCE TESTING | 14.5 | 47.0 | | |

LEGEND:
S - SURFACE BURDEN
I - INTERNAL BURDEN
O - OCCLUDED BURDEN

NOTES:

1. NUMBER SHOWN CONSIDERS REDUCTION IN PARACHUTE BURDEN DUE TO ETO SPECIAL HANDLING OF 75,000
2. BURDEN SHOWN IS THE SUMMATION OF A, B, AND C
3. ZERO BURDEN SHOWN AFTER STERILIZATION IS CONSIDERED AS A PROBABILITY OF $61.7 \times 10^{-6}$

86-1288

Figure 39 PROBE/LANDER-ENTRY FROM THE APPROACH TRAJECTORY - FACTORY - TO - LAUNCH FLOW SEQUENCE

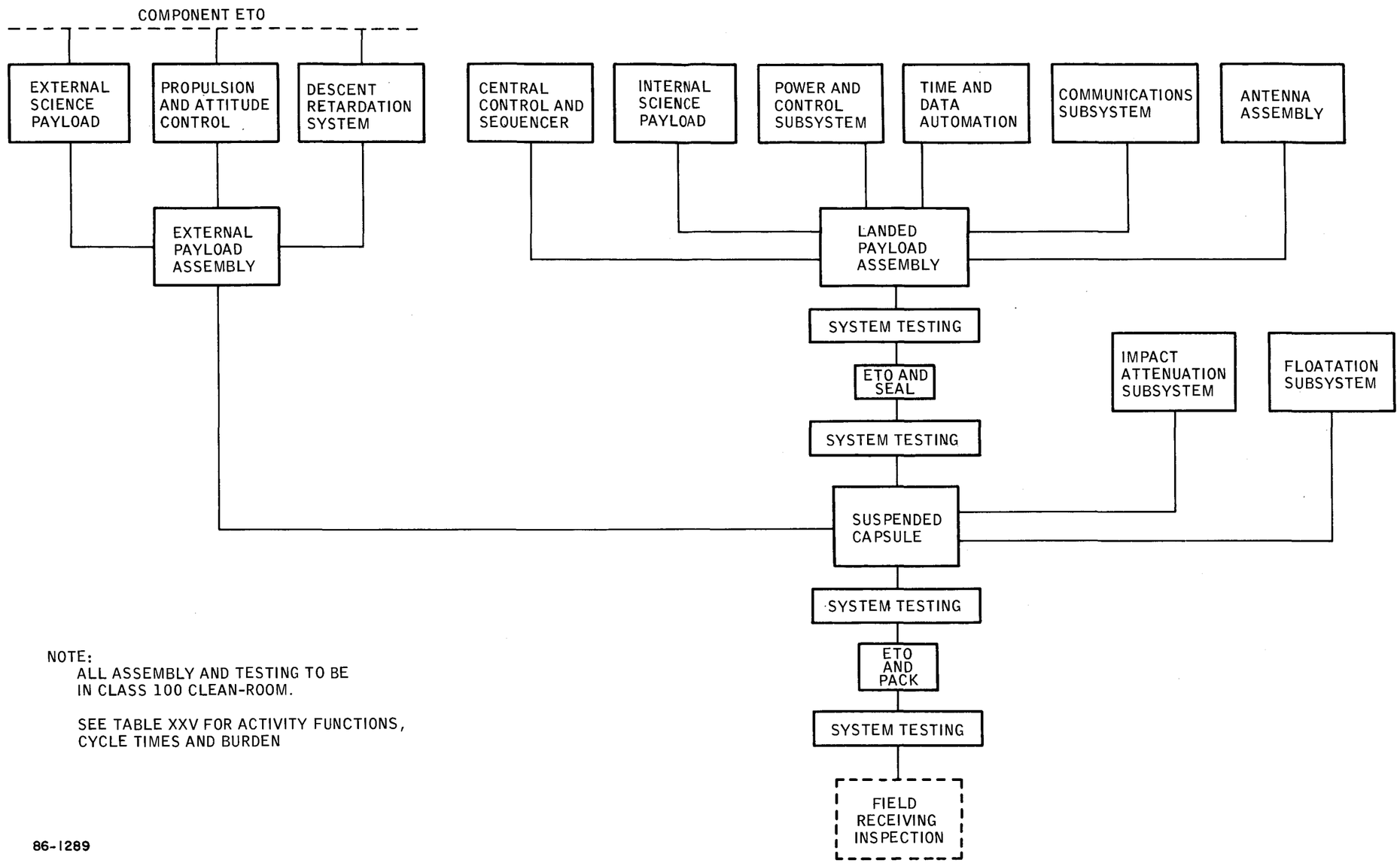


NOTE:
ALL ASSEMBLY AND TESTING TO BE IN CLASS 100 CLEAN-ROOM.

SEE TABLE XXV FOR ACTIVITY FUNCTIONS, CYCLE TIMES AND BURDEN

86-1289

Figure 40 PROBE/LANDER-ENTRY FROM THE APPROACH TRAJECTORY - SUSPENDED CAPSULE ASSEMBLY AND TEST - BLOCK DIAGRAM

## TABLE XXIV

### APPROACH TRAJECTORY--ASSEMBLY AND TEST SEQUENCE FOR PROBE/LANDER

| Level of Assembly | Functions | | Time - Weeks | |
|---|---|---|---|---|
| | Assembly | Test | Per Activity | Cumulative |
| All components and structures are subjected to ETO cycle prior to introduction into assembly area. | | | | |
| 1. Central control and sequencer<br>B. 1. 4. 6 | . Mechanical mtg. of electronic equipment.<br>. Cabling | . Visual<br>. Dimensional<br>. Continuity & isolation<br>. Functional<br>. Vibration | 1. 0 | 1. 0 |
| 2. Internal science payload<br>B. 1. 4. 7 | . Mechanical mtg. of electronic equipment<br>. Mechanical mtg. of scientific equipment<br>. Mtg. of Mechanical equipment<br>. Plumbing<br>. Cabling | . Visual<br>. Dimensional<br>. Continuity & isolation<br>. Functional | 1. 0 | 2. 0 |
| 3. Power and control subsystem<br>B. 1. 4. 8 | . Mechanical mtg. of electronic equipment<br>. Cabling | . Visual<br>. Continuity & isolation<br>. Functional | 1. 0 | 3. 0 |
| 4. Time and data automation<br>B. 1. 4. 9 | . Mechanical mtg. of electronic equipment<br>. Cable | . Visual<br>. Continuity & isolation<br>. Functional<br>. Compatibility | 1. 0 | 3. 0 |
| 5. Communications subsystem<br>B. 1. 4. 10 | . Mechanical mtg. of electronic equipment<br>. Cabling | . Visual<br>. Continuity & isolation<br>. Functional<br>. Compatibility | 1. 0 | 3. 0 |
| 6. Antenna assembly<br>B. 1. 4. 11 | . Mechanical mtg. of electronic equipment<br>. Cabling | . Visual<br>. Continuity & isolation<br>. Compatibility<br>. Pattern | 1. 0 | 3. 0 |
| 7. Lander payload assembly (structure, instrumentation, power supply and telecommunications)<br>B. 1. 4 | . Mechanical mtg.<br>. Cabling<br>. Plumbing<br>. ETO (after testing) | . Visual<br>. Continuity & isolation<br>. Functional<br>. Compatibility<br>. Vibration<br>. Mass Parameters | 6. 0 | 9. 0 |
| 8. Impact attenuator<br>B. 1. 2 | . Bonding<br>. Cabling<br>. Pyrotechnics | . Visual<br>. Continuity & isolation<br>. Bond Integrity | 0. 5 | 9. 5 |
| 9. Flotation subsystem<br>B. 1. 3 | Mechanical mtg.<br>bonding<br>plumbing<br>cabling | Visual continuity<br>pressure check | 0. 5 | 10. 0 |
| TOTAL LANDED CAPSULE | | | | |
| External science payload<br>B. 1. 1. 5 | . Mechanical Mtg. of scientific electronic equipment<br>. Cabling | . Visual, Dimensional<br>. Continuity & isolation<br>. Limited functional | 1. 0 | 11. 0 |
| Propulsion and attitude<br>B. 1. 1. 6 | . Mounting of mechanical parts<br>. Mechanical mtg. of electronic components<br>. Cabling<br>. Plumbing | . Visual, Dimensional<br>. Continuity<br>. Pressure<br>. Vibration<br>. Functional<br>. Alignment | 1. 5 | 11. 0 |
| Descent retardation system (parachute)<br>B1. 1. 7 | . Mechanical mounting<br>. Cabling | . Visual<br>. Continuity & isolation | 0. 5 | 11. 5 |
| External payload assembly<br>B. 1. 1 | . Mechanical<br>. Plumbing<br>. Cabling<br>. Mechanical mtg. of electronic parts | . Visual dimensional<br>. Continuity & isolation<br>. Limited functional | 2. 0 | 13. 5 |
| Suspended capsule<br>B. 1 | . All assembly completed in prior operations<br>. After testing, ETO, WRAP<br>. Fixture and crate | . Visual<br>. Continuity<br>. System<br>. Vibration<br>. Mass parameters<br>. RFI & safety<br>. Thermal vacuum<br>. Functional | 8. 0 | 21. 5 |

*Burden with Special Handling of Parachute

## 9.3 FACILITY REQUIREMENTS

A summary of estimates made of the space, number of assembly lines, duration of assembly, and the man years required to assemble the Probe/Lander system is given in Table XXV.

Extensive facilities are required for the fabrication, assembly, inspection, test and acceptance of the sterilization canister, entry shell, and other major components. They are generally available at qualified sources for these items.

A pilot plant is required at some location (not necessarily the basic fabrication/assembly site, nor the final-assembly field site) to provide environmental conditions suitable for conducting experiments to 1) establish detailed specifications to define the conditions for conducting assembly (including testing) of hardware which requires microbial burden control, 2) devise methods and procedures for controlling the assembly and test procedures to reduce and control microbial burden, 3) validate the assumptions used in burden allocations, including the values used for handling and fallout rates, 4) determine the amount of handling required and the assembly cycle times for processing hardware in a clean-room environment, and 5) develope methods of post-sterilization reworking of components without violating their sterility.

These objectives can be met by conducting a series of controlled experiments and operations that will simulate the methods that are planned for actual assemblies under various environmental conditions. This will permit the complete evaluation of all variables affecting the assembly operation, will furnish realistic values of burden accumulation, and permit accurate identification of the role that assembly environment contributes to burden. It will result in criteria for facility designs and for the development of assembly and test procedures to furnish the required degree of burden control with minimum cost and schedule penalties.

An assay laboratory will be required to support all activities conducted during assembly of operational capsules. It can serve to evaluate the process, including the controls imposed on it, by continual assays. The laboratory must be staffed with personnel skilled in the biological monitoring of fabrication/assembly activities and the environments in which they take place, and equipped with all necessary means for conducting assays. Typical major items of special equipment types include Royco airborne particle counters and digital printers, Anderson Air Samplers, and Velometers. A similar laboratory will be required at the final-assembly site.

The special facilities required at the assembly and field sites are listed in Table XXVI.

## TABLE XXV

### FACILITY AND MANPOWER SUMMARY FOR PROBE/LANDER

| SPACE | | NUMBER OF ASSEMBLY LINES** | |
|---|---|---|---|
| Factory | 88, 000 sq ft | Factory | 6 |
| Field | 104, 000 sq ft | Field | 3 |
| Total | 192, 000 sq ft* | | |
| **OVERALL TIME** | | **MANPOWER REQUIREMENT** | |
| Factory | 13.5 weeks | Factory | 112.5 man years |
| Field | 19.0 weeks | Field | 60.0 man years |
| Total | 32.5 weeks | Total | 172.5 man years |

* Including 49, 200 sq ft of class 100 area.

** Assuming delivery requirements of one capsule per month for a total of 12.

## TABLE XXVI

## SPECIAL FACILITIES

| Item | Description | Factory | Field |
|---|---|---|---|
| 1. | Rate tables and associated instrumentation to support component acceptance. | X | -- |
| 2. | Vibration facility (sinusoidal and random) to support component acceptance. | X | -- |
| 3. | Vibration facility to test assemblies to support sizes up to flight capsule. | X | X |
| 4. | Mass parameter facility (Pelton 10B or equivalent). | X | X |
| 5. | Space simulator. | X | X |
| 6. | ETO chamber. | X | X |
| 7. | NTD equipment. | X | X |
| 8. | RF screen room. | X | X |
| 9. | Assay laboratory. | X | X |
| 10. | Data reduction facilities to analyze system test results. | X | X |
| 11. | Manufacturing process laboratory. | X | -- |
| 12. | Quality verification laboratory | X | -- |
| 13. | Rework and post-sterilization Aseptic entry facility. | -- | X |

Notes: Assembly of suspended capsule to be conducted in Class-100 Clean-Room.

## 9.4 SPACE, MANPOWER, AND TIME REQUIREMENTS

Estimates of space and manpower requirements are listed in Table XXVII and XXVIII. The total field assembly time is shown in Table XXIX, and it may be seen that the major portion of this time is due to the tests that have to be conducted on the systems involved.

TABLE XXVII

SPACE REQUIREMENTS FOR PROBE/LANDER

| Factory | | Field Final Assembly | |
|---|---|---|---|
| Activity | Area - sq.ft. | Activity | Area - sq.ft. |
| Receiving inspection and stores | 28,400 | Receiving and stores | 14,400 |
| Suspended capsule assembly and test | 52,400 | Receiving inspection and test | 18,400 |
| | | Flight capsule assembly and test | 67,200 |
| | | ETO and sterilization | 2,000 |
| | | Assay Laboratory (Class 100 Clean-Room) | 2,000 |
| | | total | 104,000 |
| Assay Laboratory | 8,000 | | |
| total | 88,800 | | |

This facility is designed to support assembly lines in parallel. Environmental conditions are conventional except for 39,200 sq. ft. of assembly area and in the assay laboratory which are class 100 clean rooms. Fabrication areas not included.

TABLE XXVIII

MANPOWER REQUIREMENTS FOR PROBE/LANDER

| Factory (Suspended Capsule Assembly) | | Field (Final Capsule Assembly) | |
|---|---|---|---|
| Activity | Quantity | Activity | Quantity |
| Receiving inspection and stores | 88 | Receiving inspection and stores | 24 |
| Assembly and inspection | 192 | Assembly and inspection | 70 |
| Test | 56 | Test | 40 |
| Assay laboratory | 60 | Assay laboratory | 16 |
| total | 396 | total | 150 |

## TABLE XXIX

## FIELD ASSEMBLY TIME FOR PROBE/LANDER

| Activity | Time (weeks) |
|---|---|
| Receiving inspection | 1.5 |
| Entry shell and suspended capsule assembly | 2.5 |
| Mass parameter check | 2.0 |
| Add sterilization canister and after-body heat shields | 3.5 |
| Mass parameter check | 2.0 |
| Thermal vacuum functional check (space simulation) | 4.0 |
| ETO - Sterilization | 3.5 |
| Vibration | 3.0 |
| Thermal vacuum functional check (space simulation) | 4.0 |
| R.F.I. safety, compatibility check | 3.5 |
| total | 29.5 |

## REFERENCES


1. Ernst, R. and A. Kretz, Compatibility of Sterilization and Contamination Control with Application to Spacecraft Assembly, Contamination Control, 3, No. 11, p. 10 (1964).

2. Portner, Dorothy M., The Level of Microbial Contamination in a Clean-Room during a One-Year Period, Protection Branch Report of Test No. 11-65, Physical Defense Division, Fort Detrich, Maryland (December 1964).

3. Buchbiner, L., T. C. Buck, Jr., P. M. Phelps, R. V. Stone, W. D. Tiedeman, Investigation of the Swab Rinse Technique for Examining Eating and Drinking Utensils, American Journal of Public Health, 37, pp. 373-378 (1947).

4. Angelotti, R. and M. J. Foter, A Direct Surface Agar Plate Laboratory Method for Quantitatively Detecting Bacterial Contamination on Non-porous Surfaces, Food Research, 23, pp. 170-174 ( 1958).

5. Angelotti, R., J. L. Wilson, W. Litsky, W. G. Walter, Comparative Evaluation of the Cotton Swab and Rodac Methods for the Recovery of Bacilus Subtiles Spore Contamination from Stainless Steel Surfaces, Health and Laboratory Science, 1, pp. 289-296 (1964).

6. Reed, L. L., Microbiological Analysis Techniques for Spacecraft Sterilization, J. P. L. Program Summary No. 37-32, IV, pp. 35-44 (30 April 1965).

7. Jet Propulsion Laboratory, Specification XSO-30275-TST-A, Environmental Test Specification Compatibility Test for Planetary Dry Heat Sterilization Requirements (April 1963).

8. Phillips, G. B., E. Hanel, Jr., G. G. Gremillion, Practical Procedures for Microbial Decontamination, U. S. Army Chemical Corps, Biological Laboratories, Fort Detrich, Maryland (1962).

9. NASA Contract NAS 8-20502, Development of a Typical Mars Landing Capsule Sterilization Container (15 January 1966).

10. Jet Propulsion Laboratory Specification Vol. 50503-ETS. Environmental Specification Voyager Capsule Flight Equipment Type Approval and Flight Acceptance Test Procedures for the Heat Sterilization and Ethylene Oxide Decontamination Environments (12 January 1966).




PRECEDING PAGE BLANK NOT FILMED.

11. J. P. L. Specification GMO-50198-ETS. Environmental Test Specification Compatibility Tests for Ethylene Oxide Decontamination Requirements, Revision ETS-A (September 1964).

12. Miner, L. C., Gaseous Sterilization of Pharmaceutical and Hospital Pharmacy, 16, p. 285 (June 1959).

13. DuPont, Properties and Application of the Freon Fluorocarbons, Technical Bulletin B-2 (1964).

14. DuPont, Effects of Freon Fluorocarbons on Elastomers, Technical Bulletin B-12A (1963).

15. Monthly Progress Report No. 11, Study of the Effects of Ethylene, Hughes Aircraft Company, Oxide-Freon 12 Upon Properties of Polymers and Metallic Surfaces, JPL Contract 951003 (August 1965).

16. The Mechanical and Thermal Properties of Candidate Mars Entry Heat Shield Materials after Exposure to Dry Heat Sterilization and Ethylene Oxide Decontamination Avco RAD-TM-65-19 (April 1965).

17. Koesterer, M. G., NASA CR-191, Studies for Sterilization of Space Probe Components (7 March 1965).

18. Federal Specification 209, Clean-Room and Work Station Requirements, Controlled Environment (16 December 1963).

# APPENDIXES

A. EFFECTS OF THE STERILIZATION PROCESS ON MATERIALS AND COMPONENTS

B. BURDEN CALCULATION TECHNIQUES

## APPENDIX A

## EFFECTS OF THE STERILIZATION PROCESS ON MATERIALS AND COMPONENTS

The sterilization requirements serve to add two hostile environments, ETO and dry heat to all the others which the system has to resist and/or under which it has to perform. A considerable amount of work has been done on the ETO- and heat-susceptibility of parts and components for planetary-probe applications, most of it by Jet Propulsion Laboratory or under its sponsorship. Much work remains to be done along these lines before all the required elements are qualified before a list of preferred parts, materials and processes can be generated, and before a set of design guide lines covering fastening, sealing, tolerances, lubrication, etc., can be formulated.

Some of the more fundamental implications of ETO- and heat-exposure are summarized in this appendix.

### 1.0 ETHYLENE OXIDE

An ethylene oxide (ETO) mixture containing 12 percent ethylene oxide and 88 percent Freon 12 or Genetron 12, by weight, has been defined as the decontaminating gas for planetary/probe applications in the applicable specification.[11] The mechanism by which ethylene oxide kills micro-organisms has been linked to its chemical activity as an alkylating agent.[12] It replaces labile hydrogen atoms present in carboxyl, ameno, sulfhydryl and hydoryl groups with hydroxyethyl ($-CH_2CH_2OH$) groups, thereby blocking many reactive groups participating in essentially metabolic reactions.

#### 1.1 Plastic Materials

The ability of ethylene oxide to react with labile hydrogen makes it a potentially hazardous material for prolonged contact with polymers such as epoxys. Amine, which are commonly used as curing agents in epoxy systems, are vulnerable to attack by ETO. ETO can also participate in a number of reactions with compounds commonly found in other commercial materials, such as fillers, plasticizers, and residual processing solvents. Other materials, such as metal and metallic oxides, serve to catalyze the polymerization of ETO.

Reaction with ETO can greatly modify the physical characteristics of a material. The overall change in properties of materials which are reactive or contain reactive constituents depends on the amount of reactive material available and the permeability of the material to ETO.



PRECEDING PAGE BLANK NOT FILMED.

Freon 12, the commonly used ETO diluent, does not react chemically with the silicones nor epoxys tested so far. It does have solvent properties,[13] and a small amount of swelling or crazing may be experienced with some materials, especially after extended exposure at 104°F. Elastometers experience pronounced swelling after prolonged contact with liquid Freon 12, and in a series of exposures performed by DuPont[14] Viton A showed 10 percent linear swell, and Viton B a 9 percent linear swell. Other materials, such as neoprene, showed a shrinkage which is probably because of leaching of the plasticizers by Freon solvent action. Neither the materials tested nor the test conditions should decompose the Freon; therefore, reactive decomposition products should not have been present to react with the tested materials.

In general, there are many significant variables involved in the compatibility of some materials with ETO, so that a determination of this compatibility is difficult and time consuming. One report describing JPL-sponsored testing,[15] points out how mechanical data fails to establish a clear pattern of behavior for epoxy and phenolic laminates as a result of gas and heat exposure; while laminate NS (phenolic) gains 34 percent in flexural strength, micarta 238 (another phenolic material) loses 5.5 percent. This information is summarized in Table A-1, which is reproduced from this report.

Property changes may apparently be because of other than a direct interaction of the sterilant gas with the base polymer, such as: (1) state-of-cure because the dry heat cycle may serve as a further cure for test materials and increase their mechanical strength, (2) plasticizer effect, because the sterilant gas may diffuse into the test materials and act as a plasticizing agent, and (3) impurity reactions, because physical and/or chemical reactions of sterilant gas with impurities in the materials may produce property changes.

An Avco-sponsored program[16] to determine properties of heat-shield materials exposed to ETO and heat sterilization revealed changes that could significantly affect the thermal and structural effectiveness of the entry shell (see paragraph 2.1).

## 1.2 Lubricants

The need for lubricants or low-friction films in any of the components requires careful attention, because the reaction with the chemical sterilant must now be considered, in addition to the severity of space environments imposed on any lubricant. Many lubricants, by their nature, are susceptible to such reactions, although no specific data appears to be available.

## TABLE A-1

### MECHANICAL PROPERTIES OF MATERIALS EXPOSED TO STERILANT GAS AND HEAT CYCLING

| Material | Exposure | Tensile Strength (psi x $10^3$) | Change Tensile Strength (percent) | Flexural Strength (psi x $10^3$) | Change Flexural Strength (percent) | Elastic Modulus | Change Elastic Modulus (percent) |
|---|---|---|---|---|---|---|---|
| FG 9ILD Fiberglass-Phenolic | As received | 32.0 | | 55.4 | | | |
| | Gas exposure* | 35.1 | +9.6 | 61.0 | + 10.1 | 2.90 | -- |
| | Gas exposure + heat cycle | 29.8 | -7.0 | 54.1 | - 2.5 | 2.79 | |
| Laminate NS Phenolic | As received | 6.39 | | 8.70 | | 0.260 | |
| | Gas exposure + heat cycle | 6.70 | +4.8 | 11.80 | + 34.4 | 0.405 | + 56 |
| Laminate 500-J Epoxy | As received | 47.5 | | 79.4 | | 3.48 | |
| | Gas exposure + heat cycle | 47.4 | -2.1 | 91.0 | + 14.6 | 3.54 | + 1.72 |
| Micarta LE221 | As received | 8.6 | | 16.5 | | 0.755 | |
| | Gas exposure + heat cycle | 9.3 | +8.1 | 15.0 | - 9 | 0.781 | + 3.45 |
| Micarta 238 Phenolic | As received | 10.8 | | 18.0 | | 0.905 | |
| | Gas exposure + heat cycle | 11.5 | +6.5 | 17.9 | - 5.5 | 0.933 | + 3.1 |
| Micarta GX Epoxy | As received | 55.1 | | 96.0 | | 3.05 | |
| | Gas exposure + heat cycle | 58.0 | +5.2 | 94.6 | - 1.45 | 2.64 | -13.4 |
| Micarta H-5834 Phenolic | As received | 52.1 | | 64.3 | | 3.29 | |
| | Gas exposure + heat cycle | 51.3 | -1.54 | 68.5 | + 6.5 | 3.16 | -3.98 |
| Micarta 8457 G-D | As received | 45.0 | | 62.8 | | 2.81 | |
| | Gas exposure + heat cycle | 46.0 | +2.22 | 60.2 | - 4.1 | 2.94 | + 4.6 |
| XP-206 Epoxy | As received | 42.2 | | 12.1 | | 2.27 | |
| | Gas exposure + heat cycle | 47.5 | +5.1 | 11.2 | - 7.4 | 2.36 | + 4 |

* Gas Exposure: 12 percent ETO, 88 percent Freon 12,-24 hours at 74°F + 24 hours at 104°F

## 1.3 Metals

ETO effects on metals can be determined more easily, because metals are not so process-sensitive, and their physical properties are more readily controlled, leading to more uniform products than is the case with plastics. Only relatively few metals and coatings may have questionable performance in ETO exposure; these include copper, brass, bronze (some alloys), mercury alloys, magnesium alloys, and phosphate and anodic coatings*.

In general, if ETO exposure becomes a problem with these materials, sufficient exposure protection can be provided, or the relatively minor performance degradation at presently proposed chemical sterilant concentrations and temperatures can be accepted or taken into account by means of increased design factors. The surface of the metal must, however, be in the proper condition; certain contaminants such as dirt, rust or other foreign coatings which include chemical traces from prior processing could result in reactions ranging from increased property degradation to explosion.

## 1.4 Processes

The processes utilized in cleaning, plating, painting and chemical preparation of adhesives, etc., have a significant bearing on the ETO-susceptibility of the given component. Not only can traces of certain impurities create conditions of incompatibility with ETO, but in some cases these impurities could even create an explosive situation. This is particularly true if acetylene from prior processing is allowed to remain as a residual trace at the time of ETO cleaning. Many conventional manufacturing processes, such as soldering, particle- and leak-detection inspection, tend to leave some residue.

Another problem is that certain agents, such as copper sulfate or sodium chloride salts which may be deposited through hand contacts, will tend to crystalize if permitted to remain on the surface, creating an ETO-impermeable encapsulation of any spores which happen to be on the surface.

These processes and the subsequent cleaning and treatment cannot be left to standard manufacturing practice, but must be developed and evaluated in actual operation with ETO decontamination and be detailed as part of the design definition.

*Caution is advised in utilizing some existing compatibility summaries which include inappropriate early test results not based on pertinent ETO mixtures or exposures; use of this information could cause unfounded rejection of an otherwise suitable candidate material.

### 1.5 Packaging Design

Designs must provide for ETO access to all areas requiring chemical cleaning. This access may be by direct exposure or through the use of materials permeable to ETO. Care must be employed to avoid the entrapment of the chemical sterilant that would result in local areas (pockets) of prolonged exposure to or even retention of the ETO. The total amount of ETO retained by structures and components and subsequently released during the heat sterilization cycle could be appreciable; it must be held down to an irreducible minimum, and its continuing corrosive or debilitating effects must be taken into consideration or provision must be made for its evacuation.

The use of integrated monolithic circuits represents one form of packaging that will protect many parts from a chemical exposure that they might not otherwise survive.

The parachute is inherently a major contributor to flight capsule contamination if conventional packing techniques are used. The use of ETO cleaning during the packing process can reduce the burden by a factor of about 10,000. In the final stages of parachute packing, handfolding is supplemented by machine ramming for compacting. A housing can be provided which covers the partially folded parachute and the mechanical ram. This housing would accommodate an ETO environment for chemical cleaning and would include glove ports and transparent areas to permit the necessary visual and manual access. The ETO shield would be 3 feet in diameter and 50 to 100 feet long, terminating in a 6-foot cube at the machine end.

## 2.0 HEAT

The heat sterilization requirement not only places a severe demand on the materials and components of the flight capsule individually, but also leads to a stringent requirement for thermal compatibility of materials in contact with each other. These factors are discussed in the following paragraphs.

### 2.1 Plastic Materials

Many encapsulating and potting materials will be used in the flight capsule. Proper formulations must be developed to result in the required thermal compatibility of these materials with the encapsulated or potted parts to ensure that the parts are not crushed during the heat cycle.

Heat shield and heat-shield bond performance is also influenced to some extent by the sterilization exposure, despite the fact that curing temperatures are expected to be considerably more severe. Six heat-shield materials were examined in an Avco-sponsored study,[16] Armstrong 2755 Cork,

Avcoat 8021, Delrin 150, Dow-Corning Silicone 2048, Flexible Epoxy 291-59-12 and NASA Purple Blend, which were chosen because they have desirable properties for use on planetary probes and landers. The objective was to evaluate the materials after exposure to both the chemical and heat environments. Each material was exposed to one ETO and three heat cycles. The ETO cycle involved the exposure of the materials to an atmosphere at 104°F and a 35 percent relative humidity containing 500 mg/liter of ethylene oxide. Each heat cycle involved heating from ambient at the rate of 1°F per minute up to 293°F, maintaining this temperature for 40 hours, and cooling at the rate of 1°F per minute down to ambient.

The results are summarized in Table A-2. It may be observed that five of these materials had significant changes in properties that could affect the composite properties of the entry shell. The weight loss reported for Armstrong 2755 cork could have a significant effect on the mass-parameter characteristics of the entry vehicle. The other property changes would have to be taken into account in the design to avoid the possibility of mission impairment. The weight loss is believed to be because of the loss of a polyol plasticizer which is reported to be 10 percent by weight of the material, and of some residual moisture in the cork. A modification of the material could possibly be made by either eliminating the plasticizer or replacing it with a less volatile substitute that will minimize the weight loss. The changes in the other properties of Armstrong 2755 cork are significant but may not be detrimental to the mechanical performance of the material; they may actually increase the thermal compatibility with structural materials.

The improvement in properties exhibited by Dow-Corning Silicone 2048 and NASA Purple Blend was attributed to the fact that the materials involved were insufficiently cured prior to dry-heat sterilization at 293°F, so that the sterilization cycle served to complete the curing process. The Dow-Corning Silicone 2048 was cured by the vendor prior to shipment to Avco and the Purple Blend was cured per NASA's recommendations at Avco.

These tests serve as an illustration of the need for further attention in this area, specifically to the standardization of fabrication processes, methods and controls, in order to furnish predictable repeatable physical characteristics after heat sterilization.

## 2.2 Metals

Metals are not likely to represent a problem; there is extensive data on the physical characteristics under elevated temperatures, although hot- or cold-worked alloys with residual stresses may require attention, depending on the magnitude and location of the stresses; whenever possible, these should be relieved before final sterilization. Some light-metal alloys may experience metallurgic changes, with an attendant change in properties, which are not necessarily always reversible.

TABLE A-2

HEAT-SHIELD MATERIAL EVALUATION SUMMARY

| | |
|---|---|
| Armstrong 2755 Cork | a. Significant changes in tensile properties and thermal strain.<br>b. Weight loss of 14.7 percent. |
| Avcoat 8021 | a. Significant loss in tensile properties.<br>b. Specific heat increased 20 percent. |
| Delrin 150 | a. Total strain to failure decreased 96 percent at 300°F.<br>b. Thermal conductivity increased 15 percent at 250°F. |
| Dow Corning Silicone 2048 | Improved tensile properties at -100 and 75°F. |
| Flexible Epoxy 691-59-12 | No significant changes. |
| NASA Purple Blend | a. Improved tensile properties.<br>b. Increased thermal strain.<br>c. Decreased thermal conductivity 14 percent at 250°F. |

The primary consideration associated with metal usage relates to relative expansion rates which, if not compatible, can result in buckling, cracking, warping or other temporary or even permanent distortion. This is particularly important in the cases where relative movement of parts is required, as in a deployment device, or where precise alignment reference must be maintained to satisfy mission objectives.

## 2.3 Processes

The major impact of heat sterilization on processes is in the necessity for strict compliance with all special requirements. Cure cycles for plastic materials and bonds must be adequate and properly executed to assure strength and uniformity, and to minimize the amount of contamination and deposition resulting from excessive outgassing during sterilization. Stress-relieving on structural elements must be complete, to ensure against cracks or fractures during the heat cycle, as indicated previously.

## 2.4 Packaging Design

The requirement for heat sterilization complicates the existing packaging problems considerably and also adds new ones. The parachute, for example, requires transmission of heat through the compacted parachute material, which has very low conductivity; to ensure complete thermal saturation within a reasonable time, and to prevent other flight-capsule items from being overexposed, the parachute package may have to be designed to permit thermal access to the package interior, or an internal heater inside the parachute may have to be used. This must not interfere with the extraction and deployment of the parachute, however. Similar considerations apply to other poor thermal conductors.

The flight capsule consists of a great many sealed and pressurized units, the biggest one of which is the sterilization canister itself, and the need to protect some parts and components from ETO tends to increase the number of sealed containers beyond that which would be used without this requirement. During the heating cycle every container becomes a pressure vessel and requires appropriate packaging to handle the pressure differences.

Propellants, squibs, and other explosive materials need protection against the degrading effects of elevated temperatures. The packaging of these and other devices, which normally involves "O" rings, gaskets and flexible bellow devices must be examined to determine its adequacy at elevated temperatures, particularly when these devices have been subjected previously to an ETO cleaning cycle.

## 2.5 Interaction Between Components

In developing components care should be exercised that individual elements found to have acceptable tolerance to heat, or ETO, do not have degrading effects on each other when exposed in combination. Typical of this possibility is: (1) the combining of gases released from plastics with lubricants to cause corrosive conditions, (2) swelling of parts restricting motions, and (3) fogging of lenses.

# APPENDIX B

## BURDEN CALCULATION TECHNIQUES

The purpose of this appendix is to furnish additional details of the burden calculations discussed in Section 3.0; both in general terms, and specifically oriented to the two flight capsules considered herein. The relevant physical characteristics of these two capsules are summarized herein for ready reference.

### 1.0 MANUAL BURDEN CALCULATION

A manual calculation of the burden was performed for the probe/lander in Part I of the study, using the following approach:

1) All parts and components initially used in the assembly of the flight capsule are identified with respect to surface area, material, and volume.

2) Based on what is known of the manufacturing techniques and materials used, an estimate is made of the burden on each of the parts and components, prior to the time that assembly of the parts into larger elements is started. This burden may take the form of internal burden (where it is within the material which makes up a part), occluded burden (where it is trapped between mating surfaces or enclosed in a container), or surface burden (where the burden is exposed to surface decontamination techniques).

3) A chart is developed which shows the sequence of assembly of all the parts and components into the completed system (see, for instance, Figure B-1).

4) At each point of the assembly where a distinct process takes place, the burden added as a function of the process is estimated. As this series of estimates continues, a final burden estimate is reached at the last step of assembly (where the capsule is sealed within its sterilization canister), which includes the initial burden which was on each part before the assembly process started, as well as that which was added during assembly.

Listed in Table B-1 are the assumptions used for the burden estimates for this case. In addition to these general assumptions, it has been assumed that the burden on the surfaces and interior of certain common parts are as shown in Table B-2, in order to simplify repetitive type calculations. These values are based on data obtained from experimentation, and are considered as the best data available at the time of the analysis for purposes of generating an over-all burden count.

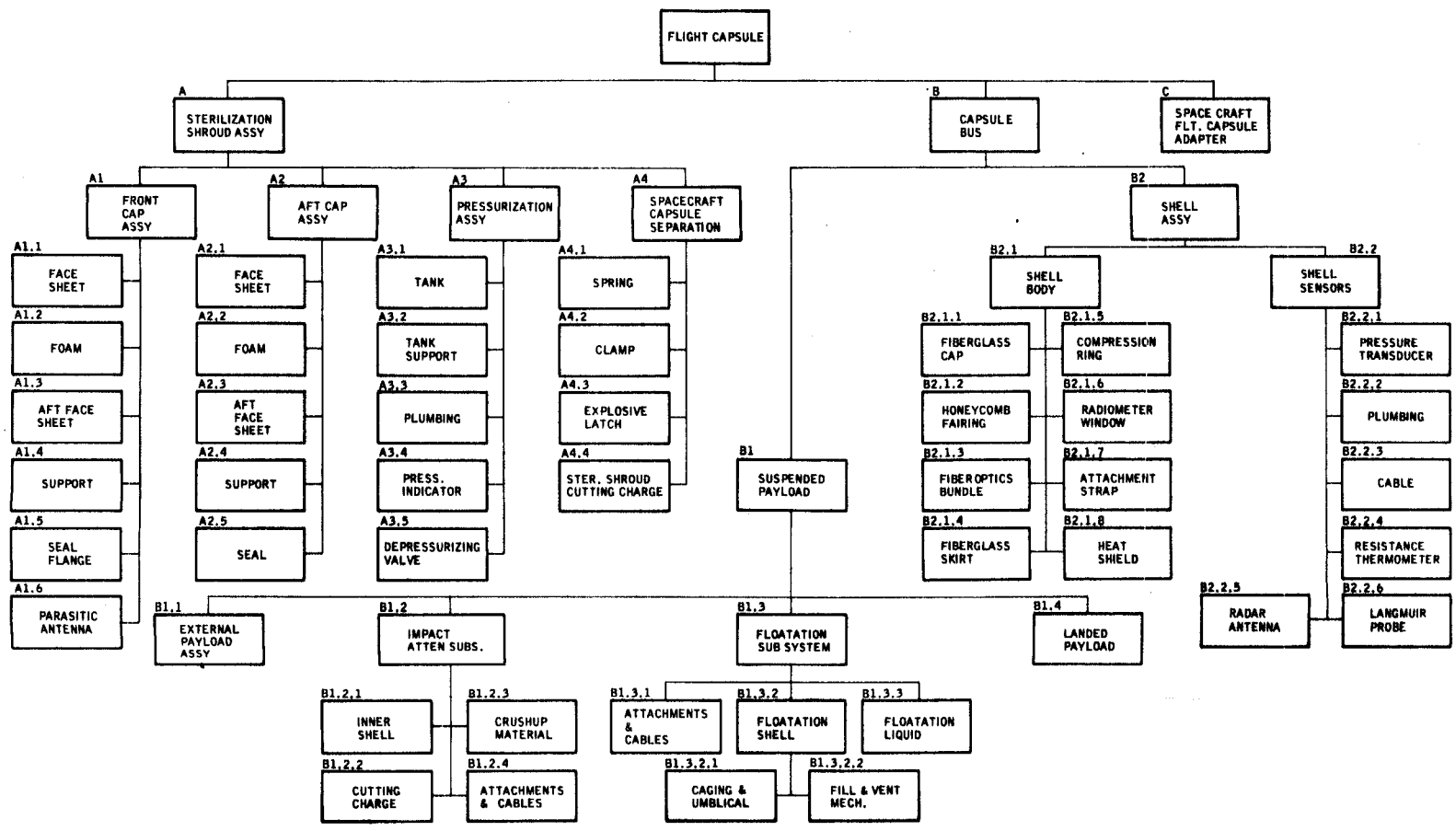


760039P

Figure B-1 PROBE/LANDER-ENTRY FROM APPROACH TRAJECTORY - BLOCK DIAGRAM

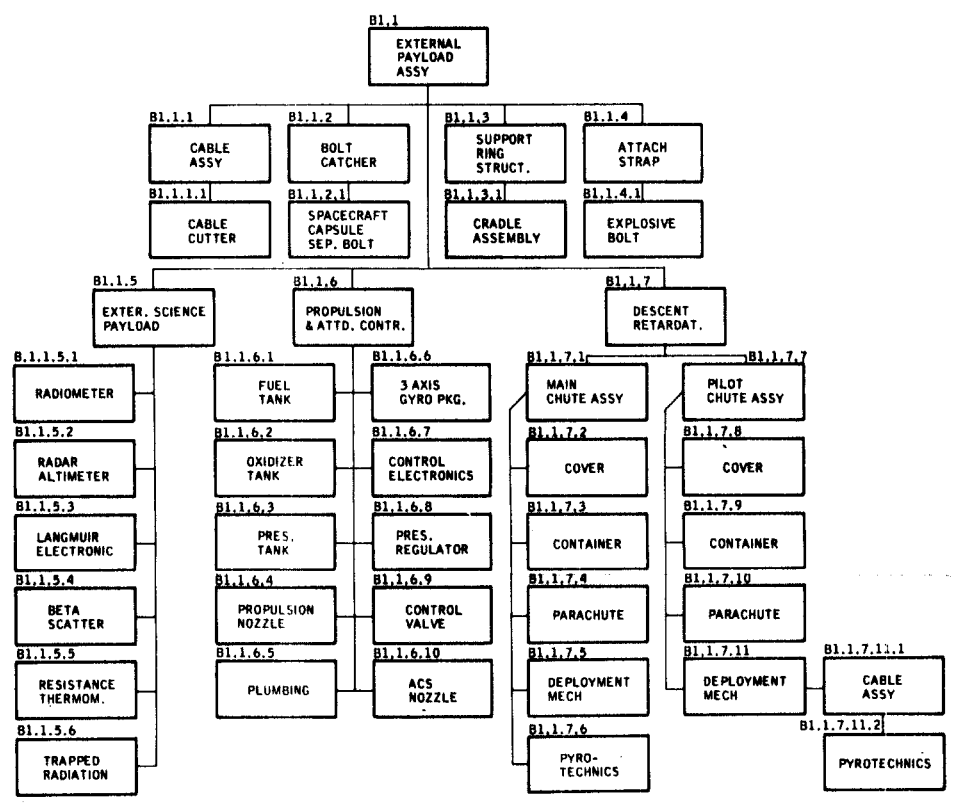


760041P

Figure B-1 (Cont'd)

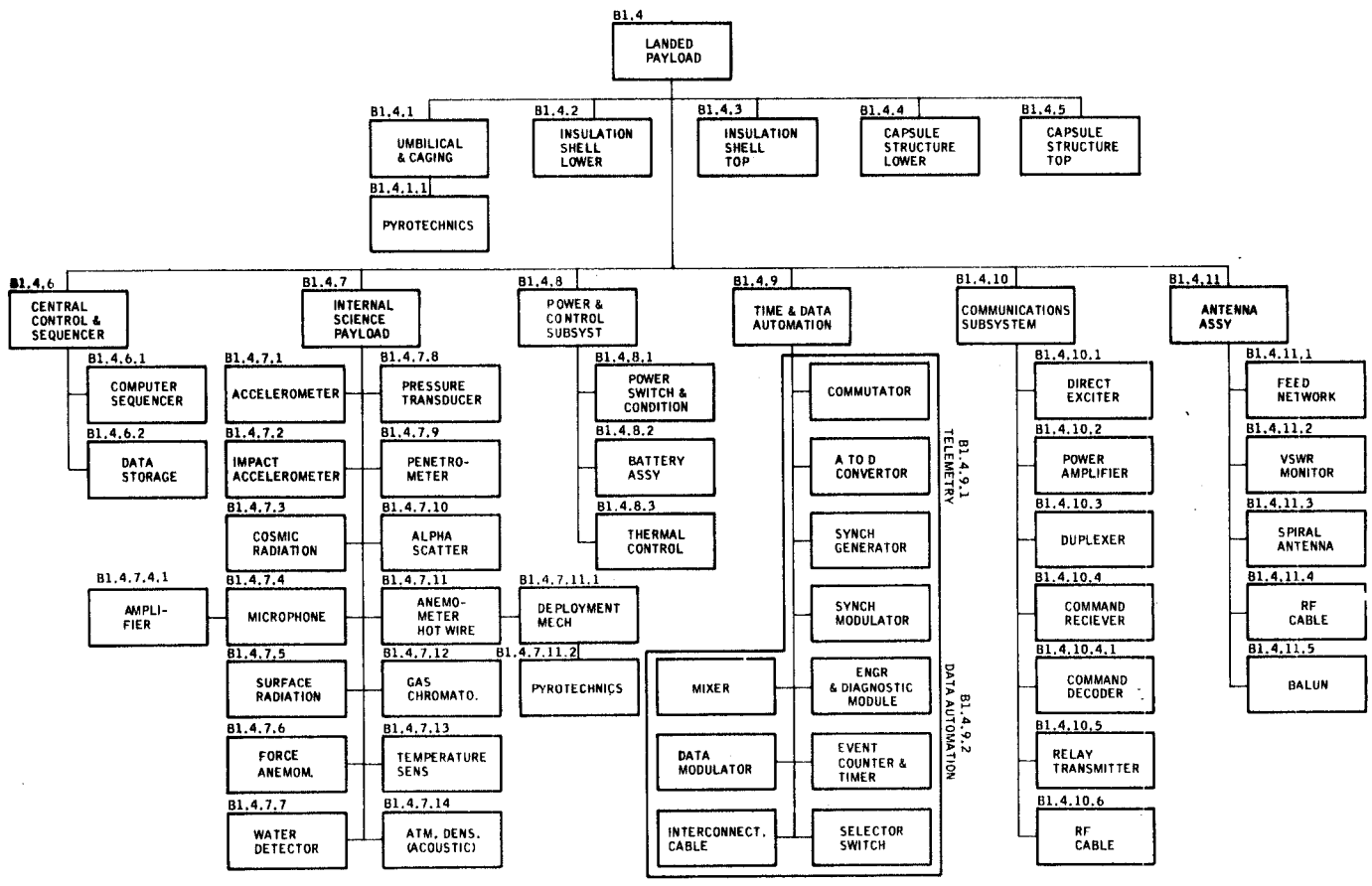


760040P

Figure B-1 (Concl'd)

B-2-1

B-2-2

## TABLE B-1

## ASSUMPTIONS FOR MANUAL BURDEN ESTIMATE

### I. Nonclean-Room Environment

1. The settling rate of microorganisms is 200 per square foot per hour during normal shop activity. (Table V of reference 1, Number of Microorganisms settling per square foot per hour in Test Area, indicates microbial fallout rate under several conditions, including general factory area. Total values of fallout here ranged from 81 to 478 organisms per square foot per hour, with lower values predominating. Estimated average values are the following (per/ft$^2$/hr):

| | |
|---|---|
| Bacteria | 150 |
| Molds | 10 |
| Anerobes | 25 |
| | 185 |

This total of 185 was rounded to a value of 200, and is the primary basis for this assumption.)

2. A part of the typical size of a capacitor, resistor, or diode will be considered to accumulate on its surface the amount of fallout incident on a square foot of work area. (This assumption was arbitrarily made as a means to simplify calculations of fallout on small parts; since most of these types of parts have small surface areas, it is considered a conservative assumption.)

3. Three hours are required to manufacture a part. (This assumption was made to provide an average number for convenient calculations without resorting to the generation of individual estimates for the many parts involved, which is not justified for the preliminary estimate objective.)

4. Parts with nonmetal exteriors will accumulate an additional burden because of the electrostatic properties of these materials. The surface burden added by electrostatic attraction will be considered 5 times that accumulated as fallout.

5. Handling, including manipulation and packaging, will add an additional 20 percent to the total because of fallout and electrostatic attraction. (Recognizing that handling of in-process equipment would add to the burden, and in the absence of any test data, a 20 percent judgment factor was established arbitrarily.

6. Die-off of the accumulated surface burden is 90 percent of the total accumulated as fallout, electrostatic attraction, and in handling.[1], [17] (Table VI of reference 17 indicates very low levels of microbial contamination on items selected from an industrial manufacturing area, in which fallout is expected to be as assumed in assumption 2, above. Table VI of reference 1 indicates microbial contamination on stainless steel exposed to air in a factory during a 52 week period. These levels average about 6000 microorganisms per square foot in spite of fallout during the same year in the same area of about 200 microorganisms per square foot per hour. If no die-off had occurred during this time, microbial accumulation would have been on the order of $1.7 \times 10^6$/ft$^2$/yr; Since only about 6000 were observed, it becomes obvious that only a small percentage survived. Recognizing that manufacturing and assembly periods are of long durations, a conservative survival factor of 10 percent was assumed.)

### II. Clean-Room Environment

1. Components are made under normal factory conditions and are considered to be sealed units containing the accumulated surface burden on all internal parts.

2. Components are surface-decontaminated to zero external surface burden before entering the Clean-Room.

3. Air velocity in the Class 100 Clean-Room will be 100 linear ft/min.

4. Air Flow over the surfaces of parts, components, etc., is assumed to be 100 ft$^3$/min/ft$^2$.

5. Suspended payload takes place in a Class 100 Clean Room.[18]

6. Assume 1 spore/ft.$^2$ of ambient clean-room air. (It is understood in tests performed at JPL under Class 100 conditions, no organisms were recovered. In the belief that some inefficiencies in filtration system will exist, one spore will be assumed to be present in each cubic foot of ambient Clean-Room air. No contamination from working personnel is expected because of gowning and other precautions, and because of the prevailing high-velocity air conditions.)

7. Handling and die-off factors are assumed to be zero. (This assumption is based on the fact that personnel are protected to the extent that they do not contribute to the burden, and die-off is considered zero since the only burden assumed in the Clean Room are spores, which do not readily die in a nonhostile environment.)

8. Parts, components, etc., collect 0.1 to 1 percent of the spores that impinge on each square foot of surface. (Because the air flow rates in the room are high, and since only a very small portion of the air in a given cubic foot actually contacts the surface of a hardware item in the room, it is arbitrarily assumed that only 0.1 to 1 percent of the atmospheric burden actually adhere to the working surface.)

9. Because of the significant air flow, the electrostatic factor is included in the fallout factor. (The electrostatic forces of attraction are small compared to the force of the moving air. Therefore, this effect is disregarded in the Clean Room.)

10. All components are considered to have a minimum of a square foot of surface area. (This is a simplifying, conservative estimate.)

## TABLE B-2

### PROBE/LANDER--ENTRY FROM APPROACH TRAJECTORY--PART AND MATERIAL BURDEN RANGES

| Item | Estimated Internal Burden Range | Estimated Surface Burden Range |
|---|---|---|
| Balsa wood | 1 to 10/in$^3$ | 100 to 1000/ft$^2$ |
| Battery cell | 0 | 800 to 3600 |
| Capacitor | 10 to 100 | 100 to 450 |
| Coaxial cable | 0 to 100/ft | 450/in |
| Connector | 100 to 10,000 | 200 to 900 |
| Crystal | 0 to 10 | 100 to 450 |
| Diode | 0 | 100 to 450 |
| Duplexer | 0 | 500 to 2250 |
| Evacuating bellows | 0 | 1 to 10 |
| Explosive | 10/in.$^3$ | -- |
| Explosive Trains | 0 to 200/ft | 900/in |
| Fiberglass | 0 | 500 to 5000/ft$^2$ |
| Foam | 1/ml | 500 to 5000/ft$^2$ |
| G-M tube | 0 | 100 to 450 |
| Inductor | 1000 to 10,000 | 100 to 450 |
| Magnetic core | 0 | 0 to 1 |
| Magnetron | 0 to 10 | 500 to 2250 |
| Metal | 0 | 100 to 1000/ft$^2$ |
| Nylon, Dacron | 0 | 500 to 5000/ft$^2$ |
| Optical system | 10 to 100 | 100 to 450 |
| PbS detector | 0 | 10 to 100 |
| Photomultube | 0 | 100 to 450 |
| Relay | 100 to 1000 | 100 to 450 |
| Resistor | 0 to 10 | 100 to 450 |
| Silicone Integ. Circuit | 0 to 10 | 100 to 450 |
| Silicone oil | 1/ml | -- |
| Silicone rubber | 0 | 500 to 5000/ft$^2$ |
| Teflon insulation | 0 | 10 to 100/in |
| Thermal control | 0 | 1000 to 10,000 |
| Transformer | 10,000 to 100,000 | 400 to 1800 |
| Transistor | 0 | 100 to 450 |
| TWT | 0 | 500 to 2250 |

The initial burden estimates of parts before they are assembled, and of components which are completed before being assembled as part of the capsule (such as black boxes, for example,) are then generated using the estimates of part and component makeup. These burdens are used as the values of initial burden prior to the start of assembly into major flight capsule modules. With the exception of the assembly of the suspended payload, all assembly operations are assumed to be carried on under normal factory conditions. The suspended payload, however, is assembled in a Class 100 Clean Room, following a surface sterilization of all unassembled elements.

A specific example is carried through below to illustrate how the calculations of initial burden and burden added during assembly are carried out. The item considered is the radiometer, code B1.1.5.1 in Figure B-1. Figure B-2 identifies the makeup of the basic unit, including the identification and numbers of constituent parts. The total internal surface area, internal burden and internal surface burdens are calculated from this information. Figure B-3 indicates the burden added to the radiometer as it is assembled in a normal assembly environment. Each line of the form, except for lines J, L and N, indicates the calculation used to arrive at the value indicated on that line; for line J, the surface burden value in the right column of Figure B-2 is used, - for line L the internal burden value is used, and the value for line N is calculated by factoring the total surface burden (line K) as a function of the occluded area (line M/line A).

In this example the assembled radiometer has the following burden:

| | | |
|---|---|---|
| Internal | 12,220 to 122,760 | (line L) |
| Occluded | 11,250 to 49,204 | (line N + line P) |
| Surface | 50 to 169 | (Line R) |

When the radiometer is introduced into the Class 100 Clean Room to be assembled onto the external science payload its surface is sterilized, but its internal and occluded burdens become contributors to lines H and K of Figure B-4, respectively. This form is used to calculate the burden added during Clean Room assembly (not only for the radiometer, but all the other external payload elements as well). The completed external science payload burden is the following:

| | | |
|---|---|---|
| Internal | 156,810 to 1,570,820 | (line I) |
| Occluded | 54,677 to 239,217 | (line L) |
| Surface | 53 to 530 | (line D) |

| Part | No. | Area in.$^2$ | Total Area in.$^2$ | Internal Burden Range | | Surface Burden Range | |
|---|---|---|---|---|---|---|---|
| | | | | Each Part | Total Parts | Each Part | Total Parts |
| Resistor* | 56 | 1.0 | 56 | 0-10 | 0-560 | 100 - 450 | 5600 - 25,200 |
| Capacitor* | 12 | 1.0 | 12 | 10-100 | 120-1200 | 100 - 450 | 1200 - 5400 |
| Diode* | 6 | 0.5 | 3 | 0 | 0 | 100 - 450 | 600 - 2700 |
| Transistor* | 26 | 0.5 | 13 | 0 | 0 | 100 - 450 | 2600 - 11,700 |
| Relay | | 6.0 | | 100-1000 | | 100 - 450 | |
| Crystal | | 0.5 | | 0-10 | | 100 - 450 | |
| Sil. Int. Cct.* | | 20 | | 0-10 | | 100 - 450 | |
| Inductor | 2 | 1.0 | 2 | 1000-10,000 | 2,000-20,000 | 100 - 450 | 200 - 900 |
| Transformer | 1 | 100 | 100 | 10,000-100,000 | 10,000-100,000 | 400 - 1800 | 400 - 1800 |
| TWT | | 40 | | 0 | | 500 - 2250 | |
| Magnetron | | 30 | | 0-10 | | 500 - 2250 | |
| Duplexer | | 35 | | 0 | | 500 - 2250 | |
| Battery Cell* | | 325 | | 0 | | 800 - 3600 | |
| Sig/Pwr Cntr.* | 1 | 10 | 10 | 100-1000 | 100-1000 | 200 - 900 | 200 - 900 |
| Magnetic Core | | 0.01 | | 0 | | 0 - 1 | |
| Coaxial Cable | | | | 0-100/ft. | | 450/in | |
| Metal | 1 | | 44 | 0 | 0 | 100 - 100/ft$^2$ | 30 - 300 |
| Pbs Detector | 1 | | | | | | |
| Total | | | 240 | | 12,220-122,760 | | 10,830 - 48,900 |

Total area of electrostatic (*) Parts 94

Figure B-2 PROBE/LANDER-ENTRY FROM APPROACH TRAJECTORY - PART AREAS AND BURDEN

Code: B1.1.5.1 Reference: Figure B-1

Component: Radiometer Mating Code: B1.1.5

| | | | |
|---|---|---|---|
| A. | Total Surface Area of Parts ($in^2$) | : | 240 |
| B. | Assembly Time (hr.) | : | 4 |
| C. | Fallout During Assembly ($200/ft^2/hr.$) (200) (A/144) (B) | : | 1,328 |
| D. | Total Surface Area of Electrostatic Parts ($in^2$) | : | 94 |
| E. | Fallout of Electrostatic Parts (D/A) (C) | : | 518 |
| F. | Burden Added in Electrostatic Attraction (E) (5) | : | 2,590 |
| G. | Burden Added in Handling (C + F) (0.20) | : | 784 |
| H. | Subtotal Burden (C + F + G) | : | 4,702 |
| I. | Viable Added Burden Assuming Die-off (H) (0.1) | : | 470 |
| J. | Total Initial Surface Burden Range of Parts | : | 10,830 - 48,900 |
| K. | Total Surface Burden Range of Completed Component I + J | : | 11,300 - 49,370 |
| L. | Total Internal Burden Range of Parts | : | 12,220 - 122,760 |
| M. | Total Occluded Surface Area Within Black Box ($in^2$) | : | 218 |
| N. | Total Occluded Surface Burden Range | : | 11,242 - 49,177 |
| O. | Total Mating Surface Area ($in^2$) | : | 3 |
| P. | Total Mating Surface Burden Range (0/144) (range 100-1000) | : | 2 - 21 |
| Q. | Total Exposed Surface Area ($in^2$) A - (M + O) | : | 19 |
| R. | Total Exposed Surface Burden Range (Q/144) (range 100 - 1000) | : | 13 - 132 |
| S. | Total Component Burden K + L | : | 23,520 - 172,130 |

Figure B-3 PROBE/LANDER-ENTRY FROM APPROACH TRAJECTORY-FACTORY AREA ASSEMBLY CALCULATION

Code: B1.1.5
Component: Exter. Science Payload — Mating Code B1.1

| | | | |
|---|---|---|---|
| A. | Exposed Black Box Surface Area ($in^2$) | : | 306 |
| B. | Residence Time in Clean Room (hr) | : | 4 hours |
| C. | Exposed Surface Burden of Assembly Entering Clean Room | : | 0 |
| D. | Accumulated Surface Burden Range 50-500/$ft^2$/ 8-hr. day (range 50-500) (A/144) (B/8) | : | 53 - 530 |
| E. | Mating Surface Area ($in^2$) | : | 55 |
| F. | Mating Surface Burden Range (E/A) (D) | : | 9 - 95 |
| G. | Internal Burden Range Exclusive of Mating Items | : | 0 |
| H. | Total Internal Burden Range of Mating Items | : | 156,910 - 1,570,820 |
| I. | Total Internal Burden Range at this Level of Assembly G + H | : | 156,810 - 1,570,820 |
| J. | Occluded Burden Range Exclusive of Mating Items | : | 0 |
| K. | Total Occluded Burden Range of Mating Items | : | 54,677 - 239,217 |
| L. | Total Occluded Burden Range at this Level of Assembly J + K | : | 54,677 - 239,217 |
| M. | Total Burden at this Level of Assembly D+I+L | : | 211,640 - 1,810,564 |

Figure B-4 PROBE/LANDER-ENTRY FROM APPROACH TRAJECTORY - CLASS 100 CLEAN-ROOM ASSEMBLY CALCULATIONS

Each element of the entire capsule is considered in the above manner, taking into account the burden initially on the elements before they are assembled, as well as that added during their assembly.

## 2.0 COMPUTER PROGRAM FOR BURDEN CALCULATIONS

The computer program used for burden calculations operates in essentially the same manner as the manual calculation. Burden contributors are identified, the capsule system and assembly processes are defined, and burden calculations are made on the basis of the assembly operation, as affected by the burden contributors. There are, however, some differences in technique between the manual and computer methods which are the results of lessons learned in using the manual approach.

The manual approach used an indentured components list to define the assembly flow sequence,and while this chart shows generally the sequence in which the constituent elements are assembled, it does not specifically identify each assembly process, as does an assembly flow chart of the type shown in Figure B-5. Basing the computer program on the more specific chart assures that each operation is taken into account in the correct sequence.

The other significant difference between the manual and computer estimates is the manner in which the handling of parts and components is taken into account. In the manual calculations the burden added by handling was taken as a constant 20 percent of the burden accumulated by fallout. For the computer program each assembly process is analyzed separately to determine handling requirements for both physical assembly and for such quality-control testing as is carried on during assembly. This handling is measured in terms of the number of times a part or assembly is handled or touched, and the estimated number of square inches of contact which occur during each handling.

The general sequence of calculations of the program is shown in Figure 9 of the main body. The basic information for each part and assembly process (part areas and volumes, time of exposure, expected handling, etc., as detailed in the following ) represents the input. The program is designed to cycle completely for each assembly process, during which new parts may be added, or two or more assemblies may be put together without the addition of new parts. During each cycle, both burden contributors (such as fallout and handling) and decontaminating factors (such as die-off, ETO application and heat application) are calculated. At each assembly point a calculation is made of the number of biological assays that are required to ascertain that the burden is less than a predetermined maximum limit.

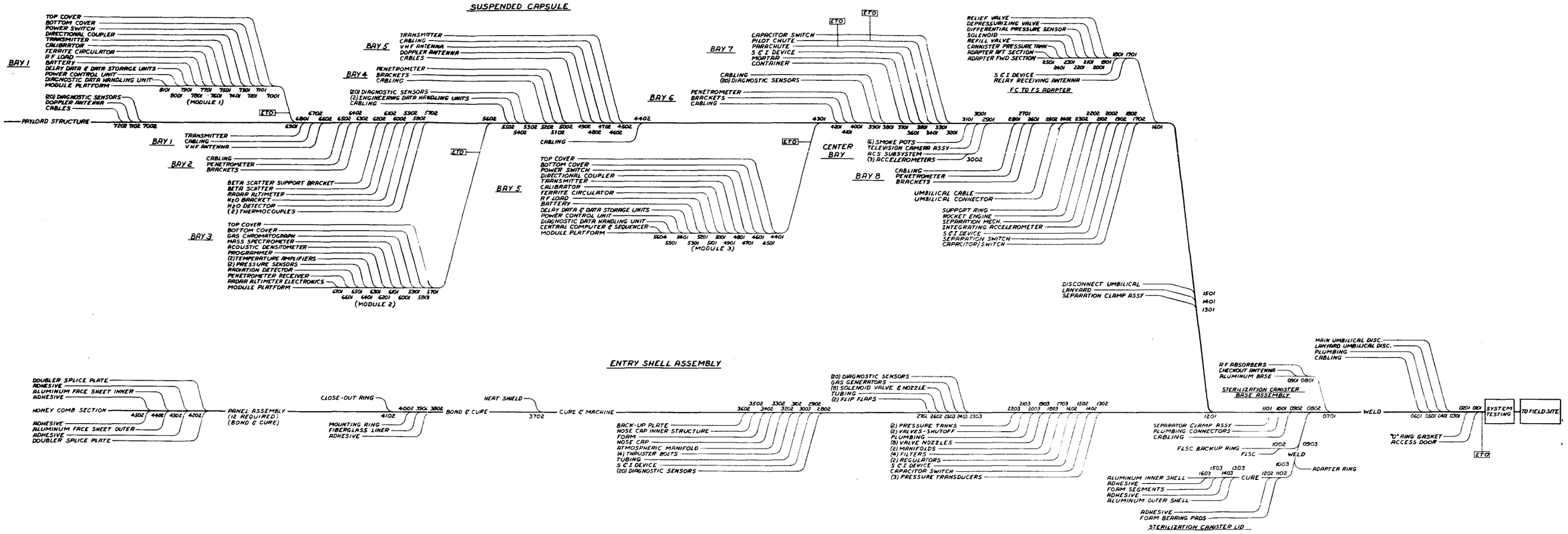


Figure B-5 PROBE-ENTRY FROM ORBIT - ASSEMBLY FLOW CHART

## 2.1 Program Input

Table B-3 indicates the inputs which are required to operate the computer program in conjunction with an assembly flow chart. There are five general types of inputs to the computer program. Part/Component inputs are required for each such element shown as a new addition in the assembly plan; in addition, where these elements are electronic components, such as resistors, diodes, etc., a separate card (as shown in the second column) is required for each type of part in the component. For any given run, the data in the third and fourth columns identify the parameters which characterize the basic assembly approach and are to be fixed for that run; these values are then used the same way at each point in the assembly process. The fifth column contains information used in the calculation of the required numbers of assays at each assembly point.

In the Part/Component column an input is required for each of two or more elements being joined at any one assembly process. If a new part is being added, for example, each of the inputs shown in Table B-4 is required for both the new part and the existing assembly to which the part is being added, with some exceptions as noted. In the event that two existing assemblies are being put together and no new parts are being added, the inputs are still required in order to identify the assembly process and to define the burden being added during the particular operation.

In the Electronic Part Input/Part column, the level, control point, and part number associated with electronic parts are defined, in the same manner as described in the preceding paragraph and Table B-4. Where the element being assembled happens to be an electronic component, the computer program has the capability of taking into account the various types of parts (such as resistors, diodes and so forth) which go to make up the electronic component. In substance, the program identifies the numbers and types of such parts from the component definition and takes into account the burden contribution of each. Thus, for each electronic component a separate card is prepared for each type of part. The required inputs are indicated in Table B-5.

In the Constants for Given Run column information is introduced which characterizes the basic assembly approach, and is therefore constant for any given run. This information is defined in Table B-6.

The information required in the columns Assay Requirements and General Inputs pertains to the number of assays required to achieve a desired confidence level that the burden, as assayed, does not exceed, a given control value. This information is described in Table B-7.

## TABLE B-3

## COMPUTER PROGRAM INPUTS

| (1) Part/Component Inputs | (2) Electronic Part Input/Part | (3) Constants for Given Run | (4) Assay Requirements | (5) General Inputs |
|---|---|---|---|---|
| Level<br>Control point<br>Part number<br>Facility code<br>Percent plastic<br>Initial surface area<br>Initial occluded area<br>Initial volume<br>Assembly mated area<br>No. personal contacts<br>Area contacted<br>ETO "D" value<br>Heat "D" value<br>Assay technique | Level<br>Control point<br>Part number<br>Facility code<br>Part area<br>No. parts<br>Internal burden<br>Percent plastic | Subroutines:<br>Black box<br>Assay<br>Die-off<br>ETO use<br>Heat application<br>Die-Off rate<br>Heat subroutine:<br>Growth rate<br>Death rate<br>ETO subroutine:<br>Growth rate<br>Death rate<br>Initial burden levels<br>Metal, surface<br>Metal, occluded<br>Plastic, surface<br>Plastic, occluded<br>Plastic, internal<br>Electrostatic factor<br>Personnel contamination rate<br>Fallout rate<br>Duration exposed factor<br>Master facility code | No. of assay types<br>Upper burden limit<br>Confidence level code<br>Assay accuracy for subassemblies<br>Confidence level required | Table of assay types and accuracies<br>Table of "t" Distribution values for different confidence levels |

TABLE B-4

INPUTS FOR PARTS AND COMPONENTS

Level

On the assembly flow chart, each distinct assembly process is identified in three ways; level, control point and part number (See Figure B-6). The level of assembly decreases by one each time a process takes place. The input to the program simply requires a one or two digit number for the process involved.

Control Point

A second set of two digits is used to distinguish between two or more assembly operations which happen to have the same level in the assembly flow chart. In Figure B-6, for example, there are two separate assembly operations for levels 03 and 02.

Part Number

A one or two digit part number is used to distinguish between the elements being assembled at a given assembly point. In the case of an existing assembly the number is always one digit, and for new elements it is always two digits.

Facility Code

This input identifies the type of facility in which any assembly process is performed. For any given run, a general value for biological fallout rate is used to define the normal, or uncontrolled environment. The facility code, imprinted on a process-by-process basis, serves to identify whether or not the process is being done in a Clean Room and, if so, how clean the room is. A one-digit number indicates the relative cleanliness of the room compared with normal, e.g., "2" indicates a room which is cleaner by two orders of magnitude than normal.

Percent Plastic

In order to define the effect of electrostatic attraction on the total fall-out, it is necessary to know how much, if any, nonmetals are exposed on the surfaces of elements. The input is in percent, from 0 to 100.

Initial Surface Area

This input identifies the total surface area as received into final assembly for each element added to the capsule.

Initial Occluded Area

Although many elements in this category are simply metallic structures and brackets, many others are nonelectronic functioning parts, such as pyrotechnic devices, cable harnesses, and switches. For these elements, which are received in an assembled state, this input indicates the amount of occluded surface area contained in the component.

Initial Volume

For those elements composed wholly or partly of nonmetals, this volume input allows calculation of internal burden, based on the burden per unit volume used for that material.

Assembly Mated Area

At any given assembly point where two or more elements are being joined, such as the case where a new element is being added, or two or more existing subassemblies are being put together, it is necessary to know how much mutual area will be mated in the assembly process, trapping some biological burden which is then no longer accessible to ETO decontamination. This input identifies the area which is mated during assembly, and is inputted as the same value for all elements being assembled at any given level and control point.

Number of Personal Contacts

During each assembly process the elements being assembled are handled by the personnel performing the assembly. For this input an estimate must be made based on the size and configuration of the elements being assembled, of the number of times that they would be handled by the assembling personnel in order to accomplish the basic assembly, and the number of testing and checkout processes which may be carried on at that assembly point. The information to be inputted here is a number which indicates the estimated number of times that a human hand actually touches either the element being added or the assembly to which it is being added.

Area Contacted

This input is made in conjunction with the preceding one and represents a term for the average number of square inches contacted each time a contact is made. For small parts, the area contacted is usually very small, at the most one or two square inches. For large elements, such as the basic structure and heat shield, on the other hand, contact may be made simultaneously by more than one person and over a contact area of several square inches per hand. (These two inputs together, number of personal contacts and area contacted, serve to identify the total surface of any element which is contacted during an assembly process; they are then used to calculate the burden deposited on the vehicle by human contact, using in addition the personnel contamination rate discussed in Table B-6).

ETO "D" Value

In the event that ETO is to be used as a surface decontaminant at any particular assembly level and control point, it is necessary to know the expected effect of the ETO on the biological burden, which is a function of the duration of the exposure, concentration of the ETO, etc. This effectiveness is defined by the number of decades (orders of magnitude) by which the burden is reduced. Thus a "D" value of three means that the burden of viable organisms on exposed surfaces is reduced to 0.001 (i.e., 0.1 percent) of the initial one. This implies that 99.9 percent of all viable organisms were killed (assuming an initial population sufficiently large for this statement to be meaningful).

Heat "D" Value

The definition of "D" value for this input is the same as that for ETO decontamination. If an element is subjected to a flight-acceptance cycle with a kill capability of 12D, this means that the burden in and on the element being heated is reduced by 12 decades.

Assay Technique

It is necessary to identify for each part or component the assay technique which would be used on that type of element to determine the biological burden. The surface of metal, for instance, would probably be assayed by swabbing, whereas the interior of a plastic element would be assayed by drilling or fracturing, etc. The input required for the program at this point is a code number which identifies the assay technique against a table of assay types and accuracies which are discussed in Table B-7.

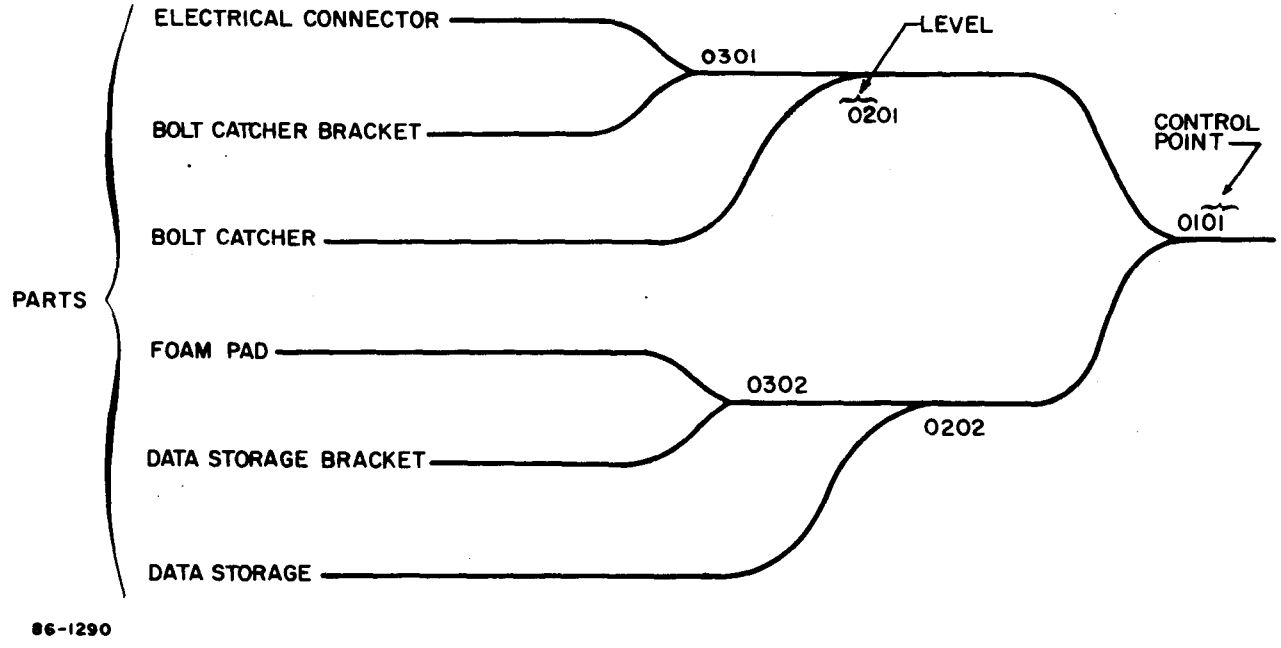


Figure B-6 PROBE-ENTRY FROM ORBIT-LEVEL, AND CONTROL POINT DEFINITION

## TABLE B-5

### INPUTS FOR ELECTRONIC PARTS

Facility Code

A facility code input is established for each electronic part card in the same manner as for each nonelectronic part in order to identify the quality of the facility in which an electronic component is assembled.

Part Area

This input identifies the external surface area of the type of electronic parts to which the particular card pertains. For example, if this card were used for resistors, the part area inputted would be the area on a typical resistor.

Number of Parts

This input identifies the number of parts of a given type used in a given electronic component. For example, if 500,000 memory cores are utilized in a data storage unit, the input pertaining to memory cores would be 500,000.

Internal Burden

A great many electronic parts are internally sterile because of the heat processes used during their manufacture, or because of a prolonged burn-in process which may be required before a part can be considered acceptable. For other types of electronic parts, however, such as transformers, the internal burden may reach very high levels. In the input card for such parts this input identifies the average internal burden for that type of part.

Percent Plastic

In order to incorporate the effects of electrostatic attraction, it is necessary to identify whether or not certain types of electronic parts have surfaces consisting entirely, or in part, of plastics. Therefore, the percentage of the surface of the given electronic part which is plastic is identified in this input.

## TABLE B-6

### PARAMETERS DEFINING THE BASIC ASSEMBLY APPROACH

Subroutine

The program has five basic subroutines. Each of these subroutines can be exercised by inserting on the constant card a "1" in place of a blank. The I will indicate that the subroutine is to be used as the program is run and will therefore take into account all input information which relates to the particular sub-routine as the program is run.

Die-Off Rate

For any given run a die-off rate is considered to apply. Typical values used here range from 30 to 99 percent, and in the program are considered to apply only to that biological burden which has been added as a function of fallout and handling during final assembly, but not to burdens assumed to be on the elements initially (prior to final assembly), since those burdens are by definition assumed to be the survivors of higher burdens resulting from exposure and die off in storage prior to final assembly.

Heat Subroutine

Where heat is being applied during final assembly either as a flight-acceptance cycle, or a cure cycle, or for some other reason which may involve using lower heat values, the program takes it into account through specified growth rates or death rates for microorganisms. In each, the input identifies the percentage of burden increase or decrease. Thus, for a 1D value of heat, the death rate input is 90 percent and the growth rate input is 0.

ETO Subroutine

The mechanics of this subroutine are the same as for the heat, and can be used to add or subtract microorganisms. Again, for an ETO application of 1D the death rate input would be 90 percent, and the growth rate, zero.

Initial Burden Levels

This part of a constant card for a given run requires five inputs; two for metal and three for plastic surfaces. For metal surfaces the inputs are: (1) burden per square inch of metal surface area, and (2) burden per square inch of metal surface area which is occluded prior to the start of final assembly. For example, if an explosive bolt were considered to have an occluded surface of 5 square inches, then the occluded burden in that part prior to final assembly would be 5 square inches times the occluded burden rate on metals. Input values for plastics are treated in the same manner, with the addition that an input is added for internal burden as well as surface and occluded burden. For all inputs of initial burden level the value is in terms of burden per square inch where surfaces are involved, and burden per cubic inch where plastic internal burden is involved.

Electrostatic Factor

For any given run an electrostatic factor from 1 to 99 may be specified. The program uses this input to multiply the surface burden on that portion of surface area of a part or element in final assembly which is plastic rather than metal.

Personnel Contamination Rate

This input takes into account the rate of biological contamination per square inch per contact by the personnel performing the final assembly. A value of 1900 organisms per square inch per contact has been used in this study (See paragraph 3.1.2).

Fallout Rate

For a given run a basic fallout rate is assumed to define the normal environment for final assembly activities in that run, and is here specified in terms of organisms per square inch per day. In conjunction with the facility code for any given assembly point (which identifies the quality of facility in which that particular assembly process is being carried out relative to the basic fallout rate, as well as the number of square inches and duration of the assembly process specified elsewhere), this basic fallout rate permits a calculation of burden accumulation because of fallout on any given part during any given point in the assembly process.

Duration Exposed Factor

To identify consistent exposure times during which assembly processes are carried out and subassemblies may be out on the floor in assembly areas, the "duration exposed" factor is an average factor which relates exposure time to assembly activity level. Thus, elements which are assembled early in the assembly process are exposed for longer periods of time than those which are assembled late in the process. By relating the highest level of assembly to the total number of days expected to be consumed in final assembly, it is possible to identify the average number of days per level (e.g., the total number of days of exposure of any element being introduced into the final assembly at a given level). The input required here is a 1 or 2 digit number defining this number of days.

Master Facility Code

If it is desired to vary the qualtiy of the facility in which final assembly takes place for a parametric study, the master facility code input can be used. The input required here is a 1 or 2 digit number identifying the quality of facility desired by specifying the number of decades by which the fallout rate is less than the basic fallout rate. Thus, the input 03 indicates that all assembly processes previously carried out in a normal area would now be carried out in a clean room with 0.001 of the fallout rate in the normal area (and all processes previously carried out in clean rooms would now be performed in higher-grade clean rooms with a fallout rate 0.001 of that in the other clean rooms).

## TABLE B-7

## PARAMETERS DEFINING ASSAY REQUIREMENTS

Number of Assay Types

The program is designed to handle as many as 40 different assay types with the accuracies of each stored in a table. The two-digit number introduced here is merely a control number identifying the number of different assay types which happen to be in the table during any particular run or set of runs.

Upper Burden Limit (Control Value)

The upper burden limit is stated in terms of the exponent of ten (to save space), and defines the burden limit against which calculated burdens are to be tested.

Confidence Level Code

This code identifies which level of confidence, of several stored in the machine, (see below) is to be used for a particular run.

Assay Accuracy for Subassemblies

Because in-process subassemblies are handled in a manner different from newly added elements internal to the program, this particular accuracy percentage is identified separately.

Confidence Level Required

For any given run in which the assay subroutine is used, it is necessary to identify the confidence level with which the estimated or assayed value is below the control value. This value, 99.99 percent, for instance, is identified in this input.

Table of Assay Types and Accuracies

A table such as the following one is stored in the memory, so that assays can be selected by code number, as described above.

| ASSAY TYPE | PERCENT ACCURACY | CODE |
|---|---|---|
| Swab | (See Table XVIII) | 1 |
| Rinse | (See Table XVIII) | 2 |
| Agitation | (See Table XVIII) | 3 |
| Immersion | (See Table XVIII) | 4 |
| Rodac | (See Table XVIII) | 5 |
| Filtration | (See Table XVIII) | 6 |
| Internal | (See Table XVIII) | 7 |
| Black boxes | (See Table XVIII) | 8 |

Table of "t" Values

In order to calculate the number of assays required, a table of Student's "t" values must be stored in the memory for each confidence level to be used, so that the proper calculation can be made.

## 2.2 Output Format

The values which are printed out following a computer run are indicated in Table B-8. For each assembly process the level, control point and part number are printed to allow identification against the final assembly flow chart used to develop the definition of assembly processes. The other entries are as follows:

The total burden is the combined burden of the elements which have been assembled at any given level and control point; it includes surface, occluded, mated and internal burden (each of which are separately printed out). The burden/part entry represents the total burden for each element at a given assembly point, printed out separately. In each case, the sum of the values in the column equals the total values discussed in the preceding paragraph. The external burden indicates the burden on exposed surfaces of the assembly, both before and after mating of the elements assembled at this point. The within burden is also printed out separately, in order to identify easily that burden which is not accessible to ETO. It consists of the occluded, mated and internal burden on the elements assembled at any given point. The internal burden indicates the burden within the substance of which nonmetallic elements are made. The occluded burden is that which in this particular step has been made inaccessible to ETO by enclosing it; such as in the case of a sealed electronic component. The mated burden is that which is trapped between mating surfaces; it is calculated as a function of the burden on surface prior to assembly and the amount of area mated after assembly.

The area/part entry defines the surface area of elements being added, and the values shown as being those of the exposed surface before mating. This information is included to aid in understanding the size of the surface area exposed at any given point in the assembly process. The total surface area is the surface area exposed on the assembly after being mated with another element or assembly.

The process added burden indicates the burden added at any assembly step as a function of fallout and handling, including the effects of electrostatic factor, and Clean-Rooms, if used.

The number of assays required/part is the number of assays which are required to demonstrate and assign burden to each type of element (transmitter, for example) used in the capsule (See Section 4.0). The code printed in the entry assay type required is defined as follows:

## TABLE B-8

## COMPUTER PROGRAM OUTPUT FORMAT

The following printed for each assembly process, involving either addition of new parts/components or joining of subassemblies

Level
Control point
Part number
Total burden
Burden/part
External burden
Within burden
Internal burden
Occluded burden
Mated burden
Area/part
Total surface area
Process added burden
Number of assays required/part
Assay type required

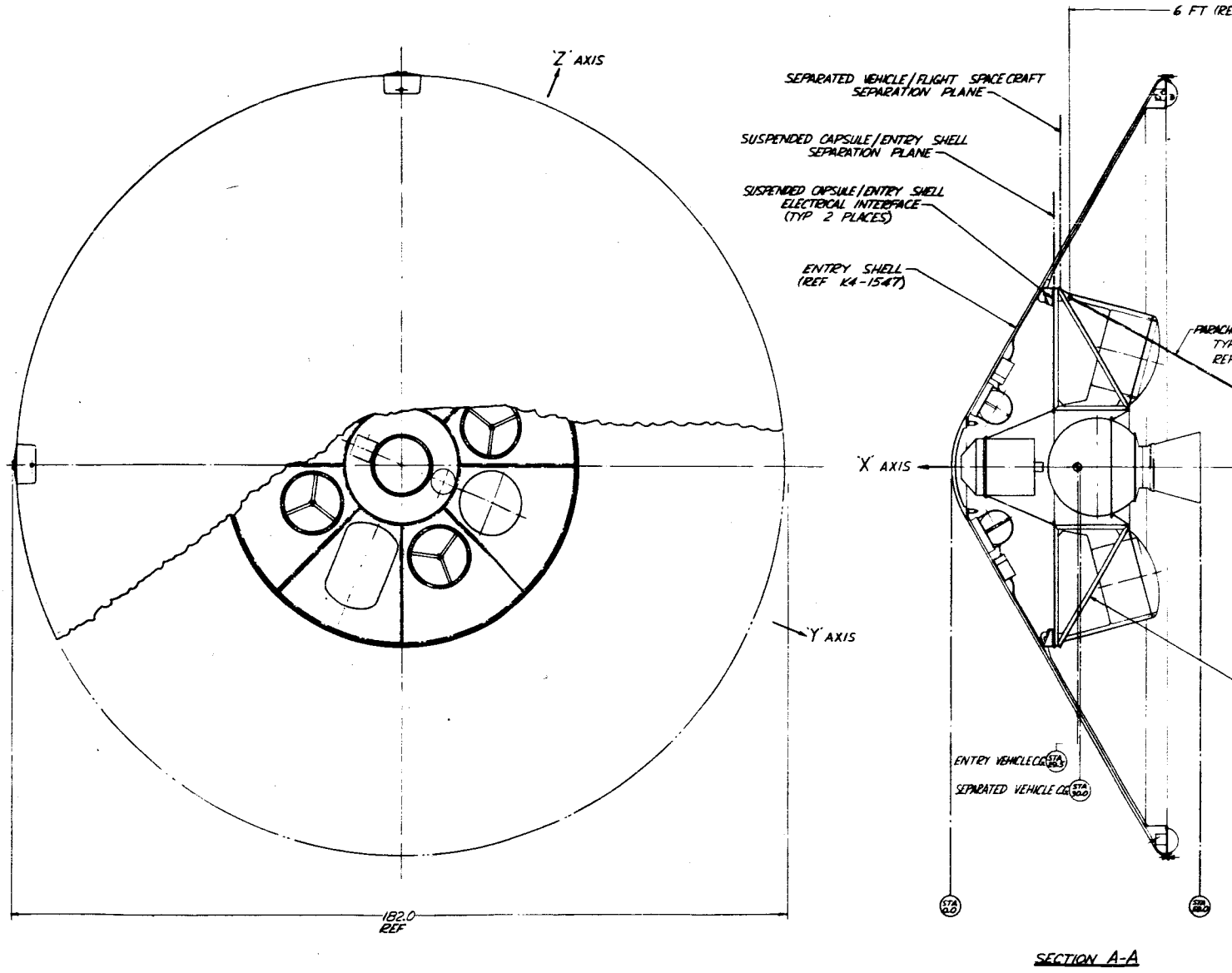


Figure B-7 PROBE-ENTRY F
ENTRY CO

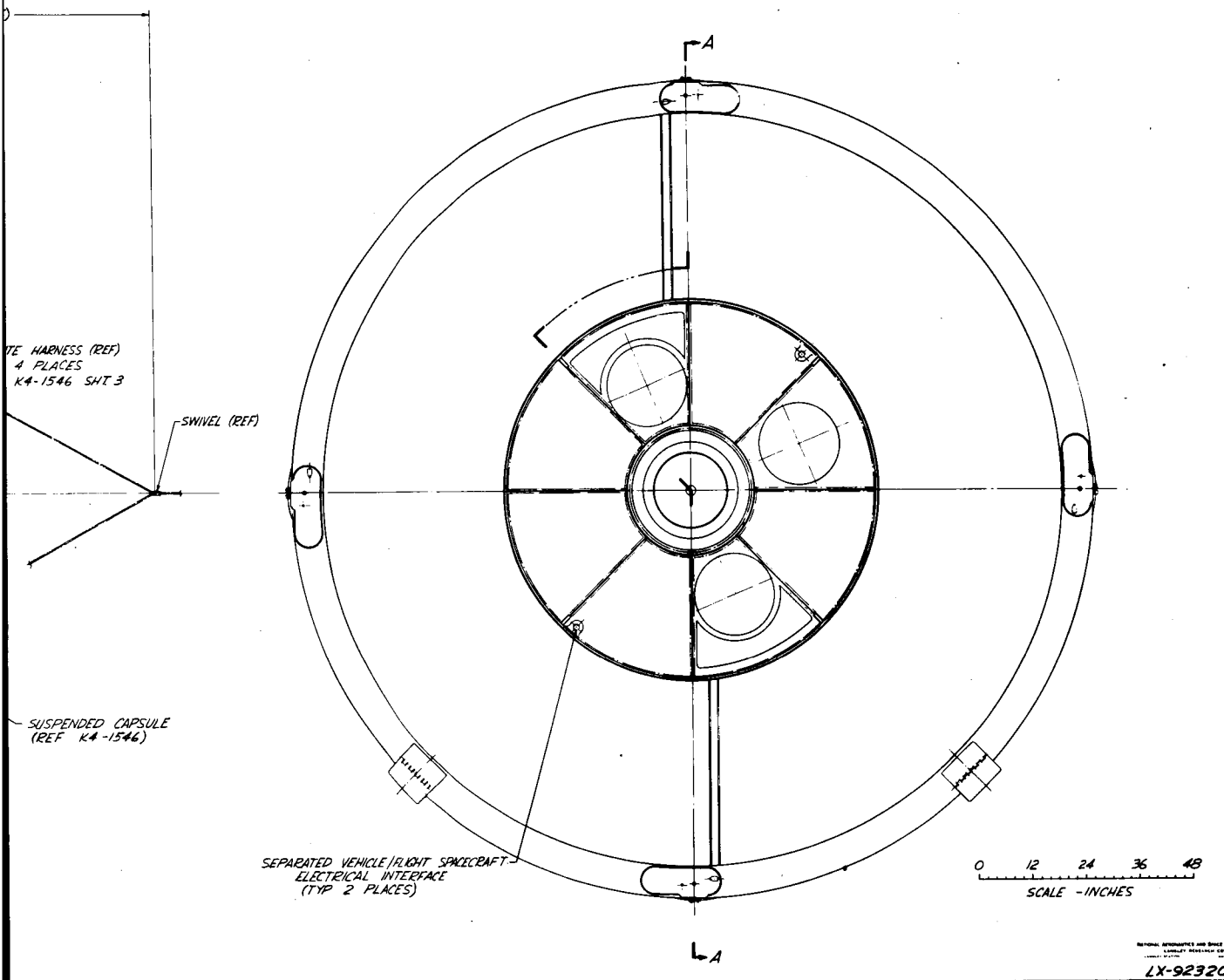


LX-923208

MARS PROBE
FLIGHT CAPSULE
ENTRY CONFIGURATION

04614

K4-1545

ROM ORBIT - FLIGHT CAPSULE
NFIGURATION

B-20-2

Table B-9. A parts list showing all major assemblies and components of the probe is shown in Table B-10; it indicates the quantities of each item in the probe, the total area of each item, and identified those areas that are occluded and mated. An electronic piece parts summary is shown in Table B-11.

The extensive engineering and scientific equipment, with the necessary power sources, is housed in a structure which provides mounting accommodations and serves to transmit loads experienced throughout the mission to the entry shell and the spacecraft adapter. It is attached through a mounting ring to the inner surface of a 15-foot diameter blunt entry shell which consists of an aluminum honeycomb structure with a Purple Blend heat shield applied to its exterior (front) surface. The payload attached to the entry shell mounting ring is encased by a sheet metal truncated afterbody coated with an ablative material. The probe is encapsulated in a canister which provides the necessary biological isolation during all mission events after thermal sterilization, until probe deployment.

## 3.2 Probe/Lander (Designed for Entry from the Approach Trajectory)

The probe/lander capsule is designed to measure Mars atmospheric properties during descent, and also to survive landing on the surface for a few days, during which time chemical and physical measurements are made of the surface and the atmosphere. An in-board profile of the capsule is shown in Figure B-8. Its weight before separation from the spacecraft which carries it to the vicinity of the planet is 2500 pounds, and it consists of over 165 major components made from more than 30,000 parts. It has a diameter of 15 feet and houses an 85 pound scientific payload. A weight summary of the capsule is given in Table B-12, and a detailed block diagram is shown in Figure B-1. ( The Alpha numeric identification codes shown correspond to reference points used in analyzing physical characteristics and assembly-activity information to identify a flow sequence for the assembly and, thus, to furnish the information for a biological burden analysis.) A detailed electronic parts count is given in Table B-13; Table B-14 defines the surface areas of these part types, and Table B-15 groups components by function and describes their physical characteristics.

The landed payload is protected by a shock-attenuation system to permit survival of the landing impact. The lenticular shape of the landed payload assures proper orientation for deployment of the scientific instrumentation and for communication. This payload structure is attached through a mounting ring to the inner surface of the 15-foot diameter blunt entry shell, which is constructed from a stainless steel honeycomb core with bonded beryllium face sheets. The heat shield (Purple Blend) is applied to the exterior (front) surface of the entry shell. A sheet-metal afterbody faced with ablative heat shield material encloses the payload and is

attached to the entry shell at its periphery. This entire assembly is encapsulated within a canister to provide biological isolation from external environments after terminal sterilization (i.e., through subsequent testing, mating, launch and space flight) to the time of sterilization-canister deployment.

All payload assembly operations are conducted in a Federal Standard 209 Class 100 Clean-Room. After ETO cleaning, components are brought into the area as required and incorporated into the assembly.

The final assembly of the flight capsule is conducted in conventional environmental conditions. The completed flight capsule is processed through an ETO cycle and then sterilized by the application of heat. A complete series of system tests is conducted to demonstrate system acceptability.

TABLE B-9

FLIGHT CAPSULE WEIGHT SUMMARY FOR PROBE (EFO CASE)

| | | | | |
|---|---|---|---|---|
| FLIGHT CAPSULE | 2967.0* | | | |
| FC/FS adapter | | 125.0 | | |
| Sterilization canister | | 383.4 | | |
| SEPARATED VEHICLE | | 2458.6 | | |
| ΔV propulsion | | | 400.0 | |
| ACS gas expelled | | | 1.0 | |
| TVC gas expelled | | | 17.6 | |
| ENTRY VEHICLE | | | 2040.0 | |
| Thermal protection | | | | 370.7 |
| Entry structure | | | | 343.0 |
| Thermal control | | | | 30.0 |
| ACS nozzles, tanks, etc. | | | | 36.0 |
| TVC nozzles, tanks, etc. | | | | 27.0 |
| Miscellaneous | | | | 208.3 |
| SUSPENDED CAPSULE | | | | 1025.0 |
| Instrumentation | | | | | 196.1 |
| Telecommunications | | | | | 111.8 |
| Altimeters, doppler | | | | | 54.4 |
| Power | | | | | 160.0 |
| Parachute | | | | | 84.0 |
| Support structure and thermal protection | | | | | 186.0 |
| Inertial reference system | | | | | 21.6 |
| Propulsion shell, hdwe., cables, etc. | | | | | 210.1 |

*All weights in pounds

B-23-1

TABLE B-10

COMPONENT PHYSICAL CHARACTERISTICS OF PROBE (EFO CASE)

| Title | Quantity | Area (~ in$^2$) | | | | Volume |
|---|---|---|---|---|---|---|
| PAYLOAD ASSEMBLY | | Total | Percent Plastic | Initial Occluded | Mated After Assembly | Non-Metallic Materials (~ in$^3$) |
| PAYLOAD STRUCTURE | | 32,500 | | 1000 | | |
| (BAY 1) | | | | | | |
| Module | | | | | | |
| Module platform | 1 | 1325 | | | | |
| Diagnostic data handling | 1 | 300 | | 300 | 50 | |
| Power control | 1 | 450 | | 450 | 75 | |
| Delay data and data storage | 1 | 500 | | 500 | 83 | |
| Battery | 1 | 600 | | 10,000 | 100 | |
| RF load | 1 | 200 | | 300 | 30 | |
| Ferrite circulator | 1 | 100 | | 300 | 15 | |
| Calibrator | 1 | 300 | | 500 | 50 | |
| Transmitter | 1 | 100 | | 100 | 15 | |
| Directional coupler | 1 | 10 | | 20 | 2 | |
| Power switch | 1 | 100 | | 200 | 15 | |
| Bottom cover | 1 | 1050 | | | 50 | |
| Top cover | 1 | 1200 | | | 50 | |
| Doppler radar antenna | 1 | 520 | | 520 | 100 | |
| Diagnostic sensors | 20 | 50 | | 50 | 20 | |
| Cabling | 1 | 1200 | 95 | 45,000 | 100 | 150* |
| VHF antenna | 1 | 750 | | 750 | 100 | |
| Transmitter | 1 | 200 | | 200 | 30 | |
| Cabling | 1 | 400 | 95 | 15,000 | 35 | 50* |
| (BAY 2) | | | | | | |
| Penetrometer | 1 | 1500 | | 4000 | 100 | 3000** |
| Bracket | 1 | 40 | | | 10 | |
| Cabling | 1 | 400 | | 15,000 | 35 | 50* |
| (BAY 3) | | | | | | |
| Beta scatter bracket | 1 | 20 | | | 5 | |
| Beta scatter | 1 | 25 | | 25 | 5 | |
| Radar altimeter | 1 | 300 | | 300 | 50 | |
| $H_2O$ bracket | 1 | 10 | | | 2 | |
| $H_2O$ detector | 1 | 20 | | 20 | 3 | |
| Thermocouples | 2 | 10 | | 30 | 2 | |
| Module 2 | | | | | | |
| Module platform | 1 | 1325 | | | | |
| Radar altimeter electronics | 1 | 150 | | 150 | 25 | |
| Penetrometer receiver | 1 | 150 | | 150 | 25 | |
| Radiation detector | 1 | 100 | | 100 | 15 | |
| Pressure sensor | 2 | 25 | | 75 | 5 | |
| Temperature amplifier | 2 | 50 | | 50 | 8 | |
| Programmer | 1 | 100 | | 100 | 15 | |
| Acoustic densometer | 1 | 100 | | 100 | 15 | |
| Mass spectrometer | 1 | 400 | | 400 | 60 | |
| Gas chromatograph | 1 | 400 | | 400 | 60 | |
| Bottom cover | 1 | 1050 | | | 50 | |
| Top cover | 1 | 1200 | | | 50 | |
| Engineering data handling | 2 | 400 | | 400 | 60 | |
| Diagnostic sensors | 20 | 50 | | 50 | 20 | |
| Cabling | 1 | 400 | 95 | 15,000 | 35 | 50* |
| (BAY 4) | | | | | | |
| (Same as bay 2) | | | | | | |
| (BAY 5) | | | | | | |
| (Same as bay 1) | | | | | | |
| Central computer and sequencer | 1 | 300 | | | 300 | |
| (BAY 6) | | | | | | |
| (Same as bay 2) | | | | | | |
| (BAY 7) | | | | | | |
| Diagnostic sensors | 20 | 50 | | 50 | 20 | |
| Cabling | 1 | 400 | 95 | 15,000 | 35 | 50* |
| Container | 1 | 7500 | | | 100 | |
| Mortar | 1 | 1300 | | | 600 | |
| S and I device | 1 | 150 | | 400 | 30 | |
| Parachute | 1 | 1500 | 100 | 2,300,000 | 1000 | 11,500 |
| Pilot chute | 1 | 700 | 100 | 360,000 | 400 | 3600 |
| Capacitor switch | 1 | 20 | | 120 | 5 | |
| (CENTER BAY) | | | | | | |
| Smoke bombs | 6 | 100 | | 600 | 15 | 1000 |
| TV camera assembly | 1 | 900 | | 1400 | 100 | |
| ***ACS electronics subsystem | 1 | 700 | | 700 | 10 | |
| 3-Axis accelerometers | 1 | 60 | | 60 | 10 | |

* Plastic

** Balsawood

*** Inertial reference system
Sentry gyro package
ACS electronics package
Pressure transducer

TABLE B-10 (Concl'd)

| Title | Quantity | Area ( ~ in$^2$) | | | | Volume |
|---|---|---|---|---|---|---|
| PAYLOAD ASSEMBLY | | Total | Percent Plastic | Initial Occluded | Mated After Assembly | Non-Metallic Material ( ~ in$^3$) |
| (BAY 8) | | | | | | |
| (Same as bay 2) | | | | | | |
| Support ring | 1 | 310 | | | 50 | |
| Rocket engine | 1 | 4000 | | 3500 | 100 | 12,000 |
| Separation mechanism | 1 | 200 | | 200 | 20 | 30* |
| Internal accelerometer | 1 | 40 | | 40 | 6 | |
| S and I device | 1 | 150 | | 400 | 30 | |
| Separation Switch | 1 | 10 | | 50 | 2 | |
| Capacitor/switch | 1 | 20 | | 120 | 4 | |
| Umbilical cable | 1 | 500 | 95 | 15,000 | 100 | 50* |
| Umbilical connection | 1 | 30 | | 75 | 5 | |
| ADAPTER ASSEMBLY | | | | | | |
| Adapter forward section | 1 | 30,000 | | | 450 | |
| Adapter aft section | 1 | 900 | | | 450 | |
| Canister pressure tank | 1 | 1500 | | 1500 | 50 | |
| Refill valve | 1 | 20 | | 20 | 5 | |
| Solenoid | 1 | 20 | | 20 | 5 | |
| Drift pressure sensor | 1 | 20 | | 40 | 5 | |
| Depressurization valve | 1 | 20 | | 30 | 5 | |
| Relief valve | 1 | 20 | | 20 | 5 | |
| S and I device | 1 | 150 | | 400 | 30 | |
| Relay receiving antenna | 1 | 1500 | | 1500 | 100 | 70 |
| Disconnect umbilical | 1 | 20 | | 40 | 10 | |
| Lanyard | 1 | 20 | | | 3 | |
| Separation clamp assembly | 1 | 160 | | | 80 | |
| ENTRY SHELL ASSEMBLY | | | | | | |
| Honeycomb section | 1 | 265,000 | | | 200 | |
| Adhesive | 2 | 120,000 | 100 | | 200 | 1200 |
| Aluminum face sheets | 2 | 120,000 | | | 60,000 | |
| Adhesive | 1 | 9000 | 100 | | 4500 | 90 |
| Doubler splice plates | 12 | 9000 | | | 4500 | |
| Close-out ring | 1 | 17,000 | | | 800 | |
| Mounting ring | 1 | 2200 | | | 1000 | |
| Fiberglass liner | 1 | 60,000 | 100 | | 30,000 | 6000 |
| Adhesive | 1 | 60,000 | 100 | | 30,000 | 600 |
| Heat shield | 1 | 60,000 | 100 | | 30,000 | 12,000 |
| Backup plate | 1 | 32,000 | 100 | | 14,000 | |
| Nose cap structure | 1 | 900 | 100 | | 100 | |
| Foam | 1 | 900 | 100 | | 450 | 1350 |
| Nose cap | 1 | 900 | | | 200 | |
| Atmosphere manifold | 1 | 20 | | 20 | 2 | |
| Thruster bolts | 4 | | | | | |
| Tubing | 1 | 400 | | 400 | 4 | |
| S and I device | 1 | 150 | | 400 | 30 | |
| Diagnostic sensors | 20 | 50 | | 50 | 20 | |
| Flip-flop valves | 2 | 120 | | 20 | 40 | |
| Diagnostic sensors | 20 | 50 | | 50 | 4 | |
| Pressure tanks | 2 | 3000 | | 3000 | 100 | |
| Valves - shutoff | 2 | 20 | | 40 | 5 | |
| Plumbing | 1 | 1800 | | 1800 | 20 | |
| Valve nozzles | 8 | 40 | | 40 | 10 | |
| Manifolds | 2 | 20 | | 20 | 5 | |
| Filters | 4 | 80 | | 100 | 10 | |
| Regulators | 2 | 30 | | 30 | 5 | |
| S and I device | 1 | 150 | | 400 | 30 | |
| Capacitor switch | 1 | 20 | | 120 | 4 | |
| Pressure transducers | 3 | 75 | | 150 | 10 | |
| Separator clamp assembly | 1 | 150 | | | 10 | |
| Plumbing connectors | 1 | 150 | | | 10 | |
| Cabling | 1 | 400 | | 15,000 | 50 | |
| THRUST VECTOR CONTROL SYSTEM | | | | | | |
| Tubing | 1 | 600 | | 600 | 30 | |
| Solenoid valves and nozzle | 4 | 175 | | 125 | 15 | |
| Gas generators | 4 | 460 | 95 | 460 | 75 | |
| STERLIZATION CANISTER LID | | | | | | |
| Aluminum inner shell | 1 | 60,000 | | | 10,000 | |
| Adhesive | 1 | 20,000 | 100 | | 10,000 | 100 |
| Foam segment | 1 | 20,000 | 100 | | 10,000 | 1000 |
| Adhesive | 1 | 20,000 | 100 | | 10,000 | 100 |
| Aluminum outer shell | 1 | 60,000 | | | 10,500 | |
| Adhesive | 1 | 1500 | 100 | | 750 | 15 |
| Foam bearing pads | 1 | 1500 | 100 | | 750 | 750 |
| Adapter ring | 1 | 5600 | | | 1000 | |
| FLSC backup ring | 1 | 7200 | | | 450 | |
| FLSC | 1 | 900 | 100 | 450 | 450 | 900 |
| STERLIZATION CANISTER BASE | | | | | | |
| Aluminum base | 1 | 60,000 | | | 30 | |
| Checkout antenna | 1 | 60 | | | 30 | |
| RF absorbers | 2 | 100 | | 400 | 50 | |
| Cabling | 1 | 400 | 95 | 15,000 | 35 | 50* |
| Plumbing | 1 | 400 | | 400 | 4 | |
| Landyard umbilical disconnet | 1 | 10 | | | 2 | |
| Main umbilical disconnect | 1 | 25 | | | 10 | |
| O-ring gasket | 1 | 40 | 100 | | 20 | 10 |
| Access door | 1 | 800 | | | 100 | |

B-24-1

## TABLE B-11

## ELECTRONICS PARTS COUNT FOR PROBE (EFO CASE)

| | Quantity | Transistors | Resistors | Capacitors | Diodes | Inductors | Transformers | Connectors | Silicon Integrated Circuits | Others* |
|---|---|---|---|---|---|---|---|---|---|---|
| Doppler radar and antenna | 2 | 200 | 1000 | 1200 | 200 | 200 | 8 | 8 | | 8 |
| Mass spectrometer | 1 | 60 | 120 | 60 | 60 | 5 | | 2 | | |
| Radiation detector | 1 | 12 | 24 | 12 | 12 | 1 | | 1 | | |
| Accelerometers | 3 | 30 | 60 | 60 | 30 | | | 6 | | 18 |
| Acoustic densitometer | 1 | 2 | 5 | 5 | 5 | 1 | | 1 | | |
| Gas chromatograph | 1 | 50 | 30 | 30 | 10 | 15 | | 2 | | |
| Pressure sensor | 2 | | 2 | | | | | 2 | | |
| Beta scatter | 1 | 6 | 10 | 2 | 2 | 1 | | 1 | | |
| Temperature sensor | 1 | | 1 | | | | | 1 | | |
| Radar altimeter | 1 | 100 | 500 | 600 | 100 | 100 | 4 | 4 | | 2 |
| Penetrometer | 4 | 40 | 80 | 48 | 40 | 12 | 4 | 4 | | 8 |
| Penetrometer receiver | 1 | 15 | 20 | 30 | 10 | 10 | 1 | 3 | | |
| Water detector | 1 | | 2 | | | | | 1 | | |
| Central computer and sequencer. | 1 | 5 | 10 | 30 | 5 | 2 | | 1 | 30 | 1 |
| Directional coupler | 2 | | 4 | | 4 | | | 2 | | |
| Transmitter | 2 | 80 | 240 | 640 | 80 | 240 | 40 | 8 | | 16 |
| Engrg. data handling | 2 | 20 | 30 | 40 | 20 | 4 | | 4 | 200 | 2 |
| Diagnostic data handling | 2 | 20 | 30 | 40 | 20 | 4 | | 4 | 200 | 2 |
| Data storage | 2 | 300 | 600 | 900 | 300 | 6 | | 6 | 1800 | ** |
| Delay data storage | 2 | 100 | 200 | 300 | 100 | 2 | | 2 | 600 | ** |
| ACS electronic package | 1 | 75 | 155 | 90 | 75 | 9 | 4 | 3 | 3 | |
| Pressure transducer | 4 | | 8 | | 8 | | | 4 | | |
| Inertial reference system | 1 | 50 | 70 | 42 | 25 | 17 | | 2 | | |
| Sentry gyro package | 1 | 17 | 70 | 25 | 28 | 2 | 4 | 1 | 3 | |
| Diagnostic sensors | 100 | | 100 | | | | | | | |
| Television | 1 | 150 | 900 | 150 | 75 | 30 | 2 | 9 | 60 | 11 |
| Power converter | 2 | 60 | 300 | 80 | 60 | 40 | 8 | 12 | | |
| Total | 143 | 1382 | 4570 | 4384 | 1269 | 701 | 75 | 94 | 2896*** | 68 |

* Crystals, relays, RF chokes, switches, magnetron, duplexer, thermistors.
** Parts 15, 341 + 8 x $10^5$ magnetic cores includes both data and delay data storage.
*** Equivalent to 64, 000 conventional parts.

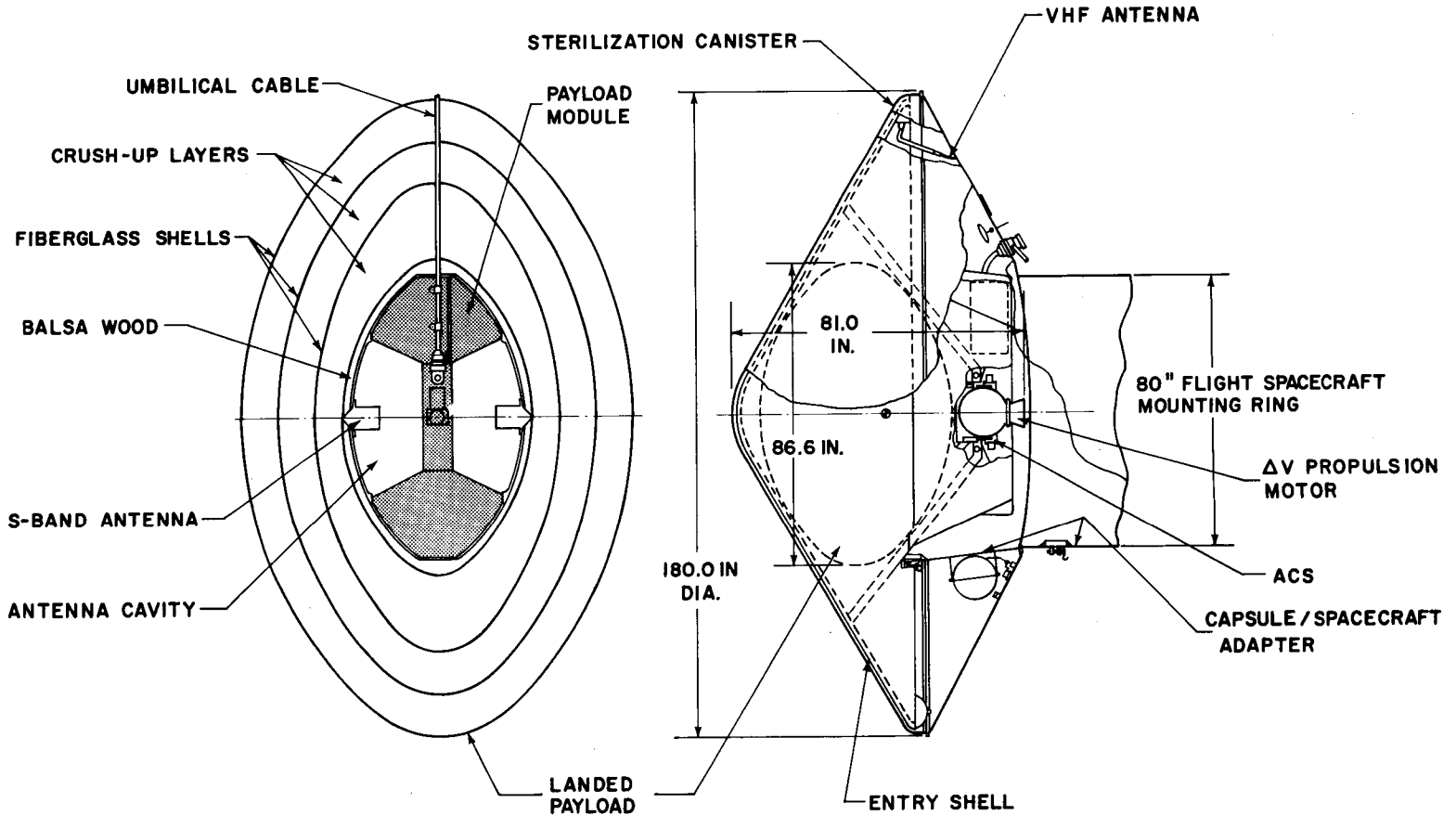


76-0021P

Figure B-8 PROBE/LANDER-ENTRY FROM APPROACH TRAJECTORY - INBOARD PROFILE

## TABLE B-12

### WEIGHT SUMMARY FOR PROBE/LANDER (EFAT CASE)

| | | | | | | |
|---|---|---|---|---|---|---|
| FLIGHT CAPSULE | 2500.0 * | | | | | |
| FC/FS adapter | | 100.0 | | | | |
| Elec/Mech connectors | | 50.0 | | | | |
| Sterilization canister | | 366.9 | | | | |
| SEPARATED VEHICLE | | 1983.1 | | | | |
| ΔV propulsion | | | 98.5 | | | |
| ACS electronics | | | 10.0 | | | |
| Spin rocket propellants | | | 2.1 | | | |
| Propulsion support structure | | | 10.0 | | | |
| Miscellaneous | | | 12.5 | | | |
| ENTRY VEHICLE | | | 1850.0 | | | |
| Thermal protection | | | | 290.0 | | |
| Primary structure | | | | 451.2 | | |
| Thermal control | | | | 25.0 | | |
| Elec/Mech connectors | | | | 55.5 | | |
| ACS nozzles, tanks, etc. | | | | 69.3 | | |
| Spin rockets and supports | | | | 10.0 | | |
| Contingency | | | | 25.0 | | |
| SUSPENDED CAPSULE | | | | 924.0 | | |
| Science | | | | | 36.9 | |
| Telecommunications | | | | | 20.6 | |
| Power | | | | | 31.1 | |
| Miscellaneous | | | | | 3.4 | |
| Contingency (25% of payload) | | | | | 22.0 | |
| Main chute, pilot, mortar | | | | | 74.0 | |
| Support structure | | | | | 65.0 | |
| Afterbody | | | | | 76.0 | |
| LANDED CAPSULE | | | | | 595.0 | |
| Impact attenuator | | | | | | 215.0 |
| Elec/Mech connectors | | | | | | 15.5 |
| INTERNAL WEIGHT | | | | | | 364.5 |
| Science | | | | | | | 48.0 |
| Telecommunications | | | | | | | 98.7 |
| Power | | | | | | | 70.1 |
| Miscellaneous | | | | | | | 2.0 |
| Contingency (25% of payload) | | | | | | | 54.7 |
| Thermal control | | | | | | | 15.0 |
| Internal structure | | | | | | | 76.0 |

*All weights in pounds

## TABLE B-13

### ELECTRONICS PARTS SUMMARY FOR PROBE/LANDER (EFAT CASE)

| | Quantity | Transistors | Resistors | Capicitors | Diodes | Inductors | Transformer | Connectors | Silicon Integrated Circuits | Others |
|---|---|---|---|---|---|---|---|---|---|---|
| Antenna subsystem | 1 | --- | --- | --- | --- | --- | --- | 5 | --- | * |
| Relay link transmitter | 1 | 10 | 30 | 80 | 10 | 30 | 5 | 2 | --- | * |
| Direct link power amplifier | 1 | 2 | 5 | 5 | 5 | 2 | 1 | 3 | --- | * |
| Direct link exciter | 1 | 5 | 20 | 30 | 10 | 15 | 5 | 2 | --- | * |
| Command receiver/decoder | 1 | 5 | 20 | 30 | 10 | 15 | 5 | 2 | 5 | * |
| Central computer and sequencer | 1 | 5 | 10 | 30 | 5 | 2 | --- | 1 | 30 | * |
| Telemetry subsystem | 1 | 5 | 10 | 30 | 5 | 2 | --- | 3 | 50 | * |
| Data automation subsystem | 1 | 5 | 10 | 30 | 5 | 2 | --- | 3 | 50 | * |
| Data storage | 1 | 100 | 200 | 300 | 100 | 2 | --- | 3 | 500 | ** |
| Power conditioning | 1 | 5 | 15 | 15 | 10 | 1 | 2 | 1 | --- | * |
| Battery | 1 | --- | --- | --- | --- | --- | --- | 1 | --- | |
| Radar altimeter | 1 | 30 | 50 | 60 | 20 | 40 | 10 | 5 | --- | * |
| Accelerometer-impact | 1 | 5 | 10 | 10 | 5 | --- | --- | 1 | --- | * |
| VSWR monitor | 1 | --- | --- | --- | 4 | --- | --- | 4 | --- | |
| Gamma scatter | 1 | 6 | 10 | 2 | 2 | 1 | --- | 1 | --- | |
| Pressure | 1 | --- | 1 | --- | --- | --- | --- | 1 | --- | |
| Mass spectrometer | 1 | 60 | 120 | 60 | 60 | 5 | --- | 1 | --- | |
| Argon detector | 1 | 4 | 8 | | 2 | --- | --- | 1 | --- | |
| $H_2O$ detector | 1 | --- | 2 | --- | --- | --- | --- | 1 | --- | |
| $O_3$ detector | 1 | --- | --- | 4 | 2 | --- | | 1 | --- | |
| $O_2$ detector | 1 | 2 | 6 | | 2 | --- | --- | 1 | --- | |
| $CO_2$ detector | 1 | 2 | 6 | --- | 2 | --- | --- | 1 | --- | |
| Anemometer | 1 | 14 | 40 | 10 | 8 | 6 | 1 | 1 | --- | |
| Alpha scatter | 1 | 6 | 10 | 2 | 2 | 1 | --- | 1 | --- | |
| Microphone | 1 | --- | --- | --- | --- | --- | --- | 1 | --- | * |
| Audio amplifier | 1 | 4 | 8 | 2 | 2 | --- | --- | 2 | --- | |
| Resistance thermometer | 3 | --- | --- | 12 | 12 | --- | --- | --- | --- | |
| Resistance thermometer bridge | 1 | --- | --- | 12 | 12 | --- | --- | 1 | --- | |
| Linear triaxial accelerometer | 1 | 24 | 54 | 30 | 27 | 3 | --- | 1 | --- | |
| Surface radiation | 1 | 12 | 24 | 12 | 12 | 1 | --- | 1 | --- | |
| Penetrometer | 1 | --- | 1 | --- | --- | --- | --- | 1 | --- | |
| Radiometer | 1 | 26 | 56 | 12 | 6 | 2 | 1 | 1 | --- | |
| Beta scatter | 1 | 6 | 10 | 2 | 2 | 1 | --- | 1 | --- | |
| Atmospheric pressure | 3 | --- | 1 | --- | --- | --- | --- | 1 | --- | |
| Atmospheric temperature | 3 | --- | 1 | --- | --- | --- | --- | 1 | --- | |
| Langmuir probe | 1 | 4 | 31 | 5 | 19 | 1 | --- | 2 | --- | |
| 1000V power supply | 1 | 13 | 30 | 14 | 10 | --- | 1 | 2 | --- | |
| Trapped radiation | 1 | 12 | 24 | 12 | 12 | 1 | --- | 1 | --- | |
| Gyro-triaxial | 1 | 17 | 70 | 25 | 28 | 2 | --- | 1 | 3 | |
| Control electronics | 1 | 24 | 54 | 30 | 27 | 3 | --- | 1 | --- | |
| Total | | 413 | 947 | 862 | 448 | 893 | 31 | 64 | 638 | |

*Crystals, relays, RF chokes, switches, magnetron, duplexer, thermistors, TWT.

**$10^5$ magnetic cores

## TABLE B-14

## ELECTRONICS PARTS CONFIGURATION OF PROBE/LANDER (EFAT CASE)

| Part | Area (in.$^2$) | Part | Area (in.$^2$) |
|---|---|---|---|
| Resistor | 1.0 | Transformer | 100.0 |
| Capacitor | 1.0 | TWT | 40.0 |
| Diode | 0.5 | Magnetron | 30.0 |
| Transistor | 0.5 | Duplexer | 35.0 |
| Relay | 6.0 | Battery cell | 325.0 |
| Sil. Int. Cct | 20.0 | Sig/pwr cntr | 10.0 |
| Inductor | 1.0 | Coaxial cntr | 2.0 |
| Magnetic cores | 0.01 | | |

Note: All wire is assumed to be 20 gage and the insulation as 0.02 in. Teflon. The copper-Teflon interface is considered sterilized when the Teflon coating is applied.

## TABLE B-15

## COMPONENT PHYSICAL CHARACTERISTICS FOR PROBE/LANDER (EFAT CASE)

| Code | Title | Description |
|---|---|---|
| A | Sterilization canister assembly | |
| A1 | Sterilization canister lid | |
| A1.1 | Face sheet | Fiberglass-200 inch diameter; Surface area: 2 x 4900 = 80,000 in.$^2$; thickness: 0.125 inch; mating surface based on seal flange (A1.5). |
| A1.2 | Foam | Cold setting plastic - 200 inch diameter. Surface area: 2 x 40,000 = 80,000 in.$^2$. Thickness: 0.5 inch; bubble diameter = 0.5 Cm.; no. of bubbles = 125 per cc. Bubble surfaces are occluded areas. |
| A1.3 | Aft face sheet | Same as for A1.1 |
| A1.4 | Support | Continuous resilient pad, silicone rubber. Surface area = 7000 in.$^2$. Other dimensions estimated. |
| A1.5 | Seal flange | Fiberglass - 1.5 x 600 inch. Surface area = 2,000 in.$^2$. |
| A1.6 | Parasitic antenna | Metal rod 6 in. long, 0.25 in. diameter, with 1 in.$^2$ mating area. |
| A2 | Sterilization canister base | Same as for A1 except omit A1.6. |

TABLE B-15 (Cont'd)

| Code | Title | Description |
|---|---|---|
| A3 | Pressurization assembly | |
| A3.1 | Tanks | Thin steel sphere 1 foot in diameter containing a gas such as nitrogen. |
| A3.2 | Tank support | Aluminum bracket with 1 $ft^2$ of surface area. |
| A3.3 | Plumbing | Stainless steel tubing 0.25 inch diameter, 2 feet long. |
| A3.4 | Pressure indicator | Simple mech, metal valve. Surface area = 1 $in.^2$ |
| A3.5 | Depressurizing valve | Pyrotechnic squib (tube). Surface area = 2 $in.^2$. 1 cc explosive. |
| A4 | Sterilization mechanism separation | |
| A4.1 | Spring | Metal Belleville washers (1 x 3 inches). Surface area = 100 $in^2$ each. 3 required. |
| A4.2 | Clamp | Metal tube to retain the spring (1 x 3 inches). |
| A4.3 | Explosive latch | Total surface area = 300 $in.^2$. With 3 cc of explosive. |
| A4.4 | Sterilization canister cutting charge | Metal (0.25 x 700 inches), 200 in. diameter. Total surface area = 300 $in.^2$; 20 grains of explosive per foot. |

TABLE B-15 (Cont'd)

| Code | Title | Description |
|---|---|---|
| B | Separated vehicle | |
| B2 | Entry vehicle | |
| B2.1 | Entry vehicle body | |
| B2.1.1 | Fiberglass cap | Total surface area = 2 (625 x Pi) = 4000 in.$^2$. Thickness = 0.125 inch. |
| B2.1.2 | Honeycomb fairing | Fiberglass - 2 foot wide having a triangular cross-section varying from 6 to 0 inch. 90-inch radius, 550 inches long. Vol = 40,000 in.$^3$. Total surface area = 2 (24 x 550) = 28,000 in.$^2$. |
| B2.1.3 | Fiber optics bundle | 5,000 glass fibers (0.5 x 100 inches) with 0.125 inch thick plastic casing. Fiber diameter = 0.0428 inch. |
| B2.1.4 | Fiberglass skirt | Tension shell structure. Total surface area = 2 x 38,000 in.$^2$ = 76,000 in.$^2$ (Backing material for heat shield). Thickness = 0.125 inch. |
| B2.1.5 | Compression ring | Metal tube - 6 inch O.D.; 700 in. long, with 200 in. diameter. |
| B2.1.6 | Radiometer window | Quartz - 0.5 inch diameter, 0.5 inch long. Metal flange 0.5 inch diameter. Bracket surface area = 4 in.$^2$. |
| B2.1.7 | Attachment strap | To hold shield on sphere. Metal (1 x 50 in.) each. 8 required. Total surface area = 8 (1 x 50 x 2) = 800 in.$^2$. |

TABLE B-15 (Cont'd)

| Code | Title | Description |
|---|---|---|
| B2.1.8 | Heat shield | Thickness = 0.1875 inch. Total surface area = 80,000 in.$^2$. Curing at 300°F for 16 hours to fiberglass structure in sealed container. |
| B2.2 | Entry vehicle sensors | |
| B2.2.1 | Pressure transducers | Metal pressurized bellows (2 in.$^2$ of brazed area). 3 required. Total surface area = 3 x 2 = 6 in.$^2$. (Wire-wound resistor acting as a voltage divider). |
| B2.2.2 | Plumbing | 3 metal tubes. Diameter = 0.1875 inch, 6 inches long. |
| B2.2.3 | Cable | 9 wire. 10 inches long. Total length = 9 x 100 = 900 inches. |
| B2.2.4 | Resistance thermometer | 0.3 x 0.7 x 0.002 inch. (Ignore because of small dimensions.) |
| B2.2.5 | Radar antenna | Same as for A1.6 |
| B2.2.6 | Langmiur probe | Same as for B1.1.5.3 |
| B1 | Suspended capsule | |
| B1.1 | External payload assembly | |
| B1.1.1 | Cable assembly | 30 wires (15 twisted pairs). Tinned copper braid. Each wire = 4 feet long. Total length = 4 x 30 = 120 feet. Looks like octupus; has 10 connectors. |
| B1.1.1.1 | Cable cutter | Guillotine type, movable blade and piston. Total surface area = 3 in.$^2$. 1 cc of explosive. |

TABLE B-15 (Cont'd)

| Code | Title | Description |
|---|---|---|
| B1.1.2 | Bolt cather | Cup shape, metal. Each is 3 in. long, diameter = 1 inch. 3 required. |
| B1.1.2.1 | Capsule separation bolt | 3 required. Total surface area - 3 x 1.5 = 4.5 in.$^2$. Each bolt with 0.5 cc of explosive. |
| B1.1.3 | Support ring structure | Metal, cylinder shape. Diameter = 100 inches. Length = 24 inches. Total surface area = 2 (24 x 150) = 7200 in.$^2$. |
| B1.1.3.1 | Cradle assembly | Metal hemisphere, radius = 50 inches. Total surface area = 2 x 8000 = 1600 in.$^2$. Occlusion due to Fiberglass sterilization ball. |
| B1.1.4 | Attachment strap | Included in B2.17. |
| B.1.1.4.1 | Explosive bolt | Total surface area = 8 x 2 = 16 in.$^2$. 0.5 cc of explosive required in each of 8 bolts. |
| B1.1.5 | Instrumentation | |
| B1.1.5.1<br>B1.1.5.2 | Radiometer<br>Radar altimeter | Black boxes. See Table B-13 and B-14. |
| B1.1.5.3<br>B1.1.5.4 | Langmuir probe<br>Beta scatter | Black boxes. See Table B-13 and B-14. |
| B1.1.5.5 | Resistance thermometer | See B2.2.4. |
| B1.1.5.6 | Trapped radiation | Black box. See Table B-13 and B-14. |

TABLE B-15 (Cont'd)

| Code | Title | Description |
|---|---|---|
| B1.1.6 | Propulsion and attitude control electronic assembly | (All items mounted on support ring) |
| B1.1.6.1 | Fuel tank | 2 foot diameter metal sphere containing filtered fuel called Hydrazine. |
| B1.1.6.2 | Oxidizer tank | 2 foot diameter metal sphere containing red fuming nitric acid. |
| B1.1.6.3 | Pressure tank | 0.5 foot diameter metal sphere containing dry nitrogen. |
| B1.1.6.4 | Propulsion nozzle | Fiberglass (Refrasil). Maximum diameter = 4 inches. Throat diameter = 1 inch . Length = 1 foot. |
| B.1.1.6.5 | Plumbing | Stainless steel tubing (40 feet long. Diameter = 0.1875 inch) and (2 feet long. Diameter = 0.5 inch). |
| B1.1.6.6 | 3 Axis gyro package | Black boxes. See Table B-13 and B-14. |
| B1.1.6.7 | control electronics | |
| B1.1.6.8 | Pressure regulator | Metal spring loaded valve. Total surface area = 4 in.$^2$. |
| B1.1.6.9 | Control valve | Solenoid valve. Diameter = 0.75 inch 1.5 inch long. 12 required. Total surface area = 12 x 5 = 60 in.$^2$. |
| B1.1.6.10 | ACS nozzle | 12 required. Total surface area = 12 x 2 = 24 in.$^2$. |
| B1.1.7 | Parachute | |

TABLE B-15 (Cont'd)

| Code | Title | Description |
|---|---|---|
| B1.1.7.1 | Main pack chute assembly | Nylon chute 100 foot diameter, with 20 shroud lines each 100 feet long. Shroud line diameter = 0.125 inch. Parachute arrives at assembly area packed, ready to be placed in container (B1.1.7.3). |
| B1.1.7.2 | Cover | Thin metal lid. Diameter = 1.5 feet. |
| B1.1.7.3 | Container | Thin metal cylinder. Diameter =1.5 feet, 1.5 feet long. |
| B1.1.7.4 | Parachute | Included in B1.1.7.1 |
| B1.1.7.5 | Deployment mechanism | Undefined. Assume piston 1.5 ft. diameter. To be moved by gas charge. |
| B1.1.7.6 | Pyrotechnics | 5cc of charge. |
| B1.1.7.7 | Pilot pack chute assembly | Nylon chute 25 foot diameter with 10 nylon shroud lines. 25 feet long each. Shroud line diameter = 0.125 inch. |
| B1.1.7.8 | Cover | Thin metal lid 8 inches in diameter. |
| B1.1.7.9 | Container | Thin metal cylinder 8 inches long. Diameter = 8 inches. |
| B1.1.7.10 | Parachute | Included in B1.1.7.7. |
| B1.1.7.11.1 | Cable assembly | 4 wires, each 6 feet long. 3 connectors. |
| B1.1.7.11.2 | Pyrotechnics | 2 cc of charge. |

TABLE B-15 (Cont'd)

| Code | Title | Description |
|---|---|---|
| B1.2 | Impact attenuation | |
| B1.2.1 | Inner shell | Thin fiberglass sphere. Diameter = 36 inches. |
| B1.2.2 | Cutting charge | 165 grains. |
| B1.2.3 | Crushup material | Balsa wood, hollow sphere. I.D. = 36 inches; O.D. = 72 inches. |
| B1.2.4 | Attachment and cables | 100 feet of 1 inch metal strap. Big net holding material together not yet conceived. 100 feet of 0.0625 inch diameter steel cable, braided. |
| B1.3 | Floatation subsystem | |
| B1.3.1 | Attachments and cables | Included in B1.2.4. |
| B1.3.2 | Floatation shell | Fiberglass sphere (Diameter = 36 inches). |
| B1.3.2.1 | Caging and umbilical | 100 contact electrical connector with metal collar. Connector diameter = 3 inches. Connector surface area = 40 in.$^2$. Collar I.D. = 3 inches. Collar surface area = 31 in.$^2$. Pyrotechnics with 1.5 cc of charge. |
| B1.3.2.2 | Fill and vent mechanism | 1 inch diameter metal pipe cap. Total surface area = 2 in.$^2$. |
| B1.3.3 | Floatation liquid | 2 gallon of silicone oil (1 gallon = 3,780 ml.). |

TABLE B-15 (Cont'd)

| Code | Title | Description |
|---|---|---|
| B1.4 | Landed capsule | |
| B1.4.1 | Umbilical and caging | Same description as B1.3. |
| B1.4.1.1 | Pyrotechnics | 1.5 cc of charge |
| B1.4.2<br>B1.4.3 | Attenuation shell lower<br>Attenuation shell top | Fiberglass hemispheres. Diameter = 36 inches. Each insulation shell goes inside of flotation shell. |
| B1.4.4<br>B1.4.5 | Probe structure lower<br>Probe structure top | Welded aluminum sheet sphere (heat sink). Diameter = 36 inches. Total surface area = 50,000 in.$^2$. Forms major portion of sphere except for antenna portion. All electronic hardware is mounted on this structure. |
| B1.4.6 | Central control and sequencer | |
| B1.4.6.1<br>B1.4.6.2 | Computer and sequencer<br>Data storage | Electronic components. See Table B-13 and B-14. $10^5$ magnetic cores will come as a single packaged unit that can be plugged in. |

TABLE B-15 (Cont'd)

| Code | Title | Description |
|---|---|---|
| B1.4.7 | Instrumentation | |
| B1.4.7.1<br>B1.4.7.2<br>B1.4.7.3<br>B1.4.7.4<br>B1.4.7.4.1<br>B1.4.7.5<br>B1.4.7.6<br>B1.4.7.7<br><br>B1.4.7.8<br>B1.4.7.9<br>B1.4.7.10<br>B1.4.7.11 | Accelerometer<br>Impact accelerometer<br>Gamma scatter<br>Microphone<br>Amplifier<br>Surface radiation<br>Spectrometer<br>$H_2O$, $O_2$, $O_3$ detector pressure<br>Transducer<br>Penetrometer<br>Alpha scatter<br>Anemometer | Electronic components. See Table B-13 and B-14. |
| B1.4.7.11.1<br>B1.4.7.11.2 | Deployment mechanical<br>Pyrotechnics | Not described. Negligible. |
| B1.4.7.12<br>B1.4.7.13<br>B1.4.7.14 | Argon detector<br>Temperature sensor<br>$C_0 2$ detector | Electronic components. See Table B-13 and B-14. |
| B1.4.8 | Power supply | |
| B1.4.8.1 | Power switch and condition | See Table B-13 and B-14. |
| B1.4.8.2 | Battery assembly | Table B-13 and B-14. Assumptions of 350 watts giving 50 pounds and 400 cu in. Total surface area = 325 in.$^2$. |

TABLE B-15 (Concl'd)

| Code | Title | Description |
|---|---|---|
| B1.4.8.3 | Thermal control | Coating outside of sphere. Black paint and gold sputtering (half and half). Black paint is baked on. |
| B1.4.9 | T/M and data automation | |
| B1.4.9.1<br>B1.4.9.2 | Telemetry<br>Data automation | See Table B-13 and B-14. |
| B1.4.10 | Telecommunications | |
| B1.4.10.1<br>B1.4.10.2<br>B1.4.10.3<br>B1.4.10.4<br>B1.4.10.4.1<br>B1.4.10.5 | Direct exciter<br>Power amplifier<br>Duplexer<br>Command receiver<br>and decoder<br>Relay transmitter | See Table B-13 and B-14. |
| B1.4.10.6 | RF cable | See Table B-13 and B-14. |
| B1.4.11 | Antenna assembly | |
| B1.4.11.1<br>B1.4.11.2<br>B1.4.11.3 | Feed network<br>VSWR monitor<br>Spiral antenna | See Table B-13 and B-14. |
| B1.4.11.4 | RF cable | 10 feet of cable (e.g., RG142B). |
| B1.4.11.5 | Balun | Neglect. |