Approved by: _____
K.W. Porter, Chief Engineer
Telecommunications Laboratory

Prepared by: _____
W. Whitworth, Project Leader

CONTRACT NO. NAS-8-11922

REPORT NO. ACF 3121

30 SEPTEMBER 1966

NASA - MARSHALL SPACE FLIGHT CENTER
HUNTSVILLE, ALABAMA

HIGH RELIABILITY DC AMPLIFIER

TABLE OF CONTENTS

Section		Page
1.	INTRODUCTION	1
	1.1 Application	1
	1.2 Circuit Description	2
2.	CIRCUIT DEVELOPMENT	5
	2.1 Power Supply	5
	2.2 Amplifier	13
	2.3 Transformer Redesign	21
3.	PACKAGE DEVELOPMENT	23
	3.1 Requirements	23
	3.2 Mockup	23
	3.3 Substrates	24
	3.4 Header	24
	3.5 Shelf	26
	3.6 Cover	28
	3.7 Ruggedizing Materials	29
	3.8 Thermal Analysis	30
	3.9 Final Mechanical Specifications	35
	3.10 Destruction Test	35
4.	ARTWORK AND LAYOUTS	40
5.	THIN FILMS	46
	5.1 Resistor Deposition	46
	5.2 Conductors	46
	5.3 Dielectric	46
	5.4 Resistor Trimming	46
6.	ASSEMBLY	49
	6.1 Die Bonds	49
	6.2 Wire Bonds	49
	6.3 Centrifuge	49
	6.4 External Connections	50
	6.5 Assembly	50
	6.6 Sealing	56
7.	QUALITY ASSURANCE	58
	7.1 Photographs	58
	7.2 Quality Assurance Plan	61
8.	TECHNICAL PROBLEMS	63
	8.1 Temperature Compensated Diodes	63
	8.2 Chrome Gold	63
	8.3 Final Balancing	64
	8.4 Noise	64
9.	FINAL UNIT SPECIFICATIONS	68
10.	CONCLUSIONS & RECOMMENDATIONS	75

LIST OF ILLUSTRATIONS

Figure		Page
1.	Proposal Schematic	3
2.	DC Amplifier Power Supply Regulation For Various Input Voltages, Loads and Temperatures	9
3	DC Amplifier Power Supply Regulation For Various Load And Temperature Conditions	10
4	Curves Showing The Power Dissipated In The Passing Transistor As A Function of Load	11
5	Power Supply	14
6	Power Supply Efficiency and Regulation	15
7	Amplifier	19
8	Typical Frequency Response Curve	20
9	Temperature Shock Effects on Leak Rate	27
10	Nodal Breakdown of Hybrid DC Amplifier	31
11	1000G Drop Test Waveform	38
12	Destruction Test Amplifier Substrate	39
13	Power Supply Substrate Layout	41
14	Amplifier Substrate Layout	42
15	Power Supply Semiconductor Assembly	43
16	Power Supply Toroid Assembly	44
17	Amplifier Substrate Semiconductor Assembly	45
18	First Header Assembly	51
19	Power Supply Assembly Drawing	52
20	Power Supply Assembly	53
21	Amplifier Assembly	54
22	Complete Assembly	55
23	Finished Product	57
24	Power Supply In-Process Photo	59

LIST OF ILLUSTRATIONS (cont)

Figure		Page
25	Amplifier In-Process Photo	60
26	D-C Amplifier QA Plan	62
27	Amplifier Substrate Destroyed During Balancing	65
28	Output Noise Reference Level	66
29	Crosscoupled Converter Noise	66
30	Amplifier Powered by Breadboard Power Supply, Module Power Supply Operating Converter Only	67
31	Amplifier Test Circuit	68
32	Temperature Drift Distribution	70
33	Open Loop Gain	72
34	Open Loop Input Impedance	73
35	Open Loop Phase Angle	74

1. INTRODUCTION

1.1 Application

A high-gain, high-stability direct current amplifier designed for use in Saturn instrumentation and control circuitry presented some interesting problems when attempts were made to achieve size reduction through the application of integrated circuit techniques. Voltage levels and resistance tolerance requirements are well beyond the state of the monolithic art. Advanced techniques were required, however, to assure minimum volume, weight and power consumption. It was therefore proposed to combine various aspects of thin film and hybrid chip technologies.

The George C. Marshall Space Flight Center of the National Aeronautics and Space Administration awarded a contract to Motorola, Inc. Aerospace Center for the development and fabrication of prototype and pilot production models of such an assembly. This document constitutes the final report of work done on that contract and its modifications. Systems supplied to NASA on the contract were intended for evaluation only. Potential applications include numerous uses in the triple redundant circuitry of the Saturn V Launch Vehicle for Apollo and in the Orbiting Telescope.

Within the Saturn System, these assemblies are used in a computer for operation of the hydraulic engine controls, and are the last link between man and machine. Since failures here cannot be over-ridden by the pilot, the case for extremely reliable circuitry needs no further justification. Motorola has endeavored to supply the required level of reliability, and a significant degree of success was achieved. Extensive problems had first to be overcome and a complete demonstration of reliability must be accomplished at a later time.

1.2 Circuit Description

The circuit involved was specified by NASA schematic 50M32393, reproduced here as Figure 1, and by design goals which were specified in the contractual document as shown in Table I.

TABLE I

Drift: Maximum input drift of 1 mv over the temperature range of -55°C to 125°C with: $Rin_1 = Rin_2 = 50K\ \Omega$, $R_{f1} = R_{f2} = 500K\ \Omega$ and the input shorted. (Scaling resistors external to temperature chamber.)

Power Consumption: Quiescent condition: .5 watt. Max. input signal (5K Ω load): 1.4 watts (This power is measured at the input to the power supply.)

Output Voltage Swing: 90 volts peak to peak with ±9 ma output current.

Output Impedance: (Same conditions given under drift specifications). Less than 100Ω over the linear range of 0 to ±45 volts with 5K Ω load to no load.

Power Supply Regulation: 59 ±1.5 volts with input line voltages of 22 to 32 VDC, with load variations from 3 to 12 ma, and temperature variations of -55°C to +125°C.

Phase Shift: Not more than 1.5 degrees lag at 5 cps, $R_f = 500K$.

Basically, the circuit is composed of a fully differential DC amplifier and its regulated power supply. The amplifier contains three voltage amplification stages plus an output driver stage. Open loop gain approximates 1.0 million (120 db). Input and output are floating with common mode rejection of about 4 db, and a nominal input impedance of 100K Ω. Any feedback for the total amplifier is selected externally to this assembly to permit its use in a wide variety of applications including operational amplifiers. Decoupling capacitors are included in overall feedback and a roll-off capacitor is included in the first amplification stage to suppress parasitic oscillations.

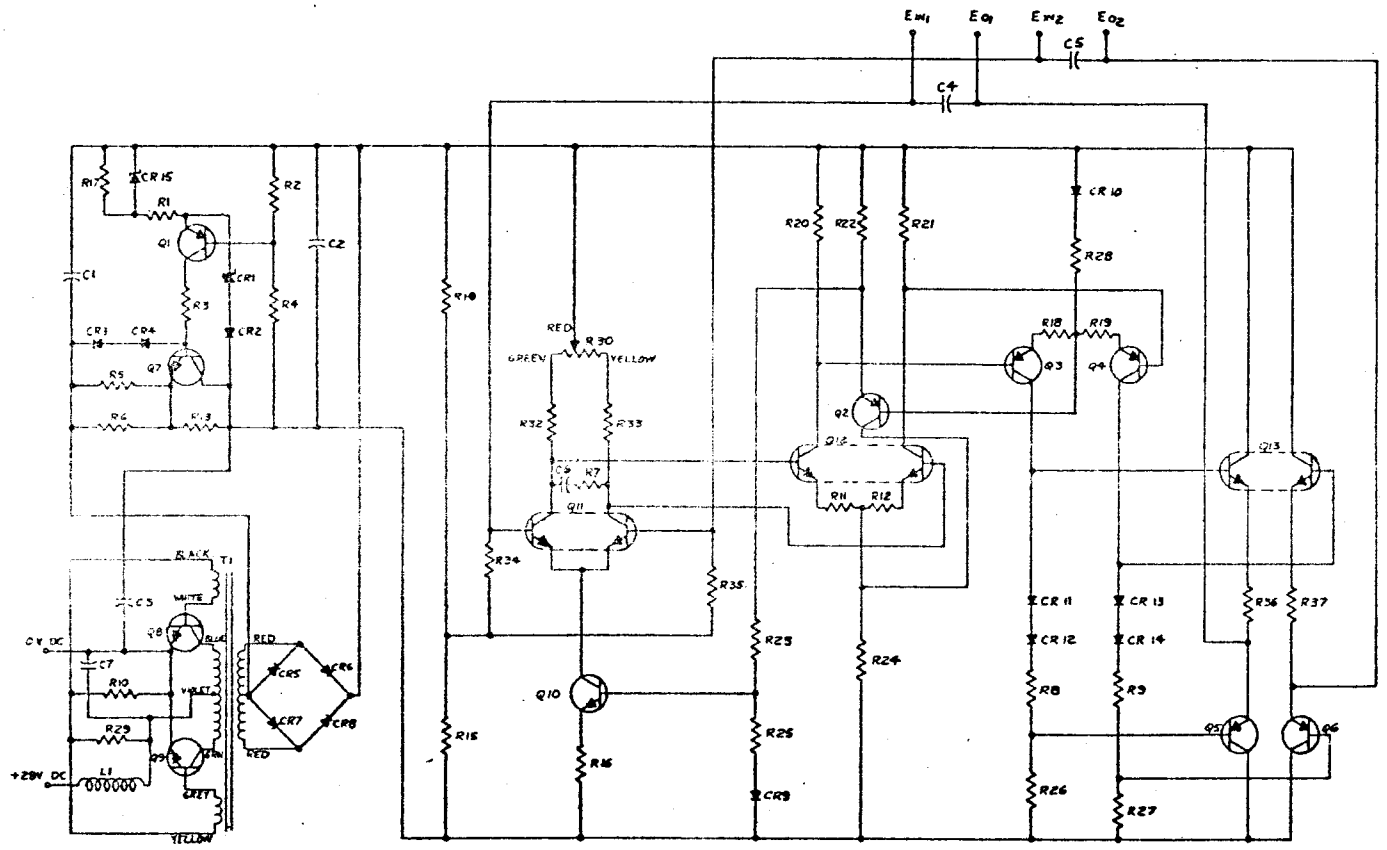

CIRCUIT COMPONENTS LIST

FIND NO.	CIRCUIT COMPONENT #	NO. REQD	DESCRIPTION	MNL SPEC OR MFR NAME & CODE	MNL TYPE OR MFR PART NO.
1	R1	1	RESISTOR 10K	MEPCO	RNR 57
2	R2	1	95K		
3	R3	1	5.7K		
4	R4	1	17.4K		
5	R5 THRU R9	5	50Ω		
6	R10 THRU R12	3	1.5K		
7	R13 THRU R16	4	100K		
8	R18 & R19	2	200Ω		
9	R20 & R21	2	36K		
10	R22	1	4K		
11	R23 & R24	2	80K		
12	R25	1	33K		
13	R26 & R27	2	68K		
14	R28	1	3.9K		
15	R29	1	RESISTOR 25K	MEPCO	RNR 57
16	R30	1	POT 20K	BOURNS	3250L
17	C1, C2, C6	3	CAP. 1μF 100V	G.E.	
18	C3	1	CAP. .005μF 100V	EL MENCO	TYPE MPD
19	C4 & C5	2	CAP. 1000μμF		
20	CR1	1	DIODE (9.4V REF)	SEMCOR	S-3727
21	CR2 THRU CR14	13	DIODE	T.I.	IN649
22	Q1 THRU Q6	6	TRANSISTOR	MOTOROLA	2N2907A
23	Q7	1		G.E.	2N657A
24	Q8 & Q9	2		SILICON TRANS. CORP.	2N2034
25	Q10	1		G.E.	2N910
26	Q11, Q12, Q13	3	TRANSISTOR	FAIRCHILD	2N2920
27	T1	1	TRANSFORMER	MSFC	C303
28	R32 & R33	2	RESISTOR 200K	DAVEN	1283
29	R34 & R35	2	RESISTOR 100K	DAVEN	1283
30	R36 & R37	2	RESISTOR 100Ω	MEPCO	RNR 57
31	L1	1	CHOKE	MSFC	
32	C7	1	CAP. 4.7μF 50V	SPRAGUE	
33	CR15	1	DIODE	MOTOROLA	HM3025
34	R17	1	RESISTOR 50K	MEPCO	RNR 57

Figure 1. Proposal Schematic

The first stage was designed for maximum gain with components specifically chosen and matched for minimum differential drift. A constant current source in the emitters provides common mode attenuation and maintains precise operating current. The absence of emitter resistors provides a low input impedance and a high voltage gain. In order to take advantage of this high gain, the load impedance presented by the second stage is kept high even at the expense of some gain. The third gain stage has some degeneration in order to permit the second stage to have voltage gain. Common mode feedback from the third stage is used for temperature compensation, to provide bias stability in the third gain stage, and to set the common mode output voltage from the driver stage by comparing the third stage emitter voltage with a voltage divider.

The output driver stage is of a complementary nature in order to drive the anticipated load with the full voltage swing without excessive power dissipation in the amplifier itself. [1]

The power supply consists of a DC to DC converter and regulator. The converter is a symmetrical push-pull, magnetic-coupled vibrator operating at 100 Kcps. Small feedback windings on the square loop transformer supply the energy necessary to sustain the oscillations as the full input voltage appears alternately across the two sections of the primary winding. The square-wave is stepped up in the transformer and rectified in the full wave bridge; then filtered of spikes and noise.

Power supply regulation is achieved by a passing transistor in the negative leg and a feedback amplifier. Current limiting is provided by cutting off the amplifier for reduced output voltage. This removes base current from the passing transistor to protect it against excessive power dissipation in high load situations.

---

[1] References are listed at rear of volume

SECTION 2

2. CIRCUIT DEVELOPMENT

2.1 Power Supply

Although the circuit was operational when furnished to Motorola, certain changes were desirable to facilitate the conversion of the circuit to thin films, and a small amount of final development was requested for the power supply to assure good starting characteristics and improved efficiency.

Input coil L1 was deleted just prior to contract award as not essential to the suppression of RFI on the 28 volt power source and in the interest of volume reduction.

The oscillator devices originally selected were 2N2034's. One disadvantage of that device is that it is a diffused junction device and generally only planar devices lend themselves readily to hybrid chip assembly techniques such as were proposed for this system. 2N2034's also typically exhibit a rather low alpha cutoff frequency (1.0 mc), with a typical turn-off time as long as 3 micro seconds. The 2N3501 is a faster device (150 mc) and has a typical storage time of 300 nanoseconds. It is a planar device and has a somewhat higher h_{fe}. Both devices have a collector-emitter breakdown of 60 volts. The regulator passing transistor, originally selected as a 2N657A, was also changed to a 2N3501 to obtain the advantages of a planar device and to reduce the number of device types used. A 1.5K Ω resistor in the oscillator-emitter circuit was found to be unnecessary and removed.

Originally, the oscillator was designed to operate at 4KC, but was changed to 100KC prior to the time the contract was awarded to Motorola. It was then necessary to change the diodes in the full wave bridge in order to get faster switching speeds. In order to reduce the quantity of different parts required, and to simplify assembly and visual inspection, all diodes

(other than the zeners) were changed to 1N4311's. A metallizing compatibility problem arose with this device, however, since the top electrode was metallized with a relatively large silver button, and there had been no experience with ultrasonic bonds to silver at that time within Motorola. Available literature [2,3] was rather vague on the subject, but seemed to indicate that it was possible to make a satisfactory ultrasonic bond between aluminum wire and a silver pad. A weld schedule was developed and a quantity of test bonds were evaluated and judged satisfactory. Later, during tests of prototype systems, these bonds became the object of considerable doubt as to their reliability as a result of bonds occasionally lifting up at the silver.

These bonds were all good at one time and had been centrifuged at 14,000 G's, but when they ultimately failed, there was very little, if any, of the characteristic deformation evident to high power microscopic inspection. It was concluded that the most probable explanation was that the relatively soft silver was absorbing the ultrasonic energy much as a spring would do, resulting in weaker bonds. In an attempt to overcome this, the bonding schedule was changed to increase the energy level, which also required a larger wire size. Although a relatively small number of bonds were made with this .002" wire, no failures were observed. Attempts were made to obtain a similar device without silver metallizing. It was determined that such a device was available from the same supplier (Transitron), but with only a 30 volt peak inverse rating. At about the same time, a somewhat similar device was released by Motorola Semiconductor Products Division. This device, the MSD6100, is a triangular-shaped chip with three common cathode planar junctions on it. Discrete samples were obtained and tested in the breadboards of both the amplifier and the power supply, at room temperature and at temperature extremes. In the amplifier, diodes were changed in one side only to help point out any

variations. No significant variations were observed. At about this same time, some Transitron 1N4311 chips with aluminum anode metallizing were made available for evaluation. The 30 volt rating was found to be quite conservative, and the devices were typically good for over 95 volts, as were the MSD6100's. Unfortunately, the value of these tests was hindered by faulty backing on some of the 1N4311 chips; however, it is assumed that either device would be generally useful.

Because of the increase in oscillator frequency, it was permissible to reduce the two filter capacitors from 1μf to .1μf, permitting a significant reduction in size of these components which it was recognized would have to remain in discrete form. The 4.7μf capacitor across the input terminals was also reduced in size to the largest value that could be obtained in a compatible case size. One vendor had a catalog item which was specified as 3.9μf. Later, experience indicated that performance of these parts was marginal and the value respecified to 2.7μf. A series of tests indicated that to assure starting of the oscillator under all conditions, the 25K Ω resistor in the input should be shunted by a 1500 picofarad capacitor, and h_{fe} of the oscillator transistors should be held at a minimum of 90.

The amplifier was redesigned to operate at a slightly lower supply voltage to improve efficiency and to assure operation below the 60 volt breakdown rating of the transistors. The details of this redesign will be discussed below, but the matter is mentioned now for its impact on the power supply redesign. The redesigned amplifier operates down to about 52 volts collector supply, and the power supply appeared to have an overall regulation of about 3 volts. For this reason, a 54 volt collector supply was specified, and the transformer secondary turns ratio modified accordingly.

The zener reference diode used for the regulator amplifier stage was changed from an S-3727 to a 1N4776A for lower current, better regulation and smaller size. The resistors in the amplifier emitter were changed from 60K Ω to 80K Ω to reduce the current through the reference zener and improve efficiency. A diode originally in series with the reference zener was removed to improve temperature regulation of the power supply. Temperature regulation is shown in Figure 2 prior to removal of this diode, and in Figure 3 after its removal. Because of the removal of this diode, and because of the change of the desired output voltage, the resistive divider for the amplifier base voltage was also altered.

A study of the short circuit protection provided by the zener diode from the emitter of the amplifier to the supply output indicated that the part was not necessary. It was deleted on systems made after the study, but it was included in some of the early prototypes. Figure 4 shows the short circuit data taken.

Forward diodes were added in the emitters of the oscillators to prevent destruction of the oscillator transistors by continual reverse breakdown of the base-emitter junction in the cutoff condition. A feedback signal large enough to assure good turnoff under all combinations of operating conditions (load, input voltage and temperature) will also exceed the BV_{EBO} rating for other combinations of operating conditions and will eventually cause the device to fail. The effect of these parts on overall efficiency can be seen in Table II. It should be noted that this was not a problem until the oscillator was redesigned for 2N3501's, which have a BV_{EBO} rating of about half that of the 2N2034.

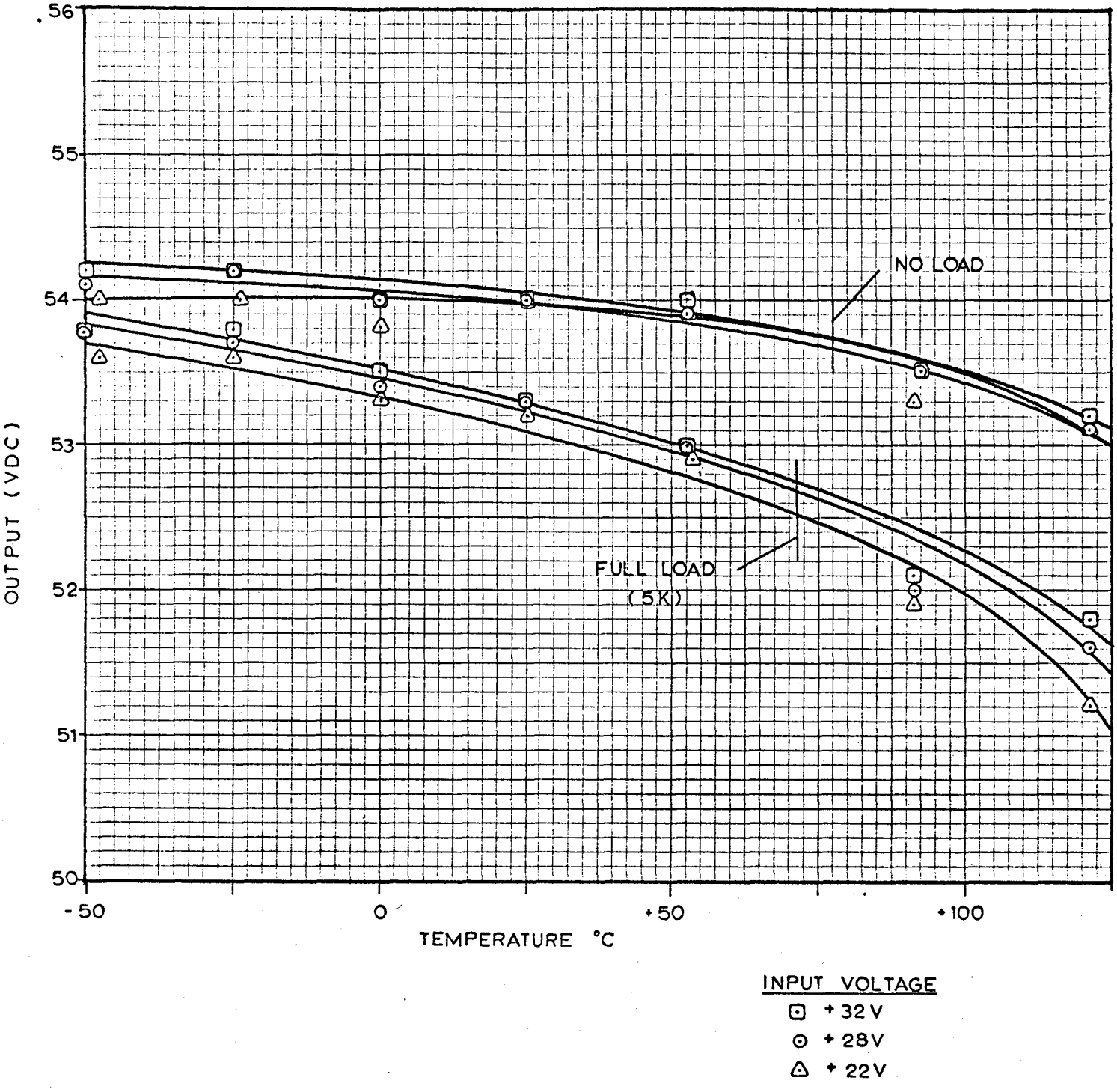

FIGURE 2

D C AMPLIFIER POWER SUPPLY REGULATION FOR VARIOUS INPUT VOLTAGES, LOADS AND TEMPERATURES.

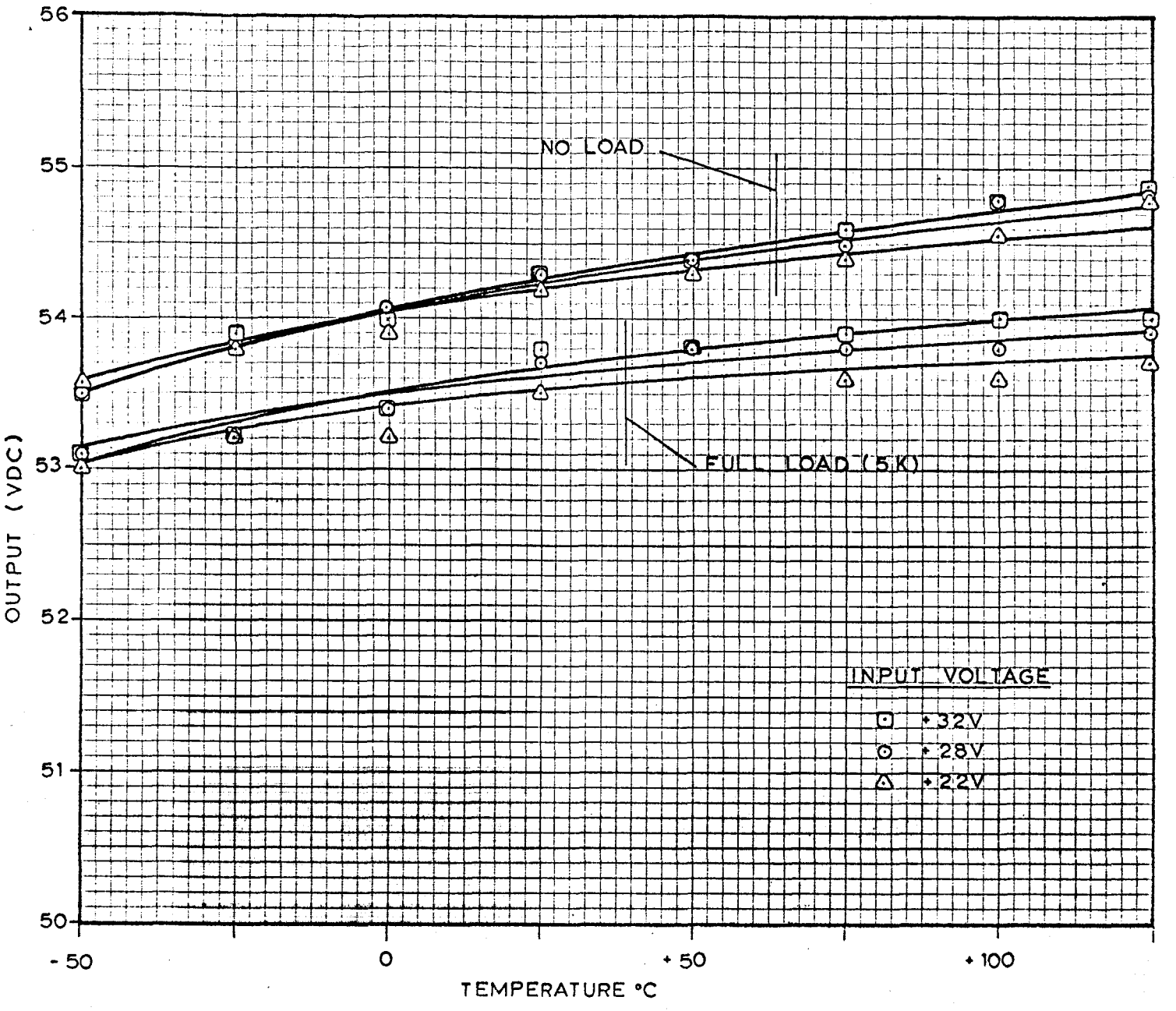

FIGURE 3

DC AMPLIFIER POWER SUPPLY REGULATION FOR VARIOUS LOAD AND TEMPERATURE CONDITIONS

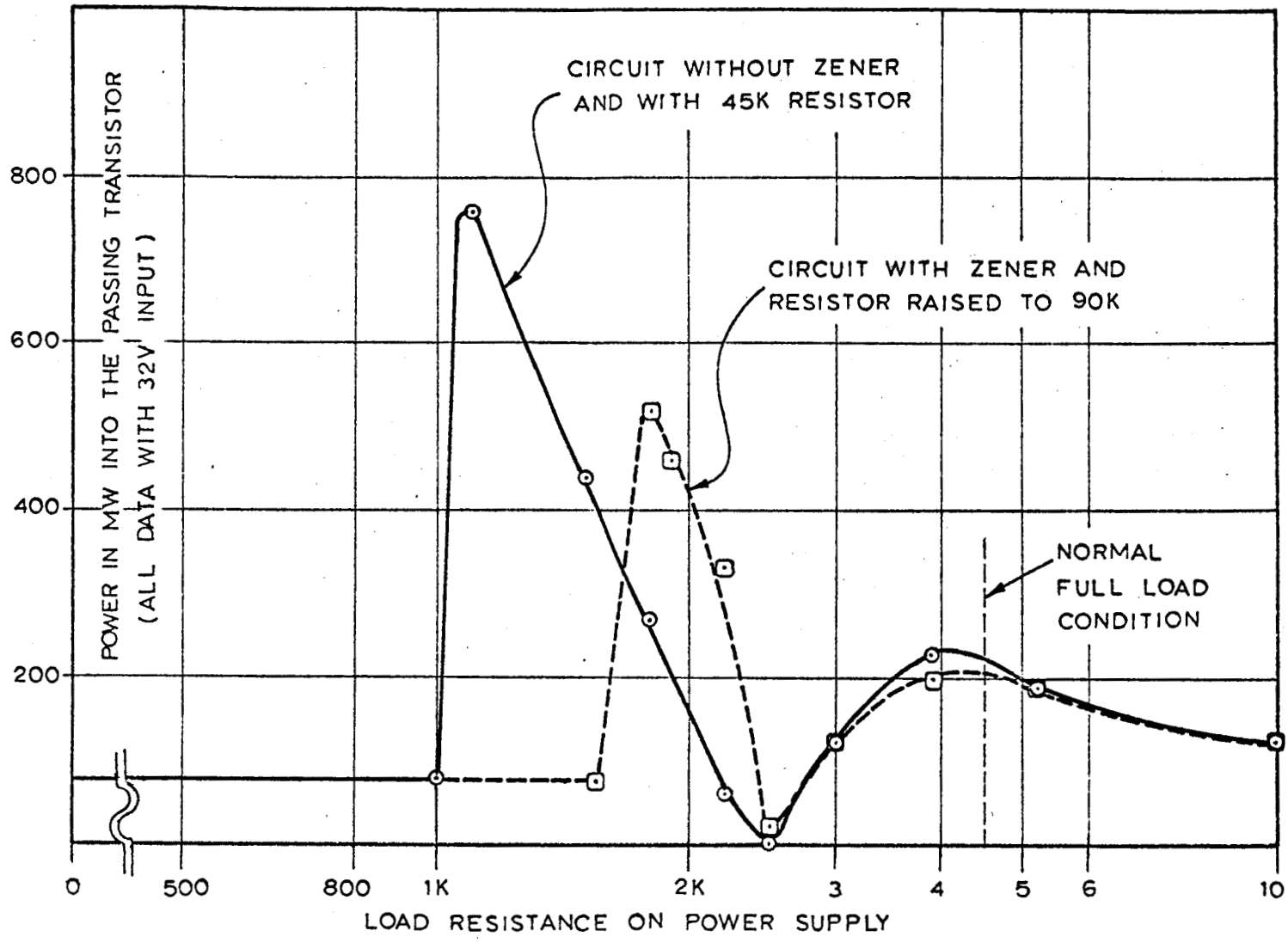

FIGURE 4

CURVES SHOWING THE POWER DISSIPATED IN THE PASSING TRANSISTOR AS A FUNCTION OF LOAD.

TABLE II

Power Supply Input Current for 28 v Applied

Condition	No Load	5K Ω Load
No emitter diodes or bases	9.6 ma	46 ma
Diodes in bases	9.8	46.2
1N649's in emitters	9.4	45.5
1N4311's in emitters	9.5	45.6

The two 50 Ω resistors paralleled in the regulator return leg were changed to a single 15 Ω resistor to improve regulation of the new circuit. Two isolation capacitors were added between case ground and the 28 volt input line, and a coupling capacitor was added between the power supply output return and the input return as an AC ground.

Well into the fabrication of the prototype systems, a great deal of difficulty was encountered with the 2N2907A devices used throughout both the power supply and amplifier. It was initially believed that the problem was one of contamination of devices which had remained in storage and/or processing for an extended period; however, wash and bake processes which normally correct contamination problems were not successful. More detailed investigations indicated that the failures were being caused in the ultrasonic wire bonding process. The geometry of the devices was too small and delicate for the energy levels involved. In some cases where the device was not destroyed during wire bonding, the passivation layer was damaged to the extent that contamination would cause failure later, but could not be adequately corrected by cleaning processes. The problem did not arise in earlier assembly because the energy levels used in the ultrasonic bonding were lower and not as reliable. A good solution to the problem seemed to be to convert to a 2N2605 which is very nearly the same as the 2N2907A except for poorer

high frequency characteristics which are not required for the D C Amplifier. The geometry of the 2N2605 is large enough to prevent damage to the chip during die bonding. It also has larger pads for wire bonding and is made with aluminum metallizing. The 2N2907A is gold metallized and does not bond as readily to aluminum metallizing. The 2N2605 is actually considered complementary to the 2N2484.

The schematic of the modified power supply is shown in Figure 5.

The resultant power supply is simple, quite efficient (see Figure 6) and compact. Should it be desirable to use the power supply alone for some application, this could readily be done. A minor charge to make a new pinch-off tool for cutting the cover to its correct height would permit the circuit to be placed in a lower package measuring .80 x .83 x .31 inches tall.

2.2 Amplifier

Most of the changes that were made in the amplifier circuit were for the purpose of permitting the circuit to operate satisfactorily on a lower collector supply voltage. The advantages of such a modification are a more efficient power supply and a lower collector-emitter breakdown requirement on the devices. The original specification was for 57.5 to 60.5 which leaves little safety margin on devices rated at 60 volts. To permit operation on a nominal 54 volt supply, the PNP's in the output driver stage were changed to Darlingtons for greater current amplification. As a part of this change, another compensating diode was added to each collector of the third stage, and the collector resistors were doubled. The common mode resistor in the third stage emitter was also raised at that time.

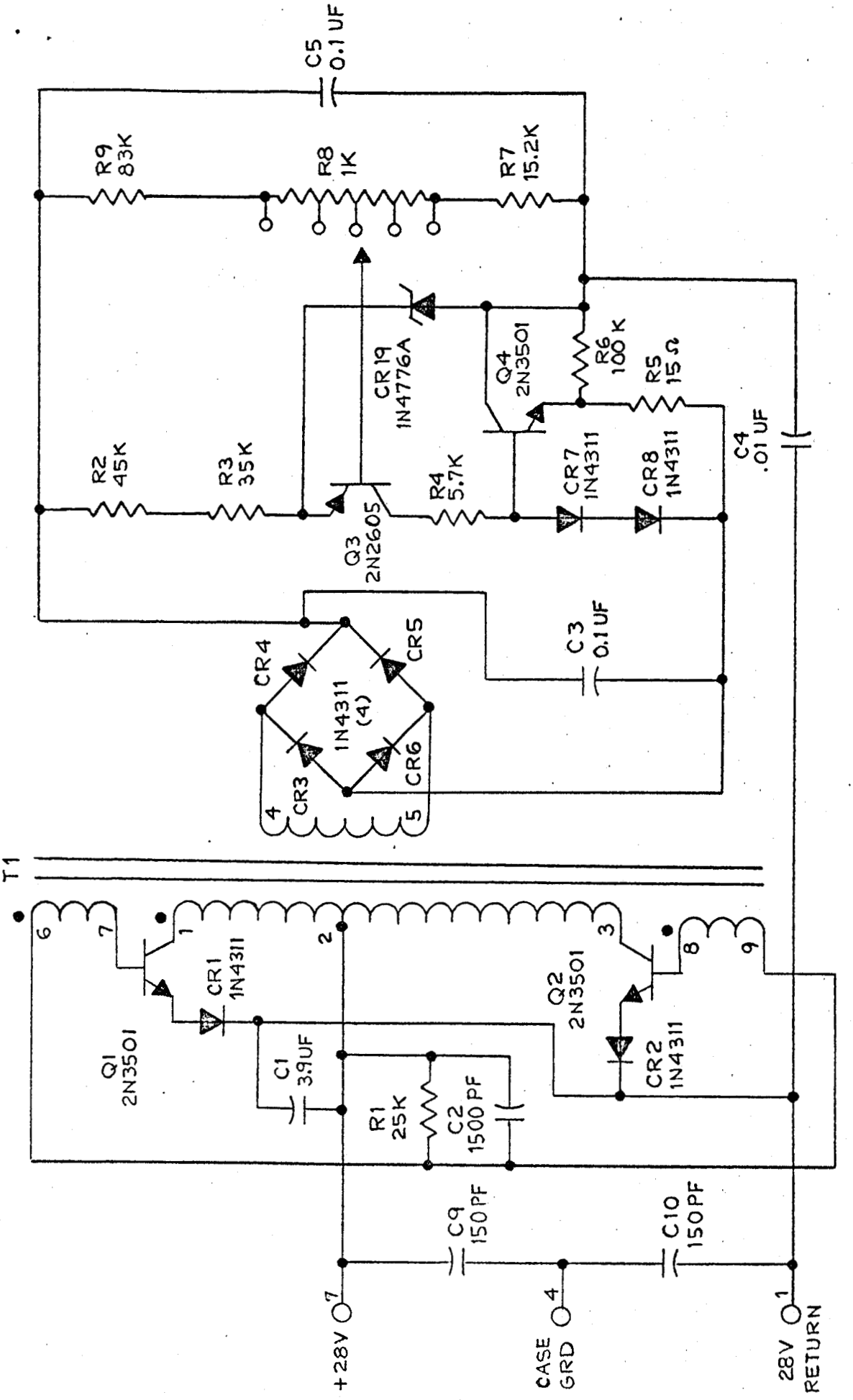

Figure 5. Power Supply

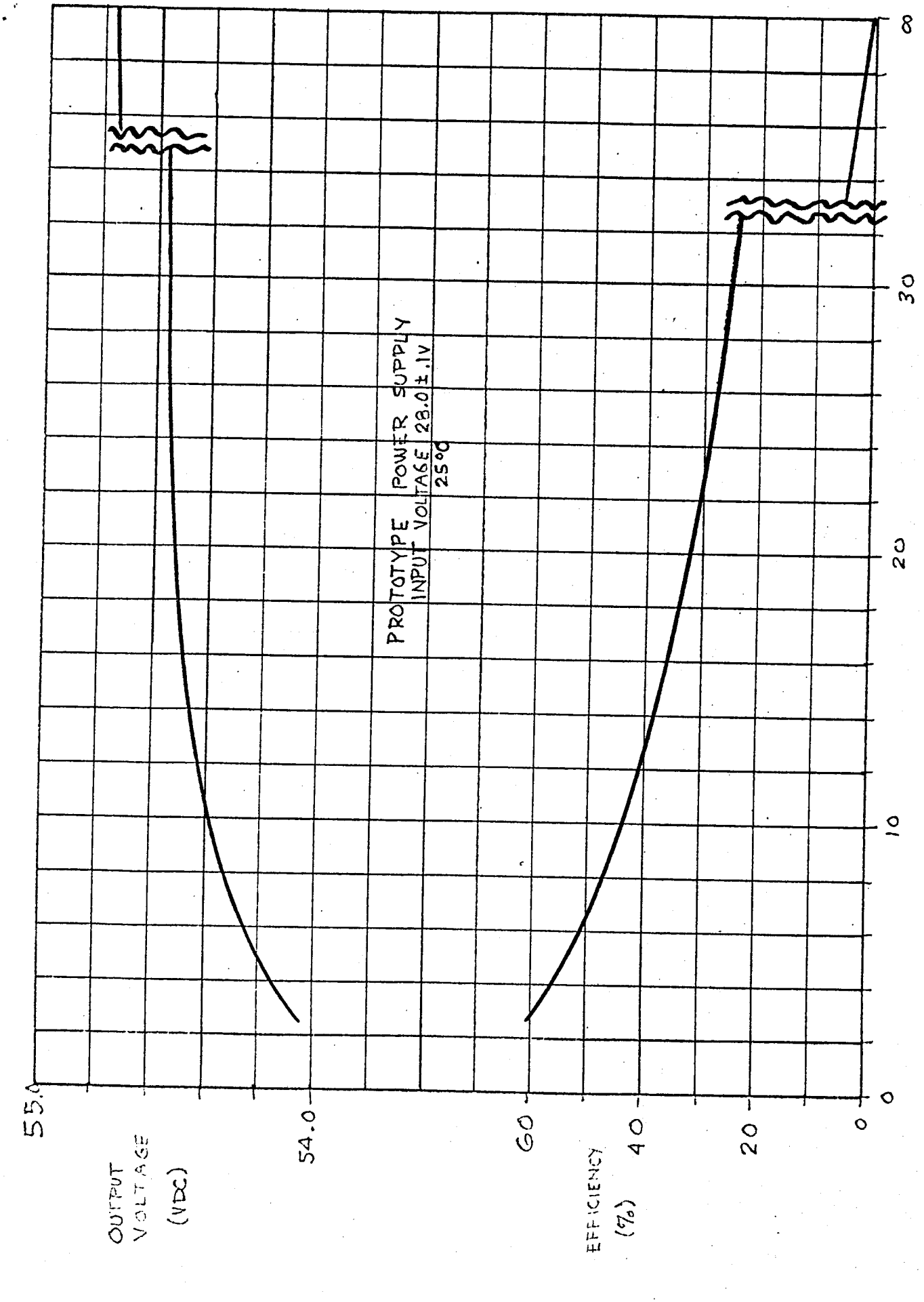

Figure 6. Power Supply Efficiency and Regulation

Matched pairs for the gain stages presented some specification problems until Union Carbide marketed a 2N4042. That device was originally made as a monolithic chip which could be connected either as a dual Darlington or as a closely matched pair, depending on the metallizing pattern selected by the manufacturer. Between procurement of devices for the prototypes and procurement for pilot production, the design of the chip was modified to contain only two junctions, as a fifth (parasitic) transistor had been shown to be present and harmful, particularly to the dual Darlington pattern. These devices were intended by the manufacturer to replace the 2N2920 and have always outperformed it. Obtaining full advantage of these devices requires some extra handling, however, when they are to be used in chip form. To buy the devices in chip or wafer form would prevent testing of the temperature variation in V_{BE} match, a particularly critical parameter in the first gain stage. To overcome this problem, the vendor devised a system of die bonding the chip to a small gold-plated kovar tab which was then fastened lightly with a temporary adhesive to a TO-5 header with extra tall posts. Gold wires are then ball-bonded to the chip and to the top of the posts, and the package covered with a plastic cap for protection during testing and shipping. Upon receipt of the devices for assembly into the systems, the plastic caps are simply lifted off, the wires broken near their bonds to the post, and the temporary bond between the tab and the header is broken. The device and kovar tab, complete with wires, can then be lifted off of the TO-5 header and die bonded to the amplifier substrate. The device intended for use in the first stage was specified to match h_{fe} as closely as the vendor would agree to supply,..94 minimum. (This is the ratio of h_{fe} for the two devices, taking the larger one as a denominator.) Both this device and the one used in the second stage are given special numbers by the vendor, but since these numbers are not meaningful

to anyone not intimately associated with the job, the derivative device number (2N4042) is retained on the schematics.. These devices are completely specified on Motorola purchase documents, as are all other discrete parts used in this assembly.

Replacement of the 2N2920 in the output driver stage with a 2N4042 was planned, but breadboard tests soon emphasized an insufficient safety margin on collector current in that stage. The 2N2920 was rated at 30 ma collector current, while the 2N4042 is rated at only 10 ma. Normal operation calls for 9 ma in the output stage, and transients or trouble in earlier stages would then cause catastrophic failure of the 2N4042, after which all four of the PNP's would also fail. 2N2484's were specified for their high collector current rating (50 ma) and because these are the devices which are matched to obtain 2N2920's. Device matching is not critical in the output stage; therefore, the 2N2484 catalog characteristics are adequate.

The common mode current source in the first stage emitters, originally a 2N910, was respecified as a 2N2484 to reduce the number of device types used.

Collector resistors in the first stage were broken up to assist in the electrical trimming procedures used for final balance of the amplifier, but the total values were not changed. The internal feedback capacitors were dropped from 1000 picofarads to 200 picofarads to give greater flexibility to the user in eventual applications of the system.

It was requested by NASA that a trimpot used in the first stage of the discrete assembly be replaced by some other more highly reliable method of nulling the amplifier to within ± .2 millivolt referred to the input

at room temperature. This was accomplished by making R16 in a series of 2K segments, one tap of which is selected in test to give the best possible balance to within approximately ± .4 millivolt. For those units that are not within the desired ± .2 mv limit, special provisions have been made to connect the proper resistor to a device which trims the resistance by means of an electro-thermal process. This process was developed at Motorola prior to the award of this contract and was refined with Motorola funds for particular application to this work. Patent applications are pending, and the process is considered proprietary.

A schematic of the modified amplifier circuit is shown in Figure 7. Figure 8 shows a typical frequency response curve.

For applications where an internal power supply is not required, it should be practical to lower the height of the cover and shelf (the amplifier cannot rest directly on the header due to spacing of the riser wires) and package it separately for a minimum one-time tooling charge. This should result in a package measuring .80 x .83 x .20 inch tall. It might prove practical, if sufficient quantites were involved (i.e. 100 units), to redesign the amplifier to fit on two smaller substrates. The result could be a package smaller than the present one in all three dimensions.

It is also possible to retool the header to accept the large substrate; however, this would involve enlarging the distance between the pin rows and therefore also increase one lateral dimension. The resultant package size would be .80 x .88 x .18 inch tall, and all tools required for the header would have to be replaced. This alternative is not recommended unless a .02 inch reduction in height is absolutely essential.

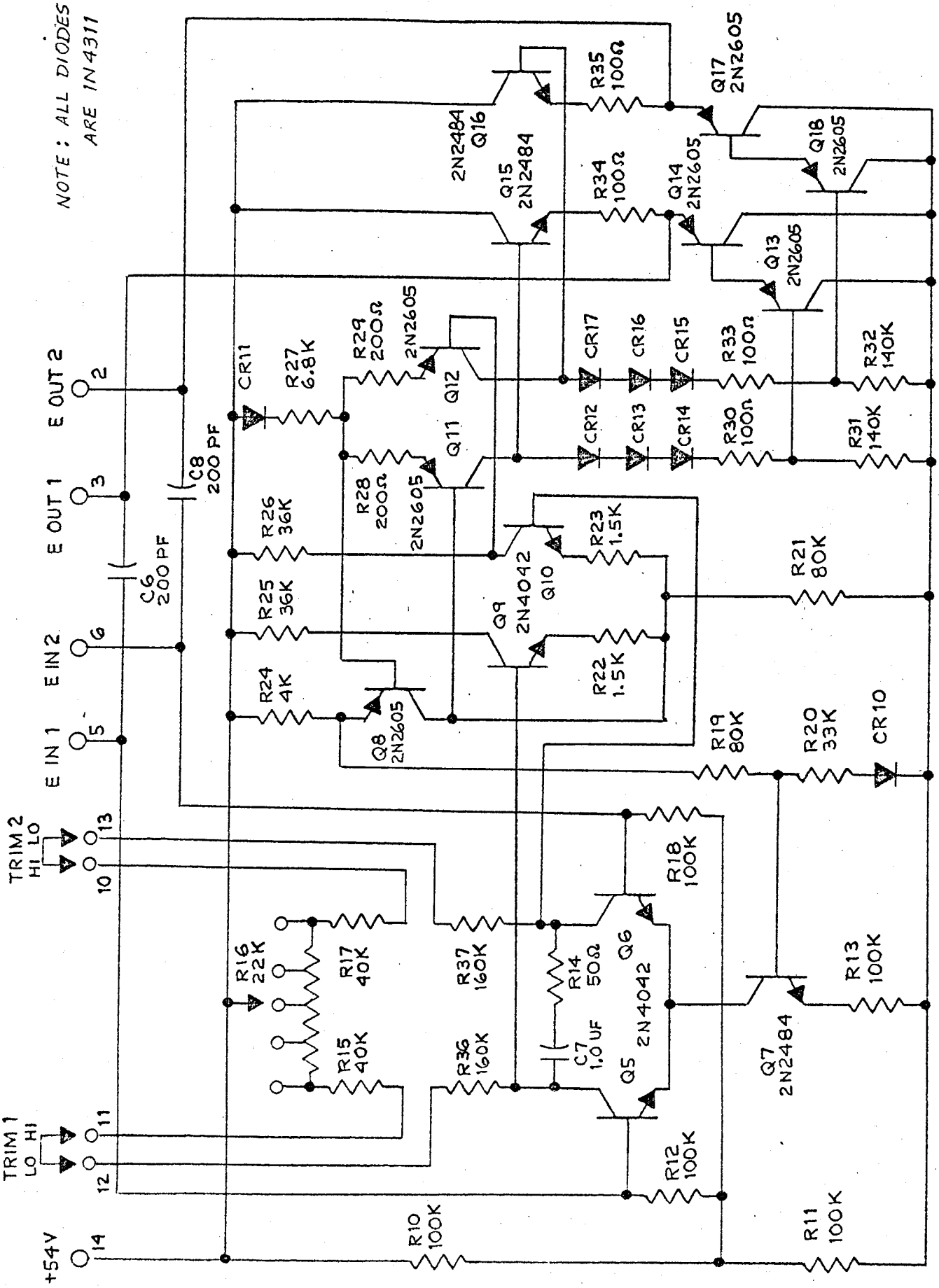

Figure 7. Amplifier

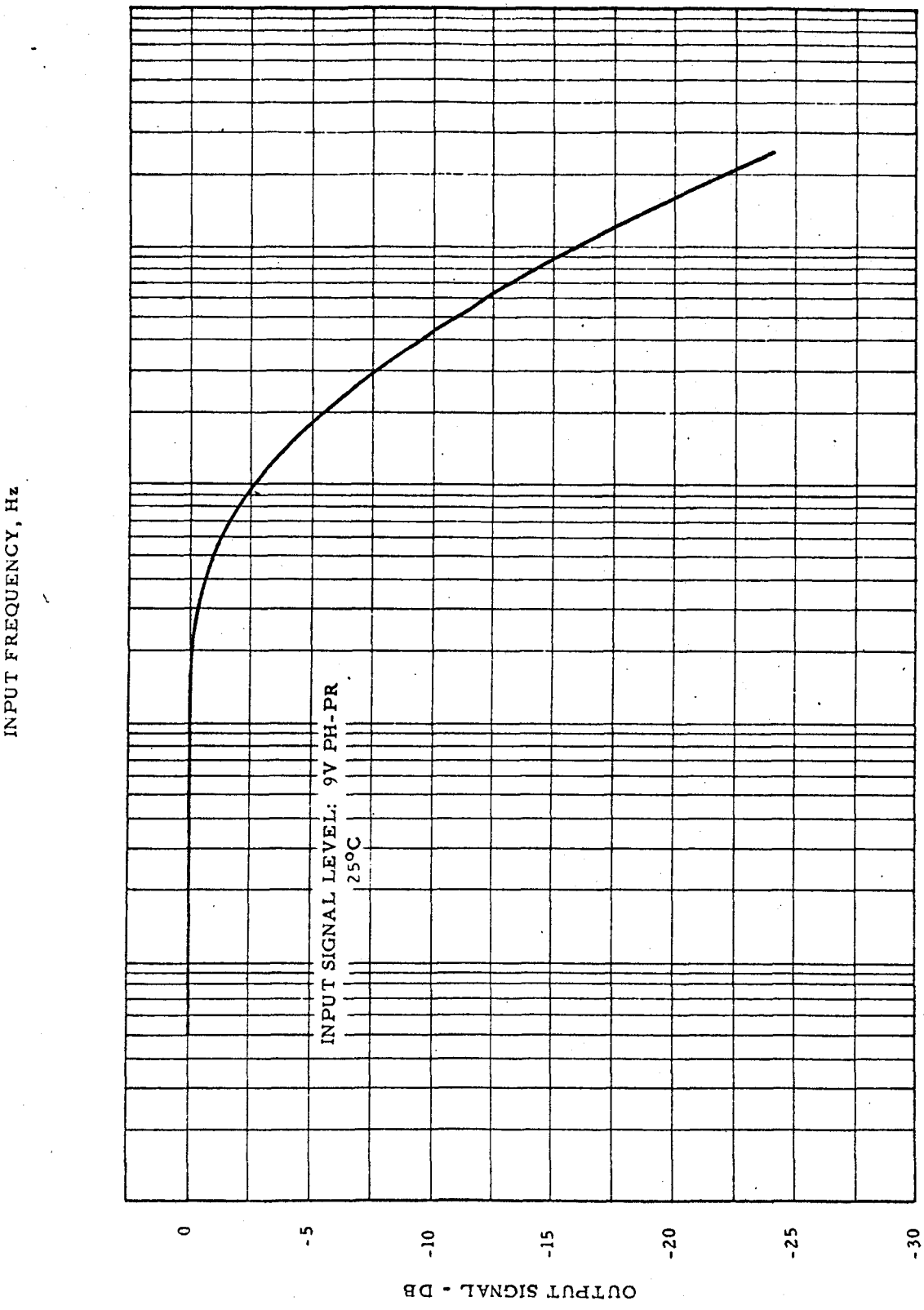

FIG 8. TYPICAL FREQUENCY RESPONSE CURVE

2.3 Transformer Redesign

Considerable difficulty was experienced in obtaining transformers for use in the power supply. Motorola maintains a Transformer Facility staffed with transformer specialists to service all Motorola projects. Early samples made by the group did not operate properly at high loads until the recommendation was made to use bifilar primary windings to increase coupling. Secondary turns were reduced from 375 to 345 as mentioned above to lower the supply output voltage. The turns on the feedback winding were also reduced from 18 to 10 to avoid excess pulses on the bases of oscillator transistors. Wire size was also increased to AWG40 from AWG42 for greater strength. Toward the end of the project, a sample was made with AWG38. Tests indicate that the device is satisfactory. It is suggested that future units be made in this way to further improve the durability of the part for the testing, processing and handling which it must endure. It is further suggested that simple carrier boards be made with terminal posts on a printed circuit card which can be plugged directly into a test socket for electrical tests and screening. The good transformers could then be stored on these carriers and cut off just prior to attachment to the thin film substrate. Such an approach will considerably reduce the breakage due to handling of the parts, which has been of serious proportions on the present contract.

It has been suggested that all discrete parts be mounted to a small printed circuit board as a separate subassembly. The suggestion was made near the end of the contract and has not been investigated. However, it is believed that the success of such an approach will be dependent upon a significant size reduction in the transformer.

An early evaluation of a transformer (NASA #C-456) made with a smaller core was performed. The part drew excessive currents, overheated, and was generally unsatisfactory. The size of the present toroid is not particularly restrictive except in height. A reduction in height of this part could be reflected directly in reduced height of the finished package.

The final transformer design is completely specified on Motorola drawing #24-22314F.

SECTION 3

3. PACKAGE DEVELOPMENT

3.1 Requirements

It was required to design a package for this circuit which would meet the following requirements:

1. Size: Maximum dimensions of .80 inches in length or width and .50 inches tall. Maximum volume, .32 cubic inches.
2. Pin Connections: All are to be on a common surface suited for mounting to a conventional printed circuit card.
3. Hermeticity: A maximum helium leak rate of 1×10^{-7} cc's per second.
4. Temperature Range: -55°C to +125+C operating.
5. Vibration: 50 G's peak, 200 to 2000 cps in all three planes.
6. Shock: 100 G's for 11 milliseconds in each plane.

3.2 Mockup

In order to fully visualize the assembly that would be needed here, a three dimensional mockup was made at 10:1 size. Substrates were made of plexiglass and discrete components made from balsa wood. With this model, proposed component packages could be easily tried for compatibility with the rest of the assembly.

It was quite obvious from the start that the complete circuit would not fit on a single substrate. A logical way to break the circuit up was to have an amplifier substrate and a power supply substrate.

Because of power considerations and size limitations, it was decided to place the power supply, the smaller of the two substrates, directly on the header and stack the amplifier above it with some form of a heat conductive support that would also tend to shield the amplifier from stray pickup from the 100 Kcps oscillator in the power supply. This support was originally intended to be a flat shelf of sheet metal placed on four rectangular

corner posts made of silver. The mockup reflected this design and was taken to Huntsville for a design review with NASA engineers as required by the contract. The evolution of this part following the design review will be covered in Paragraph 3.5.

3.3 Substrates

Substrate sizes were determined by various criteria. The power supply was chosen from standard sizes conviently available at low cost. Tooling was also available at Motorola for use in depositing films on that size substrate.

The amplifier substrate was chosen to be as large as possible and still fit within size limitations. The edges were notched for ease of assembly and to gain additional space for the metallizing to which the riser wires could be soldered. A disadvantage of this specification is that the notches made the part non-standard and more expensive, and delivery times longer. Another disadvantage was that tooling had to be designed and made for depositions to this size substrate. The substrates are completely specified on Motorola drawings #11-22310F01 and #11-22309F01.

3.4 Header

The header is a stamped and coined base specially designed for this assembly. The header is made from kovar to give reliable matching between the temperature coefficients of expansion for the glass and header materials. Pins are also kovar for the same reason and are made of standard transistor lead material. The pins are spaced on standard 0.10 inch centers to match common printed circuit spacings, and one pin was deleted to polarize the package against accidental incorrect insertion into the mating socket. During a vibration test, it became apparent that the pins alone were not sufficiently strong to hold the package securely during

such intense mechanical stress. The pins were clamped in the socket far enough below the surface of the header, that the length of pin between the clamped points and the header was free to oscillate, overstressing them to eventual failure. All pins were sheared off of serial number 5 in this manner at a level about even with the surface of the glass. It is interesting to note that before opening the package for inspection and salvage, the unit was found to exhibit no degradation in leak rate, in spite of the severe stress placed on the glass.

As a result of this problem, more complete studies were made of the mounting methods. Changing the size of the pins to .020 inch was evaluated as a correction. It was concluded that such a change would raise the resonance to about the 2000 cycle limit; however, stresses within the pin wires themselves would remain dangerously high. Therefore, it was concluded that an auxiliary hold-down technique such as studs was required. Two studs were selected rather than one to avoid rotational pressures on the pins, and they were located off center as an additional guard against incorrect insertion in the socket. The studs are spot welded and brazed for double strength.

Use of cold rolled steel as a header material instead of kovar was considered as a possible cost reduction. However, this would require an intentional mismatch between the expansion characteristics and a compression seal to the glass. Although the header vendor says this scheme is used by 90% of all relay manufacturers, it was not considered sufficiently well proven for an assembly of this size, nor would the cost savings be significant in relation to the total cost. If at some later time the risk can be shown to be nonexistent, the material change might be made on a cost reduction basis.

Earlier parts made to this drawing exhibited a tendency for the ground pin (pin 4) to fracture at the header surface. The possibility of using the hold down stud in place of this pin was briefly considered, but discarded for lack of a good method for making electrical corrections inside of the can as well as the added difficulty of wiring to the stud on a printed circuit board. Some experimenting by the header vendor indicated that the problem could be avoided by varying the brazing and annealing processes. This was done and the problem was solved.

Crazing of the glass bead was noticed by microscopic inspection on the last shipment of headers. Although this was objectionable, it was not clear how deep the crazing went, and it was possible to obtain good leak rates in spite of the crazing. An empty package was sealed up and leak tested, then subjected to a series of temperature shocks with leak tests repeated at various points during the shocks. These shocks constituted alternating the test package between a -55°C chamber and a +125°C chamber, approximately every 15 minutes. Results of the tests are shown in Figure 9. The cause of the crazing is not definitely known; however, no future parts will be accepted if they exhibit this crazing.

3.5 Shelf

Early configurations for this support shelf for the amplifier substrate have been mentioned in paragraph 3.2 above. Following the design review, the shelf was redesigned to be a one-piece, four-legged item, with the four legs bowed slightly to make spring contact to the sides of the cover for better heat transfer and mechanical rigidity. Original designs calling for this shelf to be screwed to the header were dropped. The header was difficult to tap for such small threads, and screws were not needed, as it was found that the solder used to seal the cover would also fasten the shelf to the header.

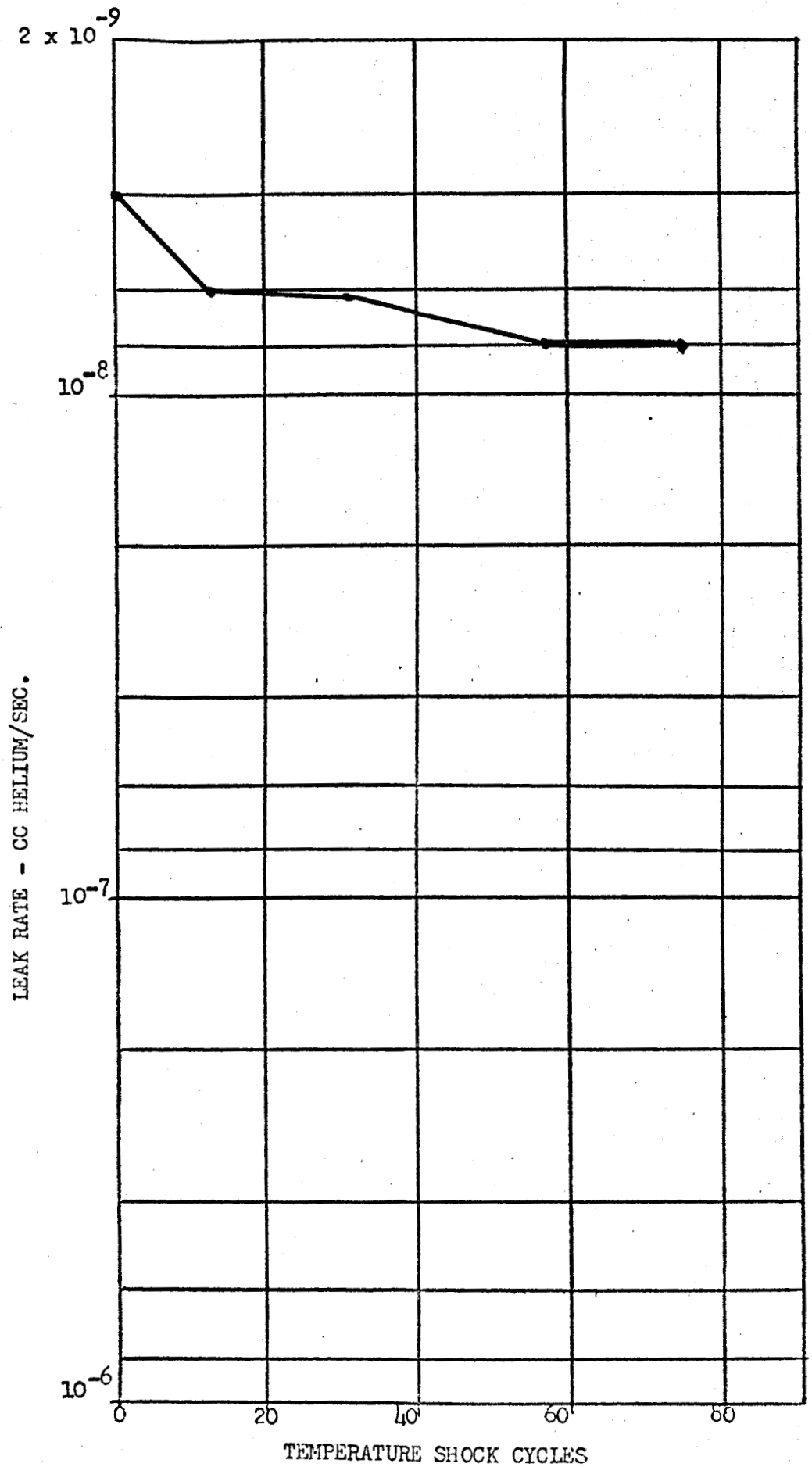

Figure 9. Temperature Shock Effects on Leak Rate

When problems arose with the ground pin on the header (paragraph 3.4 above), it was decided to design a ground lug on this shelf so that the ground pin could be glassed-in if necessary and grounded to the package by the lug. The header problem was solved, and the lug did not turn out to be necessary; however, had it turned out to be necessary, a long reorder delay would have been avoided. Future purchases may be made without the lug, or it may be simply broken off.

3.6 Cover

The cover for this package is drawn and sheared to match the header, and was also specially designed for this package. Corner radii required to make good use of the space inside were very tight, and the vendor was reluctant to attempt such a draw with kovar. Prototypes were made from brass for this reason. The different temperature coefficients of expansion for these two metals were thought to be a factor in problems that arose in getting good solder seals between these parts. The vendor was pressed to develop the ability to draw corners as tightly as required, which he did. Pilot production models were all assembled with covers drawn from kovar.

Clearances between the riser wires to the amplifier substrate and the walls of the cover were extremely tight, and shorts were encountered. The two walls adjacent to the risers and the top of the cover were coated with a high-temperature, high-voltage dielectric material called "H-film" for relief from these shorts, but the clearance was so tight that the wiring joints on the risers would abrade this film during vibration and puncture it. Relief in the width dimension (only) was requested from NASA and received. Both cover and header were redesigned for a width of .83". H-film is probably no longer necessary in the expanded cover; however, it is quite inexpensive and has been retained for additional insurance against shorts.

3.7 Ruggedizing Materials

Frequently assemblies of this sort are completely filled with potting material. To do so with this assembly would be somewhat difficult because of its double-deck nature. An even greater drawback was the fact that this potting would virtually make a throw-away unit out of what is otherwise a repairable unit. However, the discrete components needed some extra support to augment their fine and fragile leads, particularly the large 1 μf capacitor (C7) on the amplifier substrate which must be cantilever mounted. These parts were given a heavy conformal coating of a semi-rigid ruggedizing material designed to hold only these discrete parts in place and without exerting stresses upon adjacent thin film patterns. Difficulty was experienced in several of the early units with C7 tearing loose in vibration until the cure cycle for the material was properly adjusted.

Tape, commonly used as a binder for transformers, causes a special problem when used in conjunction with hybrid circuits. After soldering the transformer wires to the substrate, chemicals ordinarily used to remove flux residues also attack the adhesive on the tape and cause it to go into a temporary suspension, then settle out elsewhere on the assembly. If this happens to be on top of a semiconductor chip, as it frequently is, damage to the device is likely to occur. In any event, the residue remains tacky and attracts dirt and other contaminants. For that reason, tape was eliminated, and a ruggedizing coating used which would be compatible with later cleaning processes.

Open simiconductor devices tend to collect surface contamination which eventually causes device failure if left exposed, even in clean room atmospheres, for extended periods of time. To avoid the occurrence of this, all open die were given a coating of varnish, thin enough to permit repairs should they become necessary.

3.8 Thermal Analysis

A preliminary thermal analysis was prepared for this package by thermal experts from Motorola's Mechanical Engineering Laboratory. This group functions as a staff of experts in thermal analysis and furnishes a consulting service to other departments or projects as required. The preliminary analysis was based on tentative layouts of the substrate assemblies, preliminary concepts of the mechanical design, and known electrical characteristics of the circuit and thermal properties of materials to be used.[4] This report showed the major contributors to internal heat dissipation would have probable temperature rises of 8°C or less with respect to the header. All parts would remain below the 10°C temperature rise set as a target maximum by the project.

Further analysis was done using a digital computer program which had been developed and tested by Motorola's Mechanical Engineering Laboratory on contract N62269-2393 for the U. S. Naval Air Development Center (Warminster, Pa).[5] The approach used by this analysis involves four steps as follows:

1. Divide the entire package into small cubes or nodes;
2. Determine the power dissipated in each node;
3. Determine thermal transfer coefficients of the materials within the nodes;
4. Feed the data to the digital computer for analysis with the special program.

A Scientific Data Systems Model 930 computer installation is maintained and operated full time for the exclusive use of Aerospace Center engineering projects. The nodal breakdown used for this analysis is shown in Figure 10. Data from analyses was used as a guide in the design of the final layouts made for both substrates and the final design of the support shelf for the amplifier. These designs were in turn used to compute a final thermal analysis of the package. Power dissipations for each node were recalculated and nodal breakdown remained the same as that shown in Figure 10.

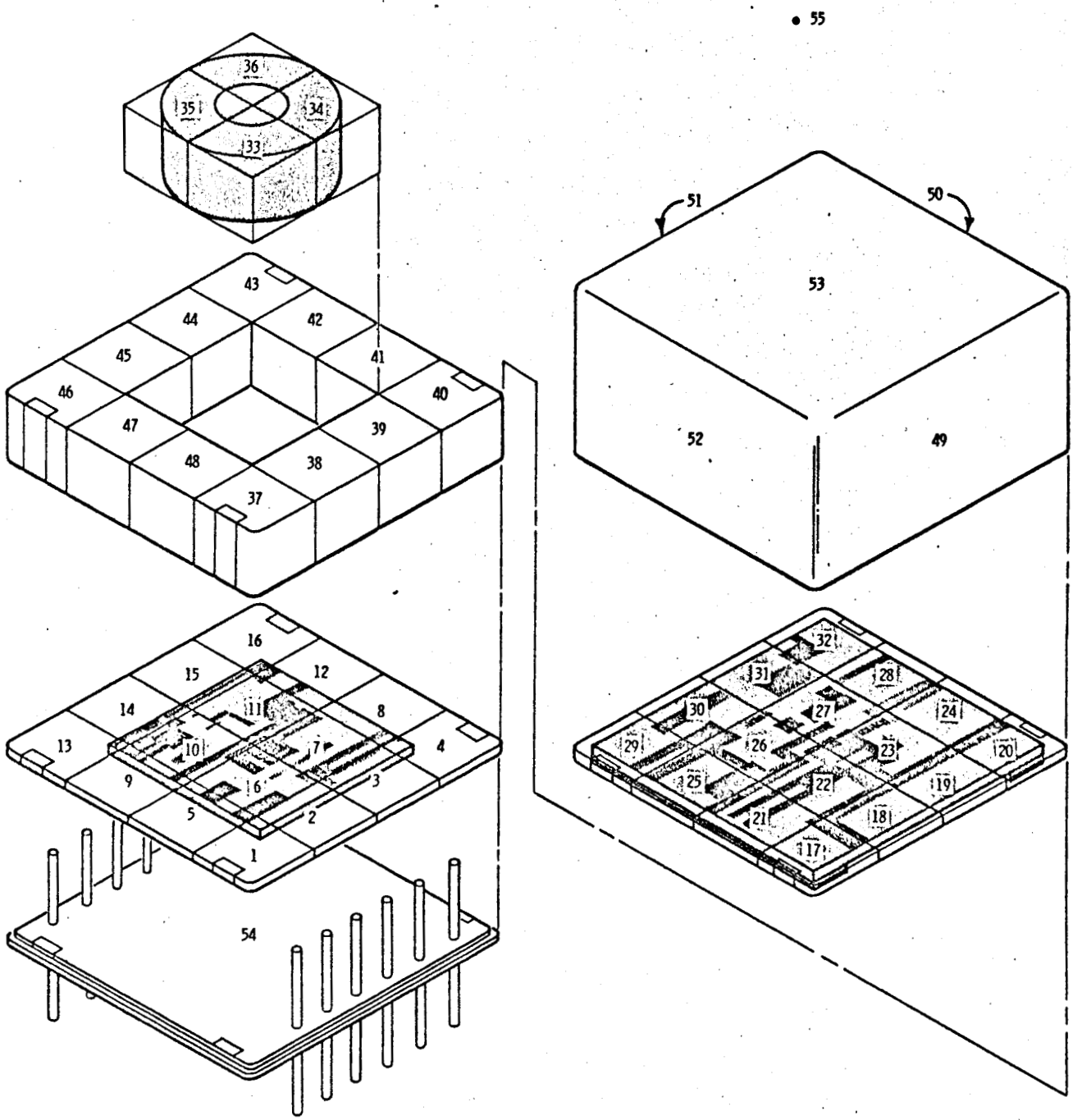

Figure 10. Nodal Breakdown of Hybrid DC Amplifier

Table III contains the final estimated temperature rise of all nodes over the presumed heat sink base, node 54. Node 55, the ambient, was assumed to be at the same temperature as node 54. This analysis indicated that the gradients on the top wafer may be expected to be less than 1°C with a maximum temperature rise of 6°C over the header. The power supply substrate, due to its high concentration of power in one node (node 5), displayed a gradient of 3.3°C with a maximum temperature rise of 3.5°C. All component temperatures were found to fall below the maximum predicted values.[6]

Some assumptions on which this analysis was based will be listed here:

1. The twenty mil alumina amplifier substrate was assumed to be bonded by a two mil thick film of epoxy to a ten mil thick beryllium copper substrate support shelf.

2. The power supply substrate was also assumed to be bonded to the header with a two mil epoxy film.

3. The substrate support shelf was to be attached to the base in four places by screws with sufficient pressure to provide a 2 watt/°C-Sq. In.) contact conductance. (These screws were later replaced by solder.)

It should be noted that the node temperatures represent the attachment points for chips. It is to be expected that die bond resistance will increase the actual junction temperature. These temperature rises are a function of the die size and bonding techniques. Because of the lack of definitive information on bond resistances available at the time, some empirical data for the thermal resistance of the proposed soft solder die bonds were needed. To obtain this information, the Integral Circuit Facility prepared five samples to be tested by the thermo group of the Mechanical Engineering Laboratory. The samples consisted of 0.5 x 0.5 x 0.025 inch alumina wafers with 25 mil triangular silicon transistor chips bonded to thin film gold bonding pads.

TABLE III. COMPUTED TEMPERATURE RISE - °C

NODES	INPUT SUPPLY VOLTAGE				
	22V	28V		32V	
	NO LOAD	NO LOAD	FULL LOAD	NO LOAD	FULL LOAD
1	0.5	0.6	1.1	0.8	1.4
2	0.1	0.2	0.2	0.2	0.3
3	0.2	0.2	0.2	0.2	0.3
4	0.3	0.3	0.5	0.4	0.5
5	0.3	0.8	2.3	1.1	3.5
6	0.2	0.3	0.5	0.4	0.7
7	0.3	0.4	0.5	0.5	0.6
8	0.2	0.2	0.4	0.3	0.4
9	0.2	0.3	0.7	0.3	0.8
10	0.2	0.3	0.4	0.4	0.5
11	0.3	0.3	0.5	0.4	0.5
12	0.3	0.5	0.6	0.6	0.6
13	0.7	0.8	1.6	1.0	1.8
14	0.1	0.1	0.2	0.2	0.3
15	0.1	0.1	0.2	0.2	0.2
16	0.3	0.3	0.5	0.4	0.5
17	2.7	3.1	4.7	3.5	5.3
18	2.7	3.2	4.8	3.6	5.4
19	2.7	3.2	4.7	3.6	5.3
20	2.7	3.1	4.6	3.5	5.1
21	2.8	3.3	5.0	3.7	5.6
22	2.8	3.3	4.9	3.7	5.5
23	2.8	3.3	4.8	3.7	5.4
24	2.8	3.2	4.7	3.6	5.3
25	3.0	3.4	5.4	3.8	6.0
26	3.0	3.5	5.2	3.9	5.8
27	3.0	3.4	5.0	3.8	5.6
28	2.9	3.4	4.9	3.7	5.4
29	3.0	3.5	5.2	3.9	5.8
30	3.0	3.5	5.2	3.9	5.7
31	3.1	3.5	5.1	4.0	5.7
32	2.9	3.4	4.9	3.7	5.4
33	2.1	2.8	4.1	3.5	5.0

TABLE III. COMPUTED TEMPERATURE RISE - °C
(Cont)

NODES	INPUT SUPPLY VOLTAGE				
	22V	28V		32V	
	NO LOAD	NO LOAD	FULL LOAD	NO LOAD	FULL LOAD
34	2.1	2.9	4.1	3.5	5.0
35	2.0	2.8	4.0	3.4	4.9
36	2.1	2.9	4.1	3.6	5.1
37	0.7	0.9	1.6	1.1	1.9
38	1.4	1.8	2.6	2.1	3.1
39	1.4	1.8	2.5	2.1	3.0
40	0.5	0.5	0.8	0.6	0.9
41	0.6	0.7	1.0	0.7	1.1
42	1.5	1.9	2.7	2.2	3.1
43	0.4	0.5	0.7	0.6	0.8
44	1.4	1.8	2.6	2.2	3.1
45	1.4	1.8	2.6	2.1	3.1
46	1.0	1.2	2.1	1.5	2.4
47	2.0	2.7	3.9	3.3	4.8
48	1.4	1.8	2.8	2.2	3.4
49	0.2	0.2	0.3	0.2	0.4
50	0.2	0.2	0.3	0.2	0.4
51	0.2	0.2	0.3	0.3	0.4
52	0.2	0.2	0.3	0.3	0.4
53	1.2	1.4	2.6	1.5	2.3
54	0.0	0.0	0.0	0.0	0.0
55	0.0	0.0	0.0	0.0	0.0
Dissipated Power (W)	0.273	0.372	0.656	0.459	0.826

Test results obtained by the ΔV_{BE} method, at approximately a 170 MW level, indicated a junction-to-wafer resistance of 210°C/W ± 15%. By correlating the data on a per unit area basis, a thermal transmittance of 17 W/°C-Sq. In. was obtained. Translating this into an expected junction-to-wafer resistance for a 25 mil square transistor chip, a thermal resistance of 94°C/W should be expected.

It should be noted that the measured tin-lead eutectic solder resistance (17W/°C-Sq. In.) was not as poor as had been anticipated. Data taken at about the same time tends to support a comparable value (20 W/°C-Sq. In.) for the gold germanium eutectic solder. This information along with the computer results was used to choose final component locations.

The results of the thermal analysis effort indicated that the thermal design would be satisfactory.

3.9 Final Mechanical Specifications

Results and measurements taken from finished units are for a size of .80 x .83 x .47 inch tall and volume of .32 cubic inches. Hermeticity of 10^{-7} to 10^{-9} cubic centimeters per second helium leak rate was achieved. Weight of a finished unit is typically 12.2 grams. Part densities achieved are 302,000 parts per cubic foot for the power supply, 659,000 parts per cubic foot for the amplifier alone, and 460,000 parts per cubic foot for the overall assembly.

3.10 Destruction Test

Information was desired as to the limiting mechanical strength of the units made under this contract. This was to be obtained by applying mechanical stresses of gradually increasing severity to an operating unit, while watching for a failure. It was agreed to begin with sinusoidal vibration up to the limit of available vibration tables (80 G's) and to

continue thereafter with shock tests until failure. Shock test levels were selected to roughly correspond in amplitude to 100, 150 and 200 G sinusoidal tests.

Serial number 26 was selected for these tests after completing all ordinary check out tests and the ten day room temperature burn-in. To verify that the unit initially met standard specifications, the unit was given a 50 G vibration test (200 to 2000 cps and return in a 15-minute cycle) in the worst (vertical) plane.

The unit operated successfully throughout. The unit was then given cycles at 40, 60, and 80 G from 200 to 2000 cps and return at .5 octave per minute. The unit was operating throughout, and the tests were performed for one cycle in each plane. During the first cycle at 80 G's (performed in the plane parallel to the header and parallel to the planes of the riser wires) a shift in offset voltage from 8 millivolts was noted. This seemed to be a non-catastrophic type failure which would be extremely difficult to locate and diagnose. Thus, the decision was made to continue testing until the failure became more pronounced. All three planes were completed at 80 G's, with no other change noted. Shock tests were performed at levels of 84, 125, 167 and 210 G's in a half sine wave of 5 ± 1 millisecond duration, in all three planes with the unit operating. Again, no changes were detected. At this time, the limit of the drop table began to be a factor requiring reduced durations to avoid over-stressing the equipment. Drops of 280 G's for 3 milliseconds were made in all three planes, without effect on the unit. The cable attached to the fixture was damaged, however, to the extent that it was no longer practical to move the unit from one plane to another. The unit was therefore placed in its vertical position for maximum effect, and given two drops at 750 G's of two millisecond duration, 3 drops at 650 G's and 750 G's,

plus 1 drop each at 800 G's and 900 G's and 2 drops at 1000 G's for 1 millisecond duration. The last two drops exhibited a very noisy waveform to further increase the severity. Figure 11 shows the accellerometer output displayed on a calibrated oscilloscope with CRT storage. Note the magnitude and duration of the noise following the main shock. No damage was done to the unit, and no further changes were observed in its operation. No change in the power supply was observable at any time.

The unit was removed from its can and photographed (See Figure 12.) Two potential short circuits can be seen in the leads from Q9-Q10; however, moving these leads had no effect on the operation of the unit. Semiconductors were checked on a curve tracer and found to be good. After opening the unit, it exhibited a still higher offset, 150 mv. Input current remained at 17 ma as it was prior to the destruction test.

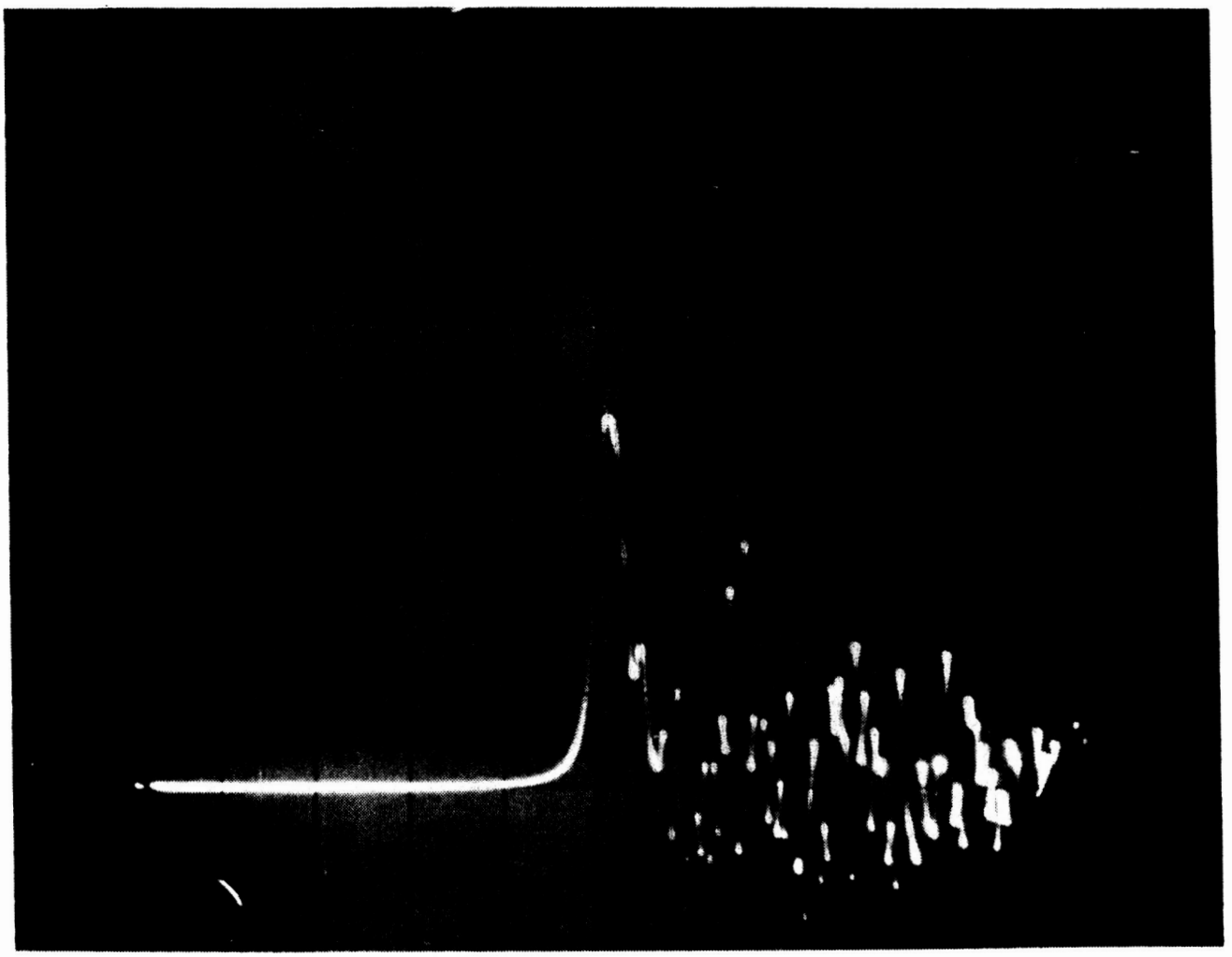

Scope Settings Vertical: $\frac{500 \text{ mv}}{\text{cm}} \times \frac{2500 \text{ mv}}{5000 \text{ G}} = 250 \frac{\text{G}}{\text{cm}}$

Horizontal: 1m sec/cm.

Figure 11. 1000G Drop Test Waveform

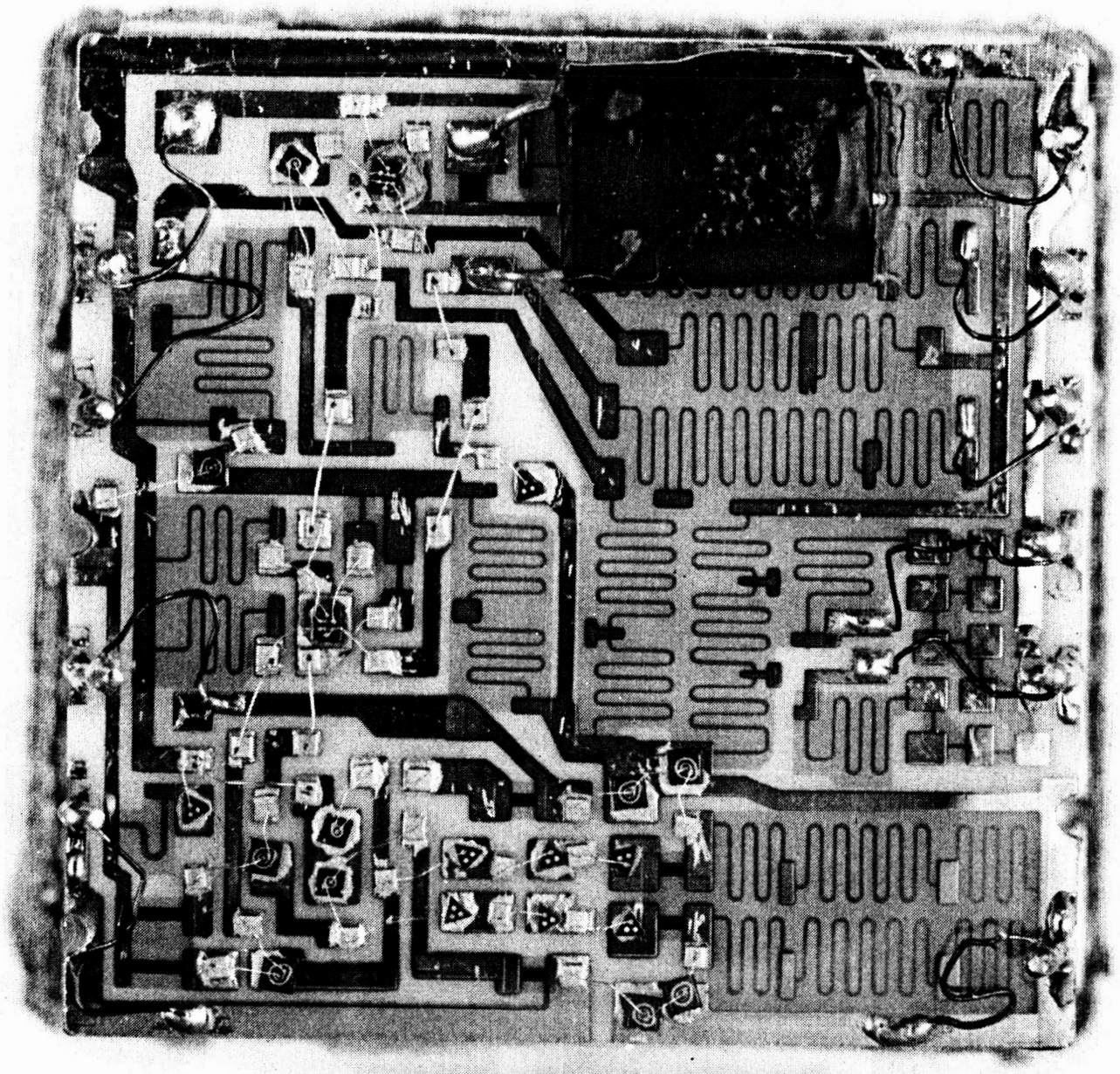

026

Figure 12. Destruction Test Amplifier Substrate

SECTION 4

4. ARTWORK AND LAYOUTS

Both substrates were laid out at ten times size to rough approximations for a preliminary solution. These layouts were used for various purposes, including a verification of the adequacy of substrate size selections, parts placement for assembly of the mockup, and calculations for use in the preliminary thermal analysis. Substrate sizes were adequate, but the thermal analysis mentioned above produced information for desirable changes. A second layout was then made at ten times size incorporating these modifications. Final designs included resistors which were 3 to 10 mils wide, and 400 Ω per square for both substrates. In addition, the amplifier substrate contains low value resistors to be made at 50 Ω per square. One low value resistor on the power supply substrate is best made with a silicon resistor chip to be die bonded to the substrate in order to eliminate a separate deposition.

Tape layouts were made at forty times size as a standard procedure, and photographically reduced to a multiple positive from which the aperture masks can be made. It was also required to make special tooling to hold the amplifier substrates and masks in close relationship to each other. Tolerances to ± .001 inch are held between adjacent depositions. The layout of the power supply is shown in Figure 13, and the amplifier substrate layout is shown in Figure 14. Drawings showing various stages of assembly of both substrates are shown in Figures 15, 16 and 17.

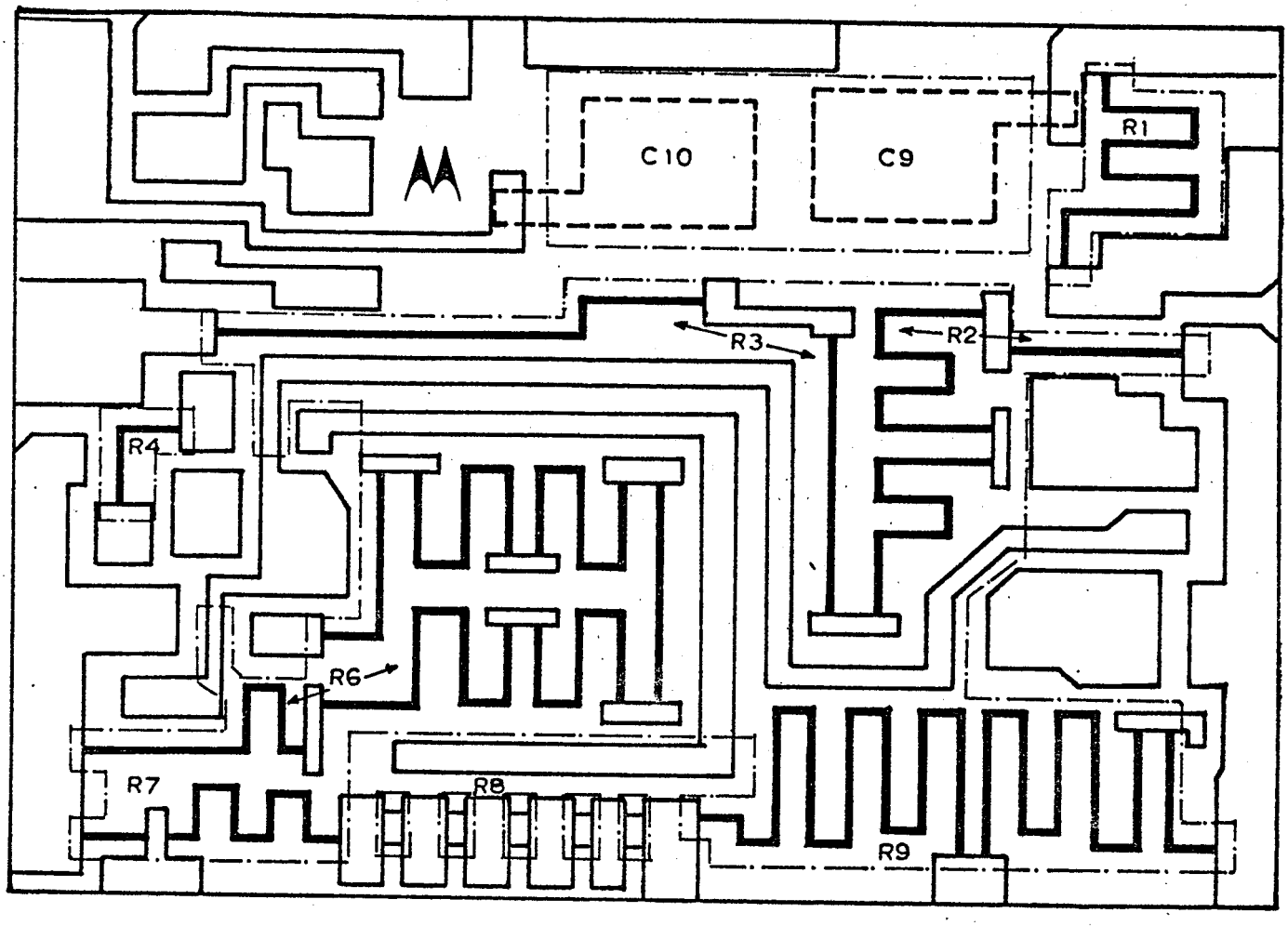

Figure 13. Power Supply Substrate Layout

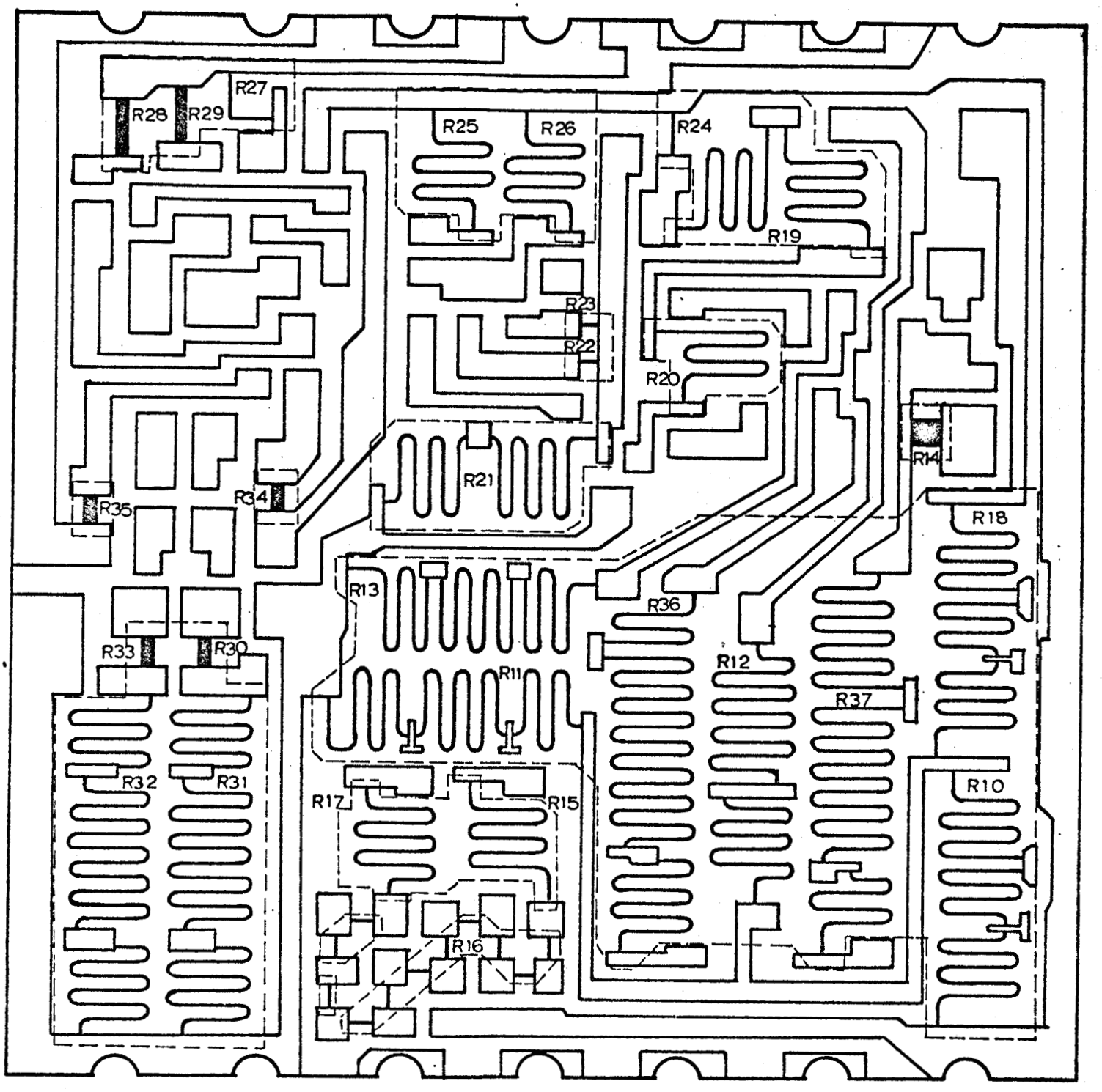

Figure 14. Amplifier Substrate Layout

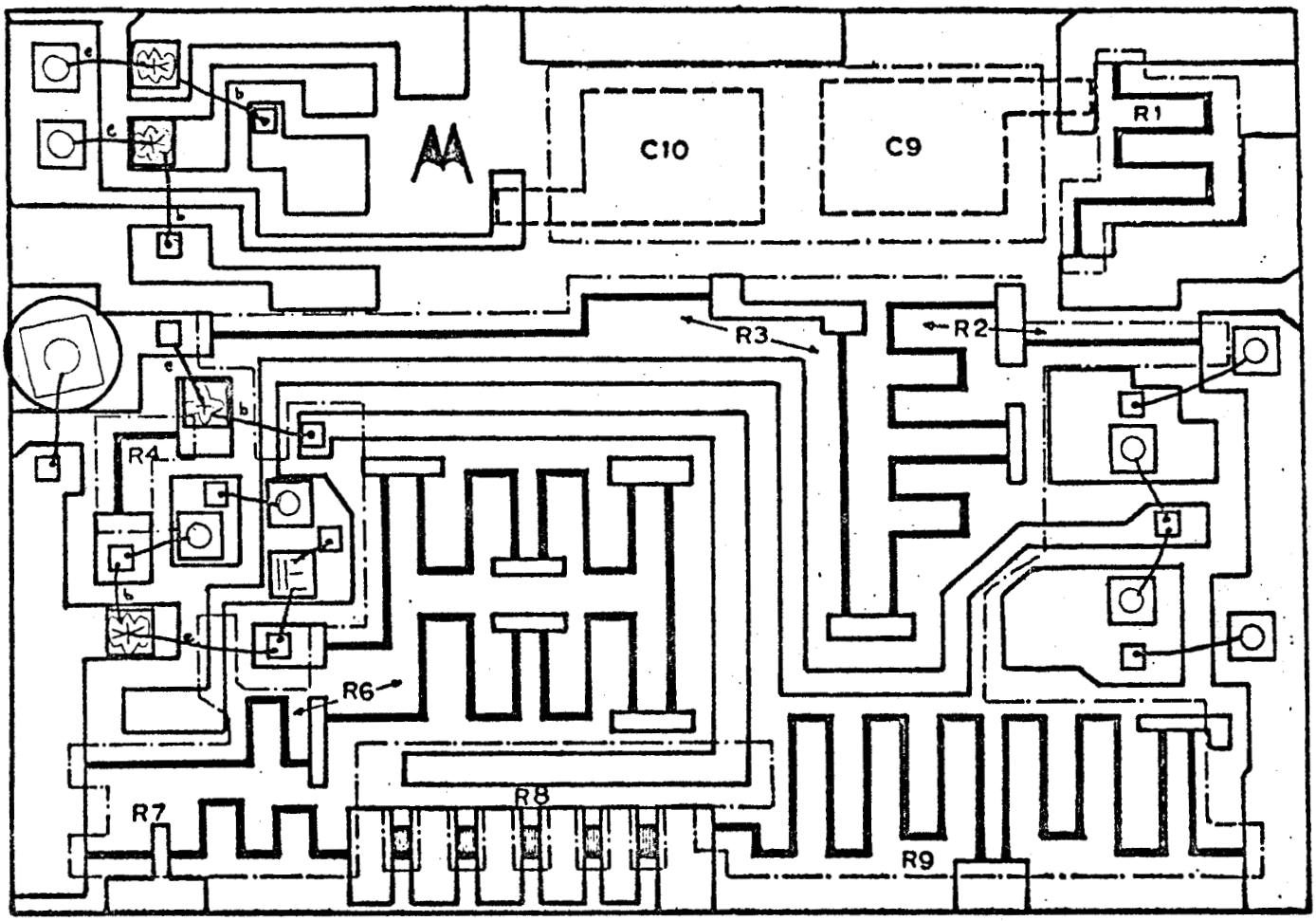

Q1, Q2, Q4

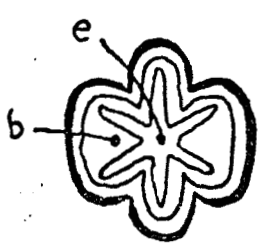

Q3



CR1,2

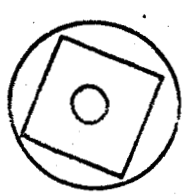

R5

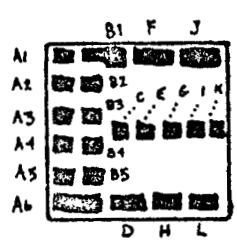

Figure 15. Power Supply Semiconductor Assembly

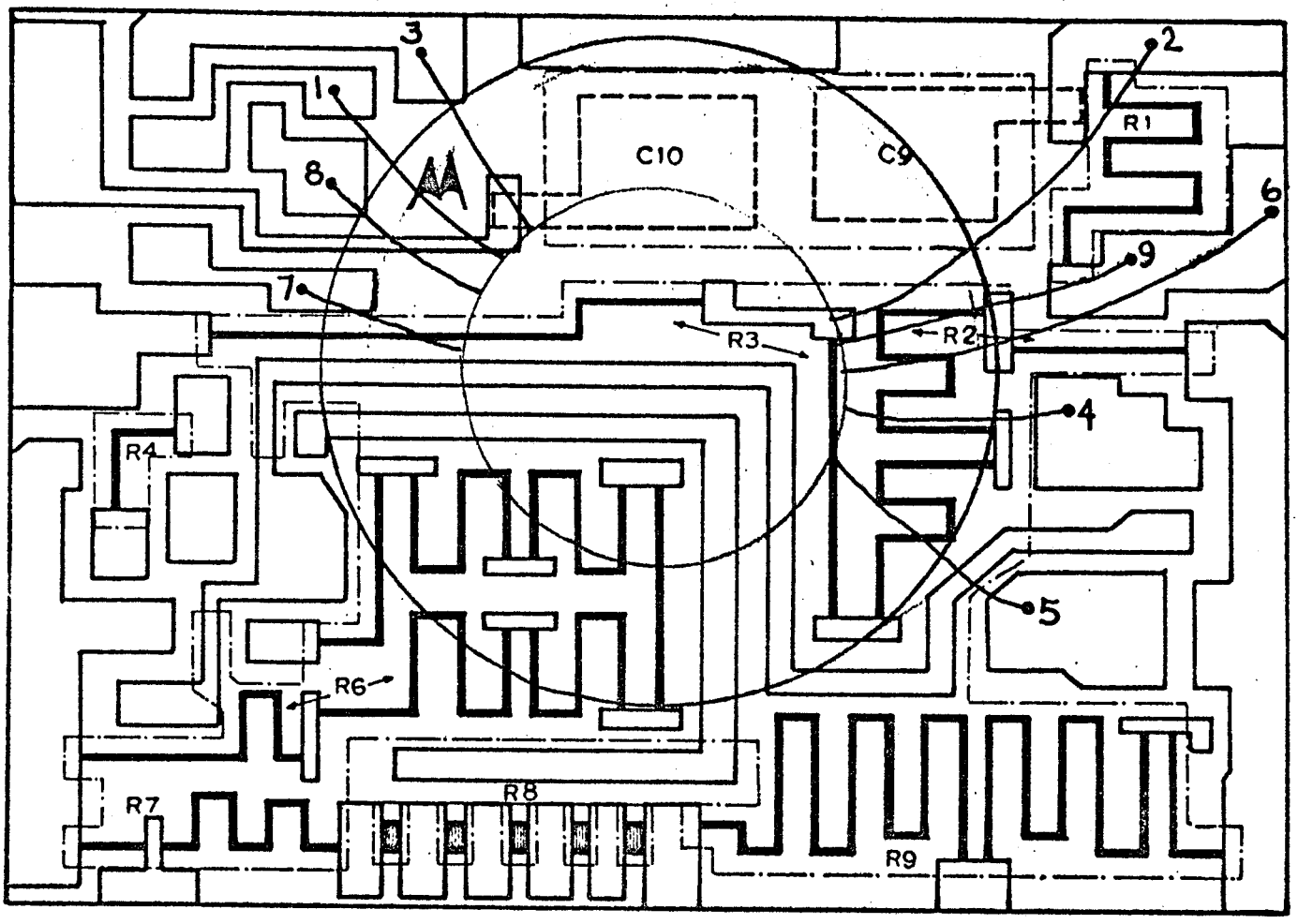

Figure 16. Power Supply Toroid Assembly

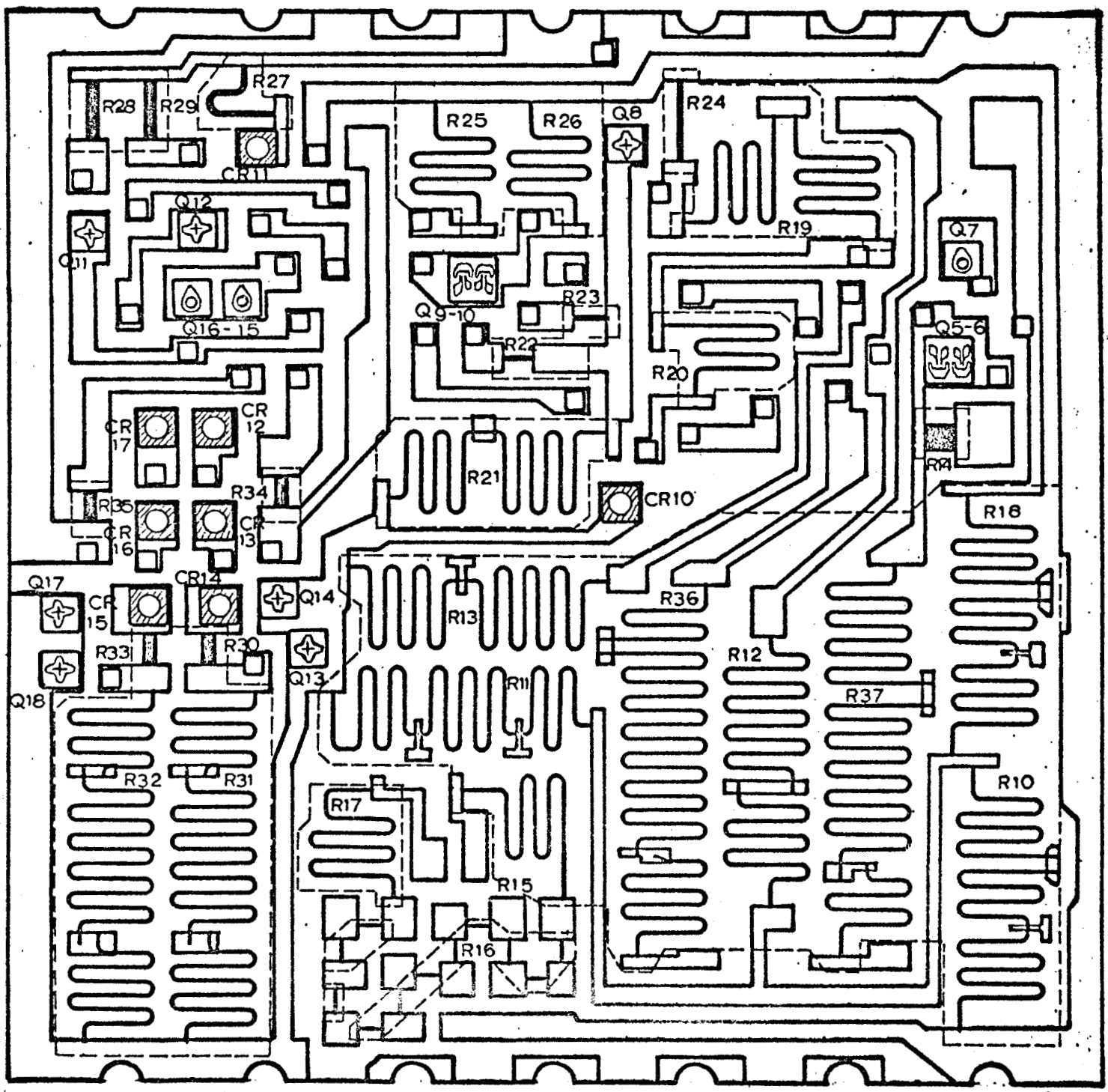

Figure 17. Amplifier Substrate Semiconductor Assembly

SECTION 5

5. THIN FILMS

5.1 Resistor Deposition

All film resistors used in this design are made from nickel-chrome film. Both substrates use a sheet resistance of 400 Ω per square, and the amplifier uses an additional film of 50 Ω per square for low value resistors. These resistors have the following reliability characteristics:

A. Value unchanged by soldering in proximity.

B. Variations in values average + .1% for a 2000-hour life. test at full load. Maximum observed change in 2000 hours has been + .7% for full loading, + .16% for 20% loading and + .64% for 200% loading. This information was obtained from tests made on 36 resistors, each operated for 2712 hours for a total of over 97,000 component hours.[7]

5.2 Conductors

All conductors for both substrates are vacuum deposited in the form of a chromium and gold film. Typical sheet resistance for this film is .1 Ω per square. For the amplifier substrate, two separate depositions are required in order to keep the apertures to an acceptable number and give adequate strength to the masks.

5.3 Dielectric

A vacuum deposit of silicon monoxide or silicon dioxide is used to encapsulate the thin film resistors. This provides environmental stability as well as abrasion and scuffing protection during assembly and testing.

5.4 Resistor Trimming

Resistors are adjusted in both absolute value and in temperature coefficient as required to achieve necessary accuracy. This is done by a special thermoelectric process developed at Motorola Aerospace Center. Resistors are adjusted to the requirements shown in Tables IV and V for the power supply and amplifier respectively.

TABLE IV

POWER SUPPLY SUBSTRATE SPECIFICATIONS

COMPONENT	NOMINAL	TOLERANCE (±%)
R1	25K	30
R2	45K	20
R3	35K	20
R4	5.7K	20
R5c	15Ω	20
R6	100K	20
R7	15.2K	20
R8	1K	20
R9	83K	20
$\frac{R9}{R7}$	Ratio 5.35 to 5.57	--

TABLE V

AMPLIFIER SUBSTRATE SPECIFICATIONS

COMPONENT	VALUE Ω	TOLERANCE	T.C (PPM/°C)	GROUP	TOLERANCE	D.C (PPM/°C)
R10	100K	30	--	A	2	--
R11	100K	30	--	A	2	--
R12	100K	20	100	B	.1	5
R13	100K	10	200	--	--	--
R14	50	20	100	--	--	--
R15	40K	20	100	D	1.	12
R16	22K	20	100	D	--	12
R17	40K	20	100	D	1.	12
R18	100K	20	100	B	.1	5
R19	80K	10	200	C	1.	50
R20	33K	10	200	C	1.	50
R21	80K	20	200	--	--	--
R22	1.5K	10	100	E	1.	--
R23	1.5K	10	100	E	1.	--
R24	4K	10	200	C	1.	50
R25	36K	20	200	F	2.	25
R26	36 K	20	200	F	2.	25
R27	6.8K	10	100	G	1.	50
R28	200	20	200	H	2.	50
R29	200	20	200	H	2.	50
R30	100	10	100	J	2.	25
R31	140K	10	100	G	1.	25
R32	140K	10	100	G	1.	25
R33	100	10	100	J	2.	25
R34	100	10	100	J	2.	25
R35	100	10	100	J	2.	25
R36	160K	20	100	K	1.	12
R37	160K	20	100	K	1.	12

SECTION 6

6. ASSEMBLY

6.1 Die Bonds

Normally, die bonds in the semiconductor industry are made using a special solder made of a gold-germanium eutectic alloy, which melts at 420°C. These temperatures would not permit the maintenance of the precise resistor values required. This led to the use of a low temperature tin-lead eutectic solder for which process and material specifications had been developed at Motorola prior to the award of this contract.

6.2 Wire Bonds

Thermal compression wire bonds have been in common usage throughout the semiconductor industry for some time. However, the temperatures required here exceed those which eutectic tin-lead die bonds can safely withstand. For this reason, ultrasonic wire bonds were proposed for use in this assembly. Wire to be used is .001 inch diameter aluminum.

Although Motorola had studied and used this bonding technique at various times, various problems did arise during the course of the project. To assure good wire bonds, two test steps were initiated. One of these required that sample wire bonds be pulled to destruction twice each day. If, at any time, these bonds did not exhibit required strengths of 3 grams minimum, the machine was removed from production and repaired. All work done since the previous pull test was re-evaluated. The other check initiated was a centrifuge test, discussed below.

6.3 Centrifuge

Each substrate was subjected to a centrifuge test as a qualitative test on die and wire bonds. Normally, tests are run at 20,000 G's for one minute; however, this had to be reduced to 14,000 G's to prevent minor

warpage of the substrates from causing destruction of otherwise useable assemblies during this test.

6.4 External Connections

Wires from the substrate to the riser wires have to date been made entirely of .005 inch copper wire soldered at both ends. Processes have been prepared to replace this with a kovar wire which can be welded to the risers in future assemblies. Sample welds have been made, sectioned, and analyzed to prove the integrity of the process. These wires would still be soldered to the substrate, however, until such time as parallel gap welds to thin films can be reliably performed.

At the time of this soldering, discrete components such as transformers and capacitors are also attached using solder. The result is an assembly which is electrically testable as a power supply or an amplifier at this point.

6.5 Assembly

Electrically tested power supplies are attached to headers. Figure 18 is a photograph of a typical power supply in this stage of assembly. The unconnected wire in one corner of the substrate is intended to be connected to a discrete capacitor in later assembly. Figure 19 is a drawing of the complete power supply assembly. The power supply capacitors and two amplifier capacitors, C6 and C8, are attached to the risers at this point for assembly convenience. Figure 20 is a photograph of a typical unit in this stage of completion.

Following another electrical and thermal test, a completed amplifier is mounted above the power supply assembly. Figures 21 and 22 show a drawing and photograph of a typical unit in this stage.

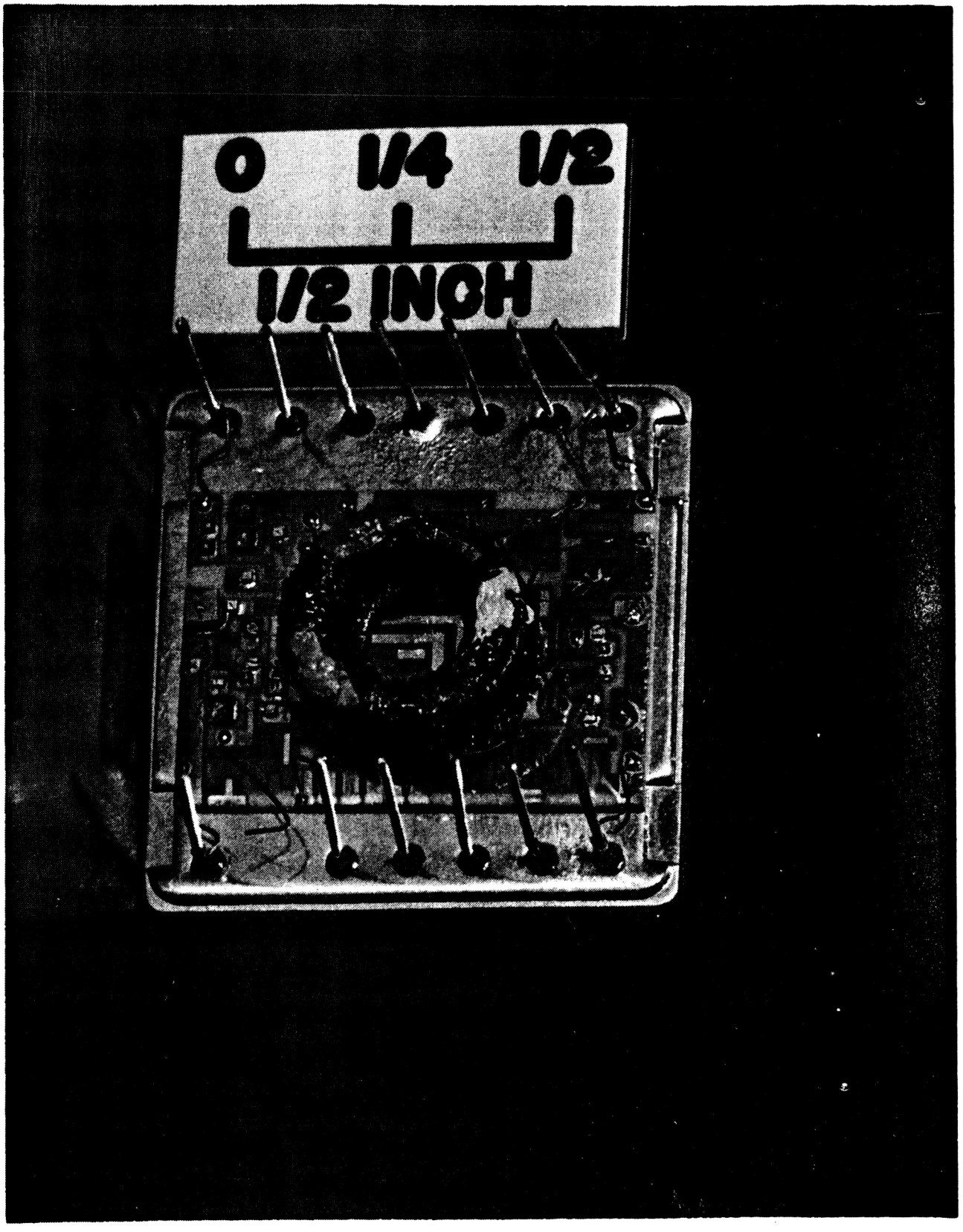

Figure 18. First Header Assembly

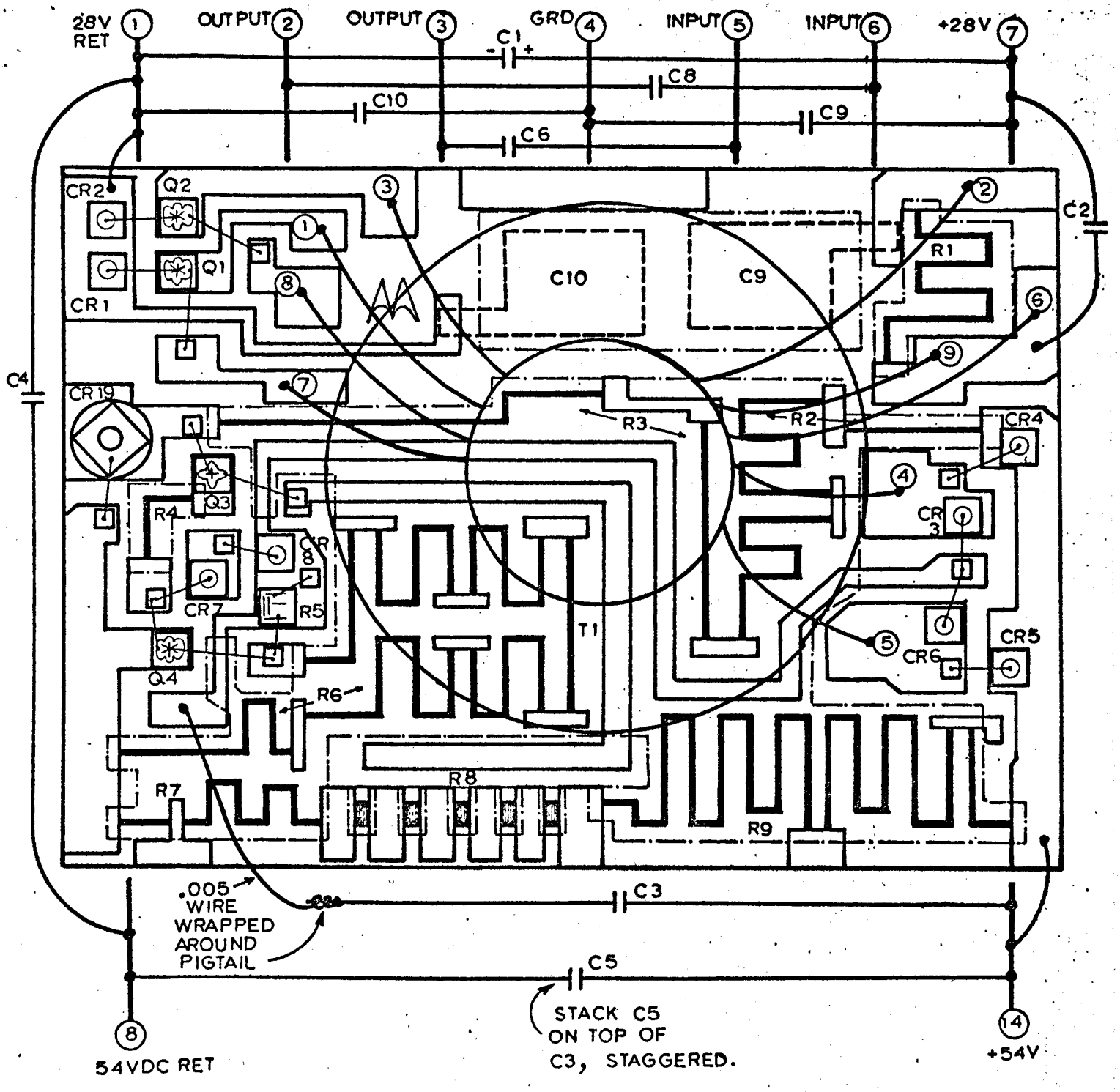

Figure 19. Power Supply Assembly Drawing

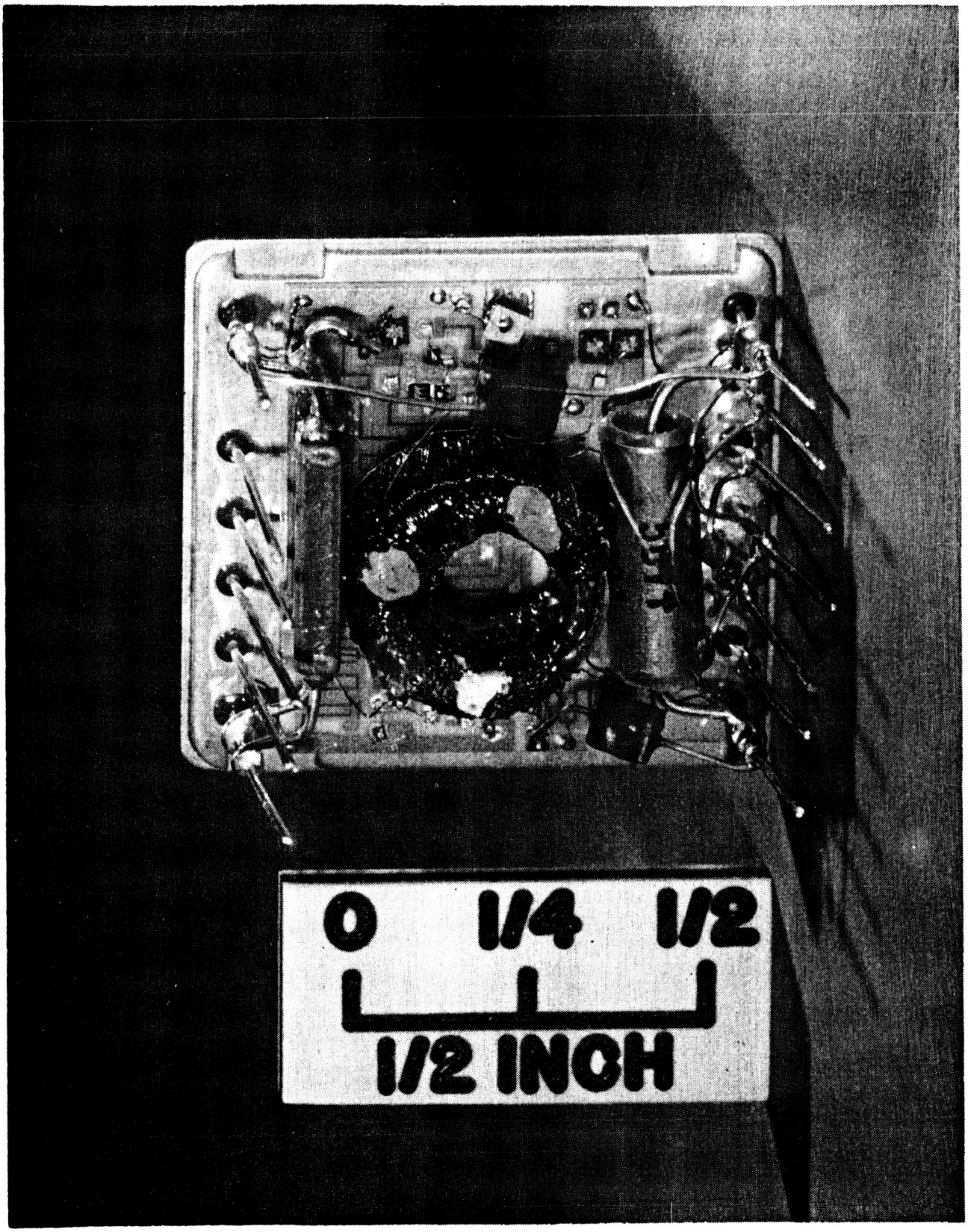

Figure 20. Power Supply Assembly

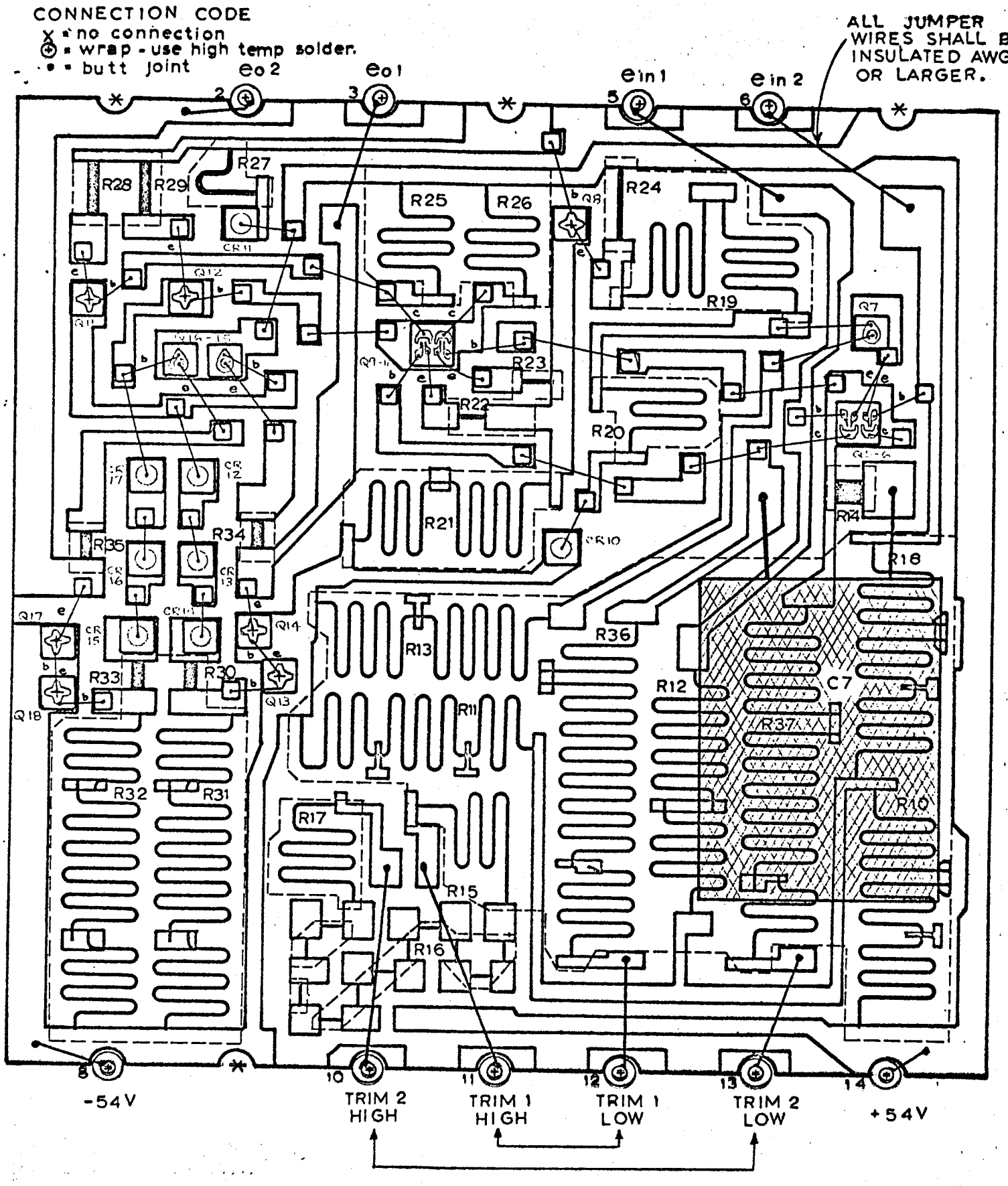

Figure 21. Amplifier Assembly

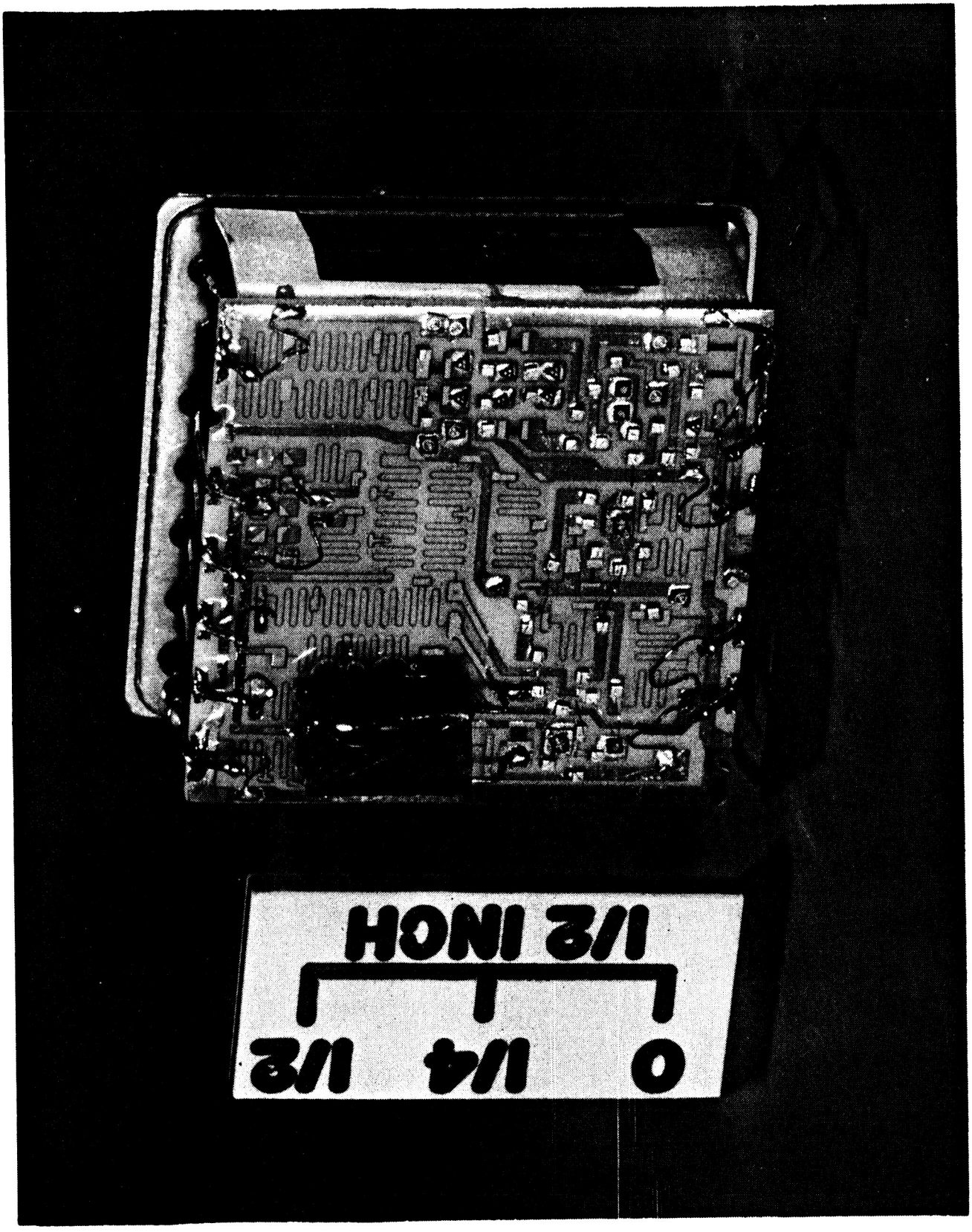

Figure 22. Complete Assembly

6.6 Sealing

Following another electrical and thermal test, the unit is sealed using a special process developed at Motorola and refined for this project. Flux is painted on and solder is applied by means of a preform. Figure 23 shows a completed unit. A small hole in one corner of the cover permits the sealing to be completed in room atmospheres. Following that, the unit can be evacuated and back-filled with dry nitrogen, and the vent hole then sealed off in a nitrogen atmosphere.

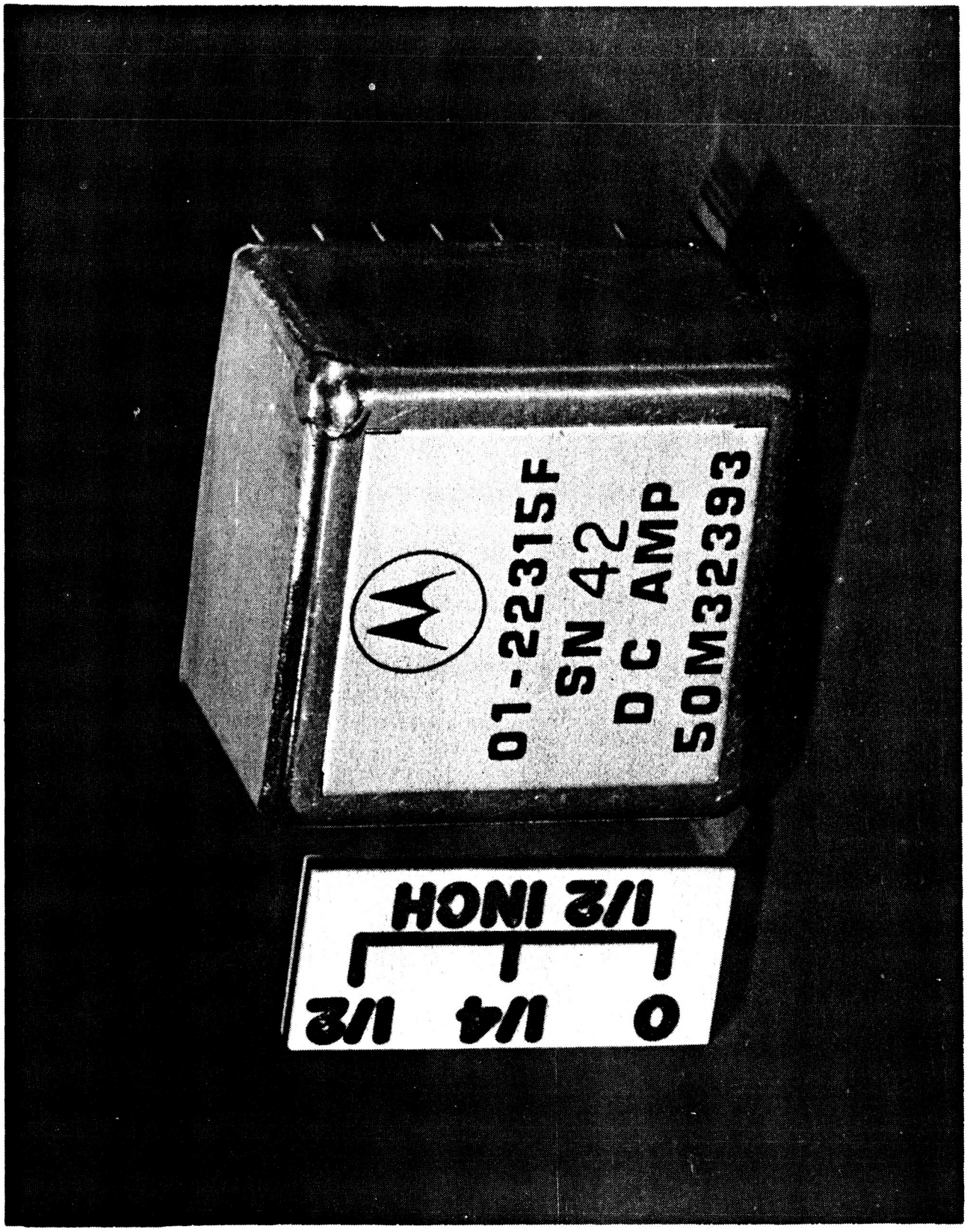

Figure 23. Finished Product

SECTION 7

7. QUALITY ASSURANCE

7.1 Photographs

Contractual requirements call for serialized photographs at various points in assembly: (a) Each substrate with chips attached, but prior to ruggedizing; (b) After ruggedizing of each substrate, and (c) Total assembly before potting. The intent of these photographs was to furnish a measure of quality assurance inspection of die bonds, wire bonds, soldering, etc., to the user. After completion of the design, it appeared that both (a) and (b) could be accomplished by a single photo due to the extremely localized nature of the ruggedizing used. Photo (c) could not be provided due to depth of field limitations of the camera equipment. As a result, serialized photos were taken once for each complete substrate, and a print of each provided to NASA with each unit as it was shipped. The negatives are numbered and keyed to system serial numbers, and are retained on file so that copies can be obtained at any time. Sample pictures are shown in Figures 24 and 25.

The amount of detail presented by the pictures was slightly disappointing, however, insofar as the wire bonds are concerned. These wires are .001 inch in diameter. To discern characteristics of the wire bonds adequately would require about ten diameters within that space, or about .0001 inch resolution. A magnification of about four times on the negative reduces the resolution required to .0004 inch. The film has a resolution of about 50 lines per millimeter or about .0008 inch, which is not adequate. Disregarding resolution of the print paper, a film resolution of five diameters is provided with this film. A new film and paper with higher possible resolution are currently under investigation in the Motorola Photo Laboratory. These films require processes vastly different from

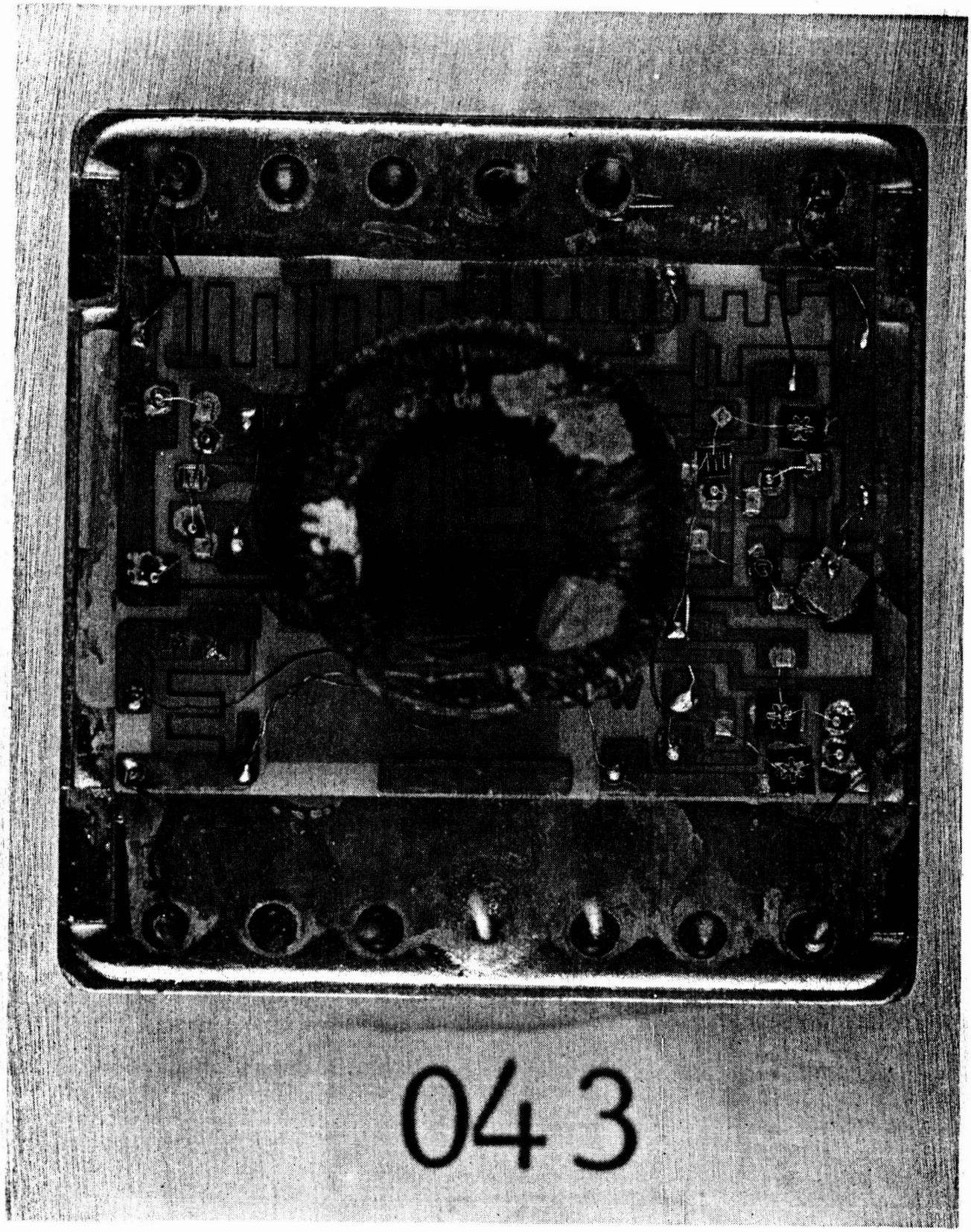

Figure 24. Power Supply In-Process Photo

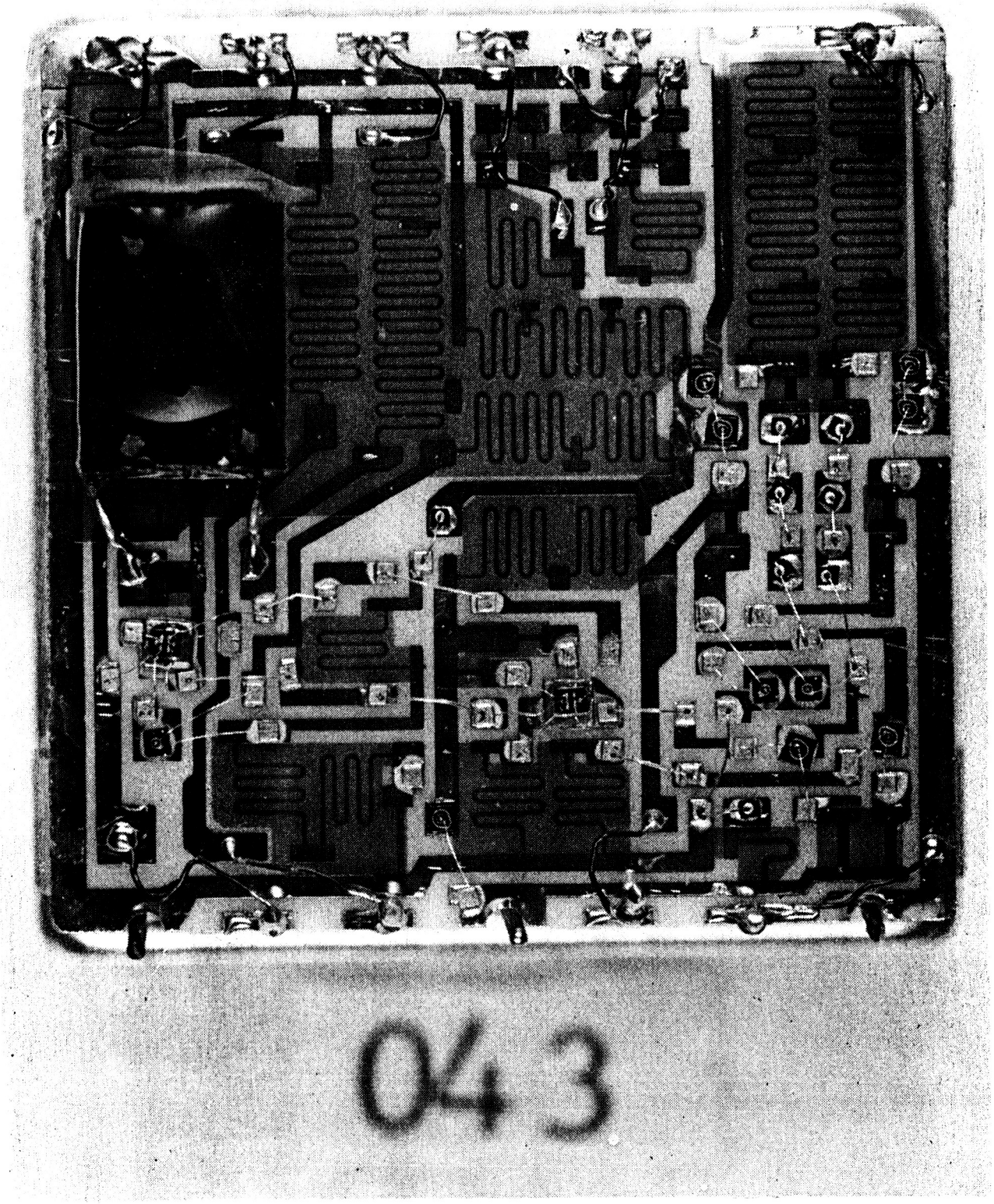

Figure 25. Amplifier In-Process Photo

those which are standard now, and will probably make the film impractical unless a very large degree of improvement can be obtained.

7.2 Quality Assurance Plan

QA planning for this contract was simplified by use of a flow chart shown in Figure 26. By each block of the chart is one or more drawing numbers (where applicable) which delineate how the tasks of that block are to be performed. Some drawings are standards used by all projects, and some contain proprietary information. Those which do not fall in either of those classifications have been provided to NASA in reproducible form in compliance with terms of the contract.

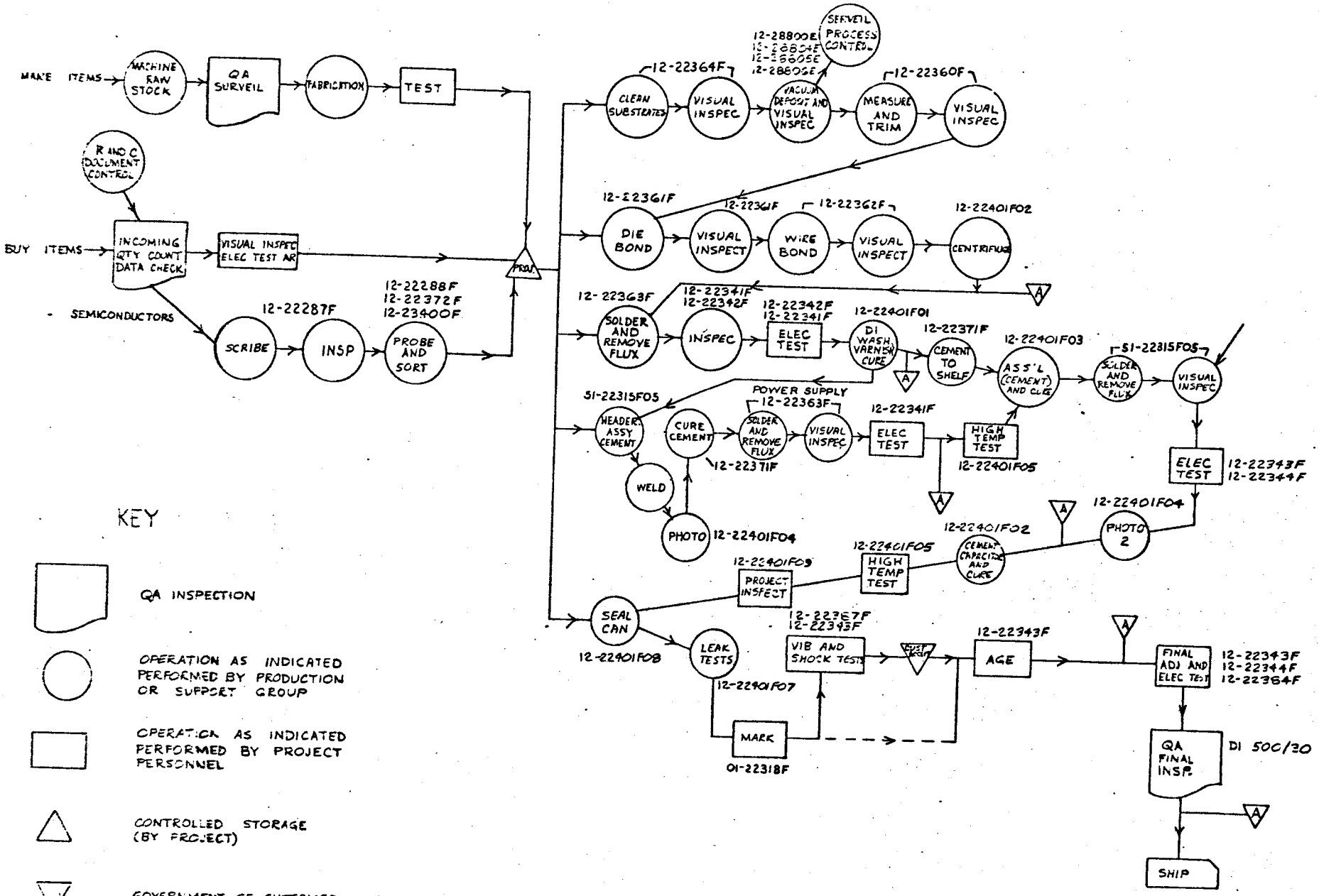

Figure 26. D-C AMPLIFIER QA PLAN

SECTION 8

8. TECHNICAL PROBLEMS

A number of technical problems were encountered in the development and pilot production of these systems. Some have been discussed in the preceding parts of this report, and most of them have been discussed at length in the progress report for the month of June, 1966. A few of those not already discussed will be covered here.

8.1 Temperature Compensated Diodes

A temperature compensated diode, type 1N4776A, was selected for use in the power supply, and attempts to obtain the device in chip form produced only one vendor who would attempt to supply it. That vendor has wide hi-rel experience in compensated zeners; however, significant difficulties arose in chip procurement. These difficulties included contamination due to packaging for shipment as well as due to handling and improper assembly techniques. These problems were solved by a series of conferences and visits from which agreements were reached regarding packaging and new assembly techniques. The drawing was changed and expanded to include these provisions. Devices received since that time have been 100% satisfactory.

8.2 Chrome Gold

Perhaps the greatest and most persistent of the problems encountered was that of chrome gold film failures, which occurred principally by means of the gold film alloying with solder materials. To correct the situation, a thicker film was adopted. Tests indicate that the allowable number of reworks is greater for this thicker film. In addition, tighter control of the die bonding process was instituted to control the temperatures more closely, and a similar control of the wire soldering process.

Tests have indicated that at least ten repairs could be made on a particular thin film pad; however, this has not as yet been verified by actual experience. While the problem has been vastly alleviated by the above mentioned steps, it is not as yet solved. Motorola is continuing to study this problem.

8.3 Final Balancing

The process described earlier for resistor trimming was also intended for use on the finished, sealed unit to adjust the offset voltage to within ± 2 millivolts. Some problems were encountered in matching that process to completed systems, and a total of three systems otherwise ready for shipping were destroyed before the problems were all corrected by modifications to the trimming equipment and procedure. Figure 27 shows a portion of one of these destroyed amplifiers.

8.4 Noise

One of the purposes of the amplifier shelf was to help shield it from power supply noise. A partially failed unit (no regulator) was used to analyze the success of this in the following manner. In the first test, the power supply was not operated, and the amplifier was connected to a 54 volt laboratory type power supply. Figure 28 is an oscillogram of the output noise reference level. Next, the power supply in the system was turned on. The portion which produces radiation was operative, and the effects are seen in the oscillogram of Figure 29. Next, the amplifier was connected to a breadboard of the power supply and the oscillograms of Figure 30 were taken, showing the effect on the amplifier output of power supply ripple. The converter within the test system remained operative; thus Figure 30 represents both radiated and conducted (common mode) noise. Performance in this respect exceeds that of the amplifier made from discrete components.

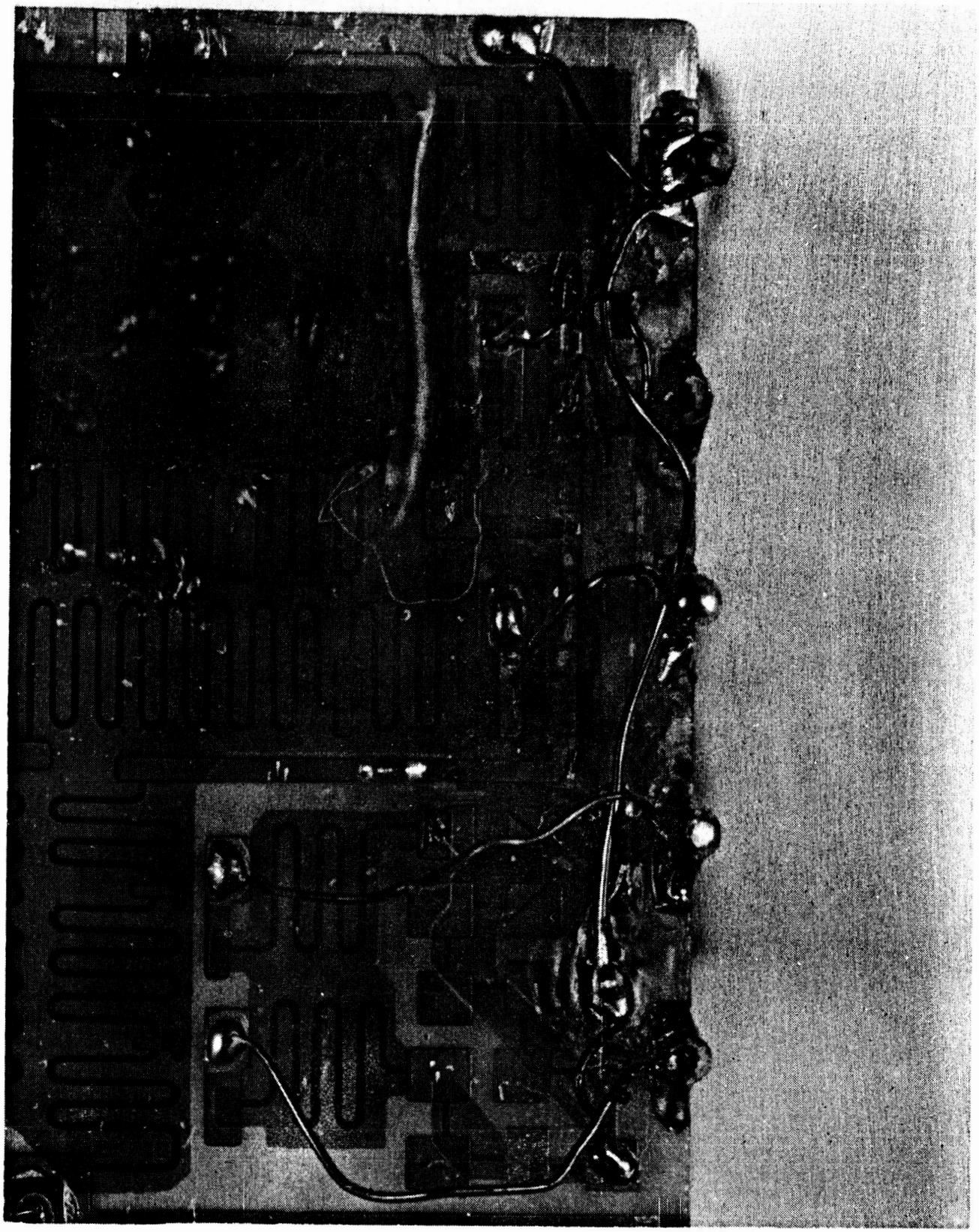

Figure 27. Amplifier Substrate Destroyed During Balancing

Motorola Inc., No. 01-22315F01 Integrated D-C Amplifier
Unit X-1

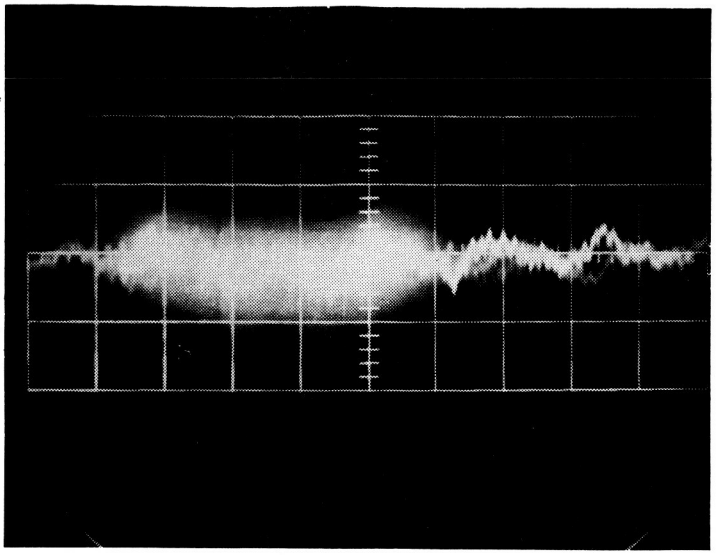

Amplifier inputs shorted
200 pf Feedback capacitors in amplifier

10 m sec/cm

10 mv/cm

f 2.8/50

Figure 28. Output Noise Reference Level

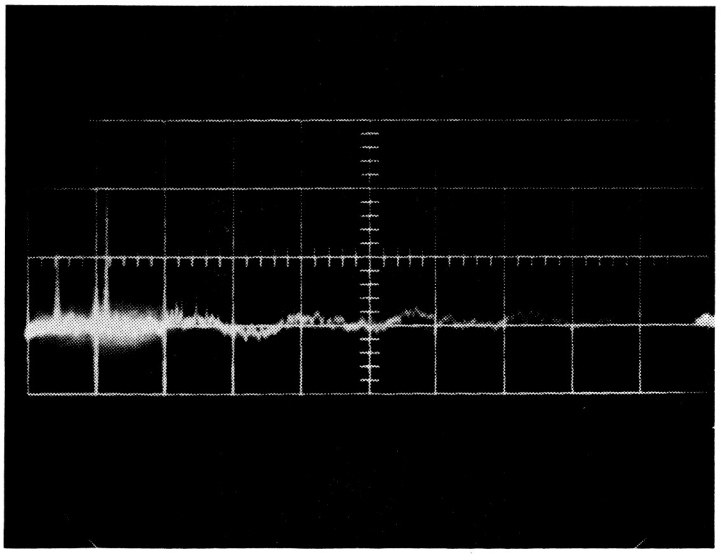

Amplifier inputs shorted
200 pf Feedback capacitors in amplifier

10 m sec/cm
20 mv/cm

f 2.8/50

Figure 29. Crosscoupled Converter Noise

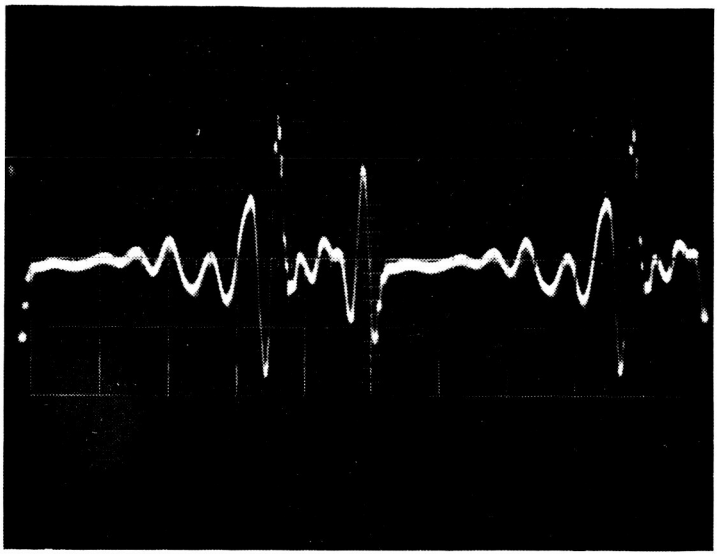

Amplifier inputs shorted C6, C8 = 200 pf

1 μsec/cm
50 mv/cm

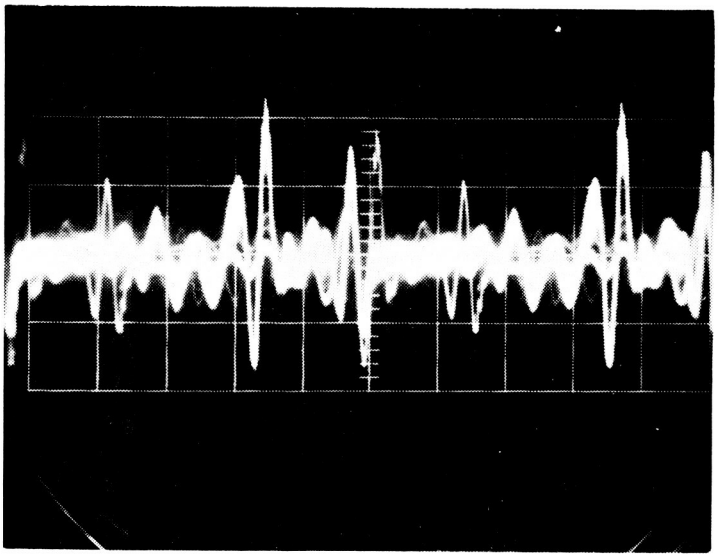

f 5.6/10

Figure 30. Amplifier Powered by Breadboard Power Supply, Module Power Supply Operating Converter Only

SECTION 9

9. FINAL UNIT SPECIFICATIONS

The specifications of the final unit must be compared with the original design goals to evaluate the measure of success achieved. This has been done in Table VI. Unless otherwise noted, all amplifier measurements shown refer to the connection of Figure 31.

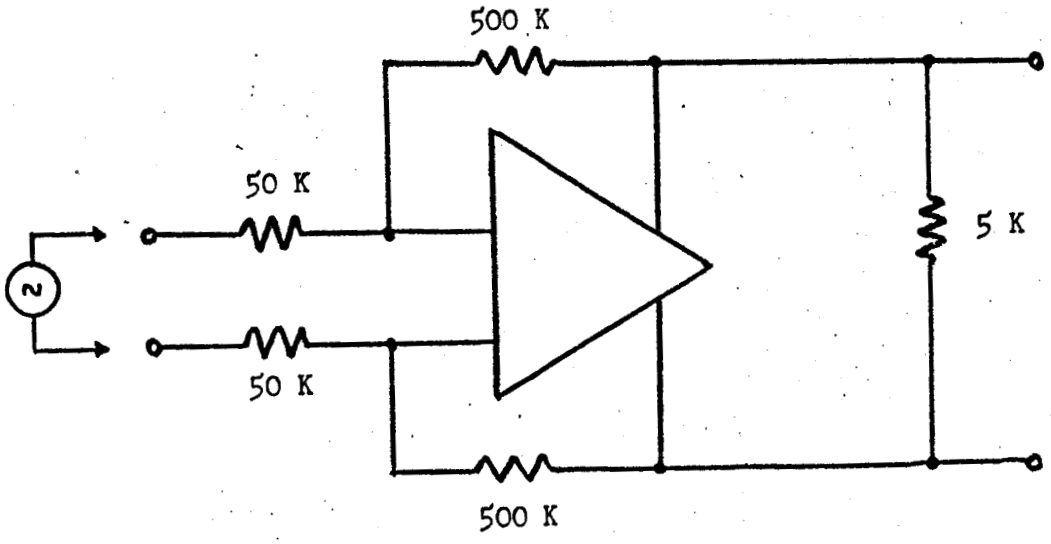

Figure 31. AMPLIFIER TEST CIRCUIT

The table shows that all design goals have been met with the exception of drift. For future units, it is intended to raise the minimum h_{fe} and add a burn-in specification to the input stage devices. This should help considerably in improving that specification. The 2 mv shown is not a statistical derivation, it should be noted. A worst case computer analysis[8] of the amplifier circuit indicates that the limit could go as high as 4.1 mv. That analysis did, however, assume a higher h_{fe} in the first stage. The great majority of drift measurements to date fall within 2 mv, as seen by the distribution of 57 units (not all of which were shipped) shown in Figure 32. Effects of the scaling resistors were eliminated by connecting them outside the temperature chamber.

TABLE VI. SPECIFICATION COMPARISON

Specification		Goal	Achieved
Power Consumption -- 28 v input, 5K Ω load			
no signal	watt	.5	.5
max. signal	watt	1.4	1.2
Power Supply Regulation -- 22-32 v input, full temperature range	VDC	59 ± 1.5 v	54 ± 2
Power Supply Efficiency -- no load	%	--	30
max. load	%	--	55
Output Balance, inputs shorted, referred to the input	MVDC	±.2	±.2
Amplifier Drift -- -55 to +125°C, referred to the input. Max.	MVDC	1.0	2.0
Gain -- open loop	DB	120	123
Max. Output Swing	V PK-PK	90	90.0
Output Impedance,	Ω	100	70, typ
Input Impedance, nominal	KΩ	--	100
Frequency Range -- input signal, no output distortion	cps	--	100
Common Mode Rejection (typical)	DB	44	73
Volume, Max.	cu. in.	.32	.31
Weight, typical		--	12.2 gr.
Seal - helium leak rate	cc/sec.	10^{-7}	10^{-9} to 10^{-7}
Vibration: 200 - 2000 cps each plane	G	50	80
Shock: trapezoidal, each plane	G	100	1000

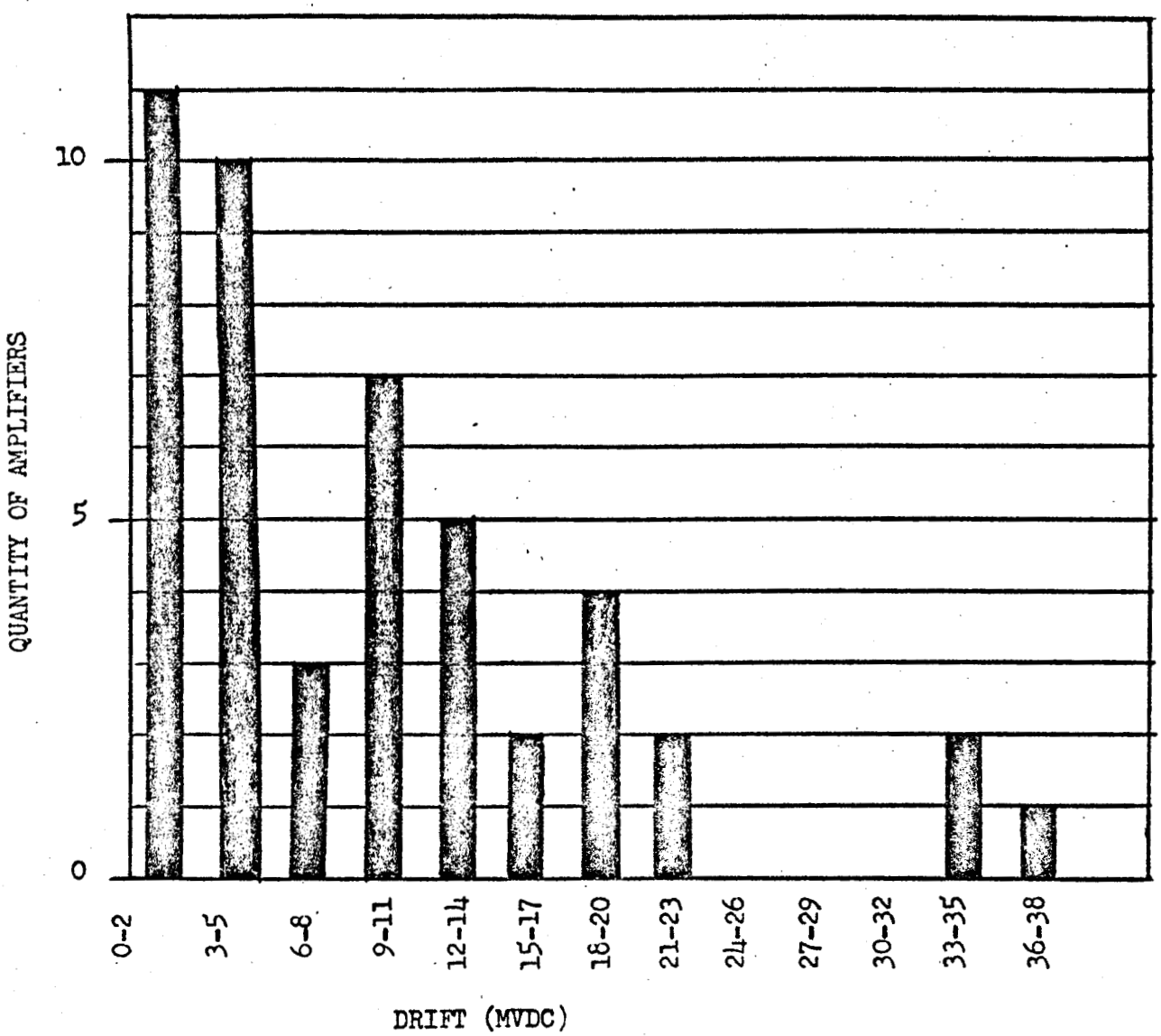

Figure 32. Temperature Drift Distribution

The .31 cubic inches compares quite favorably with the 11.5 cubic inches required to build the same circuit using discrete components. Volume reduction thus represents 1 1/2 orders of magnitude improvement. 30 integrated assemblies would occupy no more space than one discrete assembly.

Computer - generated data shown in Figs. 33, 34, and 35 characterizes the gain, input impedance, and phase angle of the amplifier operating open loop.

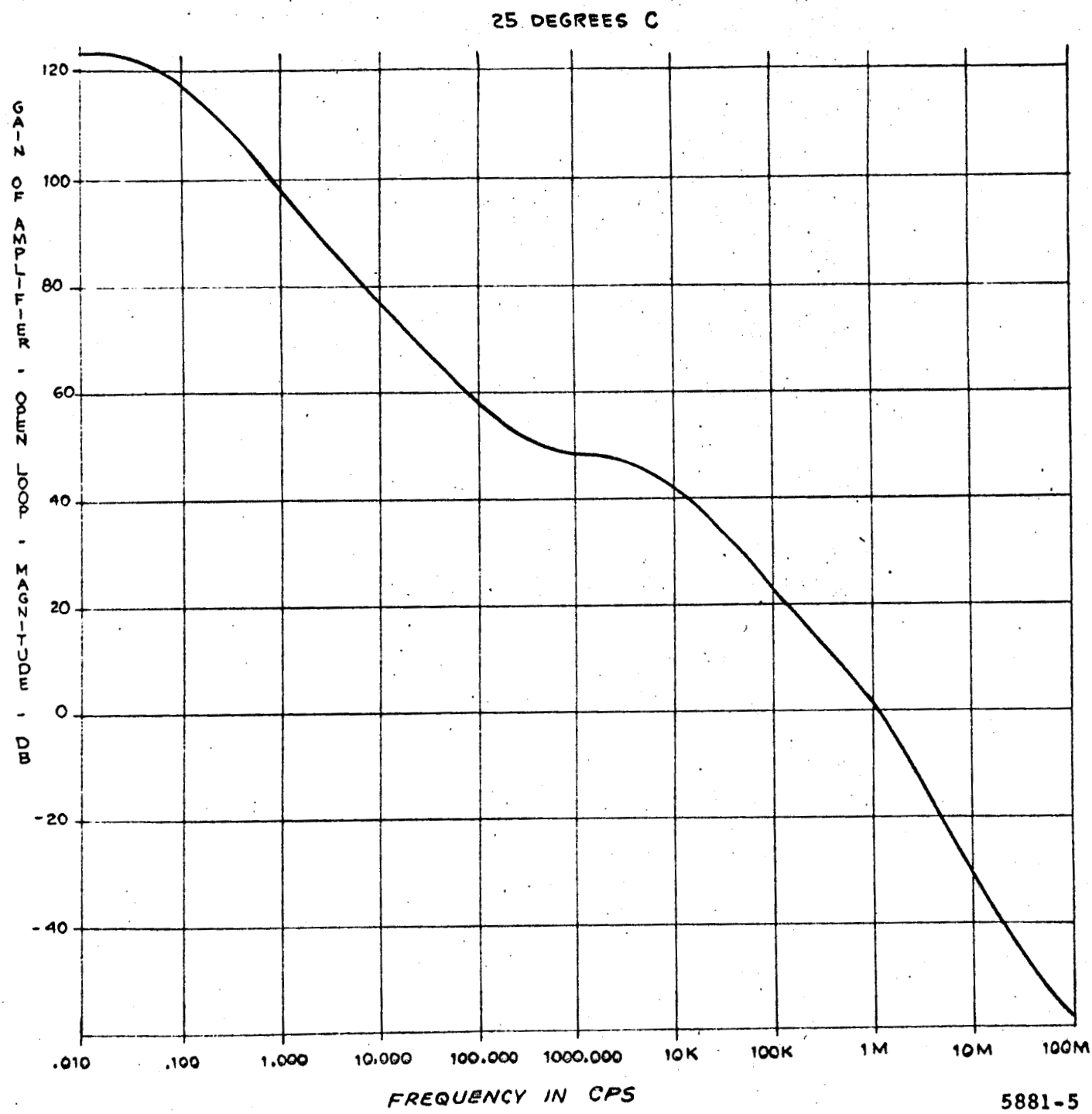

Figure 33. Open Loop Gain

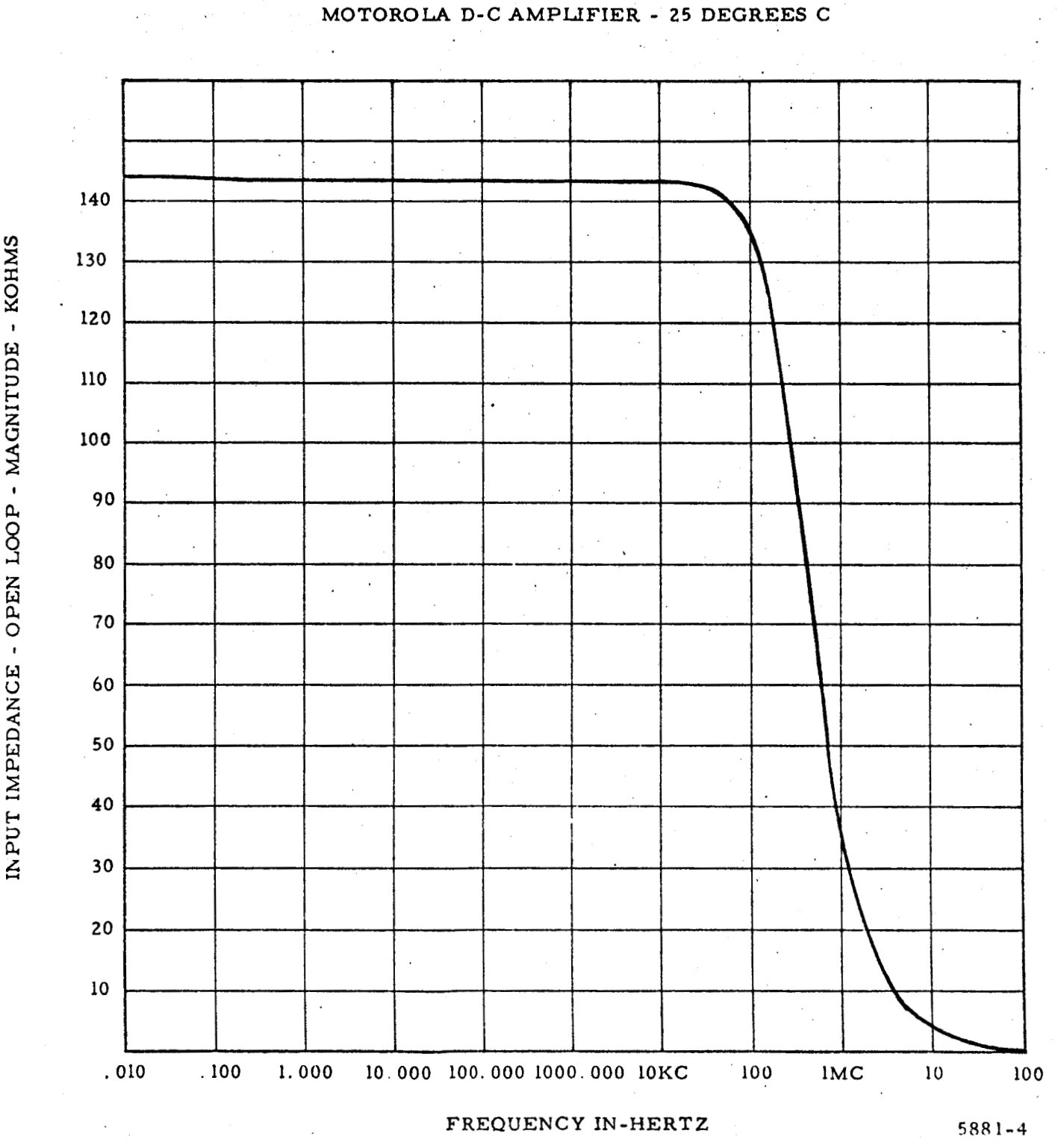

Figure 34. Open Loop Input Impedance

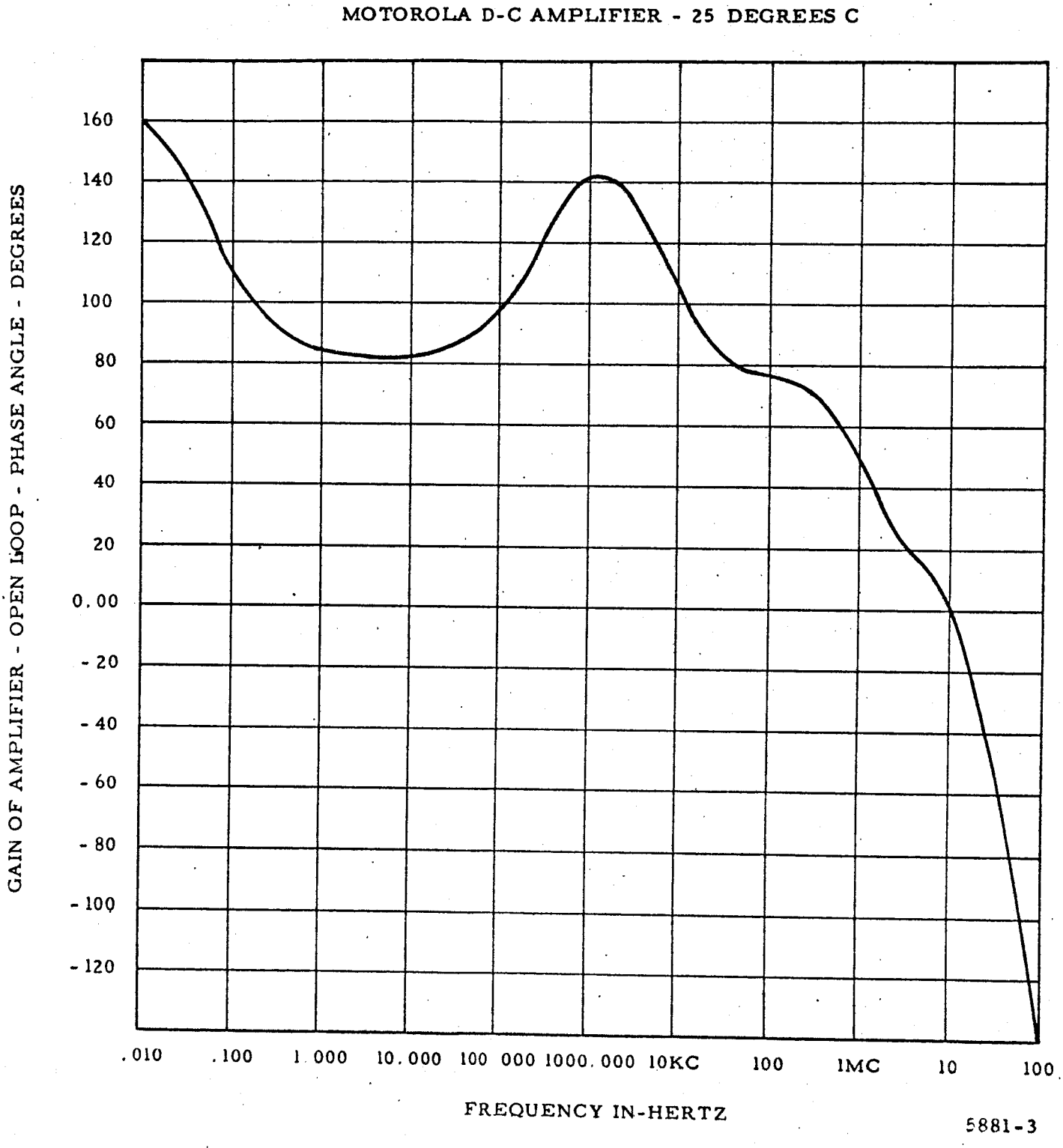

Figure 35. Open Loop Phase Angle

SECTION 10

10. CONCLUSIONS & RECOMMENDATIONS

Mechanically, the units built under this contract offer a significant reduction in size and weight over the similar unit built with discrete components. The assembly is rugged and capable of withstanding severe mechanical stresses.

Electrically, the unit operates well, with performance surpassing the discrete unit in some respects. Temperature drift does not quite meet the design goal, but some methods to improve this are known. Sustained operation at 125°C is the most severe environment encountered by the system, and if good results are to be achieved on future units, semiconductors with silver metallizing must not be used.

To improve reliability on future units, additional screening of components should be specified, particularly matched semiconductors, headers and transformers.
Soldering to the riser wires should be replaced in favor of welding.

Improved test fixtures are necessary for future units as well, particularly when the copper wires are replaced by less flexible kovar in order to permit welding.

The greatest problem remaining is the repair or replacement of die bonds or soldered wires without using up the available gold. High temperature exposure seems to have an effect on this. Further studies on the subject are essential for future contracts.

Matched pairs of 2N2605's, when available, may be useful in this circuit, particularly if fallout devices can be obtained at a low price.

Tolerances should be tightened to 3 ppm/°C for R12 and R18, loosened considerably for most other resistors.

The use of silk screening to position solder for die bonding should be investigated, particularly if the volume is large.

Thin Film Capacitors should be used for C9 and C10 to eliminate some of the crowding of discrete components.

R16 should be modified on the layout to permit closer adjustment of offset voltage by means of tap selection prior to sealing the can, thus eliminating some of the electro thermal trimming now required.

Bonding islands should be added as an intermediate point for the connections from the bases of Q14 and Q17 to the emitters of Q13 and Q18 in order to facilitate troubleshooting.

REFERENCES

1. Candle, John M. and John H. Owens. High-Gain, Low-Drift, Direct Coupled, Operational Amplifier. Huntsville, Alabama: George Marshall Space Flight Center.

2. Jones, J. Byron and James J. Powers, Jr. "Ultrasonic Welding." American Welding Society, 1956.

3. Peterson, J. M., H. L. McCraig, and C. F. DePrisco. "Ultrasonic Welding in Electronic Devices". Institute of Radio Engineers, International Convention, 1962.

4. Jimenez, Ray. "Preliminary Thermal Considerations for the High Reliability DC Amplifier". Motorola Internal Report, September 5, 1965.

5. Baum, J. R. and R. J. Jimenez. "Integrated Circuit Thermal Study Final Report". Motorola Report WF2990-1. September 1, 1965.

6. Jimenez, Ray. "Thermal Study for the Hi-Rel DC Amp.". Motorola Internal Report, February, 1966.

7. Eberhard, E. "Thin Film Part Evaluation and Resistor Development", Motorola Internal Development Project, Final Report, August, 1965.

8. "Motorola Micro-Miniature DC Amplifier -- Null Offset", IBM Report TM66-280-027, August 3, 1966.

9. Slagh, Tim D., Monthly Report, Contract NAS8-11344. Auburn, Alabama: Auburn Research Foundation, 28 May 1965.

10. Royer, G. H. "A Switching Transistor DC to AC Converter Having an Output Frequency Proportional to the DC Input Voltage", AIEE Transactions, Part I, Vol. 74, p. 322-325.

11. Magnetics, Inc. "Design Manual Featuring Type Wound Cores", TWC-300. 1962.

12. Owens, John H. "D. C. Amplifier 50M32393 Notes". Huntsville, Alabama: George Marshall Space Flight Center. Nov. 12, 1964.

13. Motorola Engineering Notebooks 65-520, 66-137, 1026, 65-855.

14. Jimenez, Ray. "Thermal Findings to Date for the High Reliability DC Amplifier". Motorola Internal Report, November 5, 1965.

15. Hewrion, W. S., W. C. Weger and L. D. Wickwar. "Linear Differential Amplifiers - Semiconductor Networks". An Application Note. Dallas: Texas Instruments, Inc., Apparatus Div. 1966.

16. "Applications Manual for Computing Amplifiers for Modeling, Measuring, Manipulating and Much Else". Dedham, Mass: Philbrick Researches, Inc. 1966.

REFERENCES (con't.)

17. Ammann, Stephen K. "Mathematics with Operational Amplifiers". EDN, March, 1965.

18. Graeme, Jerald. "Does That Operational Amplifier Fill the Bill?". EDN. July, 1965. pp. 100-108.

19. Untitled Collection of Computer Generated Graphs. Received from MSFC, August, 1966.

20. "Worst Case Performance of the Saturn Control Computer 45v D-C Differential Amplifier and Active Filter". IBM Space Gudance Center, Huntsville, Alabama. November, 1965.

21. Middlebrook, R. D. Differential Amplifiers, New York: John Wiley and Sons, Inc. 1963.