NASA SPACE CR-66562

18 Copies

GPO PRICE $ _____

CFSTI PRICE(S) $ _____

Hard copy (HC) 3.00

Microfiche (MF) .65

ff 653 July 65

N68-19248

(ACCESSION NUMBER)	(THRU)
560 (PAGES)	1 (CODE)
CR-66562 (NASA CR OR TMX OR AD NUMBER)	31 (CATEGORY)

FACILITY FORM 602

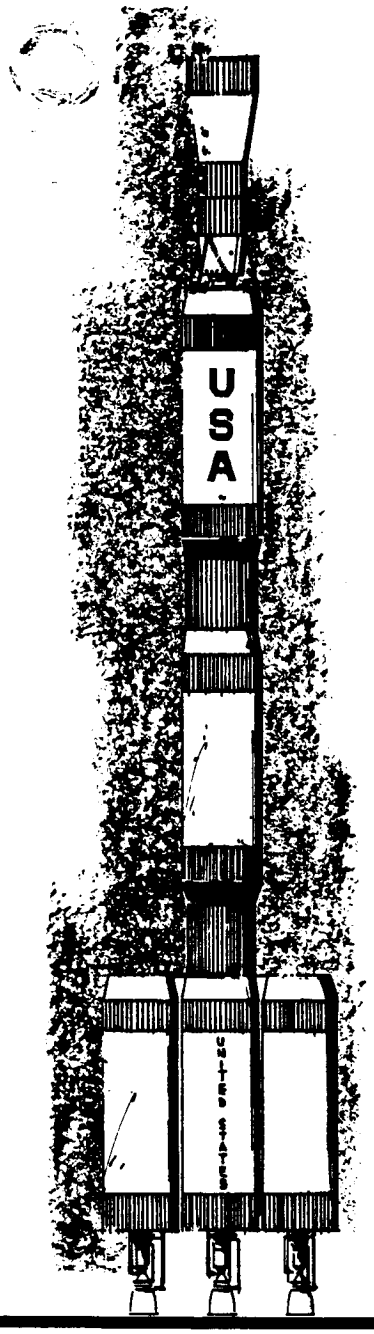

INTEGRATED MANNED INTERPLANETARY SPACECRAFT CONCEPT DEFINITION

Volume IV *System Definition*

D2-113544-4

The BOEING Company • Aerospace Group • Space Division • Seattle, Washington

NASA CR-66562

INTEGRATED MANNED INTERPLANETARY SPACECRAFT CONCEPT DEFINITION

FINAL REPORT

VOLUME IV
SYSTEM DEFINITION

D2-113544-4

Prepared for

NATIONAL AERONAUTICS AND SPACE ADMINISTRATION

LANGLEY RESEARCH CENTER

Hampton, Virginia

NASA CONTRACT NAS1-6774

January 1968

AEROSPACE GROUP THE BOEING COMPANY SEATTLE, WASHINGTON

RECOMMENDED INTERPLANETARY MISSION SYSTEM

The recommended interplanetary mission system:

- Is flexible and versatile
- Can accomplish most of the available Mars and Venus missions
- Is highly tolerant to changes in environment, go-ahead dates, and funding.

It provides:

- Scientific and engineering data acquisition during all mission phases
- Analysis, evaluation, and transmission of data to Earth
- Return to Earth of Martian atmosphere and surface samples

The mission system is centered around the *space vehicle* which consists of the *space acceleration system* and the *spacecraft*.

The *space acceleration system* consists of five identical nuclear propulsion modules:

- Three in the Earth departure stage
- A single module in the planet deceleration stage
- A single module in the planet departure stage

Propellant is transferred between the stages, as necessary, to accommodate the variation in ΔV requirements for the different missions. This arrangement provides considerable discretionary payload capacity which may be used to increase the payload transported into the target planet orbit, the payload returning to the Earth, or both.

The *spacecraft* consists of:

- A biconic Earth entry module capable of entry for the most severe missions
- An Apollo-shaped Mars excursion module capable of transporting three men to the Mars surface for a 30-day exploration and returning
- A mission module which provides the living accommodations, system control, and experiment laboratories for the six-man crew
- Experiment sensors and a planet probe module

The spacecraft and its systems have been designed to accomplish the most severe mission requirements. The meteoroid shielding, expendables, system spares, and mission-peculiar experiment hardware are off-loaded for missions with less stringent requirements.

The space vehicle is placed in Earth orbit by six launches of an uprated Saturn V launch vehicle which has four 156-inch solid rocket motors atttached to the first stage. Orbital assembly crew, supplies and mission crew transportation are accomplished with a six-man vehicle launched by a Saturn IB.

A new launch pad and associated facility modifications are necessary at Launch Complex 39 at Kennedy Space Center to accommodate:

- The weight and length of the uprated Saturn V
- The launch rate necessary for a reasonable Earth orbit assembly schedule
- The solid rocket motors used with the uprated Saturn V
- The requirement for hurricane protection at the launch pad.

ABSTRACT

This document defines the Interplanetary Mission System which consists of a spacecraft, space acceleration system, and Earth-based support. It includes a description of each element of the recommended system and alternates considered. System trades used in arriving at the recommended spacecraft and all-nuclear "common module" space acceleration system in combination with the Saturn V-25(S)U are presented. System capability with regard to Mars landing and Venus orbiter missions in the synodic cycle 1975 to 1990 is defined.

FOREWORD

This study was performed by The Boeing Company for the National Aeronautics and Space Administration, Langley Research Center, under Contract NAS1-6774. The Integrated Manned Interplanetary Spacecraft Concept Definition Study was a 14-month effort to determine whether a variety of manned space missions to Mars and Venus could be accomplished with common flight hardware and to define that hardware and its mission requirements and capabilities. The investigation included analyses and trade studies associated with the entire mission system: the spacecraft; launch vehicle; ground, orbital, and flight systems; operations; utility; experiments; possible development schedules; and estimated costs.

The results discussed in this volume are based on extensive total system trades which can be found in the remaining volumes of this report. Attention is drawn to Volume II which has been especially prepared to serve as a handbook for planners of future manned planetary missions.

The final report is comprised of the following documents, in which the individual elements of the study are discussed as shown:

Volume	Title	Part	Report No.
I	Summary		D2-113544-1
II	System Assessment and Sensitivities		D2-113544-2
III	System Analysis	Part 1--Missions and Operations	D2-113544-3-1
		Part 2--Experiment Program	D2-113544-3-2
IV	System Definition		D2-113544-4
V	Program Plans and Costs		D2-113544-5
VI	Cost-Effective Subsystem Selection and Evolutionary Development		D2-113544-6

The accompanying matrix is a cross-reference of subjects in the various volumes.

● Primary Discussion

X Summary or Supplemental Discussion

STUDY AREAS	DOCUMENTATION					
	Volume I/D2-113544-1 Summary Report	Volume II/D2-113544-2 System Assessment and Sensitivities	Volume III/D2-113544-3 System Analysis		Volume IV/D2-113544-4 System Definition	Volume V/D2-113544-5 Program Plans and Cost	Volume VI/D2-113544-6 Cost Effective Subsystem Selection and Evolutionary Development
			Part 1 - Missions and Operations	Part 2 - Experiment Program			
MISSION ANALYSIS	X		●				
Trajectories and Orbits	X	X	●		X		
Mission and Crew Operations	X	X	●	●	X		
Mission Success and Crew Safety Analysis	X	X	●		X		
Environment	X	X	●				
Scientific Objectives	X	X		●			
Manned Experiment Program	X	X		●			
Experiment Payloads and Requirements	X	X		●			
DESIGN ANALYSIS	X				●		
Space Vehicle	X				●		
Spacecraft Systems	X				●		
Configurations	X	X			●		
Subsystems	X	X			●		
Redundancy and Maintenance	X				●		
Radiation Protection	X				●		
Meteoroid Protection	X				●		
Trades	X				●		
Experiment Accommodations	X				●		
Space Acceleration Systems	X				●		
Primary Propulsion--Nuclear	X	X			●		
Secondary Propulsion--Chemical	X	X			●		
System and Element Weights	X	X			●		
IMIEO Computer Program		X			●		
Earth Orbit Operations and Assembly Equip.	X	X			●		
Earth Launch Vehicles	X	X			●		
Facilities	X	X			●		
System Trades	X				●		
Space Acceleration--Earth Launch Vehicle	X				●		
Space Acceleration Commonality	X				●		
Space Vehicle--Artificial Gravity	X				●		
SYSTEM AND PROGRAM ASSESSMENT	X	●					
System Capability	X	●		●		X	
Design Sensitivities	X	●			X		
Program Sensitivities	X	●					
Adaptability to Other Space Programs	X	●					
Impact on Other Space Programs	X	●					
Technology Implications	X	●					
Future Sensitivity Studies	X	●					
Program Schedules and Plans	X	X				●	
Test Program	X	X				●	
Facilities Plan	X	X				●	
Program Cost	X	X				●	
Cost Effective Subsystems							●

ABBREVIATIONS

A.U.	Astronomical unit
bps	Bits per second
C/O	Checkout
CM	Command module (Apollo program)
CMG	Control moment gyro
CONJ	Conjunction
CSM	Command service module (Apollo program)
ΔV	Incremental velocity
DSIF	Deep Space Instrumentation Facility
DSN	Deep Space Network
$\oplus$	Earth
ECLS	Environmental control life support system
ECS	Environmental control system
EEM	Earth entry module
ELV	Earth launch vehicle
EMOS	Earth mean orbital speed
EVA	Extravehicular activity
FY	Fiscal year
fps	feet/sec
GSE	Ground support equipment
IBMC	Inbound midcourse correction
IMIEO	Initial mass in Earth orbit
IMISCD	Integrated Manned Interplanetary Spacecraft Concept Definition
I_{sp}	Specific impulse
IU	Instrument unit
KSC	Kennedy Space Center
λ'	Ratio of propellant weight to overall propulsion module weight
LC	Launch complex
LC-34 & -37	Launch complexes for Saturn IB
LC-39	Launch complex for Saturn V
LH_2	Liquid hydrogen
LO	Long
LO_2 or LOX	Liquid oxygen
LRC	Langley Research Center

ABBREVIATIONS (Continued)

LSS	Life support system
LUT	Launch umbilical tower
♂	Mars
MEM	Mars excursion module
MIMIEO	Minimum initial mass in Earth orbit
MM	Mission module
MODAP	Modified Apollo
MSC	Manned Spacecraft Center (Houston)
MSFC	Marshall Space Flight Center (Huntsville)
MTF	Mississippi Test Facility
NAC	Letters designate the type of acceleration systems First letter--Earth orbit depart Second--planetary deceleration Third--planet escape Example: NAC = Nuclear Earth depart/aerobraker deceleration at planet/chemical planet escape
OBMC	Outbound midcourse correction
OPP	Opposition
OT	Orbit trim
P/L	Payload
PM-1	Propulsion module, Earth orbit escape
PM-2	Propulsion module, planet braking
PM-3	Propulsion module, planet escape
RCS	Reaction control system
SA	Space acceleration
S/C	Spacecraft
S-IC	First stage of Saturn V
S-II	Second stage of Saturn V
SH	Short
SOA	State of art
SRM	Solid rocket motor
S/V	Space vehicle
SWBY	Swingby

ABBREVIATIONS (Continued)

T/M	Telemetry
TVC	Thrust vector control
VAB	Vehicle assembly building
♀	Venus
V_{HP}	Hyperbolic excess velocity

CONVERSION FACTORS

English to International Units

Physical Quantity	English Units	International Units	Multiply by
Acceleration	ft/sec^2	m/sec^2	3.048×10^{-1}
Area	ft^2	m^2	9.29×10^{-2}
	in^2	m^2	6.45×10^{-4}
Density	lb/ft^3	Kg/m^2	16.02
	lb/in^3	Kg/m^2	2.77×10^{4}
Energy	Btu	Joule	1.055×10^{3}
Force	lbf	Newton	4.448
Length	ft	m	3.048×10^{-1}
	n.mi.	m	1.852×10^{3}
Power	Btu/sec	watt	1.054×10^{3}
	Btu/min	watt	17.57
	Btu/hr	watt	2.93×10^{-1}
Pressure	Atmosphere	$Newton/m^2$	1.01×10^{3}
	lbf/in^2	$Newton/m^2$	6.89×10^{3}
	lbf/ft^2	$Newton/m^2$	47.88
Speed	ft/sec (fps)	m/sec	3.048×10^{-1}
Volume	in^3	m^3	1.64×10^{-5}
	ft^3	m^3	2.83×10^{-2}

CONTENTS

CONTENTS (Continued)

CONTENTS (Continued)

1.0 INTRODUCTION

The factors that influence the selection of a given hardware system to fly a selected set of interplanetary missions are many and varied. Such factors as relative emphasis on national goals, technical feasibility, and resource availability are pre-eminent. It has been the objective of this study to examine the major factors influencing the choice of systems and missions and present to the program planner reasonable alternatives so that future designs may be made without the laborious examination of many detailed factors. However, in order to provide guidance for the on-going research and development program, system recommendations have been made based on analyses of the data presented herein.

The systematic system concept definition iterations required to produce the tradeoff data presented have been made against 20 missions (Figure 1.0-1) judged to be representative of reasonable mission operations over a Mars and Venus synodic cycle. The cycle from 1975 to 1990 was selected for Mars and the 1980-1987 cycle for Venus. Opposition, conjunction, and Venus swingby landing missions were investigated for Mars, and long and short stopover capture missions were investigated for Venus. This investigation is presented in Volume III of this report.

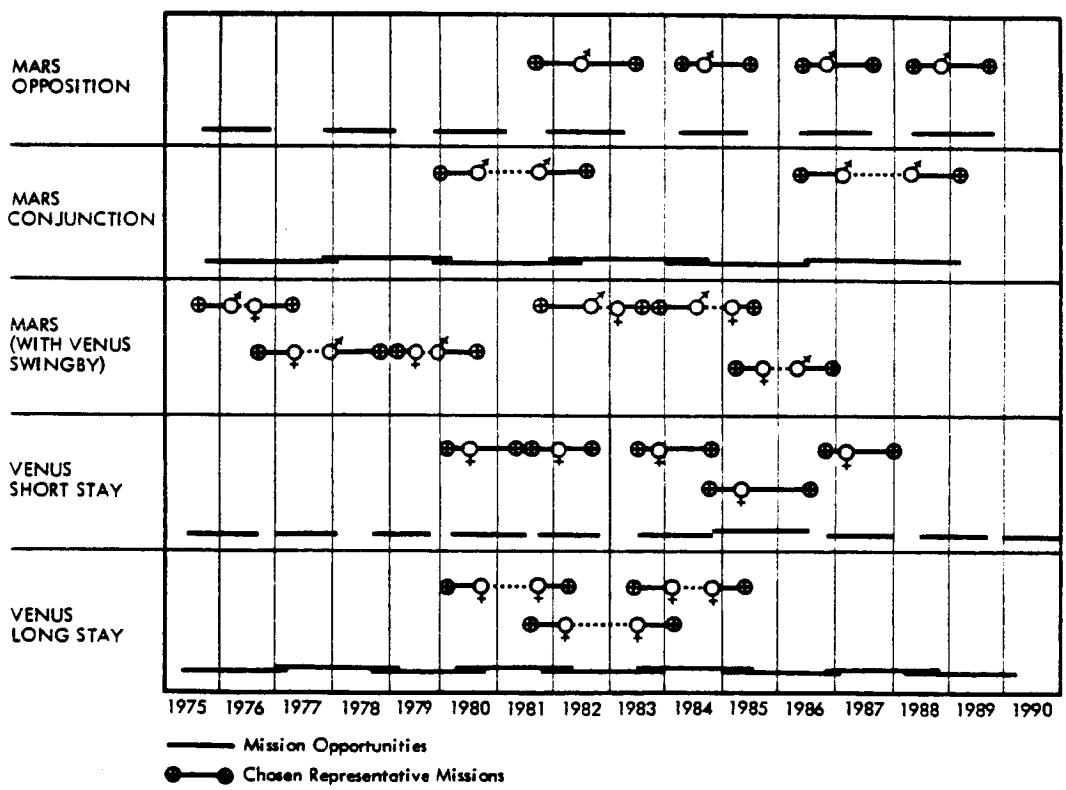

Figure 1.0-1: MISSION TRAJECTORIES

2.0 INTERPLANETARY MISSION SYSTEM

2.1 SYSTEM DEFINITION

The interplanetary mission system consists of airborne and ground-based equipment, facilities, and personnel required to conduct manned interplanetary missions. Its major elements are shown in Figure 2.1-1; a brief functional description of each follows:

1) Aerospace Vehicle--The aerospace vehicle brings together in an integrated fashion with the Earth launch vehicles all major elements of the space vehicle. Thus, it identifies launch configurations from which an assessment of payload and vehicle-launch facility interfaces can follow.

2) Earth-Based Support--The Earth-based portion of the system provides support functions for initial ground assembly of the aerospace vehicle and its launch, resupply of the space vehicle during its assembly, and rotation of the assembly and checkout crew [in the form of a logistic vehicle (MODAP) and logistics launch vehicle (S-IB)], mission control, communications between the DSIF, space vehicle, and mission control, and for recovery of the mission crew on Earth return.

3) Space Vehicle (S/V)--The space vehicle consists of a manned spacecraft for meeting exploration, experimentation, and crew safety requirements, and a space acceleration system for generating the energy changes required to leave and/or enter the vicinity of Earth, Mars, and Venus.

4) Earth Launch Vehicle (ELV)--The Earth launch vehicle(s) places space vehicle elements into an assembly orbit.

5) Spacecraft (S/C)--The spacecraft is the payload portion of the space vehicle. For Mars landing missions, it consists of a mission module which is the primary habitable volume, a Mars excursion module for surface exploration, an Earth entry module for recovery of the mission crew, and instrumentation and probes for scientific and engineering experiments. Venus mission spacecraft include a greater complement of probes and instrumentation but do not contain manned excursion modules. Also included in the spacecraft definition is the structure for connecting 1) the payload elements together and 2) the spacecraft to the Mars or Venus departure propulsion module.

6) Space Acceleration (SA)--The space acceleration system consists of three stages of propulsion. An Earth departure propulsion stage (PM-1) provides the ΔV required for injection into a heliocentric orbit, a planet capture propulsion stage (PM-2) provides the braking ΔV into Mars or Venus, and a planet departure stage (PM-3) provides the ΔV for Earth return.

7) Mission Module (MM)--The mission module serves as the primary living, operating, and control quarters for the crew during the mission, and houses all supporting subsystems and many of the experiments.

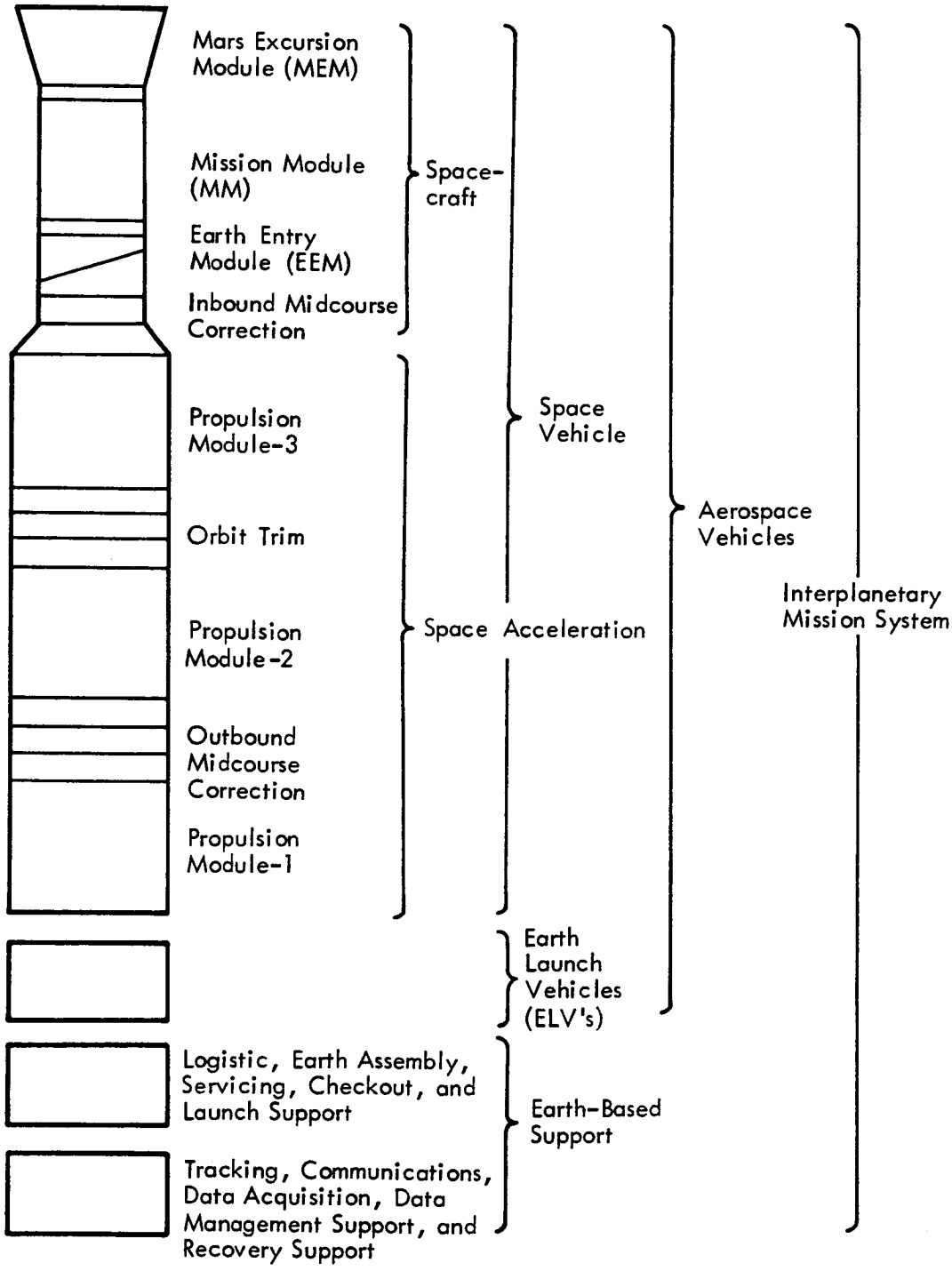

Figure 2.1-1: INTERPLANETARY MISSION SYSTEM

8) Mars Excursion Module (MEM)--The Mars excursion module is that portion of the spacecraft which lands crewmen on the Martian surface and returns them to the mission module in Mars orbit.

9) Earth Entry Module (EEM)--The Earth entry module houses the crew during the Earth entry portion of the mission.

10) Structural Interstages--The structural interstages are those portions of the space vehicle that structurally connect all the various modules.

11) Propulsion Module 1 (PM-1)--PM-1 provides the necessary ΔV to inject the space vehicle on a trans-Earth-Mars (or Venus) trajectory.

12) Propulsion Module 2 (PM-2)--PM-2 provides the ΔV required to place the space vehicle into a Mars or Venus orbit.

13) Propulsion Module 3 (PM-3)--PM-3 provides the ΔV required to inject the space vehicle into a trans-Mars (or Venus) -Earth trajectory.

14) Outbound Midcourse Correction--Outbound midcourse correction provides the ΔV to correct the outbound trajectory.

15) Orbit Trim--Orbit trim provides the ΔV required to establish and/or modify the operational orbit about a planet.

16) Inbound Midcourse Correction--Inbound midcourse correction provides the ΔV to correct the inbound trajectory.

2.2 MISSION DESCRIPTION

The interplanetary mission is initiated with the launch from Earth of the spacecraft into a nominal 262-nautical-miles assembly orbit. The spacecraft, consisting of the MEM, EEM, scientific probes, MM, and interstage structure, is launched by the uprated core of the Saturn V-25 (S)U ELV. The spacecraft functions as the control center and living quarters during the approximate 150-day orbital assembly and checkout of the space vehicle.

The assembly test and checkout (ATC) crew is then launched from Earth in a logistic aerospace vehicle. After rendezvous and docking, the spacecraft is activated and preparations are made to receive the remaining elements of the space vehicle. Saturn V-25(S)U ELV's are used to launch the propulsion modules into the assembly orbit where they rendezvous and dock with the spacecraft or incomplete space acceleration system. Checkout and test of each module is accomplished as the assembly proceeds.

The orbital assembly operation is completed with the launch of the interplanetary mission crew, resupply of the mission module, final checkout of the space vehicle, and separation of all orbital support equipment and personnel.

Final countdown, accomplished by the mission crew, includes separation and disposition of the PM-1 meteoroid shield and aft interstages, low power operation of the PM-1 Nerva engines, and final system check. This operation, as well as other typical events which occur during the course of an interplanetary mission to Mars, is shown in Figure 2.2-1. Firing of the nuclear PM-1 modules injects the space vehicle into the transfer trajectory. The spent modules are separated from the vehicle so that 1) their trajectory does not impact the planet and 2) their separation distance is large enough to ensure safety of the crew from shutdown radiation.

Three midcourse corrections are assumed for each interplanetary leg of the trip, the first occurring 5 days after orbital launch, the second about 20 days later, and the third at about 20 days prior to arrival at the destination planet. During coast periods, interplanetary experiments will be conducted in addition to vehicle monitoring and scheduled and unscheduled maintenance.

For those missions in which a Venus swingby occurs on the outbound trip, probes are launched prior to planet encounter, and data return is recorded and monitored during the swingby and as long as communications can be maintained. Additional midcourse corrections and/or powered swingby maneuvers may be required for these type missions. Planet capture and insertion into a PM-2 separation orbit is preceded by staging of the PM-2 meteoroid shield, aft interstage, and outbound midcourse correction system. The spent PM-2 stage is separated in the higher initial orbit and the space vehicle transfers to a 540-nautical mile operational orbit using the chemical orbit trim propulsion system.

Two to five days are spent surveying the planet for landing sites, performing orbital experiments (including deployment of probes), and preparing the MEM for operation. Three of the six-man crew then descend to the planet surface in the MEM. Small retrorockets insert the MEM into a trajectory that will allow the MEM to land at the selected site. Aeroballistic entry is followed by braking and propulsive descent to the surface. After a 30-day stay on the planet, a small ascent vehicle is used to bring the three men and scientific payload back to the space vehicle. During planet operations, the men in the space vehicle continue orbital experimentation, monitor planet operations, and maintain space vehicle operations. The ascent vehicle is discarded in planet orbit after the crew has transferred to the mission module.

Preparations for planet departure include staging the orbit trim propulsion system, PM-3 aft interstage, and PM-3 meteoroid shield. Departure from Mars orbit is accomplished by the nuclear PM-3. Interplanetary operations on the return are similar to the outbound portion of the mission. Approximately 1 day prior to Earth entry, the crew and scientific payload are transferred to the EEM and separation from the mission module is accomplished. The trajectory is adjusted for entry and landing at the desired location on Earth.

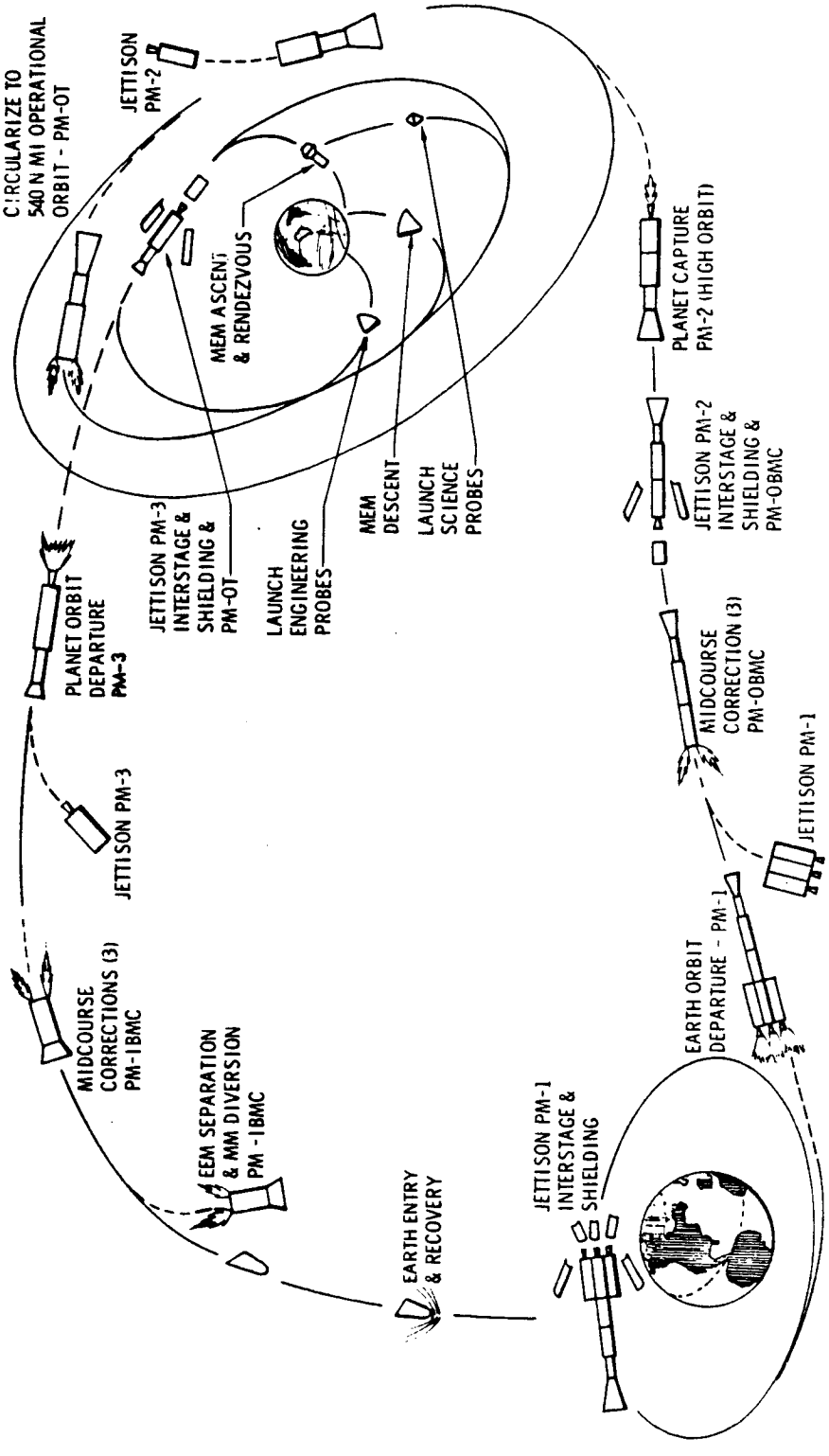

Figure 2.2-1: MISSION EVENTS SEQUENCE

2.3 MISSION REQUIREMENTS

The range of trajectory parameters for which the space vehicle of the interplanetary mission system must be designed are shown by mission class in Table 2.3-1. These trajectory parameters, along with scientific goals, maintenance of crew life, and probability of mission success and crew survival goals provide the guidelines and requirements for the design of the interplanetary mission system. However, because of the wide variation of energy and mission time requirements imposed on the space vehicle which, in turn, impact the entire interplanetary mission system, the design of a cost-effective and reliable system to cover all mission opportunities is difficult. Approaches to this problem can range from tailoring the space vehicle design for each mission to using a common space vehicle design for all missions. Each of these approaches has been investigaged in arriving at a recommended aerospace vehicle design, and thus, interplanetary mission system.

Table 2.3-1: RANGE OF TRAJECTORY PARAMETERS

	Parameter Variations--Maximum and Minimum Values				
Mission Parameter	Mars Conjunction	Mars Opposition	Mars-Venus Swingby	Venus Long	Venus Short
Total ΔV (mps)	7,900 - 8,900	11,400 - 12,400	10,700 - 13,400	10,500 - 11,600	11,300 - 12,500
ΔV_1 (mps)	3,684 - 3,869	3,645 - 3,989	3,798 - 5,093	3,539 - 3,661	3,543 - 3,900
ΔV_2 (mps)	2,124 - 2,470	2,568 - 2,947	2,337 - 5,312	3,627 - 4,539	3,337 - 4,538
ΔV_3 (mps)	1,926 - 2,713	4,969 - 5,811	2,504 - 4,550	3,306 - 3,400	4,070 - 4,310
Mission Time (days)	1,000 - 1,040	460 - 540	560 - 710	770 - 800	460 - 550
Stay Time (days)	370 - 580	40	40	430 - 470	40
Earth Entry Velocity (mps)	11,800 - 12,000	16,200 - 18,400	11,600 - 16,200	11,600 - 11,800	14,200 - 14,800
Minimum Distance to ☉ (A.U.)	0.95-0.98	0.50-1.00	0.51-0.72	0.71-0.72	0.72-0.73
Maximum Distance to ● (A.U.)	2.6-2.7	0.99-1.56	0.86-1.70	1.72	0.67-1.00

3.0 AEROSPACE VEHICLE

The recommended aerospace vehicle was chosen through comprehensive system trades (see *Space Acceleration-ELV Trade*, Section 7.1; *Commonality Trade*, Section 7.2) which considered initial mass in Earth orbit, number of launches, orbital assemblies, crew safety, technical risk, special problems, and costs and schedules.

3.1 RECOMMENDED AEROSPACE VEHICLE

The recommended aerospace vehicle which includes the spacecraft, space acceleration system, and the Earth launch vehicle is shown in Figure 3.1-1. A Mars excursion module (MEM), mission module (MM), and Earth entry module (EEM) along with associated experiments and probes, the inbound midcourse correction system, and interconnecting structure make up the spacecraft. Nuclear "common modules" consisting of three Earth departure modules (PM-1), one planet braking module (PM-2) which contains the outbound midcourse correction system, and one planet departure module (PM-3) which contains the orbit trim system, comprise the recommended space acceleration system which, when connected to the spacecraft, completes the space vehicle configuration. These propulsion modules, each in turn, and the spacecraft are injected into an assembly orbit by the recommended Earth launch vehicle (ELV), a MLV-SAT-V-25(S)U.

A brief description of the recommended aerospace vehicle major elements follows; for further details see Section 4.0 "Space Vehicle" and Section 5.0 "Earth Launch Vehicles".

3.1.1 MISSION MODULE

The mission module provides a satisfactory ecological environment for a six-man crew during space vehicle assembly and most of the interplanetary flight, except for a brief duration (30 days) at Mars when three men go to the planet's surface and the 1-day Earth entry flight. It contains all subsystems necessary to life, command functions, experiment analysis, and information transfer. A pressure vessel approximately 39 feet long and 22 feet in diameter provides a total volume of 12,250 cubic feet with a free volume per man in excess of 800 cubic feet. When designed for a Mars conjunction mission and off-loaded for other missions, its weight is 83,000 pounds for the 1981 Venus short mission and 116,000 pounds for the 1986 Mars conjunction mission. The recommended mission module is one designed for the 1986 Mars conjunction mission and off-loaded for other missions.

3.1.2 MARS EXCURSION MODULE

This module, derived from North American studies*, provides a habitable volume for a three-man crew during descent from a 540-nautical mile

*NAA Document SD-67-755, *Definition of Experimental Tests for a Manned Mars Excursion Module*, NASA Contract NAS9-6464, North American Aviation, Inc., August 1967

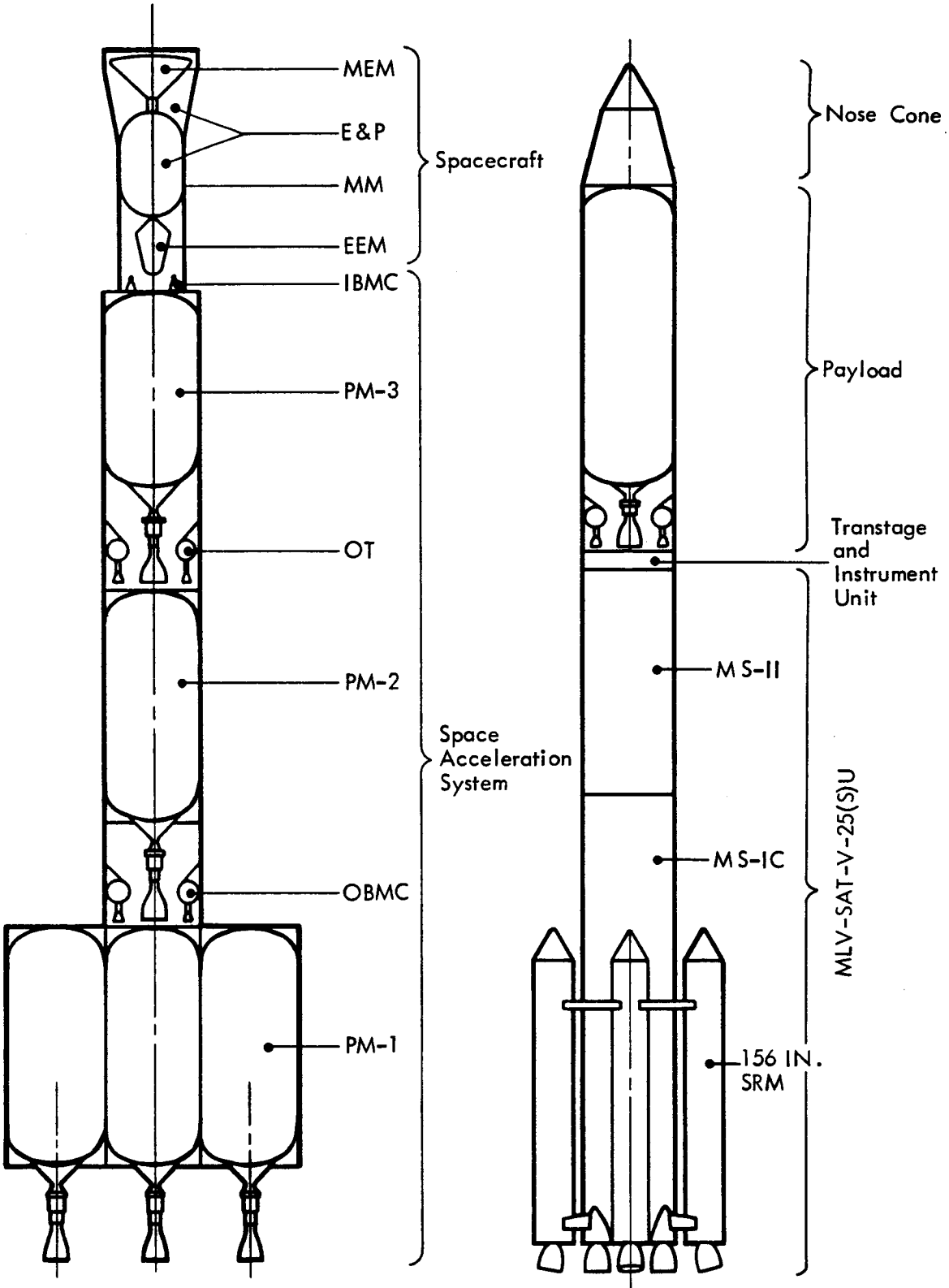

Figure 3.1-1: AEROSPACE VEHICLE

circular Martian orbit to the Mar's surface for 30 days during surface exploration, and for ascent from the Mars surface back to the mission module. It is an Apollo-shape entry vehicle with a maximum diameter of 30 feet and an overall length of 25 feet which houses retro and ascent propulsion systems and required subsystems. It provides a free volume per man of more than 150 cubic feet, a laboratory volume of about 60 cubic feet, and a sample and data return volume of approximately 10 cubic feet. Its assigned weight is 95,300 pounds.

3.1.3 EARTH ENTRY MODULE

The Earth entry module is an adaptation of a Lockheed biconic configuration*. It is designed to house a six-man crew for the 1-day flight initiated with mission module departure and terminated with Earth recovery. A pressure vessel constructed of reentry-type structure with an elliptical cross section (approximately 10 ft x 12 ft) and 21 feet long contains all the necessary subsystems and provides a volume of 40 cubic feet per man. The biconic shape is optimized so that at a 65,000-fps (19,800 m/sec) entry velocity, an entry corridor greater than 10 nautical miles exists. When tailored to the Earth entry velocities associated with the various missions, its weight varies from approximately 13,000 pounds on the 1983 Venus long mission to approximately 17,000 pounds on the 1982 Mars opposition mission. The recommended Earth entry module is one designed for the 1982 Mars opposition mission and not off-loaded for other missions.

3.1.4 SPACE ACCELERATION SYSTEM

In the recommended configuration, primary space acceleration is provided by five nuclear-LH_2 "common modules", three of which are for Earth departure (PM-1), with one each being used for planet braking (PM-2) and planet departure (PM-3). Each of the five modules is essentially identical with regard to 1) geometry--33 feet diameter by 115 feet long, 2) propellant capacity--385,000 pounds, 3) mechanical and electrical equipment, 4) forward and aft interstages, and 5) meteoroid shield (designed by launch loads).

The recommended common module includes a propellant transfer capability between modules and, except for increasing insulation mass on PM-3 for Venus long and Mars conjunction missions, is nearly identical for each of the PM's. With this approach, which now uses the same meteoroid shield for each PM, the probability of no meteoroid penetration of PM-3 drops slightly below the design requirement of 0.9970 to 0.9962 on the 1986 Mars conjunction mission.

Secondary propulsion for outbound midcourse correction, orbit trim, and inbound midcourse correction is provided by three systems based on a single concept. When tailored to individual mission and space vehicle requirements, system inerts vary by less than 1500 pounds when all three

---

*LMSC Document 4-05-65-12, *Study of Manned Vehicles for Entering the Earth's Atmosphere at Hyperbolic Speeds*, NASA Contract NAS2-2526, Lockheed Missiles and Space Co., November 1965

types of systems are considered and by less than 1000 pounds when only outbound midcourse correction and orbit trim inerts are compared. The recommended secondary propulsion systems are ones that use the same system (inert weight approximately 2000 pounds) for outbound midcourse correction and orbit trim, and a smaller system (inert weight about 780 pounds) for inbound midcourse correction.

3.1.5 EARTH LAUNCH VEHICLE

The recommended Earth launch vehicle, MLV-SAT-V-(S)U, is an uprated version of the MLV-SAT-V-25(S) studied under NAS8-20266 *Studies of Improved Saturn V Vehicles and Intermediate Payloads.** It consists of a lengthened MS-IC (ΔL = 40 ft) with five uprated (1.8×10^6 pounds thrust/engine) F-1 engines, a standard-length MS-II with five uprated J2S engines, and four 4-segment, 156-inch-diameter solid rocket motors attached to the MS-IC stage. In this configuration, a net payload of 548,400 pounds (approximately 248,000 kg) can be placed into a 262-nautical-miles circular orbit; a LO_2/LH_2 transtage is used to supply the final 475 fps (144.8 m/sec) for circularization from a 100 x 262-nautical miles orbit, rendezvous, and docking.

3.2 EARTH ORBIT ASSEMBLY

Multiple launches for the elements of the recommended space vehicle require that these elements be assembled in orbit. This section describes a technique for accomplishing this assemblage. Simplicity and common operations were the keynote to this technique. Minimum manual operations and extravehicular activity (EVA) were also a desirable goal.

The impact of the selected ELV, SAT-V-25(S)U, on the existing launch facilities result from its increased size and weight and the addition of the solid rocket strapon boosters. The ELV core vehicle and payload, after assembly in the vertical assembly building (VAB) on a modified mobile launcher (ML), are transported to the launch pad where the solid rocket motors are attached. Figure 3.2-1 shows the flow time for this assembly and for the launch operations. It can be seen that an additional launch pad at Complex 39 is required.

---

*Boeing Document D5-13183-1, *Vehicle Description of MLV-SAT-V-INT 20,-21,* The Boeing Company, October 1966
Boeing Document D5-13183-3, *Vehicle Description of MLV-SAT-V-25(S),* The Boeing Company, October 1966
Boeing Document D5-13183-4, *Vehicle Description of MLV-SAT-V-4(S)13,* The Boeing Company, October 1966
Boeing Document D5-13183-5, *Vehicle Description of MLV-SAT-V-23(L),* The Boeing Company, October 1966

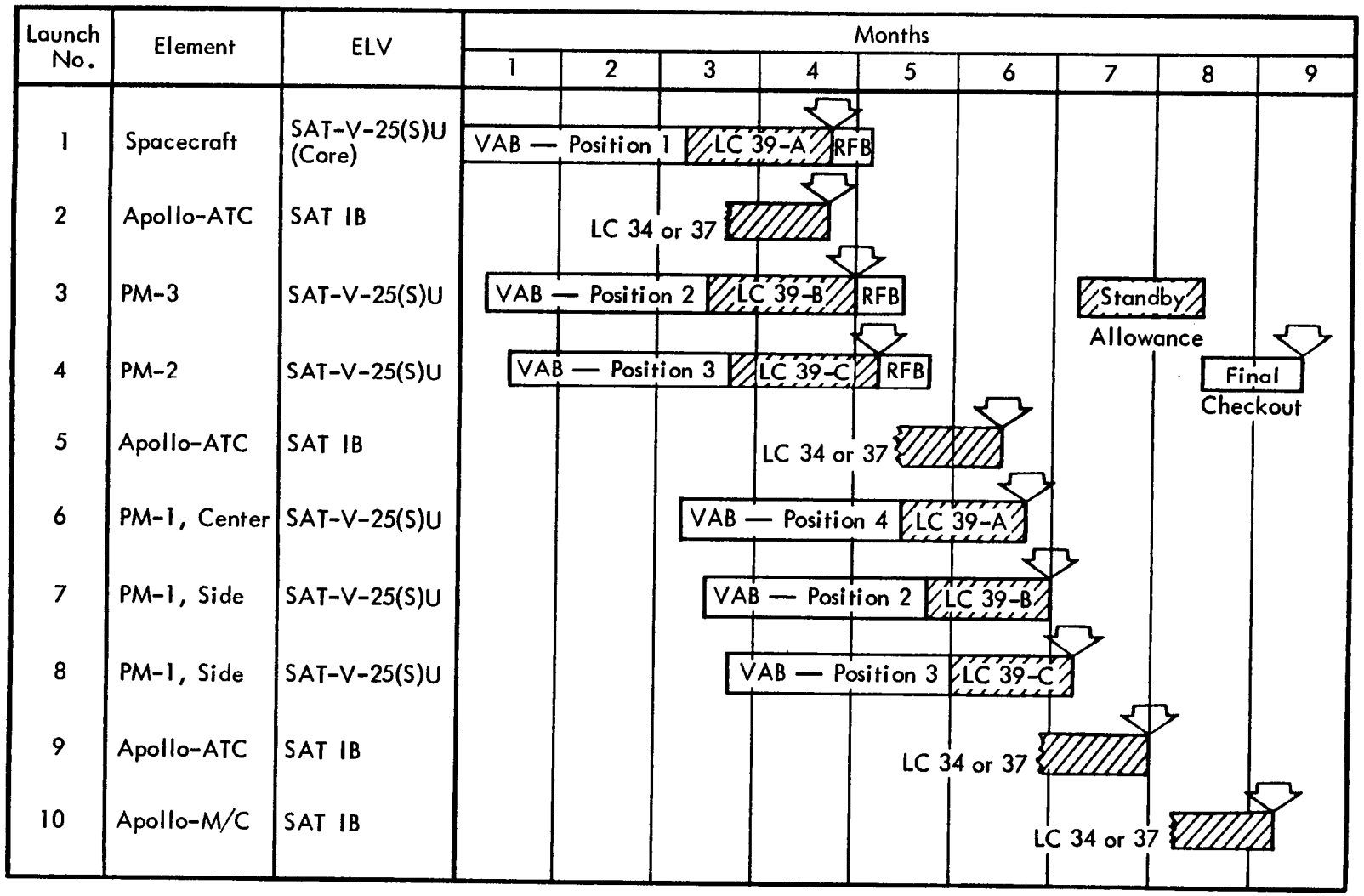

Figure 3.2-1: RECOMMENDED SPACE VEHICLE EARTH LAUNCH FLOW TIME

Launch Date

The assembly test crew (ATC) and the mission crew (MC) will be launched from Complexes 34 and 37 in a six-man modified Apollo logistics vehicle by a Saturn IB. Scheduling provides for a logistic launch rate of one every 45 days for ATC turnaround and replenishment of expendables, special tools, and equipment.

3.2.1 LAUNCH OPERATIONS

An indirect, rendezvous-compatible, circular orbit mode was selected for the assembly operation. The indirect mode provides an intermediate phasing orbit to compensate for launch-time errors. The rendezvous-compatible orbit permits two coplanar launch opportunities per day. Launch occurs at or near the coplanar launch opportunity, with the ELV providing sufficient yaw steering to accommodate at least a 10-minute ground launch window. The ELV will burn out supercircular at 100-nautical-miles to achieve an apogee orbit altitude of 262 nautical miles coincident with the assembly orbit. A LOX/LH_2 transtage instrumentation unit on each payload is used to provide the ΔV, 475 fps (144.8 m/sec), to circularize the orbit and accomplish the rendezvous and docking maneuver.

Figure 3.2-2 shows the 10 required Earth launches in their proper sequence.

Launch No. 1

The SAT-V-25(S)U core vehicle launches the spacecraft (4) unmanned. The transtage (15) (see legend on Figure 3.2-2) interfaces with both the ELV and the spacecraft. A male docking mechanism is within the nose cone (16).

3.2.1.2 Launch No. 2, 5, and 9

The assembly test crew (six men) is launched in a modified Apollo by a Saturn IB. At rendezvous, the modified Apollo docks into the logistic vehicle docking port on the side of the spacecraft (4), and the crew transfers into the mission module. The ATC checks out all systems and inspects for damage that might have occurred during launch. This inspection includes structural damage and, therefore, will require extravehicular activity. Launch numbers (5) and (9) are reserved for ATC rotation, based on a 45-day turnaround.

3.2.1.3 Launch No. 3

The first propulsion module, PM-3, is launched by a SAT-V-25(S)U with four solid rocket motors. When transfer to the assembly orbit is completed and the nose cone jettisoned, the rendezvous radar system within the mission module is activated to provide range, line of sight, and rate data for closing the distance between the spacecraft and PM-3 to within approximately 10 feet. At this close distance radar accuracy is inadequate; therefore, a television camera in the male cone (ascending element) provides the required visual information from which the final alignments for docking are made. Upon contact, the energy-absorbing system within the docking mechanism activates to eliminate the ΔV between the two elements. Connecting rods from the spacecraft are swung and

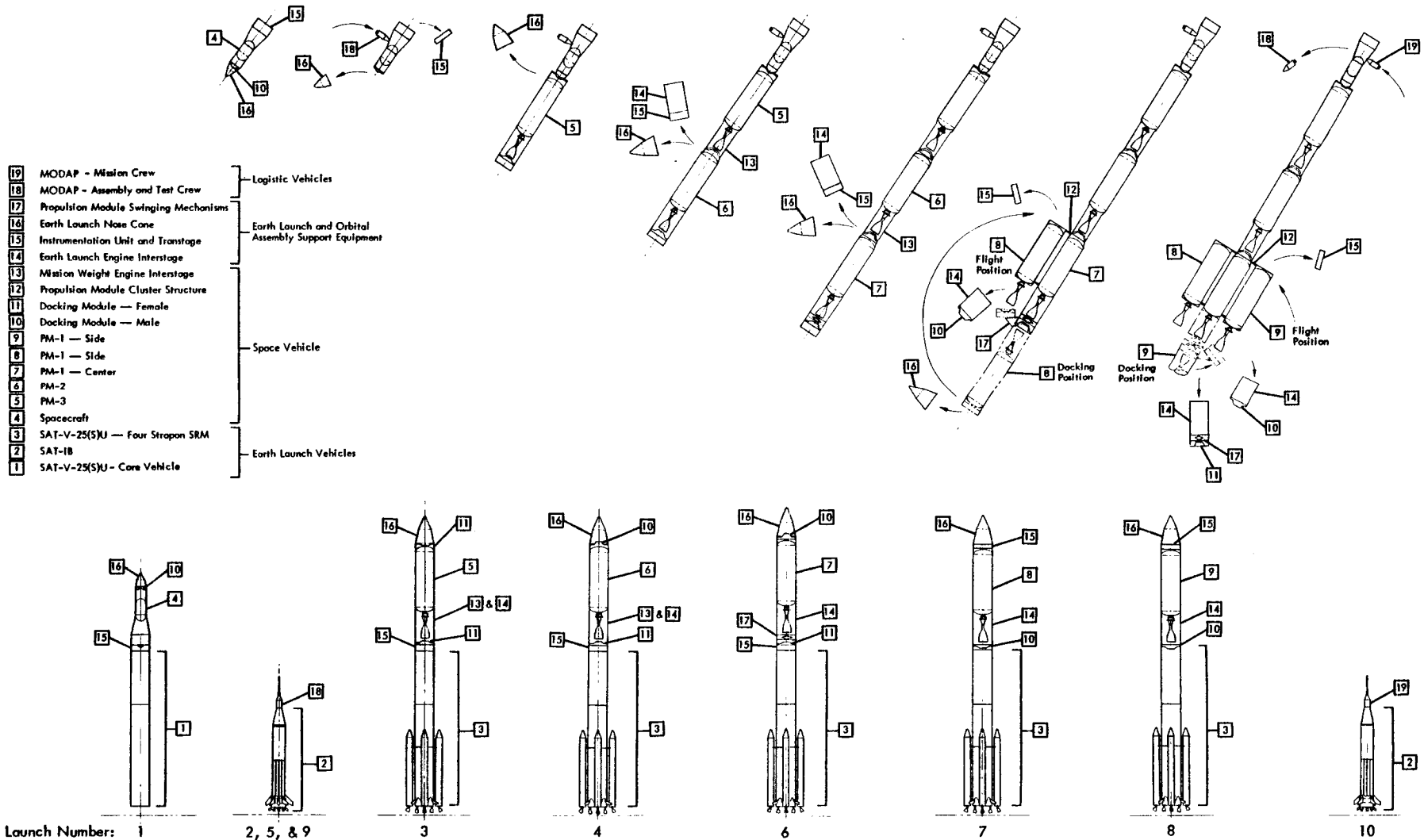

15

FOLDOUT FRAME

Fig. 3.2-2:A

Figure 3.2-2: EARTH LAUNCH AND ASSEMBLY SEQUENCE — RECOMMENDED SPACE VEHICLE

FOLDOUT FRAME 15 & 16

locked into position on the PM-3 securing the two together. Umbilicals are then automatically engaged, permitting the ATC to remotely check out the PM-3. In the next operation, the outer engine interstage (14) is severed by a circumferential primacord detonation; it and the transtage (15) are then removed from the inner space interstage. Finally, crew members by extravehicular activity, visually inspect the mission module/PM-3 assembly for launch and docking structural damage prior to the next launch.

3.2.1.4 Launch No. 4

Propulsion module (2) (6) is the fourth launch; the procedure for the third launch is repeated. The elements are drawn together by a hydraulic system in the docking mechanism until the automatic aligning and latching mechanism on the interstage structure secures the elements. In addition to the electrical umbilical connection, the fuel transfer duct and the pressurization line are connected (automatically), thus requiring EVA for inspection only.

3.2.1.5 Launch No. 6

The flow-time chart, Figure 3.2-1, shows that the sequence of launching the first four launches allows sufficient time to erect the last three payloads on their respective ELV in the VAB. They can therefore be moved to the launch complex immediately after launch pad refurbishment.

Launch No. 6 places the first of the three PM-1 propulsion modules into an assembly orbit. This propulsion module differs from PM-2 and PM-3 in that it has no inner interstage (13), but has a swinging mechanism and female docking mechanism between the outer interstage and the transtage. This PM-1 docks into the engine end of PM-2 and then jettisons its transtage. Interconnect of the fuel transfer duct and the pressurization line is required with PM-2.

3.2.1.6 Launches No. 7 and No. 8

The Earth orbit departure stage has three propulsion modules assembled in a side-by-side manner. Launches No. 7 and No. 8 inject the two side modules (8) and (9) into assembly orbit. Their configuration and orbital assembly operations are the same.

The transtage on all other modules is installed at the engine end for the straight-in docking maneuver. The transtage on the side modules is installed forward of tank to permit a straight-in engine-to-engine docking maneuver with the center module's (7) engine. The swinging mechanism (17) at the engine end of the center module is actuated and the side module is swung around 180 degrees to the side of, or in a parallel formation with, the center module. Cluster structure (12) is attached at both the forward and aft Y rings to make the final attachment. The Earth launch interstages (14) of all three PM-1 modules are jettisoned just prior to PM-1 engine burn. No fuel transfer duct or pressurization line connection is required to the side modules.

3.2.1.7 Launch No. 9 and No. 10

If required, a Saturn IB (2) launches another crew for launch No. 9. The mission crew is launched (launch No. 10) for final checkout by another Saturn IB.

3.3 AEROSPACE VEHICLE CAPABILITY

Using the common module approach for space acceleration, the number of launches required to do each of the 20 missions was determined. Table 3.3-1 provides this data and shows that with the recommended 3-1-1 (three modules for Earth departure and one each for planet braking and planet departure) space acceleration system, 15 of the 20 missions can be accomplished. Of these 15, nine can be done with a 2-1-1 space acceleration system. It will be shown that considerable discretionary payload capability is available for these missions when the recommended 3-1-1 system is used.

The payload capability for each of the 15 missions that can be accomplished with a 3-1-1-1 space vehicle (3 PM-1, 1 PM-2, 1 PM-3, 1 spacecraft) is shown in Figures 3.3-1, -2, -3, and -4. Also shown is the design payload point for each mission when the recommended space vehicle is used. The difference between the payload capability line and this design payload point when measured along the ordinate and abscissa represents discretionary payload capability.

For example, with the recommended space vehicle considerable discretionary payload is available for the 1986 Mars opposition mission. Figure 3.3-1 shows that for this mission an additional 200,000 pounds of payload can be taken into Mars orbit or an additional 60,000 pounds of payload can depart Mars. Obviously, there are also other combinations of Mars orbit and Mars departure discretionary payload for this mission.

This discretionary payload capability which is available to a lesser or greater extent for all missions can be used to accommodate more experiments, heavier spacecraft elements (MEM, EEM, or MM), or greater ΔV requirements.

Table 3.3-1: LAUNCHES AND CONFIGURATION VERSUS MISSIONS

Mission		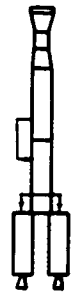	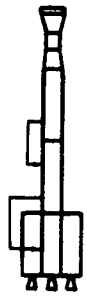	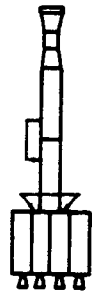
Class	Year	2-1-1-1	3-1-1-1	4-1-1-1
Mars Opposition	1982		X	X
	1984		X	X
	1986	X	X	X
	1988		X	X
Mars Conjunction	1980	X	X	X
	1986	X	X	X
Venus Swingby	1975			(8 launches)
	1978			(8 launches)
	1980			X
	1982	X	X	X
	1984			X
	1986			X
Venus Short	1980*		X	X
	1981		X	X
	1983	X	X	X
	1985	X	X	X
	1986	X	X	X
Venus Long	1980*		X	X
	1981	X	X	X
	1983	X	X	X

*1980 Venus long and short missions exceed ELV capability with 3-1-1-1 configuration by less than 3%.

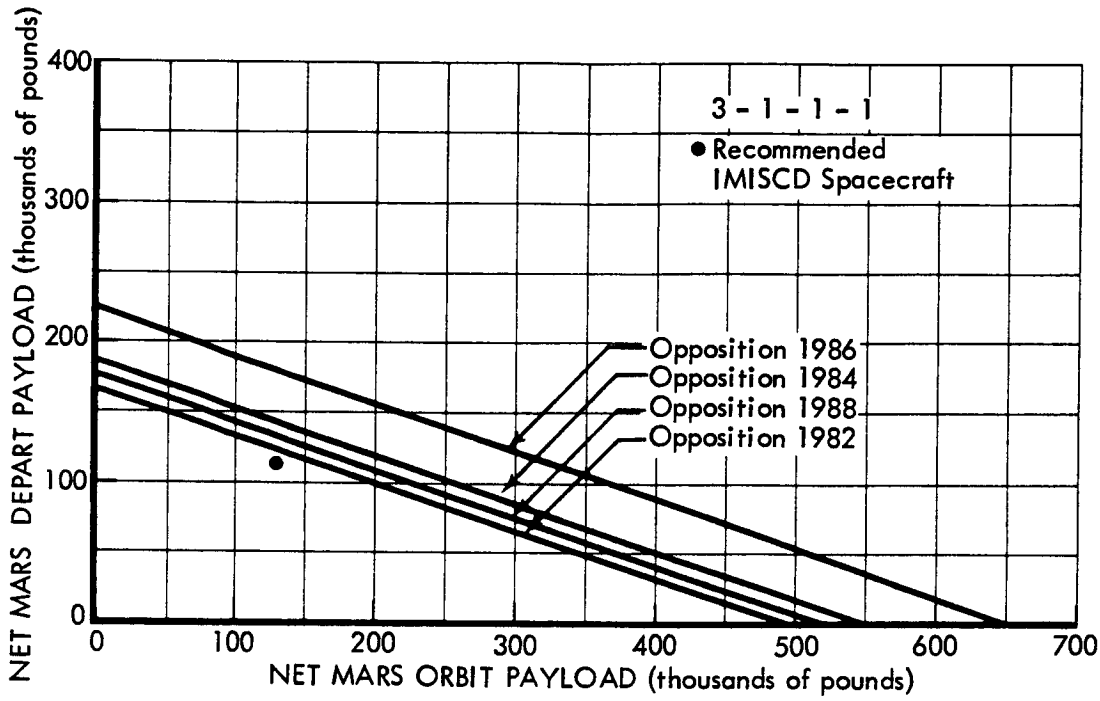

Figure 3.3-1: MARS OPPOSITION PAYLOAD CAPABILITIES

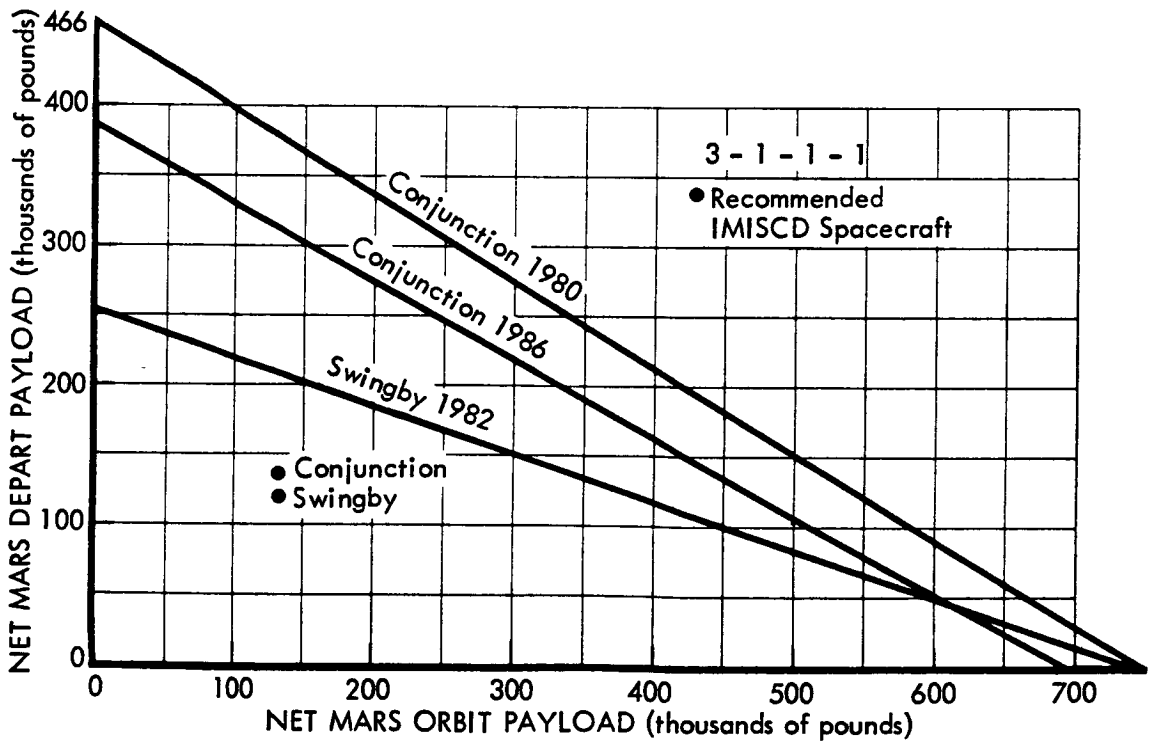

Figure 3.3-2: MARS CONJUNCTION AND SWINGBY PAYLOAD CAPABILITIES

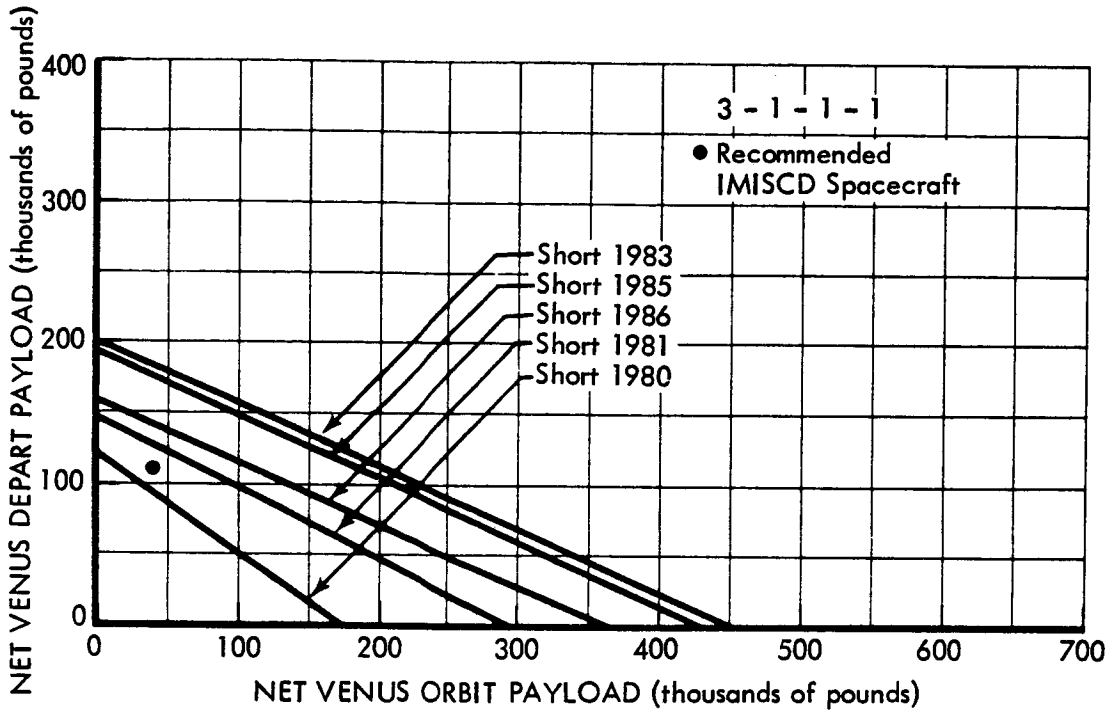

Figure 3.3-3: VENUS SHORT PAYLOAD CAPABILITIES

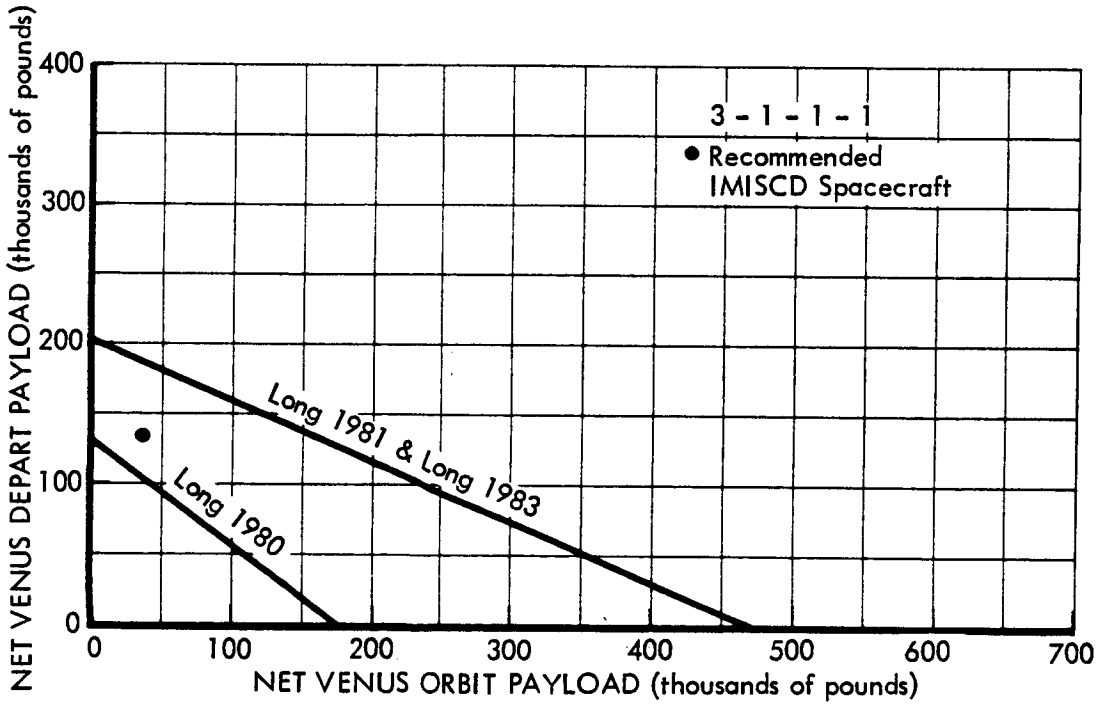

Figure 3.3-4: VENUS LONG PAYLOAD CAPABILITIES

4.0 SPACE VEHICLE—ZERO-G

The space vehicle consists of those elements that are injected from the parking-assembly Earth orbit into a heliocentric Mars or Venus targeted trajectory. It represents the most critical (from a safety standpoint), most costly, and most technically challenging portion of the interplanetary mission system. This section describes the recommended space vehicle and its elements, which are:

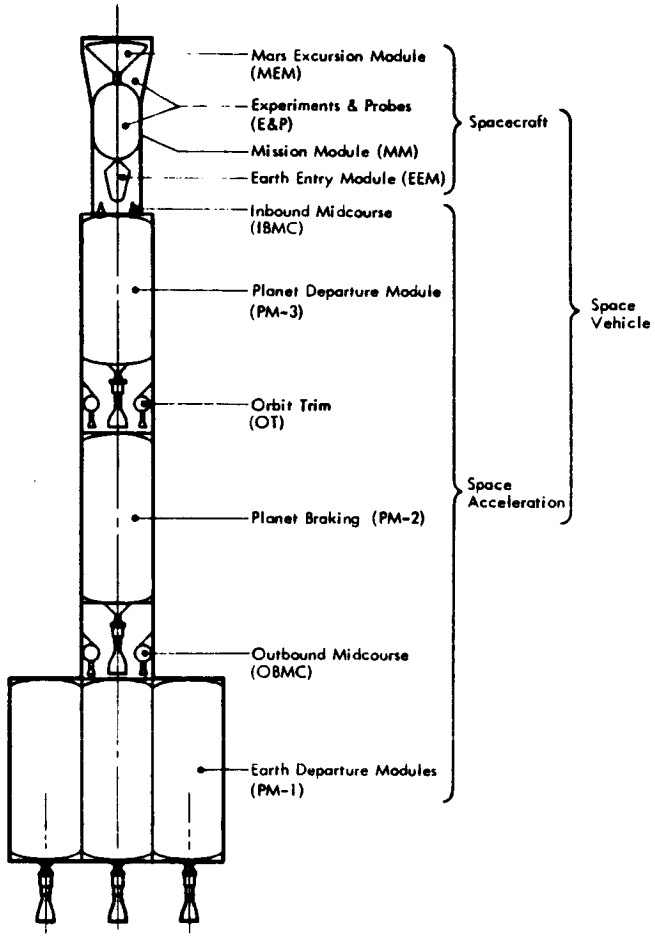

In addition to the space vehicle description, this section includes: 1) a system and element weights section which provides detail weight statements, weight sensitivities, weight derivations, and the computer program logic used in obtaining IMIEO's, 2) a reliability section which provides the logic used in establishing the reliability allocation for space vehicle elements and provides estimates of reliability versus mission time, and 3) a space vehicle artificial g section which provides

a brief description of an artificial-g space vehicle configuration and compares it with a zero-g configuration.

4.1 RECOMMENDED SPACE VEHICLE

The recommended space vehicle, consisting of a space acceleration system and spacecraft, is shown in Figure 4.1-1. It is an inline configuration (per the arrangement trades of Section 4.1.4) with the spacecraft and each stage of propulsion in series. When fully assembled in Earth orbit, the space vehicle's length is about 580 feet and its fully loaded mass is about 3×10^6 pounds. Primary space acceleration is provided by five nuclear engine common modules in a 3-1-1 configuration (three PM-1 modules, one PM-2 module, and one PM-3 module). Incorporated into this system is a propellant transfer capability from "up" stage tanks to "lower" stage tanks. This permits the use of a common tank geometry for all modules with a minimum mass penalty, since ΔV capability can be matched to ΔV required via the transfer of propellant. Three chemical propulsion systems provide secondary space acceleration for the outbound midcourse correction, orbit trim at the target planet, and inbound midcourse correction. Each of these systems are housed within the engine interstages of PM-2, PM-3, and the forward interstage of the spacecraft, respectively. The spacecraft system is composed of three major elements: an Earth entry module (EEM), a mission module (MM), and a Mars excursion module (MEM) for Mars landing missions. Spacecraft length is about 108 feet and its mass ranges from a low of approximately 152,000 pounds (Venus short mission) to a high of approximately 279,000 pounds (Mars conjunction).

Since a hard docking system similar to the Apollo probe and drogue system is used for the in-orbit assembly technique, a docking mechanism is provided between the spacecraft and PM-3, PM-3 and PM-2, and PM-2 and the center tank of PM-1. Docking and positioning equipment for PM-1 side tanks is not shown in Figure 4.1-1 as it has been jettisoned (for further details on space vehicle assembly see Section 3.2).

The engine interstages of the propulsion modules consist of an inner flight weight interstage and outer heavier Earth launch interstage. After docking, PM-2 and PM-3 Earth launch interstages are jettisoned; the PM-1 engine interstage is removed prior to PM-1 burn.

4.1.1 ARRANGEMENT TRADES

Whereas mission operations dictate, in a gross sense, the arrangement of the major spacecraft elements, such is not the case for primary propulsion modules. Consequently, a study was conducted to determine the best arrangement of the three stages of the primary propulsion system. For this study, the spacecraft configuration was held constant for ease of arrangement evaluation, and factors such as tank commonality, meteoroid shielding, orbital assembly, and staging were considered. Emphasis was placed on reducing the number of different-size tanks and the surface exposed to meteoroids. Since the meteoroid shielding weight varies as a function of exposed area x time, this factor was determined for each propulsion module arrangement. Eleven arrangements were evaluated. Of the eleven, the five most promising are discussed below.

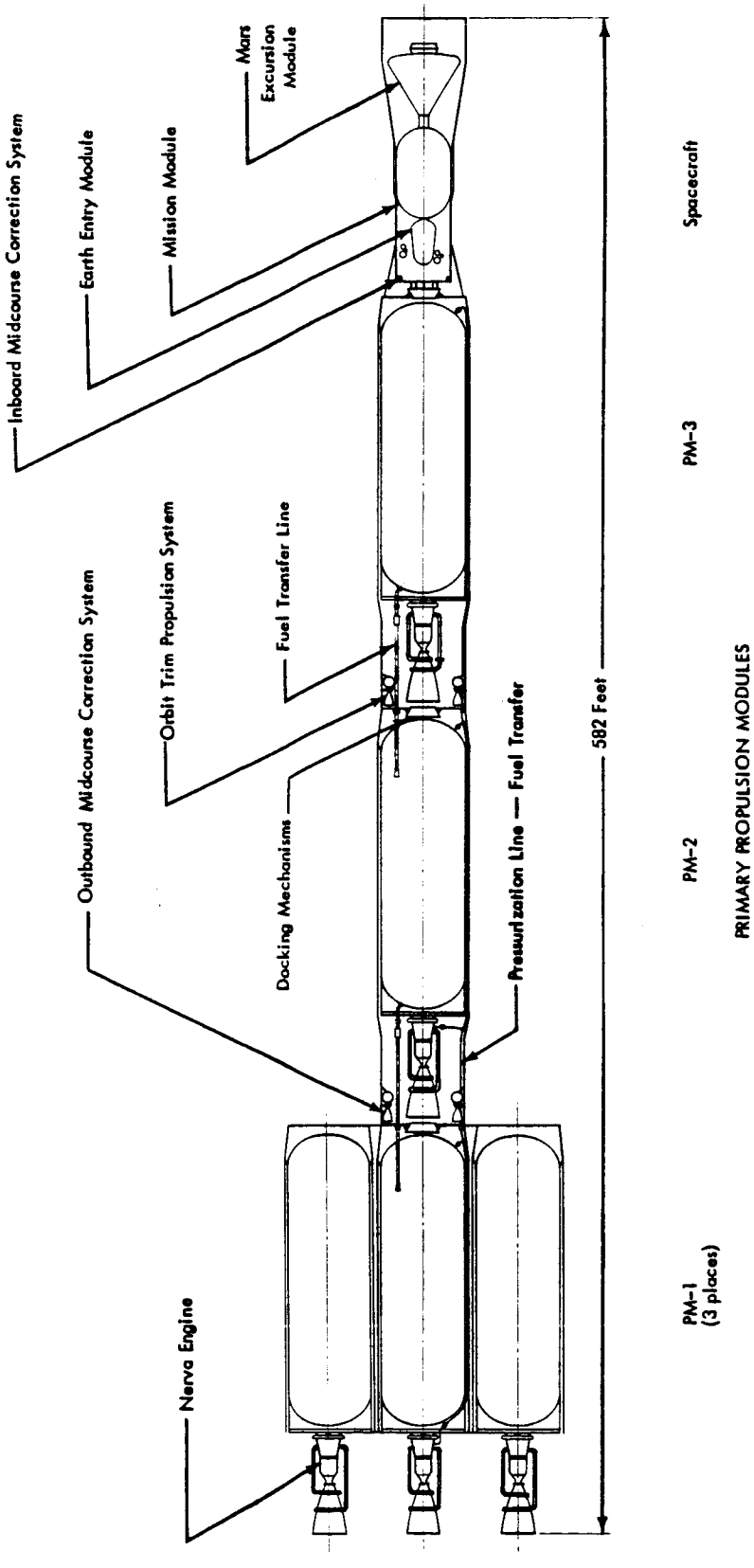

Figure 4.1-1: RECOMMENDED SPACE VEHICLE

4.1.4.1 Standard Arrangement

In the standard arrangement shown in Figure 4.1-2, the three stages and spacecraft are located sequentially along the space vehicle centerline. This arrangement was the longest of all those studied. The propellant tank diameter was common for all modules and either sized in length to meet mission propellant requirements or held constant.

4.1.4.2 Spine Arrangement

An attempt was made to reduce the overall length of the standard arrangement by placing the nuclear engines in a centrally located spine. The propellant tanks are assembled to the outside of the spine. As seen in Figure 4.1-3, this approach results in an appreciable length decrease; however, the area-time factor is high because there are no interstages, as there were on the standard arrangement, to protect the exposed tank domes. As in the case of the standard arrangement, variable-length tanks were used. Thus, propellant loading efficiency was 100%. To maintain staging symmetry about the vehicle centerline, this arrangement required one more PM-3 and one more PM-2 tank than the standard arrangement. No radiation protection to the mission module is provided by the LH_2 in this arrangement, since there is no LH_2 tank between the PM-3 engine and the mission module.

4.1.4.3 Common Tank Arrangement

Figure 4.1-4 shows a common tank arrangement which utilizes the same tank size in all stages but with no propellant transfer between tanks. The tank size was selected for the highest propellant loading efficiency for the typical mission used for the propulsion arrangement study. Propellant loading efficiency was relatively high for all stages with the PM-2 tanks having the greatest amount of off-loading. Though this configuration did have an LH_2 tank between the PM-3 and mission module for radiation shielding, it did not reduce the exposed area-time factor below the standard arrangement. This was again due to the large number of exposed tank domes. The number of launches is greater for this arrangement than for the standard arrangement, again due to the increased number of tanks required to maintain staging symmetry about the vehicle centerline.

4.1.4.4 Engine Farm Arrangement

In the engine farm arrangement, Figure 4.1-5, all engines are located on a single plane with their thrust directed through the space vehicle c.g. This arrangement allows all engines to be maintained for reuse and provides tanking and engine arrangement flexibility. This arrangement does require connecting all the plumbing from outer tanks to the center tank during orbit assembly plus additional radiation shielding and cool-down propellant for the reusable nuclear engines. It is possible to Earth-launch all the engines plus the center tank in a single launch.

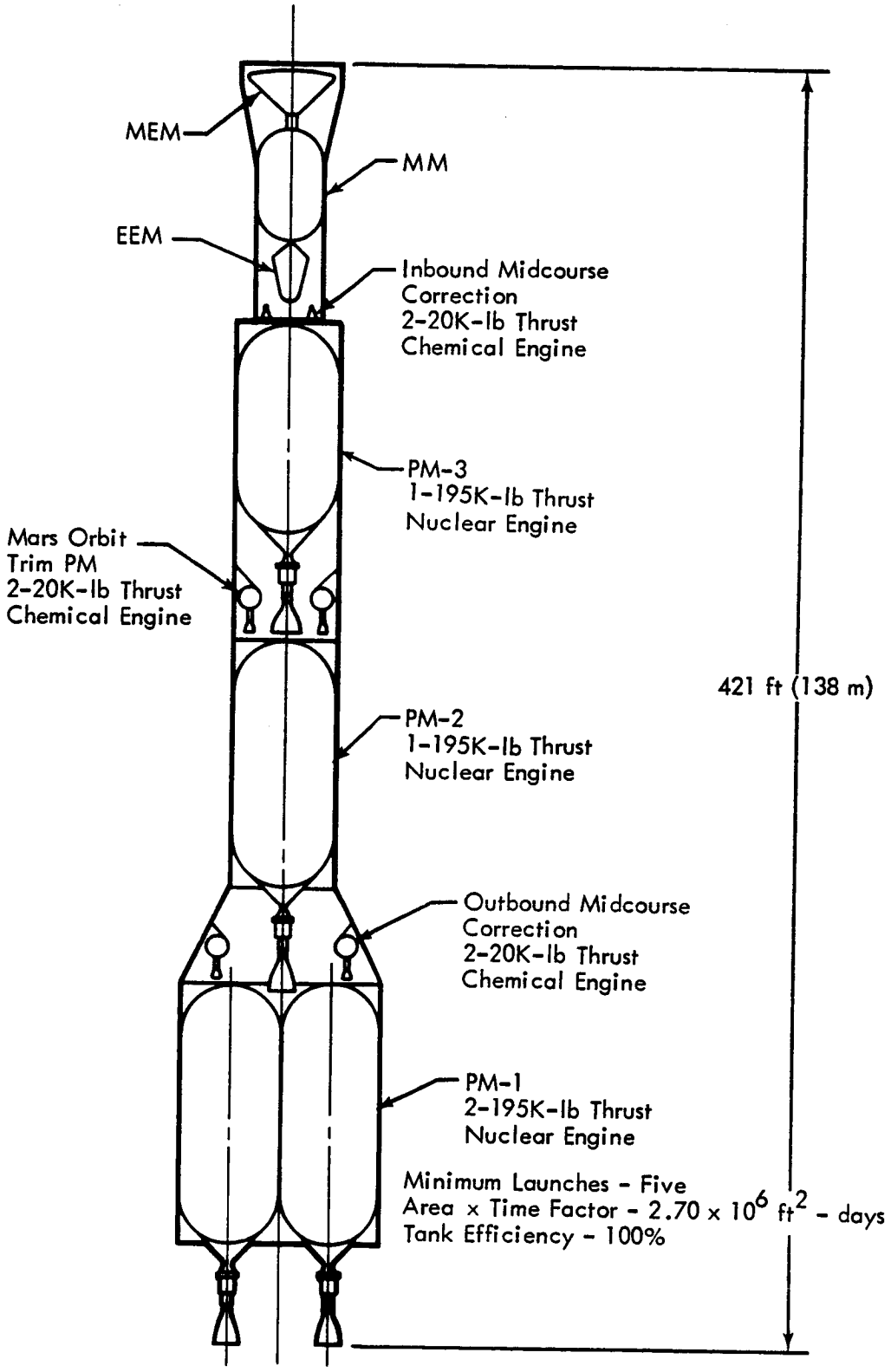

Figure 4.1-2: STANDARD APPROACH

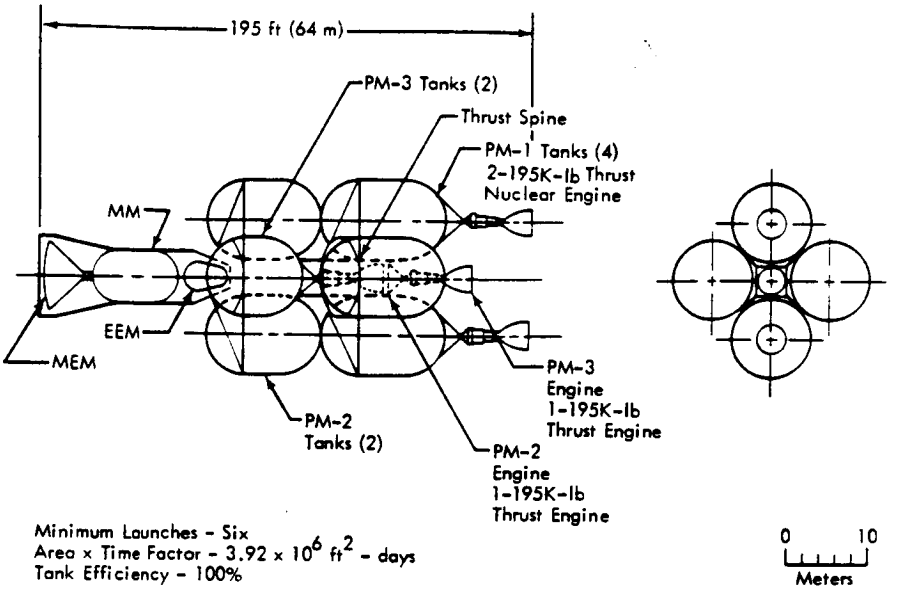

Figure 4.1-3: SPINE ARRANGEMENT

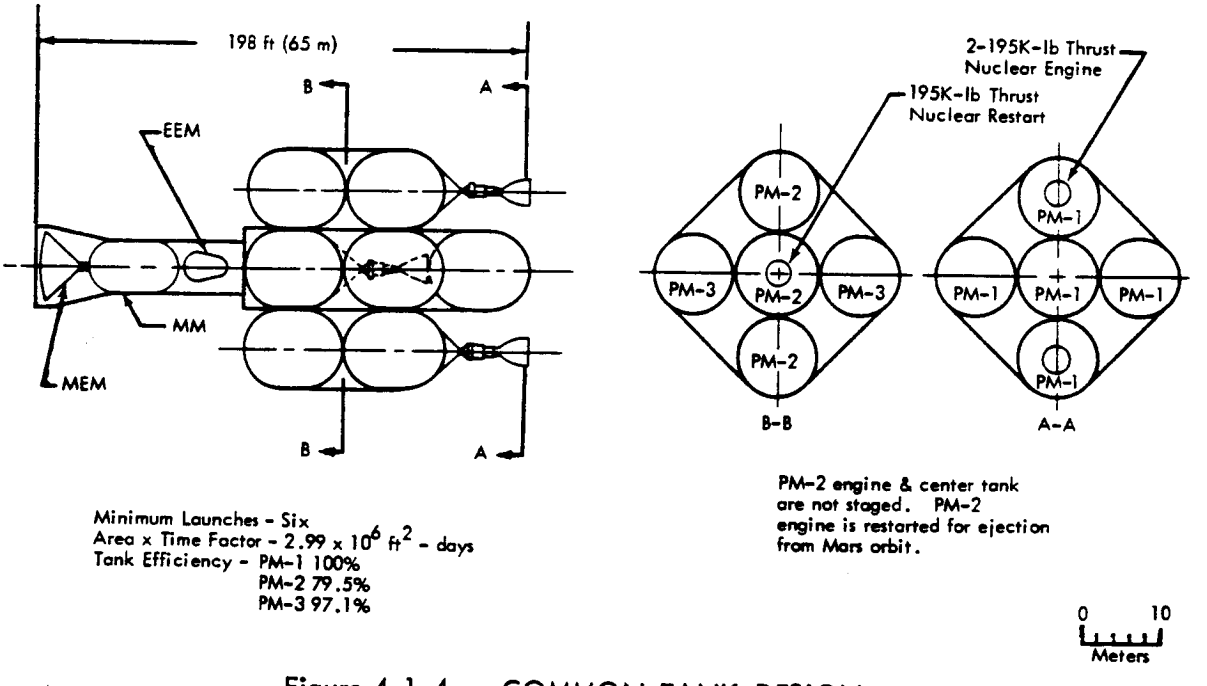

Figure 4.1-4: COMMON TANK DESIGN

4.1.4.5 Common Bulkhead Arrangement

In the common bulkhead arrangement, Figure 4.1-6, propellant for the first-, second-, and third-stage burn is contained in one tank. Four identical tanks with common bulkheads separating the PM-1, PM-2, and PM-3 propellant are assembled to a central spine.

After PM-1 stage burn is complete, the bottom sections of each tank are severed below the Y ring by a primacord explosion and jettisoned. The PM-2 and PM-3 propellant is then fed to the engine located in the thrust spine.

After PM-2 burn, the upper portion of the tank is separated, thus leaving the center portion of the tank which contains the PM-3 propellant. The major advantage of this arrangement was the combination of 100% propellant loading efficiency with a common tank design. The major disadvantages of this arrangement was the complexity of the tank staging design, the requirement to feed propellant from the peripheral tanks to the centrally located engine, and the lack of radiation protection to the mission module from the PM-3 nuclear engine.

4.1.4.6 Arrangement Evaluation

The standard arrangement was found to be the most desirable. As shown on the evaluation matrix, Figure 4.1-7, the standard arrangement required fewest number of launches, provided the lightest weight meteoroid protection, required the least number of different shielding designs, provided adequate radiation protection between the PM-3 engine and the crew compartment and allowed relatively simple staging and assembly in orbit. For 15 of the 20 missions investigated with the SAT-V-25(S)U as the Earth launch vehicle, the tank combinations could be limited to a single tank for PM-2 and PM-3 and three tanks for PM-1. This combination of tanks considers a common size tank for all propulsion modules and allows propellant transfer from PM-3 to PM-2 to PM-1 to accommodate the ΔV variations for the missions investigated.

4.2 SPACECRAFT

The spacecraft portion of the space vehicle for manned Mars missions consists primarily of the three modules occupied by the crew during the course of the mission, connecting interstages, subsystems to provide operational capability, experiment equipment and sensors, and unmanned probes. Arrangement of these major elements is shown in Figure 4.2-1. Overall length is 108 feet with the maximum and minimum diameters being 33 and 22 feet, respectively. Weight of the spacecraft for several representative missions is shown in Table 4.2-1. These variations are associated with different expendable loadings for the mission durations, a different probe complement for Mars, and Venus missions, and, of course, the deletion of the MEM on Venus missions.

The forward interstage compartment is an unpressurized area that supports and encloses the Earth entry module and mission module subsystems such as communication systems and electrical power system, external

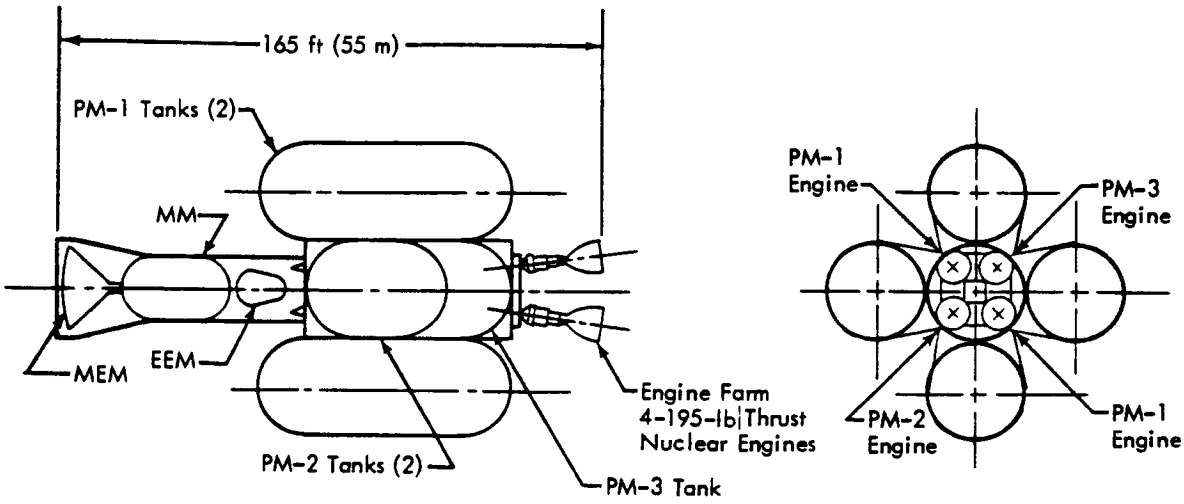

Minimum Launches - Five
Area x Time Factor - 3.23×10^6 ft^2 - days
Tank Efficiency - 100%

0 10
Meters

Figure 4.1-5: ENGINE FARM

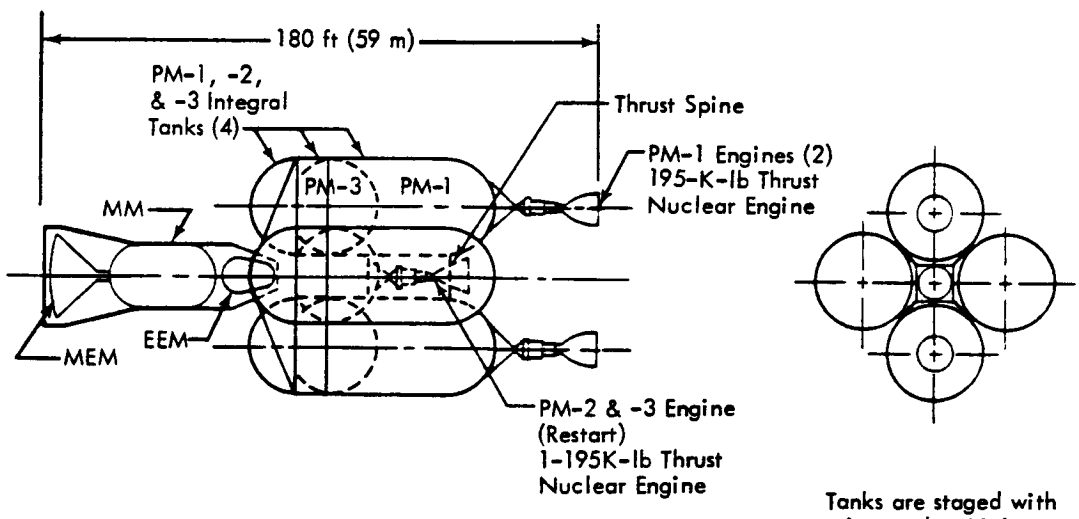

Tanks are staged with primacord at Y ring.

Minimum Launches - Five
Area x Time Factor - 3.07×10^6 ft^2 - days
Tank Efficiency - 100%

0 10
Meters

Figure 4.1-6: COMMON BULKHEAD DESIGN

Parameter Evaluated	Measurement (Msmt)	Maximum Possible Score	Configuration									
			Standard Approach		Common Tank		Common Bulkhead		Spine Arrangement		Engine Farm	
			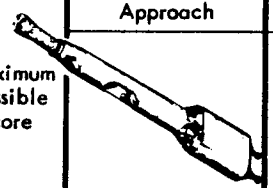				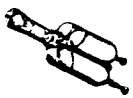					
			Msmt	Score	Msmt	Score	Msmt	Score	Msmt	Score	Msmt	Score
Booster Requirement	Number of Launches	15	5	15	6	9	5	15	6	9	5	15
Meteoroid Shielding	Exposed Area Factor (Ft^2 - Days x 10^6)	15	2.70	15	2.99	12	3.07	11	3.92	3	3.23	10
Orbital Assembly Complexity	Number of Major Assembly Operations	12.5	4	10	6	12.5	6	12.5	10	2.5	6	12.5
	Number of Engines to be Assembled		2		0		0		0		0	
Adaptability to Shed Meteoroid Shielding and Insulation	Number of Shields to be Shed	10	4	10	10	2	8	4	8	4	5	8
	Number of Different Shield Designs		3		1		2		3		3	
Shielding from Nuclear Radiation	LH_2 Shielding Length (ft)	10	69	10	39	5	0	2	0	2	69	10
Tank Commonality	Number of Different Tank Sizes	10	3	2	1	10	1	10	3	2	3	2
Staging	Number of Staging Operations	5	4	5	8	2.5	9	1	7	2.5	5	4
	Complexity of Staging		4		9		16		10		7	
Evaluation Total			—	67	—	53.0	—	55.5	—	25.0	—	61.5
Rating			1		4		3		5		2	

Figure 4.1-7: CONFIGURATION EVALUATION

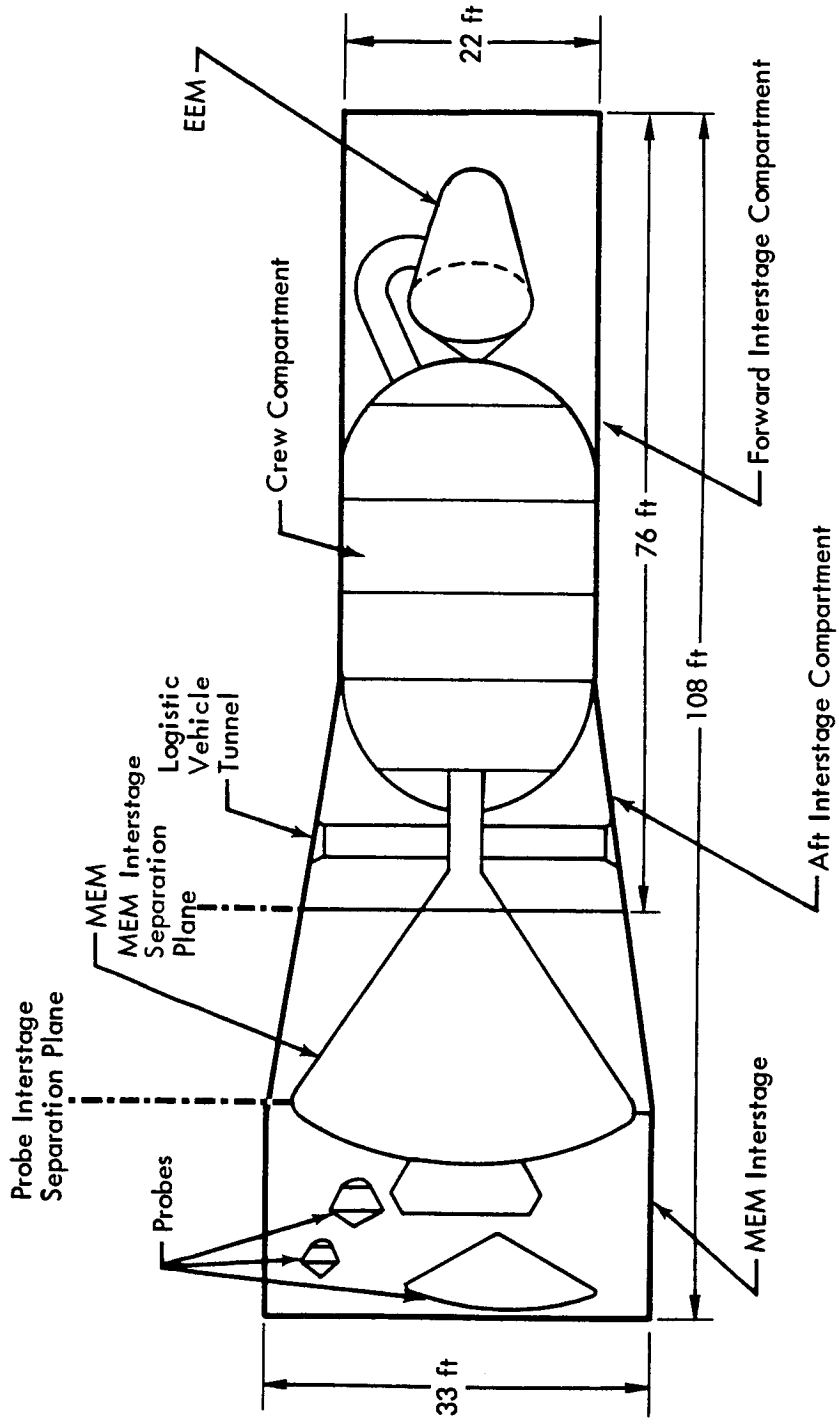

Figure 4.2-1: SPACECRAFT

Table 4.2-1: SPACECRAFT WEIGHT VARIATION

	1984 Mars Opposition	1986 Mars Conjunction	1981 Venus Short
Mission Module	82,900	116,580	82,900
Mars Excursion Module	95,290	95,290	----
Earth Entry Module	17,400	13,900	13,900
Probes	24,480	24,480	37,610
Interstages	21,000	21,000	18,000
Total	241,070	271,250	152,410

experiment sensors, and the inbound midcourse propulsion system. A tunnel connects the EEM and mission module crew compartment to provide for pressurized transfer.

The mission module crew compartment provides the crew with a shirt-sleeve environment, quarters for living functions, operation of the space vehicle, an experiment laboratory, radiation shelter, and also many of the subsystems required to support the above functions. The various functional areas and equipment are distributed on four decks. Except during crew descent to the Martian surface and during Earth entry, this compartment is occupied by the six crewmen the entire length of the mission.

The aft interstage compartment is also an unpressurized area and has the shape of a truncated cone. This compartment houses the remainder of the mission module subsystems, external experiment sensors, and a portion of the unmanned probes. An airlock extends from the crew compartment to provide for pressurized transfer to the MEM as well as for extravehicular activity operations. Tunnels connect the airlock and logistic vehicle docking ports to also provide pressurized transfer capability.

Located within the aftmost portion of the truncated cone interstage is the Mars excursion module. Purpose of the MEM is to transfer three crewmen to the Martian surface, provide living and operations quarters while on the surface, and return the crew to the space vehicle. Unmanned probes occupy the 33-foot diameter aft cylindrical portion of the spacecraft.

Operationally, the spacecraft is launched unmanned into Earth orbit fully assembled. The assembly, test, and checkout crew is launched in a modified Apollo logistic vehicle. The initial operations of this crew consist of assuring the operational capability of each of the manned modules including subsystems and experiment equipment. Included in this initial test period is the deployment of all equipment that operates external to the spacecraft. Following verification of all spacecraft systems, the propulsion modules are launched and attached to the spacecraft to form the space vehicle. A mission crew replaces the assembly test crew prior to leaving Earth orbit. During the outbound

phase of the mission, all space vehicle activities are controlled from the crew compartment portion of the spacecraft. This includes attitude control which has the reaction jets located in the aft interstage of the mission module and the control moment gyros within the crew compartment.

Upon reaching the 540-nautical-mile operational altitude at Mars, the probes located within the aft probe compartment are launched. These probes have the purpose of assuring data relating to the Martian atmosphere and surface conditions are within the design tolerances used in the design of the MEM. Verification of the MEM design conditions allows jettisoning the probe interstage and separation of the MEM with its three-man crew. The remaining unmanned probes are launched following the jettisoning of the MEM interstage. These probes are used to investigate physical characteristics of the planet as well as the moons of Mars.

Following the planet surface exploration phase of the mission, the MEM returns to the space vehicle. Docking is at the same facility as the MEM's initial position. Upon completing crew and surface sample transfer, the MEM is separated and left in Mars orbit. At the completion of the Mars departure maneuver, the PM-3 is separated leaving only the mission module and EEM for the inbound flight.

Operations of the spacecraft during the inbound phase of the mission are much the same as for the outbound phase. Approximately 3 days prior to Earth entry, the EEM is fully activated and loaded with all experiment samples that are to be returned. Crew transfer to the EEM and separation from the mission module occurs at approximately 1 day prior to entry. The inbound midcourse propulsion system is commanded shortly after EEM separation to supply the necessary impulse to divert the trajectory of the mission module so it does not enter the Earth's atmosphere.

The spacecraft and operations for Venus missions are essentially the same as for Mars capture missions. The major difference is that the MEM is replaced by unmanned probes as described in Section 4.2.2.

4.2.1 MISSION MODULE

The primary functions of the mission module are to provide shirt-sleeve environment living, operations and laboratory quarters for the crew, subsystems to provide this environment and to control the operations of the vehicle and experiments, and finally, the necessary structure to enclose and support the above systems, experiment equipment, and EEM as well as providing the structural attachment to the MEM interstage and the Mars/Venus orbit departure propulsion module (PM-3). The recommended mission module has sufficient volume for equipment and expendables suitable for Mars, Venus, and Mars/Venus swingby missions of durations up to approximately 1100 days. In addition, the mission module serves as the living and operations center for the assembly, test, and checkout crew while the interplanetary space vehicle is being assembled in Earth orbit. Assembly durations are approximately 150 days.

Subsequent sections within the mission module description, discuss the configuration, subsystems, redundancy and maintenance, radiation protection, mission module commonality, weights, and trades associated with the major aspects of the mission module. Although experiment accommodation is associated with the mission module, this topic is discussed under Section 4.2.2.

4.2.1.1 Configuration

The mission module configuration is divided into three sections as illustrated in Figure 4.2-2. These include a pressurized compartment for the crew and fore and aft interstage compartments for equipment housing. Overall length of the mission module is approximately 76 feet with the cylindrical diameter being 22 feet and the maximum diameter of the truncated cone 28.5 feet. A total volume of 28,250 cubic feet and surface area of 5530 square feet are provided by the configuration. The average equipment packing density is approximately 5 lb/ft^3 for the long-duration missions and 3.5 lb/ft^3 for the shorter missions.

Inboard Profile---The inboard profile of the recommended mission module is shown in Figure 4.2-3. Each of the major sections of the configuration is discussed in the following paragraphs.

Forward Interstage Compartment---The forward interstage compartment is an unpressurized area that encloses and supports the EEM, experiment sensors, and other equipment used during the course of the mission. The forward interstage compartment extends from the nose cone/mission module interface plane to the forward Y ring of the crew compartment as illustrated in the side view and view F-F. Overall length of the forward interstage compartment is approximately 36 feet with a diameter of 22 feet. The resulting net volume (excluding crew compartment forward bulkhead) and surface area are approximately 10,900 cubic feet and 2500 square feet, respectively.

Meteoroid and thermal protection is provided by the forward interstage compartment for the EEM supported within. Leading from the EEM to the crew compartment is a 42-inch diameter tunnel to allow a pressurized crew transfer. The tunnel is approximately 15 feet long. A hatch is installed on the tunnel surface to allow access to equipment in the forward interstage compartment. Communication antennas for the spacecraft are stowed in the forward interstage compartment and include the 10-foot-diameter S-band antenna and 5 foot x 5 foot x 12 foot (deployed) UHF antenna. The optics system for the laser communication subsystem is also stowed within the forward interstage compartment and consists of a 36-inch-diameter (optics) telescope 10 feet long. Located in the forward end of the forward interstage compartment is the radioisotope/Brayton cycle electrical power unit. At this location, a minimum of 30-foot separation exists between the unit and the approximate center of crew activity in the crew compartment. Experiment sensors within the forward interstage compartment are discussed in Section 4.2.2. The inbound midcourse correction system consists of two engines each with separate propellant storage. This system is discussed in Section 4.3.2.

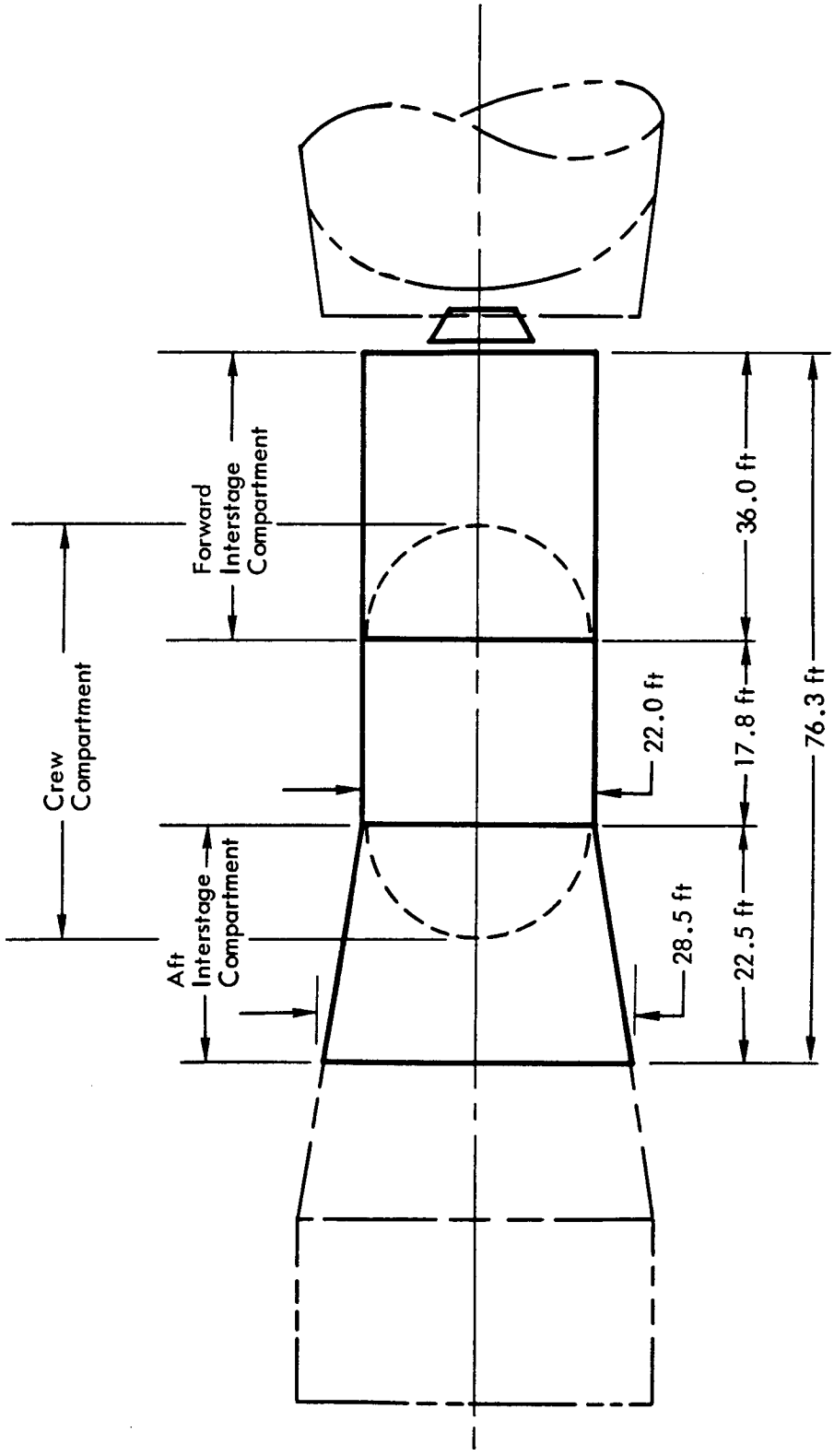

Figure 4.2-2: MISSION MODULE ELEMENTS

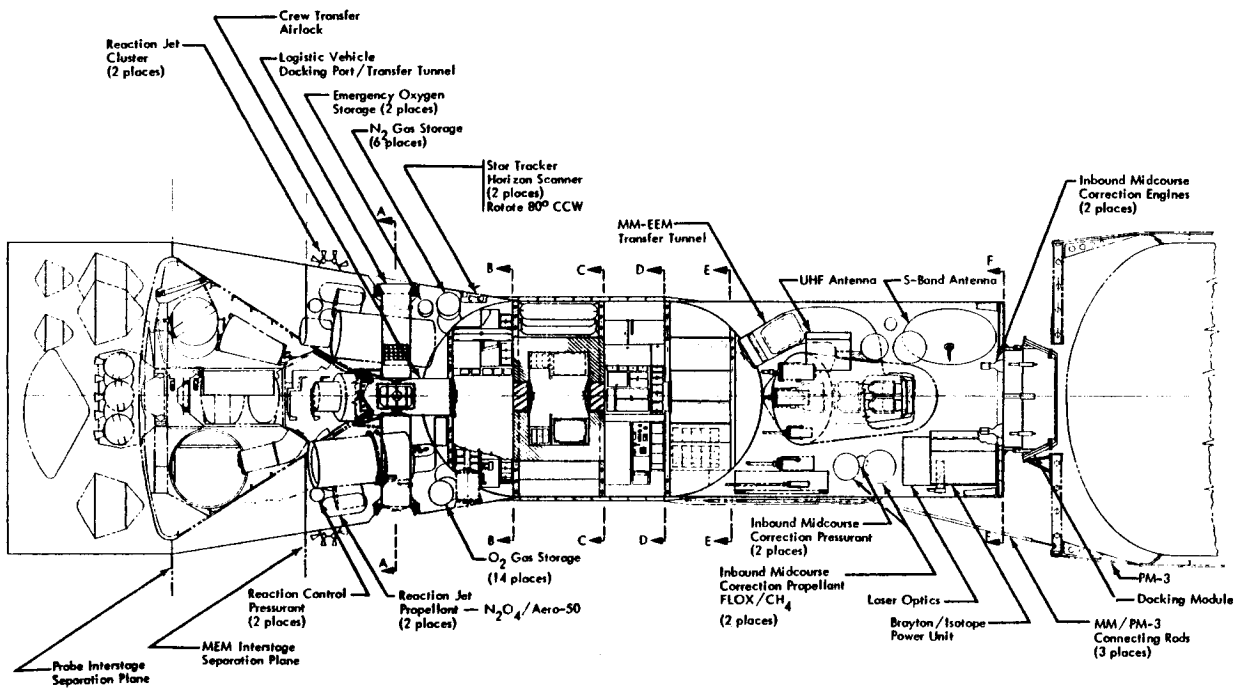

Fig. 4.2-3:A

37A

FOLDOUT FRAME

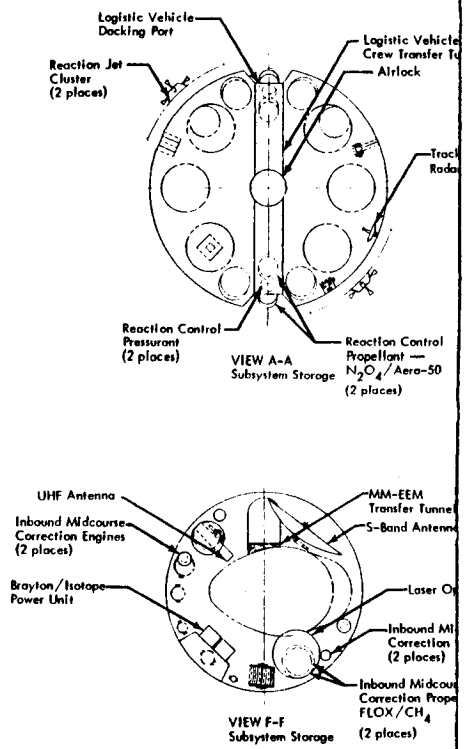

Fig. 4.2-3:B

37B

FOLDOUT FRAME

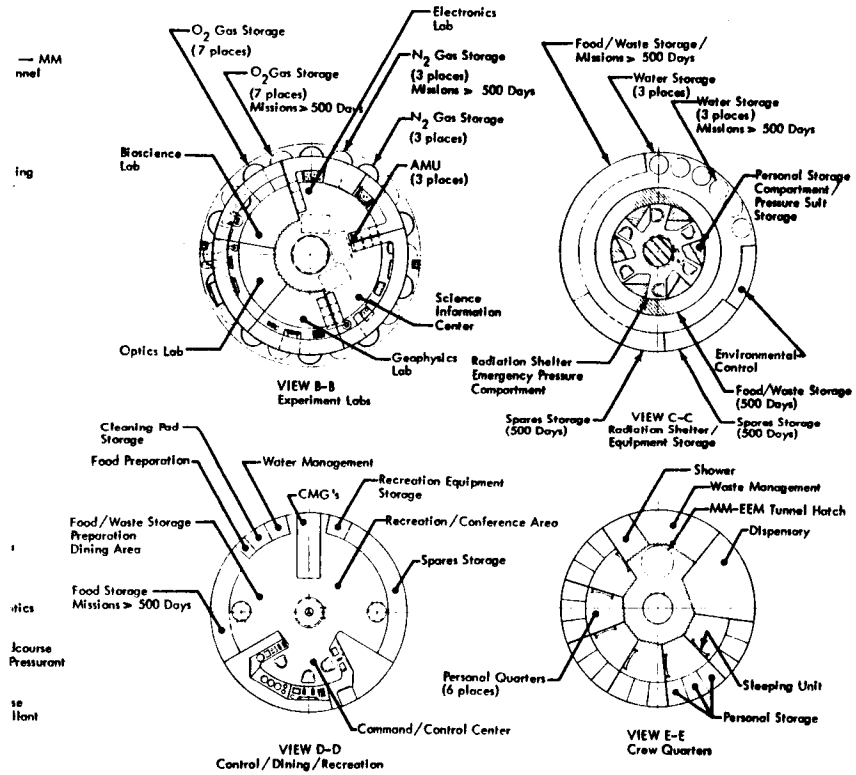

Note: Reference line items are called out in Figure 4.2-32 Experiment Accommodations Inboard Profile

Figure 4.2-3:c MISSION MODULE INBOARD PROFILE

FOLDOUT FRAME

Crew Compartment---The crew compartment provides a pressurized shirt-sleeve environment for the crew and storage for equipment which needs a thermal or pressure environment or is expected to require maintenance. This area is illustrated by views B-B, C-C, D-D, and E-E. Atmosphere within the crew compartment is nominally 7 psia O_2/N_2, 70°F and 50% relative humidity. The crew compartment consists of a 17.8-foot cylinder, 22 feet in diameter, joined at both ends by hemispherical bulkheads. A meteoroid bumper surrounds the cylindrical section of the crew compartment. Overall length of the crew compartment is 39.8 feet which provides a total volume of approximately 12,250 cubic feet. Total pressurized volume within the crew compartment is estimated to be 10,000 cubic feet for 500-day class missions with the free volume (major areas unoccupied by equipment) 5400 cubic feet or 900 cubic feet per man. A surface area of approximately 1200 square feet is provided by the cylindrical portion of the crew compartment.

The internal arrangement of the crew compartment results from having to contain within the selected 22-foot diameter pressure compartment a floor area requirement of approximately 1400 square feet and ceiling height of 7 feet in order to provide sufficient volume for equipment and men. As a result, the crew compartment consists of four separate levels of activity. Each level is designed to include those crew operations or equipment operations of a similar nature. The levels have also been located to minimize the interface or distance between levels of similar activities. An example is the above/below arrangement of the two levels which include all areas and equipment associated with spacecraft operations and crew living quarters. Equipment and cabinets within the crew compartment and located near the walls are attached in place and do not have provisions for removing or hinging the entire cabinet to expose walls for puncture repair caused by meteoroids. Previous inhouse studies such as Manned Orbital Laboratory have indicated a greater reliability benefit can be achieved by using a weight equal to the hinging mechanisms in the meteoroid shield itself.

Deck 1---Activities of a relatively quiet nature are located on Deck 1 and are shown by view E-E. In general, this deck includes the sleeping quarters, dispensary, and personal care facilities. Each crewman is provided with a separate room to be used for sleeping and stowage of personal hygiene supplies such as clothes, cleaning pads, and personal care items. Cabinet space is also available for other equipment associated with the mission module. The rooms also provide solitude for crewmen if desired, and allow a crewman to be isolated should the need exist. Approximately 110 cubic feet of free volume is provided per room. Included within the dispensary is the necessary equipment for crew psychological/physiological monitoring, medical/dental equipment and supplies, and physical conditioning equipment for the cardiovascular system and musculoskeletal system of the body. Personal care facilities include a zero-g shower and waste management system (toilet). Adjacent to the waste management system is the urine water recovery unit. After processing, this water is transferred to holding tanks on Deck 2. Located in the upper portion of Deck 1 is a pressure hatch leading to the EEM transfer tunnel. A centrally located, 36-inch-diameter hatch leads to Deck 2.

Deck 2---Activities of a relative high intensity are located on Deck 2 and illustrated by view D-D. In general, the activities include the command/control center, combination food storage/preparation area, and recreation area. The command/control center includes the necessary displays and controls to monitor and control all subsystem operation, environment parameters, and vehicle operations such as attitude changes, rendezvous, and dockings. The control center is occupied at all times. The food storage/preparation area includes freezer, hot water provisions, and food storage cabinets for missions greater than 500 days. Dining facilities are also included in the area. Another section of this area contains the remainder of the water management system consisting of the wash water/condensate water recovery unit and a 2-day water supply. Water for crew consumption comes to this supply from the makeup water supply located on the third deck. Storage for wash pads occupy the final bay in this area. The remainder of Deck 2 is used for recreation, conference room, and storage for spares (redundancy). Dividing the recreation area and food storage/preparation area is a bay for electronic equipment with the most significant being the control moment gyros of the attitude control subsystem. Located in the center of the floor of this level is the pressure hatch leading to the radiation shelter on Deck 3. Also located in the floor are nonpressure hatches which allow access to the equipment bays of Deck 3.

Deck 3---The major features of the third deck are the combination radiation shelter/emergency pressure compartment and equipment bay as shown in view C-C. Height of this deck is approximately 10 feet rather than 7 feet as for the other decks due to the design feature of the radiation shelter. The radiation shelter consists of an inner compartment 10 feet in diameter and 7 feet high which also serves as the emergency pressure compartment should the remainder of the crew compartment become uninhabitable for short periods of time. A total volume of 600 cubic feet is provided by the radiation shelter with approximately 60 cubic feet of free volume available per crewman. The shelter also provides quarters for the crew during periods of high radiation. These periods include passing through the Van Allen belt anomaly while in Earth orbit; during the firing of each nuclear propulsion module, particularly during departure from Earth as the space vehicle may pass through the heart of the Van Allen belt, and the firing of PM-3 when a minimum of hydrogen is between the crew and Nerva engine; and during major solar flares which may last up to 4 days. Because the shelter may be occupied for extended periods of time and during nuclear propulsion firings, it is necessarily provided with sufficient displays and controls to enable the crew to continue space vehicle operations. A 4-day emergency food, water, and personal hygiene supply is provided within the shelter as well as separate atmosphere supply and atmosphere control loops. Each crewman is provided with a storage compartment, which contains his pressure and emergency provisions. Should the crew compartment become uninhabitable, all crewmen transfer to the shelter and don pressure suits. A repair team can then be sent out to correct the malfunction. The final item housed in the shelter is the photographic film used in the experiment program. This location has been selected as it provides the maximum amount of radiation shielding at no additional weight penalty.

The bulk of the radiation protection for the shelter is provided by a 20-inch-thick combination food/waste storage compartment. This storage compartment contains the initial 500-day supply of food and surrounds the entire shelter providing approximately 26 lb/ft^2 of shielding. Further discussion of the radiation protection analysis is presented in Section 4.2.1.4. Food stored around the walls of the shelter is reached from the equipment bay. Floor panels are removed in the second deck to reach the food above the shelter, while ceiling panels of the fourth deck are removed to reach the food located beneath the shelter. As food is removed, the vacated area is filled with waste matter in order to maintain a nearly constant mass.

The equipment bay of this deck includes a storage area extending 2 feet inward from the outside wall and around the entire periphery. A passageway is provided between the equipment and the food storage compartment of the radiation shelter. The passageway is between 24 to 30 inches wide which should provide sufficient space for maintenance operations or removal of supplies even while operating in a pressure suit. Housed in the storage area are three 24-inch-diameter water containers and positions for three other containers to be used for missions between 500 to 1000 days. Also included in the area is the major portion of the environmental control system equipment such as electrolysis unit, Bosch reactor and atmosphere control units, storage for spares and provisions for food, and spares storage for missions beyond 500 days.

Deck 4---The fourth deck of the crew compartment is comprised almost entirely of laboratories associated with the experiment program. This level is shown in view B-B. These labs contain the necessary equipment to perform certain experiments, control the operation of all experiments, and process and store all experiment data. To accomplish these functions most effectively, the deck is divided into five separate labs. These include labs for optics, geophysics, electronics, bioscience, and science information center. Further discussion of these labs is presented in Section 4.2.2. Extending from the optics lab is a small 30-inch diameter airlock used to retrieve the mapping camera for film changing and maintenance.

Located centrally and in the ceiling is a pressure hatch leading to the combination radiation shelter/emergency pressure compartment. Also located centrally but in the floor is the pressure hatch leading to the airlock used for crew transfer to the MEM, logistics vehicles, or extravehicular activity operations. Beneath the floor of this deck and near the aft exit are located the automatic maneuvering units used for extravehicular activity (EVA) operations. Propellant for these units is replenished prior to entry into the crew compartment while oxygen and other expendables are replenished after entry.

Aft Interstage Compartment---The aft interstage compartment is an unpressurized area which encloses and supports a portion of the MEM, airlock system, and various mission module and experiment equipment. This equipment is shown in the side view and view A-A. The aft interstage compartment is a truncated cone which extends aft from the aft Y ring of the crew compartment to the MEM separation plane. Overall

length of the aft interstage compartment is approximately 22.5 feet with a forward base diameter of 22 feet and aft base diameter of 28.5 feet. The resulting net volume (less crew compartment bulkhead) and surface area is approximately 5100 cubic feet and 1800 square feet, respectively.

Extending from the crew compartment is a 48-inch diameter airlock to allow crew transfer to the MEM and also exit for EVA operations and inspection/maintenance of equipment within the aft interstage compartment. Two 36-inch diameter tunnels with provisions to allow pressurized transfer from logistic vehicles extend from the airlock. These tunnels serve as the normal EVA exit route when logistic vehicles are not attached to the space vehicle. Exit when logistics vehicles are present is via other openings located on the surface of the aft interstage compartment. The airlock itself is sized to accommodate two crewmen. The aft end of airlock contains the crew transfer hatch to the MEM and the docking unit for the MEM. Located immediately aft of the crew compartment bulkhead and around the periphery of the aft interstage compartment are 28-inch diameter high-pressure oxygen and nitrogen tanks. Seven oxygen and three nitrogen tanks are required for the 500-day class missions. Storage space is available for an equal number of tanks for missions of 1000-day durations. Two 20-inch diameter emergency oxygen tanks with 2 days supply are located in the same area. Two clusters of reaction jets for attitude and fore and aft control are located near the aft end of the aft interstage compartment. Each cluster is provided with separate N_2O_4/Aero-50 propellant storage. Other basic mission module equipment in the aft interstage compartment include star trackers, horizon scanners, and radar altimeter/tracker. Experiment equipment stowed within the aft interstage compartment include photographic system, probes, and smaller items all of which are further discussed in Section 4.2.2.

External Profile---The external profile of the recommended mission module is shown in Figure 4.2-4. Illustrated in this figure is the equipment which is deployed or located on the surface of the mission module. Deployment of equipment is done while in Earth orbit. Deployment mechanisms have not been conceptually designed, but space has been provided for such devices.

Communication equipment deploying from the forward interstage compartment includes S-band and UHF antennas and laser optics. The S-band antenna is used for Earth communication and the UHF antenna for MEM communication. The laser optics are located near the S-band antenna because both units are directed toward Earth. Immediately beneath the outer forward interstage compartment structural shell is the isotope/Brayton cycle power system cooling radiator of 1400 square feet. A total of 2500 square feet is provided by the forward interstage compartment, and it is estimated the net area for radiator use after cutouts for equipment deployment is 2200 square feet. The radiator extends aft to approximately the forward end of the crew compartment, and has an average temperature of 600°R. Located over the forward end of the forward interstage compartment is a shield for thermal and meteoroid protection. Connecting rods extending from the side of the forward interstage compartment to the PM-3 join these two elements structurally.

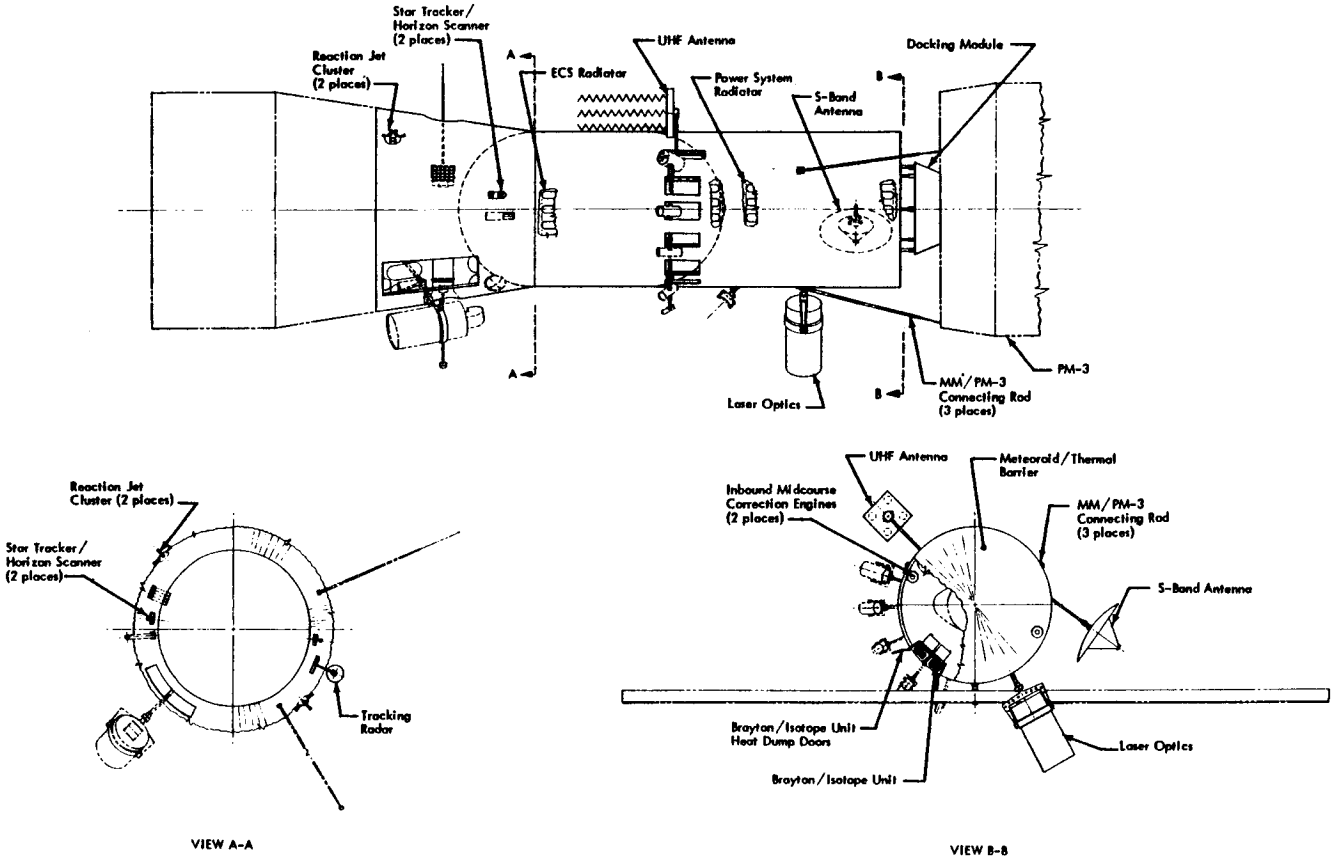

Note: Reference line items are called out in Figure Experiment Accommodations

Figure 4.2-4: A MISSION MODULE EXTERNAL PROFILE

Fig. 4.2-4: A

43

FOLDOUT FRAME

FOLDOUT FRAME

Located around the cylindrical portion of the crew compartment is the majority of the 1250-square-foot environmental control system radiator. A portion of this radiator, however, extends onto the forward interstage compartment, as the crew compartment cylinder provides only approximately 1200 square feet. The radiator has an average surface temperature of approximately 520°R. A separation distance of approximately 5 feet is provided between the environmental control system and power radiators to minimize the effects of their different operating temperatures.

Significant external equipment associated with the aft interstage compartment include the reaction control jets, docking ports for logistic vehicles, EVA exits, star trackers, and horizon scanners. Deployed experiment equipment in this area is discussed in Section 4.2.2.

4.2.1.2 Subsystems

A description of each mission module subsystem is presented including major requirements, operational and design characteristics, and schematic diagram. Redundancy and maintenance analysis is presented in Section 4.2.1.3, weights in 4.2.1.6, and trade summaries in Section 4.2.1.7.

Structure

The major structural elements of the mission module are the fore and aft interstages, the crew compartment pressure vessel, the meteoroid shield, and, within the crew compartment, the floors and the radiation shelter pressure vessel. These elements transfer launch loads and provide pressure compartments, and provide meteoroid, radiation, and thermal protection to the crew and internal equipment.

The structural design of the interstage and crew compartment interface is shown in Figure 4.2-5. The interstage is a skin-stringer-frame structure and weighs approximately 2 lb/ft^2 when designed to transfer Earth launch loads. For the crew compartment, two sidewall design approaches were considered; one carried the inertia loads through the meteoroid shield while the other carried loads through the pressure vessel. After examining both concepts, it was found that when meteoroid protection was optimized using a single-sheet meteoroid bumper, the bumper gage was only one-third as thick as the pressure vessel wall. This led to the conclusion that the thicker pressure vessel wall (designed by meteoroid criteria) should carry the inertia loads. This wall is stiffened by a waffle pattern which provides a potential tear stopper and also provides for multiple attachment points for meteoroid shield standoffs. The disadvantage of this design is the potential heat leak through the structural load path. This has been offset by incorporating a fiberglass interconnect ring at both the fore and aft Y ring.

The allocation for the probability of no penetration, P_o, of the crew compartment is 0.995. By the single-sheet bumper analysis, this reliability results in a pressure wall gage of 0.136 inch (pressure requirement required 0.029 inch) and a meteoroid bumper sheet gage of 0.045 inch.

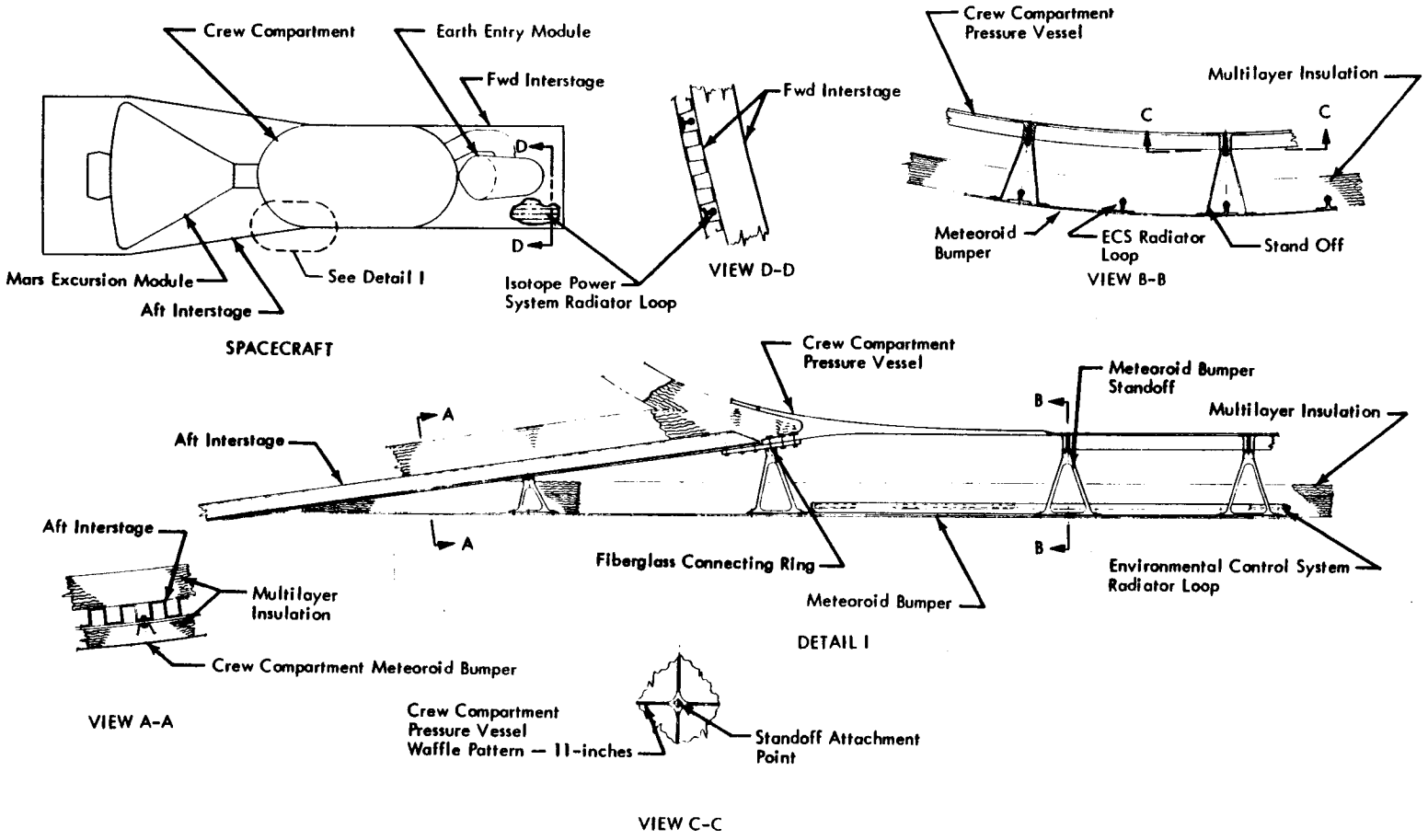

Figure 4.2-5: MISSION MODULE AND INTERSTAGE STRUCTURE

Weldable aluminum, 2021-T8E41, was selected as the pressure vessel material with the following allowables (anticipated in the 1980 time period).

Temperature	70°F	-320°F
F_{tu}	75,000 psi	90,000 psi
F_{ty}	66,000 psi	80,000 psi

Of prime consideration in the selection of this material is its toughness (meteoroid impact) and efficiency in terms of elastic stability.

Spider-type standoff clips are used to maintain a 5-inch standoff between the pressure wall and bumper. Within this gap the tubes of the environmental control radiator are attached to the underside of the bumper and then covered with 2 inches of multilayer insulation. The required radiator area for the environmental control system is 1250 square feet. The majority of this area is available over the pressure vessel constant section with the remainder extending to the forward interstage. The primary radiator loop has its tube run on 12-inch centers with a redundant tube loop running between the primary system.

Both crew compartment pressure bulkheads and the interstage around the MEM are covered with 2 inches of multilayer insulation. No insulation is on the interstage around the EEM, as this compartment must radiate to space the heat leaked from the isotope power system. The power system radiator loop is integrated as part of this interstage.

Pressure vessel leakage has been restricted by minimizing the number of necessary penetrations. Penetrations are associated with the camera airlock, pointing and tracking scope, windows, two entrance hatches, and umbilicals from the unpressurized equipment compartments. The allowable leakage rate through these penetrations is 2 pounds/day.

The crew compartment (divided into four levels by 6-inch thick floors) provides 84-inch head height in three of the compartments and 124-inch head height in the fourth compartment. The crew radiation shelter is in the 124-inch high compartment. The shelter is a 10-foot diameter pressure vessel, 84 inches high with flat bulkheads. Entrance hatches at both top and bottom are located in the center of these bulkheads. Surrounding the outside of the radiation compartment is the combination food/waste storage cabinets 20 inches thick to provide the required density for radiation shielding.

All equipment within the crew compartment is mounted to the floors, minimizing structural attachments to the pressure vessel sidewall.

Environmental Control

The major functions of the environmental control system are atmosphere supply, atmosphere control, and thermal control. Factors having the most significant impact on this system are as follows:

- Six-man crew
- Mission durations between 500 and 1100 days
- Pressurized volume of 10,000 cubic feet
- Crew compartment pressure of 7 psia--O_2/N_2
- Crew compartment leakage of 2 pounds/day
- One crew compartment repressurization every 200 days
- Crew compartment temperature of 70 ±5°F
- Crew compartment humidity of 50%
- EVA airlock operations
    - Two men per use
    - Three operations per month
        - Two via EVA umbilicals
        - One via backpack
- Emergency oxygen provisions for 2 days.

Atmosphere Supply---The primary functions of the atmosphere supply subsystem are providing oxygen to the crew at 3.5-psia partial pressure and maintaining crew compartment pressure at 7 psia. A combination of stored gas, and electrolysis of water and CO_2 reduction is used to supply the necessary O_2 and N_2 gases. A schematic of the proposed subsystem is shown in Figure 4.2-6.

Storage---Oxygen supplied at low rates such as for cabin leakage and crew consumption is provided through electrolysis of water. This supply provides the majority of the total oxygen requirement. Higher use rates of oxygen, such as for crew compartment repressurization, airlock operations, EVA operations (backpack and emergency oxygen) are obtained from a high pressure supply. The gaseous emergency oxygen supply will be stored in a separate tank(s). Nitrogen used for makeup of crew compartment leakage, crew compartment repressurization, and airlock operations is stored as a high pressure gas.

Water Electrolysis---Stored water is converted by electrolysis into gaseous oxygen and hydrogen. The oxygen produced is transferred to an accumulator for storage and eventual consumption by the crew. Hydrogen gas from the electrolysis process is also stored in an accumulator for use in the CO_2 reduction unit. Water for electrolysis is obtained through recovery of the metabolic water, that generated by the CO_2 reduction unit, and a water makeup supply.

Four electrolysis units are connected in parallel, each of which is capable of producing 4.6 pounds of oxygen per day. With a six-man crew, three of these units can produce the total oxygen requirement per day of approximately 13.8 pounds.

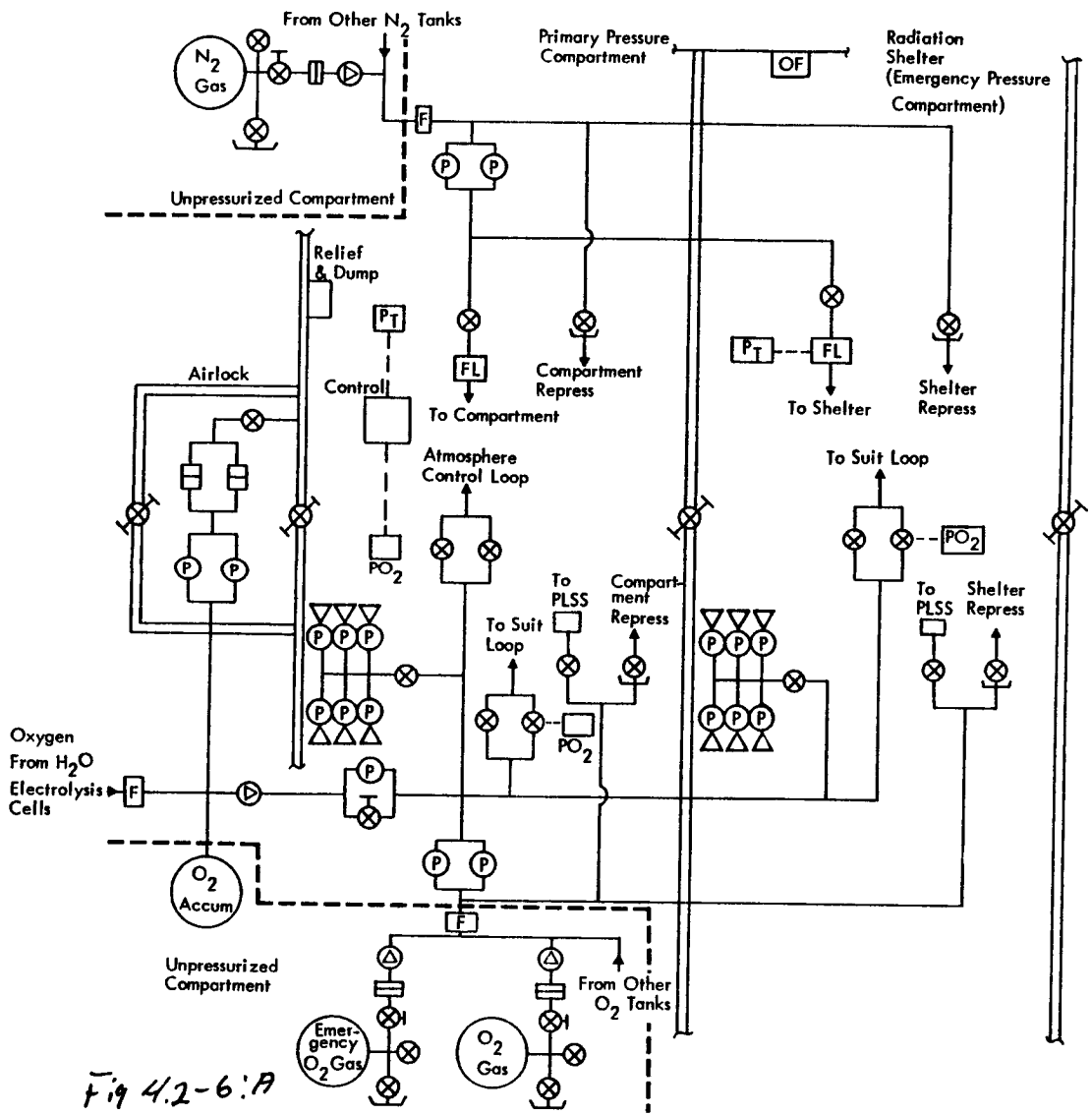

Fig 4.2-6:A

4/9

FOLDOUT FRAME

LEGEND

- Relief Valve
- Solenoid Valve
- Coupling
- Check Valve
- Fill Valve
- Filter
- Pressure Reducer
- Connector
- Manual Dump Valve
- Face Mask
- Oxygen Sensor
- Total Pressure Sensor
- Flowmeter
- Outflow Valve
- Connect/Disconnect

Figure 4.2-6 ATMOSPHERE SUPPLY SUBSYSTEM

& 50

FOLDOUT FRAME

The actual number of units which operate is established by designing the system so the accumulator stays nearly full at all times.

From the accumulator, oxygen flows to outlets located in the crew compartment, radiation shelter, airlock and to face mask and spacesuit helmet supply lines. Pressure controls are found in the crew compartment, airlock and radiation shelter.

CO_2 Reduction---A Bosch CO_2 reactor is used to combine CO_2 and hydrogen to produce water from which oxygen is obtained. The basic reaction is as follows:

$$CO_2 + 2H_2 \xrightarrow[800\text{-}1200°F]{\text{Catalyst}} 2\ H_2O + C$$

In this system, CO_2 from the CO_2 collection system and H_2 from the electrolysis cells are mixed with secondary reaction gases (CH_4, CO and H_2) in the Bosch recirculation loop. These gases are heated in a recuperative heat exchanger and fed to the reactor for further heating to 1200°F. In passing over an iron catalyst, the reaction takes place producing water and carbon. The produced water is stored until used by the electrolysis cells. Approximately 11 pounds of the 13.6-pound oxygen requirement is obtained from the water produced by the Bosch reactor.

Pumpdown Unit---A pumpdown unit is used with the airlock to minimize gas losses during EVA operations. The system reduces the atmosphere pressure to 1 psi in approximately 10 minutes. During this period a peak power demand of 850 watts is required. The recovered gas is pumped into the crew compartment, thus slightly increasing its pressure. Approximately 2.8 pounds of gas is saved per airlock operation by using the pumpdown unit.

Atmosphere Control---The atmosphere control subsystem maintains proper crew compartment atmosphere temperature, purity, and humidity control. Two identical loops are provided with one serving the radiation shelter and the other the remainder of the crew compartment. The loops are interconnected so that either may purify the atmosphere of the other. Oxygen supply to the crew compartment is introduced through the purification loops. Utilization of a two-loop system allows operation of one loop at 3.5 psi for spacesuit operation and the other to maintain a 7-psi pressure. Figure 4.2-7 presents the atmosphere control schematic for the main compartment and Figure 4.2-8 the installation for the radiation shelter.

Contaminant Removal and Control---The initial operation of this unit is to remove both solid and liquid particles from the airstream by debris traps and particulate filters. Actuated charcoal removes the larger molecules and the majority of the gases. Concurrently, catalytic burners oxidize CO, H_2, and CH_4 to produce CO_2 and H_2O vapor for subsequent removal. Chemisorbent beds remove those contaminants not previously absorbed or oxidized such as nitrogen and sulfur compounds. Contaminant identification and analysis of the crew compartment gases are provided by a combination of mass spectrometer and gas chromatograph instruments.

PRECEDING PAGE BLANK NOT FILMED.

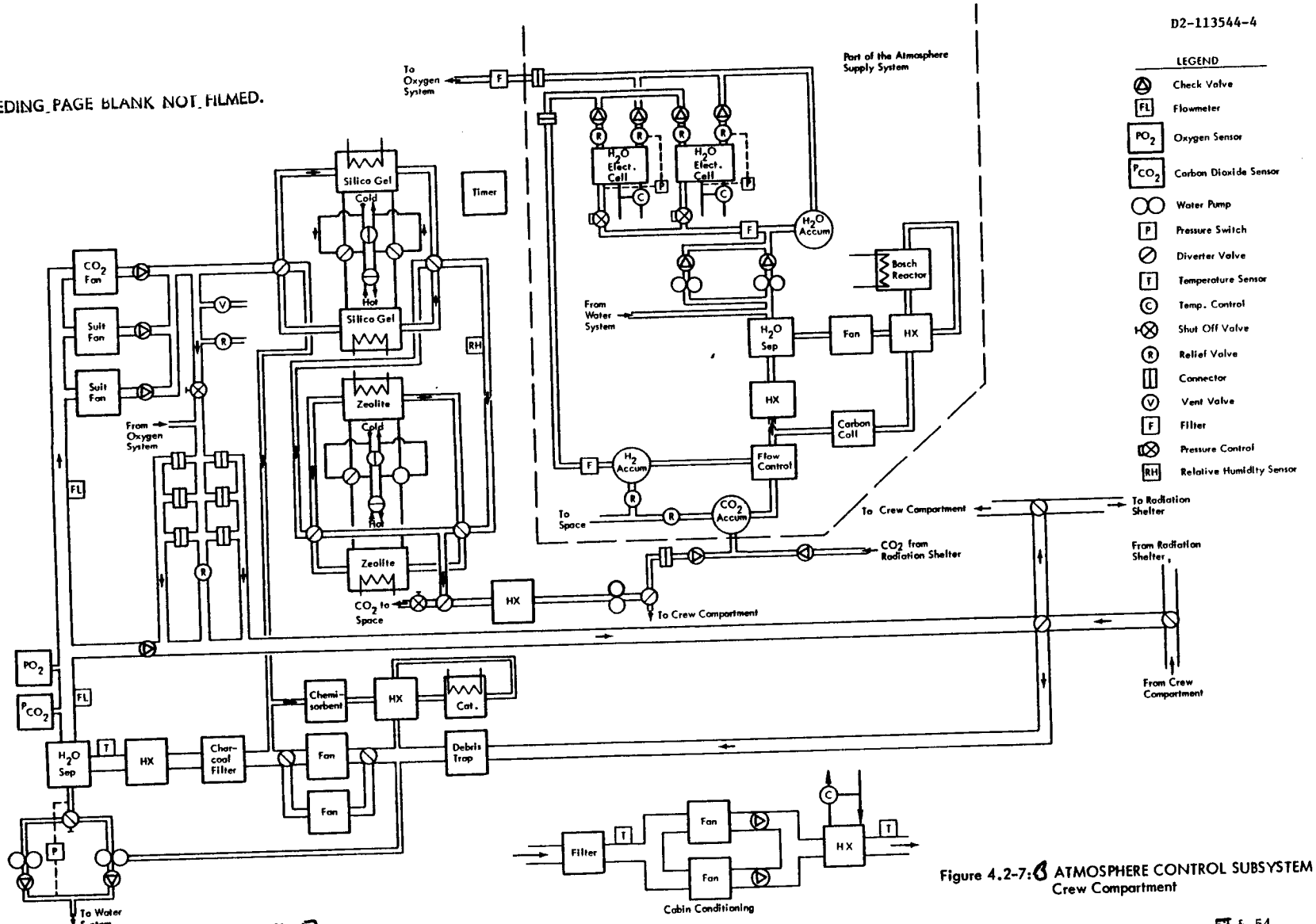

Figure 4.2-7: ATMOSPHERE CONTROL SUBSYSTEM Crew Compartment

Fig 4.2-7 A

53

PRECEDING PAGE BLANK NOT FILMED.

FOLDOUT FRAME

FOLDOUT FRAME

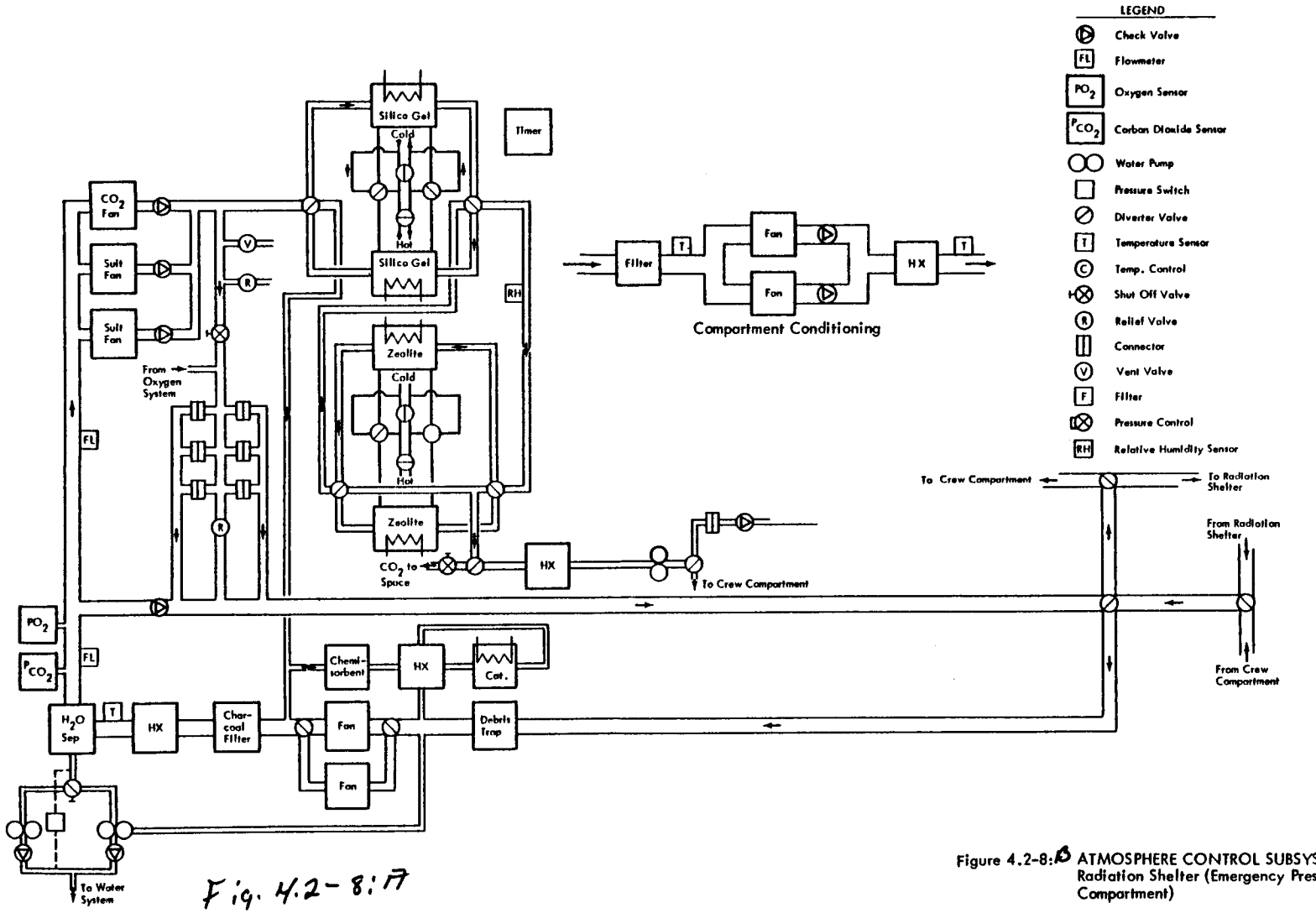

Figure 4.2-8:B ATMOSPHERE CONTROL SUBSYSTEM Radiation Shelter (Emergency Pressure Compartment)

Fig. 4.2-8:17

55

FOLDOUT FRAME

FOLDOUT FRAME

Humidity Control---Compartment humidity is controlled by condensing the water vapor in the atmosphere control air flow; pumps then transfer the water to the water management subsystem. One-third of the humidity control flow passes through the CO_2 removal unit with the remainder being directed back to the crew compartment.

CO_2 Removal and Storage---Carbon dioxide is controlled to a partial pressure of 4 mm Hg. A four-bed regenerable solid adsorption system is used with silica gel as an upstream desiccant and molecular sieves for CO_2 removal. Cold water is used during adsorption to improve adsorption efficiency and hot water is used to desorb the beds. Electric heaters are installed in both the silica gel and molecular sieve beds for emergency desorption. CO_2 desorbed from the molecular sieves is stored in an accumulator to feed the CO_2 reduction unit.

Crew Compartment Conditioning---The ventilation system maintains an air flow velocity of 15 fpm within 90% of the crew compartment. Temperature of the air supplied to the crew compartment is controlled by the amount of cooling fluid passing through the compartment heat exchanger. The distribution system fan delivers 650 cfm.

Thermal Control---The thermal control subsystem removes excess heat from the crew compartment and electrical equipment and provides heat to those processes that utilize thermal energy. To accomplish these functions, a heat transport loop, cooling loop, and heating loop are used as shown in Figure 4.2-9.

Heat Transport Loop---This loop consists of a circulating fluid (water) which transfers all the excess thermal energy from the mission module to the cooling subsystem (radiator loop). Water at temperatures between 40° and 120°F is circulated through the components in the mission module requiring cooling. Low temperature requirements of the chillers and freezers and water condensing units require the coldest flow and are supplied with 40°F coolant fluid. The silica gel beds are next and are cooled at approximately 50°F. The cabin atmosphere cooling heat exchanger must provide air temperature around 55° to 60°F and are installed in the heat transport loop downstream of the silica gel beds. Molecular sieve beds are next cooled at approximately 70°F. The combined cold water flow from the two atmosphere control loops then passes through the pump-down system where it is combined with water that has cooled the electrolysis cells and the CO_2 reduction unit. The total flow is used to cool the cold plate electronics. Essentially all the electronic and experiments heat loads must be cooled via cold plate to minimize the power required for compartment cooling. After passing through the electronic equipment, the water then removes the waste heat not required by the environmental control/life support system. The water returns to the pumps at approximately 120°F and is again cooled to 40°F by the primary heat exchanger in the cooling loop.

Radiator Loop---The radiator loop rejects the mission module excess thermal energy to space via a radiator. Included in this loop are the primary heat exchanger, radiator, circulating pumps, FC-75 reservoirs, accumulators, and the parasitic heat load control. The total radiator thermal load which includes metabolic heat of the crew, the thermal

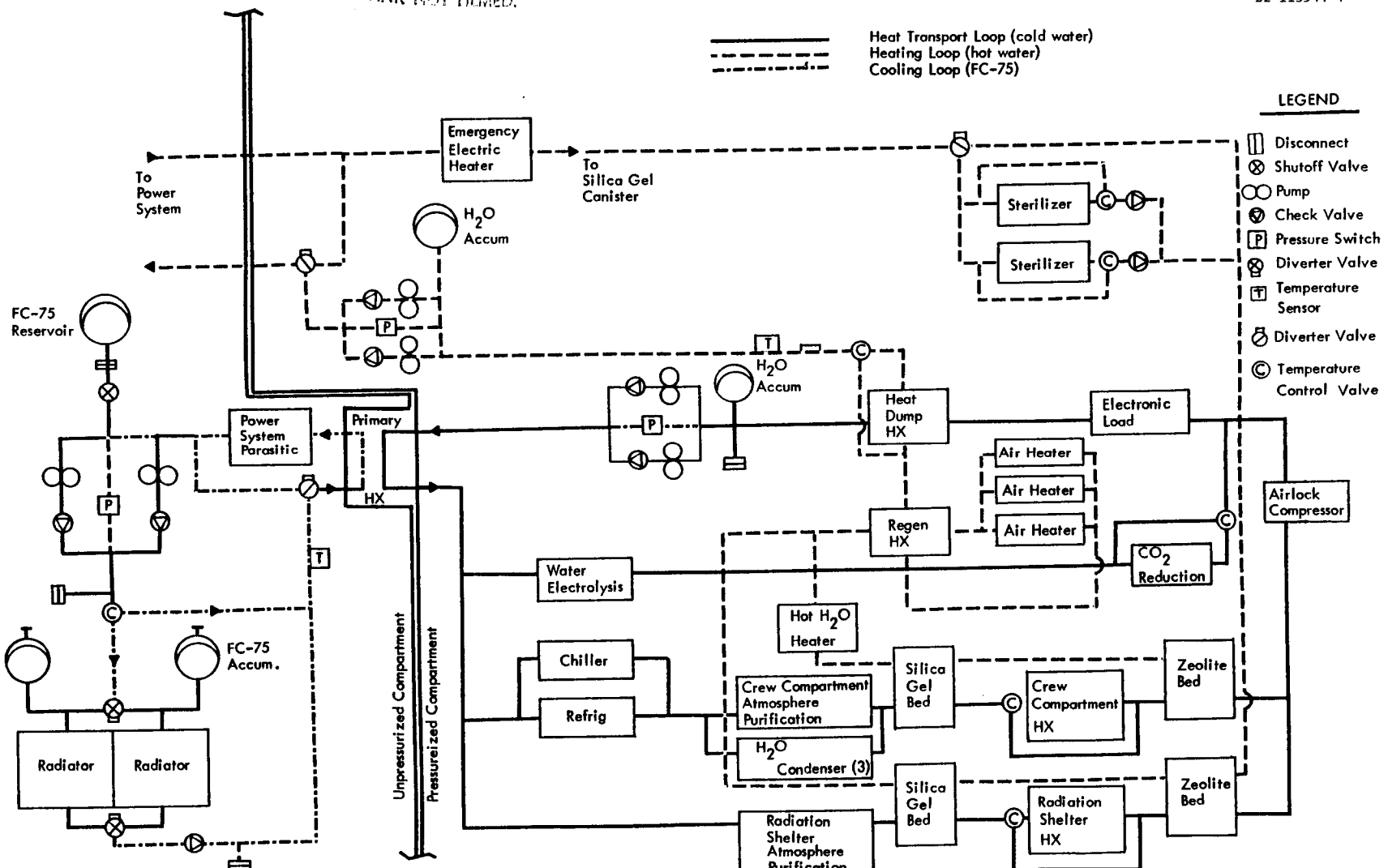

Fig. 4.2-9: A

Figure 4.2-9: B THERMAL CONTROL SUBSYSTEM

equivalent of electrical energy delivered by the power system, chemical process heat, and heat used in several environmental control/life support system operations is shown in Table 4.2-2. The resulting load may be somewhat conservative due to no benefit given to heat leak through the crew compartment wall. However, at the same time, uncertainties exist in the external thermal environment. Consequently, the conservative approach seems most appropriate.

Table 4.2-2: THERMAL LOAD

Crew $(12{,}800 \frac{\text{Btu}}{\text{manday}})(6 \text{ men})(\frac{1 \text{ day}}{24 \text{ hours}})$	3,200
Electrical 15 kw	51,428
Environmental Control/Life Support System Utilization	4,500
Chemical	
Bosch Reaction $(921 \frac{\text{Btu}}{CO_2(\text{lb})})(2.44 \frac{CO_2(\text{lb})}{\text{manday}})\frac{6}{24} \frac{\text{men}}{\text{hr/day}}$	560
MOL Sieve $(300 \frac{\text{Btu}}{CO_2(\text{lb})})(2.44 \frac{CO_2(\text{lb})}{\text{manday}}) \frac{6}{24} \frac{\text{men}}{\text{hr/day}}$	183
Water Electrolysis $(78 \frac{\text{watts}}{O_2(\text{lb})})(13.51 \frac{O_2(\text{lb})}{\text{day}})(3.413 \frac{\text{Btu/hr}}{\text{watt}})$	-3,600
Total Radiator Load	56,271 $\frac{\text{Btu}}{\text{hr}}$

The major variables affecting the size of a radiator sufficient to accommodate the above thermal load include fluid inlet and outlet temperatures, radiator orientation, and vehicle surface thermal coatings. As described in the heat transport loop discussion, an inlet temperature of 120°F and outlet of 40°F was required to perform the desired operations. Selection of the radiator orientation and surface coatings is obtained through use of Figures 4.2-10 and 4.2-11.

Figure 4.2-10 illustrates the resulting heat sink temperature as a function of several surface coatings and orientations for Venus capture missions. The orbit altitude is 540 nautical miles. These data illustrate that a painted surface using zinc oxide with potassium silicate binder (Z-93; $\alpha/\varepsilon = \frac{0.23}{0.85}$) provides a sufficiently low heat sink temperature if the longitudinal axis of the vehicle is Sun oriented. Such an orientation, however, has an unfavorable impact on experiment observations of the planet surface. Comparison of thermal coatings using back-surfaced mirrors (1-inch by 1-inch quartz silvered or aluminzed backing, $\alpha/\varepsilon = \frac{0.10}{0.80}$) indicates the lowest heat sink temperature can be achieved by having the longitudinal axis of the vehicle coincident with local vertical. This

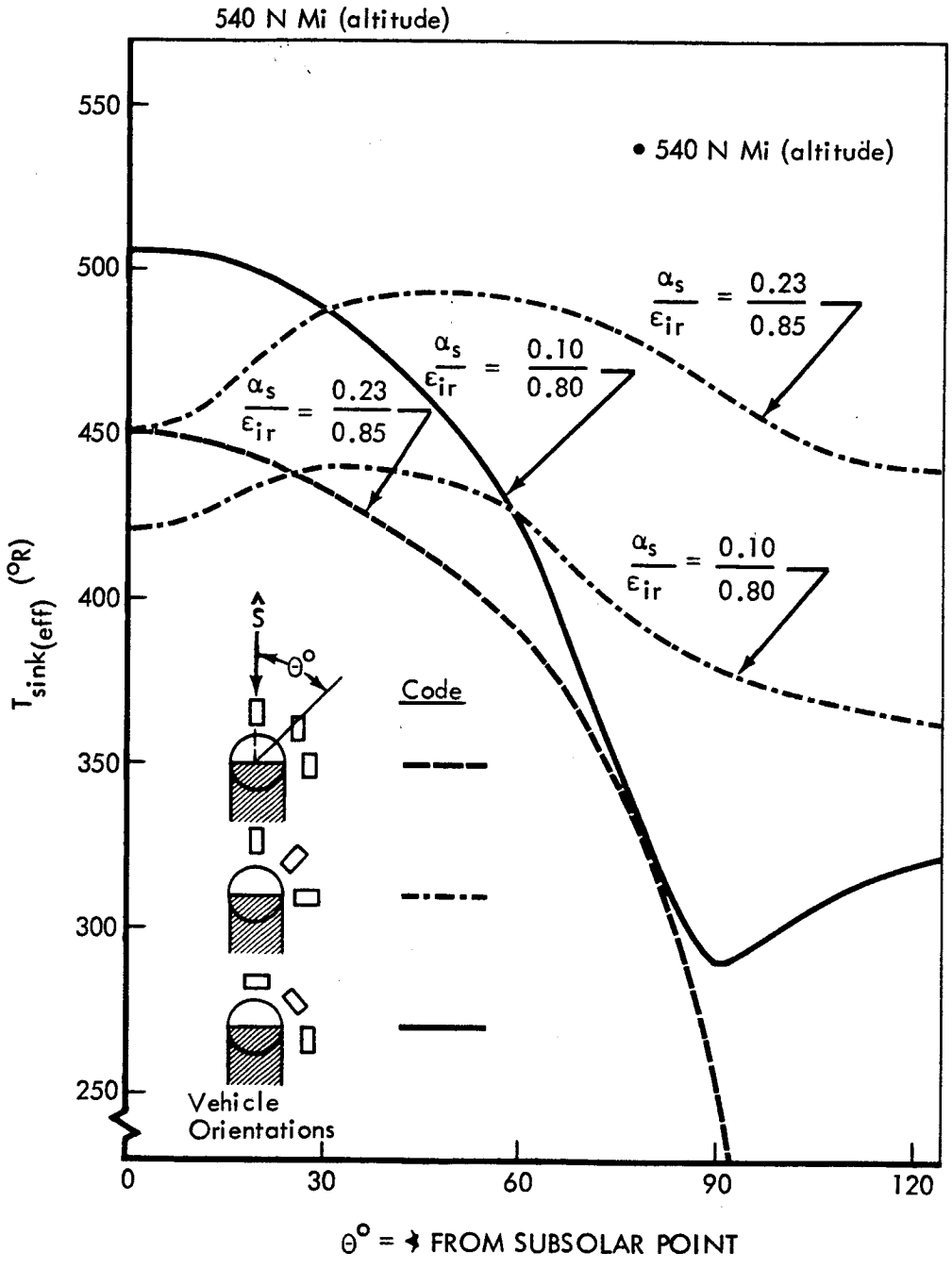

Figure 4.2-10: VENUS MISSION RADIATOR DESIGN

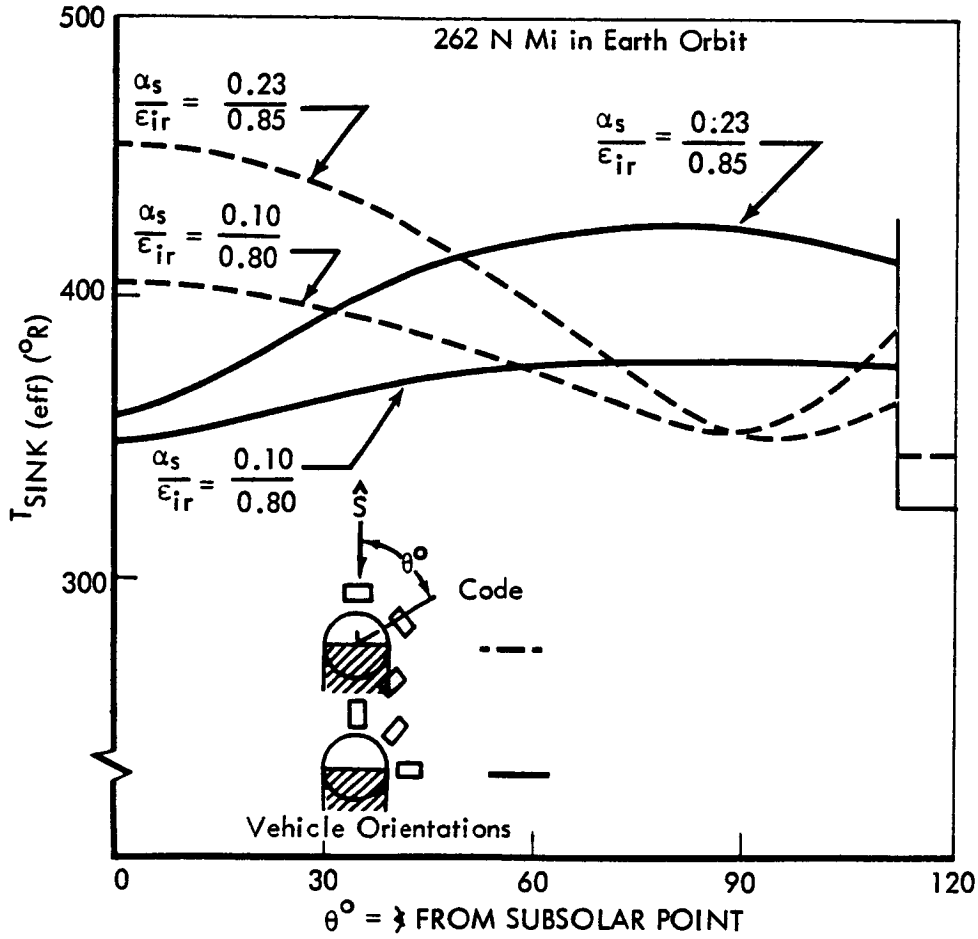

Figure 4.2-11: MARS MISSION RADIATOR DESIGN — EARTH ORBIT CHARACTERISTICS

orientation is also desirable for experiment operation. Consequently to minimize the radiator size and provide a more optimum orientation for experiments, a back-surfaced mirror is recommended along with the longitudinal axis coincident with local vertical. The resulting radiator area is 1250 square feet.

Radiator characteristics associated with Mars capture missions are shown in Figure 4.2-11. Radiators for these missions are actually determined by the Earth orbit period when the space vehicle is being assembled. From the resulting data, it can be concluded that regardless of the orientation and surface coating, the resulting heat sink temperature is lower than that for Venus missions. Orientation selection, however, is influenced by aerodynamic drag, gravity gradient, and orbital assembly considerations in Earth orbit. These considerations result in recommending the vehicle orientation to have the longitudinal axis normal to local vertical. Utilization of mirror surfaces results in a radiator area approximately 950 square feet. Should painted surfaces be used, the area would increase to approximately 1460 square feet which is still small enough to be integrated into the available surface area.

A common radiator design for vehicles flying both Mars and Venus missions is achieved by providing a total of 1250 square feet with back-surfaced mirrors covering the radiator. A portion of this area is "shut-off" for the Mars missions. Orientation is with the longitudinal axis normal to local vertical in Earth orbit and coincident with local vertical at both Mars and Venus.

The parasitic heat load control system is associated with the isotope power source. Electrical energy is dissipated in the form of heat directly into the circulating heat transport loop. The amount of energy transferred can be equal to or less than the difference between the Brayton cycle power output and vehicle power demand.

Heating Loop---The heating loop provides high temperature heat and water for various environmental control/life support system functions. Examples include desorption of silica gel and molecular sieve beds, bacteria control, waste management, and hot water supply. All heat provided by this loop is obtained from the isotope power supply. Hot water is provided between 180° and 360°F.

Life Support

The major divisions of the life support system are water management, waste management, food management, and personal hygiene. Significant requirements placed on this system include the following:

- Six-man crew
- Mission durations between 500 and 1100 days
- Water - food and drink 6.74 pounds/manday
- Water - wash 6.60 pounds/manday
- Water - experiments and cleanup 1.00 pounds/manday
- Food 1.63 pounds/manday.

Water Management--The water management system has the function of recovery, processing, and distribution of the onboard water supply. An air evaporation approach is used for the processing. Two such systems are installed. One is used for processing the urine and the other for humidity condensate and wash water. A schematic of the system is shown in Figure 4.2-12.

In the urine loop, the fluid is initially treated with chemicals and then passed into wicks where it is exposed to a flow of heated air. The resulting water vapor air stream is filtered by charcoal beds, condensed, and the water removed by a gas/liquid separator. That water which is acceptable from a purity standpoint is transferred into holding tanks. Unacceptable water is reprocessed. Water in the holding tank is sterilized and passed on to the potable water tank.

The humidity-wash water loop is essentially the same as the urine loop but without the chemical additive. In the event the humidity-wash water loop fails, the urine loop can process the entire water supply. Overall efficiency of the water recovery system is 97%. Water from feces and dirty cleaning pads is not recovered. The daily water supply requirement resulting from the total requirement and that recovered is 5.4 pounds exclusive of a 10% reserve. Use of this makeup water is as follows:

Oxygen makeup (crew consumption and leakage)	2.9 pound/day
Metabolic deficit	1.9 pound/day
Backpack operations	0.6 pound/day (average)

The metabolic water balance is shown in Table 4.2-3. A metabolic deficit of 0.32 pound/manday is indicated and constitutes the 1.9 pound/day deficit shown above.

Waste Management--The waste management system uses a concept developed by the General American Transportation Corporation and is illustrated in schematic form in Figure 4.2-13. In this approach, urine and feces are collected using mass air flow. Urine is removed from the air stream by a centrifugal liquid/gas separator and delivered to holding tanks prior to being processed. Feces and other waste are placed in vapor-permeable collection bags which are then placed in a container connected to a vacuum manifold and held in this condition for 18 hours. The resulting waste is placed in impermeable bags and returned to the combination food/waste cabinet.

Food Management--Apollo-type freeze-dried food supplemented with frozen food is used. The basic diet provides 3200 Kcal. As previously described, the food storage cabinet also serves as the waste storage cabinet. Maintaining a relatively constant mass in this cabinet allows it to be used as radiation protection at no additional penalty.

Table 4.2-3: METABOLIC WATER BALANCE

Water Available for Recovery (pound/manday)		Water Required (pound/manday)	
Urine	2.64	Food and Drink	6.74
Insensible Perspiration	3.05	Wash	6.60
Sensible Perspiration	1.43	Miscellaneous (Exp. and Cleanup)	1.00
Wash	6.60		
Miscellaneous	1.00		
Fecal	0.25		
Total	14.97*	Total	14.34
Water Not Used in Recovery	0.50		
Fecal = 0.25			
Misc = 0.25			
Total Water for Recovery	14.47 pound/manday		
Net Water Recovered	14.02 (97% efficiency)		
Water Requirement	14.34		
Water Recovered	14.02		
Water Deficit	0.32 pound/manday		

*Metabolic water generated = 0.63 pound/manday

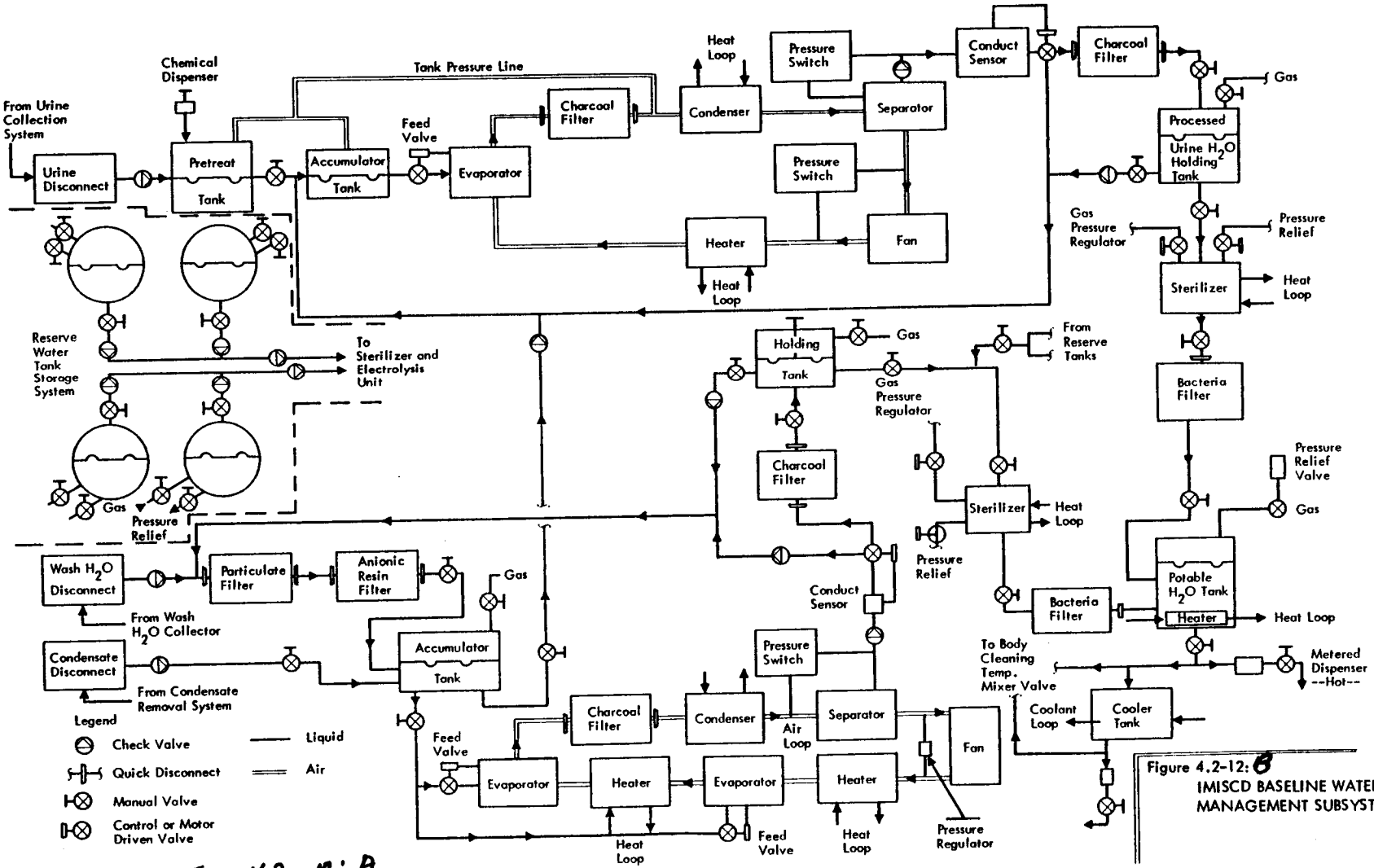

Figure 4.2-12: B
IMISCD BASELINE WATER MANAGEMENT SUBSYSTEM

Fig. 4.2-12: A
67

FOLDOUT FRAME

FOLDOUT FRAME

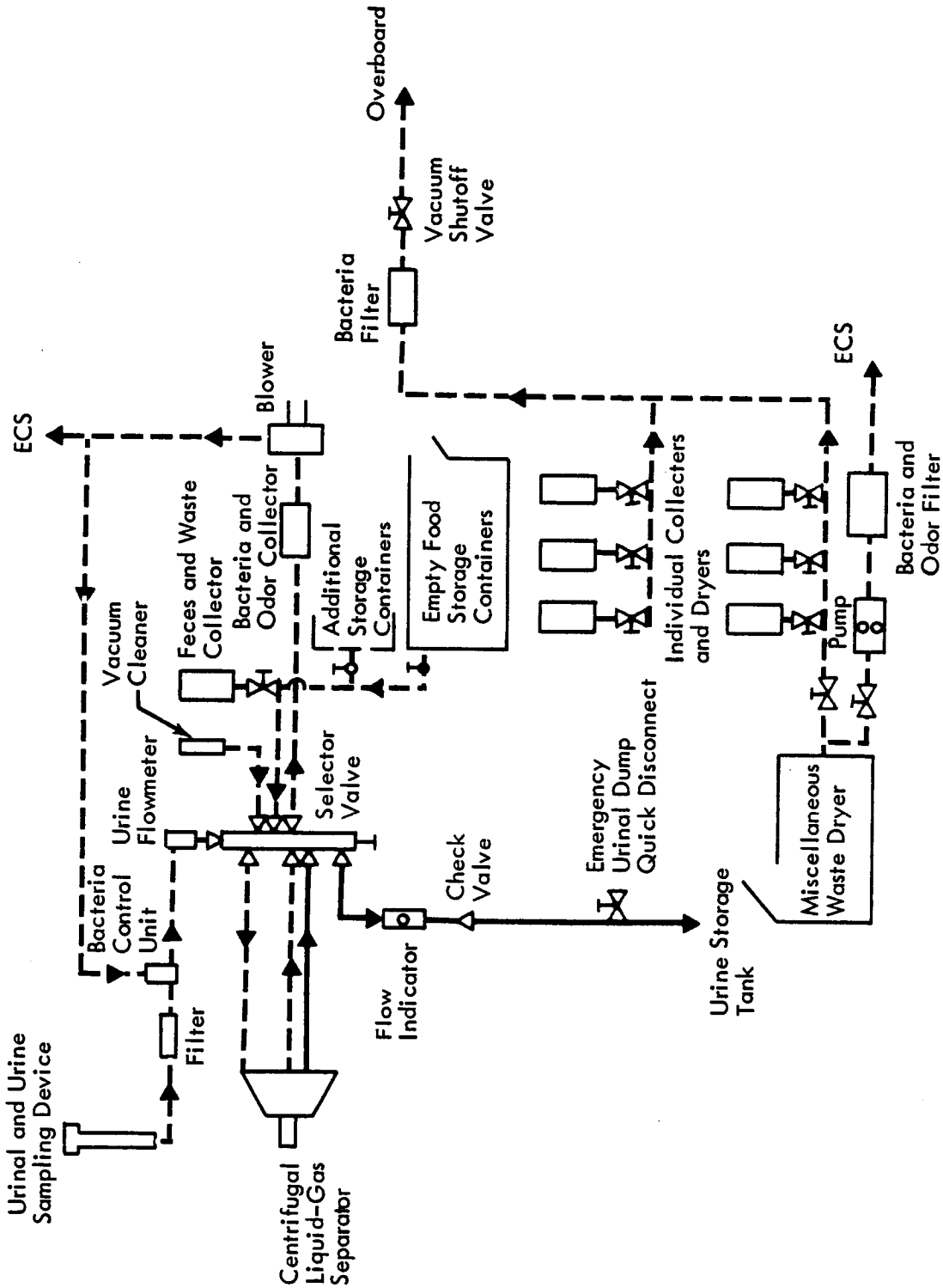

Figure 4.2-13: WASTE MANAGEMENT SYSTEM SCHEMATIC

Personal Hygiene--Body cleaning methods include use of cleaning pads and a zero-g shower. Cleaning pads are stored dry with water added as required. Water is recovered from those pads that are not badly contaminated. The shower consists of a plastic container which encloses the body up to the neck and uses a zipper for closure. Water is applied through use of sponges and hose and forced downward via a laminar flow of air. Drying is accomplished via heated air.

An expendable clothing approach is used, with inner garments and inserts for the crotch and underarm areas changed daily. An outer, close fitting, fireproof garment is changed once per week. Footwear is similar to that associated with soft-soled boat shoes. All of the expendable clothing is utilized as mass for radiation protection.

Miscellaneous personal gear includes hair clippers, nail clippers, and oral hygiene items.

Crew Systems

Crew systems include equipment and supplies necessary to maintain the crew's physical well-being, provide entertainment, and allow crew operations to continue in a zero-pressure environment.

Conditioning Equipment--Crew conditioning equipment is provided for the cardiovascular and musculoskeletal systems. A lower body negative pressure device is provided to condition the cardiovascular system. This device requires the crewman to seal the lower portion of his body in the device. A small pump reduces the pressure in the lower body areas forcing the cardiovascular system to adapt to the new pressure differential environment which leads to system conditioning.

The musculoskeletal physical conditioner is primarily an isotonic exercising device. Straps, bungees, springs, and a seat on a sliding track are combined into a device capable of providing exercise to all the major muscle groups of the body. The device also conditions all of the major skeletal members. Adjustments provide for varying the various tension load through finite ranges. Exercise work rate, frequency, and durations can be measured by the associated sensing devices.

Pressure Suits and Support Equipment and EVA Devices--Pressure suits are provided for emergency situations and for programmed extra-vehicular activity (EVA). An Apollo-type lunar surface suit is considered representative. Suits will be stored in lockers designed to dry the suits by running suit-loop air through them after use. Suit lockers are located in the centrally located radiation shelter. Pressure suit support equipment and EVA devices include umbilicals, portable life support systems (PLSS), and astronaut maneuvering units.

Recreation Equipment--Recreation equipment includes a microfilm library (in excess of 2000 volumes), sound reproduction equipment, and video entertainment equipment. Sound (tape) equipment and video equipment also serve as part of the data management subsystem. A nominal amount of cards and games are also provided.

Medical and Dental Equipment---Medical and dental equipment and supplies allow handling every accident short of major surgery, particularly traumatic injuries and after effects. Included are medicinals such as analgesics, antinauseants, dietary supplements, and antiradiation drugs. Equipment is also provided to monitor the musculoskeletal, cardiovascular, metabolic, respiratory, and sensory and preception systems of the crewmen.

Electrical Power

The electrical power subsystem supplies primary and secondary power to the mission module throughout the mission and standby power to the MEM and EEM when they are attached to the space vehicle. Principal requirements include the following:

- Provide a primary power load of approximately 15 kilowatts maximum (includes standby power to MEM and EEM).
- Provide a secondary power of approximately 2.5 kilowatts for 1.5 hours.
- Limit radiation dose (with isotope system) contribution to 12 rem for missions during solar maximum and 9 rem during solar minimum missions.
- Provide the above loads for Mars missions with Sun distance of 1.38 to 1.66 A.U. while in orbit and at a maximum distance of 1.67 A.U. and minimum distance of 0.51 A.U. during transit. Provide the above loads for Venus missions with the Sun distance of 0.72 A.U. while in orbit and a maximum of 1.0 A.U. during transit.

Candidate primary power systems to satisfy the above requirements included reactor-Rankine, radioisotope-Brayton, and solar cell-batteries. The reactor-Rankine system was eliminated from consideration due to high weight and lower reliability estimate. Solar cell power generation was discarded because of:

1) The large area (more than 6000 ft^2) required for Mars missions that result in stowage, extension, rotation, and weight problems.
2) The adverse effect of a Sun-pointing requirement on a "highly active" experimental program while in planet orbit even with a gimbaled-rotating solar panel boom.
3) Adverse thermal effect of the solar panel on environmental control radiators and long-term LH_2 storage (propulsion modules).

An additional factor in this decision was that a solar cell system would have a greatly reduced weight advantage over a radioisotope-Brayton cycle system if designed to withstand expected mission g forces of up to 0.6 g. An alternative approach to providing a design to allow stowing of the solar panels during the high acceleration portions of the mission would lead to a complicated and potentially unreliable system.

Electrical Power Loads---Preliminary estimates of subsystem load requirements indicated approximately 15 kw_e maximum (Mars missions) at power source output terminals. Further subsystem definition, especially in environmental control and life support where extensive use of

Brayton cycle waste heat in water management and CO_2 control reduced electrical power requirements, resulted in a final average electrical load of approximately 13 kw_e. The breakdown of this load is shown in Table 4.2-4.

Table 4.2-4: ELECTRICAL LOAD

Subsystem/System	Mars Load (Conjunction Mission) (Average)	Venus Load (Average)
Environmental Control	3730	3730
Life Support	140	140
Crew Systems	40	40
Communication	1650	380
Guidance & Navigation	200	200
Attitude Control	300	300
Data Management	100	100
Displays and Controls	300	300
Lighting	300	300
MEM & EEM (Standby)	500	500
Experiments	2065	2565
Subtotal	9325	8555
Contingency (10%)	930	855
Power Conversion & Distribution Losses (20%)	2565	2350
Total	12,820 watts	11,760 watts

Short-duration loads could increase the power requirement for Mars conjunction missions to a peak of approximately 15 kw_e which is the value used for the radioisotope-Brayton cycle design. Other missions have lower power requirements than the Mars conjunction missions primarily due to the lower communication power requirement because of shorter communication distances. A 15-kw_e system, however, is always provided.

Secondary electrical loads are established by the requirement to provide power for a limited amount of lights, communications, environmental control/life support and startup of a spare Brayton power conversion unit in the event both units fail. One and one-half hours are required to bring the Brayton unit up to stable operating conditions. The estimated loads for this period based on a single conversion unit startup are as follows:

Lights, Communication, Environmental Control/Life Support	350 watts
Brayton Power Conversion Subsystem Startup	2000 watts
Total	2350 watts

Primary Power Supply---The isotope-Brayton system consists of two independent 7.5-kw_e closed Brayton cycle power loops. Each loop includes a heat rejection subsystem, and power conversion subsystem. An isotope heat source is common to both loops. The entire system is located within the forward interstage compartment. Figure 4.2-14 illustrates the schematic of one of the units and Table 4.2-5 lists the major system design characteristics.

The primary power system heat source is provided by a fuel block containing Pu-238 radioisotopes. A quantity of isotope equal to 75 thermal kilowatts is required to provide the 15-kw electrical load. One side of the fuel block provides heat to the "A" power conversion subsystem, while the other side services the "B" power conversion subsystem. Uranium/lithium hydride shields are used to limit radiation doses to those specified in the requirements. Section 4.21.4 discusses the radiation analysis associated with the power system.

Prelaunch and launch phase thermal control of the isotope fuel block is accomplished through use of a water evaporator system. During prelaunch, this heat is dissipated by water provided through an umbilical to either an evaporator or to the plumbed heat shield. During the launch phase, and from 4 to 10 minutes into the flight, evaporative cooling is used for heat rejection. Once in orbit, heat is controlled conventionally through the electrical power space radiator. In an emergency where both power conversion system units are inoperative, waste heat can be rejected to space through a heat dump door that exposes the face of the fuel block to space. Heat dump door operation is automatic and linked to a sensor that monitors either fuel block surface temperature or shield temperature. Operation of the heat dump door can also be performed on command from the EEM or from the control center of the mission module.

The present heat source design concept does not provide for isotope recovery although the 89-year half life of the Pu-238 merits recovery considerations in future investigations. Such an investigation could consider permanently locating the heat source within an unmanned bay of the EEM or placing the heat source in such a bay just prior to EEM separation. Both methods, however, involve considerable complexity in cooling and gas loop integration. A separate reentry capsule is also possible.

Each power conversion system includes a heat source heat exchanger, combined rotating unit, recuperator, and a gas-to-fluid heat exchanger (radiator heat exchanger).

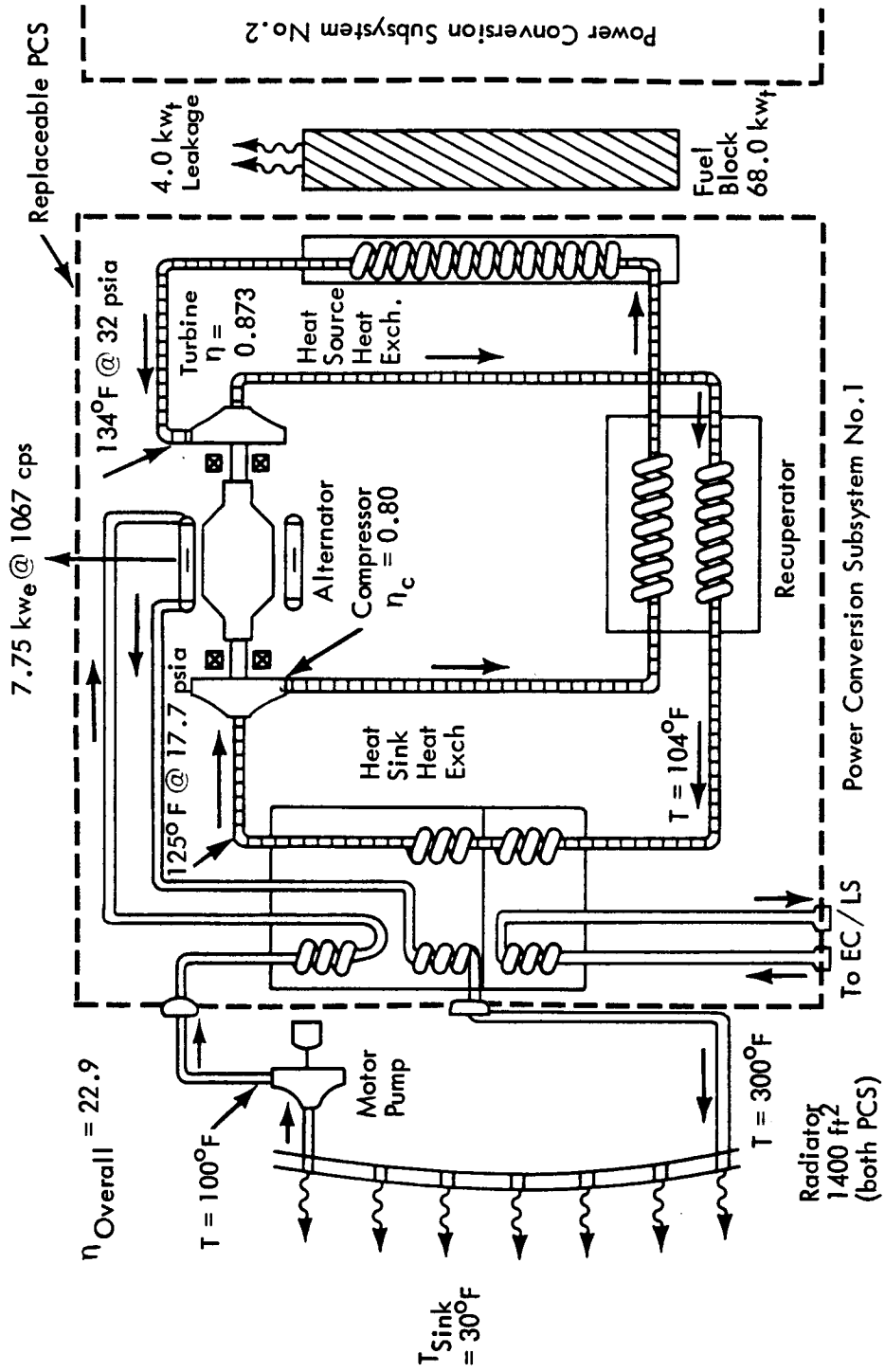

Figure 4.2-14: BRAYTON CYCLE POWER SYSTEM SCHEMATIC

Table 4.2-5: POWER CONVERSION SUBSYSTEM DESIGN CHARACTERISTICS

Net Electrical Output Power	15.0
Working Fluid	Xenon-Helium
Turbine Inlet Temperature	1800°R
Compressor Inlet Temperature	585°R
Turbine Pressure Ratio	1.716
Compressor Pressure Ratio	1.95
Turbine Efficiency	0.873
Compressor Efficiency	0.80
Alternator Efficiency	0.90
Recuperator Effectiveness	0.92
Cycle Efficiency-Percent	22.9
Pu 238 - Beginning of life	75.0 kw_t
- After 5 years	72.1 kw_t
Heat Leakage	4.0 kw_t
Radiator Pumps	0.5 kw_e

The heat source heat exchanger is a thin plate located in close proximity to one face of the isotope fuel block. Xe-He gas passes through the heat exchanger absorbing heat from the fuel block before passing directly to the combined rotating unit turbine.

The combined rotating unit is the heart of each power conversion system unit. It consists of a high-frequency permanent magnet alternator, a single-stage centrifugal compressor, and a single-stage, radial, inward-flow turbine. These components are mounted on a common shaft. The turbine and compressor are located outboard from two hydrodynamic gas bearings, with the alternator straddle-mounted between the bearings. The combined rotating unit operates at a controlled rotational speed of 64,000 rpm. The alternator generates high-frequency, a.c. power at 1067 cps. Cycle operation is started by motoring the alternator with a variable-frequency inverter until a self-sustaining speed is reached. Cycle shutdown is accomplished by closing a valve in the Xe-He line at the outlet of the combined rotating unit compressor.

Power is supplied from each power conversion subsystem alternator to a magnetic amplifier that is linked to a combined rotating unit speed sensor. Speed of the combined rotating unit is maintained through control of the electrical load. The magnetic amplifier shunts power on demand to the spacecraft systems and dumps excess electrical energy into a parasitic load resistor that either radiates this heat to space or dumps it into the environmental control system radiator subsystem. Each power system supplies alternator power to its own alternator bus, and also to the two main low-voltage d.c. rectifier regulators and high-voltage rectifier and regulator.

The recuperator within the power conversion subsystem transfers waste heat from the turbine exhaust to the compressor exhaust. Retaining this energy leads to a relatively high efficiency Brayton cycle.

The heat rejection subsystem removes heat from the power conversion system via a heat exchanger which transfers the difference between available power, minus 4 kw_t for heat leakage and 1 to 2 kw_t for environmental control and life support systems, and alternator output power into the power system radiator loop. A 300-watt, motor-driven pump circulates the FC-43 heat transport fluid in this loop. It is designed to transport 90,000 Btu/hr from the power conversion subsystem heat exchanger to the electrical power space radiator when operating between 760° and 560°R in Venus orbit. The space radiator

$\left(\frac{\alpha s}{\varepsilon_{ir}} = \frac{0.23}{0.85}\right)$ requires an area of approximately 1400 square feet for both power loops.

Redundancy to ensure crew survival is present with the two 7.5-kw Brayton cycle units available since only one is required to operate the subsystems necessary for survival. However, both units are required for accomplishing mission success goals. Spare combined rotating units and coolant pump-motor units are provided to ensure mission success.

Secondary Power Supply---A secondary power supply consists of AgZn batteries with a 3500-watt hour energy capability at 75% discharge. The batteries are used to supply or augment electrical power during primary system shutdown or startup.

Isotope Availability---The estimated availability of Pu-238 and Np-237 from power reactors is shown in Figure 4.2-15 which represents data published for the Atomics Industrial Forum Inc. (AIF) by the AEC on May 5, 1966. This estimate was based on the following assumptions:

1) Production bands relate to the following range from domestic nuclear power growth:

   Low side--60,000 megawatts(e) installed by 1980

   High side--90,000 megawatts(e) installed by 1980

2) Quantities have not been discounted for megawatts(e) generated from recycled plutonium.

3) No neptunium enhancement schemes, i.e., recycle of uranium fuel.

4) Neptunium recovery efficiency of 90% in fuel element reprocessing plants.

5) Neptunium available 1 year after discharge from reactor core.

6) Irradiation of neptunium to Pu-238: calculations assume conversion constants associated with AEC operations. (The constants themselves are classified.)

Recent data* which approximately double the May 5, 1966 estimates for Np-237 availability are shown in Figure 4.2-16. Provided facilities are available for converting Np-237 to Pu-238 and separating Pu-238 from Np-237, it can be expected that a twofold increase in Np-237 availability will result in a comparable increase in Pu-238.

Some provisions must be made for either safe recovery or safe disposal of the Pu-238 fuel block. Cost and availability considerations indicate that recovery of the Pu-238 would be advantageous.

Communication

The communication subsystem provides information transfer between the mission module (MM) and other spacecraft elements and Earth. Table 4.2-6 defines the four communication links necessary to accomplish the required functions.

---

*Nucleonics Week, *AEC Reprocessing Projection*, September 7, 1967, p. 6

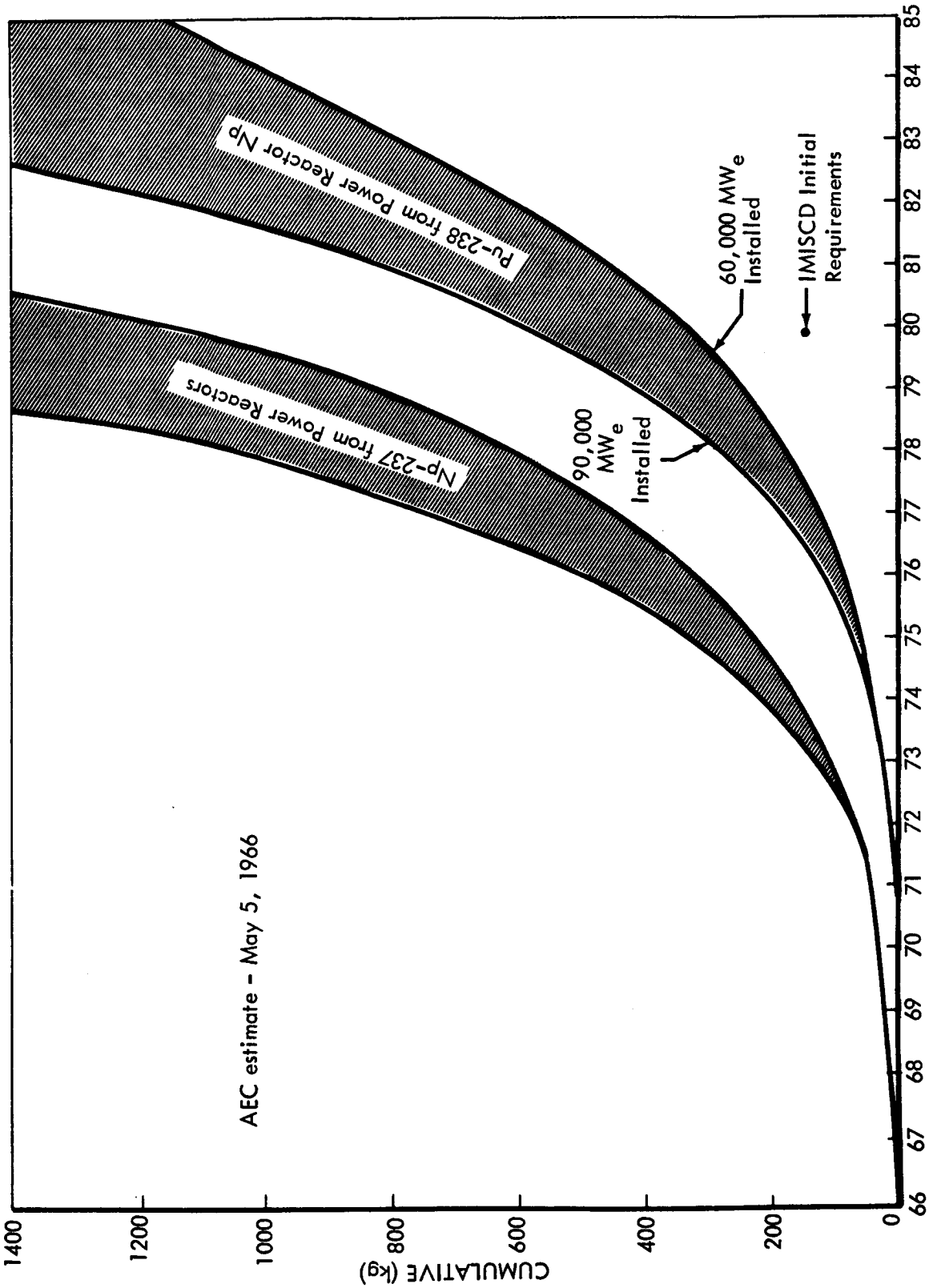

Figure 4.2-15: Np-237 AND Pu-238 FORECAST

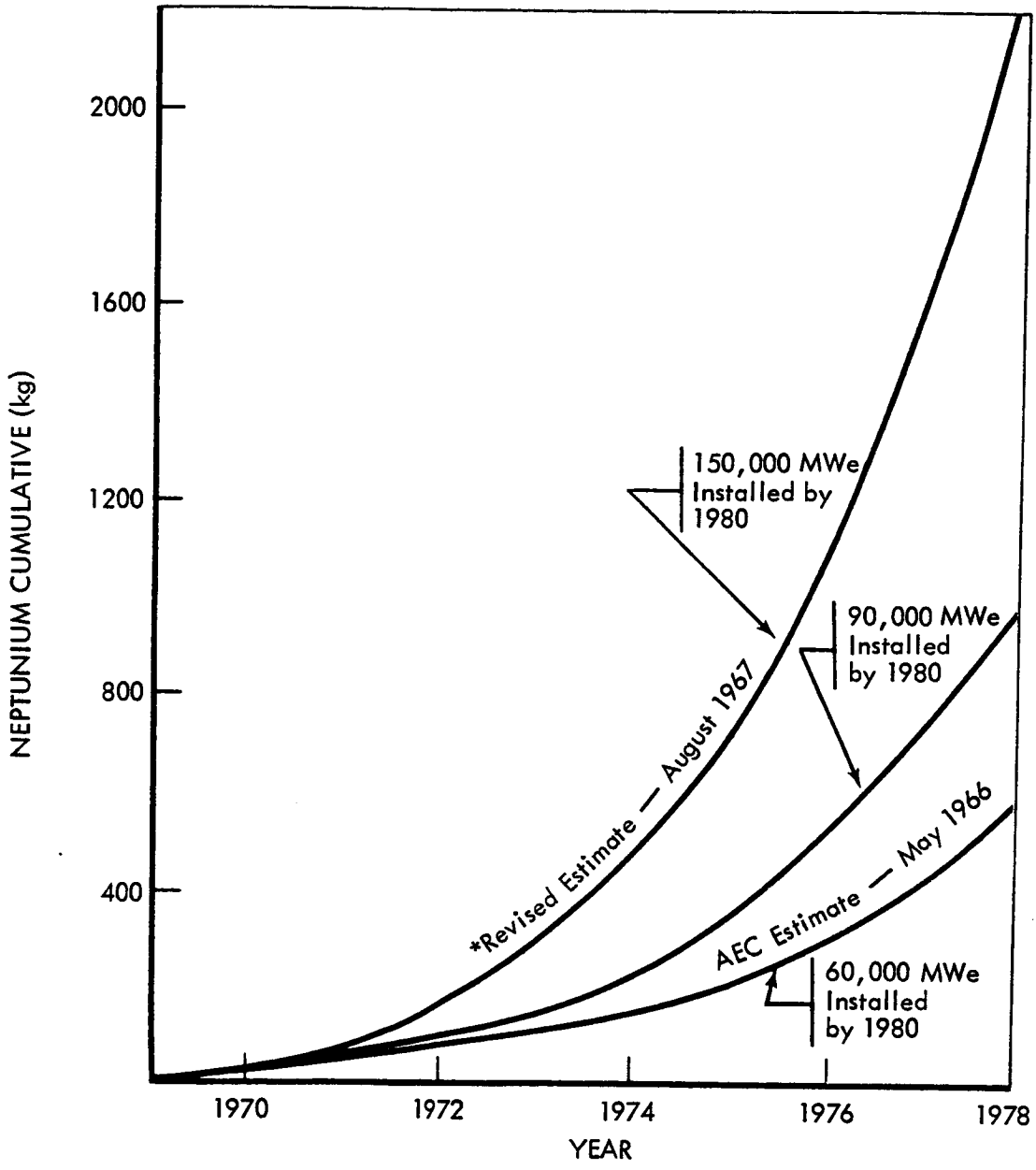

*Basis for Revised Projection
AEC reprocessing projection as reported in Nucleonics Week, 9/7/67.
Np recovery 90%
Np content
225 grams per tonne through 1970
300 grams per tonne thereafter

Figure 4.2-16: FORECAST OF Np-237 AVAILABILITY FROM POWER REACTORS

Table 4.2-6: COMMUNICATION LINKS

	Link	Frequency	Function
1)	MM ⟷ Earth	S-Band	Voice, telemetry, tracking, command
	MM → Earth	S-Band	High resolution picture backup
	MM → Earth	Laser	Real-time TV, high-resolution pictures and backup for all S-band functions
2)	MM ⟷ MEM	UHF (prime)	Voice, Telemetry
		HF (backup)	Voice
	MM ← MEM		TV
3)	Intercommunication		Voice
4)	MM ⟷ Astronaut (EVA)	UHF	Voice, Biomedical telemetry

The data rate requirement associated with the S-band functions is 90,000 bps. This rate is established by a requirement to provide backup transmission capability for high-resolution pictures. (See "Link Analysis" below.) Real-time color TV transmission establishes a requirement for 5 million bps. It should be noted, however, that this is a desirable feature and not a firm requirement. A laser system has been chosen for this communication mode. Further discussion on the necessary data rates is provided in the link analysis paragraph.

S-Band Subsystem---The mission module-Earth link uses solid-state, S-band equipment and operates at deep space distances. A schematic of the system is shown in Figure 4.2-17. Transmitter power requirements vary considerably due to the wide range in separation distance between the space vehicle and Earth for the different missions. A short-duration Venus mission has a separation distance of 0.86 A.U., while the Mars conjunction class has separation distances up to 2.67 A.U. The resulting power input to the transmitter is 83 watts and 798 watts, respectively, at 2300 MHz when a 10-foot diameter steerable antenna is used.

UHF Subsystem---The mission module-MEM link uses solid-state UHF with an estimated transmitter output of 10 watts. This equipment is used to communicate with the MEM during descent, surface stay, and ascent. In addition, it is used while in Earth orbit for links with the ground and logistic spacecraft. The UHF antenna is steerable and consists of four 12-foot long helices. An HF system with an estimated transmitter output of 4 watts provides voice backup to the MEM. A schematic of the system is shown in Figure 4.2-18.

UHF transceivers are used in the EVA link.

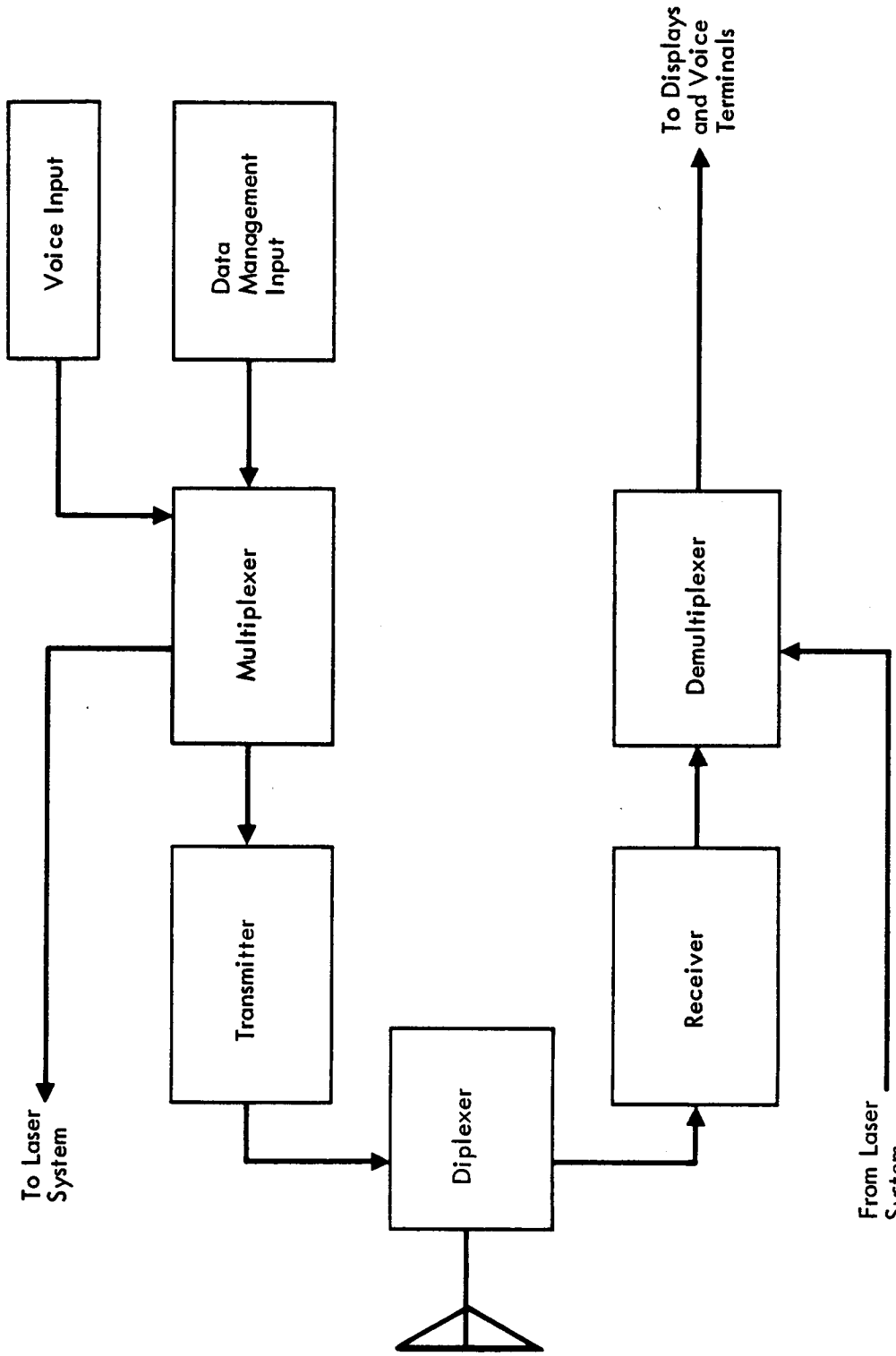

Figure 4.2-17: S-BAND SUBSYSTEM

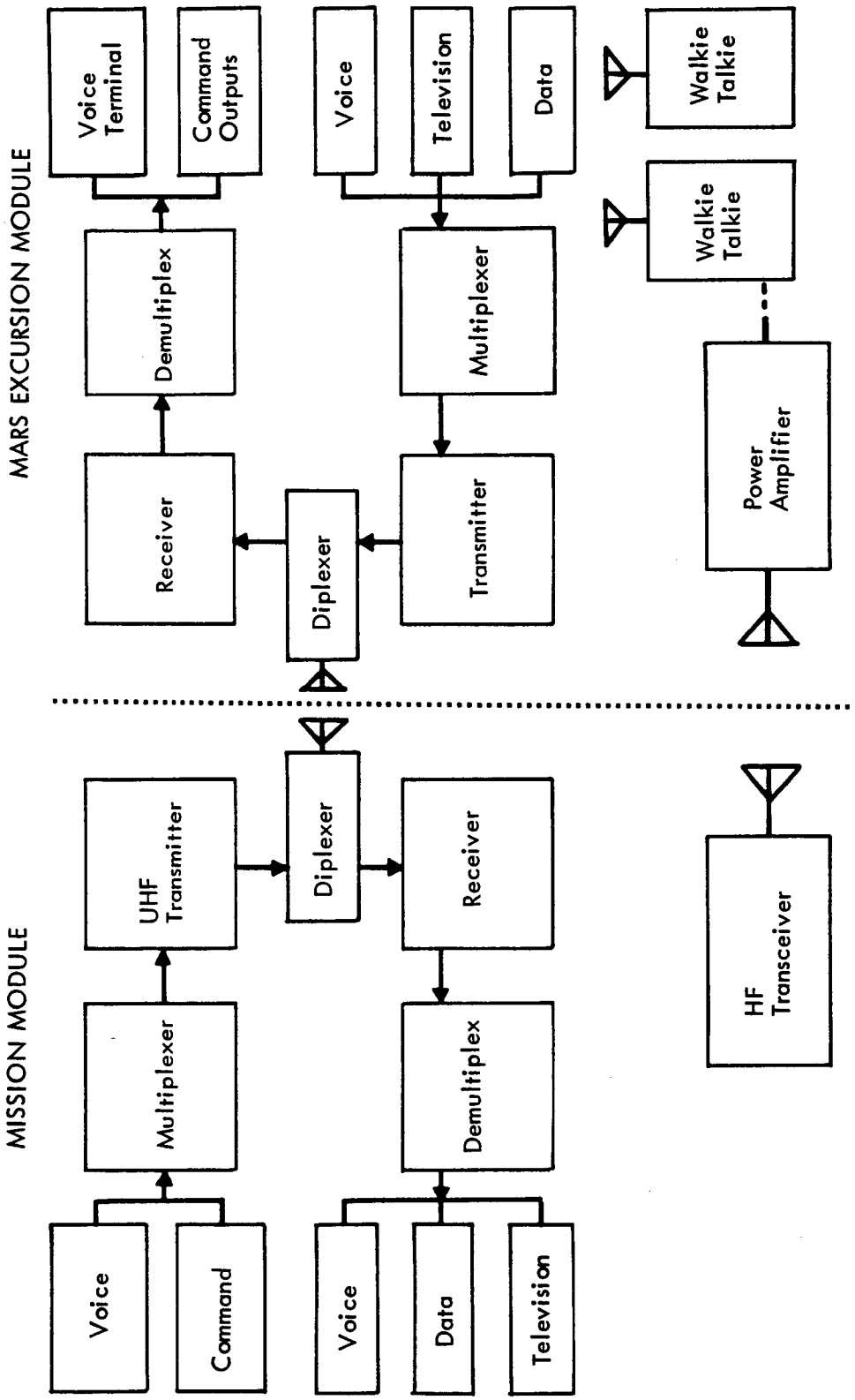

Figure 4.2-18: UHF SUBSYSTEM

Laser Subsystem---The laser subsystem includes on-board optics and transceiver/receiver equipment, utilizes Sun, star, and planet trackers, and requires a number of Earth ground-based transmitter/receiver stations. The schematic of the on-board vehicle equipment is shown in Figure 4.2-19.

1) Optics--The primary optics consist of a reflective telescope with a primary mirror diameter of 1 to 1.5 meters. The function of the telescope is to project the laser beam to Earth and collect energy from Earth beacons for tracking. An aberration-free field of view of Earth is required plus the required lead angle of 50 to 60 arc seconds.

   Equipment and instruments associated with the telescope provide coarse and fine tracking and pointing, correct for lead angle offset due to relative motion of vehicle and Earth, and allow simultaneous transmission and reception at different incoming and outgoing wavelengths.

2) Receiver/Transmitter--A CO_2 laser at 10.6μ is used in the transmitter. Expected efficiency is 25%. Pointing requirements of this laser-type appear to be significantly less stringent than those with such lasers as helium-neon. Power for the laser transmitter also varies with communication distance. For the Venus short mission 50 watts are required, while the Mars conjunction mission requires 500 watts.

3) Ground-Based System--The function of the ground stations are (1) provide a high-luminosity beacon which can be tracked by the space vehicle laser, (2) send lead angle and station changing command information, and (3) receive the vehicle-to-Earth high-data communication information. Preliminary studies indicate eight to 10 specifically located stations are required to offset inclement weather conditions and occultation of ground-based stations due to the rotation of the Earth. An argon laser (5000 A) is used at each ground station.

Link Analysis---Characteristics of a typical S-band system operating at 2.3 GHz and in the 1980 time period are shown in Table 4.2-7. Such a system could be used for space vehicle-Earth communication for Mars and Venus missions.

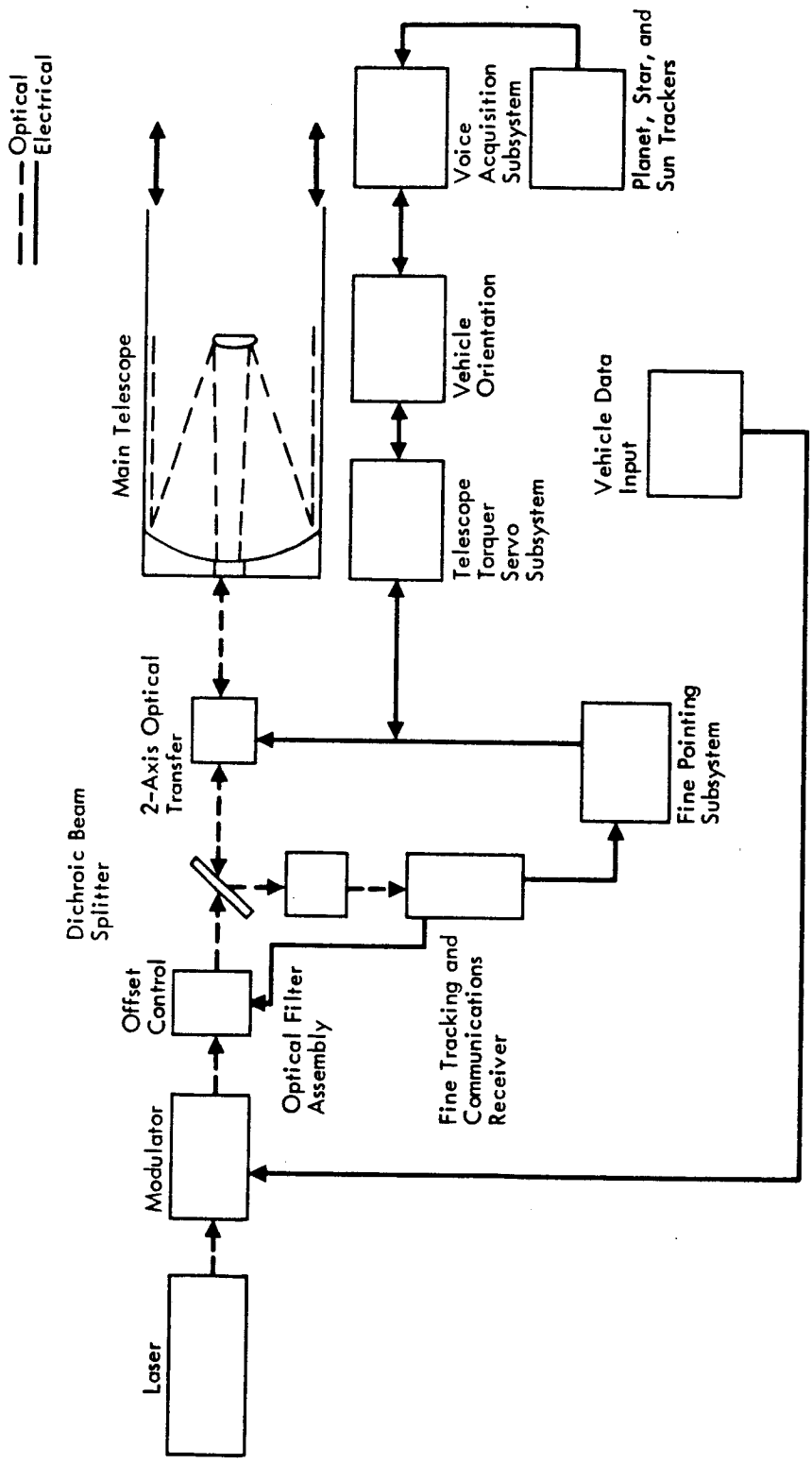

Figure 4.2-19: LASER SUBSYSTEM

Table 4.2-7: S-BAND SYSTEM CHARACTERISTICS

Ground Antenna	210-ft parabolic dish	60 db
Spacecraft Antenna	10-ft parabolic dish	35 db
Spacecraft Transmitter Output	1 kw	30 dbw
Receiver Noise Temperature	50°K	211.6 dbw
Geometrical Space Loss	2.5 A.U.	-271.6 db
Total received power above threshold for receiver of one cycle bandwidth		65 dbw
Signal-to-noise ratio required for 10^{-3} bit error rate		10 db
	Information Bandwidth =	55 db

A 55-db information bandwidth provides 354,000 bps data rate capability. Although this will handle a large number of ordinary voice or data channels, it will not meet the requirement of transmitting a 6-billion-bit picture in 2 hours, as this requires 830,000 bps. The higher rate can, however, be met by increasing the spacecraft antenna size to 17 feet which adds 4.5 db to the system gain. Transmission of home-quality television at 5 million bps would require at least another 20 db of system gain which could be met by using a 35-foot-diameter antenna and a 10-kw transmitter (about 25 kw prime power) or a 60-foot-diameter antenna and 3.4 kw transmitter (about 8.5 kw prime power).

As a result of this cursory analysis, S-band component characteristics for transmitting high-resolution pictures appear feasible, but power and antenna sizes required for real-time color TV is unrealistic. Consequently, an S-band system has been considered as the prime link only for voice, telemetry, tracking, and command. A secondary requirement on the S-band system, however, is the ability to transmit high-resolution pictures and receive further instructions from Earth within a 24-hour period should the laser system fail. Allowing 4 to 5 hours for analysis of pictures on Earth prior to sending instructions to the spacecraft results in the requirement for an on-board S-band system of 90,000 bps capability. The S-band transmitter input power requirement as a function of communication distance is shown in Figure 4.2-20.

Laser transmission has been chosen to satisfy the anticipated scientific community's desire for real-time color TV. As stated earlier, however, this is a desire and not a firm mission requirement. A link analysis is shown in Table 4.2-8 for a spacecraft operating at 2.67 A.U., and using a CO_2 laser (at 25% efficiency), and 500 watts prime power.

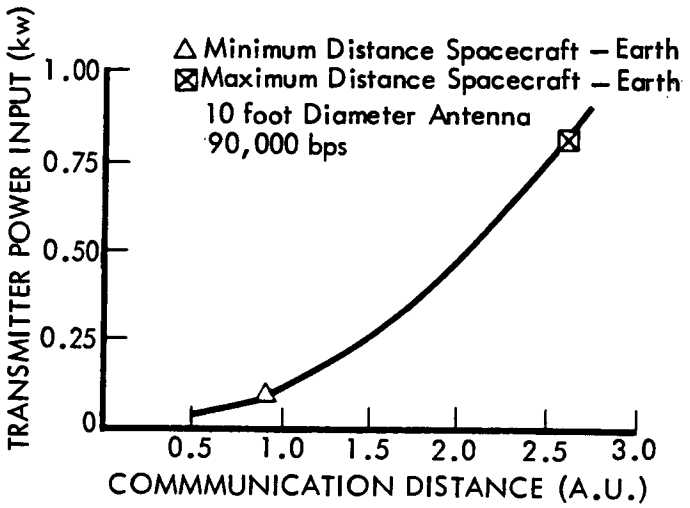

Figure 4.2-20: S-BAND TRANSMITTER POWER REQUIREMENT

Table 4.2-8: LASER SIGNAL-TO-NOISE ANALYSIS

Ground Antenna	4 meter receiving aperture	120.7 db
Spacecraft Antenna	1 meter transmitting aperture	108.6 db
Spacecraft Transmitter Output	125 watts	21.0 dbw
Receiver Noise Temperature		190.0 dbw
Geometrical Space Loss	2.67 A.U.	-353.3 db
Total received power above threshold for receiver of one cycle bandwidth		87.0 dbw
Information Bandwidth Required	5×10^6 bps	67.0 db
	Signal-to-Noise Ratio =	20 db

The signal-to-noise ratio versus communication distance for a prime power input of 500 watts is given in Figure 4.2-21.

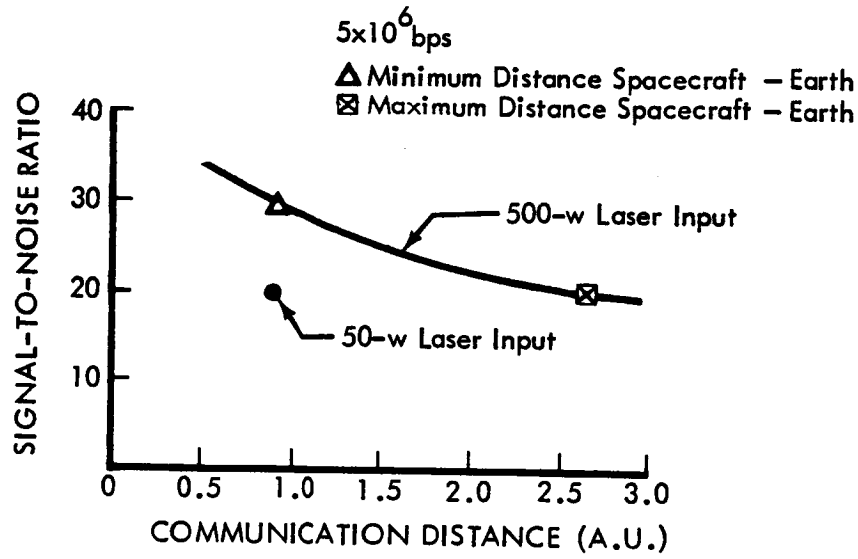

Figure 4.2-21: LASER SIGNAL-TO-NOISE RATIO

Mars Excursion Module---The dominant requirement for mission module-Mars excursion module communications is an uplink of commercial quality television. There is only one candidate for this application and that is a microwave system. Table 4.2-9 presents characteristics considered reasonable for a system which operates at 400 MHz.

Table 4.2-9: UHF SYSTEM CHARACTERISTICS

Mission Module Antenna Gain	5 ft x 5 ft ground plane with four 12 ft helices	25 db
Mars Excursion Module Antenna Gain	Endfire antenna	10 db
Mars Excursion Module Transmitter	5 watts	7 dbw
Mission Module Receiver Temperature	300°K	203.9 dbw
	System Gain	245.9 db
Space loss for 1000-nautical-mile maximum range		-148.9 db
Total received power above threshold for a receiver of one cycle bandwidth		97 db
Signal-to-noise ratio		30 db
Information Bandwidth	=	67 db
	=	5.0 MHz

Guidance and Navigation

The on-board guidance and navigation subsystem (G&N) has the general capability to determine the space vehicle's position, attitude, acceleration, and velocity (translation and angular), and compute the required data to perform a vehicle attitude, position, and velocity change. These functions, however, are normally accomplished using DSIF capabilities via the communication links as the prime mode, with the on-board G&N being used as backup and whenever the communication link is disabled. The proposed G&N system is shown in Figure 4.2-22. Attitude control subsystem elements are also included because of the strong interface of these two subsystems.

DSIF Tracking Capability---Specific DSIF capability was obtained from JPL data.*

1) Angle--Automatic angle tracking is provided on both the 85- and 210-foot DSIF antennas. In addition, the antennas can be pointed using pointing predicts via a DSIF mission-independent computer. Automatic tracking is only available in the coherent mode. For slant ranges exceeding 100,000 miles, the usefulness of angle data for orbit determination is questionable. Its primary purpose under these conditions is for providing antenna pointing when accurate angle predicts are not available.

2) Doppler--One- and two-way doppler measurement capability presently exists at all DSIF stations. Two-way doppler is the most valuable tracking parameter for orbit determination. In this technique, a precision carrier lying between 2110 to 2120 MHz is transmitted to the spacecraft where it is coherently shifted (221:240) by the spacecraft transponder and sent back via the downlink. A comparison of the received carrier and transmitted carrier phase gives the doppler data. Expected accuracy of two-way doppler is $\pm$ 30 m/sec.

*JPL Document TM 33-83, *System Capabilities and Development Schedule of the DSIF, 1964-1968*, Rev 1, Jet Propulsion Laboratory, April 1964, and JPL Document EPD 283, *Planned Capabilities of the DSN for Voyager 1973*, Rev 2, Jet Propulsion Laboratory, January 1967

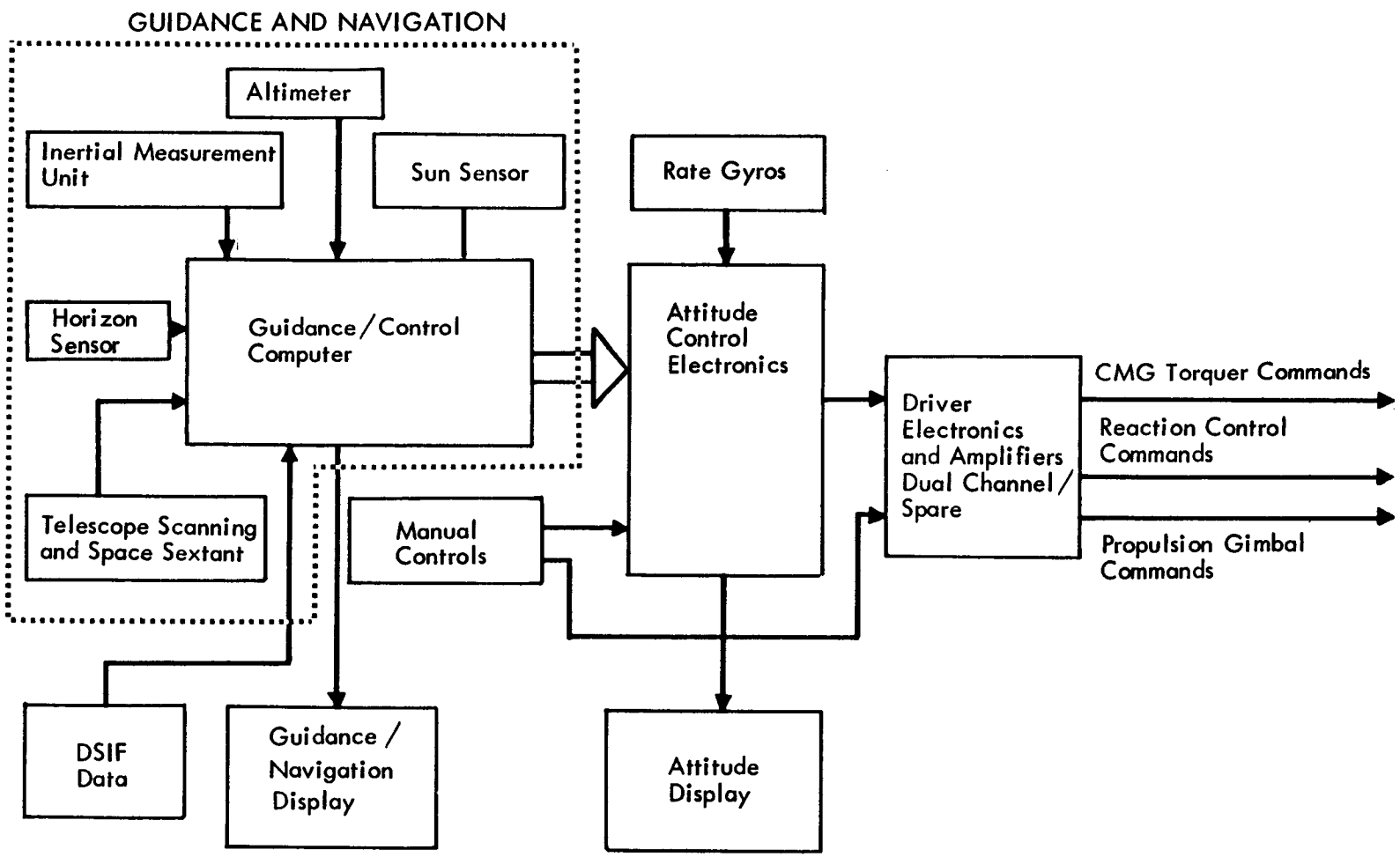

Figure 4.2-22: GUIDANCE/NAVIGATION AND ATTITUDE CONTROL

One-way doppler is limited in accuracy because of spacecraft oscillator drift and thus has limited use for precise trajectory information. Its accuracy is usually limited to about ± 30 m/sec.

3) Ranging--Ranging is accomplished by determining the time difference between two identical, separately generated, pseudorandom codes; one generated at the transmitter and the other generated and synchronized by the receiver. The transmitted signal is sent to the spacecraft where it is coherently shifted by the spacecraft transponder and sent back via the downlink.

The present ranging system has a maximum range capability of 800,000 kilometers with an expected accuracy of ± 15 meters. For planetary distances, the spacecraft transponder will have to reconstruct the code sequence before transmission to Earth. Present plans for the planetary ranging system expect comparable accuracies (± 15 meters) out to 100 million kilometers.

These expected DSIF capabilities are so superior to present state-of-art G&N systems that it is difficult to postulate new advancements in G&N systems which would significantly change this situation. Consequently, it must be concluded that the DSIF will be the prime source for navigational data during the interplanetary mission phases. In the near vicinity of Mars and Venus, the DSIF data will be supplemented with on-board G&N data.

On-Board Guidance and Control---This system consists of various on-board sensors and a guidance, navigation, and control (GN&C) computer. Sensors are used to provide precision angular measurements between stellar and planetary objects. These measurements establish the inertial reference used to update the strapdown inertial reference unit and provide data inputs to the GN&C. Identification of the required sensors and associated functions are as follows:

1) Acquisition Telescope--Provides a wide field of view for coarse pointing of the space sextant.

2) Space Sextant--Provides capability to perform subtense and stadiametric measurements.

3) Star Tracker--Used to track Canopus or other prominent stars.

4) Sun Sensor--Utilized to orient the space vehicle toward the Sun.

5) Horizon Sensors--Establish local vertical while in orbit at Earth, Mars, and Venus.

6) Radar Sensors--Utilized in determining coordinates and altitudes, rendezvous information associated with the MEM and logistic vehicles. This equipment is included under the experiment sensors, as it is also used for tracking unmanned probes.

7) Inertial Measuring Unit--A strapdown inertial measuring unit is used to sense changes in vehicle attitude and acceleration. The unit consists of three integrating rate gyros, three accelerometers, and electronics.

8) Interface Equipment--Input-output devices are used for coordinating the operation of sensor subsystems, the computer, and displays. They also are used for reading in spacecraft status measurements, crew guidance commands, and the outputs from the communications subsystem.

9) Computer--A digital computer is utilized which stores ephemeris data of the planets and stars of interest, calculates the trajectory of the vehicle, determines the deviation of the trajectory from that desired and issues commands to produce necessary corrections in the trajectory and spacecraft attitude. An atomic clock is provided which is used in conjunction with stadiametric measurements.

Guidance Error Analysis---No guidance error analysis was conducted during this study to determine midcourse and orbital trim maneuver ΔV requirements. Instead, midcourse ΔV requirements were obtained by examining previous guidance error studies for manned Mars missions and using a compromising value. As a result, 300 fps (91 m/sec) is allocated for each of the outbound and inbound trajectories.

Orbit trim ΔV's are associated with providing the space vehicle with sufficient separation distance from the spent but radioactive PM-2 and for minor orbit corrections while in orbit about Mars or Venus. Separation between the two elements is necessary to minimize the radiation effects on EVA, MEM, and/or experiment operations. The initial separation distance of 100 nautical miles is provided by having the space vehicle injected into a 640-nautical-mile orbit, jettisoning PM-2, and proceeding to 540 nautical miles which is the nominal operational altitude. This particular orbit change requires approximately 200 fps (60 m/sec) for Mars missions. A ΔV allocation of 100 fps (30 m/sec) is provided for minor orbit corrections associated with MEM rendezvous or experiment operations giving a total orbit trim requirement of 300 fps (91 m/sec).

A 300-fps (91 m/sec) orbit trim ΔV allocation is also provided for Venus missions. In this case, the majority of the ΔV is associated with providing the 100-nautical-mile separation distance. The higher ΔV requirement for the same separation distance at Venus is the result of greater gravity effects. No ΔV is necessary for MEM operations, as a manned landing is not accomplished on Venus missions.

Attitude Control

The attitude control stabilizes and changes the space vehicle attitude during all phases of the mission. Major requirements placed on the attitude control system include:

- Hold vehicle longitudinal axis within 5 degrees of desired attitude during all phases of the mission including Earth orbit.

- Provide the following maneuver rates:

Earth Orbit	0.025 deg/sec
Outbound Trajectory	0.025 deg/sec
Mars or Venus Orbit	0.3 deg/sec 0.1 deg/sec
Inbound Trajectory	0.025 deg/sec

A more detailed listing of the maneuvers is presented in subsequent paragraphs.

Typical space vehicle c.g. and inertia characteristics are presented in Figure 4.2-23.

Operational Modes---Three distinct operational modes are provided by the attitude control system. During the Earth orbit period, the longitudinal axis of the vehicle is held normal to local vertical. This attitude results in a minimum penalty for gravity gradient correction and minimizes aerodynamic drag. Although this attitude results in a greater thermal input to the propulsion modules, the penalties associated with this are far less than the gravity gradient penalty (estimated to be 100,000 pounds/30 days) if the longitudinal axis is held coincident with the Sun line of sight. For the Earth orbiting mode, horizon scanners provide local vertical signals for two axes, and a star tracker is used for the third reference. Control moment gyros provide damping control of gravity gradient oscillations and reaction jets provide the torques for maneuvers requiring higher rates.

During the in-transit trajectory phases, the vehicle longitudinal axis is pointed toward the Sun and uses the Sun and Canopus as attitude references. This attitude minimizes the thermal input into the propulsion modules and mission module radiators. Cyclic disturbances are controlled by the control moment gyros which maintain a high pointing accuracy with no propellant expulsion; reaction jets are used to desaturate the gyros. Attitude change maneuvers are accomplished by torquing about one axis at a time using reaction jets.

While the space vehicle is in orbit around either Mars or Venus, the longitudinal axis is normally held coincident with local vertical. This particular attitude like that with the longitudinal axis normal to local vertical provides a gravity gradient stabilized configuration. As a result, this attitude has been selected for the following reasons: 1) Minimizes gravity gradient penalty; 2) desirable for experiment integration and operation; and 3) minimizes the required environmental control system and power radiator area while at Venus. An attitude with the longitudinal axis toward Sun line of sight would minimize the thermal input into the propulsion modules and radiators but would have an unfavorable impact on experiment operation. CMG's again remove cyclic disturbances and reaction jets provide high maneuver rates.

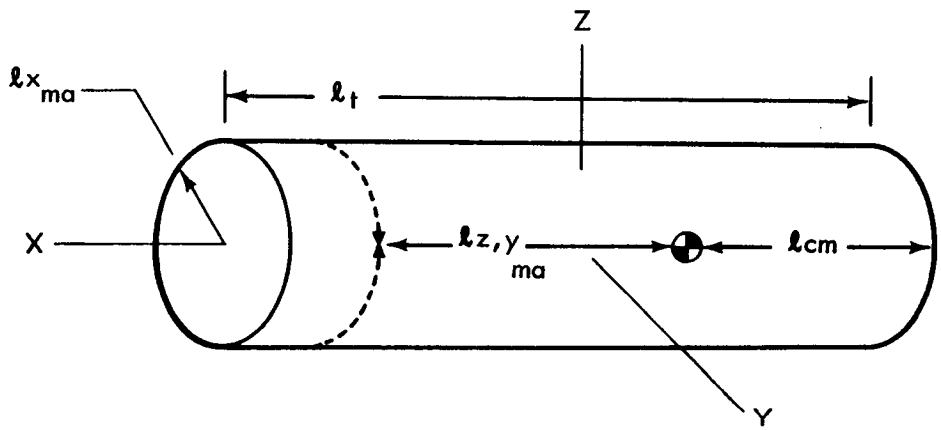

ℓ_t - Total vehicle length
ℓ_{cm} - Center-of-mass location
ℓ_{ma} - Moment arm between center of mass and reaction jets

Phase	Weight (10^6) (lb)	ℓ_t (ft)	ℓ_{cm} (ft)	ℓzy_{ma} (ft)	ℓx_{ma} (ft)	Iz&y (10^6) Slug-ft^2	Ix (10^6) Slug-ft^2
Earth Orbit	2725	583	210	335	14.2	1802	180
Outbound	1214	425	190	200	14.2	451	45
Mars Orbit	516	265	105	125	14.2	81	8
Inbound	115	110	40	30	14.2	5.1	0.5

Figure 4-2-23: CENTER OF GRAVITY/INERTIA CHARACTERISTICS

Control Modes---A minimum of three control modes are provided. These include attitude hold, automatic maneuvering, and manual maneuvering. The attitude hold mode is automatic and can hold the vehicle within 0.5 degree of a reference attitude. The automatic maneuvering mode automatically directs the vehicle from one position to some preselected position at rates of 0.025 deg/sec, 0.1 deg/sec, or 0.3 deg/sec. Manual control is used as a minimum impulse control for precise attitude hold and for maneuvering the vehicle at varying rates.

Control Moment Gyros---Control moment gyros (CMG) provide the capability to correct cyclic attitude variations and to control on-board disturbances such as crew movement. A coning suspension CMG system is used which has two rotors each controlling an axis. Two complete CMG systems are used which results in one axis of the vehicle having a redundant rotor for its control. Each rotor within a CMG provides an angular momentum of 2000 ft-lb/sec. The complete CMG system provides the vehicle with capability to hold any axis within 0.5 degree of a desired attitude. Use of the coning suspension method is expected to eliminate cross-coupling effects found in an Euler suspension CMG.

Reaction Jet System---The reaction jet system is utilized for pointing requirements outside the capability of the CMG's, such as those dictated by maneuvers for experiments, and prior to major ΔV changes. The system is also used for desaturating the CMG's.

A detailed listing of the reaction jet maneuvers is presented in Table 4.2-10. A maneuver is defined as going from one position to another at the specified rate and about the designated axes.

The selected propellant combination is nitrogen tetroxide (N_2O_4) and aero 50 (50% UDMH and 50% hydrazine). A specific impulse of 300 seconds is provided by these propellants. Each of the propellants is stored in separate tanks and expelled by a nitrogen pressurization system. Propellant tanks are equipped with bladders.

Two clusters, each consisting of three radiation-cooled reaction jets, provide the desired maneuver rates. Each jet provides 25 pounds of thrust. Figure 4.2-24 depicts the use of these reaction jets. The relatively low thrust levels are the result of long moment arms and the desire to have low accelerations to minimize vehicle deflections during maneuvers. Additional jets may be added for redundancy and/or to provide the necessary jet life associated with longer missions. Jets are also provided to allow a minimum amount of fore and aft translation.

Data Management

The data management subsystem provides the centralized facilities for the processing, storing, monitoring, displaying, and formatting of all data associated with space vehicle assembly and engineering and crew performance evaluations. In addition, the subsystem provides inflight checkout capability for the space vehicle that includes both malfunction detection and fault isolation.

Table 4.2-10: REACTION JET MANEUVERS

Phase Maneuvers	Quantity	Control Axis	Rate (deg/sec)	Propellant (lb)
Earth Orbit				105
• Align for departure	1	X & Z	0.025	
Outbound				250
• Initial alignment of vehicle to Sun	1	X & Z	0.025	
• Align vehicle for midcourse correction	3	X & Z	0.025	
• Realign vehicle to Sun after midcourse correction	3	X & Z	0.025	
• Align vehicle for ΔV_2	1	X & Z	0.025	
Mars Orbit				3210
• Align vehicle for PM-2 Separation	1	X & Z	0.1	
• Align vehicle for altitude change 640→540 nautical miles	1	X & Z	0.1	
• Align vehicle for final altitude correction at 540 nautical miles	1	X & Z	0.1	
• Align vehicle for desired attitude	1	X & Z	0.1	
• Align vehicle for probe launch and tracking	18	X	0.3	
• Align vehicle after probe launching	18	X	0.1	
• Align vehicle for MEM launch and tracking	1	X	0.3	
• Align vehicle after MEM launch	1	X	0.1	
• Align vehicle for miscellaneous experiment operations	60	X	0.1	
• Align vehicle after miscellaneous experiment operations	60	X	0.1	
• Align vehicle for MEM rendezvous and dock	1	X & Z	0.3	
• Align vehicle after MEM dock	1	X & Z	0.1	
• Align vehicle for ΔV_3	1	X & Z	0.1	
Inbound				10
• Align vehicle to Sun after ΔV_3	1	X & Z	0.025	
• Align vehicle for midcourse correction	3	X & Z	0.025	
• Align vehicle to Sun after midcourse correction	3	X & Z	0.025	
• Align vehicle for EEM departure	1	X & Z	0.025	
CMG desaturation (0.04 lb/day)				20
			Subtotal	3595
			10% Reserve	360
			Total	3955

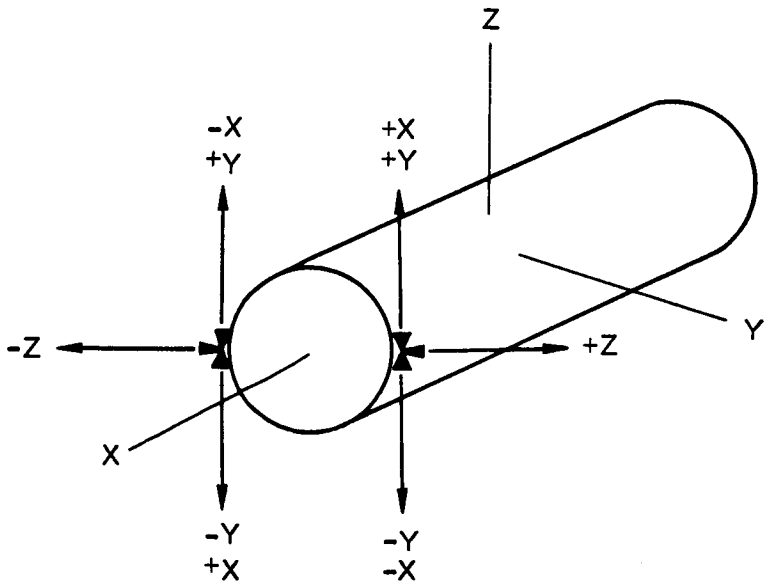

Figure 4.2-24: REACTION JET OPERATION

Design requirements for the data management subsystem are shown in Tables 4.2-11 and 4.2-12. Checkout and monitoring requirements shown in these tables are based on previous spacecraft studies, but are typical for the IMISCD space vehicle.

Table 4.2-11: ENGINEERING AND CREW PERFORMANCE DATA OF THE MISSION MODULE

Subsystem	Measurement Type			Sampling Rate		Accuracy (%)	Display
	Analog	Digital	Discrete	Low	High		
Electrical Power	38	0	0	3/min	1/sec	2	voltage--current frequency--switch positions--temperature pressure
Guidance and Navigation	26	8	4	5/min	1/sec	1	voltage--null storage registers
Attitude Control	5	3	8	1/min	1/sec	2	voltage(analog) discrete positions
Environmental Control	36	-	11	1/hr	1/sec	2	voltage(analog) discrete positions
Life Support	22	-	-	1/hr	1/sec	2	voltage(analog)
Structures	18	-	-	1/hr	1/min	1	voltage(analog)
Communications	17	-	-	3/min	1/sec	1	voltage--current discrete--frequency

Table 4.2-12: ENGINEERING AND CREW PERFORMANCE DATA EXTERNAL TO THE MISSION MODULE

	Total
Command (Excitation)	
Discrete	482
Analog	207
Digital	73
Response (Measurement)	
Discrete	335
Analog	536
Digital	55
Time Required (Minutes)	189

Major Elements--A functional diagram of the data management subsystem and its major elements is shown in Figure 4.2-25. A brief description of the elements follows.

1) Command Decoder and Main Control Unit--The command decoder and main control unit is the functional interface between the computer and the various peripheral equipment indicated in Figure 4.2-25. All data and priority interrupt lines to the computer as well as all address and control lines from the computer are processed by this unit.

2) Wideband Multiplexer--The wideband multiplexer is a multiple-bank, 64-channel, high-speed controlled switch capable of random selection of input channels. Address inputs are received in 10-line binary from the command decoder and main control unit. The multiplexer has internal timing logic for the generation of control signals to the electronic counter or other measurement equipment to which it is connected.

3) Electronic Counter--The electronic counter is capable of precision measurement of frequency, frequency ratio, time interval, multiple period, and phase angle.

4) High-Speed Multiplexer--The high-speed multiplexer is used directly in conjunction with the analog-to-digital converter for the high accuracy measurements of multichannel analog data. The multiplexer outputs settle to within 0.01% of final value within 15 microseconds of channel selection which provides a switching speed capability of 66,000 channels per second. Where conversion accuracy of less than 0.10% is satisfactory, the switching speed may be increased.

5) Analog-To-Digital Converter--This unit is used to perform high-speed precision measurements of analog voltages. The converter is capable of measuring and converting an analog voltage to 11-bit digital data at a rate of 30,000 conversions per second with an accuracy of $\pm$0.05% of full scale.

6) Digital-To-Analog Converter--This unit is used to generate precision analog voltages at a rate of up to 80,000 per second and at an accuracy of 0.15%. The incremented resolution of the analog outputs, as determined by the least significant input bit, is 1.22 mv. Input data is received over common data lines and is routed to the desired channel by the associated channel select enable signal.

7) Time Code Generator--This unit is the basic time reference for the data management system and is used to identify real time occurrence of data transferred to the computer. It is also used as an external time reference for the command generator and as a source of time-synchronized, high accuracy control pulses which provide for the computer generation of time-sequenced commands. The time-base frequency for the clock is derived from an internal 1 MHz crystal oscillator which is stable to 5 parts per billion per day.

8) Command Generator--The generator is a parallel-to-parallel and parallel-to-serial converter with a variable-speed output bit rate derived from either the time code generator or an internal 1-MHz clock

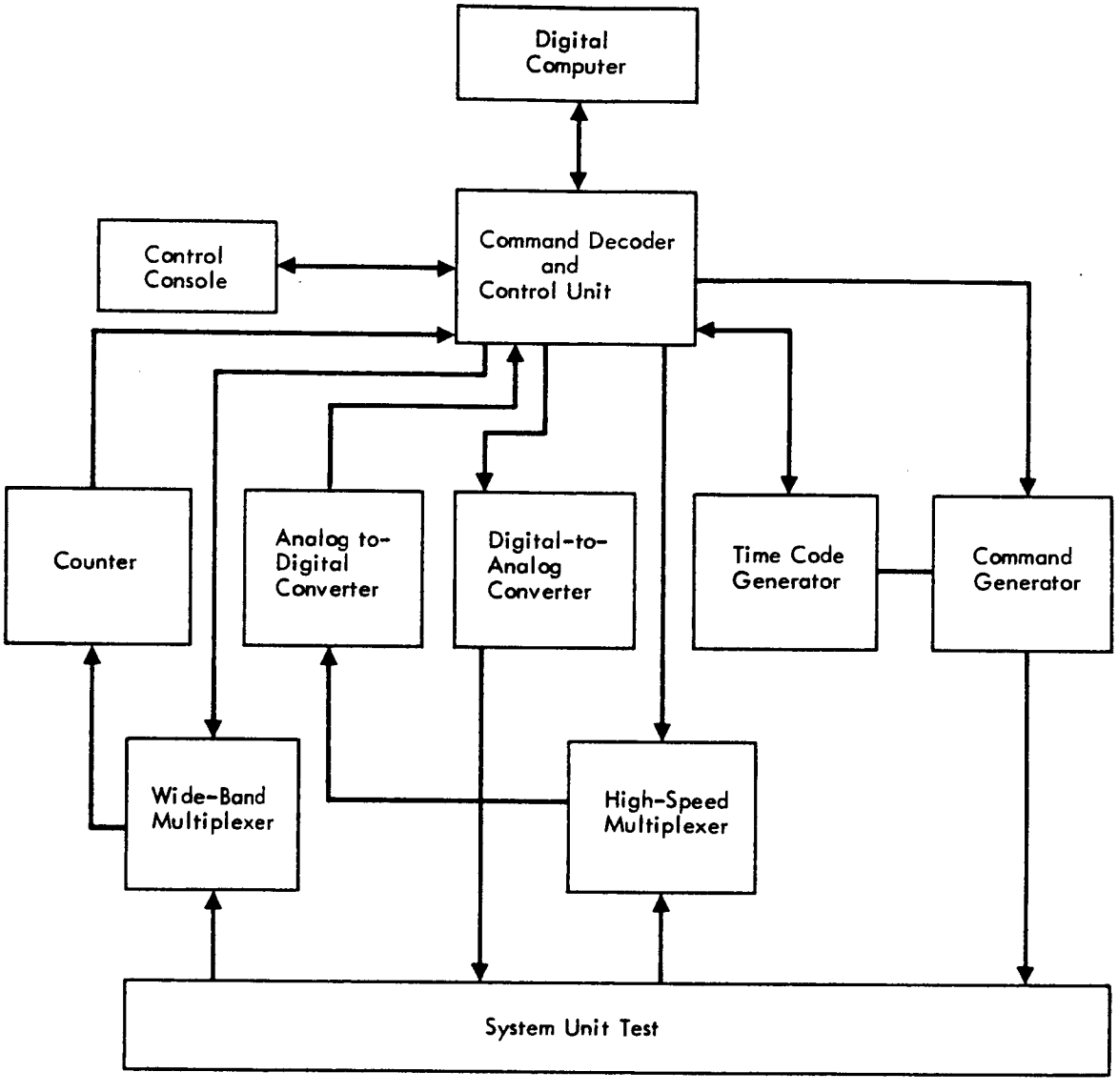

Figure 4.2-25: DATA MANAGEMENT SUBSYSTEM FUNCTIONAL DIAGRAM

generator. Parallel words use a 48-line output and, under computer control, the maximum output rate is approximately 10,000 words per second. It is capable of outputting data at any rate between 1 bps to a million bps and also output continuous-stream data such as encountered with telemetry systems and synchronous data transmission.

9) Computer--The data management computer is a stored-program, parallel, single-address machine with an instruction repertoire of general purpose instructions. An expandable memory system is used for main internal storage that can vary from 4096 words to 32,768 words in 4096-word module increments.

Type:	General purpose
Arithmetic:	24-bit parallel, two's complement fixed point with typical execution times of:
	Add 2 microseconds Multiply 16 microseconds Divide 20 microseconds
Memory:	DRO magnetic core, 24 bits per word plus parity
	Cycle time: 1 microsecond
	Solid-state bulk store of etched permalloy cores, 24 bits per word plus parity.

4.2.1.3 Redundancy and Maintenance

Reliability analysis of the total space vehicle resulted in a mission module requirement of 0.998 probability of crew survival and 0.985 for mission success as described in Volume III.

Crew survival is defined as the probability of no fatal accidents during the mission. Mission success requires achieving an orbit around Mars (or Venus), obtaining 10 days of photographs of the planet, completing the MEM mission, and safely returning the crew to Earth.

The required redundancy to achieve these goals was obtained by employing the Boeing MARCEP (Maintainability and Reliability Cost Effectiveness Program) computer program. Utilization of MARCEP required a single-thread description of each subsystem. Single thread is defined as including only that equipment functionally required to perform the subsystem purpose. The MARCEP program examines each component of the single-thread system to determine the optimum (least weight) method of redundancy, taking into consideration allowable down time, repair time, failure rate, and criticality of the component in the overall system. Candidate methods of redundancy include standby, parallel, and spares. In an iterative process, components are selected and added to the system in the optimum manner until the required system reliability is achieved or until a defined constraint (weight, volume, time, reliability equal, or dollars) has been reached. Reliability goal was the only constraint applied to the MARCEP program.

The resulting output of the program, therefore, was the redundancy weight required over and above the single-thread design, and also the associated volume and unscheduled maintenance time. The range of redundancy and maintenance time requirements was established by using the 1982 Mars opposition (570 days) and 1986 Mars conjunction (1070 days) missions.

Redundancy--The total redundancy required to achieve the desired goals of crew survival and mission success is presented in Figure 4.2-26. The actual process of acquiring the redundancy involves initially calculating that required to achieve crew survival. By definition, mission success includes crew survival; consequently, the mission success redundancy curves include only those items required to fulfill the remainder of the mission success criteria. As previously stated, these include performing the MEM mission and obtaining photographs of the planet.

Redundancy for the 570-day mission includes 4044 pounds for crew survival and 939 pounds for mission success resulting in a total redundancy of 4983 pounds. A total of 7111 pounds of redundancy is required for the 1070-day mission. This figure also illustrates the fact that the desired reliability goals are quite weight effective from the standpoint that any greater amount of redundancy would contribute very little to the reliability level. The redundancy for any level of reliability between 0.60 and 0.998 and the redundancy sensitivity for crew survival probabilities between 0.60 and 0.998 are also obtainable from the figure. Redundancy sensitivity to mission success probabilities between 0.60 and 0.985 are also available, but are associated with the 0.998 probability of crew survival.

Redundancy weight contribution of each subsystem in order to achieve the required mission module reliability goals is presented in Figure 4.2-27. Crew survival and mission success data appearing above each subsystem bar indicates the reliability contribution of that subsystem to the overall goals. Data management and guidance and navigation subsystem resulted in the largest percentage of redundancy with environmental control having the largest increment of redundancy.

Distribution of the total redundancy into categories of parallel, standby, and spares and as a function of mission duration is presented in Figure 4.2-28. Parallel and standby are fixed or built-in approaches. These approached are utilized with those components extremely critical to crew survival. Parallel redundancy is automatic and used with components which cannot have any downtime. Standby redundant components are switched into operation either automatically or by crew action. Spares are those components manually replaced by the crew. In general, the spares approach results in the lowest weight for a fixed reliability; consequently, this category results in the largest weight contribution.

Maintenance Time--Although the spares redundancy approach results in the lowest weight for a given reliability, it also requires a certain amount of crew time for maintenance and installation. Maximum average maintenance times have been determined. The term "maximum average" is used, as it assumes all of the spares redundancy would be used during the

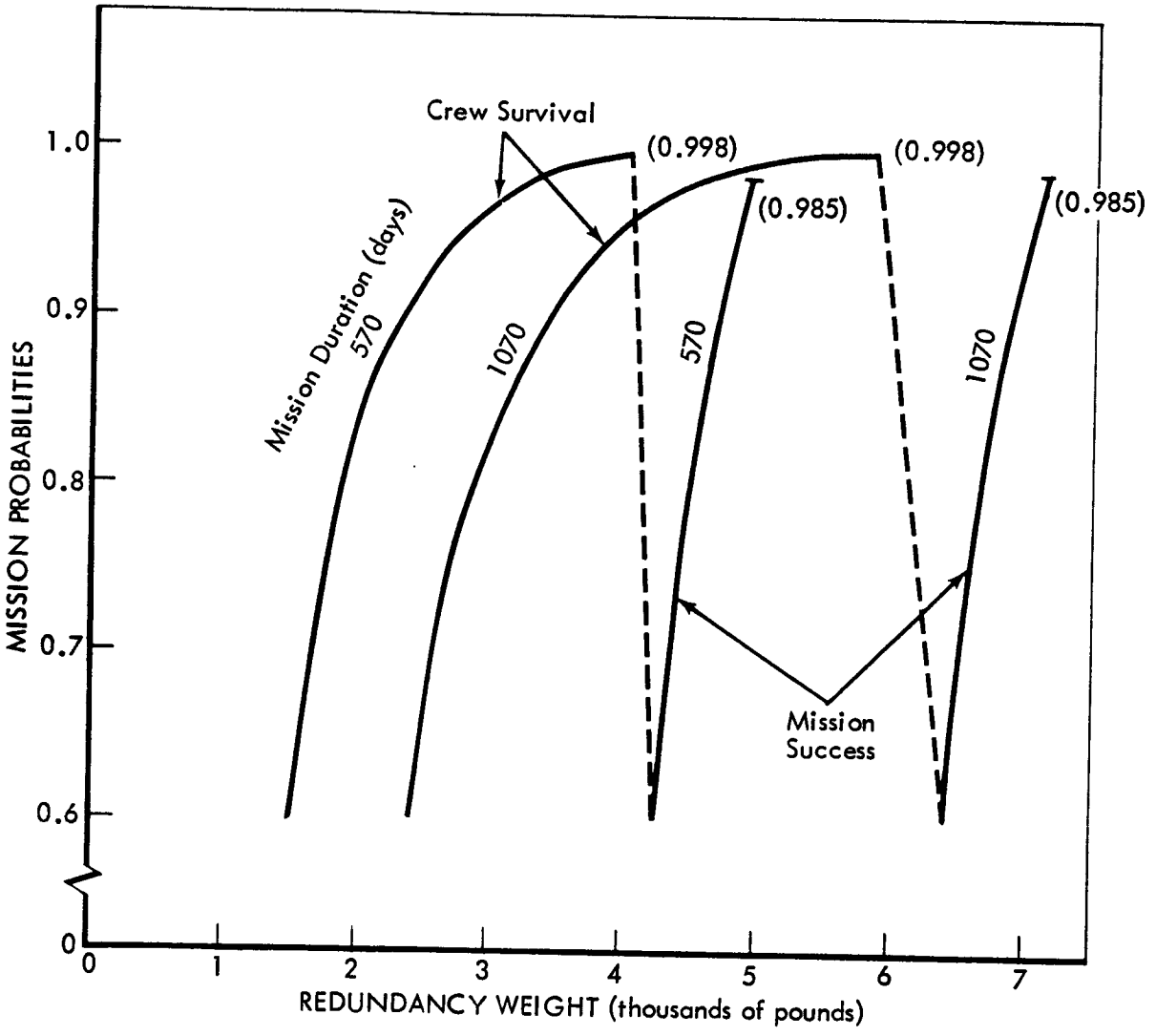

Figure 4.2-26: MISSION MODULE REDUNDANCY VARIATION

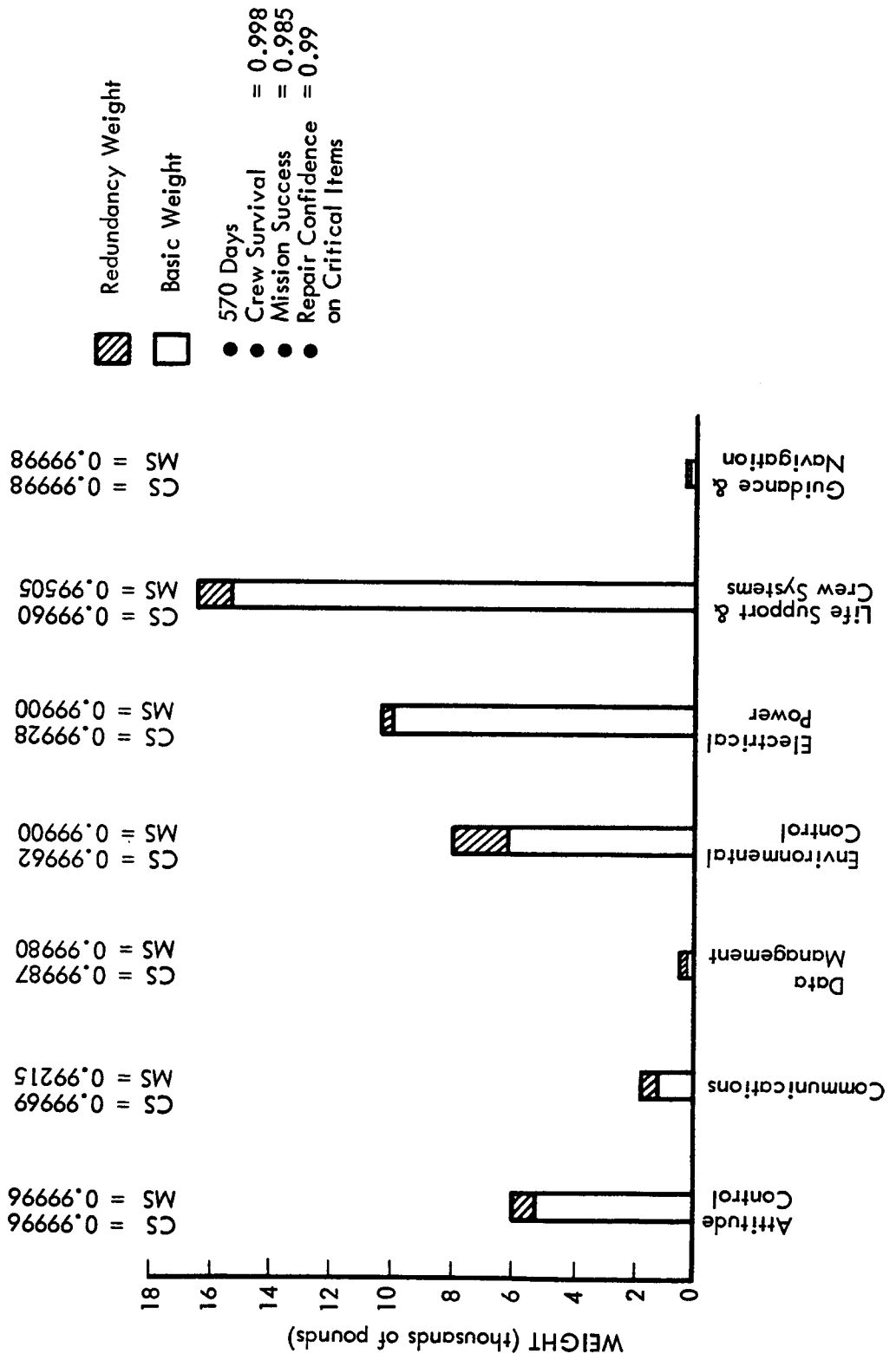

Figure 4.2-27: SUBSYSTEM REDUNDANCY DISTRIBUTION

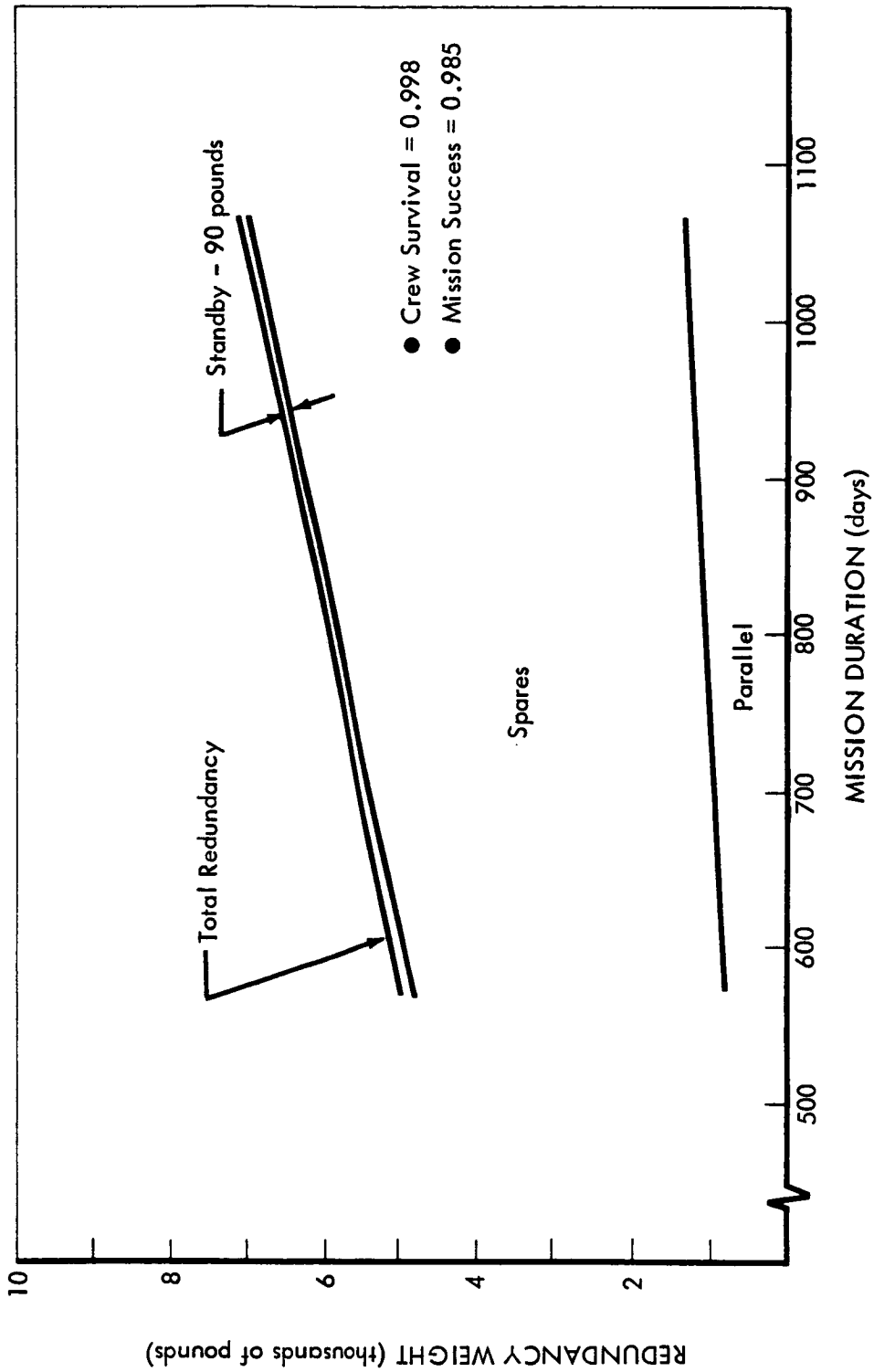

Figure 4.2-28: REDUNDANCY DISTRIBUTION

mission. Related studies, however, have indicated only approximately 10% of the spares are used. Consequently, the times shown are quite conservative. Worst-case allowances for crew maintenance, however, have not been made and should consider the period of manned Mars exploration where three men remain in the mission module combined with a worst day, when a considerably higher-than-average number of repairs must be made.

Distribution of maintenance time among the subsystems in Figure 4.2-29 provides a basis for establishing crew skill requirements. Total maintenance time required is presented in Figure 4.2-30. For the 570-day mission, approximately 140 minutes are required for unscheduled maintenance and 99 minutes for scheduled maintenance. With a six-man crew, this results in approximately 40 minutes per man per day. Unscheduled maintenance time decreases with increased mission duration as a result of the rate at which spares are required. This results from the fact that the rate of adding spares is less than the rate at which the mission is increasing. Consequently, the maintenance time/day decreases. Scheduled maintenance deals with such activities as cleaning and filter changing.

4.2.1.4 Radiation Protection

Review of radiation effects on the human body indicate the blood-forming organs to be the most critical as previously shown in Volume III. Effects on eyes are also critical; however, devices such as goggles used during sleeping periods reduce this dose to a tolerable level. The recommended radiation protection approach utilizes vehicle mass in a manner that minimizes the amount of additional shielding required to limit the blood-forming organ dosage to 55 rem per year.

Optimum allocation or distribution of the shielding mass takes into consideration natural radiation in Earth orbit and deep space and also onboard radiation sources such as the isotope power system and nuclear propulsion. Nuclear propulsion contribution is fixed at 10 rem because data is not available on the shielding weight as a function of rem dose from the nuclear engines. Radiation contribution from the remaining sources and final shielding optimization data is shown in Figure 4.2-31.

As noted in Figure 4.2-31a, the altitude in Earth orbit is designated as 289 nautical miles rather than the previously specified assembly altitude of 262 nautical miles. The higher altitude was the assembly altitude recommended early in the IMISCD study, and it was during this time that the radiation analysis was conducted. A revision of the radiation analysis has not been performed for the lower altitude, but it is expected the result would be a considerable decrease in rem contribution for this phase of the mission.

Figure 4.2-31a illustrates the radiation contribution associated with the near-Earth phase of the mission. Radiation contribution from this phase results from two activities. The first of these occurs when the mission crew is conducting the final space vehicle checkout and waiting for the proper launch window. During this period, the space vehicle passes through a Van Allen belt anomaly occurring over the South Atlantic. With the mission crew in Earth orbit for 30 days, a significant dosage

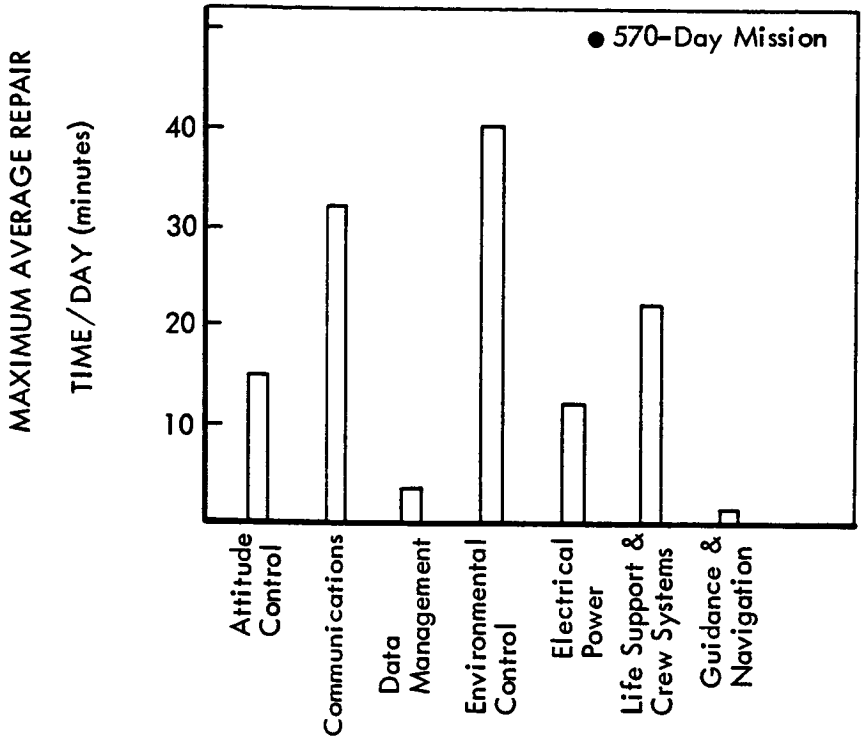

Figure 4.2-29: UNSCHEDULED SUBSYSTEM MAINTENANCE

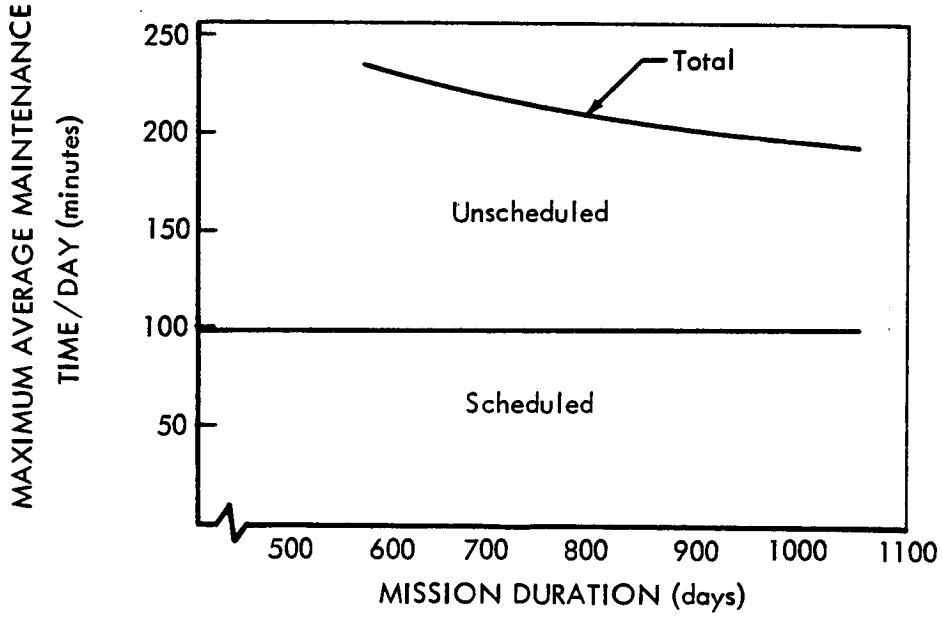

Figure 4.2-30: TOTAL MAINTENANCE TIME

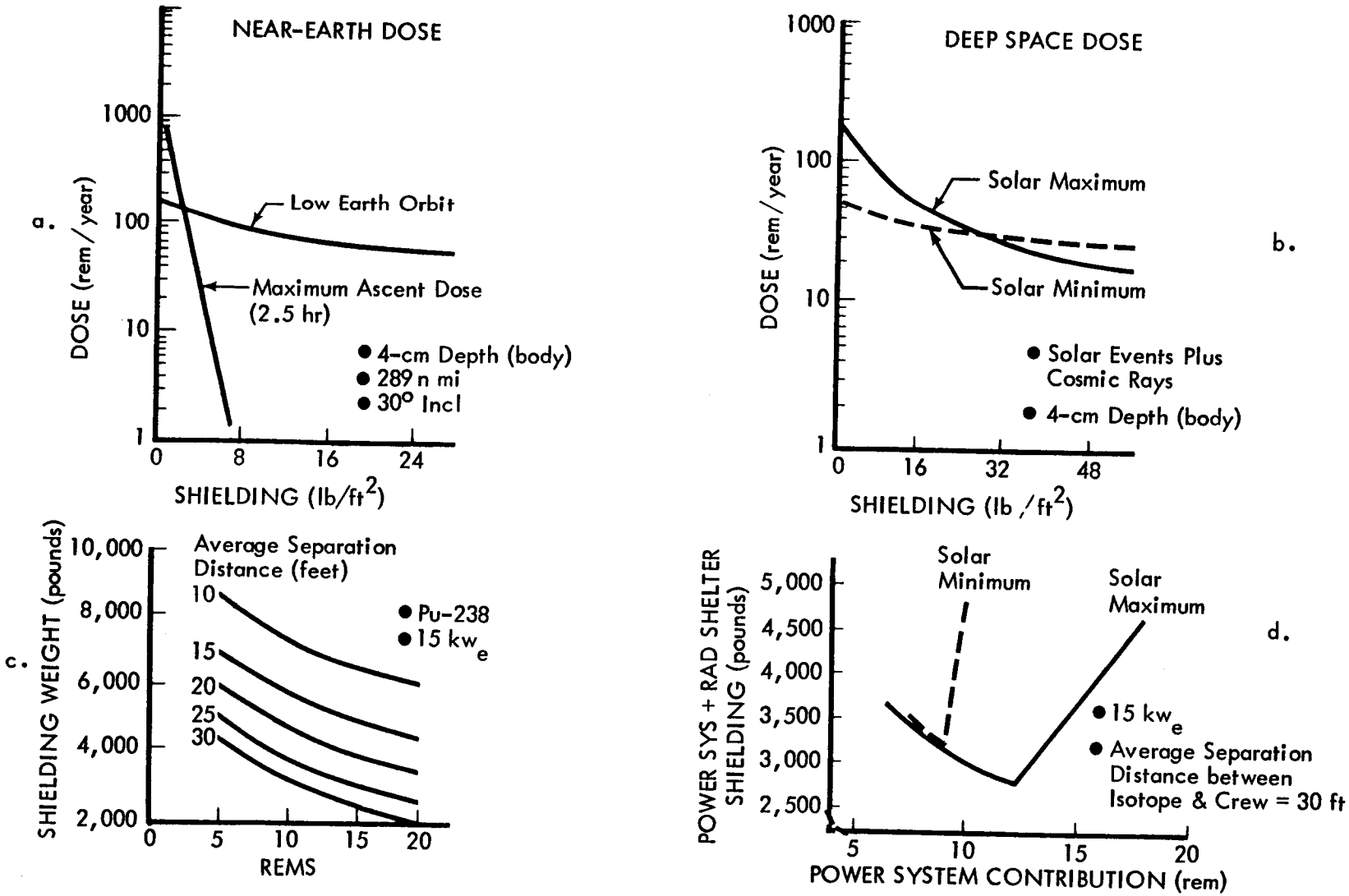

Figure 4.2-31: RADIATION ALLOCATION DERIVATION

(10 rem) occurs for shielding less than 4 lb/ft^2 such as provided by the mission module walls. The 30-day dose is obtained by dividing the illustrated yearly dose by 12. A radiation dose also occurs during passage through the Van Allen belts, as the space vehicle is injected into the outbound interplanetary trajectory. The dose illustrated is for the 2.5 hours required to pass through the belts. Again, with shielding less than 4 lb/ft^2, approximately a 10-rem dosage occurs. To reduce the Earth orbit phase dosage, the crew inhabits the radiation shelter during periods of passing through the South Atlantic anomaly and through the Van Allen belts.

Deep space radiation results from solar flare events and galactic cosmic rays. Figure 4.2-31b presents the combined dose contribution of these two sources as a function of shielding and for both periods of solar maximum and minimum activity. Missions during solar minimum periods require more shielding due to a larger contribution of galactic radiation. The larger contribution results from weaker magnetic fields associated with a quiet Sun. In general, an extremely large quantity (200 lb/ft^2) of shielding is required to appreciably reduce the galactic contribution. Radiation from solar events, however, can be reduced considerably by additional shielding. Consequently, during solar events, the crewmen occupy the radiation shelter which provides additional shielding and minimizes the radiation dose.

Radiation from the radioisotopes used in the electrical power system are shown in Figure 4.2-31c. Shielding weight is reduced appreciably by increasing the average separation distance between the crew and the radioisotope source. The recommended mission module design provides an average separation distance of 30 feet.

The results of the approach for optimizing the distribution of the radiation shielding are shown in Table 4.2-13. Data for both the solar maximum and minimum periods are presented. Several radiation shelter shielding weights were considered, and the resulting dosages from natural sources calculated. The differences between the total allowable dose of 55 rem/yr and the total of natural and fixed propulsion dose contribution is allocated as power system contribution. Shielding weights for the power system are determined from Figure 4.2-31c. Radiation shelter shielding is defined as that mass between crewmen when occupying the shelter and the natural radiation sources. Included in this shielding is the vehicle structure and equipment/supplies located around the shelter. A conservative analysis of the available equipment/supplies indicates 30 lb/ft^2 can be provided. Further discussion of the shielding is presented in subsequent paragraphs. As indicated in Table 4.2-13, utilization of all the usable on-board materials (30 lb/ft^2) results in the lightest total shielding weight. Utilizing less than the full capability for natural radiation protection results in higher contributions from natural radiation sources, thus decreasing the power system contribution. The latter consequently requires a heavier power system shield. Adding more shielding for natural radiation protection than inherently available allows a greater contribution from the power

Table 4.2-13: RADIATION SHIELDING OPTIMIZATION

Radiation Shelter Shielding (lb/ft^2)	Earth Orbit Dose (rem)	Deep Space Dose (rem)	Propulsion Dose (rem)	Resulting Power Sys Dose (rem)	Added Shelter Shielding (lb)	Power System Shield (lb)	Total Weight Shelter and Power Shield (lb)
				Solar Maximum			
26	5.5	32	10	7	--	3,700	3,700
28	5.0	30	10	10	--	3,000	3,000
30**	5.0	28	10	12	--	2,800	2,800
34	5.0	26	10	14	915	2,400	3,315
38	5.0	24	10	16	1,830	2,200	4,030
42	5.0	22	10	18	2,745	1,900	4,645
				Solar Minimum			
26	5.5	32	10	7.5	--	3,600	3,600
28	5.0	32	10	8.0	--	3,400	3,400
30**	5.0	31	10	9.0	--	3,200	3,200
34	5.0	30.5	10	9.5	915	3,100	4,015
38	5.0	30	10	10.0	1,830	3,000	4,830

**That shielding which is easily utilized in the mission module.

system, but still results in more total radiation shielding. Where additional shielding is added, a quantity of water is used (instead of aluminum) which provides the same protection at approximately 40 percent less weight.

Results of this analysis are shown in Figure 4.2-31d. With 30 lb/ft^2 provided for natural radiation protection, the total radiation shielding is optimized allowing 12-rem contribution from the power system during solar maximum missions and 9-rem contribution during solar minimums.

Equipment and expendable candidates for providing shielding against natural radiation have only been considered if they are compact and can be easily integrated into the general arrangement of the mission module. Candidates with these qualifications include the crew compartment structural wall, expendables such as food and waste matter. The structural shielding contribution of the mission module wall and radiation shelter pressure wall amount to approximately 4 lb/ft^2. Utilization of the food and waste products is accomplished by completely surrounding the radiation shelter with a combination food/waste storage cabinet. Using the full 570-day food supply and storage (10,000 lb) with a radiation shelter surface area of 380 square feet results in a storage cabinet 20 inches thick. This distribution of food provides shielding of 26 lb/ft^2 to give a total of 30 lb/ft^2.

To maintain the shielding provided by the food even though it is being consumed, the lost mass is replaced by an equal amount of waste matter. The balance of mass is as follows:

Food Consumed	1.5 pound/manday = 9 pound/day	
Waste Matter*		
Food Package	0.44 pound/manday	
Feces	0.33 pound/manday	
Water Management Expendables	0.18 pound/manday	
Waste Management Expendables	0.20 pound/manday	
Personal Hygiene Expendables	0.36 pound/manday	
	1.52 pound/manday = 9 pound/day for 6 crewmen	

As described earlier in this section, a conservative analysis has been made. The following are examples: 1) no shielding benefit has been given to the other equipment located around the crew compartment walls, or the protection provided by the MEM and EEM, and 2) considering the food and waste matter to have shielding characteristics the same as aluminum when actually they may be up to 20% better.

*The 3.5 pound of carbon produced per day by the Bosch CO_2 reduction unit is also available should any of the following prove undesirable.

4.2.1.5 Mission Module Commonality

Design of a mission module common for missions to both Mars and Venus is complicated by factors related to the destination as well as the year in which the mission is performed. The most significant of these factors are the variations in thermal radiation and meteoroid environment, communication distance, and mission duration.

The design approach used to satisfy the various requirements and still achieve a common mission module is presented in Table 4.2-14. Each of the listed design variations have been discussed in earlier sections and consequently are not discussed to the extent of justifying the extent of the variation. In general, the mission module has been sized for the "worst-case situation" and off-loaded on a modular basis for lesser missions.

Where the subsystem did not easily lend itself to modularity, the worst-case system is carried on all missions. This is done especially in those cases, such as fixed redundancy, where the weight saving by off-loading is quite small but where off-loading probably necessitates complete requalification of the subsystem. Design variations relating to durations are for the 1982 Mars opposition and 1986 Mars conjunction missions of 570 and 1070 days, respectively.

In summary, although a relatively wide range of requirements exist for Mars and Venus missions, it appears a common mission module can be obtained with a minimum of weight penalty. In addition, single design approach will lead to a more reliable system than would be obtained with several different mission modules.

4.2.1.6 Mission Module Weights

Mission modules for the 1984 Mars opposition and 1986 Mars conjunction missions are estimated to weigh approximately 94,000 and 127,000 pounds, respectively. As previously described in Section 4.2.1.1, the mission module includes all that equipment and expendables used up through the time of EEM departure. A detailed weight breakdown for the above missions is presented in Table 4.2-15. These missions generally span the range of mission module weights. Short Venus missions have approximately the same weight as the 1984 Mars opposition mission. Mission module weight for other mission durations is presented in Section 4.4.

Included in the weights is a 25% growth allowance against all equipment, excluding the interstages which are 5%. A 10% reserve is applied to all expendables. The average expendable use rate for all crew operation is 28 pounds/day. This includes 2 pound/day for atmosphere leakage. It should also be noted that this rate is based on water recovery and oxygen regeneration through the CO_2 reduction/water electrolysis process. Excluded from the expendable use rate is the attitude control propellant which is a function of the number of maneuvers performed during the mission.

Table 4.2-14: DESIGN APPROACH TO VARYING MISSION REQUIREMENTS

Variation	Extent of Design Variation	Reason	Design Approach
ECS Radiator	950 - 1250 sq ft	Thermal Environment	Incorporate maximum radiator. Use shutoff valves for lesser missions.
Power Radiator	1000 - 1400 sq ft	Thermal Environment	Incorporate maximum radiator. Use shutoff valves for lesser missions.
S-Band Transmission	83 w - 798 w	Communication Distance	Size for worst case. Increase bandwidth for lesser missions.
Laser Transmission	50 w - 500 w	Communication Distance	Size for worst case. Increase bandwidth for lesser missions.
Expendables	855 - 1610 cu ft	Mission Duration	Size mission module for maximum volume. Modularize expendables.
Oxygen (gas)	(20 - 39 cu ft)		
Nitrogen (gas)	(48 - 90 cu ft)		
H_2O	(60 - 112 cu ft)		
Personal Hygiene	(87 - 162 cu ft)		
Food	(600 - 1140 cu ft)		
Miscellaneous	(40 - 67 cu ft)		
Wear-out Items		Mission Duration	Size mission module for maximum volume. Incorporate items as mission dictates.
Redundancy		Mission Duration	
Fixed			Install as required for maximum mission.
Spares			Add as required by mission.
Radiation Protection		Solar Cycle	Provide 30 lb/ft^2 shielding. Design both a 9- and 12-rem contribution shield for power system.
Meteoroid Protection		Mission Duration	Design both a meteoroid. Bumper for 570 and 1070 days.

Table 4.2-15: MISSION MODULE WEIGHT BREAKDOWN

		Mars Opposition 1984 - 490 days		Mars Conjunction 1986 - 1070 days
Primary Structure		(10,790)		(11,400)
Laboratory Shell		4,970		4,970
Meteoroid Shield		1,250		1,710
Insulation		480		480
Pressure Bulkheads		380		380
Floors and Supports		1,840		1,990
Airlock and Hatches		300		300
EEM Tunnel and Hatch		70		70
Radiation Shelter Pressure Shell		1,500		1,500
Secondary Structure		(4,630)		(8,510)
Operation Consoles		350		350
Subsystem Supports, Cabinets, and Partitions		4,100		7,980
Radiation Shelter Facilities		180		180
Environmental Control		(7,820)		(13,980)
Atmosphere Supply	(4630)		(9490)	
Gaseous Oxygen System - Dry		1,140		2,480
Gaseous Oxygen		570		1,240
Gaseous Nitrogen System - Dry		1,550		3,390
Gaseous Nitrogen		820		1,490
Electrolysis Units		200		200
Emergency Oxygen System		100		100
CO_2 Reductional Catalyst		220		260
Pumpdown Unit		30		30
Atmosphere Control	(870)		(1250)	
CO_2 Removal and Transfer		240		240
Contaminant and Humidity Control		80		180
Crew Compartment Conditioning		210		210
Suit Loop		110		110
Charcoal		160		360
LiOH		70		150
Thermal Control	(690)		(690)	
Heat Transport Loop		80		80
Radiator Loop		350		350
Heating Circuit		80		80
Heat Transport Fluid		70		70
Radiator Loop Fluid		110		110
Redundancy	(1630		(2550)	

Table 4.2-15: MISSION MODULE WEIGHT BREAKDOWN (Continued)

	Mars Opposition 1984 - 490 days	Mars Conjunction 1986 - 1070 days
Life Support	(14,580)	(29,810)
Water Management - Dry	800	1,220
Water Recovery Expendables	600	1,300
Water	3,080	6,760
Waste Management - Dry	60	60
Waste Management Expendables	650	1,420
Food Handling	150	150
Food	6,700	14,500
Personal Hygiene - Dry	160	260
Hygiene Expendables	1,180	2,570
Redundancy (includes crew systems)	1,200	1,570
Crew Systems	(1,990)	(2,660)
Pressure Suits/Storage	590	490
EVA Equipment	690	690
Exercise/Recreation/Personal	210	520
Medical/Dental - Dry	430	610
Medical/Dental - Expendables	70	250
Communication and Data Management	(2,250)	(2,840)
Unified S-Band System	180	180
EVA/Intercommunication/Emergency	60	60
UHF System	150	150
Data Management	140	140
Laser System	780	780
Wiring	60	60
Communications Redundancy	620	1,080
Data Management Redundancy	260	390
Attitude Control	(6,050)	(7,280)
Reaction Control System	60	60
Propellant Supply System	470	600
CMG and Controls	840	840
Wiring	30	30
Propellant	3,940	5,000
Redundancy	710	750
Guidance and Navigation	(220)	(250)
IMU	20	20
Trackers and Sensors	90	90
Computer	20	20
Wiring	10	10
Redundancy	80	110

Table 4.2-15: MISSION MODULE WEIGHT BREAKDOWN (Continued)

	Mars Opposition 1984 - 490 days	Mars Conjunction 1986 - 1070 days
Displays and Controls	(490)	(510)
Vehicle Operations	190	190
Science Program	200	220
Shelter Operations	60	60
Wiring	40	40
Electrical Power	(10,250)	(10,850)
Isotope Unit	1,480	1,480
Shielding	3,200	3,200
Insulation Structure	160	160
Power Conversion System	2,500	2,500
Power Conditioning	830	830
Power Distribution and Lighting	2,000	2,000
Redundancy	80	680
Experiment Equipment *	(10,860)	(12,290)
Optical Laboratory	1,600	1,600
Geophysical Laboratory	450	450
Electronic Laboratory	250	250
Bioscience Laboratory	2,670	4,000
Primary Instruments	3,890	3,890
Science Information Center	2,000	2,100
Growth Allowance **	(12,970)	(16,200)
Subtotal ***		
(pounds)	82,900	116,580
(kilograms)	(37,600)	(52,880)
Mission Module Interstages	(10,700)	(10,700)
Outer Shell	7,930	7,930
End Closures	520	520
EEM Support and Separation	1,740	1,740
Growth Allowance (5%)	510	510
Total		
(pounds)	(93,600)	(127,280)
(kilograms)	(42,460)	(57,730)

*Probe weights are presented in Section 4.2.2.
**Based on past programs -- 25% of hardware
***Exclusive of interstage

4.2.1.7 Mission Module Trades

Mission Module/Crew Compartment Diameter Selection--A cursory trade was conducted to select the most optimum mission module diameter or, more appropriately, the diameter of the crew compartment. Factors for consideration include weight, volume, floor area, surface area, traffic patterns, safety, transportability, and impact on the remainder of the spacecraft.

The major conditions used in the trade are as follows:

- Crew compartment pressure--7 psia
- CC probability of no penetration--0.997
- CC deck height--7 feet
- CC pressurized volume--approximately 12,000 cubic feet
- Provide an emergency pressure compartment--600 cubic feet, 7-foot deck

Candidates--Crew compartment diameters investigated were 22 and 33 feet. Integration of these two crew compartments with the remainder of the spacecraft is shown in Figure 4.2-32.

The 22-foot-diameter design consists of a 17.8 cylinder with hemispherical heads. Within the crew compartment are four decks. Deck 1 is used for crew quarters and personal care and hygiene facilities. Deck 2 provides command and control facilities as well as feeding and recreation areas. Located on Deck 3 is the emergency pressure compartment plus various subsystem equipment. Deck 4 consists of the experiment labs. Overall length of the mission module is approximately 76 feet, with the length of the spacecraft 108 feet.

The 33-foot-diameter crew compartment requires only two decks to provide the necessary pressurized volume. To keep the volume as near to the requirement as possible, flat bulkheads were used with tension rods connecting the bulkheads.

Deck 1 of this design would include crew quarters and personal facilities as well as the emergency pressure compartment and various subsystem equipment. Located within Deck 2 would be the experiment labs, command control center, and feeding and recreation facilities. Overall length of the mission module is 56 feet, with the length of the spacecraft 88 feet.

Comparison--Comparison of the two mission module crew compartment diameters is shown in Table 4.2-16. Review of this data indicates the most significant difference being in the area of weight. Approximately 10,500 pounds of the weight difference is associated with the flat bulkheads of the 33-foot-diameter crew compartment. The difference in crew compartment (cylindrical) surface area (meteoroid shielding) results in approximately another 1500-pound penalty for the 33-foot-diameter design. Small weight savings were provided by the 33-foot-diameter design in the areas of interstages and floors. The end bulkhead in the 33-foot-diameter

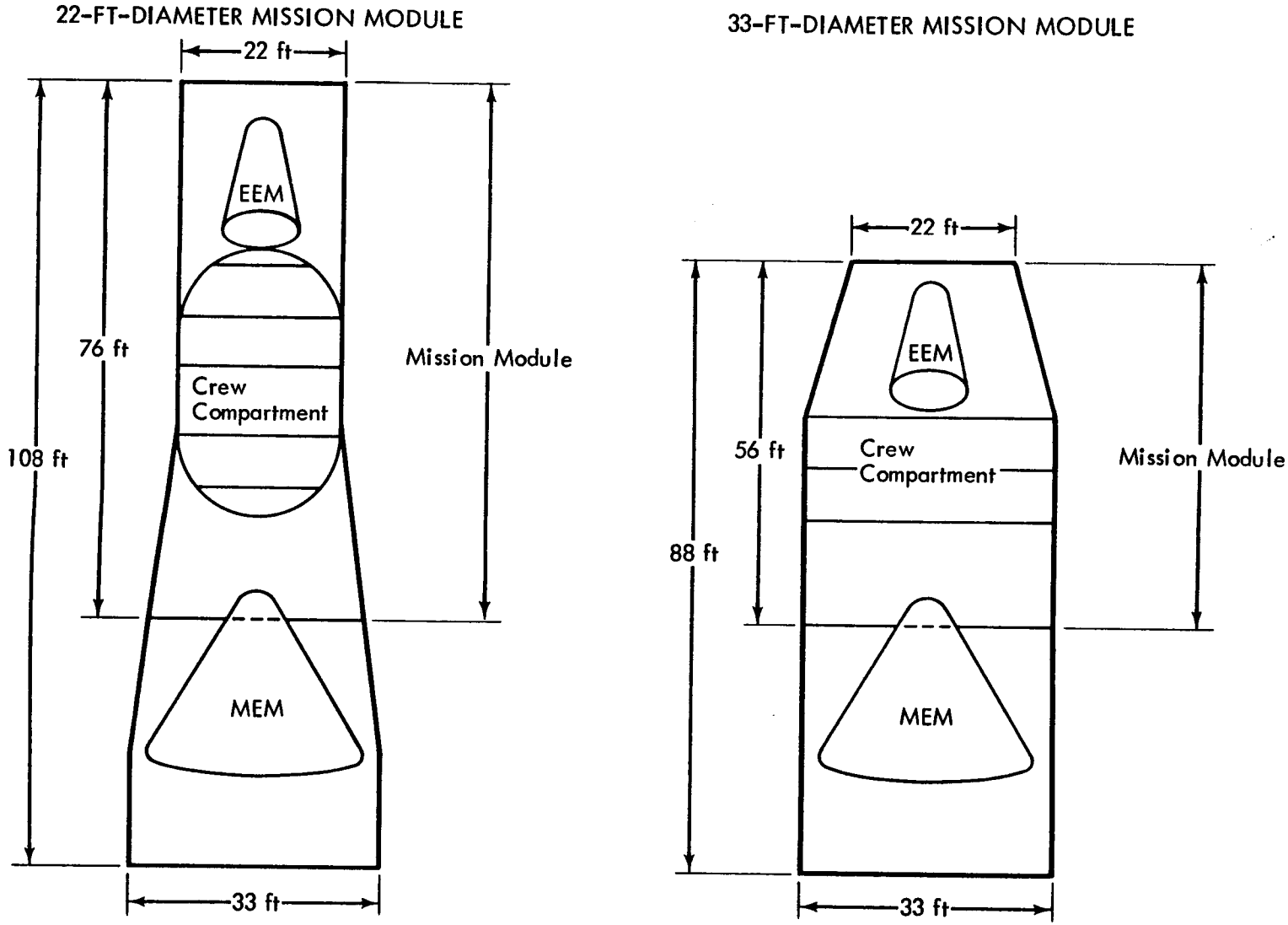

Figure 4.2-32: SPACECRAFT CONFIGURATIONS — 22-FT-33-FT-DIAMETER MISSION MODULES

Table 4.2-16: MISSION MODULE/CREW COMPARTMENT DIAMETER COMPARISON

Criteria	Diameter	
	22 Foot	33 Foot
Volume (cu ft)	12,000	12,000
Floor Area (sq ft)	1,200	1,700
Mission Module Surface Area (sq ft)	5,530	5,560
Δ Weight (lb)	--	+11,100
Traffic Pattern	Requires significant interdeck movement	Requires significant intradeck movement
Safety	Average separation distance is greater between the crew and onboard radiation sources (power and propulsion).	Generally shorter distances to the emergency pressure compartment.
Transportability	Air or barge	Barge

F

design serves as one of the two floors. This reduces the net penalty for the 33-foot-diameter design to 11,100 pounds.

The only other difference that may have some significance is that of transporting the mission module between its manufacturing facility and the launch site. The significance of this difference, however, can only be measured after the manufacturing site is identified. Should the two sites be cross-country, it appears necessary to transport the 33-foot-diameter mission module by barge, as present land routes and anticipated aircraft do not have this capability.

Recommended Mission Module/Crew Compartment--The 22-foot-diameter mission module/crew compartment is recommended primarily due to its lower weight. All other criteria relating to selection can be adequately satisfied by either design.

Subsystem Trades--A review of previous studies relating to manned interplanetary vehicles and long-duration Earth orbit space stations established the foundation for subsystem trades. These reviews combined with a cursory inhouse analysis resulted in the subsystem candidates and selections presented in Table 4.2-17. In many instances, the selections were clean-cut and little controversy existed. In other areas, several candidates were quite competitive. In those areas, the best selection was based on available trade data. The selected subsystem approaches are enclosed by a "box." Some candidates were eliminated since they were obviously unsuitable for a manned interplanetary mission. In most instances, eliminated subsystems have not been shown on the charts.

The following discussion deals only with those areas where the selection was not obvious.

1) Atmosphere Supply--A combination gas and water electrolysis system was selected for storage of the oxygen and with gaseous storage for the nitrogen. Gaseous oxygen is used for rapid supply situations such as cabin repressurization, airlock losses, and backpack recharge. Water electrolysis was used for makeup of oxygen leakage and breathing atmosphere. The use of water electrolysis evolved largely by the selection of the Bosch CO_2 reduction system which resulted in a minimum makeup requirement per day. Gaseous nitrogen is used for leakage, repressurizations, and airlock losses.

2) CO_2 Removal--The regenerable molecular sieve system was chosen for CO_2 removal because of its relatively low weight and power requirements and because of its advance state of development.

3) CO_2 Reduction--The Bosch CO_2 reduction system was chosen because it has relatively low expandable requirements as compared to the Sabatier and because of its relatively advanced state of development as compared with molten carbonate. Because the molten carbonate system has potential of being the least weight and lowest cost system, further trade analysis should be conducted at a later date.

Table 4.2-17: BASELINE MISSION MODULE SUBSYSTEM SELECTION

Subsystem	Candidates	Comments: Major Advantage	Comments: Major Disadvantage
Environmental Control			
Atmosphere Supply (O_2 & N_2)	Subcritical Cryo	Low weight	Zero-g operation
	Supercritical Cryo	Low weight	Long storage
	Gas	Simplicity	Heavy
	Chemical	Potential low weight	Development
	Electrolysis-Water	East storage, low weight	Higher power penalty
Air Circulation	Electric Fans	Simplicity	No alternate
Humidity Control	Cond H_X-H_2O Sep	Alternates are of minor nature.	
Trace Contaminant Control	Charcoal, Filters, Cat. Burner, Chemisorbents	No alternates - all required for long missions.	
CO_2 Removal	Regen Solid Adsorption (MOL Sieve)	Minimum weight and power State of the art	Requires dry air Complex valving
	Electrodialysis	Low weight Reduces CO_2 to O_2	High power Membrane life
	Solid Amines	No H_2O removal required.	High weight and power
CO_2 Reduction	Sabatier	Simple design	High H_2O makeup
	Bosch	Low weight - complete reduction	Solid carbon removal
	Molten Carbonate	Potentially low weight	Future state of the art
	Solid Electrolyte	Potentially low weight	Development of high temperature components
Thermal Control	Heat Transport Loop and cooling loop	No alternates	
Crew Systems Conditions	Centrifuge	Provide g stimulus	Large weight and volume
	Pressure Boot	Minimum penalty	Doesn't provide vestibular stimulus
	Bugee Exercising Device	Conditions large muscle and bone structure	

Table 4.2-17: BASELINE MISSION MODULE SUBSYSTEM SELECTION (Cont)

Subsystem	Candidates	Comments: Major Advantage	Comments: Major Disadvantage
Life Support			
Water Management (Closed Loop)	Air Evaporation Multifilter	Low weight, high reliability, simplicity	High power without waste heat
	Electrodialysis Multifiltration	Direct removal of solids and low power	High penalty if charcoal regeneration is impractical
	Vapor Compression	Lowest weight	Complexity
Waste Management	Collect, Dry, Store	Metabolic waste totally inert	Power penalty
	Collect and Store	No power penalty	Gas formation
	Collect and Jettison	Minimum penalty	Contrary to international agreement
Nutrition	Frozen/Freeze Dried	No alternate	
Personal Hygiene	Disposable Pads	Addition of shower has a psychological benefit.	
	Disposable Pads and Shower		
Clothing	All Disposable	Simplicity	Weight for extended duration
	Disposable Inner, Reusable Outer, and Wash Machine	Lower weight	Complexity
Attitude Control Electronics	Rate Gyros, Attitude and Drive Electronics	No alternates except on low level	
Torquing Source	Momentum Exchange Inertia Wheel CMG	Low weight, high reliability Simplicity Low power	Low maneuver rate High power
	Reaction Jets	Wide range of rates	High weight and lower reliability
	Earth Storable Bipropellant	Moderately high I_{sp}	High freezing temperature
	Earth Storable Monopropellant	Simplicity	Low I_{sp}
	Cryo Bipropellant	High I_{sp}	Storage
	Waste Products	Weight saving	Development
	Ion	Good for low thrust to weight	High power

Table 4.2-17: BASELINE MISSION MODULE SUBSYSTEM SELECTION (Cont)

Subsystem	Candidates	Comments: Major Advantage	Comments: Major Disadvantage
Electrical Power Power Source/Cycle	Isotope - Brayton	Mission and design flex Low weight	Kw limit, abort hazard
	SR^{90}	Good availability, low cost	High shielding, biological hazard
	PU^{238}	Long life, low weight	Biological hazard, high cost, availability
	CM^{244}	Low shielding, low cost	Availability
	Solar Cell - Battery	Lightest, low cost, high reliability	Requires orientation, bulky, impractical at high kw
	Reactor - Brayton	High kw capability	Development status, total cost, weight
Guidance and Navigation Inertial Sensing	Gimbaled Inertial Measuring Unit	Higher angular rate	No maintenance capability
	Strapdown Inertial Measuring Unit	High reliability	Lower reliability Less accuracy
Electronics and Sensors	Altimeter, Sun Sensor, Telescope Scanning, Sextant, G.P. Digital Computer Horizon Sensor	Use combination of these	
System Level	Onboard Capability	Independence	Less accuracy and lower reliability
	Onboard Capacility Plus DSIF Support	Reliability	
Communication Earth-Planet	Microwave	Proven system	Data rate limited
	Laser	High data rate	Devel status and DSIF addition
	Combination	Reliability	

4) Water Management--An air evaporation/multifiltration system with two units was selected. One unit recovers water from urine and the other water from condensate and wash water. The urine recovery unit may also be used to recover the condensate of wash water if the need exists. This system was selected because of its low weight and relative simplicity. The major disadvantage of air evaporation (a high power requirement) was eliminated because adequate waste heat is provided by the selected power system.

5) Waste Management--All waste matter is collected, dried, and stored on board. Drying is initiated to inert the waste matter and subdue biological activity. Waste is retained aboard the mission module because it is used to replace expended food as shielding protection for the radiation shelter and because discarding of biologically active waste material in free space would be in violation of existing COSPAR treaties.

6) Nutrition--A freeze-dried diet supplemented by frozen food has been selected. The addition of frozen food provides variety and increases diet bulk.

7) Personal Hygiene--Disposal pads supplemented by a shower has been selected as the prime means for personal hygiene. It is felt a shower would provide a needed psychological benefit for long-duration interplanetary missions.

8) Clothing--An all-disposable clothing system has been selected because it is simple and reduces the time required for housekeeping duties. "Used" clothing is further utilized to replace expended food and provide radiation protection. Sufficient work has not been performed in industry to assess the penalty of a zero-g wash machine for use with the reusable outer garment concept.

9) G Conditioning--A pressure boot system for cardiovascular conditioning supplemented by a bungi-exercising device for muscular-skeletal conditioning has been selected for the baseline. The pressure boot system provides considerable weight and volume saving over the centrifuge system. In addition, the pressure boot system provides minimum interference with other vehicle activities. A major advantage of the centrifuge is that it provides a means of measuring man's G tolerance deterioration during the mission and also provides vestibular conditioning. In making the selection it was assumed that man's ability to withstand g forces after long-term exposure to the zero-g environment will have been established prior to initiation of an interplanetary flight.

10) Attitude Control--A low-weight system consisting of a combination control moment gyro and reaction jet system utilizing Earth-storable bipropellants has been selected. Control moment gyro's provide the capability to cope with cyclic attitude variations and to control onboard disturbances without propellant/expenditures. The reaction jet system is utilized for noncyclic pointing requirements such as those dictated by the experiments and maneuvers prior to use of the propulsion modules and for desaturating the control moment gyros. The control moment gyro also provides the additional advantage of

close tolerance attitude control during cruise phases of the mission and for the experimental program.

11) Electrical Power--An isotope/Brayton cycle power system utilizing Pu-238 has been selected. This system was selected over the reactor/Brayton cycle system because of its lower weight and because of its relatively greater ease of integration into the aerospace vehicle design. The major drawback of the isotope system is isotope availability. Pu-238 was selected because of its relatively long half-life and because of its low weight.

    The solar cell/battery power system was estimated to be the lightest of all those shown. It was not selected because of its potential interference with mission experiments and other mission module subsystems such as communications and thermal control. The power system trade study must consider the interactions between the power subsystems and all other subsystems and the aerospace vehicle configuration, and the operations required during the mission in order to confidently select a power system. Thus, a detailed trade study is recommended before a final selection is made.

12) Guidance and Navigation--A strapped-down inertial measuring unit along with various sensors and digital computer has been selected to provide autonomous guidance and navigation capability. As specified in the work statement, this system will work in conjunction with the Deep Space Information Facility.

13) Communications--The selected communications system utilizes an S-band system for transmission of the 90,000-bps minimum data rate requirement. This basic system is supplemented with a carbon dioxide laser system, thus making it possible to meet the desired high data rate requirement for television picture transmission without prohibitive weight penalties.

4.2.2 EXPERIMENT ACCOMMODATION

Experiment accommodation deals in general, with the impact of the experiments on the space vehicle and specifically on the mission module. In general, this includes the design, installation, deployment, and operational procedures of the experiments and the necessary support equipment. Experiment program rationale, and detail definition of instruments and requirements are presented in Volume III, Part 2. Subsequent paragraphs discuss the experiment accommodation task by using the categories of experiment labs, external experiment instruments, and unmanned probes. Installation of the experiments is shown in Figures 4.2-33 and 4.2-34.

4.2.2.1 Experiment Labs

Experiment labs serve as the control center for conducting all on-board and probe experiments including the initial data gathering operation, processing, and analysis. Separate labs are devoted to bioscience, optics, geophysics, electronics, and a science information center. These

PRECEDING PAGE BLANK NOT FILMED.

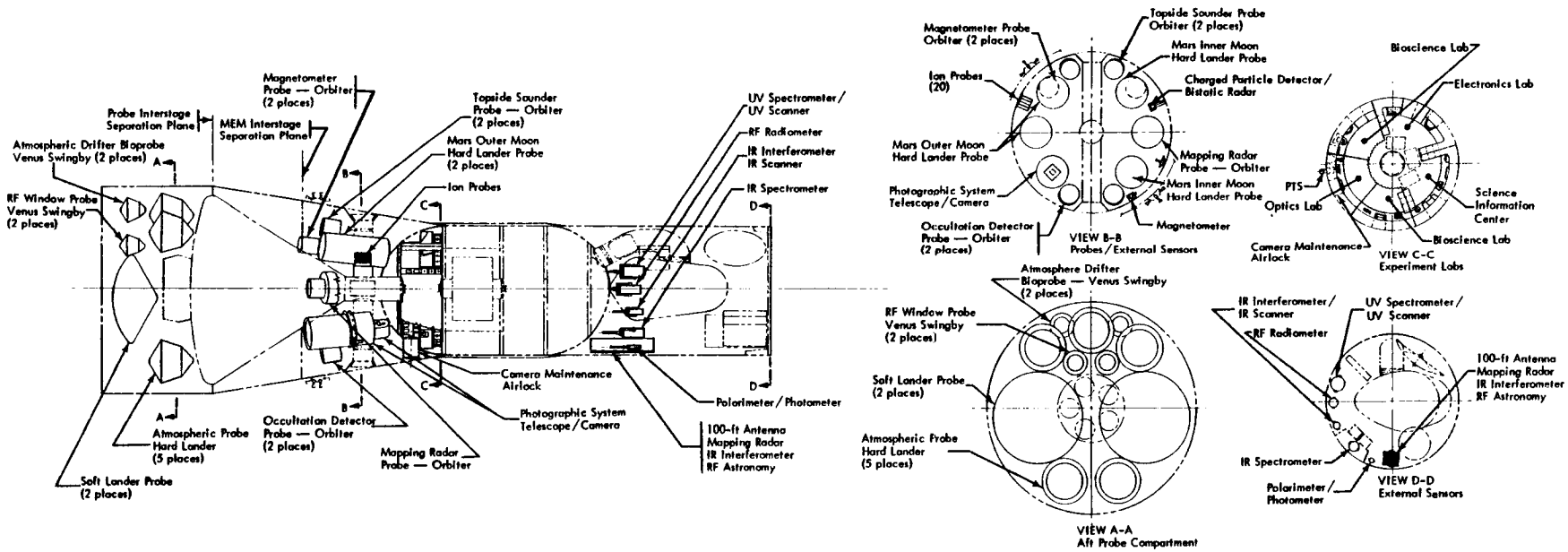

Note: Reference line items are called out in Figure 4.2-33, Mission Module Inboard Profile

PRECEDING PAGE BLANK NOT FILMED.

Fig 4.3-33: A

125

FOLDOUT FRAME

Figure 4.3-33: B EXPERIMENT ACCOMMODATION

~~125~~ & 126

FOLDOUT FRAME

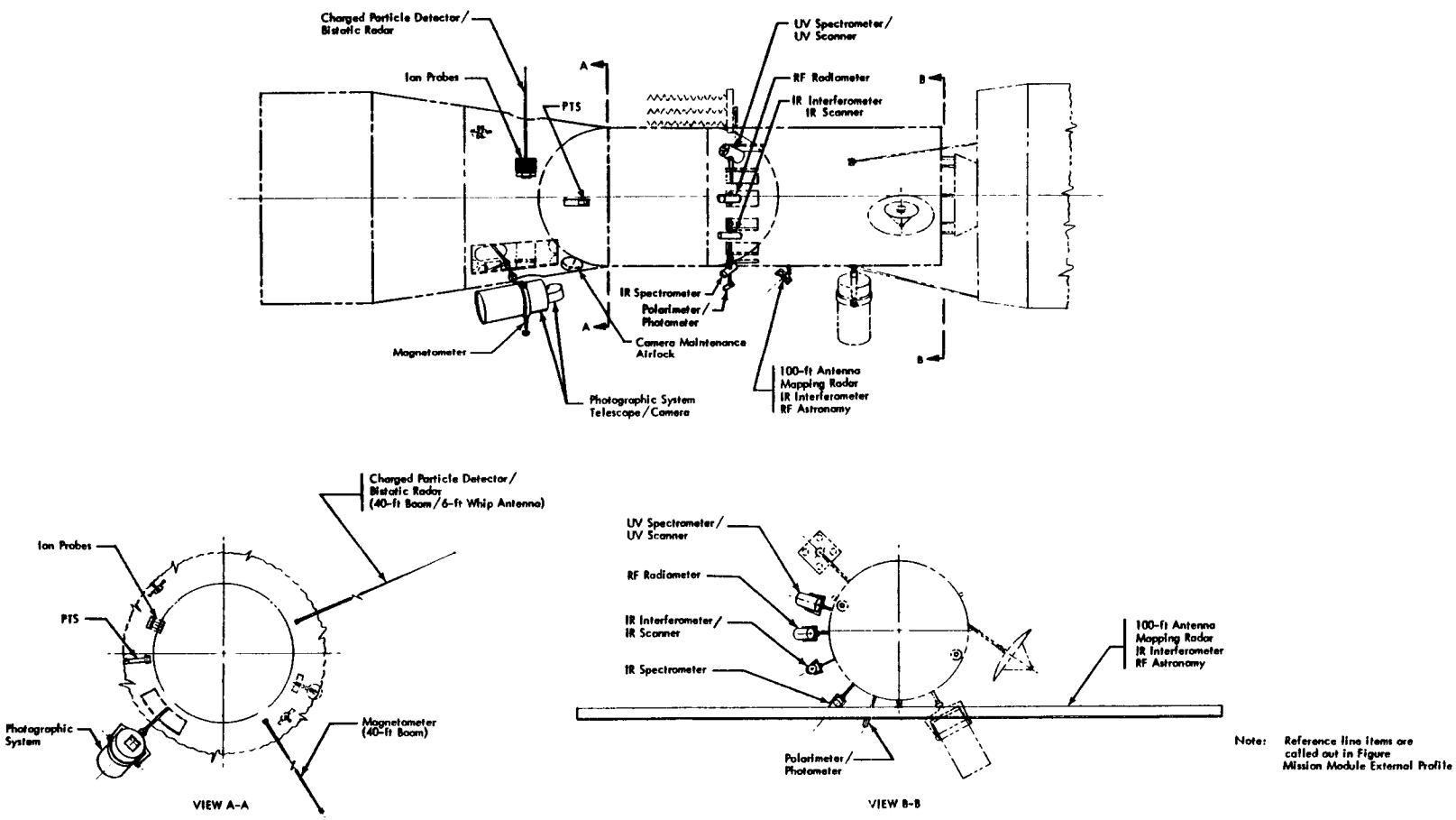

Fig 4.2-34: A

128

Figure 4.2-34B EXPERIMENT ACCOMMODATION

FOLDOUT FRAME

FOLDOUT FRAME

labs occupy an entire deck of the crew compartment as shown in Figure 4.2-33, view C-C. Specific functions of the five labs are discussed in subsequent paragraphs.

The bioscience lab serves two distinct functions. The first of these is associated with experiments on plants and animals. The experiments include providing data on the effects of zero-g on plant and animal life that has evolved in a 1-g environment as well as evaluating the back contamination problems associated with Martian life or viruses. Separate environmental control systems are provided for the plant and animal specimens, both of which are independent of the crew environmental control system. The second function of the bioscience lab is to provide the facilities required for the study and the culturing of the samples obtained from the Martian surface. To minimize the effects such as odors, etc., of these experiments on the remainder of the crew compartment, air intakes are provided which lead directly to the air purification system.

The geophysics lab permits two diverse functions simultaneously. The first of these is the evaluation of displayed information either in the form of photographs or as electronic displays reproduced from electromagnetic recordings. The second function is the analysis of rock samples collected while on the surface and collated with surface features that have been photographed in color and in IR. Equipment is provided that permits these tests and experiments to be conducted in an environment which prevents any contamination from the crew compartment atmosphere.

The optics lab permits the repair and calibration of all optical equipment used during the mission. As such it must be light-tight and constructed to reduce the light scatter from wall materials. It contains monochromators, dark room facilities, thin-film coating devices for the preparation of interference filters, densitometers, and other equipment required for the interpretation of spectral data.

Attached to the optics lab is a 30-inch diameter, 36-inch long airlock used to accomplish film replacement or maintenance of the camera of the photographic system. The operation involves positioning the photographic system (telescope + camera) in the near proximity of the airlock.

Manipulators extend from the airlock and attach to the camera/film pack. Upon command, the camera/film pack is separated from the telescope and drawn into the airlock. The airlock is then pressurized to correspond to the crew compartment pressure. The camera/film pack can then be taken into the lab and have the required maintenance or film replacement performed in a shirt-sleeve environment. Attaching the camera/film pack to the telescope involves placing the unit in the airlock which is then depressurized. Upon reaching zero psi and with the outer airlock hatch open, the manipulators attach the unit to the telescope. Controls within the optics lab allow alignment of the camera and telescope. One film change is anticipated every other day while in orbit about either Mars or Venus. This is derived by considering a total of 30,000 pictures (9 inch by 9 inch format) taken to acquire the 10,000 pictures desired. Using 1000 pictures/roll results in 30 rolls taken during the orbit stay time. With 30 days in orbit, one roll is used per day. Attaching two rolls to the camera results in one change every other day. Film changes of this frequency tend to eliminate serious consideration of EVA methods for film replacement. In addition, any maintenance work on the camera seems far too intricate to perform in a pressure suit. The number of film changes could of course be reduced by reducing the number of pictures, or increasing the pictures per roll or number of rolls in the camera.

The electronics lab provides data reduction facilities for information obtained from both probe and on-board instruments associated with the topside sounder and magnetometer experiments. Test equipment and facilities are also available for repair and checkout of all science-type electronic equipment.

The science information center includes those systems required to integrate all mission experiments and provide the necessary information to conduct the experiments as initially scheduled or according to any revised schedule. A large memory system provides for information storage and control. Instruction and repair manuals and other scientific information is also provided. A status display system identifies the preplanned experiment program and any deviations that are to occur or have occurred. All comments and observation relating to the experiment program are recorded in this center.

Size, weight, and power requirements of these labs are presented in Table 4.2-18. Because all of these labs do not operate at one time, the average electrical load is approximately 780 watts in orbit and 1660 watts during the inbound trajectory for Mars missions and for Venus missions 1280 watts for both the in-orbit and inbound phases.

4.2.2.2 External Experiment Instruments

Experiment instruments are defined as including the sensors for gathering data and the necessary electronics to assist in operation and control. The major experiment instruments located external to the crew compartment and their functions are identified in Table 4.2-19. These experiments are common to both Mars and Venus missions.

Table 4.2-18: EXPERIMENT LABS

Lab	Floor Area* (sq ft) (minimum)	Weight (lb)	Power (watts) maximum
Bioscience	55	2670	500
Optics	55	1600	300
Geophysics	25	450	250
Electronics	55	250	250
Science Information	70	2000	1000

*7-foot height

Physical and operational characteristics of the instruments are presented in Table 4.2-20. Weight and volume characteristics include that for the sensor packaging and supporting electronics. Approximately 3890 pounds and 458 cubic feet are required. Operational characteristics include impact on vehicle subsystems, identification of when the experiment is conducted, and the frequency and duration. The average power requirement is 1265 watts in-orbit with peaks approximately 1800 watts.

Stowed positions of the experiment instruments are shown in Figure 4.2-33 (views B-B and C-C) and deployed positions in Figure 4.2-34. All of these instruments are deployed prior to leaving Earth orbit. Those instruments with similar operational procedures are integrated into a single unit. In general, this involves those instruments in the same bandwidth, such as UV, IR, and RF. Another example of multiuse is that of the 100-foot antenna which provides data for the mapping radar, IR interferometer, and RF astronomy experiments. Experiment instruments that require pointing in various directions have been located on gimbaled platforms, while those that do not require direction control have been placed on deployable booms. As indicated in Table 4.2-20, a number of these instruments require boresighting--the capability of viewing an object simultaneously. Operation of these instruments in the boresight mode is accomplished by having each instrument platform slaved to the pointing and tracking scope. Targets for investigation may be initially observed with the pointing and tracking scope which also fixes the target's position. Upon command, this information is transmitted to the electronic controls of each instrument, followed by automatic positioning of the instrument toward the target. The pointing and tracking scope head is located in the aft equipment bay to minimize the optical path distance to the monitor in the experiment labs. The instruments on gimbaled platforms can also be operated simultaneously while viewing different targets. The telescope and camera of the photographic system are also in the aft equipment bay and near the optics experiment lab. This location allows the camera portion of the system to be retrieved for periodic maintenance and film replacement as described in Section 4.2.2.1.

Table 4.2-19: EXTERNAL EXPERIMENT INSTRUMENTS

UV Spectrometer

- Observes ions released in the study of the interplanetary magnetic field as well as the study of the reflected and emitted UV light from the planets and the stars.
- Determines the chemical reactions taking place as well as identifying the constituents, either charged or in excited levels, while spacecraft is in orbit.

IR Spectrometer

- Observes planets and the stars in-transit.
- Detects IR radiation from the planet's surface whether emitted or reflected.
- Isolates areas within which chemical reactions are occurring.

IR Interferometer

- Determines chemical compounds present as well as the rate at which interactions are taking place. Used during many organic compound analyses.

UV Scanner

- Searches for recombination of ions such as H_2, N_2, and O_2.

IR Radiometer Scanner

- Determines presence of the CO_2 and water vapor. Identifies their concentration within specific localized areas.

RF Radiometer Scanner

- Maps areas through temperature comparisons.

Photometers

- Determines the intensity of electromagnetic radiation in relatively broad bands.
- Used during the photography of the planet surface or cloud tops.
- Aids study of the energy or heat balance of the planet.

Table 4.2-19: EXTERNAL EXPERIMENT INSTRUMENTS (Continued)

Photographic System

- Provides high resolution images of selected areas for structure and feature identification.
- System includes telescope, camera, and pointing and tracking scope.
- The telescope portion of this system can be used with interferometers and the spectrometers to achieve resolution or isolation of small areas.

Radar Mapping

- Used to map the surface of the planet obscured by clouds as well as to determine the thickness of the ice cap and the surface material.

Magnetometer

- Locates the magnetic poles on the surface of the planet. The magnitude of the fields and its variation will also be recorded with the position of the spacecraft.

Charged Particle Detector

- Determines the density of charged particles in orbit and in-transit during solar wind studies.

Micrometeoroid Detector

- Determines the density of cosmic dust with distance from the Earth.

Polarimeters

- Reflected and emitted light is identified by the polarization of the radiation reaching the detector. One polarimeter is provided for each of the bands of UV, vis, and IR.

Ion Probes

- Used to study three phases of the structure of the magnetic fields. First to determine the distortion of the field due to the presence of the spacecraft. Second, to determine the structure of the interplanetary field, and third to observe the structure of the field during solar flares. This probe category is added to the experiment instruments due to its being common to both Mars and Venus missions.

Table 4.2-19: EXTERNAL EXPERIMENT INSTRUMENTS (Continued)

Radar Altimeter

- Determines the altitude of the spacecraft.
- Develops altitude profiles.
- Permits determination of the height of the clouds above the terrain as well as their stratification.

Tracking and Range Radar

- Tracks orbiters and probes as well as determines their range and range rate.
- Determines the distance between two objects on the surface of the planet.

Table 4.2-20:B MARS-VENUS EXTERNAL EXPERIMENT INSTRUMENTS

Instrument	Utilization	Frequency (maximum)	Bore-sight	Weight (lb)	Power (watts)	Volume (ft^3)	Attitude Control		Data Management	Mounting
							Rate (deg/sec)	Pointing (degrees)		
1. UV Spectrometer	IT, IO	one/5 minutes	X	135	60	3.0	0.02-0.05		10-20 kps	Scan Platform
2. IR Spectrometer	IT, IO	one/5 minutes	X	100	40	7.0	0.02-0.05		10-20 kps	Scan Platform
3. IR Interferometer	IO	one/5 minutes	X	50	25	0.2	0.01		2.0 kps	Scan Platform
4. Photographic System	IT, IO	one/minute	X	2,000	30	230.0	0.03	±0.5	80,000 photos 1 pic = 6×10^9 bits	Scan Platform
5. UV Scanner	IO	one/5 minutes	X	55	25	7.0	0.02-0.05			Scan Platform
6. IR Scanner	IO	one/5 minutes	X	185	25	1.8	0.02-0.05		10-20 kps	Scan Platform
7. Polarimeter	IO	one/5 minutes	X	50	20	0.5	0.01		0.01 kps	Scan Platform
8. Photometer	IO	one/minute	X	10	20	0.25		±1	0.01 kps	Scan Platform
9. RF Radiometer	IO	one/5 minutes	X	100	20	8.0	0.02		19 kps	Scan Platform
10. Bistatic Radar	IO	10-20 minutes/orbit		36	6	0.5				Boom
11. Magnetometer	IT, IO	one/day		6	7	0.2			0.2 kps	Boom
12. Charged Particle Detector	IT, IO	one/10 minutes		50	15	1.0			0.1 kps	Boom
13. Micrometeoroid Detector	IT	continuous		115	1.5	1.4			0.01 kps	Body Mounted
14. Mapping Radar	IO	one/minute		420	550	50		±0.5 yaw ±1.0 P&R	180 kps	Scan Platform
15. Ion Probes*	IT	20/mission		300	10	10				
16. Tracking Radar	IO, EO	10 minutes/observation		230	450	8		±1°	1.2×10^4 kps	Scan Platform
17. Altimeter	IO, EO	one/minute twice/orbit		50	220	2		±1°	1.7×10^3 kps	Scan Platform
Totals				3890	1265 Average	458				

IO = In orbit about planet
IT = In transit
EO = Earth orbit
*This probe category has been included as it is common to both Mars and Venus missions.

TABLE 4.2-20: A

135

The 36-inch diameter telescope portion of the photographic system requires an envelope of 60-inch diameter and 120-inch length with the camera attachment requiring a unit approximately 2 feet by 3 feet by 3 feet. The magnetometer and charged particle detector/bistatic radar instruments are each located on 40-foot booms. Experiment instruments in the forward interstage compartment are located on booms which allow the instrument to have an unobstructed 5-degree field of view in a downward direction after the MEM has departed.

4.2.2.3 Unmanned Probes

Unmanned experiment probes serve to gather information to supplement that of the on-board experiment instruments and the MEM. These probes are classified into scientific and engineering probes and are discussed accordingly.

Scientific Probes--These probes have the characteristic of making repetitive scientific measurements. A brief description of the functions of these probes follows:

1) Mars

Occultation Detector Probe
Determines the variation of atmospheric density as observed from phase variations due to the atmospheric pressure effects on the transmitted frequency.

Topside Sounder Probe
Determines the ionospheric constituents and their distribution in an orbit below that of the spacecraft.

Magnetometer Probe
Augments the instrument on the spacecraft in mapping the magnetic field.

Mars' Moon Probes
Examines surface features of the two Mars' moons using television and spectrometric observations.

Mapping Radar Probe
Determines the thickness of the solid overlay on the planet. If cloud cover prohibits optical observations of the surface, then these will map the planet features that become apparent because of the variations in the cloud structure and cloud altitude above the surface.

2) Venus

Atmosphere Drifter Bioprobe
Collects data on the type of life that may have evolved in the atmosphere. The instrument filters the atmosphere, cultures it, and then determines the presence of enzyme or radioactive CO_2 due to life presence. This probe will also be used on Venus swingby missions.

Cloud Data Probe
Determines the difference in cloud composition that may occur as the result of precipitation, of latitude and longitude since that planet doesn't rotate, and of altitude.

Mapping Radar Probe
Same as the Mars mapping radar probe.

RF Window Probe
Determines the frequency at which radiation cannot escape the atmosphere and determines other windows through which RF can be transmitted. This probe will also be used on Venus swingby missions.

Soft Lander Probe
Equipped with a complete weather station, television to determine the variation of the light reaching the surface and to photograph itself, and sampling device to determine the mineral and chemical composition.

3) Engineering Probes--These probes are responsible for obtaining engineering data used to determine if the atmosphere and surface characteristics of Mars are suitable for the MEM mission.

Atmospheric Probe (Hard Lander)
Determines the engineering characteristics of the atmospheric profile essential to landing in a selected area.

Soft Lander
Verifies the data of the atmospheric probe as well as establishes the surface bearing strength, and measures radiation background, surface temperature, surface wind, and dust content.

Operation and design characteristics of the probes for Mars and Venus missions are shown, respectively, in Tables 4.2-21 and 4.2-22. Probes for Mars missions weigh 22,255 pounds and those for Venus 34,190 pounds.

Velocity increments (ΔV) indicated are associated with the designated operational maneuvers. These maneuvers are required to obtain the desired experiment information. ΔV's for all maneuvers are initiated from the manned space vehicle orbiting the planet at 540 nautical miles and approximately 60-degree inclination to the equator. Experiment instrumentation and support includes the actual experiment sensors and operational support equipment such as power, telemetry, and data handling. Probe flight systems include such items as guidance and navigation, reaction control, structure, etc. A large portion of the weight of this equipment was obtained from the NAA Manned Flyby Study*. Propulsion systems include propellant, tanks, and engines. Both solid and storable systems have been used as designated. In general, for velocity increments below 3000 fps or propulsion system weights below 300 pounds, a solid propulsion system was used. Probes with requirements greater than the above used storable propulsion. The storable systems were based on $\lambda' = 0.88$ and $I_{sp} = 325$ seconds. Solid systems used a $\lambda' = 0.75$ and $I_{sp} = 250$ seconds. All soft landing probes assumed aerobraking designs to assist in eliminating velocity. A growth and contingency factor of 35% has been applied to the sum of the experiment instrumentation, probe flight systems, and propulsion system.

*NAA Document SID67-549, *A Study of Manned Planetary Flyby Missions Based on Saturn/Apollo Systems*, NASA Contract NAS8-18025, North American Aviation, Inc., August 1967.

Table 4.2-21: MARS EXPERIMENT PROBE SUMMARY

Probe	Operational Maneuvers	ΔV (fps)	Exp. Inst. & Support (lb)	Probe Flight System (lb)	Propulsion System (lb)	Growth 35% (lb)	Probe Flight Weight (lb)	Qty	Total (lb)
1. Hard Lander	Deorbit 20-deg Plane Change	3,870	20	105	120 (solid)	85	330	5	1,650
2. Soft Lander	Deorbit and 20-deg Plane Change Soft Landing	3,870 2,000	100	1,135	1,235 (storable)	865	3,335	2	6,670
3. Occultation Detector-Orbiter	5-deg Plane Change Maintain Altitude	890	5	60	10 (solid)	25	100	2	200
4. Topside Sounder Orbiter	5-deg Plane Change Maintain Altitude	890	20	80	15 (solid)	40	155	2	310
5. Magnetometer-Orbiter	5-deg Plane Change Maintain Altitude	890	5	60	10 (solid)	25	100	2	200
6. Mars Moon Hard Lander									
No. 1 Inner Moon	60-deg Plane Change Orbit Change to 5000 nautical miles	10,340 2,250	25	405	1,500 (storable)	675	2,600	2	5,200
No. 2 Outer Moon	60-deg Plane Change Orbit Change to 15,000 nautical miles	10,340 3,300	25	405	2,025 (storable)	855	3,305	2	6,610
7. Mapping Radar-Orbiter	20-deg Plane Change Maintain Altitude	3,550	420	280	350 (storable)	365	1,415	1	1,415
									22,255

Table 4.2-22: VENUS EXPERIMENT PROBE SUMMARY

Probe	Operations	ΔV (fps)	Exp. Inst. & Support (lb)	Probe Flight System (lb)	Propulsion System (lb)	Growth 35% (lb)	Probe Flight Weight (lb)	Qty	Total (lb)
1. Atmosphere Drifter-Bioprobe	Deorbit	900	50	450	75 (solid)	200	775	2	1,550
2. Cloud Data Probe-Orbiter	20 deg Plane Change	7,655	150	280	720 (storable)	400	1,550	2	3,100
3. Mapping Radar-Orbiter	60 deg Plane Change	22,000 (2 stage)	420	280	7,875 (storable)	3,000	11,575	2	23,150
4. RF Window Probe-Drifter	Deorbit	900	80	450	80 (solid)	215	825	2	50
5. Soft Lander	Deorbit Soft Landing	900 100	320	1,205	230 (solid)	615	2,370	2	4,740
									34,190

Probe weights for swingby missions (Mars capture and Venus swingby) have the same Mars probe complement shown in Table 4.2-21. For these missions, the Venus probes have been limited to several atmosphere drifter-bioprobes and several RF window probes. These probes will be launched in the plane of the space vehicle trajectory. A total probe weight of 880 pounds has been estimated for Venus on the swingby missions to give a total experiment probe weight of 23,135 pounds.

Installation of the probes for a Mars mission is shown in Figure 4.2-33 and Views A-A and B-B. In general, the probes have been located in unpressurized areas on either side of the MEM and integrated with other spacecraft equipment to minimize the total required volume. The ion probes are located to allow use of both during the outbound and inbound phases of the missions. Probes to be launched from Mars orbit and prior to the launching of the MEM are located in the aftmost section of the vehicle as shown by view A-A. Major envelope dimensions of these probes include soft lander--14-foot diameter by 7-foot length, atmospheric probe--7-foot diameter by 7-foot length, and Venus swingby probes--4-foot diameter by 4-foot length. Upon launching and verification of certain engineering parameters, the MEM is launched. The aft conical skirt which surrounded the MEM is then jettisoned allowing easy deployment of the remainder of the probes as scheduled. These probes are installed as shown in view B-B. Mars moon probes have envelopes of 5-foot diameter by 10-foot length, mapping radar--5-foot diameter by 13-foot length, and occultation detector, topside sounder, and magnetometer probes--3-foot diameter by 3-foot length.

The probe compartment for Venus missions will be the same as that shown for the Mars missions. A large portion of the volume available through removal of the MEM is filled due to approximately 3400-cubic-foot additional volume required for unmanned probes.

The estimated installed weight of the probes including support structure and separation devices and the compartment to house the experiments is shown in Table 4.2-23.

Table 4.2-23: PROBE INSTALLATION WEIGHT

	Mars	Venus	Swingby
Probes	22,255	34,190	23,135
Support Structure and Separation Device (10% of Probe Weight)	2,225	3,420	2,315
Storage Compartment	1,800	2,800	1,950
	(6,350 ft^3)	(9,770 ft^3)	(6,610 ft^3)
Total	26,280 lb	40,410 lb	27,400 lb*

*1120 pounds of this total is associated with the probes for Venus.

Estimated installation volumes have been calculated using a packing density of 3.5 lb/ft^3. Small unmanned spacecraft such as SAMOS, OGO, NIMBUS, etc., have an average density of 5 lb/ft^3. Installing a number of these spacecraft in one compartment would result in an installed density similar to that designated. Mars missions will therefore require approximately 6400 cubic feet and Venus missions 9800 cubic feet.

4.2.3 MARS EXCURSION MODULE (MEM)

An Apollo-type MEM with a lift-to-drag ratio of 0.5 was selected as the recommended Mars excursion module. The MEM design was adapted from work performed by North American Aviation, Inc., under NASA Contract NAS9-6464*. The MEM configuration used in the present study was selected before North American Aviation completed their designs. Accordingly, it is somewhat different from North American's recommended configuration. Also, this study used a three-man MEM which was staged from the space vehicle at a 540 nautical mile circular orbit while the North American configuration accommodated four men and was staged from a 270-nautical-mile orbit.

The MEM is that portion of the space vehicle that transports the surface exploration crew and equipment from the space vehicle in Mars orbit to the Mars surface, provides living quarters and a laboratory while on the surface, and transports the crew and scientific data and samples back to the orbiting space vehicle. The MEM is not returned to Earth and is left in Mars orbit. Accordingly, the MEM is a payload element for the PM-1, outbound midcourse, PM-2, and orbit trim propulsion systems. Because of these factors, the weight of the MEM has a leverage factor on the space vehicle's IMIEO, ranging from 2.5 to 3.5 for the recommended common module space vehicle configuration for the Mars missions evaluated in the study. These leverage factors would be greater for a tailored module space vehicle configuration concept. Accordingly, a light-weight MEM is desirable. The requirements placed on the MEM did not vary from mission to mission and, therefore, the one design is adequate for all missions.

4.2.3.1 Design Criteria

The following guidelines and constraints were used for the selection of the IMISCD study MEM:

1) Environments: Design to the worst-case atmosphere considering Mars atmospheres VM-7 and VM-8. Surface winds up to 304 fps (104 m/sec)

2) Mission Constraints:

Crew Size	3 men
Mars Parking Orbit	540 nautical miles
Stay Time	30 days on Mars surface
Earliest Mission	1981-1982

---

*NAA Document SD-67-755, *Definition of Experimental Tests for a Manned Mars Excursion Module*, NASA Contract NAS9-6464, North American Aviation, Inc., August 1967

3) Design: The MEM will be compatible with IMISCD study space vehicle configurations. Crew accelerations will be limited to 10 Earth g's.

In addition to the foregoing guidelines and constraints, the following design criteria were used for equipment packaging, crew quarters, and structural design:

1) Design loads in Earth g's:

Earth	
Boost	5
Injection	1
Mars Capture	
Aerobraker	10
Retrobraker	0.5
Mars	
Entry	2
Impact	5
Ascent	2

2) Entry

V_E = 11,050 to 11,350 fps (3370 to 3460 m/sec)

3) Propulsion

	ΔV fps	(m/sec)
Deorbit	800	(244)
Descent		
With ballute	2400-2800	(731-853)
Retro only	3500-4000	(1067-1219)
Ascent	17,300	(5280)
Rendezvous	500	(152)

4) Crew Quarters and Laboratory Volume

Free volume/man is more than 150 ft^3

Laboratory equipment is about 60 ft^3

Samples and data return is about 10 ft^3

5) Crew Operational Constraints

Space suits tours of duty limited to 4 hours.

Crew work/rest cycles of 12 hours on/12 hours off. Off duty time will include 8 hours of sleep and 4 hours of housekeeping, eating, etc.

At least one man must remain inside the MEM at all times.

No mobile surface vehicle is available.

4.2.3.2 MEM Description

Mission Profile--The mission profile of the MEM is depicted in Figure 4.2-35. The MEM is passive and unmanned during the Earth orbital operations and interplanetary transit except for periodic checkout and maintenance. After the space vehicle has attained the desired Mars orbit and a suitable landing area on the planet has been selected, the landing crew is transferred from the mission module to the MEM. After a final checkout, the MEM is separated from the space vehicle and low thrust deorbit motors are fired such that entry and landing at the selected site might be accomplished. Entry generally is undertaken with the lift vector up, and roll control is employed for minor navigational adjustments. After the MEM has decelerated to equilibrium velocity, ballutes are deployed while the MEM is in horizontal flight to aerodynamically decelerate the MEM. The ballutes are then jettisoned along with portions of the heat shield to reduce weight and to provide an opening for firing the descent engine. The landing gear is extended and the descent engine is started. Touchdown will occur after a short hover period over the final landing site. Until touchdown, the crew will remain in the control cabin on top of the vehicle.

A laboratory and living quarters, connected to the crew compartment by a tunnel and airlock, is provided for surface operations. Surface operations includes external operations on the surface of the planet as well as experiments to be performed in the laboratory. After an approximate 30-day stay on the planet, an ascent and rendezvous with the space vehicle is made. Only required equipment and structure is used in the ascent stage. The control cabin is reused for ascent and rendezvous. Much of the equipment and structure is left behind on Mars, and propulsion tankage is staged during ascent. Normally, an intermediate orbit will be attained. After appropriate phasing of the MEM and spacecraft, the MEM will perform an orbit transfer maneuver to effect the rendezvous and docking. After the crew and scientific payload are transferred to the spacecraft, the MEM is abandoned in Mars orbit.

Abort capability exists before entry, before landing, and on the Mars surface. There is no abort capability during entry. The most critical abort requirement is imposed for the condition before touchdown wherein the ascent stage must be separated, the ascent engine ignited in flight, and a maneuver performed to correctly orient the thrust vector.

MEM Configuration--The selected Apollo-shape MEM inboard profile is illustrated in Figure 4.2-36. Figure 4.2-37 shows the MEM configuration during the various mission phases. The MEM consists of a descent and an ascent module. The ascent module houses the three-man crew during entry, descent, landing, and ascent. The ascent module consists of the control center, ascent engine and propellant tanks. A portion of the ascent propellant tankage is jettisonable to increase ascent performance.

The crew couches are arranged in two tiers as shown. During deorbit and entry, all three crewmen are seated and front-view instrument and control panels are provided for the top crewman. Sideview panels are available for the men below. After peak acceleration, the two lower crewmen take up

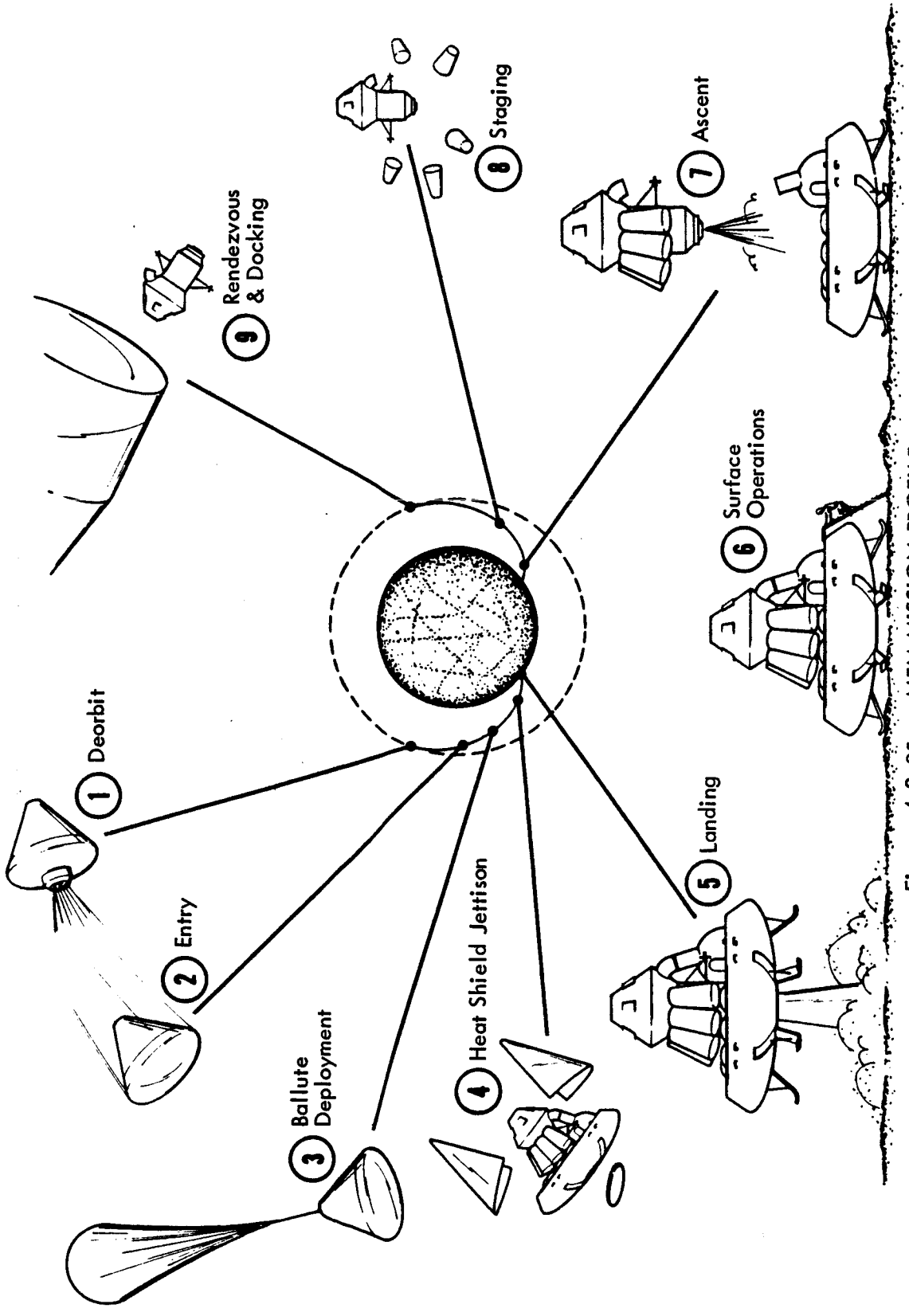

Figure 4.2-35: MEM MISSION PROFILE

PRECEDING PAGE BLANK NOT FILMED.

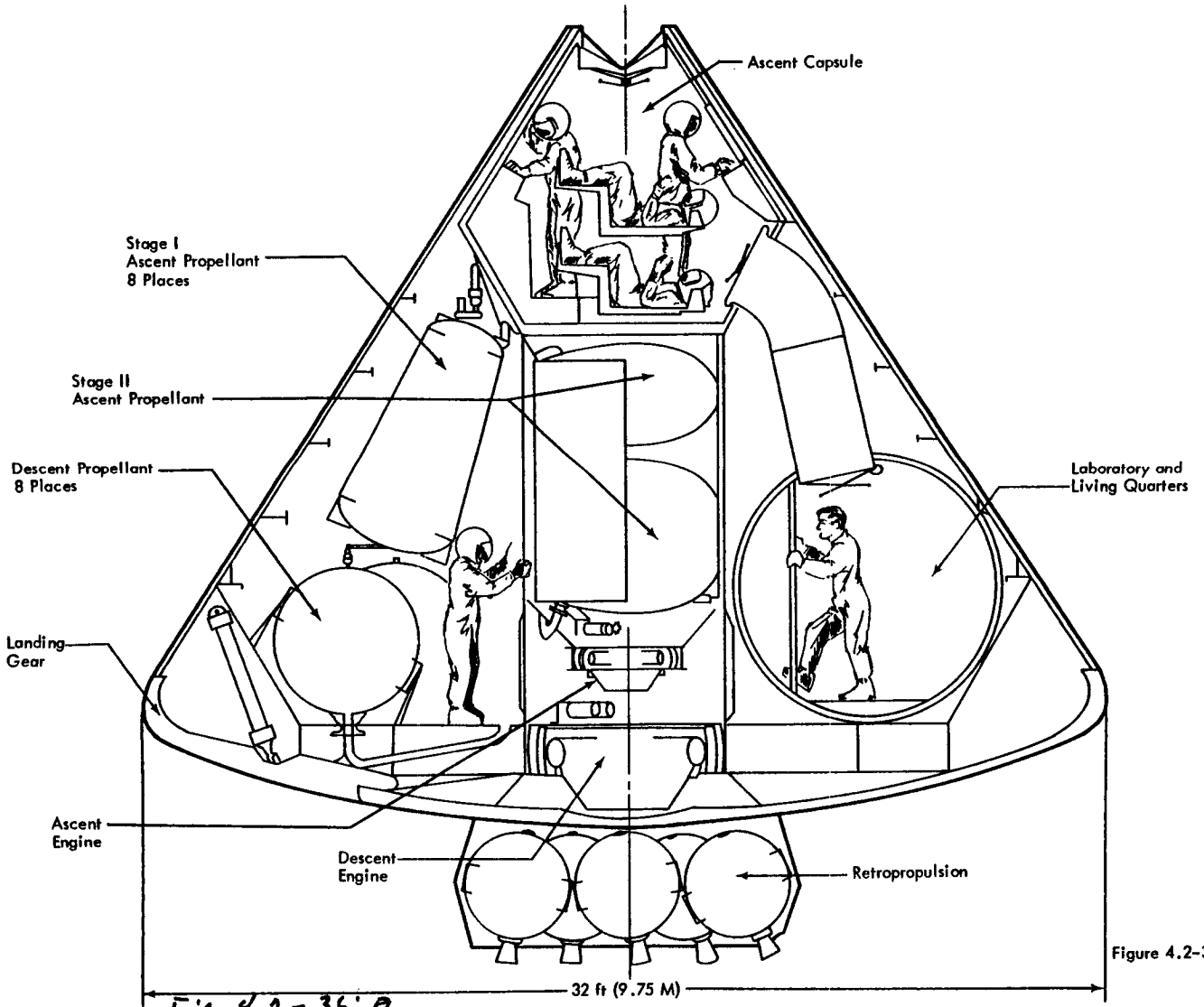

Figure 4.2-36: B MEM CONFIGURATION

Fig. 4.2-36: A

FOLDOUT FRAME

FOLDOUT FRAME

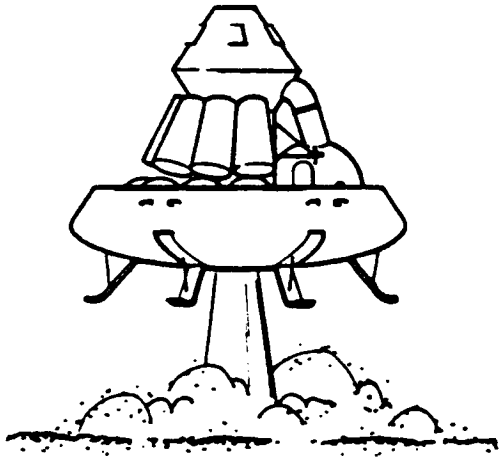

Descent

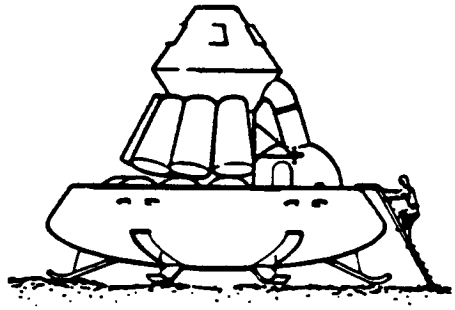

Landed

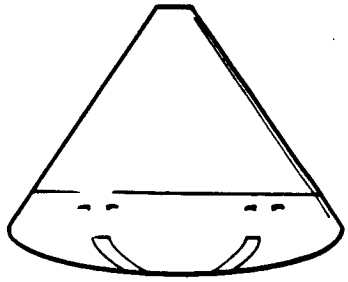

Entry

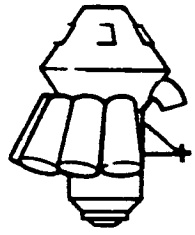

Stage I Ascent

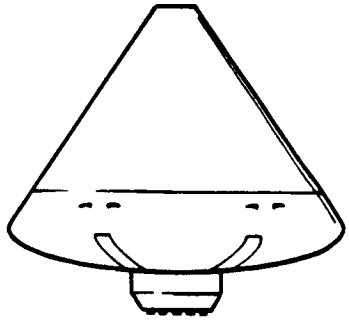

Deorbit

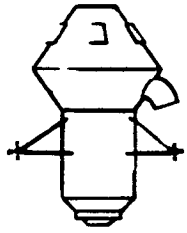

Stage II Ascent

Figure 4.2-37: MEM - MISSION PHASE CONFIGURATIONS

standing positions and pilot the MEM to a landing, using instrument consoles located below the two windows. A docking drogue and hatch, which also gives access to the MEM in the spacecraft during the trans-Mars phase, is shown at the top.

The descent stage contains the crew living quarters and laboratory for use while on Mars, the descent engine and propellant tanks, ballutes, landing gear, supporting structure, an outer heat shield/structure, and the various subsystems. The crew quarters are formed out of a segment of the toroidal lower part of the vehicle and are connected to the control center of the ascent module by airlocks and tunnel. Seven deorbit motors are arranged in a circle outside the heat shield. The descent propellants are housed in eight spherical tanks, the first-stage ascent propellant in eight conical tanks (five for oxidizer and three for fuel) outside the thrust structure, and the second-stage ascent propellant in two tanks between the engines and the ascent capsule. The crew has access to the unpressurized space between the outside structure and the cylindrical thrust structure for inspection and maintenance.

The descent and ascent engines are both pump-fed, gimbaled, plug nozzle engines and operate at a chamber pressure of 1000 psi. Plug nozzles were selected over bell nozzles because of their smaller volume and diameter. FLOX/methane propellants are used. Although cryogenic propellants have a higher I_{sp}, they are also less dense and result in larger volume tanks. The larger tanks result in increased MEM structural weights. The MEM size is limited by the diameter constraints imposed by the space vehicle, and hence, the increased volume required by the cryogenic propellants result in less ΔV budget growth potential.

Subsystems--

1) Propulsion--The system constraints considered in the selection of the propulsion systems were minimum weight and envelope, ease of spacecraft thermal management, and engine design feasibility. A summary of the propulsion systems selected to satisfy the deorbit, descent and ascent, and reaction control requirements of the MEM mission are noted in Table 4.2-24.

   The deorbit function is provided by a cluster of seven spherical, externally mounted solid propellant rocket motors which employ an advanced beryllium propellant formulation (I_{sp} = 310 seconds). The motor cluster, weighing 6600 pounds, provides a thrust of 40,000 pounds.

   The descent and ascent propulsion systems both employ FLOX/CH_4 propellants. Although neither stage appears to require restart capability, the propellant combination is hypergolic. Methane (CH_4) is used as the transpiration coolant because it has a higher heat capacity and heat of vaporization than FLOX. Although performance is lower than that of a bell nozzle, throttleable plug-nozzle engines were selected for the descent and ascent propulsion systems because of engine envelope constraints and weight advantages. The descent engine thrust is 100,000 pounds throttleable to 6:1 ratio. The throttleable ascent engine thrust is 30,000 pounds.

Table 4.2-24: PROPULSION SYSTEM SUMMARY

Function	System
Deorbit	Solid motor Advanced beryllium I_{sp} = 310 seconds Vacuum thrust = 40,000 pounds for 48 seconds P_C = 600 psi
Descent and Ascent	Liquid engines (plug nozzles, ε = 30) $FLOX/CH_4$ propellants at 5.75 mixture ratio P_C = 1000 psi (pump-fed) I_{sp} = 383 seconds Vacuum thrust Descent = 100,000 pounds Ascent = 30,000 pounds Inert helium gas pressurization (20 to 30 psia)
Reaction Control System	Liquid engines (pulsing and steady-state operational modes) Space- or Earth-storable propellants (CLF_5/MH-5 selected for study) P_C = 100 psi (pressure-fed) Inert helium gas pressurization - positive expulsion

Because of the wide divergence in reaction control thrust level requirements, two separate reaction control systems are employed, one to provide attitude control during orbital, ascent, and rendezvous operations, and the other for entry operations. Each system employs 16 thrusters arranged in clusters of four engines. Since a propellant combination that is insensitive to the MEM environment is desirable, CLF_5/MHF-5, a high performance space-storable propellant combination was selected to permit sizing of the reaction control system. Approximately 2700 pounds (1230 kg) of propellant are required during entry and 240 pounds (109 kg) during orbit, ascent, and rendezvous.

2) Thermal Protection and Structural--The heat shield concept is similar to that used on the Gemini. In the areas where the temperature exceeds 1800°F, the heat shield consists of an ablator bonded to a titanium honeycomb sandwich substructure. In areas where the equilibrium surface temperatures were less than 1800°F (1250°K), HS-25 honeycomb-sandwich construction was employed. The radiative portions of the heat shield are composed of overlapping shingles mounted so as to be free to expand or contract in their temperature environment. The shingles are made of Rene 41 in areas where the maximum temperature is 1800°F, while titanium is used where temperatures are limited to 1000°F. All heat shielding and structure not required for the structural integrity of the landing configuration is jettisoned prior to ignition of the descent engine.

   The descent stage consists of an external shell supported by three rings and longitudinal stiffeners. An engine support central tunnel was used to give support to radial bulkheads which, in turn, are used as load paths for all concentrated loads: inertial loads during boost, aerobraking, entry, and landing. The subsystems, engines, propellant tankage, and landing mechanisms are directly supported by these bulkheads, as well as shell and heat shield circumferential, longitudinal, and radial support members.

3) Retardation--The single-stage aerodynamic decelerator system, which employs a ballute and a retrorocket (descent engine) is the lightest system of the ones analyzed. The ballute is deployed after the peak entry heat pulse and after the MEM has attained horizontal flight. The MEM velocity is reduced to about 1400 fps (427 m/sec) at 10,000 feet altitude through use of the ballute. Table 4.2-25 summarizes the weight of the ballute by its elements.

4) Environmental Control/Life Support--The ECS will provide four major functions: (1) a life supporting environment with controlled pressure, temperature, and humidity; (2) a heat protection system; (3) a water supply system; and (4) a waste management system. The life supporting environment consists of a continuous oxygen supply to replace that used in metabolic consumption and leakage, and a sufficient quantity of oxygen to allow for the occurrence of likely emergencies (puncture) in either the laboratory module or command module.

Table 4.2-25: BALLUTE WEIGHTS

Element	Ballute Weight (%)	Weight (lb)(Kg)	Remarks
Envelope	20	196 (89)	Neoprene--Coated Nomex @ .030
Coating	15	148 (67)	lb/ft^2 ($1.4\ N/m^2$)
Meridian Cables	35	344 (156)	
Riser	30	292 (132)	125 foot (38 m) Nylon 300,000 lb (1.3×10^6 N) ultimate
	Total	980 (444)	

The environmental control system will provide the crew with a continuous conditioned atmosphere in both the command module and the laboratory module. The system automatically controls the gas flow, pressure, temperature, and humidity and removes debris, carbon dioxide, water, and odors from the suits and the command module and laboratory module compartments.

Cabin heating or cooling will be accomplished by circulation of hot or cold glycol through a crew compartment heat exchanger. Cooling or heating in the laboratory module will be by means of the laboratory module compartment heat exchanger.

The glycol circuit will be the main coolant for the electronics and the suit and cabin gases. Heat from the glycol will be rejected to the Mars atmosphere by radiation when possible. Since intense dust storms may rapidly degrade the radiators, water evaporation will be the secondary mode of heat rejection.

The water system consists of two individual fluid management networks which control the collection, storage, and distribution of potable and waste water.

Cryogenic storage of the breathing gases was selected because of the lighter tankage and smaller volume requirements. Insulation techniques suitable for use with cryogenic propellants and fuel cell reactants are applicable to the storage of these gases. O_2 recovery was not considered feasible because of the additional system complexity and weight. Also, previous studies have shown that a mission of at least 6-months duration is required before an O_2 recovery system can be justified.

A two-bed molecular sieve was selected for CO_2 removal because of its weight, power, and volume advantages when complete water recovery is not required (e.g., when fuel cells are used).

Water storage is the simplest solution to the water management problem. Approximately 420 pounds of stored water would be required even with fuel cells as the primary power source. Since this weight is prohibitive, a multifiltration process was selected for the recovery of wash water and condensate.

The life support system weights include food supply and preparation (1.45 pounds/manday) (0.66 kg/manday), personal hygience (0.69 pound/manday) (0.31 kg/manday), waste handling and disposal, and medical supplies.

5) Communications--The selected communications system contains three radio frequency (RF) sections (one operating in the UHF range, one in the HF range, and one in the L-band range), a television section, a signal processing section, and a rendezvous radar section.

The RF sections provide two-way voice communications between the MEM and the spacecraft, MEM and Earth, and between the MEM and extravehicular astronauts by means of backpack personal communications subsystems. The UHF-band sections receive and transmit telemetry and biomedical information and transmit TV to the orbital spacecraft. An emergency HF voice link is provided as backup for the normal voice link; emergency keying is provided to backup the emergency voice link. The television section picks up and transmits pictures of the Mars surface and live biomedical subject material. An extensible cable is visualized for flexible line connections between the MEM vehicle and EVA camera. The signal processing section provides the functions of modulation, switching, amplification, and multiplexing of signals and housekeeping data during the different operating modes.

6) Guidance and Control--The MEM-integrated guidance and control system (GCS) provides all guidance and navigation (GNS) and stabilization and control information and functions for the active MEM mission phases (deorbit thrusting maneuver, entry, retrothrusting, soft landing, ascent boost, and rendezvous with the spacecraft). Attitude errors are furnished by the inertial measuring unit, suitably conditioned by the GCS computer, and used to control the reaction control system or thrust vector control. Since the MEM orbital stay-time is short (2 to 8 hours), the GCS will be used continuously during this period.

A two-thrust, level reaction control system is required to provide the high roll rate for lift modulation during entry and low angular rates to minimize propellant consumption in orbit. Since the orbital propellant increases with thrust, four roll engines are used during entry but only two during orbital phases to reduce thrust level and propellant consumption.

Thrust vector control is used to provide attitude control during the powered descent and ascent phases of flight in a manner similar to the lunar module.

7) Electrical Power--The selected MEM spacecraft electrical power system provides the required electrical power for the descent, surface operations, and ascent and rendezvous phases of the MEM mission. The average electrical power requirements of the MEM is 2 kw_e. Fuel

cells with auxiliary batteries to meet peak power requirements were selected as power sources for descent and surface stay-time power requirements. Two batteries are provided for the ascent and rendezvous power requirements. Fuel cells were selected because of their advanced state of development, high reliability, and by-product water used in the life support system. Batteries were chosen for the ascent module power since batteries provide the lightest weight system for the short service time required by the ascent module.

Experiments--The experiments to be performed and experimental equipment to be used on the Mars surface are discussed in detail in Volume III, Part 2. These experiments are directed toward increasing knowledge of Mars planetology, effects of modifying forces on Mars, its composition, environment, and possible life forms. The laboratory equipment descending to the surface weighs 1367 pounds and occupies a volume of 59.4 cubic feet. Total power requirements for this experimental package with all equipment in operation is 1.8 kilowatts. However, all equipment will not be operated at the same time and the maximum requirement at any one time is estimated to be 0.8 kilowatt. The return payload, consisting mainly of samples and data, weighs approximately 912 pounds and has a volume of 9.2 cubic feet.

Reliability--Based on an overall system probability of mission success of 0.969, a probability of 0.991 is allocated for the MEM. A detailed analysis of MEM reliability was not accomplished for this study.

Weights--A weight breakdown based on the North American four-man, 30-day, Apollo-type MEM is shown in Table 4.2-26. This configuration is 32 feet in diameter, uses ballutes for subsonic deceleration, uses FLOX/CH_4 propellants, and has an ascent ΔV of 16,000 fps (4880 m/sec) (corresponds to an orbital altitude of 500 km). This studies requirements differ from the North American version in three areas: (1) the crew size is three men, (2) the orbital altitude is 540 nautical miles (1000 km) and (3) the diameter is 30 feet. It is assumed for weight purposes that these differences in requirements are nearly compensating and so the recommended system's basic weight is the same as North America's. A 30% growth and contingency factor is added because of the possible wide variation in MEM weight with changes in such things as atmosphere, and velocity. The variation of the MEM injected weight as a function of orbit eccentricity is shown in Figure 4.2-38.

4.2.3.3 MEM Alternate

Lifting body configurations were also evaluated under Contract NAS9-6464 by North American Aviation. One of these lifting body configurations is illustrated in Figure 4.2-39.

Recommended Designs--Comparison of the Apollo-shape and lifting body configuration designs indicated that both could perform the missions selected and that both would be compatible with the trans-Mars spacecraft (i.e., aerobraker or retrobraker mode). Close examination, however, indicated that the Apollo-type configuration would be approximately 10% lighter than

Table 4.2-26: MEM WEIGHT STATEMENTS (lb)

4 men - 30 days

32 foot diameter, Apollo Shape

Ballutes/Retro- 1 minute hover

FLOX/CH_4 Propellant - I_{sp} = 383 seconds

	Ascent ΔV
Ascent Capsule	5,590
Ascent Stage II Propulsion	6,860
Ascent Stage II	12,450
Ascent Stage I Propulsion	13,450
Total Ascent Stage	25,900
Descent Stage	43,200
Total Entry Weight	69,100
Deorbit Motor	4,200
Growth	22,000
Total MEM Weight	95,300

For retropropulsion only, the total MEM weights are approximately 10% higher than those shown above; the ascent stage weights remain unchanged.

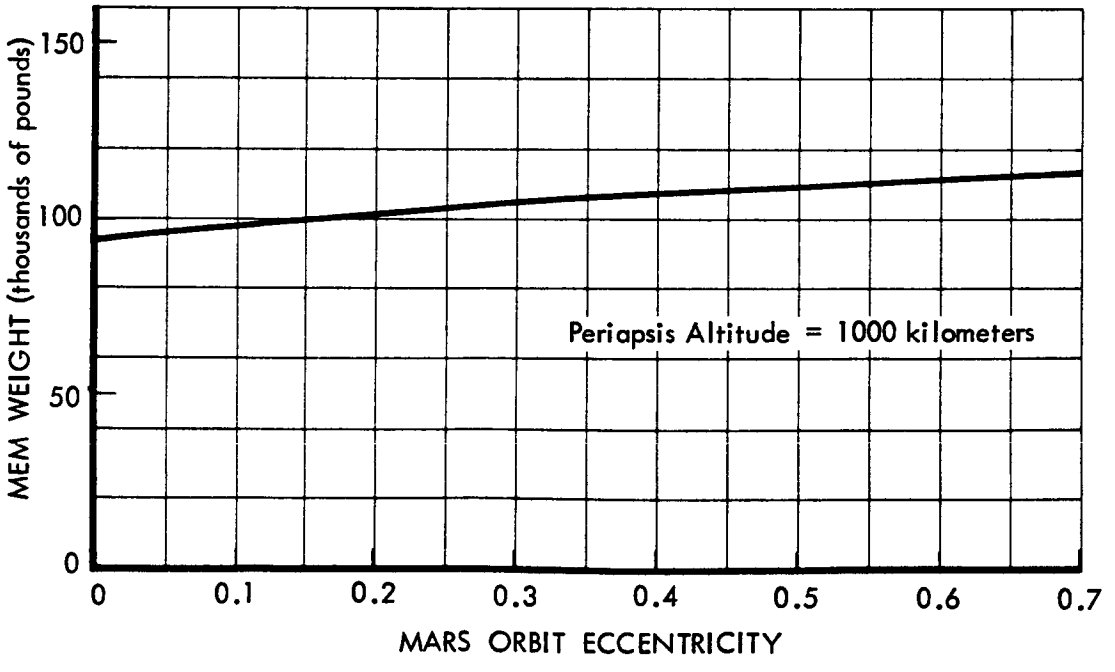

Figure 4.2-38: MEM INJECTED WEIGHT

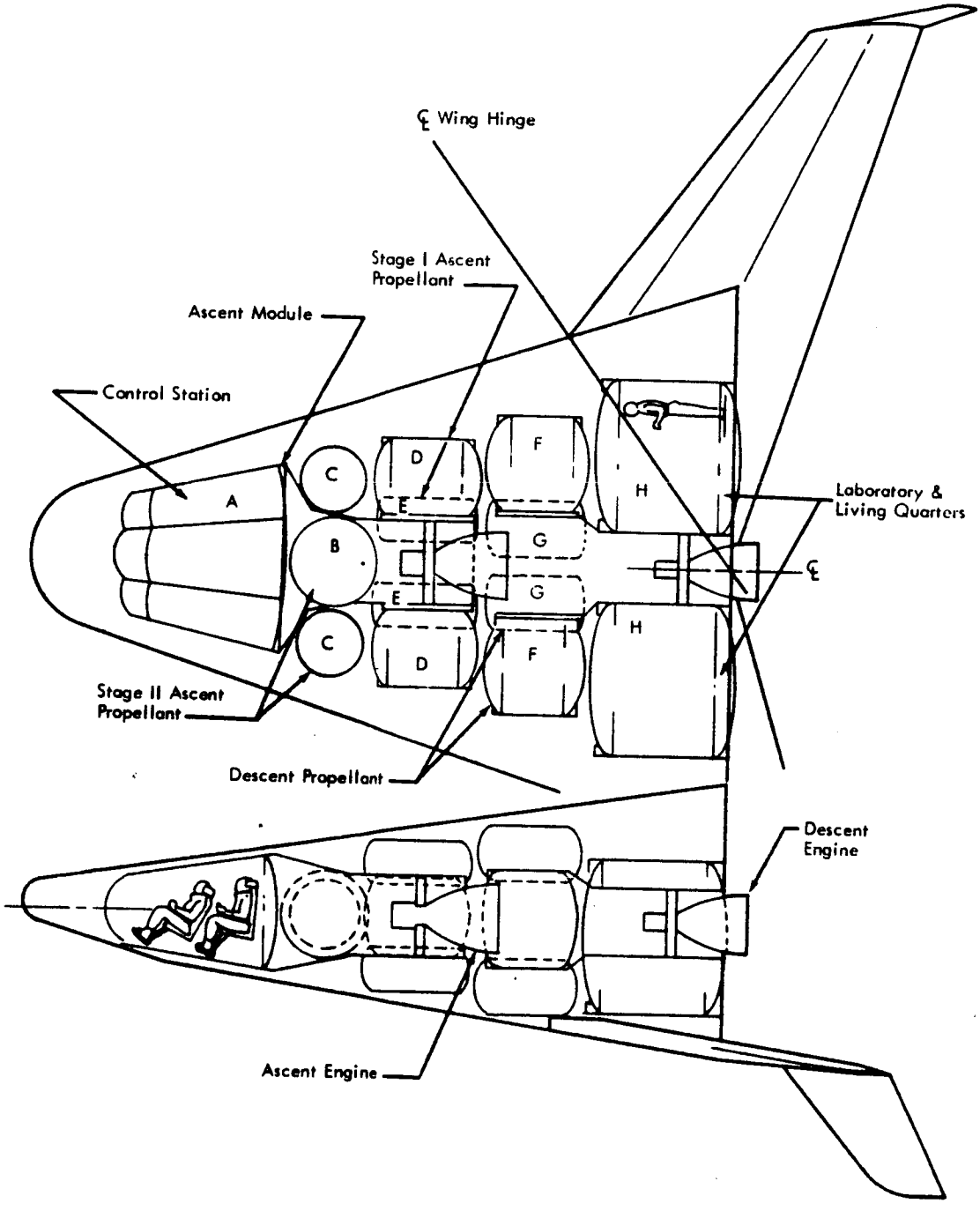

Figure 4.2-39: LIFTING BODY MEM

the lifting body, that it could provide more ascent ΔV capability (or alternatively, accommodate a heavier payload), and that its heat shield would be significantly less sensitive to the entry heat loads. Entry technology for Apollo-type configurations in the 1970's will have reached maturity, whereas, there is only limited experience anticipated for lifting bodies (this maturity should result in lower development costs). Crew accelerations always are in the "eyeball-in" direction for the Apollo-shape spacecraft, whereas, they may vary in direction on the lifting body. Although the lifting body may have a greater ranging capability than the Apollo-shape, approximate selection of the deorbit position and time will land either configuration within a desired landing site. Except for minor sequence variations (e.g., heat shield separation), entry, landing, abort, and ascent operations are similar for both vehicles. Based on these comparisons, the Apollo-shape configuration was recommended.

4.2.4 EARTH ENTRY MODULE (EEM)

A blunted biconic EEM was selected as the recommended Earth entry module. The biconic EEM design was adapted from the work performed by Lockheed under NASA Contract NAS2-2526*. Though its weight varied when optimized for the Earth entry velocities of this study, the recommended EEM (see Section 3.1) has a fixed design and weight of 17,400 pounds. The weight penalty associated with this approach is considered of lesser importance than the gains obtained by having a fixed common design.

The EEM is the only portion of the interplanetary space vehicle that completes the entire round trip. It performs the vital function of transporting the mission crew and the science data and samples from the mission module on the return hyperbolic trajectory to a safe landing on the Earth's surface. Since the EEM is a payload element for every propulsion system of the space vehicle, the weight of the EEM has a high leverage factor of approximately 6 to 1 on the space vehicle IMIEO when the recommended common module space vehicle is considered. The leverage factor is much larger when the tailored module space vehicle concept is considered. Accordingly, a lightweight EEM is desirable.

The entry velocity is mission dependent and varies from 38,000 to 61,000 fps (11,600 to 18,400 m/sec) for the missions evaluated in the present study. The design requirements for entry at these velocities are stringent and vary with the mission. An EEM is an expensive vehicle to develop and, therefore, it is desirable to develop an EEM with multimission capabilities to minimize development expense. The approach used during the study to arrive at an EEM capable of meeting the variable mission requirement, while retaining a degree of commonality and minimization of development cost was to:

1) Configure a biconic EEM with a basic 65,000-fps (19,800 m/sec) entry capability

2) Modify the heat shield design and off-load attitude control and landing retrorocket propellant for missions with lower entry speeds.

---

*LMSC Document 4-05-65-12, *Study of Manned Vehicles for Entering the Earth's Atmosphere at Hyperbolic Speeds*, NASA Contract NAS2-2526, Lockheed Missile and Space Co., November 1965

4.2.4.1 EEM Design Criteria

The following guidelines and constraints were used for the design of the EEM:

- Only direct entry mode was considered.
- EEM is to be capable of entering at up to 65,000 fps (19,800 m/sec).
- Entry corridor capability is to be more than 10 nautical miles.
- Trimmed lift roll control at a fixed lift-to-drag ratio was used.
- The maximum deceleration is to be 10 g.
- EEM must be capable of safe landing in sea-state-4 conditions or on a ground slope up to 15 degrees for a maximum vertical descent velocity of 33 fps (10 m/sec).
- Nominal crew size is six crew men.
- Designed occupancy time is 1 day.
- The EEM is to be designed for lightweight and is to retain as much commonality as possible for missions with different entry velocity requirements.

In addition to the foregoing general guidelines and constraints, the following design criteria and constraints were used for equipment packaging, crew arrangement, and structural design:

Equipment Packaging

- Items not pertaining to pilot's reach or vision or independent of vehicle geometry may be located in any available space.
- Symmetrical arrangement of equipment about the vehicle's vertical plane of symmetry is used wherever possible.
- Standard packaging shapes are used. Pressurized tanks are spherical; electronic packages are rectangular.
- Equipment is located as far forward as possible for maximum static stability.
- Components of a given subsystem are located together unless static stability considerations dictate otherwise.
- Frames and longerons are arranged to accommodate internal equipment wherever possible, except for primary frames joining forebody and afterbody sections.
- All vehicles have a 10% packaging volume contingency.

Crew Accommodation

- Seat width is 24 inches.
- Seat length varies with positions of crew. Where seat length is not a limiting constraint, the crew members are in a reclining position, except for pilot and copilot(s), who in all cases are in a normal seating position.

- A 6-inch minimum clearance is used between each crew member and the seat ahead of him. More clearance is provided where possible.
- The volume provided for each crew member, including seat, is 40 cubic feet per man.
- Seats are mounted directly to the vehicle structure. No seat stroke is required for shock mitigation.

Structure and Thermal Protection

- Honeycomb crush structure is used in forward areas for landing shock mitigation (backup mode).
- Crush structure is cut out locally as required for equipment packaging.
- All surfaces shaded from the flow are inclined at least 6 degrees below the flow at the vehicle's horizontal centerline, and at least 2.5 degrees below the flow at the forebody lateral edges.
- Forward heat shield thickness is tapered uniformly along any given ray. The thicknesses used are the straight-line envelope of the thickness versus station curves obtained from the thermal analysis.

4.2.4.2 EEM Description

Entry Trajectory--Any vehicle configuration required to enter the Earth's atmosphere at hyperbolic speeds must fulfill certain critical aerodynamic requirements. The entry corridor width available to the vehicle for a safe entry maneuver is of prime importance and must be compatible with the approach guidance capability. The corridor width is governed mainly by the lift-to-drag ratio (L/D) of the vehicle and to a lesser extent by the lift parameter (W/C_LA). Further, the lift and drag characteristics must be such that the total heat load is kept as low as possible and satisfactory corridor control, maneuverability, and landing point control are maintained. Adequate stability characteristics are essential to ensure acceptable flight performance. Finally, since internal arrangement has a considerable influence on vehicle size and weight, the required aerodynamic characteristics should not be achieved at the expense of packaging efficiency.

Constant altitude deceleration, in conjunction with the trimmed lift roll control mode, was adopted for the entry trajectory. The characteristics of this trajectory are illustrated in Figure 4.2-40. A typical trajectory sequence of events is as follows:

At entry altitude (approximately 400,000 feet), the entry guidance system commands a roll angle which varies between 180 degrees (maximum negative lift) and zero degrees (maximum positive lift) depending on the entry corridor position resulting from the approach guidance terminal conditions. When the pull-out altitude is reached, the vehicle is rolled to the required angle to maintain constant altitude. The major portion of the deceleration occurs at this constant altitude. As the velocity decreases, the roll angle is gradually decreased until it becomes zero at the equilibrium glide boundary. Final descent begins along an equilibrium glide path. Recovery can be achieved by parachute deployment.

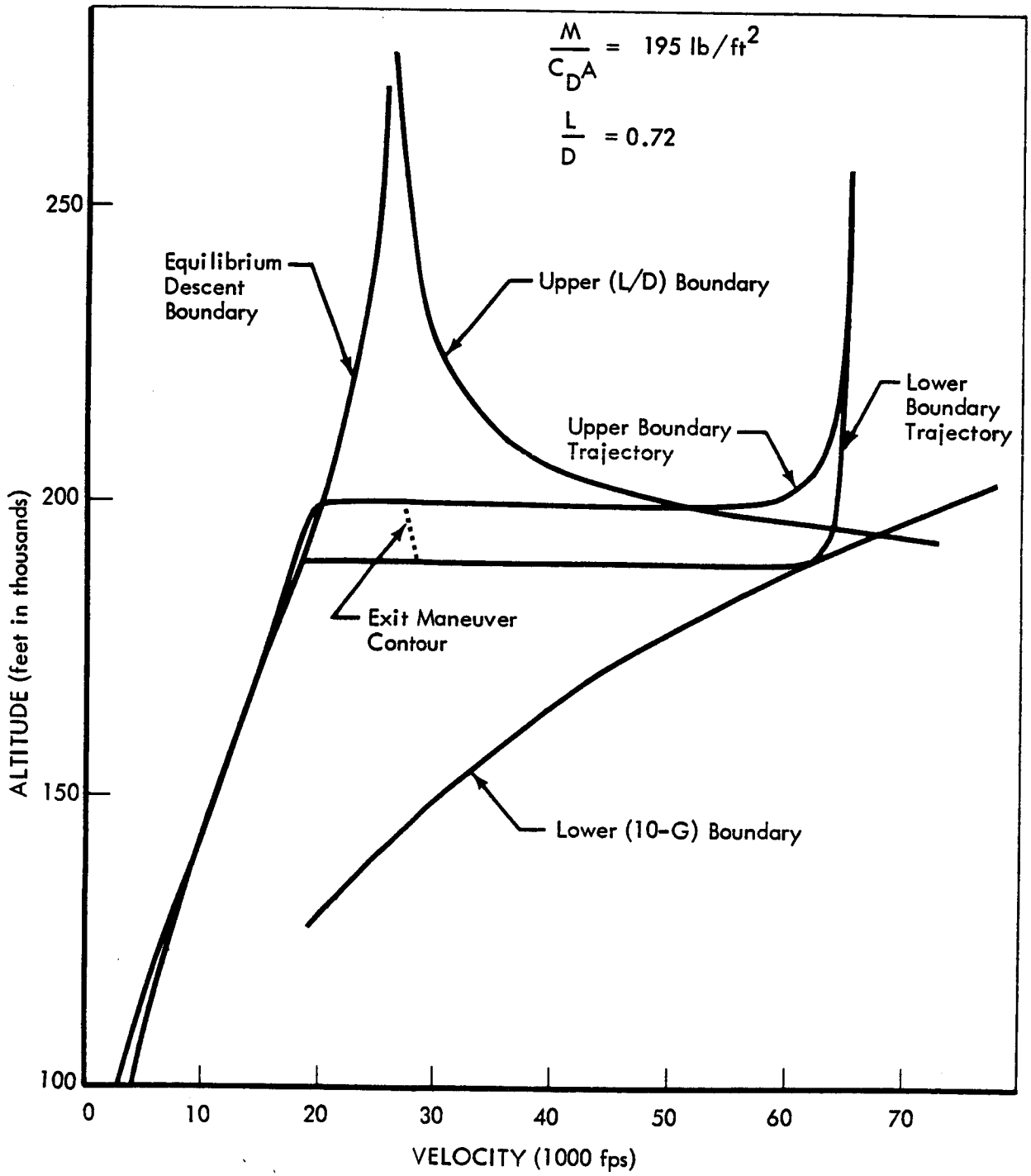

Figure 4.2-40: EEM NOMINAL DESIGN TRAJECTORIES

The operating requirements from entry to pull-out are constrained within the upper and lower boundaries as shown in Figure 4.2-40. The upper boundary is defined for an entry at fixed maximum negative lift (roll angle 180 deg). The lower boundary is defined for entry resulting in 10 g maximum deceleration. Above the upper boundary, insufficient negative lift is available to counteract the centrifugal force and skip-out will occur. Below the lower boundary, the 10 g tolerance level of the crew will be exceeded. For a 10-nautical-mile vacuum perigee corridor width, assumed in the study, the differences between the upper and lower boundary trajectories are approximately 30,000 feet and 10,000 feet for entry at 50,000 fps (15,200 m/sec) and 65,000 fps (19,800 m/sec), respectively.

EEM Configuration--The optimum (least weight) biconic EEM geometric shape varies somewhat for each entry velocity. To obtain the greatest amount of EEM commonality for the different missions that may be flown, the optimum-shape vehicle for an entry velocity of 65,000 fps (19,800 m/sec) was chosen. The same basic vehicle with modified heat shields would be used for missions that have lower entry speed requirements. The basic dimensions for the 65,000-fps (19,800 m/sec) biconic EEM are shown in Figure 4.2-41. This configuration has a lift-to-drag ratio of approximately 0.8.

The biconic EEM configuration is illustrated in Figure 4.2-42 along with a weight statement for the 60,000-fps (18,300 m/sec) entry velocity vehicle. The crew is arranged in three rows with two crewmen in each row. The crew volume allowance is 40 cubic feet/man.

The elliptical cross section of the afterbody, in which nearly all the internal subsystems are packaged, dictates the arrangement of most of the large components. These are placed above the heads and below the feet of the crew men to allow the seats to fill the center portion of the vehicle. Placing any sizable items along the sides of the rows of seats would extend the width of the vehicle needlessly and result in a weight increase, without efficiently using the space already available.

The main access hatch is located on the side of the vehicle, with ready access to the seats. This leaves the entire region above the crew's heads for placement of the heavy items. The center-of-mass location and static stability margin constraints on this vehicle dictate that the heavy items such as propellants, life support, etc., all be located above the crew's heads and as far forward as possible. The only exceptions to this requirement are the fuel cells which are too large to be located in the forward portion, the flotation bags which must be placed near the point of deployment, the descent parachutes which must be deployed from the aft end of the vehicle, the display panels which must be placed near the pilot, and part of the science payload for which no space was available in the front part of the vehicle.

The main differences between the biconic EEM selected for the IMISCD study from the designs studied under Contract NAS2-2526 are:

1) A double-wall-type structure similar to present Apollo structure was used instead of an advanced-type, single-wall structure.

2) A crew capacity of six was used instead of eight.

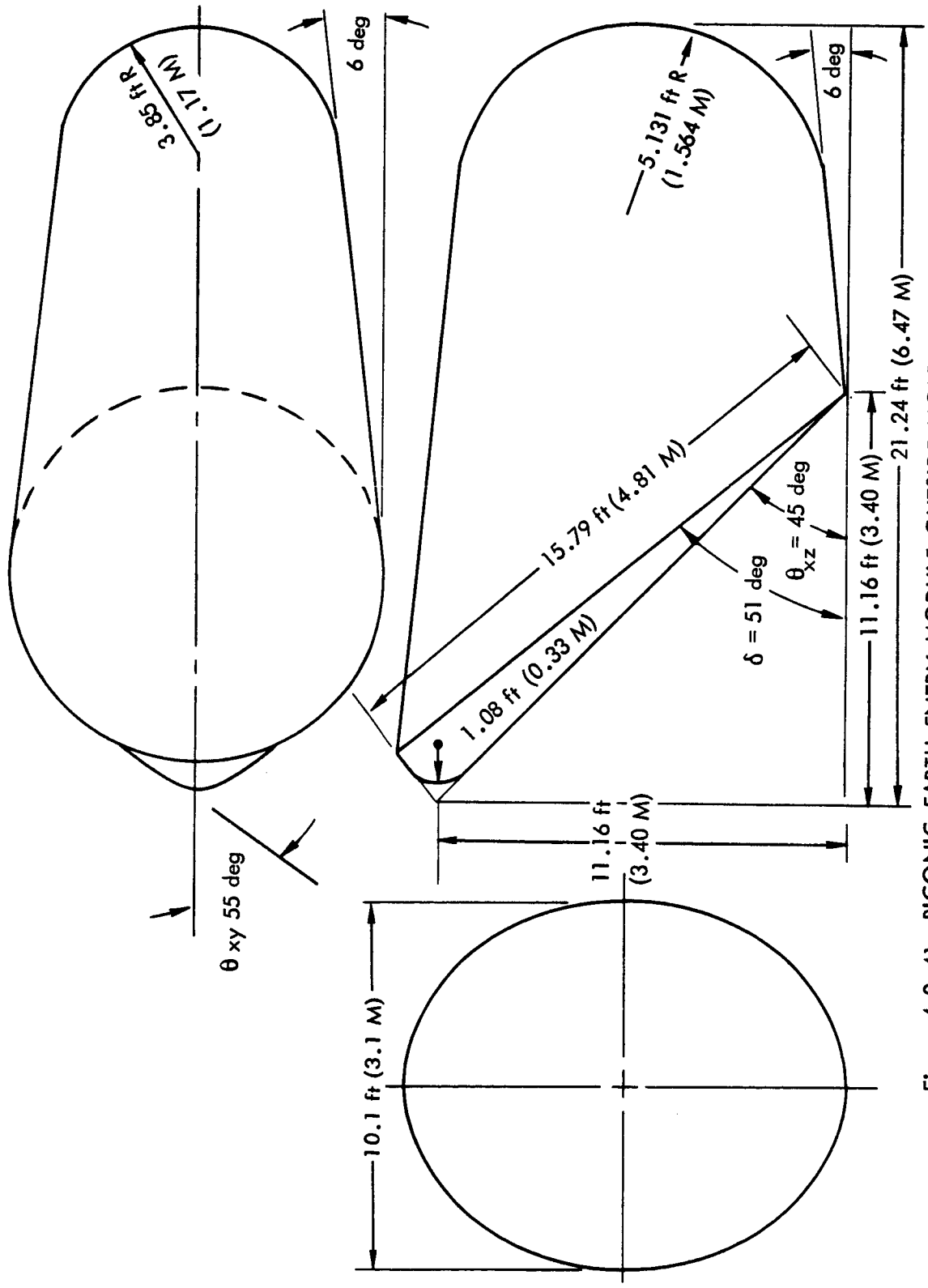

Figure 4.2-41: BICONIC EARTH ENTRY MODULE OUTSIDE MOLDLINE (65,000 fps)

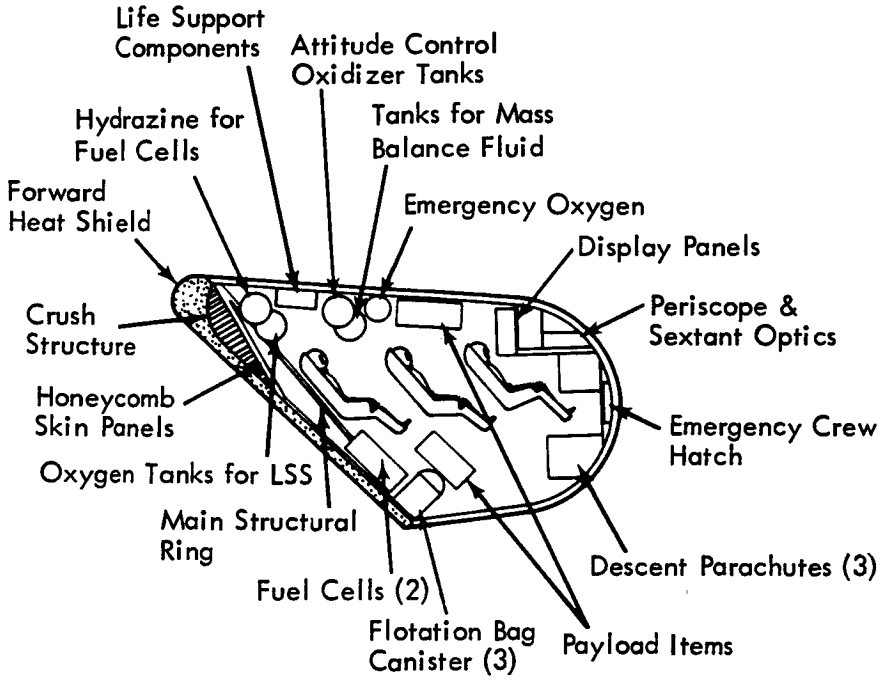

Estimated Weights	
Crew and Seats	1,362 pounds
Controls	270
Guidance and Navigation	300
Communications	185
Science	912
Life Support	732
Electrical Power	659
Attitude Control	1,120
Recovery	870
Heat Shield	4,340
Structure	4,160
Growth & Contingency (15%)	2,240
Total	17,150 pounds (7,779 kg)

Figure 4.2-42: BICONIC EEM CONFIGURATION

SIX-MAN CREW
V_e = 60,000 fps

3) Gas rather than cryogenic storage of oxygen was used in the life support subsystem.

4) Hydrazine fuel cells replaced the oxygen-hydrogen fuel cells because of long-term storage problems of liquid hydrogen.

5) The science payload was increased 112 pounds to 912 pounds.

6) A weight growth factor of 15% was used instead of 10%.

Subsystems

Crew and Seats--With the requirements of 40 cubic feet/man, this subsystem becomes the most bulky single item of the subsystems (nearly 50% of the total volume for a typical vehicle). A total allowance of 200 pounds per man was assumed. This total consists of 170 pounds for the man himself, 5 pounds for clothing, 5 pounds for personal effects, 18 pounds for the seat, and 2 pounds miscellaneous. It is considered that 18 pounds is sufficient for a well-designed foamed seat over an aluminum frame designed to support up to 30 g during a hard landing.

Controls--This subsystem includes all the pilot's display panels (one central panel and one on each side), the pilot's controls, viewing periscope and sextant mount, and some miscellaneous small items. The weight is constant at 270 pounds for all vehicles.

Guidance and Navigation--All items that pertain to the guidance and automatic navigation of the vehicle are included in this subsystem. It includes inertial reference platforms and their associated electronics, computers, horizon scanner, manual sextant, radar altimeter, and the cabling and junction boxes associated with all this hardware. This is another fixed subsystem with a weight of 300 pounds allowed for all vehicles.

Science--A fixed weight of 912 pounds was assumed for the science payload in all vehicles and a 30 cubic-foot envelope volume was provided. Depending on the vehicle, the components of the science package can be distributed wherever space permits. The science sample and return cargo and its weight, volume, and power requirements are shown in Table 4.2-27.

Life Support--This subsystem consists of all components necessary for preservation of the crew. Oxygen is stored in a gaseous condition in high pressure tanks and the CO_2 is absorbed by a LIOH system. Water is stored because of EEM's short activation time. The cabin atmosphere is purified by a charcoal filter. The largest single item is the thermal and humidity control unit for the cabin and suit atmosphere. This maintains a pressure of 5 psi in the cabin and 3.5 psi minimum O_2 pressure in the suits. Survival kits and spacesuits are also included in the total weight, which amounts to 732 pounds for a six-man crew based on a 24-hour operational requirements.

Electrical Power--A hydrazine fuel cell is used to produce the electrical power. The oxygen for the fuel cells is stored in the gaseous state in high pressure bottles. The system includes power conditioning units, cabling and junction boxes, and emergency rechargeable batteries. It weighs 659 pounds for the six-man vehicle.

Table 4.2-27: CARGO RETURN

Sample and Data Return	Weight (lb)	Power (watts)	Volume (cu ft)
Sedimentary Samples	180	--	1.2
Stratigraphic Records	12	--	.2
"Long" Core Samples	450	--	4.2
Photographic Records	6	--	.1
Surface Soil Samples	150	--	1.0
Water Samples	8	--	.1
Environment Data	6	--	.1
Tape Recordings	12	--	.2
Ice Samples (includes refrig)	28	150	1.1
Specimens (lichen, algae, etc.)	60	--	1.0
Total Sample and Data Return	912	150	9.2

Attitude Control--The vehicle's attitude is controlled by a combination of rocket jets and a fluid mass balance system. The quoted weights include the jets, the storable propellants (MMH and nitrogen tetroxide), the tank pressurant gas (N_2), the autopilot electronics, and the mass balance system. The total subsystem comes to about 6.75% of the total vehicle weight. Of the subsystem total of 1120 pounds for the biconic (V_E = 60,000 fps), about 440 pounds are chargeable to the mass balance system. Water is pumped from one tank to another at opposite ends of the vehicle to balance out the shift in center of mass, caused by the mass loss by ablation of material from the assymmetrical heat shield.

Recovery--The recovery system includes all items used to recover the vehicle after reentry, i.e., the parachutes, the touchdown retrorockets, the flotation bags (used for upright flotation in water), and the crush structure. The entire recovery system amounts to about 5.25% of the overall vehicle weight (before ablation).

Three parachutes are used to obtain a final descent velocity of about 30 fps. These are housed in canisters in the aft end of the vehicle and are deployed through small hatches in the tail. Any two parachutes will produce a descent velocity of 37 fps (11 m/sec) while about 53 fps (16 m/sec) will be attained with only one parachute functioning. The parachutes constitute by far the largest single portion of the recovery system, weighing about 586 pounds for a 17,150-pound vehicle (around 3.42% including canisters).

Just prior to touchdown, the retrorocket, mounted either on the bottom of the vehicle or possibly on the parachute riser cable, is fired to reduce the descent velocity to near zero. A telescoping feeler or fish pole is extended below the capsule for a few feet. On contacting the

ground, a switch is closed which fires the retrorocket. The rocket is of the solid propellant type and is sized so that the vehicle experiences about 3 g for about 0.5 second. The length of the feeler would have to be only 93 inches to cause the vehicle to touch down with zero velocity. The rocket weighs about 144 pounds including its nozzle and case, or about 0.84% of the vehicle weight.

In case of failure of the retrorocket (or rockets), or in case of a failure of one or more parachutes, crush structure is provided. This backup mode would protect the crew, but the structure would probably not withstand the hard landing.

For water landing, the vehicle should float with the main crew access hatch up. The biconic vehicle is marginally stable in flotation and in a choppy sea would have a decided tendency to flip over and float on its back with the hatch under water. Three bags were provided, and a nitrogen bottle is used for inflation.

Heat Shield--An iterative method was used in calculating the heat shield thicknesses and weight that accounted for the effects of vehicle size, drag parameter, mass loss, and shield thickness linearization. The aft shield weights were based on the assumption of a constant thickness over the entire area. This assumption is reasonable since the whole afterbody is shaded from the main flow.

Structurally, the heat shield can be fabricated from 50-50 nylon reinforced phenolic laminate. It can be made in two portions--forward and aft--with a joint at the baseline. Bonding of each portion to the outer surface of the structural pressure vessel could be effected by a high temperature adhesive. The vehicle would be assembled at the major joint after installing the major internal components and equipment. Final structural integrity can be assured by an internal bolted, area-sealed flange, while the shield joint is sealed with an adhesive of phenolic material. Local joints in the shield must be provided for hatches, ports antennas, etc., and all possible care must be exercised to keep such joints behind the flow line, i.e., on the aft or shaded portion of the vehicle.

Structure--A double-wall structure similar to Apollo structure was used for the study EEM. Each wall structure consists of brazed honeycomb stainless steel outer panels and aluminum honeycomb inner panels. The ribs also serve as attachment points for equipment. The structure has an overall average thickness of six inches being somewhat thicker in the nose section and thinner in the leeward areas.

Reliability Allocation--Based on an overall system probability of mission success of 0.969, a probability of 0.9968 is allocated for the EEM. A detailed analysis of EEM reliability was not accomplished for this study.

EEM Weights--Figure 4.2-42 showed a representative biconic EEM and a weight statement for an EEM capable of entering at a velocity of 60,000 fps. During the IMISCD study the EEM concept was to configure an EEM optimized for a 65,000-fps entry velocity so as to provide the lightest weight EEM for the high energy missions and their associated higher entry speeds. In the

interests of commonality, this vehicle would be modified in a minimal manner to reduce its weight for missions with lower velocity entry velocities. The modifications consist of a new tailored heat shield and off-loading the attitude control system propellant tanks and the recovery system landing rocket to meet the requirements of particular missions. With the exception of these items, the weight and the configuration of the EEM remain the same for all missions. Figure 4.2-43 illustrates the EEM weight variation with entry speed. Also shown are the entry velocities for some representative missions.

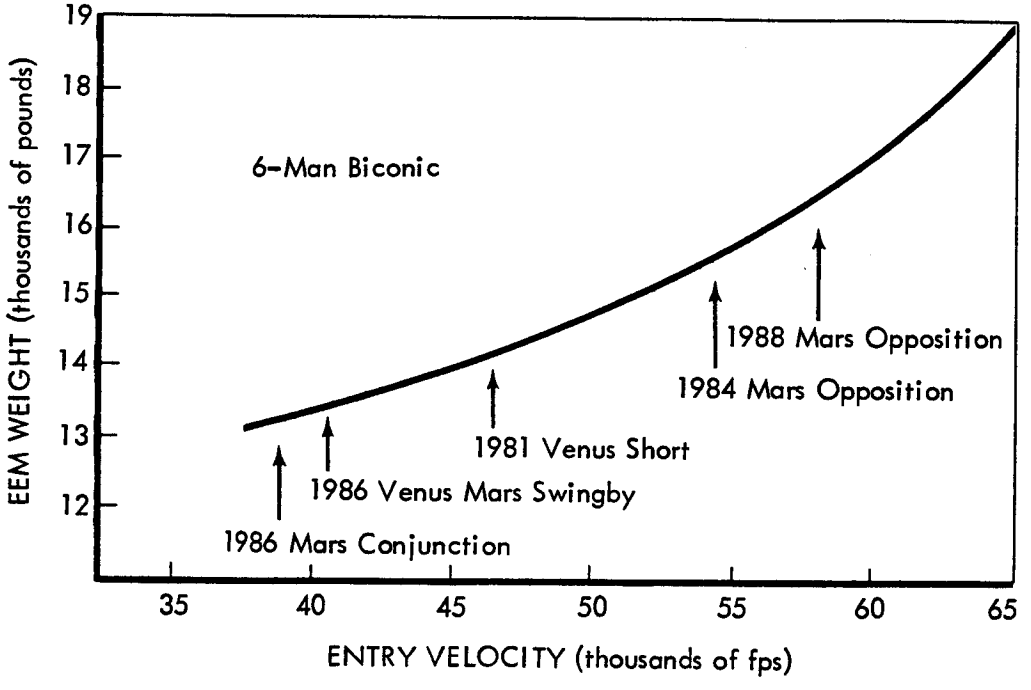

Figure 4.2-43: EEM WEIGHT VERSUS ENTRY VELOCITY

4.2.4.3 EEM Trades

The biconic and Apollo-type EEM's were the two candidates considered for use on the IMISCD study space vehicles. Trade studies were performed that compared these two types of EEM's on a weight and on a cost basis. Studies of an Apollo-type EEM performed by North American Aviation under Contract NAS8-18025 indicated that the Apollo shape has a capability of entering the Earth's atmosphere at velocities up to 55,000 fps (16,750 m/sec). For greater entry velocities, the Apollo shape requires a retropropulsion system capable of reducing the entry velocity to 55,000 fps (16,750 m/sec).

EEM Weight Trades--The designs of the biconic and the Apollo-type EEM's used in this weight trade study were selected to retain a large degree of commonality within the respective shapes over the range of entry velocities

evaluated. The biconic EEM configuration was selected to be optimum for a 65,000-fps (19,800 m/sec) entry velocity. Its weight was reduced for lower entry velocities by substituting a new heat shield and off-loading attitude control and landing retrorocket propellant. The Apollo-type EEM configuration was designed for its maximum entry velocity of 55,000 fps (16,750 m/sec). Its weight was reduced for lower entry velocities in the same manner as was done for the biconics EEM. For entry speeds greater than 55,000 fps (16,750 m/sec), the Apollo EEM's weight was increased to include a retropropulsion system capable of reducing the entry velocity to 55,000 fps (16,750 m/sec). The other criteria used conformed to that listed in Section 4.2.4.1 except for equipment placement dictated by the Apollo shape.

The results of the weight trade study are shown in Figure 4.2-44. At an entry speed of 55,000 fps (16,750 m/sec), the Apollo shape is lighter than the biconic by approximately 450 pounds. As entry velocity decreases, this weight differential increases moderately. At 40,000-fps entry speed, the Apollo EEM is about 1460 pounds lighter than the biconic EEM. However, at entry velocities greater than 55,000 fps (16,750 m/sec), the weight of the Apollo and required retro system increases drastically compared to the biconic weight. At an entry velocity of 60,000 fps (18,300 m/sec), the Apollo weighs over 10,000 pounds more than the biconic and, at 65,000-fps (19,800 m/sec) entry speed, weighs over 25,000 pounds more.

Unfortunately, the higher entry velocities occur on the short-trip time, high-energy, opposition missions which require the largest IMIEO space vehicles. Keeping in mind the large leverage factor of the EEM weight on space vehicle IMIEO, the desirability of using the biconic EEM on the high energy missions is evident. Using the biconic EEM with a common module space vehicle on a mission with a 65,000-fps (19,800 m/sec) entry velocity would result in a space vehicle IMIEO that would be approximately 150,000 pounds lighter than if an Apollo-type EEM were used. If a tailored module spacecraft were used on a similar mission, the IMIEO difference would be much greater, possibly as much as 375,000 pounds.

On the lower energy missions, which have lower Earth entry velocities, the difference in weight between the biconic and Apollo is small and favors the Apollo shape. For example, the biconic EEM is 1460 pounds heavier than the Apollo for a 40,000-fps (12,200 m/sec) entry velocity. This difference increases the biconic equipped common module space vehicle IMIEO by 8760 pounds as compared to one using an Apollo-type EEM. For a tailored module space vehicle, this difference could be as much as 21,000 pounds.

In summary, the weight trade shows considerable weight saving on the space-vehicle IMIEO when the biconic EEM is used on missions with entry velocities above 55,000 fps (16,750 m/sec) and only small IMIEO penalties when used on missions with entry velocities below 55,000 fps (16,750 m/sec) as compared with use of an Apollo-type EEM.

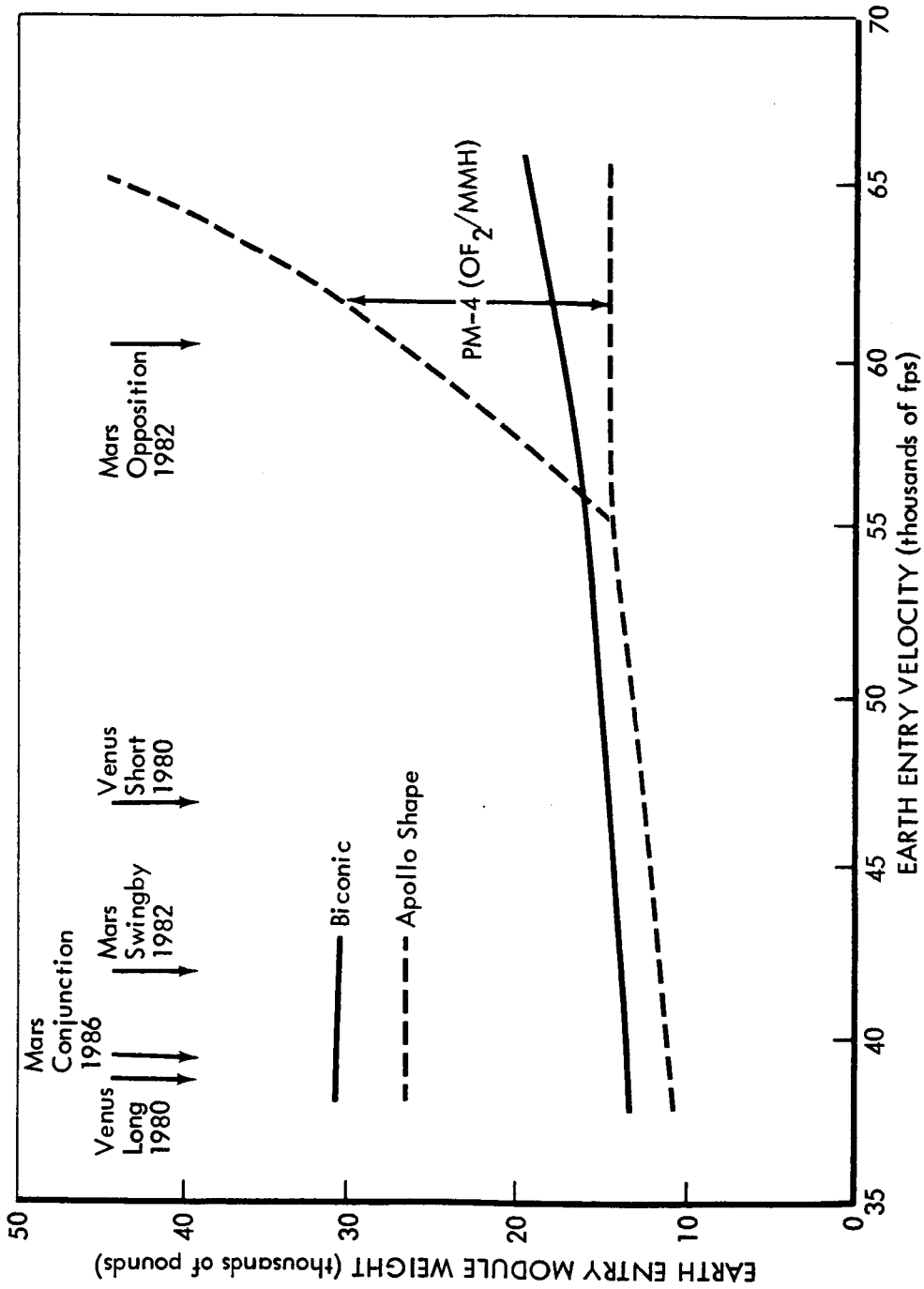

Figure 4.2-44: EARTH ENTRY MODULE WEIGHTS

EEM Cost Trades--A comparison of the costs of developing the biconic and Apollo-type EEM's was also made. The Apollo-type EEM is a new vehicle design and is not a modified Apollo. The costs include fixed research and development, test, and recurring costs for a five-mission program. These costs are summarized in Table 4.2-28.

Table 4.2-28: COST IN MILLIONS OF DOLLARS

	R&D	Test	Total Fixed	Five-Mission Recurring	Total Program
Apollo EEM	950.6	272.8	1223.4	184.2	1407.6
PM-4 Retro	52.0	30.0	82.0	24.2	106.2
Apollo + Retro	1002.6	302.8	1305.4	208.4	1513.8
Biconic EEM	1007.5	291.7	1299.2	196.2	1495.8

The costs of the two types of EEM's are nearly the same, since both are new vehicles and use the same structural techniques and subsystems. The costs of the Apollo EEM without a retro system are somewhat less than the biconic because the shape of the biconic is more complex than the Apollo. Also, more detailed data are available for the Apollo shape. However, when the cost of the retropropulsion system required for the Apollo at the higher entry velocities is added in, the Apollo EEM becomes slightly more expensive than the biconic EEM.

The biconic EEM was chosen for use on the IMISCD study space vehicles because of its considerable weight savings on high energy missions and small weight penalties on the low energy missions as compared to use of an Apollo EEM. The costs of the two vehicles are comparable.

Alternate--The Apollo-type EEM was selected as an alternate to the biconic. The Apollo and the biconic EEM's are similar as to structural techniques (i.e., both utilized double-wall honeycomb panel construction) and use the same subsystems. The same design criteria is used for the Apollo as is listed in Section 4.2.4.1 for the biconic, except for subsystem locations which will vary because of the different shapes of the two vehicles. The retropropulsion system consists of a 15,000-pound-thrust engine that burns OF_2/MMH propellants. The size of the propellant tanks were varied in three steps to provide variable retro capability for different missions.

Figure 4.2-45 illustrates a representative configuration and weight statement for an entry velocity of 60,200 fps (18,350 m/sec). Figure 4.2-46 shows the Apollo-shape entry capability as evaluated under Contract NAS8-18025 by North American Aviation.

Weights:	
Crew & Seats	1362 pounds
Controls	270
Guidance & Navigation	300
Communications	185
Science	912
Life Support	733
Electrical Power	659
Attitude Control	991
Recovery	771
Heat Shield	3550
Structure	3575
Contingency	1477
55,000-fps EEM	14,785 pounds
Retro-6,000 fps	12,270
61,000-fps EEM	27,055 pounds (12,272 kg)
EEM Diameter	13.6 ft (4.1 M)
EEM Gross Volume	754.0 ft^3 (21.4 M^3)
Volume/Man	40.0 ft^3 (1.13 M^3)

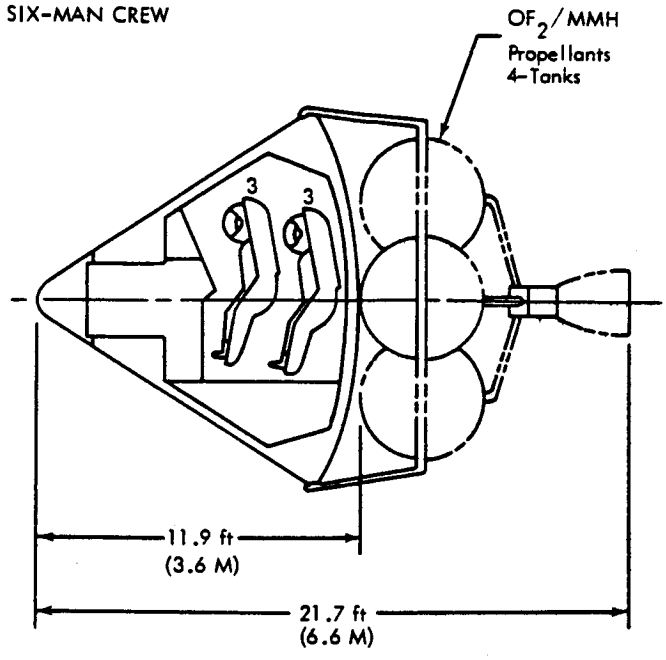

Figure 4.2-45: APOLLO-TYPE EEM

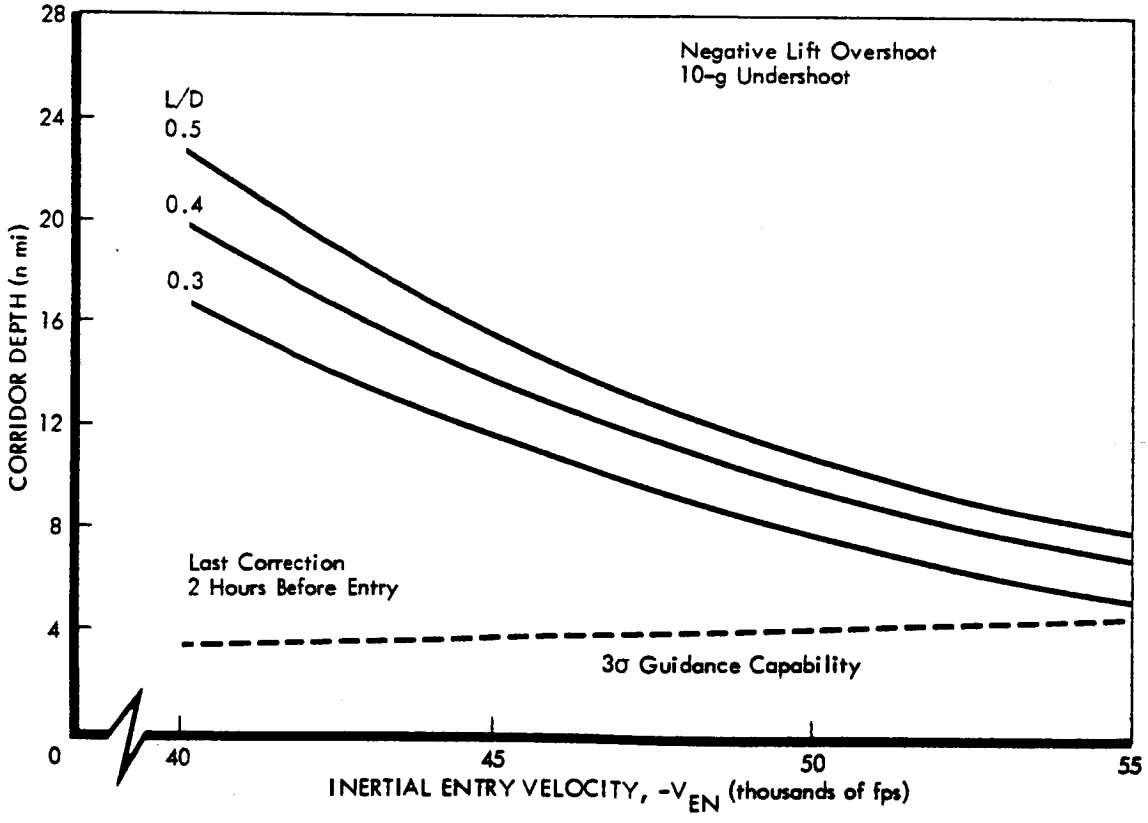

Figure 4.2-46: APOLLO SHAPE ENTRY CAPABILITY

4.3 SPACE ACCELERATION

Five propulsion modules make up the primary space acceleration systems. As described in Section 4.1, these five common modules are assembled in orbit in a 3-1-1 inline propulsion train. All have the same general characteristics, that is, the tank diameter--33 feet; the tank length--115 feet; Nerva II nuclear engine; and meteoroid shields and interstages that are the same for each of the five modules. The recommended common-module concept benefits from this common tank geometry but derives its greatest benefits from its use of propellant transfer to adjust stage ΔV capability to mission ΔV requirements, since, if the concept only embodied common tank geometry, it would represent nothing more than a modular approach to propellant tankage. However, with propellant transfer, PM-1 can use propellant from PM-2 and PM-3, and PM-2 can use propellant from PM-3. Thus, variations in Earth departure, planet braking, and planet departure PM's requirements that occur with different missions, are accommodated by propellant transfer rather than by a large number of tanks specifically tailored to meet all the individual requirements. An inboard profile of a propulsion module is shown in Figure 4.3-1.

Investigation of the elements as a system showed that gains in weight, cost, and test requirements result when the propellant tank is supported within an outer shell which carries launch loads and serves as a meteoroid bumper. The investigation also revealed that IMIEO savings could be obtained by eliminating any structure required by Earth launch conditions but not required by flight conditions, and by eliminating the meteoroid shield from the propellant tank prior to engine ignition. General criteria used to design each propulsion module of the space acceleration system are as follows; more detailed criteria are included within the description of the individual elements:

1) Provide two engine interstages. The outer interstage shall be designed for Earth launch condition and shall be removed prior to the completion of the in-orbit assembly operation. The inner interstage shall be designed for inflight and docking load conditions.

2) Provide a meteoroid shield along the propellant tank length to withstand Earth launch loads and the space meteoroid environment which is capable of being shed prior to engine burn.

This section will discuss, in order, the propulsion module structure, the Nerva II nuclear engine, stage equipment propellant transfer, and propellant storage.

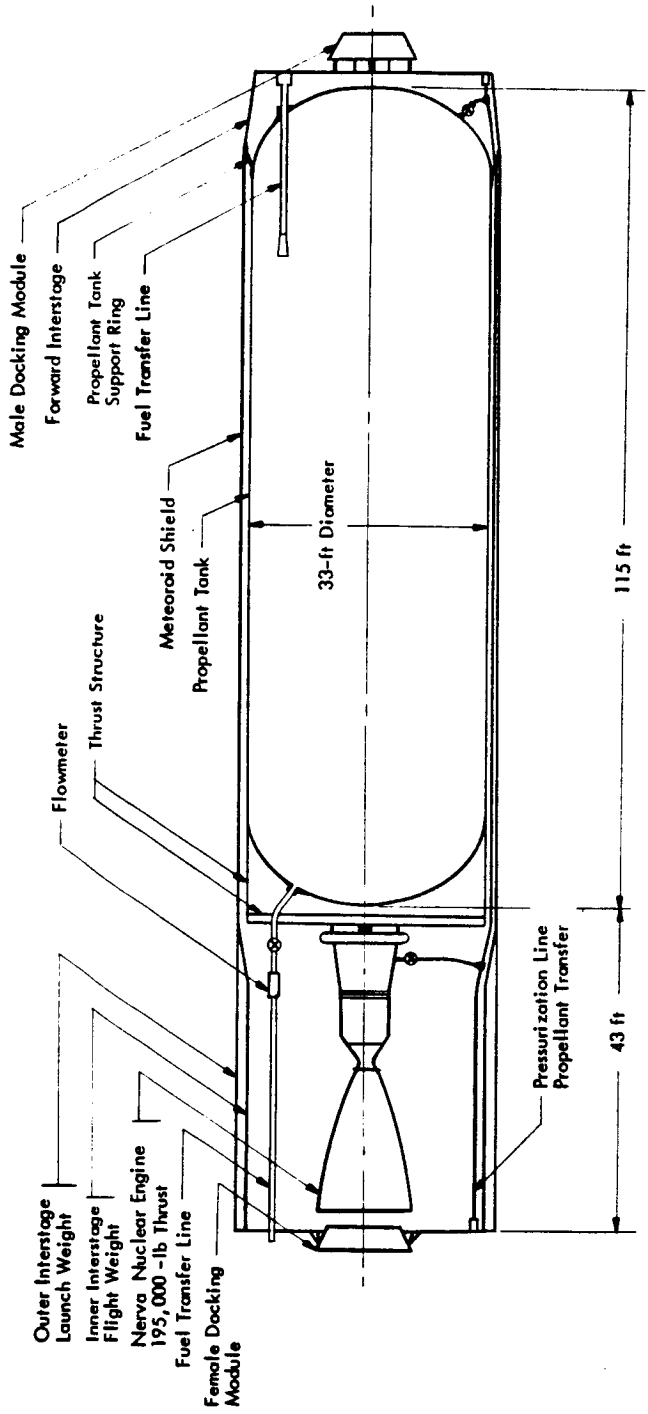

Figure 4.3-1: PRIMARY PROPULSION MODULE

4.3.1 PRIMARY PROPULSION MODULE

4.3.1.1 Propulsion Module Structure

The propulsion module structure consists of 1) a propellant tank along with its associated thrust structure and engine support, 2) a meteoroid shield, 3) forward interstage, and 4) aft or engine interstage.

1) Propellant Tank - Thrust Structure and Engine Support--Aluminum, 2219-T81, was chosen for propellant containment because of its light weight, fracture toughness, and good crack propagation characteristics at liquid hydrogen temperatures. This is especially important for the IMISCD tank design because 70% of the tank wall thickness is included in the meteoroid shield calculations as the third sheet of a two-sheet bumper analysis. As shown in Figure 4.3-1, the 33-foot diameter-115-foot long propellant tank is a conventional welded pressure vessel that is not integral with the Earth launch load-carrying structure. This permits deployment of the launch load-carrying engine interstage and the meteoroid shield prior to start burn, and reduces heat shorts. Its design is based on a maximum pressure of 30 psia plus the hydrostatic pressure (from LH_2) resulting from an acceleration during Earth launch of 4.2 g. With the loads resulting from these pressures and an allowable design stress of 39,000 psi (based on a yield critical value of 45,000 psi and a factor of safety, FS = 1.155) tank wall thickness and weights are determined. Further details on tank structural design and weights are given in Section 4.4.2.

Tank length was chosen so that a propellant volume capacity equal to a full ELV payload capability was available. Figure 4.3-2 shows how the aerospace vehicle length will vary with ELV payload capabilities. The design point noted identifies our recommended tank length of 115 feet. This length is associated with the payload capability of the SAT-V-25(S)U ELV. The Commonality Trade Study, Section 7.2, explains the selection rationale of the ELV, and thus, the tank length.

The tank configuration consists of a cylindrical section capped with bulk-heads which are elliptical ($\frac{r}{R}$ = 0.70) to provide a tank which is shorter by approximately 6 feet but equal in volume to a tank with a conical thrust structure. The tank is attached to the outer shell by a fiberglass conical support ring at the forward Y ring. Lateral tension ties at the thrust structure maintain the spacing between the tank and the outer shell. The thrust structure extends as a cylinder from the propellant tank lower Y ring aft to the engine support beams. The engine support is a cross-beam structure attaching to the thrust structure at four places. The intersection of the beams at the longitudinal center-line is reinforced to accept the Nerva II engine gimbal attachment. Plumbing, valves, and all engine control equipment are contained within the cross-beam structure. The propellant tank walls, bulkheads, thrust structure, and cross-beams are covered with a blanket of multilayer insulation. This concept is shown in Figure 4.3-3. Another approach that may be preferable is one where the thrust structure and the engine it supports are mounted directly to the central portion of the aft elliptical dome. This latter concept, which was not considered in the study, could be substituted for the illustrated concept without impacting any of the study results.

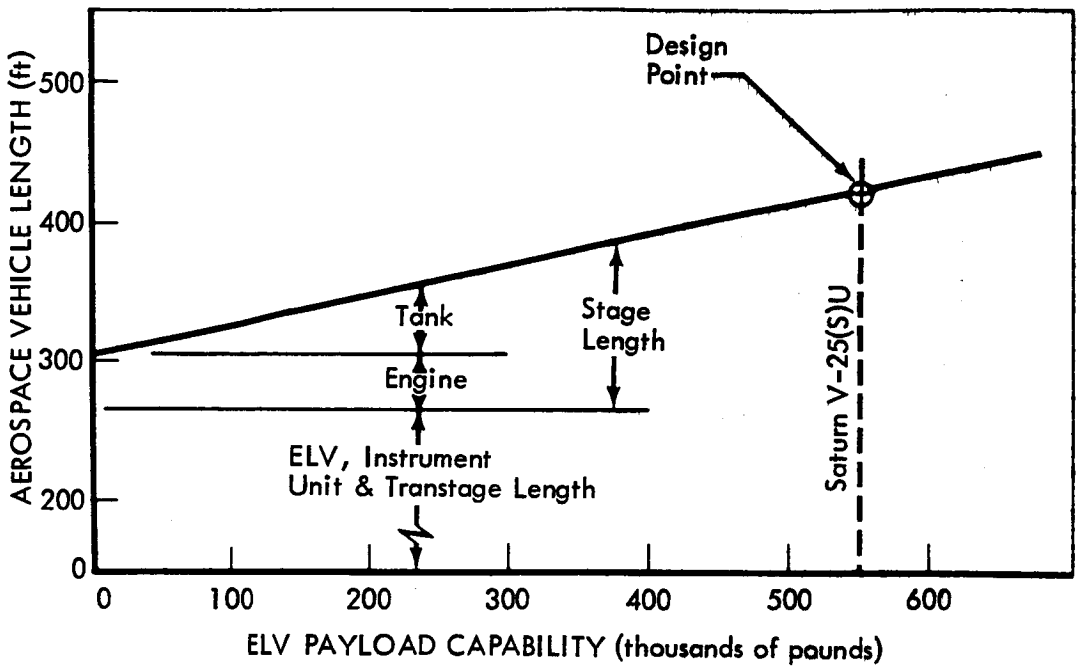

Figure 4.3-2: VEHICLE HEIGHT VERSUS PAYLOAD CAPABILITY

Tank Material Selection--Due to the long-term storage and meteoroid environment, the hydrogen tank material selection is primarily based on fracture toughness criteria. Strength criteria is not predominant due to the relatively low operating pressure. Material compatibility must be considered, but, in general, stress corrosion is not a serious problem with hydrogen. Fatigue and corresponding reduction in strength is not critical because of the expected low stress corrosion and minimum cyclic testing at cryogenic temperatures. Weldability and good weld properties are definitely prerequisite requirements.

Fracture toughness is a material property used to measure the ability to inhibit crack propagation from a starting flaw or damage size. The hydrogen tank and meteoroid bumper design includes the probability of meteoroid particle or bumper material ejecta impingement upon the tank pressure shell. As far as the pressure vessel material selection is concerned, such damage can be treated as flaws and examined by the methods currently being developed for fracture mechanics.

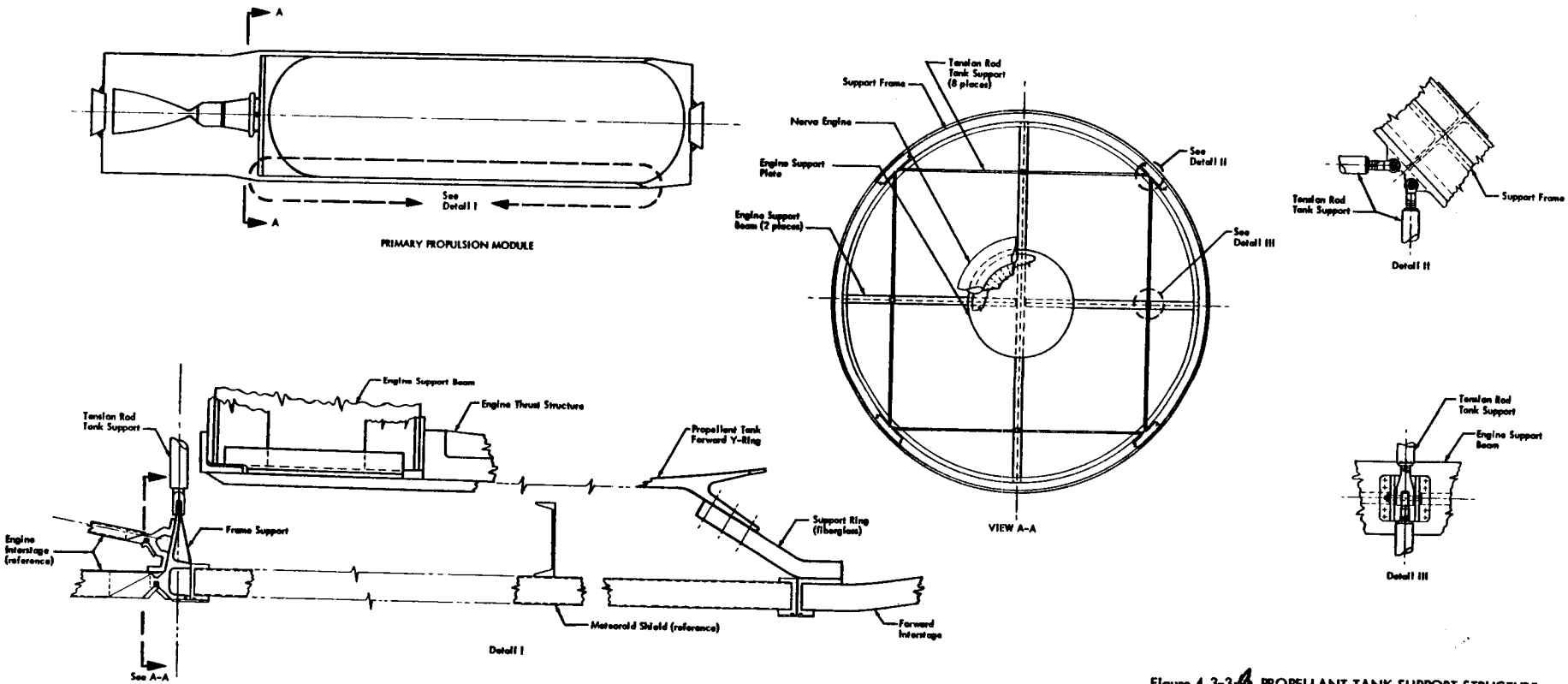

Figure 4.3-3:A PROPELLANT TANK SUPPORT STRUCTURE PRIMARY PROPULSION MODULE

& 178

177 Fig. 4.3-3:A

FOLDOUT FRAME

FOLDOUT FRAME

Fracture toughness is measured by a critical stress intensity term which is a function of the applied stress and the flaw shape:

$$K_{Ic} \propto \left(\frac{a}{Q}\right)^{1/2} \sigma$$

where

K_{Ic} = fracture toughness

a = flaw depth

Q = flaw shape parameter ($0.8 < Q < 2.1$)

σ = applied stress

Figure 4.3-4 shows various general materials and the range of critical flaw depth for various stress levels. At the 30-psi operating pressure of the hydrogen tanks, a wall thickness times stress product in the order of 7000 lb/in. is required. It can be noted that only the aluminum alloys offer enough material to sustain large flaws without being over-designed. That is, titanium, steel, and high-strength aluminum alloys result in pressure design thicknesses so small that additional material is required to meet fracture criteria. The ranges of fracture toughness indicated in Figure 4.3-4 are for room temperature. At liquid hydrogen temperatures, titanium and steel fracture toughness values reduce as much as 50%, whereas many aluminum alloys maintain relatively constant toughness or reduce only slightly.

Of the aluminum alloys in current development, 2219 offers the highest strength for stringent requirements of weldability, weld strength, and fracture toughness. In fact, the fracture toughness of 2219 can actually increase with decreasing cryogenic temperatures. Other aluminum alloys that may be competitive with 2219 for IMISCD applications include 2021 and 7039. These alloys have not been developed to the extent that cryogenic temperature fracture allowables are known under sustained-life operating conditions.

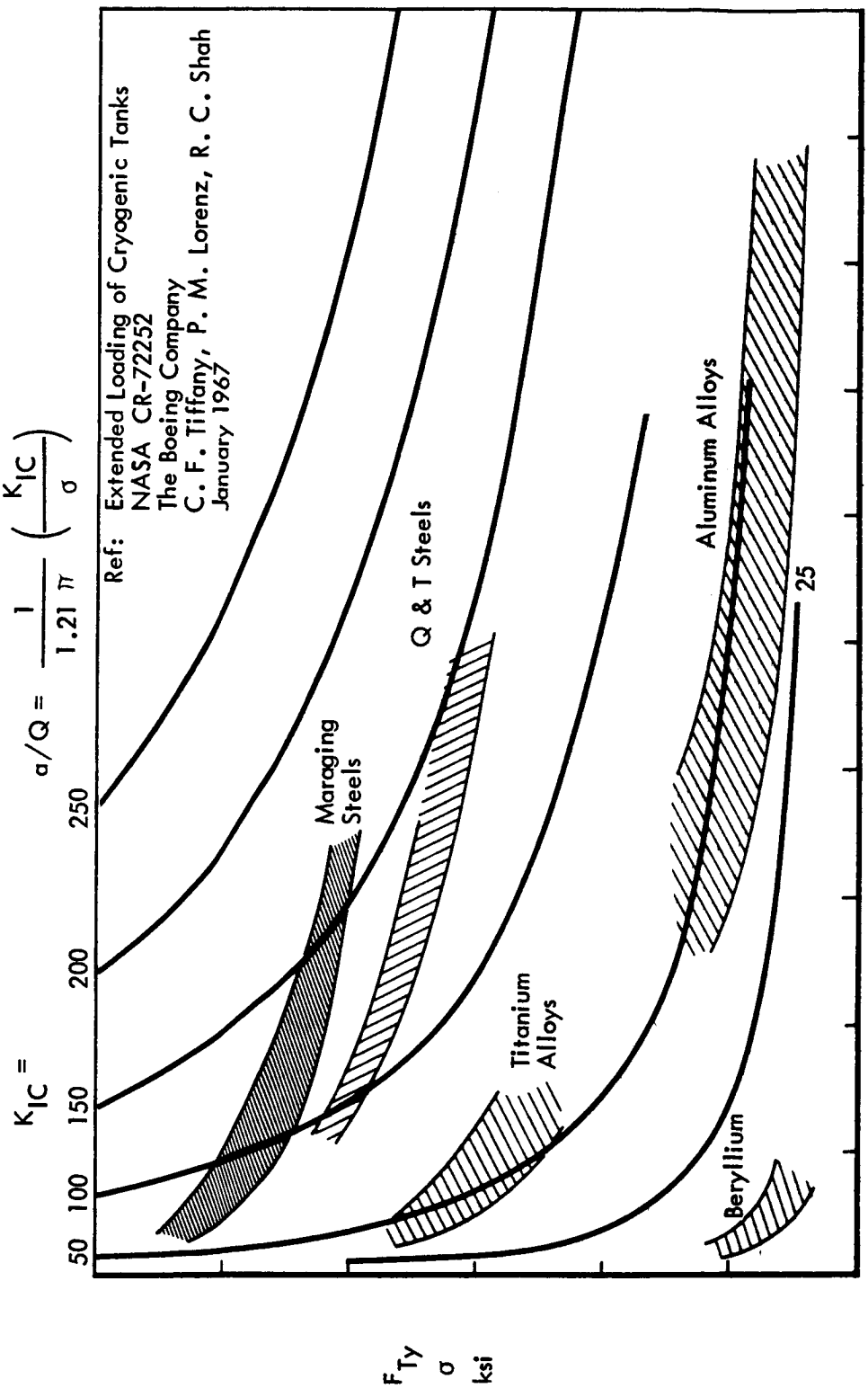

Figure 4.3-4: STRESS VERSUS FLAW DEPTH

2) Meteoroid Shield--The meteoroid shield around each propulsion module extends from the upper Y-ring support structure down to the end of the engine thrust structure. It is constructed from a laminated skin and frame assemblage. The laminated skin is a truss core sandwich which provides both meteoroid protection and load-carrying capability. Its efficiency as a load-carrying member is dependent on both local and general stability considerations for this application. Local stability is a function of the sandwich width-to-thickness ratio of each of the plate elements composing the cross section. This ratio must be low enough to prevent buckling of the truss core. General stability is a function of the moment of inertia of the truss core wall, and hence, the dominant variable is sandwich thickness. This must be large enough to prevent whole-shield buckling between supports. Maximum structural efficiency requires a balance of these two diverging requirements. Meteoroid protection has spacing or sandwich width as the dominant variable for high-velocity particles.

The truss core geometry selected for this study consists of equal-gage faces and core with a 60-degree corrugation pitch angle. This design is optimum for local stability. For general stability, a thinner core gage would be somewhat more efficient. The sandwich thickness was chosen as the minimum spacing consistent with meteoroid protection sheet separation distances. This choice was made to improve the local stability of the truss core design.

In evaluating the shielding capability of the truss core, one-half the gage thickness of the core was added to each of the face sheets which, along with 70% of the pressure wall, was then analyzed as a three-sheet barrier.

Figure 4.3-5 shows the truss face sheet thickness requirements, $t_1 + t_2$, as a function of exposure time for a probability of no penetrations, P_o, of 0.997. Further details on meteoroid protection shield analysis and weights can be found in Section 4.4.2.1. It can be seen that the strength requirements dominate at the lower exposure levels, with meteoroid protection requirements dominating when $FA\tau \approx 6 \times 10^6$. For the interplanetary missions, it has been determined that in no case, except for the 1986 Mars conjunction mission, does the meteoroid protection requirement exceed the Earth launch strength requirement for maximum SAT-V-25(S)U payload capability. Since the strength requirements dominate, the truss core was optimized to carry the required load as efficiently as possible. This was achieved by adjusting the sandwich thickness and gage to produce general stability and local stability simultaneously within the frame spacing. The frame characteristics and requirements were derived from the following equation:

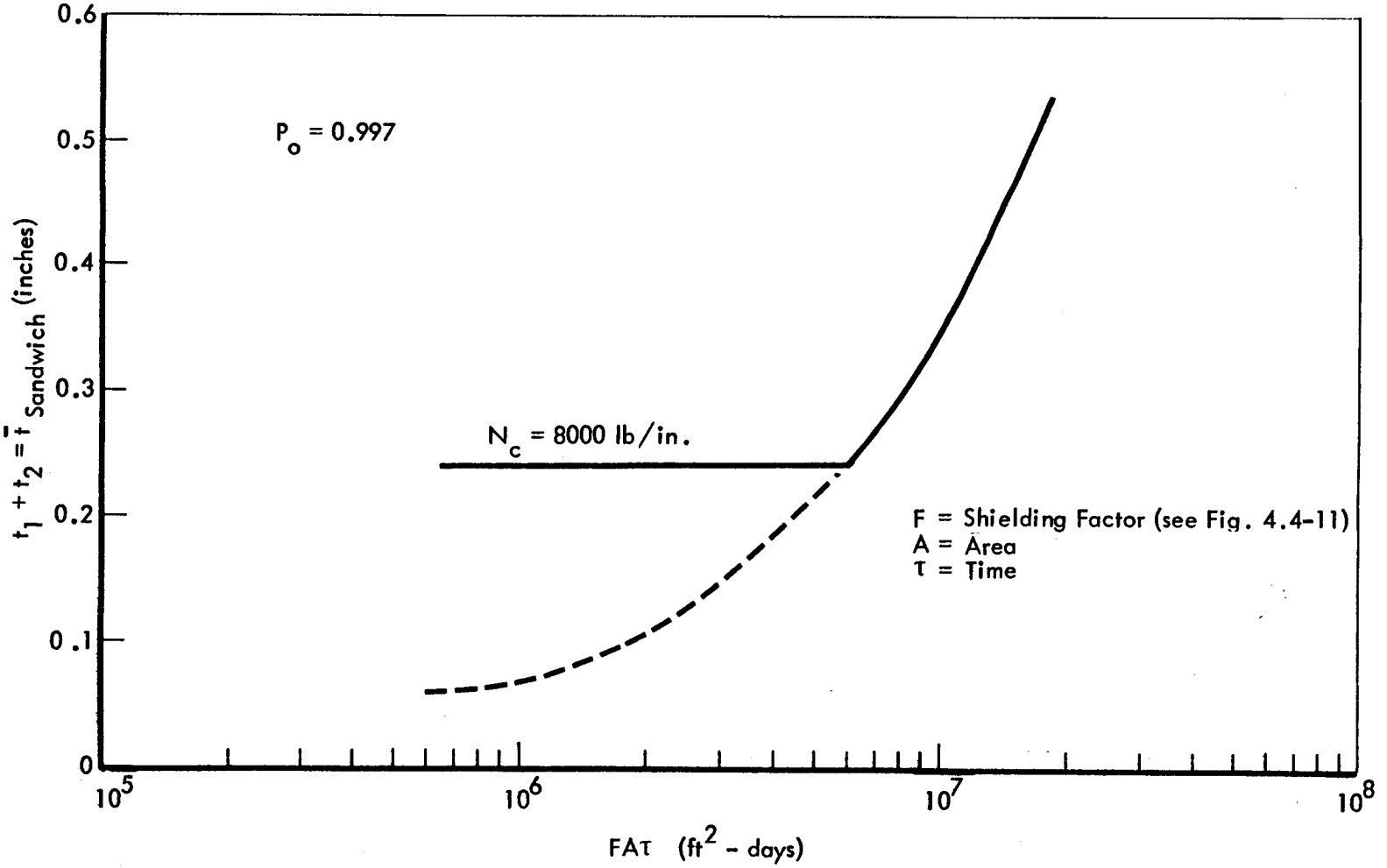

Figure 4.3-5: OUTER SHELL EFFECTIVE THICKNESS REQUIREMENTS

$$I_F = 7.854 \times 10^4 \frac{R^4 N}{EL}$$

where

I_F = Frame moment of inertia

R = Frame radius

N = Running load

E = Frame modulus

L = Frame spacing

The requirement exists to shed the meteoroid shield just prior to ignition from each propulsion module. A structural concept for accomplishing the shedding operations is shown in Figure 4.3-6. The cylindrical shield is segmented circumferentially into four elements. Each element has bonded on its four edges a channel for load transfer to adjoining structure. Hoop straps on the outside diameter and at frames along the shield secure the four elements together and to adjoining structure. Primacord is used to sever the hoop straps and the frames at each segment joint. Jettisoning energy is provided by compressed springs at the Y ring and thrust structure.

3) Forward Interstages--The forward interstage extends from the propellant tank support ring forward for a length equal to the tank dome. It is a truncated conical section reducing its diameter as it goes forward to match the diameter of the inner engine interstage with which it docks. The male docking mechanism structure is supported at the forward end of the interstage. This interstage is not removable, thus it is designed for both inflight and Earth launch load conditions, with the latter being the controlling design condition. It is a skin-corrugated stringer-frame structure weighing 4.3 lb/ft^2.

4) Engine Interstages--In light of the difference between Earth launch and in-orbit flight loads, and because the length of the Nerva II engine is 40 ft, it appeared desirable to provide two separate interstages, one for each condition. This increases the Earth launch load by the weight of the in-orbit interstage but reduces the interstage mass prior to Earth departure by 50%.

The outer interstage is designed for the Earth boost condition (N_c = 8000 lb/in.) at 4.3 lb/ft^2. It is separated from the tank structure when the in-orbit assembly of the tank is completed. The technique for separation is to sever the forward end from the tank meteoroid shield by a primacord circumferential charge (see Figure 4.3-7). The interstage is then slipped off the inner interstage in the aft direction as a complete sleeve with the transtage attitude control system.

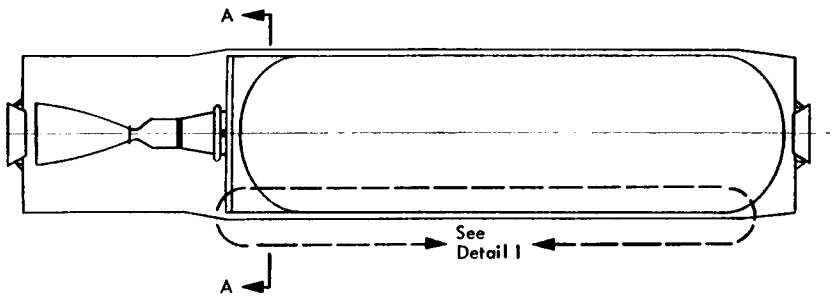

Primary Propulsion Module

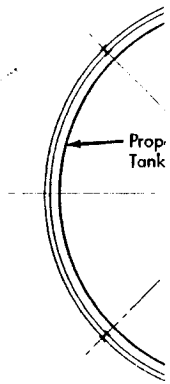

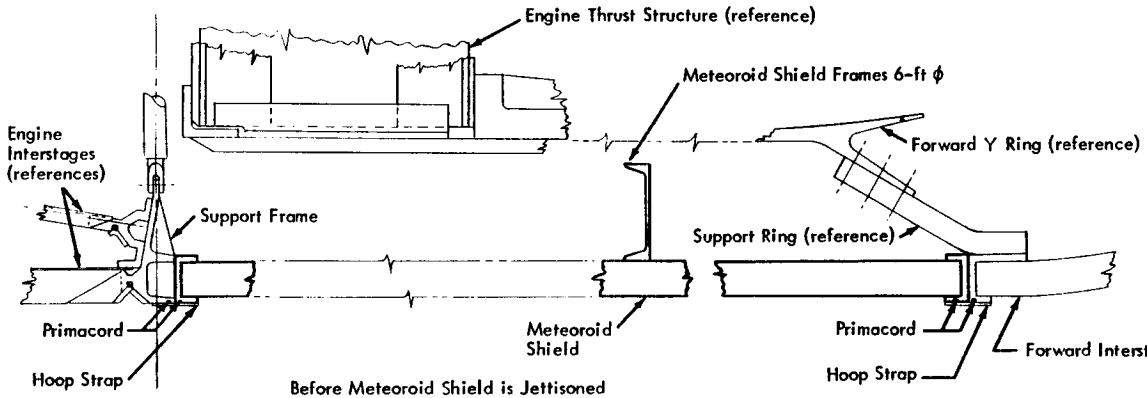

Before Meteoroid Shield is Jettisoned
Earth Launch Condition

Fig. 4.3-6: A

185 A

FOLDOUT FRAME

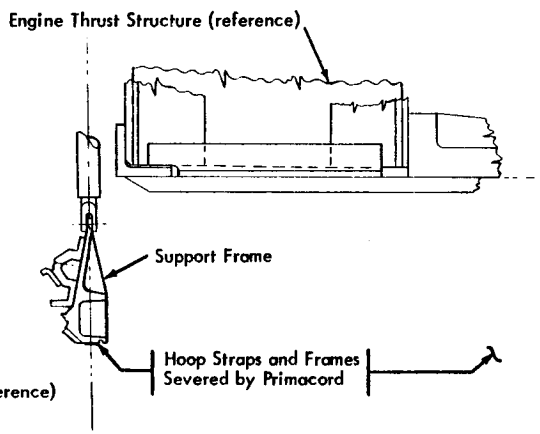

Detail I

Fig. 4.3-6:B

FOLDOUT FRAME

185 B

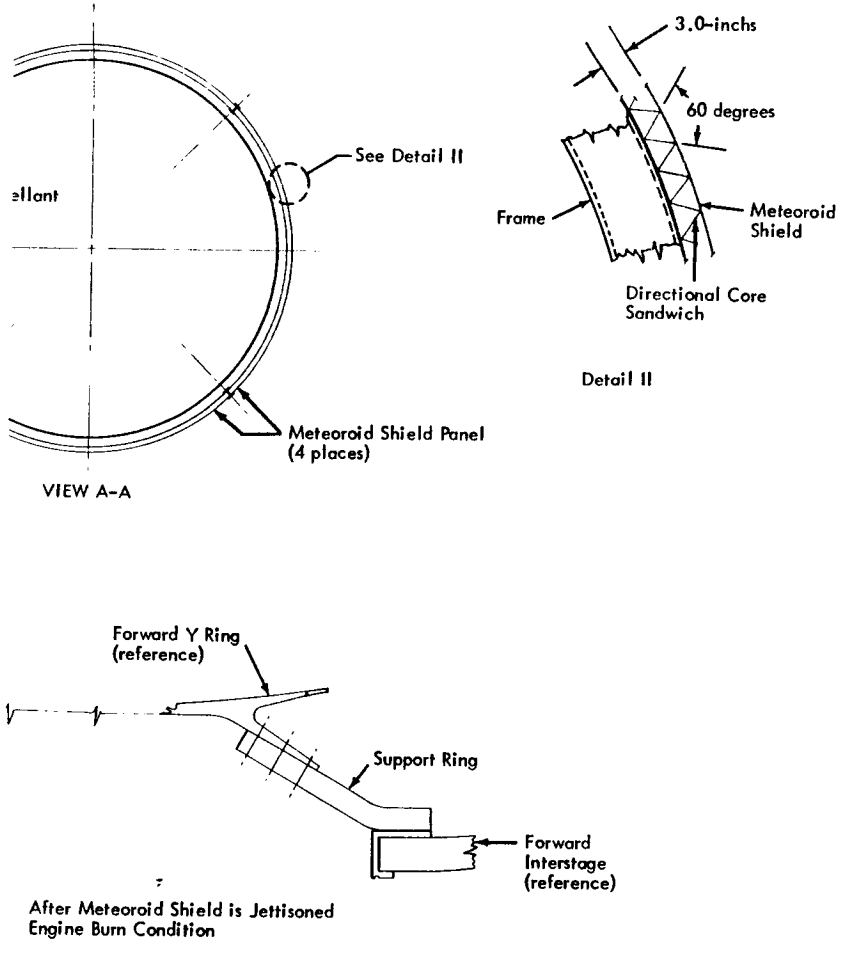

Figure 4.3-6: METEOROID SHIELD STRUCTURE PRIMARY PROPULSION MODULE

Fig. 4.3-6

FOLDOUT FRAME

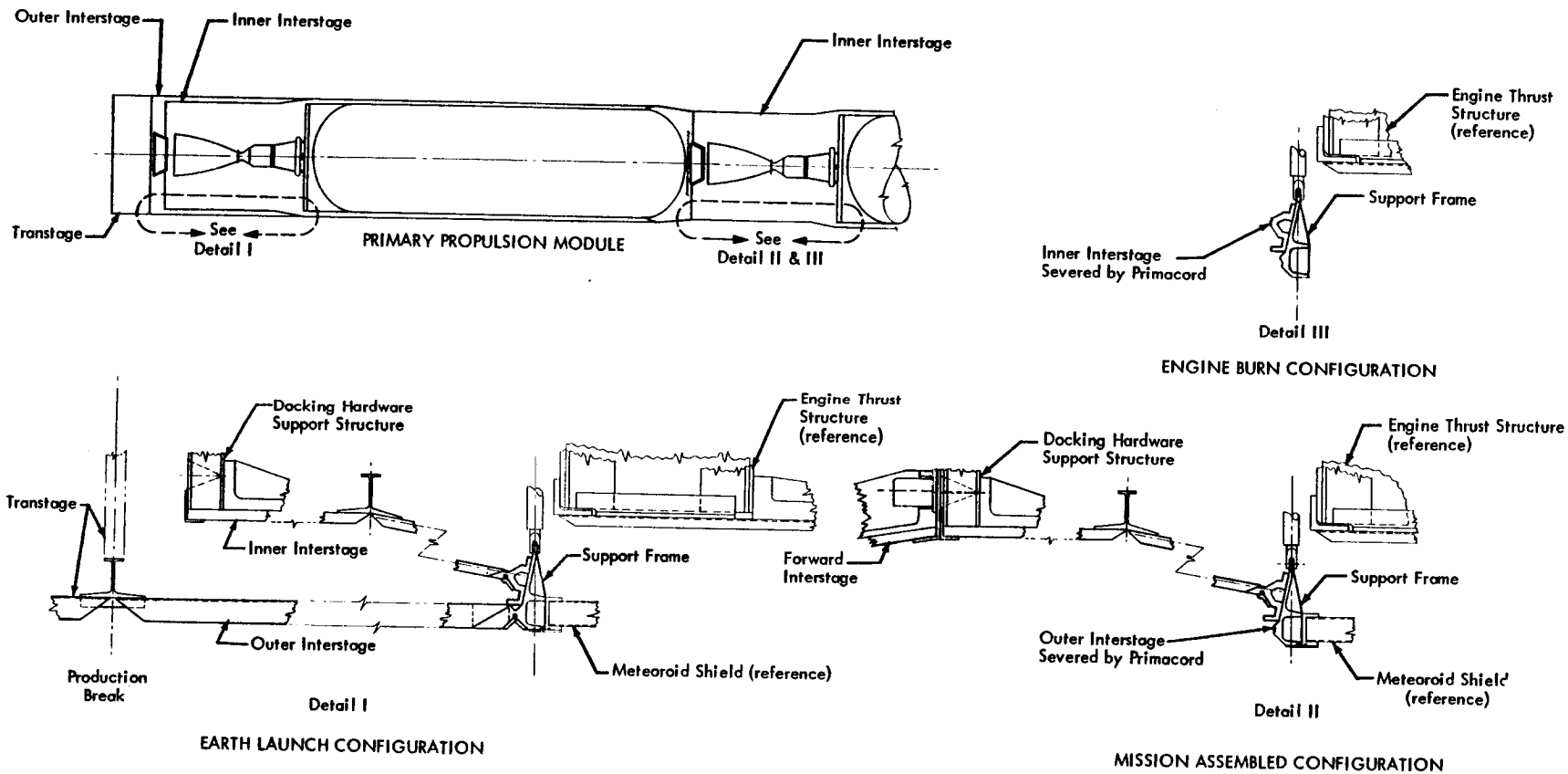

Fig. 4.3-7: A

187

Figure 4.3-7: B ENGINE INTERSTAGE STRUCTURE
PRIMARY PROPULSION MODULE

~~187~~ & 188

The in-orbit flight load would require an interstage weighing 1.11 lb/ft^2. An aluminum interstage of this weight has a sheet thickness below minimum gage, 0.016. When minimum gage material is used, the inner interstage weight comes up to 2.2 lb/ft^2. The inner interstage is staged just prior to engine burn. It is staged by severing the forward edge from the same circumferential frame that the outer interstage was severed from and by the same primacord technique. It is also staged as a complete sleeve. The reason for the complete sleeve instead of clam shelling away in two parts is that the aft frame supports the structure of the female docking mechanism.

Both inner and outer interstages are made of skin-corrugation-frame construction. The approach used in sizing the interstages is a minimum-weight analysis where corrugation dimensions and skin gage are optimized in terms of allowable stress. Stresses are equated for local crippling, column buckling of individual corrugation elements, and applied load. Frames are sized for the applied load and frame spacing, and total weight is optimized on stress level. The method used is as follows:

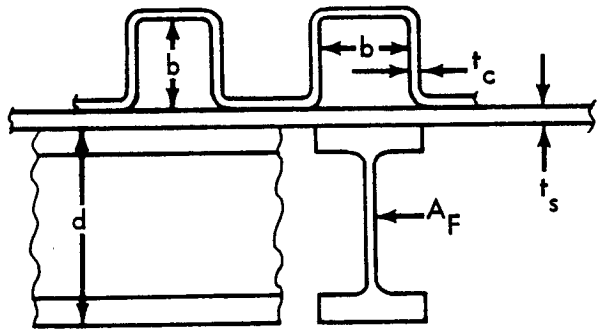

$$\alpha = \sqrt{\frac{F_{cc}}{3.62E_F}} \qquad \beta = \frac{N}{F_{cc}}$$

$$t_c = \frac{\beta - .2126\alpha}{3 + 14.74\alpha}$$

$$t_s = \beta - 2t_c$$

$$b = t_c/\alpha$$

$$\bar{t} = \beta + R^2\sqrt{\frac{N}{E_F}}\ \frac{f(\alpha)}{(\beta - .2126\alpha)^{3/2}}$$

$$L = \left(\frac{R^2}{\bar{t} - \beta}\sqrt{\frac{2.618 \times 10^{-4}\ N}{E_F}}\right)^{2/3}$$

$A_F = (\bar{t} - \beta)L$

N = Running Load - Lb/In.

R = Interstage Radius-In.

L = Frame Spacing

E_F = Frame Modulus

F_{cc} = Allowable Crippling Stress

$\bar{t}$ = Average Weight Gage

$f(\alpha)$ = See Figure 4.3-8.

A_F = Frame Area

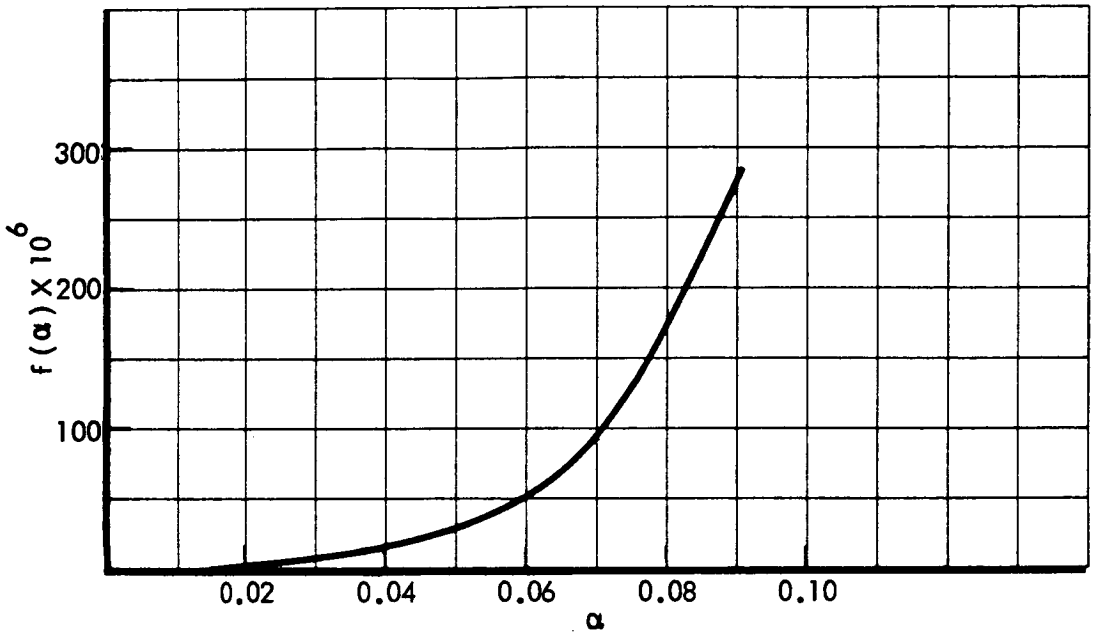

Figure 4.3-8 : LOCAL BUCKLING PARAMETER

4.3.1.2 Nerva Engine Description and Shielding Requirements

The development of a flight-type nuclear engine has not reached the stage where a definitive design can be referenced. Figure 4.3-9 shows the dimensional characteristics of the NASA-furnished engine definition used in the IMISCD study. The following data were furnished for this engine:

- Engine weight less shield and thrust structure weight = 25,540 pounds
- Light shield weight for propellant heating = 1,940 pounds
- Thrust structure weight = 1,050 pounds
- Nozzle exit area ratio = 100:1
- Assumed specific impulse (1980 time period) = 850 seconds
- Reactor power = 4,000 megawatts
- Engine thrust = 195,000 pounds
- Nozzle chamber pressure = 625 psia
- Main nozzle flow rate = 224 lb/sec
- Total propellant flow rate = 239 lb/sec

Simulated Nerva startup characteristics including core power, temperature, chamber pressure, and flow rate are shown in Figure 4.3-10. Similar shutdown characteristics are shown in Figure 4.3-11. The data shown were

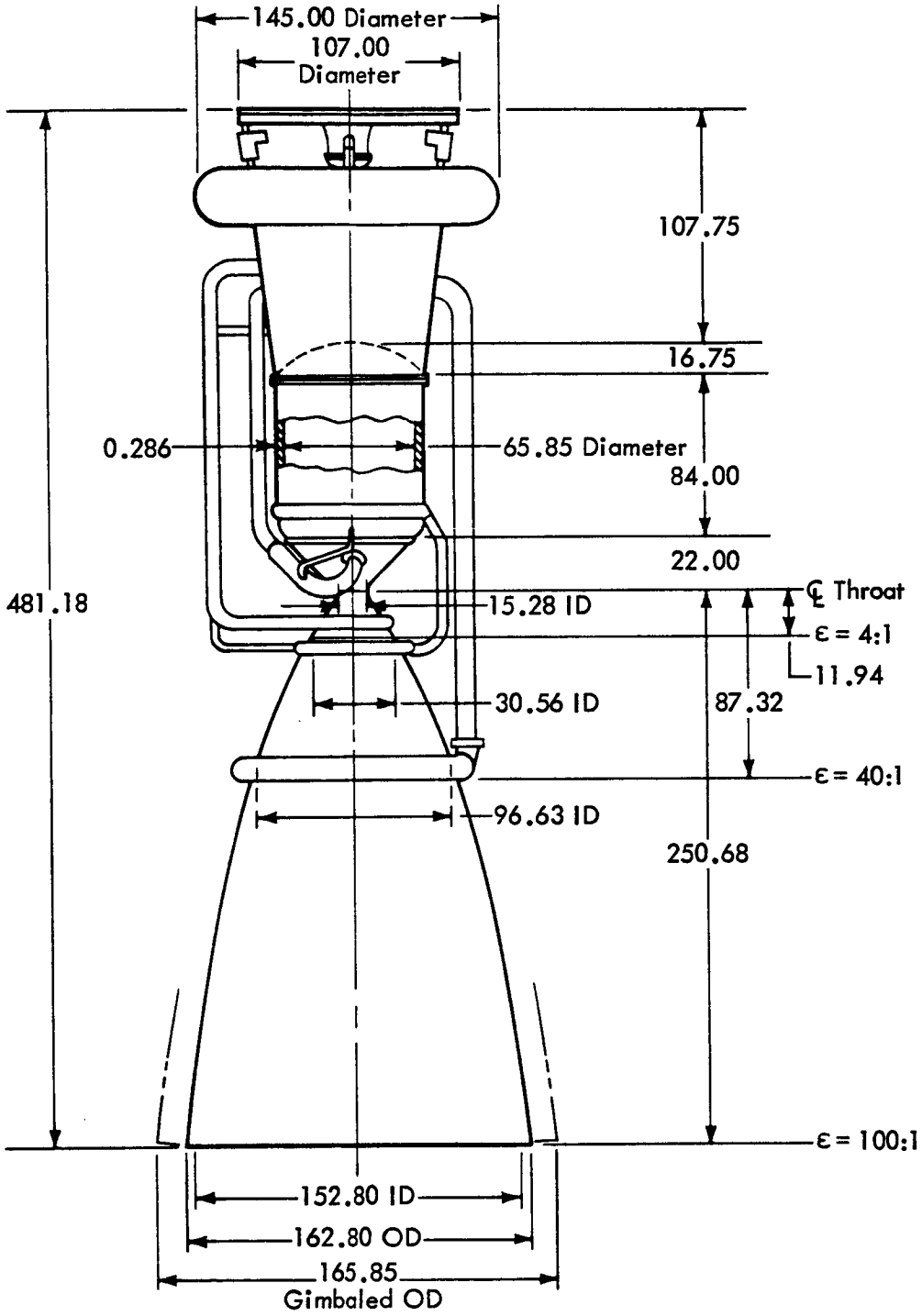

Figure 4.3- 9 : NERVA FLIGHT ENGINE CONCEPT (4000 MW, Pc = 625 psia)

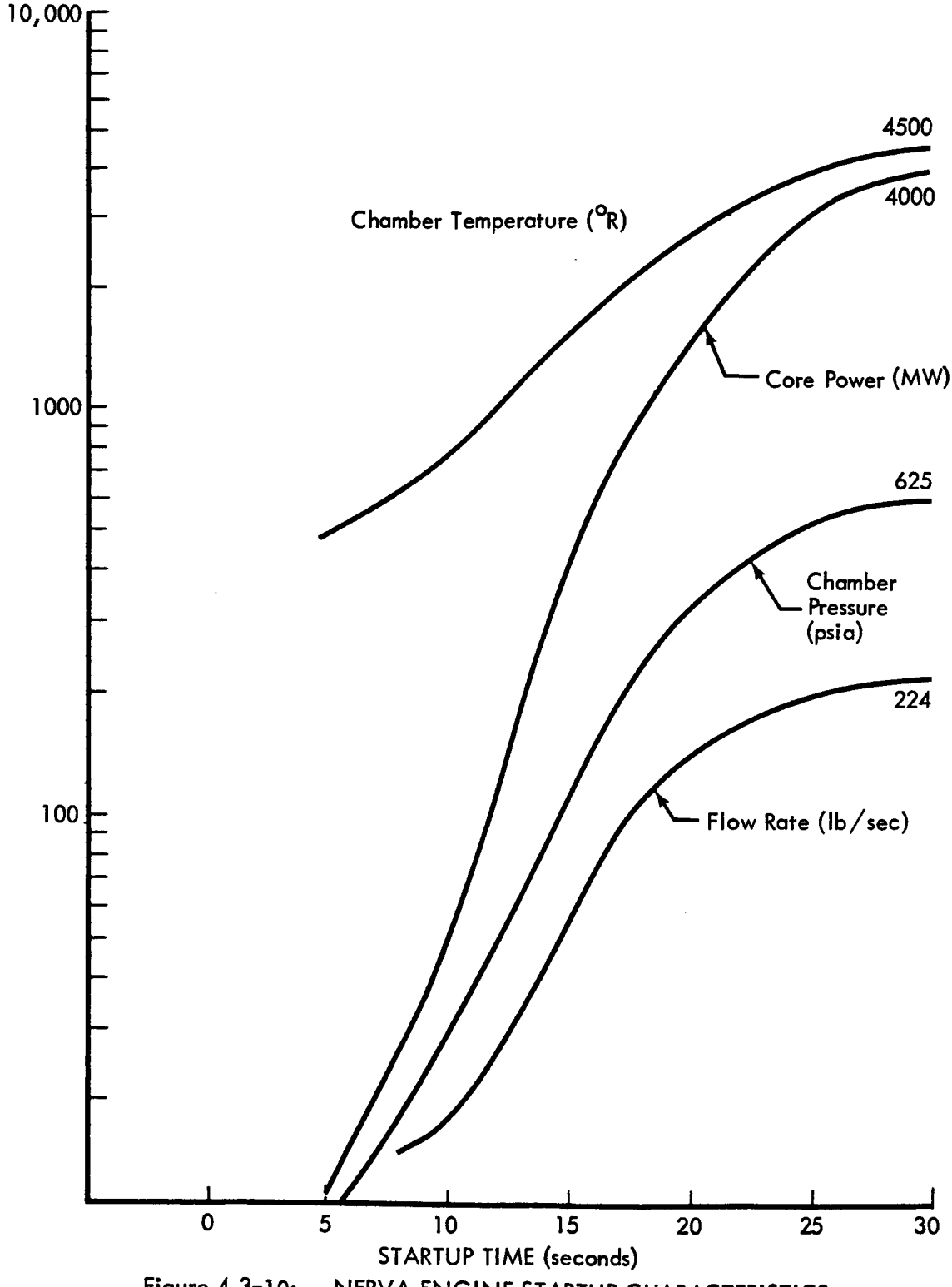

Figure 4.3-10: NERVA ENGINE STARTUP CHARACTERISTICS

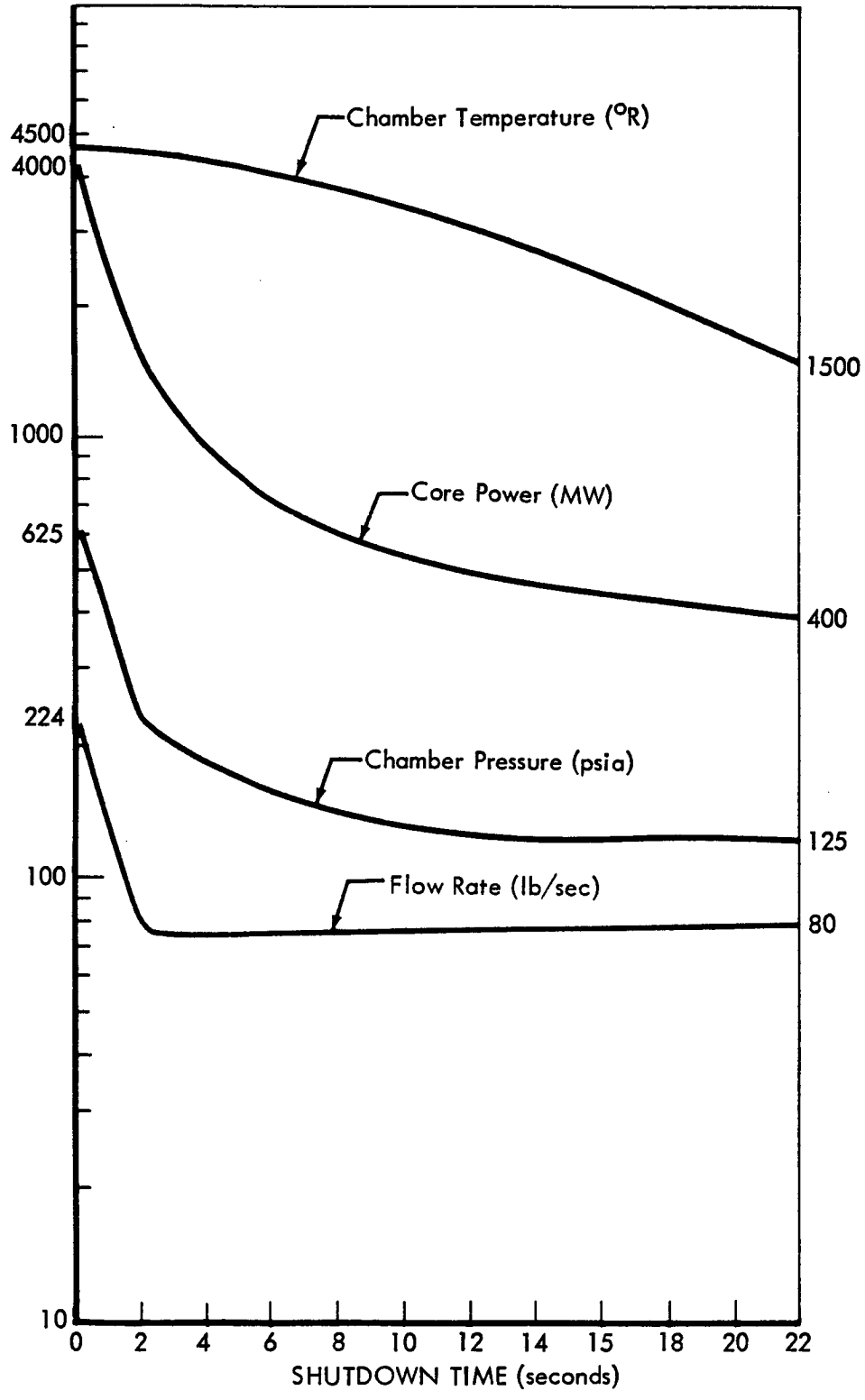

Figure 4.3-11: NERVA ENGINE SHUTDOWN CHARACTERISTICS

used to calculate the weight of startup and shutdown propellant and to determine the equivalent velocity increment obtained during these operations. The startup and shutdown propellant weight is the integral of the flow rate during this period. For the calculation of the equivalent velocity increment, it is assumed that the thrust T(t) of the engine is proportional to the chamber pressure P(t) such that

$$T(t) = T_d \frac{P(t)}{P_d}$$

where T_d and P_d are the full-power design thrust and chamber pressure.

The total impulse I for startup or shutdown time τ, is:

$$I = \frac{T_d}{P_d} \int_o^{\tau} P(t)dt$$

and the average specific impulse ($\bar{I}_{sp}$)

$$\bar{I}_{sp} = \frac{I}{W_s}$$

where W_s is the weight of propellant used during the startup or shutdown operation. The velocity increment is then calculated using the standard rocket equation.

The selection of materials for the Nerva flight shield has not been defined. For the IMISCD study, BeO was assumed. A calculated fast neutron and primary gamma environment on a 10-foot meridian ring using various beryllium oxide radiation shield configurations is shown in Figures 4.3-12 and 4.3-13. The 41-gm/cm^2 shield results in a potential heat source in the hydrogen propellant of 97 kilowatts for neutrons and 280 kilowatts for the gamma rays*. For this study, it has been assumed that these heat loads will not be a major factor in the propulsion module design because a zero NPSP turbopump is assumed for propellant feed.

The radiation leakage from the engine of a PM-3 nuclear propulsion module creates a special problem in crew protection. It has been shown (LMSC A848446) that radiation from operating reactors in PM-1 and PM-2 is adequately shielded by the propellant of PM-3. However, as the propellant is used in PM-3, the radiation impinging on the mission module from the PM-3 engine will result in large radiation doses to the crew. To assess this problem for the configuration developed in this study, a simplified radiation shield computer program was developed. Since the separation distance between the crew and the reactor radiation source is large, a modified point source approximation was used. Also, an attenuation kernel approach was used. Gamma-ray calculations were made

*LMSC Document A848446, *Modular Nuclear Vehicle Study, Phase II Nuclear Radiation Environment*, Vol XI, NASA Contract NAS8-20007, October 1967

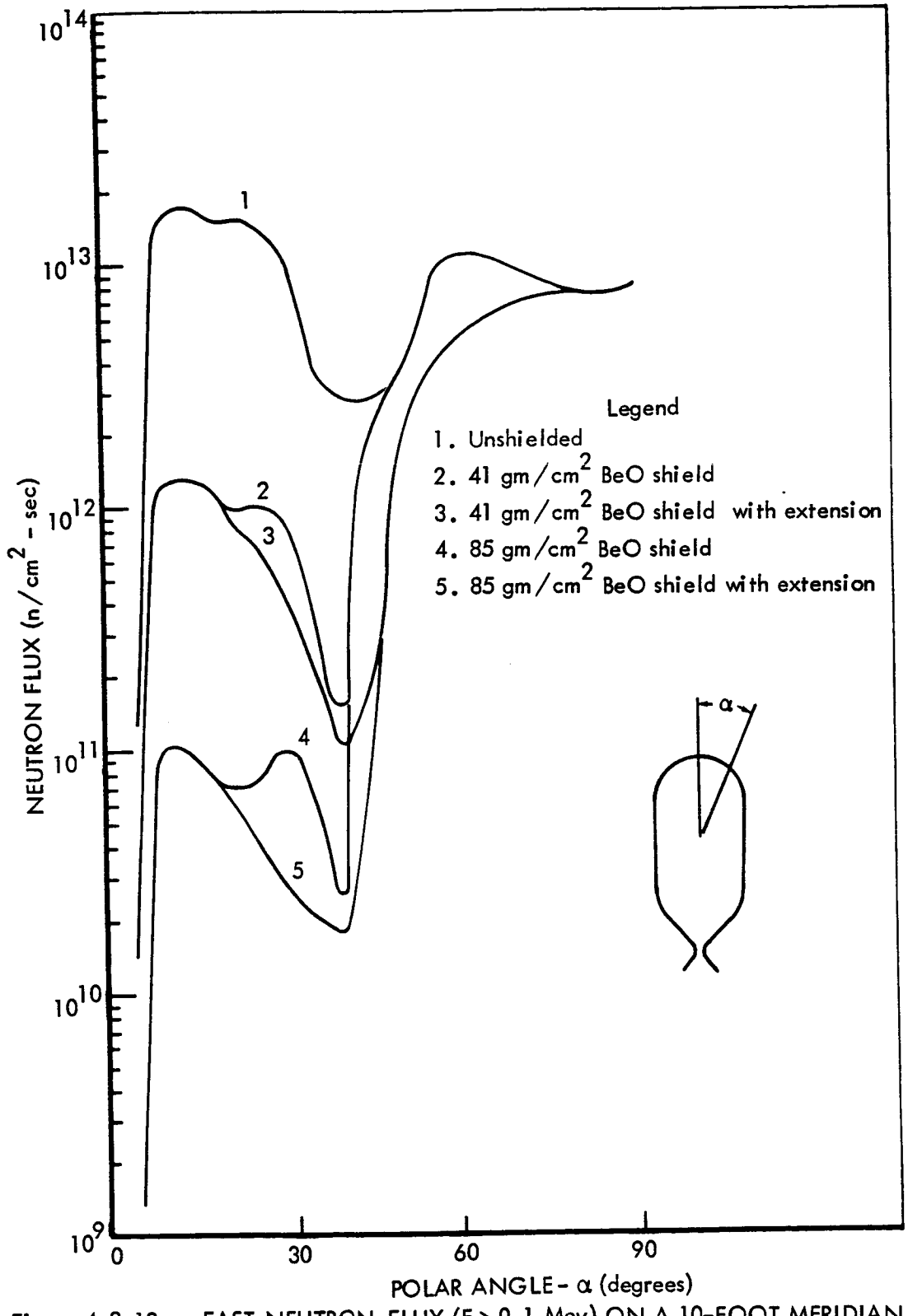

Figure 4.3-12: FAST NEUTRON-FLUX (E > 0.1 Mev) ON A 10-FOOT MERIDIAN RING FROM CORE CENTER

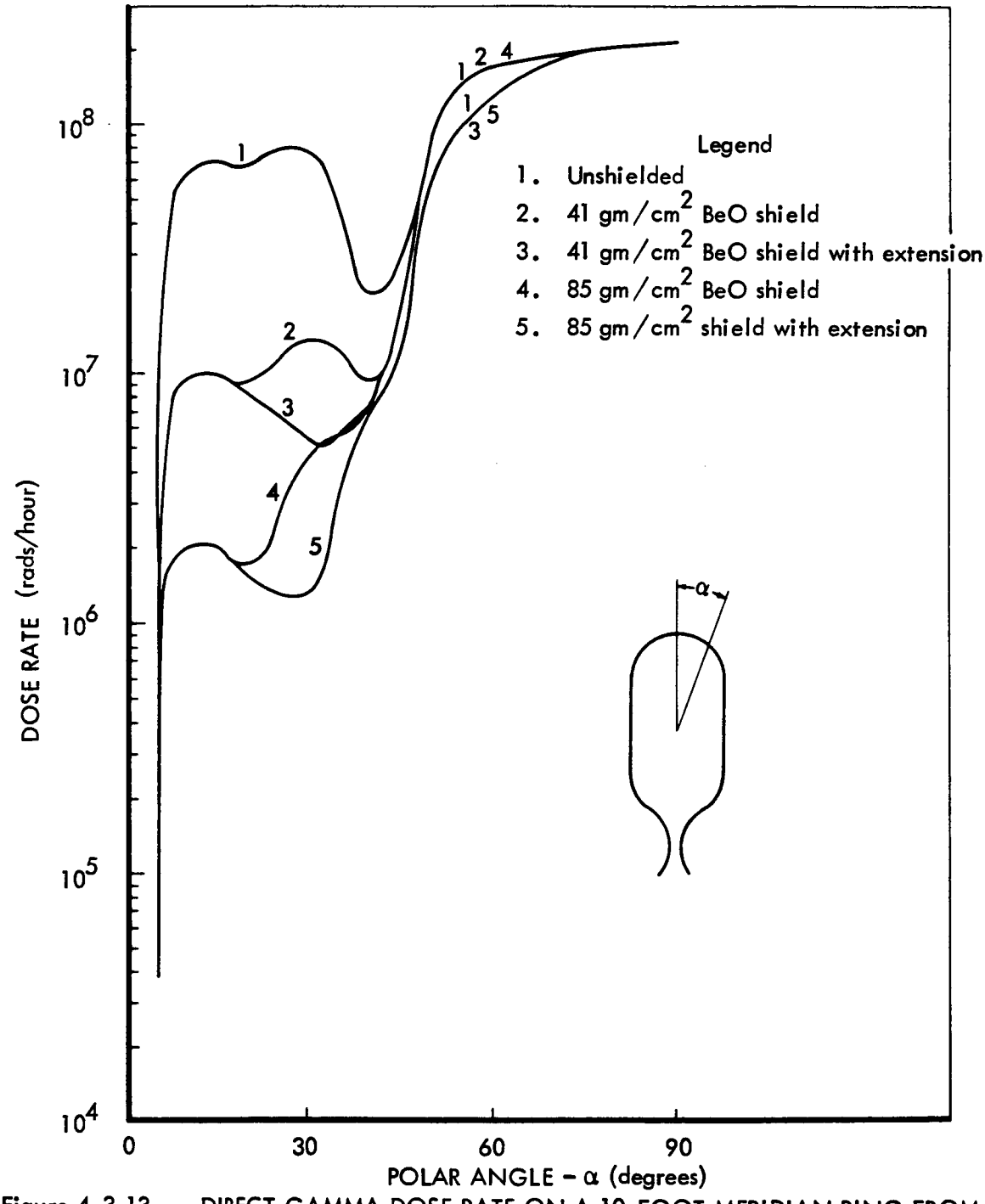

Figure 4.3-13: DIRECT GAMMA DOSE RATE ON A 10-FOOT MERIDIAN RING FROM CORE CENTER

using five energy groups with appropriate attenuation coefficients and buildup factors. Variation of the shielding, due to the changing hydrogen propellant level, was accounted for by an integration of the attenuation kernels over the burn time of the engine. Radiation sources considered were the neutrons and gamma rays from the reactor and capture gamma rays in the hydrogen propellant.

Neutrons scattered by the tank are partially accounted for by normalization of the neutron dose calculated by this program with the detailed Lockheed calculations performed under NASA Contract NAS8-20007. To incorporate the shielding effect of the materials in the mission module, as well as other major modules which may be located between the top of the propulsion module and the crew, requires knowledge of the source strength as well as the energy distribution at the top of the propulsion tank. This information is not available from the simplified program, but was accounted for in the manner described below.

The major materials in the mission module as well as other modules are aluminum, water, and various hydrocarbons. The radiation attenuation of these materials is very nearly that of water. Lockheed has calculated the attenuation of the radiation from the top of a propulsion module tank to a crew compartment, for varying thicknesses of water. Attenuation factors based on this data are shown in Figure 4.3-14. The method used to incorporate the shielding of these modules into the program consists of calculating their equivalent water thickness and multiplying the unshielded crew compartment dose by the appropriate attenuation factor. Spacial variations from the Lockheed calculations are accounted for in the program calculations.

The radiation shield program calculates the required shield thickness at the reactor for a given allowed dose. Typical reactor shield requirements as a function of allowed dose for both tailored modules and for the recommended common module are shown in Figure 4.3-15. A 2.7-gr/cm^3, BeO_2-type shield was assumed for these calculations. The weight of a reactor shadow shield for the common module is approximately 8860 pounds for an allowed dose of 10 rem. If the light 4-gr/cm^2 shield is used at the reactor and additional water shielding is applied at the biowell in the mission module, approximately 36,500 pounds of water would be required. The reflected difference in IMIEO between these two concepts is greater than 100,000 pounds for all IMISCD missions.

The results of this investigation indicate the importance of including the crew dose requirements in nuclear engine design considerations. Selection of the best shielding concept is dependent on whether the increased engine weight, design complexity, and cost due to the addition of the larger shield at the reactor overrides the increased costs resulting from the large IMIEO penalty incurred when a crew compartment shield concept is used.

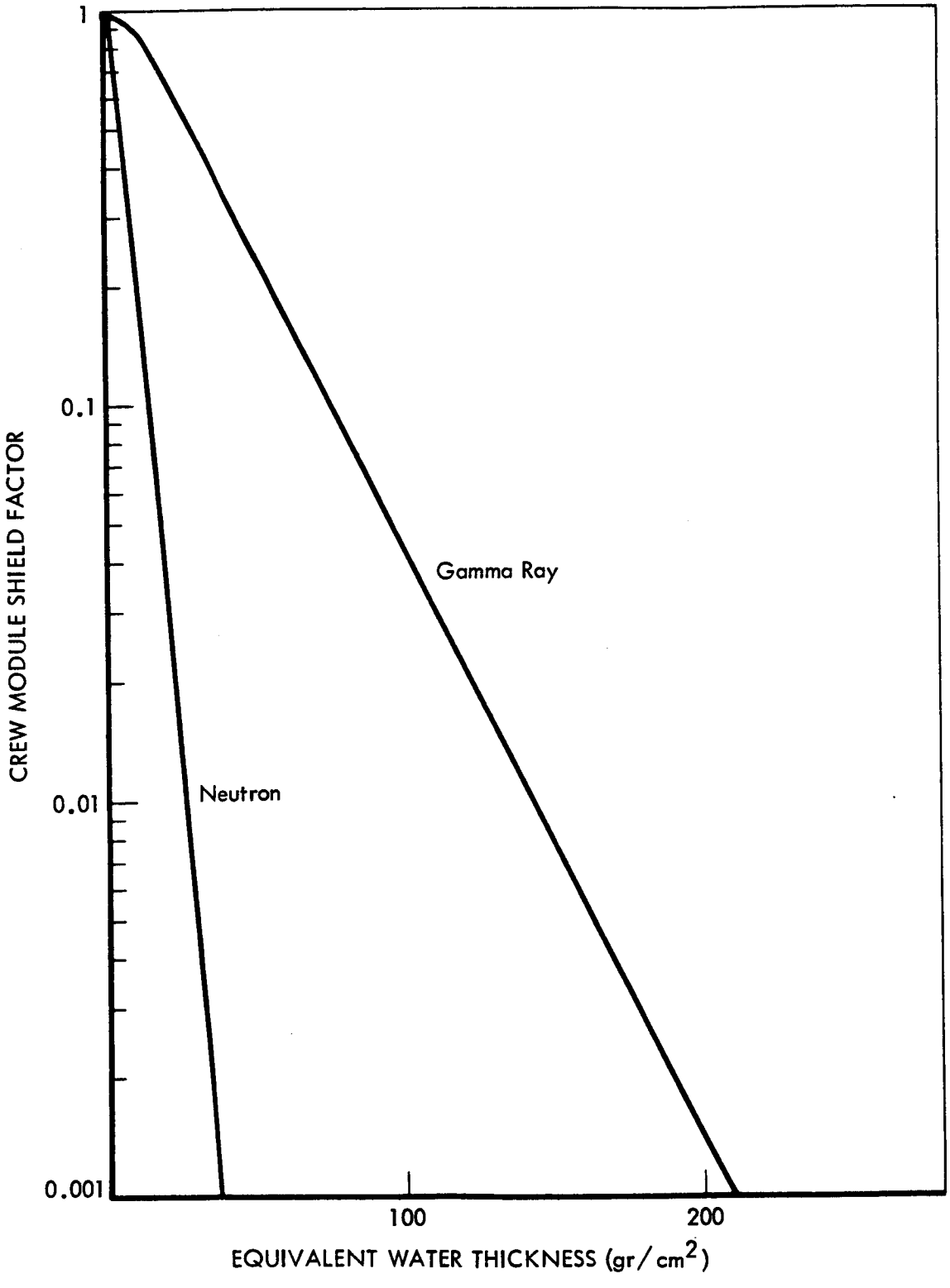

Figure 4.3-14: CREW MODULE SHIELD FACTOR

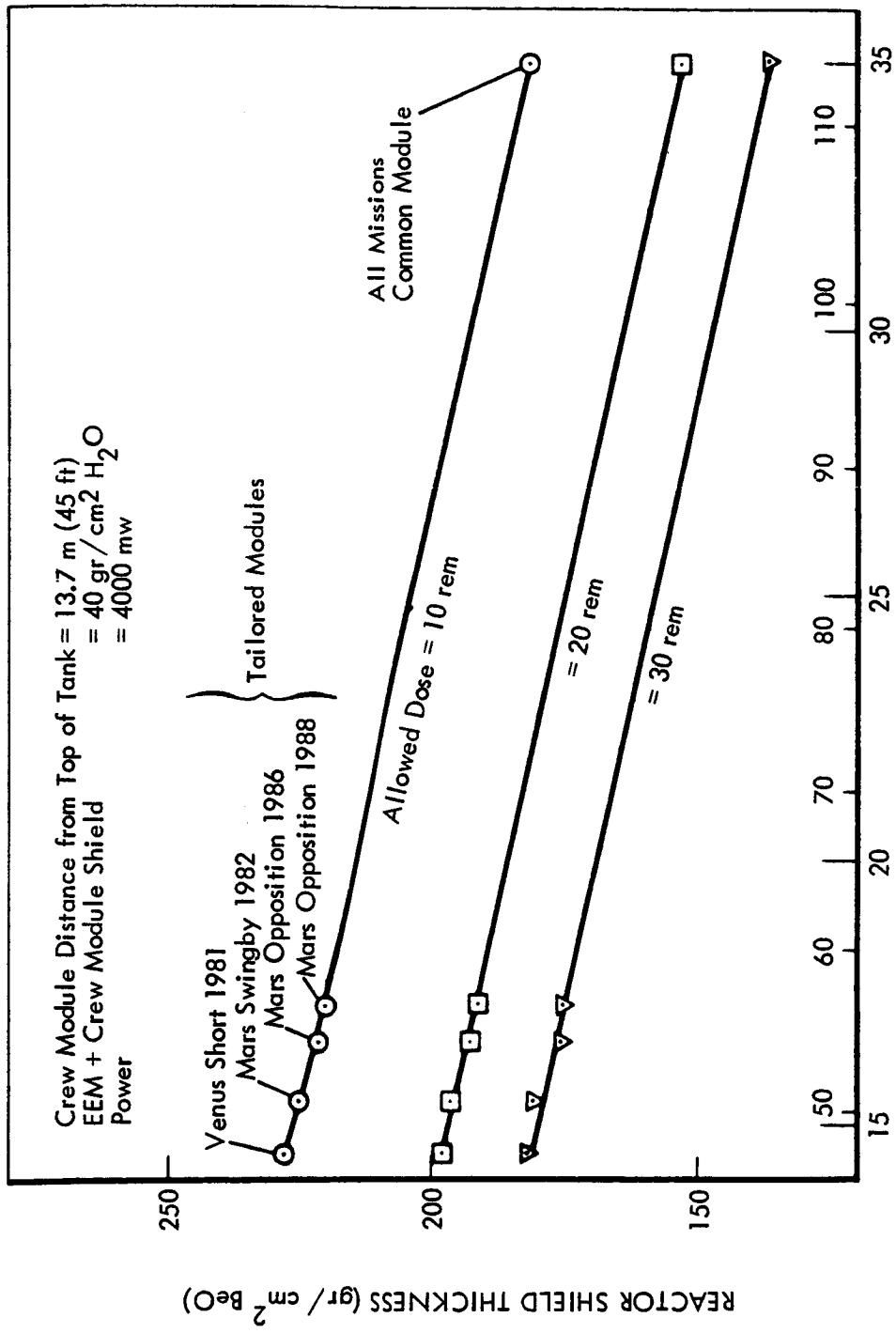

Figure 4.3-15: REACTOR SHIELD REQUIREMENTS

4.3.1.3 Nuclear Stage Equipment

Stage equipment consists of 1) that mechanical and electrical equipment vital to the functioning of a nuclear propulsion module, and 2) the orbital assembly equipment used to assemble the total space acceleration system, which is not jettisonable. For the recommended common module a weight of 8740 pounds has been used for this equipment (Figure 4.4-12).

1) Mechanical and Electrical Equipment--The primary propulsion modules are activated, monitored, and controlled by the mechanical and electrical equipment installed in the fore and aft interstages. These systems include the pressurization and venting, pneumatic, purge, fill and drain, propellant feed telemetry and thrust vector control subsystems. A detailed definition of these subsystems was not undertaken. Weight estimates for this equipment is based on existing liquid oxygen/liquid hydrogen propulsion stages and nuclear propulsion module studies conducted at Boeing, Huntsville.

2) Orbital Assembly Equipment--The conclusions drawn from the orbital docking and assembly evaluation section of Volume III show that the "direct fly-in, hard dock" method appears to be the most practical. To review this evaluation, the hard dock method was evaluated against the following techniques: tow-in hard dock; soft dock with reel-in (propulsive tension); and soft dock with reel-in (spinning tension). Each of these systems were studied with respect to: 1) relative positions of mating elements, series, parallel and offset; 2) EVA work periods; 3) element closing rates; 4) crew viewing requirements; 5) times and crew size requirements; 6) docking system interface requirements; 7) crew safety; 8) weight of orbital support equipment, and 9) simplicity.

The direct fly-in, hard dock equipment selected is shown in Figure 4.3-16. The female alignment cone, approximately 10 feet in diameter, is suspended within a spring suspension system. The suspension system is mounted to framework within the inner interstage. This system aligns the female docking cone with the male cone. After initial contact the energy-absorbing system in the male cone which is restricted to energy absorption along the longitudinal axis only, absorbs docking energy by a honeycomb, crushable structure within four cylinders. When initial latching within the cones is accomplished and there is no relative motion of the modules, hydraulic pressure is applied to the cylinder. This pressure continues to compress the crushable structure which in turn draws the propulsion modules together. The modules are finally secured by automatic azimuth aligning and latching pins at the meteoroid shield bearing surface. A television camera is mounted within the male cone to provide the necessary visual assistance for final alignment during the engagement stroke. A load stroke analysis was conducted to determine the docking forces for several impact velocities and stroke distances for a typical docking condition (see Figure 4.3-17). This data, together with crushing strength and density data of honeycomb, showed that crushable structure technique appears to be a feasible method for a docking system.

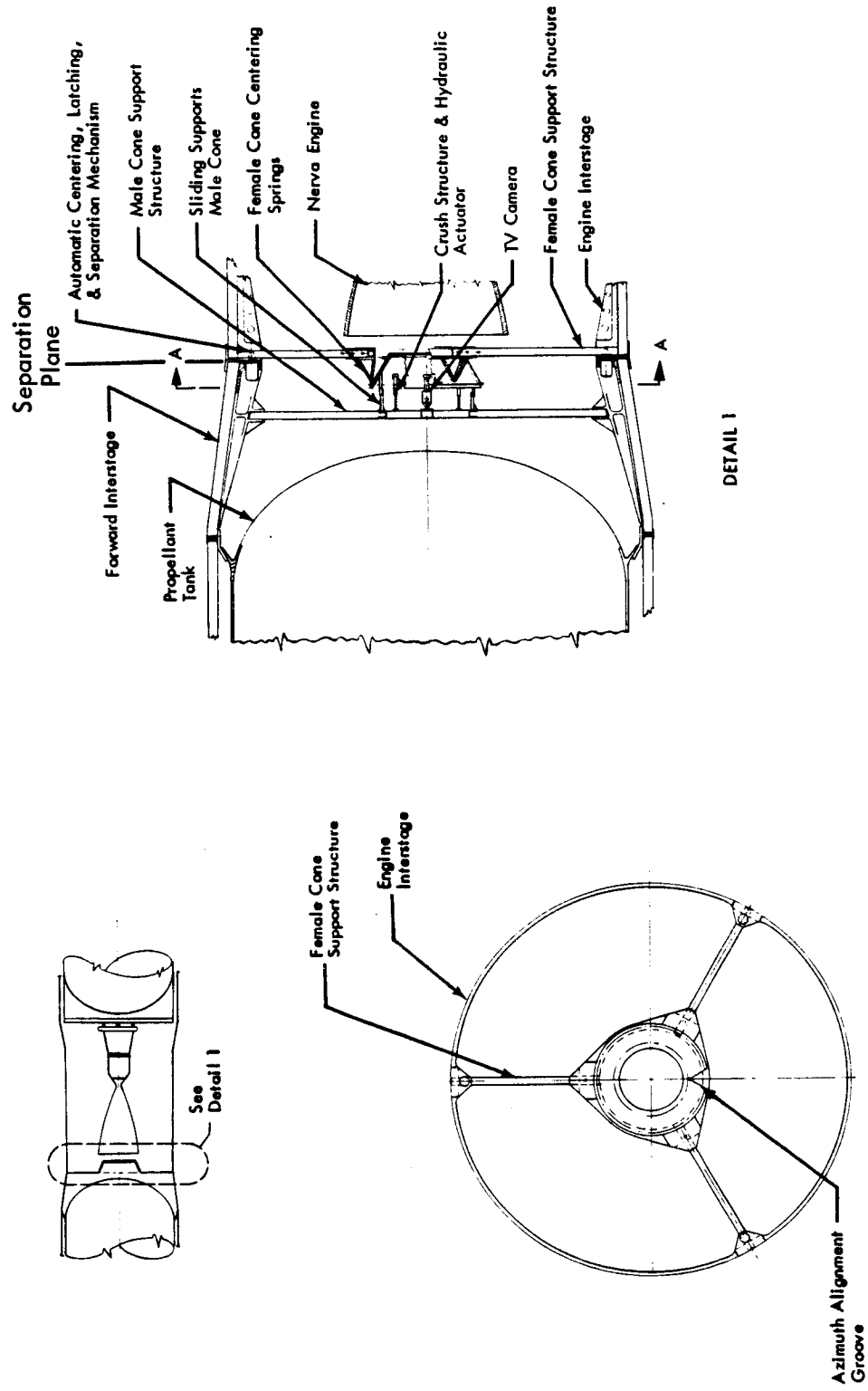

Figure 4.3-16: DOCKING HARDWARE PRIMARY PROPULSION MODULE

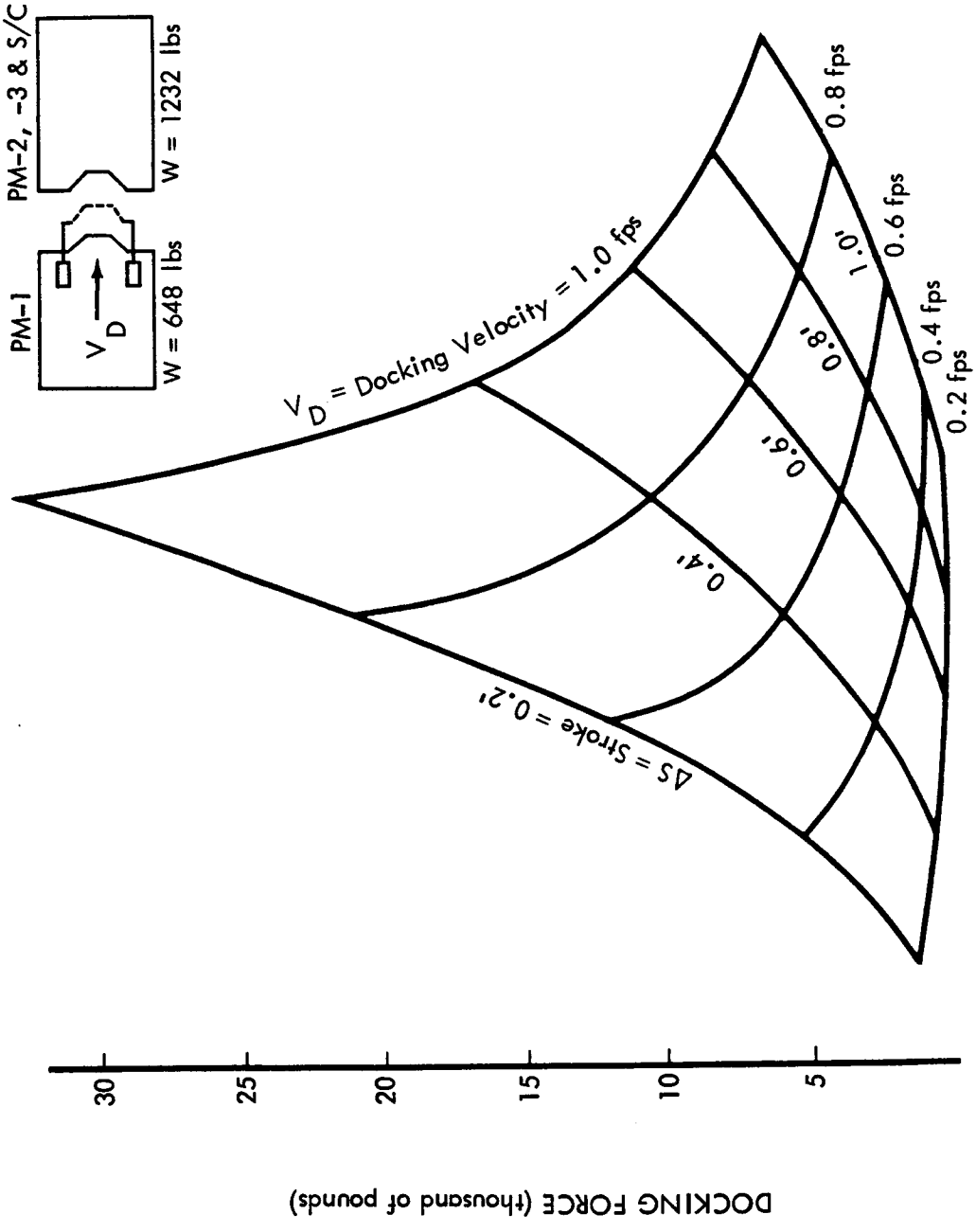

Figure 4.3-17: DOCKING FORCES

A swinging mechanism is required to maneuver the side-mounted propulsion modules of PM-1 from their initial docking position. The initial position is inline along the longitudinal axis in an engine-to-engine attitude. Figure 4.3-18 shows a structural concept for this swinging mechanism. The mechanism, which is initially Earth-launched with the center PM-1 propulsion module, is located between the Earth launch interstage and the transtage. When the transtage is jettisoned, a female cone of the docking system (part of the swinging mechanism) becomes available to receive the first side module. The swinging mechanism is a scissor-type linkage actuated by a linear actuator. A hinge link controls the lateral displacement as the scissor linkage closes, swinging the side propulsion module into position for cluster structure attachment. The docking mechanism is then released allowing the scissor linkage to return to the original position. The hinge link is engaged on the opposite side ready to swing the second propulsion module to the opposite side.

4.3.1.4 Propellant Transfer

A distinguishing feature of the common module recommended system is the propellant transfer system. This operational procedure is used when a PM contains less propellant than required for the PM maneuver. Figure 4.3-19 depicts this operation including the other transfers which occur during the mission. During the Earth departure maneuver, a quantity of propellant is required from PM-2 to fulfill the total PM-1 requirement. This partial depletion of the propellant in PM-2 requires transferring of propellant from PM-3 to fulfill the PM-2 requirement. The remaining propellant in PM-3 is sufficient to perform the Mars/Venus departure maneuver.

Transfer Systems--The transfer system can be either based on a pressure gradient obtained by creating a differential pressure between the donor and receiver tank or on an inline pump approach. Four concepts utilizing the differential pressure approach are being evaluated at Boeing/Huntsville. These ΔP systems used hot GH_2 tapped from the receiver tank pressurization system to pressurize both the receiver and the donor tank so that propellant transfer can occur during receiver engine burn.

A brief description of these concepts follow; Concept I is the recommended concept.

Concept I--At the start of receiver engine burn, the donor tank is pressurized with hot hydrogen gas and the receiver tank is not. When the quantity of LH_2 (predetermined) for obtaining the required ΔV has been transferred (Flowmeter A), the donor tank pressurizing line is closed (Valve B), the fuel transfer line is closed (Valve C), and the receiver pressurizing line is opened (Valve D).

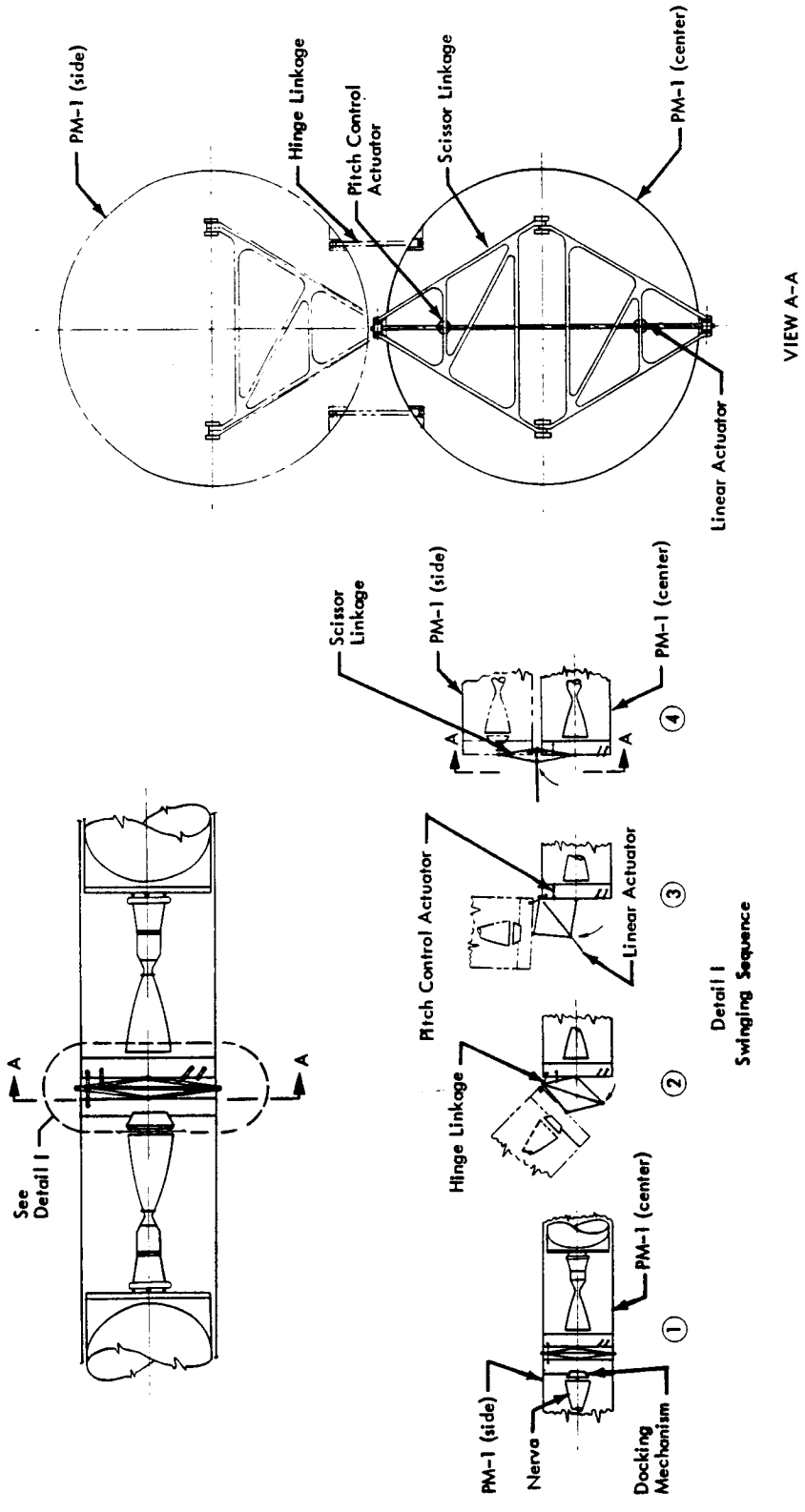

Figure 4.3-18: SWINGING MECHANISM PRIMARY PROPULSION MODULE

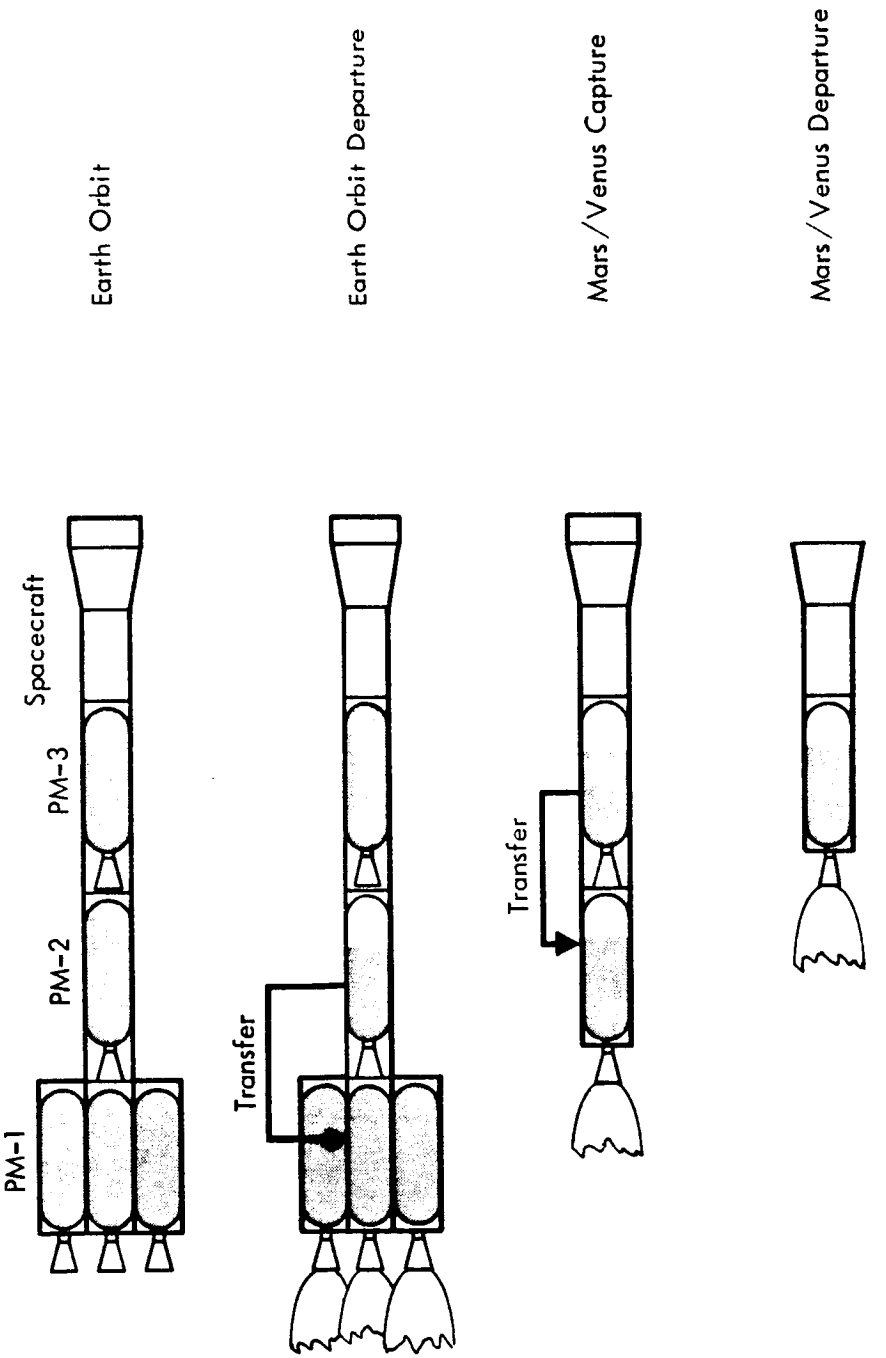

Figure 4. 3-19: COMMON MODULE PROPELLANT TRANSFER OPERATIONS

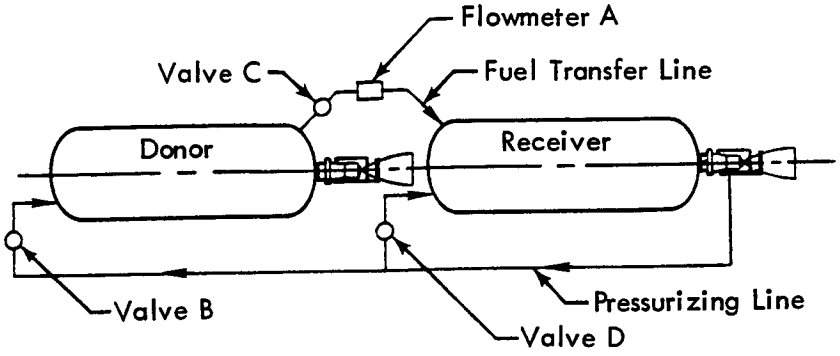

Concept I

Concept II--Hot hydrogen gas from the receiver engine pressurizes both the receiver tank and the donor tank. The receiver tank pressure is maintained at approximately 5 psi less than the donor tank by venting hydrogen gas to space through the receiver tank pressure regulator. As with Concept I, adequate donor flow rate is provided.

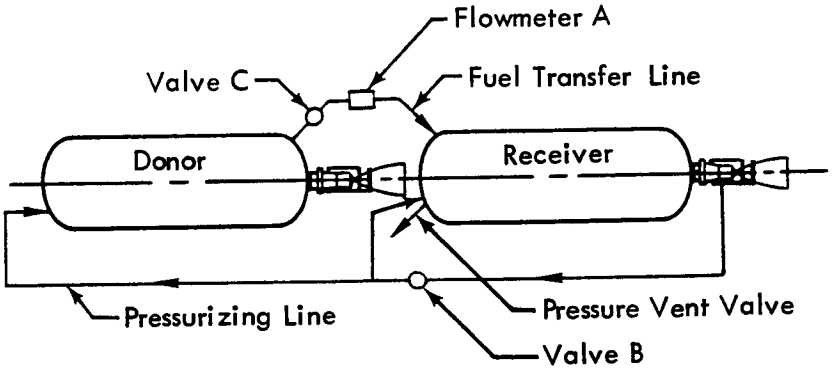

Concept II

Concept III--In an efficient tank design, the tank pressure will rise during engine burn due to propellant heating from the nuclear engine. This self-generating pressure is regulated by venting so that the donor tank pressure provided by the receiver engine pressurization system is higher by approximately 5 psi. This concept eliminates the need for a pressure line to the receiver tank.

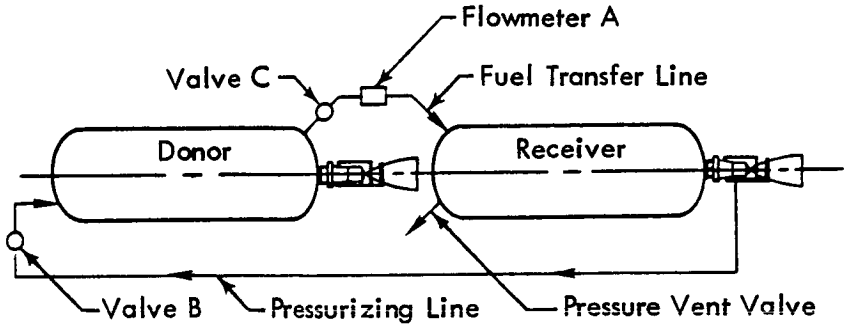

Concept III

Concept IV--Both tanks are pressurized with hot hydrogen gas at the start of receiver engine burn. LH_2 outflow from the donor tank is joined to the outflow of the receiver tank at the receiver engine. Donor flow is terminated when required amount has been used.

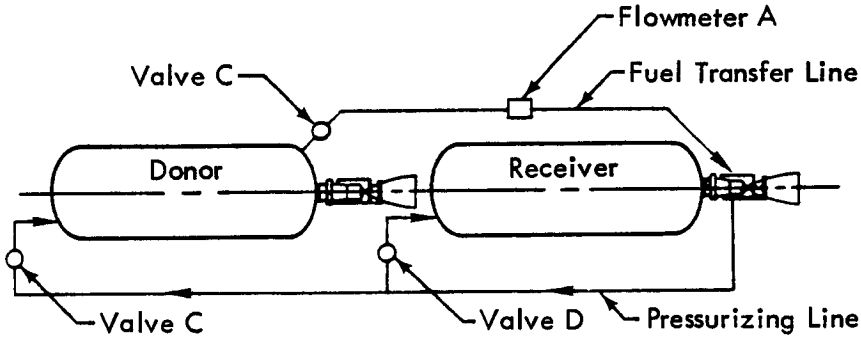

Concept IV

Inline pump transfer system by a submerged electric motor or gas-turbine-driven pump could be considered. However, these systems, because of power requirements and component sizes, do not provide any design improvement or operational advantage over the differential pressurization system.

4.3.1.5 Propellant Storage

The long-term hydrogen storage requirement associated with planet braking and departure nuclear propulsion modules necessitates heat transfer analyses to first establish feasibility and then attendant weight penalties. This is especially true for Mars conjunction missions and Venus long missions. This section provides the thermal data used in determining the insulation and boiloff penalties incurred when nuclear-hydrogen propulsive systems are used for Mars landing and Venus orbiter missions.

Thermodynamics--Penalties associated with storing liquid hydrogen are predicated on an initial LH_2 temperature of 25.5°R at injection into Earth orbit and a final LH_2 temperature of 41°R before tank venting begins. Thus, a heat storage capacity of approximately 32 Btu's per pound of hydrogen is available prior to venting. Figure 4.3-20 shows a pressure-temperature diagram of the expected thermodynamic process.

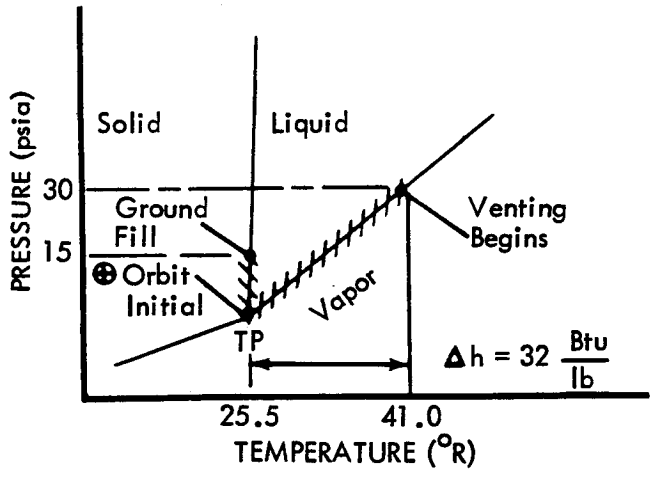

Figure 4.3-20: EXPECTED THERMODYNAMIC PROCESS

It is realized that greater heat storage capacity (approximately 50 $\frac{Btu}{pound}$) can be obtained by increasing the percentage of slush in the prelaunch fill. However, uncertainties with predicting, or an inability to presently predict numerous factors which can significantly affect heat transfer calculations, has led to the use of more conservative no-slush, fully subcooled, initial hydrogen state. Thus, when more accurate predictions of heat transfer are made, the probable increase in heat transfer estimates can be counterbalanced by increasing slush concentrations. Some examples of areas of high uncertainty with regard to heat transfer calculations are: 1) launch hold time, and heat transfer to the propellant during ground hold when the tank insulation is being purged with helium, 2) launch heat transfer rates both due to presently unknown wall temperatures and insulation effectiveness (as it outgasses) versus time, 3) conductance of tank supports and tank penetrations, 4) thermal control coating absorptance after boost heating and exposure to ultraviolet energy, 5) infrared heating rates while in Venus orbit, and 6) propellant stratification which might result in localized boiling even though calculations based on an isothermal propellant would not indicate a boiling condition.

Tank Conductance

Support Structure--For a liquid hydrogen tank such as shown in Figure 4.3-21, a majority of the heat leak to the LH_2 propellant can occur at the various support structure attached to the tank. This heat leak can be responsible for up to 40% of the total hydrogen boiloff when a titanium compression cone is used for an aft tank and engine support. The design considered in this study consists of a fiberglass conical support located at the forward Y ring and a cross-beam thrust structure, both illustrated in Figure 4.3-3. The entire thrust structure, cross-beams and supports, and the forward conical support are insulated with 1 inch of multilayer insulation. Steady-state heat transfer through these supports with an outside temperature of 400°R and a LH_2 temperature of 37°R is estimated as 320 Btu/hr; its conductance is therefore approximately 0.88 Btu/hr-°R. It should be noted that changes in engine thrust will result in heat transfer changes through the forward conical support since it is sized by compressive load due to engine thrust.

Tank Penetrations--Several lines penetrate the tank insulation which increases the total heat leak to the hydrogen propellant. The major penetrations are the LH_2 feed line, fill and drain line, and the GH_2 vent line. Smaller penetrations such as the pressurization line and electrical wire conduits also exist. Analysis of these heat leak paths is difficult because their configurations are relatively undefined. Therefore, parametric studies which considered stainless steel lines, conduit diameter, conduction, and conduction-radiation were conducted to get a feel for this problem. The analysis assumed that:

1) Every line has 1 inch of multilayer insulation around it with a surface temperature of 400°R,

2) The ends of the penetrations have boundary temperatures of 400 and 37°R.

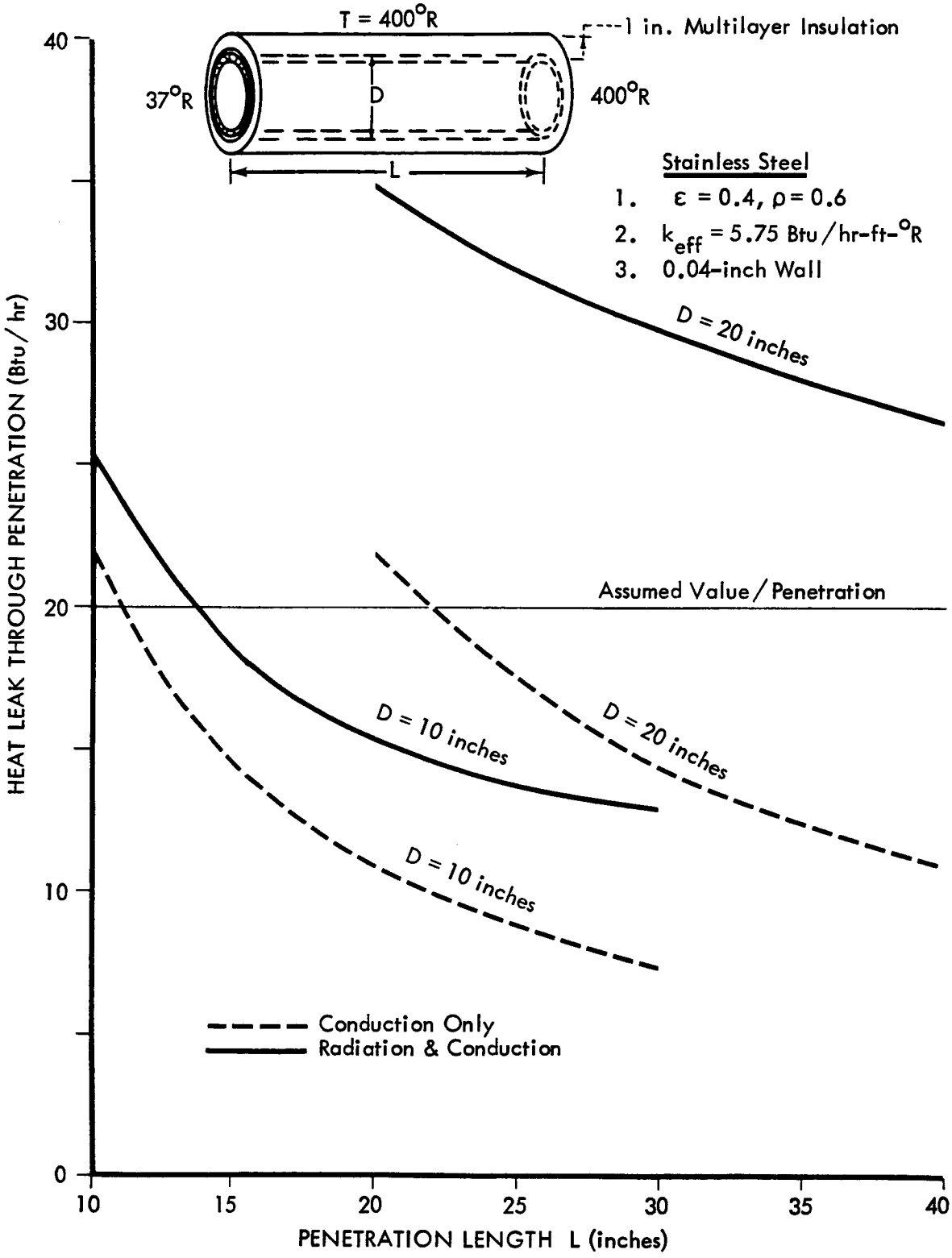

Figure 4.3-21: HEAT LEAKS THROUGH STAINLESS STEEL PENETRATIONS

The importance of including radiation effects in the thermal analysis is clearly shown in the results, Figure 4.3-21. For determining insulation and boiloff penalties in our work, a value of 20 Btu/hr, which from this graph appears reasonable, was assumed for each type of penetration. Therefore, the five types of penetrations (feed, fill, drain, vent, pressurization, and electrical) contributed a heat leak of 100 Btu/hr for the temperature conditions examined. The resulting penetration conductance is then approximately 0.28 Btu/hr-°R.

Tank Insulation--Currently, three insulation concepts are used or considered. The first of these is the hard-shell tank. Here the insulation is applied to the pressure vessel, after which a second pressure vessel is applied over the insulation, sealed, and evacuated. This vessel must be capable of supporting an external pressure of 15 psi. With this concept, essentially constant thermal performance from ground fill to orbit is realized. The external pressure condition, however, makes the concept unreasonably heavy for all but the smallest tanks.

The second concept consists of replacing the hard shell with one of thin-gage metal or plastic which, when sealed and evacuated, collapses against the insulation and the tank. It has the advantage of light weight, but at the expense of degraded performance. When compressed (on the ground and during launch), the insulation heat leak is increased one-hundredfold. As the ambient pressure decreases, the conductivity of the insulation "recovers" to a degree, but does not return to the theoretical minimum because of the increased mechanical contact generated by compression.

The third approach, and the one used in the IMISCD study, consists of using perforated multilayered radiation shields and allowing the insulation to remain gas-filled until the ambient pressure reduction during launch causes the gases to vent. Since insulation is applied over the bare LH_2 tank, helium gas must be used to prevent cryopumping while on the launch pad. This approach has the advantage of attaining theoretical maximum performance in orbit. However, it does so at the expense of performance on the ground and for the period of time in orbit it takes the insulation to vent. In addition, perforating the radiation shields reduces their efficiency.

Figure 4.3-22 is an estimate of the expected performance, in space, of perforated multilayer insulation. This data was used in the heat transfer analysis subroutine of the IMIEO program.

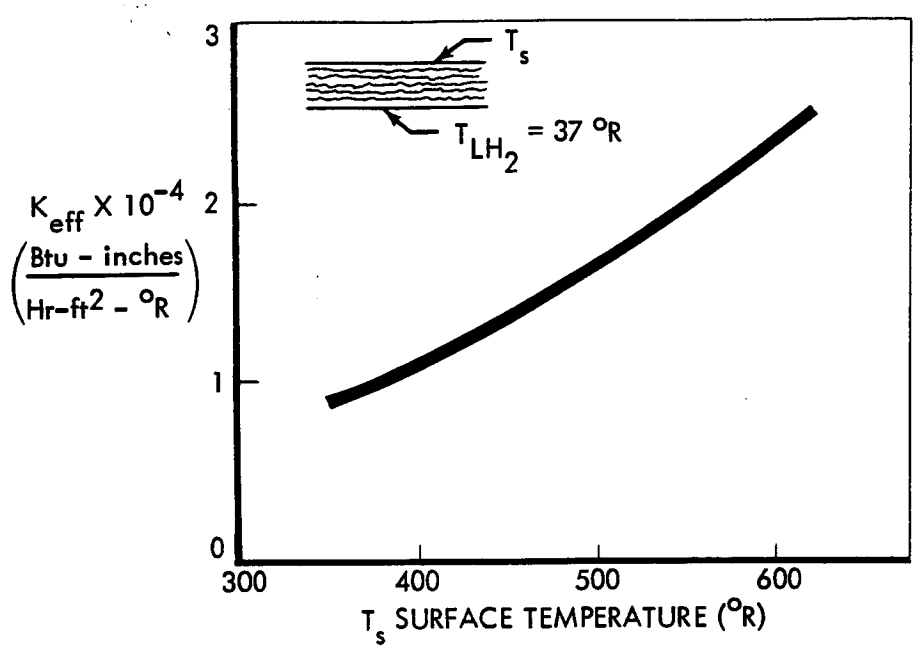

Figure 4.3-22: EFFECTIVE CONDUCTIVITY VERSUS SURFACE TEMPERATURE

Thermal Coatings--To control or minimize the effect of thermal energies incident on the tank and its interstages, a low absorptivity-high emissivity thermal control coating is used. It is applied to the forward interstage, aft interstage, and meteoroid shield external surfaces. A paint designated ZN-93 (zinc oxide with a potassium silicate binder) by its developer, the Illinois Institude of Technology, was assumed in the heat transfer analysis. Studies conducted by Boeing and results from Mariner and Lunar Orbiter flights have shown that its thermal properties are only slightly affected by long-time exposure to ultraviolet radiation and solar protons. Its most important property for quasi-steady-state heat transfer analyses, solar absorptivity to infrared emissivity ratio ($\alpha_s/\varepsilon_{ir}$), has shown variations between 0.22 and 0.26. A higher $\alpha_s/\varepsilon_{ir}$ of 0.28 was used in our work to account for coating degradation during boost and long-time space environment exposure.

Skin Temperatures

1) Earth Orbit Period--Three cases, each assuming a different orientation of the propellant tank while orbiting the Earth at 262 nautical miles, were evaluated. The cases examined are shown below; note that the solar vector is assumed to lie in the orbit plane.

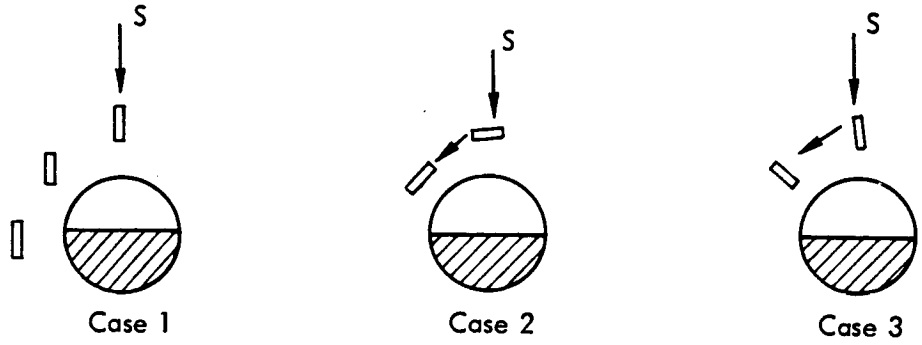

Orbit average heat transfer rates and skin temperatures are shown below. For Case 1, a direct solar incident energy of 88 Btu/hr-ft^2 (during sunlit periods) was assumed to account for off-sun pointing conditions.

Case	Q_P Btu/hr-ft^2	Q_{RS} Btu/hr-ft^2	Q_S Btu/hr-ft^2	$\bar{T}_{SK}$ °R
1	21.2	13.9	55.4	390
2	24.1	21.5	59.0	407
3	19.1	16.6	59.0	390

Q_P = Planetary contribution

Q_{RS} = Solar reflected contribution

Q_S = Direct solar contribution

$\bar{T}_{SK} = (\alpha_S/\varepsilon_{ir}\ (Q_S + Q_{RS}) + Q_P)^{1/4}\ (\frac{1}{\sigma})^{1/4}$

Heat transferred into the hydrogen propellant during Earth orbit operation is based on an external skin temperature of 390°R.

2) Interplanetary--During interplanetary travel, the vehicle is nominally Sun pointing. However, a solar incident energy equal to 0.20 of the average solar constant between points of travel has been assumed to account for interreflections between space vehicle elements and off-sun pointing conditions. This gives the following average external skin temperatures:

Mission Phase	$\overline{T}_{SK}$
Earth--Venus	375°R
Earth--Mars	300°R
Venus--Mars	362°R

3) Mars and Venus Orbit--Planetary, reflected solar, and direct solar energy incident on the planet departure propulsion module was determined for a space vehicle in a 540-nautical-mile orbit with the solar vector lying in the orbit plane. The vehicle's orientation, as required for experimental purposes and for achieving satisfactory control over mission module internal temperatures (see Section 4.2.12), is fixed so that its longitudinal axis and the local vertical are coincident.

Factors important to determining the orbit average heat rates impinging on the propulsion module are as follows:

Planet	Rotation Period	Radius	Solar Energy	Albedo
Mars	Approximately 24 hr	1840 N Mi	Approximately 200 $\frac{\text{Btu}}{\text{hr-ft}^2}$	0.15
Venus	More than 50 days	3290 N Mi	880 $\frac{\text{Btu}}{\text{hr-ft}^2}$	0.76

Mars was considered to be an isothermal planet when average infrared heating rates were obtained. For the Venus surface, which for our purposes is its cloud cover, an energy distribution with a cosine variation around the subsolar point (similar to lunar orbiting heat transfer) is used for obtaining average infrared heating rates.

The orbit averaged heat rates impinging on the planet departure propulsion module for both Mars and Venus are presented below along with the resulting average skin temperatures.

Planet	$Q_P \frac{Btu}{hr\text{-}ft^2}$	$Q_{RS} \frac{Btu}{hr\text{-}ft^2}$	$Q_S \frac{Btu}{hr\text{-}ft^2}$	$\bar{T}_{SK}$ ~ °R
Mars	(9.0) 5.36	(2.8) 1.4	(34) 34	(325) 310
Venus	15.3	36.5	131	438

( ) Values for longitudinal axis normal to local vertical

Storage Penalties--The usual trade to minimize insulation and boiloff penalties for a venting system is shown in Figure 4.3.23.

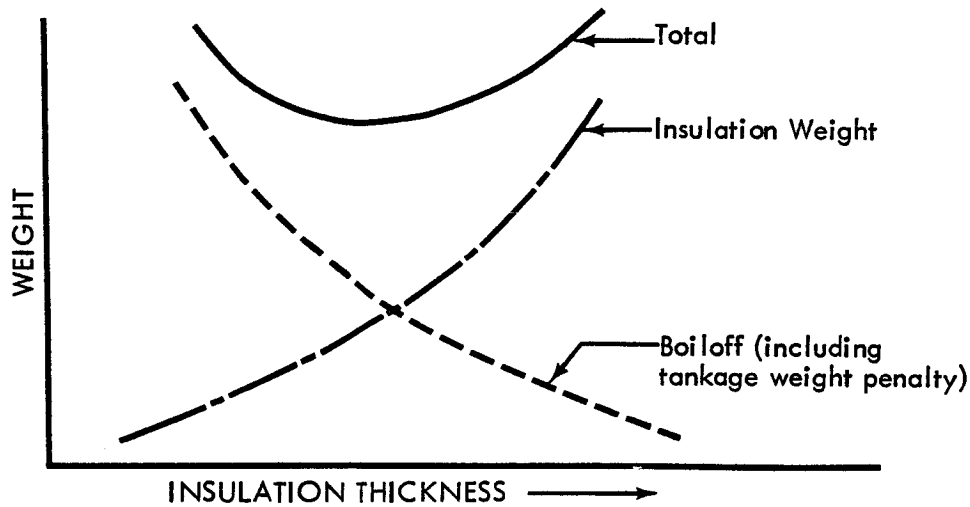

Figure 4.3-23: MASS PENALTY MINIMIZATION

The minimum total weight occurs at an insulation thickness for which the weight of insulation is approximately equal to the boiloff weight. For a propulsion system, this is not exactly correct, since the insulation weight must be accelerated by the velocity increment. The boiloff has been vented and, therefore, is not accelerated. This refinement has not been included in our optimization analysis. The problem is also further complicated because the propellant tanks may be serviced with subcooled or slush propellants.

For a venting system, the usual expression for the insulation thickness which optimizes insulation and boiloff weight is:

$$t_{opt} = \left(\frac{K\ \Delta\bar{T}\ \tau_t}{L_V\ \rho_{ins}}\right)^{1/2} \qquad (1)$$

Calculations for subcooled or slush propellants have shown that Equation (1) still applies.

This optimum value is then used in the equation for LH_2 boiloff.

$$W_{BO} = \frac{\frac{KA\ \overline{\Delta T}\ \tau_t}{t_{opt}} - W_p\ \Delta h + C\ \Delta T}{L_V + \Delta h} \qquad (2)$$

W_{BO} = pounds boiled off

K = insulation conductivity

A = tank surface area

ΔT = time averaged temperature differential

τ_t = total time until engine burn

t_{opt} = optimum insulation thickness from Equation 1

W_p = total LH_2 weight

Δh = LH_2 heat capacity 25.5°R to 41°R

C = supports and penetration conductance

L_V = latent heat of vaporization

If a negative result for W_{BO} is obtained, W_{BO} is set equal to zero; the insulation weight is then determined from:

$$W_{ins} = KA^2\ \overline{\Delta T}\ \tau_t\ \rho_{ins}/(\Delta h\ W_p - C\overline{\Delta T}\ \tau_t)$$

The data of the previous sections for skin temperatures, insulation conductance, support conductance, and penetration conductance along with Equations 1 and 2 are used in subroutine BOILOF, part of a general IMIEO program, to determine insulation and boiloff penalties. Results from this program for missions which cover the range of LH_2 storage requirements, but which are based on propellant requirements for accelerating the associated payloads (thus resulting in off-loaded tanks) are given in Table 4.3-1 for a 3-1-1 off-loaded "common module" space acceleration system.

Table 4.3-1: PROPELLANT REQUIREMENTS FOR ACCELERATING PAYLOADS

	Time (Day)	Operating Propellant (lb)	Insulation (lb)	Boiloff (lb)
Mars Conjunction (1986)				
PM-1 (3)	150	893,631	3,311	0
PM-2 (1)	310	266,873	2,967	0
PM-3 (1)	870	131,662	12,400	23,220
Venus Long (1983)				
PM-1 (3)	150	928,088	3,260	0
PM-2 (1)	290	408,291	2,838	0
PM-3 (1)	740	159,310	16,121	27,432
Mars Opposition (1986)				
PM-1 (3)	150	957,739	3,220	0
PM-2 (1)	290	342,748	2,295	0
PM-3 (1)	310	198,666	4,000	0

4.3.2 SECONDARY PROPULSION

Three midcourse corrections are assumed for each interplanetary leg of the mission. The first occurring approximately 5 days after Earth departure, the second approximately 20 days later, and the third approximately 20 days prior to Mars or Venus capture. After planet capture and PM-2 separation, the space vehicle transfers from an initial capture orbit to the final 540 nautical mile operational orbit. These maneuvers are accomplished by three secondary propulsion systems:

1) Outbound Midcourse Correction

2) Orbit Trim

3) Inbound Midcourse Correction

Each of these systems function during different mission phases. Thus, they must be placed at different space vehicle locations because of propulsion module staging. The Outbound Midcourse Correction system is installed within the PM-2 engine interstage; the Orbit Trim within the PM-3 engine interstage; and the Inbound Midcourse Correction within the spacecraft interstage.

A ΔV of 300 fps is provided by each system; this requirement is discussed in Section 4.2.1, Guidance and Navigation Subsection.

The recommended secondary propulsion system is one which uses a FLOX/Methane propellant and two pump-fed engines for reliability. This propellant choice was made after a cursory evaluation of four oxidizer-fuel combinations:

1) Liquid Oxygen-Liquid Hydrogen (LO_2/LH_2)
2) Oxygen Difluoride-Monomeythlhydrazine (OF_2/MMH)
3) Fluorine-Oxygen-Methane (FLOX/CH_4)
4) Nitrogentetraoxide-Aerozine 50 (N_2O_4/A-50)

For the evaluation, the quantitative physical characteristics and qualitative handling-availability features provided in Tables 4.3-2 and 4.3-3 were used. Also, the structure-carrying secondary propulsion thrust load was conventional. Mechanisms that include disengaging and engaging supports for lowering heat leaks during nonuse were not considered. With these data and ground rules, the following desirable and undesirable features of these propellants were noted in Table 4.3-4.

From this data it was judged that FLOX/CH_4 represented the best compromise to IMISCD criteria for a secondary propulsion propellant in the 1980 time period; namely, low propellant mass, fair long-term stability, a low volumetric parameter, and a capability superior to OF_2/MMH for engine cooling. Subsequent analysis has shown that for the in-bound midcourse correction system, a storable such as N_2O_4/A-50 gives about the same mass results as FLOX/CH_4 because of the latter's boiloff. However, in the interest of commonality, all three secondary propulsion systems are designed to use FLOX/Methane.

Engine size (thrust) for the systems was identified by the design computer program for each mission with the thrust/weight ratio set at 0.05. The resulting thrust ranges were:

System	Thrust (lb)
Outbound Midcourse Correction	50 to 65K
Orbit Trim	25 to 35K
Inbound Midcourse Correction	5 to 8K

4.4 SYSTEM AND ELEMENT WEIGHTS

The weight data shown are for the recommended space vehicle configuration. Common nuclear-propulsion modules are used with three modules in PM-1, and one module each in PM-2 and PM-3 (3-1-1). Propellant transfer is used to accommodate differences in ΔV distribution with missions. Detail weights are shown for three typical missions. These detail weights are the result of IMIEO computations that match the mission times and mission velocities with the space-vehicle payload element and propulsion module weights. It should be noted that the recommended EEM is designed for the maximum Earth entry velocity (approximately 60,000 feet per second) and has a fixed weight of 17,400 pounds (see Section 3.1). This is done so that a high degree of spacecraft commonality exists for all missions.

Table 4.3-4: PROPELLANT ASSESSMENT

LO_2/LH_2

- Technology developed
- Experience level high
- High I_{sp} (450 sec)
- Operational status
- Nontoxic - stability good
- No engine cooling problem

- High volumetric parameter

$$\left(\frac{1}{I_{sp}\ \rho_{Bulk}} \sim 1.1 \times 10^{-4}\right)$$

- Severe thermal storage problem with LH_2

OF_2/MMH

- Good storability
- Low volumetric parameter

$$\left(\frac{1}{I_{sp}\ \rho_{Bulk}} \sim 0.33 \times 10^{-4}\right)$$

- High I_{sp} (~380 sec)

- Technology relatively new
- Experience level low
- R&D status
- OF_2 extremely toxic, stability good
- Engine cooling a serious problem

FLOX/CH_4

- Fair storability
- Low volumetric parameter

$$\left(\frac{1}{I_{sp}\ \rho_{Bulk}} \sim 0.37 \times 10^{-4}\right)$$

- High I_{sp} (~400 sec)

- Technology relatively new
- Experience level low
- R&D status
- Flox is toxic, separation in oxidizer possible
- Engine cooling a problem

N_2O_4/Aerozine 50

- Technology developed
- Experience level high
- Operational status
- Boiloff no problem
- No engine cooling problem

- Relatively low I_{sp} (~300 sec)
- Moderate volumetric parameter

$$\left(\frac{1}{I_{sp}\ \rho_{Bulk}} \sim 0.45 \times 10^{-4}\right)$$

- Mildly toxic, separation in fuel possible
- Freeze-up prevention a problem

Table 4.3-2: CANDIDATE PROPELLANTS

Propellant Symbol	Propellant Name	Density (g/cc)	Freezing Point (°R)	Boiling Point NBP (°R)	Specific Heat Capacity Btu/lb)	Specific Heat Capacity AT (°R)
Oxidizers						
O_2	Oxygen	1.14	97	162	0.406	NBP
OF_2	Oxygen Difluoride	1.53	89	231	0.281	NBP
F_2	Fluorine	1.509	97	153	0.365	NBP
N_2F_4	Tetrafluorohydrazine	1.66	196	360	0.51	NBP
FLOX *82/18)	30% Fluorine 70% Oxygen	1.43	96	156	0.378	NBP
N_2O_4	Nitrogen Tetroxide	1.447	472	530	0.36	NBP
MON (75/25)	Mixed Oxides of N_2	1.381	390	500	0.391	NBP
MON (85/15)	Mixed Oxides of N_2	1.40	436	500	0.382	NBP
IRFNA	Inhib. Red Nitric Acid	1.49	397	608	0.41	528
H_2O_2	Hydrogen Peroxide	1.443	471	762	0.635	NBP
Fuels						
RP-1	RP-1	0.806	515	882	0.45	528
MMH	Monomethylhydrazine	0.8765	398	648	0.70	NBP
50/50	50% N_2H_4 50% UDMH	0.8986	479	616	0.69	537
N_2H_4	Hydrazine	1.008	495	696	0.74	528
CH_4	Methane	0.42	160	201	0.84	NBP
C_2H_6	Ethane	0.546	182	333	0.60	NBP
B_2H_6	Diborane	0.45	195	325	0.66	NBP
B_5H_9	Pentaborane	0.627	407	600	0.55	537
NH_3	Ammonia	0.68	352	432	1.07	NBP
H_2	Hydrogen	0.071	25	37	2.23	NBP

Table 4.3-3: PROPELLANT HANDLING AND AVAILABILITY

Propellant	Toxicity	Stability	Status	Availability Pre-1970	Availability Post-1970
Oxidizers					
O_2	Nontoxic	Good	OPN	Excellent	Excellent
OF_2	Extremely Toxic	Good	R&D	Fair	Excellent
F_2	Toxic	Good	R&D	Good	Excellent
N_2F_4	Mildly Toxic	Questionable	R&D	Research	
FLOX (82/18)	Toxic	Separation possible	R&D	Good	Good
N_2O_4	Mildly Toxic	Good	OPN	Excellent	Excellent
MON (75/25)	Mildly Toxic	Separation possible	OPN	Good	Good
MON (85/15)	Mildly Toxic	Separation possible	OPN	Good	Good
IRFNA	Toxic	Good	OPN	Excellent	Excellent
H_2O_2	Nontoxic	Monopropellant	OPN	Excellent	Excellent
Fuels					
RP-1	Nontoxic	Good	OPN	Excellent	Excellent
MMH	Mildly Toxic	Fair - Good	OPN	Good	Excellent
50/50	Mildly Toxic	Separation possible	OPN	Excellent	Excellent
N_2H_4	Mildly Toxic	Monopropellant	OPN	Excellent	Excellent
CH_4	Nontoxic	Good	RES	Excellent	Excellent
C_2H_6	Nontoxic	Good	RES	Excellent	Excellent
B_2H_6	Very Toxic	Good	RES	Limited	Good
B_5H_9	Extremely Toxic	Good	RES	Limited	Good
NH_3	Slightly Toxic	Good	OPN	Excellent	Excellent
H_2	Nontoxic	Good	OPN	Excellent	Excellent
Solid Propellant	Nontoxic	Good	OPN	Excellent	Excellent

Also included is a description of the IMIEO computer program and a weight sensitivity section showing the effects of such changes as element weight, crew size, and design criteria.

4.4.1 DETAIL WEIGHT STATEMENT

Table 4.4-1 shows detail weights for the space vehicle configuration. Three typical missions are shown: one Venus (1981 short) and two Mars (1982 opposition and 1986 conjunction). The weight sources and design criteria on which the weights are based are given in Section 4.4.2.2. For each of the three missions, additional payload capability is available with no increase in the number of launches. This is especially true for the 1986 Mars Conjunction where only two, not three, PM-1 modules are required for the mission. The extent of additional discretionary payload for each of the missions with the recommended 3-1-1 common module space acceleration system is given in Figure 4.4-1.

The earth entry module (EEM) is a six-man, biconic vehicle, with full-speed entry capability. The EEM weight is a function of the Earth entry velocity. The mission module (MM) provides the protection and resources for a crew of six men for the full mission time. Therefore, its weight is a function of mission time. A Bosch system is used for CO_2 reduction. The communications system uses a combination of microwave for voice and laser for TV, and high-resolution pictures. Attitude control is provided by a combination of control moment gyros and reaction jets. A 15-kw_e (maximum capability) isotope-Brayton system supplies an average power level of 11.5 kw_e. The experiments are included in the mission module weight.

The Mars excursion module (MEM) weight reflects a three-man, Apollo-shaped vehicle. The MEM uses ballutes for subsonic deceleration and FLOX/CH_4 propellants for hover and ascent. The stay time on the Mars surface is 30 days. The ascent velocity is sufficient to rendezvous at a circular orbital altitude of 1000 kilometers. The secondary propulsion systems (midcourse and orbit trim) use FLOX/CH_4 propellants. The ΔV is 300 fps for each of the three impulses (outbound, orbit trim, and inbound).

The primary propulsion modules are made up of common nuclear (LH_2) modules, with three modules in PM-1 and one module each in PM-2 and PM-3. The tank lengths are 115 feet, which correspond to the SAT-V-25(S)U ELV weight-to-orbit capability when the tanks are fully loaded. Propellant transfer from the PM above is used to accommodate differences in velocity distribution with mission. The operating propellant weight shown for

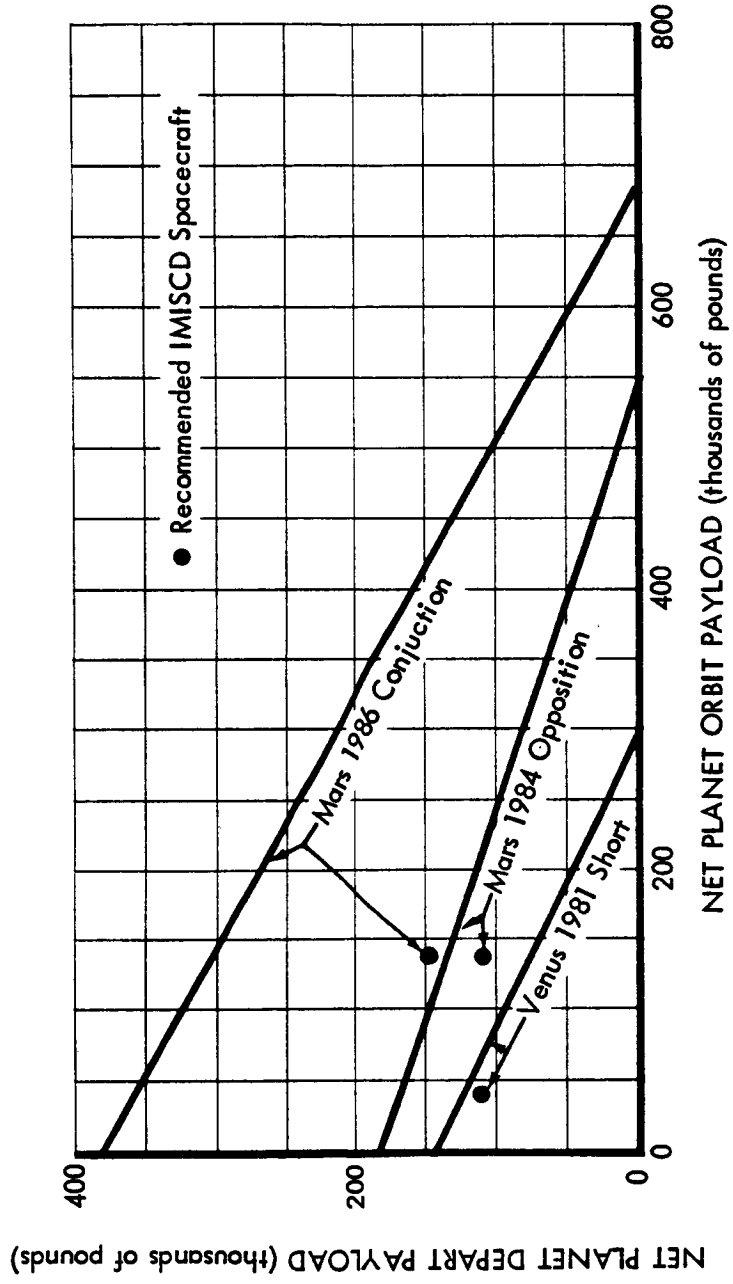

Figure 4.4-1: PAYLOAD CAPABILITIES

Table 4.4-1: DETAIL WEIGHT STATEMENTS (lb)

	Venus 1981 Short	Mars 1984 Opposition	Mars 1986 Conjunction
Earth Entry Module	(13,900)*	(17,400)*	(13,900)*
Crew and Seats	1,360	1,360	1,360
Controls	270	270	270
Guidance and Navigation	300	300	300
Communications	190	190	190
Science	910	910	910
Life Support	730	730	730
Electrical Power	660	660	660
Attitude Control	900	1,140	900
Recovery	710	880	710
Heat Shield	1,900	4,530	1,900
Structure	4,160	4,160	4,160
Growth and Contingency (15%)	1,810	2,270	1,810
Mission Module	(82,900)	(82,900)	(116,580)
Primary Structure	(10,790)	(10,790)	(11,400)
Laboratory Shell	4,970	4,970	4,970
Meteoroid Shield	1,250	1,250	1,710
Insulation	480	480	480
Pressure Bulkheads	380	380	380
Floor and Supports	1,840	1,840	1,990
Airlock and Hatches	300	300	300
EEM Tube and Hatch	70	70	70
Radiation-Shelter Presssure Shell	1,500	1,500	1,500
Secondary Structure	(4,630)	(4,630)	(8,510)
Operation Consoles	350	350	350
Subsystem Supports, Cabinets, and Partitions	4,100	4,100	7,980
Shelter Facilities	180	180	180
ECS/Life Support	(5,520)	(5,520)	(9,320)
Atmosphere Supply	3,200	3,200	6,380
Atmosphere Control	640	640	740
Thermal Control	510	510	510
Water Management	800	800	1,220
Waste Management	60	60	60
Food Handling	150	150	150
Personal Hygiene	160	160	160
Crew Support	(1,920)	(1,920)	(2,410)
Pressure Suits and Storage	590	590	590
EVA Equipment	690	690	690
Exercise and Recreation	210	210	520
Medical and Dental	430	430	610

*EEM weight per IMIEO computer program input (see Figure 4.4-15)

Table 4.4-1: DETAIL WEIGHT STATEMENTS (lb) (Continued)

	Venus 1981 Short	Mars 1984 Opposition	Mars 1986 Conjunction
Communications and Data Handling	(1,370)	(1,370)	(1,370)
Unified S-Band System	180	180	180
EVA/Intercom/Emergency	60	60	60
UHF System	150	150	150
Data Management	140	140	140
Laser System	780	780	780
Wiring	60	60	60
Attitude Control	(1,400)	(1,400)	(1,530)
Reaction Control System	60	60	60
Propellant Supply System	470	470	600
CMG and Controls	840	840	840
Wiring	30	30	30
Guidance and Navigation	(140)	(140)	(140)
IMU	20	20	20
Trackers and Sensors	90	90	90
Computer	20	20	20
Wiring	10	10	10
Displays and Controls	(490)	(490)	(510)
Vehicle Operations	190	190	190
Science Program	200	200	220
Shelter Operations	60	60	60
Wiring	40	40	40
Electrical Power	(10,170)	(10,170)	(10,170)
Isotope Unit	1,480	1,480	1,480
Shielding	3,200	3,200	3,200
Insulation Structure	160	160	160
Power Conversion System	2,500	2,500	2,500
Power Conditioning	830	830	830
Power Distribution and Lighting	2,000	2,000	2,000
Experiment Equipment	(10,860)	(10,860)	(12,290)
Optical Laboratory	1,600	1,600	1,600
Geophysical Laboratory	450	450	450
Electronic Laboratory	250	250	250
Bioscience Laboratory	2,670	2,670	4,000
Primary Instruments	3,480	3,480	3,480
In-Transit Experiments	410	410	410
Science Information Center	2,000	2,000	2,100

Table 4.4-1: DETAIL WEIGHT STATEMENTS (lb) (Continued)

	Venus 1981 Short	Mars 1984 Opposition	Mars 1986 Conjunction
Expendables	(18,060)	(18,060)	(35,600)
Reaction Control Propellant	3,940	3,940	5,000
Gaseous Oxygen	570	570	1,240
Gaseous Nitrogen	820	820	1,790
Charcoal	160	160	360
Catalyst	40	40	80
Lithium Hydroxide	70	70	150
Water	3,080	3,080	6,760
Water Recovery Expendables	600	600	1,300
Waste Management Expendables	650	650	1,420
Hygiene Expendables	1,180	1,180	2,570
Food	6,700	6,700	14,500
Medical/Dental	70	70	250
Thermal Control Expendables	180	180	180
Redundancy	(4,580)	(4,580)	(7,130)
Environmental Control	1,630	1,630	2,550
Life Support and Crew Support	1,200	1,200	1,570
Communications	620	620	1,080
Data Management	260	260	390
Attitude Control	290	290	310
Reaction Control	420	420	440
Guidance and Navigation	80	80	110
Electrical Power	80	80	680
Growth and Contingency (25%)	(12,970)	(12,970)	(16,200)
Mission Module Interstages	(10,700)	(10,700)	(10,700)
Outer Shell	7,930	7,930	7,930
End Closures and Doors	520	520	520
EEM Support and Separation	1,740	1,740	1,740
Growth and Contingency (5%)	510	510	510
Mars Excursion Module	---	(95,290)	(95,290)
Ascent Capsule		5,590	5,590
Ascent Stage II Propulsion		6,860	6,860
Ascent Stage I Propulsion		13,450	13,450
Descent Stage		43,200	43,200
Deorbit Motor		4,200	4,200
Growth and Contingency (30%)		21,990	21,990
Probes	(37,610)	(24,480)	(24,480)
Hard Lander	---	1,220	1,220
Occultation Detector-Orbiter	---	150	150
Topside Sounder Orbiter	---	230	230
Magnetometer Orbiter	---	150	150
Mars/Moon Hard Landers	---	8,750	8,750
Soft Lander	3,510	4,940	4,940
Mapping Radar Orbiter	17,150	1,050	1,050

Table 4.4-1: DETAIL WEIGHT STATEMENTS (lb) (Continued)

	Venus 1981 Short	Mars 1984 Opposition	Mars 1986 Conjunction
Atmosphere Drifter-Biprobe	1,150	---	---
RF Window Probe-Drifter	1,220	---	---
Cloud Data Probe-Orbiter	2,300	---	---
Probes Support and Separation	2,530	1,650	1,650
Growth and Contingency (35%)	9,750	6,340	6,340
MEM and Probes Interstages	(7,300)	(10,300)	(10,300)
Outer Shell	6,950	6,950	6,950
MEM Support and Separation	---	2,860	2,860
Growth and Contingency (5%)	350	490	490
Inbound Midcourse Propulsion	(4,540)	(4,020)	(6,380)
Tankage	270	210	350
Propulsion	320	320	350
Unused Propellant	1,360	830	2,270
Operating Propellant	2,520	2,600	3,340
Growth and Contingency (11%)	70	60	70
Propulsion Module 3	(319,950)	(383,770)	(308,840)
Tankage	36,940	36,940	36,940
Slosh Baffles	3,290	3,290	3,290
Tank Supports	7,540	7,540	7,540
Insulation	7,470	3,440	12,400
Engine	28,530	28,530	28,530
TVC	2,000	2,000	2,000
Propellant Feed	500	500	500
Thrust Structure	950	950	950
Stage Equipment	6,240	6,240	6,240
Meteoroid Shield	42,000	42,000	46,240
Interstages	11,530	11,520	11,570
Growth and Contingency (11%)	16,170	15,720	17,180
Unused Propellant	3,710	5,380	25,360
Operating Propellant	153,080	219,720	110,100
Orbit Trim Propulsion	(12,900)	(17,020)	(15,950)
Tankage	340	400	380
Propulsion	600	720	690
Unused Propellant	830	1,100	1,030
Operating Propellant	11,030	14,680	13,730
Growth and Contingency (11%)	100	120	120

Table 4.4-1: DETAIL WEIGHT STATEMENTS (lb) (Continued)

	Venus 1981 Short	Mars 1984 Opposition	Mars 1986 Conjunction
Propulsion Module 2	(634,070)	(535,900)	(428,540)
Tankage	36,940	36,940	36,940
Slosh Baffles	3,290	3,290	3,290
Tank Supports	7,540	7,540	7,540
Insulation	2,060	2,140	2,930
Engine	28,530	28,530	28,530
TVC	2,000	2,000	2,000
Propellant Feed	500	500	500
Thrust Structure	950	950	950
Stage Equipment	6,240	6,240	6,240
Meteoroid Shield	42,000	42,000	42,000
Interstages	11,520	11,520	11,520
Growth and Contingency (11%)	15,570	15,580	15,670
Unused Propellant	11,490	9,090	6,460
Operating Propellant	465,440	369,580	263,970
Outbound Midcourse Propulsion	(30,000)	(31,640)	(27,700)
Tankage	630	650	590
Propulsion	1,090	1,140	1,020
Unused Propellant	1,960	2,070	1,810
Operating Propellant	26,130	27,590	24,100
Growth and Contingency (11%)	190	190	180
Propulsion Module 1	(1,530,690)	(1,511,090)	(1,388,250)
Tankage	110,820	110,820	110,820
Slosh Baffles	9,860	9,860	9,860
Tank Supports	22,590	22,590	22,590
Insulation	5,540	5,590	5,980
Engine	85,590	85,590	85,590
TVC	6,000	6,000	6,000
Propellant Feed	1,500	1,500	1,500
Thrust Structure	2,850	2,850	2,850
Stage Equipment	12,090	12,090	12,090
Meteoroid Shield	126,000	126,000	126,000
Interstages	34,540	34,560	34,570
Cluster Structure	8,160	8,010	7,140
Growth and Contingency (11%)	46,810	46,800	46,750
Unused Propellant	25,410	24,950	21,970
Operating Propellant	1,032,930	1,013,880	894,540
*Initial Mass in Earth Orbit (lb)	2,684,560	2,724,510	2,446,910
(kg)	(1,217,720)	(1,235,840)	(1,109,920)

*See Figure 4.4-1.

each PM is that propellant burned in that PM. Because of the transfer, it is possible to show more operating propellant weight in a PM-1 or PM-2 than the module is capable of containing. Figure 4.4-2 shows the common module weight as a function of time in space and propellant weight. The curve shows the effect of additional meteoroid shielding with time, plus additional insulation and boiloff weight with increased time and decreased propellant weight. Additional propellant provides a heat sink that reduces insulation and boiloff weight.

4.4.2 IMIEO COMPUTER PROGRAM

The Boeing designed IMIEO computer program provides a tool by which the complicated relationships of design variables and the iterations required in a multistaged device are solved rapidly and accurately. This computer program allowed the accumulation of more data in sensitivities and multimission analyses than would have been possible with hand calculations. The IMIEO program logic and weight inputs are included.

4.4.2.1 Program Logic

The principal problem in calculating the initial mass in Earth orbit of an interplanetary space vehicle lies in the large number of interrelated design variables that must be adjusted to meet the mission requirements. For example, a reasonably accurate propulsion module design requires that a set of over 25 equations, with an equal number of variable unknowns that must be solved. This Boeing-design computer program solves this problem rapidly and has the flexibility to allow design concept variation as well as to provide concept evaluation. Each element of the space vehicle is described mathematically in terms of the mission and design variables. To facilitate design changes, each of the major element descriptions are programmed as subroutines of the overall program.

A logic diagram of the computer program is shown in Figure 4.4-3. Each block represents a separate control or space vehicle element description subroutine. The main subroutine is a control program, which calls CONTRL (Control) a subroutine written by the computer according to a set of control cards that determine the number and staging order of the propulsion and payload modules and, thus, controls the overall space vehicle configuration. CONTRL calls DEFINE, which is an input subroutine for design data associated with the space vehicle, and INPUT, which inputs design for each individual propulsion module. The payload subroutines ENTRY, MISSION, and EXCURSION are called, as required by the staging sequence. The payload subroutines furnish module weights based on input data. CONTRL further collects all calculated data for the space vehicle and provides the program output.

Subroutine PROMOD (propulsion module), called by CONTRL, controls the calculation of each individual propulsion stage by selecting the required propulsion stage data. Program control is then transferred to RAFSON. RAFSON gets its name from the Newton-Raphson procedure for solving a transcendental equation. It uses an initial estimate,

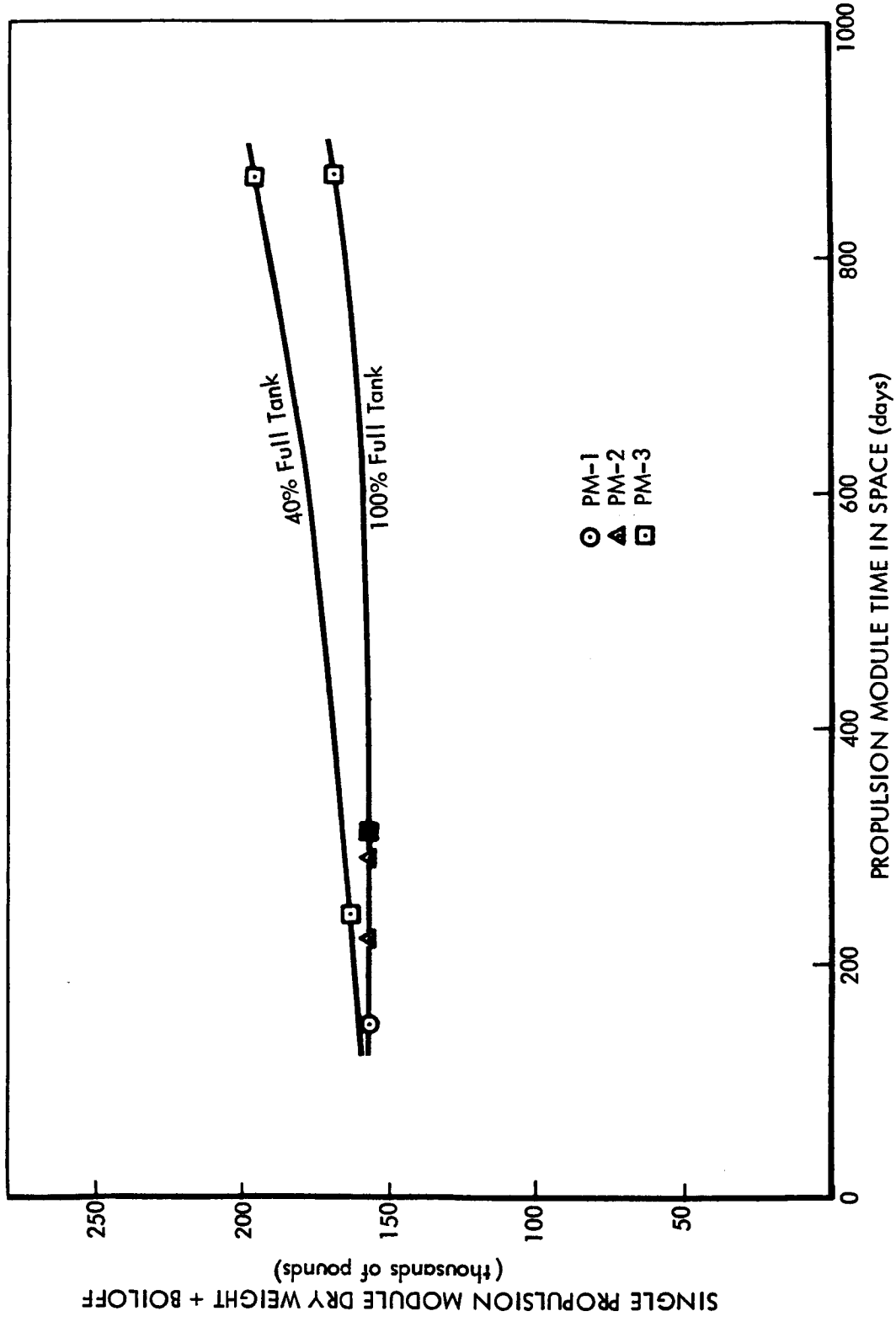

Figure 4.4-2: COMMON PROPULSION MODULE WEIGHTS

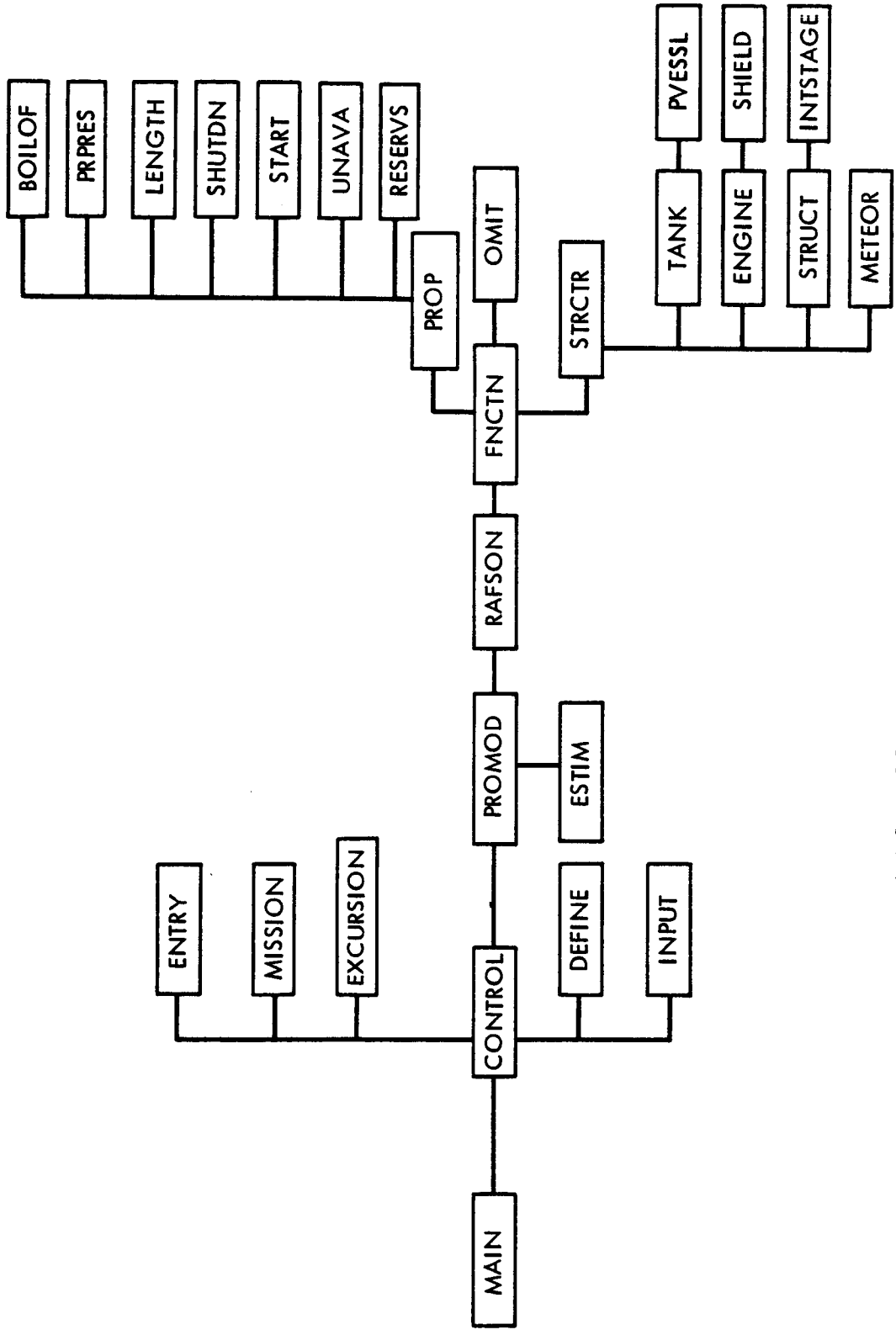

Figure 4.4-3: COMPUTER DESIGN PROGRAM LOGIC

obtained from subroutine ESTIM, and proceeds to improve the value of the independent variable. The weight of the operating propellant (WOP) is taken as the independent variable for this routine. Successive iterations of each stage design are made, based on projected values of WOP, until the following function is equal to zero within a prescribed value:

$$\phi = WPL + WP + WST - WOP \left(\frac{R}{R-1}\right)$$

$$R = e^{\frac{\Delta V}{gI_{SP}}}$$

where

ΔV is the imputed ideal velocity increment after adjustment for gravity losses and startup and shutdown corrections for nuclear systems.

I_{sp} is specific impulse of the propellant.

WPL is the payload for the current stage.

WP is total propellant weight including reserves (obtained from subroutine PROP).

WST is total structure weight (obtained from subroutine STRCTR).

The start-burn designed stage weight (WO = WPL + WP + WST) must equal the required start-burn weight $[(WO^1 = WOP \left(\frac{R}{R-1}\right)]$, based on mission parameters. Thus, ϕ must equal zero for the stage to be designed. Subroutine RAFSON is a general-purpose subroutine; thus, control of the program is transferred to subroutine function (FNCTN). FNCTN calls subroutine propellant (PROP) and total structure (STRCTR), from which the total propellant weight (WP) and structure weight WST are obtained; ϕ is then calculated. If any part of the structure is to be dropped from the stage (such as the meteoroid shield or the interstage), subroutine OMIT is called and ϕ is adjusted accordingly.

Subroutine PROP calls the various reserve subroutines, which at the present time are dummy routines set up for expansion of program detail, as required. The reserves are simple percentages of the operating propellant that can be controlled by inputs to the program. For the recommended design, only the unavailable propellant (UNAVA) is calculated. Subroutine PROP calls subroutines start (START) and shutdown (SHUTDN), if nuclear stages are to be calculated. Subroutines START and SHUTDN calculate the weight of the propellant used in the startup and shutdown of a nuclear engine, as well as an equivalent velocity increment based on a averaged I_{sp} and the resulting mass ratios. Further, subroutine SHUTDN contains an option to calculate coolant propellant if multiple operation of the nuclear engine is required. The inputed,

ideal velocity increments are adjusted in PROP for gravity losses, and those velocity increments resulting from the propellant used during startup and shutdown. Subroutine length (LENGTH) is called to determine the necessary tank dimensions to calculate boiloff and insulation requirements from subroutine boiloff (BOILOF).

Subroutine LENGTH is a key subroutine in the configuration of the propulsion module. Here the length, diameter, number, and shape of the tanks are defined. Further, the area of the various surfaces of the resulting tanks are calculated. Nine options are available, including the following items.

1) For a given diameter and length limit, the number and length of cylindrical tanks with spherical elliptic or elliptic-conical heads can be determined. Further, common bulkhead tanks for chemical systems can be calculated for these conditions.

2) For a fixed diameter and length, the number of cylindrical tanks can be determined.

3) For a fixed diameter limit, the number and required diameter of spherical tanks can be determined.

4) For a fixed length and diameter limit, the diameter and number of cylindrical tanks can be determined.

5) The tank areas associated with a fixed diameter, length, and number of cylindrical tanks with elliptic or spherical heads can be calculated.

Subroutine BOILOF calculates the weight of propellant lost due to boiloff, if any, and the required insulation, thickness, and weight. Details of these calculations are given in Section 4.4.2.2. If boiloff does occur, the weight of boiloff propellant can be subtracted from the stage before engine burn-through Subroutine OMIT. Options include the use of subcooled or saturated propellants.

The structural weight calculation is controlled through Subroutine STRCTR, which first calls Subroutine TANK. TANK accounts for the weight of the pressure vessels calculated in Subroutine PVESSL and computes the required weight of slosh prevention materials for the tanks. PVESSL computes the weight of the pressure vessel. The method of calculation is discussed in Section 4.4.2.2. Options include spherical, cylindrical (spherical-elliptic and conical heads), and common bulkhead tanks. Subroutine ENGINE, called by STRCTR, calculates the weight and number of engines. Options include chemical engines and small or large Nerva nuclear engines. Further, the number of engines can be based on the number of tanks or an input initial thrust-to-weight ratio. Subroutine SHIELD is presently a dummy routine, which will be replaced by the shield-calculation program discussed in Section 4.3.1.2.

Subroutine STRUCT calculates the cluster, structural weight for multitank modules, as well as such miscellaneous structural weights as tank support and stage equipment. (See Section 4.4.2.2.) STRUCT calls INSTAGE, which calculates the interstage weights based either on space loads or Earth launch loads.

The meteroid shield weight is calculated in Subroutine METEOR. Calculation details are given in Section 4.4.2.2. Output of the program is in the form of a C-array for each stage. In addition, all inputs are written out prior to the output array. A sample case is shown in Figures 4.4-4 and 4.4-5. The Fortran nomenclature is defined on the right for the reader's convenience.

4.4.2.2 IMIEO Program Weight Inputs

The primary job of the IMIEO program is to size the nuclear (and mid-course) propulsion modules to match the mission velocities and spacecraft weights. The spacecraft (EEM, MM, and MEM) weight inputs to the program are at the total element level, and are a function of mission time and Earth entry velocity. Design criteria and weight equations for the major propulsion module components, as well as for the spacecraft elements, are given below.

Main Propulsion Modules--The main propulsion modules for the recommended baseline configurations are nuclear stages utilizing the Nerva engine and liquid hydrogen propellant. The liquid hydrogen propellant specific impulse is 850 seconds and has a minimum density of 4.2 lb/ft^3 (30-psi tank pressure at saturation temperature). The propellant for engine startup and shutdown (approximately 5000 pounds per engine) is used for ΔV at a reduced specific impulse (approximately 620 seconds). Propellant reserves are included by a 2% increase in the nominal ΔV requirements. Unavailable propellant is 2.5% of the operating propellant weight.

Tankage--The liquid-hydrogen tankage material is 2219-T81 aluminum alloy. The allowable room temperature yield and ultimate stress levels are:

$$F_{TY} = 45{,}000 \text{ psi}$$

$$F_{TU} = 60{,}000 \text{ psi.}$$

The factors of tank pressure safety are:

Limit to proof = 1.05
Proof to yield = 1.10
Limit to ultimate = 1.40.

Thus, the tanks will be proof-tested at 5% above the limit pressure and 10% below the yield stress. The tanks, therefore, are yield critical, and the allowable stress in the program is 45,000 psi, with a factor of safety of 1.05 x 1.10 = 1.155. Since the tanks will be hydrostatically tested (with water), room temperature allowables are appropriate.

```
@X    FOR,* CONTRL
COMPILATION BY UNIVAC 1108 FORTRAN-IV DATED     NOV. 23,1965 F4008
THIS COMPILATION WAS DONE ON 04 DEC 67 AT 13:32:09

      END OF LISTING.     0 *DIAGNOSTIC* MESSAGE(S).
   CONTRL  CODE    SYMBOLIC                                    04 DEC 67  13:32:09   0  00417316    14    108  (DELETED)


@X XQT MAIN
                    BOEING DESIGN PROGRAM MODEL-2


CAB =     .63500001+05  CMEM =     .13007000+06  CEEM =     .10500000+01
     SLASH          CLWRF          CFPRF          CPRF           CUPF           CSPF
  .10900000+05   .00000000      .49999999-01   .00000000      .24999999-01   .00000000
    NERVA1         NERVA2          UDGP           NULT          ENTVEL          CMMS
  .11900000+05   .26590000+05   .49900000+04   .48499999+01   .55000000+05   .61050000+02
     RHOMS         GROWTH           KIN
  .27999999+01   .11100000+01   .70000000-00
     EPSLN           GFF          NSATUR          ABC1           ABC2          NERTYP
  .70000000-00   .20000000-00   .10000000+01   .70000000-00   .20000000-00   .20000000+01
      I&C            ES            TLNCH           IOPT          ELVPC
  .20000000+01   .15000000+01   .23200000+08   .10000000+01   .54840000+06
      ELVL           DLV
  .24050000+03   .33000000+02
   DV        TAU     OPT NF NO NPLNT TRIP TOWO   F2  NTNKF NTNKO MATTNK NUC
 13585.0     30.00    1  1  1    3    0   .200  1.0   3     0     1     1
   300.0    270.00   10  3  8    4    1   .050  1.0   1     1     1     0
  6420.0     20.00    1  1  1    4    1   .200  1.0   1     0     1     1
   300.0      5.00   10  3  8    4    0   .050  1.0   1     1     1     0
 19000.0     35.00    1  1  1    4    0   .200  1.0   1     0     1     1
   300.0    210.00   10  3  8    4    1   .050  1.0   1     1     1     0

  TO        TL        TS      KOMIT
  33.00   115.00      .00 000000100010010
  33.00    62.00      .00 000000100000000
  33.00   115.00      .00 000000100010010
  33.00    62.00      .00 000000100000000
  33.00   115.00      .00 000000100010010
  33.00    62.00      .00 000000100000000

   PSUBO        F      UDGPF     UDGPO     ELNGTH    ETL    TAUX
   .9970      1.17    4990.00      .00     43.00     .00   150.00
   .9995      2.00    6480.00    6480.00   15.00     .00   100.00
   .9970      1.17    4990.00      .00     43.00     .00   100.00
   .9995      2.00    6480.00    6480.00   15.00     .00    80.00
   .9970      1.17    4990.00      .00     43.00     .00    80.00
   .9995      2.00    6480.00    6480.00   15.00     .00    60.00
**** PROPULSION  STAGE    6  ****
**** PROPULSION  STAGE    5  ****
**** PROPULSION  STAGE    4  ****
**** PROPULSION  STAGE    3  ****
TANK IS TOO SHORT
```

Figure 4.4-4: Design Program Imputs - Example

***** OUTPUT ARRAY *****

STAGE NUMBER	1	2	3	4	5	6	
WP C(1)	.116664+07	.294605+05	.319116+06	.170662+05	.261113+06	.390367+04	Total propellant weight
WPL C(2)	.119608+07	.116642+07	.689094+06	.670563+06	.120205+06	.115728+06	Payload weight
WST C(3)	.425503+06	.198667+04	.142531+06	.131961+04	.143401+06	.516340+03	Total structure weight (no growth)
WOP C(4)	.112245+07	.272606+05	.305336+06	.156761+05	.250290+06	.271095+04	Operating propellant
WLWR C(5)	.000000	.000000	.000000	.000000	.000000	.000000	Propellant reserves launch window
WFPR C(6)	.000000	.136303+04	.000000	.783804+03	.000000	.135548+03	Propellant reserves performance
WPR C(7)	.000000	.000000	.000000	.000000	.000000	.000000	Not used
WUNA C(8)	.280612+05	.681516+03	.763339+04	.391902+03	.625725+04	.677738+02	Unavailable reserves
WBO C(9)	.000000	.155357+03	.000000	.214407+03	.000000	.989395+03	Boiloff
WSD C(10)	.707270+04	.000000	.301763+04	.000000	.134569+04	.000000	Shutdown propellant
WT C(11)	.120665+06	.372903+03	.402282+05	.221927+03	.402282+05	.485501+02	Tank weight
WE C(12)	.959400+05	.112644+04	.319800+05	.749754+03	.319800+05	.328431+03	Engine weight
WS C(13)	.776022+05	.210910+03	.253011+05	.149045+03	.253014+05	.503376+02	Structure weight
WMS C(14)	.125996+06	.000000	.419987+05	.000000	.419987+05	.000000	Meteoroid shield weight
WPV C(15)	.110823+06	.291108+03	.369410+05	.164474+03	.369410+05	.272505+02	Pressure vessel weight
WIN C(16)	.528056+04	.276414+03	.302279+04	.198887+03	.389227+04	.890217+02	Insulation weight
WSL C(17)	.986158+04	.817957+02	.328719+04	.574535+02	.328719+04	.212996+02	Slosh prevention weight
LF C(18)	.115000+03	.706047+01	.115000+03	.588904+01	.115000+03	.330159+01	Fuel tank length
AF C(19)	.122893+05	.156609+03	.122893+05	.108953+03	.122893+05	.342449+02	Fuel tank area
WIS C(20)	.345584+05	.000000	.115165+05	.000000	.115169+05	.000000	Interstage weight
WMSC C(21)	.346764+05	.210910+03	.137846+05	.149045+03	.137846+05	.503376+02	Miscellaneous structure weight
WCS C(22)	.836743+04	.000000	.000000	.000000	.000000	.000000	Cluster structure
WO C(23)	.283724+07	.119808+07	.116642+07	.689094+06	.540493+06	.120205+06	Total weight
AO C(24)	.000000	.208050+03	.000000	.144741+03	.000000	.454933+02	Oxidizer tank area
NF C(25)	.100000+01	.300000+01	.100000+01	.300000+01	.100000+01	.300000+01	Fuel index
NO C(26)	.000000	.800000+01	.000000	.800000+01	.000000	.800000+01	Oxidizer index
DIAF C(27)	.330000+02	.706047+01	.330000+02	.588904+01	.330000+02	.330159+01	Diameter of fuel tank
NTYP C(28)	.100000+01	.000000	.100000+01	.000000	.100000+01	.000000	Type of propulsion nuclear or chem.
RATIO C(29)	.000000	.575000+01	.000000	.575000+01	.000000	.575000+01	Oxidizer-to-fuel ratio
NTNKF C(30)	.300000+01	.100000+01	.100000+01	.100000+01	.100000+01	.100000+01	Number of fuel tanks
NTNKO C(31)	.000000	.100000+01	.000000	.100000+01	.000000	.100000+01	Number of oxidizer tanks
DIAO C(32)	.330000+02	.813783+01	.330000+02	.678766+01	.330000+02	.380538+01	Diameter of oxidizer tank
LO C(33)	.115000+03	.813783+01	.115000+03	.678766+01	.115000+03	.380538+01	Length of oxidizer tank
TOWO C(34)	.217857-00	.500000-01	.168087-00	.500000-01	.398958-00	.500000-01	Initial thrust-to-weight ratio
WSH C(35)	.582000+04	.000000	.194000+04	.000000	.194000+04	.000000	Nerva engine shield weight
WPVO C(36)	.000000	.188297+03	.000000	.105399+03	.000000	.170678+02	Oxidizer pressure vessel weight
WPVF C(37)	.369410+05	.102810+03	.369410+05	.590750+02	.369410+05	.101827+02	Fuel pressure vessel weight
GRSAT C(38)	.268266+07	.119793+07	.111490+07	.688879+06	.488946+06	.119216+06	Start burn weight
WSTRT C(39)	.926098+04	.000000	.312908+04	.000000	.321979+04	.000000	Start-up propellant weight
DVSTRT C(40)	.621368+02	.000000	.491904+02	.000000	.113697+03	.000000	Start-up Delta V
THRUST C(41)	.195000+06	.598949+05	.195000+06	.344429+05	.195000+06	.597505+04	Engine thrust
TPVF C(42)	.163915+07	.316657+05	.477325+06	.185310+05	.420287+06	.447680+04	Total propulsion module weight
TPVO C(43)	.000000	.000000	.000000	.000000	.000000	.000000	Not used
TNS C(44)	.000000	.000000	.000000	.000000	.000000	.000000	Not used
GROWTH C(45)	.111000+01	.111000+01	.111000+01	.111000+01	.111000+01	.111000+01	Structure growth factor
LCF C(46)	.919000+02	.000000	.919000+02	.000000	.919000+02	.000000	Length of fuel tank cylinder
ACF C(47)	.952751+04	.000000	.952751+04	.000000	.952751+04	.000000	Area of fuel tank cylinder
AH1F C(48)	.138088+04	.763045+02	.138088+04	.544765+02	.138088+04	.171225+02	Area of upper fuel tank head
AH2F C(49)	.138088+04	.763045+02	.138088+04	.544765+02	.138088+04	.171225+02	Area of lower fuel tank head
AHF C(50)	.276175+04	.156609+03	.276175+04	.108953+03	.276175+04	.342449+02	Total area of fuel tank head
LCO C(51)	.000000	.000000	.000000	.000000	.000000	.000000	Length of oxidizer cylinder
ACO C(52)	.000000	.000000	.000000	.000000	.000000	.000000	Area of oxidizer cylinder
AH1O C(53)	.000000	.104025+03	.000000	.723703+02	.000000	.227466+02	Area of upper oxidizer head
AH2O C(54)	.000000	.104025+03	.000000	.723703+02	.000000	.227466+02	Area of lower oxidizer head

Figure 4.4-5: Design Program Output — Example

Input Nomenclature for Figure 4.4-4 and -5

CMM	Mission module constant weight
CMEM	MEM + probes + structure weight
CEEM	Growth factor for EEM
SLASH	Not used
CFPRF	Chemical flight performance reserves factor
CUPF	Unavailable factor
NERVA I	Weight of No. 1 Nerva engine
NERVA II	Weight of No. 2 Nerva engine
UDGP	Ultimate design gas pressure
ENTVEL	Not used
CMMS	MM expendable rate
RHOMS	Not used
GROWTH	Growth factor for PM structure
KIN	Factor for elliptic head tanks
EPSLN	Space vehicle emissivity
GFF	Geometric factor for direct solar heating
NSATUR	Propellant initial condition option
ABC1	Infrared absorption coefficient
ABC2	Direct solar absorption coefficient
NERTYP	Nuclear engine option
TWC	ELV design thrust-to-weight
FS	Structure safety factor
TLNCH	ELV thrust level
IOPT	Interstage option
ELVPC	Maximum ELV payload capability
ELVL	Maximum tank length for ELV payload
DLV	Maximum ELV payload diameter
DV	Delta V
TAU	Mission time between burns
OPT	Tank design option (1-10)
NF	Fuel type index
NO	Oxidizer type index
NPLNT	Planet index
TRIP	Location index (0-Planet 1 - Interplanetary)
TOWO	Design thrust-to-weight ratio
NTNKF	Number of fuel tanks inputed
NTANKO	Number of oxidizer tanks inputed
MATTNK	Tank material index
NUC	Propulsion option (nuclear or chemical)
TD	Tank diameter
TL	Tank length
TS	Time required for aftercooling engine
KOMIT	PM component to be stayed prior to burn
PSOBO	Probability of meteroid penetration
F	Tank welds and structure factor
UDGPF	Design pressure fuel
UDGPO	Design pressure oxidizer
ELNGTH	Engine length nuclear
ETL	Chemical engine length option
TAUX	PM time in Earth orbit

The nominal gas pressure in the tank is assumed to be 30 psi. The tank must also withstand hydrostatic pressure (from the LH_2) during launch-to-Earth orbit at a maximum acceleration of 4.2 g. During the engine burn of any propulsion module, the tank cylinder wall carries the thrust loads to the payload above. Previously encountered axial loads are carried through the meteroid shield, which is jettisoned before engine burn. All bulkheads on the recommended baseline are elliptical with $r/R = 0.7$.

A tank weight allowance of 17% of the theoretical tank weight is included in the program to account for the tank Y rings and for material buildup in the weld areas. The tanks are hung inside the meteroid shell from the top by a low-heat-leak, fiberglass-tank support. Pads separate the tank and meteroid shield at the bottom of the tank. A weight allowance of 2% of the propellant weight is included for these tank supports.

Insulation and Boiloff--The tanks are thermally protected by a multilayer insulation. The hydrogen propellant is assumed subcooled to 25.5°R (injection into Earth orbit) to provide initial heat capacity. The thermal design parameters are as shown below.

K = insulation conductivity, Btu/ft-hr°R

= function of outside surface temperature

= 6.8×10^{-6} Btu/ft-hr°R at 320°R and 9.3×10^{-6} Btu/ft-hr°R at 400°R.

A = tank total surface area, ft^2

ΔT = temperature drop across insulation, °R; 300°R for typical PM-3 stage on a Mars mission.

τ = mission duration for the tank in question, hr

h_v = hydrogen heat of vaporization, Btu/lb; 185.3 Btu/lb.

h_s = hydrogen heat capacity from subcooling, Btu/lb; 30.2 Btu/lb (25.5 to 4.10°R).

t = Insulation thickness, ft.

Q_s = Plumbing and structural support heat leak, Btu/hr; 1.157 ΔT (see Section 4.3.1.5)

W_p = total hydrogen weight, lb

ρ = insulation density, lb/ft^3; 3.6 lb/ft^3

W_{Bo} - boiloff weight, lb

W_{Ins} = insulation weight, lb.

The program checks to see if boiloff occurs through the use of the following equations:

Heat in through insulation

Heat capacity from subcooling

$$W_{Bo} = \frac{1}{h_v}\left(\frac{KA\ \Delta T\ \tau}{t} + Q_s \tau - h_s W_p\right)$$

Heat in through plumbing and support

The insulation thickness (near optimum) is where the insulation weight is equal to the boiloff weight from heat through the insulation:

$$t = \sqrt{\frac{K\ \Delta T\ \tau}{h_v\ \rho}} \quad \text{and} \quad W_{Ins} = A\ \rho \sqrt{\frac{K\ \Delta T\ \tau}{h_v\ \rho}}$$

If the solution of the boiloff weight equation yields a positive number, the insulation thickness and weight are determined as shown in the above equation. If the boil off weight comes out negative, however, no boiloff will occur, and the insulation weight is determined as shown below:

$$W_{Ins} = \frac{KA^2\ \Delta T\ \tau\ \rho}{h_s\ W_p - Q_s\ \tau}$$

Propulsion--The nuclear-stage propulsion system is made up of the engine and radiation shield, thrust vector control system, engine thrust structure, and propellant-feed system. The engine and radiation shield weights (26,590 and 1940 pounds per engine, respectively) come from Aerojet-General Corporation data*. The thrust vector control system and engine thrust structure weights (2000 and 950 pounds per engine, respectively) are arrived at empirically, as shown in Figures 4.4-6 and 4.4-7. The propellant feeding system weight (500 pounds per engine) is an estimated weight allowance for plumbing, valves, bellows, and supports required to carry the hydrogen from the tank to the engine-pump inlet.

Interstages--Interstage weights for the program are determined from the empirical curve shown in Figure 4.4-8**. The interstage weight input to the program is the equation of the resulting line, as calculated below:

$$W/S = 0.00034\ N_{c_{ult}} + 1.6$$

---

*AJG Memo 7400:6241L, *Weight, Envelope and Performance Data for the 4000 Mw NERVA Engine*, February 11, 1967

**Data from Boeing Document D5-13183-3, Vehicle Description MLV-SAT-V-25(S), NASA Contract NA88-20266, The Boeing Company, October 1966

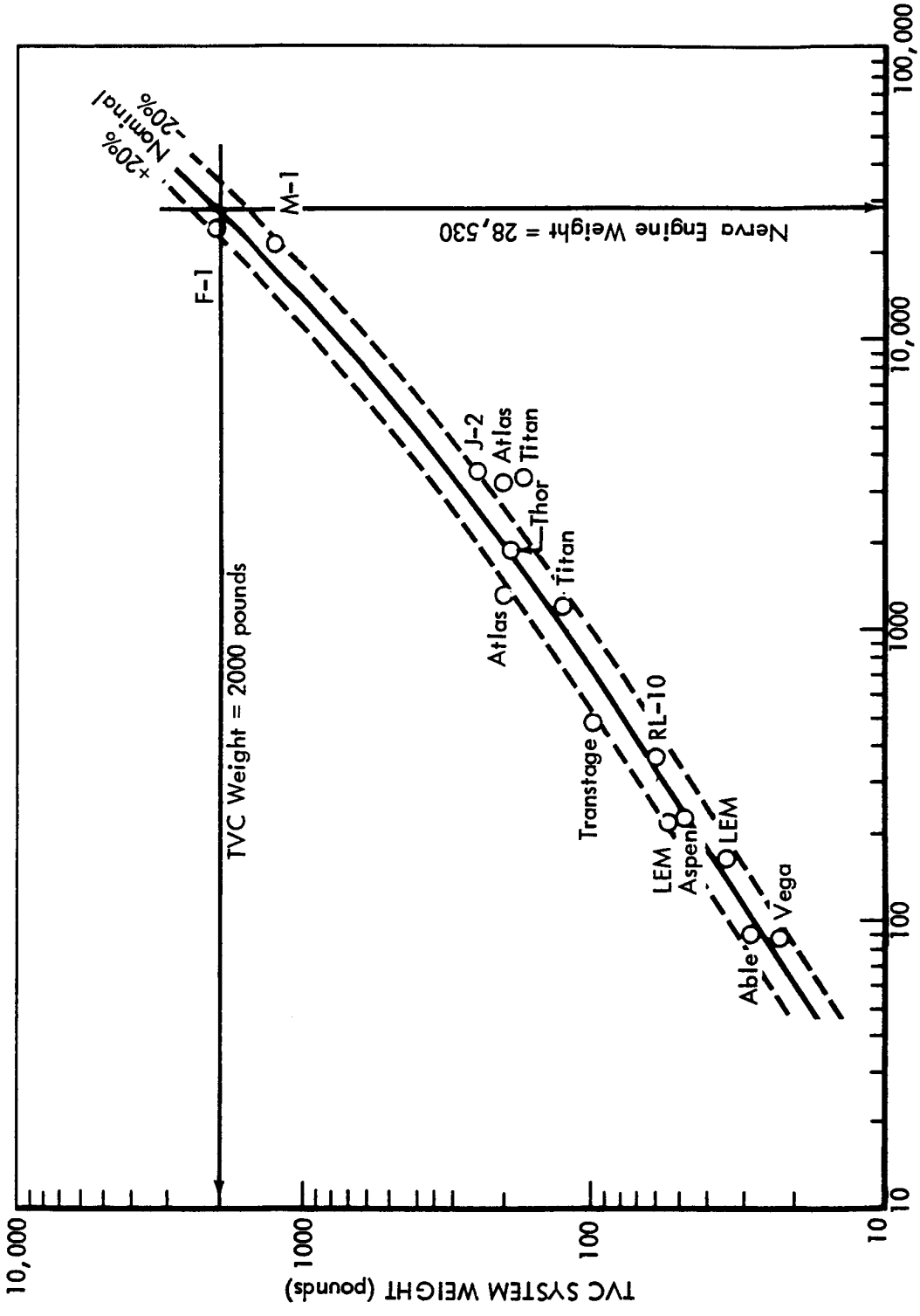

Figure 4.4-6: THRUST VECTOR CONTROL SYSTEM WEIGHT (Includes Hydraulic System and Actuators)

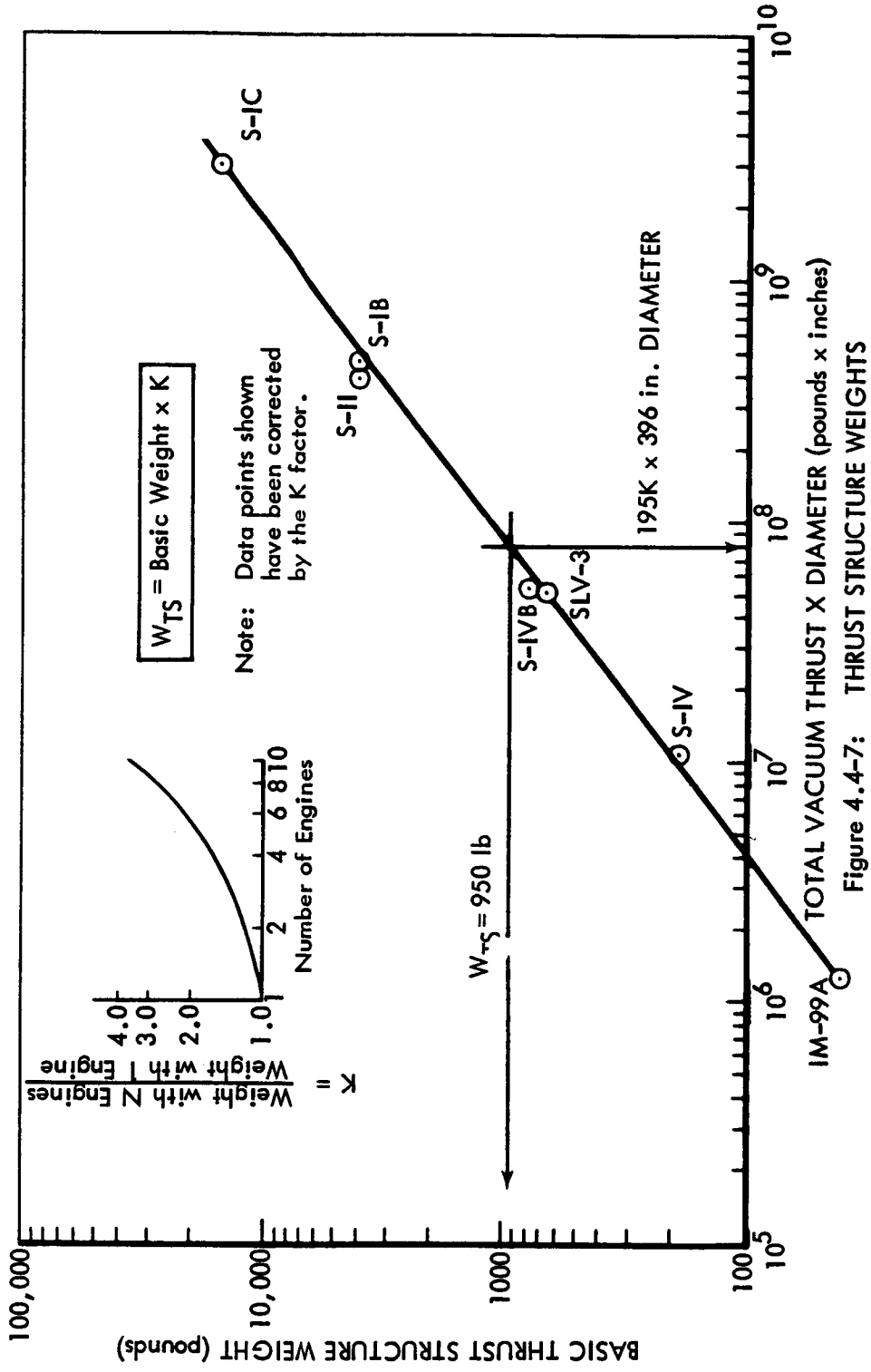

Figure 4.4-7: THRUST STRUCTURE WEIGHTS

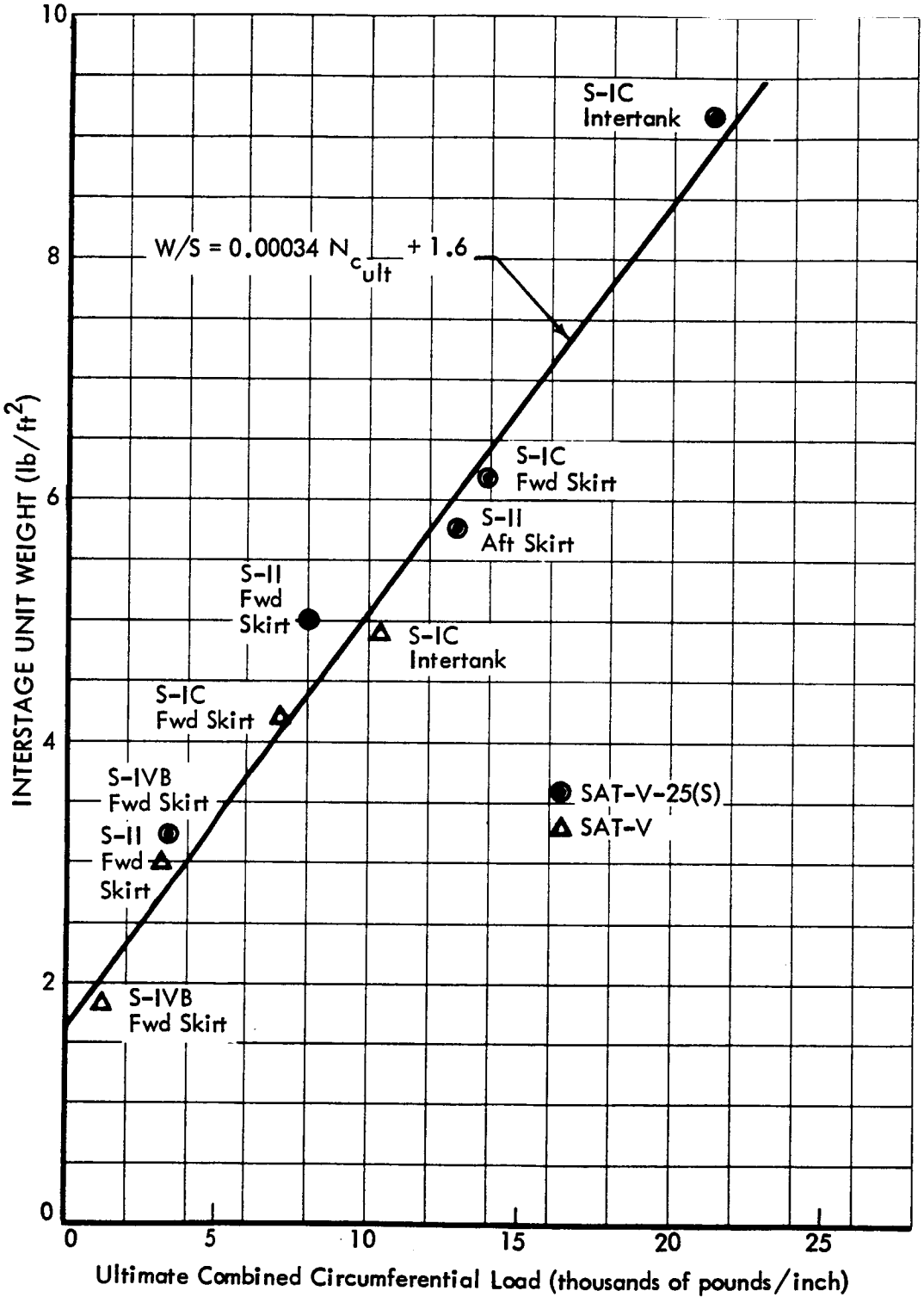

Figure 4.4-8: INTERSTAGE UNIT WEIGHTS

where

W/S = interstage unit weight, lb/ft^2

$N_{c_{ult}}$ = combined circumferential ultimate load, lb/in.

The design, ultimate interstage loads are determined from the accelerations incurred in space. The load equation is:

$$N_{c_{ult}} = \frac{W_{above} \; (T/W)_{max} \; (F.S.)}{\pi \; D \; \cos \; \theta}$$

where

W_{Above} = weight above the interstage, lb

$(T/W)_{max}$ = maximum thrust-to-weight ratio incurred in space from a previous stage.

F.S. = factor of safety (1.5).

D = interstage average diameter, in.

θ = interstage half-angle, degrees.

The lower interstage from the aft-tank Y ring to the engine exit plane is jettisoned before that stage's ignition.

Meteroid Shield--The meteroid shield covers the tank cylinder wall from Y ring to Y ring. This outer shell serves the dual purpose of providing meteroid protection from the tank, plus carrying all the loads incurred before ignition of the stage. Just before the stage's ignition, its meteoroid shield is jettisoned. The shield configuration is a directional core sandwich, which forms a two-sheet bumper. Of the tank wall thickness, 70% is used as the third sheet in the two-sheet bumper analysis. The probability of no penetration (P_o) is assumed 0.997.

Figure 4.4-9 shows the meteoroid diameter as a function of the area, time, and P_o. This curve represents a Boeing estimate of the flux in the vicinity of Earth. Because the estimates of meteoroid flux and flux changes with location are so widely varied at this time, the flux for this study is assumed constant at Earth, Mars, and Venus.

Figure 4.4-10 is the design curve for a two-sheet bumper. The two-sheet bumper is the directional-core-sandwich outer shell that must also carry all previous acceleration and bending loads. The total outer shell thickness ($t_1 + t_2$), as derived from the curve, is assumed equal to the equivalent thickness of the sandwich. Thus, the core thickness is assumed to be 100% effective, as if it were distributed equally between the outer and inner face sheets. Of the tank-wall pressure thickness, 70% determines

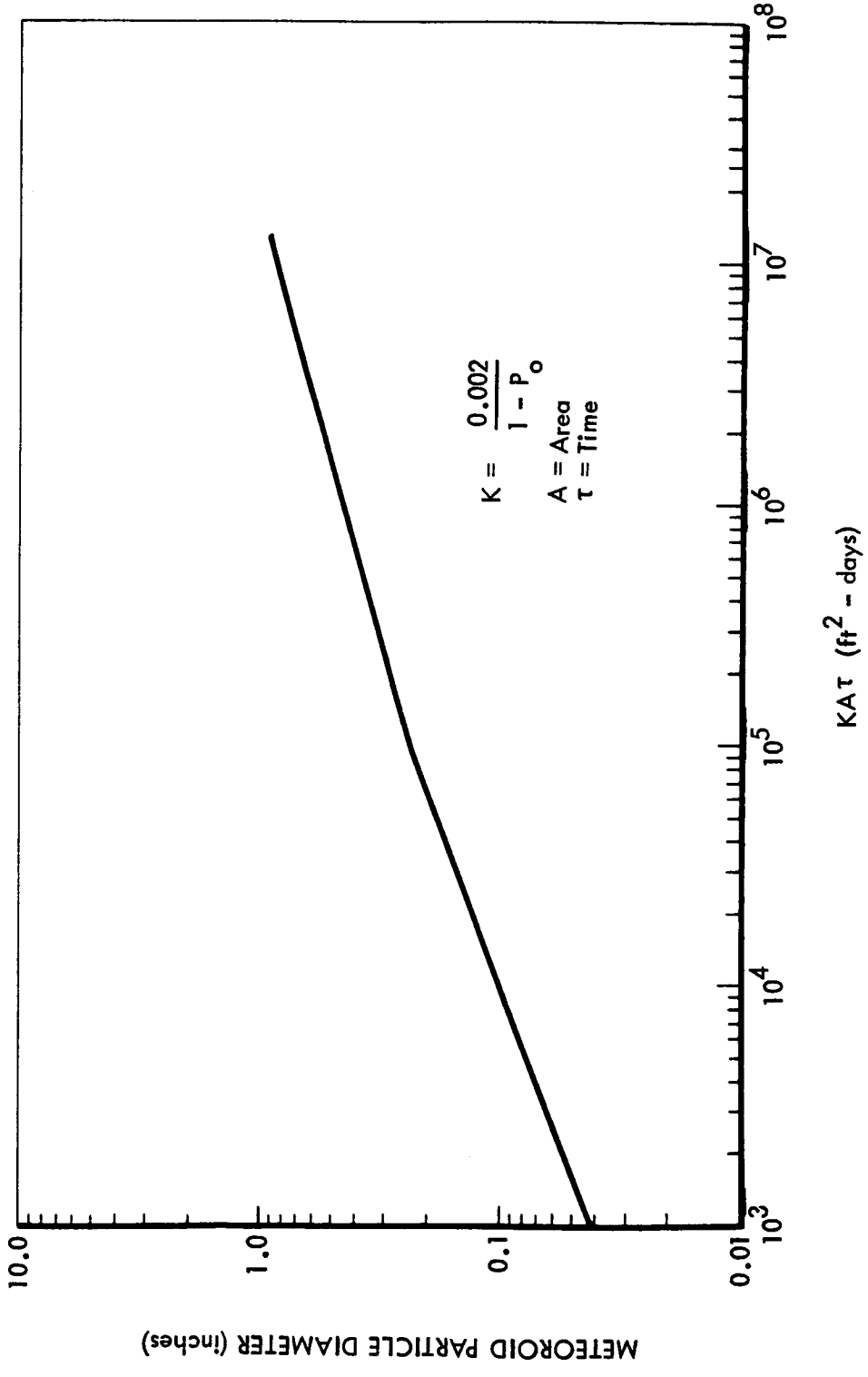

Figure 4.4-9: METEOROID PARTICLE DIAMETER

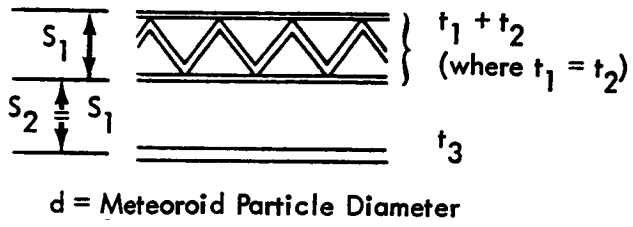

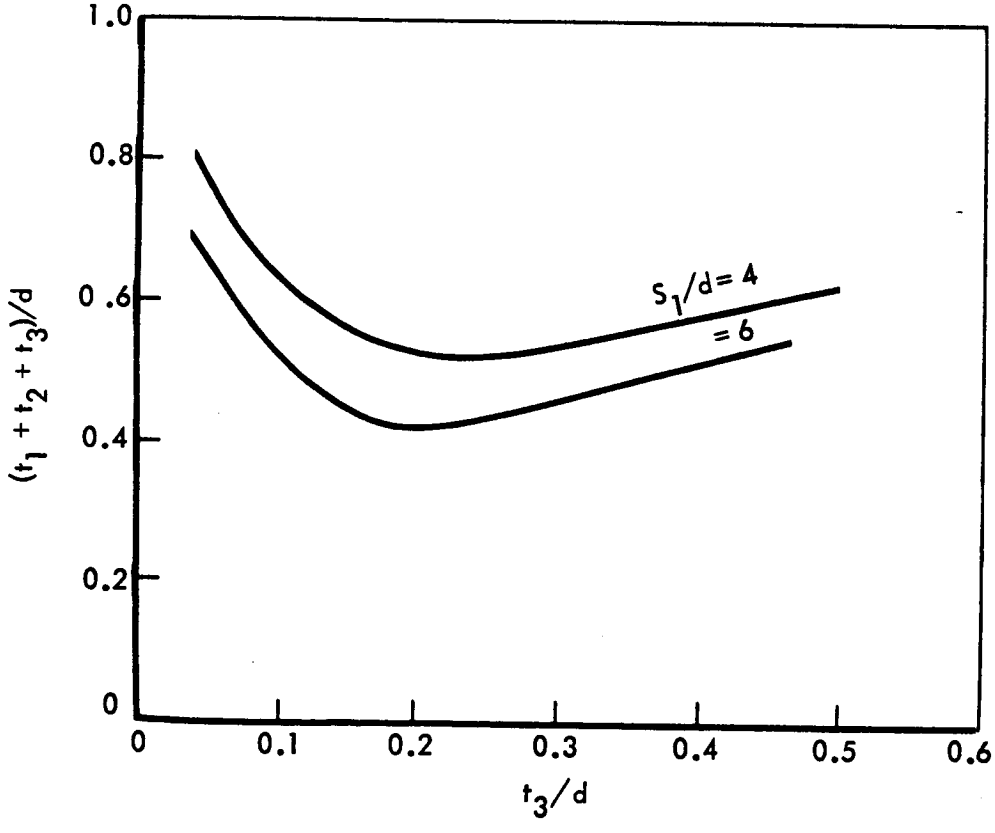

Figure 4.4-10: TWO-SHEET METEOROID BUMPER DESIGN

t_3. Knowing the meteoroid diameter (d) from Figure 4.4-7, the outer shell theoretical thickness ($t_1 + t_2$) can now be determined. Figure 4.4-11 converts the ($t_1 + t_2$) thickness from Figure 4.4-10 to a shield unit weight. This conversion is made using the following equation:

$$W/S = (t_1 + t_2)\ (144)\ (0.101)\ \underbrace{(1.10) + 0.5}_{\text{allowance for frames, attachments, separation, etc.}}$$

Area-time factors are shown to account for planet shielding and multiple tank shielding. A unit-weight limit line is shown at 4.3 lb/ft^2 which corresponds to the shell weight required to carry the ultimate load at the top of the booster ($N_{c_{ult}}$ = 8000 lb/in.) The program weight equations for meteoroid shielding are:

$FA\tau < 6 \times 10^6$ ft^2-days

$W_{MS} = 4.3\ A_c$.

where

W_{MS} = meteoroid shield weight, lb

A_c = tank cylinder area

$FA\tau > 6 \times 10^6$ ft^2-days;

$W_{MS} = 0.000116\ (FA\tau)^{0.675}$

(straight-line approximation).

Stage Equipment--An estimate of the stage equipment required on the nuclear stages is based primarily on existing liquid-oxygen/liquid-hydrogen propulsion stages. Figure 4.4-12 shows the equipment weight trend line established by these existing stages. An estimate of the equipment weight breakdown for a nuclear stage with 250,000 pounds of propellant is also shown. The stage equipment curve for the nuclear stages is assumed parallel to the LO_2 LH_2 line through the one estimated data point. The nuclear-stage equipment weight equation input to the program is:

$$W_{EQ} = 2.83\ (W_p)^{0.6}$$

W_{EQ} = stage equipment weight, lb

W_p = stage operating propellant weight, lb.

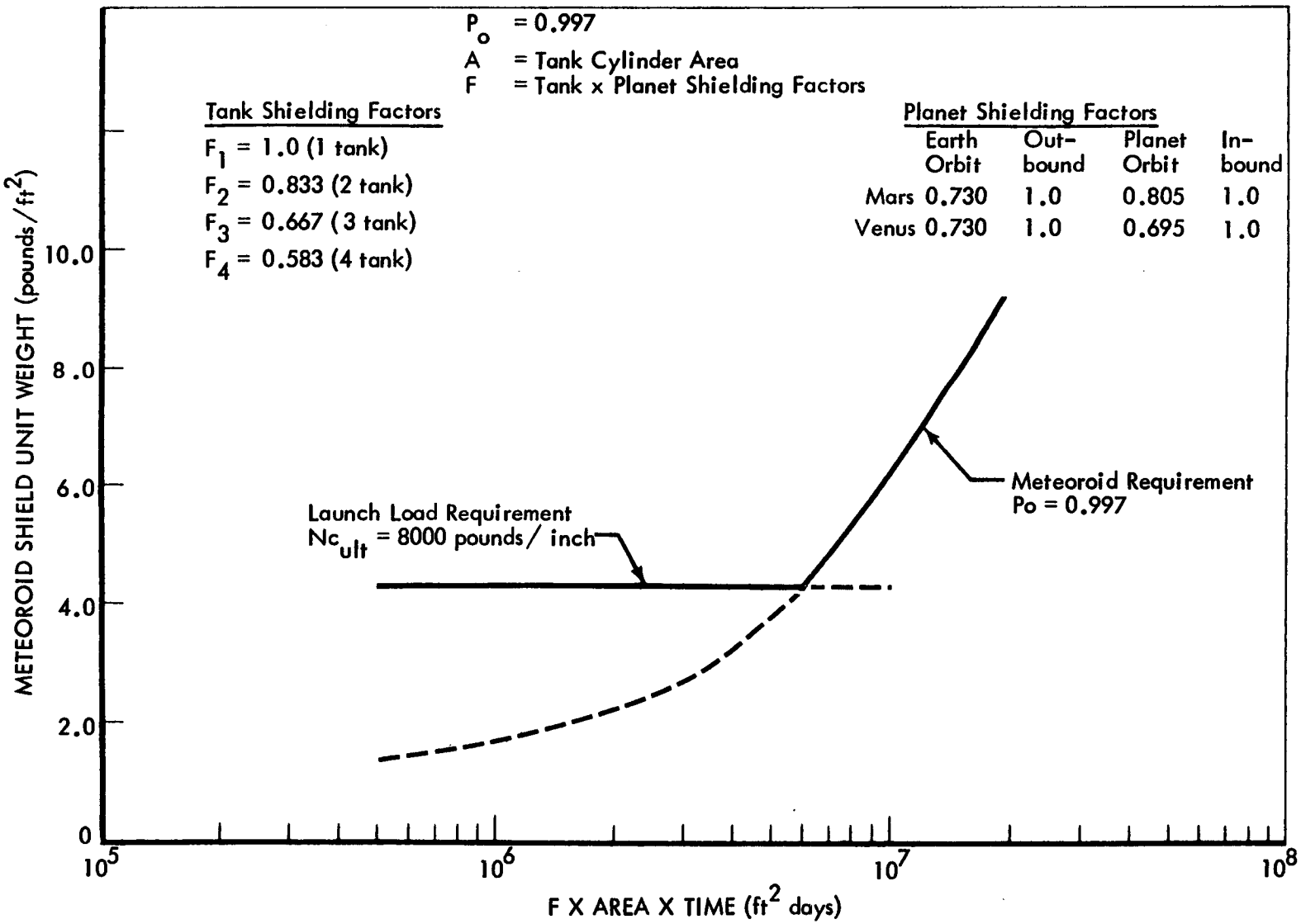

Figure 4.4-11: METEOROID SHIELD WEIGHTS

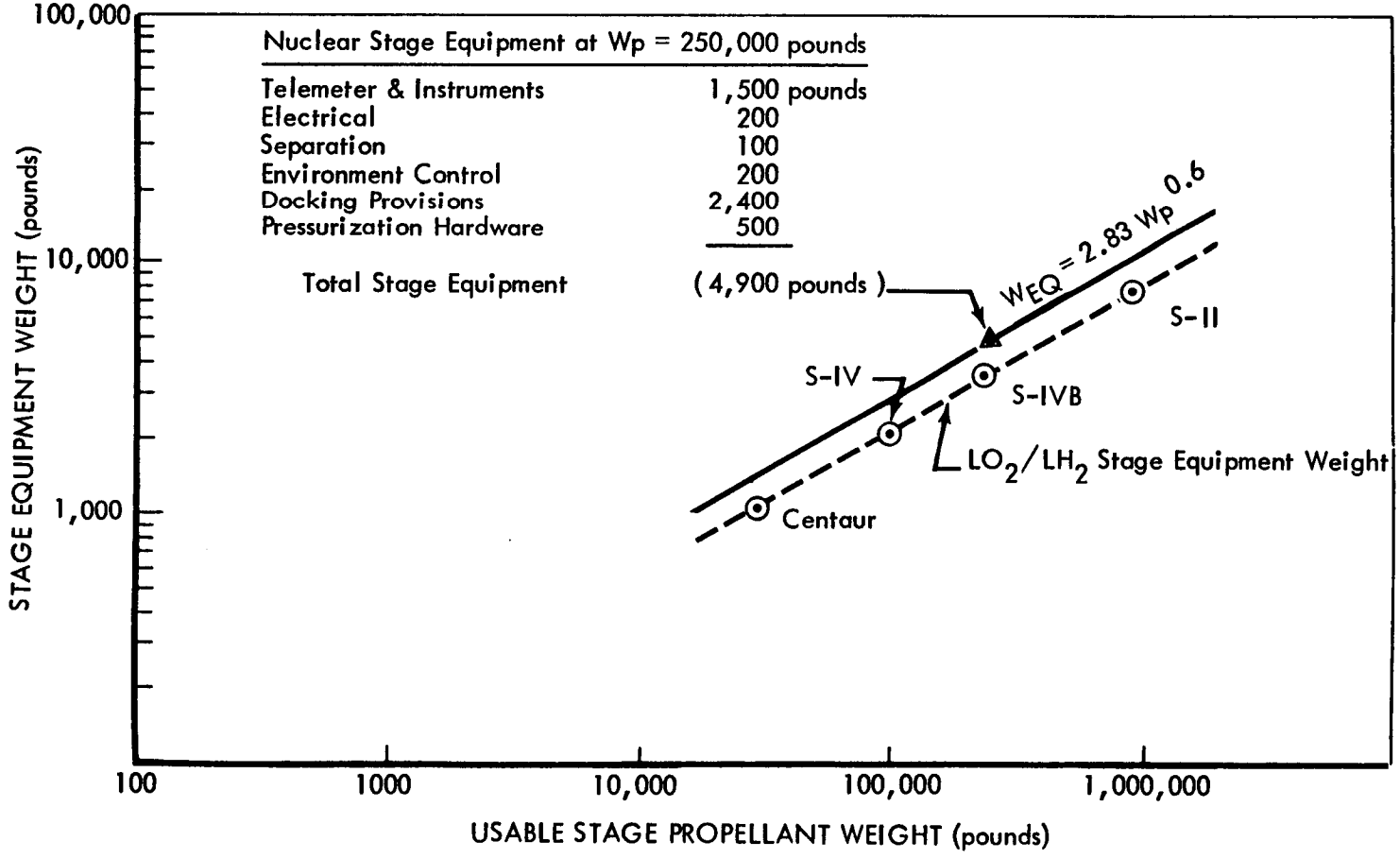

Figure 4.4-12: NUCLEAR STAGE EQUIPMENT WEIGHTS

4.4.2.3 Midcourse and Orbit Trim Propulsion

The midcourse correction and orbit trim propulsion systems for the recommended baseline configurations use FLOX/methane (CH_4) propellants. This combination burns at a mixture ratio (O/F) of 5.75. The specific impulse is 400 seconds. The densities of FLOX and CH_4 are 89.0 and 23.7 lb/ft^3, respectively. These propulsion systems are used to deliver the following ΔV's:

1) Outbound midcourse = 300 fps.
2) Orbit trim (planet orbit) = 300 fps.
3) Inbound midcourse = 300 fps.
4) Swingby ΔV (at Venus) = variable with mission.

The tankage material, allowables, and factors of safety are the same as those used for the main propulsion (hydrogen) tanks. These midcourse and orbit trim tanks are spherical and carry a gas pressure of 40 psi. The tanks are assumed to be stored within an existing interstage; therefore, they require no interstages or meteoroid protection of their own. The theoretical-to-actual-weight factor for these small tanks is 2. This factor accounts for tank welds, supports, fittings, pressurization plumbing, and equipment.

The midcourse and orbit trim engine weight input to the program provides for a thrust-to-start-burn weight ratio of 0.05 for orbit trim and midcourse corrections. Figure 4.4-13 shows the development of the propulsion system weight. Engine, thrust vector control, propellant feed system, and thrust structure are included. The weight equation is:

$$W_{PS} = 0.0148\ T + 240$$

where

W_{PS} = midcourse and orbit trim propulsion system weight, lb

T = engine thrust, lb.

4.4.2.4 Mission Module

The mission module weight input to the program is at the total element level. Table 4.4-2 shows six-man mission module summary weights for the two mission times analyzed (490 and 1070 days). These two data points describe the line shown in Figure 4.4-14. To this weight is added the interstages of the spacecraft that return to Earth. Included are the interstages associated with the mission module and with the Earth entry module, as well as that structure required to support the Earth entry module within its interstages. The mission-module program input weight equation is:

$$W_{MM} = 61.05\ \tau + 63{,}500$$

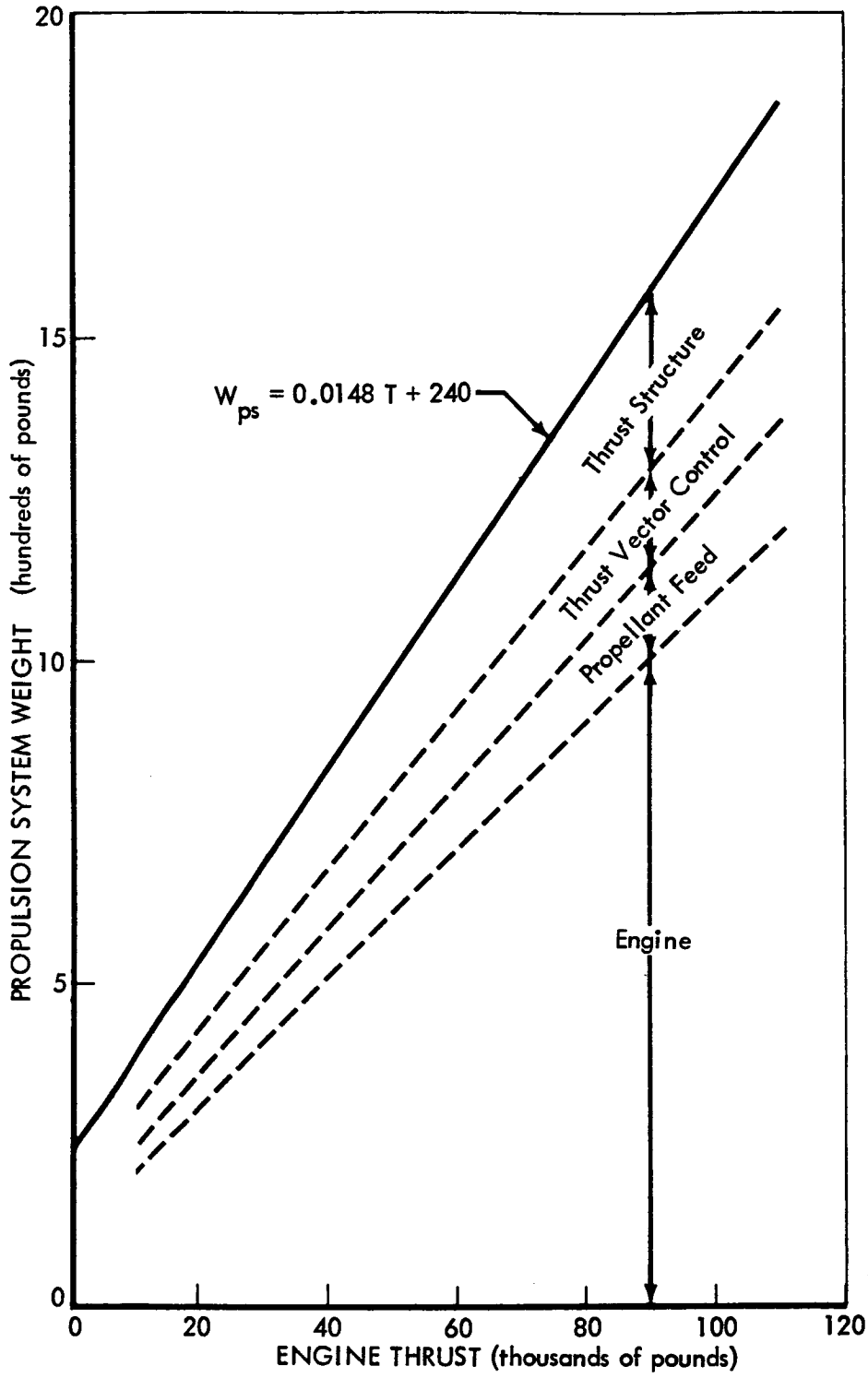

Figure 4.4-13: MIDCOURSE & ORBIT TRIM PROPULSION WEIGHTS

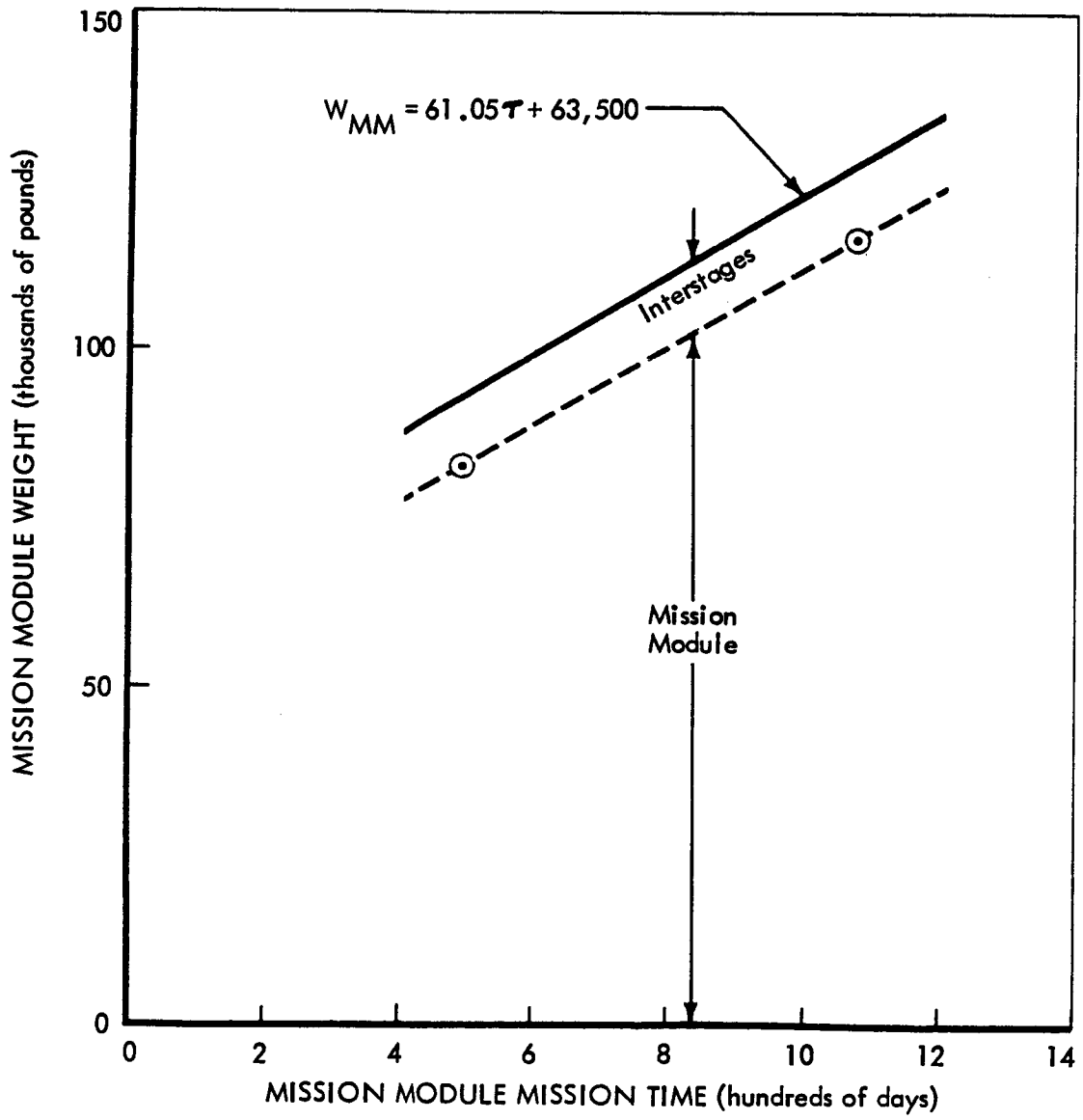

Figure 4.4-14: MISSION MODULE WEIGHTS

where:

W_{MM} = mission module weight, lb

τ = mission time, days, including 30 days in Earth orbit.

Table 4.4-2: Mission Module Summary Weights (Six-Man Crew)

Mission Time	1984 Mars Opposition 490 Days	1986 Mars Conjunction 1070 days
Structure	15,420	19,910
Environmental Control/Life Support	5,520	9,320
Crew Support	1,920	2,410
Communications and Data Handling	1,370	1,370
Attitude Control	1,400	1,530
Guidance and Control	140	140
Displays and Controls	490	510
Electrical Power	10,170	10,170
Expendables	18,060	35,600
Redundancy	4,580	7,130
Experiments	10,860	12,290
Growth and Contingency	12,970	16,200
Total Mission Module (lb)	82,900	116,580
(kg)	(37,600)	(52,880)

4.4.2.4 Earth Entry Module

The Earth entry module is a full-speed-entry, biconic configuration. The weights are derived from a Lockheed Study*. EEM weights for various Earth entry velocities are shown in Table 4.4-3. A plot of these data is shown in Figure 4.4-15. The program inputs for EEM weight is at the total element level and are shown in Figure 4.4-14 as straight-line approximations.

*LSMC Document 4-05-65-12, *Study of Manned Vehicles for Entering the Earth's Atmosphere at Hyperbolic Speed*, NASA Contract MAS2-2576, Lockheed Missiles and Space Co., November 1965

Table 4.4-3: BICONIC EARTH ENTRY MODULE WEIGHT STATEMENTS (SIX-MAN CREW)

Earth Entry Velocity (fps)	40,000	45,000	50,000	55,000	60,000	65,000
Crew and Seats	1,362	1,362	1,362	1,362	1,362	1,362
Controls	270	270	270	270	270	270
Guidance and Navigation	300	300	300	300	300	300
Communications	185	185	185	185	185	185
Science	912	912	912	912	912	912
Life Support	733	733	733	733	733	733
Electrical Power	659	659	659	659	659	659
Attitude Control	868	910	958	1,025	1,120	1,240
Recovery	675	710	745	797	871	963
Heat Shield	1,485	1,946	2,458	3,260	4,340	5,724
Structure	4,160	4,160	4,160	4,160	4,160	4,160
Growth and Contingency	1,741	1,822	1,911	2,049	2,237	2,476
Total EEM Weight lb	13,350	13,969	14,653	15,712	17,148	18,984
(kg)	(6,054)	(6,335)	(6,636)	(7,125)	(7,777)	(8,609)

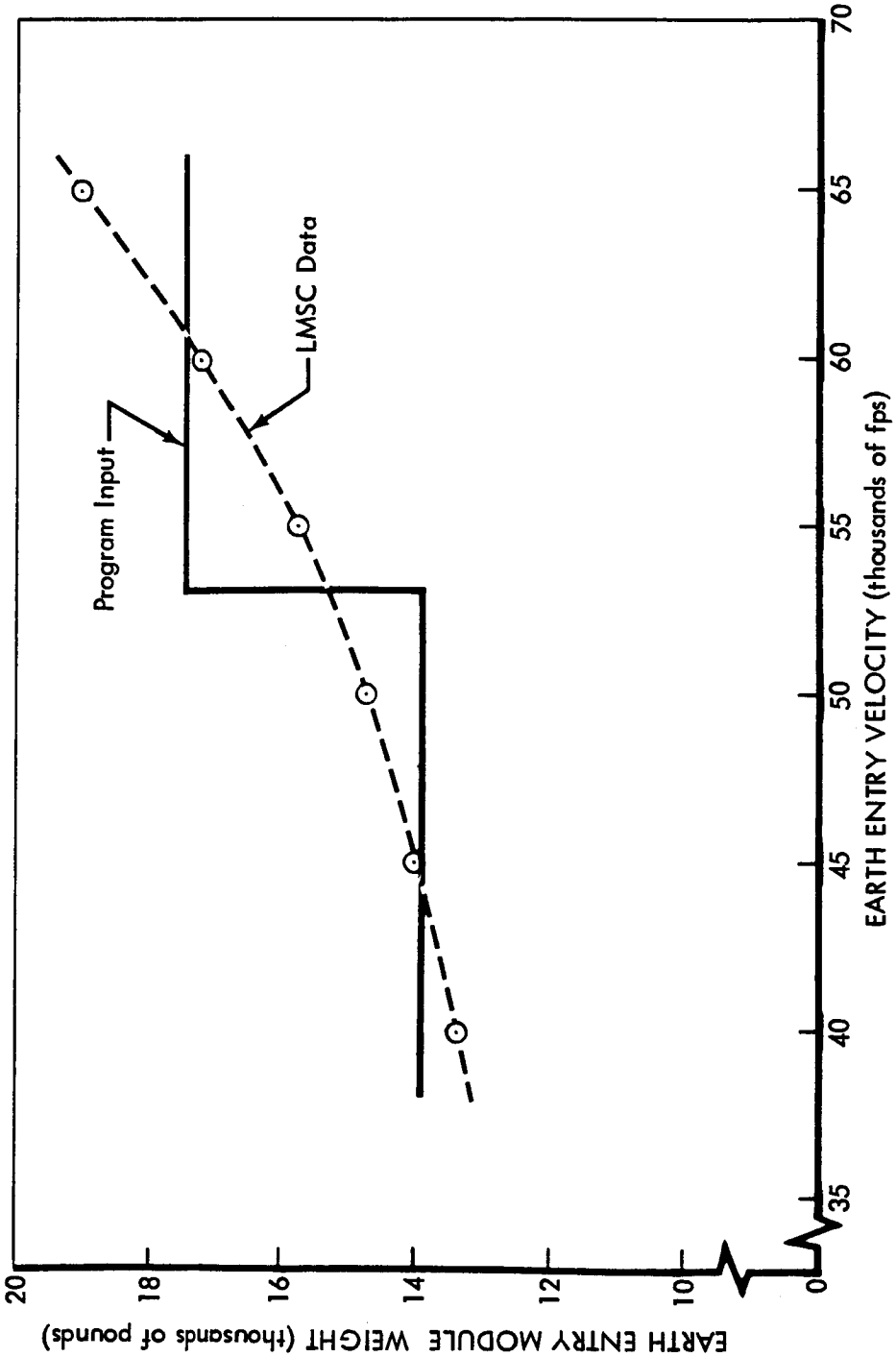

Figure 4.4-15: EARTH ENTRY MODULE WEIGHTS

Therefore, the program equations are:

$V_E < 53{,}000$ fps

$W_{EEM} = 13{,}900$ lb.

$V_E > 53{,}000$ fps

$W_{EEM} = 17{,}400$ lb.

where:

V_E = Earth entry velocity, fps

W_{EEM} = Earth entry module weight, lb.

4.4.2.5 Mars Excursion Module and Probes

The Mars excursion module (MEM) is a three-man vehicle, spends 30 days on the Mars surface, uses ballutes for subsonic deceleration, and uses FLOX/CH_4 propellants for ascent and final stages of descent. The ascent velocity is 17,320 fps (5280 m/sec) which corresponds to a circular obital altitude of 1000 kilometers. The MEM data used for this study comes from North American Aviation studies conducted under NAS9-6469. The MEM interstage is the shell that covers the MEM on the outbound leg and falls away at MEM departure from the spacecraft. The program input for MEM weight is:

MEM (NAA)	73,300 pounds
Growth and contingency	21,990 pounds
MEM interstage	8,500 pounds
Total weight input for MEM	103,790 pounds

The probe weights are a function of the mission and are given in Table 4.4-4. The probe weight inputs to the program are the totals in this table.

4.4.2.6 Weight Growth and Contingency

Much NASA and Boeing inhouse discussion has centered around the weight growth and contingency allowances to be used in preliminary design studies. No values can be assigned without full cognizance of the weight-estimating methods and design progression at the time of the estimate. Historical weight-growth data usually start at contract award for hardware design. Preliminary design (IMISCD) cannot depend entirely on historical data, because it has not progressed to the hardware design stage. Therefore, the growth and contingency factors shown in Table 4.4-5 are based on a combination of historical weight data and experience. The growth and contingency factors are applied to the payload-element weights before their use in the program. The program applies a growth and contingency factor of 11% to all the propulsion elements.

Table 4.4-4: PROBE WEIGHTS

	Mars		Swingby		Venus	
	Qty	Weight* (lb)	Qty	Weight* (lb)	Qty	Weight* (lb)
Hard Lander	5	1,650	5	1,650		
Occultation Detector-Orbiter	2	200	2	200		
Topside Sounder Orbiter	2	310	2	310		
Magnetometer Orbiter	2	200	2	200		
Mars/Moon Hard Landers	4	11,810	4	11,810		
Soft Lander	2	6,670	2	6,670	2	4,740
Mapping Radar Orbiter	1	1,415	1	1,415	2	23,150
Atmosphere Drifter-Biprobe			2	340	2	1,550
RF Window Probe-Drifter			2	540	2	1,650
Cloud Data Probe-Orbiter					2	3,100
Probe Support and Separation	-	2,225	-	2,315	-	3,420
Probe Interstages	-	1,800	-	1,950	-	2,800
Total Probe Weight lb (kg)		26,280 (11,920)		27,400 (12,430)		40,410 (18,330)

* Weight shown = total including 35% growth and contingency.

Table 4.4-5: WEIGHT GROWTH AND CONTINGENCY (RECOMMENDED IMISCD VALUES)

	Growth and Contingency Allowance (%)	Basic Weight Source
Payload Elements		
EEM (Biconic)	15	LMSC
MM	25*	Boeing
MEM	30	NAA
Probes	35	Boeing
Propulsion Elements		
Tankage	15	Boeing
Propulsion	15	AGC
Interstage and Cluster Structure	5	Boeing
Meteoroid Shield	5	Boeing
Stage Equipment	15	Boeing
Unusable Propellant	3	Boeing
(Average Nuclear Stage)	(11)*	

*Hardware only, exclude expendables.

4.4.3 Weight Sensitivity

The weight effects of changes in design criteria, spacecraft, PM element weights, crew size, nuclear stage performance, and structural materials are shown in this section. The weight statements of Table 4.4-1 show the primary PM propellant weights required to do each mission with the IMISCD spacecraft weights and a configuration with three PM-1, one PM-2, and one PM-3 modules (3-1-1). The weight sensitivity data show the additional propellant required in each case. A fence is shown where the additional propellant required exceed the 3-1-1 configuration capability.

4.4.3.1 Jettisoned Structure Weight Effects

The IMISCD spacecraft design jettisons the meteoroid shield just before that PM's ignition. The outer interstage, which carries the Earth launch loads, is jettisoned after docking in Earth orbit. Figure 4.4-16 shows the additional propellant required for: first, a single interstage that is designed for Earth launch loads; second, when not jettisoning the meteoroid shield; and third, having Earth launch interstages and not jettisoning the meteoroid shield. The 3-1-1 configuration is violated on the 1984 opposition mission when the meteoroid shield is not staged.

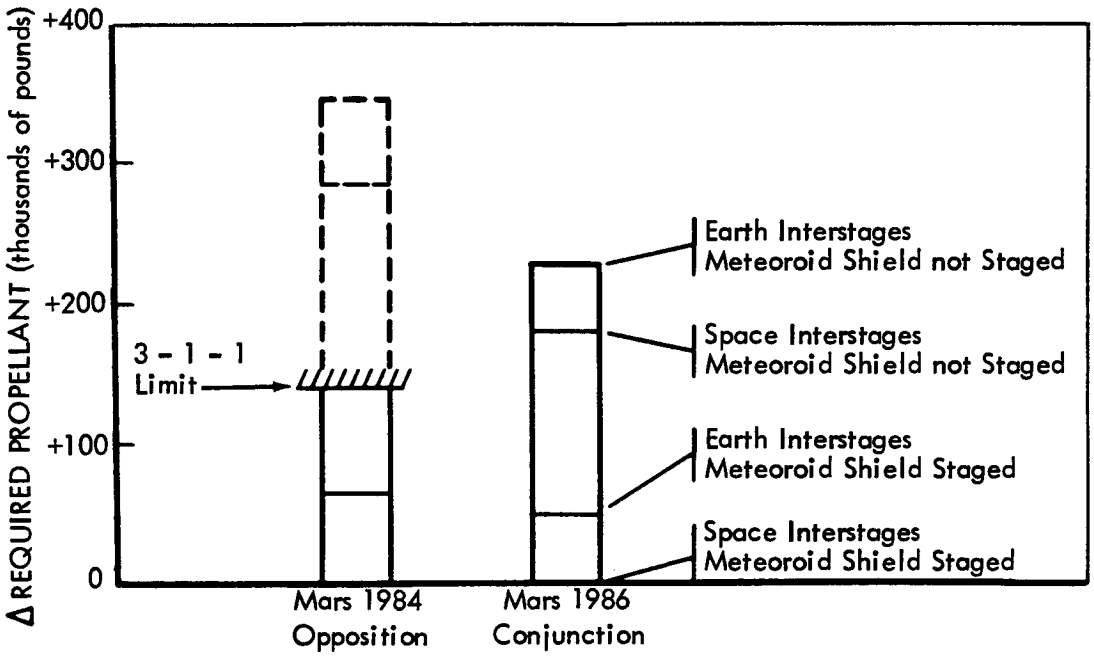

Figure 4.4-16: JETTISONED STRUCTURE WEIGHT EFFECTS

4.4.3.2 Meteoroid Probability Weight Effects

The meteoroid shields have two functions: first, they carry all axial loads incurred before the stage's ignition; second, they provide meteoroid protection for the tank cylinder walls. Figure 4.4-17 shows the additional propellant required for probabilities of no penetrations other than the design P_o of 0.997. The 1986 conjunction PM-3 is designed by meteoroids at $P_o = 0.997$, but the 1984 opposition PM's are load-designed to $P_o = 0.9985$.

4.4.3.3 EEM, MM, or Experiment Weight Effects

Figure 4.4-18 shows the additional propellant required for a change in EEM, MM, or experiment weight. The limiting propellant weight is shown for both missions. For most missions this function is a straight line. However, for the 1986 Conjunction mission, a curve is shown just before reaching propellant capacity. The PM-3 stage for this conjunction mission loses propellant through boiloff in the off-loaded condition. However, as the PM-3 tank becomes full, no boiloff occurs and the stage becomes more efficient.

4.4.3.4 MEM or Probe Weight Effects

Figure 4.4-19 shows the additional propellant required for changes in MEM or probe weight. Because the MEM and probes are not accelerated out of Mars orbit, their leverage factors on propellant usage are less than those of the EEM, mission module, and experiments (see Figure 4.4-18).

4.4.3.5 Nuclear-Engine Weight

The Nerva II engine is still in the early development stages. Along with its shield, it is also a heavy item (28,530 pounds). Figure 4.4-20 shows the propellant change with changes in the Nerva II engine weight. With a 57% increase in the Nerva II engine weight, the 1984 Opposition, 3-1-1 configuration reaches its capacity.

4.4.3.6 Crew-Size Weight Effects

An approximation has been made of the MM and EEM weights as a function of crew size. The leverage factors are applied, and their effect on propellant usage is shown in Figure 4.4-21. In all cases, the MEM crew size is assumed to stay at three men. The propellant-change effect for the missions shown is approximately 43,000 pounds/man.

4.4.3.7 Specific-Impulse Weight Effects

Because of the early development stage of the Nerva II engine, it is difficult to determine what the delivered specific impulse will eventually be. Consequently, Figure 4.4-22 shows the propellant change for 50 seconds of specific impulse on either side of the nominal 850 seconds. The 1984 opposition, 3-1-1 configuration capacity is reached at approximately 815 seconds.

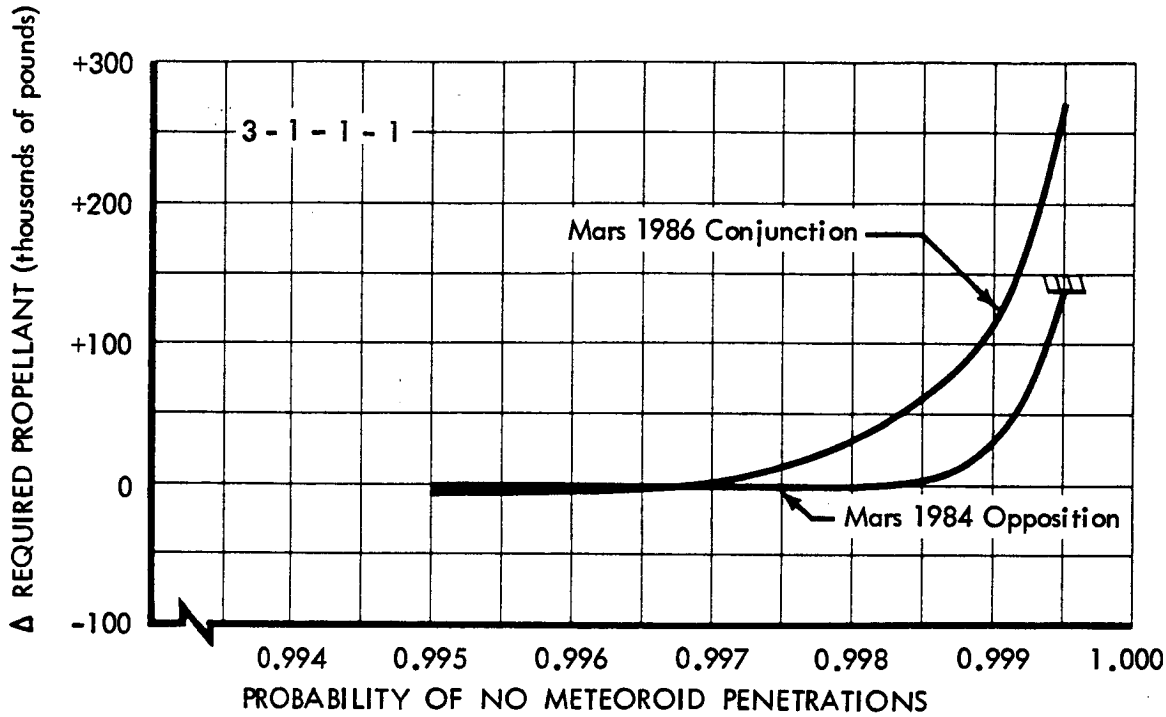

Figure 4.4-17: METEOROID PROBABILITY WEIGHT EFFECTS

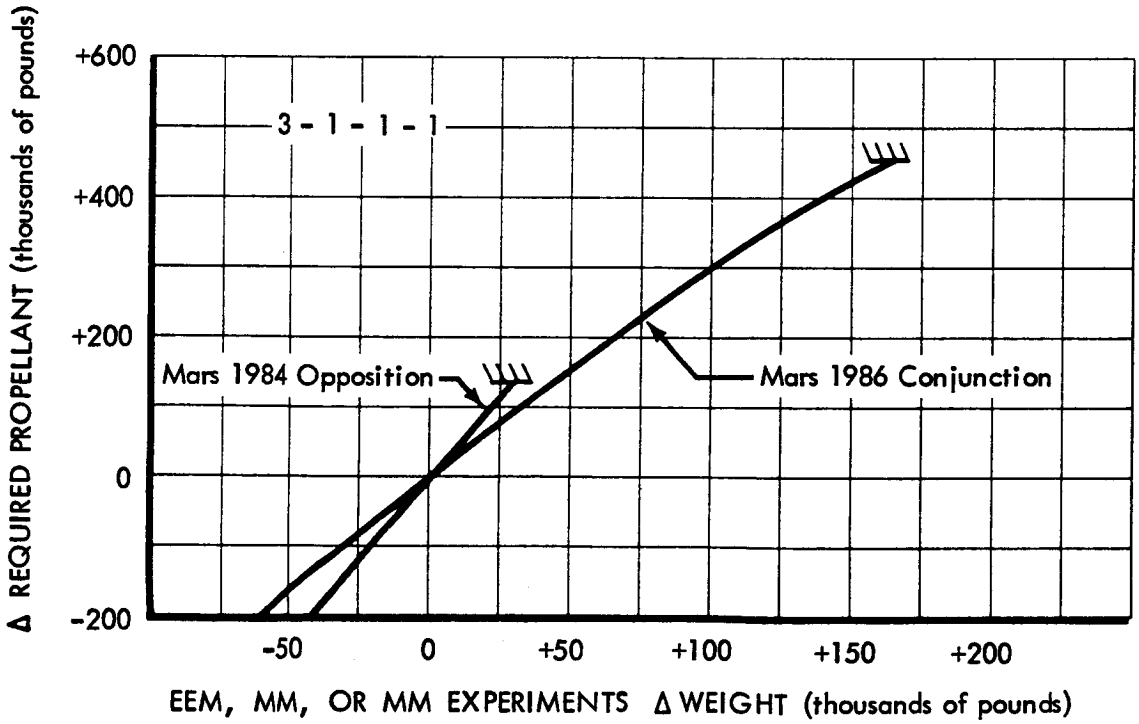

Figure 4.4-18: EEM, MM, OR MM EXPERIMENTS Δ WEIGHT EFFECTS

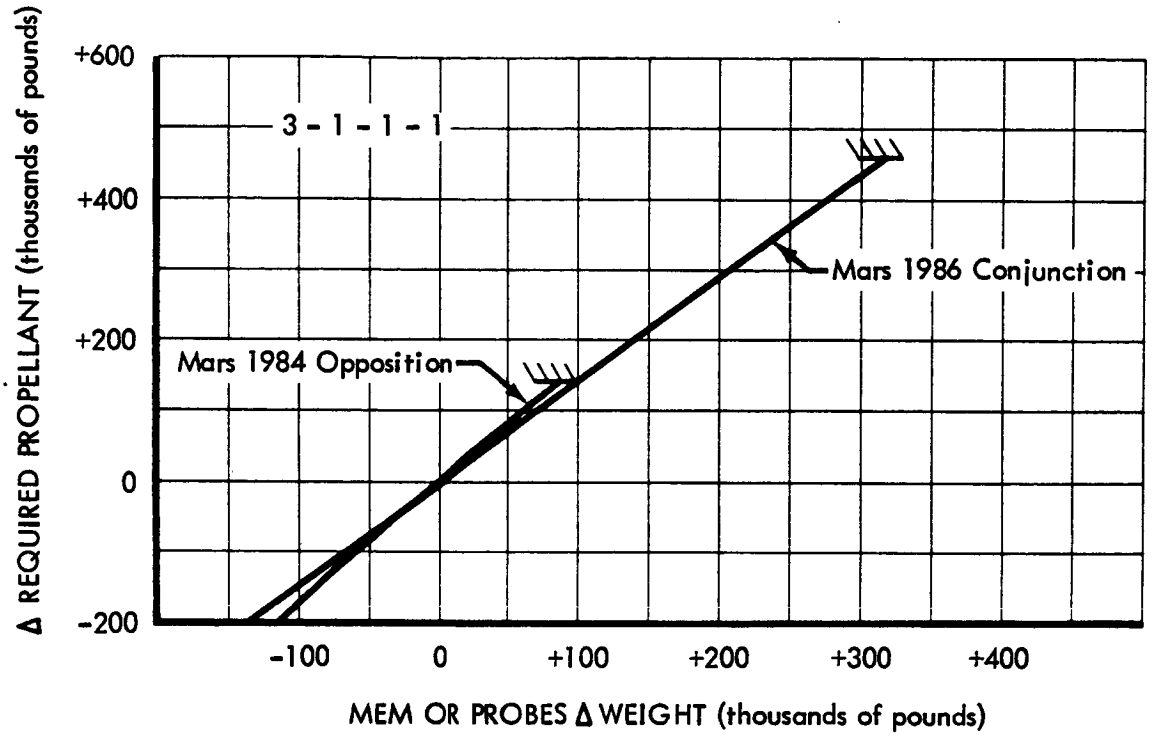

Figure 4.4-19: MEM OR PROBES WEIGHT EFFECTS

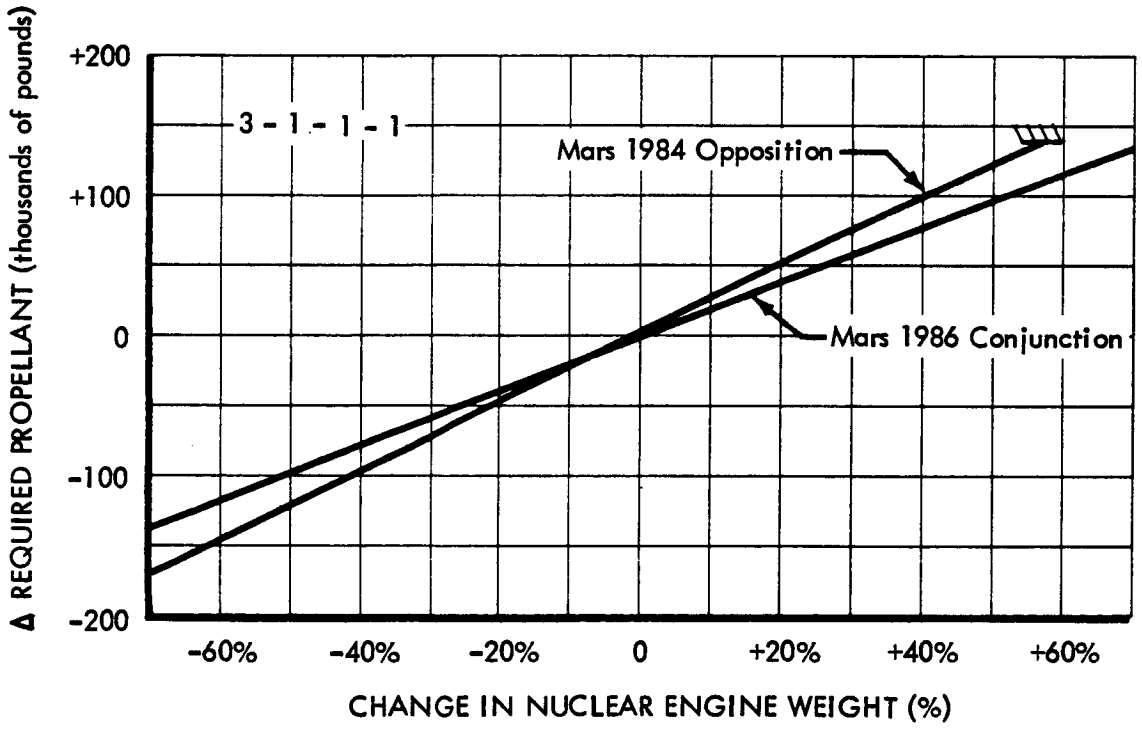

Figure 4.4-20: NUCLEAR ENGINE WEIGHT EFFECTS

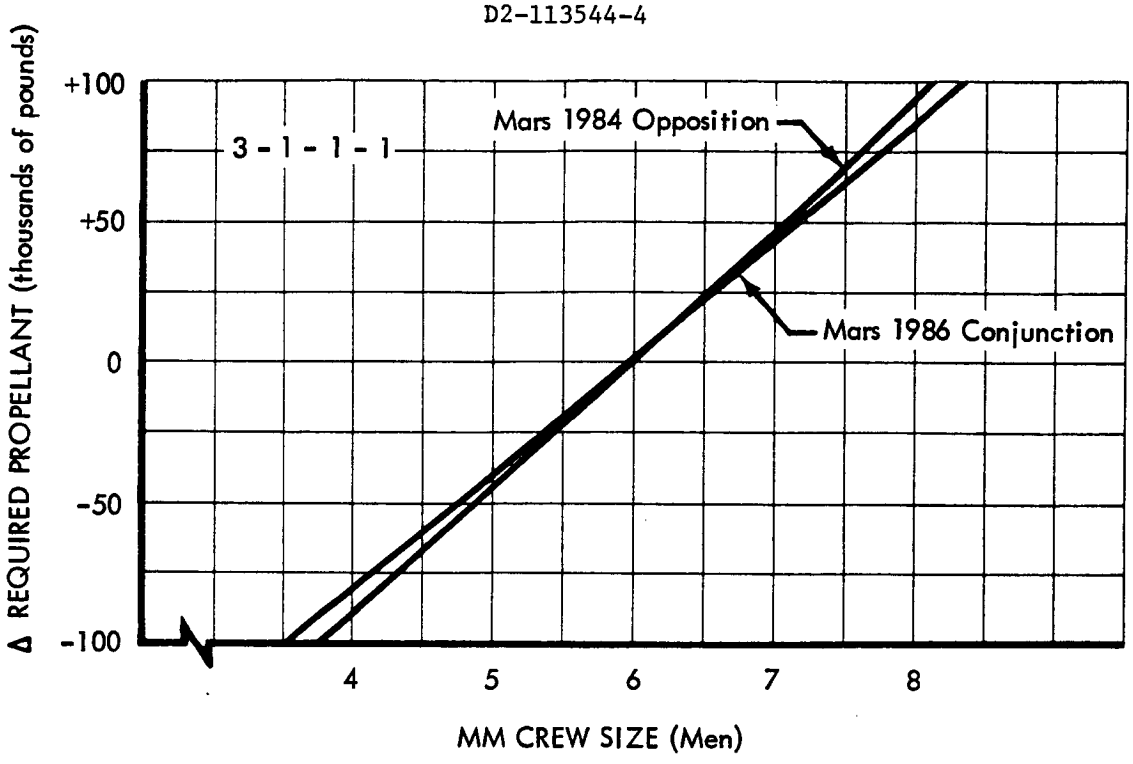

Figure 4.4-21: CREW SIZE WEIGHT EFFECTS

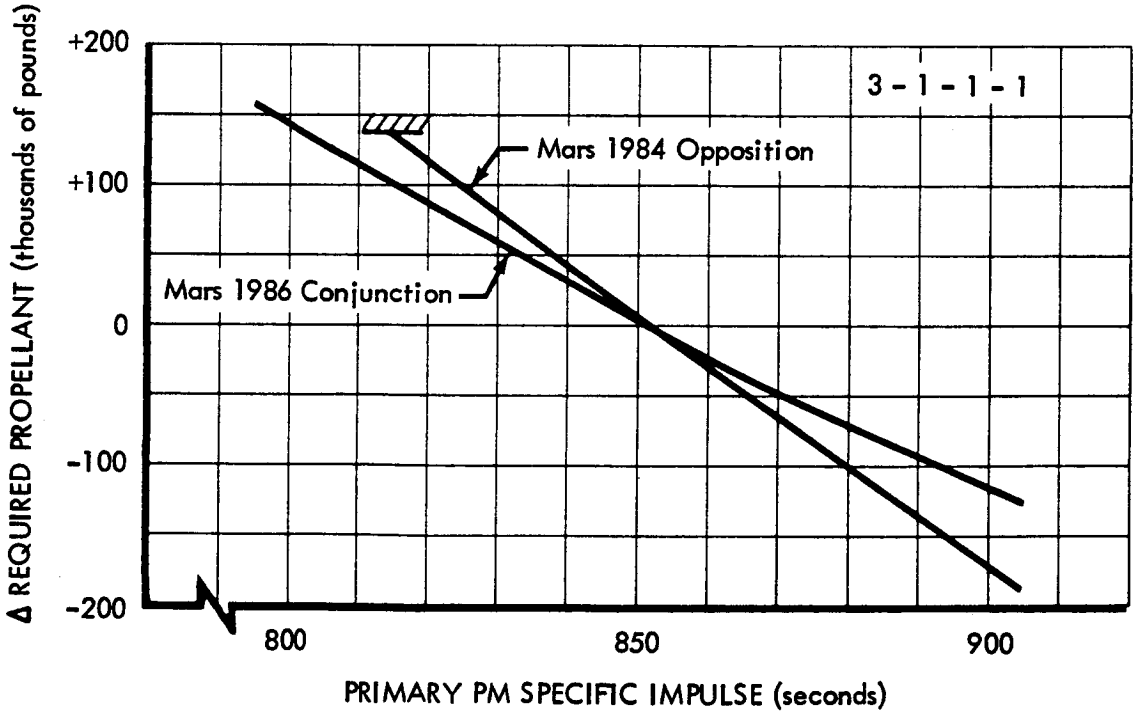

Figure 4.4-22: SPECIFIC IMPULSE WEIGHT EFFECTS

4.4.3.8 Interstage Weight Effects

For the two missions shown in Figure 4.4-23, the total interstage (spacecraft and PM) weight is approximately 76,000 pounds. The PM propellant required to accelerate these interstages ranges from 70,000 to 90,000 pounds (the PM-1 aft interstage is not accelerated beyond Earth orbit). The use of advanced structural materials, or a shorter nuclear engine, to reduce interstage weight has not been considered in this study. However, Figure 4.4-23 does show that even if a 50% reduction in the interstage weight were possible, the change in propellant weight would only be approximately 45,000 pounds.

4.4.3.9 Meteoroid-Shield Weight Effects

For the two missions shown in Figure 4.4-24, the propellant required to accelerate the spacecraft meteroid shields is approximately 100,000 pounds. The use of advanced materials (such as beryllium) for the meteoroid shields has not been investigated. Figure 4.4-24 shows, however, that even if a 50% reduction in the meteoroid shield weight were possible, the required propellant would only be reduced by approximately 50,000 pounds. This effect would be much greater if the PM meteroid shields were not jettisoned before PM ignition.

4.5 RELIABILITY

The nature of this study precludes a detailed reliability analysis for each spacecraft element or propulsion module. A qualitative examination of each element was made, and the reliability of each element was estimated, based on factors influencing the reliability of all other modules relative to the same factors for the mission module. The approach to evaluating the impact of reliability as a system parameter was:

1) Derive probability estimates for each system element (module);
2) Develop an analytical model;
3) Compute reliability.

4.5.1 RELIABILITY OF SYSTEM ELEMENTS

The system is considered to be composed of the following nine major elements:

1) Mars excursion module (MEM)
2) Mission module (MM)
3) Earth entry module (EEM)
4) Propulsion Module 1 (PM-1)
5) Propulsion Module 2 (PM-2)
6) Propulsion Module 3 (PM-3)
7) Propulsion module-outbound midcourse correction
8) Propulsion module-Mars orbit trim
9) Propulsion module-inbound midcourse correction

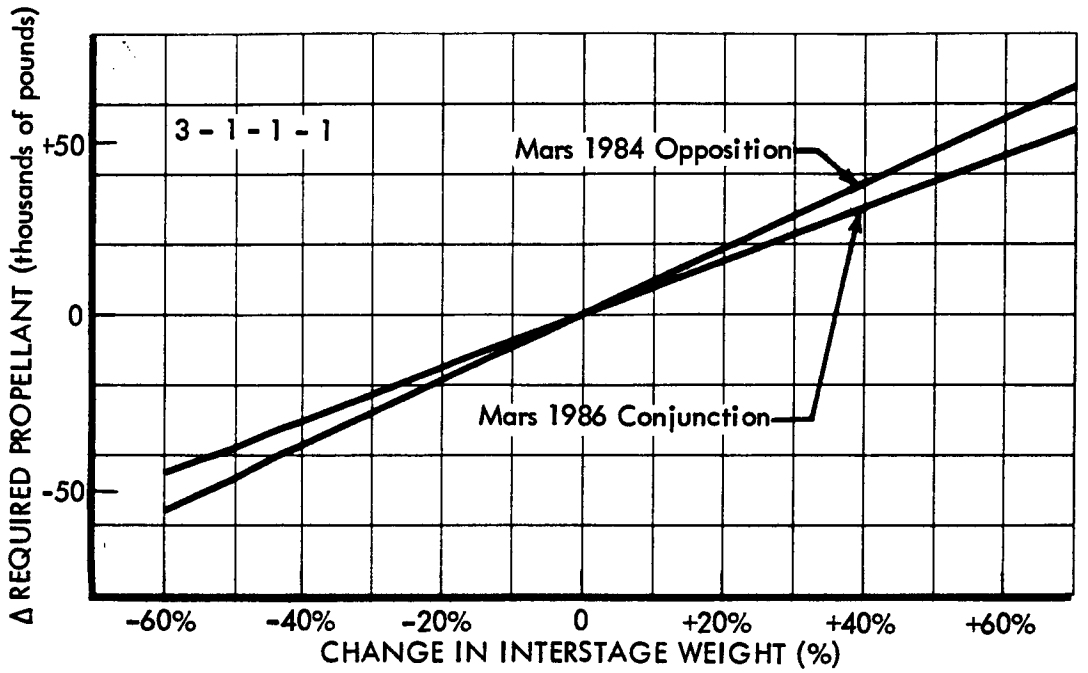

Figure 4.4-23: INTERSTAGE WEIGHT EFFECTS

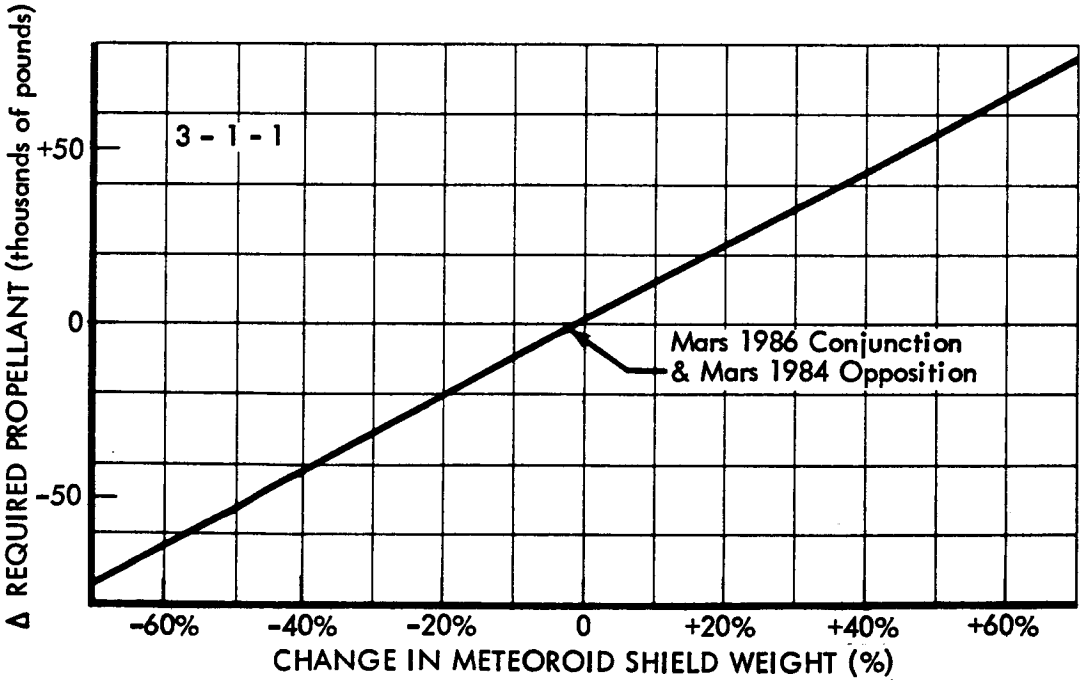

Figure 4.4-24: METEOROID SHIELD WEIGHT EFFECTS

The probability-of-success models use estimates of the reliability for each of the elements. This section discusses the method(s) by which these reliability values were derived.

Previous studies of manned interplanetary missions show that the module reliability values are a function of the weight allocated for redundancy and spares (Figure 4.5-1). Therefore, the reliability analysis was conducted in parametric fashion. Two levels of reliability were assumed for the total system and allocated to each of the modules based on the combined results of a study team survey. In this survey the relative unreliabilities of the system elements were qualitatively ranked based on the factors influencing reliability. The survey was conducted in the following manner:

1) Factors influencing reliability were identified. These were:
   a) Complexity
   b) State of the art
   c) Operating time
   d) Environment
   e) Reliability growth
2) A chart, such as the one shown in Table 4.5-1 was distributed to members of the study team with instructions to rank the system elements according to the effects that these factors had on reliability.
3) These factors were then combined at the module level to yield an estimate of the fraction of total system unreliability attributable to each system module.

4.5.2 RELIABILITY ALLOCATION

Based on the results of the survey previously discussed, the mission probability of failure was allocated to the major system elements in the same proportion as the fraction of the combined factors associated with each element. For example, 29% of the combined total of the factors were accounted for by the MEM. Therefore, 29% of the total system unreliability (Q) was allocated to the MEM.

The next step was to establish a value for Q which could be allocated to each system element, or establish a value for unreliability for any one system element from which proportionate values for the other elements could be derived. Since a maintainability and reliability cost effectiveness program analysis of the mission module existed, the latter approach was used in deriving estimates for system element reliability. MARCEP is an analytical technique whereby reliability improvement from a single-thread configuration is calculated for effective (cost, weight, etc.) incremental increases in weight (redundancy and spares). From the results of such an analysis, an optimum analytical relationship between reliability and weight (redundancy and spares) can be constructed. From this relationship, a point of diminishing returns can be estimated wherein additional weight offers little gain in reliability. Figure 4.5-1 is based on the results of the MARCEP analysis of the mission module. A reliability value

Table 4.5-1: FACTORS INFLUENCING RELIABILITY

System Elements	Complexity	State of the Art	Operating Time	Environ-ment	Reliability Growth	Fraction of Total	Reliability
MEM	8	7	2	5	6	0.290	
MM	10	8	10	1	7	0.483	
EEM	5	6	1	8	5	0.104	
PM-1	1	9	1	3	9	0.021	
PM-2	1	9	2	3	9	0.042	
PM-3	1	9	2	3	9	0.042	
Outbound Midcourse Correction OMBC	1	2	4	3	3	0.006	
Orbit Trim OT	1	2	4	3	3	0.006	
Inbound Midcourse Correction IBMC	1	2	4	3	3	0.006	
Total						1.00	

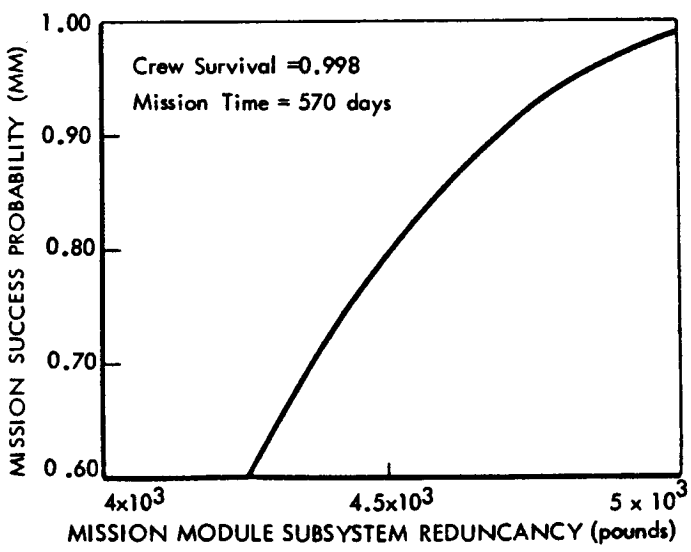

Figure 4.5-1: MISSION MODULE REDUNDANCY VARIATION

Table 4.5-2: RELIABILITY ESTIMATES

System Element	Reliability Estimate	
	High	Low
Mars Excursion Module	0.9910	0.9290
Mission Module	0.9850*	0.8816*
Earth Entry Module	0.9968	0.9745
Propulsion Module 1	0.9993	0.9949
Propulsion Module 2	0.9987	0.9897
Propulsion Module 3	0.9987	0.9897
Propulsion Module - Outbound Midcourse Correction	0.9998	0.9985
Propulsion Module - Inbound Midcourse Correction	0.9998	0.9985
Total (Single Mode)	0.969	0.774

*The mission module reliability served as the basis for allocation of system reliability to constituent modules.

of 0.985 was selected as a cutoff point. A second, more pessimistic, value (0.8816) was also selected. The lower value of 0.8816 for mission module reliability was selected because it was the calculated value for mission success which immediately preceded the addition of a heavy communication and data management subsystem component. Using these two values for the mission module reliability, the corresponding values for the other major elements were calculated. The resultant reliability estimates are shown in Table 4.5-2.

Using this data, mission reliability for the three different mission modes is compared in the hazard plots of Figures 4.5-2 and 4.5-3. These plots display the probabilities of successful equipment performance from Earth depart up to completion of the indicated mission phases. Figure 4.5-2 reflects high reliability values for the various system modules (compatible with 0.9850 reliability for the mission module). The lower probabilities of Figure 4.5-3 were calculated using lower module reliabilities compatible with a mission module reliability of 0.8816.

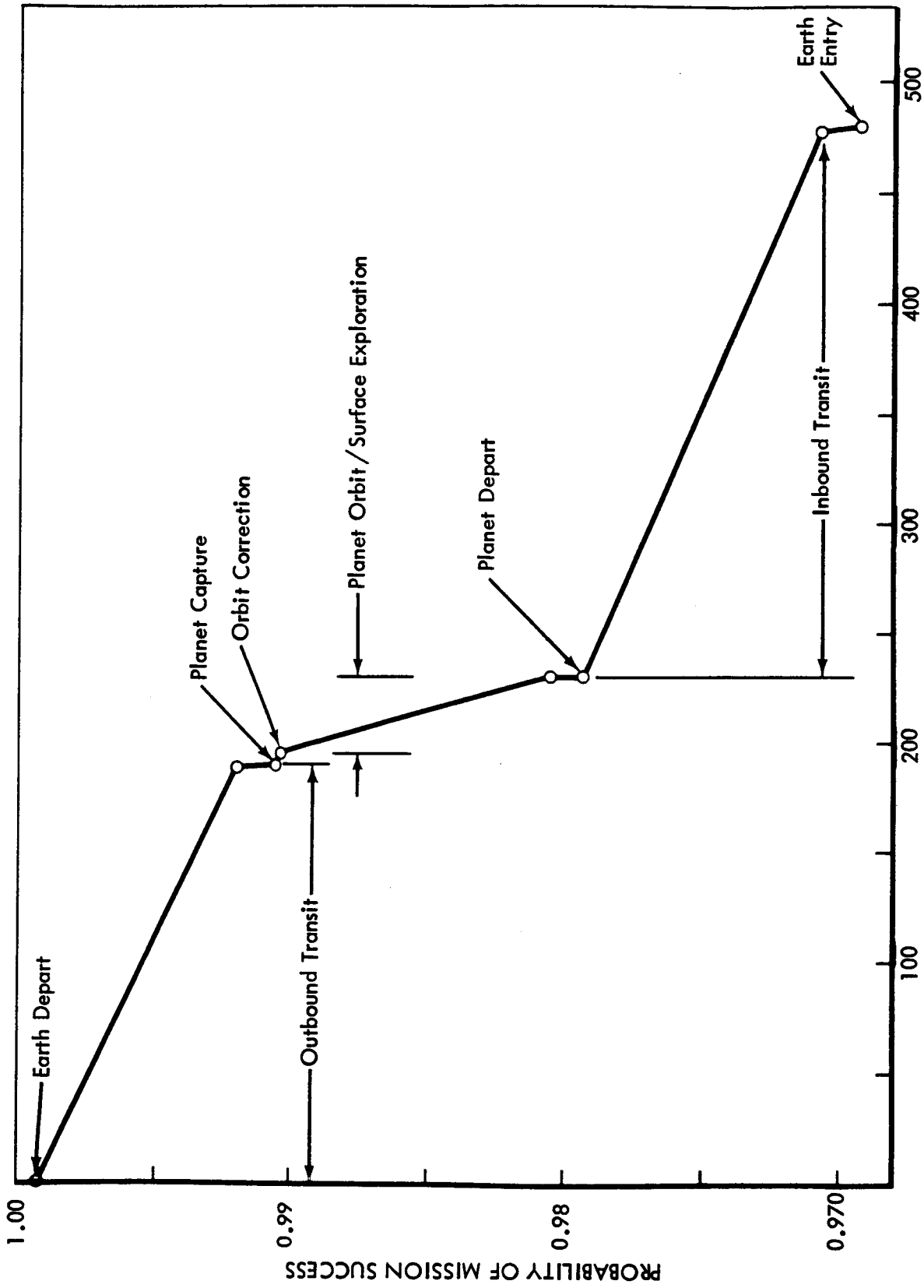

Figure 4.5-2: HAZARD PLOT (0.9850 MM Reliability)

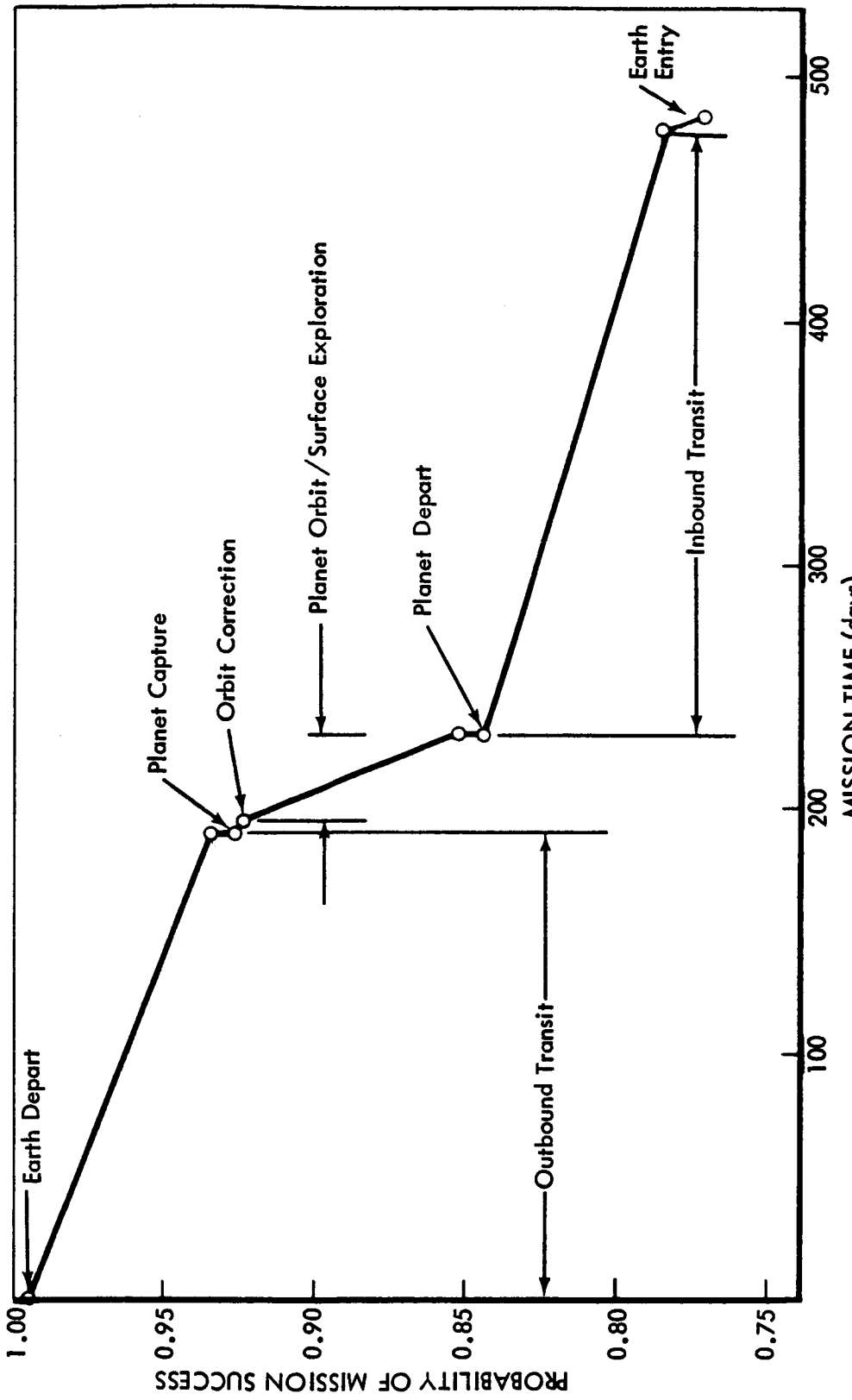

Figure 4.5-3: HAZARD PLOT (0.8816 MM Reliability)

4.6 ARTIFICIAL-GRAVITY CONFIGURATION

The recommended space vehicle has been designed to operate in a zero-gravity environment. As an alternate, a study which considers the effect of incorporating an artificial gravity system into the space vehicle design has been conducted. Included in this section is a description of an acceptable artificial gravity configuration, together with a discussion of human factors, mission operations, major element and weight changes, a system comparison, and the impact on experimentation.

4.6.1 HUMAN FACTORS

Studies investigating artificial-gravity environments suitable for crew comfort have focused on establishing an acceptable "comfort zone". An example of such work which has been used in the present analysis is shown in Figure 4.6-1. The comfort zone shown as a shaded area is defined by a one-Earth-g line and by a 4-rpm line, above which vestibular disturbances tend to appear and a 20-fps rim speed above and to the right of which Coriolis accelerations on crew members may be neglected. The rotational parameters selected for this study are indicated by the three circles within the "comfort zone". Of these three, the upper circle represents average conditions within the mission module on the outbound trajectory leg with the lower circle representing average mission module conditions on the inbound leg. The middle circle is the special case for conjunction missions while in planet orbit. An examination of other artificial-gravity space vehicle studies shows that they usually require complicated mechanisms for extending and retracting counterbalances for each spinup and spindown maneuver. Obviously, this was brought about by their unacceptable mass distribution when not extended which resulted in rotational parameters outside the comfort zone. Such is not the case for the recommended zero-gravity space vehicle when used in an artificial-gravity mode. It was apparent from its lengths and mass that an artificial-gravity environment could be obtained with relatively few changes.

4.6.2 MISSION OPERATION

Since the zero-gravity space vehicle can provide an artificial gravity environment, it appears that this environment should be available to the crew to the greatest extent possible. Forty days has been selected as the longest period the crew should be required to experience the zero-g environment. Forty days is an opposition-type mission in-planet-orbit period and is a reasonable extension of present day knowledge of the effects of zero gravity on man.

A typical opposition mission was examined with respect to the above constraints. From this, the following space vehicle operations were evolved:

The space vehicle continues in a zero-gravity mode after injection from Earth orbit until the first midcourse correction of the outbound trajectory is completed. As shown in Figure 4.6.2, this maneuver will

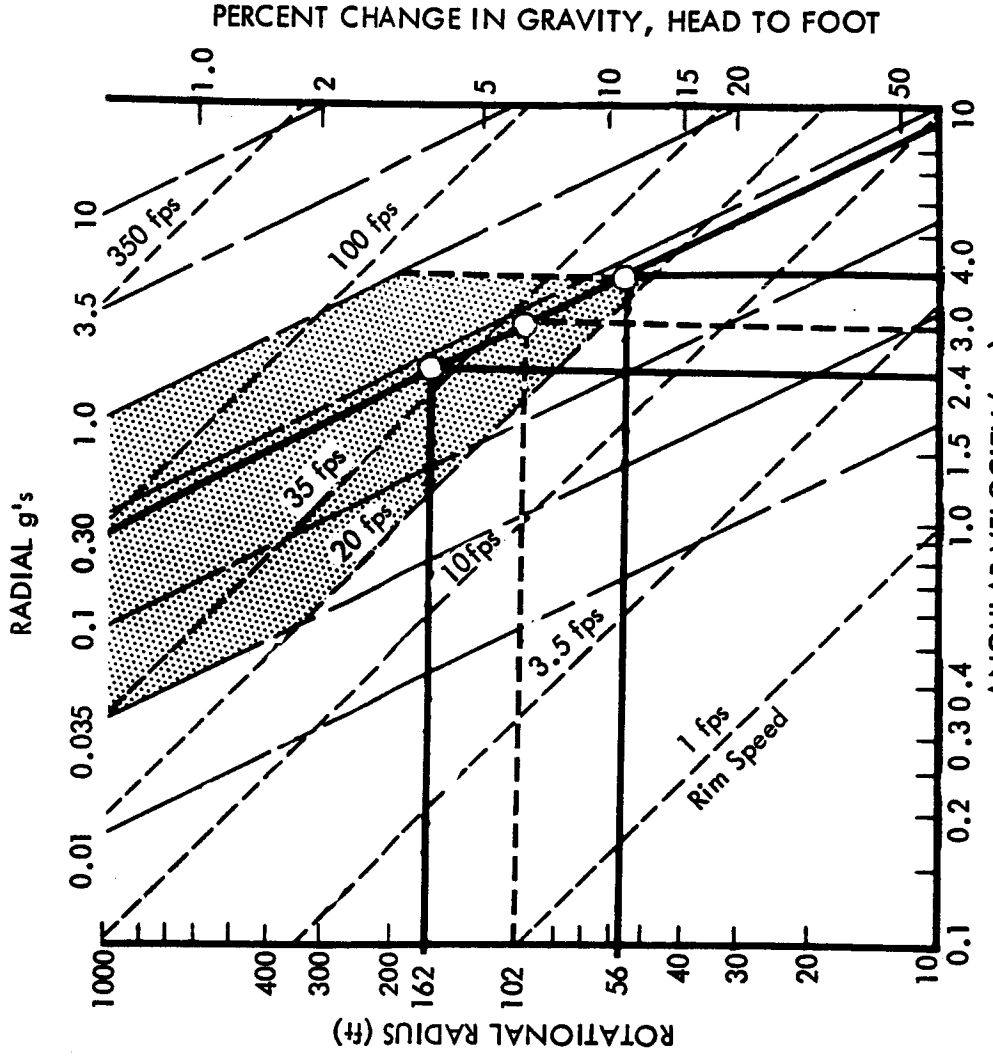

Figure 4.6-1: ROTATIONAL PARAMETERS AND COMFORT ZONE

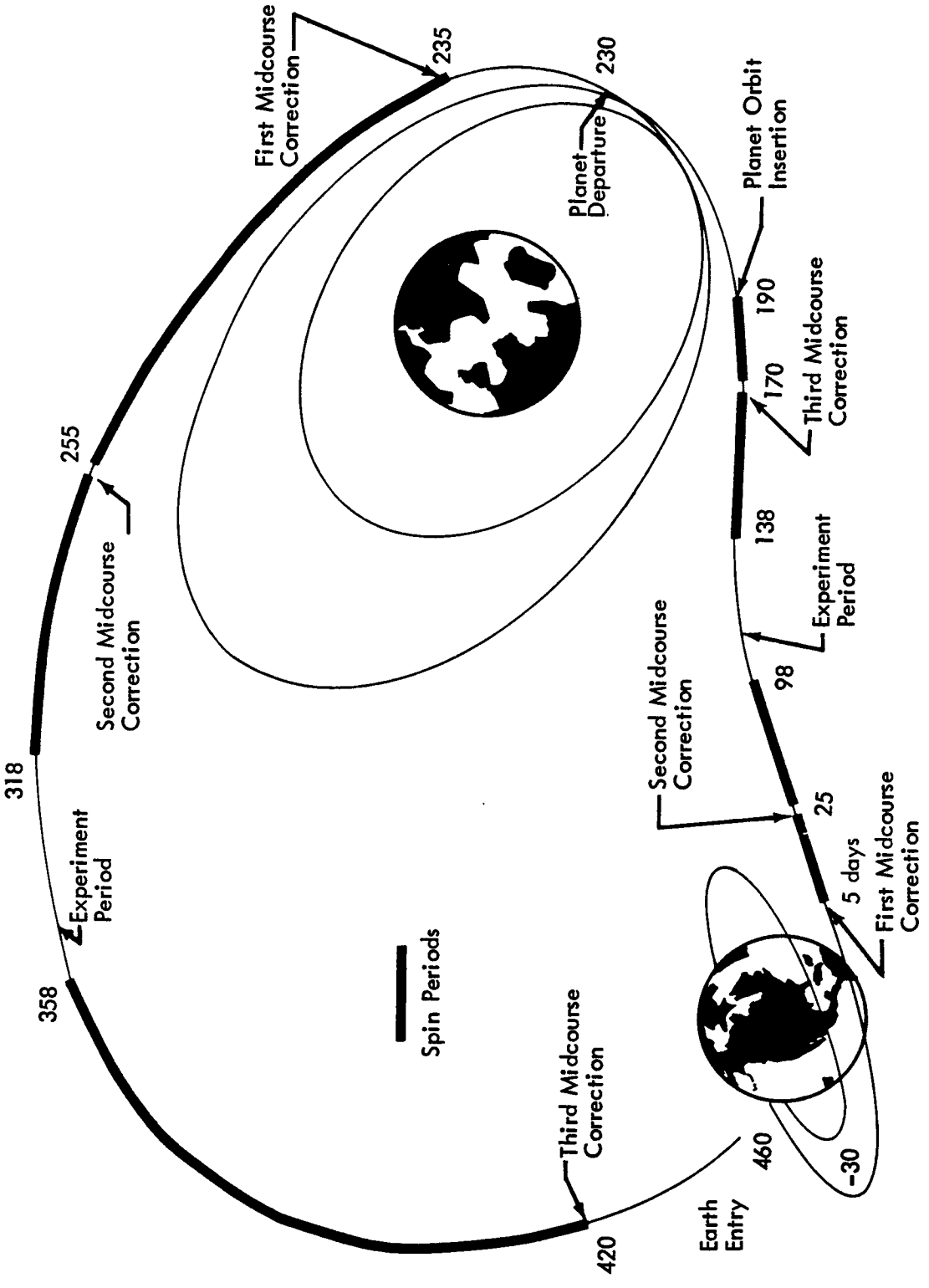

Figure 4.6-2: ARTIFICIAL GRAVITY SPIN PERIODS (Mars 1984 Opposition)

occur approximately 5 days into the mission and after a 30-day stay in Earth orbit. Upon completion of the first midcourse correction, the vehicle is spun up to its artificial-gravity condition of 0.30 g. Thus, a total zero-gravity time of 35 days can be experienced by the crew prior to the first spinup. Approximately 20 days later, the second midcourse correction is scheduled, at which time the space vehicle is spun down and then spun up again after the correction is accomplished. One in-transit zero-gravity experiment period is scheduled for the outbound trajectory. This period will be limited to 40 days; thus, one more spindown and spinup is scheduled. The third midcourse correction is scheduled about 20 days prior to the planet capture maneuver. The vehicle is spun down for the correction, then up again after its completion, and finally, spun down prior to the planet capture maneuver.

No artificial gravity is provided until after the first midcourse correction maneuver on the inbound trajectory. This is a period of 45 days; 40 while in planet orbit and 5 out to the correction maneuver. The inbound trajectory follows the same pattern as the outbound, that is, the vehicle is spun down for the second midcourse correction, the 40-day in-transit experiment period, and finally, the third midcourse correction 20 days prior to the Earth entry maneuver. This mode of operation is true for all missions except Mars conjunction and Venus long flights. For these missions, additional spinups and spindowns must be scheduled to accommodate experimental programs and Mars excursion module operations. Thus, for a mission such as the 1986 Mars conjunction, which involves a 580-day planet stay time, eight additional spinups and spindowns are scheduled for the orbital period.

4.6.3 SPACE VEHICLE

4.6.3.1 Concept Selection

The zero-gravity space vehicle configuration was examined at each major staging operation for potential artificial-gravity configuration candidates. These candidates are shown on Figure 4.6-3 and were evaluated as follows:

Mission Mode	Concept	Description	Remarks
Outbound	1	Stage nothing after PM-1 burn.	Excessive spin propellant required.
	2	Stage side tanks after PM-1 burn	Same as 1, and requires new staging system.
	3	Stage side tanks and engine of center tank.	Same as 2 above.
	4	Stage PM-1	Minimum spin propellant, no new staging equipment.

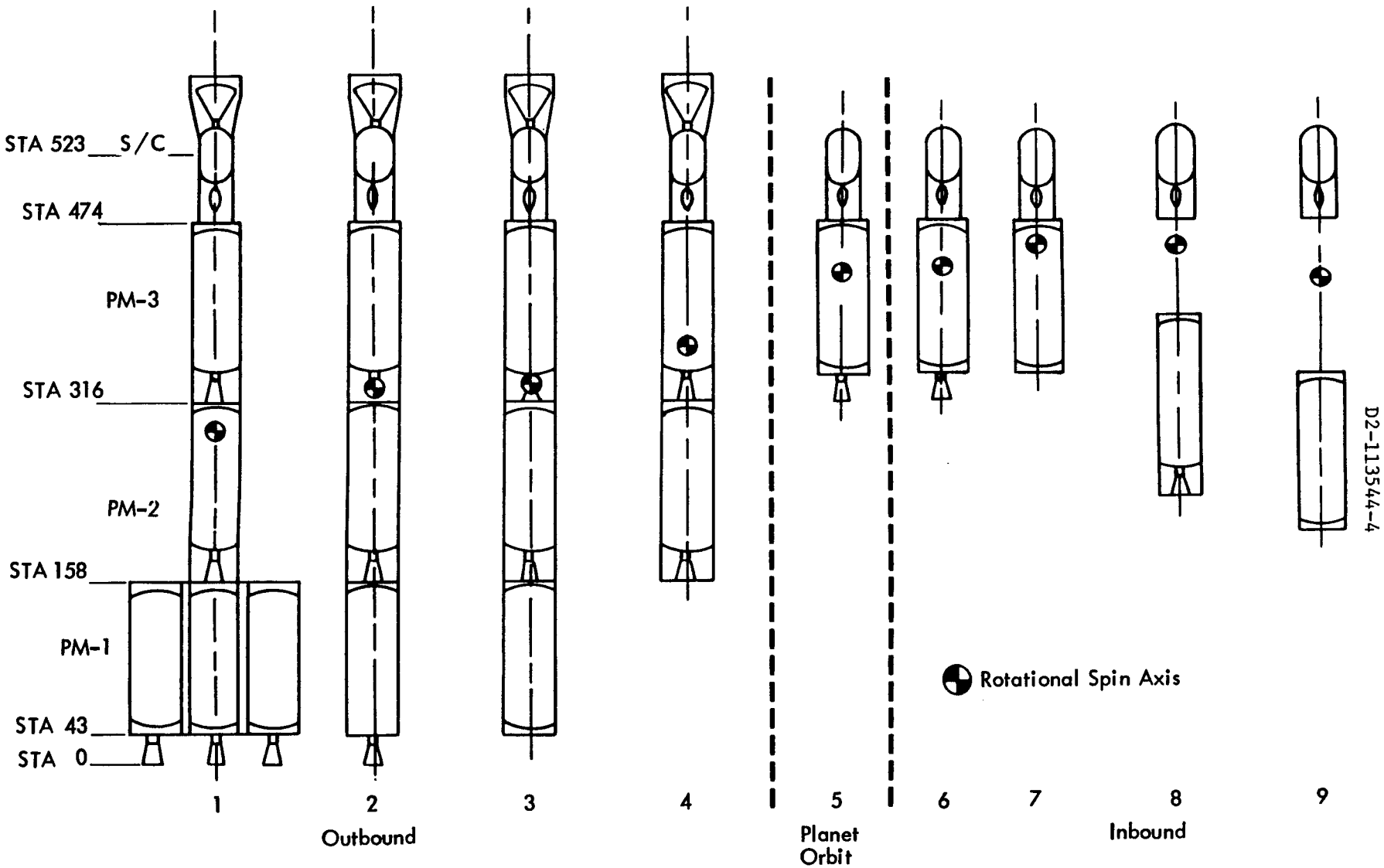

Figure 4.6-3: ARTIFICIAL-GRAVITY CANDIDATE CONFIGURATIONS

Mission Mode	Concept	Description	Remarks
*In Orbit	5	Normal condition after PM-2 staging.	Requires no special equipment.
Inbound	6	Normal condition after PM-2 burn.	Requires more spin propellant than 7. Has "hot" engine shielding problem.
	7	Stage PM-3 engine and purge tank after PM-3 burn.	Minimum spin propellant, requires engine staging equipment.
	8 & 9	With and without PM-3 engine plus cable deployment system.	Deployment not required to stay in "comfort zone". Control problems. Deployment system required.

*Consideration as an artificial gravity configuration applies to Mars conjunction and Venus long missions only.

From these configurations, Concepts 4, 5, and 7 were selected as best. Figure 4.6-4 shows the selected configurations in more detail. The vehicle as assembled in Earth orbit is also shown to orient the reader with vehicle-station relationships.

4.6.3.2 Space Vehicle Description

It appeared desirable to provide a constant gravity environment to the crew for all spinning conditions even though the space vehicle configuration changes with mission phase. The inbound configuration, which has the shortest spin radius from the space vehicle center of gravity to the mission module, determined the 0.30-g gravitational level. The in-planet orbit spin rate (when required) and the outbound configuration spin rate were then adjusted to provide the same gravity level.

Outbound Artificial-Gravity Space Vehicle---The artificial gravity conditions (a_n = 0.30 g) can be obtained with no modifications to the general arrangement of the zero-gravity space vehicle after the PM-1 propulsion modules have been staged. A 150-pound thruster, located in the MEM spacecraft interstage, can supply the required thrust to obtain a spin rate of 2.4 rpm in approximately 1 hour.

In-Planet-Orbit Artificial-Gravity Space Vehicle---Like the outbound configuration, no modifications are required to the zero-g space vehicle configuration to obtain an artificial gravity environment. The vehicle can be spun up after the planet orbit has been circularized and the MEM has been released from the vehicle for planet landing. Burning the

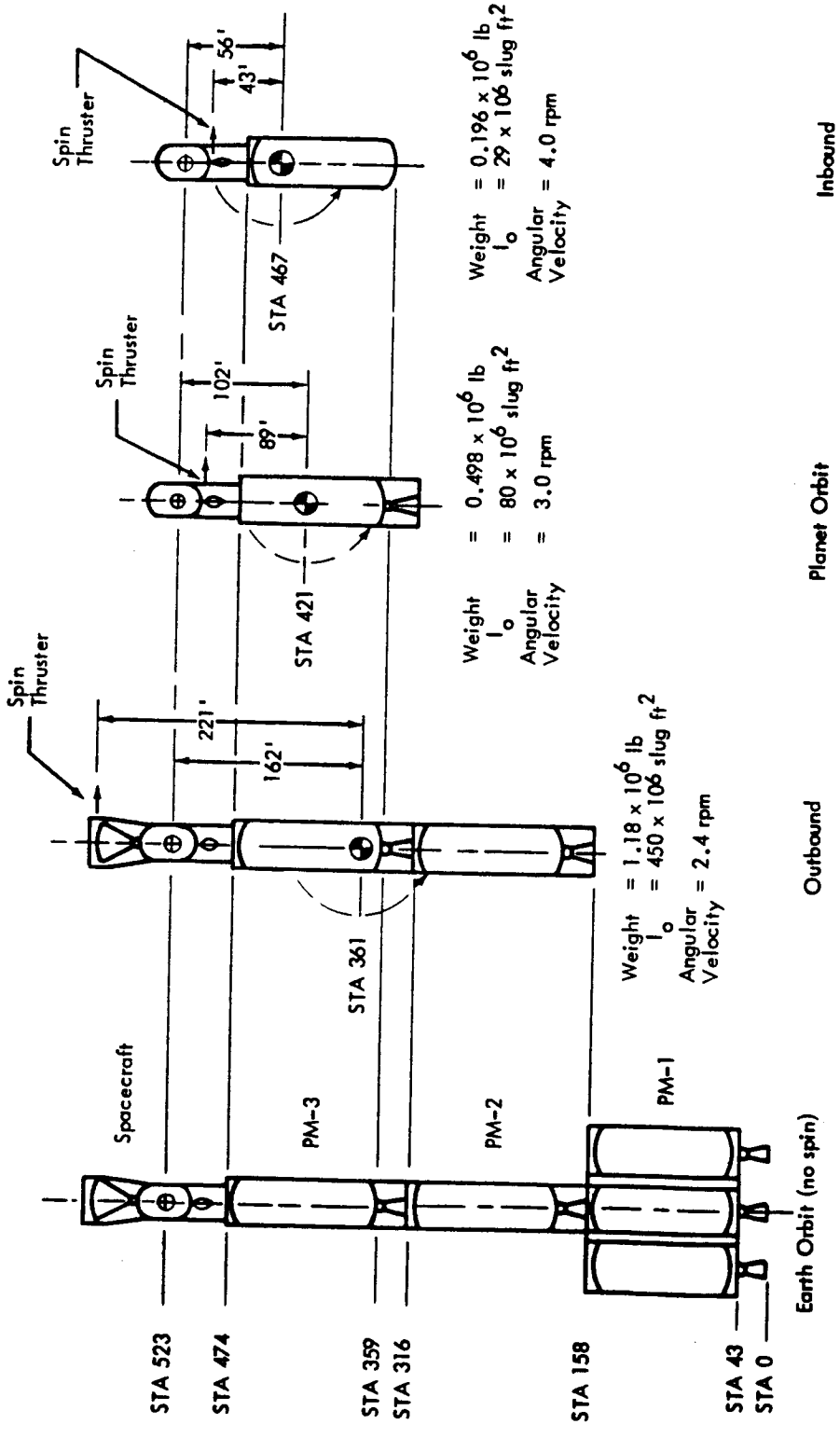

Figure 4.6-4: ARTIFICIAL-GRAVITY RECOMMENDED CONFIGURATIONS

150-pound thruster in the EEM spacecraft interstage for approximately 0.5 hours will bring the space vehicle to the required rotation rate of 3 rpm.

Inbound Artificial-Gravity Space Vehicle---A major change to the zero-gravity configuration is required for the inbound artificial gravity configuration. The PM-3 tank is retained to provide a counterweight for the mission module. However, the "hot" Nerva II engine must be staged from the PM-3 propulsion module to avoid exceeding the radiation dose to the crew. Removal of this engine mass reduces the mission module radius of rotation to a value bordering on the acceptable Coriolis limits; coincidently, it reduces the required propellant to provide the desired spin rate of 4 rpm. This rotation is obtained from the same 150-pound thruster used for the in-orbit spin condition in approximately 0.5 hour.

4.6.3.3 Required Element Changes

The changes required to the recommended zero-gravity space vehicle to effect artificial gravity operation are:

1) A staging system must be added to jettison the PM-3 Nerva engine.
2) Two 150-pound thruster spinup and spindown systems, one in the EEM, one in the MEM spacecraft interstages, must be added.
3) The inbound midcourse correction engines located in the EEM spacecraft interstage need repositioning to align their thrust through the new space vehicle center of gravity.
4) Modifications are required to the attitude control system to provide capability to control the precession and wobble of the spin plane.
5) The sleeping bunks for the crew will require repositioning to place the plane of the bunk normal to the acceleration force.

4.6.3.4 Propellant Requirements for Spinning

The propellant selected for the new spin thruster systems is N_2O_4/Aero-50 with an I_{sp} of 320 seconds.

Mission Mode	Average Mission Module Acceleration (g's)	Space Vehicle Io (slug-ft^2)	Spinning Rate - w (rpm)	Mission Module Rotational Radius - r (ft)	Propellant Weight/Spin (lb)
Outbound	0.30	450×10^6	2.4	162	1566
In-planet orbit	0.30	80×10^6	3.0	102	871
Inbound	0.30	29×10^6	4.0	56	883

4.6.3.5 Gross Weight Effect on Zero-Gravity Configuration to Provide Artificial Gravity Environment

	1984 Opposition (lb)	1986 Conjunction (lb)
Spin Propellant	18,710	33,340
Outbound - 4 up, 4 down		
In orbit - 8 up, 8 down (Conjunction and Venus long only)		
Inbound - 3 up, 3 down		
Reserves - 5%		
Propulsion Inerts	3,560	6,340
Tankage and pressurization		
Engine, feed and tank supports		
Growth and contingency		
Equipment Changes	∿100	∿100
Net Artificial-Gravity Effect	(22,370)	(39,780)
Additional LH_2 Propellant Required (Propulsion)	42,730	57,860
Gross Artificial-Gravity Mass Effect	(65,100)	(97,640)

4.6.4 SYSTEM COMPARISONS

When consideration is given to incorporating an artificial-gravity environment into the recommended space vehicle system, questions relating to its effect on mission success are pertinent. The questions vacillate between considerations that favor and considerations that do not favor such an artificial environment. The following are typical examples of these considerations:

Considerations in favor of artificial gravity:

1) It is not known if man can adapt to zero-gravity conditions for the long periods required for interplanetary missions.

2) Artificial gravity removes the possibility that the crewman might suffer irreparable physical damage from long-term zero gravity exposure.

3) Loose objects can be considered less hazardous since their movements are naturally directed which is not the case for zero gravity flight.

4) Man's capability to withstand the high-g level associated with Earth reentry after long-time, zero-gravity exposure is questionable.

5) The ground qualification test program for the space vehicle is more valid for artificial-gravity flight.

Considerations not in favor of artificial gravity:

1) It is not known how well man adapts to an artificial-gravity environment produced by a short radius rotational movement.

2) The failure to spin down or control spin rate could be catastrophic.

3) Movement of large masses is more readily accomplished in zero gravity.

4) Extravehicular activities appear significantly safer with a non-rotating vehicle.

5) The in-transit experimentation program is complicated and/or curtailed by space vehicle rotation.

6) Artificial gravity adds an element of complexity to on-board equipment. For instance, there are additional motions to be considered for all externally oriented equipment such as position sensors and external experiments.

7) The space vehicle and all subsystems must still be capable of operation in a zero-gravity as well as an artificial-gravity environment.

8) Periodic expenditure of propellant for spinning up and spinning down adds to IMIEO and program costs or reduces payload capability.

9) Crew operating procedures must be adaptable to both environments.

10) Additional spinup and spindown subsystems plus controlling equipment is necessary.

11) Thermal balance problems associated with LH_2 storage are aggravated by a spinning vehicle as opposed to a zero-gravity Sun pointing vehicle.

Prior to incorporating a requirement for an artificial gravity environment, each of these and more considerations must be resolved in terms of mission success, with the full knowledge that adding additional systems will undoubtedly reduce the space vehicle hardware reliability. Evidently if man can efficiently function for the required mission time in a zero-gravity environment, the probability of mission success will be higher than with an artificial-gravity vehicle. However, if man cannot function efficiently without it, artificial gravity will be required and this will result in a lower probability of mission success.

4.6.5 IMPACT ON EXPERIMENT PROGRAM

A spinning artificial-gravity space vehicle complicates and/or curtails an experimental program to obtain data related to interplanetary space, planetary bodies, and near or distant suns. The experimental program conceived for the interplanetary program, especially with regard to Mars and Venus, assumed both the availability of man and sufficient

in-transit time to obtain necessary data from which decisions could follow. As an example, for Mars, in-transit measurements are required to select a preferred landing site for the MEM should cloud cover preclude optical observation of the planet's surface when in orbit. These observations and measurements are estimated to require over 50% of the in-transit time after the 110th day into the mission.

For Venus missions, the usefulness of man will be considerably reduced if he cannot preplan the in-orbit observation program because insufficient time is allowed to observe the planet prior to orbit insertion. The program devised depends on information that can be obtained only during the late in-transit phases to the planet. This information concerns: 1) the presence of small moons; 2) the presence of breaks in the clouds for surface viewing; 3) the detection of strata in the clouds and the variation of these on a simultaneous planet-wide basis; 4) the correlation of cloud structure with underlying geological features; and 5) the early detection of the solar radiation and the neutron flux near the planet.

With respect to observations of other bodies in-transit, there is no indication that sufficient data will be gathered if the in-transit observation program is shortened to the periods of no-spin proposed for the artificial-gravity configuration. Fields and particle measurements can still proceed with a probable loss in the resolution of directional information. If a spectral rather than an imaging technique is used in the early prediction of solar flare events, it is believed that crew safety will not be jeopardized. Those measurements to be made on Jupiter and Pluto depend on the orbits of the two bodies, and whether their particular or specific impact can be identified, because some observations are permitted on a preplanned basis.

The experiments of the in-transit program most affected by spinning operations are those devoted to radio astronomy and X-ray astronomy. However, the impact cannot be assessed because the number of hours required for this observational program has not been identified.

It can be seen that the scientific achievements originally planned to be obtained during the zero-gravity in-transit periods are being curtailed by a requirement for a spinning artificial gravity space vehicle.

Table 4.6-1 provides a list of the scientific instrument complement and briefly states how each is affected when on-board a spinning space vehicle with no despun scientific platform or bay.

Table 4.6-1: IMPACT OF ARTIFICIAL G ON IN-TRANSIT OBSERVATION PROGRAM

	Instrument	Impact of Artificial G
1)	UV Spectrometer	Eliminates UV astronomy sightings while in spinning mode. May eliminate ion probes. See item 15).
2)	IR Spectrometer	Eliminates Mars observations while in spinning mode. Reduces chances of locating small hot areas.
3)	IR Interferometer	Reduces ability to determine presence of hot gas vents and the possibility of identifying them.
4)	Photographic System	Impairs image acquisition of planets. May have major impact on in-orbit observation program because of reduced planning activity based on images of planet (Conjunction and Venus long missions only).
5)	UV Scanner	Eliminates UV astronomy and zodiacal light scatter measurements during spinning mode.
6)	IR Scanner	Practically no effect.
7)	Polarimeter	Same as 2).
8)	Photometer	Used in conjunction with 4).
9)	RF Radiometer	Reduces Jupiter observations after leaving Mars for specific mission years.
10)	Bistatic Radar	None.
11)	Magnetometer	Would require an isolated instrument in convoy.
12)	Charged Particle Detector	Reduces accuracy of directional data. Not a major item.
13)	Micrometeoroid Detector	Same as 12).
14)	Mapping Radar	No effect.
15)	Ion Probes	Reduces the time to observe probes, thus making them inefficient payload items.

5.0 EARTH LAUNCH VEHICLES (ELV)

The ELV is by far the largest of the aerospace vehicle elements. Because of the significant impact of the ELV characteristics on all the mission systems including manufacturing, transportation, ground and orbital support as well as the space vehicle, the recommended ELV capability was selected on the basis of the overall systems trades as reported in Section 7.0 of this volume.

A decision was made early in the study to consider only launch vehicles that have been studied rather than use launch vehicle parametric data. This approach permitted more realistic evaluation of the launch vehicles and their impact on all parts of the mission system, since performance, facility, operations, and cost data were readily available. Fortunately, studies had been made or were in progress that covered a wide range of launch vehicle capability.

Uprated versions of the Saturn V launch vehicles previously studied under NASA Contract NAS8-20266 had nominal payload capabilities to 100 nautical miles that varied from 380,000 to 580,000 pounds. Boeing inhouse studies included clustered uprated Saturn V launch vehicles with payload capabilities of 930,000 to 3,194,000 pounds. Studies running concurrently with the Integrated Manned Interplanetary Spacecraft Concept Definition (IMISCD) study included NASA Contracts NAS8-21105 and NAS2-4079. Contract NAS8-21105 covered a study of an uprated Saturn V with four 260-inch solid rocket motor strapons having a nominal payload capability of 860,000 pounds. Contract NAS2-4079 covered a study of a multipurpose large launch vehicle that consists of a core vehicle with a variable number of strapon booster rockets resulting in payloads varying between 1,000,000 and 4,000,000 pounds. These ELV's also provide a wide range of payload volume capability.

5.1 LAUNCH AND RENDEZVOUS MODE

The launch and rendezvous mode used in this study was adopted from a mode described by North American Aviation.* An indirect, rendezvous-compatible, circular orbit mode was selected. The indirect mode provides an intermediate phasing orbit to compensate for launch-time errors. The rendezvous-compatible orbit permits two coplanar launch opportunities (i.e., satisfying both in-plane and in-phase conditions) per day. The nominal launch sequence corresponding to an on-time launch is shown in Figure 5.1-1. Launch occurs at or near the coplanar launch opportunity. The ELV provides sufficient yaw steering to accommodate at least a

*NAA Document SID67-S49-4, *Manned Planetary Flyby Missions Based on Saturn/Apollo Systems*, NASA Contract NAS8-18025, August 1967.

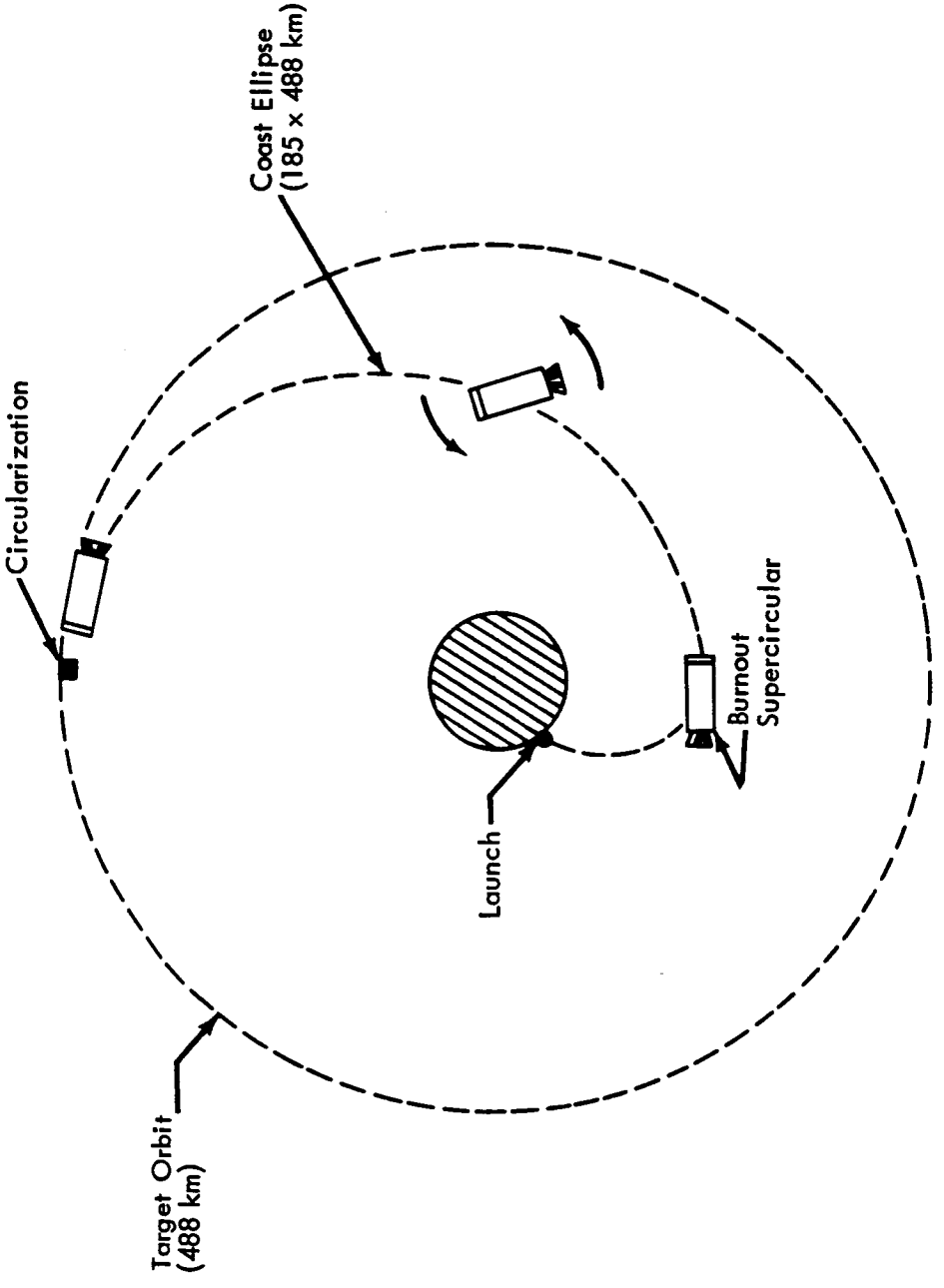

Figure 5.1-9: LAUNCH SEQUENCE — ON-TIME LAUNCH

10-minute ground launch window. The ELV burns out supercircular at 100 nautical miles to achieve an apogee orbit altitude of 262 nautical miles coincident with the assembly orbit. A transtage on the payload (space vehicle module) is used to circularize the orbit and accomplish the docking maneuver.

In the launch vehicle studies previously identified, the payload performance of the ELV's were based on a 100-nautical-mile circular orbit injection. The ELV payload capabilities were adjusted downward to be compatible with the present study's launch mode. Table 5.1-1 shows the ΔV budget required to transfer the payload from the elliptic phasing orbit to the 262-nautical-mile assembly orbit and to accomplish the docking maneuver. The portion of the space vehicle in the assembly orbit is the target vehicle, and each new payload module is the active vehicle in the rendezvous and docking sequence. A LOX/LH_2 transtage is used on each payload to provide the rendezvous ΔV requirements. The weight of the transtages was deducted from the ELV payload capability to the 100-nautical-mile by 262-nautical-mile elliptical phasing orbit to obtain the ELV gross payload capability to the 262-nautical-mile circular assembly orbit. The adjusted ELV payload capability to the 262-nautical-mile assembly orbit are presented in Figure 5.2-1.

Table 5.1-1: ΔV BUDGET FOR RENDEZVOUS FROM THE 100 x 262-NAUTICAL-MILE ELLIPTICAL PHASING ORBIT TO THE 262-NAUTICAL-MILE ASSEMBLY ORBIT

Maneuver	ΔV (fps)	ΔV (m/sec)
Orbital Insertion Correction	30	9.14
RCO Circularization	284	86.56
Plane Change Contingency	45	13.72
Stationkeeping	5	1.52
Catch-up	45	13.72
Course Correction	5	1.52
Subtotal	414	126.18
Velocity Reserve (5%)	21	6.40
Docking	40	12.19
Total	475	144.77

5.2 RECOMMENDED ELV

The MLV-SAT-V-25(S)U was selected as the recommended ELV on the basis of the results of the system trade studies reported in Section 7.0. The space acceleration/ELV trade study, which considered tailored space vehicle propulsion modules, showed the all-nuclear space acceleration system/MLV-SAT-V-25(S)U combination to be superior to all other competitors. The Space Acceleration Commonality Trade Study results did not alter this conclusion.

5.2.1 CONFIGURATION DESCRIPTION

The four-solid rocket motor strapon configuration of the -25(S)U is shown in Figure 5.2-1. It should be noted that, although this configuration is recommended, a core vehicle and a core plus two strapon booster vehicle are available with essentially no modification required. The first stage of this vehicle is rotated 45 degrees from its normal position in the standard Saturn V configuration to minimize the impact on launch facilities, GSE, and operations. This stage rotation requires that the flight control signal be modified to compensate for the rotation. The strengthened MS-IC stage is 40 feet longer than the standard S-IC stage and contains 6.56 million pounds of propellant.

The uprating of the F-1 engines to 1.8 million pounds is attained by direct linear uprating of the chamber pressure. This is accomplished by reorificing the gas generator for greater propellant flow and by the following component modification:

1) High head "6 + 6" oxidizer and fuel pump impellers,
2) Increased power "30-inch diameter" turbine,
3) Modified low-pressure-drop main oxidizer valve,
4) Reduced internal diameter turbopump shaft,
5) Increased propellant flow area injector,
6) Strengthened gas generator and thrust chamber,
7) Regulator for thrust control.

The resulting increase in turbopump speed, and hence, increased main propellant flow rate, increases the chamber pressure and thereby increases the thrust to 1.8 million pounds.

The -25(S)U utilizes zero, two, or four 4-segment, 156-inch, strapon solid rocket motors for thrust augmentation. Each motor incorporates a regressive thrust time trace with an initial thrust of 3.7 million pounds. The solid propellant weight per motor is 1.38 million pounds. Each of the solid motors has a liquid injection (N_2O_4) thrust vector control system to augment the capability of the gimbaled uprated F-1 engines during flight through the maximum g regime. The 156-inch solid rocket motors with their thrust vector control system must be developed and qualified for this application.

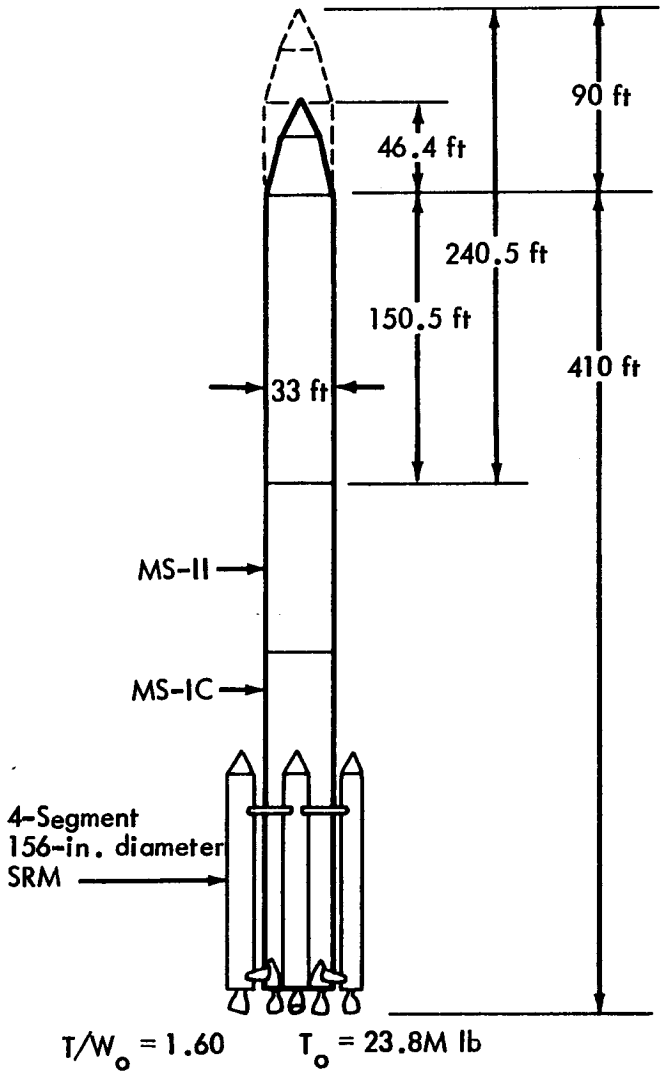

MS-IC ΔLength = 40 feet
5 F-1, 1.8M lb Thrust
W_P = 6.56M lb x (2.98M kg)

MS-II ΔLength = 0 feet
5 Uprated J2S
W_P = 970 lb (441K kg)

Strapons 4 Segment - 156-in. diameter
W_P = 1.38M lb (0.627M kg) @
T_O = 3.7M lb (1.68M kg) @

Vehicle	Gross Payload to 262-n-mi Circular Orbit
-25(S)U Core	302,700
Core + 2 Strapons	410,800
Core + 4 Strapons	548,400

Figure 5.2-1: MLV-SAT-V-25(S)U

The -25(S)U utilizes a strengthened standard-length S-II stage equipped with five -J2S engines. The J-2S is an improved J-2 engine providing a higher thrust through a mixture ratio shift. The modified S-II stage contains 970,000 pounds of propellant.

The payload dimensions shown in Figure 5.2-1 are representative for overall aerospace vehicle heights of 456 feet and 500 feet. With the recommended space acceleration system, which consists of 115-foot long tanks called common modules, the maximum overall aerospace vehicle height, including the nose cone, is 471 feet.

5.3 CAPABILITY

The payload capability of the three versions of the -25(S)U to the IMISCD study 262-nautical-mile assembly altitude with the use of a transtage is as follows:

Core	302,700 lb
Core + 2 strapons	410,800 lb
Core + 4 strapons	548,400 lb

All versions of the -25(S)U are launched in the parallel-stage mode in which the ignition of the core and strapons occurs at the same time.

5.4 FACILITIES IMPACT

The facilities impact of the -25(S)U are the same as the -25(S) except for the facilities affected by uprating the F-1 engine and those affected by the increased weight of the additional segment to the solid rocket motors. The manufacturing plan for the MS-IC stage is essentially the same as that used for the fabrication, test, and inspection of the S-IC vehicle. The longer length and structural design changes will affect the manpower, tooling, facilities, and handling equipment. The addition of the solid motor attachment structure will require new facilities and production capabilities. The attachment of solid motors to the stage necessitates increased electrical and telemetry requirements, strengthening of the first-stage intertank region to tie the solids to the core vehicle, additional staging and destruct functions, and relocation of some access doors. The increased acoustical level will require requalification of approximately 70% of the acoustically sensitive components. The effect of rotating the first stage 45 degrees is minimal. Additional length of electrical wiring is necessary, three alignment pin locations must be changed, the control signal must be modified to compensate for the rotation, and some telemetry antennas must be relocated.

The major impact of the first stage changes on Michoud facilities will be due to the added solid rocket motor functions and manufacture of the solid rocket motor aft skirt structure. Additional assembly equipment, checkout and handling, and transportation equipment will be required. The aft attachment structure is a maraging steel structure requiring boring machines, welding fixtures, and additional welding facility area.

The heavier and longer first stage will require rework of much of the existing equipment. Major tooling and assembly requirements at Michoud include an additional tank assembly station, an additional hydrotest position, and some additional and modified tooling. The final assembly position in the Michoud VAB can be adapted to handle the 40-foot longer stage.

Modification of the S-IC test firing stands at MTF and MSFC are required due to increased stage length and propellant capacity. Solid motors will not be fired in conjunction with the stage static test. The stage transporter and the barges must be modified to accommodate the increased stage length.

The 156-inch solid rocket motors with their thrust vector control must be developed and qualified for this application. New production and test facilities are required for these motors. Additional solid motor handling and transportation equipment will be required.

The manufacturing plan for the MS-II stage is essentially the same as for the S-II stage. Manufacturing requirements for the MS-II are defined by the stage structural modifications. The revised structural design will require modification of the fabrication and assembly tools for the forward and aft skirts, LH_2 tank walls, interstage, and aerofairings. The Seal Beach facilities require a minimum of modification; the major work required is modification to the structural test tower for the increased test loads. Some handling equipment at Tulsa and Seal Beach will require modification as a result of the increased stage weight. The current S-II program transport equipment and vehicles are compatible with the MS-II stage design; no modifications would be required to handle the additional stage weight.

The impact of the -25(S)U on the launch facilities and operations result from its increased size and weight and the addition of the solid rocket strapon boosters. The modified core vehicle and payload will be assembled according to standard procedures in the VAB on a modified mobile launcher (ML) (see Section 6.0, "Facilities"), and will subsequently be transported to the pad for attachment of the solid rocket motors. Concurrent with the core vehicle assembly and checkout, the solid rocket motor (SRM) segments and closure assemblies will undergo receiving inspection, component installation, and individual checkout in a new mobile erection and processing structure (MEPS) at a remote site. After the liquid-core vehicle on the mobile launcher has been secured to the launch pad, the MEPS, with inspected segments and preassembled closures for all four of the solid rocket motors, will move to the launch pad and will be mated with the mobile launcher and ground structure for transfer operations of the solid rocket motor segments. Two cranes mounted on the MEPS will be used to lift and attach the aft solid rocket motor closure (with the preassembled aft attachment skirt) to the liquid core. The four center segments and the forward closure will then be stacked on top of each of the aft closures. Assembly of two solid rocket motors will be accomplished concurrently. This procedure will be duplicated for assembly and mating of the remaining two solid rocket motors. After

assembly is made and alignment of all four SRM's is completed, the MEPS will then be transported back to its parking position. From this point on, the launch operations proceed in a manner similar to those for the Saturn V vehicle with the exception of the added operations for integrated solid rocket motor checkout and for solid rocket motor arming.

The existing vertical assembly building (VAB) with the work platform altered can be utilized.

Modifications at the launch pad include reinforcement of the mobile launcher support piers and pad structure and the provision of heat shields for pad-mounted equipment and structure, new flame deflectors, and improved flame deflector anchorage, flame protection for flame trench walls, auxiliary exhaust deflector shields, and increased high pressure gas and propellant storage capabilities. Additional quantity and flow rates of industrial water will be required which will require increased pumping capacity and upgrading of the hydromatic systems. The water mains serving the pad area are adequate without modification. Existing electrical power and communications are satisfactory.

A solid rocket motor inert components building must be provided. A mobile erection and processing structure (MEPS) must be provided with parking position and additional crawler transporter roadway for access.

The mobile service structure (MSS) will require a height extension to permit work platforms to be raised to the required service levels. This will require increased structural reinforcement and increased elevator runs. The cantilever framing which supports the platforms in the vicinity of the solids must be reworked to increase the lateral clearance.

The principal modifications required for the mobile launcher involve relocation to higher levels of all umbilical arms, shielding of the front umbilical face, increased elevator runs, an enlargement of the aspirator hole from 45 feet square to 55 feet square, strengthening of the mobile launcher platform structure, replacement of the existing vehicle support arms, and relocation of equipment in the umbilical tower and mobile launcher platform. Protection from exhaust impingement on the bottom of the mobile launcher will be required because of the exhaust plume spillover from the flame trench.

The crawler transporter, which will be used to transport the mobile launcher and MEPS, will require uprating to handle the increased loads caused by this vehicle. These modifications will include structural beef-up at the corners of the transporter and a new, more powerful steering system.

The pad separation distance for Complex 39 is 8730 feet which was determined from early estimates of Saturn V propellant weights with TNT equivalencies of 10% of total LOX-RP-1 weight, 60% of total LOX-LH_2 weight, and 0.4-psi overpressure limit. Using the latest propellant weight estimate for the Saturn V vehicle, TNT equivalencies, 0.4-psi overpressure limit, and the approved range safety curve of peak overpressure versus scaled distance for TNT surface blast (see Figure 5.4-1), the required interpad distance would be 9060 feet for the Saturn V.

A 0.4-psi overpressure limit was used for the Saturn V program because of vehicle-structure design criteria limits. This overpressure limit is also considered safe for unprotected personnel. The four-segment, 156-inch motors, when attached to the MS-IC stage and in the presence of the fully fueled liquid vehicle, are assigned 100% TNT equivalency. Using this value for the solid motors, and a 60% equivalency for the LH_2 in the payload (400,000 lb), the flight-ready MLV SAT-V-25(S)U vehicle interpad separation distance requirement for 0.4 psi is 16,800 feet. This is 8070 feet more than the existing siting distance of 8730 feet. (However, all test results and previous experience with large solid motors seems to indicate that the rating of 100% TNT equivalency is excessive under any condition.) Figure 5.4-1 shows pad separation-distance radii for 0.4-psi overpressure resulting from on-pad catastrophic failures of loaded boosters. A radii of 12,050 feet is shown for the case where 20% TNT equivalency was used for the solid rocket motors.

Despite the seemingly inadequate separation distance between pads A and B, it is believed that a waiver should be granted to allow use of the present pads as sited without requiring evacuation of personnel or vehicle from the adjacent pad. Such a waiver appears justified because a total vehicle explosion, requiring virtually instantaneous mixing of all propellants, is highly improbable.

The 125-db overall sound pressure level of the -25(S)U is approximately 38,000 feet. This distance is well beyond the 0.4-psi overpressure blast limit range and will definitely require ear protection of all personnel within this range during launch operations.

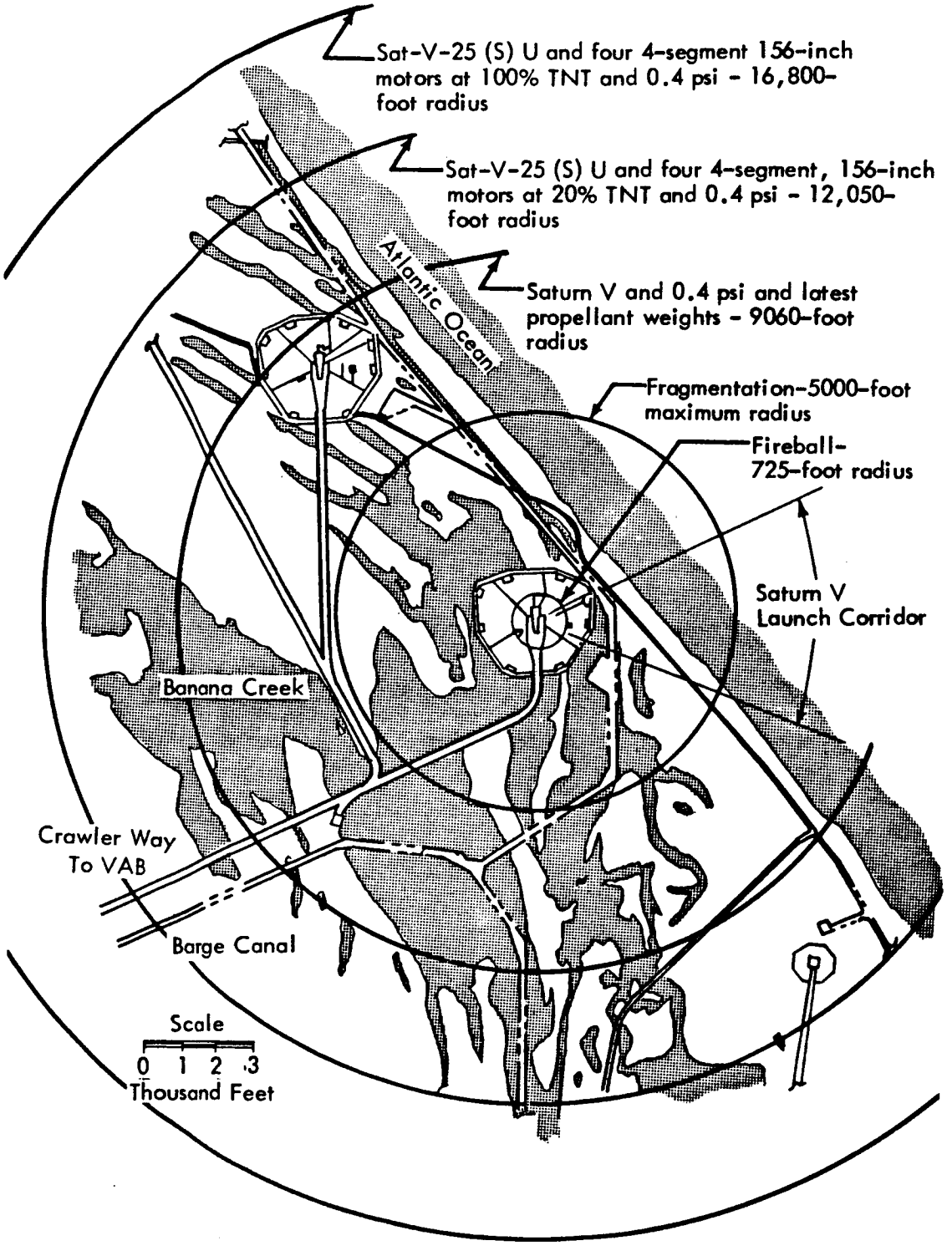

Figure 5.4-1: HAZARD RADII FOR COMPLEX 39

6.0 FACILITIES

6.1 LAUNCH FACILITIES

Selection of the SAT-V-25(S)U for the Earth launch vehicle (ELV) makes possible the use of Launch Complex 39 and other facilities at KSC to support the interplanetary mission program. The increase in length of the MS-IC stage, the omission of the S-IVB stage and the addition of the four-segment solid rocket motors (SRM's) will require extensive modifications of existing facilities and construction of some new facilities (Figure 6.1-1).

The procedure for assembly, checkout, and launch of the SAT-V-25(S)U and the various payload elements of the space vehicle will, with the exception of the SRM integration, basically follow that developed for Saturn V.

The SAT-V-25(S)U launch schedule as shown in Figure 3.2-1 indicates a maximum launch rate of six launches in 2-1/2 months. To support a launch rate of this magnitude, the following conditions are imposed on the launch facilities:

1) Exclusive use of Launch Complex 39 is given to the planetary program when required.
2) Hurricane protection at the launch pad can be developed.
3) Pad refurbishment can be accomplished in 9 days.

The following sections describe the major modifications, additions, and new facilities that will be required at KSC to support the program. In addition, certain facility/GSE requirements are identified as being of such scope or importance to the program to warrant additional detailed study.

6.1.1 OPERATIONAL SEQUENCE

The assembly, checkout, and launch of the ELV and a PM payload begins with the arrival by barges at KSC of the MS-IC stage, the MS-II stage, and a propulsion module (PM) tank. The SRM's are also water transported in railroad cars on barges. Due to the increased length of the first stage, a new transportation vehicle will be required to move the MS-IC stage from the unloading dock to the VAB. A new vehicle will also be required to transport the PM tank to the nuclear engine/fuel tank mating facility. The railroad cars containing the live rocket motor components go directly to a new open rail car storage area. The inert components are transferred to the new inert components building (ICB).

In the VAB, erection of the ELV on the mobile launcher follows the Saturn V procedure. Following the integration and checkout of the payload, the vehicle is moved by crawler-transporter to the launch pad. Concurrent with the assembly and checkout of the ELV core, the SRM components are processed through the new ICB and the new mobile erection and processing structure (MEPS).

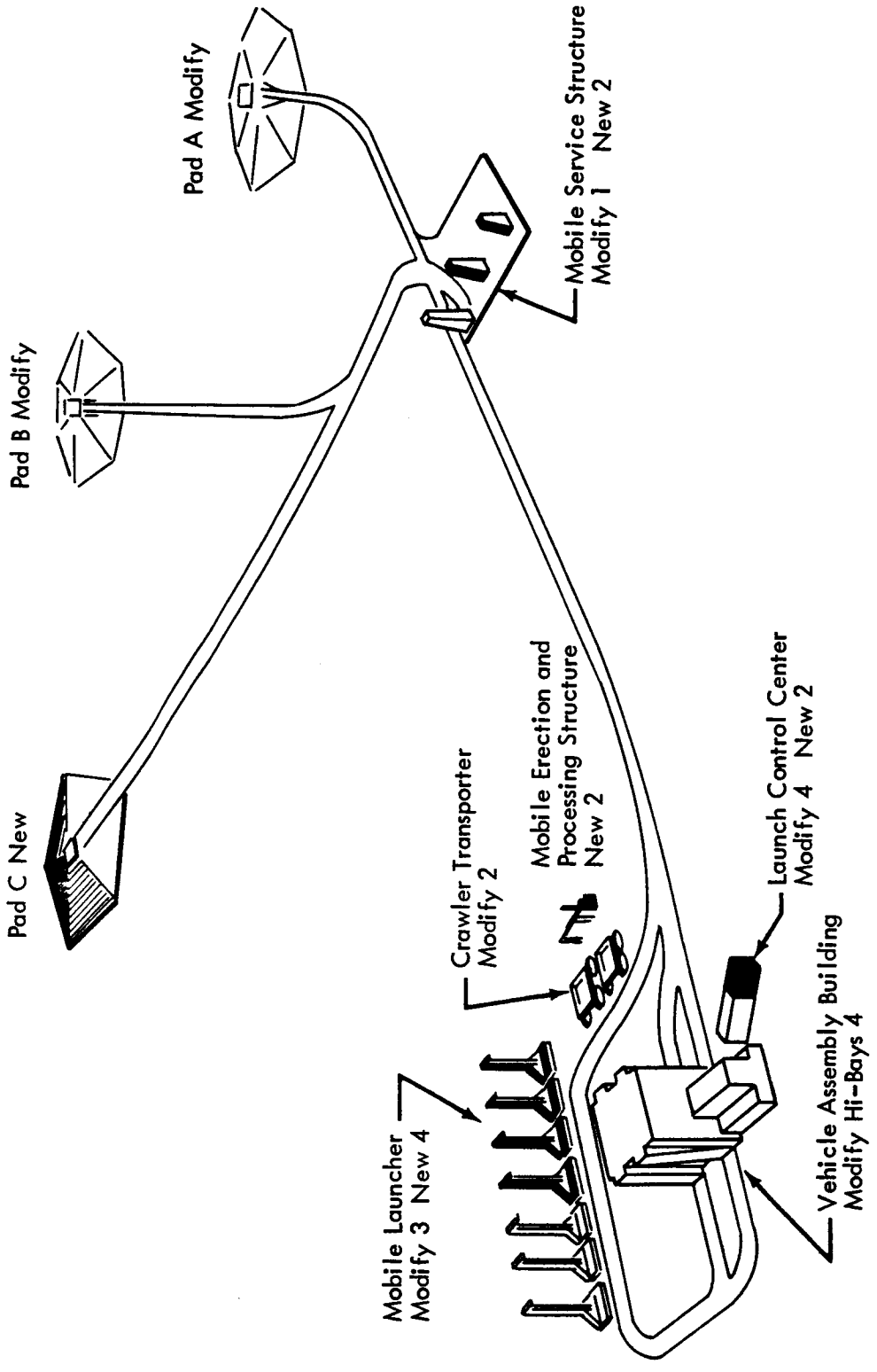

Figure 6.1-1: LAUNCH COMPLEX - SATURN V-25(S)U

Upon completion of checkout, the SRM's are transported to the launch pad in the MEPS by use of the crawler-transporter. At the pad, the SRM segments are assembled and integrated with the core of the ELV.

Completion of the pad checkout procedure, fueling operations, and launch follow the Saturn V routine.

6.1.2 VERTICAL ASSEMBLY BUILDING (VAB)

Four high bays in the VAB will be required to serve the proposed launch rate. Three bays will be configured to accommodate an ELV and a PM payload--PM-1, -2, and -3 being identical in size. The fourth bay will be configured for the spacecraft payload.

At present, two of the bays are completely outfitted for Saturn V/Apollo. Modifications required for Saturn V-25(S)U in these two bays will include relocation upward of the work platforms and utilities for the longer first stage and the corresponding new level of the second stage. The platforms formerly serving the S-IVB stage and Apollo will require modification or replacement to accommodate a 33-foot diameter payload.

The two remaining high-bays must be outfitted completely, including work platforms, enclosures, utilities, and test systems.

A major problem presents itself in adapting the VAB for assembly and checkout of the Saturn V-25(S)U and the payload. This problem occurs due to the ELV/payload height, when assembled on a mobile launcher; it is greater than the VAB high-bay door opening and also exceeds the hook height of the 250-ton crane. The height of the vehicle, less nose cone, above the VAB floor is 463 feet 6 inches. The door height is 456 feet 2 inches and the hook height is 462 feet 6 inches. In arriving at clearance requirements, the operational procedure of raising the mobile launcher before leaving the VAB must be taken into account as well as an allowance for a payload handling fixture.

To provide a reasonable margin of clearance, a change in elevation of 8 feet must be added to the VAB high-bay doors and cranes, or the height of the vehicle reduced by that amount.

A brief examination of the work involved in altering the VAB roof structure to gain the necessary height indicates this approach to be extremely costly. The principle complication results from the increased wind loads when the height is increased and probable need to strengthen the basic building structure.

A more reasonable solution appears to be in reducing the vehicle height through aerospace vehicle design or by modification of the mobile launcher platform in conjunction with changes required for the solid rocket motors. Basically, the mobile launcher modification would allow the vehicle to set deeper into the mobile launcher platform structure. If this lowered position adversely affects the flame deflection at the launch pad, the mobile launcher support piers could be modified to compensate as required. A detailed study will be required to fully resolve this problem.

The increased weight of the Saturn V-25(S)U and the payload, plus the increase in weight of the mobile launcher, could exceed the designed capability of the supporting piers. A detailed study of this problem will be required.

6.1.3 LAUNCH CONTROL CENTER (LCC)

The proposed launch rate and continuance of the concept of one firing room assigned to an ELV/PL from assembly to launch will require six equipped firing rooms in the Launch Control Center. This requirement will be met by modifying the three existing outfitted firing rooms to accommodate consoles for the solid rocket motors and new payloads, outfitting the fourth room, and constructing and outfitting two additional rooms.

Checkout of the spacecraft will be accomplished by expansion of the acceptance checkout equipment (ACE).

6.1.4 MOBILE LAUNCHERS (ML)

Seven ML's will be required to support the program. This will require modification of the three existing ML's and construction of four new units. Modifications will consist of changes in the launch platform opening to accommodate the SRM's, addition of heat shields and relocation and modification of umbilical arms and fluid systems piping.

6.1.5 MOBILE SERVICE STRUCTURE (MSS)

Three MSS's will be required for the program. This requirement can be met by modification of the existing structure and construction of two new units, including parking facilities and crawlerways.

Revisions to the existing MSS will include increasing the height to accommodate raising the work platform due to the larger MS-IC stage, alterations for the SRM's, and new payload platforms.

6.1.6 MOBILE ERECTION AND PROCESSING STRUCTURE (MEPS)

A previous study by the Martin Company evaluated several methods of integrating the 156-inch solid rocket motors into the assembly, checkout, and launch procedure for a modified Saturn V core. Their recommended concepts, which have been adopted for this study, will require the development of a mobile facility that will be used to inspect and checkout the SRM's and will provide derricks for erecting the segments on the launch pad.

A parking facility for the MEPS will be required near the open railcar storage. This facility will be similar to that provided for the mobile service structure. As the MEPS will be transported to the launch pad by the crawler-tractor, a new spur from the crawlerway must be extended to the MEPS parking position.

6.1.7 CRAWLER-TRANSPORTERS

Two crawler-transporters will be required for the planetary program. A comprehensive study will be required to determine the feasibility of modifying the existing units to carry the increased load imposed by the ELV/payload and heavier mobile launcher.

6.1.8 LAUNCH PADS

The increase in size, weight and thrust of the Saturn V-25(S)U over the Saturn V will require extensive modifications to the existing launch pads if they are to be used for the program. Also, since three vehicles will be undergoing launch pad processing concurrently, three pads will be required.

The major complication in developing launch pad requirements is in the determination of a practical requirement for pad separation for catastrophic failure of a fueled vehicle. Pad separation for Complex 39 is 8730 feet, which was determined by using TNT equivalencies of 10% of the LOX-RP.1 weight and 60% of the LOX-LH_2 weight, and 0.4-psi overpressure. The 0.4-psi limit is imposed by the Saturn V structure.

With the introduction of the SRM's and the increased fuel capacity of the MS-IC stage, the separation distance required for 0.4 psi becomes 16,700 feet. This figure is based on assigning 100% TNT equivalency to the solid propellants when in the presence of a fully-fueled core plus a propulsion module payload.

Earlier studies have recommended that a waiver be granted on the separation requirements, the justification being that overpressures near the theoretical value are highly improbable due to inadequate mixing of propellants and the difficulty in detonating solid propellants. Further study and evaluation is required to establish criteria for pad siting. For this study present separation, though of concern, has been considered adequate.

Major modifications to the existing launch pads include reinforcement of the ML and MSS support piers and pad structure, new flame deflectors, increased industrial water pumping, and increased fluid systems capacity. A tabulation of present propellant storage and ELV/PL requirements is shown below:

	Existing Pad Storage	On-board Requirement Saturn V-25(S)U + PM
RP-1	258,000 gallons	300,000 gallons
LOX	700,000 gallons	550,000 gallons
LH_2	850,000 gallons	950,000 gallons*

*687,000 gallons for propulsion module

Increased propellant storage requirements at each existing launch pad to support the program would include one 86,000-gallon RP-1 reservoir, manifolded to the three existing tanks, one 200,000-gallon LOX dewar for boiloff replenishment, and two additional 850,000-gallons LH_2 dewars.

Minor modifications to the high-pressure gas system will be required to interface with the new vehicle. The existing N_2O_4 system will be modified to service the thrust vector control system on the solid rocket motors.

One new launch pad, including the crawlerway extension, and having the same capability as the modified pads will be required.

6.2 INDUSTRIAL FACILITIES

This section describes major new or modified facilities that will be required to support the manufacture, assembly, and test of the hardware components that make up the interplanetary mission system. Development and fabrication facilities for the nuclear engines and the solid rocket motors are assumed to be available at the time required through provisioning separate from this program. Thus, they are not treated here except when they occur as a direct result of program requirements.

6.2.1 MANUFACTURING AND ASSEMBLY

The major facility changes evolve from the increase in the length of the first stage of the ELV and provisions for the solid strapon rocket motors and the PM hydrogen tanks.

Major tooling and assembly requirements at Michoud include an additional tank assembly station, an additional hydrotest position, and some additional and modified tooling. Additional warehousing, quality assurance, and receiving inspection areas will be required. The final assembly position in the vertical assembly building can be adapted to the longer stage.

The aft skirt structure and aft attachment structure for the SRM's will require new assembly and handling equipment as well as boring machines and a new welding facility.

6.2.2 TEST FACILITIES

Major additions and modifications will be required to the test facilities at MSFC and MTF to support the program.

1) Dynamic Test Facility: The present Saturn V dynamic test stand at MSFC has a foundation limit of 12×10^6 pounds. The Saturn V-25(S)U plus a PM weighs approximately 15×10^6 pounds. Therefore, a new facility must be constructed to meet this test requirement.

2) Static Firing Facility: The S-IC stand at MTF will require modification to accommodate the MS-IC stage. The SRM's will not be fired. Modifications to the stand will include revisions to platforms because of the increased length of the stage and revisions to propellant and gas piping systems. Three new LOX barges will be required to provide the additional propellant required for the MS-IC.

7.0 SYSTEM TRADES

The objective of the system trade studies was to select the best space vehicle configuration concept along with the best combination of space acceleration system and Earth launch vehicle (ELV) for a variety of manned Mars and Venus missions. The strong impact of space acceleration systems on IMIEO and the consequent interaction on the ELV requirements, ground and orbital facilities and operations along with the impact of the different ELV capabilities on the space vehicle configuration, ground and orbital facilities and operations required that these trade studies be performed on a mission system basis. The very large number of combinations of space vehicle configuration concepts, types of space acceleration systems, and ELV's of different capabilities required that the system trades be performed in two steps to reduce the amount of work to more manageable portions. Accordingly, in the initial studies, only one space vehicle configuration concept was evaluated along with seven space acceleration systems and four ELV's. These combinations were evaluated for a representative five-mission program that covered the range of energy requirements for a variety of missions to Mars and Venus. This procedure determined the best space acceleration system/ELV combination. The second step of the system trade studies was to use the best space acceleration system/ELV combination in three different approaches to space vehicle commonality. These designs were evaluated over a 20-mission program that included conjunction, opposition, and swingby missions to Mars and long and short missions to Venus.

The first step of the trade study resulted in the all-nuclear space acceleration system/MLV-SAT-V-25(S)U ELV combination being the recommended system. Though this combination was selected, the all-nuclear MLV-SAT-V/4-260 was very competitive. Accordingly, both ELV's were included along with the all nuclear space acceleration systems in the second step commonality trade study. This study resulted in the recommended common module, all nuclear, MLV-SAT-V-25(S)U aerospace vehicle.

7.1 SPACE ACCELERATION/ELV TRADE STUDY

The objective of the space acceleration system and Earth launch vehicle system trade was to select the best combination for a variety of manned Mars and Venus missions. The candidate combinations considered in the trade study included seven space acceleration systems in combination with each of four Earth launch vehicles.

The space acceleration candidates are listed in Figure 7.1-1 as to the individual modes used for PM-1, Earth orbit escape; PM-2, planet braking; and PM-3, planet escape. For example, the NAC or nuclear/aerobraking/chemical candidate uses a nuclear stage for the Earth orbit escape impulse, aerobraking for the planetary capture maneuver, and chemical propulsion for the planetary escape impulse. At the beginning of the trade study all ten possible combinations were considered, using nuclear or chemical propulsion and aerobraking in connection with the space acceleration system. However, because it is illogical to use chemical

OBJECTIVE

To select best combination of space acceleration system and Earth launch vehicle for manned Mars and Venus missions

CANDIDATES

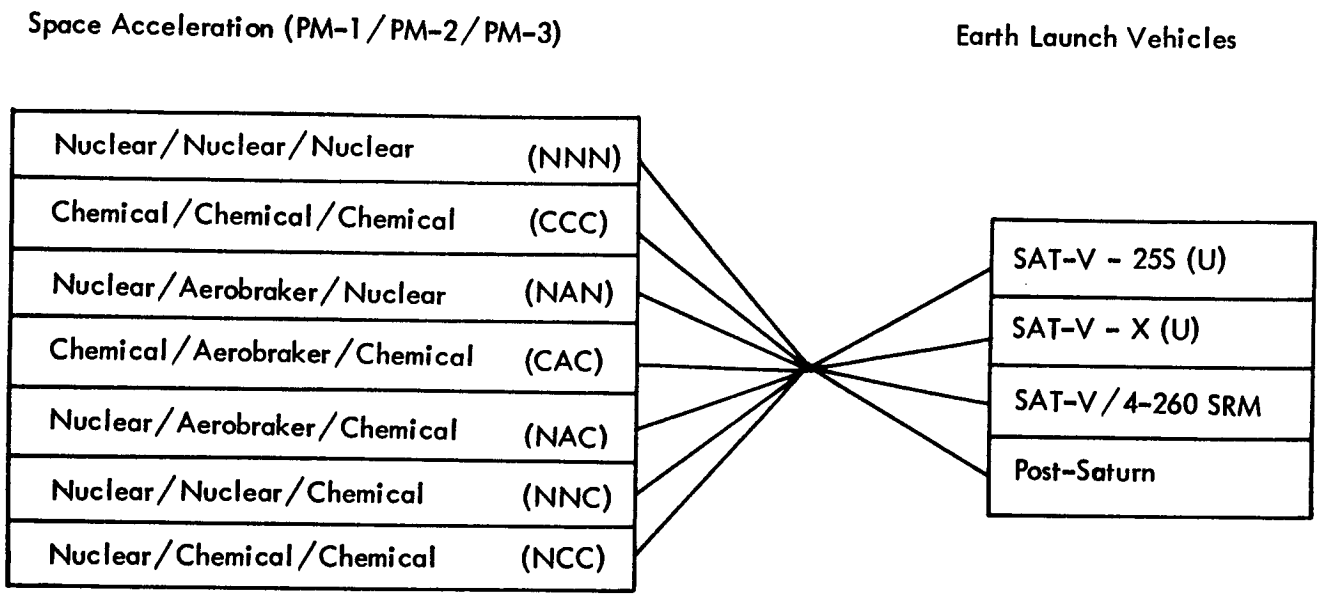

Figure 7.1-1: SPACE ACCELERATION/EARTH LAUNCH VEHICLES SYSTEM TRADE

propulsion for Earth orbit escape if nuclear propulsion is available, three of the possible candidates, CNN, CAN and CNC, were eliminated. The NAC, NNC, and NCC space acceleration systems were eliminated during the trade study and were not investigated to the same depth as were the remaining four space acceleration system candidates (NNN, CCC, NAN, CAC). The IMIEO's for NCC, NNC, and NAC were determined. After examining the resulting IMIEO's and the expected program costs as developed for their counterpart space acceleration system, only the NAC case warranted further definition. The NAC case was costed for a five-mission program. The results showed that the NAC was not competitive costwise with the NNN and, therefore, was not given further consideration.

The Earth launch vehicle (ELV) candidates considered in the space acceleration-ELV trade study included the Saturn V-25(S)U, the Saturn V-X(U), the Saturn V/4-260 SRM, and the Post-Saturn. These ranged from a modest uprating of the Saturn V ELV to a new launch vehicle having the capability of launching most of the interplanetary vehicles to orbit in a single launch. The ELV payload-to-orbit ranged from about 300 thousand pounds to about 4 million pounds.

7.1.1 TRADE STUDY METHODOLOGY

The approach to accomplishing the system trade and evaluation is depicted in Figure 7.1-2. Given the mission parameters associated with the five representative missions to be considered, the conditions for design and for cost estimation, the spacecraft payload elements to be carried on the missions and the space acceleration system and ELV candidates to be considered, a design analysis was performed to make appropriate design selections and configure the space vehicles in the best manner for each candidate. A modified tailored module design concept was used in the space acceleration-ELV trade studies. This concept had a commonality aspect in that the diameters of the respective propulsion modules (PM) were held constant within a particular space acceleration-ELV combination. For example, in a NNN/4-260 combination, all of the PM-1's for each of the five missions have the same diameter, but their lengths and number of PM-1's used were varied to meet each mission's ΔV requirement. Similarly, the diameters of the PM-2 and PM-3 were held constant and the length of the tank was varied to meet ΔV requirements. The three separate tank diameters (for PM-1, PM-2 and PM-3) were optimized for the representative five-mission program. The maximum diameter for each PM was determined by the mission in which that particular PM's propellant requirement was a minimum. The tank then was sized such that it was formed by two elliptical heads. This determined the common diameter of that particular PM. Propellant requirements for other more demanding missions were met by inserting an appropriate cylindrical section between the tank heads. Therefore, each space acceleration/ELV combination had a unique set of three PM diameters. The exceptions were the NNN/-25(S)U and the NAN/25(S)U in which the -25(S)U payload envelope diameter limited all three space acceleration systems to a maximum of 33 feet. The design analysis included detailed considerations of the weights associated with the elements of the space vehicle configuration.

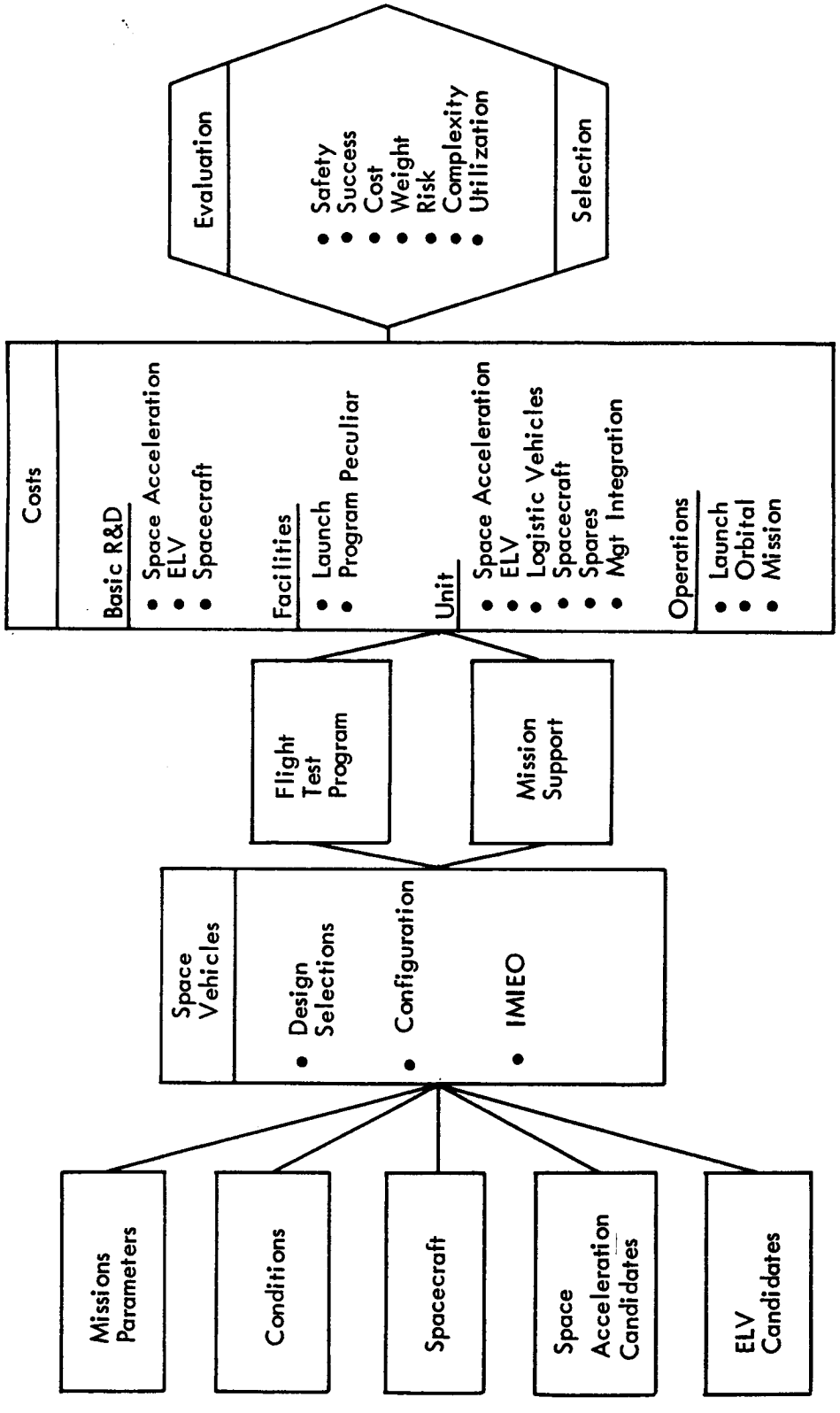

Figure 7.1-2: TRADE METHODOLOGY

Using the results of the design analysis in conjunction with the five representative missions to be accomplished as a program, a flight test plan was developed and the mission support requirements were analyzed to determine quantities of hardware elements and spares for accomplishing the mission program.

Using the total hardware elements required for the mission program, the flight test plan activities, the individual mission duration, and launch and orbital assembly requirements, a detailed cost-estimating procedure was applied to arrive at the elemental costs required to accomplish the mission programs. These were then summed to find the total program costs.

Using the weight or IMIEO data, configuration and technical development requirements from the design analysis, and the costs estimates from the cost analysis, the candidate combinations of ELV/space acceleration systems were evaluated considering safety, success, cost, weight, risk, complexity, and utilization as criteria. Because each candidate configuration was developed to give the same reliability and also to accomplish all of the five representative missions, the evaluation considerations relative to mission success and utilization were considered in a qualitative manner, as were the safety, risk, and complexity criteria.

7.1.2 GUIDELINES AND CONSTRAINTS

7.1.2.1 Design

The major guidelines and constraints for the design analysis within the space acceleration/ELV trade study are as follows:

- Missions

  Mars Opposition 1982

  Mars Conjunction 1986

  Venus Short 1980

  Venus Long 1980

  Mars-Venus Swingby 1982
- Flight test and mission - only one new ELV family shall be considered for each case.
- EEM - Biconic - designed for 65,000-fps entry
- MEM - NAA aeroballistic design
- MM - Phase 1 design - six-man crew
- Experiments - Phase 1 definition
- Earth Orbit - circular - repeating ground track
- Probability of Success - space vehicle = 0.95, launch operations = 0.985
- ELV Spares - as required per mission to meet 0.985 $P_{success}$ for launch operations, rendezvous, and docking

The study objective to examine the possibility of developing a single concept for accomplishing all different types of missions over a typical synodic cycle for Mars and Venus set the stage for the particular missions to be considered. They span the range of the relatively ambitious opposition class missions to the easier conjunction class missions with the swingby type mission also included.

The required ΔV's and trip times associated with the five representative missions considered in the trade study are shown in Table 7.1-1.

Table 7.1-1: MISSION PARAMETERS

Mission	ΔV_1 (m/sec)	ΔV_2 (m/sec)	ΔV_3 (m/sec)	ΔV_E (m/sec)	Total Trip Time (days)
Mars 1982 Opposition (Propulsive)	3989	2568	5811	18,353	540
Mars 1986 Conjunction (Propulsive)	3684	2470	2713	11,852	1040
Mars 1982 With Venus Swingby (Propulsive)	3798	2337	4550	12,160	600
Venus 1980 Short (Propulsive)	3858	4538	4070	14,193	460
Venus 1980 Long (Propulsive)	3661	4539	3400	11,751	800

The missions were selected from the 28 typical missions analyzed in the IMISCD study mission analysis effort. These trajectories were selected on the basis of near-minimum IMIEO for an all-propulsive mission mode. The five missions are not intended as a recommended mission program, but rather, represent the various types that can be employed as Mars or Venus capture missions. The representative missions span broad ranges of total energy, required individual impulse energy, Earth entry velocity, and total trip times. The Mars 1982 opposition mission was chosen because it was the most difficult mission of the favorable-time-period (1982-1990) opposition missions examined. The Mars 1986 conjunction mission was the easiest (except for mission duration) mission. The Mars 1982 with Venus swingby was selected to represent the reduced-energy requirements associated with the swingby mode. The Venus 1980 missions are typical of Venus missions where energy requirements do not vary greatly.

For the system trade study, all space acceleration candidates were analyzed from the design and cost standpoint using the trajectories selected for the all-propulsive mode. Additional trajectories selected specifically for the aerobraking mode were used to examine the sensitivity of aerobraking space vehicle IMIEO's to trajectory selection. This work is reported in Volume III, Part 1.

It was reasoned that only one new Earth launch vehicle would be developed. Therefore, only the ELV candidate in question and already existing ELV's were considered available to support the mission program. Spare ELV's were determined through analyses to meet a 0.985 probability for successful launching and orbital assembly of the space vehicle. The probability of success for the space vehicle was 0.95. For all cases, Earth orbital assembly was accomplished in a circular orbit selected for an integer number of repeating ground tracks.

The spacecraft payload elements were the six-man mission module as described in Section 4.2-1; the aeroballistic Mars excursion module as adapted from the current North American Aviation study (Contract NAS9-6464); and a biconic Earth entry module (based on a Lockheed study under Contract NAS2-2526) designed for 65,000-fps (10,800 m/sec) entry velocity. The scientific experiment payloads aboard the various spacecraft modules were as defined in Section 4.2-2.

7.1.2.2 Costs

The major conditions imposed upon the cost estimating procedure are as follows:

1) Orbital support for PM testing provided by spacecraft orbital tests.
2) SAT-INT-21 (two-stage Saturn V) available as required for tests with SAT-V-X(U) and Post-Saturn.
3) Standby ELV's PM modules and spacecraft required for missions and demonstration tests-
   - ELV quantities per reliability analyses
   - PM's for each mission
   - Spacecraft - store unused, refurbish, and reuse.
4) "All-up" ELV tests planned.
5) Logistic spacecraft = six-man modified Apollo/Saturn 1B - five reuses
6) Demonstration tests based on Mars 1982 opposition mission.
7) Aerobraking flight test for each different shape or shield weight.
8) Nuclear and chemical engines - recurring costs only; no R&D.

These were established through judgment as to logical extension of present state of the art and rationale for accomplishing various portions of a test plan and for reuse of certain required mission system elements.

Orbital flight testing of the spacecraft modules was assumed to be phased with the orbital testing of the propulsion modules such that any required manned or logistic orbital support for the latter could be provided for by that used for the former. Also, an "all-up" testing philosophy was used; i.e., all of the flight tests for the ELV development were assumed to carry payloads consisting of space vehicle flight

test elements. Because the dynamics of aerobraking maneuvers are highly dependent on shape and weight, flight tests were planned for each different aerobraking configuration. R&D costs for nuclear or chemical space acceleration system engines were not included.

A full space vehicle demonstration test was deemed necessary for each five-mission program; it was reasoned that one demonstration test, based on the most difficult of the representative missions, could be sufficient for the program. The reusability concepts for the three- and six-man modified Apollo logistic spacecraft system were reviewed and considered to be reasonable; the six-man modified Apollo launched on the Saturn 1B ELV was selected as the logistic spacecraft and it was considered to be reusable with refurbishment up to five times. The two-stage Saturn V Earth launch vehicle (SAT-INT 21 ELV) was assumed to be available to support the flight test program for the Post-Saturn and clustered Saturn ELV/space vehicle combinations.

Standby or backup elements for the ELV's, and propulsion and spacecraft modules required for the missions (or the demonstration test) were determined and were treated as noted in Table 7.1-3. The standby ELV quantities were determined by reliability analysis; propulsion modules were backed up for both the possibility of an individual module failure prior to launch and the possibility of the loss of any complete ELV payload. The spacecraft modules were backed up on a one-for-one basis, with a cost allowance for storage, refurbishment, and modification for subsequent missions.

7.1.3 AEROSPACE VEHICLES DESCRIPTIONS

A total of 80 aerospace vehicle configurations were evaluated in the principal portion of the space acceleration/ELV trade studies. These configurations represented all the possible combinations of the NNN, NAN, CCC, CAC space acceleration systems with four sizes of ELV's (SAT-V-25(S)U, SAT-V/4-260, SAT-V-X(U) and Post-Saturn) configured for each of the five representative missions. An additional 25 aerospace configurations were evaluated to the extent that they were shown to be noncompetitive with the preliminary recommended aerospace vehicle, the NNN/SAT-V-25(S)U.

7.1.3.1 Spacecraft

The spacecraft consists of the mission module, Earth entry module, and the Mars excursion module. A weight breakdown by major subsystem is shown in Table 7.1-2 for two mission modules. The crew size is six men. A Bosch system is used for CO_2 reduction. The communications system utilizes a combination of microwave for voice and laser for TV and high-resolution pictures. Attitude control is provided by a combination of control moment gyros and reaction jets. A 15 kw_e (maximum capability) isotope-Brayton system supplies an average power level of 13 kw_e. Note that the experiments are included in the mission module weights. Weight contingency and growth is provided at 25% of the mission module

Table 7.1-2: MISSION MODULE WEIGHTS
(Space Acceleration---ELV Trade)

	Mars 1982 Opposition 570 Days (lb)	Mars 1986 Conjunction 1070 Days (lb)
Structure	15,960	19,160
Environmental Control/Life Support	6,050	9,150
Crew & Support	3,040	3,550
Communications & Data Handling	1,370	1,370
Attitude Control	1,670	1,670
Guidance & Control	140	140
Displays & Controls	490	510
Electrical Power	9,710	10,360
Expendables	19,180	33,050
Spares	6,960	10,580
Experiments	9,120	11,040
Growth & Contingency	13,360	17,060
Total Mission Module	87,050	117,640

inerts. Mission module weights are shown for two missions of 570 and 1070 days duration (the MM spends 30 days in Earth orbit prior to PM-1 ignition). Weights for the other missions are derived by assuming a straight-line relationship with mission time.

Weights are shown in Figure 7.1-3 for the biconic shape Earth entry modules (EEM) as a function of the Earth entry velocity. The crew size is six men. Weight contingency and growth is included at 15%. Additional details of the biconic EEM are described in Section 4.2-4.

Table 7.1-3: PAYLOAD ELEMENT WEIGHTS

	Mars 1982 Opposition (lb)	Mars 1986 Conjunction (lb)	Mars 1982 Swingby (lb)	Venus 1980 Short (lb)	Venus 1980 Long (lb)
Mission Module (Including Experiments)	87,050	117,640	90,720	82,160	102,980
Earth Entry Module (Biconic)	17,400	13,400	13,500	14,400	13,400
Mars Entry Module	95,290	95,290	95,290	--	--

Includes growth and contingency.
Does not include interstage.

The spacecraft element weights are summarized in Table 7.1-3 for the five missions considered. The previous two figures describe how the mission module and Earth entry module weights are derived. The Mars entry module (MEM) weights are derived from North American Aviation studies. These weights reflect a three-man crew and a 540-nautical mile circular orbit. Because of the wide variation of weight possible in the MEM design (by changes in the ΔV, size, descent mode, propulsion type, etc.), the 30% growth and contingency factor is applied to the total MEM weight (including expendables).

7.1.3.2 Space Acceleration Systems

Three major types of space acceleration systems were evaluated in the space acceleration/ELV system trade study. These include nuclear, chemical, and aerobraking. The nuclear propulsion systems evaluated use LH_2 and the Nerva II engine. The 33-foot diameter nuclear propulsion modules have design characteristics similar to that developed by in-house Boeing/Huntsville nuclear stage studies. Tanks of 33-foot diameter have a 0.7r elliptical upper bulkhead and a conical lower bulkhead. Tanks with diameters larger than 33 feet have a 0.7r elliptical design for both bulkheads.

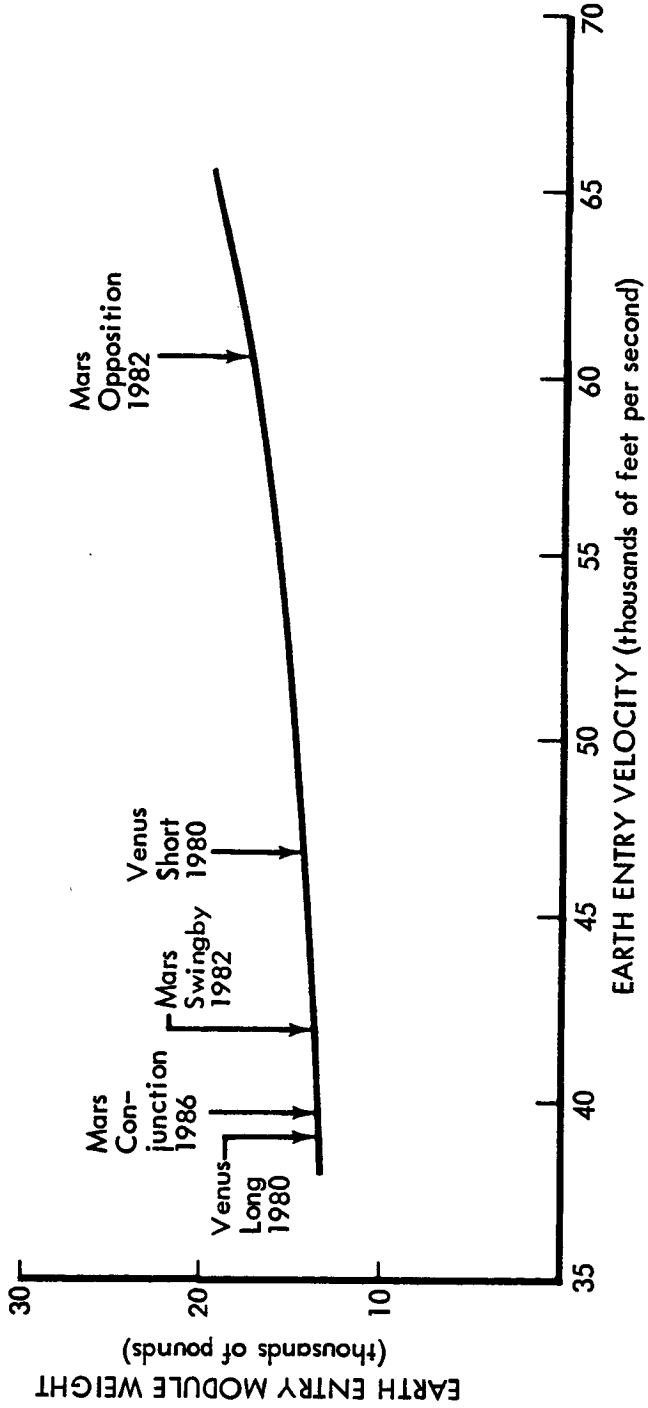

Figure 7.1-3: BICONIC EARTH ENTRY MODULE WEIGHTS

Cryogenic propulsion systems use LH_2 and LO_2. For representative engine weight and size characteristics, the J-2 is used. The propellants are stored in a single tank with a hemispherically shaped common bulkhead. The upper and lower bulkheads are 0.7r elliptical when the common bulkhead does not intercept the tank end. When it does, the intercepted tank end is hemispherical. Storable chemical propellants such as $FLOX/CH_4$ are used for midcourse corrections and planet orbit trim.

Aerobraking space acceleration systems are used only for planet capture. The most significant characteristics of this system are the lift to drag ratio of 1, 30-degree half-angle nose cone, and 18-degree flare. These space acceleration systems are summarized in Figure 7.1-4.

Chemical and nuclear stage propulsion module mass fractions (λ') are shown in Figure 7.1-5 as a function of operating propellant weight. A band is shown which represents the range of values that result depending on whether or not the stage is clustered and whether the meteoroid shield and interstage is on or off. These λ' values result from the detail weight calculations as performed by the computer program. The λ' values can be used as a point of reference for comparison with other studies.

The aerobraking configuration is a cone/cylinder/flare as shown in Figure 7.1-6. A fixed deflection in the flare forces the vehicle to fly at an angle of attack consistent with the desired lift-to-drag ratio. The direction of the lift vector is controlled by rolling the vehicle with reaction jets. The nose, flare, and lower half of the cylinder are protected by ablation material. The upper half of the cylinder and the base of the flare are protected by Rene' 41 radiation material. The average unit weights are determined for the conditions shown. This point design was used as a base for calculating the aerobraking weights shown in Figure 7.1-7 for four missions and for nuclear and chemical PM-3 propulsion. The thermal protection weight includes ablated material, ablation for insulation, and understructure. The upper half of the cylinder is Rene' 41 with insulation and standoff structure. The circularization weight includes the propellant ($FLOX/CH_4$) and tankage required to provide the circularization ΔV. The orbit trim propulsion system is used for circularization. Unit ablative weights were varied as a function of M/C_DA and planet entry velocity. Aerobraking provisions as a percentage of space vehicle weight at planet encounter are shown for each mission.

7.1.3.3 Earth Launch Vehicles

The four ELV's, whose capability is summarized in Table 7.1-4 and described in detail in Appendix A, evaluated in this trade study cover a wide range of payload capability.

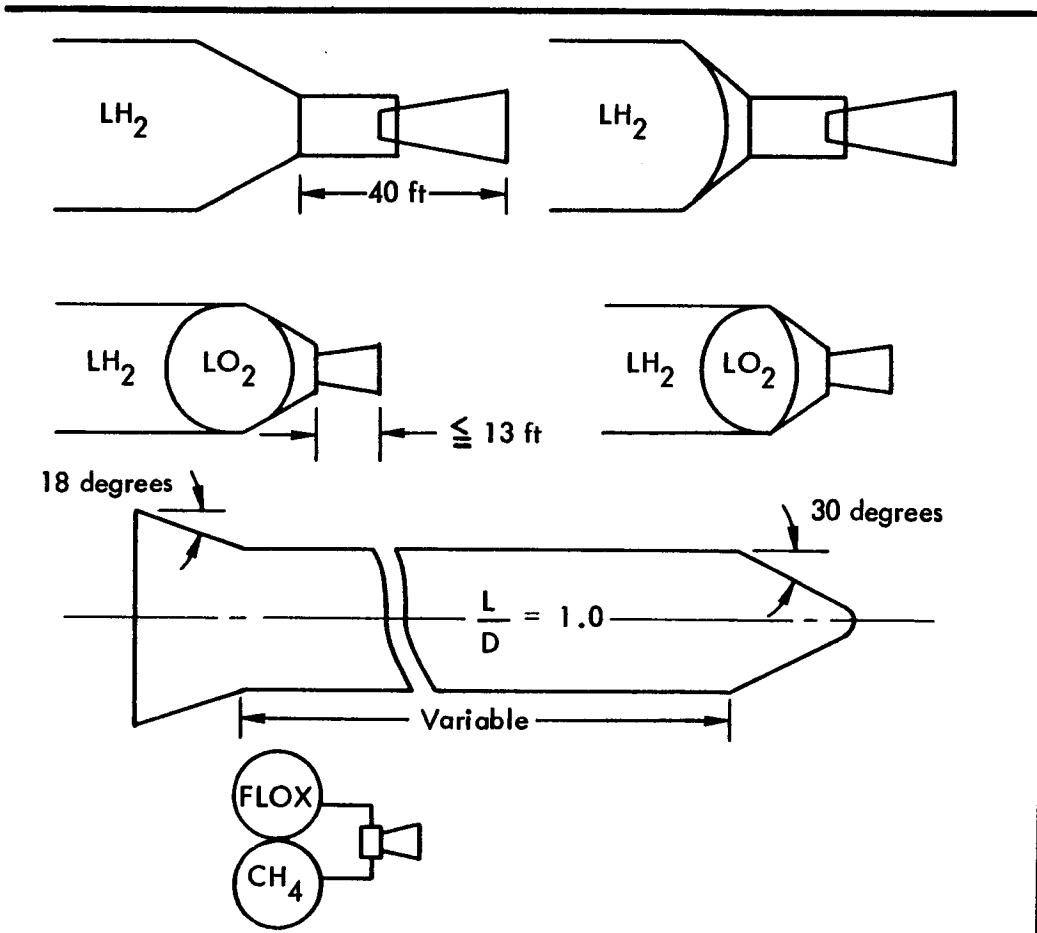

Configurations	I_{sp}	Engine	Application
	850	Nerva	Primary Propulsion
	450	Variable	Primary Propulsion
			Planet Capture
	400	Variable	Midcourse & Orbit Trim

Figure 7.1-4: SPACE ACCELERATION SYSTEMS

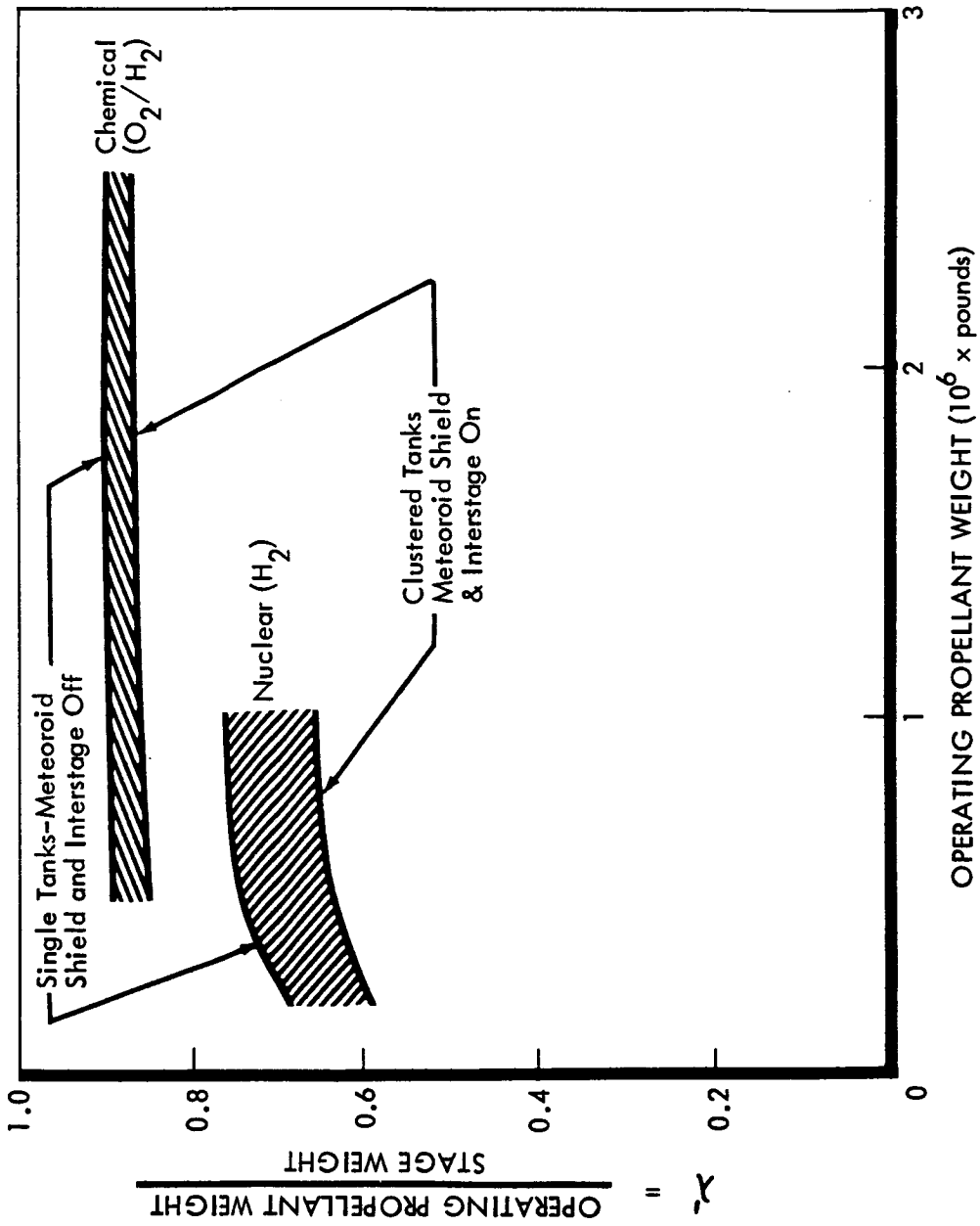

Figure 7.1-5: PROPULSION MODULE WEIGHTS

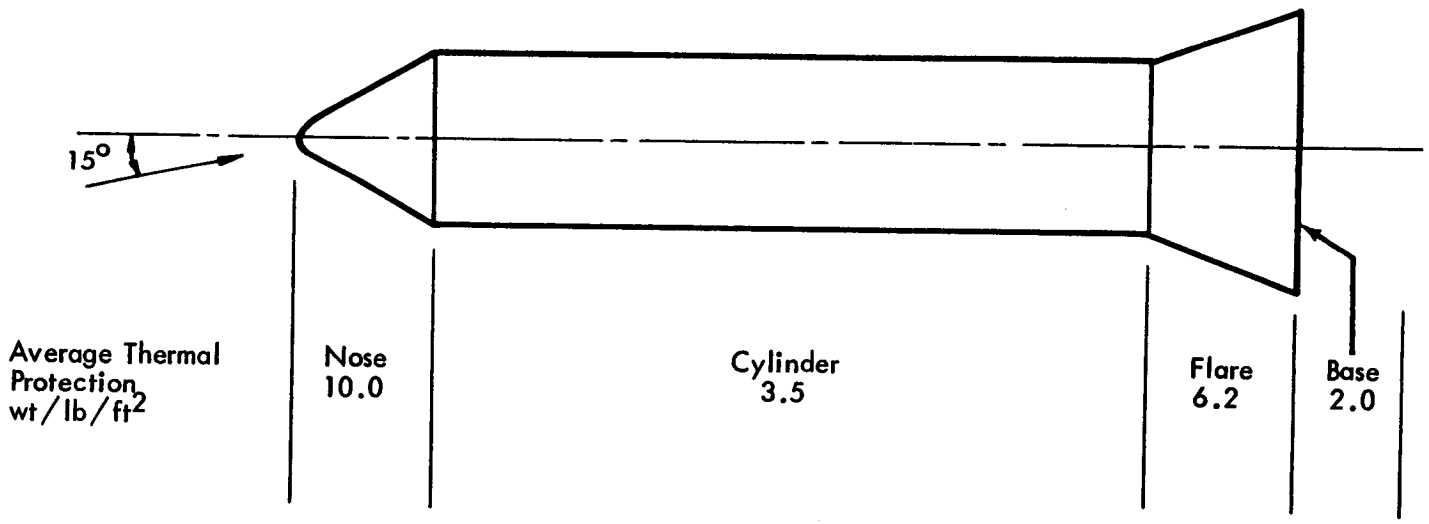

Lift/Drag = 1.0

m/C_DA = 25 slugs/ft^2

V_E = 22,500 ft/sec

Mars VM - 8 Atmosphere

Circularization ΔV = 920 fps

Figure 7.1-6: AEROBRAKING WEIGHTS (TYPICAL)

	Nuclear		Chemical	
	M/C_DA (slugs/ft^2)	V_E (fps)	M/C_DA (slugs/ft^2)	V_E (fps)
Mars 1982 Opposition	22	20K	56	20K
Mars 1986 Conjunction	18	20K	33	20K
Venus 1980 Short	18	38K	36	38K
Mars-Venus 1982 Swingby	19	20K	43	22K

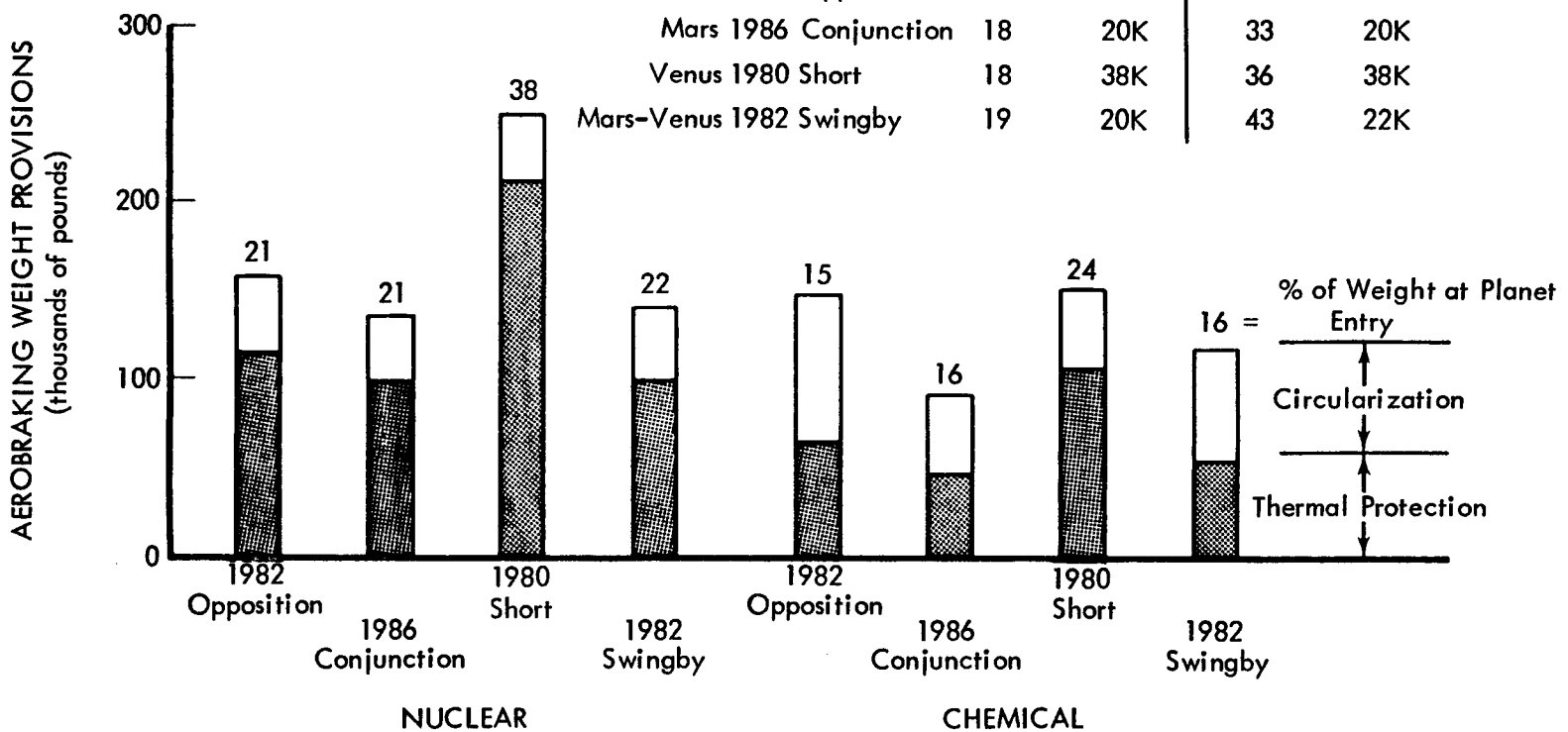

Figure 7.1-7: AEROBRAKING WEIGHT PROVISIONS

Table 7.1-4: TRADE STUDY ELV's

ELV	Maximum Payload Diameter (ft)	Gross Payload to 262-Nautical Mile Assembly Orbit (K lb)
MLV-SAT-V-25(S)U		
Core	33	302.7
Core + 2 Strapons	33	410.8
Core + 4 Strapons	33	548.4
MLV-SAT-V/4-260	78	797.2
SAT-V-XU		
-1XU	33	302.7
-3XU	99	862.0
-4XU	86.5	1163.5
Post Saturn		
Core	75	1205.6
Core + 2 Strapons	75	1484.3
Core + 4 Strapons	120	2073.8
Core + 6 Strapons	120	2927.0
Core + 8 Strapons	120	3589.0
Core + 10 Strapons	120	4047.0
Core + 12 Strapons	120	4204.0

The smallest is the MLV-SAT-V-25(S)U that consists of a two-stage Saturn V with uprated engines and a lengthened first stage along with zero, two, or four 156-inch solid rocket motor strapon boosters. The -25(S)U has a payload diameter capability of 33 feet. The next largest ELV is the MLV-SAT-V/4-260 that consists of standard-length Saturn V stages equipped with standard engines and that utilizes four 260-inch solid rocket motor strapon boosters. Auxiliary tanks above the solid rocket motors contain additional first-stage propellant and extend to the top of the S-II stage. The 4-260 can accommodate payload diameters up to 78 feet. The Saturn V-XU consists of one, three, or four core vehicles that are identical to the -25(S)U core. The cluster of four has a payload diameter capability of 86.5 feet. The Post-Saturn is an all-new LO_2/LH_2 core vehicle with a variable number of 260-inch solid rocket motor strapon boosters. The Post-Saturn can accommodate over 75-foot diameter payloads.

7.1.4 SPACE VEHICLE IMIEO's

The Boeing Design Computer Program, described in Section 4.4.2, was used to determine the IMIEO for each space vehicle configuration. The program was also used to determine the common diameters of the respective PM-1, PM-2 and PM-3's within a particular space acceleration system/ELV combination for the representative five mission program. The IMIEO's resulting from these design iterations are shown in Figure 7.1-8 for all 80 combinations of the four principal space acceleration systems, four ELV's, and five missions that were evaluated in detail. Several interesting conclusions can be reached from these data:

1) There are wider IMEO variations across the missions for the chemical systems than the nuclear systems. The lower specific impulse chemical systems are more IMIEO sensitive to changes in ΔV.

2) Changes in Earth launch vehicle have a small effect on IMIEO. The clustering penalties associated with the smaller payload ELV's are incurred in the initial propulsion stages where the IMIEO leverage factors are small.

3) The chemical systems benefit more from aerobraking than the nuclear systems. The weight savings obtained with aerobraking over a chemical PM-2 stage is higher because of the lower chemical specific impulse and is exaggerated by the high leverage factors associated with all-chemical propulsion stages.

4) Missions with high planet capture ΔV requirements (Venus missions) benefit most from aerobraking. The weight difference between aerobraking and propulsive braking increases as the braking ΔV increases.

In addition to the prime space acceleration candidates (NNN, NAN, CCC, CAC), IMIEO's for NCC, NNC, and NAC were determined and are shown in Figure 7.1-9. After examining the resulting IMIEO data it was concluded, based primarily on expected program costs when compared to its counterpart, that only the NAC case warranted further definition.

7.1.5 SPACE VEHICLE CONFIGURATION AND LAUNCH REQUIREMENTS

The space vehicle configuration and ELV requirements discussions are combined because of the strong impact each has on the other. The effects of the ELV impact on the space vehicle configuration and the impact of the space vehicle configuration on the ELV design is discussed in detail in Appendix A.

7.1.5.1 Space Vehicle Configuration

The space vehicle configurations were developed through design iterations performed by the Boeing Design Computer Program. The mission requirements, ELV constraints, space acceleration system, and spacecraft were input along with design parameters for each of the 80 possible combinations. Space vehicle configurations were defined to the extent of identifying the pertinent characteristics such as weights and

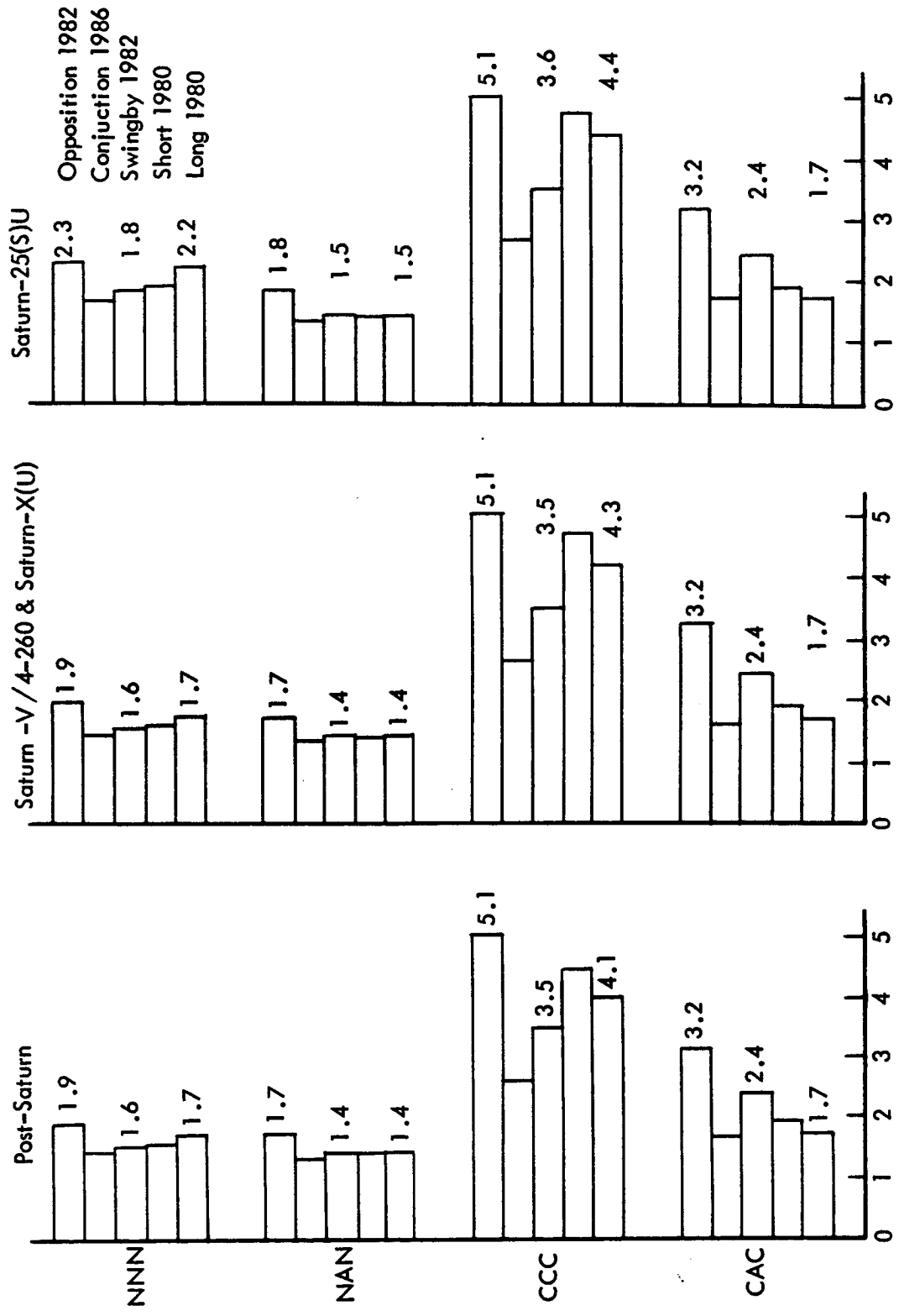

Figure 7.1-8: SPACE VEHICLE IMIEO

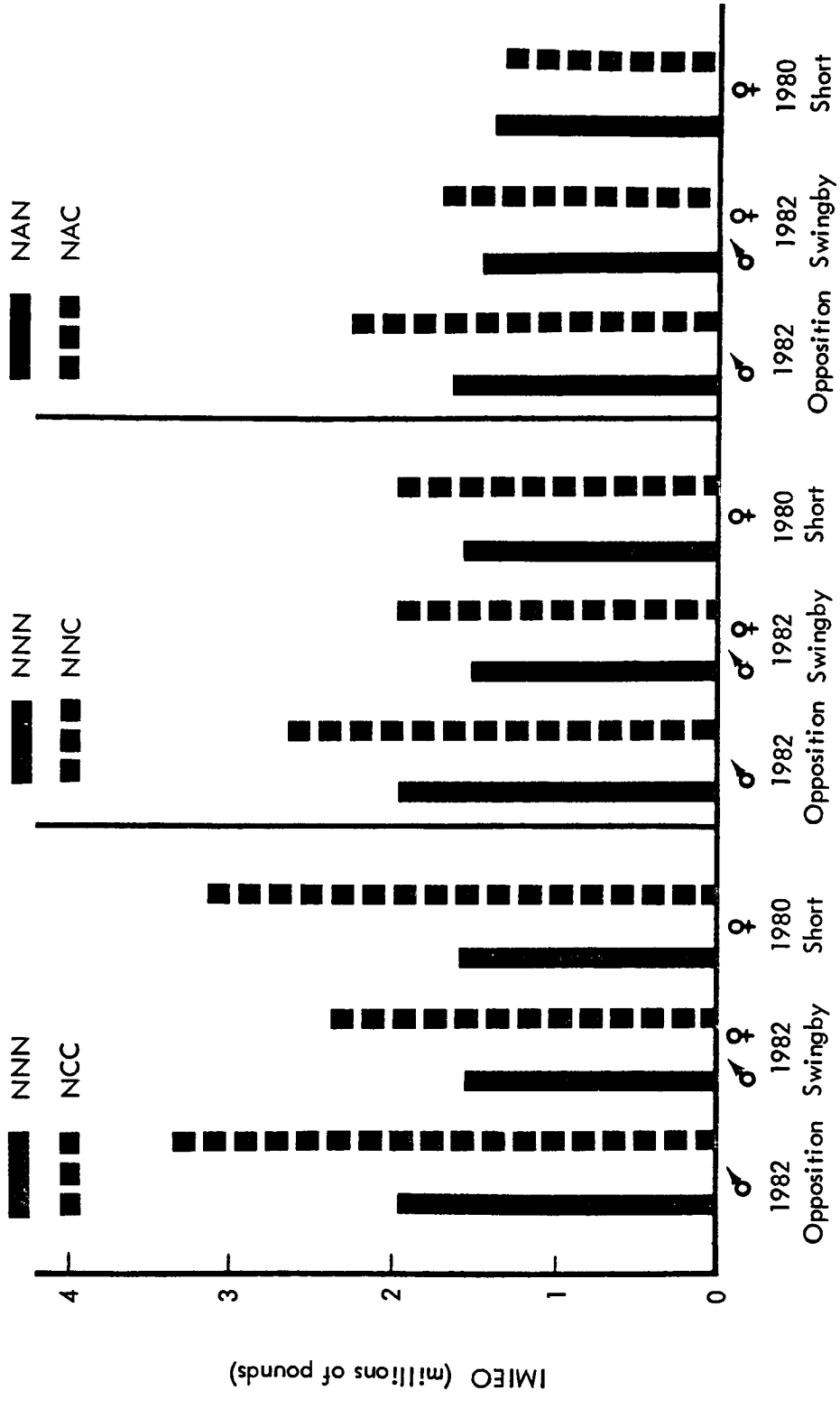

Figure 7.1-9: IMIEO COMPARISON

sizes necessary in support of the space acceleration/Earth launch vehicle system trade. These configurations are not necessarily optimum but do provide a representative approach for each space acceleration/ ELV combination from which IMIEO's, cost data, and operational characteristics can be defined.

Figure 7.1-10 illustrates an aerospace vehicles summary sheet. A similar sheet was prepared for each space acceleration/ELV combination. The ELV payload capabilities and space vehicle elements characteristics combine to identify which elements of the space vehicle are launched together. Launch number relates to the total number of launches required to place the space vehicle in Earth orbit. The number associated with each payload does not necessarily represent the order in which the launches occur. ELV model identifies the required configuration of an ELV family for each launch. The presented data identifies the core and number of solid strapons required for the SAT-25(S)U, -V/4-260, and Post-Saturn. The number of cores associated with the Saturn -X(U) are identified by the number of X's. Payload lengths are those associated with each launch and include any required nose cone. The payload length characteristic is of significance due to its impact on launch facilities such as VAB and loads and dynamics on the ELV. A combined ELV/payload maximum height of 500 feet was established as a goal. Payload weight is that associated with each launch. Propulsion module length and diameter identifies the extent of commonality in each configuration. IMIEO's are presented to show the effect of different ELV's with a given space acceleration system.

Figures 7.1-11 and 7.1-12 are the aerospace vehicle summary sheets for the NNN/-25(S)U and the CAC/-25(S)U aerospace vehicles, respectively. These sheets illustrate how the space vehicle configuration utilizing a particular space acceleration system and launch vehicle varied to meet the five different mission requirements. Also illustrated are the different combinations of space vehicle elements that make up the individual launch payloads. The number of launches required for each mission is indicated, along with the particular family member of the ELV being evaluated. Similar sheets were prepared for each space acceleration system/ELV combination.

Figure 7.1-13 is a composite of some of the aerospace vehicle summary sheets showing the all-nuclear 1982 Mars opposition space vehicles as configured for launch by each of the four ELV's included in the evaluation. This figure illustrates how the space vehicle configuration and number of launches varies with the ELV capability. The number of launches required for each ELV indicates the variability of the number of orbital assembly operations and launch facility requirements with ELV capability. This data is developed further in Sections 7.1.6 and 7.1.7.

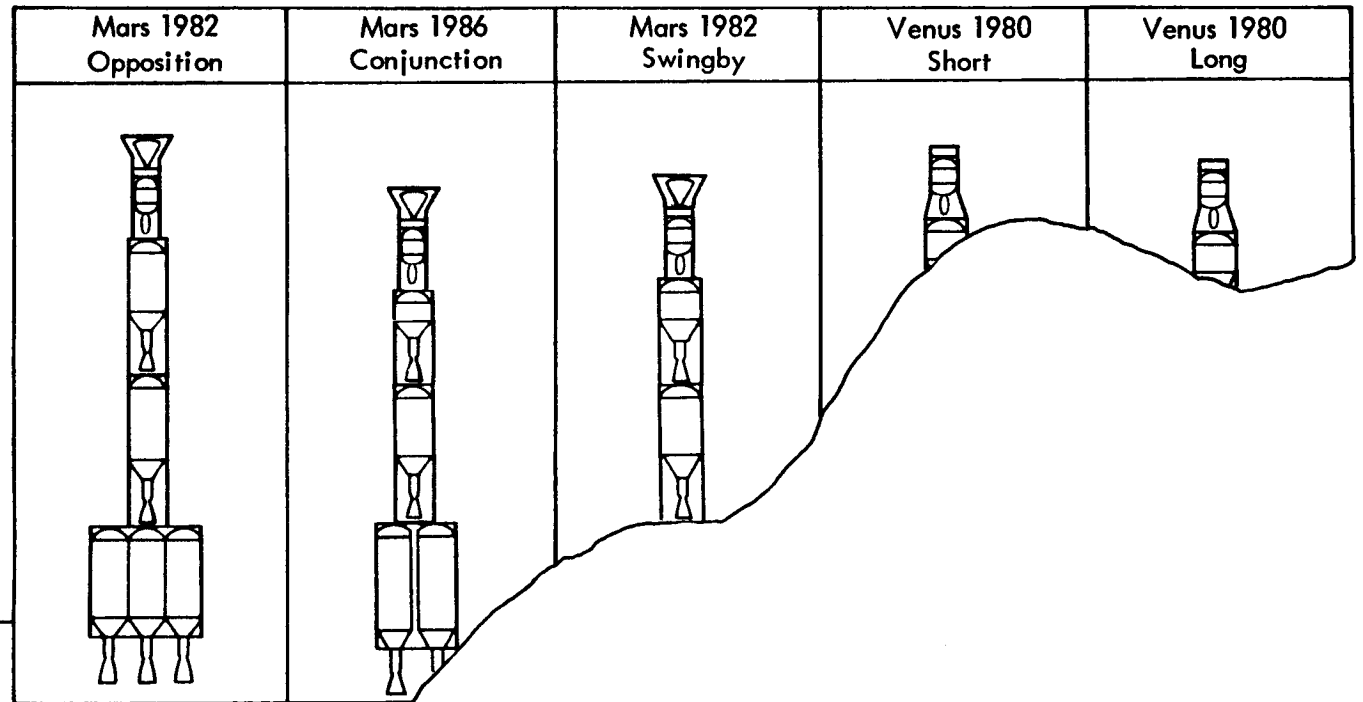

EARTH LAUNCH	Mars 1982 Opposition				Mars 1986 Conjunction		Mars 1982 Swingby	Venus 1980 Short	Venus 1980 Long
Payload	PM-1	PM-2	PM-3	S/C	PM-1	PM			
Launch Number	1-3	4	5	6	1-2	3			
ELV Model	C+2	C+4	C+2	C	C+2	C+			
P/L Length (ft)*	191	182	171	95	191	16.			
P/L Weight (10^3 lb)	415	444	374	223	427	346			
PM Tank Length (ft)	99	93	82	-	102	76			
PM Tank Diameter (ft)	33	33	33	-	33				
IMIEO (10^3 lb)	2,286								

*Includes nose cone

Figure 7.1-10: NUCLEAR/NUCLEAR/NUCLEAR SPACE ACCELERATION —SAT-V-25(S)U

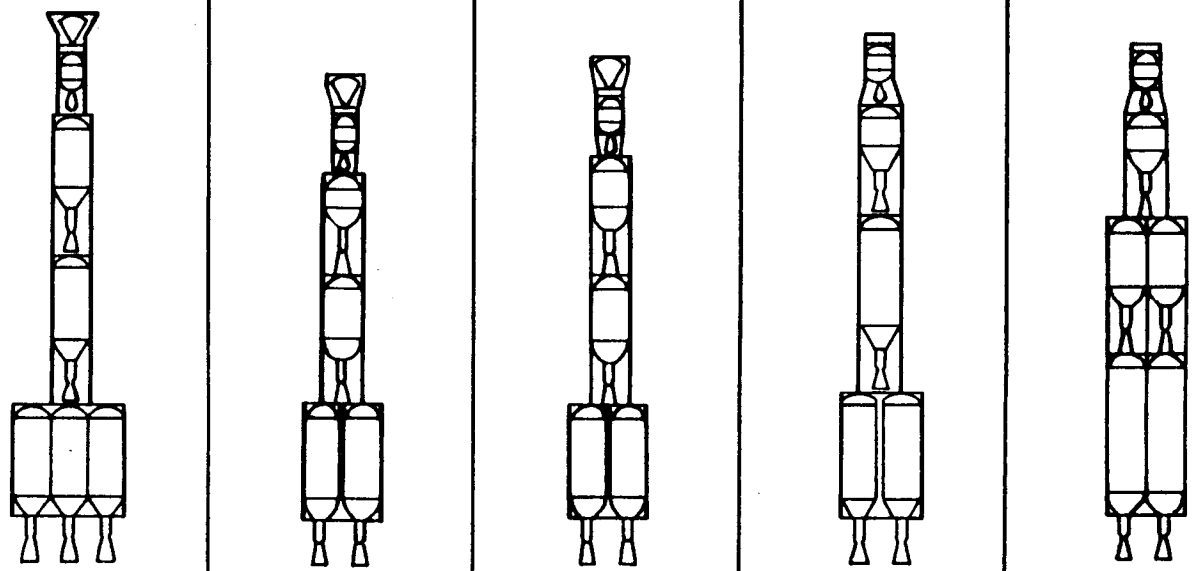

EARTH LAUNCH	Mars 1982 Oppositon				Mars 1986 Conjunction			Mars 1982 Swingby			Venus 1980 Short			Venus 1980 Long		
Payload	PM-1	PM-2	PM-3	SC	PM-1	PM-2	PM-3 S/C	PM-1	PM-2	PM-3 S/C	PM-1	PM-2	PM-3 S/C	PM-1	PM-2	PM-3 S/C
Launch Number	1-3	4	5	6	1-2	3	4	1-2	3	4	1-2	3	4	1-2	3-4	5
ELV Model	C+2	C+4	C+2	C	C+2	C+2	C+4	C+4	C+2	C+4	C+4	C+4	C+2	C+4	C+2	C+2
P/L Length (ft)*	191	182	171	95	191	165	184	198	165	176	203	205	168	234	167	165
P/L Weight (10^3 lb)	415	444	374	223	427	346	469	463	349	507	484	537	348	575**	356	368
PM Tank Length (ft)	99	93	82	-	102	76	46/-	109	76	63/-	114	116	55/-	145	78	52/-
PM Tank Diameter (ft)	33	33	33	-	33	33	33/-	33	33	33/-	33	33	33/-	33	33	33/-
IMIEO (10^3 lb)	2,286				1,669			1,782			1,853			2,230		

* Includes Nose Cone

**Exceeds allowable 5%

Model 2

Figure 7.1-11: NUCLEAR/NUCLEAR/NUCLEAR SPACE ACCELERATION — SAT-V - 25(S)U

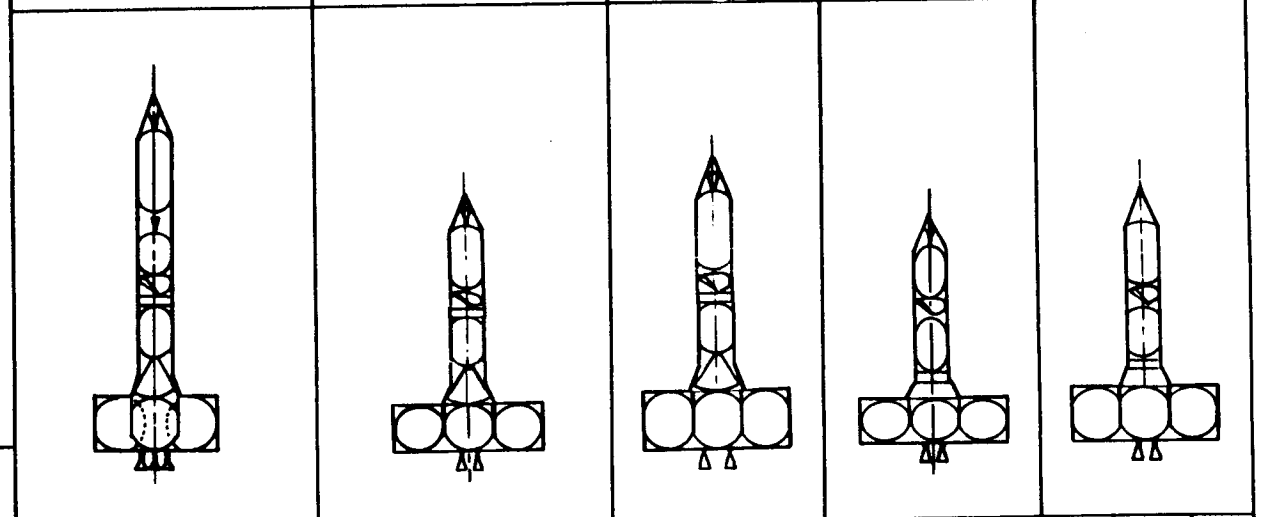

EARTH LAUNCH	Mars 1982 Opposition			Mars 1986 Conjunction		Mars 1982 Swingby			Venus 1980 Short			Venus 1980 Long		
Payload	PM-1,	PM-3A, -3B	S/C	PM-1	PM-3 & S/C	PM-1	PM-3	S/C	PM-1	PM-3	S/C	PM-1	PM-3	S/C
Launch Number	1-5	6	7	1-3	4	1-3	4	5	1-3	4	5	1-3	4	5
ELV Model	C+4	C+4	C+4	C+4	C+4	C+4	C+2	C	C+2	C+2	C	C+2	C	C
P/L Length (ft)*	78	118	110	60	161	83	76	110	77	63	100	65	58	100
P/L Weight (10^3 lb)	435	573	455	378	587	505	402	411	419	341	282	384	295	303
PM Tank Length (ft)	32	54/27	--	29	29	38	53	--	31	41	--	29	35	--
PM Tank Diameter (ft)	33	22	--	33	22	33	22	--	33	22	--	33	22	--
IMEO (10^3 lb)	3,209			1,719		2,441			1,881			1,750		

*Includes nose cone

Model 3

Figure 7.1-12: CHEMICAL/AEROBRAKING/CHEMICAL SPACE ACCELERATION —SAT-V-25(S)U

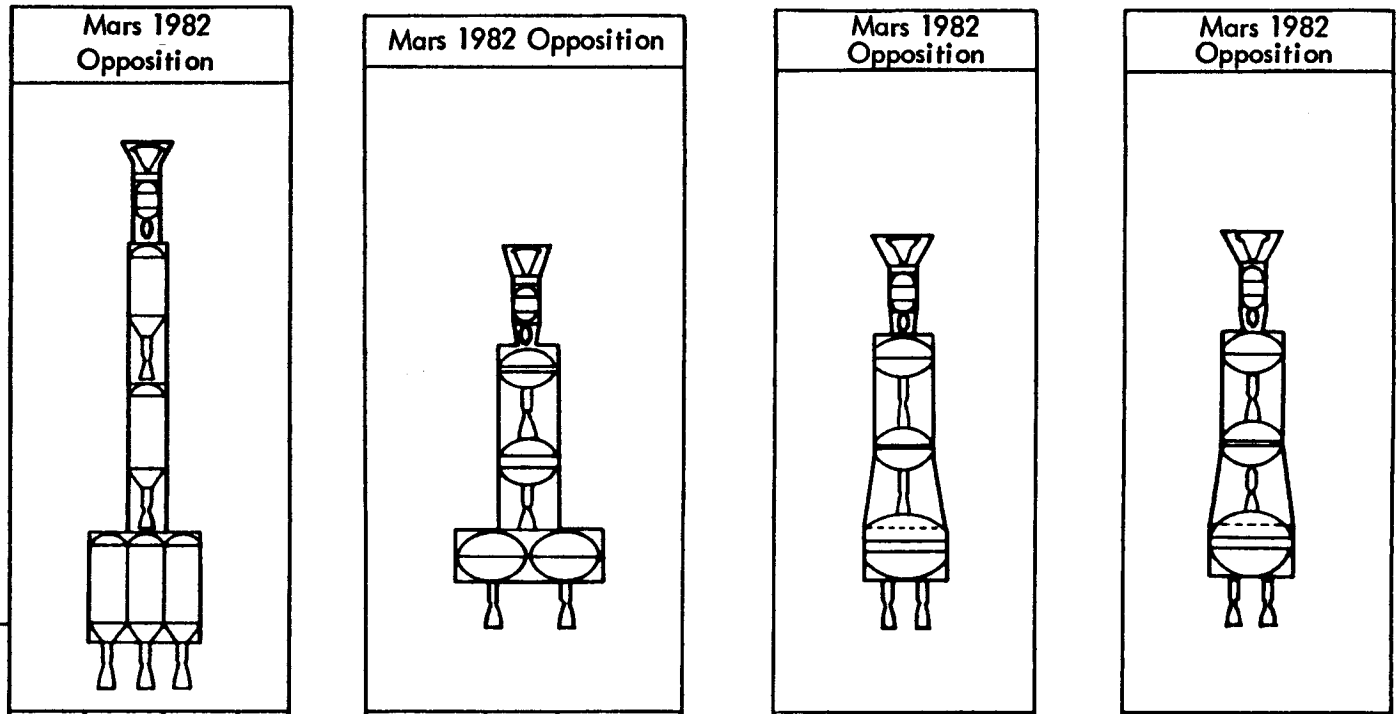

EARTH LAUNCH	Mars 1982 Opposition				Mars 1982 Opposition			Mars 1982 Opposition		Mars 1982 Opposition
Payload	PM-1	PM-2	PM-3	S/C	PM-1S/C	PM-1	PM-2,-3	PM-1	PM-2,-3, SC	PM-1, -2,-3, S/C
Launch Number	1-3	4	5	6	1	2	3	1	2	1
ELV Model	C+2	C+4	C+2	C	C+4	C+4	C+4	4X	4X	C+4
P/L Length (ft)*	191	182	171	95	185	152	223	208	255	364
P/L Weight (10^3 lb)	415	444	374	223	722	513	705	1005	935	1940
PM Tank Length (ft)	99	93	82	-	45/-	45	42/38	60	38/36/-	60/38/36
PM Tank Diameter (ft)	33	33	33	-	65	65	50/50	72	52/52/-	72/52/52
IMIEO (10^3 lb)	2,286				1940			1940		1940

*Includes nose cone

Figure 7.1-13: NUCLEAR/NUCLEAR/NUCLEAR SPACE ACCELERATION

7.1.5.2 ELV Requirements

The nominal number of launches required for each space acceleration system/ELV combination were obtained from the aerospace vehicle summary sheets described in the previous paragraph and summed for the representative five mission program. The results are shown in Figure 7.1-14. The relative distribution of required launches between the various space vehicle propulsion modes varies in a nonpredictable manner, since each class of ELV's consists of a family of ELV's that have varying capabilities. This permits relatively close matching of individual space vehicle modules with the ELV capabilities. The exception is the MLV-SAT-V/4-260 which was evaluated for the four-strapon configuration only so that the corresponding large payload volume could be utilized in all launches. All members of the clustered Saturn and Post-Saturn families have large payload volume capability, while the MLV-SAT-V-25(S)U is limited to a 33-foot diameter.

The spare ELV requirements were based on the five-mission program. Space vehicle backup elements were not mated to the ELV until required. Sufficient time was included in the ground and orbital operations schedule to accommodate this approach. The rendezvous, docking, and assembly operations were assumed to have a 0.99 reliability per launch. The ELV reliability was combined with this number to obtain an ELV/orbital operations reliability. These reliability numbers, shown in Table 7.1-5, were then used to determine the five-mission program ELV requirements. The spare ELV requirements were based on the number required to successfully assemble the space vehicles prior to their departure from Earth orbit with a probability of success of 0.985 for each mission over a five-mission program. The nominal and total ELV requirements are summarized in Table 7.1-6.

Concern over the high reliability value (0.99) assigned to rendezvous and docking led to a reexamination of spare requirements when this value is lowered to 0.95. For this condition the total number of ELV cores required increased by about 10% except for the Post-Saturn which remained the same. This change would increase total program cost by less than 3% which is not significant to the final evaluation.

7.1.6 MISSION SUPPORT AND DEVELOPMENT TEST

Before pricing the various aerospace vehicle configurations, it was necessary to define what would be required in the way of mission support and to define a developmental flight test program for each different configuration.

Ground support requirements were identified for orbital and mission operations which included tracking and communications, mission control, recovery operations, and logistics support. Quantities of logistic spacecraft were noted.

Test program requirements were determined for orbital-qualification tests and demonstration tests. Space vehicle requirements for facilities and hardware quantities were detailed. Options as to launching frequencies and orbital operation times were identified and selections of optimums made.

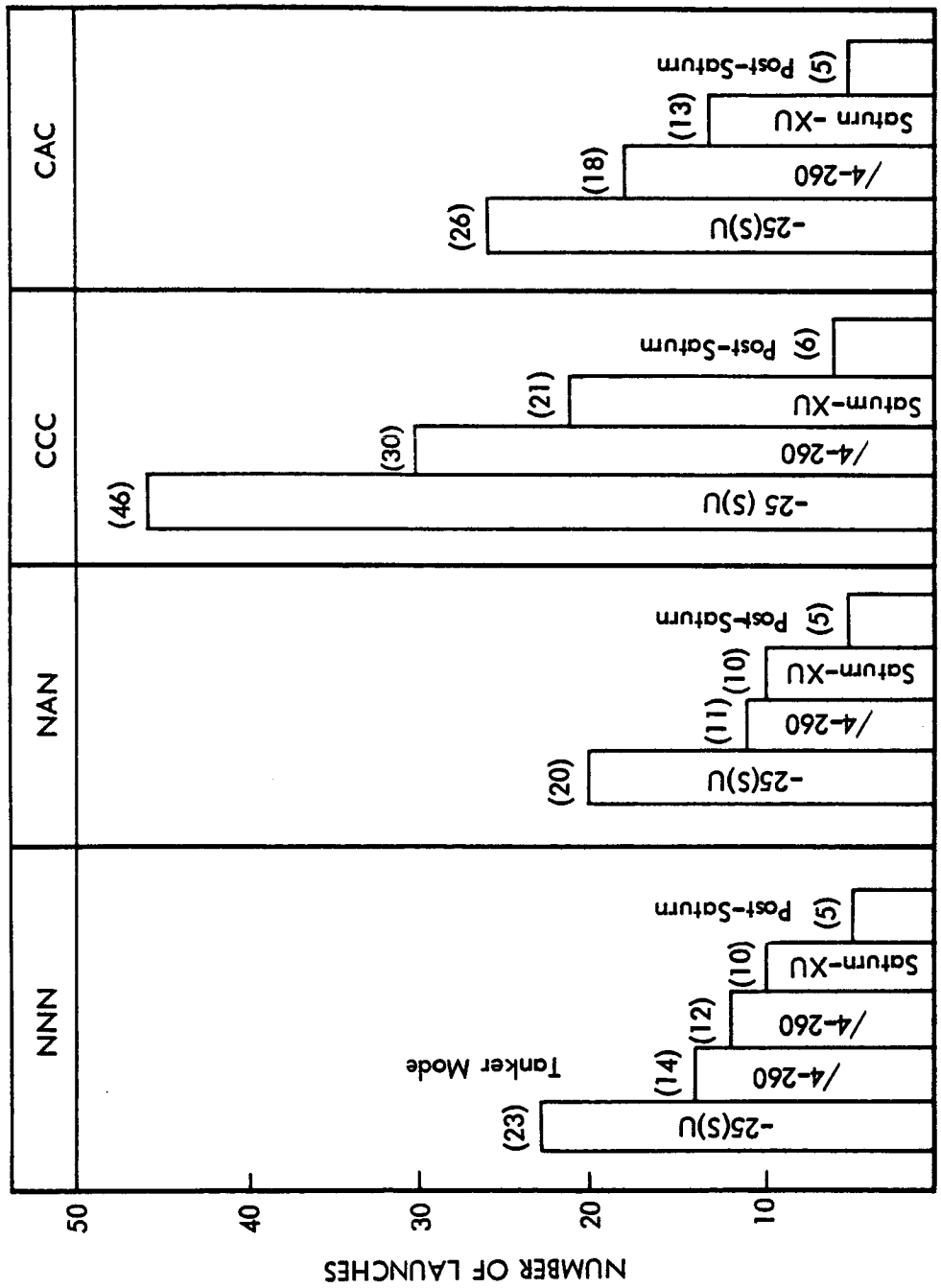

Figure 7.1-14: REQUIRED NOMINAL LAUNCHES — FIVE MISSION PROGRAM

Table 7.1-5: ELV AND ORBITAL OPERATIONAL RELIABILITY

ELV	ELV Reliability	Orbital Operations Reliability per Rendezvous	Combined ELV and Orbital Operations Reliability
MLV-SAT V-25(S)U Core	0.990	0.99	0.980
Core + 2 Strapons	0.988	0.99	0.978
Core + 4 Strapons	0.986	0.99	0.976
MLV-SAT-V/4-260	0.978	0.99	0.968
Clustered Saturn Core	0.990	0.99	0.980
3X U	0.970	0.99	0.960
4X U	0.960	0.99	0.950
Post-Saturn Core	0.990	0.99	0.980
Core + 2 Strapons	0.988	0.99	0.978
Core + 4 Strapons	0.986	0.99	0.976
Core + 6 Strapons	0.984	0.99	0.974
Core + 8 Strapons	0.982	0.99	0.972
Core + 10 Strapons	0.980	0.99	0.970
Core + 12 Strapons	0.978	0.99	0.968
Standard 2-Stage Saturn V	0.990	0.99	0.980

Table 7.1-6: ELV REQUIREMENTS VERSUS SPACE VEHICLE--
Propulsion Mode for a Five - Mission Program

	NNN				NAN				CCC				CAC			
	Nominal		Total		Nominal		Total		Nominal		Total		Nominal		Total	
ELV	Core	Strap On	Core	Strap On	Core	Strap On	Core	Strap On	Core	Strap On	Core	Strap On	Core	Strap On	Core	Strap On
MLV-SAT V-25(S)U	23	60	27	70	20	44	24	52	46	148	52	168	26	74	30	86
Clustered SAT XU	32	N/A	42	N/A	30	N/A	39	N/A	78	N/A	98	N/A	44	N/A	56	N/A
Post-Saturn	5	14	6	20	5	12	6	16	6	48	8	60	5	26	6	34
MLV-SAT-V/4-260	12	48	15	60	11	44	14	56	30	120	36	144	18	72	22	88

Although development flight test requirements were defined, engineering ground development test and ground qualification test requirements were not defined in detail since our parametric cost data curves already included the operational and hardware costs. Mission support requirements and costs and development test requirements follow:

7.1.6.1 Mission Support and Costs

Mission support costs include those for facilities, for orbital operations support, and for mission support. It was necessary to identify these costs for each of the candidate areas.

Launch Rate Trade Vehicle System — Orbital operation time is determined, to a large extent, by the launch rate, and the launch rate is determined by the facilities available for launching the quantities of ELV's required. Orbital operations cost would be minimum if all ELV's could be launched at one time; i.e., quantity of launch pads would equal the quantity of launches required. This would mean, then, that launch facilities costs would be at a maximum. When the quantity of launch facilities was at a minimum, then mission operation costs would be at a maximum. It was important to optimize the relationship between orbital operations and launch facilities. A launch rate trade was conducted, therefore, to determine the optimum launch rate based on minimum total program costs. Orbital operations support costs are directly related to the time required for assembly and checkout in orbit. Orbital operations time, however, will decrease as additional launch facilities are provided to increase the launch rate. A detailed launch rate trade was completed for the SAT-V-25(S)U ELV. The SAT V/4-260 solid rocket motor launch rate trade would be similar to the -25(S)U ELV. High launch facility costs and fewer launches required for the SAT-X(U) and Post-Saturn ELV's negated the need for a similar launch rate trade for these ELV's. The general approach, then, was to find the optimum set of facilities which would give the minimum combined costs for both facilities and orbital operations.

Orbital Operations Flow Time Approach--Orbital operations flow time is determined by:

1) The mission launches required for the particular aerospace vehicle configuration.

2) Launch preparation of the standby ELV and its potential payload.

3) The final assembly operation and checkout operations of the total space vehicle in orbit, plus the allowance for the launch window.

The time required for mission launches is dependent on the particular mission and is determined by the number of launches required and the number of launch facilities available for these launches. An example would be four launches required, as shown in Figure 7.1-15. If four launch pads were available, all launches could be conducted in a salvo fashion requiring only a few days. If two launch pads were available, however, each pad would have to be recycled once, thus adding the pad turnaround time to the orbital operations.

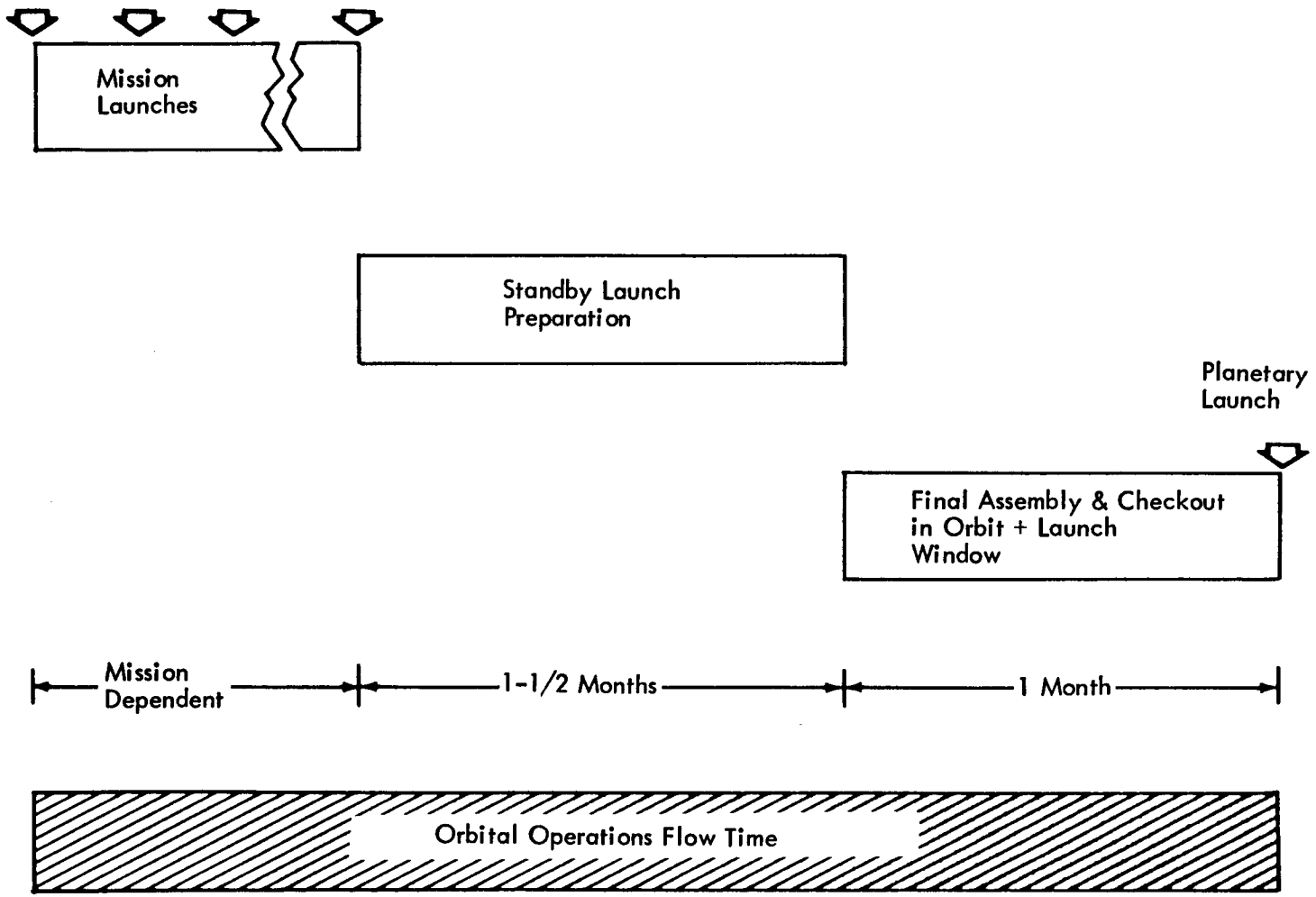

Figure 7.1-15: ORBITAL OPERATIONS FLOW TIME APPROACH
SAT-V-25(S)U

Standby ELV's are planned for the program and, therefore, time must be allowed for preparation of the standby launch. It cannot be known in advance when the standby ELV may have to be inserted into the normal sequence and used. Since launches must occur in a specified sequence, the assembly operations in orbit must be shut down until the standby is prepared and launched to take the place of the ELV that failed or could not be used. In the case of the SAT-V-25(S)U, the standby launch preparation time is approximately 1-1/2 months.

Time allowed for final assembly and checkout in orbit, plus the launch window, is 1 month. The final assembly and checkout operations can be completed in several days, however, so planetary launch could occur early in the 1-month period if all went well.

Orbital Operations Ground Support Costs--Orbital operations ground support costs are related to the time required for the orbital operations. The costs of orbital support operations for Apollo is believed to be generally applicable to the IMISCD program as well. Figure 7.1-16 shows the approximate costs required for Apollo per year. A certain portion of these costs is a fixed cost which would be chargeable to the IMISCD program regardless of the length of time required for this support. Other costs are believed applicable to the daily orbital operations and could be prorated on a cost-per-day basis. It is recognized that additional study is required in this area. An orbital satellite relay communications system may be required as well as additional tracking stations.

Total Orbital Operations Support Cost--Additional costs associated with logistic spacecraft support must also be considered. Such logistics support will continue during orbital operations. The conditions for arriving at logistic spacecraft support costs include the following:

1) SAT-IB = the logistic spacecraft ELV

2) The six-man modified Apollo = the logistics spacecraft

3) The six-man modified Apollo is refurbishable and can be used for five flights.

4) Each mission requires:

   - One logistic spacecraft launch for the assembly and checkout crew
   - One logistic spacecraft launch for the mission crew
   - One standby logistic spacecraft available at all times
   - One additional logistic spacecraft launch for each 45 days of additional orbital operations time.

The logistics spacecraft costs related to orbital operations flowtime is shown in Figure 7.1-17 which also gives the total orbital operations costs. The lower or cross-hatched portion of the chart is the orbital operations ground support costs from Figure 7.1-16 and the top line represents the total costs. The total costs of orbital operations support costs provide one of the basic inputs to the launch rate trade. After the selection of

F.

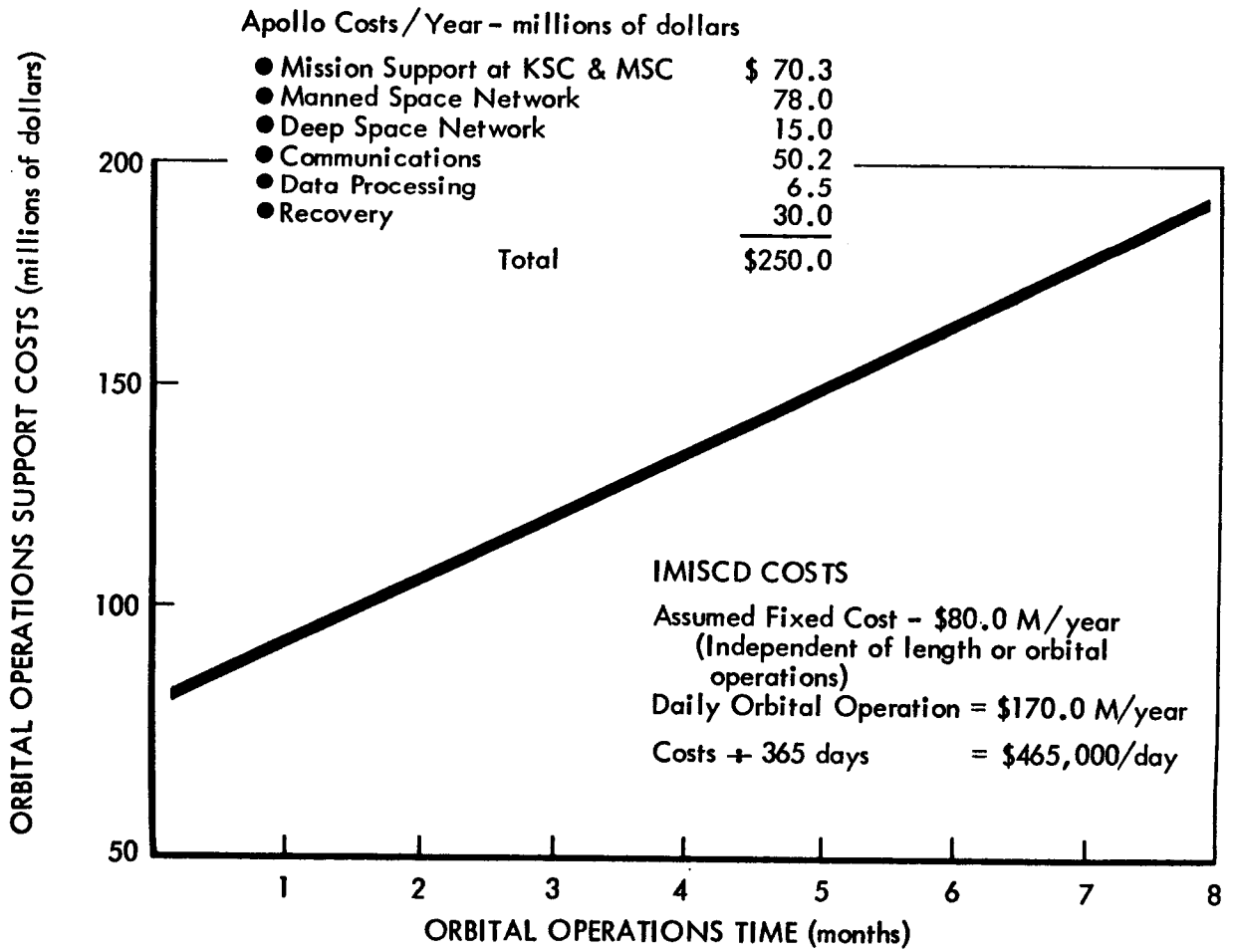

Figure 7.1-16: ORBITAL OPERATIONS GROUND SUPPORT COSTS VERSUS ORBITAL OPERATIONS FLOW TIME

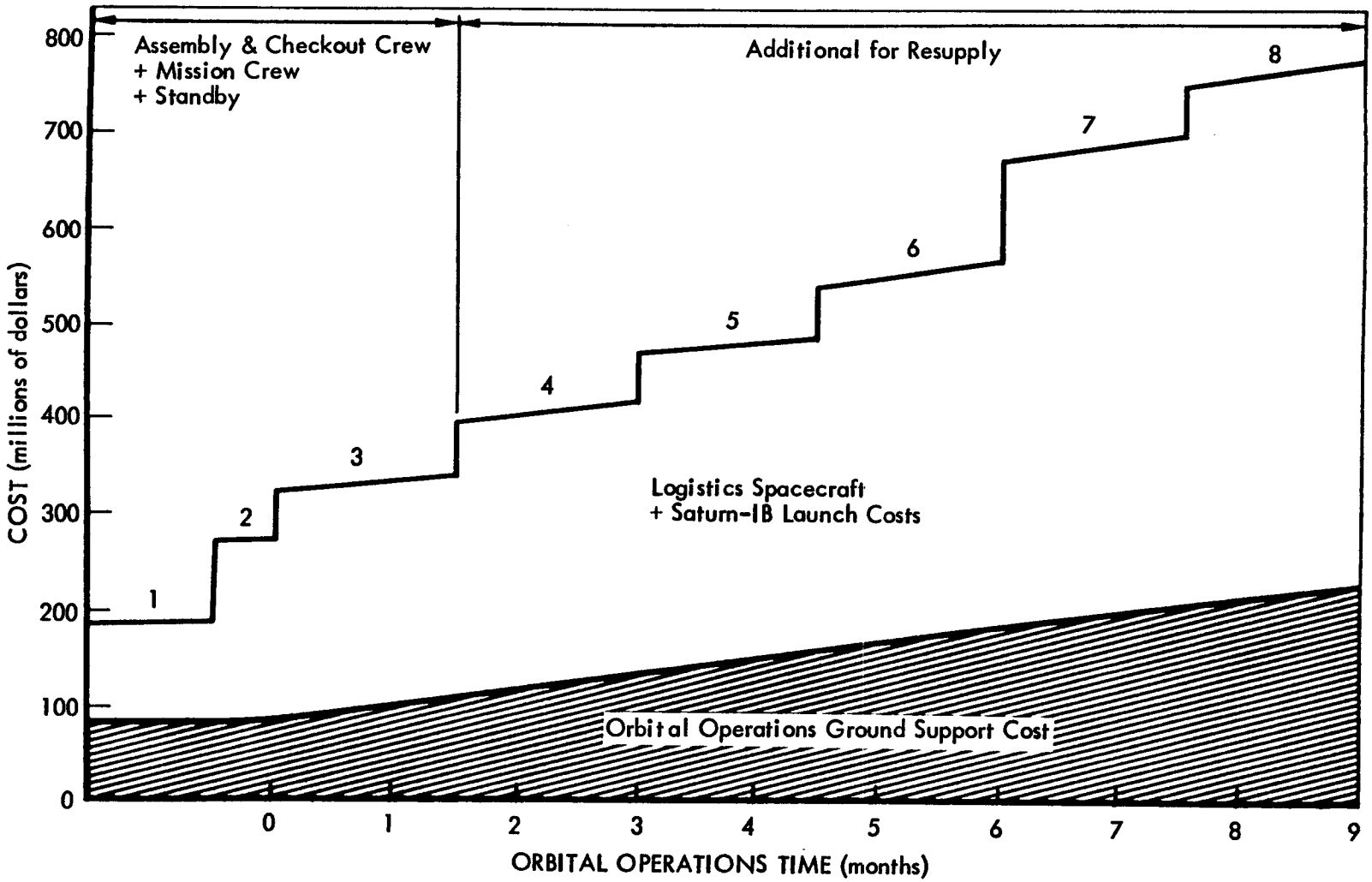

Figure 7.1-17: TOTAL ORBITAL OPERATIONS COSTS VERSUS ORBITAL OPERATIONS FLOW TIME

the optimum quantity of launch pads for each aerospace vehicle configuration and the orbital operations flow times are determined, these costs will be included as a part of the total costs for the particular aerospace vehicle configuration.

Facilities Approaches and Costs--To complete the launch rate trade, it was necessary to determine the facilities costs associated with each aerospace vehicle concept. A facility approach for each ELV type developed and is summarized in Table 7.1-7. Quantities of launch pads, VAB positions, launch umbilical towers, etc., varied for the different space vehicle concepts when an uprated Saturn V was used. Facilities quantities for the SAT-X(U) and the Post-Saturn did not vary, however, with the space vehicle concepts. With the facility approach selected for each ELV type and with the numbers of launch facilities known for each space vehicle concept, costs could be developed for the facilities. Cost data were available from the Saturn V uprating studies and from the Apollo program. Some data were also available for the SAT-X(U). Costs for the Post-Saturn facilities, however, were extrapolated from known data.

The facilities approach for each ELV type, costs, and some of the major problems associated with each are included in Appendix B.

Flow Times at KSC and For Orbital Operations--Flow times at KSC for each ELV type and a method for determining the orbital operations flow time were developed and are included in Appendix C2.

Facilities Costs versus Orbital Operations Flow Time--The facilities costs associated with varying numbers of launches and launch facilities are shown in Figure 7.1-18. Note that as numbers of launch pads and associated costs increase, time for orbital operations decreases. However, increased facilities do not always give significant reductions in orbital operations time. For example, examine the curve for eight launches. It can be seen that for two pads, the orbital operations time is more than 8 months. In this case, each pad must be cycled four times. Significant decrease in time can be realized by going to three launch pads. In this case two pads would be cycled three times and one pad two times. It can also be seen that going to four pads reduces the time to approximately 5 months. In this case, each pad would be cycled twice. Significant decrease in time cannot be realized by increasing to five, six, or seven pads, however, since at least one of the pads would have to be cycled twice. Another significant reduction in flow time is realized by going to eight pads. This means that each pad would be used only once, giving minimum orbital operations time--but maximum facilities costs. The launch rate trade did not consider more than eight launch pads for a 10-, 12-, and 14-launch quantity requirement. Additional facilities, however, are needed when the launches required per mission exceed eight. This is to account for additional mobile launchers and, in some cases, additional crawler tractors. The shaded portion of the bar for six, seven, and eight pads reflects the cost range where more than eight launches are required.

Table 7.1-7: FACILITY APPROACH SUMMARY

	Saturn V-25(S) U	Saturn V/4-260 SRM	Saturn X (U)	Post-Saturn
Assembly, Checkout, and Preparation for Launch Concept	Assembly and checkout in VAB-Transport to pad-Assemble and install solids on pad - Launch.	Assembly and checkout in VAB-Transport to pad-Install solids on pad - Launch.	Assembly and checkout in VAB-Transport to pad-Launch	Assembly, checkout, and launch on pad
Launch Pads	Modify old + additional	New	New - Adaptable to 3x or 4x	New
VAB	Modify old + additional	Modify old	New - Adaptable to 3x or 4x	Combination-Mobile VAB/MSS
Mobile Service Structure (MSS)	Modify old + additional	Modify old	New for 3x New for 4x	Combination-Mobile MSS/VAB
Launch Umbilical Tower	Modify old + additional	New	New for 3x New for 4x	New-at pad
Transportation and Handling	Crawler tractor-Modify old + additional + new for SRM	Crawler tractor Modify old + additional + major new for SRM	Crawler tractor-New	Water and erect on pad
Hurricane Protection	Modify pad	At pad	At pad	At pad

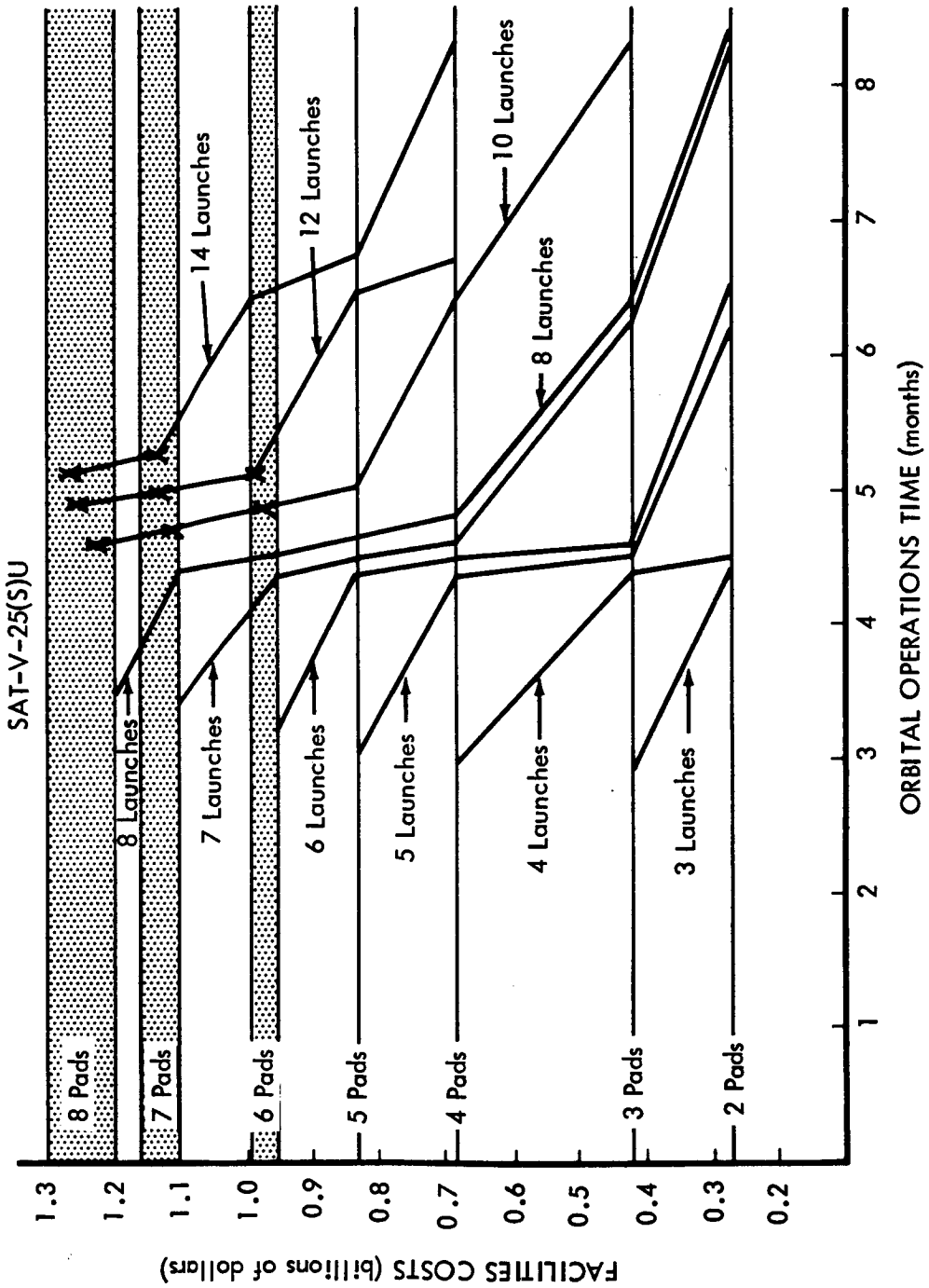

Figure 7.1-18: FACILITIES COSTS VERSUS ORBITAL OPERATIONS TIME

Five-Mission Launch Rate Trade Cost Analysis--Having now the orbital support operations costs versus orbital operations time and having facilities cost versus orbital operations time, it is possible to perform the launch rate trade analysis. The criteria for performing the analysis and determining the optimum number of launch pads follows:

1) Standby launches will be scheduled and orbital operations will be planned as if the standby launches are required.

2) One standby ELV will be planned for each mission.

3) Maximum orbital operations flow time will be approximately 6 months.

4) Five total missions plus demonstration tests will be assumed for selecting the proper number of launch pads. The five missions are the same ones that were used in the design portion of the trade study.

5) A lower launch pad quantity will be selected unless a savings of 10% or greater can be realized by choosing a higher number of launch pads.

The analysis is summarized in Figure 7.1-19, which shows the facilities costs for a varying number of launch pads as a function of the five-mission costs of facilities plus orbital operations. A minimum point is sought for each quantity of launches required per mission. The optimum quantity selected is shown by the large dots joined by the dashed lines. The optimum number of launch facilities is one-half the number of launches required per mission

Examination of Figure 7.1-19 reveals that the choice of the number of launch pads for minimum costs is nearly equal for (1) the number of pads being equal to one-half the number of launches per mission, or (2) the number of pads being equal to the number of launches per mission. The reasons for this are that the flow time is minimum when the number of launch pads is equal to the number of launches required and, at five missions, the cost of the additional facilities almost balances the savings in orbital operations. If the quantity of missions used for making a selection was increased to 10 or more, the optimum number of launch pads would increase in most cases to the number of launches required per mission.

7.1.6.2 Development Test Plans

Test plans developed for the various concepts have a major impact on the total program. Engineering development tests start at program go-ahead. Other tests are conducted throughout the total program until the space vehicle is finally launched. The impact of testing and the major test phases are shown representatively in Figure 7.1-20 (Figure 7.1-20 is only representative and is not on a calendar scale.). Although preliminary plans were developed for engineering development tests and ground qualification tests, the testing costs are included in the basic parametric curves used for pricing the major program elements. All test costs following ground qualification test, however, have been estimated according to the hardware requirements for orbital qualification tests and demonstration tests. Ground qualification tests and orbital qualification tests will include full mission-duration tests. All major program elements would be fully flight-qualified at

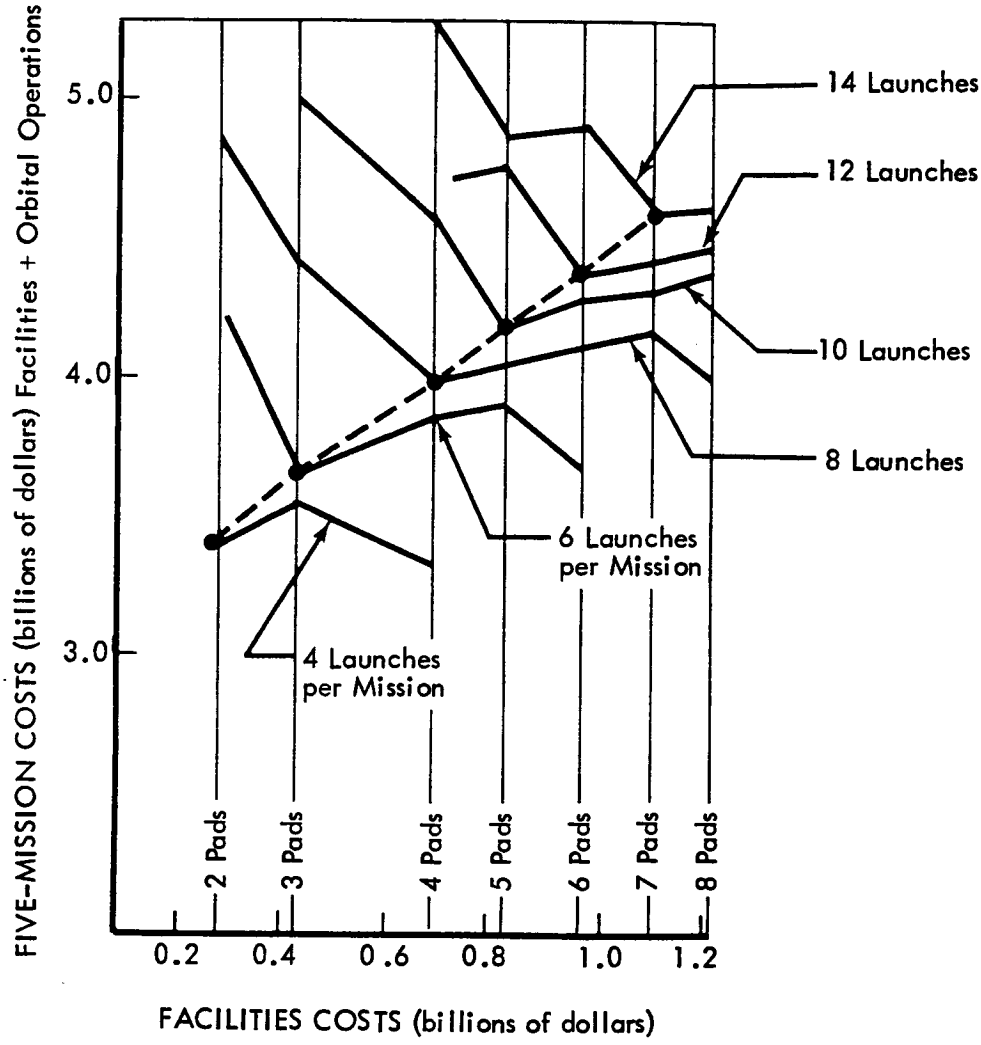

Figure 7.1-19: FIVE MISSION-LAUNCH RATE TRADE COST ANALYSIS

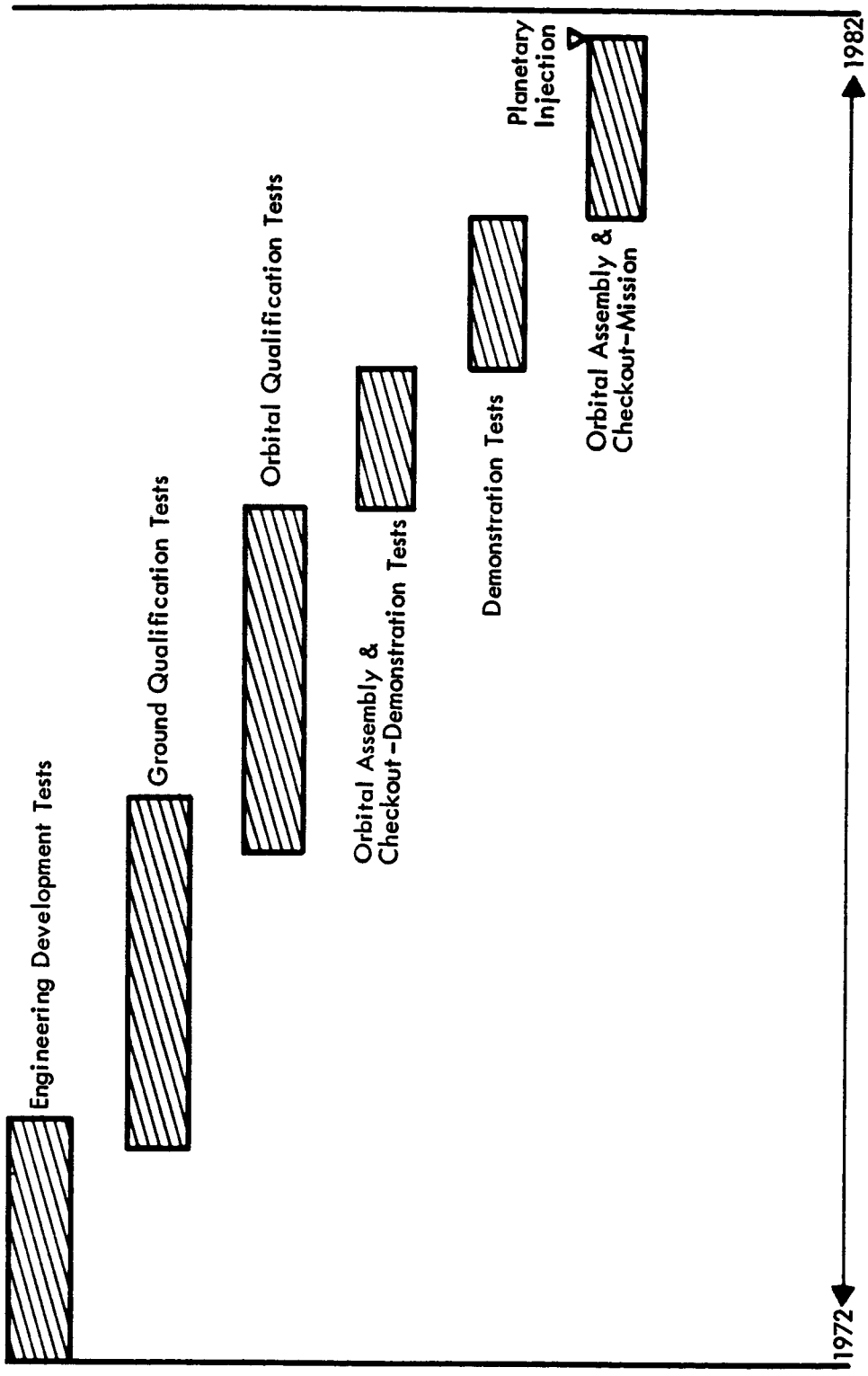

Figure 7.1-20: TEST PLAN CONCEPT

end of the orbital qualification testing period. Demonstration tests are planned to qualify the total aerospace vehicle system and to qualify orbital and mission operational procedures. Demonstration tests will involve all of the operations required for a mission, including orbital assembly and checkout, firing of all propulsion modules, and simulated entries of the MEM and EEM. All operations, however, will be conducted in the vicinity of Earth. The total time planned for demonstration tests is approximately 3 months.

Test plans were developed for each aerospace vehicle concept defined. The plans are summarized in Table 7.1-8. Orbital qualification plans for the spacecraft varied depending upon the ELV system used. For the Post-Saturn, all space vehicle elements could be launched for tests with one ELV, while in the case of an uprated Saturn, only portions of the spacecraft could be launched with one ELV.

Ground qualification tests for each ELV configuration were approximately the same. Although hot firings on the ground are planned for all stages and solid rocket motors, hot firings of clustered stages or stages with strapons are not planned in any case. Conduct of such tests would be very difficult and it is doubtful that gains would be worth the extra costs since special structural designs would be required to conduct such tests in a static condition. Propulsion module ground qualification tests would be similar for nuclear propulsion modules and chemical propulsion modules. Additional units, however, would be required for hot firing the nuclear propulsion module. It is believed that cold flow and hot firing tests can be conducted with one diameter propulsion module only. Other ground qualification tests are planned for each different diameter tank. Flight qualification tests of nuclear and chemical propulsion modules are approximately the same except an additional flight test of a single nuclear propulsion module is planned. Clustered flight qualification tests include all of the propulsion modules units required for the Mars 1982 opposition mission. A PM-2 propulsion module is planned to be joined to the clustered PM-1 stages and then tested as a stack. In addition, one PM flight qualification test is planned for each different diameter. Additional tests, however, are not planned for changes in length. It is believed that a qualification test of the most difficult configuration will suffice for the lesser ones. The two-heat shield and aeroshell tests planned for the aerobraker configurations are unmanned and the spacecraft program elements enclosed within the shell would be dummies or mass-simulated. The two aerosystem tests, however, would include all of the spacecraft elements and would be manned tests. An additional heat shield and aerobraking shell test is planned for each mission since each mission has a different configuration and weight. These would be unmanned tests simulated in the Earth's atmosphere.

A typical flight test plan for the NNN/Saturn V/4-260 SRM is shown in Figure 7.1-21. Flight test plans were developed for each trade configuration and costs developed for each different flight test plan. The flight test plan shown for the spacecraft modules was identical for all cases. Separate flight test programs for each space acceleration system

Table 7.1-8: TEST PLAN SUMMARY

ELV Ground Qualification Tests	Structural static, dynamic, thermal, cold flow and hot firings for stages and strapons but no cluster, or stage + strapon hot firings.
ELV Flight Tests	All up - Program element payloads for each launch.
Propulsion Module Ground Qualification Tests	Structural static, dynamic, thermal, etc. for each diameter - cold flow and hot firings for each type.
Space Acceleration Flight Qualification Tests - SAT-V-25(S)U	Nuclear PM's -3 Modules + cluster and stack Chemical PM's -2 Modules + one for each different diameter + cluster and stack Aerobrakers -2 Heat shield and aeroshell (unmanned) + 2 complete aerosystems (manned) + one heat shield and aeroshell for each configuration shape and weight. Included in the above are full life tests.
Logistics Support and Man-In-The-Loop Orbital Tests	Provided by space station program and mission module test program.
Demonstration Tests	Full Mars 1982 opposition mission configuration - Full launch, orb. assembly and checkout - Full mission operations in Earth vicinity, but short transit times.
Standby Units	Provided for demonstration tests - For other tests accept the risk or use ground test units.
Spacecraft Elements	Same for all cases, except variations because of different ELV's.

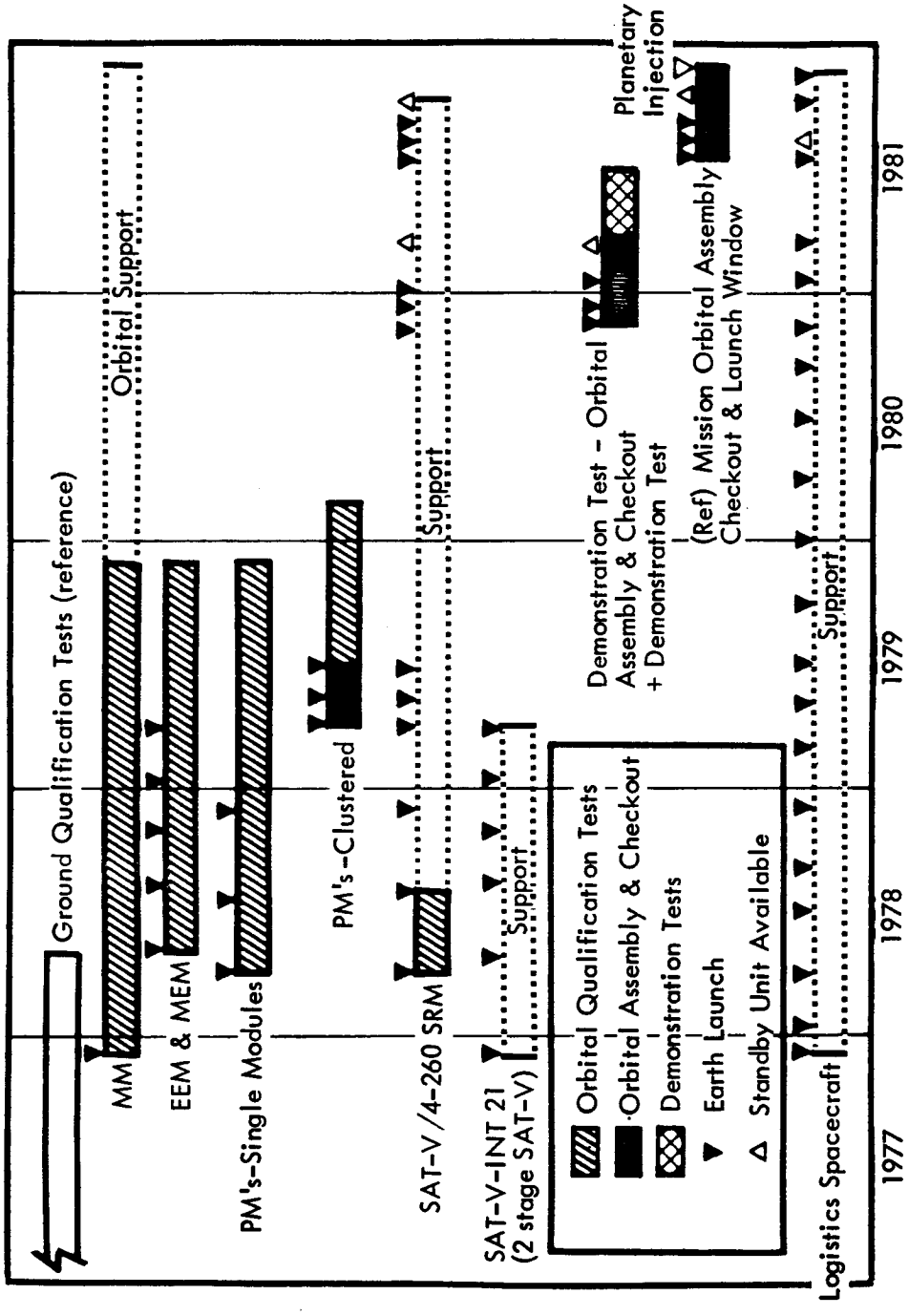

Figure 7.1-21: NNN - SAT-V/4-260 SRM FLIGHT TEST PLAN

or ELV combination were tailored to the particular combination and the hardware requirements defined for pricing purposes. The hardware quantity requirements are included in Appendix B.

A single-mission-module qualification flight test program is shown. Logistic spacecraft support would be provided for resupply, modifications, experiment tests, and changing of subsystems or multiple subsystem tests. A standby mission module is not provided, but in an emergency, a ground test module could be refurbished and used.

Five flight tests of both the EEM and the MEM are planned. Tests would all be conducted in the vicinity of the Earth. Past studies have indicated that satisfactory Mars entries can be simulated in the upper Earth atmosphere. At least two of the MEM and EEM flight tests will be unmanned and driven into the Earth's atmosphere at full reentry velocities. At least two more will be manned. Test lifetimes will simulate full mission durations prior to the entry maneuvers.

At least three tests are planned for single propulsion modules. Tests would be designed for the worst conditions. Where there is more than one diameter for the PM's, additional tests of single modules have been planned. Separate tests were planned for the propulsion module cluster and stack arrangement.

The SAT-V-INT 21 (two-stage standard Saturn V) was assumed to be available for test of the spacecraft elements. ELV qualification tests were assumed to flight test payloads as well. Two qualification tests for each ELV were considered adequate.

A demonstration test of the full configuration for the Mars 1982 opposition mission was planned. Standby units are provided for demonstration tests.

The number of logistic spacecraft support launches required throughout the test program is shown.

7.1.7 PROGRAM COSTS

7.1.7.1 Cost Estimating Approach

The cost estimating approach used during the trade studies is illustrated in Figure 7.1-22. The method of determining costs involved establishment of estimating parameters and criteria based on data from other actual programs and studies. These data were transformed into a cost model with the flexibility required to account for all the IMISCD design concepts. This model was tested on a similar Boeing study immediately prior to its use on the IMISCD trades. The use of a cost model assures a uniform criteria for establishing total and, especially, relative costs for all cases. Basic development, flight qualification and demonstration test, mission-peculiar, and discrete mission costs were developed for each of the space acceleration/Earth launch vehicle concepts. Only costs directly associated with the acceleration systems were treated as

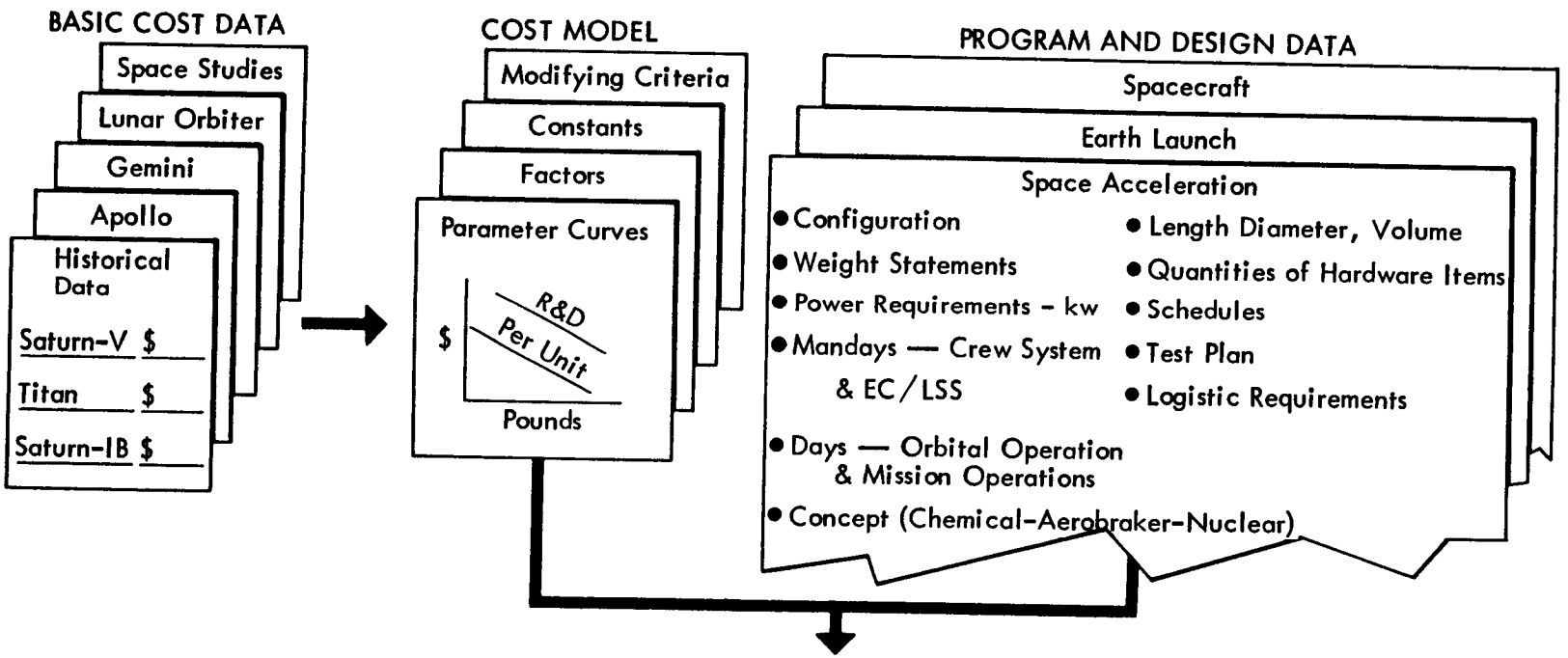

COST ESTIMATES

Configuration # _____	Mission Concept			System/Subsystem Trade # _____				
IMISCD Work Breakdown Structure	R&D			Planetary Missions				
	Basic Development	Flight Qualification Test Program	Demonstration test Program	Mission 1 Mars	Mission 2 Venus	Mission 3 Mars	Mission 4 Venus	Mission 5 Mars
Aerospace Veh Space Vehicle MM Struct Electric MEM	$	$	$	$	$	$	$	$

Figure 7.1-22: COST ESTIMATING APPROACH

variables. The spacecraft and other elements required for total program costs were considered to be relatively independent of the ELV and space acceleration concept selected and, therefore, treated as a constant for all cases.

7.1.7.2 Aerospace Vehicle Concept Cost Data Inputs

Specific data which was needed to cost each aerospace vehicle concept was developed and included:

- Spacecraft and other nonacceleration costs
- Mission hardware requirements
- Test plan hardware quantity requirements
- Launch pad quantities and orbital operations times.

These are detailed in Appendixes C1, C2, D1, and D2.

7.1.7.3 Five-Mission Cost Estimates

A summary of the five-mission program costs for each space propulsion/ELV combination studied is summarized in Table 7.1-9. Costs are tabulated by major program elements. Several combinations of space propulsion, notably NNC and NCC, were eliminated from the pricing exercise for both unfavorable IMIEO's and problems associated with the dual development of chemical and nuclear modules. The NAC, Post-Saturn NN optimized, Post-Saturn two-stage, and tanking mode cases were supplemental trades prepared to further evaluate and substantiate the conclusions derived from the basic trades.

Costs were developed for each combination to the level of detail shown in Table 7.1-10, which is a sample work sheet used to summarize costs for all of the IMISCD trade study configurations. A complete set of the work sheets, definition of terms, costing methodology and cost backup data is included in Appendix D2.

7.1.7.4 System Cost Summaries and Comparisons

Total Five-Mission Cost Comparisons--The total program cost data resulting from the detailed cost analysis are shown in Figure 7.1-23 for four of the space acceleration systems candidates, each with the four ELV candidates for a five-mission program.

The total system costs range from 32.1 billion dollars for the NNN/4-260 SRM ELV to 44.7 billion dollars for the CCC/SAT-V-X(U) ELV. The total program costs are generally lower when the NNN space acceleration system is used; the cost differential between the NNN and the aerobraking space acceleration systems is about 15 to 20%. This difference is largely attributable to the aerobraker R&D and flight test requirements.

The lowest nonrecurring costs are generally associated with the SAT-V-25(S)U and SAT-V/4-260 SRM ELV's, and the highest nonrecurring costs are generally associated with the use of the Post-Saturn ELV.

Table 7.1-9: FIVE-MISSION COST ESTIMATES (MILLIONS OF DOLLARS)

Space Acceleration				Earth Launch Vehicle Configuration						
PM-1 Earth Depart	PM-2 Planet Capture	PM-3 Planet Depart		SAT-V-25(S)U	SAT-V/4-260-SRM	SAT-V-XU	Post-Saturn All-Purpose	Post-Saturn NNN Optimized	Post-Saturn Two-Stage	SAT-V/4-260 SRM Tanker
NUC	NUC	NUC	Space Propulsion	2657	4056	4366	4366	4366	4366	4842
			ELV's	5222	5215	8284	10473	9169	12331	5112
			A&DU + M/C	928	604	999	907	907	907	646
			Orbital Operation	2530	2290	2040	2030	2030	2030	2450
			Spacecraft	19900	19900	19900	19900	19900	19900	19900
			Total	32237	32085	35589	37876	36372	39534	32980
NUC	AERO	NUC	Space Propulsion	7543	8387	8499	8328			
			ELV's	6863	5956	8298	11960			
			A&DU + M/C	1064	726	1043	1084			
			Orbital Operation	2920	2350	2040	2030			
			Spacecraft	19900	19900	19900	19900			
			Total	38290	37319	39780	43229			
NUC	AERO	CHEM	Space Propulsion	5664	508					
			ELV's	7769	8862					
			A&DU + M/C	1170	832					
			Orbital Operations	2920	2550					
			Spacecraft	19900	19900					
			Total	37 423	36652					
CHEM	AERO	CHEM	Space Propulsion	6482	6437	6912	6579			
			ELV's	8170	8543	12575	12630			
			A&DU + M/C	1318	1021	1246	1055			
			Orbital Operation	2920	2550	2040	2030			
			Spacecraft	19900	19900	19900	19900			
			Total	38790	38501	42673	42194			
CHEM	CHEM	CHEM	Space Propulsion	3842	4681	4364	5097			
			ELV's	11267	10448	16707	11453			
			A&DU + M/C	1599	1161	1725	1002			
			Orbital Operations	2520	2450	2040	2030			
			Spacecraft	19900	19900	19900	19900			
			Total	39128	38640	44736	39482			

Table 7.1-10: ELV AND SPACE PROPULSION TRADES (Cost in Millions of Dollars)

		Development						Five Missions			
			Test Program								
		Basic R&D	Flight Units	Spares	Cost	Mission Peculiar R&D	Total Development	Flight Units	Spares	Cost	Total Program
Space Propulsion - NNN	PM-1	807	6	1	259	125	1191	7	5	424	1615
	PM-1A	-0-	-0-	-0-	-0-	-0-	-0-	-0-	-0-	-0-	-0-
	PM-2	608	3	1	119	164	891	5	5	232	1123
	PM-3	573	2	1	101	68	742	5	5	208	950
	PM-3A	-0-	-0-	-0-	-0-	-0-	-0-	-0-	-0-	-0-	-0-
	Management and Integration	199			48	35	282			86	368
	Total	$2187			$527	$392	$3106			$950	$ 4056
Earth Launch Vehicles - SAT-V/4-260	ELV Flight and Hardware	402			1220		1622			1830	3452
	Program Peculiar	---			-0-		-0-			-0-	-0-
	Launch Site	400	9	1	122		522	12	3	183	705
	Launch Operations	-0-			260		260			361	621
	Management, Assembly, and Integration	-0-			175		175			262	437
	Total	$ 802			$1777	$	$2579			$2636	$ 5215
	Assembly and Docking Unit and Midcourse Correction	$ 140			$ 183	$	$ 323			$ 281	$ 604
	Earth Based Support Orbital Operation		Time in Earth Orbit	=132	$ 470	$	$ 470	Average time in Orbit	=	$1820	$ 2290
	Total Acceleration Cost	$3129			$2957	$ 392	$6478			$5687	$12165
	Spacecraft and Mission Support	$10940			$4200	$1450	$16590			$3310	$19900
	Total Program	$14069			$7157	$1842	$23068			$8997	$32065

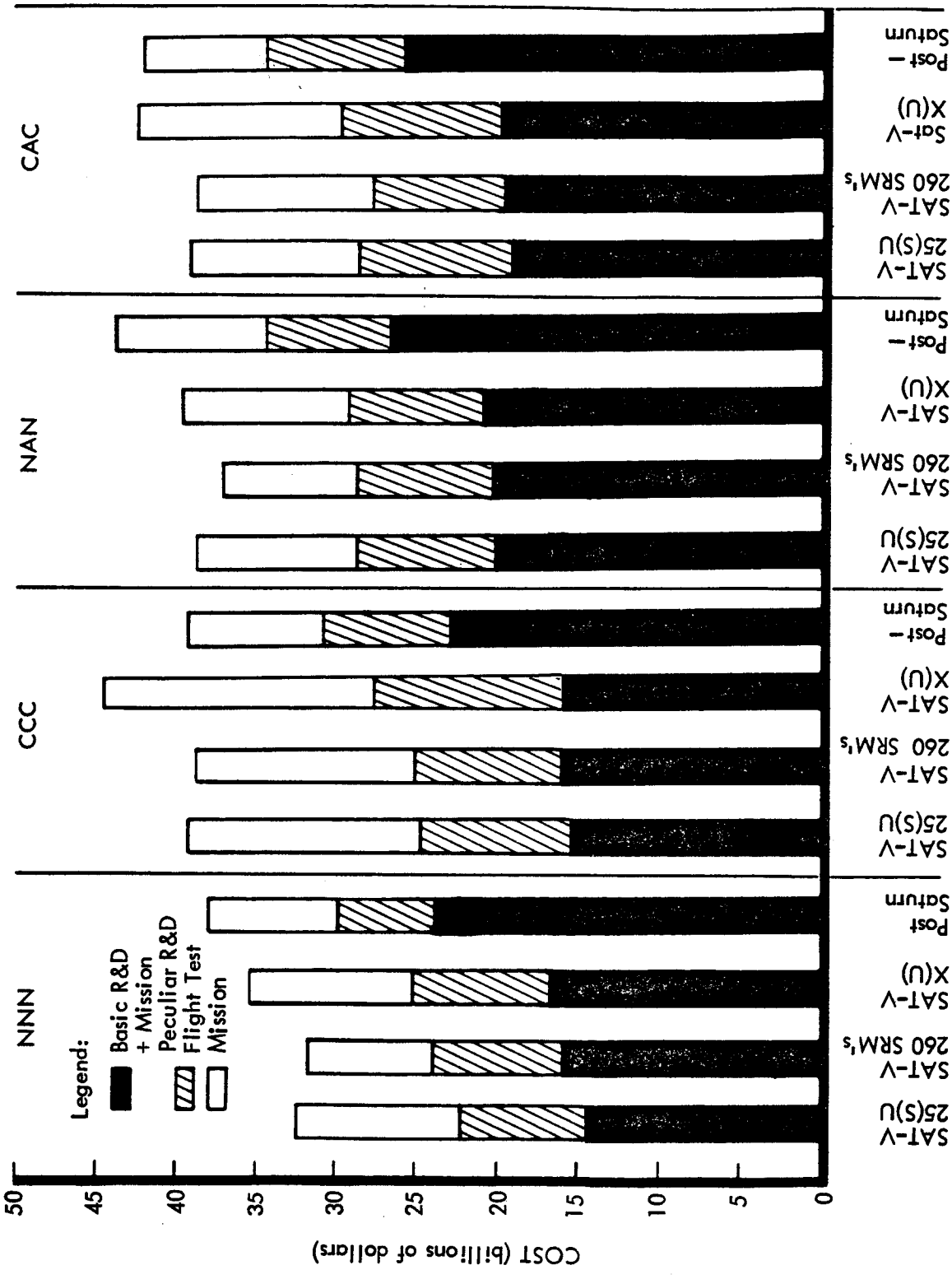

Figure 7.1-23: FIVE-MISSION COST COMPARISON

Mission costs are generally lowest when the Post-Saturn ELV is employed. The relatively higher mission cost for the SAT-V-X(U) when used with chemical systems is due to the high recurring cost of that ELV and the higher IMIEO's associated with chemical systems.

The breakdown of costs into mission and aerospace vehicle program statements is depicted in Figure 7.1-24. Total costs on this figure are identical to those in Figure 7.1-23.

The largest variance in elemental costs is for the ELV's. The costs associated with using uprated Saturn V ELV's are more sensitive to the IMIEO, whereas the costs associated with using Post-Saturn configuration show little sensitivity to IMIEO, primarily due to the low recurring costs associated with that ELV. The combination of the high recurring costs for the SAT-V-X(U) ELV and the high IMIEO of the chemical space acceleration system gives the highest ELV elemental costs.

7.1.7.5 Relative Cost Comparisons

The relative costs for the space acceleration systems and ELV's only are shown in Figure 7.1-25 with the data normalized to the NNN/SAT-V-25(S)U case. An estimated confidence limit of ±20% for the cost estimate data is also shown.

In the case of a five-mission program, the NNN space acceleration system gives the least cost. Both the SAT-V-25(S)U and the SAT-V/4-260 SRM ELV's in combination with the NNN space acceleration system are well within the estimated cost confidence level, while all of the other combinations fall outside.

For a 10-mission program, the NNN space acceleration system in combination with any ELV is within the estimated confidence limit. Also, note that the CCC space acceleration system with the Post-Saturn ELV is within the estimated confidence limit. The low recurring cost associated with the Post-Saturn ELV is the factor which tends to favor the Post-Saturn ELV as the mission program becomes larger.

7.1.7.6 Cost Trends

Figure 7.1-26 represents the ELV and space acceleration portion of the cost data. For each of the four candidate ELV's, the costs are shown in plots on which the nonrecurring costs are represented as points on the ordinate at the zero mission abscissa, and the recurring costs as a linear relationship to the number of missions.

For both five- and ten-mission programs, the NNN space acceleration system in combination with either the SAT-V-25(S)U or the SAT-V/4-260 SRM ELV is a least-cost system.

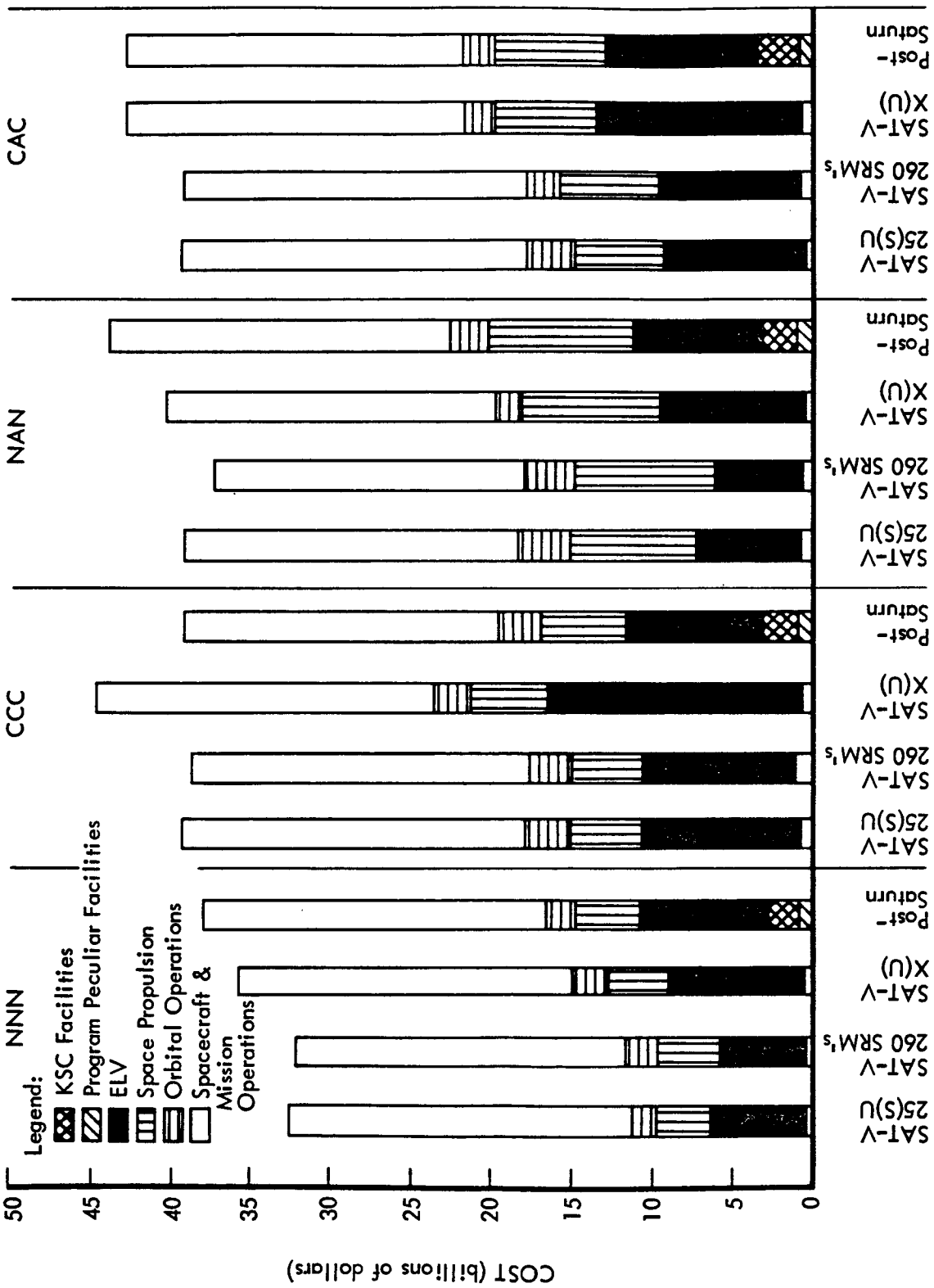

Figure 7.1-24: TOTAL COST BREAKDOWN (Five-Mission Program)

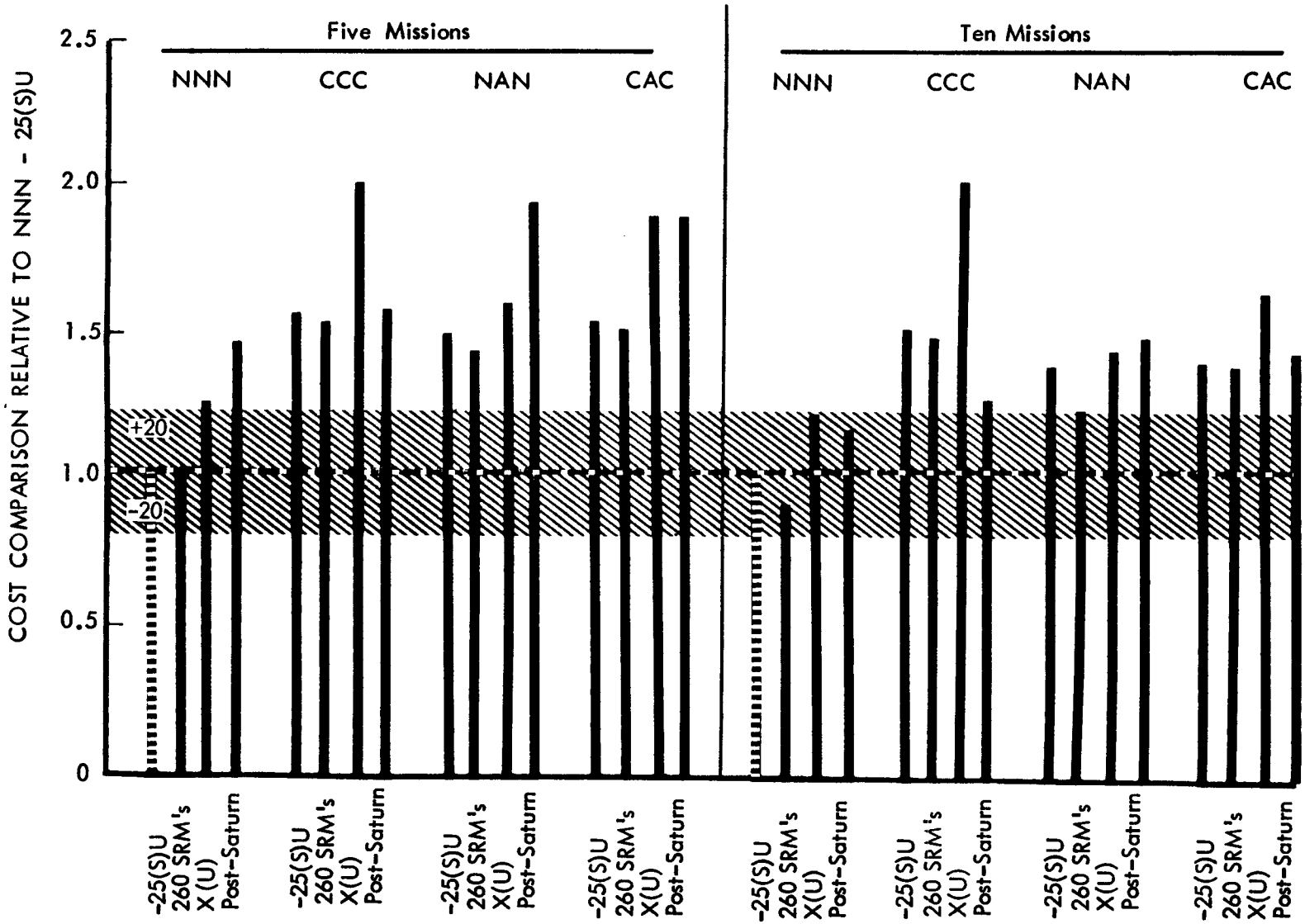

Figure 7.1-25: RELATIVE COST COMPARISONS
(ELV and Acceleration Only)

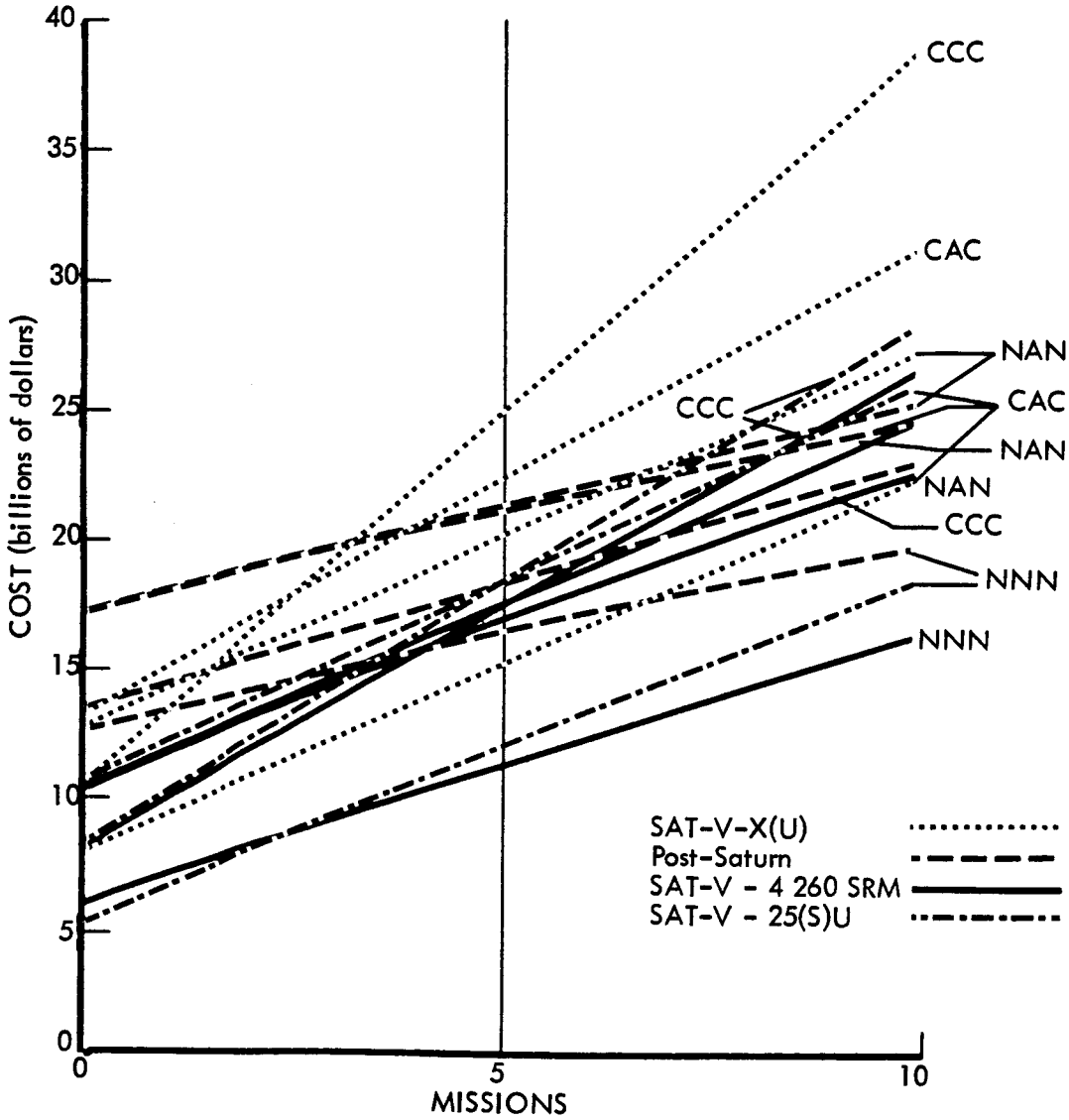

Figure 7.1-26: COST TRENDS
(ELV and Acceleration Systems Only)

7.1.7.7 Other Aerospace Vehicle Variations Cost Trades

Having developed cost estimates for the aerospace vehicle configuration shown in the preceding charts, it was deemed advisable to examine certain variations on a trade basis to determine their sensitivities to the cost results.

These additional trades included:

- Tanking Mode Trade
- NNN Optimized Post-Saturn Trade
- Two-stage LH_2 LO_2 Post-Saturn Trade
- NAC/Saturn V-25(S)U SRM Trade

Results of the trades follow:

Tanking Mode Trade--This trade involved the examination of the tanking mode concept as opposed to the fully-fueled-prior-to-launch philosophy used in the mainstream cost analysis. For this trade, the SAT-V/4-260 SRM ELV was selected in combination with the NNN space acceleration system because its weight and volume capability is particularly compatible to a tanking mode concept.

The tanker selected was a modified PM-1 as sized for the Mars 1982 opposition mission. The modification costs were estimated at approximately $100 million. The cost impact on the test program was minor and two additional ELV's were required to accomplish five missions.

The results of the trade study are shown on Figure 7.1-27. The tanking mode had little impact on the program cost.

NNN Optimized Post-Saturn Trade--The Post-Saturn ELV family used in the basic design and cost analyses consisted of a central core with variable numbers of strapon modules to give discrete payload capabilities ranging from 1.2 million pounds to over 4 million pounds. Since the IMIEO of the worst-case mission (using the NNN/Post-Saturn combination) was less than 2.5 million pounds, it was reasoned that a smaller Post-Saturn vehicle tailored especially for the particular space acceleration system may result in lower total program cost.

The results of the trade studies are shown on Figure 7.1-28. The optimized Post-Saturn did result in lower development and lower unit costs than the basic Post-Saturn, but it did not become competitive with the SAT-V-25(S)U SRM ELV.

Two-Stage LH_2 LO_2-Post-Saturn Trade--Possible gains through the use of a two-stage cryogenic Post-Saturn ELV were investigated and compared with the optimized Post-Saturn ELV from the previous trade and with the SAT-V-25(S)U SRM ELV.

Tanking Mode

- Launch space vehicle completely assembled and partially fueled
- Complete fueling in orbit with LH_2 tanker
- Tanker = PM-1 type

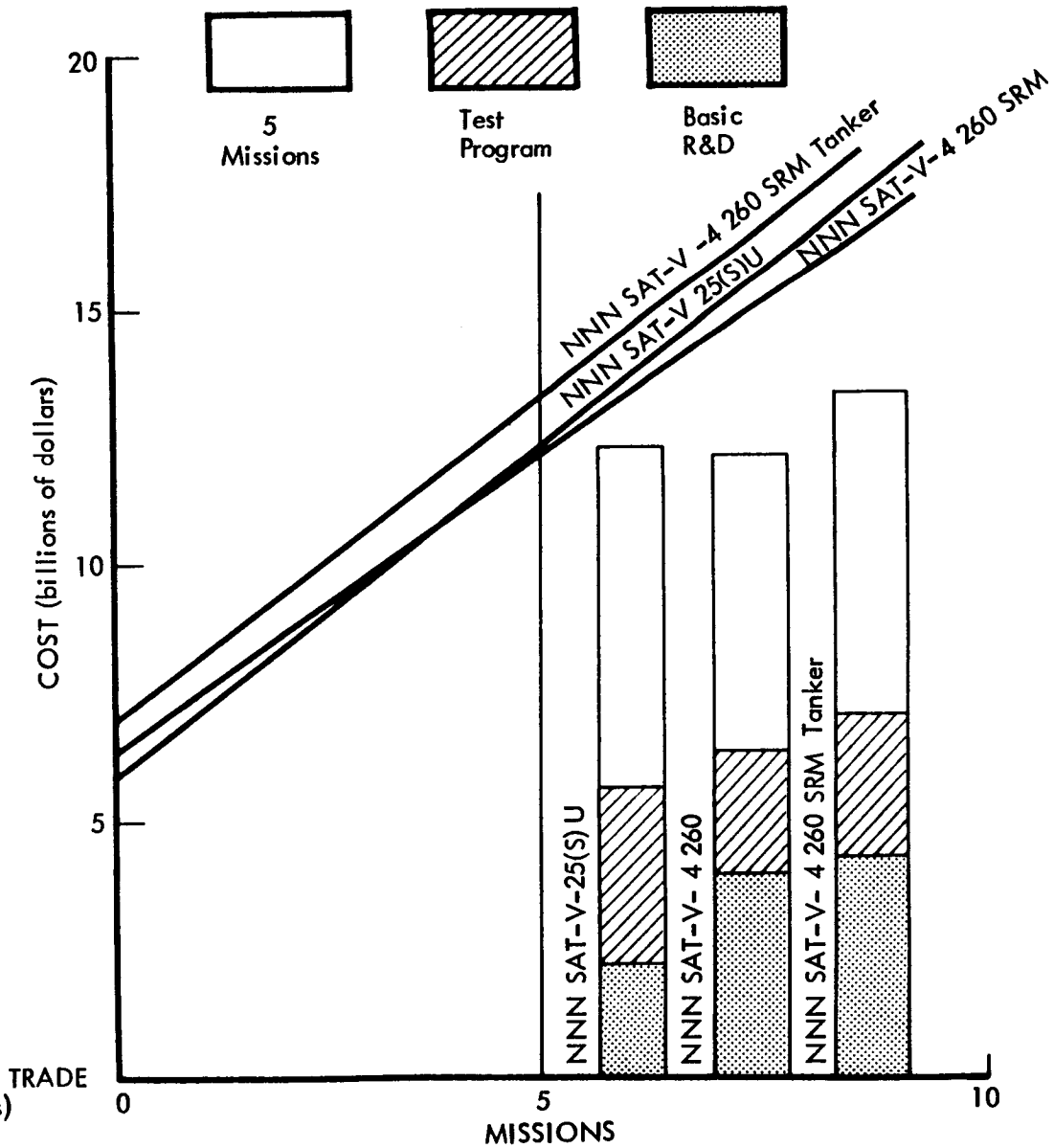

Figure 7.1-27: NNN TANKING MODE TRADE (Total Acceleration Costs)

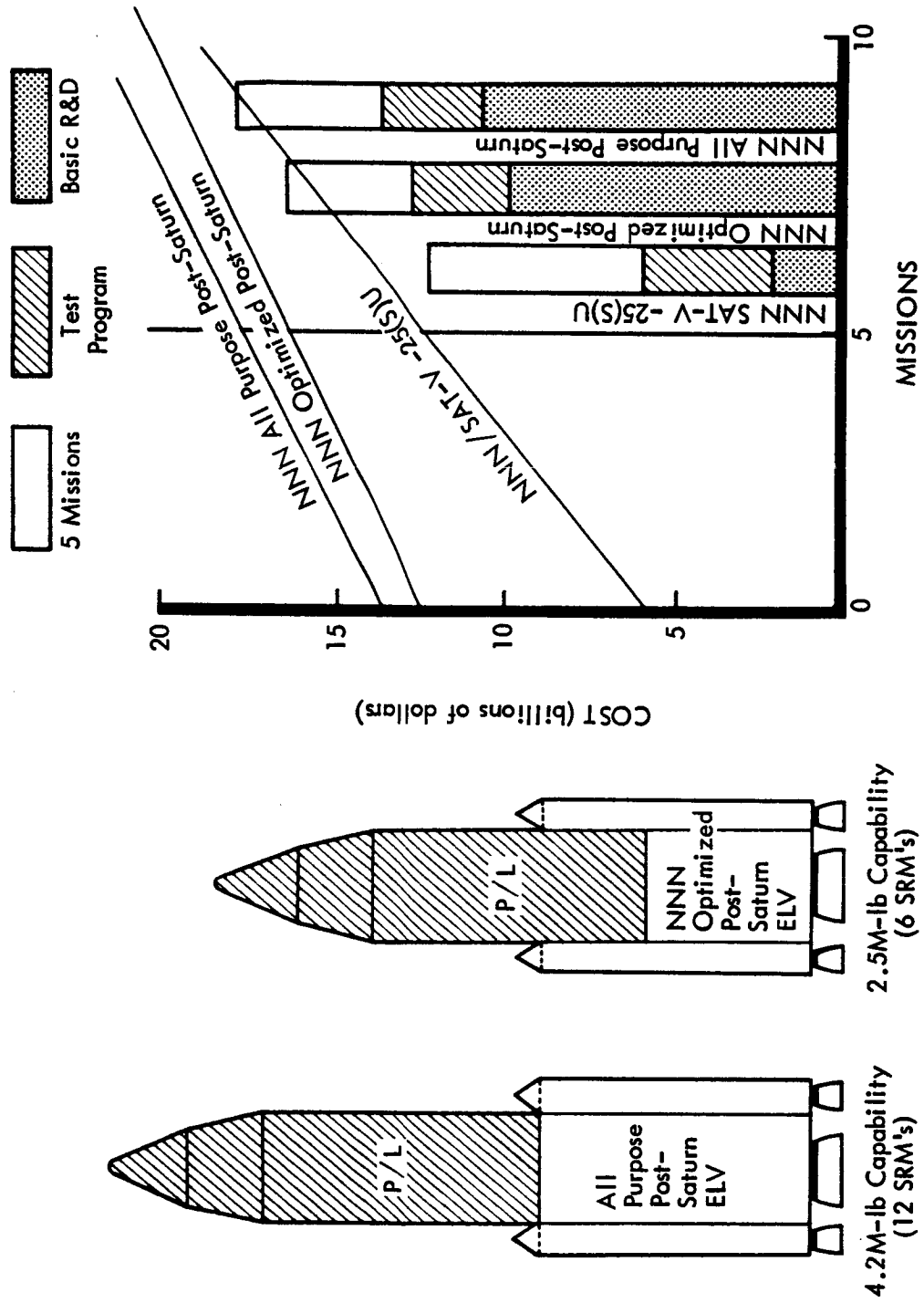

Figure 7.1-28: NNN OPTIMIZED POST SATURN TRADE (Total Acceleration Costs)

The results, depicted on Figure 7.1-29, show that for the two-stage liquid Post-Saturn to become competitive in cost to the SAT-V-25(S)U SRM, a program consisting of a large number of missions would be required. Relative to the optimized Post-Saturn, both recurring and nonrecurring costs are greater for the two-stage liquid ELV; consequently, program costs are always higher regardless of the number of missions.

NAC/SAT-V-25(S)U SRM Trade--A major disadvantage of the NAN candidate was the cost of the larger aerobraker required for the relatively large-volume, nuclear Earth-return stage. Analysis of the CAC candidate indicated the NAC concept would be cost effective.

The higher IMIEO's of the NAC configuration necessitated three additional ELV's over the NAN case to accomplish a five-mission program, but this cost was more than offset by the lower development and unit cost of the NAC's smaller aerobraker. The results in Figure 7.1-30 show that costs of the NAC concept are not competitive with the all-nuclear (NNN) space acceleration system.

7.1.7.8 Program Funding Comparisons

Besides the total mission program costs, another consideration is the annual funding level required. Figure 7.1-31 is an estimate of the funding levels required over the program lifetime for the NNN space accleration system case.

Use of the SAT-V-25(S)U ELV gives the lowest annual funding rate peak; the Post-Saturn ELV gives the highest funding rate peak. In all cases, the total program time schedule was from 1972 through 1991 except for the case of the Post-Saturn, wherein it was reasoned that first-stage engine development should be initiated 3 years earlier. Even with this consideration, the annual funding level peak for the Post-Saturn ELV was $4.2 billion as compared to approximately $3.5 billion for the SAT-V-25(S)U SRM ELV. The funding level peak for the SAT-V/4-260 ELV was $3.6 billion, and $4 billion for the SAT-V-X(U) ELV. The length of time associated with high annual funding rates is also of interest. The funding exceeds $3 billion/year for 5 years with the Post-Saturn, 4 years with the SAT-V-25(S)U, and 3 years with the SAT-V/4-260 SRM.

As was the case with total program costs, the comparison of the annual funding level peaks is not the deciding factor in the selection of the ELV/space acceleration system combination. With further schedule refinements, it should be possible to develop a schedule that would give acceptable funding levels for the selected combination.

7.1.8 EVALUATION AND SELECTION

The selection of the best space acceleration system/ELV combination, which represents an iteration of information previously generated in the overall system study, was accomplished by the following evaluation steps.

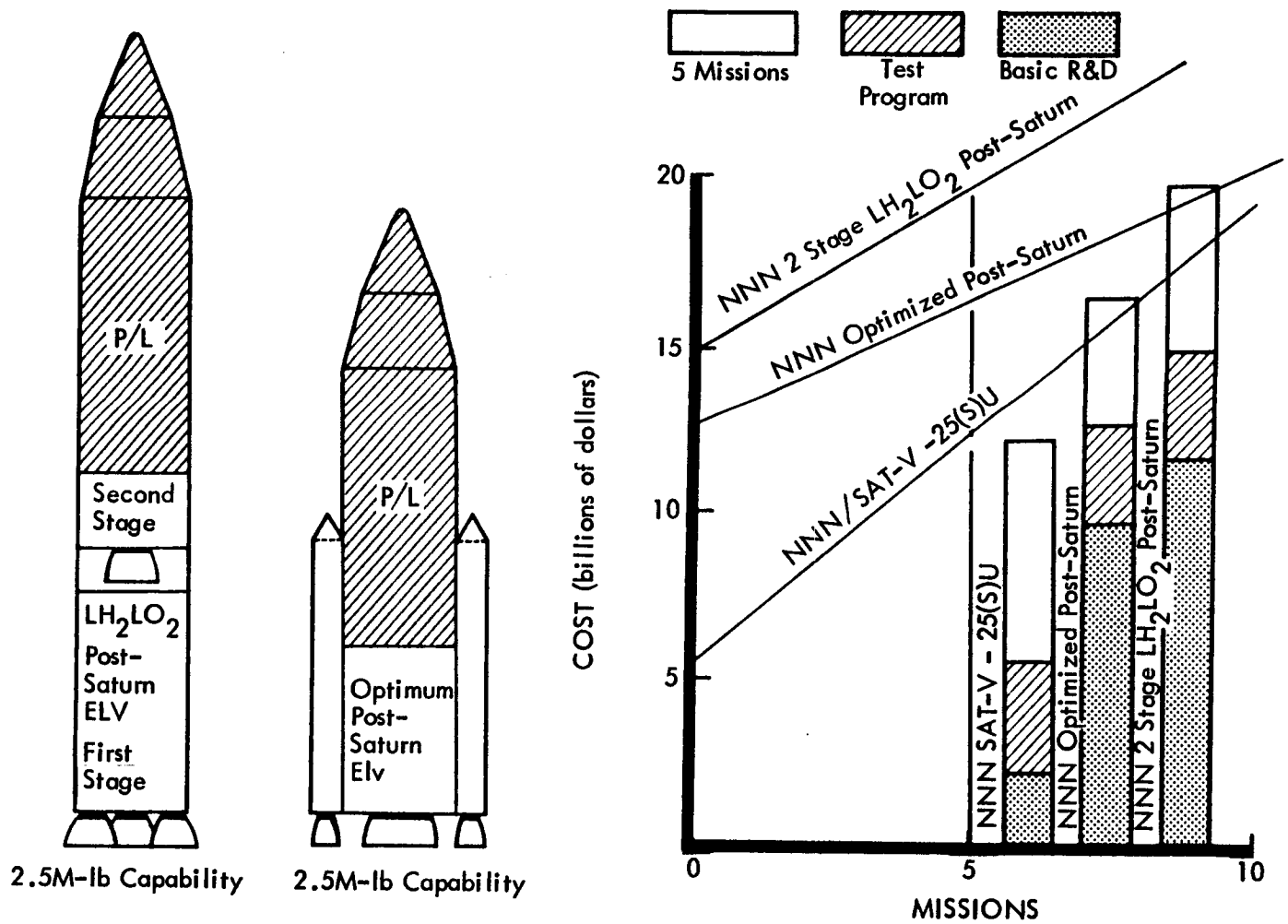

Figure 7.1-29: TWO STAGE LH_2LO_2 POST-SATURN TRADE
(Total Acceleration Costs)

NAC Configuration

- Same as NAN except PM-3 = LH_2O_2
- Aerobraking configuration = shorter and smaller diameter

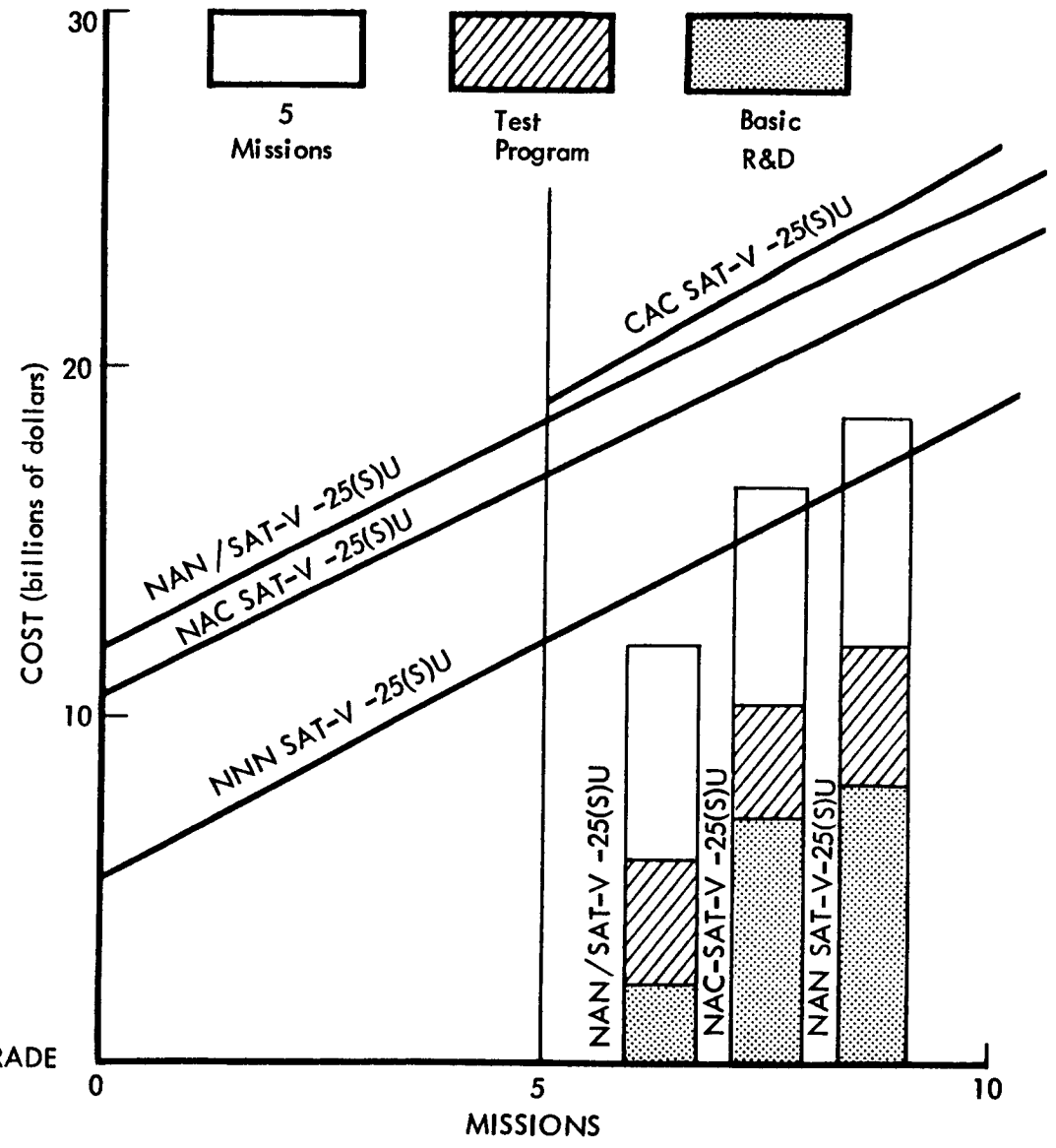

Figure 7.1-30: NAC/SAT-V -25(S)U SRM TRADE (Total Acceleration Costs)

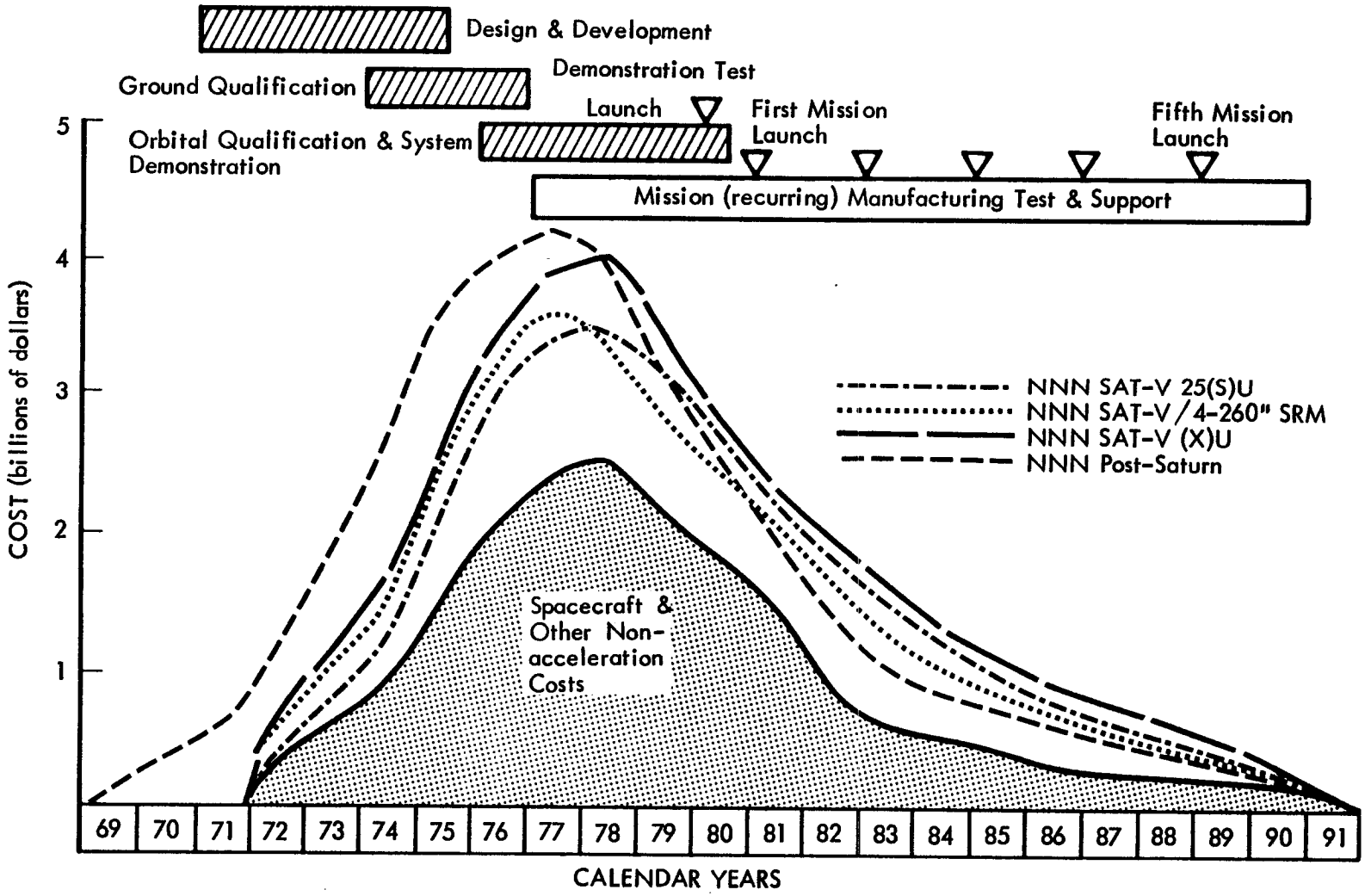

Figure 7.1-31: PROGRAM FUNDING COMPARISONS — NNN (Five Missions)

1) The number of combinations involved (considering seven space acceleration systems and four ELV candidates) was reduced by comparing initial mass in Earth orbit (IMIEO) requirements.

2) The space acceleration system was selected from the remaining candidates, considering each in combination with the ELV's resulting in lowest system cost.

3) The four candidate ELV's, each in combination with the selected space acceleration system, were evaluated to select the ELV.

7.1.8.1 IMIEO Comparison

The large number of candidate ELV/space acceleration system combinations was reduced by comparing the initial mass in Earth orbit requirements. The left-hand chart in Figure 7.1-32 illustrates the point that the ELV choice has little impact on the IMIEO for a given space acceleration system. The data are shown for four space acceleration systems and two of the five representative missions. IMIEO data for the other three space acceleration systems examined show the same insensitivity to ELV selection. IMIEO data for the other three representative missions show the same trend.

The right-hand chart in Figure 7.1-32 shows an IMIEO combination of the seven space acceleration systems, each in combination with the SAT-V-25(S)U ELV, for two missions. The IMIEO's for the NNC and NCC cases are greater than for the NNN case. For this reason, together with the fact that the cost for these two candidates can be expected to be greater than for the NNN case (because each requires both chemical and nuclear engine development), further evaluation considered only five remaining space acceleration system candidates.

7.1.8.2 Cost Comparison

The five-mission program cost data for four of the space acceleration system candidates in combination with the four ELV candidates are shown in Figure 7.1-23. The five-mission program costs range from approximately 31 billion dollars for the NNN/25(S)U or NNN/4-260 combination to approximately 44 billion dollars for the CCC/SAT-V-X(U) combination. The NNN space acceleration system results in the lowest program cost regardless of which ELV is considered. The MLV-SAT-V-25(S)U and the MLV-SAT-V/4-260 costs are comparable and result in the lowest program costs within each of the space acceleration systems being considered. The NAC space acceleration, not shown in Figure 7.1-23, was also costed and it can be expected that the same trend would follow, that is, that the NAC candidate in combination with the SAT-V-25(S)U or SAT-V/4-260 SRM ELV results in least system cost. The space acceleration systems evaluation was performed with each of the five remaining candidates considered in combination with the SAT-V-25(S)U and the SAT-V/4-260.

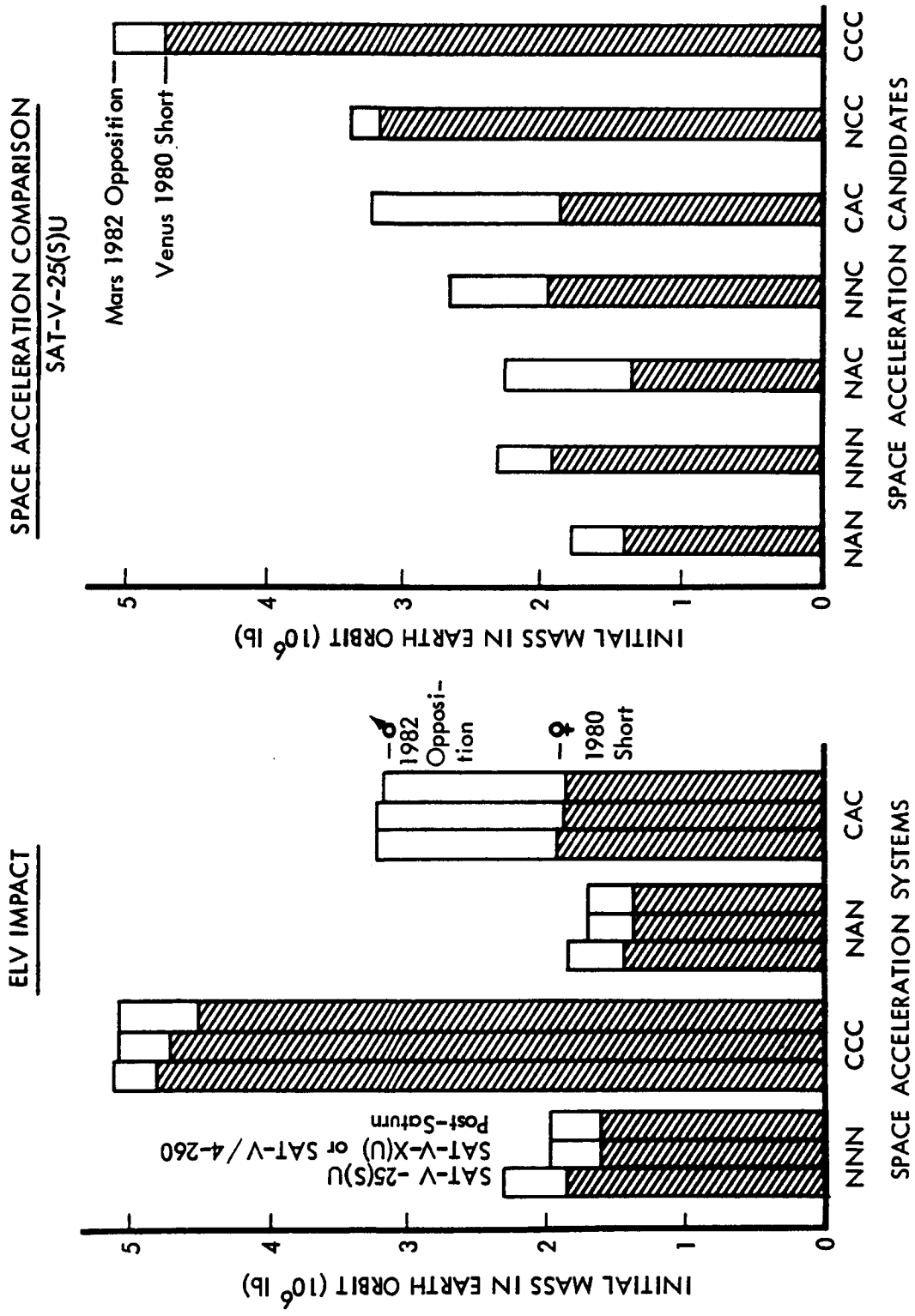

Figure 7.1-32: IMIEO COMPARISON

7.1.8.3 Space Acceleration System Evaluation

Six major criteria were considered in evaluating the five space acceleration systems as shown in Table 7.1-11.

1) Safety--Nuclear systems have the inherent radiation hazard that adds to the space radiation hazard associated with all candidates, and to the radioisotope electric power source radiation, which has equal probability of use with any candidate. Aerobraker systems introduce abort difficulties over and above the all-propulsive systems since they have less impulsive ΔV capability prior to all the planetary braking maneuver. The dynamics of effecting the aerobraking maneuver itself presents some safety risk. Chemical systems appear best from the safety standpoint.

2) Utilization--Since all candidate systems were configured to accommodate all the representative missions considered, the factor considered here was IMIEO sensitivity or the IMIEO required per pound of spacecraft placed on the final Earth return trajectory. The nuclear/aerobrakers are best, with the NAC and NNN candidates next. The CCC system is a factor of 4 higher than the nuclear aerobrakers. The IMIEO sensitivity factors shown are applicable to only small changes in payload (up to approximately 50,000 pounds) for the aerobrakers, since no size change in the aerodynamic shroud was considered.

3) Cost--The NNN system gives lowest total cost and the lowest annual funding-level peak, with the aerobrakers next lowest having approximately 15 to 20% higher total costs. The aerobrakers higher cost is primarily due to R&D and flight test requirements. The CCC system gives the highest cost at about 23% greater than the NNN system. No significant differences in funding level peaks are expected. The candidate systems were ranked relative to the NNN system based on examination of the cost estimate data already presented.

4) Weight--The NNN and nuclear/aerobraker systems have the lowest IMIEO requirements. The values shown are those pertaining to Mars 1986 conjunction and Mars 1982 opposition missions for each candidate.

5) Risk--The problem of developing provisions for long-term cryogenic storage is common to all candidates. The nuclear systems also depend on the nuclear engine development. Aerobraker systems have development problems associated with aerobraking provisions and maneuver techniques, as well as dependence on definition of the planetary atmospheres. The nuclear engine development is considered less risk than the aerobraker development.

6) Complexity--The NNN and nuclear/aerobraker systems require the fewest numbers of orbital assemblies, the CAC requiring a third again as many, and the CCC approximately two times as many. The NNN system has the problem of separation and disposal of PM-2 after achieving planetary orbit. The CCC system with its multimodule configurations have complicated stage and interstage assembly in orbit. Aerobraker shrouds must be deployed for radiator, communication-antenna, and experiment-sensor operation during the in-transit phase and must be jettisoned after the planetary capture maneuver.

Table 7.1-11: EVALUATION - SPACE ACCELERATION SYSTEM (SAT-V-25(S)U SRM ELV)

Space Acceleration Candidates	Criteria							
	Safety	Utilization IMIEO Sensitivity (5 Mission Average)	Cost (millions of dollars)		Weight	Risk	Complexity	
			Program (5 Missions)	Maximum Yearly Peak	IMIEO Range (10^6 lb)		Orbital Assemblies (5 Missions)	Special Problems
NNN	Radiation hazard	12.8	32.2	1 3.5	1.7-2.3	Nuclear engine development Long term cryogenic storage	23	PM-2 disposal
CCC		29.9	$39.1	2	2.6-5.1	Long term cryogenic storage	46	Multi-modules per stage
NAN	Radiation hazard Abort difficulty	6.6	38.3	4	1.3-1.8	Atmosphere uncertainty Nuclear engine development Aerodynamic Braking	20	Deploying aero-shroud
CAC	Abort difficulty	10.7	38.8	3	1.6-3.2	Atmosphere uncertainty Aerodynamic Braking	26	Deploying aero-shroud
NAC	Radiation hazard Abort difficulty	7.3	37.4	5	1.3-2.3	Atmosphere uncertainty Nuclear engine development Aerodynamic Braking	23	Deploying aero-shroud

Considering the candidates in relation to all the evaluation criteria, the NNN space acceleration system was selected for the recommended system. This same conclusion resulted when the space acceleration candidates were examined using the SAT V-4/260 ELV.

7.1.8.4 ELV Evaluation

Five major criteria were considered in evaluating the four ELV candidates in combination with the previously selected NNN space acceleration system as shown in Table 7.1-12.

1) Safety--Comparisons included acoustic and overpressure considerations. The acoustic effect relates to the range limit within which 125 db (estimated threshold for ear damage) or greater would exist during ELV thrusting. Similarly, the 0.4-psi overpressure (estimated threshold for structural damage) range relates to the TNT equivalency, should the ELV detonate. The Saturn-V-25(S)U and the clustered Saturn V are best from both standpoints, and the Post-Saturn is worst.

2) Cost--Total program cost is slightly lower for the Saturn V/4-260 SRM than for the Saturn V-25(S)U, with the difference being less than 2%. Also, the difference in maximum annual funding-rate peaks is less than 3% between these two ELV candidates (with the SAT-V-25(S)U being slightly lower). The Saturn V-X(U) and Post-Saturn ELV's result in approximately 15% greater program costs and approximately 20% greater annual funding-rate peaks.

3) Risk--The Saturn V-25(S)U is considered the minimum-risk ELV. The Saturn V/4-260 SRM involves the development of the large solid rocket motors and deployment of auxiliary pods. The dynamics associated with clustering up to four two-stage Saturn V ELV's is the development risk associated with Saturn V-X(U). The Post-Saturn ELV represents an entirely new vehicle requiring new engine development (whether a multi-chamber or toroidal concept is used) and also requiring development of a large-diameter liquid core.

4) Space Vehicle Impact--The number of orbital assemblies required depends on the payload capability of the ELV. The large Post-Saturn allows the space vehicle to be launched as a single unit; the Saturn V/4-260 SRM and the Saturn V-X(U) both require approximately two launches per space vehicle, while the smaller Saturn V-25(S)U requires an average of about twice this number.

5) Ground System Impact--The Saturn V-25(S)U requires the least change in facilities or ground support systems. The Saturn V/4-260 SRM will require special ground support equipment for the handling and/or transportation of the large solid rockets, as well as new launch facilities. The Saturn V-X(U) will require more complex and costly new launch facilities. The Post-Saturn is the worst candidate from the standpoint of ground system impact, since it will require handling equipment for the large solid rockets, even more complex and costly new launch facilities, and on-pad assembly and checkout.

The Post-Saturn and Saturn V-X(U) candidates were eliminated since they had the least favorable standings in all but one of the evaluation criteria. From the remaining two ELV candidates, Saturn V-25(S)U and Saturn V/4-260, it was judged that the differences in technical risk, launch risk, facility

Table 7.1-12: EVALUATION - ELV (NNN SPACE ACCELERATION SYSTEM)

ELV Candidates	Criteria						
	Safety		Cost (billions of dollars)		Risk	Space Vehicle Impact	Ground System Impact
	0.4-psi* Range (miles)	125-db Range (miles)	Program (5 missions)	Maximum Yearly Peak		Orbital Assemblies (5 missions)	
SAT-V-25(S)U	3.2	7.2	$31.1	$3.5	156-inch SRM development	23	Modified launch facilities
SAT-V/4-260	4.5	10.0	$30.5	$3.6	260-inch SRM development Auxiliary pod jettisoning	12	GSE for large solids New launch facilities
SAT-V-X(U)	3.0	8.5	$34.2	$4.0	Cluster dynamics 260-inch SRM development	10	New launch facilities GSE for large solids
Post-Saturn	6.9**	17.8**	$35.5	$4.2	New engine development Large core tank development	5	New launch facilities On-pad assembly and checkout

*Includes LH_2 of space acceleration system

**Core + 12 SRM

impact, and safety favored the Saturn V-25(S)U, in spite of the greater number of orbital assemblies associated with its use. Consequently, the Saturn V-25(S)U was selected for the recommended system.

7.2 SPACE ACCELERATION COMMONALITY STUDY

The purpose of the Space Acceleration Commonality Study was to determine if there was a more effective space acceleration concept than that established by each propulsion element being sized for a specific maneuver ΔV. Effectiveness is defined as 1) low cost, 2) mission flexibility, 3) program flexibility, 4) potential mission flexibility, and 5) minimum complexity. The major steps in this study are diagrammed below:

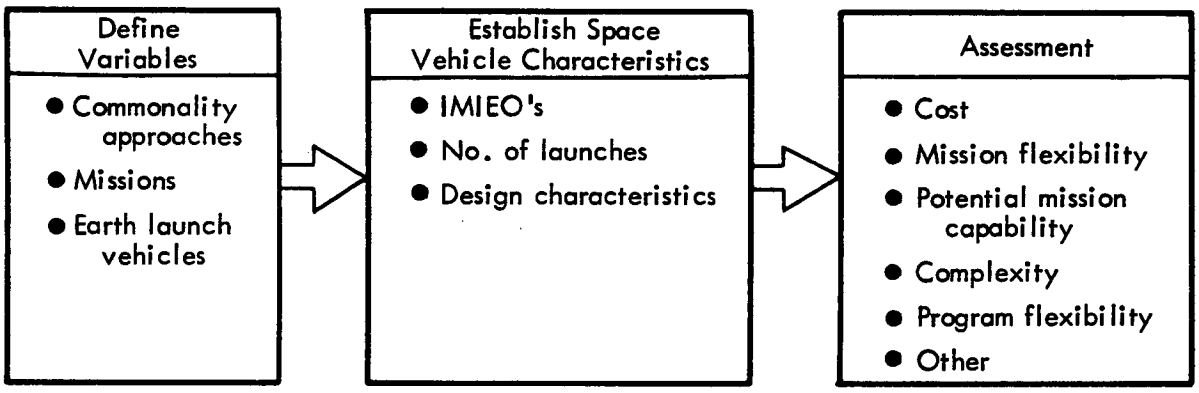

7.2.1 SPACE ACCELERATION SYSTEM CONCEPTS

The design approaches investigated are classified as tailored modules, common modules, and fixed tailored modules.

1) Tailored Module
   This approach uses the same diameter modules but the length is varied to provide specific ΔV requirements. There is no propellant transfer between propulsion modules.

2) Common Module
   The common module approach has each propulsion module exactly the same diameter and length for all missions. The number of equal modules, however, varies for the different missions. Capacity of each of these modules is equal to the full ELV payload capability. The number of modules in PM-1 is generally one less than the required propellant for the ΔV_1 maneuver. This requires the additional propellant to be transferred from the next higher stage or PM-2. Should PM-2 module not have sufficient propellant to perform ΔV_2, propellant will be transferred from PM-3.

3) Fixed Tailored Module
This approach is similar to the tailored module except three different lengths only were considered in various combinations to provide near optimum propellant requirements for the various missions. There is no propellant transfer between modules.

7.2.2 MISSIONS

To fully assess the design approaches, 20 missions which encompass the range of mission requirements over a synodic cycle were selected. These are presented in Table 7.2-1.

7.2.3 EARTH LAUNCH VEHICLES

Both the recommended MLV-SAT-V-25(S)U and its closest competitor, the MLV-SAT-V/4-260, were considered in this trade study. Their configuration and payload capability are shown in Figures 7.2-1 and 7.2-2.

7.2.4 DESIGN CONDITIONS

Following are the major design conditions used in this trade:

1) Mission module weight (approximate) including experiments but not probes:

   Opposition Missions -- 91,500 pounds
   Swingby Missions -- 98,500 pounds
   Conjunction Missions -- 125,000 pounds
   Venus Short Missions -- 95,500 pounds
   Venus Long Missions -- 110,500 pounds

2) Probe installation weights (approximate):

   Opposition and Conjunction Missions -- 26,000 pounds
   Swingby Missions -- 27,500 pounds
   Venus Missions -- 40,500 pounds

3) EEM weights (approximate):

   Opposition Missions -- 17,500 pounds
   All Other Missions -- 14,000 pounds

4) MEM weights (approximate) including interstage:

   All missions -- 105,000 pounds

5) Missions and major propulsions ΔV's and midcourse and orbit trim ΔV's are shown in Table 7.2-1.

6) Space vehicle probability of success = 0.95.

7) Launch operations probability of success = 0.985.

8) ELV spares as required to meet the 0.985 probability of success for launch operations, rendezvous, and docking.

9) Propulsion modules include an aft inner and outer interstage. Combined they are sized to accept the loads resulting from Earth launch. The outer interstage is jettisoned in Earth orbit leaving the inner interstage sized by the loads resulting from the mission.

Table 7.2-1: MISSION TRAJECTORY CHARACTERISTICS

Mission	ΔV_1	ΔV_2	ΔV_3	ΔV_4	ΔV_5	ΔV_6	Mission Duration (days)
Mars 1982 Opposition	13,088	300	8,426	300	19,066	300	540
Mars 1984 Opposition	12,090	300	10,125	300	17,560	300	460
Mars 1986 Opposition	11,959	300	9,292	300	16,303	300	480
Mars 1988 Opposition	12,950	300	9,663	300	16,871	300	460
1975 Swingby	14,367	300	17,429	300	12,143	946	560
1978 Swingby	16,710	1072	12,468	300	12,304	300	710
1980 Swingby	16,077	497	14,026	300	8,216	300	620
1982 Swingby	12,461	300	7,668	300	14,929	648	600
1984 Swingby	16,579	300	10,604	300	14,500	851	640
1986 Swingby	14,161	923	12,399	300	8,639	300	590
Mars 1980 Conjunction	12,694	300	6,969	300	6,319	300	1000
Mars 1986 Conjunction	12,087	300	8,104	300	8,901	300	1040
Venus 1980 Short	12,658	300	14,889	300	13,354	300	460
Venus 1981 Short	12,629	300	13,747	300	13,360	300	460
Venus 1983 Short	11,625	300	11,831	300	14,141	300	540
Venus 1985 Short	12,796	300	10,949	300	13,416	300	550
Venus 1986 Short	11,808	300	13,826	300	13,465	300	470
Venus 1980 Long	12,012	300	14,892	300	11,155	300	800
Venus 1981 Long	11,611	300	12,428	300	10,847	300	770
Venus 1983 Long	11,884	300	11,900	300	10,883	300	780

ΔV_1 = Earth orbit departure

ΔV_2 = Outbound midcourse correction and/or swingby kick

ΔV_3 = Mars or Venus capture

ΔV_4 = Orbit trim

ΔV_5 = Mars or Venus orbit departure

ΔV_6 = Inbound midcourse correction and/or swingby kick

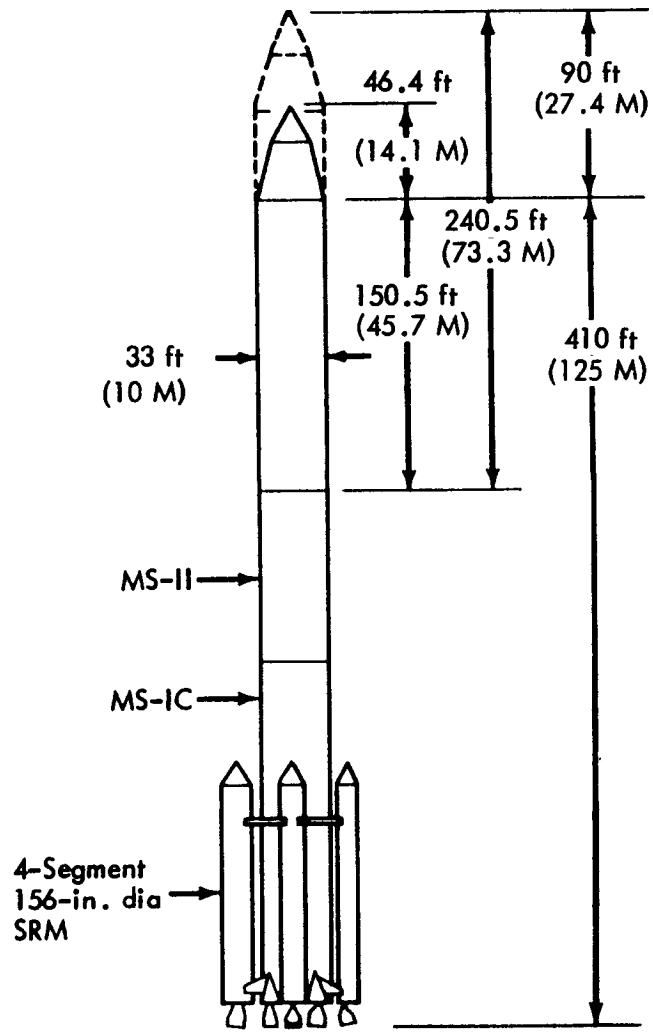

$T/W_o = 1.60$ $T_o = (10.8M\ kg)$

MS-IC	Δ Length = 40 ft 5 F-1 engines, 1.8M lb thrust W_p = 6.56M lb x (2.98M kg)
MS-II	Δ Length = 0 ft 5 uprated J2S engines W_p = 970K lb (441K kg)
Strapons	4-Segment - 156 in. dia W_p = 1.38M lb (0.627M kg) @ T_o = 3.7M lb (1.68M kg) @

Vehicle	Gross Payload to 262-n-mi Circular Orbit
-25(S)U Core	302,700
Core + 2 strapons	410,800
Core + 4 Strapons	548,400

Figure 2.1-1: MLV-SAT-V-25(S)U

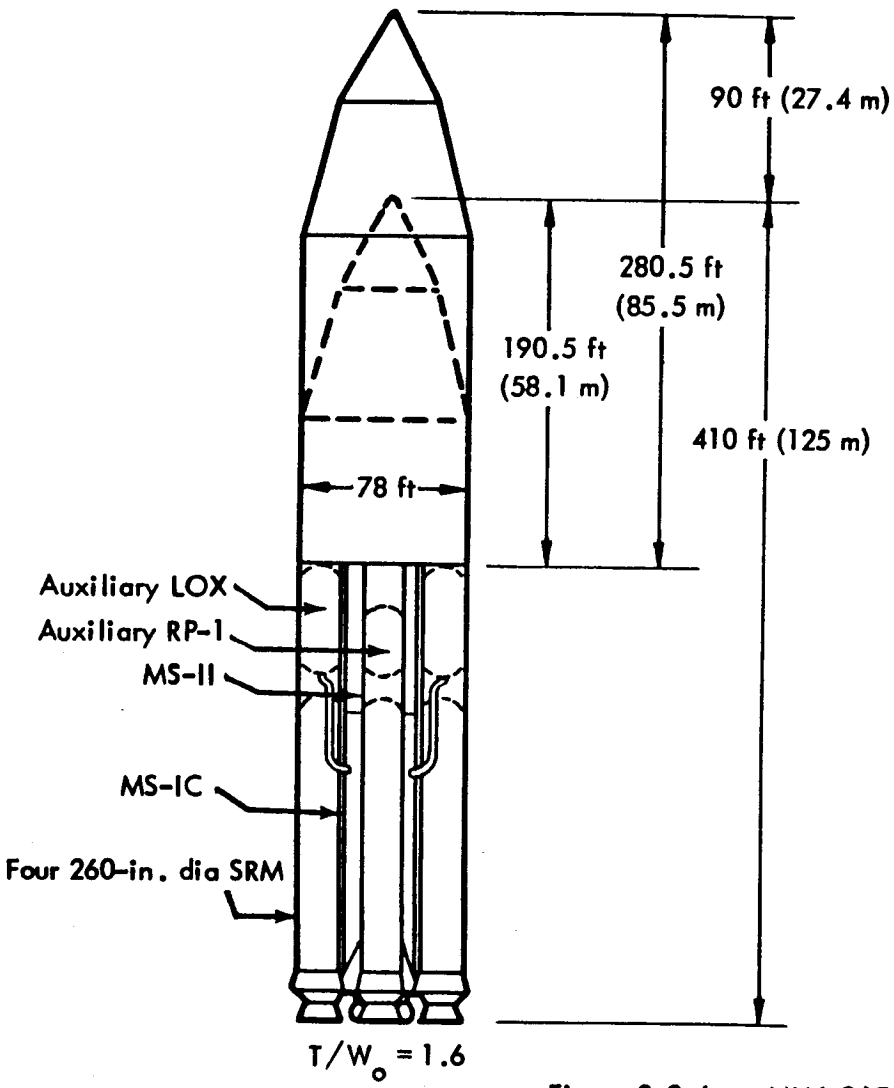

MS-IC	Standard Length 5 F-1 engines W_p = 4.56M lb (2.07M kg)
MS-II	Standard Length 5 J-2 engines W_p = 930K lb (423K kg)
Auxiliary Pods	W_p = 3.56 M lb (1.62 M kg)
Strapons	Four 260-in. SRM W_p = 4M lb (1.82M kg)@

Gross payload to 262-n-mi circular orbit = 797.2K lb

Figure 2.2-6: MLV-SAT-V / 4-260

10) The outer shell of the PM tank is sized by Earth launch loads except for several conjunction class missions in which meteroid protection (P_o = 0.997) is the sizing factor.

11) All PM tanks will use 0.7 elliptical bulkheads.

12) A 5% margin will be applied to the ELV nominal capability.

13) The Saturn V-25(S)U will have payloads not exceeding 33-foot diameter and the Saturn V-4/260 not exceeding 42-foot diameter.

14) ELV payload heights will be as short as possible but not constrained to present VAB limitations.

15) Thrust-to-weight ratio of not less than 0.16 will be used for primary propulsion maneuvers and orbit trim and 0.05 for midcourse maneuvers.

16) Use the Nerva II engine.

7.2.5 IMIEO

Initial mass in Earth orbit for the 20 missions using both ELV's are shown for the tailored module, common module, and fixed tailored module approaches respectively, in Figures 7.2-3, 7.2-4, and 7.2-5. IMIEO in all cases includes the PM Earth launch interstages. These values will subsequently be used to determine number of launches per mission.

IMIEO's for tailored module configurations are generally lower when the Saturn V-4/260 ELV is used. This is the result of the tailored module Saturn V-25(S)U configurations requiring more modules resulting in a higher structural weight for meteoroid shielding and interstages. However, IMIEO's for the common module configurations using the Saturn V-25(S)U are usually lower than those which use a Saturn V/4-260. This is because the module sized for the Saturn V/4-260 is much larger than necessary for the ΔV_2 and ΔV_3 requirements, thus paying an unusual structural weight penalty.

Saturn V-25(S)U/common modules, however, are more nearly the size required by the ΔV requirement. Fixed tailored modules follow the same IMIEO pattern at the tailored modules.

7.2.6 DESIGN CHARACTERISTICS

7.2.6.1 Tailored Module

Since each module is tailored for a specific maneuver ΔV, each mission has three different module tank lengths. Should a PM stage actually consist of more than one module, then all modules of that stage are the same size. This condition exists primarily for PM-1 of the Saturn V-25(S)U where each of these individual modules consist of a tank and engine. Configurations requiring multimodules in a PM necessarily involve lateral arrangement of the modules. Positioning of these modules require end docking and swinging into place. Typical tailored module configurations illustrating representative module sizes and PM-1 assembly are shown in Figure 7.2-6.

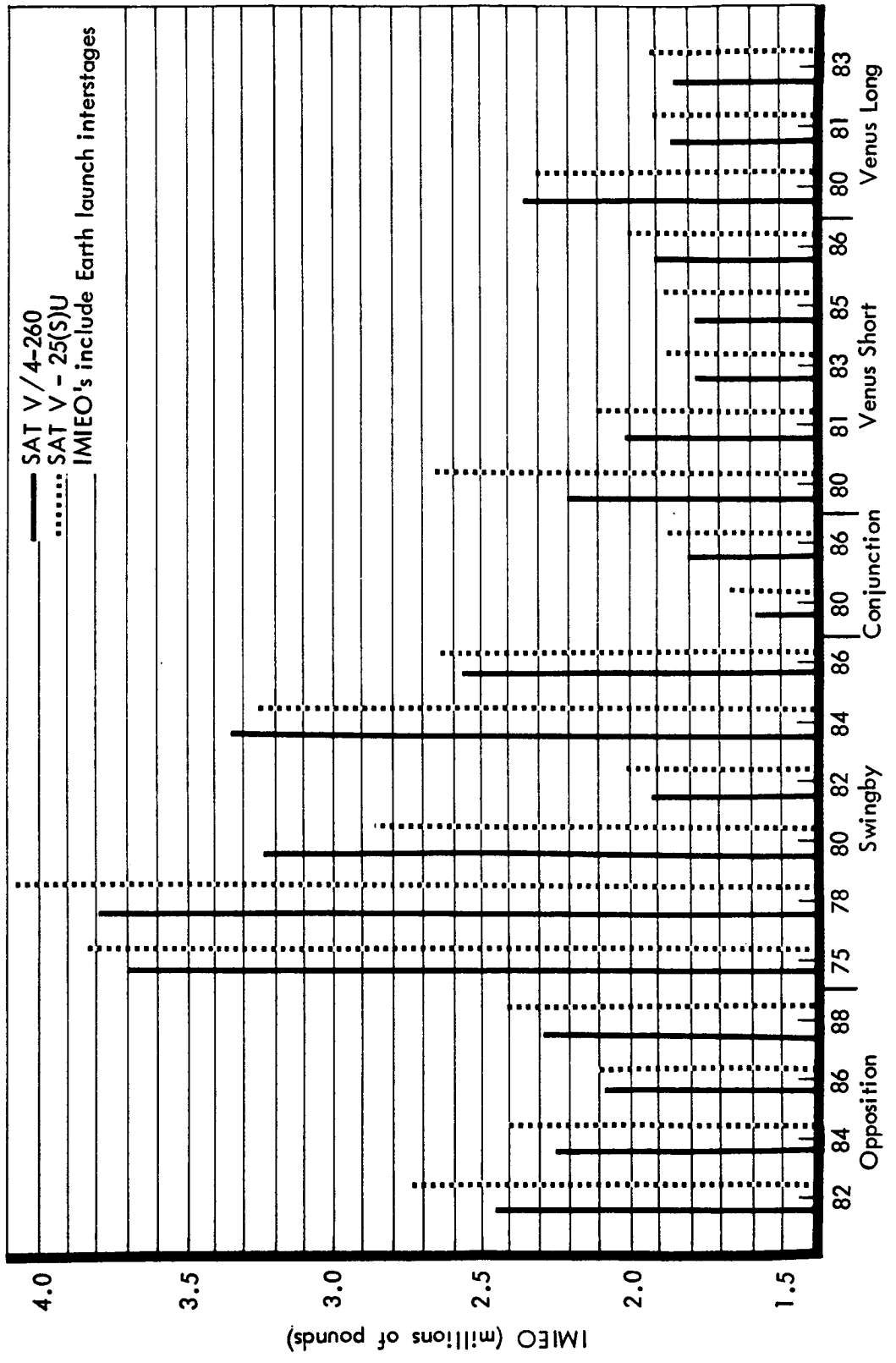

Figure 7.2-3: SPACE VEHICLE IMIEO'S TAILORED MODULES

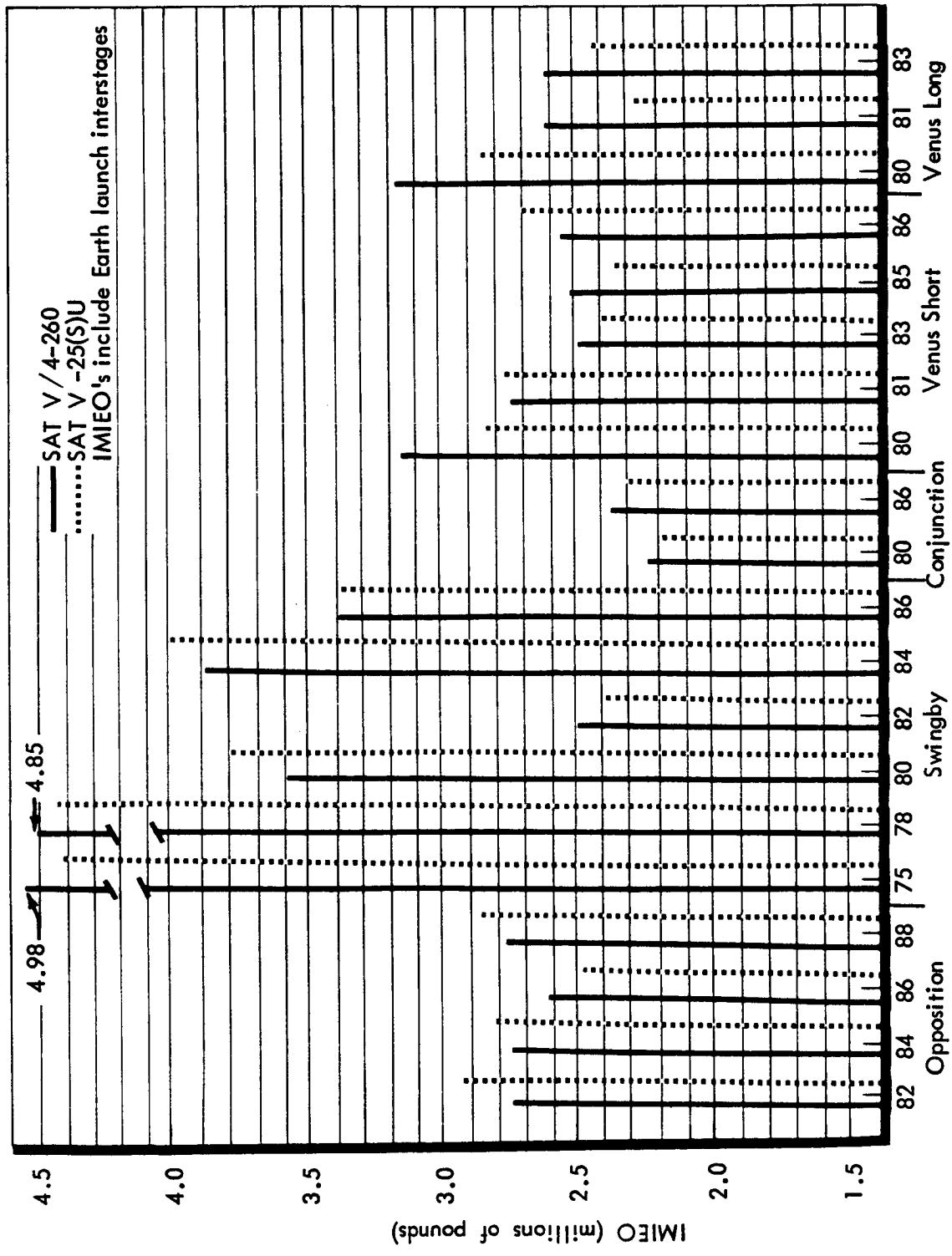

Figure 7.2-4: SPACE VEHICLE IMIEO'S COMMON MODULES

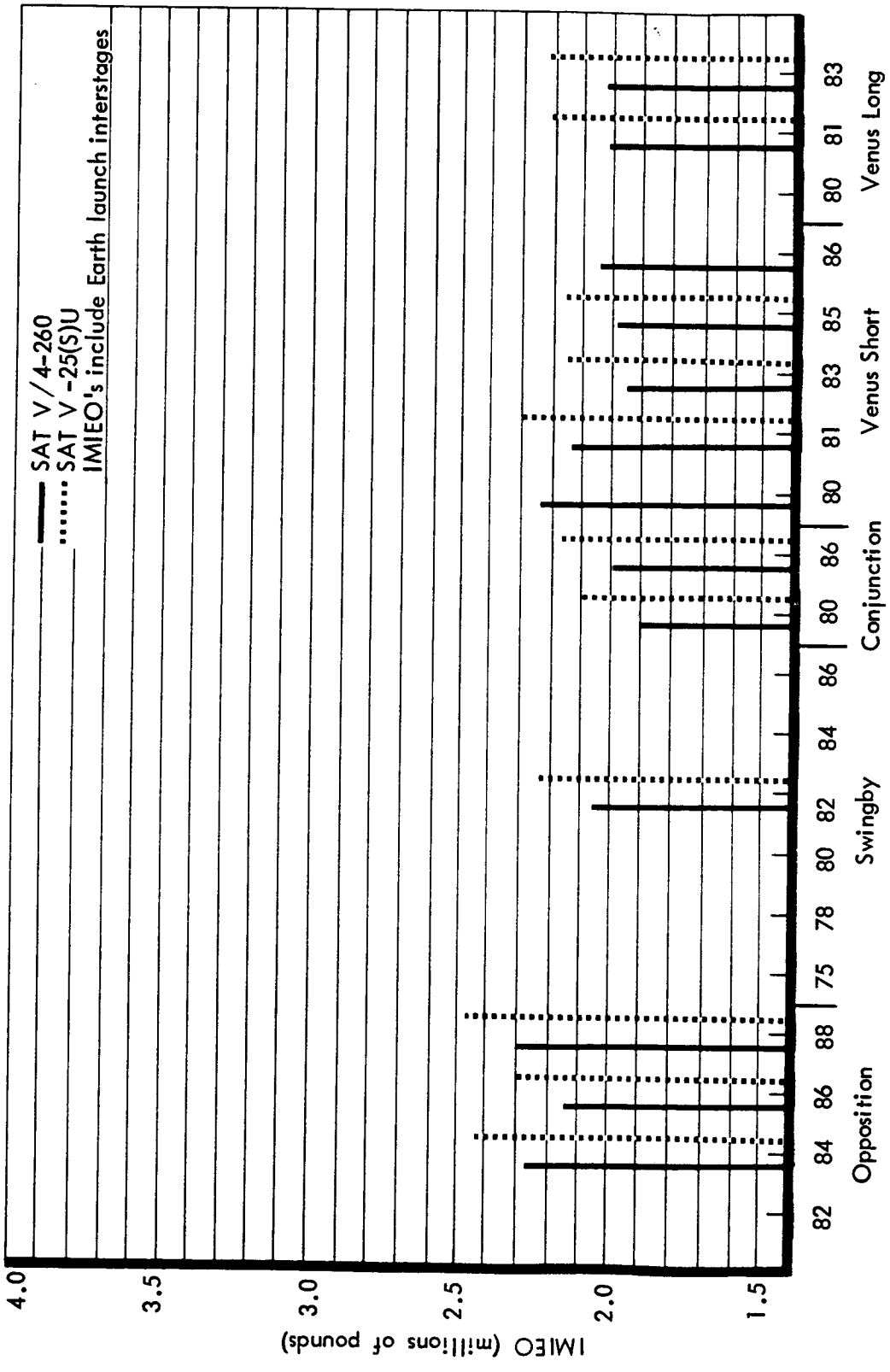

Figure 7.2-5: SPACE VEHICLE IMIEO'S FIXED TAILORED MODULES

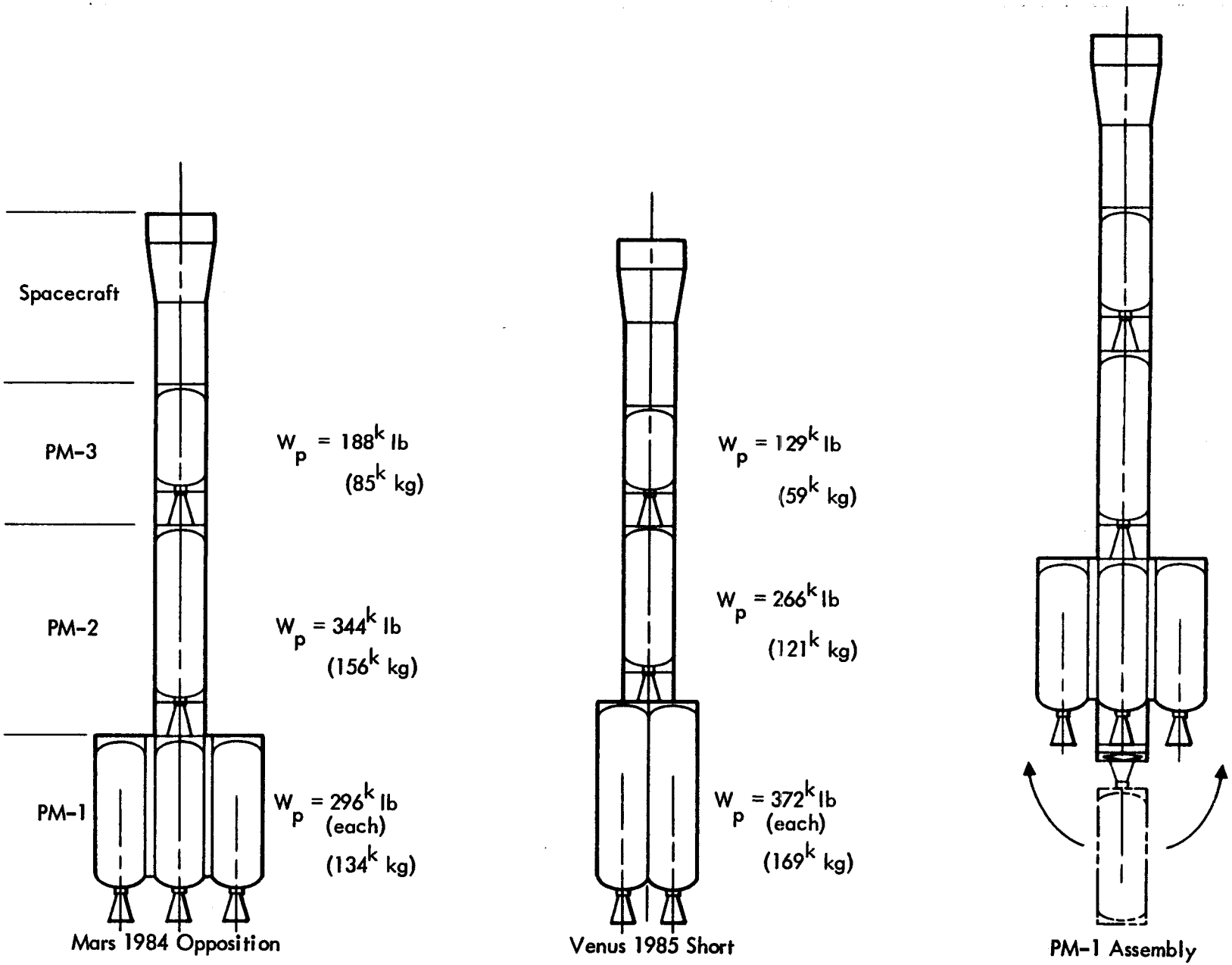

Figure 7.2-6: TAILORED MODULE CONFIGURATIONS SATURN V-25(S)U

Tailored module configurations using the Saturn V/4-260 also have each module of each mission a different size. The larger diameter of this tailored module, and the desirability to avoid, if possible, lateral PM-1 arrangements, require that for PM-1 several engines be used along with a PM-1A/B configuration approach. Such an arrangement is shown in Figure 7.2-7. In this arrangement, PM-1A consists of a single tank and necessary engines with the module sized by the launch capability of the Saturn V/4-260. The PM-1B module is then sized for the remainder of the PM-1 propellant and does not have any engines. This involves propellant transfer and in-orbit propellant line connections. Use of such an arrangement results in having an inline configuration for some missions allowing direct docking with no swinging of modules. The number of launches was determined from the IMIEO's for each design approach. Criteria for establishing launches was to have the minimum number of launches and have the elements launched in a sequence to allow orbital assembly with a minimum of repositioning of the elements. Tables 7.2-2 and 7.2-3 present the number of launches and the individual space vehicle element weights when used with the Saturn V-25(S)U and Saturn V/4-260, respectively. The main body of these tables are interpreted in the following manner. Numbers occurring immediately to the right of the mission year and IMIEO are the weights of each space vehicle element. On the line immediately below the weights is the launch number associated with each element. The column to the far right identifies the total number of launches and the space vehicle arrangement. To illustrate, refer to the 1984 opposition mission in Table 7.2-2. For this mission, three launches are required for PM-1 (all equal modules), one launch for PM-2, and one launch for the combined payload of the PM-3 and spacecraft.

The 1984 opposition mission shown in Table 7.2-3 requires the PM-1 to have two launches, PM-1A and PM-1B. PM-2 and PM-3 can be launched together and the spacecraft is launched with PM-1B.

7.2.6.2 Common Module

Common modules used for propulsion systems have the characteristics of being the same size for each PM and each mission. Propulsion capability to perform the various missions is provided by using different quantities of common modules.

The other major feature of the common module approach is that propellant is transferred from the upper module to the lower as required. Figure 7.2-8 depicts the transfer procedure during a typical mission. The modules are fully loaded with propellant. During the Earth departure maneuver, a quantity of propellant is required from PM-2 to fulfill the total PM-1 requirement. This partial depletion of the propellant in PM-2 required transferring of propellant from PM-3 to fulfill the PM-2 requirement. The remaining propellant in PM-3 is sufficient to perform the Mars/Venus departure maneuver.

Common modules for the Saturn V-25(S)U configuration are sized by the payload capability of the ELV to 262 nautical miles, which is approximately 550,000 pounds. Sizing in this manner results in a tank 33 feet in diameter and 115 feet in length with a propellant capacity of 385,000

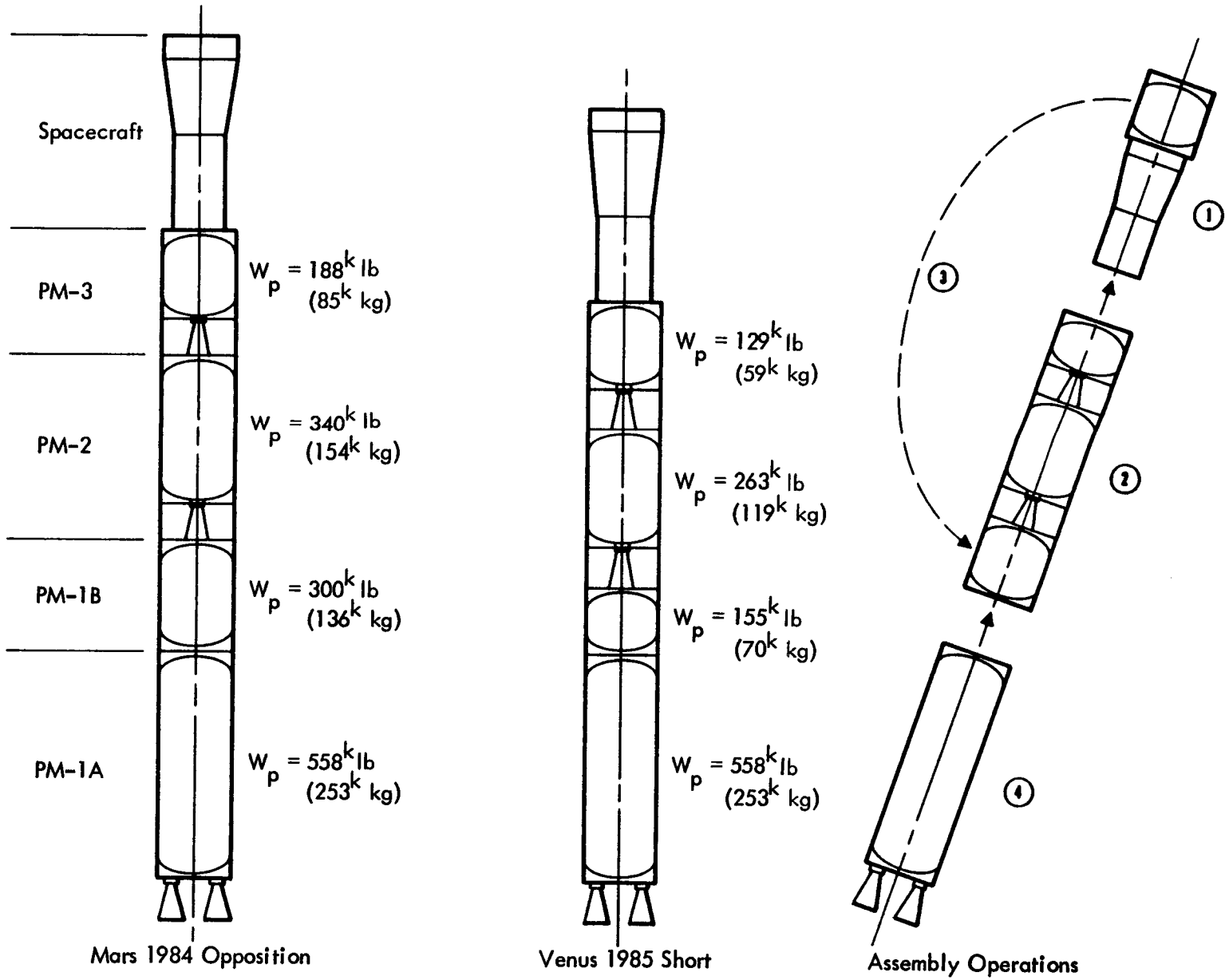

Figure 7.2-7: TAILORED MODULE CONFIGURATIONS SATURN V/4-260

Table 7.2-2: CONFIGURATION CHARACTERISTICS-- TAILORED MODULE SATURN V-25(S)U

Missions		IMIEO (1) (10^3 lb)	Start Burn Weight (10^3 lb)				Total Launches
			Earth Launch Number				Configuration Arrangement
Class	Yr		PM-1	PM-2/OBMC	PM-3/OT	S/C/IBMC	
Mars Opposition	82	2724	1591	455	362	251	6
			1-3	4	5	6	3-1-1-1
	84	2412	1277	517	307	246	5
			1-3	4	5*	5*	3-1-1-1
	86	2114	1116	420	280	246	4
			1-2*	3	4	4	2-1-1-1
	88	2403	1352	450	290	246	5
			1-3	4	5	5	3-1-1-1
Mars-Venus Swingby	75	3848	2310	972	207	255	8
			1-5	6-7	8	8	5-2-1-1
	78	4065	2677	776	248	260	8
			1-5	6-7	8	8	5-2-1-1
	80	2858	1757	591	167	252	7
			1-4	5-6	7	7	4-2-1-1
	82	2032	1105	355	265	255	4
			1-2*	3	4	4	2-1-1-1
	84	3262	2165	497	262	260	6
			1-4*	5	6	6	4-1-1-1
	86	2634	1570	570	179	250	5
			1-3	4*	5	5	3-1-1-1
Mars Conjunction	80	1692	921	280	162	277	4
			1-2	3	3	4	2-1-1-1
	86	1889	1000	353	205	279	4
			1-2	3	4	4	2-1-1-1
Venus Short	80	2665	1457	762	216	152	6
			1-3	4-5	6	6	3-2-1-1
	81	2154	1180	542	215	152	5
			1-3	4	5	5	3-1-1-1
	83	1891	972	468	241	158	4
			1-2	3	4	4	2-1-1-1
	85	1902	1051	411	230	158	4
			1-2	3	4	4	2-1-1-1
	86	2043	1066	554	218	153	4
			1-2	3*	4	4	2-1-1-1
Venus Long	80	2329	1243	595	238	175	6
			1-3	4-5	6	6	3-2-1-1
	81	1970	1013	504	228	173	4
			1-2	3	4	4	2-1-1-1
	83	1978	1035	482	235	174	4
			1-2	3	4	4	2-1-1-1

(1) Includes Earth launch interstages.

* Exceeds ELU capability by less than 5%.

Table 7.2-3: CONFIGURATION CHARACTERISTICS--TAILORED MODULE--SATURN V/4-260

Missions		IMIEO (1)	Start Burn Weight (10^3 lb)					Total Launches
			Earth Launch Number					
Class	Yr	(10^3 lb)	PM-1A	PM-1B	PM-2/OBMC	PM-3/OT	S/C/IBMC	Configuration Arrangement
Mars Opposition	82	2452	818 1*	538 2*	438 3*	353 3*	251 2*	3
	84	2266	779 1	387 2	499 3*	301 3*	246 2	3
	86	2078	779 1	293 2	431 2	275 3	246 3	3
	88	2297	779 1	498 2	435 3	285 3	246 2	3
Mars-Venus Swingby	75	3710	2243 1-3	-	917 4-5**	205 5	255 5	5
	78	3794	2524 1-4	-	658 5	244 6	260 6	6
	80	3214	2107 1-3	-	599 4	166 5	252 5	5
	82	1955	779 1	263 2	344 2	260 3	255 3	3
	84	3350	2254 1-3	-	504 4	242 5	260 5	5
	86	2561	779 1	750 2	550 3	178 4	250 4	4
Mars Conjunction	80	1607	779 1	62 2	273 2	162 2	277 2	2
	86	1826	779 1	168 2	344 2	202 3	279 3	3
Venus Short	80	2232	779 1	437 2*	597 3	213 2*	152 2*	3
	81	2040	779 1	323 2	520 3	212 2	152 2	3
	83	1808	779 1	130 2	450 2	237 3	158 3	3
	85	1814	779 1	200 2	396 2	227 3	158 3	3
	86	1947	779 1	216 2	530 2	215 3	153 3	3
Venus Long	80	2391	818 1*	437 2*	673 3	234 2*	175 2*	3
	81	1884	779 1	168 2	485 2	225 3	173 3	3
	83	1890	779 1	189 2	463 2	231 3	174 3	3

(1) Includes Earth launch interstages.

* Exceeds ELV capability by less than 5%.

** PM-2 has an A & B tank arrangement.

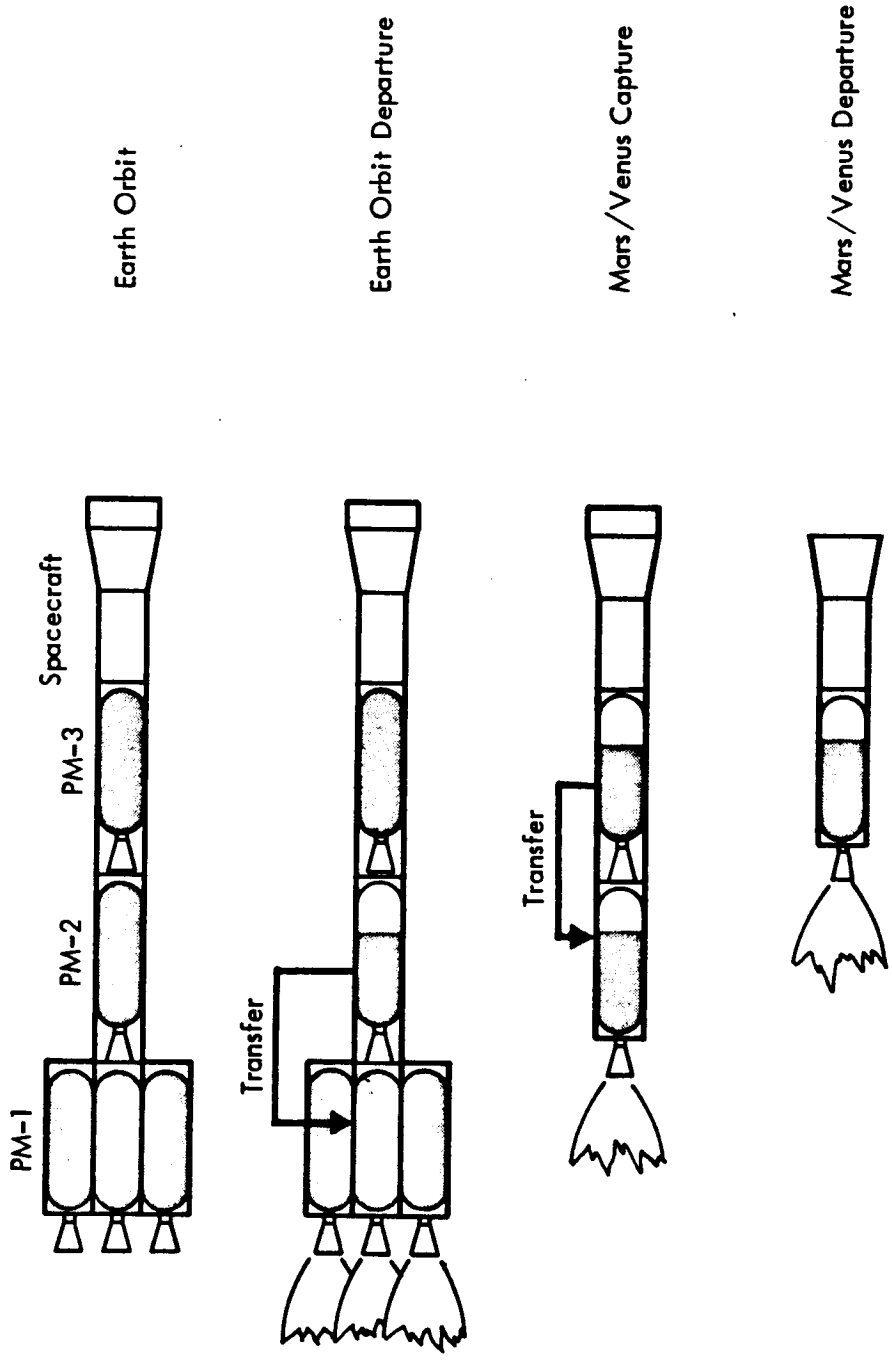

Figure 7.2-8: COMMON MODULE PROPELLANT TRANSFER OPERATIONS

pounds. In most cases, the spacecraft portion of the configuration is launched separately by a Saturn V-25(S)U core.

The common modules for use with the Saturn V/4-260 are sized by the approximate 800,000-pound capability of the ELV to 262 nautical miles. This results in a tank 42 feet in diameter and 106 feet in length with propellant capacity of 558,000 pounds.

Configuration characteristics showing the weight of each space vehicle element, amount of propellant transferred, and number of launches is presented in Tables 7.2-5 and 7.2-6 for the Saturn V-25(S)U and Saturn V/4-260, respectively. The main body of each table has the following interpretation. Numbers occuring to the right of the mission year and IMIEO are the weight requirements of each major element. If these tables are compared with Tables 7.2-2 and 7.2-3, an indication of any additional weight requirement for the common module approach can be noted. The number written in the "Total Launches" column is that for launching all PM's and the spacecraft; below these numbers the space vehicle arrangement is given. The number occurring below the PM weight requirement is the amount of propellant that must be obtained to provide the total PM requirements. In all cases, the transferred propellant comes from the next higher PM.

Interpretation of these tables is demonstrated by referring to the 1986 Opposition mission in Table 7.2-4 where the PM-1 weight requirement is 1,278,000 pounds. Use of two common modules in PM-1 of 1,070,000-pounds capability requires 208,000 pounds of propellant to be transferred from PM-2 to fulfill the PM-1 requirement. Depletion of a portion of the propellant in PM-2 requires 204,000 pounds of propellant transferred from PM-3 to provide the PM-2 requirement of 531,000 pounds.

7.2.6.3 Fixed Tailored Module

Fixed tailored module configurations consist of three modules of different capacity. Various combinations of these modules are used to perform as many missions as possible. The difficulty in this design approach is the selection of the size of the modules which when combined to form a propulsion system will allow the greatest number of missions to be performed, but still not be too far off optimum. The wide ΔV variation between missions makes this approach less attractive. The fixed tailored propulsion module design is further complicated by the fact that the spacecraft weights vary for Mars and Venus missions.

Selection of the combination of modules which allow a large number of missions to be performed is somewhat of a trial-and-error procedure which involves inspecting the tailored module configuration characteristic data (Tables 7.2-2 and 7.2-3) for selection of the best combinations.

Table 7.2-4: CONFIGURATION CHARACTERISTICS - COMMON MODULE - SATURN V-25(S)U

Missions		IMIEO (1)	Start Burn Weight Req't (10^3 lb) / Required Propellant Transfer (10^3 lb) / Earth Launch Number				Total Launches / Configuration Arrangement
Class	Yr	(10^3 lb)	PM-1	PM-2/OBMC	PM-3/OT	S/C/IBMC	
Mars Opposition	82	2927	1651	522	438	251	6
			46	33	--	--	3-1-1-1
			1-3	4	5	6	
	84	2809	1516	588	394	246	6
			--	53	--	--	3-1-1-1
			1-3	4	5	6	
	86	2482	1278	531	375	246	5
			208	204	--	--	2-1-1-1
			1-2	3	4*	5	
	88	2845	1599	554	381	246	6
			--	19	--	--	3-1-1-1
			1-3	4	5	6	
Mars-Venus Swingby	75	4429	2657	1100	313	255	8
			--	--	--	--	5-2-1-1
			1-5	6-7*	8	8	
	78	4420	2937	774	358	260	8
			--	212	--	--	5-1-1-1
			1-5	6*	7*	8	
	80	3777	2427	723	284	252	7
			179	--	--	--	4-2-1-1
			1-4*	5-6	7	7	
	82	2387	1275	441	364	255	5
			205	111	--	--	2-1-1-1
			1-2	3	4	5	
	84	3969	2650	606	362	260	8
			--	71	--	--	5-1-1-1
			1-5	6	7	8	
	86	3379	2043	724	297	250	7
			--	189	--	--	4-1-1-1
			1-4	5	6	7	
Mars Conjunction	80	2183	1188	390	276	277	4
			118	--	--	--	2-1-1-1
			1-2	3	4	4	
	86	2313	1213	450	319	279	4
			90	257	--	--	2-1-1-1
			1-2*	3*	4*	3*	

Table 7.2-4: CONFIGURATION CHARACTERISTICS - COMMON MODULE - SATURN V-25(S)U (continued)

Missions		IMIEO (1)	Start Burn Weight Req't (10^3 lb) / Required Propellant Transfer (10^3 lb) / Earth Launch Number				Total Launches / Configuration Arrangement
Class	Yr	(10^3 lb)	PM-1	PM-2/OBMC	PM-3/OT	S/C/IBMC	
Venus Short	80	2849	1580	725	327	152	6
			--	190	--	--	3-1-1-1
			1-3	4	5	6	
	81	2726	1518	665	326	152	5
			--	103	--	--	3-1-1-1
			1-3	4*	5*	5*	
	83	2343	1195	587	351	158	5
			125	177	--	--	2-1-1-1
			1-2	3	4	5	
	85	2302	1219	533	340	158	4
			96	67	--	--	2-1-1-1
			1-2*	3*	4	4	
	86	2641	1420	675	329	153	6
			--	139	--	--	3-1-1-1
			1-3	4	5	6	
Venus Long	80	2887	1576	789	347	175	6
			--	227	--	--	3-1-1-1
			1-3	4*	5*	6	
	81	2291	1105	621	340	173	4
			--	59	--	--	2-1-1-1
			1-2*	3*	4*	4*	
	83	2418	1248	598	346	174	5
			178	214	--	--	2-1-1-1
			1-2	3*	4*	5	

(1) Includes Earth launch interstages.

* Exceeds ELV capability by less than 5%.

Table 7.2-5: CONFIGURATION CHARACTERISTICS - COMMON MODULE - SATURN V/4-260

Missions		IMIEO (1)	Start Burn Weight Req't (10^3 lb) / Required Propellant Transfer (10^3 lb)				Total Launches
			Earth Launch Number				
Class	Yr	(10^3 lb)	PM-1	PM-2/OBMC	PM-3/OT	S/C/IBMC	Configuration Arrangement
Mars Opposition	82	2741	1377	568	491	251	4
			559	309	--	--	1-1-1-1
			1*	2*	3*	4	
	84	2717	1328	639	450	246	4
			510	331	--	--	1-1-1-1
			1*	2*	3	4	
	86	2591	1286	579	426	246	4
			507	307	--	--	1-1-1-1
			1	2	3	4	
	88	2746	1409	603	434	246	4
			591	376	--	--	1-1-1-1
			1*	2*	3*	4	
Mars-Venus Swingby	75	4977	3021	1238	355	255	7
			--	459	--	--	4-1-1-1
			1-4	5	6*	7	
	78	4857	3195	891	403	260	6
			79	152	--	--	4-1-1-1
			1-4	5*	6*	6*	
	80	3575	2161	767	323	252	5
			525	474	--	--	2-1-1-1
			1-2*	3*	4*	5	
	82	2453	1238	496	410	255	3
			459	137	--	--	1-1-1-1
			1	2*	3*	3*	
	84	3827	2508	650	409	260	5
			171	42	--	--	3-1-1
			1-3	4	5	5	
	86	3357	1926	772	337	250	4
			290	244	--	--	2-1-1
			1-2*	3*	4*	4*	
Mars Conjunction	80	2219	1140	436	312	277	3
			361	18	--	--	1-1-1-1
			1	2	3	3	
	86	2350	1162	501	354	279	3
			383	105	--	--	1-1-1-1
			1	2	3	3	

Table 7.2-5: CONFIGURATION CHARACTERISTICS - COMMON MODULE - SATURN V/4-260 (continued)

Missions		IMIEO (1)	Start Burn Weight Req't (10^3 lb) / Required Propellant Transfer (10^3 lb)				Total Launches
			Earth Launch Number				Configuration
Class	Yr	(10^3 lb)	PM-1	PM-2/OBMC	PM-3/OT	S/C/IBMC	Arrangement
Venus Short	80	3124	1678	850	372	152	4
			120	191	--	--	2-1-1
			1-2	3	4	4	
	81	2692	1357	758	371	152	4
			539	479	--	--	1-1-1-1
			1*	2*	3*	4	
	83	2450	1175	667	396	158	3
			357	206	--	--	1-1-1-1
			1*	2*	3	3	
	85	2494	1289	608	385	158	3
			471	261	--	--	1-1-1-1
			1*	2*	3*	3*	
	86	2513	1163	769	374	153	3
			345	296	--	--	1-1-1-1
			1*	2*	3*	3*	
Venus Long	80	3184	1648	897	392	175	4
			90	208	--	--	2-1-1
			1-2	3	4	4	
	81	2566	1248	707	384	173	4
			469	397	--	--	1-1-1-1
			1	2	3	4	
	83	2566	1269	679	390	174	4
			490	390	--	--	1-1-1-1
			1	2	3	4	

(1) Includes Earth launch interstages.

* Exceeds ELV capability by less than 5%.

Table 7.2-6: CONFIGURATION CHARACTERISTICS - FIXED TAILORED MODULE - SAT-V-25(S)U

Missions		IMIEO (1)	Start Burn Weight (10^3 lb)				Total Launches
			Earth Launch Number				Configuration Arrangement
Class	Yr	(10^3 lb)	PM-1	PM-2/OBMC	PM-3/OT	S/C/IBMC	
Mars Opposition	82						
	84	2441	1320	501	309	246	5
			1-3	4	5*	5	3-1-1-1
	86	2313	1254	456	290	246	5
			1-3	4	5	5	3-1-1-1
	88	2470	1389	474	296	246	5
			1-3	4	5	5	3-1-1-1
Mars-Venus Swingby	75						
	78						
	80						
	82	2251	1257	394	280	255	5
			1-3	4	5	5	3-1-1-1
	84						
	86						
Mars Conjunction	80	2093	1197	351	203	277	5
			1-3	4	5	5	3-1-1-1
	86	2190	1208	401	237	279	5
			1-3	4	5	5	3-1-1-1
Venus Short	80						
	81	2322	1300	562	243	152	5
			1-3	4*	5	5	3-1-1-1
	83	2157	1168	502	264	158	5
			1-3	4	5	5	3-1-1-1
	85	2183	1245	460	255	158	5
			1-3	4	5	5	3-1-1-1
	86						
Venus Long	80						
	81	2221	1194	533	256	173	5
			1-3	4	5	5	3-1-1-1
	83	2228	1213	515	261	174	5
			1-3	4	5	5	3-1-1-1

(1) Includes Earth launch interstages.

* Exceeds ELV capability by less than 5%.

The general configuration of a fixed tailored module system using the Saturn V-25(S)U was three modules in PM-1 and one module in each PM-2 and PM-3. Configurations for the final tailored module approach and Saturn V-25(S)U are shown in Figure 7.2-9.

The configuration for the final tailored module systems using the Saturn V/4-260 utilizes a PM-1 A/B approach similar to that of the tailored module design. This results in sizing four different modules. Configurations are also shown in Figure 7.2-9.

Design characteristics of the fixed tailored module system are presented in Tables 7.2-6 and 7.2-7. The data presented in these tables follow the same format as that presented for the tailored modules. These can be compared with the tailored module approach. It should be noted that in many cases, the masses of the fixed tailored module are greater than for those of the tailored module approach.

7.2.7 COST

The major cost categories for the commonality study included space propulsion, Earth launch vehicles, assembly and docking units, orbital operations, spacecraft, and mission support. All but the last two vary with the space propulsion design approach and ELV selected. Development cost and mission cost were established for each cost category.

To allow a more realistic cost comparison of the design approaches, a hypothetical but representative mission program was established. This program consisted of four primary missions and three alternates. Major considerations in selecting the missions were the earliest time at which a mission could be performed, scientific interest, and separation time between missions. The primary and alternate missions and departure data which were selected are as follows:

Primary

Venus Short	October	1981
Mars Opposition	February	1984
Mars-Venus Swingby	April	1985
Mars-Conjunction	--	1988

Alternates

Venus Short	May	1983
Venus Short	--	1985
Venus Long	--	1985

Cost Conditions--In addition to the mission program presented above, the following are the cost conditions utilized in the study:

1) Demonstration test will be on the basis of the October 1981 Venus short mission.

2) Orbital support for PM testing provided by spacecraft orbital tests.

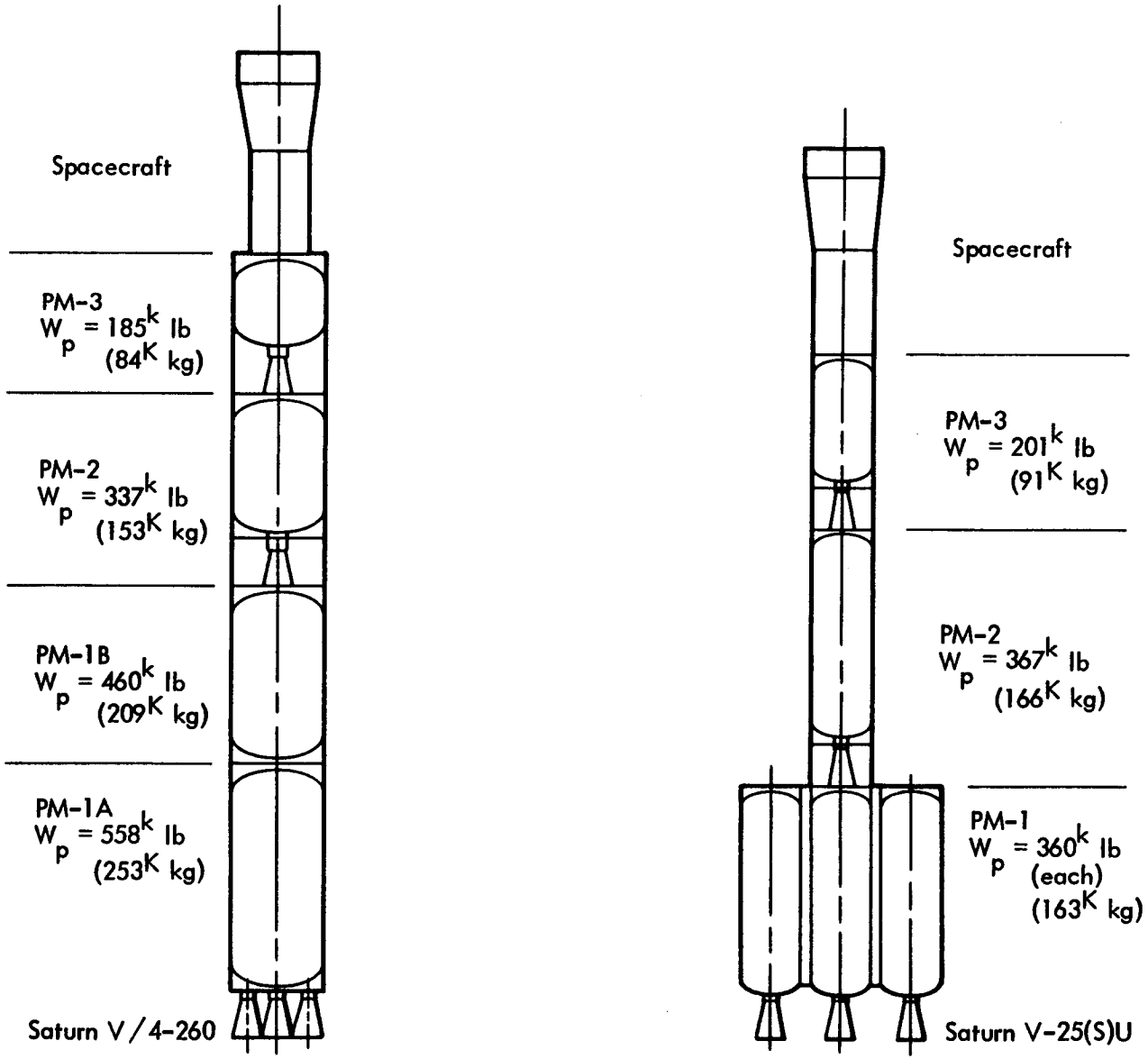

Figure 7.2-9: FIXED TAILORED MODULE CONFIGURATIONS

Table 7.2-7: CONFIGURATION CHARACTERISTICS - FIXED TAILORED MODULE - SATURN V/4-260

Missions		IMIEO (1)	Start Burn Weight (10^3 lb)					Total Launches
			Earth Launch Number					Configuration Arrangement
Class	Yr	(10^3 lb)	PM-1A	PM-1B	PM-2/OBMC	PM-3/OT	S/C/IBMC	
Mars Opposition	82							
	84	2271	779 1	425 2	470 3	297 3	246 2	3
	86	2139	779 1	357 2	426 3	277 3	246 2	3
	88	2312	779 1	504 2	444 3	285 3	246 2	3
Mars-Venus Swingby	75							
	78							
	80							
	82	2078	779 1	357 2	365 3	268 3	255 2	3
	84							
	86							
Mars Conjunction	80	1910	779 1	290 2	321 3	189 3	277 2	3
	86	2014	779 1	306 2	372 3	224 3	279 2	3
Venus Short	80	2251	779 1	454 2	581 3*	231 3*	152 2	3
	81	2137	779 1	397 2	525 3*	230 3*	152 2	3
	83	1964	779 1	257 2	465 3	251 3	158 2	3
	85	1997	779 1	338 2	426 3	242 3	158 2	3
	86	2064	779 1	312 2	533 3	233 3	153 2	3
Venus Long	80							
	81	2030	779 1	286 2	496 3	242 3	173 2	3
	83	2038	779 1	306 2	478 3	247 3	174 2	3

(1) Includes Earth launch interstages.

* Exceeds ELV capability by less than 5%.

3) "All-up" ELV tests are planned.

4) Standby ELV's, PM's, and spacecraft required for missions and demonstration tests:

- ELV quantities per reliability analysis

  Saturn V-25(S)U)--Approximately one spare per three

  Saturn V/4-260--Approximately two spares per five

- PM's for each mission as variation in design dictates.
- Spacecraft spare per mission. If not required, store and refurbish for next mission.

5) Logistic spacecraft is a six-man modified Apollo/Saturn 1B--five reuses.

6) Provide three launch pads for both the Saturn V-25(S)U and Saturn V/4-260.

Design Approach Cost--A complete cost breakdown of the major program elements and the major categories of development and mission cost are presented in Table 7.2-8 for the common module design approach using the Saturn V-25(S)U. The four-mission cost is approximately $30 billion. This particular cost breakdown was used for each of the design approach combinations investigated. Cost sheets for the other approaches are presented in Volume V. Much of the cost data utilized in the commonality study was derived from the space acceleration/ELV trade study. Cost for the orbital operations element includes operations of the mission support facilities at KSC and MSC, manned space network and data processing, and also logistic space vehicle cost including the spacecraft and ELV, and the recovery of the logistic spacecraft.

Basic R&D cost is that required to develop a configuration for one mission. The cost shown is for the 1988 conjunction mission which would be the maximum cost spacecraft (mission module) because of the long duration. Mission peculiar costs are related to the modifications required of the basic configuration to enable other missions to be flown. Most notable of these modifications are new propulsion module lengths (does not apply to common module and fixed tailored module) and the second experiment probe complement related to Venus missions.

Total program cost for each of the six design approaches and four mission program is shown in Figure 7.2-10. As indicated by this figure, all design approaches investigated resulted in a program cost of approximately $30 billion.

It should be noted, however, that the fixed tailored module concepts did not perform the more difficult 1986 swingby mission and consequently the cost cannot be compared directly with the other approaches. The cost for the fixed tailored modules are, however, for four missions.

Cost breakdown for the major program elements for each of the six design approaches are shown in Figure 7.2-11. The most significant cost in all cases are the spacecraft and mission support. ELV costs are approximately half of the cost which varied with the investigated design approaches.

Table 7.2-8: PROGRAM COST BREAKDOWN - COMMON MODULE - SAT V-25(S)U (FOUR MISSIONS)

		Development						Missions			
			Test Program								
		Basic R&D ($\$10^6$)	Flight Unit	Spares	Cost ($\$10^6$)	Missions Peculiar R&D ($\$ 10^6$)	Total Development	Flight Units	Spares	Cost ($\$ 10^6$)	Total Program ($\$ 10^6$)
Space Propulsion	PM-1	765	10	2	350		1115	12	7	558	1673
	PM-1A							-0-	-0-	-0-	-0-
	PM-2							4	2	177	177
	PM-3							4	2	177	177
	Management and Integration	75			36		111			91	202
	Total	840			386		1226			1003	2229
Earth Launch Vehicles	ELV FLIGHT Hardware	552			1088		1640			2640	4280
	Program Peculiar	-0-			-0-		-0-			-0-	-0-
	Launch Site	272	11	1	33		305	22	7.3	82	387
	Launch Operations	-0-			299		299			736	1035
	Management Assembly and Integration	-0-			140		140			348	488
	Total	824			1560		2384			3806	6190
	Assembly and Docking Unit and Midcourse Correction	140			218		358			550	908
	Orbital Operations	-0-			475		475			1600	2075
	Total Acceleration Cost	1804			2639		4443			6959	11402
	Spacecraft and Mission Support	10940			4200	1450	16590			2650	19240
	Total Program	12744			6839	1450	21033			9609	30642

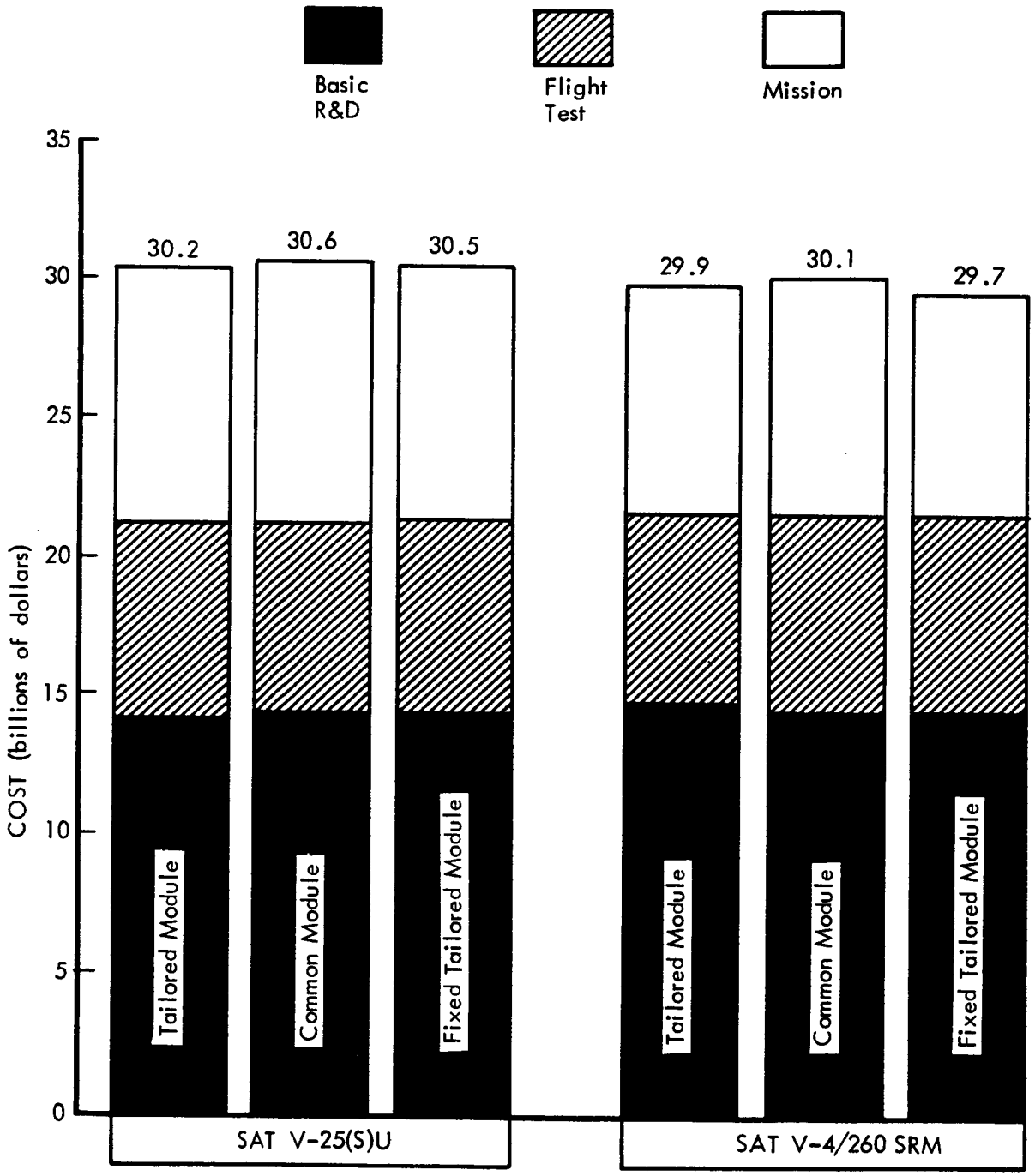

Figure 7.2-10: DESIGN APPROACH COST COMPARISON

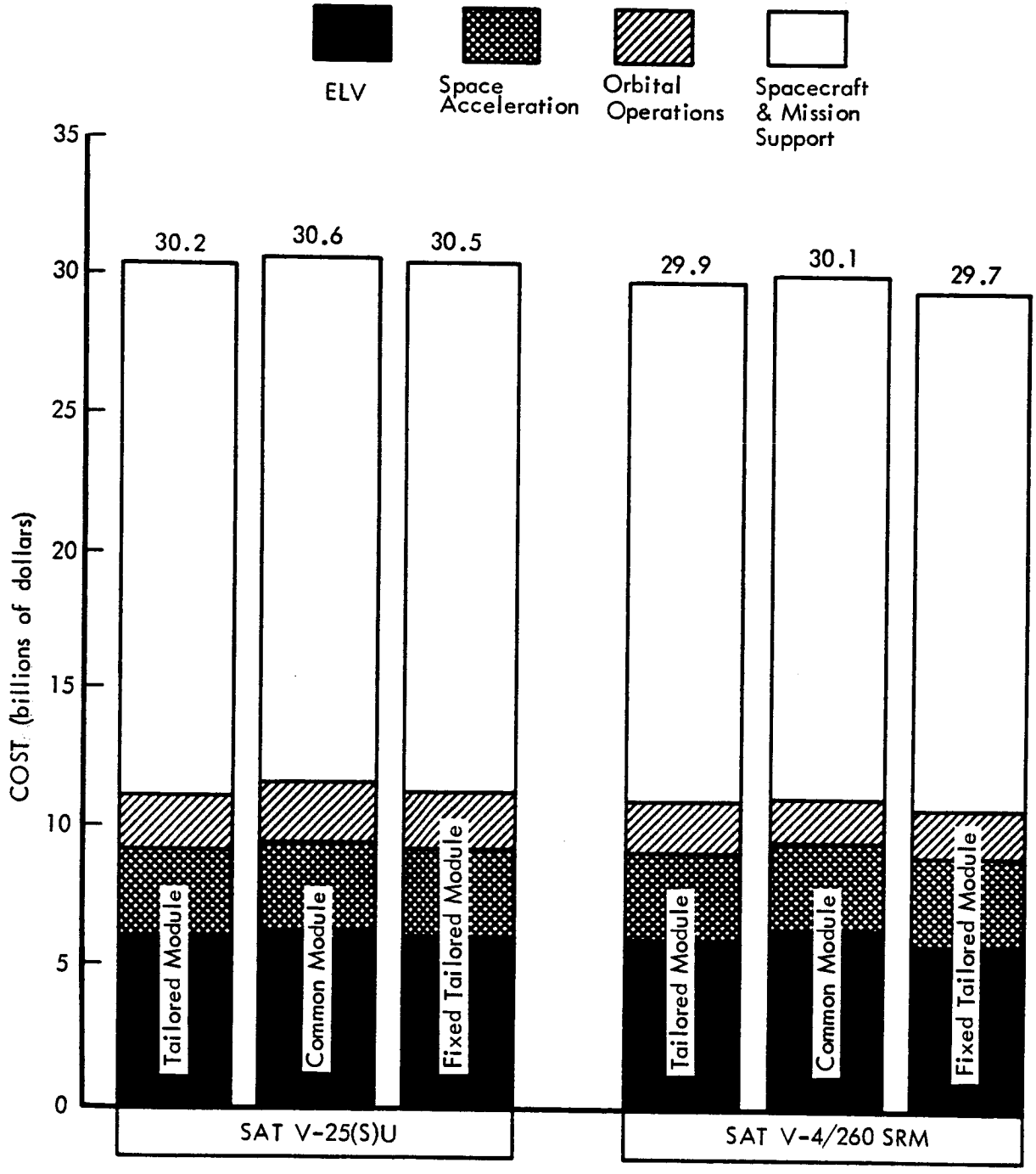

Figure 7.2-11: PROGRAM ELEMENT COST COMPARISON

7.2.8 EVALUATION

The evaluation of these design approaches is presented in Table 7.2-9. A portion of this evaluation required a mission program for assessment while others were of a more general nature. The representative mission program used for the evaluation included the following missions:

- 1981 Venus Short
- 1984 Mars Opposition
- 1986 Mars-Venus Swingby
- 1988 Mars Conjunction

7.2.8.1 IMIEO

Initial mass in Earth orbit (IMIEO) comparisons present the weights associated with the lightest and heaviest missions of the representative mission program. These two missions correspond to the 1988 Mars conjunction and 1986 Mars-Venus swingby missions, respectively. Weights, however, are not provided for the Mars-Venus swingby mission using the fixed tailored module approach because this configuration could not do the mission. Comparison of these IMIEO's lead to the following observations:

1) Using the same ELV, the common module approaches generally weighs approximately 500 to 700 thousand pounds greater than tailored module configurations. This weight difference is due to the PM-2 and particularly PM-3 having a larger structural weight than the corresponding module of a tailored module configuration.
2) There is little IMIEO difference for a specific design approach such as the common module regardless of which ELV is used.
3) Fixed tailored module configurations weigh less than common module configurations because the modules are only slightly larger than those of a tailored module configuration.

7.2.8.2 Cost

Cost comparison of the design approaches was made on only the space acceleration system, Earth launch vehicles, and orbital operations. Included in the space acceleration cost is that relating to the assembly and docking units and midcourse propulsion systems. Orbital operations include the ground systems required to operate during orbital assembly and the required logistics support launches. The cost presented in this comparison are for the representative four-mission program. Again it should be noted that the cost for the fixed tailored module concepts are not quite comparable because the 1986 swingby mission could not be performed. Cost, however, has been included for four missions using the specified configuration associated with both ELV's. An examination of these costs for the three space acceleration concepts shows the maximum cost variation (Table 7.2-9) regardless of ELV to be less than 1.5% of total program costs (Figure 7.2-10); thus, cost is not a determining factor in choosing a space acceleration approach when the state of the costing art is considered.

Table 7.2-9:B SPACE ACCELERATION DESIGN APPROACH COMPARISON

Concepts		Comparison Criteria											
		IMIEO Range (10^3 lb) (1)	Cost = 10^6 dollars			Complexity			Growth		Design Flexibility	Development Risk	Potential Mission Capability
			S/A	ELV	Oper	Number of Launches	Average Assembly Time (days)	Special Problems	IMIEO Sensitivity (lb/lb payload)	Weight Margin			CM-SAT-V-25(S)U
			Total										
SAT-V-25(S)U	Tailored Module	1882-2634	3.22	5.82	2.08	19	140	PM-1 lateral module assembly — all missions	15	Generally unavailable	Payload or ΔV changes require new space acceleration modules	Requires firm commitment of mission Many PM sizes	17/20
			11.00										
	Common Module	2312-3293	3.14	6.19	2.08	22	152	Propellant transfer PM-1/-2/-3 PM-1 lateral module assembly — all missions	5	Generally available	Playload or ΔV changes have no effect on space acceleration module and generally no effect on space acceleration configuration	Propellant transfer Sooner go-ahead	17/20
			11.40										
	Fixed Tailored Module	2190-(2)	3.15	6.06	2.08	20 (3)	140	PM-1 lateral module assembly — all missions	> 5 <15	Possibly available	Payload or ΔV changes generally require new space acceleration modules	Requires firm commitment of many missions	11/20 (3)
			11.29										
SAT-V/4-260	Tailored Module	1819-2575	3.25	5.72	1.70	13	84	Propellant transfer PM-1A/B PM-1 lateral module assembly — some missions	15	Generally unavailable	Payload or ΔV changes require new space acceleration modules	Requires firm commitment of mission Many PM sizes	19/20
			10.67										
	Common Module	2351-3358	2.97	6.19	1.70	15	84	Propellant transfer PM-1/-2/-3 PM-1 lateral module assembly — some missions	5	Generally available	Payload or ΔV changes have no effect on space acceleration module and generally no effect on space acceleration configuration	Propellant transfer Sooner go-ahead	18/20
			10.86										
	Fixed Tailored Module	2014 - (2)	3.17	5.56	1.70	12 (3)	84	Propellant transfer PM-1A/B PM-1 lateral module assembly — some missions	> 5 <15	Possibly available	Payload or ΔV changes generally require new space acceleration modules	Requires firm commitment of many missions	13/20 (3)
			10.43										

(1) Includes Earth launch interstages
(2) Did not perform the 1986 Swingby Mission
(3) Limited by a fixed configuration

Table 7.2-9:A

395

FOLDOUT FRAME

FOLDOUT FRAME

7.2.8.3 Complexity

The complexity category of Table 7.2-9 includes the number of Earth launches required, average time to assemble space vehicle in Earth orbit, and the identification of special problems.

The common module for both ELV's requires two to three more launches for the four-mission program than the tailored module. Launches for the fixed tailored concept are not comparable because it could not perform the more difficult swingby mission which needed the most number of launches.

Orbital assembly time, whose cost impact has already been included in the cost evaluation, does not vary significantly as a function of space acceleration concept when either ELV is considered. For the Saturn V-25(S)U, the variation averages approximately 12 days while for the Saturn V/4-260 no variation is expected.

The common module approach requires propellant flow monitoring between stages and PM-1 lateral assembly for all missions with the Saturn V-25(S)U and for some missions with the Saturn V/4-260. With tailored or fixed tailored modules using the Saturn V-25(S)U, no special problems have been identified other than lateral assembly of PM-1 modules. However, with the Saturn V/4-260 either lateral assembly or propellant transfer between PM-1A and PM-1B is required for nearly all missions.

7.2.8.4 Growth

Growth assessment of the design approaches include IMIEO sensitivity and weight margin. IMIEO sensitivity is the weight in Earth orbit required to place one additional pound through the inbound midcourse correction maneuver. Common modules have a low penalty as a result of having propellant transfer capability and also the condition of PM-3 not being completely loaded for many of the missions. Consequently, up until the PM-3 is completely loaded the penalty is only that of adding propellant as the tankage is already available. Tailored modules, however, by definition are sized exactly for a specific payload and ΔV requirement. Therefore, adding additional payload not only required additional propellant but also the tankage to accommodate the propellant. This results in the largest sensitivity factor. Fixed tailored modules IMIEO sensitivity factor will be greater than for the common module approaches, but less than for tailored modules.

Weight margin capability is the amount of weight difference between the total vehicle capability and the actual mission requirement. Although each concept for specific missions can have a weight margin, it rarely is as useful as when a common module approach is used. This is due again to the propellant transfer capability of the common module approach. As long as a margin is available in the total propulsion system it is useful. Having the capability to transfer propellant eliminates the requirement of having a weight margin in all three PM's if a weight margin is desired as is the case for tailored module designs.

7.2.8.5 Design Flexibility

This category examines the effect on each space acceleration concept of reasonable changes in design or mission requirements.

With the common module concept reasonable changes in payload or ΔV requirements will in most cases result in no change to the space acceleration configuration. This condition occurs because a weight margin exists for nearly all missions. This is not the case for tailored or fixed tailored modules where changes in design payloads or mission ΔV's always require new propulsion modules. The tanks tailored to the old design requirements are then of no use, with the time and moneys spent in their production lost. This is of special concern when an increasing payload change occurs since for this case all tailored tanks which have been developed for a multiple mission program may be unacceptable.

7.2.8.6 Development Risk

Development risk relates to meeting the required program schedule. Associated with the tailored module approaches are the factors of requiring a firm commitment to the mission to be flown and the exact ΔV's of each PM. The large number of propulsion modules sizes could also result in more unforeseen problems. Common module designs by having propellant transfer capability and using multiples of these modules to provide the required total impulse do not require a firm commitment of a mission. As a result of this factor, development of a common module could begin at an earlier date than for either the TM or FTM approaches. Fixed tailored module designs have much the same development characteristics as the TM.

7.2.8.7 Potential Mission Capability

Potential mission capability deals with the number of missions from which the four-mission program can be selected if a fixed cost is established.

The 20 missions investigated in the main portion of this study were not constrained by a fixed cost as the purpose was to establish vehicle characteristics for all missions. For this particular comparison criteria, a reference cost is established for a common module design using the Saturn V-25(S)U with the representative four-mission program. The remaining design concepts are then equated in cost to the baseline. Any cost difference between the baseline and the other concepts is applied to the total number of launches available which contributes in establishing the number of missions which may be performed.

A comparison of these concepts on an equal cost basis indicates that the potential mission capability is the same for common and tailored modules when the Saturn V-25(S)U is used. When the Saturn V/4-260 is used, the common module has slightly less potential mission capability than the tailored module.

The fixed tailored module was not judged on an equal-cost basis. Instead, the number of missions which could be performed with the design investigated is given.

7.2.8.8 Recommended System Selection

As a result of the discussed evaluations the common module approach was selected. It offers the highest degree of flexibility when used in combination with the Saturn V-25(S)U launch vehicle.

APPENDIX A
ELV CANDIDATES

1.0 INTRODUCTION

The ELV candidates, described in this section, have been studied in detail under other contracts, are being studied under separate contracts running parallel timewise to the IMISCD study, or are modifications to the ELV's developed under these contracts. The exception is the clustered Saturn configuration that was studied inhouse. Table 1 lists the candidate ELV's and their net payload capabilities to a 262-nautical-mile assembly orbit. The ELV configurations used in the IMISCD study may not be identical to the configurations reported under the separate contracts since the IMISCD ELV configurations were selected before the ELV studies were completed or the configurations were purposely modified slightly. However, all the ELV configurations used in the IMISCD study are realistic and, in terms of performance, cost and facilities impact, are similar to their counterparts reported under separate contracts.

The uprated Saturn V studies performed under Contract NAS8-20266 considered that the overall height of the aerospace vehicle in the VAB was limited by the hook height of the mobile launcher crane. As shown in Figure 1 this resulted in an aerospace vehicle height of 410 feet. The 410-foot aerospace vehicle height was used in the optimization studies performed under contract NAS8-20266. However, using the crane installed in the VAB, the overall height of the aerospace vehicle mounted on the mobile launcher in the transporting position is limited by the 456-foot door height. Allowing a 1-foot door clearance, the aerospace vehicle overall height limitation is then 416 feet rather than 410 feet when installed on the mobile launcher.

The configuration, capabilities, and facilities impact of the ELV's considered in the IMISCD study are described in this document in sufficient detail to permit their evaluation. The reader interested in greater detail is referred to the following documentation prepared under the separate ELV contracts:

1) Contract NAS8-20266, entitled *Studies of Improved Saturn V Vehicles and Intermediate Payload Vehicles*

   a) D5-13183-1, dated 10-7-66, entitled *Vehicle Description of MLV-SAT-V-INT-20, -21*

   b) D5-13183-3, dated 10-7-66, entitled *Vehicle Description of MLV-SAT-V-25(S)*

   c) D5-13183-4, dated 10-7-66, entitled *Vehicle Description of MLV-SAT-V-4(S)B*

   d) D5-13183-5, dated 10-7-66, entitled *Vehicle Description of MLV-SAT-V-23(L)*

   e) D5-13183-6, dated 10-7-66, entitled *Research and Technology Implications Report*

   f) D5-13183-7, dated 10-7-66, entitled *First Stage Cost Plan*

Table 1: ELV CANDIDATES

ELV Class	ELV	Gross P/L to 262 N.Mi. Circular Orbit (K lbs)
Supplementary	SAT-INT-21	237.3
Modest Uprated Saturn V	MLV-SAT-V-4(S)B	351.4
	MLV-SAT-V-25(S)	457.7
	MLV-SAT-V-23(L)	536.7
	MLV-SAT-V-25(S)U	
	Core	302.7
	Core + 2 S/O	410.8
	Core + 4 S/O	548.4
Medium Uprated Saturn V With Large Payload Volume Capability	MLV-SAT-V/4-260 (SRM)	797.2
	MLV-SAT-V-23L-II	673.7
	MLV-SAT-V/4-260 (LIQ)	797.2
Large Uprated Saturn V	Clustered Saturn	
	-1XU	302.7
	-3XU	862.0
	-4XU	1163.5
Multipurpose Large Launch Vehicle	Post-Saturn	
	Core	1205.6
	Core + 2 S/O	1484.3
	Core + 4 S/O	2073.8
	Core + 6 S/O	2927.0
	Core + 8 S/O	3589.0
	Core + 10 S/O	4047.0
	Core + 12 S/O	4204.0

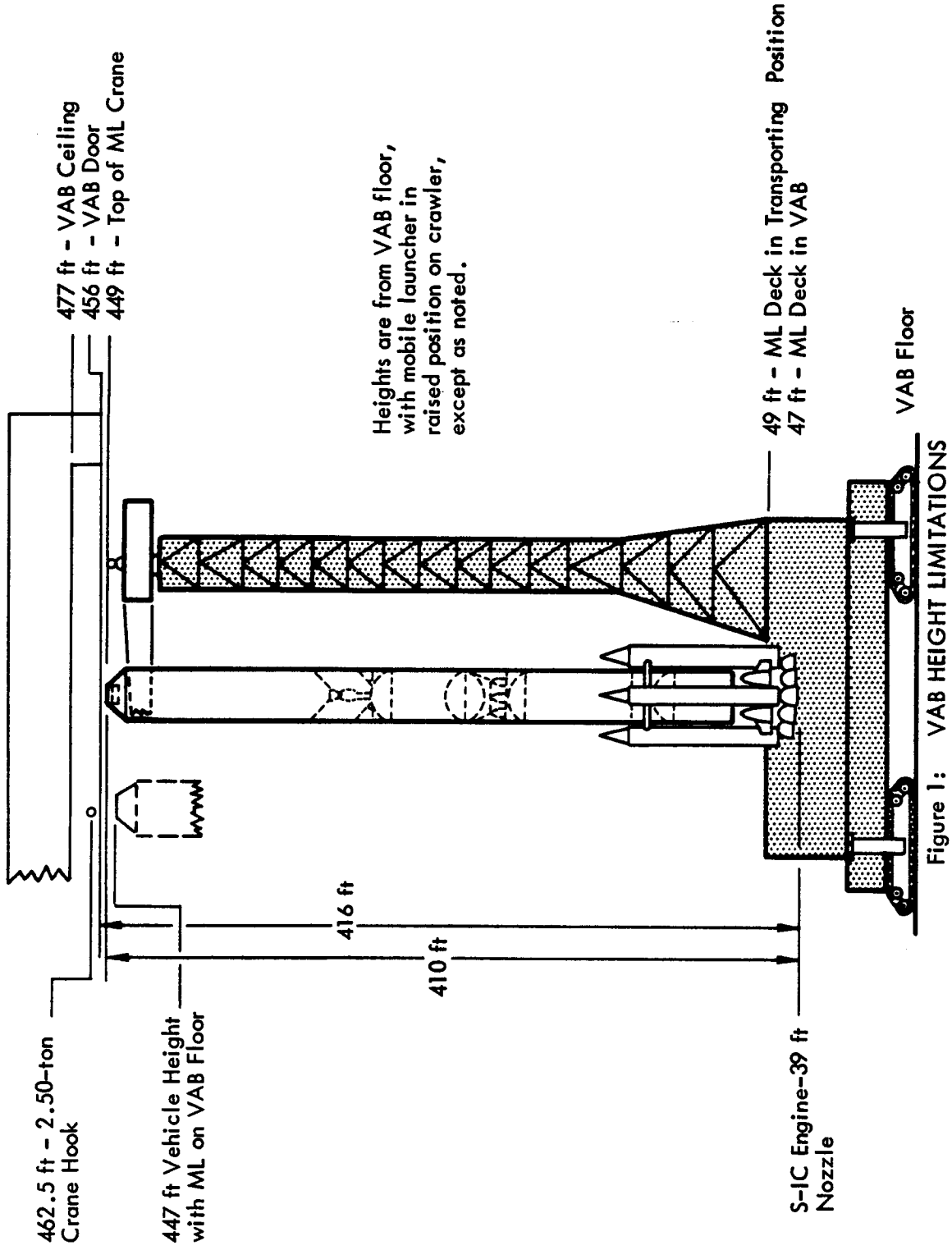

Figure 1: VAB HEIGHT LIMITATIONS

2) Contract NAS8-21105, entitled *Saturn V Launch Vehicle With 260-inch Diameter Solid Motors* (Final report to be issued.)

3) Contract NAS2-4079, entitled *Study of Advanced Multipurpose Large Launch Vehicles* (Final report to be issued.)

2.0 MLV-SAT-V-INT-21

The INT-21 launch vehicle consists of standard S-IC and S-II stages. Various versions consisting of different numbers of engines in the two stages were studied under contract NAS8-20266. However, only the five-engine S-IC stage and five-engine S-II stage version (a standard two-stage Saturn V) was considered in the IMISCD study. The INT-21 was not considered as a primary launch vehicle, but its use was allowed as a supplemental launch vehicle with certain other ELV's such as the MLV-SAT-V/4-260 and post-Saturn. Its use was not permitted with the other uprated Saturn V's or clustered Saturns since the uprated core vehicle alone can be used if required for a small payload launch. This approach allowed launch capability flexibility within the IMISCD study ground rule that only one new ELV would be developed for a manned interplanetary mission program.

2.1 Configuration Description

The configuration of the INT-21 is shown in Figure 2. The stages are standard Saturn V stages. Extending the cylindrical payload section to 410 feet provides a 33-foot (10 m) diameter payload envelope that is 190.5 feet (58 m) long. The overall aerospace vehicle height is 456 feet (139 m) including the nose cone.

2.2 Capability

The INT-21 has the capability of placing a 255,000-pound (116,000 kg) payload into a 100-nautical mile (185 km) circular orbit. Its capability in the IMISCD study launch mode using a transtage is 237,300 pounds (108,000 kg) into a 262-nautical mile (488 km) circular assembly orbit.

2.3 Facilities Impact

The INT-21 has no impact on facilities since its stages are identical to the Saturn V's S-IC and S-II stages.

3.0 MLV-SAT-V-4(S)B

The -4(S)B was the smallest of the uprated Saturn V's utilizing strapon boosters studied under Contract NAS8-20266.

3.1 Configuration Description

The configuration of the -4(S)B is shown in Figure 3. The strengthened S-IC stage has been lengthened by 28 feet (8.54 m) which increases its propellant capacity to 6 million pounds (2.72M kg). The first stage of

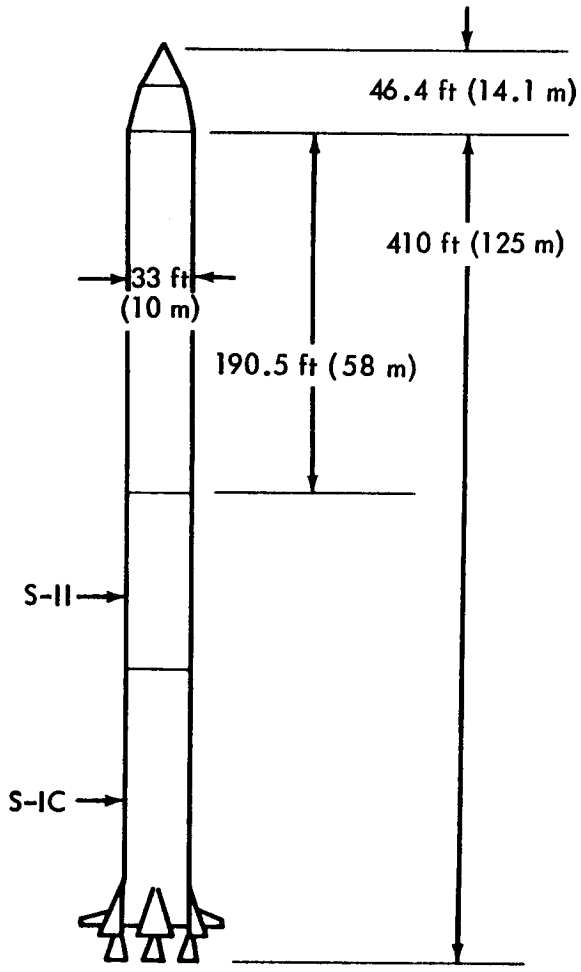

T_o = 7.61M lb
T/W_o = 1.25

S-IC
Δ Length = 0
5 F-1 (engines)
W_p = 4.56M lb (2.07M kg)

S-II
Δ Length = 0
5 J-2 (engines)
W_p = 930K lb (423K kg)

Gross payload to 262-n-mi (488 km) circular orbit = 237,300 lb (107,800 kg)

Figure 2: MLV-SAT-V-INT-21

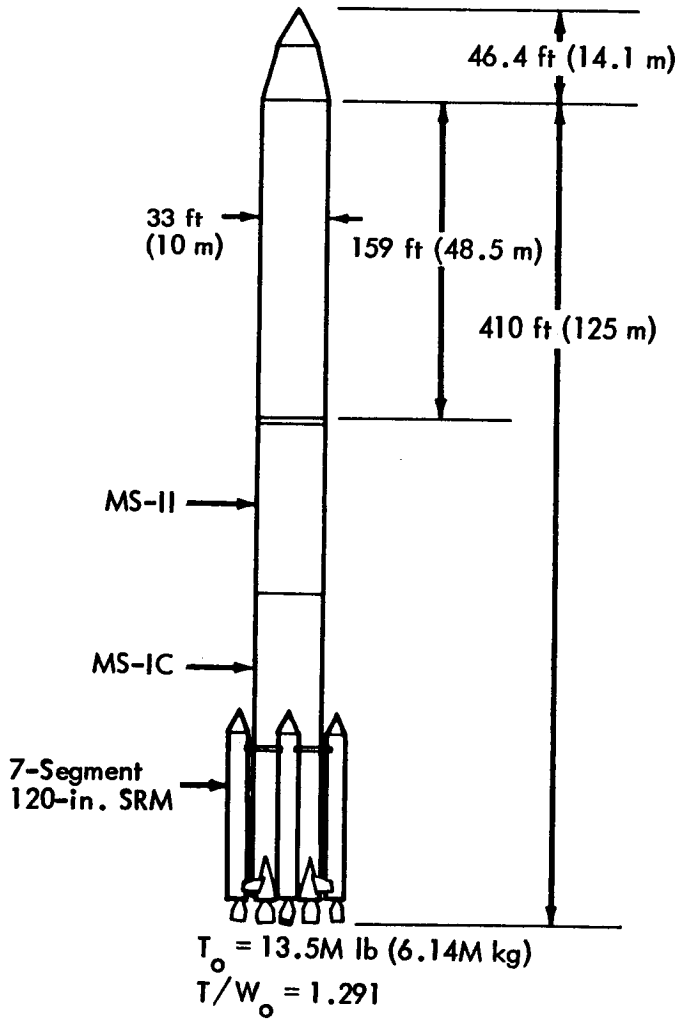

MS-IC — Δ Length = 28 ft (8.54 m)
5 F-1 (standard engines)
W_p = 6M lb (2.72M kg)

MS-II — Δ Length = 0 ft
5 J-2 (standard engines)
W_p = 930K lb (423K kg)

Strapons — 7-Segment - 120-in. dia
T_o = 1.4M lb (0.636M kg)@
W_o = 0.57M lb (0.258M kg)@

Gross payload to 262-n-mi (488 km)
Circular orbit = 351.4K lb (175.5K kg)

Figure 3: MLV-SAT-V-4(S)B

the ELV is rotated 45 degrees from its normal position in the standard Saturn V configuration to minimize the impact on launch facilities, GSE, and operations. This stage rotation requires that the flight control signal be modified to compensate for the rotation. The length of the S-II stage was not changed. The first and second stage engines were not uprated. Four 7-segment, 120-inch-diameter solid rocket motors with a total thrust of 6 million pounds and a total propellant weight of 2.28 million pounds were strapped on to the modified S-IC stage. Each of these solid motors has a liquid injection (N_2O_4) thrust vector control system to augment the control capabilities of the gimbaled F-1 engines during flight through the maximum q regime. The solid motors conform to preliminary designs developed for Titan III-C applications. For use in the IMISCD study, the cylindrical payload section was extended to a vehicle height of 410 feet which permitted a 159-foot cylindrical payload section. The overall aerospace vehicle height including the nose cone is 456 feet.

3.2 Capability

The -4(S)B can launch a 379,300-pound (172,500 kg) payload into a 100-nautical mile circular orbit. Its capability with the use of a transtage to the IMISCD study 262-nautical mile (488 km) assembly orbit is 351,400 pounds (159,000 kg). The payload envelope diameter is 33 feet (10 m) and the cylindrical payload length is 159 feet (48.4 m), or a total length of 205 feet (62.5 m) including the nose cone.

3.3 Facilities Impact

The mobile launcher, vertical assembly building, pad, crawler transporter, LCC firing room, and mobile service structure must all be reworked for the new configuration. New facilities required are a mobile solid motor assembly building (MSMAB) in which the solid motors are assembled, checked out, and transported to the pad for assembly onto the launch vehicle.

Manufacturing facility changes are influenced primarily by the increased length of the first stage and the fitting attachments for the solid rocket motors. The first-stage post-manufacturing and checkout facility at Michoud and the test stand at the Mississippi Test Facility must be adapted for the increased stage length and weight.

4.0 MLV-SAT-V-25(S)

The -25(S) was the most cost-effective of the launch vehicles evaluated under Contract NAS8-20266 even though it did not have the largest payload capability.

4.1 Configuration Description

The -25(S) configuration is shown in Figure 4. The S-IC stage has been lengthened by 41.5 feet (12.6 m) which increases its propellant capacity to 6.64 million pounds (3.02M kg). The first stage of this vehicle

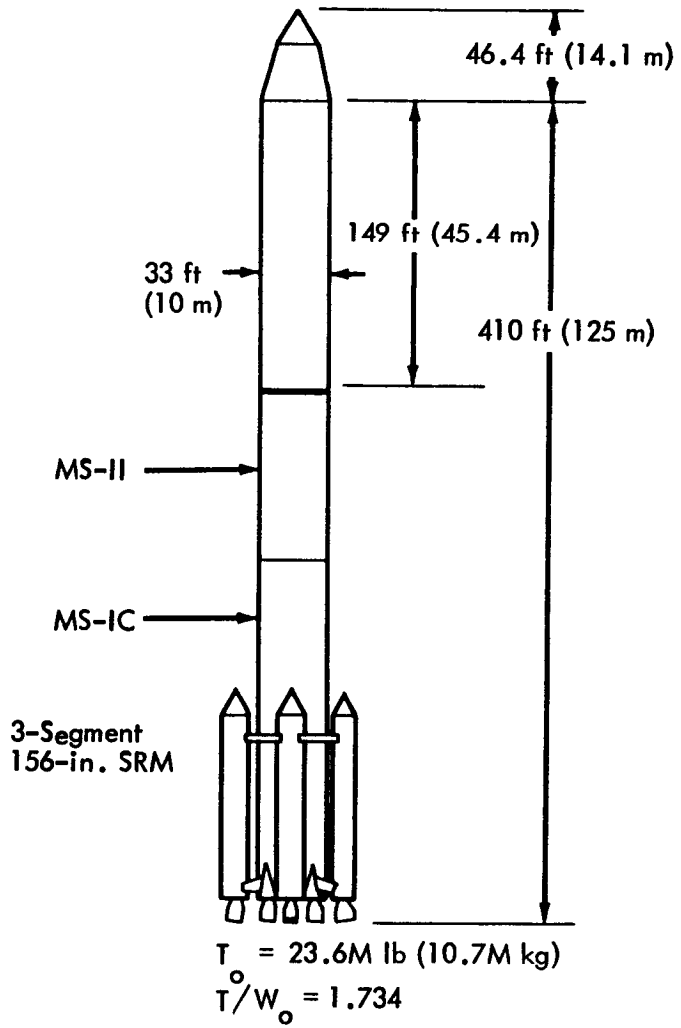

MS-IC — Δ Length = 41.5 ft (12.5 m)
5 F-1 (standard engines)
W_p = 6.64M lb (3.02M kg)

MS-II — Δ Length = 0 ft
5 J-2 (standard engines)
W_p = 930K lb (423K kg)

Strapons — 3-Segment - 156-in. dia
T_o = 4M lb (1.82M kg) @
W_p = 1.112M lb (0.506M kg) @

Gross payload to 262-n-mi (488 km) circular orbit = 457.7K lb (208K kg)

Figure 4: MLV-SAT-V-25(S)

is rotated 45 degrees from its normal position in the standard Saturn V configuration to minimize the impact on launch facilities, GSE, and operations. This stage rotation requires that the flight control signal be modified to compensate for the rotation. The length of the S-II stage was not changed. The first and second stage engines were not uprated. Four 3-segment, 156-inch-diameter solid rocket motors with a total thrust of 16 million pounds and a total propellant weight of 4.45 million pounds were strapped on to the modified S-IC stage for thrust augmentation. Each motor incorporates a regressive thrust time trace with an initial thrust of 4 million pounds. The solid propellant weight per motor is 1.112 million pounds. Each of the solid motors has a liquid injection (N_2O_4) thrust vector control system to augment the capability of the gimbaled F-1 engines during flight through the maximum q regime. The 156-inch motors and their thrust vector control system must be developed and qualified for this application. The cylindrical portion of the payload envelope is 33 feet in diameter and 146 feet long. The overall aerospace vehicle height is 456.4 feet.

4.2 Capability

The -25(S) has the capability of placing a 493,900-pound (224,000 kg) payload into a 100-nautical mile circular orbit. Its capability in the IMISCD study launch mode using a transtage is 457,700 pounds (208,000 kg) into a 262-nautical mile (488 km) circular assembly orbit. The payload envelope of the -25(S) is shorter than the -4(S)B because of the longer S-IC stage and the overall aerospace vehicle length constraint. The payload envelope is 33 feet (10 m) in diameter and the cylindrical length is 146 feet (44.5 m).

4.3 Facilities Impact

The facilities impact of the -25(S) is similar to that described in Section 6.3 for the -25(S)U except for variations due to differences in size and weights of the two vehicles.

5.0 MLV-SAT-V-23(L)

The -23(L) was the largest-capability ELV studied under contract NAS8-20266. Although its large payload capability was desirable, its costs were higher in terms of dollars per pound of payload in orbit.

5.1 Configuration Description

The configuration of the -23(L) is shown in Figure 5. The S-IC stage was lengthened 20 feet (6.1 m) compared to the standard Saturn V S-IC stage. The S-IC stage propellant capacity was increased to 5.6 million pounds. The length of the S-II stage was unchanged. The first and second stage engines were not uprated. The -23(L) includes four 260-inch-diameter liquid pod boosters. The 131-foot (40 m) long pods attach to the modified S-IC stage at the outboard engine locations, use S-IC technology, structural concepts, and systems. Each pod has two F-1 engines which gimbal to supplement the control capabilities of the core

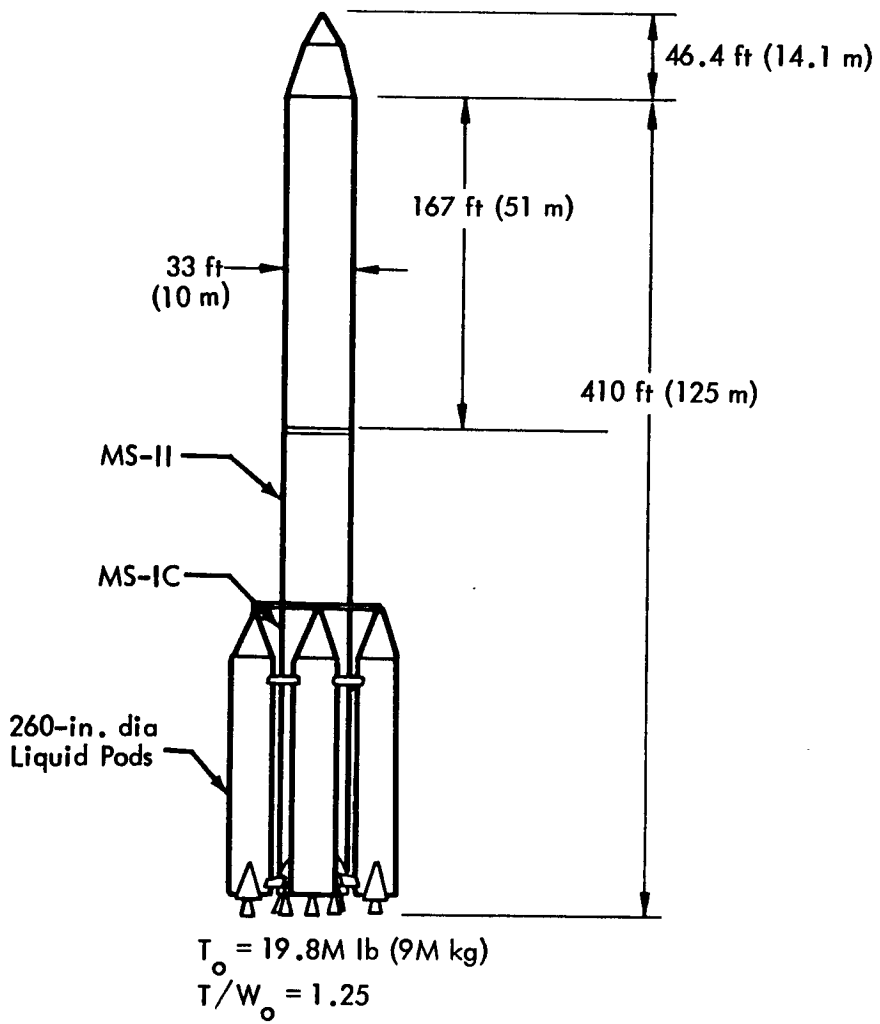

MS-IC	Δ Length = 20 ft (6.1 m) 5 F-1 (standard engines) W_p = 5.6M lb (2.54M kg)
MS-II	Δ Length = 0 5 J-2 (standard engines) W_p = 930K lb (423K kg)
Strapons	Four 260-in. dia liquid pods 2 F-1 motors/pod W_p = 1.89M lb (0.859M kg) /pod

Gross payload to 262-n-mi (488 km) circular orbit = 536.7K lb (244K kg)

Figure 5: MLV-SAT-V-23(L)

vehicle. Each pod is an independent stage which can be checked out and fired as a unit. The total weight of the propellant in the four pods is 7.55 million pounds (3.43M kg). Extending the cylindrical payload section to 410 feet provides a 33-foot-diameter payload envelope that is 167 feet long. The overall aerospace vehicle height is 456 feet including the nose cone.

5.2 Capability

The -23(L) has the capability of placing a 579,300-pound (253,000 kg) payload into a 100-nautical mile (185 km) circular orbit. Its capability in the IMISCD study launch mode using a transtage is 536,700 pounds (244,000 kg) into a 262-nautical mile (488 km) circular assembly orbit. The payload volume capability of the -23(L) is also better than the -4(S)B or -25(S) because the S-IC was lengthened only 20 feet --8 feet shorter than the -4(S)B and 21.5 feet shorter than the 25(S). The -23(L) payload envelope is 33 feet (10 m) in diameter and the cylindrical length is 167 feet (51 m).

5.3 Facilities Impact

The impact of the modified S-IC stage on manufacturing and test facilities is due primarily to the increased stage length and material thicknesses. New manufacturing facilities are required for liquid pods. A scaled-down, S-IC, dual-position test stand and storage facility must be provided at the Mississippi Test Facility for pod acceptance firing. Only minor facility changes are required due to the modified S-II stage.

The core vehicle is assembled according to standard procedures in the VAB. The pods are attached to the core vehicle in the VAB. The existing VAB with work platforms relocated and modified can be used. The launch pad and flame trench need modification to adapt to the -23L configuration. The existing crawler transports will be replaced. The mobile launcher will require modification.

6.0 MLV-SAT-V-25(S)U

The -25(S)U was selected as the recommended ELV on the basis of the results of the system trade studies reported in Section 7.1.

6.1 Configuration Description

The four solid rocket motor strapon configuration of the -25(S)U is shown in Figure 6. The strengthened S-IC stage with uprated F-1 engines is 40 feet longer than the standard S-IC stage and contains 6.56 million pounds (2.98M kg) of propellant. It is rotated 45 degrees from its normal position in the standard Saturn V configuration to minimize the impact on launch facilities, GSE, and operations. This stage rotation requires that the flight control signal be modified to compensate for the rotation. Uprating of the F-1 engines to 1.8 million pounds is attained by direct linear uprating of the chamber pressure. This is

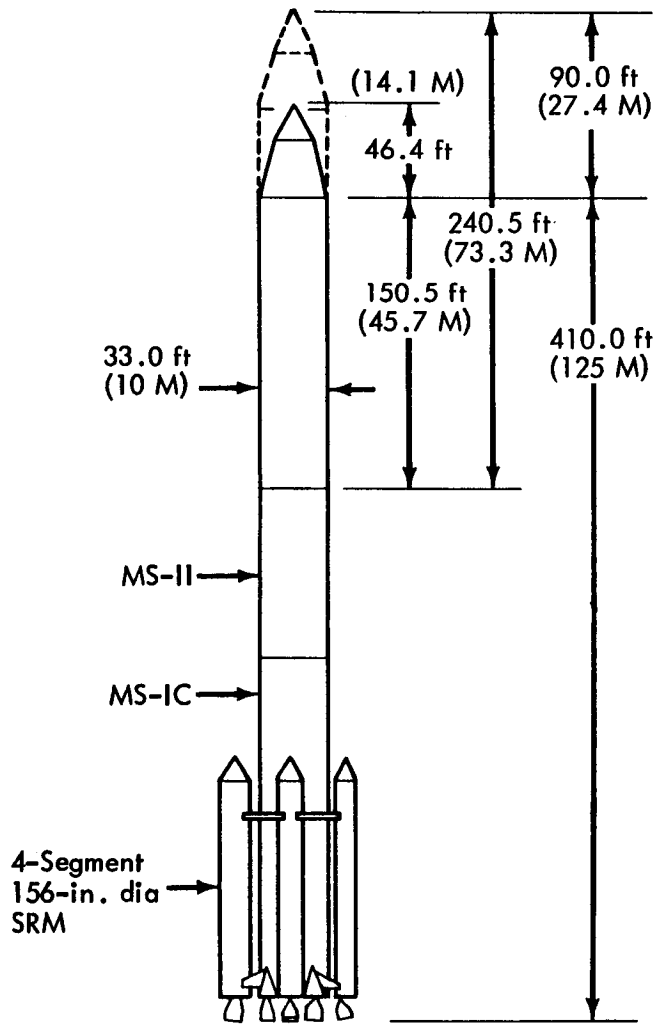

$T/W_o = 1.60$ $T_o = (10.8M\ kg)$

MS-IC	Δ Length = 40 ft 5 F-1 engines, 1.8M lb thrust W_p = 6.56M lb x (2.98M kg)
MS-II	Δ Length = 0 ft 5 uprated J2S engines W_p = 970K lb (441K kg)
Strapons	4-Segment - 156 in. dia W_p = 1.38M lb (0.627M kg) @ T_o = 3.7M lb (1.68M kg) @

Vehicle	Gross Payload to 262-n-mi Circular Orbit
-25(S)U Core	302,700
Core + 2 strapons	410,800
Core + 4 Strapons	548,400

Figure 6: MLV-SAT-V-25(S)U

accomplished by re-orificing the gas generator for greater propellant flow and by the following component modification:

1) High head "6 + 6" oxidizer and fuel pump impellers;
2) Increased power "30-inch diameter" turbine;
3) Modified low-pressure-drop main oxidizer valve;
4) Reduced internal diameter turbopump shaft;
5) Increased propellant flow area injector;
6) Strengthened gas generator and thrust chamber;
7) Regulator for thrust control.

The resulting increase in turbopump speed and, hence, in main propellant flow rate raises the chamber pressure and, thereby, the thrust to 1.8 million pounds.

The -25(S)U uses zero, two, or four 4-segment 156-inch strapon solid rocket motors for thrust augmentation. Each motor incorporates a regressive thrust time trace with an initial thrust of 3.7 million pounds (1.68M kg). The solid propellant weight per motor is 1.382 million pounds (0.63M kg). Each of the solid motors has a liquid injection (N_2O_4) thrust vector control system to augment the capability of the gimballed uprated F-1 engines during flight through the maximum "g" regime. The 156-inch solid rocket motors with their thrust vector control system must be developed and qualified for this application.

The -25(S)U uses a strengthened standard length S-II stage equipped with five J-2S engines. The J-2S is an improved J-2 engine providing a higher thrust through a mixture ratio shift. The modified S-II stage utilizes 970,000 pounds (440,000 kg) of propellant.

The payload dimensions shown in Figure 6 are representative for overall aerospace vehicle heights of 456 feet and 500 feet. With the recommended space acceleration system, which consists of 115-foot long tanks, called common modules, the maximum overall aerospace vehicle height including the nose cone is 471 feet.

6.2 Capability

The payload capability of the three versions of the -25(S)U to the IMISCD study 262-nautical mile (488 km) assembly altitude with the use of a transtage is as follows:

1)	Core	302,700 lb	137,000 kg
2)	Core + 2 strapons	410,800 lb	190,000 kg
3)	Core + 4 strapons	548,400 lb	249,000 kg

All versions of the -25(S)U are launched in the parallel stage mode in which the ignition of the core and strapons is at the same time.

6.3 Facilities Impact

The facilities impact of the -25(S)U are the same as the -25(S) except for the facilities affected by uprating the F-1 engine and those affected by the increased weight of the additional segment to the solid rocket motors. The manufacturing plan for the MS-IC stage is essentially the same as that used for the fabrication, test, and inspection of the S-IC vehicle. The longer length and structural design changes will impact the manpower, tooling, facilities, and handling equipment. The addition of the solid motor attachment structure will require new facilities and production capabilities. The attachment of solid motors to the stage necessitates increased electrical and telemetry requirements, strengthening of the first stage intertank region to tie the solids to the core vehicle, additional staging and destruct functions, and relocation of some access doors. The increased accoustical level will require requalification of approximately 70 percent of the accoustically sensitive components. The effect of rotating the first stage 45 degrees is minimal. Additional length of electrical wiring is necessary, three alignment pin locations must be changed, the control signal must be modified to compensate for the rotation, and some telemetry antennas must be relocated.

The major impact of the first stage changes on Michoud facilities will be due to the added SRM functions and manufacture of the SRM aft skirt structure. Additional assembly equipment, checkout and handling, and transportation equipment will be required. The aft attachment structure is a maraging steel structure requiring boring machines, welding fixtures, and additional welding facility area.

The heavier and longer first stage will require rework of much of the existing equipment. Major tooling and assembly requirements at Michoud include an additional tank assembly station, an additional hydrotest position, and some additional and modified tooling. The final assembly position in the Michoud VAB can be adapted to handle the 40-foot longer stage.

Modification of the S-IC test firing stands at MTF and MSFC are required due to increased stage length and propellant capacity. Solid motors will not be fired in conjunction with the stage static test. The stage transporter and the barges must be modified to accommodate the increased stage length.

The 156-inch solid rocket motors with their thrust vector control must be developed and qualified for this application. New production and test facilities are required for these motors. Additional solid motor handling and transportation equipment will be required.

The manufacturing plan for the MS-II stage is essentially the same for the S-II stage. Manufacturing requirements for the MS-II are defined by the stage structural modifications. The revised structural design will require modification of the fabrication and assembly tools for the forward and aft skirts, LH_2 tank walls, interstage and aerofairings. The

Seal Beach facilities require a minimum of modification; the major work required is modification to the structural test tower for the increased test loads. Some handling equipment at Tulsa and Seal Beach will require modification as a result of the increased stage weight. The current S-II program transport equipment and vehicles are compatible with the MS-II stage design; no modifications would be required to handle the additional stage weight.

The impact of the -25(S)U on the launch facilities and operations result from its increased size and weight and the addition of the solid rocket strapon boosters. The modified core vehicle and payload will be assembled according to standard procedures in the VAB on a modified mobile launcher (ML) (see facilities Section) and will subsequently be transported to the pad for attachment of the solid rocket motors. Concurrent with the core vehicle assembly and checkout, the solid rocket motor (SRM) segments and closure assemblies will undergo receiving inspection, component installation, and individual checkout in a new mobile erection and processing structure (MEPS) at a remote site. After the liquid core vehicle on the mobile launcher has been secured to the launch pad, the MEPS with inspected segments and pre-assembled closures for all four of the solid rocket motors will move to the launch pad and will be mated with the mobile launcher and ground structure for transfer operations of the solid rocket motor segments. Two cranes mounted on the MEPS will be used to lift and attach the aft solid rocket motor closure (with the pre-assembled aft attachment skirt) to the liquid core. The four center segments and the forward closure will then be stacked on top of each of the aft closures. Assembly of two SRM's will be accomplished concurrently. This procedure will be duplicated for assembly and mating of the remaining two solid rocket motors. After assembly is made and alignment of all four SRM's is completed, the MEPS will then be transported back to its parking position. From this point on, the launch operations proceed in a manner similar to those for the Saturn V vehicle with the exception of the added operations for integrated solid rocket motor checkout and for solid rocket motor arming.

The existing vertical assembly building (VAB) with the work platforms altered can be utilized.

Modifications at the launch pad include reinforcement of the mobile launcher support piers and pad structure and the provision of heat shields for pad mounted equipment and structure, new flame deflectors and improved flame deflector anchorage, flame protection for flame trench walls, auxiliary exhaust deflector shields, and increased high pressure gas and propellant storage capabilities. Additional quantity and flow rates of industrial water will be required necessitating increased pumping capacity and upgrading of the hydromatic systems. The water mains serving the pad area are adequate without modification. Existing electrical power and communications are satisfactory.

A solid rocket motor inert components building must be provided. A MEPS must be provided with parking position and additional crawler transporter roadway for access.

The mobile service structure (MSS) will require a height extension to permit work platforms to be raised to the required service levels. This will require increased structural reinforcement and increased elevator runs. The cantilever framing that supports the platforms in the vicinity of the solids must be reworked to increase the lateral clearance.

The principal modifications required for the mobile launcher involve relocation to higher levels of all umbilical arms, shielding of the front umbilical face, increased elevator runs, an enlargement of the aspirator hole from 45 feet square to 55 feet square, strengthening of the ML platform structure, replacement of the existing vehicle support arms, and relocation of equipment in the umbilical tower and mobile launcher platform. Protection from exhaust impingement on the bottom of the ML will be required because of the exhaust plume spillover from the flame trench.

The crawler transporter used to transport the mobile launcher and MEPS will require uprating to handle the increased loads caused by this vehicle. These modifications will include structural beef-up at the corners of the transporter and a new, more powerful steering system.

The pad separation distance for Complex 39 is 8730 feet, which was determined from early estimates of Saturn V propellant weights with TNT equivalencies of 10 percent of total LOX - RP-1 weight, 60 percent of total LOX - LH_2 weight, and 0.4 psi overpressure limit. Using the latest propellant weight estimate for the Saturn V vehicle, TNT equivalencies, 0.4 psi overpressure limit, and the approved range safety curve of peak overpressure versus scaled distance for TNT surface blast (Figure 7) the required interpad distance would be 9060 feet for the Saturn V.

A 0.4 psi overpressure limit was used for the Saturn V program because of vehicle structure design criteria limits. This overpressure limit is also considered safe for unprotected personnel. The four segment 156-inch motors, when attached to the MS-IC stage and in the presence of the fully fueled liquid vehicle, are assigned 100-percent TNT equivalency. Using this value for the solid motors, and a 60-percent equivalency for the LH_2 in the payload (400,000 lb) the flight-ready MLV Saturn V-25(S)U vehicle interpad separation distance requirement for 0.4 psi is 16,800 feet. This is 8070 feet more than the existing siting distance of 8730 feet. However, test results and previous experience with large solid motors seems to indicate that the rating of 100-percent TNT equivalency is excessive under any condition. Figure 15 shows pad separation-distance radii for 0.4 psi overpressure resulting from on-pad catastrophic failures of loaded boosters. A radii of 12,050 feet is shown for the case where 20-percent TNT equivalency was used for the solid rocket motors.

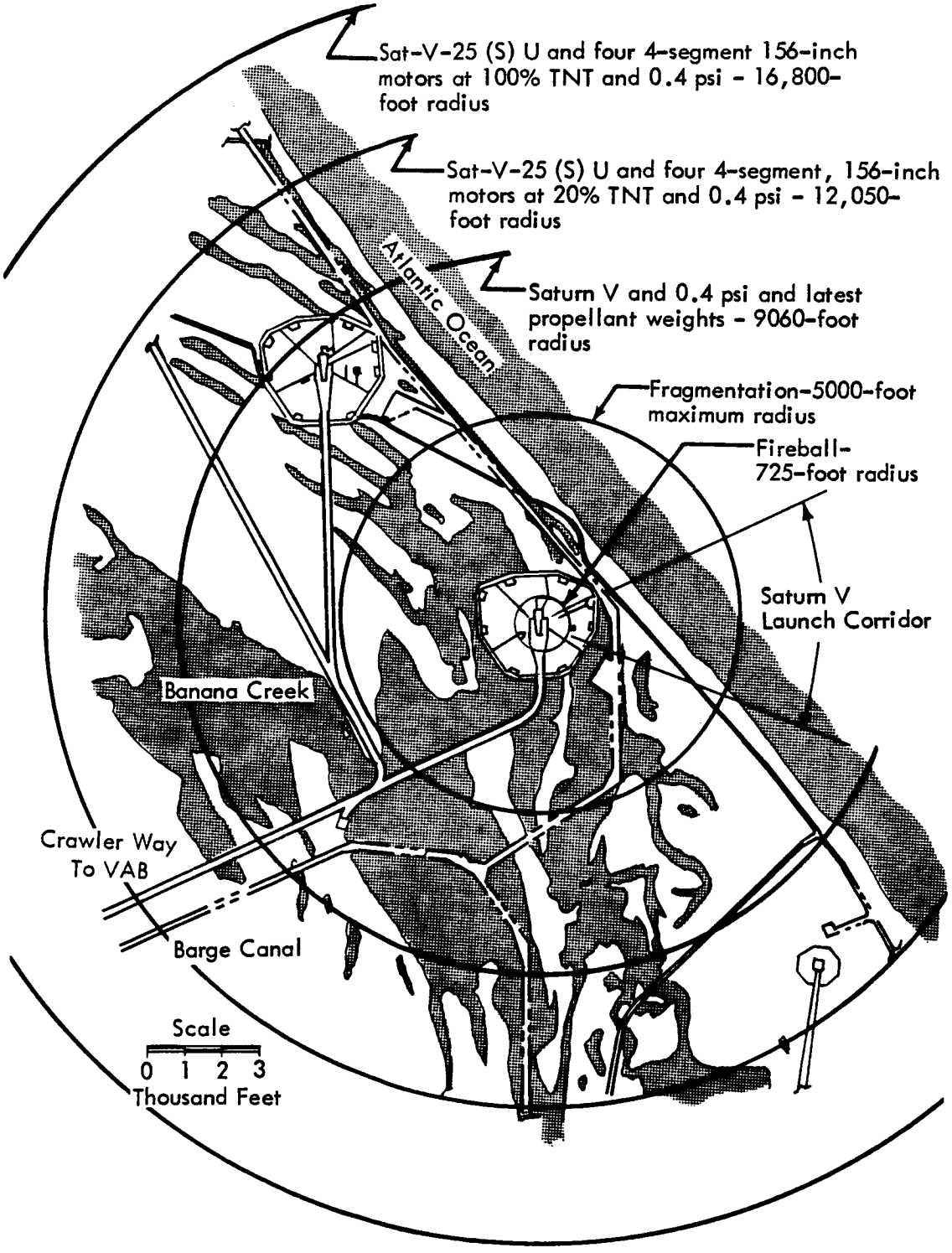

Figure 7: HAZARD RADII FOR COMPLEX 39

Despite the seemingly inadequate separation distance between pads "A" and "B," it is believed that a waiver should be granted to allow use of the present pads as sited without requiring evacuation of personnel or vehicle from the adjacent pad. Such a waiver appears justified because a total vehicle explosion, requiring virtually instantaneous mixing of all propellants, is highly improbable.

The 125-db overall sound pressure level of the -25(S)U is approximately 38,000 feet. This distance is well beyond the 0.4 psi overpressure blast limit range and will definitely require ear protection of all personnel within this range during launch operations.

7.0 MLV-SAT-V/4-260

The MLV-SAT-V/4-260 ELV consists of a modified Saturn V core and four 260-inch solid rocket motor boosters. It was studied concurrently with the IMISCD under Contract NAS8-21105. The configuration selected for evaluation in the IMISCD study is one that was developed in the first phase of the MLV-SAT-V/4-260 contracted study and varies from the final configuration resulting from Contract NAS8-21105. The primary differences between the two configurations is the use of auxiliary S-IC stage propellant tanks mounted above the solid rocket motors in the IMISCD configuration, whereas the final study vehicle eliminated the auxiliary tanks. The IMISCD configuration utilized a parallel-burn mode, has a payload capability of 860,000 pounds (391,000 kg) to a 100-nautical mile orbit and permitted a payload diameter of up to 78 feet (23.8 m). The final contracted study configuration utilized a zero-stage mode (core not ignited until strapon thrust tailoff), has a payload capability of 715,000 pounds (325,000 kg), and is limited to a 33-foot (10 m) payload diameter.

7.1 Configuration Description

The MLV-SAT-V/4-260 configuration is illustrated in Figure 8. The second stage is a standard-length S-II structurally modified for heavier loads. Its propellant capacity is 930,000 pounds (423,000 kg). The first stage is a standard-length S-IC structurally modified for the heavier loads and attachment of the solid motors and auxiliary tank feed lines. The propellant required for the first stage is 8,120,000 pounds (3,690,000 kg) of which 4,560,000 pounds (2,070,000 kg) is contained in the MS-IC with the remaining propellant (3,560,000 pounds) (1,615,000 kg) located in the auxiliary tanks mounted over the solid motors. The solid motors contain 4 million pounds (1.82M kg) of propellant in each motor and have a web burning time of slightly under 130 seconds. The nozzle employed on the solid motor is straight and has a flexible seal thrust vector control system. The liftoff thrust-to-weight ratio is approximately 1.6 and is based on parallel operation of the first stage and the solid motors.

The auxiliary propellant tanks are located on the head-end of the four solid motors. There are two LOX tanks, located opposite each other, and two RP-1 tanks also located opposite each other. The use of separate tanks for the LOX and RP-1 eliminates the need for a separating

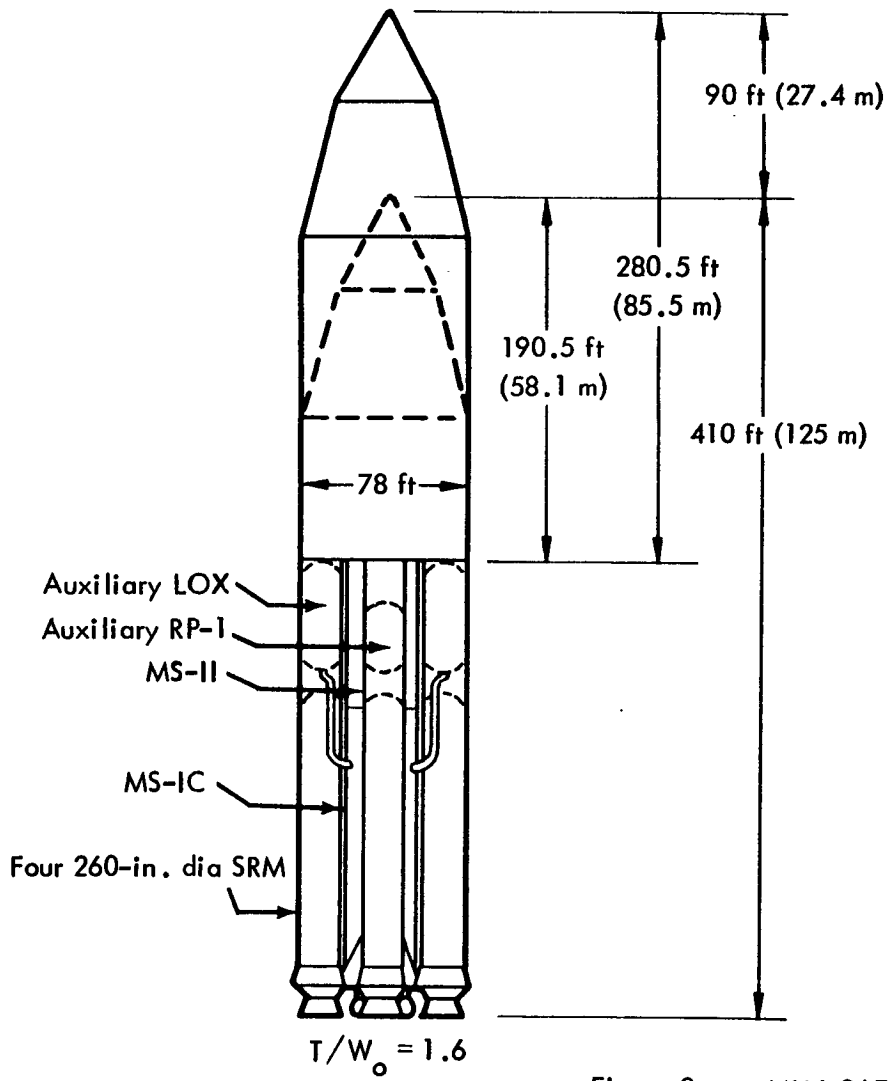

MS-IC	Standard Length 5 F-1 engines W_p = 4.56M lb (2.07M kg)
MS-II	Standard Length 5 J-2 engines W_p = 930K lb (423K kg)
Auxiliary Pods	W_p = 890KM lb (405KM kg)@
Strapons	Four 260-in. SRM W_p = 4M lb (1.82M kg)@

Gross payload to 262-n-mi circular orbit = 797.2K lb

Figure 8: MLV-SAT-V/4-260

bulkhead, thus reducing auxiliary tank weight while simplifying their design. Both tanks are 260 inches in diameter. To ensure compatibility with the fuel and oxidizer, the 2219 aluminum used for the S-IC stage will be used for the auxiliary tank wall material.

At ignition of the first F-1 engines, the propellant in the auxiliary tanks will start transferring to the corresponding first-stage tanks through one line per auxiliary tank. The propellant transfer rate will be identical to the first-stage F-1 engines consumption rate which is a mass flow rate of 28,872 lb/sec. The mass flow rate for each auxiliary LOX tank is 10,074 pps, and each RP-1 tank is 4,362 lb/sec. This will require a propellant transfer time of 124 seconds. The propellant transfer line sizes will be 20 inches diameter for LOX and 12 inches diameter for RP-1. This permits use of current S-IC valves, bellows, gimbals, etc., which are already developed and qualified.

The one transfer line per tank attaches to the bottom of the auxiliary tank. It then penetrates the forward attachment fitting wall. The transfer line then extends from the attachment fitting downward and along the 260-inch solid motor case wall until it is adjacent to the upper cylindrical section of its corresponding first-stage tank. It then attaches radially to a shutoff valve located on the skin but inside of the first-stage tank. Local beef-up of the first-stage tanks will be required to react the imposed loads. A plumbing support system will be required and will attach the transfer lines to the solid motor.

The auxiliary tanks and plumbing support system will be staged with the solid motors. An extension of the MS-IC pressurization system will be required to perform the propellant transfer requirements. The propellant transfer pressurization requirements are minor since the transfer rate is identical to that of the first stage. The acceleration head will further reduce the pressurization requirements.

The 260-inch solid rocket motor is a monolithic (one piece) chamber rather than one assembled from segments 120-inch and 156-inch solid motors. For this reason, motor assembly, checkout, and conversion to a complete strapon stage including the auxiliary tanks for MS-IC stage propellant will be accomplished at the solid motor manufacturing site. The integrated strapon stage can then be shipped to the launch facility and stored on the shipment barge.

The solid rocket motor utilizes a flexible seal, movable nozzle, hydraulic-actuated, thrust vector control system. Significant advantages are basic design simplicity and low actuation torque which permits use of a smaller and lighter weight actuation system. High inherent reliability and good maintainability can be achieved with this system. A performance advantage (i.e., higher vehicle payload due to lower weight) and a lower cost are also major advantages of this system.

7.2 Capability

The MLV-SAT-V/4-260 is launched in the parallel stage mode with both the strapon boosters and S-IC burning at liftoff. The parallel-burn mode provides greater performance for this configuration than does the zero-launch mode. Also, the concept of the auxiliary MS-IC tanks require that the 4-260 operate in the parallel-burn mode since these tanks must be emptied at strapon burnout because the tanks and strapons are jettisoned as a unit. The auxiliary tank arrangement does not permit use of a variable number of strapons to provide flexibility in matching different space vehicle payload requirements.

The 4-260 has a payload capability of 797,200 pounds (362,000 kg) to a 262-nautical mile (488 km) circular orbit using the IMISCD study launch mode. Payload diameters up to 78 feet (23.8 m) can be accommodated.

7.3 Facilities Impact

The impact of the S-IC and S-II stages will be minor since changes include only material thicknesses, auxiliary propellant inlets, and strapon pod attachments. The 260-inch solid rocket motors will have a major impact because of their size and weight. To date, two half-length, 260-inch-diameter motors have been fired. The motors were loaded, cured, assembled and static tested in an upsidedown (i.e., nozzle up) position. All manufacturing and test operations were conducted in the manufacturing and test pit and the motor was not moved after propellant loading. This leaves a number of manufacturing and handling operations for future development.

The core vehicle and payload will be assembled on a new mobile launcher in the VAB similar to the present Saturn V procedures. The VAB would require modification to accommodate the payload. The new mobile launcher has an enlarged aspirator hole to accommodate the increased vehicle exhaust. Rotation of the first stage 45 degrees from its current position provides the minimum requirement for the size of this aspirator hole and allows the exhaust to be contained in an increased width and depth flame trench at the launch pad which can be accommodated between the existing crawler transporter roadways. The solid motors and integral auxiliary MS-IC tanks are installed at the pad.

The solid rocket motors will be shipped by barge in a horizontal position. The solid motor/strapon stage assembly is delivered in its shipping container at the receiving and inspection dock. The solid motor/strapon stage assembly is shipped from the motor manufacturer in a rigid shipping container equipped with lifting trunions at the center of gravity. The container will have removable panels for access and checkout of the thrust vector control system and for visual inspection and those other inspection procedures required. The container is supported on the barge at either end on powered roller assemblies. During

shipping and storage, the container may be gradually rotated, if required, to maintain the integrity of the solid motor grain shape (to prevent slump). These roller assemblies can be utilized during the inspection procedure to position the motor as required.

After inspection, each solid motor/strapon stage assembly in its shipping container will be stored until required on the barges in the storage slips along the Banana River. A new mobile handling fixture, capable of lifting the solid rocket motor, mounted on an existing crawler transporter is used to unload the motor from the barge and to transport it to the pad for assembly to the core vehicle.

The following new or modified facilities are required at the launch site:

1) Receiving-inspection dock and equipment:

   260-inch barge storage slips, turning basin and unloading dock

   Mobile solid motor handling frame and auxiliary checkout and handling equipment

2) Two new pads with:

   High pressure gas system

   Propellant system

   Utilities

   Site preparation

   Solid motor positioning and storage structure for hurricane abort

3) New mobile launchers (LUT's) with:

   Electrical/mechanical GSE

   Instrumentation and communications

   Holddown and support mechanism

   Tail service masts or equivalent

   Service arms

4) Additional crawlerway, parking, and unloading area

5) Crawler transporter modifications (2)

6) Service tower modifications

7) Additional support facilities (buildings, offices, etc.)

8) VAB low-bay modifications

9) VAB high-bay modifications

10) LCC equipment modifications (2 positions)

8.0 CLUSTERED SATURN ELV (SAT-V-XU)

The SAT-V-XU family of launch vehicles consists of uprated Saturn V cores that may be used singly or in clusters. The IMISCD study considered use of single cores and clusters of three and four cores to permit closer matching of ELV capability with space vehicle module requirements.

8.1 Configuration Description

The configuration of the SAT-V-3XU and SAT-V-4XU are shown in Figure 9. The core vehicle is identical in size to the -25(S)U. The strengthened S-IC stage is 40 feet (12.2 m) longer than the standard S-IC stage and contains 6.56 million pounds (2.98M kg) of propellant. Five uprated F-1 engines with 1.8 million pounds (0.819M kg) of thrust are used in each first-stage core. The second stage of the core is a standard-length S-II. A mixture ratio shift was specified for this stage to permit an increased propellant capacity of 970,000 pounds (441K kg).

The SAT-V-3XU cluster structure utilizes a triangular crossbeam with structural cylinders to uniformly distribute loads into each S-II/S-IC booster core and a structural cylinder to uniformly distribute loads into the payload. This structure carries all the axial and bending loads. The fins of the adjoining S-IC stages are attached to each other to prevent relative displacement and will provide some shear capability during vehicle landing. The SAT-V-3XU was clustered to permit a 33-foot (10 m) diameter payload to be inserted between the S-II stages. This feature also allows the large 99-foot (30.2 m) diameter payload element, assuming the payload is hammerheaded out to the outside diameter.

The SAT-V-4XU cluster structure consists of a structural platform above the forward skirt of the S-II stages. The structural platform consists of structural, cylindrical, or conical sections for distribution of the loads into the S-II and a set of crossbeams to carry the loads between core stages and from the payload to the core stages. The payload is also supported by cylindrical or conical structures of the payload diameter. The first-stage engine fairings were used as a structural joint in a similar manner as were the fins on the SAT-V-3XU.

The clustered Saturns were studied under the ground rule that the aerospace vehicle height would be limited to 410 feet (125 m) in the vertical assembly building (VAB), and that parts of the payload could be assembled outside the VAB up to a height limit of 500 feet (152.4 m). However, the IMISCD study assumed a new VAB would be required and, therefore, 500 feet is not a firm aerospace vehicle height limit. The entire aerospace vehicle is assembled in the VAB and transported to the launch pad on a new mobile launcher.

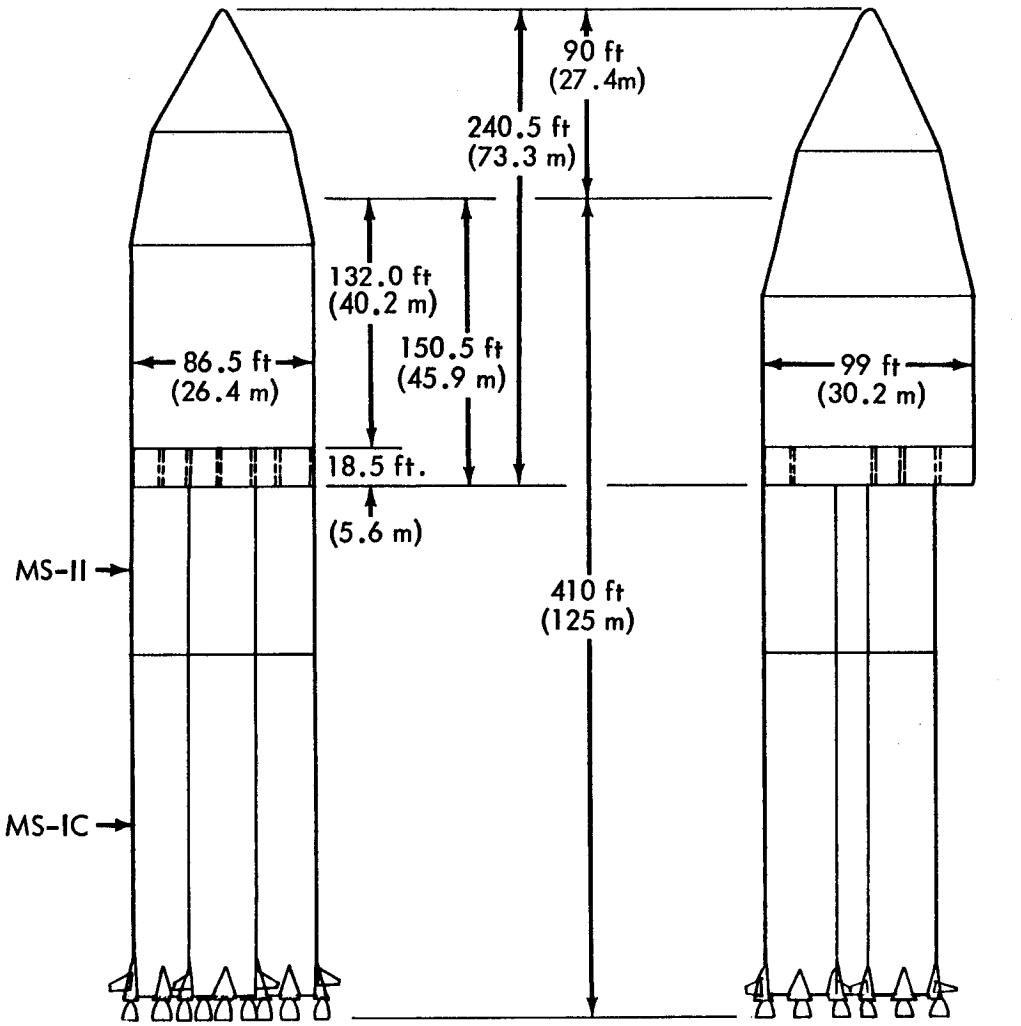

MS-IC Δ Length = 40 ft (12.2 m)
5 uprated F-1 engines, 1.8M lb thrust
W_p = 6.56M lb (2.98M kg)

MS-II Δ Length = 0
5 uprated J2S engines
W_p = 970K lb (441K kg)

Vehicle	Gross Payload to 262-n-mi circular orbit
Core	302,700
-3XU	862,000
-4XU	1,163,500

T_o = 36M lb (16.4M kg)
T/W_o = 1.25
Saturn-V-4XU

T_o = 27M lb (12.3M kg)
T/W_o = 1.25
Saturn-V-3XU

Figure 9: SAT-V-XU

8.2 Capability

The clustered Saturn's payload capability in the IMISCD study launch mode varies from 302,700 pounds (137,500 kg) for a single core, 862,000 pounds (392,000 kg) for a cluster of three cores, to 1,163,500 pounds (530,000 kg) for a cluster of four cores. The single-core vehicle is limited to a payload diameter of 33 feet (10 m). The clustering method selected for the cluster of three permits payload diameters up to 99 feet (30.2 m). The cluster of four allows a maximum payload diameter of 86.5 feet (26.4 m).

8.3 Facilities Impact

The clustered Saturn core vehicle is identical to the -25(S)U core except for changes due to attachments of the cluster structure and the strapon boosters. The manufacturing, transportation, and test facilities impact of the clustered Saturn core will be the same as described for the -25S(U) core in Section 6.3.

The clustered Saturn vehicles will be assembled and checked out, and the payload installed in a vertical assembly building (VAB) and transported to the pad as a unit. This concept requires a new VAB that would have built-in flexibility to handle the core, 3XU, and 4XU versions.

The present crawler tractor, mobile launcher, mobile service structure, and launch pad require modification to handle the single core. The 3XU and 4XU would require a new crawler tractor, a separate new mobile launcher, a mobile service tower, and a new launch pad adaptable to both.

9.0 POST-SATURN

The post-Saturn ELV evaluated in the IMISCD study was studied concurrently with IMISCD under NASA Contract NAS2-4079, *Study of Advanced Multipurpose Large Launch Vehicles* (AMLLV). The version evaluated in the IMISCD study was selected before all the optimization studies of the AMLLV were completed. Accordingly, the version evaluated in the IMISCD study and described herein varies somewhat in size and performance from the final recommended AMLLV study configuration. The IMISCD study version is 49.6 feet (15.1 m) longer and 3.3 feet (1 m) greater in diameter than the AMLLV study final configuration. The IMISCD study version also has greater payload capability. These differences are relatively minor and would not change the results of the comparative evaluation of the post-Saturn with the other ELV's in the mission system trades that were performed.

9.1 Configuration Description

The post-Saturn configuration is illustrated in Figure 10. This launch vehicle system features a LH_2/LO_2 main stage with a single-stage-to-orbit capability of approximately 1 million pounds. This main stage

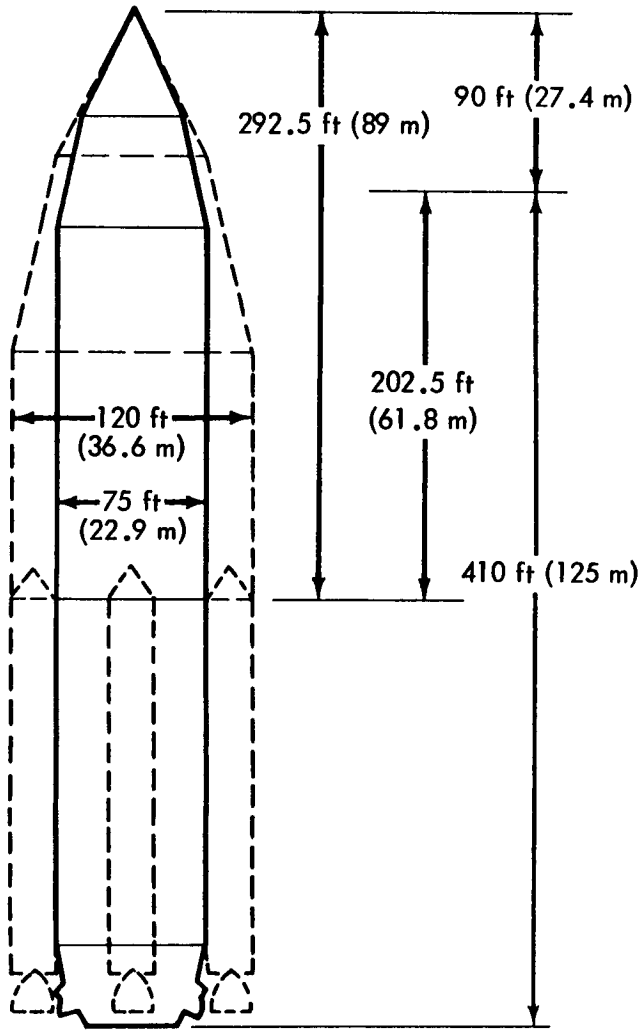

Core — 16 module multichamber plug engine
T_o = 24M lb (10.9M kg)
W_p = 16.794M lb (7.64M kg)

SRM — 260-in. diameter
T_o = 12M lb (5.46M kg) 50% regressive burn trace @
W_p = 5M lb (2.27M kg) @

Vehicle	Gross Payload to 262-n-mi Circular Orbit (lb)	
Core	1,205,600	Core throttling parallel staged
Core + 2 strapons	1,484,300	
Core + 4 strapons	2,073,800	No core throttling zero staged
Core + 6 strapons	2,927,000	
Core + 8 strapons	3,589,000	
Core + 10 strapons	4,047,000	
Core + 12 strapons	4,204,000	

Figure 10: POST-SATURN

is used as a core stage of a "building block" system that incorporates varying numbers of solid rocket motor strapon stages for boost assist to provide a variety of payload capabilities. Core stage design selected for the IMISCD study utilizes skin-stringer-frame construction and incorporates a throttleable multichamber/plug engine consisting of 16 modules. The total thrust of the core stage is 24 million pounds (10.9M kg). An unusual feature of the AMLLV post-Saturn design is the forward holddown which eliminates ground wind and emergency shutdown (rebound) from being design considerations for sizing any part of the vehicle except the holddown posts. In contrast, present booster stages have major structural components designed by rebound and ground winds, resulting in mass fraction penalties. The forward holddown and support posts are used as the strapon thrust takeout hard points to minimize core structural penalty. The core contains 16.794 million pounds (7.64M kg) of propellant.

The core's payload capability is increased in steps by adding from 2 to 12 solid rocket motors in increments of two. The solid rocket motors are 260 inches in diameter. Each motor has an initial thrust of 12 million pounds (5.46M kg). A 50% regressive burning trace (i.e., 6-million-pound thrust at burnout) is used. Each motor contains 5 million pounds (2.27M kg) of propellant. The solid rocket motor uses a gimbaled nozzle thrust vector control system.

9.2 Capability

The single-stage-to-orbit core employs engine throttling in its launch mode to increase its payload capability. A step change in thrust is attained by throttling the engine by 90%. The ratio of propellant consumed at reduced thrust to that consumed at full thrust is 0.12. The throttling mode increases the burn time which reduces the steepness of the trajectory required to gain the necessary altitude to meet the orbital conditions. Throttling the core as described increases the payload capability 300,000 pounds (136,400 kg) to a 100-nautical mile (185 km) orbit. The payload capability of the core vehicle alone in the IMISCD study launch mode is 1.2 million pounds (545,000 kg).

The capability of the post-Saturn is increased to meet particular payload requirements by adding 260-inch-diameter solid rocket motors in increments of two. The ELV operational mode varies depending upon the number of strapons. The parallel staging mode is used for the two solid rocket motor configuration, that is, the core and strapons are burned from the ground up. Core throttling is also used in the parallel-stage mode. For configurations with four or more strapon solid rocket motors, the zero-stage mode is used. In the zero-stage mode, the core engines are not started until the thrust of the solid rocket motors is tailing off. Core throttling is not used in the zero-stage mode. The performance capability of the different post-Saturn configurations is shown in Figure 10. The post-Saturn payload envelope is 75 feet (22.8 m) in diameter. If the payload were hammerheaded out to the diameter of the strapons, the envelope would be 120 feet (36.6 m) in diameter.

9.3 Facilities Impact

The post-Saturn ELV has by far the largest facility impact of any of the ELV's evaluated due to its large size, weight, and acoustic impact. New manufacturing, test, and checkout facilities are required. New land and water transportation vehicles are required for the 75 feet (22.8 m) diameter by 208 feet (63.5 m) long core that weighs approximately 750,000 pounds (341,000 kg). The solid rocket motors weigh over 5 million pounds (2.27M kg) apiece. Weights and size of this magnitude present unique transportation and handling problems.

A completely new launch facility and operational procedure will be required for the post-Saturn. A fixed, rather than a mobile, system as used on the Saturn V is required. The launch complex would serve as the static firing stand for the core, the vertical assembly facility of the entire vehicle, and the launch facility. The vehicle supported in the launch stand at its holddown points must be capable of withstanding a hurricane through use of additional braces or tiedowns.

10.0 MLV-SAT-V-23(L) TYPE II

The -23(L) Type II is a modified and uprated version of the MLV-SAT-V-23(L) that was studied under Contract NAS8-20266. The modification consisted of utilizing standard length S-IC and S-II stages and adding auxiliary S-IC propellant tanks at the top of the liquid strapon pods. The purpose of this modification was to permit longer payloads (because of the 20-foot shorter S-IC stage length compared to the -23L) and a larger diameter payload envelope by hammerheading the payload out to the diameter of the strapon pods which extend to the top of the S-II stage. This configuration was not studied in detail, but its performance and configuration are considered feasible.

10.1 Configuration Description

The configuration of the -23(L) Type II is shown in Figure 11. The core of this vehicle consists of strengthened standard-length S-IC and S-II stages equipped with uprated F-1 and J-2S engines. Additional LOX and RP-1 propellants are carried in auxiliary tanks carried on top of the liquid strapon pods. The auxiliary tanks are 230 inches in diameter and use S-IC type structure and components. The auxiliary propellant is transferred into the main S-IC tanks at the same flow rate as the S-IC engines burn the propellant. The auxiliary tanks are emptied by the time the liquid pods burn out and are jettisoned along with the pods as a unit.

The four strapon liquid pods are also 230 inches in diameter and use S-IC-type structures and components. Each pod is equipped with two uprated F-1 engines with 1.8 million pounds thrust (0.818M kg). The -23(L) Type II does not have a variable number of strapons because the propellant requirements of the auxiliary tanks do not permit varying the number of strapons.

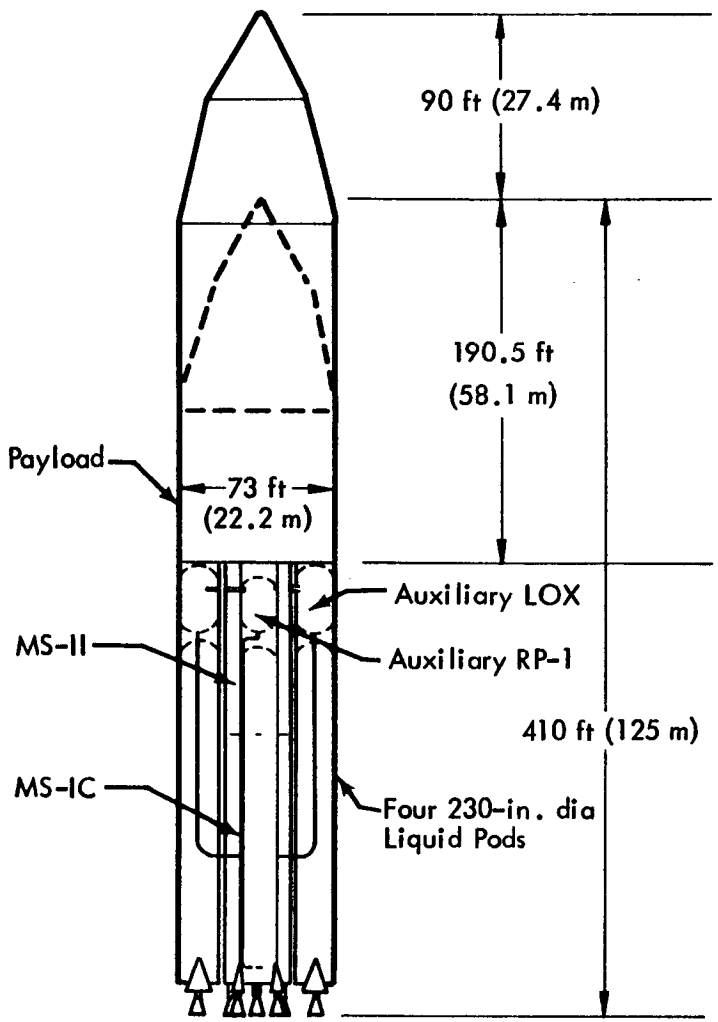

MS-IC — Δ Length 0
5 F-1 engines 1.8M lb
W_p = 4.56M lb (2.07M kg)

MS-II — Δ Length = 0
5 uprated J-2S engines
W_p = 930K-lb (423K kg)

Auxiliary Pods
W_p = 2M lb (0.91M kg)

Liquid Pods Four 230-in. dia
2 F-1 engines, 1.8M lb @
W_p = 2.31M lb (1.05M kg) @

Gross payload to 262-n-mi circular orbit = 673,700 lb (306,000 kg)

Figure 11: MLV-SAT-V-23(L), TYPE II

10.2 Capability

The -23(L) Type II is launched in the parallel-stage mode since the pods may not be jettisoned until the auxiliary propellant is expended. This ELV has the capability of placing 673,700 pounds (306,000 kg) into the 262-nautical mile (488 km) assembly orbit using the IMISCD study launch mode. The payload envelope is 73 feet (22.2 m) in diameter and 190.5 feet (58.1 m) long if the aerospace vehicle length is limited to 410 feet (125 m).

10.3 Facilities Impact

The impact of the modified S-IC and S-II stages will be minor since changes include only material thicknesses, auxiliary propellant inlets and strapon pod attachments. Facilities will be required to manufacture the auxiliary tanks and liquid pods. A scaled-down, S-IC, dual-position test stand and storage facilities are required at the Mississippi Test Facility for pod acceptance firing. The ELV and payload are all assembled and checked out in the VAB. Modifications will be required to accommodate the pods and the payload. The existing crawler transports will be replaced. The mobile launcher will require modification. The launch pad, mobile service structure, and flame trench all require modification to adapt to the -23(L) Type II configuration.

11.0 MLV-SAT-V/4-260(LIQ)

The 4-260(LIQ) ELV was configured to provide a large volume and weight payload capability incorporating a modified Saturn V core and low-cost, pressure-fed, liquid propellant strapon pods. This configuration has not been studied in detail, but its performance is considered to be realistic.

11.1 Configuration Description

The 4-260(LIQ) (Figure 12) consists of strengthened standard-length S-IC and S-II stages, equipped with standard F-1 and J-2 engines, and four 260-inch diameter liquid pod strapon boosters. This configuration did not use uprated F-1 engines since not much payload capability would be gained due to the limited amount of propellant that can be carried in the standard-length S-IC stage.

The strapon liquid pods are 260 inches in diameter and extend to the top of the S-II stage. The exit diameter of the engine nozzle is also 260 inches. Each pod contains 5.5 million pounds (2.5M kg) of propellant (N_2O_4/UDMH) and produces an initial thrust of 8.5 million pounds (3.86M kg). The pod is of monocoque (maraging 250 steel) construction, has a coaxial injector (pressure fed) engine, liquid injection thrust vector control system, and a self-contained dual gas generator pressurization system.

The 4-260(LIQ) ELV has a 78-foot (23.8 m) diameter payload envelope.

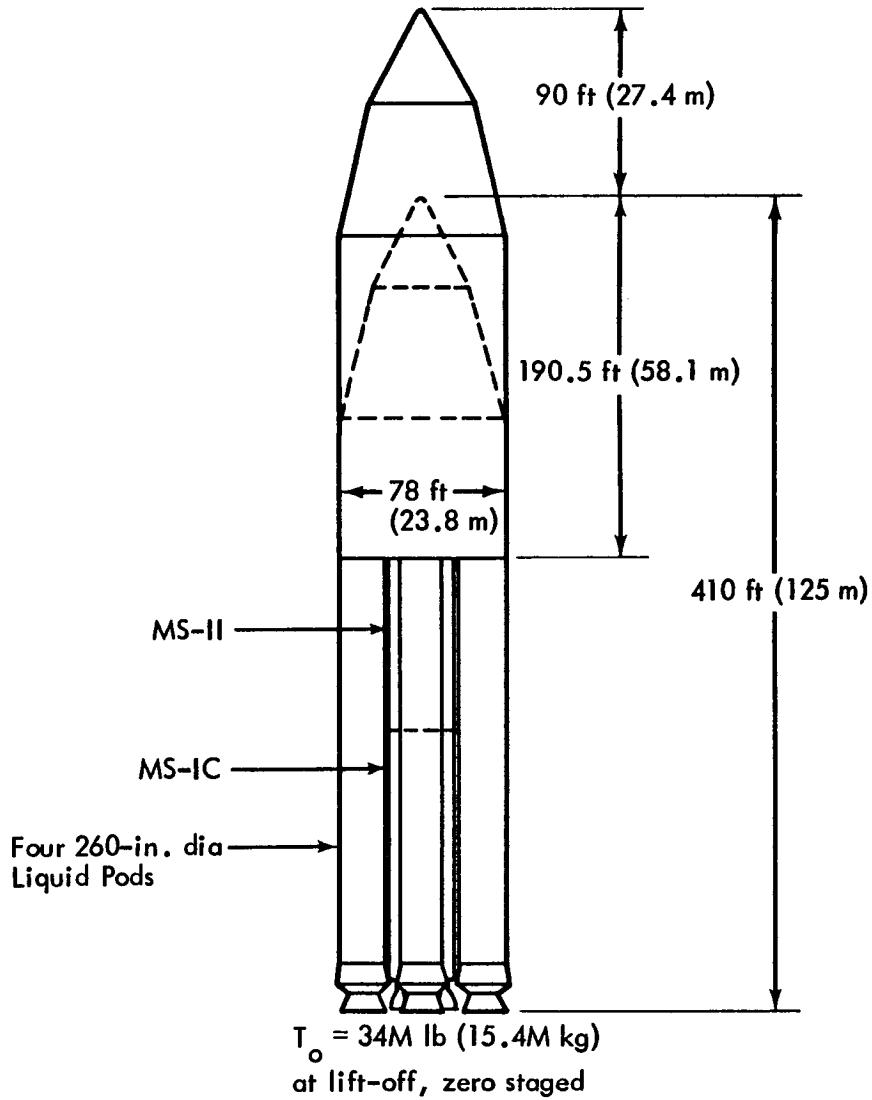

MS-IC — Δ Length = 0
5 F-1 (standard engines)
W_p = 4.56M lb (2.07M kg)

MS-II — Δ Length = 0
5 J-2 (standard engines)
W_p = 930K lb (423K kg)

Liquid Pods — Four 260-in. dia
Pressure-fed engines
T_o = 8.5M lb (3.86M kg) @
W_p = 5.5M lb (2.5M kg) @
N_2O_4/UDMH

Gross payload to 262-n-mi (488 km) circular orbit = 797,200 lb (362,000 kg)

Figure 12: MLV-SAT-V/4-260 (LIQ)

11.2 Capability

The 4-260(LIQ) ELV utilizes a zero-stage launch mode in which the S-IC stage is not started until thrust tailoff of the strapon boosters. The strapon thrust time trace is shaped to maintain the trajectory within the required dynamic pressure and g limits. Using the IMISCD study launch and rendezvous mode, the 4-260(LIQ) ELV has the capability of placing 797,200 pounds (362,000 kg) into a 262-nautical mile (488 km) circular orbit. The payload envelope is 78 feet (23.8 m) in diameter and 190.5 feet (58.1 m) long with an aerospace vehicle height of 410 feet (125 m).

11.3 Facilities Impact

The modified S-IC and S-II stages impact on facilities will be small since the stages are standard length, incorporate standard engines, and require only material thickness changes and strapon attachment fittings. The pressure-fed liquid pods require development. Their technology is not as far advanced as solid rocket motor technology. Development, manufacturing, and test facilities would be required for these pods.

The 4-260(LIQ) ELV and its payload would be assembled and checked out in the VAB and be transported as a unit to the launch pad. The VAB would require modification to accommodate the pods and the payload. The mobile launcher and umbilical tower will require modification. The launch pad, mobile service structure, and flame trench all require modification to adapt to the 4-260(LIQ) configuration.

12.0 ELV SELECTIONS FOR TRADE STUDY

The purpose of the system trade studies, described in Section 7.0, was to determine the most desirable space acceleration system configuration ELV combination for manned interplanetary flight. The initial trade study considered a representative five-mission program that included missions of various types (i.e., conjunction, opposition, swingbys to Mars, and long and short duration missions to Venus) that covered the range of energy requirements. The trade study also included four space acceleration systems for the space vehicle. These mission/space acceleration system combinations result in 20 separate designs for each of the nine candidate ELV's. Since the ELV's capabilities have a strong impact on the space vehicle design described in Section 13.1, separate designs are required for each of the nine candidate ELV's resulting in 180 mission/space acceleration system/ELV combinations. The amount of work required in developing and analyzing such a large number of combinations required that the number of ELV's be reduced. A decision was made to reduce the number of ELV's to be evaluated to four to reduce the amount of work to more manageable portions. The following criteria were used to aid in the selection of the four ELV's to be evaluated in the system trade studies:

- The range of the different ELV payload weight and volume capability is to be represented.
- The cost-effectiveness and level of technology development will be the criteria in the selection where ELV's of similar capability are concerned.

12.1 ELV Assessment and Selection

A summary of the candidate ELV's maximum payload size envelope and weight payload capability is shown in Table 2. The ELV's are grouped into four categories: (1) modest uprated Saturn V's, (2) medium uprated Saturn V's, (3) large uprated Saturn V's, and (4) the multipurpose large launch vehicle or post-Saturn.

The SAT-INT-21, a standard two-stage Saturn V, is listed as a supplementary launch vehicle. Its use was permitted with the medium uprated Saturn V group, since this group utilized a core vehicle whose stages were the same size as the SAT-INT-21. Therefore, both vehicles could be manufactured on the same tooling or the SAT-INT-21 could be replaced by the strengthened cores which would have approximately the same payload capability. Its use, if required, was also permitted with the post-Saturn on the assumption that if the post-Saturn were built, the Saturn V would remain in production for smaller payloads. Its use was not permitted with modest uprated Saturn V or the clustered Saturn group since these vehicles used longer S-IC stages and, in some cases, uprated engines. If these modest uprated Saturns were built, it is assumed they would replace the standard size Saturn V. The new core vehicle without any strapons can be used for smaller payloads.

Inspection of Table 3 shows that the capability of each group blends, and in some cases overlaps, with the capability of the ELV's of the adjoining group. The modest uprated Saturn V's payload diameters are limited to 33 feet; their payload length varies from 149 to 170.5 feet for an aerospace vehicle height of 410 feet and their payload weight capability ranges from 351,400 to 548,400 pounds. The medium uprated Saturn V's payload diameters vary from 73 to 78 feet; their payload length capability is 190.5 feet for an aerospace vehicle height of 410 feet and their payload weight capability ranges from 673,700 to 797,200 pounds. The large uprated Saturn V's are a single family of launch vehicles consisting of from one to three uprated clustered cores. Conceivably, each configuration could be used on a single mission. The payload diameter capability of the clustered Saturns varies from 33 to 99 feet, the payload length is 150.5 feet, and the payload weight capability ranges from 302,700 to 1,163,500 pounds. The multipurpose large launch vehicles (Post-Saturn) are also a family whose capabilities can be varied by adding from 2 to 12 strapon boosters in increments of two. The Post-Saturn maximum payload diameter capability varies from 75 to 120 feet, the payload length is 202.5 feet for a 410-foot aerospace vehicle, and its weight payload capability ranges from 1,205,600 to 4,204,000 pounds.

Table 2 : ELV CAPABILITY SUMMARY

ELV Class	ELV	Maximum Payload Diameter (ft)	Maximum Payload Length to 500 ft (Incl. nose cone) (ft)	Maximum Payload Length to 410 ft (Excl. nose cone) (ft)	Payload to 100-n.-mi. (K lb)	Gross Payload to 100 x 262-n.-mi. Orbit	Transtage Weight (K lb)	Gross Payload to 262-n.-mi. Circular Orbit (K lb)
Supplementary	SAT-INT-21	33	280.5	190.5	255.0	248.5	11.2	237.3
Modest Uprated Saturn V	MLV-SAT-V-4(S)B	33	252.5	162.5	379.3	367.9	16.5	351.4
	MLV-SAT-V-25(S)	33	239.0	149.0	493.9	479.1	21.4	457.7
	MLV-SAT-V-23(L)	33	260.5	170.5	579.3	561.9	25.2	536.7
	MLV-SAT-V-25(S)U							
	Core	33	240.5	150.5	327.0	317.0	14.3	302.7
	Core + 2 strapons	33	240.5	150.5	443.0	430.0	19.2	410.8
	Core + 4 strapons	33	240.5	150.5	592.0	574.0	25.6	548.4
Medium Uprated Saturn V with Large Payload Volume Capability	MLV-SAT-V/4-260 (SRM)	78	280.5	190.5	860.0	834.2	37.0	797.2
	MLV-SAT-V-23L-II	73	280.5	190.5	727.0	705.2	31.5	673.7
	MLV-SAT-V/4-260(LIQ)	78	280.5	190.5	860.0	834.2	37.0	797.2
Large Uprated Saturn V	Clustered Saturn							
	-1XU	33	240.5	150.5	327.0	317.0	14.3	302.7
	-3XU	99	240.5	150.5	930.0	902.0	40.0	862.0
	-4XU	86.5	240.5	150.5	1255.0	1217.0	53.5	1163.5
Multipurpose Large Launch Vehicle	Post-Saturn							
	Core	75	292.5	202.5	1300.0	1261.0	55.4	1205.6
	Core + 2 strapons	75	292.5	202.5	1600.0	1552.0	62.7	1484.3
	Core + 4 strapons	120	292.5	202.5	2234.0	2167.0	93.2	2073.8
	Core + 6 strapons	120	292.5	202.5	3150.0	3055.0	128.0	2927.0
	Core + 8 strapons	120	292.5	202.5	3860.0	3744.0	155.0	3589.0
	Core +10 strapons	120	292.5	202.5	4350.0	4219.0	172.0	4047.0
	Core +12 strapons	120	292.5	202.5	4518.0	4382.0	178.0	4204.0

Table 3: MODEST UPRATED SATURN V ELV COMPARISON

	SAT-V-4 (S)B	SAT-V-25 (S)	SAT-V-23 (L)	SAT-V-25 (S)U
Payload to 100-Nautical-Miles (lb)	380,000	494,000	579,000	592,000
Payload to 262-Nautical-Miles (lb)	351,400	457,700	536,700	548,400
Maximum Payload Length (ft)	162.5	149	170.5	150.5
Maximum Payload Volume (ft^3)	136,000	120,000	143,000	121,300
DDT&E ($M)	365	492	813	1036.5
R&D Flight Vehicles (2)	247.5	284	373	
*Average Operational Unit Cost ($M)	105.1	109.6	142.5	123.5
*Operational Cost Efficiency ($/lb in orbit)	276	222	246	209.5
First Delivery (Authority to Proceed -- January 1968)	AS-524-June 1971	AS-524-July 1971	AS-535-May 1973	

*Based on 30 operational flights in 5 years.

Arranging the ELV's in groups as shown in Table 2 shows that the first criteria (covering the range of ELV capability) for reducing the number of ELV's from nine to four can be met by selecting one ELV from each group. The clustered Saturn and Post-Saturn ELV's were the only candidates within their respective groups and, therefore, became automatic selections.

In the modest uprated Saturn V group of ELV's, the MLV-SAT-4(S)B, -25(S), and -23L have been studied in detail under Contract NAS8-20266 and the -25(S)U has been studied inhouse. Comparative data on these three ELV's were abstracted from the contracted and inhouse studies and are shown in Table 3. The -25(S)U has the largest payload capability by approximately 13,000 pounds over its nearest rival, the -23(L). Its average operational unit cost was second highest, but its operational cost efficiency, in terms of dollars per pound in orbit, was the best of all four ELV's. Accordingly, the MLV-SAT-V-25(S)U was selected to represent the modest uprated Saturn V class of ELV's in the system trade studies because of its superior payload capability and operational cost efficiency.

The medium uprated Saturn V class of ELV contained three candidates: the MLV-SAT-V/4-260 studied under Contract NAS8-21105, the MLV-SAT-V-23L, Type II, and the MLV-SAT-V/4-260(LIQ). The latter two vehicles were studied inhouse and were not studied in depth. Accordingly, quantitative cost data were not available for these two vehicles. Also, the SAT-V/4-260 selected for consideration in the IMISCD study was an initial configuration that was not studied in depth in the Contract NAS8-21105 study. Accordingly, the selection of the ELV to represent the medium uprated Saturn V class in the system trades was made on a qualitative basis.

The medium uprated Saturn V class of ELV's are similar in that all three use standard-length Saturn V stages for the core. Also, their strapon boosters extend to the top of the S-II stage permitting large diameter payloads of 78 feet (73 feet for the -23(L)-II). The payload lengths are 190.5 feet for a 410-foot aerospace vehicle length. The weight payload capabilities of the SAT V/4-260 and SAT V/4-260(LIQ) are identical (797,200 pounds), while the -23(L)-II capability is 673,200 pounds. Both the SAT V/4-260 and the -23(L)-II carry auxiliary MS-IC stage propellant in tanks mounted on top of the strapons and use a parallel-burn launch mode. The SAT V/4-260(LIQ) carries no auxiliary MS-IC stage propellant and uses a zero-stage launch mode.

The primary difference between these ELV's are the type of strapon boosters that are used. The -23(L)-II strapons utilize the relatively expensive S-IC type tank structure and two uprated F-1 engines per pod. The cost comparison shown in Table 2 for the modest uprated Saturn V show that the more efficient and more costly S-IC technology liquid boosters are not competitive costwise with the less efficient and less costly solid rocket motors for applications as added boost to the first stage of launch vehicles. Accordingly, the -23(L)-II was eliminated on the basis of its smaller payload capability and poorer operational cost efficiency (dollars per pound in orbit).

The SAT V/4-260(LIQ) utilizes pressure-fed liquid engines burning N_2O_4/UDMH propellant. The pressure-fed engine pods are much cheaper than F-1 engine pump-fed pods and appear to be cost-competitive with solid rocket motors. Pressure-fed liquid boosters can use low-cost propellants compared to solid rocket motor propellants (0.22 versus 0.65 dollars per pound) and like solid rocket motors, can use simple and low cost design principles such as monocoque tank structure and pressure-fed engines.

The SAT V/4-260 and the SAT V/4-260(LIQ) are competitive both from a performance and a cost standpoint. However, the SAT V/4-260 was selected to represent the medium uprated Saturn V class of ELV's because solid rocket motor technology is more advanced than pressure-fed liquid motor technology. Also, more detailed data on performance, facility impact, and costs are available for the SAT V/4-260 as a result of the study performed under Contract NAS8-21105.

The four ELV's (MLV-SAT-V25(S)U, MLV-SAT-V/4-260, clustered Saturn, and Post-Saturn) selected for the system trade studies cover a wide range of payload capability. The weight payload capability varies from 302,700 pounds for a -25(S)U core to 4,204,000 pounds for a Post-Saturn with 12 strapon boosters. The payload envelope capabilities vary from 33 feet diameter by 150.5 feet long for -25(S)U to a potential 120 feet diameter by 202.5 feet for a Post-Saturn vehicle.

12.2 ELV Discussion

The size, weight, and power of all four of the selected ELV's present new problems of varying degrees of complexity with the more complex problems associated with the larger ELV's. Launch pad siting is one such problem. In the past, pad siting and separation distances have been calculated on the basis of the ELV characteristics alone since payloads have been practically all inert. The advent of manned interplanetary missions with their high energy requirements change the character of the ELV payloads to ones of being largely propellant. All of the selected ELV's incorporated solid rocket motor strapons except for the clustered Saturn. The solid motors not only affect the pad siting problem due to their added potential explosive hazard, but also create an acoustic hazard that affects pad siting more severely than the explosive hazard.

Figure 13 illustrates the overpressure profile for the MLV-SAT-V/4-260 configuration with a total of 16 million pounds of solid propellant, 8.12 million pounds of MS-IC propellant, 930 thousand pounds of MS-II propellant, and 530 thousand pounds of LH_2 in the payload module. The circles represent required distances based on a design criteria for a maximum allowable overpressure of 0.4 psi. The large dotted circle (22,900-ft radius) represents the required safety distance for a fueled core vehicle with four 260-inch motors having a TNT equivalency of 100%. The solid circle (14,980-ft radius) represents the required safety distances for an assembled vehicle at the pad and a single motor at the unloading dock, respectively, assuming a solid motor TNT equivalency of

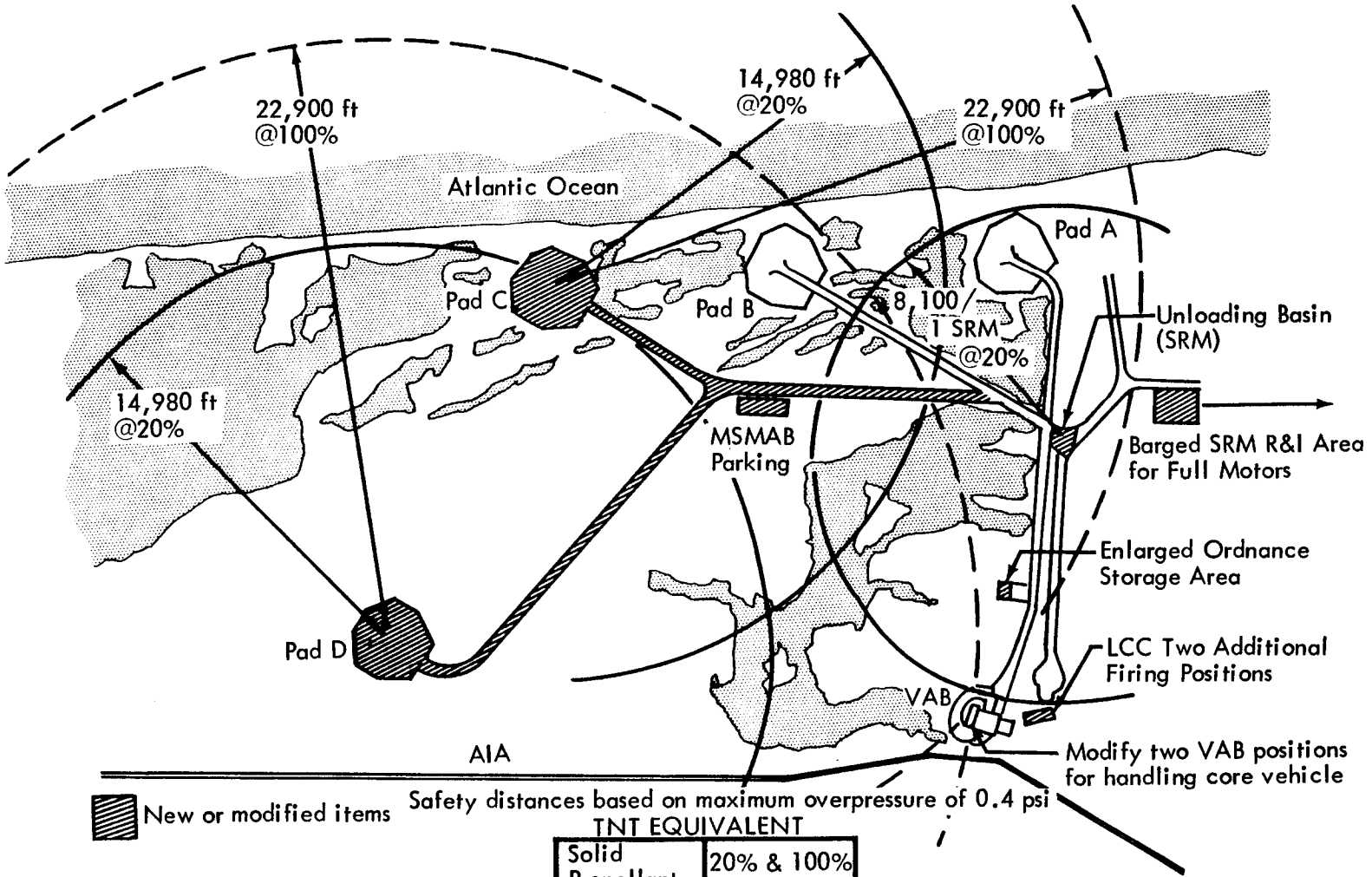

TNT EQUIVALENT

Solid Propellant	20% & 100%
LOX/RP-1	10%
LOX/LH_2	60%
LH_2	60%

Figure 13: SITING AND EXPLOSIVE SAFETY DISTANCES-MLV-SAT-V/4-260

20%. All tests to date have demonstrated that the TNT equivalency of solid motors with similar propellant composition is less than 10%. Air Force safety criteria currently rates solid motors for safety distance evaluation at 20% TNT equivalency.

The far-field acoustic environment resulting from zero staging the Saturn V with four 260-inch solid rocket motors on the pad is shown as a topography plot in Figure 14. Profiles for constant overall sound pressure levels at 120 db, 130 db, and 140 db are given. These predictions are based on far field analysis methods* under the following conditions:

1) The vehicle is stationary on the pad.
2) A single flame bucket is assumed.
3) The acoustics environment in the horizontal is symmetrical about the centerline of the exhaust from the flame bucket.
4) Atmosphere conditions are standard with no adverse temperature or wind gradients.

Also plotted on the same figure is the 120-db line for the vehicle after the vehicle is clear of the launch pad. At an altitude of approximately 500 feet, the 120-db level profile extends to 60,000 feet in a circular contour from the launch pad.

The 0.4 overpressure and 125-db acoustical ranges for the four selected ELV's are summarized in Table 4.

Table 4: ACOUSTICAL AND OVERPRESSURE SAFETY RANGES

ELV	125-db Range (miles)	0.4-psi* Range (miles)
MLV-SAT-V-25(S)U	7.2	3.2
MLV-SAT-V/4-260	10.0	4.5
SAT-V-4X(U)	8.5	3.0
Post-Saturn (12 strapons)	17.8	6.9

*Includes LH_2 payload and assumes 100% TNT equivalency for solid rocket motors.

*Wilhold, G.A., Guest, S.H., and Jones, J.H., *A Technique for Predicting Far Field Acoustic Environments Due to a Moving Rocket Sound Source*, NASA Technical Note D1832

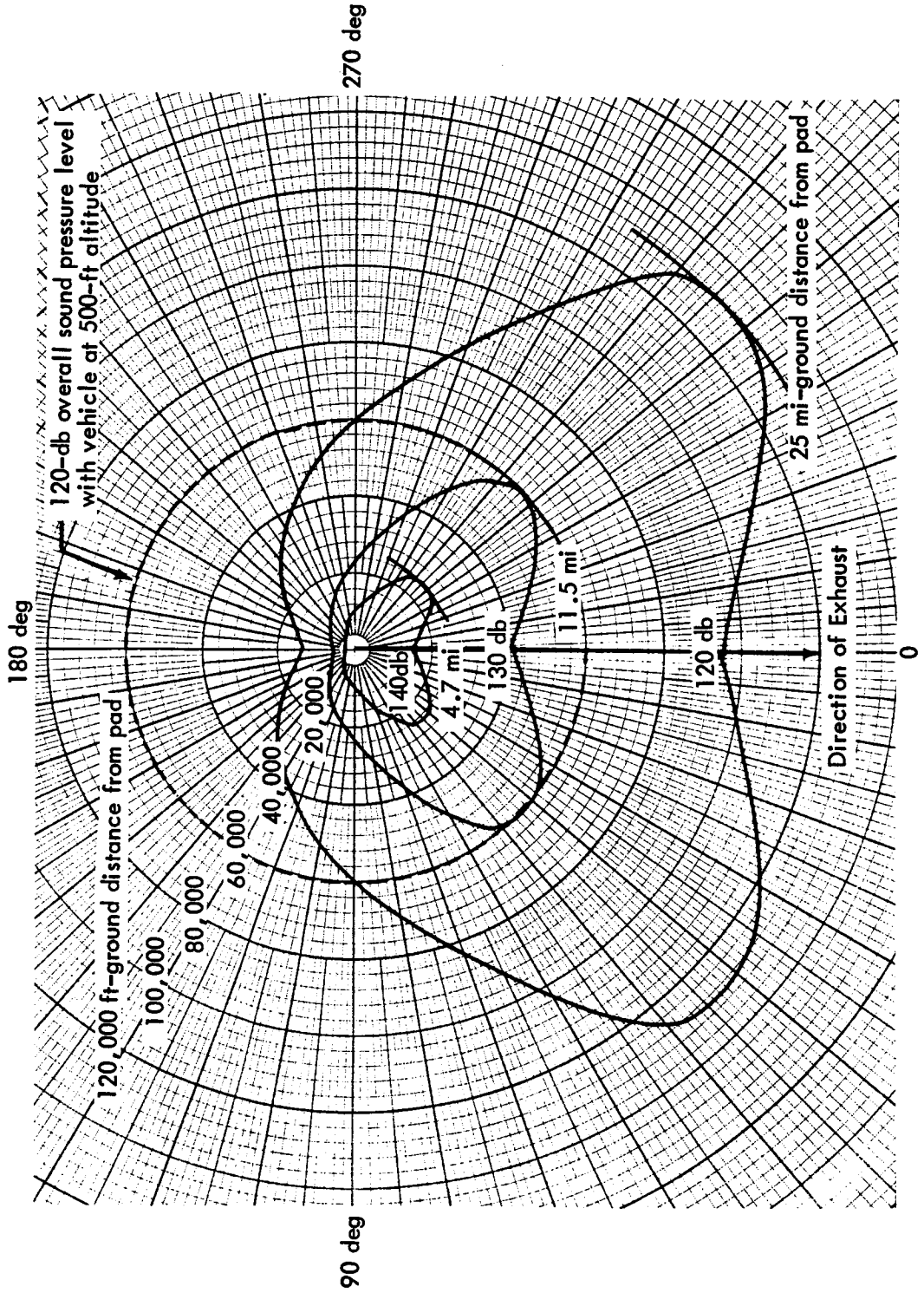

Figure 14: SAT V/4-260" SRM FAR FIELD OASPL TOPOGRAPHY ZERO STAGING, VEHICLE ON PAD, SINGLE BUCKET EXHAUST DEFLECTOR

The weight of the 260-inch solid rocket motors used on the SAT-V/4-260 and Post-Saturn ELV's and the size of the Post-Saturn core present new handling problems and equipment in sizes and capability that are not yet developed. The weight of the solid propellant may require that the solid rocket motor be mounted on powered rollers to permit rotation of the motor during transportation and storage to prevent distortion or possible cracking of the grain. However, well developed solid rocket motor technology is available, and required further developments are well defined.

A pressure-fed N_2O_4/UDMH system may be an attractive alternate to a solid rocket motor since it is competitive with the solid rocket motor, offers still more cost savings and simpler handling, and possesses the payload matching flexibility of a liquid-propellant system. Only demonstration testing in the very large engine (4.5 million-pound thrust) class appears necessary to bring the state of knowledge of this type system to a level comparable to the 260-inch diameter solid rocket motor. A pressure-fed liquid engine pod is relatively inexpensive since it eliminates the costly turbopump machinery, milled skin-stringer-ring construction, and complex assembly and installation requirements of pump-fed systems. The pressure-fed system utilizes simple monocoque tank structure similar to solid rocket motors, a simplified pressurization system, and reduced assembly and installation because of fewer components, plumbing runs, and instrumentation requirements. The liquid propellants are much cheaper than solid rocket motor propellant.

The Post-Saturn ELV requires all new facilities for manufacture, transportation, and launch. Consideration of the Post-Saturn for the initial manned interplanetary missions does not appear prudent since, if the initial missions should demonstrate no good reason for continued planetary exploration, there does not appear to be alternate missions for such a hugh ELV. Also, by the time (20 or more years in the future) manned interplanetary flight could occur with some regularity, there may be technological breakthroughs in space propulsion that could materially reduce the size and weight of the space vehicle, thereby eliminating the need for these very large ELV's. Therefore, using growth versions of the Saturn V for the initial manned interplanetary missions would appear to be prudent especially since uprated Saturn V's would be applicable to other Earth orbital, lunar, and unmanned interplanetary missions.

13.0 ELV IMPACT

The trade study on which the selection of the recommended ELV was based was performed on a mission systems and program basis. This broad trade study was necessary because of the varying impact of the different-capability ELV's on manufacturing facilities, logistics, launch site facilities, ground support systems, orbital support systems, and the space vehicle configuration. The mission requirements which vary with each opportunity, destination planet, and type of mission (i.e.,

opposition, conjunction, etc.) impact the ELV through the space vehicle configuration, i.e., size and weight. The type of space propulsion system being considered also has a significant impact on the space vehicle configuration and, therefore, on the ELV. Accordingly, the determination of the most desirable Earth-to-orbit capability must be made on a broad basis.

13.1 ELV Impact on the Space Vehicle

The ELV volume payload capability is of considerable importance to the space vehicle configuration and especially to those space vehicles utilizing low density nuclear propulsion stages. The recent uprated Saturn V studies, performed under NASA Contracts NAS8-20266 and NAS8-21105, optimized the uprated vehicles on the basis of a 5 lb/ft^3 payload density fitted within an overall aerospace vehicle height of 410 feet. The Advanced Multipurpose Large Launch Vehicle Study (AMLLV) performed under NASA Contract NAS2-4079 and referred to in this study as Post-Saturn, also used a 5 lb/ft^3 payload density requirement. The 5-lb/ft^3 requirement was derived from the density of a fully fueled nuclear propulsion module sized for a Saturn V launch vehicle.

The IMISCD aerospace vehicle height was initially limited to 410 feet to permit using the present Vertical Assembly Building (VAB). Also, each of the ELV's were designed and optimized on the basis of a 5-lb/ft^3 payload density and an overall aerospace vehicle height of 410 feet with the exception of the Post-Saturn which assumed on the pad assembly and a 5-lb/ft^3 payload envelope. Subsequent studies showed that:

1) The 410-ft aerospace vehicle limitation overly constrained the space vehicle configuration.
2) Additional bays were required in the VAB when the MLV-SAT-V-25(S)U was used as the ELV.
3) A new VAB was required for the clustered Saturn ELV.
4) The post-Saturn aerospace vehicle would be assembled at the pad.
5) The cost of the launch facilities was small compared to the program costs.

Based on these study results, the overly restrictive 410-foot maximum height limitation on the aerospace vehicle was removed for the system trade studies.

The four different ELV's that were evaluated in the system trade studies all had different payload weight, volume, and diameter capabilities. These varying ELV capabilities resulted in different optimized space vehicle configurations (tailored modules) for each ELV as illustrated in Figure 15 for the all-nuclear space vehicles and Figure 16 for the chemical-aerobraking-chemical space vehicles. The configurations of space vehicles using other propulsion trains were affected in a similar manner. For the all-nuclear configurations, at least one of the launches for each mission involved a payload length that exceeded

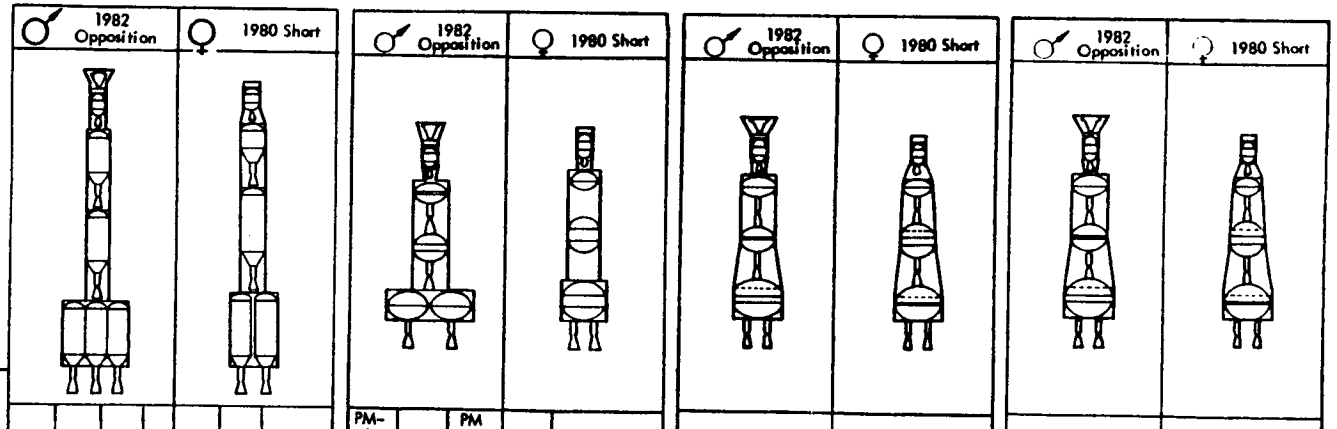

Earth Launch	SATURN V-25(S)U							SATURN V/4-260 SRM					SATURN V-XU				POST SATURN	
Payload	PM-1	PM-2	PM-3	SC	PM-1	PM-2	PM-3/SC	PM-1/SC	PM-1	PM-2,-3	PM-1	PM-2,-3,SC	PM-1	PM-2,-3, SC	PM-1	PM-2,-3,SC	PM-1,-2,-3, SC	PM-1,-2,-3, SC
Launch Number	1-3	4	5	6	1-2	3	4	1	2	3	1	2	1	2	1	2	1	1
ELV Model	C+2	C+4	C+2	C	C+4	C+4	C + 2	C+4	C+4	C+4	C+4	C+4	4X	4X	3X	3X	C+4	C+2
Payload Length (ft)*	191	182	171	95	203	205	168	185	152	223	167	243	208	255	200	233	364	333
PM Tank Length (ft)	99	93	82	-	114	116	55/-	45/-	45	42/38	60	52/31	60	38/36/-	51	47/30/-	60/38/36	51/47/30
PM Tank Diameter (ft)	33	33	33	-	33	33	33/-	65	65	50/50	65	50/42	72	52/52/-	72	52/43/-	72/52/52	72/52/43

*Includes nose cone

Figure 15: Nuclear/Nuclear/Nuclear Space Acceleration

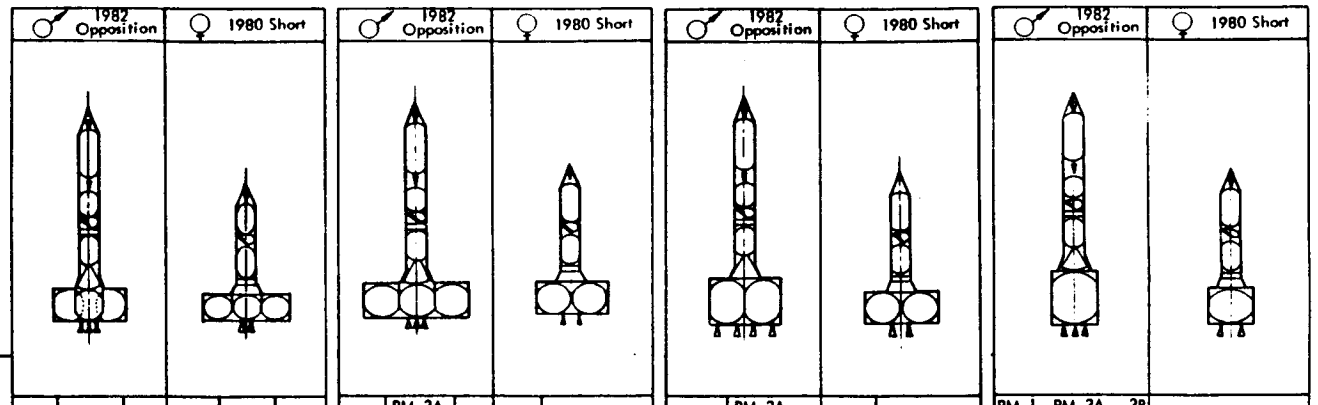

Earth Launch																													
Payload	PM-1	PM-3A, -3B	S/C	PM-1	PM-3	S/C	PM-1	PM-3A, 3B	S/C	PM-1	PM-3, S/C		PM-1	PM-3A, -3B, S/C		PM-1	PM-3 S/C		PM-1, PM-3A, -3B, S/C				PM-1, PM-3, S/C		
Launch Number	1-5	6	7	1-3	4	5	1-3	4	5	1-2	3		1-2	3		1-2	3		1				1		
ELV Model	C+4	C+4	C+4	C+2	C+2	C	C+4	C+4	C+4	C+4	C+4		4X	4X		3X	3X		C+8				C+4		
Payload Length (ft)*	78	118	110	77	63	100	115	118	112	110	133		128	200		110	133		276				189		
PM Tank Length (ft)	32	54/27	--	31	41	--	38	54/27	--	33	41	--	51	54 27	-	33	41	-	61	54 27	--	41	41	--	
PM Tank Diameter (ft)	33	22	--	33	22	--	40	22/22	--	40	22	--	40	22 22	-	40	22	-	51	22 22	--	51	22	--	
*Includes nose cone																									

SATURN V-25(S)U | SATURN V/4-260 SRM | SATURN V-XU | POST SATURN

Figure 16: Chemical/Aerobraking/Chemical Space Acceleration

designed ELV payload envelope length (see Table 6) regardless of the ELV being considered. Figure 15 also illustrates the effect of ELV capability on the number of major orbital assembly operations. Table 4 summarizes the number of orbital assemblies required to accomplish a 1982 Mars opposition mission for two types of space acceleration systems (NNN and CAC) versus four classes or sizes of ELV's.

Table 5: REQUIRED ORBITAL ASSEMBLIES FOR A 1982 MARS OPPOSITION MISSION VERSUS ELV CAPABILITY

	NNN Space Acceleration		CAC Space Acceleration	
	No. of Launches	No. of Orbital Assemblies	No. of Launches	No.of Orbital Assemblies
MLV-SAT-V-25(S)U	6	5	7	6
MLV-SAT-V/4-260	3	2	5	4
SAT-V-X(U)	2	1	3	2
Post-Saturn	1	0	1	0

The impact of four different capability ELV's on the space vehicle IMIEO was also investigated. Space vehicle configurations utilizing all-nuclear, all-chemical, combination nuclear-aerobraking-nuclear, and chemical-aerobraking-chemical space acceleration systems were included. The impact of the type or class of ELV was found to have only a very small effect on IMIEO (see Space Acceleration-ELV Trade, Section 7.1).

13.2 Space Vehicle Impact on the ELV

The space vehicle configuration has a large impact on the ELV design requirements. As noted in Section 13.1, all of the ELV's considered in the IMISCD study were originally designed to a payload density criteria of 5 lb/ft^3. However, the possible packaging efficiency of space vehicle configurations that are optimized for minimum IMIEO's does not permit even a close approach to a 5-lb/ft^3 ELV payload envelope except for the all-chemical and chemical-aerobraking configurations. The all-chemical space acceleration configurations fit within the ELV 5-lb/ft^3 payload envelope in spite of packaging inefficiencies because of the much higher density of the chemical-powered space vehicles. The only exception was in the case of some of the lower energy missions where the Post-Saturn had the capability of launching the space vehicle fully assembled. In these cases, the space vehicle length exceeded the Post-Saturn ELV payload envelope capability, and the high density of the chemical propellants resulted in tank sizes that could not take advantage of the large diameter of the ELV payload envelope.

The packaging efficiency problem is acute for the nuclear space acceleration systems primarily because of the long length (43 feet) of the nuclear engine. If two propulsion stages were to be launched in one payload package, the nuclear engines alone take up 86 feet of the available payload length, yet the maximum diameter of the engine is only 12 feet compared, for example, to a Post-Saturn payload diameter capability of 75 feet.

The fully assembled space vehicle launch represents the worst case of payload packaging efficiency problems. The nuclear PM-1, PM-2, and PM-3 engine installations alone, not including the length of the tanks or spacecraft, require 129 feet of length. During the configuration studies for the all-nuclear space vehicle configured for the Post-Saturn ELV, three separate tank diameters (one for each PM module) were optimized for the representative five-mission program. The maximum diameter for each stage was determined by the mission in which that particular stage's propellant was a minimum. The tank then was sized such that it was formed by two elliptical heads. This determined the common diameter of that particular stage. Propellant requirements of other more demanding missions were met by inserting an appropriate cylindrical section between the tank heads. This approach resulted in common diameters of 72 feet for PM-1, 52 feet for PM-2, and 43 feet for PM-3. In some cases, propellant requirements were such that a particular space vehicle could utilize two common diameters efficiently. An example is the Mars 1982 opposition space vehicle, shown in Figure 17, which utilized a 72-foot diameter PM-1 and 52-foot diameter PM-2 and PM-3 stages. Figure 17 also illustrates the packaging efficiency problem. The space vehicle envelope has a density of 2.3 lb/ft^3. The ELV payload envelope required to enclose this vehicle shown by the solid line has a density capability of 1.6 lb/ft^3. The ELV payload envelope of 5 lb/ft^3 used to design this ELV is shown by the dotted lines. If a common diameter were used for all three of the propulsion modules, the packaging efficiency would be much poorer since the maximum diameter would be approximately 43 feet and the space vehicle would be considerably longer, i.e., 465 feet versus 364 feet for the Mars 1982 opposition.

This packaging efficiency problem exists to varying degrees in all the ELV's evaluated in this study even though the space vehicle was launched in several payload modules. All the ELV's evaluated in this study were originally designed for a 5-lb/ft^3 payload density. However, some of these ELV's, which were evolved under NASA Contracts NAS8-20266, NAS8-21105, NAS2-4079, and inhouse studies were modified during the IMISCD study by engine upratings and the use of a variable number of strapon solid rocket motor boosters. For these reasons, the payload density capability of the ELV's as used in the IMISCD study vary from the 5-lb/ft^3 capability design parameter. Table 5 compares the payload size and density capability of the ELV's with the space vehicle modules requirements as configured for launching. A NNN Mars 1982 opposition mission space vehicle was used for this comparison. The ELV payload size capability listed are those resulting from the separately contracted ELV studies. The ELV payload density was obtained by dividing

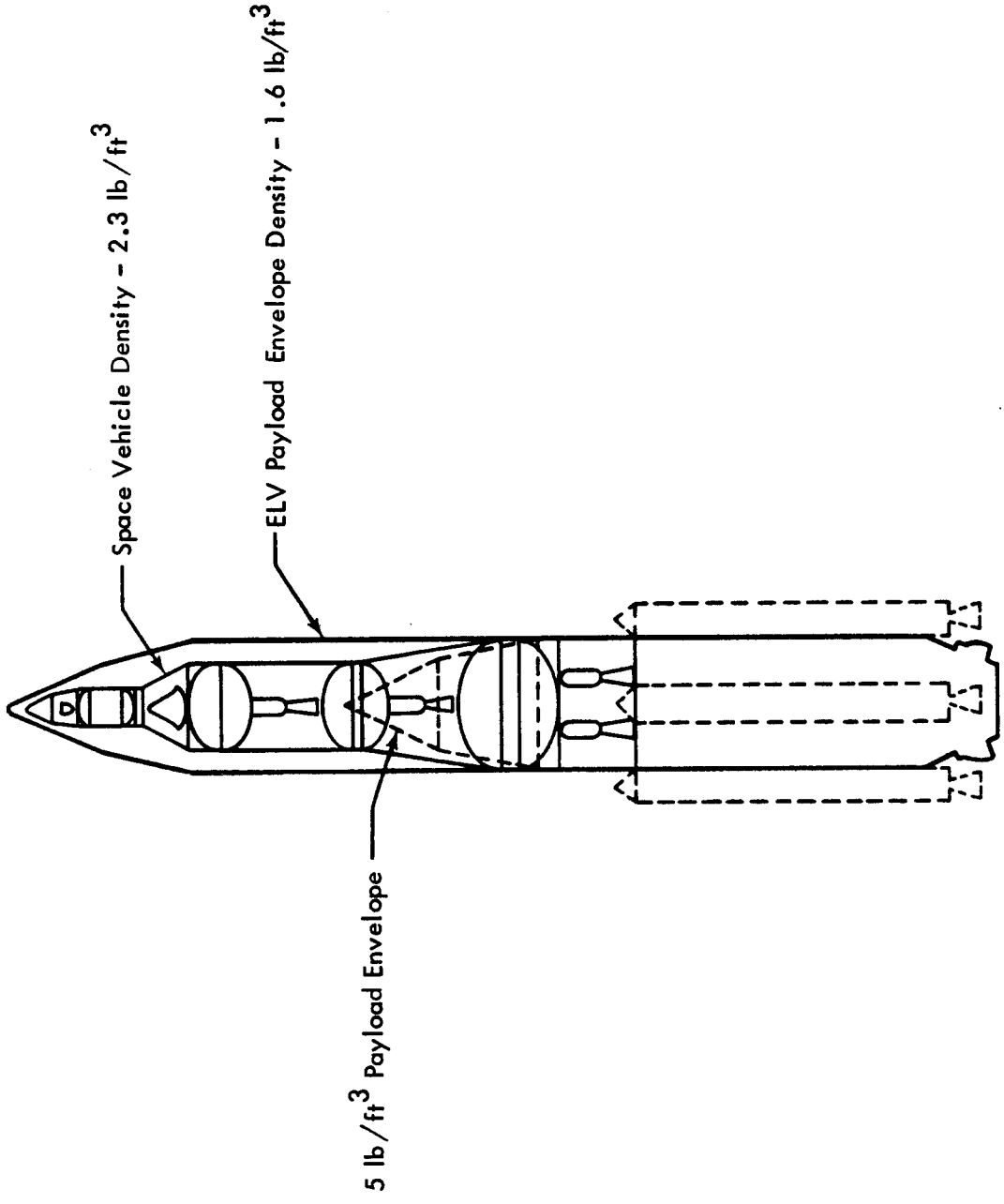

Figure 17: ILLUSTRATION OF PACKAGING EFFICIENCY PROBLEMS

Table 6: ELV PAYLOAD SIZE AND VOLUME CAPABILITY VERSUS SPACE VEHICLE REQUIREMENTS (TAILORED MODULES)

ELV	ELV Payload Envelope as Designed in ELV Studies			Space Vehicle Payload Modules (All Nuclear Space Vehicle Mars 1982 Opposition)			
	Dia. (ft)	Length* (ft)	Density (lb/ft^3)	Module	Dia. (ft)	Length* (ft)	Density (lb/ft^3)
MLV-SAT-V-25(S)U							
Launch No. 1 (C + 2)	33	150.5	5	PM-1	33	191	3.4
Launch No. 2 (C + 2)	33	150.5	5	PM-1	33	191	3.4
Launch No. 3 (C + 2)	33	150.5	5	PM-1	33	191	3.4
Launch No. 4 (C + 4)	33	150.5	6.7	PM-2	33	182	3.8
Launch No. 5 (C + 2)	33	150.5	5	PM-3	33	171	3.5
Launch No. 6 (C)	33	150.5	3.7	SC	33-22	95	5.7
MLV-SAT-V/4-260							
Launch No. 1	78	190.5	6.2	PM-1 + SC	PM-1 = 65 SC = 50-22	185	2.2
Launch No. 2	78	190.5	6.2	PM-1	65	152	1.8
Launch No. 3	78	190.5	6.2	PM-2 + PM-3	50	223	2.3
SAT-V-4X(U)							
Launch No. 1	86.5	150.5	2.5	PM-1	72	208	2.4
Launch No. 2	86.5	150.5	2.5	PM-2, PM-3 + SC	52 52-22	255	1.7
Post-Saturn (C + 4)							
Launch No. 1	75	161	5	Space Vehicle	72-52-22	364	2.3

*Includes Nose Cone

this volume by the ELV weight payload capabilities as used in the IMISCD space acceleration/ELV trade studies. Inspection of Table 6 shows that in nearly every launch, the ELV size capability (which was obtained in separately contracted ELV studies by optimizing the ELV on the basis of a 5-lb/ft^3 payload density and a 410-foot overall aerospace vehicle length) and payload density capability were exceeded. This problem was resolved in the IMISCD study by relaxing the ELV payload size and volume constraints as explained in Section 13.1. Although the payload density parameter has been used as a design requirement in past ELV studies, it is not a good criteria for use in designing ELV's for manned interplanetary spacecraft. The ELV payload envelope is usually assumed to be a cylinder equal to the ELV diameter with a nose cone at the top. However, the packaging inefficiencies due to the space vehicle's long nuclear engine and maximum tank diameter constraints, result in IMIEO-optimized space vehicles that will not fit within the ELV payload envelope when it's designed to a 5-lb/ft^3 payload density parameter. Invariably, the length of at least one of the space vehicle modules as divided into ELV payload packages exceeded the designed ELV payload envelopes as illustrated in Table 5. In the case of the Post-Saturn ELV, this payload length problem could be reduced by configuring the PM-1 into parallel-staged satellite tanks. This would reduce the overall length of the space vehicle by the length of the PM-1 stage and better utilize the Post-Saturn diameter capability. However, tank arrangement studies showed that this technique would increase the space vehicle IMIEO. The parallel staging technique would additionally penalize mission systems using lesser capability ELV by considerably complicating the orbital operations since a larger number of assembly operations, parallel docking, and intramodule assemblies would be required. The impact of the long space vehicle payload requirements as opposed to the short ELV payload envelope is to increase the combined loads on the ELV and to increase the control requirements for the ELV.

The available combined loads data at the ELV-space vehicle interface were based on the 410-foot aerospace vehicle length limitation. These combined loads would increase for the longer aerospace vehicles and would increase ELV and interstage weights. The determination of these new loads would be complex due to the shape of the payload, including the hammerheading of some payloads out to the diameter of the strapon motors as on the MLV-SAT-V/4-260, and the additional length. Determining these loads would require wind tunnel testing and was, therefore, beyond the scope of this study. Available loads data based on the 410-foot aerospace vehicle height were used. The effect on ELV payload capability of the increased inert ELV weight and interstage weight due to the longer aerospace vehicle length is expected to be small and within the accuracy limits of the ELV studies payload estimates. The added control requirements imposed by the space vehicle payload configurations were not investigated. The ELV control capability was assumed to be adequate or could be increased to a satisfactory level. Any future studies on manned interplanetary ELV should be based on realistic space vehicle configurations rather than a density factor. If a density factor approach is still followed, then a value of from 2.5 to 3.5 lb/ft^3 (when a 43-ft nuclear engine is used) is more realistic.

APPENDIX B
FACILITIES PLANS FOR IMISCD PHASE II TRADE STUDIES

1.0 FACILITY CONCEPT

Facilities Approaches and Costs - To complete the launch rate trade it was necessary to determine the facility costs associated with each aerospace vehicle concept. A facility approach for each ELV was developed and is summarized in Table 1. Quantities of launch pads, VAB positions, mobile launchers, etc., varied for the different space vehicle concepts when an uprated Saturn V was used. Quantities for the SAT-X(U) and the Post-Saturn did not vary, however, with the space vehicle concepts. With the facility approach selected for each ELV type and with the numbers of launch facilities known for each space vehicle concept, costs could then be developed for facilities. Cost data were available from the Saturn V uprating studies and from the Apollo program. Some data were also available for the SAT-X(U). Costs for the Post-Saturn facilities, however, were extrapolated from known data.

The facilities approach for each ELV type with all nuclear propulsion, costs and some of the major problems associated with each follows:

1.1 SAT-V-25(S)U (Figure 1)

The SAT-V-25(S)U ELV has the least impact on launch facilities of all candidates considered. With the exception of the 156-inch diameter solid rocket motors (SRM's), the vehicle can be integrated into launch complex 39 by modification and expansion of existing facilities. For this study exclusive use of L/C 39 is assumed.

The modified core (40 foot longer IC stage and deletion of S-IVB stage) is delivered to KSC and processed through the VAB, integrated with the P/L and transported to the launch pad following the procedure established for the Saturn V/Apollo.

To accommodate the SAT-V-25(S)U in the existing high-bay positions in the VAB, work platforms will require modification and relocation to match the reconfigured vehicle. The launch rate requires the provisioning of four high-bays. This requirement will necessitate complete outfitting of the two remaining unfinished bays. Three bays will be configured for an ELV with the capability of taking either a PM-1, -2 or -3 payload. The fourth bay will, because of the special requirements, be configured to service the spacecraft only.

The launch rate and standby condition impose a requirement of seven mobile launchers (ML's) on the launch complex. This requirement is met by modifying the three existing units and constructing four new units. Modification of the existing ML's includes relocation of umbilical arms, increasing platform strength, provisions for SRM's and heat shielding.

Table 1: FACILITY REQUIREMENTS SUMMARY

ELV Model	Saturn V-25(S)U		Saturn X(U)		Post-Saturn		Saturn V/4-260	
Propulsion Mode	NNN	CCC	NNN	CCC	NNN	CCC	NNN	CCC
Launches Per Mission	6	13	2	6	C+4 + Sat.V	C+12 C+4	3	7
Launch Pads	3	7	2	2	2	2	2	4
VAB Positions	4	8	2	4	0	0	3	4
Crawler Transporters	2	4	2	2	0	0	2	2
Maximum ELV/PL Height (ft)	475		515		540		442	
Maximum Weight Transported to Launch Pad	792,000 lb		2,370,000 lb		---		931,000 lb	
Solid Rocket Facilities Required	Yes		No		Yes		Yes	
Fuel Requirements On-Board LH_2	950,000 gal		2,410,000 gal		6,350,000 gal		1,073,000 gal	
LOX	550,000 gal		2,270,000 gal		1,500,000 gal		655,000 gal	
RP-1	300,000 gal		1,200,000 gal		-0-		377,000 gal	
Pad Spacing @ 0.4 psi with 100% TNT Eq. for solids	17,800 ft		17,000 ft		41,000 ft	52,000 ft	23,000 ft	

SAT V— 25(S)U

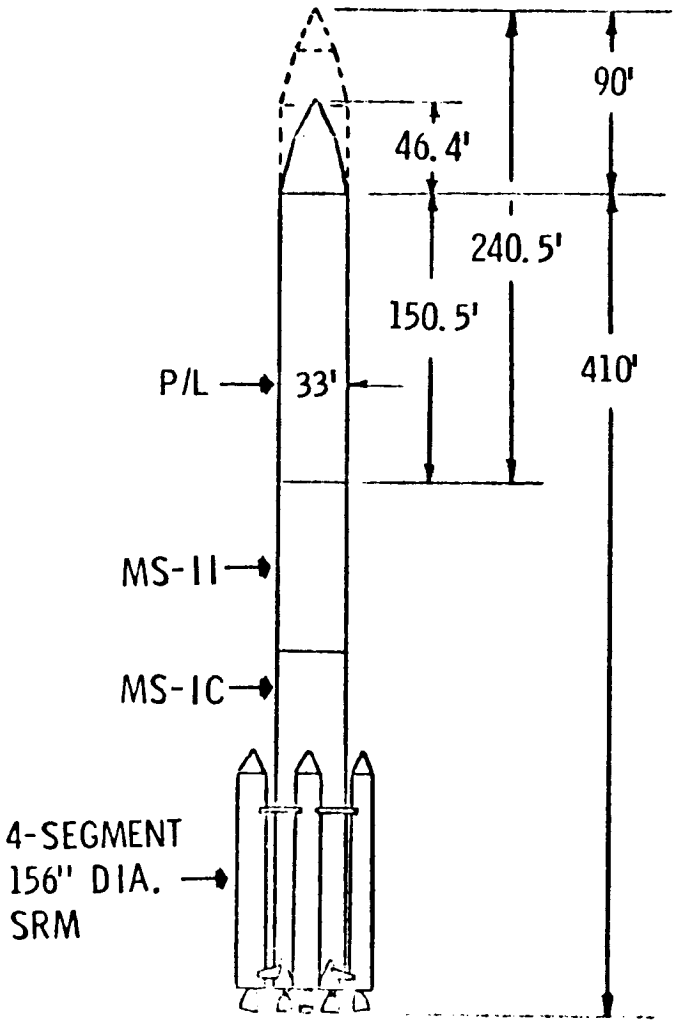

SAT V
MAXIMUM WEIGHT TO L/PAD =
792,000 LBS.
FUELING REQUIREMENTS - MAX.
LH_2 — 950,000 gals.
LOX — 550,000 gals.
RP-1 — 300,000 gals.
Q/D @ 0.4 psi = 17,800 ft

82 OPP

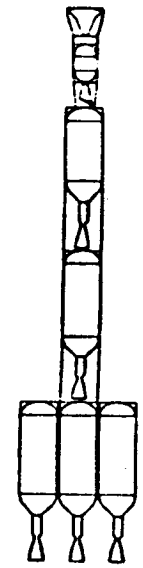

EARTH LAUNCH				
PAYLOAD	PM-1	PM-2	PM-3	SC
LAUNCH NUMBER	1-3	4	5	6
ELV MODEL	C+2	C+4	C+2	C
P/L LENGTH (FT)	191	182	171	95
P/L WEIGHT ($LB \times 10^3$)	404	432	363	219
PM TANK LEN (FT)	99	93	82	—
PM TANK DIA (FT)	33	33	33	—
IMIEO ($LB \times 10^3$)	2286			

Figure 1

To retain the principal established for Saturn V/Apollo of mating one Launch Control Center firing room to a vehicle from assembly through launch, a total of six equipped firing rooms will be required. To provide this facility, four existing rooms will be modified and two new rooms constructed and equipped.

The additional weight of the SAT-V-25(S)U and ML will require some structural changes to the crawler-transporter plus modification to the steering system. Both existing units will require this updating.

Three launch pads are required to satisfy the launch schedule. It is proposed to meet this requirement by modifying the two existing pads A & B and constructing one complete new pad. The general layout of the new pad and the crawlerway extension is shown in Figure 2. Modification to the existing pads includes reinforcement of ML support piers, new flame deflectors, additional heat shielding and increased water pumping capability.

The increased propellant requirements for the ELV core and the PM's will require additional storage capability for RP-1, LOX and LH_2. The propellant for the PM's is proposed to be subcooled or slush hydrogen with an on-board requirement of approximately 700,000 gallons. Additional storage required over existing capacities is:

a) RP-1 100,000 gal

b) LOX 200,000 gal

c) LH_2 1,700,000 gal

Additional high pressure gas requirements will require enlargement of both the helium and nitrogen gas systems.

Two mobile service structures (MSS) will be required to support the pad operations for the SAT-V-25(S)U. The existing structure will require a height extension to accommodate new work platforms and modification to the lower structure to provide clearance for the SRM's. A second unit will be constructed incorporating the features of the modified unit. A new parking area with supporting utilities will be required for the new unit.

The new facilities required to assemble and checkout the SRM's are the Inert Components Assembly Building (ICB) and the Mobile Erection and Processing Structure (MEPS). The ICB serves as a receiving-inspection area for the non-hazardous components of the SRM and will require new roads and a railroad siding. The MEPS is an environmentally controlled structure for inspection and checkout of the SRM segments and closures. It also contains two 160-ton stiffleg derricks for placing the segments around the ELV core at the launch pad. The MEPS is transported by the crawler-transporter. A parking area and supporting utilities must be provided for the MEPS.

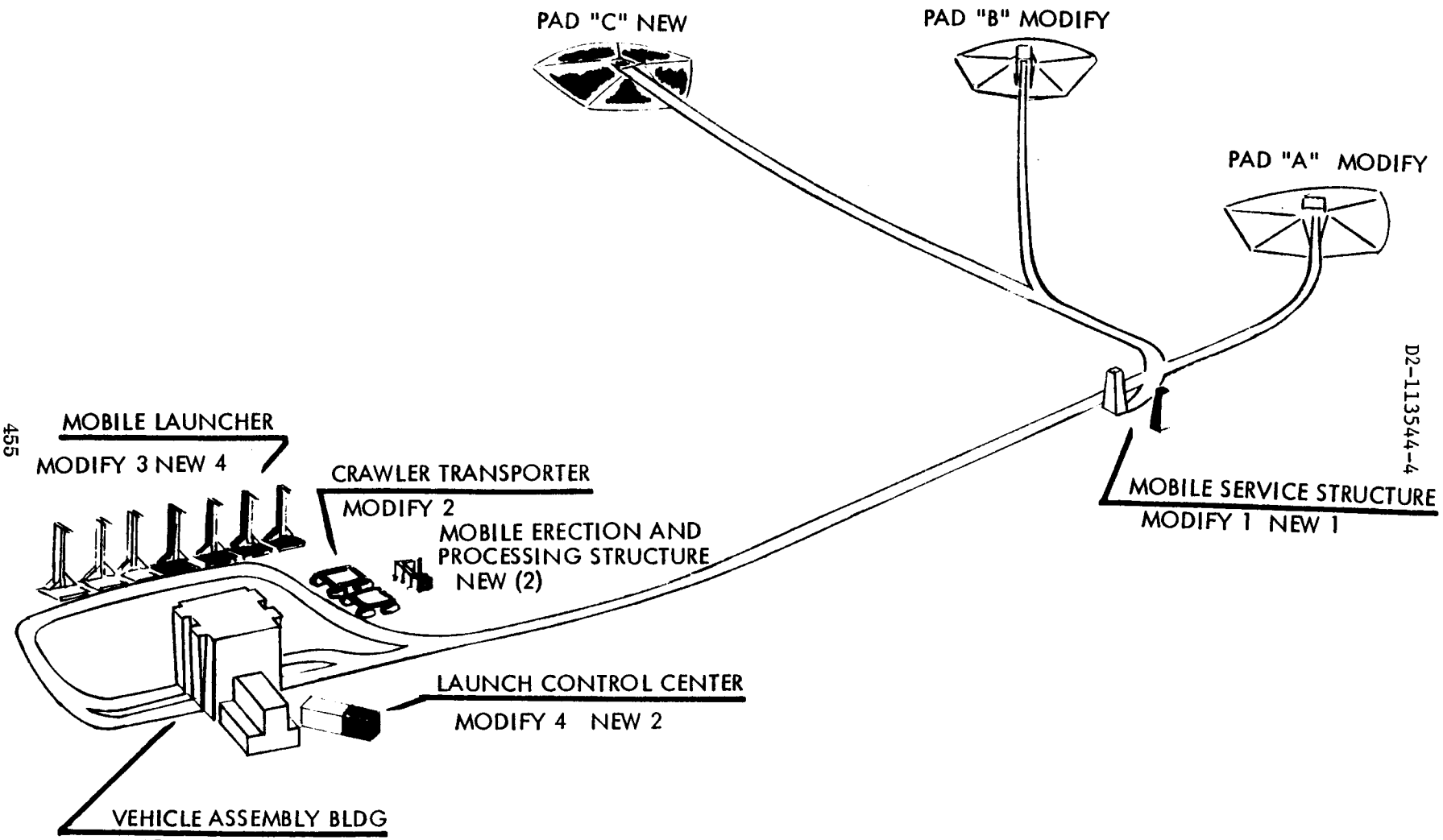

Figure 2: SATURN V 25S(U) FACILITY CONCEPT/NNN

D2-113544-4

A space vehicle assembly and checkout building has been included to provide a facility to mate the PM's and spacecraft prior to orbital assembly. The facility has been sized on the basis that an end-to-end check will not be a requirement. Additional future study will be necessary to establish many of the requirements for this facility.

1.1.1 Cost Analysis

Table 2 lists the costs associated with the major facility additions and modifications required to support the IMISCD program utilizing a SAT-V-25(S)U ELV and a nuclear propelled space vehicle.

1.2 CLUSTERED SATURNS - Sat-V-3X(U) & 4X(U) (Figures 3 and 4)

The typical mission selected for the facility trade study for the clustered Saturn ELV requires both a 3X and a 4X model as shown in Figure 3 and 4. In developing facility requirements for assembly, checkout, and launch for the ELV/PL, several approaches appear to be possible that stay within the mobility concept established for Saturn V.

The first approach considered involves modification of the present assembly high-bays in the VAB to accommodate the two ELV models and the two payloads. However, because of the very large diameter of the vehicle (99 feet) and the overall assembled vehicle height (468 feet for the 4X/PM-1 combination), the extensive modification that would be required to utilize this existing facility does not appear to be a practical approach.

A second method considered was to assemble and checkout the ELV's in modified high-bays in the VAB and then integrate them with the payload at the launch pad.

This system would require a large gantry type crane at the launch pad to lift the payload to the height of the assembled ELV. The principle disadvantage of this method, in addition to the cost of the gantry, is the increase in the time for pad assembly and checkout.

The facility approach adopted for the SAT-X(U) ELV adheres as close as possible to the Saturn V operational procedure of complete VAB assembly and checkout. The facilities required to support this approach include the following and are shown in Figure 5:

a) Two new assembly high-bays constructed adjacent to the present VAB

b) Four new mobile launchers

c) Two new crawler-transporters

d) Two new mobile service structures

e) Two new launch pads

f) Four modified firing rooms in the Launch Control Center

Table 2: MAJOR FACILITY ADDITIONS AND MODIFICATIONS - COSTS
SAT-V-25(S)U/NNN

Facility	Quantity	$(million)
Vehicle Assembly Building (Mod)	-	10.1
Launch Control Center (Mod)	-	1.5
Mobile Launcher (Mod)	3	52.4
Mobile Launcher (New)	4	180.0
Mobile Service Structure (Mod)	1	5.0
Mobile Service Structure (New)	1	60.0
Launch Pads (Mod)	2	23.1
Launch Pads (New)	1	20.4
Fueling (New)	-	59.7
Crawler-Tractor (Mod)	2	13.3
Space Vehicle Assy and Checkout Building (New)	1	16.4
SRM Inert Component Assembly Building (New)	1	2.4
SRM Mobile Erection & Processing Structure (New)	1	12.1
Total		459.0

SAT V— 3X(U)

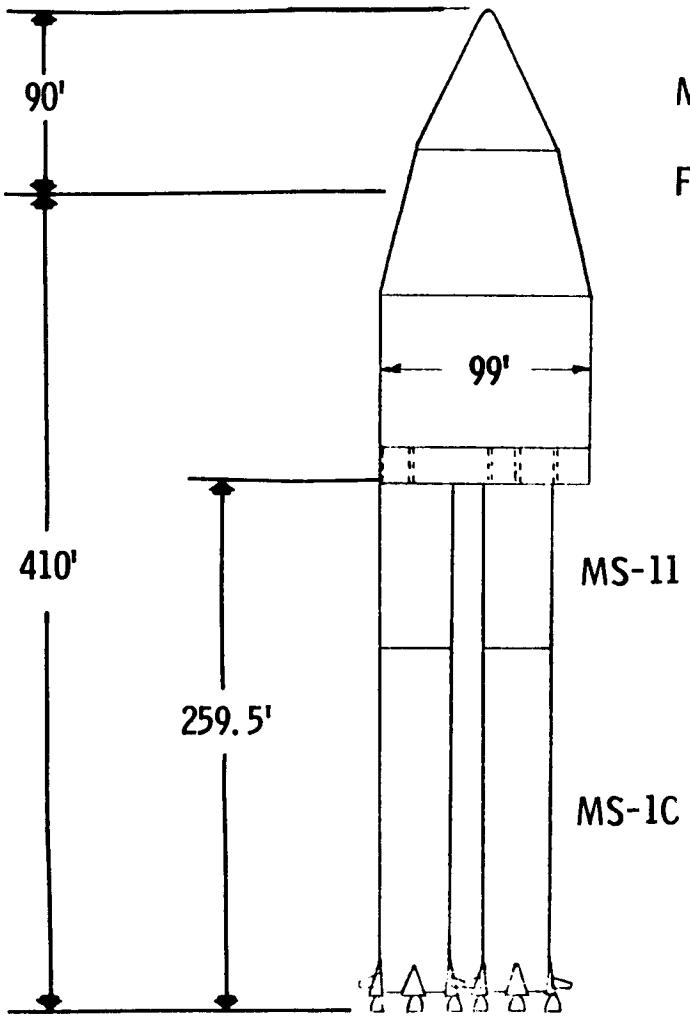

MAXIMUM WEIGHT TO L/PAD = 1,893,000 LBS.

FUELING REQUIREMENTS - MAX.

- LH_2 — 2,150,000 gals.
- LOX — 1,700,000 gals.
- RP-1 — 900,000 gals.
- Q/D @ 0.4 psi = 16,000 ft

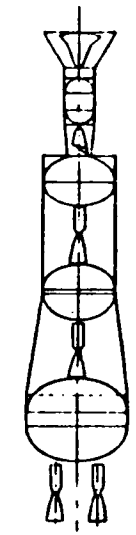

EARTH LAUNCH		
PAYLOAD	PM-1	PM-2, -3, SC
LAUNCH NUMBER	1	2
ELV MODEL	4X	3X
P/L LENGTH (FT)	208	255
P/L WEIGHT ($LB \times 10^3$)	985	886
PM TANK LEN (FT)	60	38/36/—
PM TANK DIA (FT)	72	52/52/—
IMIEO ($LB \times 10^3$)	1940	

Figure 3:

SAT V— 4X(U)

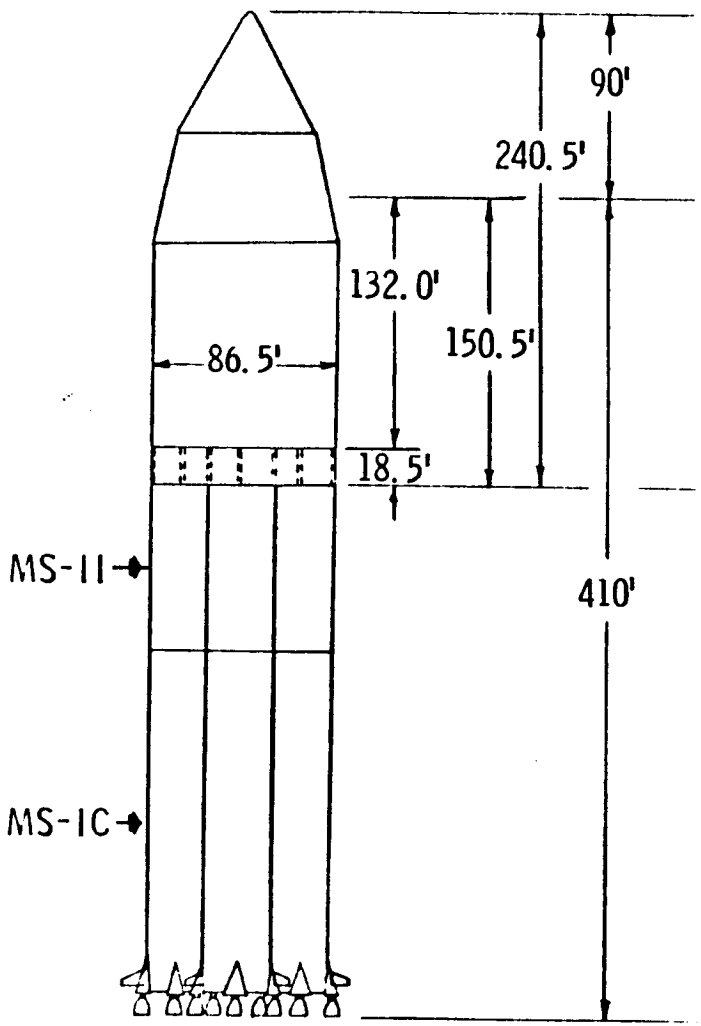

SAT V–4X(U)
MAXIMUM WEIGHT TO L/PAD = 2,370,000 LBS.

FUELING REQUIREMENTS - MAX

LH_2	–	2,410,000 gals.
LOX	–	2,270,000 gals.
RP-1	–	1,200,000 gals.
Q/D	@	0.4 psi = 17,000 ft

EARTH LAUNCH

	82 OPP	
PAYLOAD	PM-1	PM-2, -3, SC
LAUNCH NUMBER	1	2
ELV MODEL	4X	3X
P/L LENGTH (FT)	208	255
P/L WEIGHT ($LB \times 10^3$)	985	886
PM TANK LEN (FT)	60	38/36/–
PM TANK DIA (FT)	72	52/52/–
IMIEO ($LB \times 10^3$)	1940	

Figure 4:

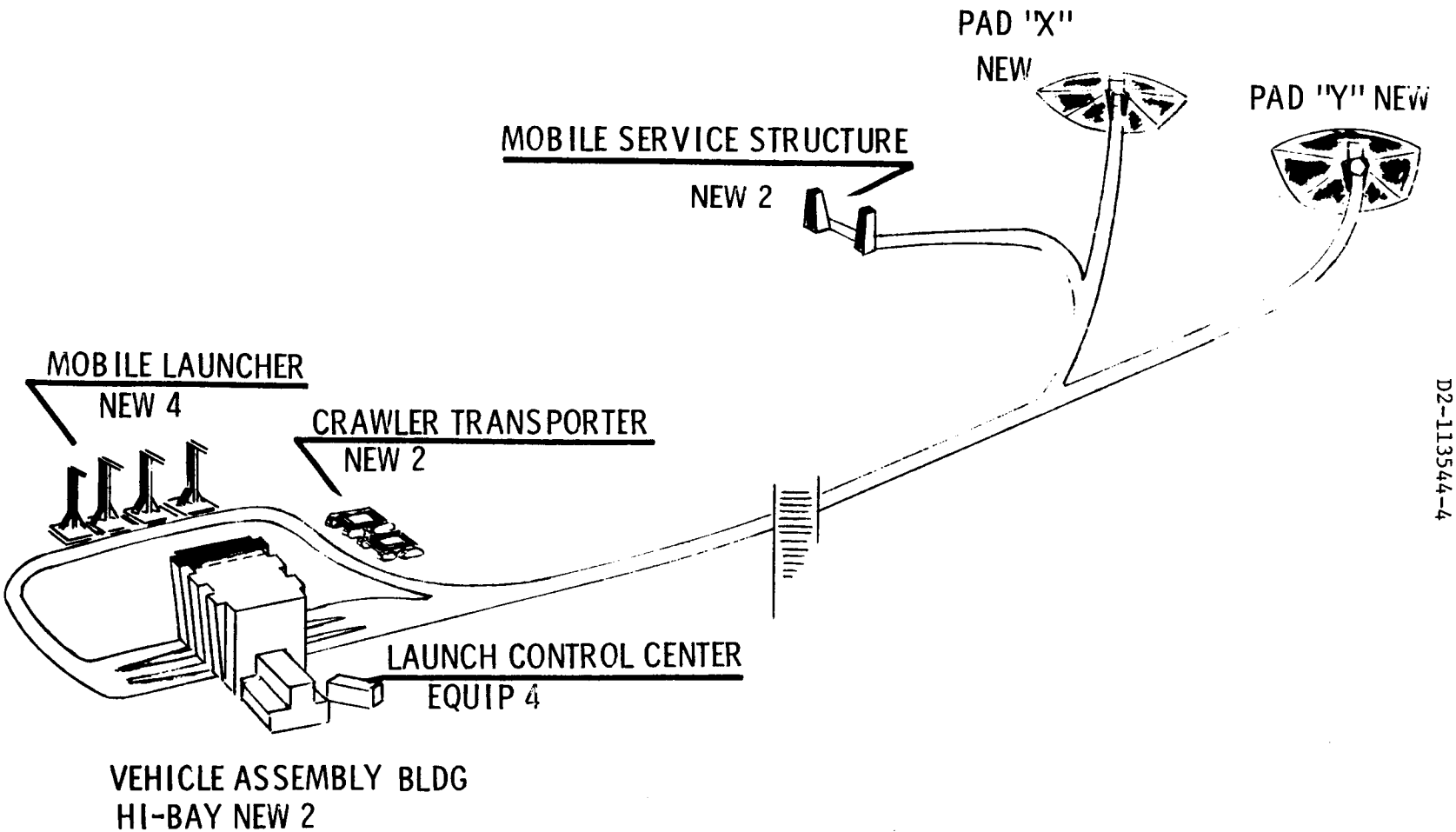

SATURN V -X(U) FACILITY CONCEPT

Figure 5:

The new assembly high-bays in the VAB would be large enough to accommodate the clustered ELV/PL and the new ML. The service platforms, utilities, etc., of one bay would be configured for the 4X ELV and the PM-1 payload, the other would be configured for the 3X ELV and the PM-2, -3 & S/C payload. The transfer aisle and craneway would be extended from the present VAB to the new high-bays. Component handling would be similar to Saturn V procedure.

Since assembly of a standby unit will be started when the mission vehicle leaves the VAB, four Mobile Launchers (ML) will be required to support the program. The umbilical arms and services of each ML will be configured for a specific ELV/PL arrangement.

The two new crawler-transporters would be considerably larger than the present units. The maximum vehicle weight of 2.4 million pounds plus an ML weight estimated at 15 million pounds, gives a total weight of 17-18 million pounds, compared to Saturn V at 12 million pounds. The ability of the existing crawlerway to accept this increased load even with larger area traction units will require careful consideration.

Modification of the existing Mobile Service Structures does not appear practical because of the extent of the changes that would be required to service the new vehicle and the need to incorporate hurricane protection into the structure. Therefore, two new units must be constructed.

While modification of the existing launch pads to accept the SAT-V-X(U) from a structural standpoint is feasible, overpressures from vehicle failure at the pad precludes this consideration. Siting requirements for 0.4 psi are approximately 17,000 feet for the 4X(U) ELV. One approach would be to modify one existing pad and construct one new pad, sited at the required distance. However, since the modifications required to convert an existing pad would be very extensive and difficult to define, for this trade study both pads were assumed to be new. RP-1 and LOX storage requirements for each new pad will run about five times that of the present pads and LH_2 requirements about seven times present capacity.

No detailed analysis of the test equipment required to checkout and launch a cluster of Saturns and a PM or S/C payload has been attempted for this study. It has been assumed that these expanded requirements could be accommodated in the existing Launch Control Center and MSOB.

1.2.1 Cost Analysis

The estimated costs for the major facility additions and modifications for the SAT-V-XU concept are tabulated in Table 3.

1.3 POST-SATURN (Figure 6)

The Post-Saturn ELV with a 15-foot-diameter core and from 4 to 12 260-inch diameter solid strapon rocket motors will require a completely new facility for assembly, checkout and launch. The quantity of propellants and the acoustic hazard during lift-off preclude any consideration

POST SATURN

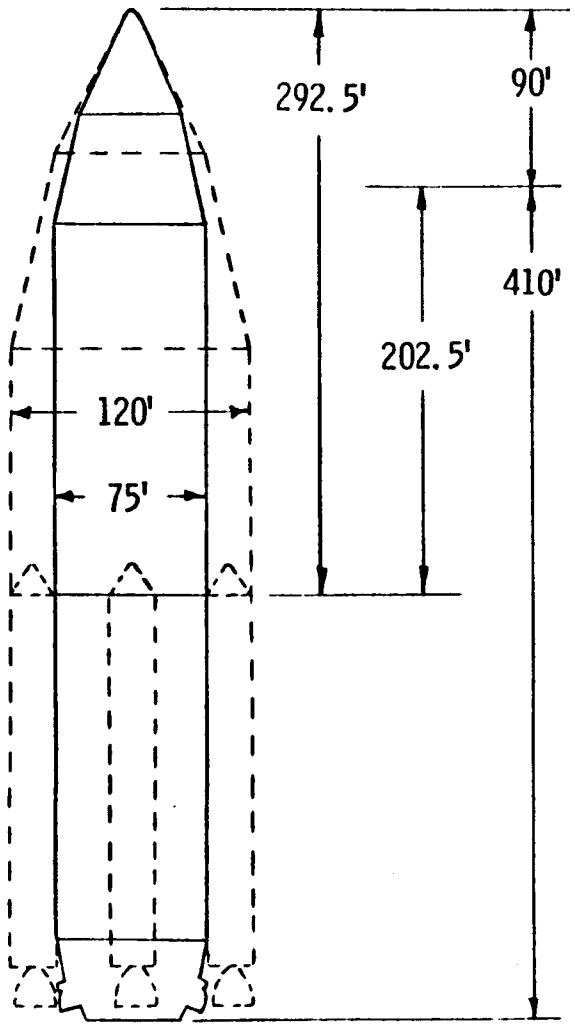

MAXIMUM WEIGHT TO L/PAD = 1,695,000 LBS.

FUELING REQUIREMENTS - MAX.

LH_2 — 6,350,000 gals.

LOX — 1,500,000 gals.

Q/D @ 0.4 psi with (4) S/O = 41,000 ft

SOLID ROCKET WEIGHT = 15,000,000 lbs. ea.

OPP 82

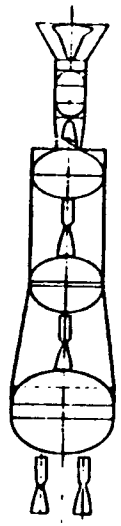

EARTH LAUNCH		
PAYLOAD	PM-1, -2, -3	SC
LAUNCH NUMBER	1	2
ELV MODEL	C+4	SAT V
P/L LENGTH (FT)	333	95
P/L WEIGHT ($LB \times 10^3$)	1719	219
PM TANK LEN (FT)	60/38/36	—
PM TANK DIA (FT)	72/52/52	—
IMIEO ($LB \times 10^3$)	1940	

Figure 6:

Table 3: FACILITY ADDITIONS AND MODIFICATIONS COSTS - SAT-V-X(U)

Facility	Quantity	$(million)
Vehicle Assembly Building - New High-Bays	2	45.0
Mobile Launchers - New	4	240.0
Crawler-Tractors - New	2	23.0
Mobile Service Structure - New (with tie-down)	2	84.0
Launch Pads - New	2	52.0
Fueling - New	-	120.0
Other (Roads, LCC Equip., Communications, etc.)	-	43.0
Total		607.0

Table 4: FACILITY ADDITIONS OR MODIFICATION COSTS - POST-SATURN

Facility	Quantity	$(million)
Launch Pads	2	80.0
Barge Facility and Channel	1	5.0
Dock Facilities	-	11.0
Roads	-	3.0
Fueling	2	620.0
Combination MSS/Mobile VAB	2	180.0
Launch Control	-	71.0
Communications and Utilities	-	42.0
Fixed LUT	2	160.0
Total		1172.0

of using Launch Complex 39 for this purpose. As indicated in Table 1 for the maximum ELV configuration, the 125 db level (ear damage point) occurs at 18 miles.

The very large physical size and weight of the components that make up the Post Saturn vehicle dictates the choice of a fixed rather than a mobile launch facility as was used for the two previous vehicles. A specific location for the facility was not investigated, but would have to provide the necessary distance from uninhabited areas and be suitable for connection to established water transportation routes as barge shipment of the core and solid rockets is the only practical method of transporting items of this size.

To provide standby capability, two vehicles are assembled at the same time which would require construction of two launch complexes. A possible arrangement is shown in Figure 7. Basically, each launch facility will consist of a launch pad with a barge docking facility and a large gantry type crane for unloading the barges and transporting the vehicle components to the launch pad for assembly. The development of a crane to lift the 15 million pound SRM's would be a major technological problem. A mobile service structure would provide access platforms similar to the Saturn V concept. A fixed Launch Umbilical Tower provides fixed and swing arms for carrying electrical pneumatic and propellant connections to the vehicle. The LUT also contains work platforms for GSE.

A solid rocket motor storage facility for receipt and processing of the 260 inch diameter motors is provided. The SRM's are maintained on the shipping barges in this area.

A launch control center similar to that provided at launch complex 39 for Saturn V is located remote from the launch pads.

1.3.1 Cost Analysis

Estimated costs for the major facility elements for the Post Saturn launch complex are tabulated in Table 4. Inasmuch as the requirements were not developed in any great detail, but rather were presented as a general approach, the costs are primarily some multiple of a known cost for a similar but smaller facility.

1.4 MLV-SAT-V/4-260 (Figure 8)

The MLV-SAT-V/4-260 vehicle consists of a standard Saturn V first and second stage and four 260 inch diameter strap-on solid rocket motors. For assembly, checkout, and launch of this vehicle, facilities common to both the SAT-V-25S(U) and the SAT-X(U) configurations would be required. The core vehicle and payloads could be accommodated in the existing VAB assembly high-bays with relatively minor modification. However, the propellant quantities and the acoustic hazard that arises due to the addition of the solid rocket motors precludes use of the existing launch pads. For this trade study the facility concept includes

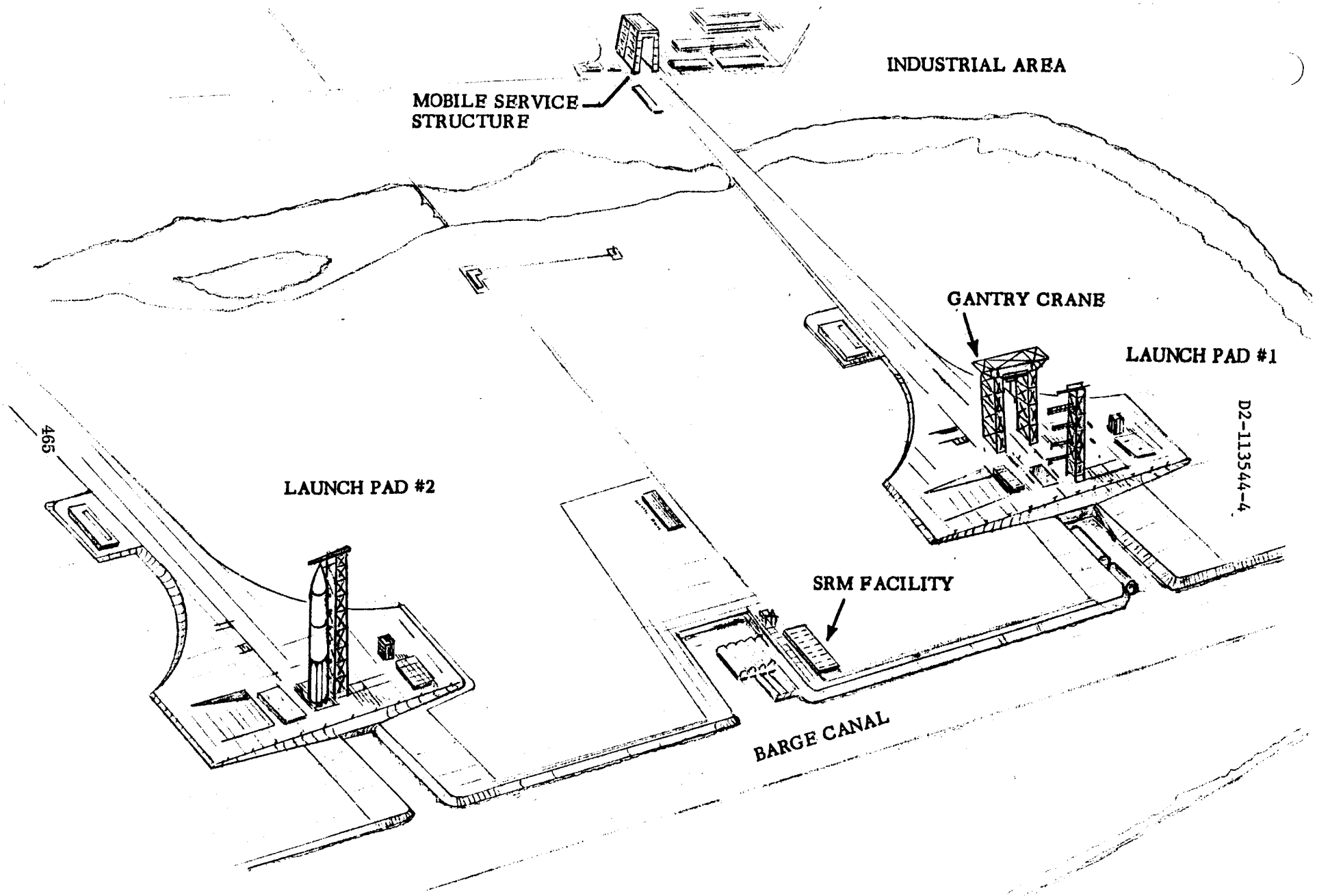

Figure 7:

POST SATURN FACILITY CONCEPT

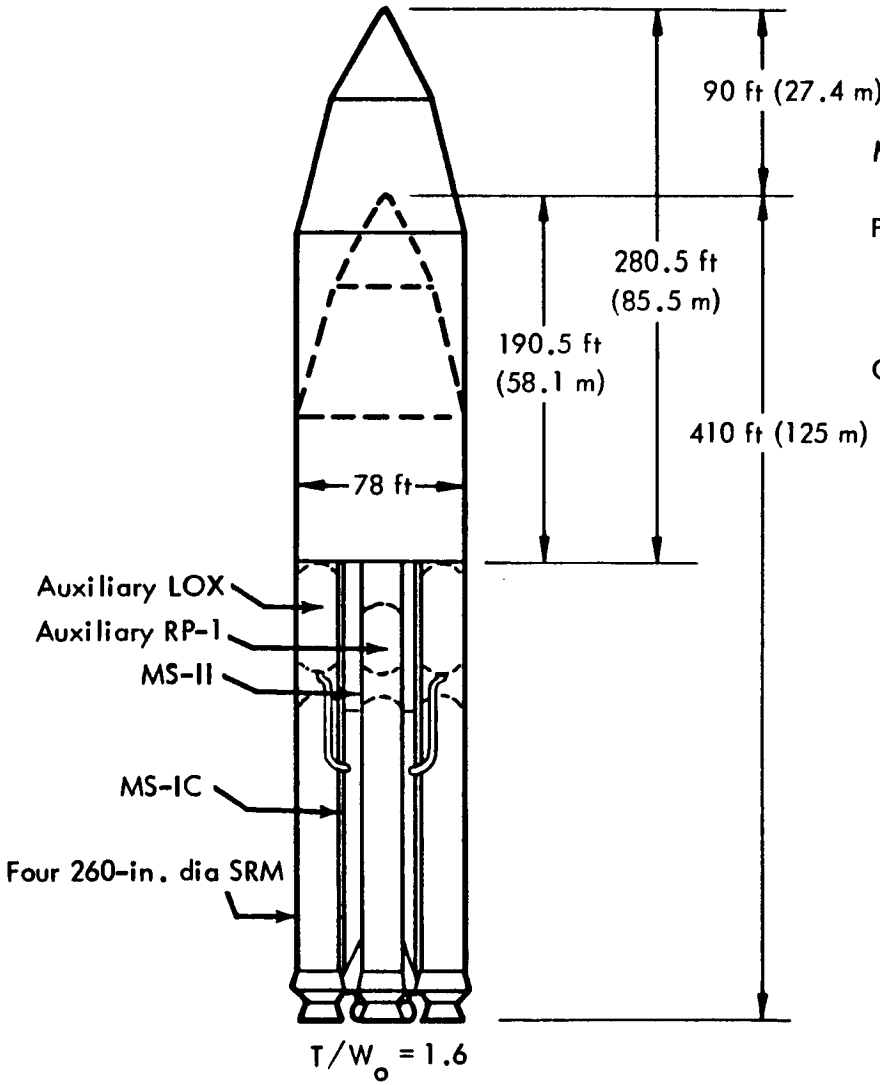

Max. Weight To L/Pad:
931,000 Lbs

Propellant Requirements:
LH_2 -1,073,000 Gals
LOX- 655,000 Gals
RP-1 - 377,000 Gals

Q/D @ 0.4 Psi = 23,000 Ft

♂ 82 OPP

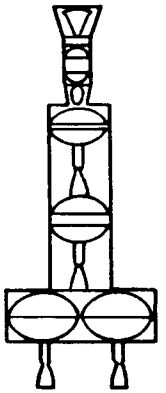

Earth Launch			
Payload	PM-1/SC	PM-1	PM-2, -3
Launch Number	1	2	3
ELV Model	C+4	C+4	C+4
P/L Length (Ft)	185	152	223
P/L Wt.(10^3 Lb)	722	513	705
PM Tank Len (Ft)	45/-	45	42/38
PM Tank Dia (Ft)	65	65	50/50
IMIEO (10^3Lb)	1940		

Figure 8: MLV-SAT-V / 4-260

modification of three of the existing assembly high-bays in the VAB and the construction of two new launch pads and connecting crawlerway north of the present Saturn V pads.

To support the mission schedule, the operational procedure would be to assemble the three ELV/PL configurations, less SRM's, in the VAB and then transport them to the launch pads for integration with the SRM's. Processing of a standby unit for each configuration would be started in the VAB as the flight unit was moved out. A possible arrangement of the launch complex is shown on Figure 9. Facilities required to accommodate this procedure include:

a) Six new mobile launchers

b) Two new crawler-transporters

c) Two new mobile service structures

d) Four modified and two new launch control center firing rooms

In addition to the above, each launch pad would require an integral docking facility for the SRM transportation barges.

The proposed manufacture of the SRM's in a one piece casting will present a very major problem in the development of a facility capable of handling these components. The 2000 ton weight of one unit far exceeds the capacity of any crane or derrick in use today.

1.4.1 Cost Analysis

Cost estimates of major facilities required to support this ELV/PL concept are tabulated in Table 5.

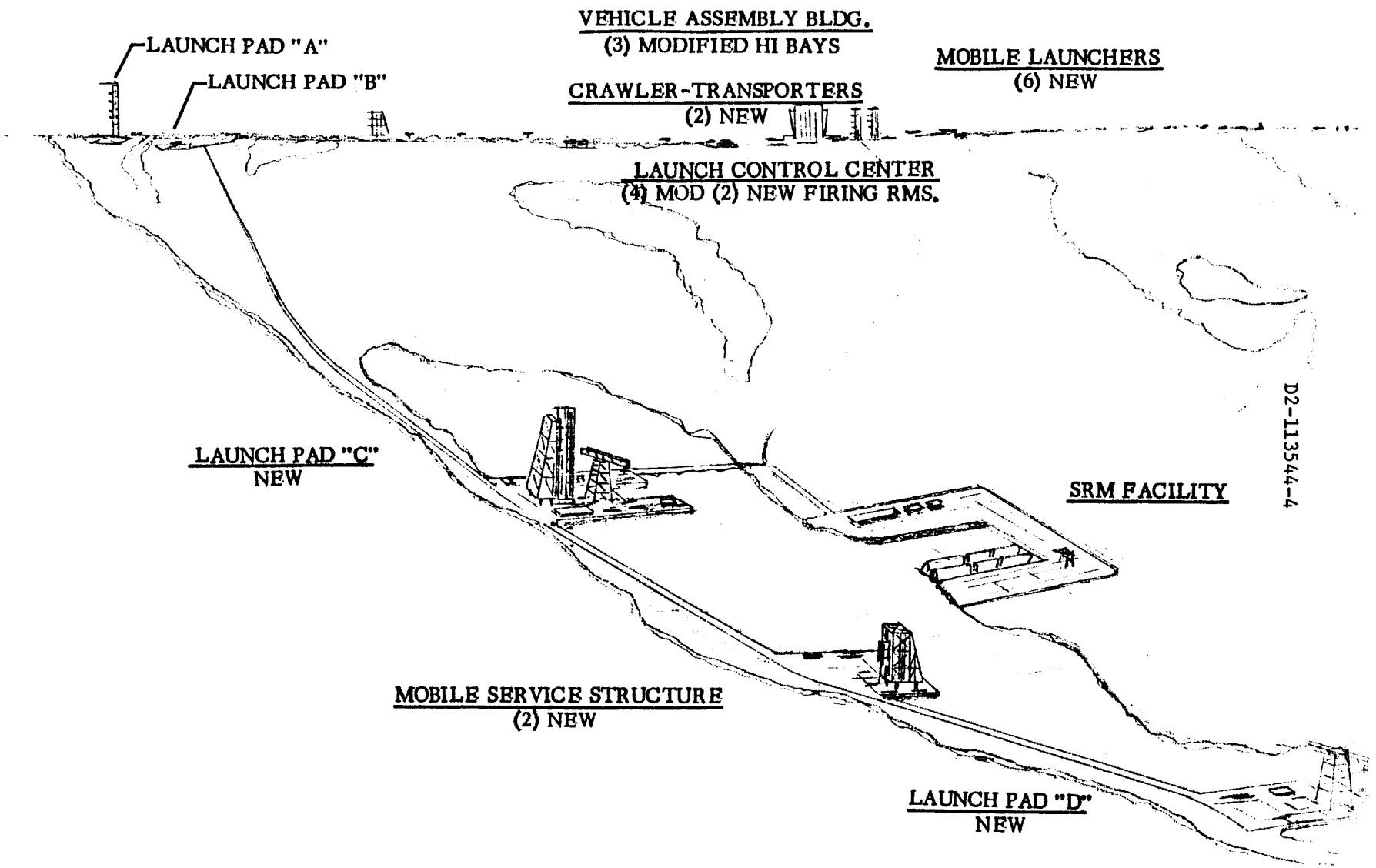

MLV-SAT-V/4-260 FACILITY CONCEPT
Figure 9:

Table 5: COST ESTIMATES OF MAJOR FACILITIES

Facility	Quanity	$(million)
VAB High-Bay (Mod + Outfit)	1	11.0
VAB High-Bays (Modify)	2	12.0
Launch Control Center Firing Rooms (Modify)	4	4.0
Launch Control Center Firing Rooms (New)	2	22.5
Mobile Launchers (New)	6	360.0
Crawler-Transporters (New)	2	22.0
Mobile Service Structures	2	140.0
Launch Pads (New) Including fueling, crawlerways, docking and SRM handling.	2	320.0
SRM Storage	1	16.5
Total		900.0

APPENDIX C1
TEST PLAN HARDWARE QUANTITIES FOR THE IMISCD PHASE II TRADE STUDIES

It was necessary during the Phase II trade studies to determine the quantities of flight test hardware required for each space propulsion/ELV combination. These quantities were then used in the cost estimates for the flight test program for each combination. A preliminary test plan was developed which included major ground test requirements in addition to the flight test requirements. The ground test hardware quantity requirements were not continued, however, since all of the parametric cost curves included allowances for ground test programs. The quantities for flight qualification tests and flight demonstration tests are included in Tables C1-1 through C1-7.

PRECEDING PAGE BLANK NOT FILMED.

Table C1-1: NNN TEST PLAN QUANTITIES

	SAT-V-25S(U)		SAT-V-260 Inch SRM		SAT-X(U)		Post-Saturn	
	PM	ELV	PM	ELV	PM	ELV	PM	ELV
Flight Qual Tests:								
S/C		2-C	2	2-C+4		2-SAT-V		2-SAT-V
PM-1 Single Module		3-C+4	2		2	2-4x		
PM-2 Single Module	3		1	C+4	2	2-3x		
PM-3 Single Module			1		2			
PM-1 Clustered or Stacked	3	3-C+2	2	2-C+4	1	1-4x	3	2-C+4
PM-2 Clustered or Stacked	1		1	1-C	1	1-3x	3	1-C+2
PM-3 Clustered or Stacked		1-C+4			1		3	
Demonstration Test:						Launched on same ELV as PM-2 &-3		
S/C		1-C	1	2-C+4				
S/C Standby			1					
PM-1	3	3-C+2	2		1	1-4x	1	
PM-1 Standby	1		1	1-C+4 (standby)	1	1-4x	1	1-C+4 & 1-C+4
PM-2	1	1-C+4	1		1	1-3x	1	
PM-2 Standby	1	1-C+4	1	1-C+4	1		1	
PM-3	1	1-C+2	1		1		1	
PM-3 Standby	1		1		1		1	

Table C1-2: CCC TEST PLAN QUANTITIES

	SAT-V-25S(U)		SAT-V-260 Inch SRM		SAT-X(U)		Post-Saturn	
	PM	ELV	PM	ELV	PM	ELV	PM	ELV
Flight Qual Tests:								
S/C PM-3A &/or 3B	2	2-C	2	2-C+4	2 4	2-3x	2 4	Same as PM-2
PM-1 (single modules)	1	1-C+4	1	1-C+4	1	1-4x	1	1-C+8
PM-2 (single modules)			1	1-C+4	1	1-3x	2	2-C+4
PM-1 (Modules) clustered	7	7-C+4	5	5-C+4	4	3-4x	1	1-C+8
PM-2 or stacked	2	2-C+4	1	1-C+4	1	1-3x	1	1-C
Demonstration Tests:								
S/C	1	Same as PM-3A	1	Same as PM-3A & -3B	1	Same as PM-3A & -3B		Same as PM-2 & -3
S/C Standby	1		1		1			
PM-1 (Modules)	7	7-C+4	5	5-C+4	4	3-4x	1	1-C+8
PM-1 Standby (Modules)	1	1-C+4 (Standby)	1	1-C+4 (Standby)	1	1-4x (Standby)	1	1-C+8 (Standby)
PM-2 (Modules)	2	2-C+4	1	1-C+4	1	1-3x	1	1-C+4
PM-2 Standby (Modules)	1		1		1	1-3x (Standby)	1	
PM-3 (Modules)	2 (3A&B)	1-C+4 1-C	2 (3A&B)	1-C+4	2 (3A&B)	1-3x	2 (3A&B)	
PM-3 Standby (Modules)	2 (3A&B)		2 (3A&B)		2 (3A&B)		2 (3A&B)	

Table C1-3: NAN TEST PLAN QUANTITIES

	SAT-V-25S(U)		SAT-V-260 Inch SRM		SAT-X(U)		Post-Saturn	
	PM or Aero	ELV	PM or Aero	ELV	PM or Aero	ELV	PM or Aero	ELV
Flight Qual Tests:								
Heat Shield & Aero Tests(2) (MM, EEM, MEM Mass Simul & PM-3)	2 ea.	2-C+4 2-C+2	2 ea.	2-C+4	2 ea.	2-3x	2 ea.	2-C
Aero Syst Flt Tests (2)								
MM	2*		2		2*		2*	
MEM	2*		2		2*	1-3x	2*	
EEM	2*	2-C+2	2	2-C+4	2*	1-3x	2*	
Aero Struct, etc.	2		2		2		2	1-C+4 1-C+2
PM-3 (Modules)	2	2-C+4	2		2		2	
PM-1 Single Modules Tests	1	1-C+4	1	1-C+4	2	2-3x	12	
PM-1 Clustered Test (Mods)	2	2-C+4	2	2-C+4	-		-	
Demonstration Tests:								
S/C Aero Struc	1	1-C+2	1		1		1	
S/C Standby Aero Struct.	1		1	1-C+4	1		1	
PM-1 (Modules)	2	2-C+4	1		1	2-3x	6	1-C+4
PM-1 Standby (Modules)	1		1		1	1-3x Standby	1	1-C+4 Standby
PM-3 (Modules)	1	1-C+4	2	2-C+4	1		1	
PM-3 Standby (Modules)	1	1-C+4 (Standby)	1	1-C+4 (Standby)	1		1	

*Do not charge to program for initial trades.

Table C1-4: NAN TEST PLAN QUANTITIES (Cont'd)

	SAT-V-25S(U)		SAT-V-260 Inch SRM		SAT-X(U)		Post-Saturn	
	PM or Aero	ELV	PM or Aero	ELV	PM or Aero	ELV	PM or Aero	ELV
Heat Shield & Aerobraking Tests for Each Mission Aero Configuration:								
Mars Opp 82 Mission (covered by basic plan above)	-	-	-	-		-	-	-
Mars Conj 86 Mission - Heat Shield & Aero Struct. (MM, EEM, MEM & PM-3 Mass Simul)	1	1-C+2 1-C	1	1-C+4	1	1-3x	1	1-C
Mars Venus Swby 82 Mission Heat Shield & Aero Struct. (MM, EEM, MEM & PM-3 Mass Simul)	1	2-C+2	1	1-C+4	1	1-3x	1	1-C
Venus Short 82 Mission - Heat Shield & Aero Struct. (MM, EEM, MEM & PM-3 Mass Simul)	1	2-C+2	1	1-C+4	1	1-3x	1	1-C
Venus Long 80 Mission - Heat Shield & Aero Struct. (MM, EEM, MEM & PM-3 Mass Simul)	1	2-C+2	1	1-C+4	1	1-3x	1	1-C

Table C1-5: CAC TEST PLAN QUANTITIES

	SAT-V-25S(U)		SAT-V-260 Inch SRM		SAT-X(U)		Post-Saturn	
	PM or Aero	ELV	PM or Aero	ELV	PM or Aero	ELV	PM or Aero	ELV
Flight Qual Tests:								
Heat Shield & Aero Tests(2) (MM, EEM, MEM Mass Simul & PM-3)	2	4-C+4	2	4-C+4	2	2-4x	2	2-C+8
Aero Syst Flt Tests (2)								
MM	2*		2*		2*		2*	
MEM	2*		2*		2*		2*	
EEM	2*		2*		2*		2*	
Aero Struct. etc.	2	4-C+4	2	4-C+4	2	2-4x	2	1-C (1 same as PM-1)
PM-3A (Modules)	2		2		2		2	
PM-3B (Modules)	2		2		2		2	
PM-1 Single Module Tests	2	2-C+4	2	2-C+4	2	2-4x	2	1-C
PM-1 Clustered Test (Mod)	5	5-C+4	3	3-C+4	3	3-4x	-	---
Demonstration Tests:								
S/C Aero Struct	1	Same as PM-3A&B	1	Same as PM-3A&B	1	Same as PM-3	1	
S/C Standby Aero Struct	1		1		1		1	
PM-1 (Modules)	5	5-C+4	3	3-C+4	3	3-4x	1	
PM-1 (Modules) Standby	1	1-C+4 (Standby)	1	1-C+4	1	1-4x	1	1-C+8 +1-C+8 (Standby)
PM-3A (Modules)	1		1		1		1	
PM-3A (Modules) Standby	1	2-C+4	1	2-C+4	1	1-4x	1	
PM-3B (Modules)	1		1		1		1	
PM-3B (Modules) Standby	1		1		1		1	

*Do not charge to program for initial trades.

Table C1-6: CAC TEST PLAN QUANTITIES (Cont'd)

	SAT-V-25S(U)		SAT-V-260 Inch SRM		SAT-X(U)		Post-Saturn	
	PM or Aero	ELV	PM or Aero	ELV	PM or Aero	ELV	PM or Aero	ELV
Heat Shield & Aerobraking Tests for Each Mission Aero Configuration:								
Mars Opp 82 Mission (covered by basic plan above)	-	-	-	-	-	-	-	-
Mars Conj. 86 Mission - Heat Shield & Aero Struct. (MM, EEM, MEM & PM-3 Mass Simul)	1	1-C+4	1	1-C+4	1	1-3x	1	1-C
Mars Venus Swby 82 Mission - Heat Shield & Aero Struct. (MM, EEM, MEM & PM-3 Mass Simul)	1	2-C+2	1	2-C+4	1	1-3x	1	1-C
Venus Short 82 Mission - Heat Shield & Aero Struct. (MM, EEM, MEM & PM-3 Mass Simul)	1	1-C 1-C+2	1	1-C+4	1	1-3x	1	1-C
Venus Long 80 Mission - Heat Shield & Aero Struct. (MM, EEM, MEM & PM-3 Mass Simul)	1	2-C	1	1-C+4	1	1-3x	1	1-C

Table C1-7: NNN SAT-V-260 INCH SRM/TANKER TEST PLAN QUANTITIES

	PM Modules	ELV	Tanker	ELV For Tanker
Flight Qual Tests:				
S/C				
PM-1	2	2-C+4		
PM-2	2			
PM-3	2			
Tanker			2	2-C+4
Demonstration Tests:				
S/C	1	1-C+4 Standby		
S/C Standby	1			
PM-1	1			
PM-1 Standby	1			
PM-2	1			
PM-2 Standby	1			
PM-3	1			
PM-3 Standby	1			
Tanker			2	2-C+4
Tanker Standby			1	

APPENDIX C2
LAUNCH PREPARATION AND ORBITAL FLOW TIMES FOR IMISCD PHASE II TRADE STUDIES

Flow time schedules were developed for each of the ELV types studied during the IMISCD Phase II trades. The flow times were based on the present Saturn V flow times and the flow times developed for uprated Saturn V's from the NAS8-20266 NASA contract conducted by Boeing (Huntsville). Figure C2-1 gives a comparison of the flow times which were used in the trade studies.

One standby launch was scheduled for each demonstration test and each mission for every ELV type. It was necessary, therefore, to provide a schedule allowance for processing this standby ELV with its payload. Processing time included:

- Removal of any existing payload from an ELV in the VAB;
- Installation of a new payload and full processing of the new payload in the VAB;
- Full processing of the ELV and new payload on the launch pad.

It was concluded that if a standby should be required, it would be on an emergency basis and therefore should be processed on an overtime basis. The allowance for processing the various ELV's studied during Phase II are shown on Figure C2-1.

The detailed launch operations flow time analysis for SAT-V-25(S)U, SAT-V/4-26 SRM, SAT-V-X(U), and Post-Saturn is shown on Figures C2-2, -3, -4 and -5. It may be noted on the figures that the launch operations flow time analysis was based on the MLV-SAT-V-25(S) time line and SOP from the uprated Saturn V studies on contract NAS8-20266. The basic chart form--25(S) was modified by deleting or adding days and operations. Differences are noted on the figures.

Orbital operations flow times are determined to a large extent by the quantity of launches required, by the quantity of launch facilities available, and by the launch pad turn-around time. Total orbital operations flow time starts with the first launch and concludes with the launch of the space vehicle into its planetary trajectories. This flow time is composed of:

- Time required between successive launches on the pad. For the IMISCD study we have used a salvo launch philosophy to minimize orbital operations flow time. Three days is allowed between each launch;
- Launch pad turn-around time;
- An allowance for processing the ELV standby with its payload;
- The final orbital assembly and checkout operations plus the launch window.

Figure C2-6 is an example of the orbital operations flow time required for a SAT-V-25(S)U ELV when six launches are required for a mission, three launch facilities are available, and standby processing time is allowed. A formula was developed for quickly determining orbital operations flow time required with varying quantities of launch pads, varying quantities of launches required, different pad turn-around times and different allowances for preparation of standby ELV's and payloads. This formula with several examples is included as Table C2-1.

Table C2-1: ORBITAL OPERATIONS FLOW TIME FORMULA

Symbols:

C = Constant time (in days) for the Final Orbital Assembly Operation plus C/O plus launch window. C = 30 days for all cases.

K = Constant time (in days) for assembly, checkout and preparation for launch of a standby unit.
K = 32 days for SAT-V-25(S)U
K = 28 days for SAT-V-X(U)
K = 38 days for Post Saturn

NOTE: This is on a 7 day week, O.T. basis.

L = Launch quantities required (less standby launch).

P = Pad quantities required.

L/P* is always the next integer when L/P is a fraction (i.e., when L/P = 2.2, then L/P* = 3).

PTA = Pad-turnaround-time (in days).

R = The remainder of L/P unless the remainder is 0, then R = P (i.e., if L/P = 8/3, then R = 2) (i.e., if L/P = 8/4, then R = 4).

A = Allowance-minimum time (in days) between launches.

OT = Orbital time required for orbital operations (in months).

NOTE: Ground operations are based on a 5-day week and therefor one month = 21 days. Orbital operations are based on a 7-day week and therefore one month = 30 days.

Formula:

$$OT = \frac{C}{30 \text{ days/month}} + \frac{PTA\ (L/P^*-1) + A(R-1) + K}{21 \text{ days/month}}$$

Formula Tests for SAT-V-25(S)U Launches:

C = 30 days in all cases.
K = 32 days in all cases.
PTA = 40 days in all cases.
A = 3 days in all cases.

$$OT = \frac{30}{30} + \frac{40\ (L/P^*-1) + 3(R-1) + 32}{21}$$

Case 1. 8 launches with 4 pads.

$$OT = \frac{30}{30} + \frac{40\ (8/4^*-1) + (4-1) + 32}{21} = 1 + \frac{81 \text{ days}}{21} = 3.9 \text{ months}$$

Case 2. 6 launches with 4 pads.

$$\frac{30}{30} + 40\ (6/4^*-1) + 3(2-1) + 32 = 1 + \frac{75}{21} = 3.6 \text{ months}$$

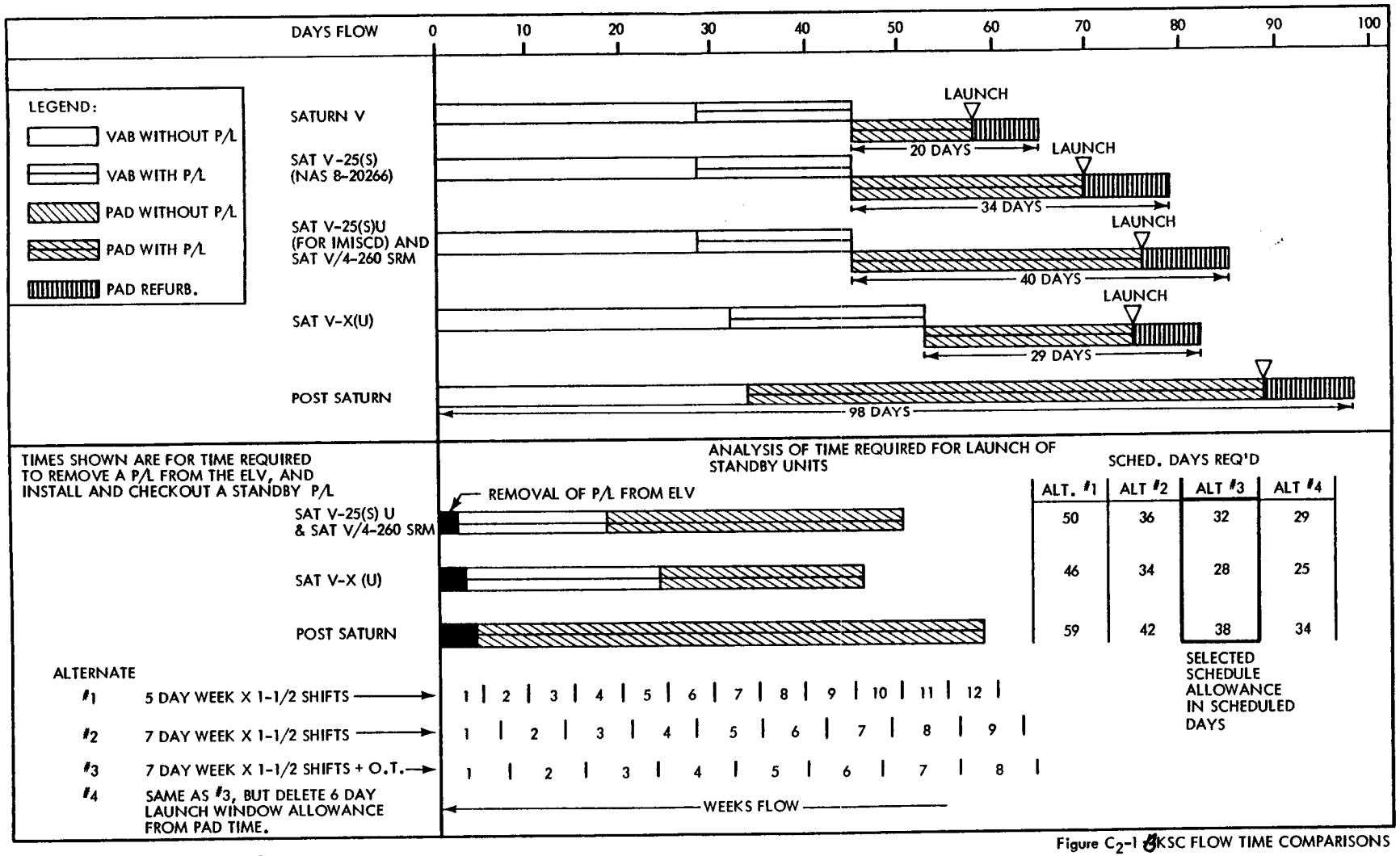

Figure C_2-1 KSC FLOW TIME COMPARISONS

483 Fig C2-1:A

PRECEDING PAGE BLANK NOT FILMED.

FOLDOUT FRAME

FOLDOUT FRAME

LOCATION	ACTIVITY	TIME (DAYS)
VAB HI-BAY	Off-load and Erect MS-1C on ML	**
	Install MS-1C Platforms, Swing Arms, etc.	2-1/2
	Install SRM Attachment Hardware	2
	Install Mech Stage Hardware & Connect Umbilicals	2
	Mechanical Systems Tests	4
	Transfer MS-II, Erect on MS-1C and Connect	15-1/2
	Transfer MS-IVB, Erect on MS-II and Connect	4
	Install IU and Connect	3
	Elec. Compat. Tests - Elec. Mate all Stages	2-1/2
	Electronic System Tests (RF, TM, etc.)	4
	Elect. Interstage Functional Tests	31
** Flow Times in Hi-Bay and Indent. to SAT V	Launch Vehicle O.A.T. #1 & #2 (Swing Arms)	5
	Transfer, Erect and Mate Payload	5
	Perform Payload Integration Tests	2-1/2
	Launch Vehicle O.A.T. #3 (Elec. Plug Drop)	4-1/2
	Space Vehicle O.A.T. #1 & #2 (Elec. Plug Drop)	2
	Install MLV Ordnance	3
	Perform Simulated Flight Test	12
	Prepare S/V and ML for Transfer	2
	Transfer S/V and ML to Pad	2
LC-39	ML Connection on Pad and Preliminary Checks	1/2
	Position MEPS	2-1/2
	Prepare for SRM Installation & Erect Scaffolding	(1/2)
	Transfer SRM Segments on MEPS to Pad	1-1/2
	Install and Assemble First Two SRMs	(3/4)
	Install and Assemble Second Two SRMs	3*
	Attach TVC Tank Assemblies	3*
	Remove Mobile MEPS	1/2* (3)
	Integrate SRMs with MS-IC Stage, Mech/Elect.	(1/2)
	Test and Accept all SRMs	2*(4)
	Remove Scaffolding & Position MSS	1-1/2*(4)
	Perform SRM Elec. Power Tests	1/2*(1)
	Perform Flight Readiness Tests	(1/2)
	Perform Prop. Tanking Tests and Evaluation	2
	Simulated Flight Test	4
	Launch Preps. Including SRM/TVC Tank Loading	1
	Countdown & Launch	2
	Launch Window	1
	Refurbish Launch Pad	9
	Remove and Refurbish ML	15

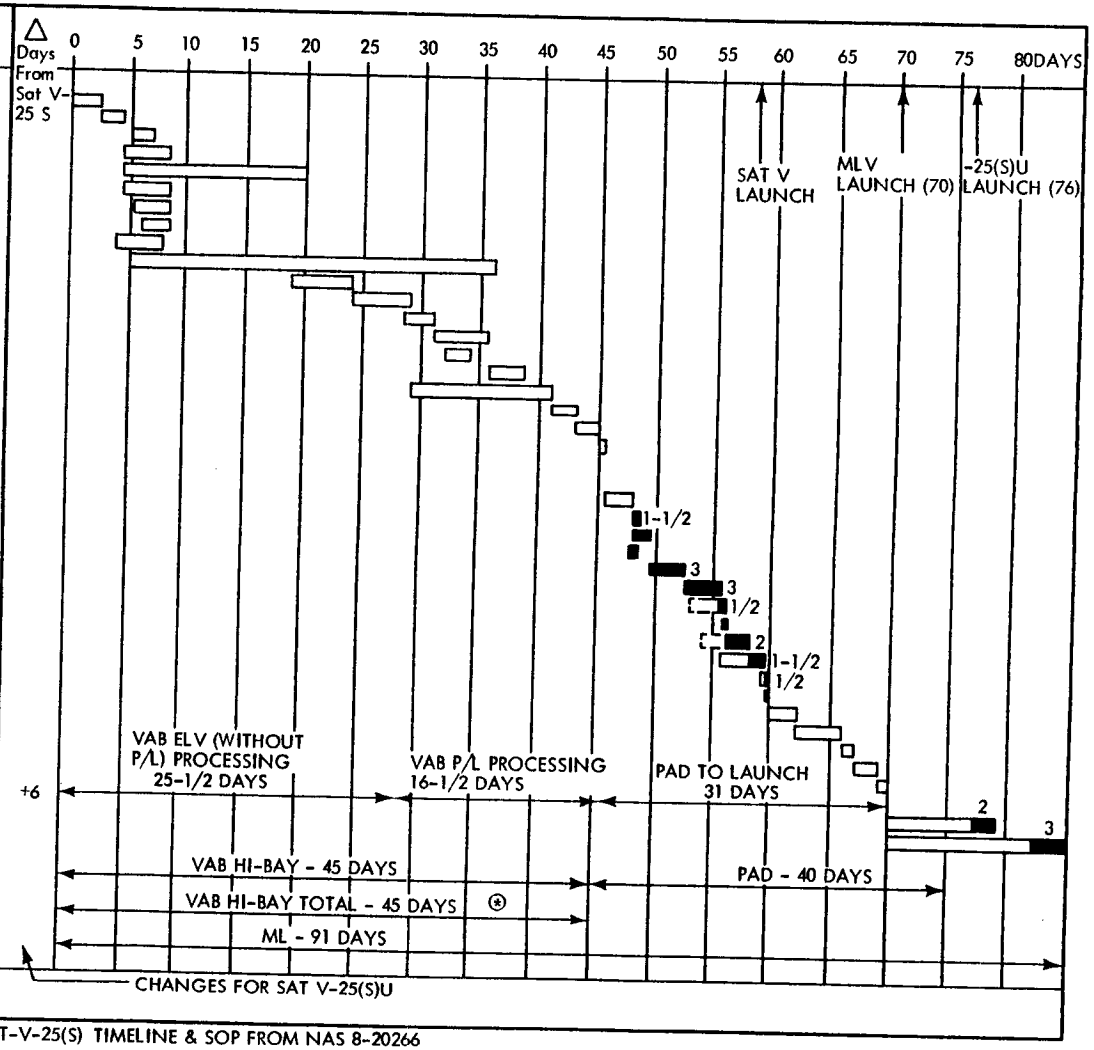

* TWO SHIFT OPERATIONS
( ) NOT IN CRITICAL TIME PATH
⊛ HURRICANE PROTECTION AT PAD

ANALYSIS IS BASED ON MLV-SAT-V-25(S) TIMELINE & SOP FROM NAS 8-20266

485 Fig. C_2-2: A

Figure C_2-2: A IMISCD-SAT V-25(S) U LAUNCH OPERATIONS FLOW TIME ANALYSIS

FOLDOUT FRAME

FOLDOUT FRAME

LOCATION	ACTIVITY	TIME (DAYS)
VAB HI-BAY	Off-load and Erect MS-1C on ML	**
	Install MS-1C Platforms, Swing Arms, etc.	2-1/2
	Install SRM Attachment Hardware	2
	Install Mech Stage Hardware & Connect Umbilicals	2
	Mechanical Systems Tests	4
	Transfer MS-II, Erect on MS-1C and Connect	15-1/2
	Transfer MS-IVB, Erect on MS-II and Connect	4
	Install IU and Connect	3
	Elec. Compat. Tests - Elec. Mate all Stages	2-1/2
	Electronic System Tests (RF, TM, etc.)	4
	Elect. Interstage Functional Tests	31
	Launch Vehicle O.A.T. #1 & #2 (Swing Arms)	5
	Transfer, Erect and Mate Payload	5
	Perform Payload Integration Tests	2-1/2
	Launch Vehicle O.A.T. #3 (Elec. Plug Drop)	4-1/2
	Space Vehicle O.A.T. #1 & #2 (Elec. Plug Drop)	2
	Install MLV Ordnance	3
	Perform Simulated Flight Test	12
	Prepare S/V and ML for Transfer	2
	Transfer S/V and ML to Pad	2
		1/2
LC-39	ML Connection on Pad and Preliminary Checks	2-1/2
	Position MEPS	(1/2)
	Prepare for SRM Installation & Erect Scaffolding	1-1/2
	Transfer SRM on MEPS to Pad	(3/4)
	Install and Assemble First Two SRMs	3*
	Install and Assemble Second Two SRMs	3*
	Attach TVC Tank Assemblies	1/2*(3)
	Remove Mobile MEPS	(1/2)
	Integrate SRMs with MS-IC Stage, Mech/Elect.	2*(4)
	Test and Accept all SRMs	1-1/2*(4)
	Remove Scaffolding & Position MSS	1/2*(1)
	Perform SRM Elec. Power Tests	(1/2)
	Perform Flight Readiness Tests	2
	Perform Prop. Tanking Tests and Evaluation	4
	Simulated Flight Test	1
	Launch Preps. Including SRM/TVC Tank Loading	2
	Countdown & Launch	1
	Launch Window	
	Refurbish Launch Pad	9
	Remove and Refurbish ML	15

** Flow times in Hi-Bay are Ident. to SAT V

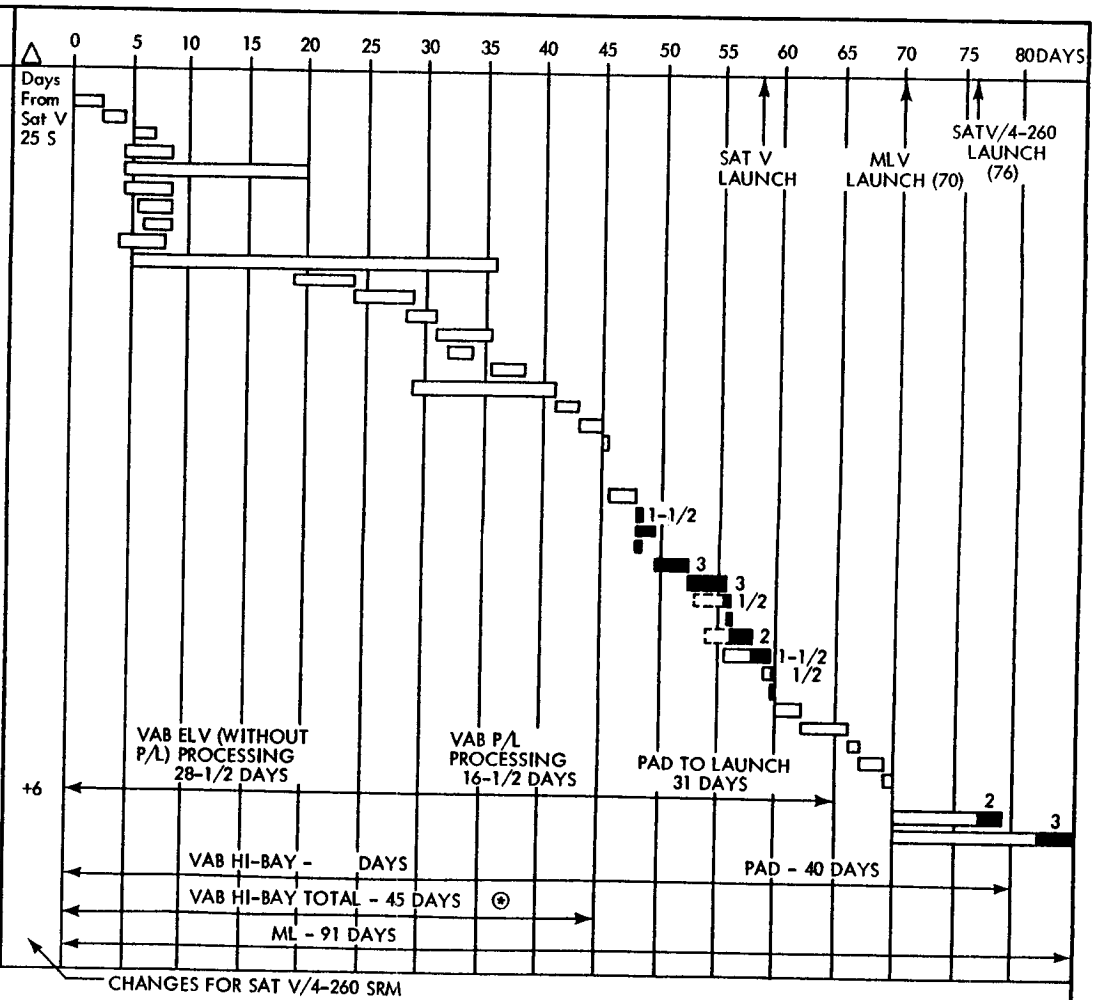

* TWO SHIFT OPERATIONS
( ) NOT IN CRITICAL TIME PATH
⊛ HURRICANE PROTECTION AT PAD

ANALYSIS IS BASED ON THE MLV -SAT-V-25(S) TIMELINE & SOP FROM NAS 8-20266

487 Fig. C2-3:A

Figure C_2-3: MISD-SAT V/4-260" SRM LAUNCH OPERATIONS FLOW TIME ANALYSIS

FOLDOUT FRAME

FOLDOUT FRAME

LOCATION	ACTIVITY	TIME (DAYS)	Δ Days From 25(S) Sat V-
VAB HI-BAY	Off-load and Erect MS-1C on ML	** 2-1/2	+2
	Install MS-1C Platforms, Swing Arms, Etc.	2	+1/2
	Install Mech Stage Hardware & Connect Umbilicals	4	(+1)
	Mechanical Systems Tests	15-1/2	(+2)
	Transfer MS-II, Erect on MS-1C and Connect	4	(+3)
	Install IU and Connect	2-1/2	0
	Elec. Compat. Tests - Elec. Mate all Stages	4	(+2)
	Electronic System Tests (RF, TM, etc.)	31	(+3)
	Elect. Interstage Functional Tests	5	+1
	Launch Vehicle O.A.T. #1 & #2 (Swing Arms)	5	+1
** Flow Times in Hi-Bay are Ident. to SAT V	Transfer, Erect and Mate Payload	2-1/2	+1/2
	Perform Payload Integration Tests	4-1/2	0
	Launch Vehicle O.A.T. #3 (Elec. Plug Drop)	2	(+1/2)
	Space Vehicle O.A.T. #1 & #2 (Elec. Plug Drop)	3	(+1/2)
	Install MLV Ordnance	12	+1
	Perform Simulated Flight Test	2	+1/2
	Prepare S/V and ML for Transfer	2	+1
	Transfer S/V and ML to Pad	1/2	+1/2
	Hi-Bay Total (Change)		+8
NEW - X(V) LAUNCH PAD	ML Connection on Pad and Preliminary Checks	2-1/2	+1/2
	Remove Scaffolding & Position MSS	1/2* (1)	+1/2
	Perform Flight Readiness Tests	2	+1/2
	Perform Prop. Tanking Tests and Evaluation	4	+1/2
	Simulated Flight Test	1	+1/2
	Launch Preps. Including SRM/TVC Tank Loading	2	+1/2
	Countdown & Launch	1	0
	Launch Window		+6
	Refurbish Launch Pad	9	-2
	Remove and Refurbish ML	15	0

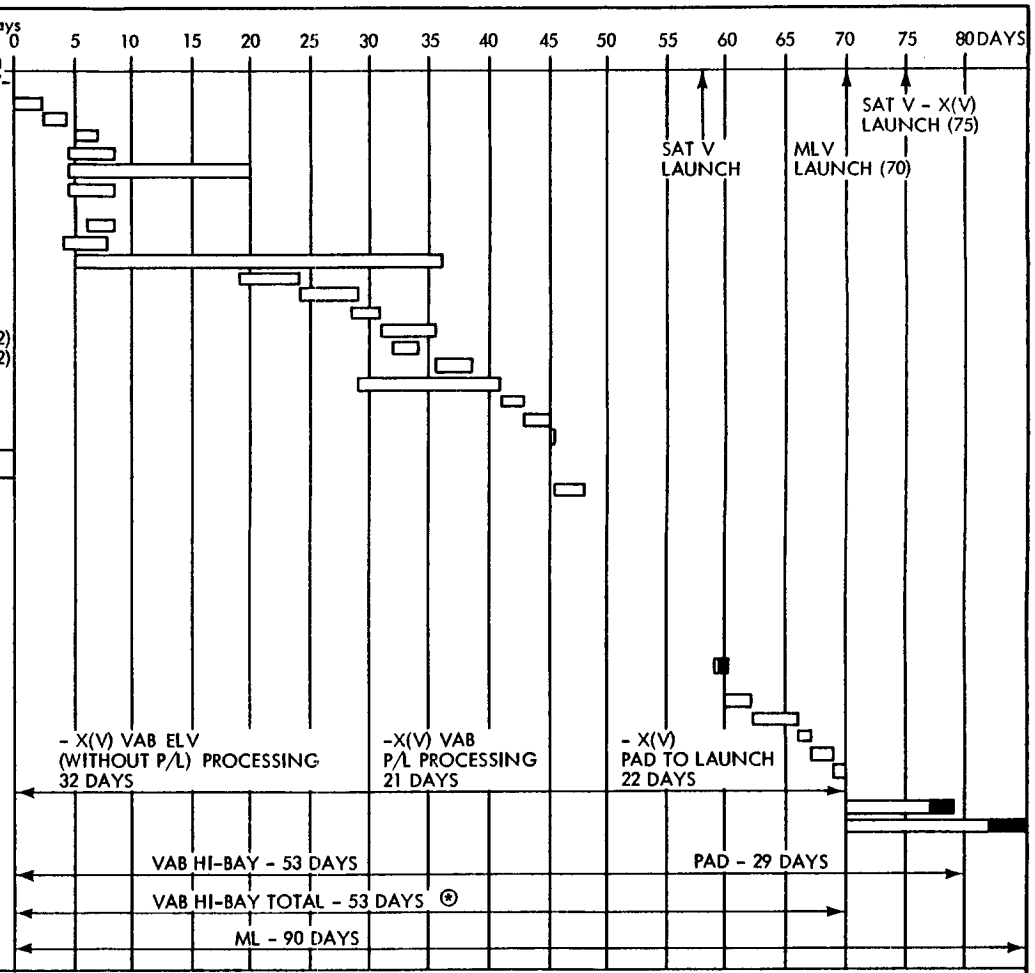

* TWO SHIFT OPERATIONS
( ) NOT IN CRITICAL TIME PATH
⊛ HURRICANE PROTECTION AT PAD

ANALYSIS IS BASED ON THE MLV - SAT-V-25(S) TIMELINE & SOP FROM NAS 8-20266

Figure C_2-4 ~~3~~ IMISCD-SAT V-(X)U LAUNCH OPERATIONS FLOW TIME ANALYSIS

Fig. C_2-4: A

489

FOLDOUT FRAME

FOLDOUT FRAME

LOCATION	ACTIVITY	TIME (DAYS)	Δ Days From Sat V-25 S
NEW POST SATURN LAUNCH PAD	Off-Load and Erect MS-1C on Pad	2-1/2	+1
	Install MS-1C Platforms, Swing Arms, Etc.	2	+1
	Install SRM Attachment Hardware	2	+1/2
	Install Mech Stage Hardware & Connect Umbilicals	4	+2
	Mechanical Systems Tests	15-1/2	(+2)
	Install IU and Connect	2-1/2	0
	Elec. Compat. Tests - Elec. Mate all Stages	4	(+1)
	Electronic System Tests (RF, TM, etc.)	31	
	Elect. Interstage Functional Tests	5	0
	Launch Vehicle O.A.T. #1 & #2 (Swing Arms)	5	+1
	Transfer, Erect and Mate Payload	2-1/2	+4
	Perform Payload Integration Tests	4-1/2	+2
	Launch Vehicle O.A.T. #3 (Elec. Plug Drop)	2	(+1)
	Space Vehicle O.A.T. #1 & #2 (Elec. Plug Drop)	3	(+1)
	Install MLV Ordnance	12	0
	Perform Simulated Flight Test	2	+1/2
	Position MEPS	(1/2)	0
	Prepare for SRM Installation & Erect Scaffolding	1-1/2	+1/2
	Transfer SRM Segments on MEPS to Pad	(3/4)	0
	Install and Assemble First Two SRM's	3*	+1/2
	Install and Assemble Second Two SRM's	3*	+1/2
	Attach TVC Tank Assemblies	1/2* (3)	0
	Remove Mobile MEPS	(1/2)	0
	Integrate SRM's with MS-IC Stage, Mech/Elect.	2* (4)	0
	Test and Accept all SRM's	1-1/2* (4)	0
	Remove Scaffolding & Position MSS	1/2* (1)	+1/2
	Perform SRM Elec. Power Tests	(1/2)	0
	Perform Flight Readiness Tests	2	+1/2
	Perform Prop. Tanking Tests and Evaluation	4	+2
	Simulated Flight Test	1	+1/2
	Launch Preps. Including SRM/TVC Tank Loading	2	+1
	Countdown & Launch	1	0
	Launch Window		+6
	Refurbish Launch Pad	9	0

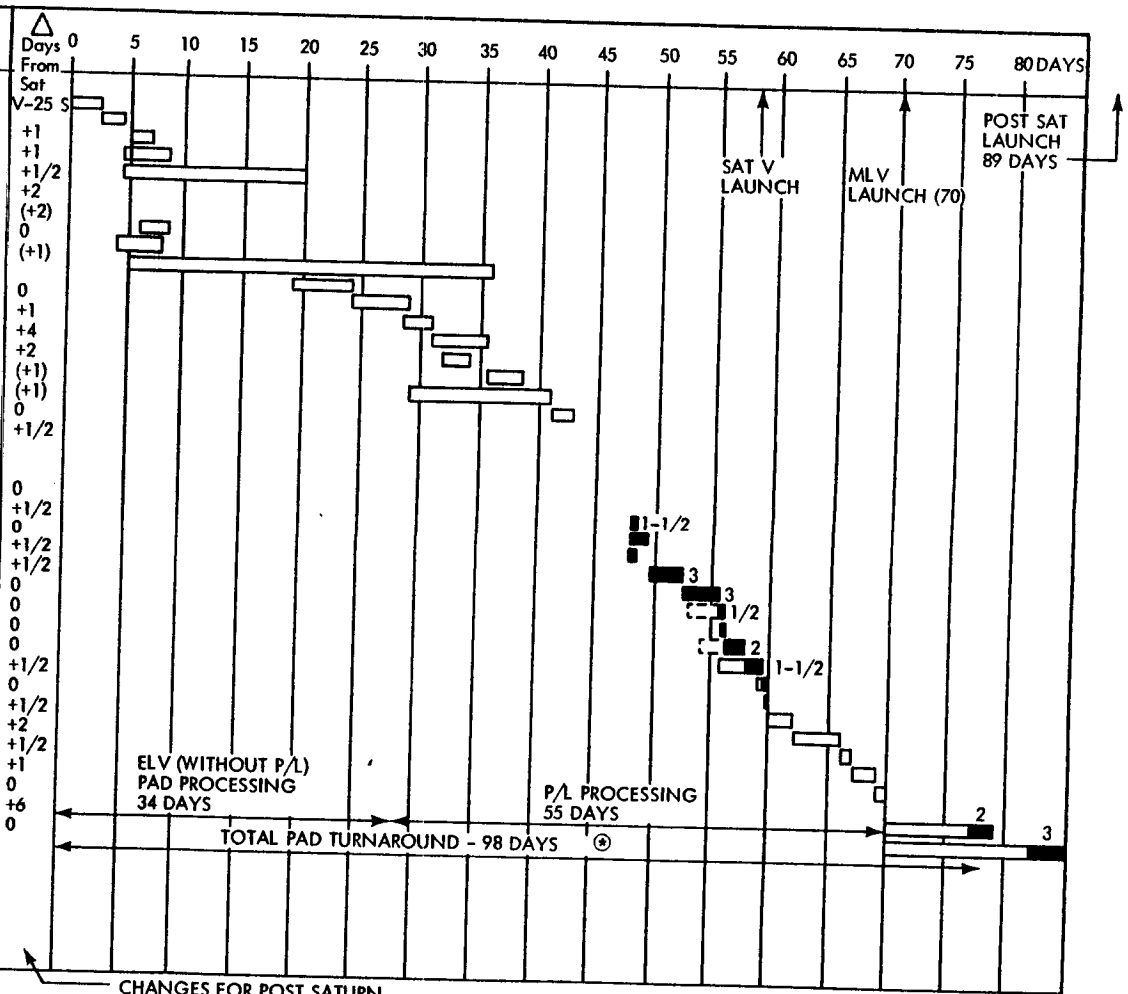

* TWO SHIFT OPERATIONS
( ) NOT IN CRITICAL TIME PATH
⊛ HURRICANE PROTECTION AT PAD
CHANGES FOR POST SATURN

ANALYSIS IS BASED ON THE MLV - SAT-V-25(S) TIMELINE & SOP FROM NAS 8-20266

Fig. C2-5: A
4/91

Figure C_2-5: MIMISCD-POST SATURN LAUNCH OPERATIONS FLOW TIME ANALYSIS

FOLDOUT FRAME

FOLDOUT FRAME

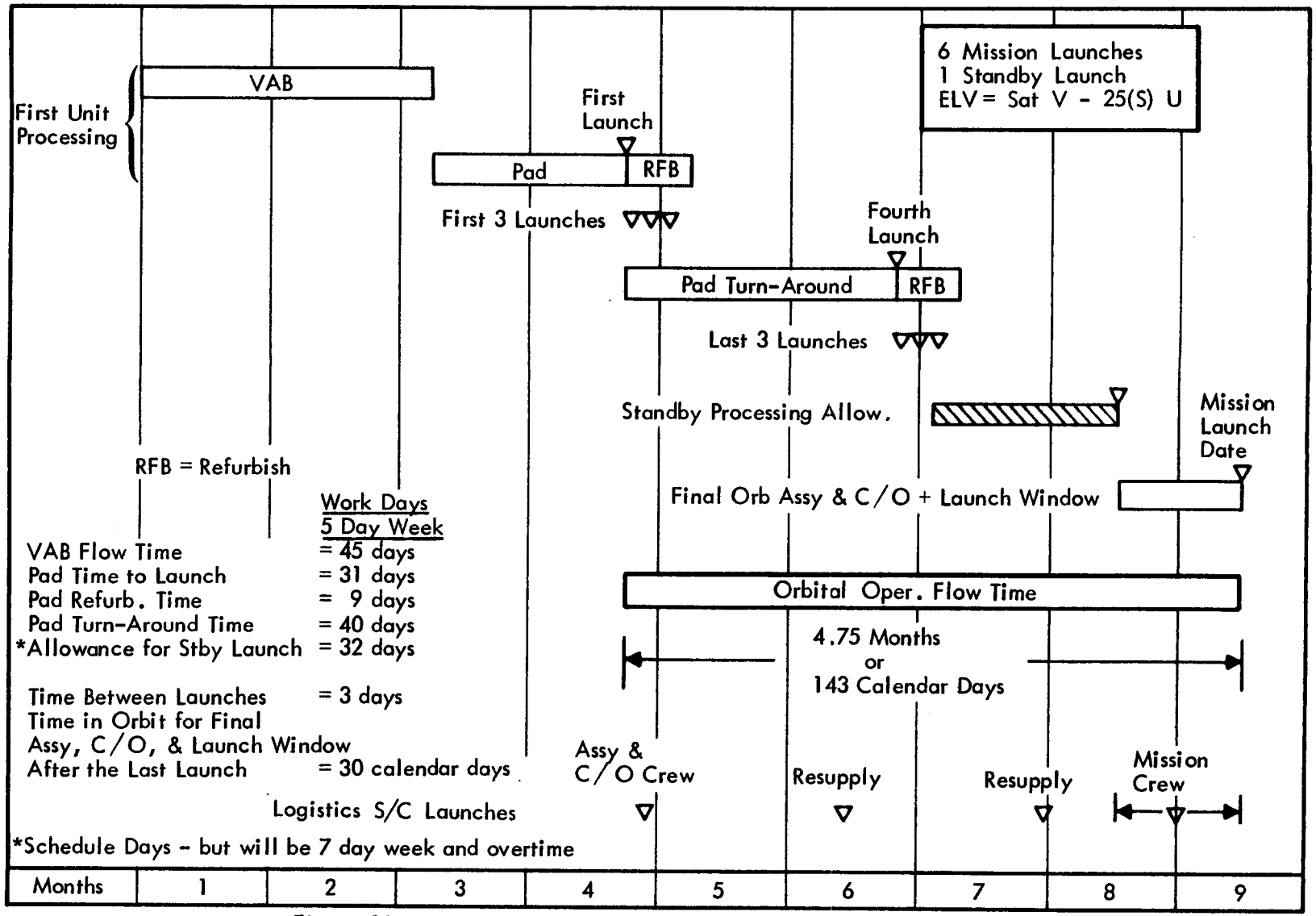

Figure C2-6: VAB, PAD AND ORBITAL OPERATIONS FLOW TIMES

APPENDIX C3
LAUNCH PAD QUANTITIES AND ORBITAL OPERATION FLOW TIMES FOR THE IMISCD PHASE II TRADE STUDIES

It was necessary to determine the quantity of launch periods required for each space propulsion/ELV combination studied during Phase II. Quantities of launches required for each mission often varied. It was therefore necessary to select the quantity of launch periods that would most closely fit all of the missions. Tables C3-1 through C3-4 give the results of the analysis showing the quantity of launch facilities selected for each combination. Also noted are the orbital operations flow time in days. These orbital operation flow times were used in determining orbital operation support cost for the cost trades.

Table C3-1: LAUNCH PAD QUANTITIES & ORBITAL OPERATIONS TIMES FOR NNN

	Mission Launches + Standby	Quantity Launch Pads		Orbital Operations Time-Days
		Optimum	Selected	
SAT-V-25(S) - ELV				
Demonstration	7	3	(3)	145
Mars Opp 82	7	3		145
Mars Conj 86	5	2		135
Mars-Venus Swby 82	5	2		135
Venus Short 80	5	2		135
Venus Long 80	6	3		140
SAT-V-260-Inch SRM - ELV				
Demonstration	4	2	(2)	132
Mars Opp 82	4	2		132
Mars Conj 86	3	2		81
Mars-Venus Swby 82	3	2		81
Venus Short 80	3	2		81
Venus Long 80	4	2		92
SAT-V-X(U) - ELV			Note:	
Demonstration	3	2	(2)	60
Mars Opp 82	3	2		60
Mars Conj 86	3	2		60
Mars-Venus Swby 82	3	2		60
Venus Short 80	3	2		60
Venus Long 80	3	2		60
Post-Saturn - ELV			Note:	
Demonstration	2	2	(2)	84
Mars Opp 82	2	2		84
Mars Conj 86	2	2		84
Mars-Venus Swby 82	2	2		84
Venus Short 80	2	2		84
Venus Long 80	2	2		84

NOTE: Saturn V launches or launch pads are not listed since pads are available and Saturn V launches will not affect orbital operations time.

Table C3-2: LAUNCH PAD QUANTITIES & ORBITAL OPERATIONS TIMES FOR CCC

	Mission Launches + Standby	Quantity Launch Pads		Orbital Operations Time-Days
		Optimum	Selected	
SAT-V-25(S)U				
Demonstration	12	6	(5)	190
Mars Opp 82	12	6		190
Mars Conj 86	7	3		132
Mars-Venus Swby 82	10	5		147
Venus Short 80	11	4		150
Venus Long 80	11	3		150
SAT-V-260-Inch SRM				
Demonstration	8	4	(4)	145
Mars Opp 82	8	4		145
Mars Conj 86	5	3		90
Mars-Venus Swby 82	6	3		95
Venus Short 80	8	4		145
Venus Long 80	8	4		145
SAT-V-X(U)				
Demonstration			(2)	
Mars Opp 82	6	2		138
Mars Conj 86	4	2		111
Mars-Venus Swby 82	4	2		111
Venus Short 80	6	2		138
Venus Long 80	6	2		138
Post-Saturn				
Demonstration	3	2	(2)	90
Mars Opp 82	3	2		90
Mars Conj 86	2	2		87
Mars-Venus Swby 82	2	2		87
Venus Short 80	2	2		90
Venus Long 80	2	2		90

Table C3-3: LAUNCH PAD QUANTITIES & ORBITAL OPERATIONS TIMES FOR NAN

	Mission Launches + Standby	Quantity Launch Pads		Orbital Operations Time-Days
		Optimum	Selected	
SAT-V-25(S)U				
Demonstration	5	2	(2)	132
Mars Opp 82	5	2		
Mars Conj 86	5	2		
Venus Short 80	5	2		
Venus Long 80	5	2		
SAT-V-260-Inch SRM				
Demonstration	4	2	(2)	132
Mars Opp 82	4	2		132
Mars Conj 86	3	2		81
Mars-Venus Swby 82	4	2		132
Venus Short 80	4	2		132
Venus Long 80	4	2		132
SAT-V-X(U)				
Demonstration	3 (3x only)	2	(2)	60
Mars Opp 82	3 (3x only)	2		60
Mars Conj 86	3 (3x only)	2		60
Mars-Venus Swby 82	3 (3x only)	2		60
Venus Short 80	3 (3x only)	2		60
Venus Long 80	3 (3x only)	2		60
Post-Saturn				
Demonstration			(2)	
Mars Opp 82	2	2		84
Mars Conj 86	2	2		84
Mars-Venus Swby 82	2	2		84
Venus Short 80	2	2		84
Venus Long 80	2	2		84

Table C3-4: LAUNCH PAD QUANTITIES & ORBITAL OPERATIONS TIMES FOR CAC

	Mission Launches + Standby	Quantity Launch Pads		Orbital Operations Time-Days
		Optimum	Selected	
SAT-V-25(S)U				
Demonstration	8	4	(3)	190
Mars Opp 82	8	4		190
Mars Conj 86	5	2		135
Mars-Venus Swby 82	6	3		138
Venus Short 80	6	3		138
Venus Long 80	6	3		138
SAT-V-260-Inch SRM				
Demonstration	6	3	(2)	190
Mars Opp 82	6	3		190
Mars Conj 86	4	2		132
Mars-Venus Swby 82	5	2		136
Venus Short 80	4	2		132
Venus Long 80	4	2		132
SAT-V-X(U)				
Demonstration	5 (4x only)	2	(2)	90
Mars Opp 82	5 (4x only)	2		90
Mars Conj 86	4 (3x only)	2		65
Mars-Venus Swby 82	4 (3x only)	2		65
Venus Short 80	4 (3x only)	2		65
Venus Long 80	4 (3x only)	2		65
Post-Saturn				
Demonstration	2	2	(2)	84
Mars Opp 82	2	2		84
Mars Conj 86	2	2		84
Mars-Venus Swby 82	2	2		84
Venus Short 80	2	2		84
Venus Long 80	2	2		84

APPENDIX D1
COST METHOD AND BACKUP DATA FOR IMISCD PHASE II TRADE STUDIES

1.0 INTRODUCTION

It was necessary during the Phase II trade studies to develop cost methods and a considerable amount of cost backup data. Since it was not reasonable to include much of this data in the main body of the Volume IV report, this Appendix has been prepared.

1.1 AEROSPACE VEHICLE CONCEPT COST DATA INPUTS

Specific data which was needed to cost each aerospace vehicle concept was developed and included:

- Spacecraft and other non-acceleration costs
- Mission hardware requirements
- Test plan hardware quantity requirements
- Launch pad quantities and orbital operations times.

1.1.1 Spacecraft and Other Non-Acceleration Costs

Costs estimated for the spacecraft and other program elements are shown in summary in Table D1-1. These costs, being constant, were included only to give perspective to the launch vehicle and space acceleration trades. The spacecraft and other non-acceleration costs, which represent from 45% to 65% of the total program cost, are discussed in detail in Section 5.5.

1.1.2 Mission Hardware Requirements

Figure D1-1 is a sample hardware-requirements work sheet which was developed from designs for each aerospace vehicle. Included are all technical data required for pricing the five-mission hardware items.

1.1.3 Test Plan Hardware Quantity Requirements

From the development test plans described in Section 7.0, test plan hardware quantity requirements were defined for each aerospace vehicle configuration. These test plan quantities are shown in Appendix C1.

1.2 CONDITIONS FOR COST ESTIMATES

The major conditions imposed upon the cost estimating procedure are as follows:

- Orbital support for PM testing provided by spacecraft orbital tests;

Table D1-1: SPACECRAFT COST SUMMARY
(dollars in millions)

	Basic R&D	Test Prog.	Mission Peculiar	Total	Five Missions	Total
MM	$ 3,050	$ 500	$ -0-	$ 3,550	$ 800	$ 4,350
MEM	2,900	750	-0-	3,650	550	4,200
EEM	1,450	400	-0-	1,850	400	2,250
Science	2,100	-0-	1,300	3,400	800	4,200
A&DU	300	200	-0-	500	-0-	500
S/V Integration & Support	980	190	130	1,300	260	1,560
Orbital Support	-0-	800	-0-	800	-0-	800
Earth-Based Support	-0-	800	-0-	800	450	1,250
Launch	-0-	500	-0-	500	-0-	500
Management	160	60	20	240	50	290
Total	$10,940	$4,200	$1,450	$16,590	$3,310	$19,900

SAMPLE FIVE-MISSION HARDWARE REQUIREMENTS WORK SHEET

NUC/NUC/NUC - 25(S)U ELV

ELEMENT		LENGTH (FT)	DIAMETER (FT)	TANK OR HEAT SHIELD WT. (LB)	MODULES USED	INTERSTAGE WEIGHT (LB)	CLUSTERING STRUC. WT. (LB)	J-2S ENGINE	NERVA II ENGINE	MODULE SPARES	C QUANTITY	C+2 QUANTITY	C+4 QUANTITY	
♂ OPP 82	PM-1	99	33	212,100	3	38,990	7,390		3	1		3		
	PM-2	93	33	73,480	1	13,000	0		1	1			1	
	S/C									1	1			
	PM-3	82	33	61,910	1	12,980	0		1	1		1		
♂ CONJ 86	PM-1	102	33	142,600	2	25,990	4,060		2	1		2		
	PM-2	76	33	50,030	1	12,980	0		1	1		1		
	PM-3	55	33	29,700	1	12,940	0		1	1			1	

ELV'S NOMINAL = 23 CORES + 60 S/O

SPARES = 4 CORES + 10 S/O

TOTAL = 27 CORES + 70 S/O

Figure D1-1 :

- SAT-INT 21 (2-stage SAT-V) available as required for tests with SAT-V-X(U) and Post-Saturn;
- Standby ELV's PM modules and spacecraft required for missions and demonstration tests
  - ELV quantities per reliability analyses
  - PM's for each mission
  - Spacecraft - store unused, refurbish and reuse
- "All-up" ELV tests planned;
- Logistics S/C = 6-man Apollo/Saturn IB - 5 reuses;
- Demonstration tests based on Mars Opp 82 Mission;
- Aerobraking flight test for each different shape or shield weight;
- Nuclear and chemical engines - recurring costs only, no R&D.

These were established through judgment as to logical extension of current technology and the following rationale for accomplishing various portions of a test plan and for reuse of certain required mission system elements:

- Orbital flight testing of the spacecraft modules could be phased with the orbital testing of the propulsion modules such that any required manned or logistic orbital support for the latter could be provided for by that used for the former.
- An "all-up" testing philosophy could be used; i.e., all of the flight tests for the ELV development were assumed to carry payloads consisting of space vehicle flight test elements. Because the dynamics of aerobraking maneuvers are highly dependent upon shape and weight, flight tests were planned for each different aerobraking configuration. R&D costs for nuclear or chemical space acceleration system engines were not included.
- A full space vehicle demonstration test would be necessary for each five-mission program. One demonstration test, based on the most difficult of the representative missions, could be sufficient for the program.

1.3 FIVE-MISSION COST ESTIMATES

Table D1-2 tabulates by major program elements the combinations of space propulsion/Earth launch vehicle trades for which costs were estimated. Several combinations of space propulsion, notably NNC and NCC, were eliminated from the pricing exercise for both unfavorable IMIEO's and problems associated with the dual development of chemical and nuclear modules. The NAC, Post-Saturn NNN optimized, Post-Saturn Two Stage, and Tanking Mode cases were supplemental trades prepared to further evaluate and substantiate the conclusions derived from the basic trades.

Table D1-2: FIVE-MISSION COST ESTIMATES ($ IN MILLIONS)

Space Acceleration				Earth Launch Vehicle Configuration						
PM-1 Earth Depart	PM-2 Planet Capture	PM-3 Planet Depart		SAT V 25(S)U	SAT V 4-260 SRM	SAT V XU	Post SAT All Purpose	Post SAT NNN OPT.	Post SAT 2 Stage	SAT V 4-260 SRM Tanker
NUC	NUC	NUC	Space Prop.	2657	4056	4366	4366	4366	4366	4842
			ELV's	6222	5215	8284	10473	9169	12331	5112
			A&DU + M/C	928	604	999	907	907	907	646
			Orbital Ops.	2530	2290	2040	2030	2030	2030	2450
			Spacecraft	19900	19900	19900	19900	19900	19900	19900
			Total	32237	32065	35589	37676	36372	39534	32950
NUC	AERO	NUC	Space Prop.	7543	8387	8499	8328			
			ELV's	6863	5956	8298	11967			
			A&DU + M/C	1064	726	1043	1004			
			Orbital Ops.	2920	2350	2040	2030			
			Spacecraft	19900	19900	19900	19900			
			Total	38290	37319	39780	43229			
NUC	AERO	CHEM	Space Prop.	5664	6508					
			ELV's	7769	6862					
			A&DU + M/C	1170	832					
			Orbital Ops.	2920	2550					
			Spacecraft	19900	19900					
			Total	37423	36652					
CHEM	AERO	CHEM	Space Prop.	6482	6487	6912	6579			
			ELV's	8170	8543	12575	12630			
			A&DU + M/C	1318	1021	1246	1055			
			Orbital Ops.	2920	2550	2040	2030			
			Spacecraft	19900	19900	19900	19900			
			Total	38790	38501	42673	42194			
CHEM	CHEM	CHEM	Space Prop.	3842	4681	4364	5097			
			ELV's	11267	10448	16707	11453			
			A&DU + M/C	1599	1161	1725	1002			
			Orbital Ops.	2520	2450	2040	2030			
			Spacecraft	19900	19900	19900	19900			
			Total	39128	38640	44736	39482			

Figure D1-2 is a sample of the work sheet used to summarize costs for all of the IMISCD trade study configurations. A complete set of work sheets is contained in Appendixes D2 and D3. The following definitions apply to the columns used for collecting cost.

1.3.1 Development

This covers all costs from program to that point in time where the first flight configured vehicle is ready for production, plus all costs thereafter which are not a function of, or related to, the number of units produced. This category is subdivided into:

1) Basic R&D, which includes the basic design and tooling, ground test units, associated testing, subsystem integration, GSE and launch site support development, training associated with the use of the vehicle, and spares development;

2) Flight test, which includes all hardware, launch and support costs for the qualification and demonstration of the IMISCD Aerospace Vehicle;

3) Mission Peculiar R&D, which includes additional basic R&D and test program costs for configuration changes to meet specific mission requirements.

1.3.2 Missions

This is the recurring cost of the flight hardware, standby units, and support required to complete the five selected missions.

The cost estimates were prepared using a cost model in combination with the aerospace vehicle cost data inputs (Section 1.1). The resulting estimates for space propulsion, Earth launch vehicles, A&DU's plus mid-course correct stages, and orbital support when added to the spacecraft cost (a constant) comprise a given trade. The detail as to how the cost model was used for pricing the major program elements are as follows:

1.3.3 Space Propulsion

The major variables affecting space acceleration cost are:

1) The combination of module length, diameter, and weight;

2) Propulsion type, chemical or nuclear;

3) Commonality (modules with length changes only were charged modification costs and not the complete cost of separate development);

4) Clustering structure and interstage weight;

5) Number of modules per PM, number of engines per module, quantity requirements for testing, five missions, and spares.

Figures D1-3, D1-4 and D1-5 were the basic parameters used to price a propulsion module. Engine costs were added based on Number One Unit costs of $14 million for the NERVA II and $3.5 million for the J-2. Engine development costs were not included. Full Basic R&D costs were

SPACE PROPULSION COMBINATION =
ELV =

IMISCD SPACE PROPULSION TRADES
FIVE-MISSION PROGRAMS

$ IN MILLIONS

		DEVELOPMENT						MISSIONS			TOTAL PROGRAM
		Basic R&D	Test Program			Mission Peculiar R&D	Total Devel	Flight Units	Spares	Cost	
			Flight Units	Spares	Cost						
SPACE PROPULSION	PM-1	$			$	$	$			$	$
	PM-1A										
	PM-2										
	PM-3										
	PM-3A										
	MGMT & INTEGR										
	TOTAL	$			$	$	$			$	$
EARTH LAUNCH VEHICLES	ELV FLIGHT HDWE										
	PROGRAM PECULIAR										
	LAUNCH SITE										
	LAUNCH OPERATIONS										
	MGMT ASSY & INTEGR										
	TOTAL	$			$	$	$			$	$
	A&DU + M/C	$			$	$	$			$	$
	ORBITAL OPERATIONS	$	Time in Earth Orbit	=	$	$	$	Time in Orbit Avg.	=	$	$
	TOTAL ACCELERATION COST	$			$	$	$			$	$
	SPACECRAFT AND MISSION SUPPORT	$			$	$	$			$	$
	TOTAL PROGRAM	$			$	$	$			$	$

Figure D1-2:

BASIC PROPULSION MODULE COSTS (TANKAGE, INSULATION & SHIELDING)

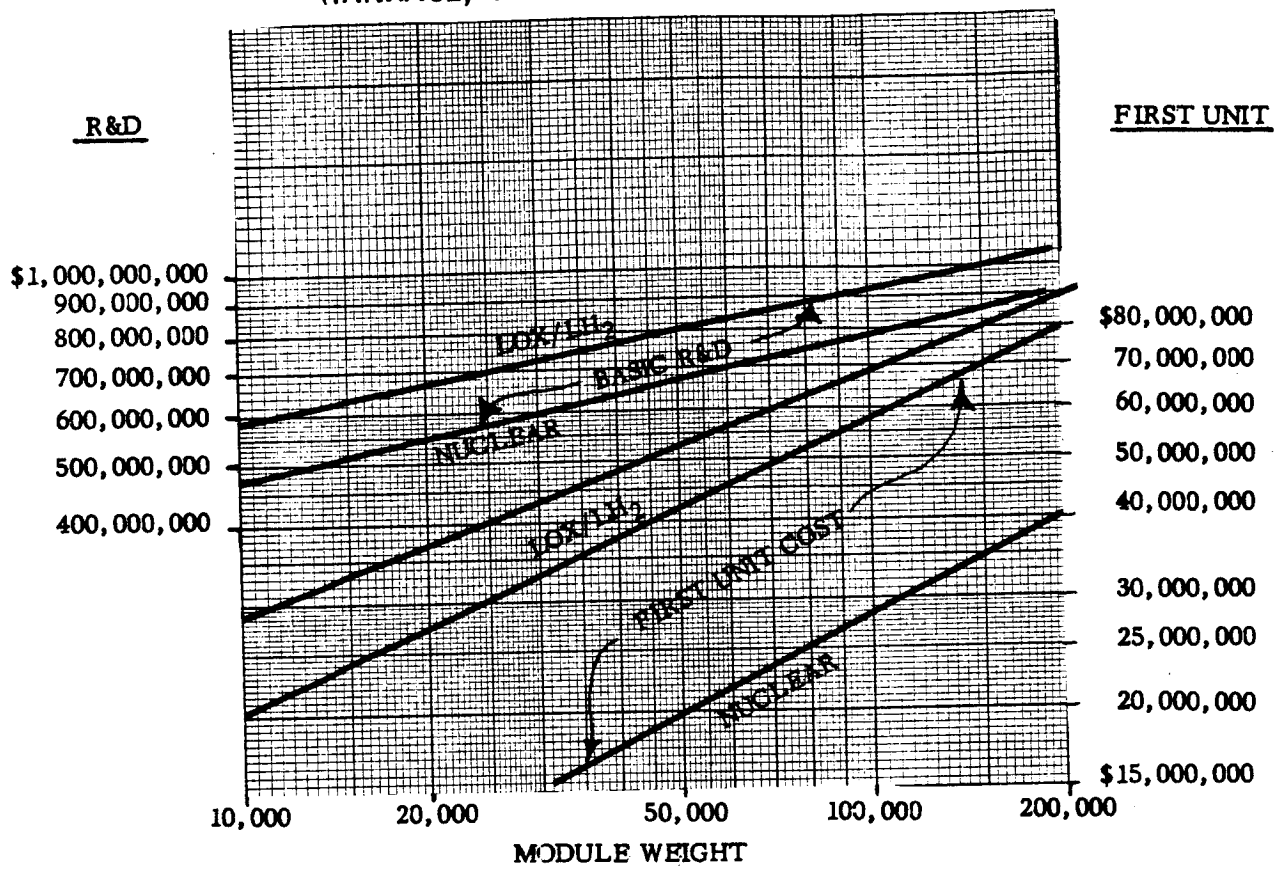

Figure D1-3:

CLUSTERING STRUCTURE + INTERSTAGE COSTS

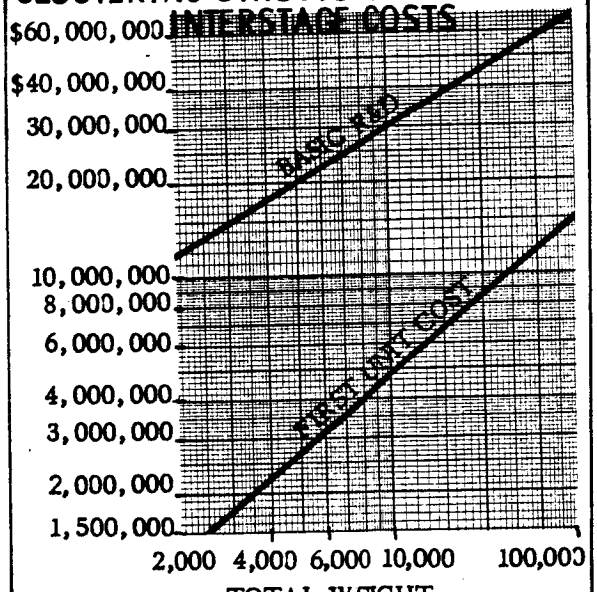

Figure D1-4:

AEROBRAKER COSTS

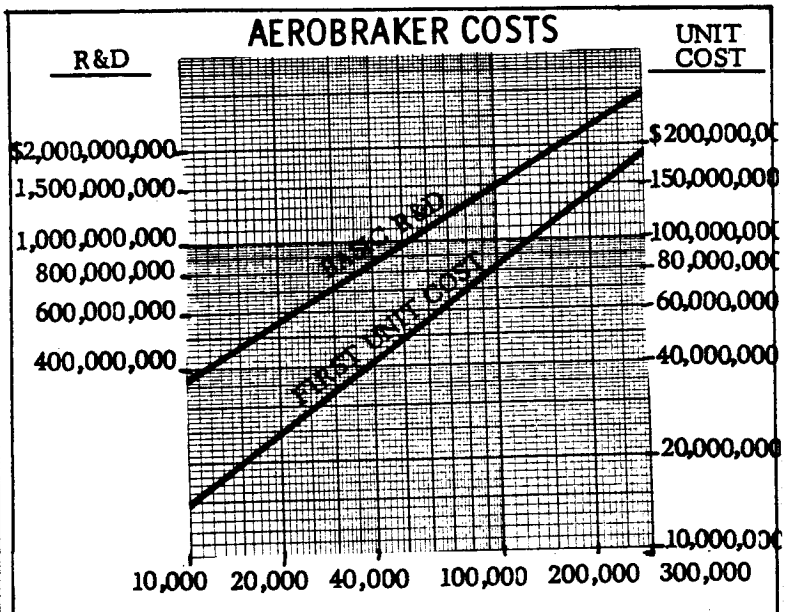

Figure D1-5:

6'

charged only once for each different PM diameter. That is, once a PM of a given diameter was developed, changes in length, either for the other two PM's or for the same PM for subsequent missions, were priced as modifications of the initial PM. The following equation was used to determine the total basic R&D costs of the first three PM's of constant diameter but variable lengths.

$$\text{Basic R\&D} = \left[\frac{C_1 + C_3}{2}\left(\frac{C_3}{C_1}\right) \quad 1 + \left(\frac{C_2}{C_1} - 1\right)\left(\frac{C_3}{C_2} - 1\right)\right]$$

where

1. C_1, C_2, C_3 represent Basic R&D costs based on weight per Figure D1-3 with $C_1 \leq C_2 \leq C_3$

2. $C_3/C_1 < 2$

Figure D1-6 is an example of the application of the above equation. Additional costs were charged to Mission Peculiar R&D for PM length changes in excess of three based on the PM previously developed closest in size to each new PM. This technique was also used to price the aerobraking configurations.

To estimate recurring costs, number one values were established for each of the major propulsion module elements and a 90% learning curve was applied. In applying the learning curve, each mission was considered separately with the costs being adjusted to account for variations in weights, PM staging, and number of engines. The number one values derived from Figure D1-3 were calculated only for PM's of separate diameters. Figure D1-7 shows the PM unit costs estimated for NAN/SAT-V-25(S)U concept. In this concept, PM's 1 and 3, being of constant diameter for all missions, are priced using the same number one value with subsequent cost variations dependent on mission configuration requirements.

1.3.4 Earth Launch Vehicles

The development and recurring costs for each of the Saturn V family of Earth launch vehicles were derived from other NASA-contracted studies by The Boeing Company. The Post-Saturn costs were estimated parametrically using weight, volume, and thrust. It should be noted that no flight tests are included in the basic ELV R&D costs. Upon selecting an ELV, the number of launches, average number of strap-ons, and number of X(U) cores are the variables required for a particular IMISCD trade. Figure D1-8 is a summary tabulation of the costs used for preparing the ELV estimates.

PRIMARY PROPULSION MODULE PRICING TECHNIQUE - BASIC R&D

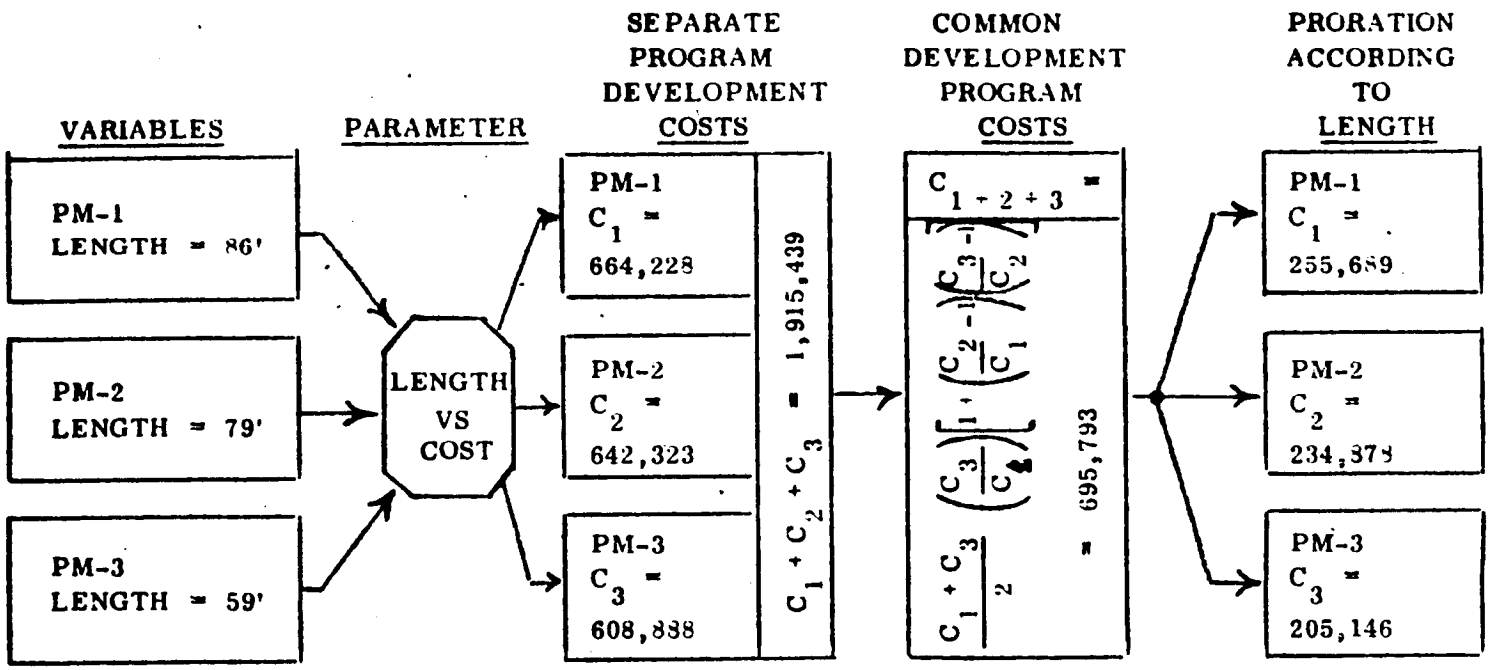

ALTERNATE CONCEPTS

	SEPARATE DEVELOPMENT	COMMON DEVELOPMENT
PM-1 LENGTH = 99'	C_1 = 702,206	C_1 = 423,725
PM-2 LENGTH = 79'	C_2 = 642,323	C_2 = 338,124
PM-3 LENGTH = 35'	C_3 = 465,698	C_3 = 149,801
	$C_1 + C_2 + C_3$ = 1,810,227	C_{1+2+3} = 911,650

Figure D1-6:

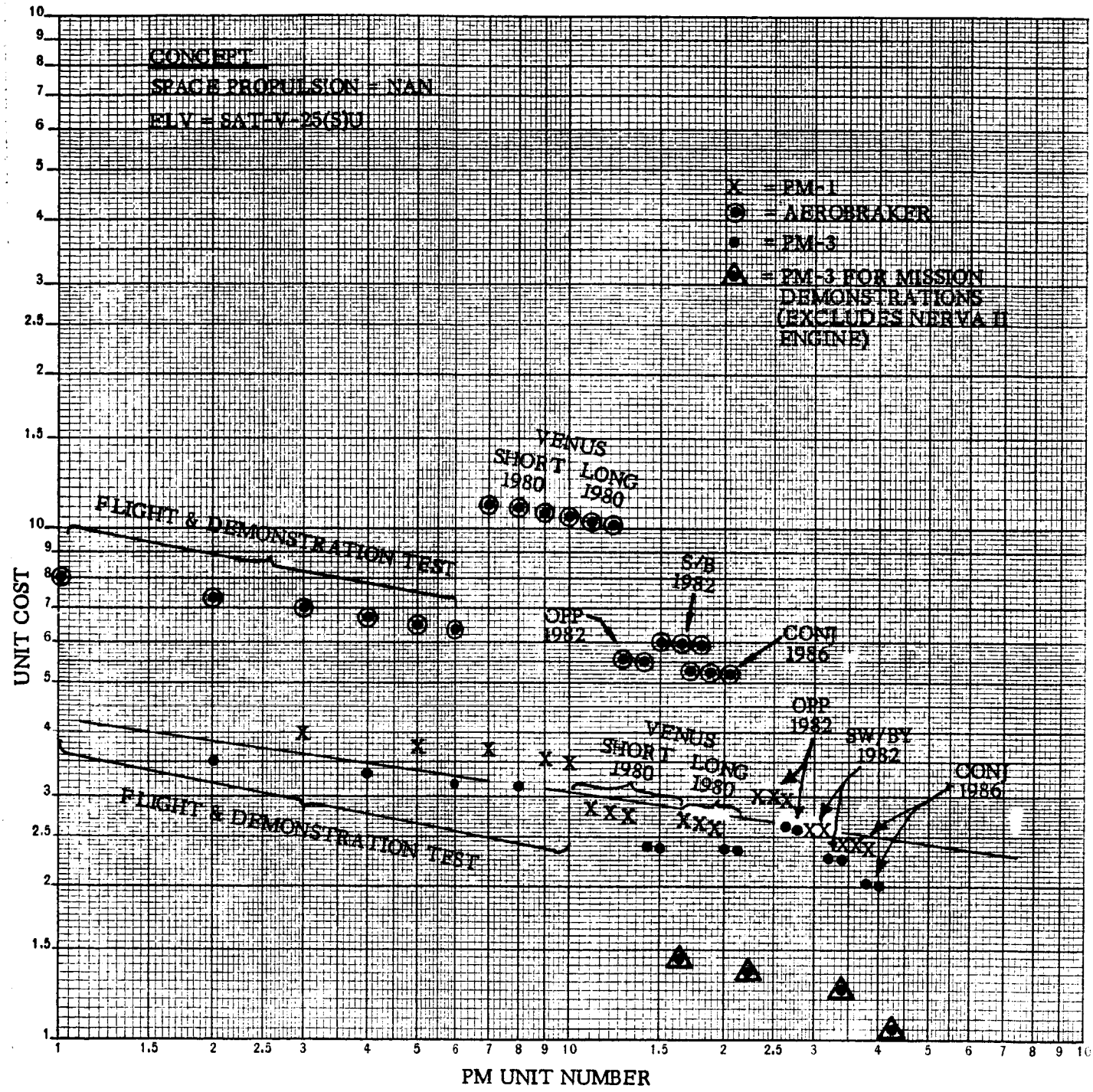
CONCEPT
SPACE PROPULSION = NAN
ELV = SAT-V-25(S)U
X = PM-1
= AEROBRAKER
= PM-3
= PM-3 FOR MISSION DEMONSTRATIONS (EXCLUDES NERVA II ENGINE)
VENUS
SHORT 1980
LONG 1980
FLIGHT & DEMONSTRATION TEST
S/B 1982
OPP 1982
CONJ 1986
OPP 1982
SW/BY 1982
CONJ 1986
VENUS
SHORT 1980
LONG 1980
FLIGHT & DEMONSTRATION TEST
UNIT COST
PM UNIT NUMBER

Figure D1-7:

IMISCD PHASE II
EARTH LAUNCH VEHICLE TRADES
BASIC COST DATA
($ IN MILLIONS)

	SAT V 4-260" SRM	SAT V CORE (2 STAGES)	SAT V 25(S)U + 2 S/O (2 STAGES)	SAT V 25 (S)U + 4 S/O (2 STAGES)	SAT V 25(S)U CLUSTER OF 3	SAT V (X)U CLUSTER OF 4	SAT V (X)U CORE SINGLE STAGE	POST SAT + 4 S/O SINGLE STAGE	POST SAT NNN OPTIMIZED SINGLE STAGE	POST SAT P/L 2.5M LH2 LO2 STAGE
DEVELOPMENT										
STAGE 1										
STRUCTURE	$ 20.00	78.4	$ 78.4		$ 92.0		$1200.0	$1570.0	$1200.0	$1250.0
ENGINES	---	133.0	133.0		133.0		2100.0	2100.0	2000.0	2400.0
S/O OR CLUSTER STRUCT.	226.0	---	137.0		47.0		---	300.0	350.0	---
PODS	36.0	---	---		---		---	---	---	---
TOTAL	$282.0	$211.4	$348.4		$272.0		$3300.0	$3300.0	$3550.0	$3650.0
STAGE 2										
STRUCTURE	120.0	80.0	80.0		91.4		---	---	---	950.0
ENGINES	---	123.0	123.0		123.0		---	---	---	---
TOTAL	$120.0	$203.0	$203.0		$214.4		---	---	---	$950.0
I.U.	---	---	---		---		$200.0	$200.0	$200.0	$200.0
TOTAL ELV	$402.0	$414.4	$551.4		$486.4		$3500.0	$4170.0	$3750.0	$4800.0
PROGRAM PECULIAR										
HOT RUN TEST	---	---	---		---		80.0	100.0	70.0	100.0
MFG. FAC.	---	---	---		---		260.0	280.0	240.0	320.0
GSE	---	---	---		---		530.0	570.0	565.0	660.0
LAUNCH SITE										
LAUNCH COMPLEX	375.5	135.9	247.5		552.1		750.0	815.0	730.0	930.0
GSE	24.5	24.5	24.5		24.5		1050.0	1138.0	1125.0	1305.0
TOTAL DEVELOPMENT	$802.0	$574.8	$823.4		$1063.0		$6170.0	$7073.0	$6470.0	$7015.0
FIRST OR AVG LNCH										
STAGE 1										
STRUCTURE	$17.5	$21.4	$21.4	21.4	$64.2	$85.6	$126.0	$136.0	$106.0	$142.0
ENGINES	11.0	14.6	14.6	14.6	43.8	58.3	126.0	126.0	66.0	125.0
S/O OR CLUSTER STRUCTURE	45.0	---	8.4	16.7	2.7	3.3	---	28.0	42.0	---
PODS	10.0	---	---	---	---	---	---	---	---	---
TOTAL	83.5	36.0	44.4	52.7	110.7	147.2	$252.0	$290.0	$214.0	$267.0
STAGE 2										
STRUCTURE	$22.1	$24.3	$24.3	24.3	$72.9	$97.1	---	---	---	$ 80.0
ENGINES	8.7	9.6	9.6	9.6	28.8	38.4	---	---	---	25.0
TOTAL	$30.8	$33.9	$ 33.9	33.9	101.7	$135.5	---	---	---	$105.0
I.U.	$7.7	$7.7	$ 7.7	7.7	$7.7	$7.7	$8.0	$8.0	$ 8.0	$ 8.0
TOTAL ELV	$122.0	$77.6	$ 86.0	94.3	$220.1	$290.4	260.0	$298.0	$222.0	$380.0
LAUNCH SITE	12.2	2.7	2.7	2.7	2.7	2.7	26.0	30.0	22.0	38.0
LAUNCH OPERATIONS	26.0	24.0	24.1	24.2	35.8	47.8	24.0	27.0	26.0	28.0
INTEGRATION	17.5	9.0	11.0	11.8	40.6	53.2	12.0	14.0	14.0	15.0
TOTAL LAUNCH	$177.7	$113.3	$123.8	$133.0	$299.2	$394.1	$322.0	$369.0	$284.0	$461.0
	AVERAGE LAUNCH COSTS						NUMBER ONE LAUNCH COSTS 90 λ			

Figure D1-8:

1.3.5 Assembly and Docking Units Plus Midcourse Correct Stages (A&DU Plus M/C)

Table D1-3 shows the costs and method of application for estimating the A&DU's plus M/C stages impact on the trades. The A&DU's are used for the final positioning of payloads in Earth orbit. Only one common A&DU was assumed to be developed for each class of launch vehicle. The SAT-V(S)U and 4/260 SRM launch vehicles use the same A&DU as the SAT-V-INT-21 with development costs being charged to the spacecraft.

The midcourse correct stages were assumed to be variable with the space propulsion concepts. They are FLOX/METHANE propulsive stages using a modified MEM Ascent engine, with separate units for outbound, orbit trim, and inbound corrections.

1.3.6 Orbital Operations

The orbital operations cost estimates were derived from Figure D1-9. The figure shows cost versus time for one mission. For a multiple mission, the standby units were adjusted down for a one per mission basis to the minimum for the overall IMISCD reliability requirements.

Table D1-3: ASSEMBLY AND DOCKING UNIT COSTS
(Millions of Dollars)

Assembly and Docking Units	Nonrecurring	Recurring Cost per ELV
SAT-V-25(S)U	-0-	$17.5
SAT/V-4/260 Inch SRM	-0-	$17.5
SAT-X(U)	$350	$19.0
Post-Saturn	$450	$21.0

Midcourse Correct Stages	Nonrecurring	Recurring Cost Per Space Vehicle
NUC/NUC/NUC	$140	$ 4.3
NUC/AERO/NUC	$160	$ 4.8
NUC/AERO/CHEM	$160	$ 4.8
CHEM/AERO/CHEM	$185	$ 5.4
CHEM/CHEM/CHEM	$160	$ 4.7

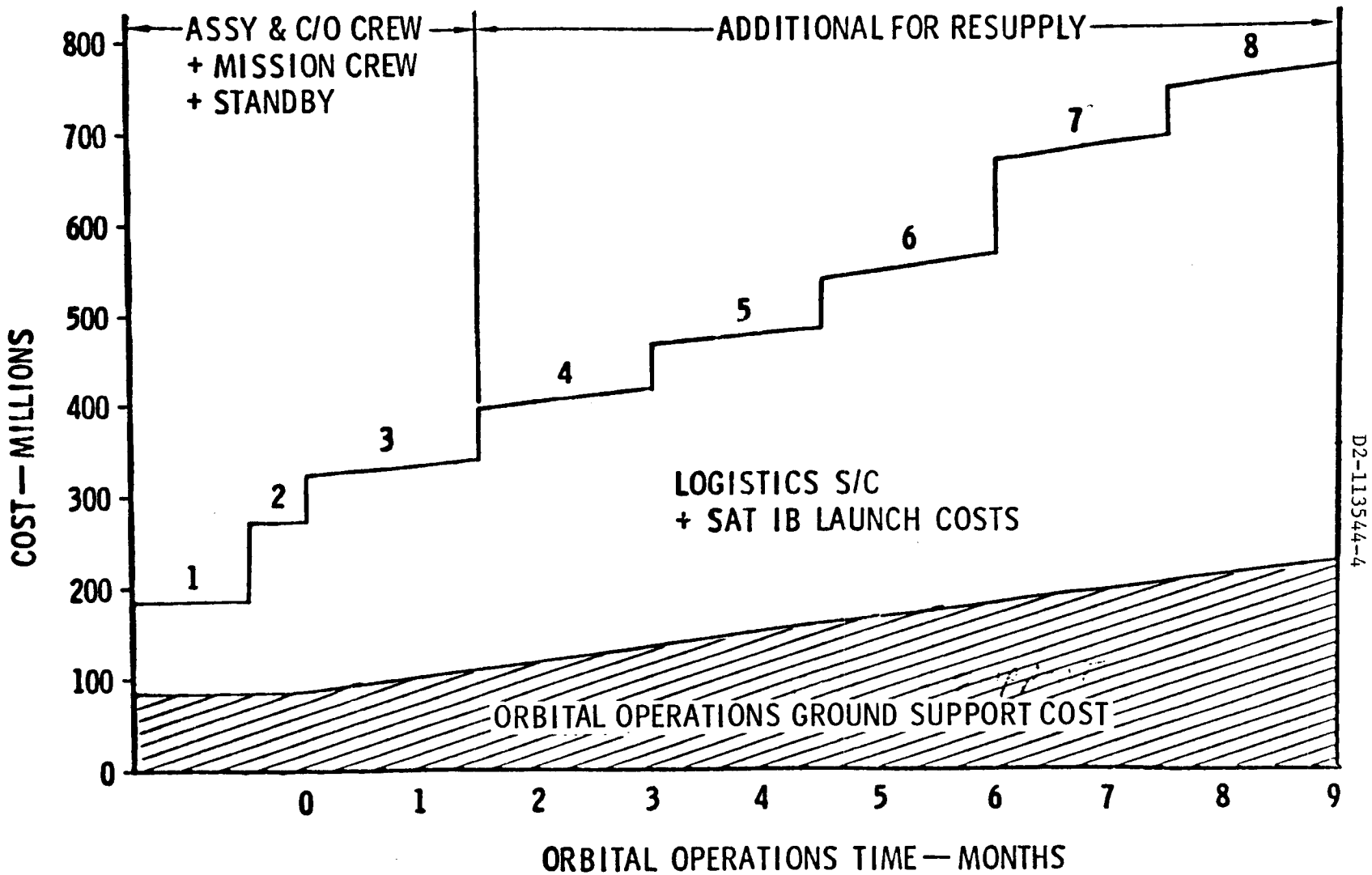

Figure D1-9: TOTAL ORBITAL OPERATIONS COSTS VS ORBITAL OPERATIONS FLOW TIME

APPENDIX D2
COST DATA FOR IMISCD SPACE PROPULSION/ELV PHASE II TRADES

Cost estimates were developed for twenty space propulsion/ELV combinations. These estimates were developed from configuration data and quantities of launches required which were provided from the configuration trade effort. Additional inputs to the cost estimates were quantity of launch facilities, orbital operations, flow time, quantities of flight test hardware, and quantities of standby units required.

Table D2-1 is a summary of the costs for all the combinations studied. The summary costs include all nonrecurring plus recurring costs for five selected missions. Tables D2-2 through -20 are the detailed backup for each combination. It will be noted that the five mission program costs have been summarized into one total. Costs for each mission were calculated separately.

FIVE-MISSION COST ESTIMATES ($ IN MILLIONS)

SPACE ACCELERATION				EARTH LAUNCH VEHICLE CONFIGURATION						
PM-1 EARTH DEPART	PM-2 PLANET CAPTURE	PM-3 PLANET DEPART		SAT V 25(S)U	SAT V 4-260 SRM	SAT V XU	POST SAT ALL PURPOSE	POST SAT NNN OPT.	POST SAT 2 STAGE	SAT V 4-260 SRM TANKER
NUC	NUC	NUC	Space Prop.	2657	4056	4366	4366	4366	4366	4842
			ELV's	6222	5215	8284	10473	9169	12331	5112
			A&DU + M/C	928	604	999	907	907	907	646
			Orbital Ops.	2530	2290	2040	2030	2030	2030	2450
			Spacecraft	19900	19900	19900	19900	19900	19900	19900
			Total	32237	32065	35589	37676	36372	39534	32950
NUC	AERO	NUC	Space Prop	7543	8387	8499	8328			
			ELV's	6863	5956	8298	11967			
			A&DU + M/C	1064	726	1043	1004			
			Orbital Ops.	2920	2350	2040	2030			
			Spacecraft	19900	19900	19900	19900			
			Total	38290	37319	39780	43229			
NUC	AERO	CHEM	Space Prop.	5564	6508					
			ELV's	7764	6862					
			A&DU + M/C	1170	832					
			Orbital Ops.	2920	2550					
			Spacecraft	19900	19900					
			Total	37423	36652					
CHEM	AERO	CHEM	Space Prop.	6482	6487	6912	6579			
			ELV's	8170	8543	12575	12630			
			A&DU + M/C	1318	1021	1246	1055			
			Orbital Ops.	2920	2550	2040	2030			
			Spacecraft	19900	19900	19900	19900			
			Total	38790	38501	42673	42194			
CHEM	CHEM	CHEM	Space Prop.	3842	4681	4364	5007			
			ELV's	11267	10448	16707	11453			
			A&DU + M/C	1599	1161	1725	1002			
			Orbital Ops.	2520	2450	2040	2030			
			Spacecraft	19900	19900	19900	19900			
			Total	39128	38640	44736	39482			

Table D2-1:

Space Propulsion Combination = NNN
ELV = SAT-V-25(S)U

Dollars in Millions

		Development						Five Missions			Total Program
		Basic R&D	Test Program: Flight Units	Test Program: Spares	Test Program: Cost	Mission Peculiar R&D	Total Dev.	Flight Units	Spares	Cost	
Space Propulsion	PM 1	337	7	1	264	75	676	11	5	431	1107
	PM-1A	-0-	-0-	-0-	-0-	-0-	-0-	-0-	-0-	-0-	-0-
	PM-2	290	3	1	106	49	445	6	5	276	721
	PM-3	280	2	1	72	14	366	5	5	221	587
	PM-3A	-0-	-0-	-0-	-0-	-0-	-0-	-0-	-0-	-0-	-0-
	Mgmt. and Integr.	91			44	14	149			93	242
	Total	998			486	152	1636			1021	2657
Earth Launch Vehicles	ELV Flight Hdwre	552			1410		1962			2344	4306
	Program Peculiar	-0-			-0-	-0-	-0-			-0-	-0-
	Launch Site	272	15	1	43		315	23	4	73	388
	Launch Operations	-0-			387		387			651	1038
	Mgmt. Assy. and Integr.	-0-			182		182			308	490
	Total	824			2022		2846			3376	6222
	A&DU + M/C	140			288		428			500	928
	Orbital Ops.		Time in Earth Orbit	= 145	480		480	Time in Orbit Avg	= 138	2050	2530
	Total Acceleration Cost	1962			3276	152	5390			6947	12337
	Spacecraft and Mission Support	10940			4200	1450	16590			3310	19900
	Total Program	$ 12902			$ 7476	$ 1602	$ 21980			$ 10257	$ 32237

Table D2-2: IMISCD PHASE II ELV AND SPACE PROPULSION TRADES

Space Propulsion Combination = NNN
ELV = SAT - V/4-260

Dollars in Millions

		Development						Five Missions			Total Program
		Basic R&D	Test Program: Flight Units	Test Program: Spares	Test Program: Cost	Mission Peculiar R&D	Total Dev.	Flight Units	Spares	Cost	
Space Propulsion	PM 1	807	6	1	259	125	1191	7	5	424	1615
	PM-1A	-0-	-0-	-0-	-0-	-0-	-0-	-0-	-0-	-0-	-0-
	PM-2	608	3	1	119	164	891	5	5	232	1123
	PM-3	573	2	1	101	68	742	5	5	208	905
	PM-3A	-0-	-0-	-0-	-0-	-0-	-0-	-0-	-0-	-0-	-0-
	Mgmt. and Integr.	199			48	35	282			86	368
	Total	2187			527	392	3106			950	4056
Earth Launch Vehicles	ELV Flight Hdwre	402			1220		1622			1830	3452
	Program Peculiar	-0-	9	1	-0-		-0-			-0-	-0-
	Launch Site	400			122		522	12	3	183	705
	Launch Operations	-0-			260		260			361	621
	Mgmt. Assy. and Integr.	-0-			175		175			262	437
	Total	802			1777		2579			2636	5215
	A&DU + M/C	140			183		323			281	604
	Orbital Ops.		Time in Earth Orbit	=132	470		470	Time in Orbit Avg	=	1820	2290
	Total Acceleration Cost	3129			2957	392	6478			5687	12165
	Spacecraft and Mission Support	10940			4200	1450	16590			3310	19900
	Total Program	$14069			$ 7157	$ 1842	$23068			$ 8997	$ 32065

Table D2-3: IMISCD PHASE II ELV AND SPACE PROPULSION TRADES

Space Propulsion Combination = NNN
ELV = SAT-V-XU

Dollars in Millions

		Development						Five Missions			Total Program
		Basic R&D	Test Program: Flight Units	Test Program: Spares	Test Program: Cost	Mission Peculiar R&D	Total Dev.	Flight Units	Spares	Cost	
Space Propulsion	PM 1	868	4	1	290	102	1260	5	5	410	1670
	PM-1A	-0-	-0-	-0-	-0-	-0-	-0-	-0-	-0-	-0-	-0-
	PM-2	610	4	1	149	198	957	5	5	244	1201
	PM-3	630	4	1	145	118	893	5	5	205	1098
	PM-3A	-0-	-0-	-0-	-0-	-0-	-0-	-0-	-0-	-0-	-0-
	Mgmt. and Integr.	211			58	42	311			36	397
	Total	2319			642	460	3421			945	4366
Earth Launch Vehicles	ELV Flight Hdwre	486	8 3&4 XU's 2 Cores	4 Cores	2260		2746	10 3&4 XU's	9 Cores	2961	5707
	Program Peculiar	-0-			-0-		-0-			-0-	-0-
	Launch Site	546			35		581			61	642
	Launch Operations	-0-			421		421			589	1010
	Mgmt. Assy. and Integr.	-0-			400		400			525	925
	Total	1032			3116		4148			4136	8284
	A&DU + M/C	490			218		708			291	999
	Orbital Ops.	-0-	Time in Earth Orbit	= 60	390		390	Time in Orbit Avg	= 60	1650	2040
	Total Acceleration Cost	3841			4366	460	8667			7022	15689
	Spacecraft and Mission Support	10940			4200	1450	16590			3310	19900
	Total Program	$14781			$ 8566	$ 1910	$25257			$10332	$ 35589

Table D2-4: IMISCD PHASE II ELV AND SPACE PROPULSION TRADES

Space Propulsion Combination = N/N/N
ELV = POST SATURN

Dollars in Millions

		Development						Five Missions			Total Program
		Basic R&D	Test Program: Flight Units	Test Program: Spares	Test Program: Cost	Mission Peculiar R&D	Total Dev.	Flight Units	Spares	Cost	
Space Propulsion	PM 1	868	4	1	290	162	1260	5	5	410	1670
	PM-1A	-0-	-0-	-0-	-0-	-0-	-0-	-0-	-0-	-0-	-0-
	PM-2	610	4	1	149	198	957	5	5	244	1201
	PM-3	630	4	1	145	118	893	5	5	205	1098
	PM-3A	-0-	-0-	-0-	-0-	-0-	-0-	-0-	-0-	-0-	-0-
	Mgmt. and Integr.	211			58	42	311			86	397
	Total	2319			642	460	3421			945	4366
Earth Launch Vehicles	ELV Flight Hdwre	4186			1412		5598			1294	6892
	Program Peculiar	950	Post	Saturn	-0-		950			-0-	950
	Launch Site	1952	4	1	131		2083	5	1	129	2212
	Launch Operations	-0-	SAT V		121		121			126	247
	Mgmt. Assy. and Integr.	-0-	2		87		87			85	172
	Total	7088			1751		8839			1634	10473
	A&DU + M/C	590			148		738			169	907
	Orbital Ops.		Time in Earth Orbit	= 84	405		405	Time in Orbit Avg	= 84	1625	2030
	Total Acceleration Cost	9997			2946	460	13403			4373	17776
	Spacecraft and Mission Support	10940			4200	1450	16590			3310	19900
	Total Program	$ 20937			$ 7146	$ 1910	$ 29993			$ 7683	$ 37676

Table D2-5: IMISCD PHASE II ELV AND SPACE PROPULSION TRADES

Space Propulsion Combination = NAN
ELV = SAT-V-25(S)U

Dollars in Millions

		Development						Five Missions			Total Program
		Basic R&D	Test Program: Flight Units	Test Program: Spares	Test Program: Cost	Mission Peculiar R&D	Total Dev.	Flight Units	Spares	Cost	
Space Propulsion	PM 1	477	5	1	228	14	719	10	5	405	1124
	PM-1A	-0-	-0-	-0-	-0-	-0-	-0-	-0-	-0-	-0-	-0-
	Aerobraker	1487	5(4)	1	419	2219	4125	4	5	765	4890
	PM-3	413	3(4)	1	113	85	611	5	5	232	843
	PM-3A	-0-	-0-	-0-	-0-	-0-	-0-	-0-	-0-	-0-	-0-
	Mgmt. and Integr.	238			76	232	546			140	686
	Total	2615			836	2550	6001			1542	7543
Earth Launch Vehicles	ELV Flight Hdwre	551			1411	705	2667			2091	4758
	Program Peculiar	-0-	15	1	-0-	-0-	-0-			-0-	-0-
	Launch Site	272	(8)		43	22	337	20	4	65	402
	Launch Operations	-0-			385	193	578			578	1156
	Mgmt. Assy. and Integr.	-0-			181	92	273			274	547
	Total	823			2020	1012	3855			3008	6863
	A&DU + M/C	160			288	148	596			468	1064
	Orbital Ops.		Time in Earth Orbit	= 132	470	400	870	Time in Orbit Avg	= 132	2050	2920
	Total Acceleration Cost	3598			3614	4110	11322			7068	18390
	Spacecraft and Mission Support	10940			4200	1450	16590			3310	19900
	Total Program	$14538			$ 7814	$ 5560	$27912			$10378	$ 38290

Table D2-6: IMISCD PHASE II ELV AND SPACE PROPULSION TRADES

Space Propulsion Combination = NAN
ELV = SAT-V/4-260

Dollars in Millions

		Development						Five Missions			Total Program
		Basic R&D	Test Program			Mission Peculiar R&D	Total Dev.	Flight Units	Spares	Cost	
			Flight Units	Spares	Cost						
Space Propulsion	PM 1	722	5	1	199	146	1067	6	5	398	1465
	PM-1A	-0-	-0-	-0-	-0-	-0-	-0-	-0-	-0-	-0-	-0-
	PM-2	1487	5(4)	1	420	2220	4127	5	5	766	4893
	PM-3	736	3(4)	1	139	155	1030	5	5	237	1267
	PM-3A	-0-	-0-	-0-	-0-	-0-	-0-	-0-	-0-	-0-	-0-
	Mgmt. and Integr.	294			76	252	622			140	762
	Total	3239			834	2773	6846			1541	8387
Earth Launch Vehicles	ELV Flight Hdwre	402	10	1	1342	488	2232	11	3	1708	3940
	Program Peculiar										
	Launch Site	400	(4)		134	49	583			171	754
	Launch Operations				286	104	390			364	754
	Mgmt. Assy. and Integr.				193	70	263			245	508
	Total	802			1955	711	3468			2488	5956
	A&DU + M/C	160			203	70	433			293	726
	Orbital Ops.		Time in Earth Orbit	=	470	-0-	470	Time in Orbit Avg	= 122	1880	2350
	Total Acceleration Cost	4201			3462	3554	11217			6202	17419
	Spacecraft and Mission Support	10940			4200	1450	16590			3310	19900
	Total Program	$15141			$ 7662	$ 5004	$27807			$ 9512	$37319

Table D2-7: IMISCD PHASE II ELV AND SPACE PROPULSION TRADES

Space Propulsion Combination = NAN
ELV = SAT-V-XU

Dollars in Millions

		Development						Five Missions			Total Program
		Basic R&D	Test Program			Mission Peculiar R&D	Total Dev.	Flight Units	Spares	Cost	
			Flight Units	Spares	Cost						
Space Propulsion	PM 1	833	3	1	229	86	1148	5	5	418	1566
	PM-1A	-0-	-0-	-0-	-0-	-0-	-0-	-0-	-0-	-0-	-0-
	PM-2	1487	5(4)	1	420	2220	4127	5	5	766	4893
	PM-3	736	3(4)	1	139	155	1030	5	5	237	1267
	PM-3A	-0-	-0-	-0-	-0-	-0-	-0-	-0-	-0-	-0-	-0-
	Mgmt. and Integr.	306			79	246	631			142	773
	Total	3362			867	2707	6936			1563	8499
Earth Launch Vehicles	ELV Flight Hdwre	486			1752	876	3114			2655	5769
	Program Peculiar	-0-			-0-	-0-	-0-			-0-	-0-
	Launch Site	546			22	11	579			43	622
	Launch Operations		8	1	324	108	432	10	6	505	937
	Mgmt. Assy. and Integr.		(4)		369	123	492		Cores	478	970
	Total	1032			2467	1118	4617			3681	8298
	A&DU + M/C	510			181	76	767			276	1043
	Orbital Ops.		Time in Earth Orbit	=	390	-0-	390	Time in Orbit Avg	= 60	1650	2040
	Total Acceleration Cost	4904			3905	3901	12710			7170	19880
	Spacecraft and Mission Support	10940			4200	1450	16590			3310	19900
	Total Program	$15844			$ 8105	$ 5351	$ 29300			$10480	$ 39780

Table D2-8: IMISCD PHASE II ELV AND SPACE PROPULSION TRADES

Space Propulsion Combination = NAN
ELV = Post Saturn

Dollars in Millions

		Development						Five Missions			Total Program
		Basic R&D	Test Program: Flight Units	Test Program: Spares	Test Program: Cost	Mission Peculiar R&D	Total Dev.	Flight Units	Spares	Cost	
Space Propulsion	PM 1	629	18	6	359	13	1001	25	8	415	1416
	PM-1A	-0-	-0-	-0-	-0-	-0-	-0-	-0-	-0-	-0-	-0-
	PM-2	1487	5(4)	1	420	2222	4129	5	5	771	4900
	PM-3	736	3(4)	1	139	156	1031	5	5	224	1255
	PM-3A	-0-	-0-	-0-	-0-	-0-	-0-	-0-	-0-	-0-	-0-
	Mgmt. and Integr.	285			92	239	616			141	757
	Total	3137			1010	2630	6777			1551	8328
Earth Launch Vehicles	ELV Flight Hdwre	4168			1266	844	6278	5	1	1888	8166
	Program Peculiar	950			-0-	-0-	950			-0-	950
	Launch Site	1953	5	1	126	84	2163			119	2282
	Launch Operations		(4)		132	88	220			123	343
	Mgmt. Assy. and Integr.				84	57	141			85	226
	Total	7071			1608	1073	9752			2215	11967
	A&DU + M/C	610			136	84	830			174	1004
	Orbital Ops.		Time in Earth Orbit	=	405		405	Time in Orbit Avg	= 84	1625	2030
	Total Acceleration Cost	10818			3159	3787	17764			5565	23329
	Spacecraft and Mission Support	10940			4200	1450	16590			3310	19900
	Total Program	$ 21758			$ 7359	$ 5237	$ 34354			$ 8875	$ 43229

Table D2-9: IMISCD PHASE II ELV AND SPACE PROPULSION TRADES

Space Propulsion Combination = CCC
ELV = SAT-V-25(S)U

Dollars in Millions

		Development						Five Missions			Total Program
		Basic R&D	Test Program: Flight Units	Test Program: Spares	Test Program: Cost	Mission Peculiar R&D	Total Dev.	Flight Units	Spares	Cost	
Space Propulsion	PM 1	434	15	1	389	49	872	28	9	725	1597
	PM-1A	-0-	-0-	-0-	-0-	-0-	-0-	-0-	-0-	-0-	-0-
	PM-2	366	5	1	148	38	552	11	5	285	837
	PM-3	367	3	1	114	48	529	6	5	195	724
	PM-3A	244	2	1	55	-0-	299	1	1	35	334
	Mgmt. and Integr.	141			71	14	226			124	350
	Total	1552			777	149	2478			1364	3842
Earth Launch Vehicles	ELV Flight Hdwre	551			2248		2799			4777	7576
	Program Peculiar	-0-			-0-		-0-			-0-	-0-
	Launch Site	672	24	1	68		740	48	6	146	886
	Launch Operations				603		603			1301	1904
	Mgmt. Assy. and Integr.				285		285			616	901
	Total	1223			3204		4427			6840	11267
	A&DU + M/C	160			447	-0-	607			992	1599
	Orbital Ops.		Time in Earth Orbit	=	470	-0-	470	Time in Orbit Avg	= 132	2050	2520
	Total Acceleration Cost	2935			4898	149	7982			11246	19228
	Spacecraft and Mission Support	10940			4200	1450	16590			3310	19900
	Total Program	$ 13875			$ 9098	$ 1599	$ 24572			$ 14556	$ 39128

Table D2-10: IMISCD PHASE II ELV AND SPACE PROPULSION TRADES

Space Propulsion Combination = CCC
ELV = SAT-V/4-260

Dollars in Millions

		Development						Five Missions			Total Program
		Basic R&D	Test Program			Mission Peculiar R&D	Total Dev.	Flight Units	Spares	Cost	
			Flight Units	Spares	Cost						
Space Propulsion	PM 1	795	11	1	382	60	1237	18	5	650	1887
	PM-1A	-0-	-0-	-0-	-0-	-0-	-0-	-0-	-0-	-0-	-0-
	PM-2	771	3	1	173	50	994	7	5	264	1258
	PM-3	367	3	1	131	93	591	5	5	186	777
	PM-3A	244	2	1	52	-0-	296	1	1	37	333
	Mgmt. and Integr.	218			74	20	315			114	429
	Total	2395			812	223	3430			1251	4681
Earth Launch Vehicles	ELV Flight Hdwre	402			2196		2598			4380	6978
	Program Peculiar	-0-			-0-		-0-			-0-	-0-
	Launch Site	650	17	1	216		866	30	6	438	1304
	Launch Operations	-0-			468		468			855	1323
	Mgmt. Assy. and Integr.	-0-			275		275			568	843
	Total	1052			3155		4207			6241	10448
	A&DU + M/C	160			324	-0-	484			677	1161
	Orbital Ops.		Time in Earth Orbit	=	470	-0-	470	Time in Orbit Avg	= 122	1980	2450
	Total Acceleration Cost	3607			4761	223	8591			10149	18740
	Spacecraft and Mission Support	10940			4200	1450	16590			3310	19900
	Total Program	$ 14547			$ 8961	$ 1673	$ 25181			$ 13459	$ 38640

Table D2-11: IMISCD PHASE II ELV AND SPACE PROPULSION TRADES

Space Propulsion Combination = CCC
ELV = SAT-V-XU

Dollars in Millions

		Development						Five Missions			Total Program
		Basic R&D	Test Program			Mission Peculiar R&D	Total Dev.	Flight Units	Spares	Cost	
			Flight Units	Spares	Cost						
Space Propulsion	PM 1	978	9	1	443	70	1491	13	5	603	2094
	PM-1A	-0-	-0-	-0-	-0-	-0-	-0-	-0-	-0-	-0-	-0-
	PM-2	382	3	1	111	49	542	8	5	320	862
	PM-3	321	3	1	108	93	522	5	5	186	708
	PM-3A	214	2	1	52	-0-	266	1	1	37	303
	Mgmt. and Integr.	190			71	21	282			115	397
	Total	2085			785	233	3103			1261	4364
Earth Launch Vehicles	ELV Flight Hdwre	486			4117		4603			7345	11948
	Program Peculiar	-0-			-0-		-0-			-0-	-0-
	Launch Site	547			54		601			111	712
	Launch Operations	-0-	13	7	677		677	21	20	1434	2111
	Mgmt. Assy. and Integr.	-0-			650		650			1286	1936
	Total	1033			5498		6531			10176	16707
	A&DU + M/C	510			389		899			826	1725
	Orbital Ops.		Time in Earth Orbit	=	390		390	Time in Orbit Avg	= 60	1650	2040
	Total Acceleration Cost	3628			7062	233	10923			13913	
	Spacecraft and Mission Support	10940			4200	1450	16590			3310	19900
	Total Program	$ 14568			$ 11262	$ 1683	$ 27513			$ 17223	$ 44736

Table D2-12: IMISCD PHASE II ELV AND SPACE PROPULSION TRADES

Space Propulsion Combination = CCC
ELV = Post Saturn

Dollars in Millions

		Development						Five Missions			Total Program
		Basic R&D	Test Program: Flight Units	Test Program: Spares	Test Program: Cost	Mission Peculiar R&D	Total Dev.	Flight Units	Spares	Cost	
Space Propulsion	PM 1	1065	3	1	327	110	1502	5	5	574	2076
	PM-1A	-0-	-0-	-0-	-0-	-0-	-0-	-0-	-0-	-0-	-0-
	PM-2	771	4	1	217	122	1110	5	5	327	1437
	PM-3	367	3	1	133	93	593	5	5	192	785
	PM-3A	244	2	1	53	-0-	297	1	1	38	335
	Mgmt. and Integr.	245			73	33	351			113	464
	Total	2692			803	358	3853			1244	5097
Earth Launch Vehicles	ELV Flight Hdwre	4368			1473		5841			1720	7561
	Program Peculiar	990			-0-		990			-0-	990
	Launch Site	1993	7	1	147		2140	6	2	172	2312
	Launch Operations	-0-			197		197			162	359
	Mgmt. Assy. and Integr.	-0-			118		118			113	231
	Total	7351			1935	-0-	9286			2167	11453
	A&DU + M/C	610			177	-0-	787			215	1002
	Orbital Ops.		Time in Earth Orbit	=	405		405	Time in Orbit Avg	=	1625	2030
	Total Acceleration Cost	10653			3320	358	14331			5251	19582
	Spacecraft and Mission Support	10940			4200	1450	16590			3310	19900
	Total Program	$ 21593			$ 7520	$ 1808	$ 30921			$ 8561	$ 39482

Table D2-13: IMISCD PHASE II ELV AND SPACE PROPULSION TRADES

Space Propulsion Combination = CAC
ELV = SAT-V-25(S)U

Dollars in Millions

		Development						Five Missions			Total Program
		Basic R&D	Test Program: Flight Units	Test Program: Spares	Test Program: Cost	Mission Peculiar R&D	Total Dev.	Flight Units	Spares	Cost	
Space Propulsion	PM 1	715	12	2	338	53	1106	19	5	469	1575
	PM-1A	-0-	-0-	-0-	-0-	-0-	-0-	-0-	-0-	-0-	-0-
	PM-2	1029	5(4)	1	268	1361	2658	5	5	462	3120
	PM-3	392	3(4)	1	123	113	628	5	5	210	838
	PM-3A	262	2	1	59	-0-	321	1	1	39	360
	Mgmt. and Integr.	240			79	152	471			118	589
	Total	2638			867	1679	5184			1298	6482
Earth Launch Vehicles	ELV Flight Hdwre	551			2050	670	3271			2582	5853
	Program Peculiar										
	Launch Site	272	22	1	62	21	355	26	4	80	435
	Launch Operations	-0-	(8)		556	186	742			714	1456
	Mgmt. Assy. and Integr.	-0-			261	88	349			77	426
	Total	823			2929	965	4717			3453	8170
	A&DU + M/C	185			414	140	739			579	1318
	Orbital Ops.		Time in Earth Orbit	=	470	300	770	Time in Orbit Avg	= 132	2150	2920
	Total Acceleration Cost	3646			4680	3084	11410			7480	18890
	Spacecraft and Mission Support	10940			4200	1450	16590			3310	19900
	Total Program	$14586			$ 8880	$ 4534	$28000			$10790	$ 38790

Table D2-14: IMISCD PHASE II ELV AND SPACE PROPULSION TRADES

Space Propulsion Combination = C/A/C
ELV = SAT-V/4-260

Dollars in Millions

		Development						Five Missions			Total Program
		Basic R&D	Test Program: Flight Units	Test Program: Spares	Test Program: Cost	Mission Peculiar R&D	Total Dev.	Flight Units	Spares	Cost	
Space Propulsion	PM 1	774	8	1	304	74	1152	11	5	427	1579
	PM-1A	-0-	-0-	-0-	-0-	-0-	-0-	-0-	-0-	-0-	-0-
	PM-2	1029	5(4)	1	268	1361	2658	5	5	462	3120
	PM-3	392	3(4)	1	143	113	648	5	5	208	856
	PM-3A	262	2	1	39	-0-	301	5	1	41	342
	Mgmt. and Integr.	246			75	155	476			114	590
	Total	2703			829	1703	5235			1252	6487
Earth Launch Vehicles	ELV Flight Hdwre	402			2074	610	3086			2684	5770
	Program Peculiar	-0-	16	1	-0-	-0-	-0-			-0-	-0-
	Launch Site	400	(5)		207	61	668	18	4	268	936
	Launch Operations	-0-			441	130	571			571	1142
	Mgmt. Assy. and Integr.	-0-			260	88	348			347	694
	Total	802			2982	889	4673			3870	8543
	A&DU + M/C	185			309	88	582			439	1021
	Orbital Ops.		Time in Earth Orbit	=	470	100	570	Time in Orbit Avg	= 122	1980	2550
	Total Acceleration Cost	3690			4590	2780	11060			7541	18601
	Spacecraft and Mission Support	10940			4200	1450	16590			3310	19900
	Total Program	$ 14630			$ 8790	$ 4230	$ 27650			$ 10851	$ 38501

Table D2-15: IMISCD PHASE II ELV AND SPACE PROPULSION TRADES

Space Propulsion Combination = CAC
ELV = SAT-V-XU

Dollars in Millions

		Development						Five Missions			Total Program
		Basic R&D	Test Program: Flight Units	Test Program: Spares	Test Program: Cost	Mission Peculiar R&D	Total Dev.	Flight Units	Spares	Cost	
Space Propulsion	PM 1	855	6	1	456	106	1417	8	5	528	1945
	PM-1A	-0-	-0-	-0-	-0-	-0-	-0-	-0-	-0-	-0-	-0-
	PM-2	1029	5(4)	1	268	1361	2658	5	5	462	3120
	PM-3	392	3(4)	1	123	127	642	5	5	210	852
	PM-3A	262	2	1	59	-0-	321	1	1	45	366
	Mgmt. and Integr.	254			91	159	504			125	629
	Total	2792			997	1753	5542			1370	6912
Earth Launch Vehicles	ELV Flight Hdwre	486			3394	950	4830			4014	8844
	Program Peculiar		13	4							
	Launch Site	547	(4)	Cores	46	11	604	13	12	68	672
	Launch Operations				606	157	763		Cores	796	1559
	Mgmt. Assy. and Integr.				616	175	791			709	1500
	Total	1033			4662	1293	6988			5587	12575
	A&DU + M/C	535			277	76	888			358	1246
	Orbital Ops.		Time in Earth Orbit	=	390		390	Time in Orbit Avg	= 60	1650	2040
	Total Acceleration Cost	4360			6326	3122	13808			8965	22773
	Spacecraft and Mission Support	10940			4200	1450	16590			3310	19900
	Total Program	$ 15300			$ 10526	$ 4572	$ 30398			$ 12275	$ 42673

Table D2-16: IMISCD PHASE II ELV AND SPACE PROPULSION TRADES

Space Propulsion Combination = CAC
ELV = Post Saturn

Dollars in Millions

		Development						Five Missions			Total Program
		Basic R&D	Test Program: Flight Units	Test Program: Spares	Test Program: Cost	Mission Peculiar R&D	Total Dev.	Flight Units	Spares	Cost	
Space Propulsion	PM 1	947	3	1	257	59	1263	5	5	421	1684
	PM-1A	-0-	-0-	-0-	-0-	-0-	-0-	-0-	-0-	-0-	-0-
	PM-2	1029	5(4)	1	268	1361	2658	5	5	462	3120
	PM-3	392	3(4)	1	123	127	642	5	5	177	819
	PM-3A	262	2	1	59	-0-	321	1	1	36	357
	Mgmt. and Integr.	263			71	155	489			110	599
	Total	2893			778	1702	5373			1206	6579
Earth Launch Vehicles	ELV Flight Hdwre	4366			1820	1080	7266			1329	8595
	Program Peculiar							5	1		
	Launch Site	990	6	1	182	108	1280			133	1413
	Launch Operations	1993	(4)		166	88	2247			134	2381
	Mgmt. Assy. and Integr.				99	57	156			85	241
	Total	7349			2267	1333	10949			1681	12630
	A&DU + M/C	635			156	84	875			180	1055
	Orbital Ops.		Time in Earth Orbit	=	405		405	Time in Orbit Avg	=	1625	2030
	Total Acceleration Cost	10877			3606	3119	17602			4692	22294
	Spacecraft and Mission Support	10940			4200	1450	16590			3310	19900
	Total Program	$ 21817			$ 7806	$ 4569	$ 34192			$ 8002	$ 42194

Table D2-17: IMISCD PHASE II ELV AND SPACE PROPULSION TRADES

Space Propulsion Combination = NNN

ELV = Post Saturn Single Stage Optimized

Dollars in Millions

		Development						Five Missions			Total Program
		Basic R&D	Test Program			Mission Peculiar R&D	Total Dev.	Flight Units	Spares	Cost	
			Flight Units	Spares	Cost						
Space Propulsion	PM 1	868	4	1	290	102	1260	5	5	410	1670
	PM-1A	-0-	-0-	-0-	-0-	-0-	-0-	-0-	-0-	-0-	-0-
	PM-2	610	4	1	149	198	957	5	5	244	1201
	PM-3	630	4	1	145	118	893	5	5	205	1098
	PM-3A	-0-	-0-	-0-	-0-	-0-	-0-	-0-	-0-	-0-	-0-
	Mgmt. and Integr.	211			58	42	311			86	397
	Total	2319			642	460	3421			945	4366
Earth Launch Vehicles	ELV Flight Hdwre	3768	SAT-V	INT 21	1091		4859			966	5825
	Program Peculiar	875	2	-0-	-0-		875			-0-	875
	Launch Site	1855	Post	Saturn	99		1954	5	1	97	2051
	Launch Operations		4	1	121		121			126	247
	Mgmt. Assy. and Integr.				86		86			85	171
	Total	6498			1397		7895			1274	9169
	A&DU + M/C	590			148		738			169	907
	Orbital Ops.		Time in Earth Orbit	=	405		405	Time in Orbit Avg	= 84	1625	2030
	Total Acceleration Cost	9407			2592	460	12459			4013	16472
	Spacecraft and Mission Support	10940			4200	1450	16590			3310	19900
	Total Program	$ 20347			$ 6792	$ 1910	$ 29049			$ 7323	$ 36372

Table D2-18: IMISCD SPACE PROPULSION TRADES FIVE MISSION PROGRAMS

Space Propulsion Combination = NNN

ELV = Post Saturn 2 Stage Optimized

Dollars in Millions

		Development						Five Missions			Total Program
		Basic R&D	Test Program: Flight Units	Test Program: Spares	Test Program: Cost	Mission Peculiar R&D	Total Dev.	Flight Units	Spares	Cost	
Space Propulsion	PM 1	868	4	1	290	102	1260	5	5	410	1670
	PM-1A	-0-	-0-	-0-	-0-	-0-	-0-	-0-	-0-	-0-	-0-
	PM-2	610	4	1	149	198	957	5	5	244	1201
	PM-3	630	4	1	145	118	893	5	5	205	1098
	PM-3A	-0-	-0-	-0-	-0-	-0-	-0-	-0-	-0-	-0-	-0-
	Mgmt. and Integr.	211			58	42	311			86	397
	Total	2319			642	460	3421			945	4366
Earth Launch Vehicles	ELV Flight Hdwre	4818	SAT	V INT	1777		6595			1653	8248
	Program Peculiar	1080	2	21	-0-		1080	5	1	-0-	1080
	Launch Site	2235	Post	-0-	168		2403			165	2568
	Launch Operations	-0-	4	Saturn	131		131			131	262
	Mgmt. Assy. and Integr.	-0-		1	87		87			86	173
	Total	8133			2163		10296			2035	12331
	A&DU + M/C	590			148		738			169	907
	Orbital Ops.		Time in Earth Orbit	=	405		405	Time in Orbit Avg	= 84	1625	2030
	Total Acceleration Cost	11042			3358	460	14860			4774	19634
	Spacecraft and Mission Support	10940			4200	1450	16590			3310	19900
	Total Program	$ 21982			$ 7558	$ 1910	$ 31450			$ 8084	$ 39534

Table D2-19: IMISCD SPACE PROPULSION TRADES FIVE MISSION PROGRAMS

Space Propulsion Combination = NNN

ELV = SAT-V/4-260 Tanking Mode

Dollars in Millions

		Development						Five Missions			Total Program
		Basic R&D	Test Program: Flight Units	Test Program: Spares	Test Program: Cost	Mission Peculiar R&D	Total Dev.	Flight Units	Spares	Cost	
Space Propulsion	PM 1	918	3	1	229	160	1307	5	5	432	1739
	PM-1A	100	4	1	167	20	287	7	2	208	495
	PM-2	611	3	1	123	165	899	5	5	247	1146
	PM-3	628	3	1	121	68	817	5	5	210	1027
	PM-3A	-0-	-0-	-0-	-0-	-0-	-0-	-0-	-0-	-0-	-0-
	Mgmt. and Integr.	221			64	41	326			109	435
	Total	2478			704	454	3636			1206	4842
Earth Launch Vehicles	ELV Flight Hdwre	402			976		1378	SAT V INT 21		2024	3402
	Program Peculiar				-0-		-0-	2	1	-0-	-0-
	Launch Site	400	7	1	98		498			187	685
	Launch Operations				208		208	SAT-V/4-260		391	599
	Mgmt. Assy. and Integr.				140		140	12	3	286	426
	Total	802			1422	-0-	2224			2888	5112
	A&DU + M/C	140			148	-0-	288			358	646
	Orbital Ops.		Time in Earth Orbit	=	470	-0-	470	Time in Orbit Avg	= 122	1980	2450
	Total Acceleration Cost	3420			2744	454	6618			6432	13050
	Spacecraft and Mission Support	10940			4200	1450	16590			3310	19900
	Total Program	$ 14360			$ 6944	$ 1904	$ 23208			$ 9742	$ 32950

Table D2-20: IMISCD PHASE II ELV AND SPACE PROPULSION TRADES

APPENDIX D3
COST DATA FOR IMISCD SPACE PROPULSION COMMONALITY TRADE STUDIES

Cost estimates were developed for six all-nuclear propulsion module commonality concepts. Costs were developed from the configuration data and quantities of launches required, which are listed in Section 7.0 of Volume IV.

Figure D3-1 is a summary of costs for the six configurations studied. The summary costs include all nonrecurring plus recurring costs for four selected missions.

Tables D3-1 through D3-6 are the detailed backup costs for each combination.

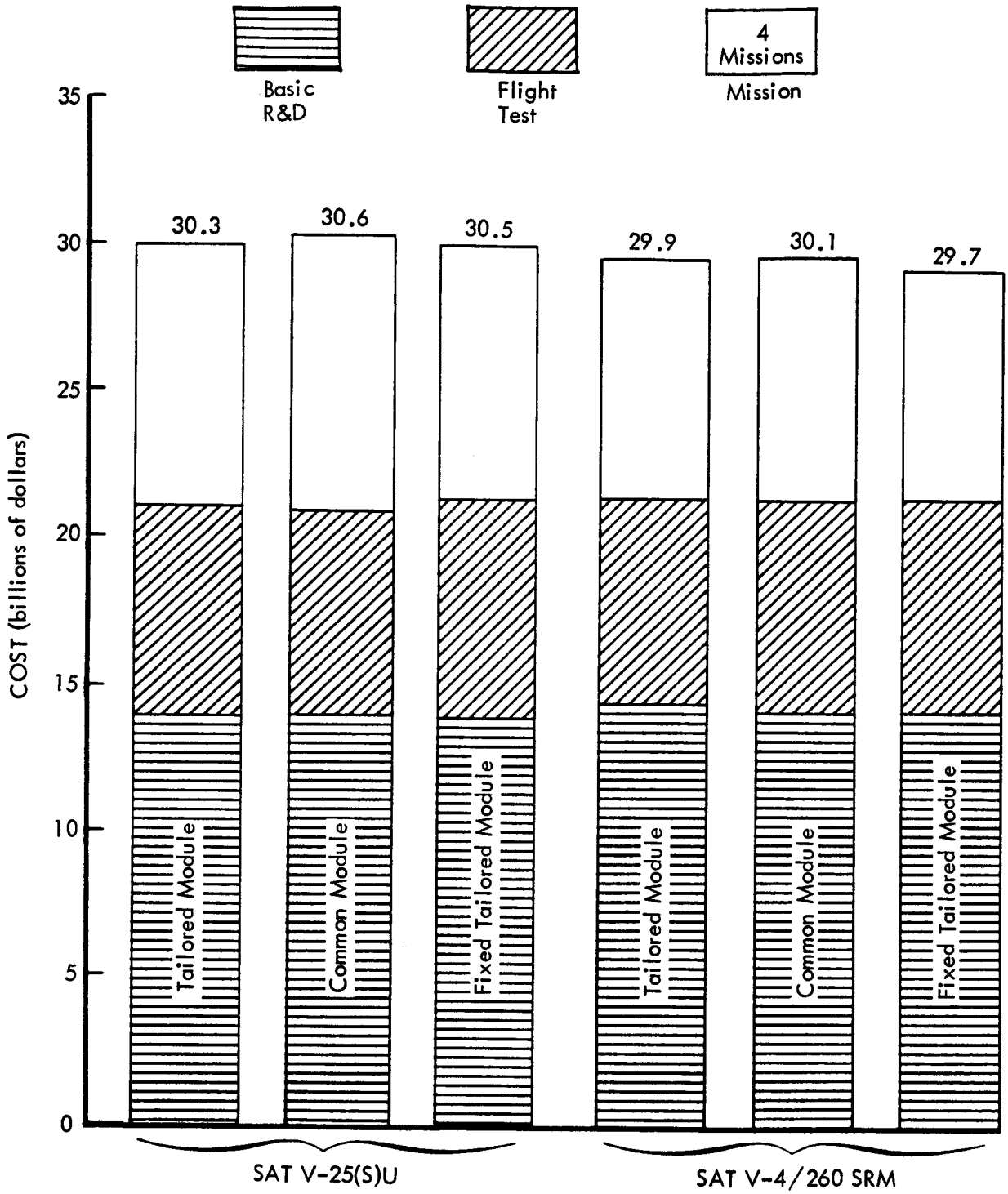

Figure D3-1: DESIGN APPROACH COST COMPARISON

Tailored Module — SAT V-25(S)U

	Costs are in $\$ \times 10^6$	Development						Missions			Total Program Cost
		Basic R&D Cost	Test Program			Mission Peculiar R&D Costs	Total Dev. Cost	Flight Units	Spares	Cost	
			Flight Units	Spares	Cost						
Space Propulsion	PM 1	276	6	1	182	41	499	11	7	480	979
	PM-1A	-0-	-0-	-0-	-0-	-0-	-0-	-0-	-0-	-0-	-0-
	PM-2	316	3	1	109	28	453	5	4	227	680
	PM-3	198	2	1	71	41	310	4	4	176	486
	Mgmt. and Integr.	80			36	11	127			88	215
	Total	870			398	121	1389			971	2360
Earth Launch Vehicles	ELV Flight Hdwre	552			1088		1640			2300	3940
	Program Peculiar	-0-			-0-		-0-			-0-	-0-
	Launch Site	272			33		305	19	6.6	71	376
	Launch Operations	-0-			299		299			633	932
	Mgmt. Assy. and Integr.	-0-			140		140			302	442
	Total	824			1560		2384			3306	5690
	A&DU + M/C	140			218		358			500	858
	Orbital Ops.	-0-			475		475			1600	2075
	Total Acceleration Cost	1834			2651	121	4606			6377	10983
	Spacecraft and Mission Support	10940			4200	1450	16590			2650	19240
	Total Program	$12774			$ 6851	$ 1571	$21196			$ 9027	$ 30223

A&DU = Assembly & Docking Units
M/C = Midcourse

Table D3-1: IMISCD COMMON MODULE TRADES - FOUR PRIMARY MISSIONS

Common Module - SAT V-25(S)U

Costs are in $\$ \times 10^6$		Development: Basic R&D Cost	Development: Test Program: Flight Units	Development: Test Program: Spares	Development: Test Program: Cost	Development: Mission Peculiar R&D Cost	Development: Total Dev. Cost	Missions: Flight Units	Missions: Spares	Missions: Cost	Total Program Cost
Space Propulsion	PM 1	765	10	2	350		1115	12	7	558	1673
	PM-1A							-0-	-0-	-0-	-0-
	PM-2							4	2	177	177
	PM-3							4	2	177	177
	Mgmt. and Integr.	75			36		111			91	202
	Total	840			386		1226			1003	2229
Earth Launch Vehicles	ELV Flight Hdwre	552			1088		1640			2640	4280
	Program Peculiar	-0-			-0-		-0-			-0-	-0-
	Launch Site	272	11	1	33		305	22	7.3	82	387
	Launch Operations	-0-			299		299			736	1035
	Mgmt. Assy. and Integr.	-0-			140		140			348	488
	Total	824			1560		2384			3806	6190
	A&DU + M/C	140			218		358			550	908
	Orbital Ops.	-0-			475		475			1600	2075
	Total Acceleration Cost	1804			2639		4443			6959	11402
	Spacecraft and Mission Support	10940			4200	1450	16590			2650	19240
	Total Program	$ 12744			$ 6839	$ 1450	$ 21033			$ 9609	$ 30642

Table D3-2: IMISCD COMMON MODULE TRADES - FOUR PRIMARY MISSIONS

Fixed Tailored — SAT V-25(S)U

Costs are in $\$ \times 10^6$		Development						Missions			Total Program Cost
		Basic R&D Cost	Test Program			Mission Peculiar R&D Cost	Total Dev. Cost	Flight Units	Spares	Cost	
			Flight Units	Spares	Cost						
Space Propulsion	PM 1										
	PM-1A	453	7	2	236		689	12	8	528	1217
	PM-2		-0-	-0-	-0-		-0-	-0-	-0-	-0-	-0-
	PM-3		3	1	105		105	4	4	211	316
	PM-3A	319	2	1	68		387	4	4	182	569
	Mgmt. and Integr.	78			42		120			92	212
	Total	850			451		1301			1013	2314
Earth Launch Vehicles	ELV Flight Hdwre	552			1269		1821			2370	4191
	Program Peculiar	-0-			-0-		-0-			-0-	-0-
	Launch Site	272	13	1	38		310	20	6.6	74	384
	Launch Operations	-0-			349		349			658	1007
	Mgmt. Assy. and Integr.	-0-			164		164			312	476
	Total	824			1820		2644			3414	6058
	A&DU + M/C	140			253		393			450	843
	Orbital Ops.		Time in Earth Orbit		475		475	Time in Orbit Avg		1600	2075
	Total Acceleration Cost	1814			2999		4813			6477	11290
	Spacecraft and Mission Support	10940			4200	1450	16590			2650	19240
	Total Program	$ 12754			$ 7199	$ 1450	$ 21403			$ 9127	$ 30530

Table D3-3: IMISCD COMMON MODULE TRADES - FOUR PRIMARY MISSIONS

Tailored Modules — SAT V-4/260 SRM

Cost are in $\$ \times 10^6$		Development						Missions			Total Program Cost
		Basic R&D Cost	Test Program			Mission Peculiar R&D Cost	Total Dev. Cost	Flight Units	Spares	Cost	
			Flight Units	Spares	Cost						
Space Propulsion	PM 1	353	3	1	149	-0-	502	4	4	312	814
	PM-1A	229	3	1	65	41	335	4	4	128	463
	PM-2	267	3	1	104	28	399	4	4	206	605
	PM-3	178	2	1	69	46	293	4	4	170	463
	Mgmt. and Integr.	103			39	12	154			82	236
	Total	1130			426	127	1683			898	2581
Earth Launch Vehicles	ELV Flight Hdwre	402			1220		1622			2180	3802
	Program Peculiar	-0-			-0-		-0-			-0-	-0-
	Launch Site	400	9	1	122		522	13	5.2	218	740
	Launch Operations	-0-			260		260			429	689
	Mgmt. Assy. and Integr.	-0-			175		175			312	487
	Total	802			1777		2579			3139	5718
	A&DU + M/C	140				183	323			353	676
	Orbital Ops.	-0-				400	400			1300	1700
	Total Acceleration Cost	2072			2786	127	4985			5690	10675
	Spacecraft and Mission Support	10940			4200	1450	16590			2650	19240
	Total Program	$13012			$ 6986	$ 1577	$21575			$ 8340	$ 29915

Table D3-4: IMISCD COMMON MODULE TRADES - FOUR PRIMARY MISSIONS

Common Module — SAT V-4/260 SRM

	Costs are in $\$ \times 10^6$	Development						Five Missions			Total Program Cost
		Basic R&D Cost	Test Program			Mission Peculiar R&D Cost	Total Dev. Cost	Flight Units	Spares	Cost	
			Flight Units	Spares	Cost						
Space Propulsion	PM 1	800	10	2	427		1227	5	3	288	1515
	PM-1A							-0-	-0-	-0-	-0-
	PM-2							4	3	252	252
	PM-3							4	2	218	218
	Mgmt. and Integr.	80			43		123			76	199
	Total	880			470		1350			834	2184
Earth Launch Vehicles	ELV Flight Hdwre	402			1338		1740			2270	4010
	Program Peculiar	-0-			-0-		-0-			-0-	-0-
	Launch Site	400	10	1	134		134	16	6.5	227	761
	Launch Operations	-0-			285		285			546	831
	Mgmt. Assy. and Integr.	-0-			193		193			396	589
	Total	802			1950		2752			3439	6191
	A&DU + M/C	140			218		358			430	788
	Orbital Ops.	-0-			400		400			1300	1700
	Total Acceleration Cost	1822			3038		4860			6003	10863
	Spacecraft and Mission Support	10940			4200	1450	16590			2650	19240
	Total Program	$12762			$ 7238	$ 1450	$ 21450			$ 8653	$ 30103

Table D3-5: IMISCD COMMON MODULE TRADES - FOUR PRIMARY MISSIONS

Fixed Tailored — SAT V-4/260 SRM

Costs are in $\$ \times 10^6$		Development: Basic R&D Cost	Development: Test Program: Flight Units	Development: Test Program: Spares	Development: Test Program: Cost	Development: Mission Peculiar R&D Cost	Development: Total Dev. Cost	Missions: Flight Units	Missions: Spares	Missions: Cost	Total Program Cost
Space Propulsion	PM 1	359	3	1	182		541	4	4	364	905
	PM-1A	233	3	1	64		297	4	4	127	424
	PM-2	240	3	1	105		345	4	4	211	556
	PM-3	168	2	1	64		232	4	4	171	403
	Mgmt. and Integr.	106			41		141			87	228
	Total	1100			456		1556			960	2516
Earth Launch Vehicles	ELV Flight Hdwre	402			1220		1622			2070	3692
	Program Peculiar	-0-			-0-		-0-			-0-	-0-
	Launch Site	400			122		522	12	4.8	207	729
	Launch Operations	-0-			260		260			408	668
	Mgmt. Assy. and Integr.	-0-			175		175			298	473
	Total	802			1777		2579			2983	5562
	A&DU + M/C	140			183		323			329	652
	Orbital Ops.	-0-			400		400			1300	1700
	Total Acceleration Cost	2042			2816		4858			5572	10430
	Spacecraft and Mission Support	10940			4200	1450	16590			2650	19240
	Total Program	$12982			$ 7016	$ 1450	$ 21448			$ 8222	$ 29670

Table D3-6: IMISCD COMMON MODULE TRADES - FOUR PRIMARY MISSIONS