NASA TECHNICAL NOTE

NASA TN D-4306

NASA TN D-4306

TECH LIBRARY KAFB, NM
0131364

LOAN COPY: RETURN TO
AFWL (WLIL-2)
KIRTLAND AFB, N MEX

DISCHARGE CHARACTERISTICS OF SOME COPPER OXIDE - MAGNESIUM THERMAL CELLS

by Lawrence H. Thaller

Lewis Research Center
Cleveland, Ohio

NATIONAL AERONAUTICS AND SPACE ADMINISTRATION • WASHINGTON, D. C. • APRIL 1968

TECH LIBRARY KAFB, NM

0131364

DISCHARGE CHARACTERISTICS OF SOME COPPER OXIDE - MAGNESIUM THERMAL CELLS

By Lawrence H. Thaller

Lewis Research Center
Cleveland, Ohio

NATIONAL AERONAUTICS AND SPACE ADMINISTRATION

For sale by the Clearinghouse for Federal Scientific and Technical Information
Springfield, Virginia 22151 – CFSTI price $3.00

DISCHARGE CHARACTERISTICS OF SOME COPPER OXIDE - MAGNESIUM THERMAL CELLS *

by Lawrence H. Thaller

Lewis Research Center

SUMMARY

Primary thermal cells were discharged at 450° C for periods ranging from 24 to 290 hours. These cells employed magnesium (99.8 percent) as the anode material. The cathode material was the wire form of cupric oxide, which is about 80-mole-percent cupric oxide with the remainder cuprous oxide. The electrolytes consisted of 59-mole-percent lithium chloride with the remaining 41-mole-percent mixtures of potassium chloride and cesium chloride ranging from pure potassium chloride to pure cesium chloride. The average capacity of the cells was 15 ampere-hours (5.4×10^4 C).

Previously, the service life of this type of cell was observed not to exceed a few days. The service life was limited by self-discharge arising from internal chemical reactions and short circuits. In this work, several features of cell design were altered in order to reduce self-discharge. A woven glass fabric separator was successful in eliminating the internal short circuits. Self-discharge from internal chemical reaction was reduced by increasing the electrode spacing and by adding CsCl to the electrolyte. The former increased the distance that electrode materials had to diffuse before reaction, and the latter reduced the diffusion coefficient. With these improvements, the rate of self-discharge was reduced from 200 milliamperes to less than 1 milliampere with a corresponding increase in cell resistance from 0.2 to 2.0 ohms. Service lives up to 12 days were achieved.

During cell discharge, 0.1- to 0.2-volt stepwise decreases in the open circuit voltage were observed. These were believed to be the result of several competing electrochemical reactions occurring during discharge. In confirmation of this, X-ray analyses of the electrolyte composition in completely discharged cells showed that a change occurred in the products of the electrochemical reaction during the latter stages of discharge.

INTRODUCTION

Thermal cells are a class of primary electrochemical devices which at room temperatures are inactive. The electrolytes used in these cells are usually mixtures of solid inorganic salts which require the application of heat to melt the electrolyte and thus to

* Published in Journal of the Electrochemical Society, vol. 115, no. 2., Feb. 1968, pp. 116-121.

activate the cells. For certain applications, these cells have advantages over the more common aqueous or nonaqueous cells. While in the inactive state, these cells are not subject to internal chemical reactions of the active materials which lower the output of the cells. A less obvious advantage of a thermal battery is simply the ability of being able to operate at temperatures hundreds of degrees above the operating temperatures of aqueous batteries. It is this latter advantage that this research program is concerned with.

Earlier studies (ref. 1) on this system employed magnesium anodes, mixed copper oxide cathodes, and electrolytes of the eutectic mixture of lithium chloride (LiCl) and potassium chloride (KCl). This material when melted (mp, $+352^{\circ}$ C) has a high specific conductivity ($K = 2.2$ ohm^{-1} cm^{-1} at 450° C) and possesses a high decomposition potential of about 3 volts. The magnesium anode material (Mg) and the copper oxide cathode material (CuO-Cu_2O) both have rather high half cell potentials and low equivalent weights, and were thought to have low solubilities in the electrolyte. The cells discharged in these earlier studies were opened and the contents analyzed quantitatively for products of reaction and unused reactants. The results of a typical analysis are shown in table I.

TABLE I. - CHEMICAL ANALYSIS OF DISCHARGED CELL

Material		Weight		
In fresh cell	In spent cell	g	Milli-equivalents	C
Mg^0		5.66	466	4.49×10^4
	Mg^0	4.16	343	3.31×10^4
	$Mg^{+2}(MgO)$	1.55	131	1.23
	Mg total	5.71	474	4.54
$Cu^{+2}(CuO)$		1.49	46.8	0.45×10^4
$Cu^{+1}(Cu_2O)$		13.36	210.0	2.03
Cu total		14.85	256.8	2.48
	$Cu^{+2}(CuO)$	0.48	15.2	0.15×10^4
	$Cu^{+1}(Cu_2O)$	8.50	133.7	1.28
	Cu^0(from CuO)	1.00	30.4	.30
	Cu^0(from Cu_2O)	4.79	75.4	.76
	Cu total	14.76	254.7	2.49

The results of table I show that during the cell discharge magnesium is oxidized to the +2 state and that both the cupric and cuprous oxide are reduced finally to metallic copper. The exact electrochemical reactions are, of course, difficult to determine.

It was evident from the results of the material balances made on the discharged cells and from the continuous recordings of the cell voltage and cell current taken during the testing of the cells that self-discharge was a major cause of poor performance. The

losses of electrochemical efficiency by internal chemical reactions were of two types. The first type was caused simply by the diffusion of copper ions from the vicinity of the cathode to the magnesium anode. At the anode, the copper ions reacted chemically with the magnesium to form submicron particles of copper. The second type occurred when these small particles of copper suspended in the electrolyte actually formed an electric short circuit between the anode and either the cell case or the cathode. The former type affected the cell performance by lowering the yield of current from the cell. The latter type of self-discharge was characterized by erratic voltage and current fluctuations. The object of this research program was to decrease the internal chemical reaction type of self-discharge and to try to prevent the internal short circuits, with a consequent increase in the service life of the cell.

EXPERIMENT

Electrolytes

Mixtures of lithium chloride (LiCl), potassium chloride (KCl), and cesium chloride (CsCl) were used as the electrolytes for these cells. The reagent grade alkali halides were predried at 200° C for several weeks in a drying oven. Three different compositions of electrolyte were used in these studies:

(1) 59-mole-percent LiCl - 41-mole-percent KCl

(2) 59-mole-percent LiCl - 20.5-mole-percent KCl - 20.5-mole-percent CsCl

(3) 59-mole-percent LiCl - 41-mole-percent CsCl

The proper proportions of these materials were weighed out in porcelain crucibles. After slowly bringing the ingredients to the melting point, magnesium chips were added in an effort to remove the last traces of water. When all evidence of reaction had ceased, the electrolyte was poured into a waiting cell.

Lab Cells

The cells used in these studies are shown in figures 1 and 2. One type had the electrodes arranged in a vertical fashion and will be referred to as the vertical type; the other configuration will be referred to as the horizontal type. Both types of cells had the same nominal inside dimensions of 2.9 centimeters in diameter by 5.1 centimeters in height. The material used for the cell case was either commercially pure copper or nickel. The top assembly of the cell included the lid with the threaded fill tubes and either one or two electrical feedthroughs. The centrally located feedthrough served to insulate the anode from the cell case which was the current collector for the cathode. The other feedthrough was used for the insertion of a thermocouple or a reference electrode.

In all instances, an anode of the desired shape was screwed onto a shaft which ex-

tended up through the central feedthrough and was silver soldered onto the top of it. The grade of magnesium used for the anodes is called primary (99.8-percent Mg). The wire form of cupric oxide was used as the cathode material. The composition of this material varies from batch to batch and from supplier to supplier. In general, its composition was between 65- and 85-mole-percent CuO, and the remainder was cuprous oxide (Cu_2O). This cathode material was placed either in the bottom of the cell case for horizontal type cells or behind a cylindrical copper screen for the vertical type cells. Woven glass cloth was used as a separator material in these cells. This tightly woven fabric was manufactured in the form of a continuous cylinder. After being coated with a resin, this material is sold as a flexible electrical insulation. The fabric thickness was about 1 millimeter. After oxidizing away the resin in a 500° C furnace, this fiberglass material was suitable for use as a separator in these cells. Its main function was to act as a mechanical barrier through which particles of copper could not form a continuous electronically conducting path. Usually one layer of separator material was placed against the cathode, and one layer was placed against the anode.

With all the cell components in the cell, except for the electrolyte, the top assembly was welded onto the cell case. The electrolyte was added to these cells while placed in a furnace which had been preheated to about 450° C. The final step in the construction was to screw stainless-steel screws into the threaded fill tubes and to seal the two together with the silver solder.

Beaker Cells

Beaker cells were used from time to time to perform certain preliminary experiments. These cells employed 20-milliliter beakers as the cell case and close fitting copper tubes as the cathode current collectors. These cells used the same anodes, separators, and cathode material as the enclosed cells but were open at the top and thus were exposed to the atmosphere inside the furnace. The spacing between the anode and the cathode was provided by the thickness of two layers of glass separator material (approximately 2 mm). A typical makeup of a beaker cell is shown in table II.

TABLE II. - MAKEUP OF A TYPICAL BEAKER CELL

Component	Weight or size
Cell case (20-ml beaker)	29 mm i.d. by 41 mm tall
Cathode current collector	25 mm i.d. by 45 mm tall
Cathode weight (CuO wires)	29.1 g (85-mole-percent CuO)
Electrolyte weight (LiCl-KCl)	22.0 g
Separators	2 thicknesses at anode
Anode size	12.7 mm diam by 38 mm tall
Anode weight	7.95 g (6.3×10^4 C; 17.5 amp-hr)

Experimental Setup and Procedure

An unsealed furnace was used for the electrolyte addition step and also for the discharge of the beaker cells. Figure 3 shows a block diagram of the setup used for the discharge of the sealed test cells. A fresh cell was wired to the proper leads of the disassembled furnace. The furnace used for heating the sealed cells was pressurized with nitrogen to retard oxidation of the lead wires and cell components during the prolonged exposure to the elevated temperatures. After making the proper exterior electrical connections, the furnace, as well as the strip chart recorder, was turned on. These test cells had four leads. One positive and one negative wire from the cell went to one pen of a two-pen strip chart recorder. This pen thus recorded the load voltage of the cell while it was under load or the open circuit voltage of the cell when it was in the no-load condition. This same set of wires also went to the cutoff voltage sensor. When the voltage of the cell dropped below a preselected value (cutoff voltage), the sensor would shut off all power to all the equipment.

The other set of wires from the test cell was used to discharge the cell at the proper rate and also to measure the output of the cell in coulombs. One of the wires of this pair went to an electronic counting device. The rate at which this device counted was proportional to the current that passed through the device. The sum of all the counts was thus related to the integral of the current times the time $\int I\,dt$. This device was in essence an electronic coulometer. From this device, the wire went next to the cycle programer. A complete cycle was 120 minutes long and was divided as follows:

100-minute cell under load R_1

10-minute cell under load $R_1 + R_2$

10-minute cell under no load

This cycle was repeated until the cell voltage fell below the cutoff voltage. From the cycle programer, the wire went to a standard resistor. The voltage drop across this resistor was a measure of the current that was flowing through the cell. The current was continuously recorded on the other pen of the strip chart recorder. A lapsed time meter was also used to record the time between the startup of a fresh cell and the termination of the experiment.

After a test had been terminated, the discharged cells were opened, and the unused anode was washed and weighed. This weight lost by the anode represented the sum of two different types of reaction. Part of the weight loss was due to electrochemical dissolution and the other was due to chemical dissolution caused by the self-discharge reaction of copper ions with the magnesium. Using the proper conversion factor (1 g of Mg $\equiv$ 7.92 $\times 10^3$ C $\equiv$ 2.20 amp-hr) these weight losses may be expressed in terms of coulombs or ampere-hours. The total weight loss ΔW_T is then the sum of the weight loss due to electrochemical action ΔW_{ec} and that due to self-discharge ΔW_{sd}. Since the electro-

chemical output of the cell is measured for each of the cell discharges, all three of these quantities may be determined. The total lapsed time of the experiment t allows three different types of average currents to be calculated; they are the following:

$$I_T = \frac{\Delta W_T}{t}$$

$$I_{ec} = \frac{\Delta W_{ec}}{t}$$

$$I_{sd} = \frac{\Delta W_{sd}}{t}$$

where

I_T rate of total discharge

I_{ec} rate of electrochemical discharge

I_{sd} rate of self-discharge

The anode efficiency η_a is defined as the ratio of the loss of anode weight due to useful electrochemical processes to the total loss of weight of the anode. It is likewise defined as

$$\eta_a = \frac{I_{ec}}{I_T} = \frac{\Delta W_{ec}}{\Delta W_T}$$

For each experiment, the information appearing in table III was recorded or calculated.

TABLE III. - REPRESENTATIVE INFORMATION

RECORDED FOR EACH CELL

Cell configuration	Horizontal
Anode weight (fresh cell)	5.9 g (4.67×10^4 C)
Case material	Nickel
Anode weight (spent cell)	0.52 g (0.41×10^4 C)
Electrolyte weight	25 g
Separators	1 anode, 1 cathode
Anode to cathode spacing	14 mm
Duration of test	290.8 hr
Anode weight loss	5.38 g
Coulombs delivered	3.92×10^4 C
Coulombs of self-discharge	0.33×10^4 C
Electrochemical discharge rate	37.4 mA
Self-discharge rate	3.10 mA
Anode efficiency	92.2 percent

RESULTS AND DISCUSSION

Determination of Optimum Amount of Electrolyte

Preliminary work was necessary to find suitable design parameters for the cells. One of the most important parameters was the selection of the amount of electrolyte to be used in the cells. With this particular combination of anode, electrolyte, and cathode, there was no a priori reason to believe that the electrolyte would be consumed during the discharge of these cells. Since the earlier studies (ref. 1) had shown that the major products of reaction were sparingly soluble MgO and insoluble Cu^0, there was no reason to believe the melting point of the electrolyte would be altered during the discharge of the cell. The particles of MgO, however, were held in suspension in the electrolyte and did change its consistency from a free flowing liquid to a semisolid paste.

The role played by the electrolyte in an electrochemical device varies from one system to another. Recent publications indicate that with certain cathode materials the discharge mechanism involves a solid-state electron transfer coupled with the increase of the hydrogen ion content of the solid. This is called the electron-proton mechanism (ref. 2), and the electrolyte supplies the protons. When a solid-state electron transfer cannot take place, the solid cathode material must first go into solution. This step is then followed by an electrochemical reduction involving these dissolved species. In the magnesium-copper oxide cell being studied, it is felt that the latter type of mechanism

takes place. The function of the electrolyte, therefore, would be to act as a solvent for the cathode material and also as a refuse accumulator for the products of reaction. The extent to which the cathode material is soluble, therefore, will affect the amount of copper species available both for electrochemical discharge and for diffusion to the anode.

A beaker cell was constructed and discharged to find how the conductivity of the electrolyte was affected by the products of discharge. Voltage against current plots were generated at several stages of discharge. These plots were constructed by placing different loads on the cell and then allowing ample time for the cell to reestablish a new steady-state condition. The slopes of these plots are defined as the overall internal cell resistance. Both the ohmic and the concentration polarization are included in this way of estimating cell resistance. Figure 4 shows the results obtained from this beaker cell. It is evident that the overall internal cell resistance remains about constant up to the point where about 12 ampere-hours of electricity had been withdrawn from the cell, and then the cell resistance increases. Knowing the number of grams of electrolyte present in the cell permits the correlation of the cell resistance with the grams of magnesium oxide per gram of electrolyte, which is given the symbol W. Figure 5 shows how this overall internal resistance value varies with the parameter W. In this plot, it is seen that the resistance remains about the same to a W value of about 28. From information like this, it was decided that about two grams of the LiCl-KCl eutectic were required for every ampere-hour (3.6×10^2 C) of reaction products. The cells shown in figures 1 and 2 use this electrolyte loading factor along with the woven glass fabric separators discussed in the section EXPERIMENT.

Controlling the Self-Discharge Process

The first group of cells to be tested were all alike (class 1 - table IV). They were the vertical type and had copper cases, lids, screens, and shafts. The use of copper throughout was an attempt to eliminate any possible side reactions between the cupric ion and any less noble material of construction to form reducible ions other than copper.

TABLE IV. - PARAMETERS STUDIED

Cell class	Type	Distance from anode to cathode, mm	Electrolyte	Separators
1	Vertical	2.0	LiCl-KCl	1 anode, 1 cathode
2	Vertical	5.0	LiCl-KCl	1 anode, 1 cathode
3	Vertical	5.0	LiCl-KCl-CsCl	1 anode, 1 cathode
4	Vertical	5.0	LiCl-CsCl	1 anode, 1 cathode
5	Horizontal	14	LiCl-KCl	1 anode, 2 cathode
6	Horizontal	14	LiCl-CsCl	1 anode, 2 cathode

Four of these cells were discharged at different average currents. Figure 6 shows the results of this series; the anode efficiencies are plotted against the average current. Here it is seen that although the average electrochemical currents vary over a wide range (43 to 487 mA), the rate of self-discharge I_{sd} for all these cells is about the same (160 to 230 mA). From this plot, it is seen that at an average electrochemical drain of about 190 milliamperes, the anode efficiency is 50 percent, or, in other words, the average rate of nonelectrochemical discharge is also about 190 milliamperes. This rate is high considering the total capacity of these cells is only about 5.4×10^4 coulombs (15 amp-hr).

In all probability, this self-discharge process is caused by the diffusion of copper ions from the vicinity of the cathode to the anode where chemical reaction takes place. This overall process may be divided into three stages or steps: (1) the solution of the copper ions at the cathode; (2) the diffusion of the copper ions from the vicinity of the cathode to the anode; and (3) the reaction of the copper ions with the magnesium anode.

In principle, any one of these three processes could have the slowest rate and thus could control the overall process. Considering the high temperatures and the large change in free energy (about 40 kcal (167 000 J)) for the reaction of copper ions with magnesium metal, the rate of this reaction would be very fast and therefore not rate controlling. Either the rate of solution or the rate of diffusion would control the overall process.

The basic diffusion equation was used to differentiate between these two processes (solution and diffusion).

$$\text{Rate of diffusion } \frac{dN}{dt} = DA\frac{dc}{dx}$$

Although the exact applicability of this simple equation to this particular system is not implied, it is instructive to investigate the implications of such an assumption. Fick's first law of diffusion simply states that rate of diffusion dN/dt is equal to the diffusion coefficient D of the species that diffuse times the area A available for diffusion times the concentration gradient dc/dx of the diffusing species. Several short fat cells were made that contained the same weights of electrode material (same area for dissolution of CuO-Cu_2O wires) and electrolyte but only had one-half the area available for diffusion between the anode and the cathode. There also was a greater distance between the anode and the cathode. If the rate of self-discharge was controlled by the rate of solution of the copper oxides, these alterations would not be expected to alter the rate of self-discharge. Table V shows the results of altering the area for diffusion by a factor of two and decreasing the concentration gradient by a factor of about two.

The fact that the rate of self-discharge was reduced by about a factor of three makes plausible the conclusion that the factor controlling the self-discharge process was the rate

TABLE V. - SELF-DISCHARGE RATES FOR TALL AND SHORT CELLS

Cell	Anode area (for diffusion), cm^2	Rate of self-discharge, I_{sd}, mA	Average rate of self-discharge, I_{sd}, mA	Self-discharge current per unit area per concentration gradient, $\frac{I_{sd}}{A \frac{dc}{dx}}$
Tall	14.1	160, 160, 205, 235	181	12.8
Short	6.2	40, 51, 63	51	16.7

of diffusion of copper ions from the vicinity of the cathode to the anode. Therefore, it should be possible to alter the diffusional characteristics of these cells by any one of the following means:

(1) Decrease the area available for diffusion; this can be done, for example, by constructing a short fat cell.

(2) Decrease the concentration gradient of the species that diffuse: this may be accomplished by increasing the separation between the two electrodes.

(3) Decrease the diffusion coefficient of the species involved in the self-discharge process. Alterations in the ion size and character of the electrolyte might bring this about.

(4) Reduce the activity of the ions causing the self-discharge. The formation of complex ions would perform this task.

(5) Introduce a separator between the electrodes which would preferentially hinder the passage of the particular ion of interest.

Studies on Alterations of Diffusional Characteristics

The method of data presentation is somewhat different than for other battery studies so it will be explained prior to the discussion of the results of these studies. The anode efficiency as stated earlier may be defined as

$$\eta_a = \frac{I_{ec}}{I_{ec} + I_{sd}}$$

If the assumption is made that the rate of self-discharge I_{sd} of a particular cell configuration and electrolyte is a constant for all rates of electrochemical discharge I_{ec}, then a curve may be generated as shown in figure 7. Here, it was arbitrarily assumed that I_{sd} would be 100 milliamperes. For any assumed I_{ec}, the anode efficiency can be calculated. For a different assumed I_{sd}, the curve would be moved up or down but would maintain the same general shape being asymptotic at zero and 100-percent anode efficiency. Figure 8 shows a whole family of these curves along with data points for some of the cells run in these studies. It is to be noted that in general the data points for a particular class of cell fall near a line of constant self-discharge. A class of cell is defined as a group of cells having the same electrode spacing, electrolyte, and separator configuration as shown in table IV. The points near the 200-milliampere line (class 1) are those seen earlier in figure 6. The electrolyte was the eutectic mixture of LiCl-KCl. The points near the 75-milliampere line are again for vertical type cells but with a greater separation between the anode and the cathode (class 2) (i.e., smaller concentration gradient of the copper ions). With this latter configuration and replacing 50 mole percent of the KCl with CsCl, the points fall near the 50-milliampere line (class 3). The effect of the larger ion size of cesium on the diffusional characteristics is more dramatically shown where all the KCl is replaced with CsCl. The points for these cells of class 4 now fall near the 15-milliampere line. The eutectic of LiCl-CsCl has about the same composition and melting point as the LiCl-KCl eutectic (mp, 333° C $\sim$ 42.5-mole-percent LiCl).

For cells of the horizontal type, the same general trend was noticed. When the electrolyte was LiCl-KCl, the rate of self-discharge was about 5 milliamperes for class 5 cells, and when the electrolyte was LiCl-CsCl, the rate was about 3 milliamperes (class 6).

With all these cells, it was found that erratic performance and intermittent short circuits occurred when cells were discharged at average currents less than about 30 or 40 milliamperes. Figure 8 has a number of points of several classes of cells that are off their respective lines of constant self-discharge. The exact reason for this is not known. At higher values of I_{ec}, on the other hand, it appears that the cells display a lower value of I_{sd} than predicted from the curves. This behavior is reasonable since, at the higher rate of electrochemical discharge, the higher concentration polarizations will act to hinder the diffusion of the copper ions from the cathode.

Although it is not obvious from the material presented in figure 8, the cells with the lowest rates of self-discharge have the highest overall internal resistance. As used herein, the cell resistance is equal to the slope of the voltage versus current plot for the cell, and includes both ohmic and concentration polarization. The value of R defined in this way will be a function of the depth of discharge of the cell and also of the current being withdrawn from the cell. Figure 9 shows a typical cell discharge cycle and how two

different values of R may be defined. In general, the term R_Δ will be of more significance than R_T since it involves two cell operating points and not one operation point and an open circuit condition. For these cells, a hundred-fold decrease in the rate of self-discharge was accompanied by only a ten-fold increase in the internal resistance. In general, the values of the internal resistance for the horizontal cells was of the order of 2 to 4 ohms while for the vertical cells it was in the range of 0.2 to 0.4 ohm. The value of the internal resistance limits the upper value of the current that may be withdrawn from a cell. In general, cells with a high internal resistance may only be used where small current drains are required.

Discharge curves of three representative cell classes are shown in figures 10 to 12. Figure 10 is the discharge curve of a class 2 cell illustrating the performance over a short discharge time (34 hr) of a cell that used a LiCl-KCl electrolyte. Figure 11 illustrates the performance of a cell (class 3) at a moderate duration discharge (77 hr) using an electrolyte of LiCl-KCl-CsCl. Figure 12 shows the long term (290 hr) operating characteristics of a class 5 cell with a LiCl-CsCl electrolyte. In addition to the open circuit voltage, the load voltage, and the current, cell resistance is also plotted in figure 12 as a function of time to illustrate how this value varies as the cell is discharged. The main point to be noted on these three figures is that abrupt changes or steps in the open circuit voltage curves occur accompanied with only small and gradual changes in the current and in the voltage under load.

Explanation of Steps in the Open Circuit Voltage

The steps in the open circuit voltage shown in figure 12 may be explained in terms of the following electrochemical model. Assume there are two overall electrochemical reactions possible (reactions I and II). Overall reaction I will have an open circuit voltage E_I which is greater than E_{II} by 100 millivolts or more. During the initial stages of discharge, the observed open circuit voltage and the load voltage are caused predominately by the presence of the reactants and the products of reaction I. As the discharge proceeds, there will be fewer type I species, and this reaction may become polarized to the extent that reactants of type II will be discharged concurrently with those of type I. Gradually the proportion of type II species reacting during discharge will become greater until the load voltage is caused predominately by reaction II. However, until almost all the type I reactants have been consumed, the open circuit voltage will be a consequence of the type I species. Later, of course, the open circuit voltage will be caused predominately by the overall reaction II. With cells of all classes discharged in these studies, there was at least one abrupt change in the open circuit voltage during the discharge. The magnitude of these changes ranged from about 50 to 250 millivolts.

Figure 13 will illustrate what two successive cycle traces look like as the changeover (from reaction I to II) is made complete. Figure 13 is based on data from a class 2 cell, and this changeover occurred between cycle 18 and 19. During the 18th cycle, there is an electroactive specie present (type I) that is responsible for the open circuit voltage, but it is not present in large enough amounts to be able to maintain the higher currents. (I drops quickly from 142 to 112 mA.) That is, they are subject to extreme concentration polarization. At the 19th cycle, this more active specie (type I) has disappeared, and the less active (type II) but more abundant specie is now responsible for both the open circuit voltage and the load voltage of the cell.

At this time it is not known exactly what these overall electrochemical reactions are. However, X-ray analyses on some cells that had undergone these abrupt changes in open circuit voltage tended to confirm the contention that a change in overall reaction had occurred.

X-Ray Analysis of the Electrolyte After Cell Discharge

The method of analysis was as follows: A discharged horizontal type cell was opened, and the unused anode was washed and weighed as before. Next, the cell was split down the middle: one-half being placed in a desiccator and the other left out in contact with the moist air. As the materials in the cell picked up hydration water, characteristic colors began to form in horizontal bands in the cathode area. From each of the areas which were made evident by the "wet" half of the cell, X-ray samples were taken from the cell half that had been kept as dry as possible. Figure 14 shows a typical set of results. The existence of the associated compound $KCl \cdot MgCl_2$ in the anolyte and the presence of Li_2O in the lower layers of the cathode area are to be noted. The upper area of the cathode area contained Cu^0 and MgO. The lack of any MgO in the anolyte is also to be noted. From this set of information, it may be concluded that cations from the anolyte migrate to the catholyte to maintain overall charge neutrality in these cells. Since the upper portion of the cathodes react first, it may further be deduced that during the latter stages of discharge the lithium ion moves instead of the magnesium ion. The overall reaction I, therefore, is associated with a reaction that would have MgO as a product of reaction, such as,

$$Mg^0 + CuO \rightarrow Cu^0 + MgO$$

whereas reaction II would be associated with a reaction that would have Li_2O as a product of reaction. One possibility might be

$$Mg^0 + 2LiCl + CuO \rightarrow Cu^0 + Li_2O + MgCl_2$$

CONCLUSIONS

Long-life high-temperature primary cells can be built that have predictable discharge characteristics. The woven glass separator material was found to prevent internal short circuits for certain cell configurations. For the cell configurations employed in these studies, the rate controlling step in the self-discharge process was found to be the rate of diffusion of copper ions from the vicinity of the cathode to the anode. The rate of self-discharge could be considerably reduced by increasing the electrode spacing and by adding cesium chloride to the electrolyte to reduce ion diffusion rates. The open circuit voltage of these cells decreased in a step-wise fashion during discharge, with at least two steps observable. The electrochemical reactions responsible for these voltages are not understood.

Lewis Research Center,
National Aeronautics and Space Administration,
Cleveland, Ohio, April 25, 1967,
120-34-01-11-22.

REFERENCES

1. Thaller, Lawrence H.: A Long-Life Thermal Cell. NASA TN D-2915, 1965.
2. Kozawa, A.; and Powers, R. A.: The Manganese Dioxide Electrode in Alkaline Electrolyte; The Electron-Proton Mechanism for the Discharge Process from MnO_2 to $MnO_{1.5}$. Electrochem. Soc. J., vol. 113, no. 9, Sept. 1966, pp. 870-877.

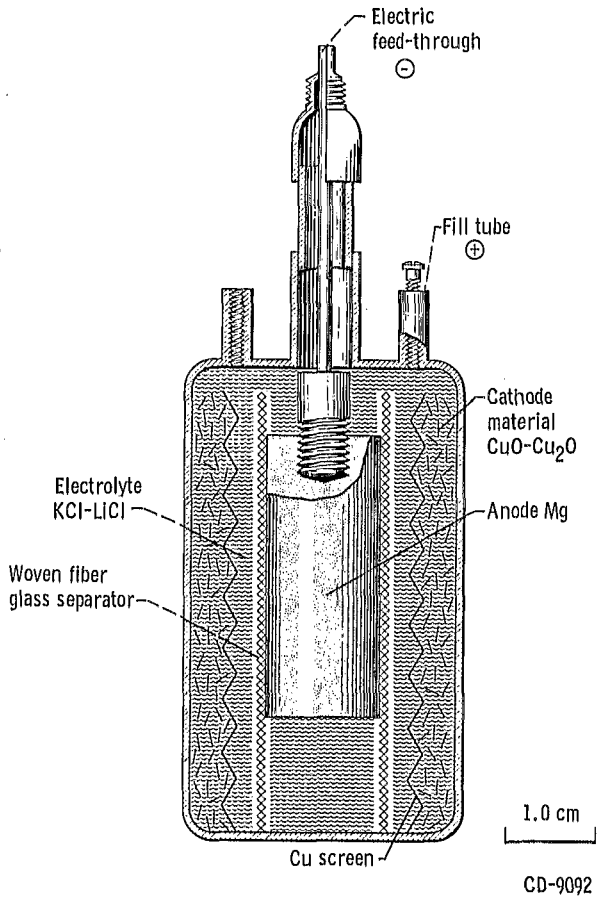

Figure 1. - Vertical type cell.

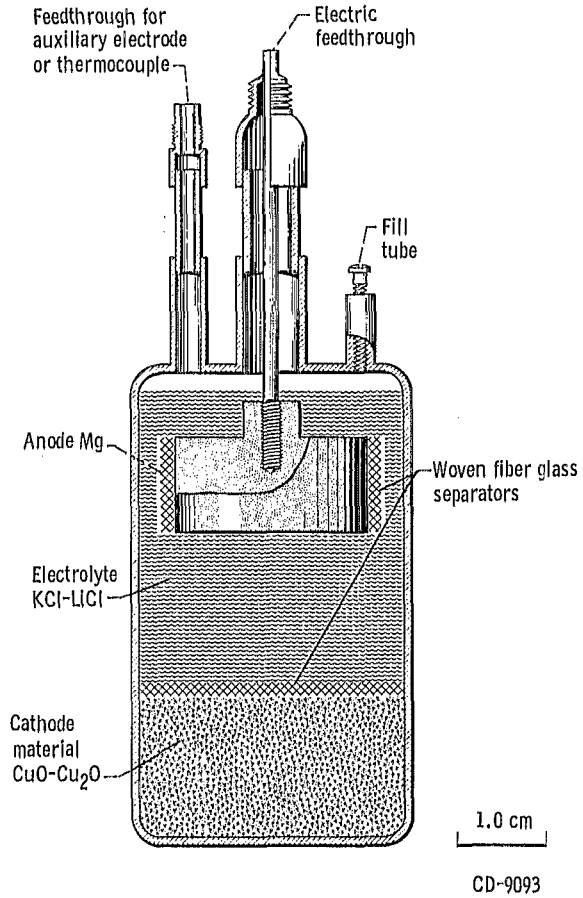

Figure 2. - Horizontal type cell.

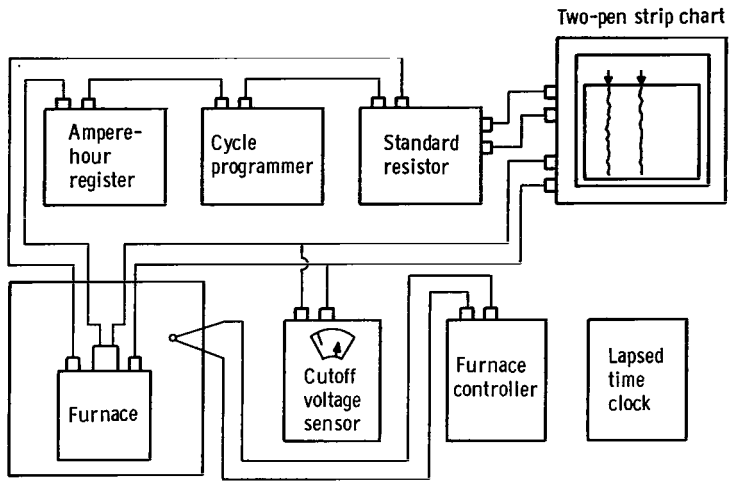

Figure 3. - Block diagram of experimental setup.

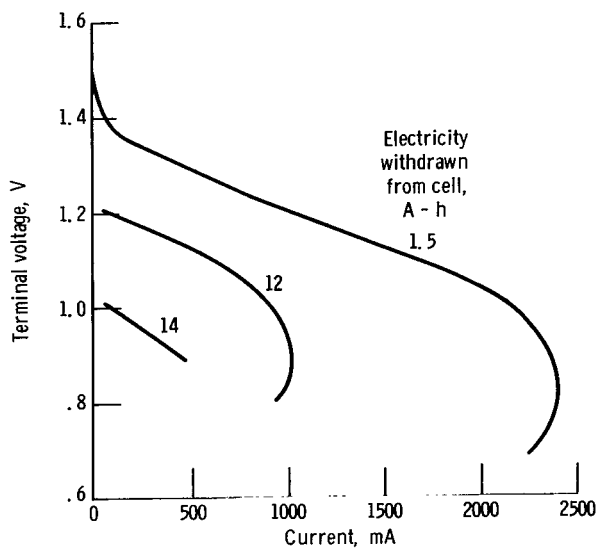

Figure 4. - Voltage and current curves of electrolyte deficient cell.

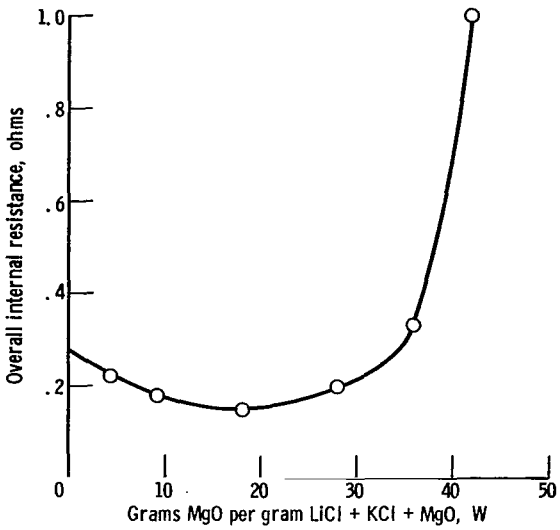

Figure 5. - Effect of ratio of magnesium oxide to electrolyte on overall internal resistance.

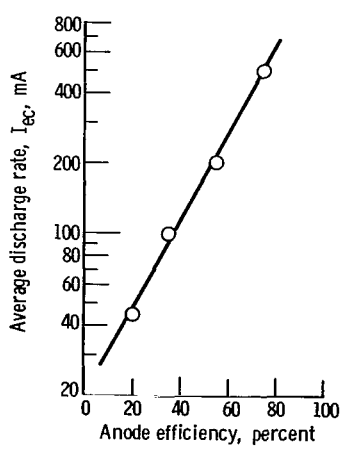

Figure 6. - Plot of average discharge rate and anode efficiency.

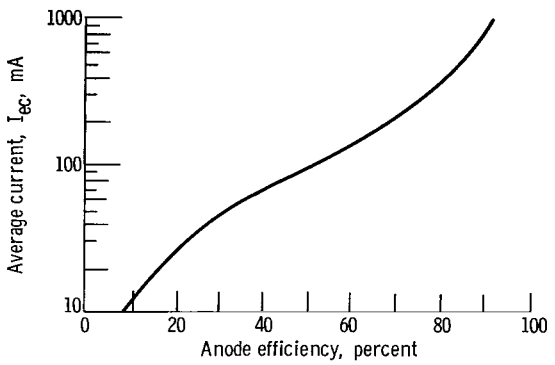

Figure 7. - Plot of average electrochemical and anode efficiency. Self-discharge rate, 100 milliamperes.

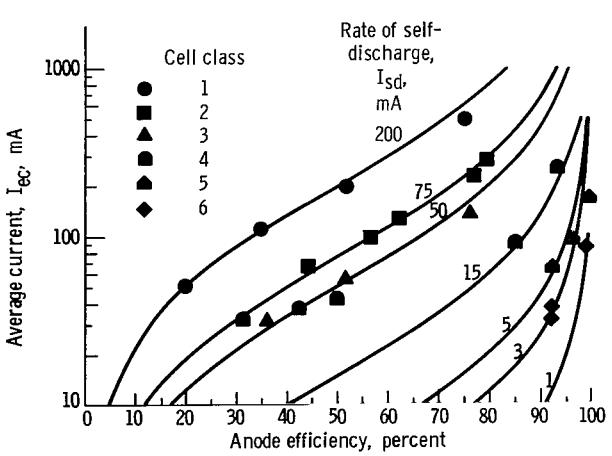

Figure 8. - Plot of average electrochemical current and anode efficiency.

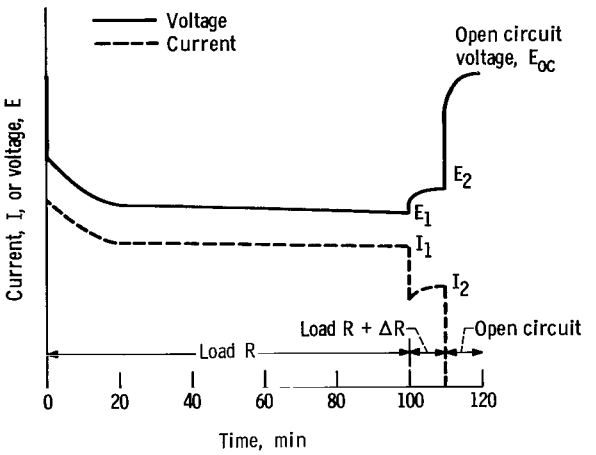

Figure 9. - Significance of overall internal resistance values. $R_\Delta = \frac{E_2 - E_1}{I_1 - I_2}$; $R_T = \frac{E_{oc} - E_1}{I_1}$.

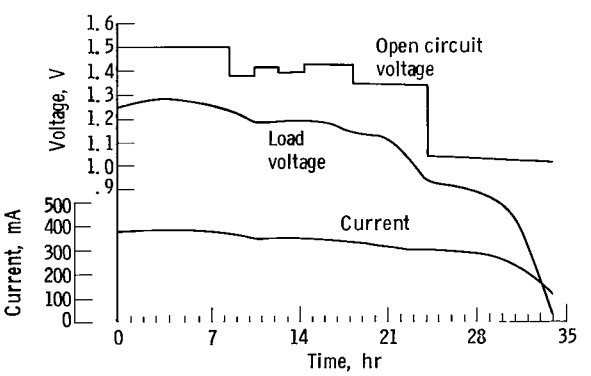

Figure 10. - Discharge curve of vertical cell. Electrolyte, 59-mole-percent LiCl - 41-mole-percent KCl; rate of self-discharge, 72 milliamperes; rate of electrochemical discharge, 280 milliamperes.

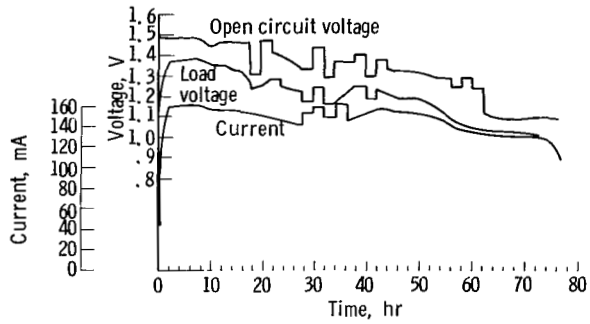

Figure 11. - Discharge curve of vertical cell. Electrolyte, 59-mole-percent LiCl - 20.5-mole-percent KCl - 20.5-mole-percent CsCl; rate of self-discharge, 41 milliamperes; rate of electrochemical discharge, 132 milliamperes.

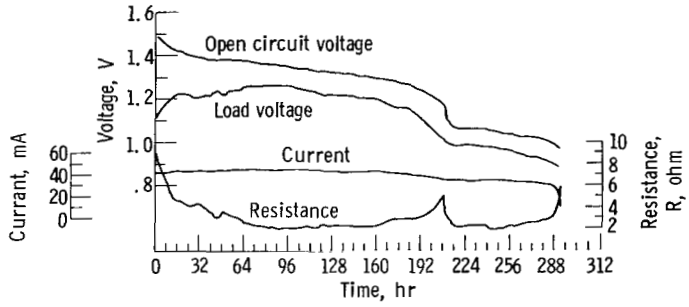

Figure 12. - Discharge curve of horizontal cell. Electrolyte, 59-mole-percent LiCl - 41-mole-percent CsCl; rate of self-discharge, 3.1 milliamperes; rate of electrochemical discharge, 37.4 milliamperes.

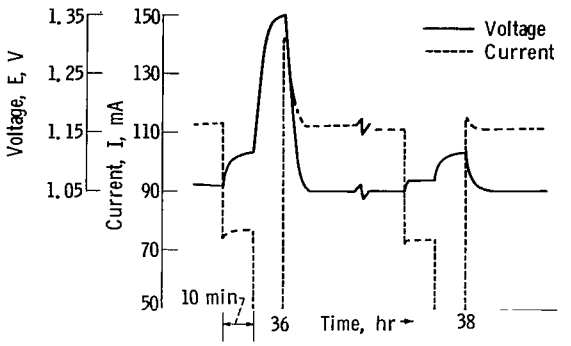

Figure 13. - Variance of current and voltage with time.

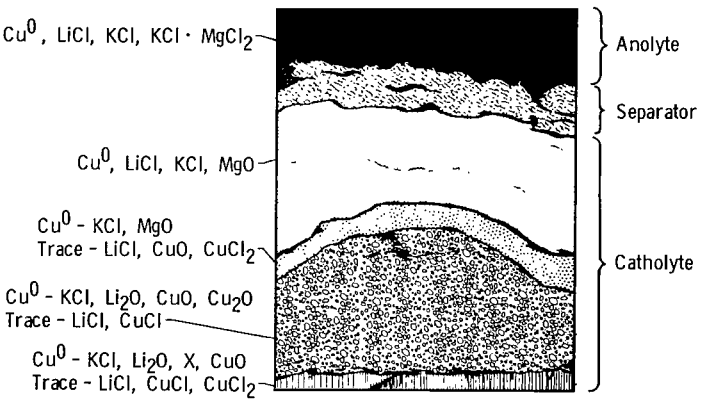

Figure 14. - X-ray analysis of spent cell.

National Aeronautics and Space Administration
WASHINGTON, D. C.

OFFICIAL BUSINESS

FIRST CLASS MAIL

POSTAGE AND FEES PAID
NATIONAL AERONAUTICS AND
SPACE ADMINISTRATION

08U 001 28 51 3DS 68092 00903
AIR FORCE WEAPONS LABORATORY/AFWL/
KIRTLAND AIR FORCE BASE, NEW MEXICO 87117

ATT MISS MADELINE F. CANOVA, CHIEF TECHNI
LIBRARY (WLIL)

POSTMASTER: If Undeliverable (Section 158 Postal Manual) Do Not Return

"The aeronautical and space activities of the United States shall be conducted so as to contribute . . . to the expansion of human knowledge of phenomena in the atmosphere and space. The Administration shall provide for the widest practicable and appropriate dissemination of information concerning its activities and the results thereof."

—NATIONAL AERONAUTICS AND SPACE ACT OF 1958

NASA SCIENTIFIC AND TECHNICAL PUBLICATIONS

TECHNICAL REPORTS: Scientific and technical information considered important, complete, and a lasting contribution to existing knowledge.

TECHNICAL NOTES: Information less broad in scope but nevertheless of importance as a contribution to existing knowledge.

TECHNICAL MEMORANDUMS: Information receiving limited distribution because of preliminary data, security classification, or other reasons.

CONTRACTOR REPORTS: Scientific and technical information generated under a NASA contract or grant and considered an important contribution to existing knowledge.

TECHNICAL TRANSLATIONS: Information published in a foreign language considered to merit NASA distribution in English.

SPECIAL PUBLICATIONS: Information derived from or of value to NASA activities. Publications include conference proceedings, monographs, data compilations, handbooks, sourcebooks, and special bibliographies.

TECHNOLOGY UTILIZATION PUBLICATIONS: Information on technology used by NASA that may be of particular interest in commercial and other non-aerospace applications. Publications include Tech Briefs, Technology Utilization Reports and Notes, and Technology Surveys.

Details on the availability of these publications may be obtained from:

SCIENTIFIC AND TECHNICAL INFORMATION DIVISION

NATIONAL AERONAUTICS AND SPACE ADMINISTRATION

Washington, D.C. 20546