NATIONAL AERONAUTICS AND SPACE ADMINISTRATION

Technical Report 32-1244

Thermionic Converter and Generator Tests

P. Rouklove

JET PROPULSION LABORATORY
CALIFORNIA INSTITUTE OF TECHNOLOGY
PASADENA, CALIFORNIA

March 1, 1968

NATIONAL AERONAUTICS AND SPACE ADMINISTRATION

Technical Report 32-1244

Thermionic Converter and Generator Tests

P. Rouklove

Approved by:

L. D. Runkle for

P. Goldsmith, *Manager*
Spacecraft Power Section

JET PROPULSION LABORATORY
CALIFORNIA INSTITUTE OF TECHNOLOGY
PASADENA, CALIFORNIA

March 1, 1968

Acknowledgment

The author wishes to thank S. Luebbers, G. L. Rose, G. Stapfer and R. F. Gruber for their assistance both during the development of the test equipment and during laboratory tests; E. C. Bernett for the material examinations; Dr. K. Shimada for his technical assistance; and T. W. Koerner for his support of this work.

Page intentionally left blank

Page intentionally left blank

PRECEDING PAGE BLANK NOT FILMED.

Contents

Tables

Figures

Abstract

This report presents the results of tests of approximately 40 advanced-technology thermionic converters (all of planar geometry) and of 2 thermionic generators, which were made to determine power output, maximum life, efficiency, and ability to withstand environmental stresses. Electron bombardment was used to simulate solar heating. In support of the converter and generator development, ancillary experiments were performed to investigate (1) the reaction of alumina with molybdenum at high temperatures, (2) the accuracy of temperature measurements with different types of hohlraums with various *L/D* ratios, (3) the effects on the performance of a converter when enclosed in a generator configuration, and (4) the relationship between the shape of the emitter and that of the filaments used in the electron bombardment. Improved test equipment enabled simpler operation and, also, provided greater accuracy in diagnostic measurements. It was demonstrated that the units assembled have increased power and long-term life and can stand the stresses of the *Atlas/Agena* launch environment.

Thermionic Converter and Generator Tests

I. Introduction

Since 1961, the Jet Propulsion Laboratory of the California Institute of Technology, sponsored by the National Aeronautics and Space Administration, has been involved in the design, development, and testing of solar-heated thermionic power systems for space application.

A total of some 120 converters and five thermionic generators have been tested in this program. Between 1961 and 1965 approximately 80 thermionic converters were evaluated and performance-tested for power output, power density, efficiency, maximum life, and ability to withstand environmental stresses. Additionally, 40 converters of more advanced design were tested during the latter part of 1965 and through 1967. All the converters tested were of the planar electrode geometry.

This report documents the results of the tests performed on some of the later engineering model thermionic converters and of two of the five thermionic generators assembled using the converters. Sections of the document describe the equipment used in the testing, results of the metallographic examination of the abnormal converters, and ancillary experiments performed in support of the converter and generators design and tests.

II. Test Equipment

The equipment used for the testing of converters has been subjected to several modifications during the past years to improve the accuracy of the results, to simplify the operating procedures, and to include the ability to perform diagnostic measurements. The present equipment (Fig. 1) includes the capability (1) to perform parametric tests in both steady and dynamic states, (2) to make electrode-surface work-function measurements, and (3) to accomplish cesium conduction measurements. The desirable features from previous equipment – such as large-capacity ion pumps for producing the working vacuum for laboratory testing, heavy feedthroughs, adjustable universal converter supports, uninterrupted thermocouple leads, etc. – have been retained. In addition, the high-voltage accelerating power supply for the electron gun was modified to provide constant bombardment power in either an emission control of photodetector mode, as well as manual control.

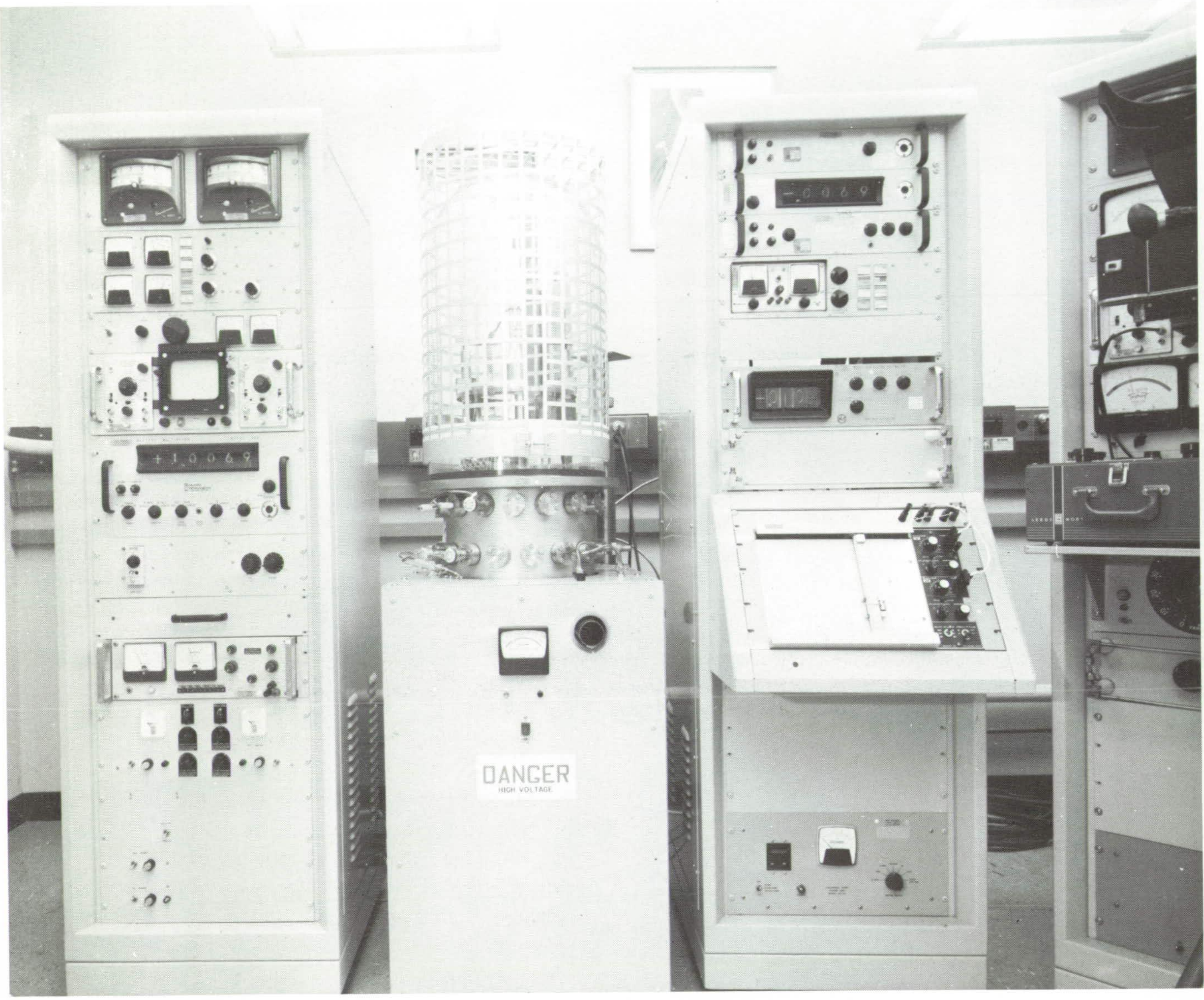

Fig. 1. Laboratory test equipment

The power supply, itself, utilizes solid-state circuitry to minimize space requirements and heat-dissipation problems. The resistive-type load has been replaced by a water-cooled solid-state load that uses high-power transistors and is capable of operating between 3.0 and 0.2 V at an output of 200 A. This arrangement permits a remote location of the controls. Use of the solid-state load, which can be either voltage- or current-regulated, simplifies the measurement techniques. In addition, it allows the performance of dynamic *sweeps* by superimposing ac signals at the load-control level to eliminate the use for heavy-duty transformers, variacs, and long leads associated with the *common* sweep operation. Both cesium-reservoir and collector heaters are controlled by silicon-controlled-rectifier (SCR) proportional controllers activated by thermocouples. The use of these controllers, in conjunction with rectification and filtering of the SCR output, improves both the control and measurement accuracy of the heater power. All measurements are taken with a six-digit digital voltmeter to provide greater accuracy and to avoid reading errors. Meters are used only as general monitors.

A sampler designed by JPL allows the expanded graphical recording of the dynamic *I–V* characteristics on an *X–Y* plotter; an electronic watt-meter will be incorporated soon. Air- or water-cooled blocks are used to control the cesium-reservoir and collector temperatures. A solid-state, 0°C reference junction, approved after a 6-mo testing period, is used for all thermocouple readings. This test equipment has greatly simplified the tasks of accurately measuring the converter performance and obtaining additional experimental measurements necessary for diagnostic evaluation.

The test stand used for the measurements of the generators has also been redesigned to include the automatic emission controller to prevent the possibility of expensive — and often disastrous — thermal runaways. All generator performance data are now recorded on a 100-channel automatic recording system. Meters are provided for general monitoring.

III. Converter Tests

Approximately 40 converters of different types have been tested since June 1965. For the first time in thermionic converter history, a large number of converters (26) were procured simultaneously to rigid acceptance conditions. The minimum power density was 17 W/cm^2 at 1735°C emitter temperature as measured with an 8/1 hohlraum. The converters were of a type developed under a previous effort with power densities of 22 W/cm^2 achieved in prototype engineering models. The same prototype converters demonstrated power densities of 28.5 W/cm^2 at 1800°C emitter temperature (Fig. 2). The average spread of the converter characteristics, observed at an emitter temperature of 1700°C, is graphically illustrated in Fig. 3. The spread observed was 8 A at 0.7 V, or ±6%. All these converters had a molybdenum collector and a composite emitter obtained by isostatic pressure-bonding a 20-mil-thick rhenium sheet onto a tantalum substrate. Although no ill effects were observed in the early developmental stages of prototype

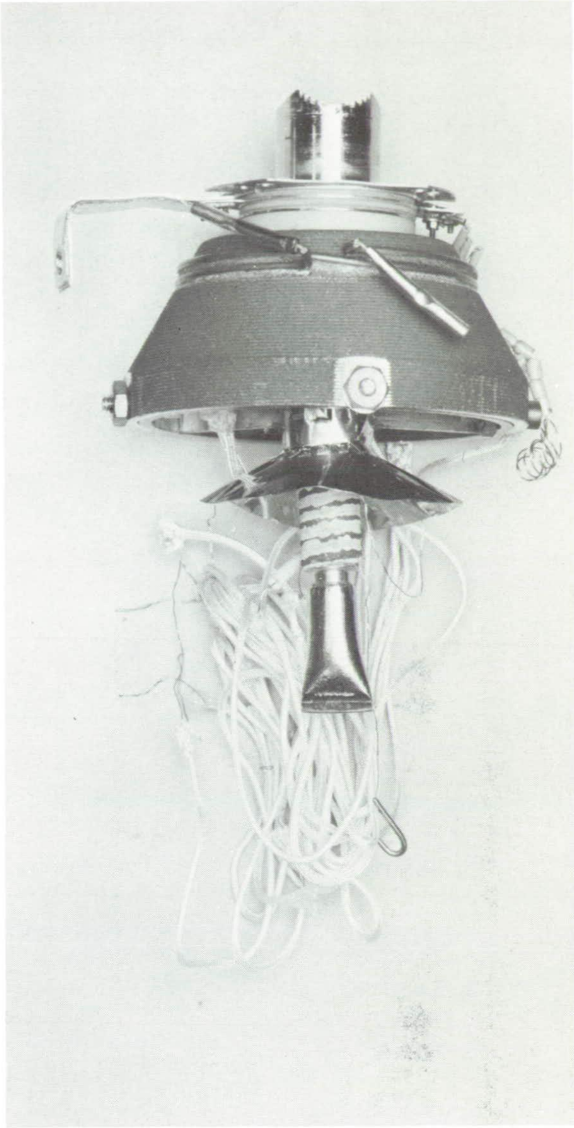

Fig. 2. Series VIII converter

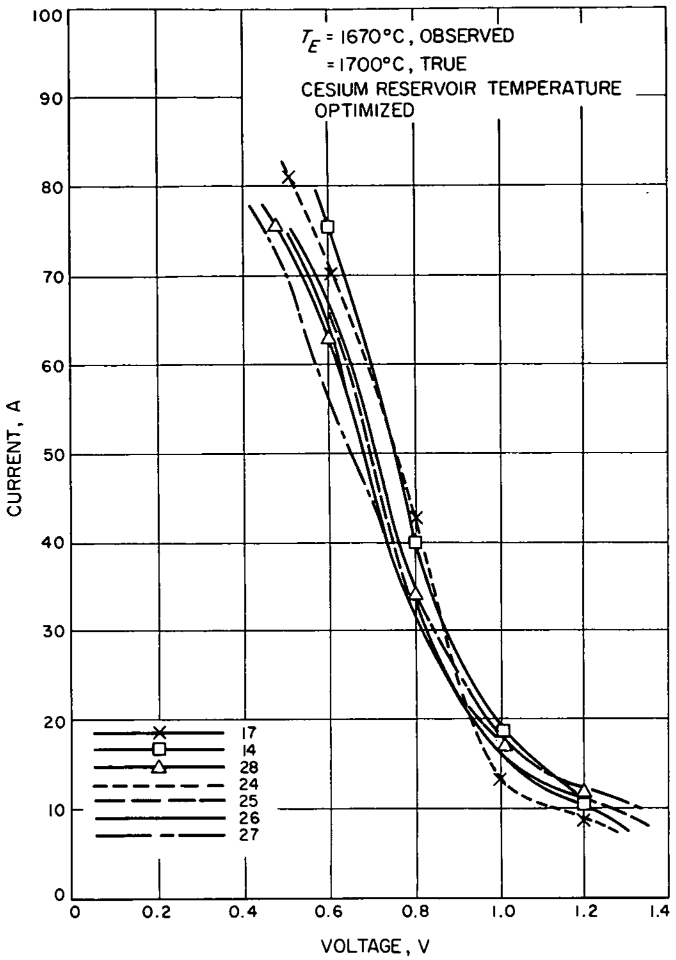

Fig. 3. Series VIII converter performance

Table 1. Converter performance, 1962 through 1965

Parameter	1962	1963	1964	1965
Power output, W	12	25	36	44
Power density, W/cm^2	6	12	18	22
Efficiency, %	3	5	8	12.5
Maximum life, h	119	1500	3200+	13150+
Vibration: 20 g and 0 to 2000 Hz	—	—	—	Passed
Shock: 100 g, 0.5 ms	—	—	—	Passed

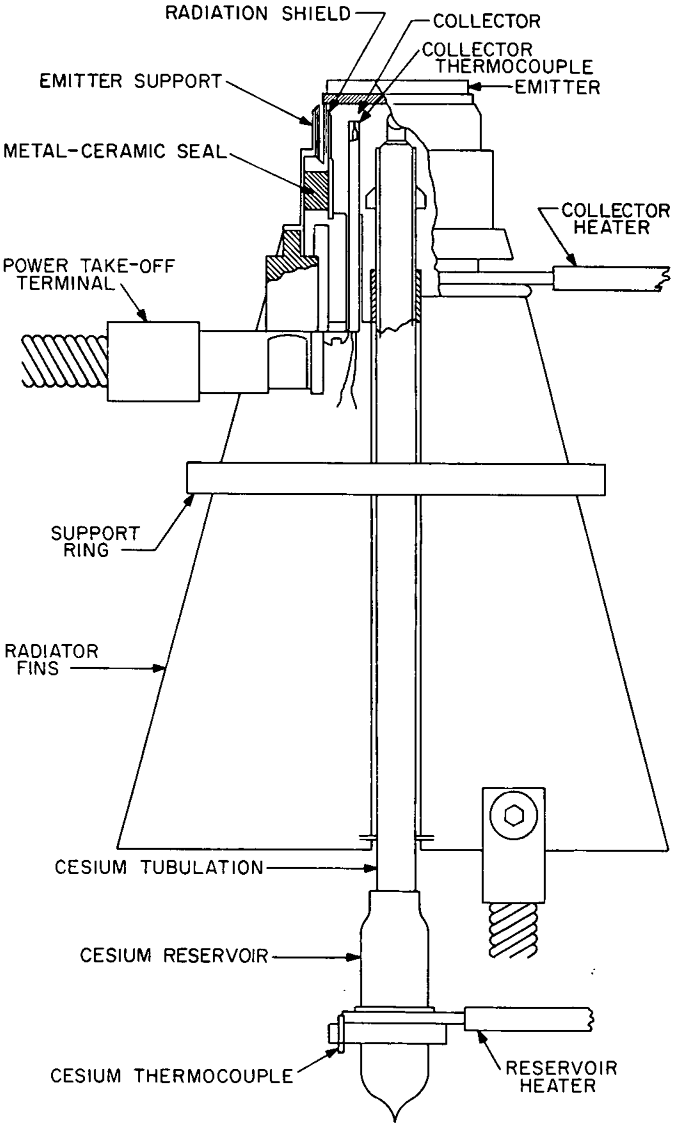

Fig. 4. Series IX converter

hardware, long-term life tests (Ref. 1) indicated a progressive reduction in power output. This reduction was attributed to a decrease in emitter-surface temperature that resulted from an excessive interdiffusion of rhenium with the tantalum substrate (Ref. 2) and resulted in Kirkendall holes and stress cracks at the tantalum–rhenium interface. The use of the rhenium emitters has resulted in improved converter performance, both as an increase in power-output density and in greater contamination tolerance of the material; although the gain in power density is not spectacular (22 W/cm^2 with rhenium to 20 W/cm^2 for tantalum), far fewer problems were encountered as a result of electrode contamination. These contaminants generally caused transport of the emitter material onto the collector surface with a net degradation in power output, instability of operation, and eventual failure of the converter. The high performance, repeatability of results, and progress shown in the last years (Table 1) confirm that the thermionic converters have passed the primary development stage and, under careful processing control, are capable of extended and reliable operation.

To implement desirable improvements in the previous type solar-energy thermionic (SET) converter, series IX of experimental models was initiated; this new series included reentrant emitter sleeves, containment in a 30-deg encompassing angle, and reinforced emitter-current pickup leads. A view of such a converter is presented in Fig. 4. The converters were built with a 2.5-cm^2 emitter area and a 0.0015-in. interelectrode spacing. It was expected that the reduced spacing would improve the performance by reducing the plasma losses. The reentrant-type emitter sleeve offers the advantages of lengthening the heat choke and, thus, of allowing the use of heavier structural material. Typical performance of this converter is presented in Fig. 5.

The results of experimental measurements performed on laboratory test vehicles were verified in an engineering model converter shown in Fig. 6. These experiments (Ref. 3) confirmed earlier results (Ref. 4) and specifically demonstrated the existence of an optimum interelectrode spacing for a given combination of electrode materials, operating temperature, and selected voltage. The comparative results are presented in Table 2. During the tests of the converters, it was observed that different configurations of emitter cavity faces, in conjunction with the design of the electron-gun, had a great influence on the observed converter performance. Differences of as high as 130°C in actual emitter temperatures were estimated to result when using different electron-gun configurations. In general, the size, location, shape, and concentricity of the filament used in the electron-beam heating of thermionic converters and thermionic generator cavities were found to be paramount factors in the test results.

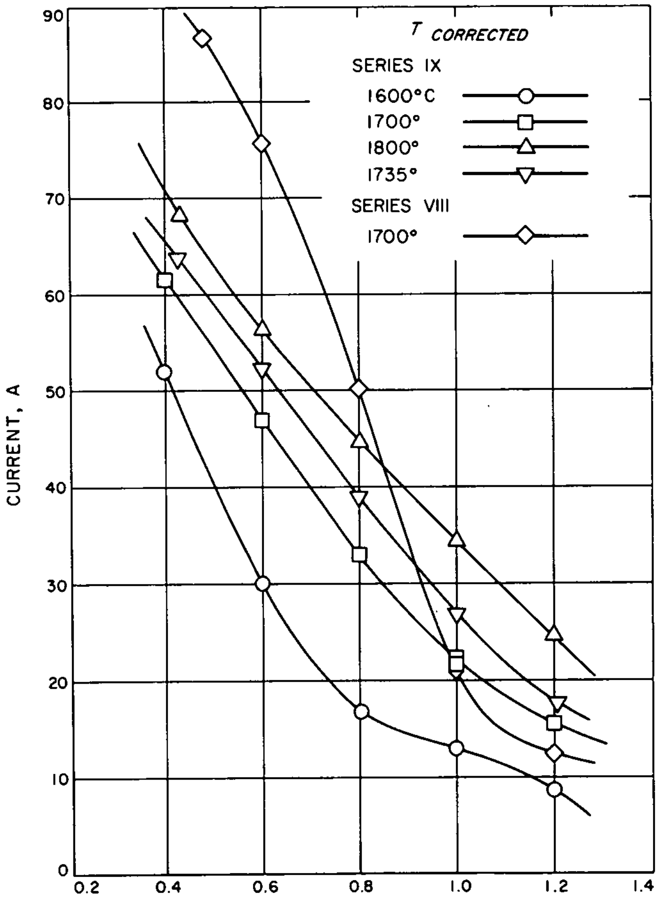

Fig. 5. Series IX converter performance

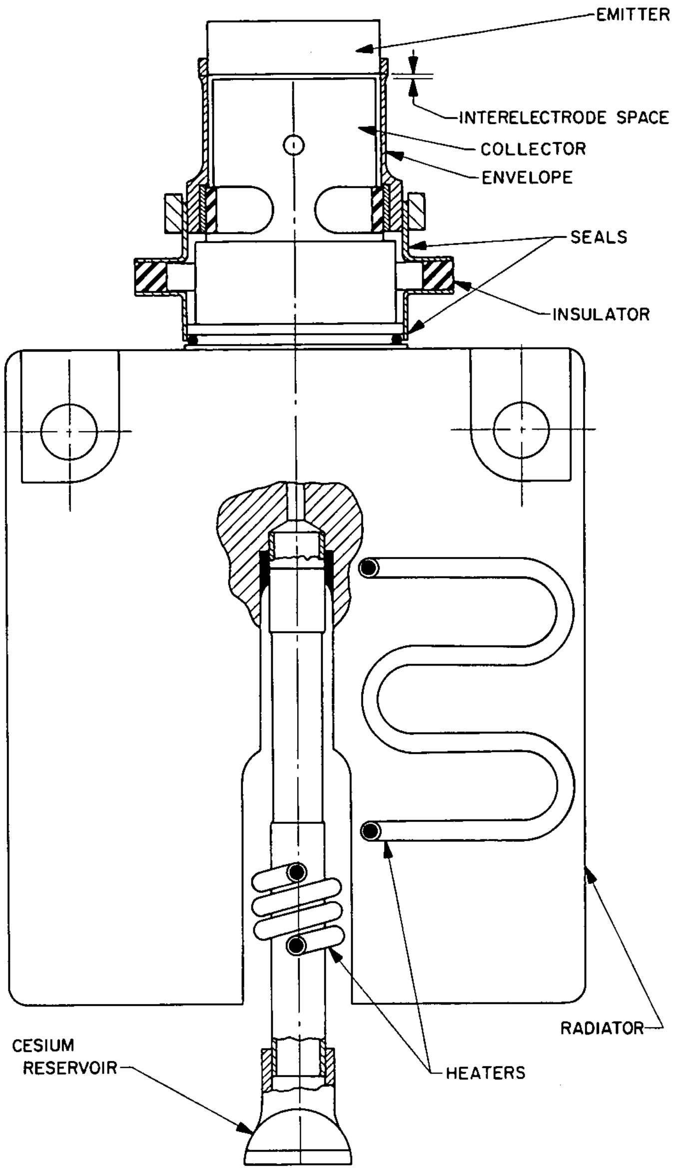

Fig. 6. Advanced converter SN 3

Table 2. Converter vs test-vehicle performance comparison[a]

Voltage output, V	Output power densities, W/cm²		
	Test-vehicle collector 2-cm² guard ring	Converter	
		Emitter area 2 cm²	Collector area[b] 1.88 cm²
0.6	25.2	24.6	26.0
0.7	21.3	21.0	22.2
0.8	16.1	15.2	16.1

[a]SN 3 advanced converter.
[b]Sidewall emission discounted.

IV. Generator Tests

Two multiconverter thermionic generators were tested during 1966–1967. The earlier constructed generator (Ref. 5) consisted of three converters connected in series. Specially shaped emitter pieces, or *shoes*, were machined in an L-shaped configuration, each constituting one-third of the side and bottom of the thermal cavity. The 0.60-in.-diam cavity opening was surrounded by a tantalum cone. The converters used in the generator were built with tantalum emitters and molybdenum collectors. The radiators were mechanically clamped onto the collector base; this attachment method resulted in imperfect thermal contact and in deficient heat transfer, which was reflected in excessive collector surface (1050°C) and seal (900°C) temperatures. A sectional view of the generator is presented in Fig. 7.

The generator was tested in the laboratory by use of electron-bombardment heating at five values of total heat input: 1100, 1000, 900, 800, and 700 W. No allowance was made for the conduction or radiation losses (estimated at 300 W). The generator performance data are presented in Table 3 and graphically shown in Fig. 8. The generator was tested with solar energy for a short time and under non-optimum conditions. A power output of 9.5 W was recorded, with an insolation estimated at 700 W. The tests were interrupted as a result of a leak in the cesium tubulation pinch-off of one converter.

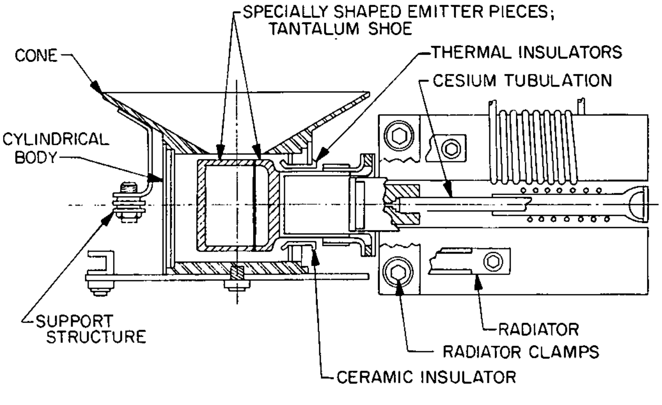

Fig. 7. Three-converter generator

Table 3. Performance of three-converter thermionic generator

Total power input, W	Voltage output, V	Current output, A	Power output, W	Efficiency, %
700	1.5	16.6	24.9	3.56
	2.1	9.1	19.2	2.74
	3.0	3.3	9.9	1.42
800	1.5	20.8	30.8	3.84
	1.8	17.7	32.3	4.02
	2.4	10.6	25.6	3.02
	3.0	6.6	19.7	2.46
900	1.2	30.2	35.7	3.96
	1.5	25.4	38.1	4.24
	2.0	18.0	35.9	4.00
	3.0	9.0	26.9	3.00
1000	2.0	22.0	44.0	4.40
	2.2	20.5	44.7	4.47
	3.0	11.2	33.6	3.36
1100	2.1	22.9	48.0	4.31
	2.4	22.0	52.0	4.73
	3.0	13.6	40.3	4.00

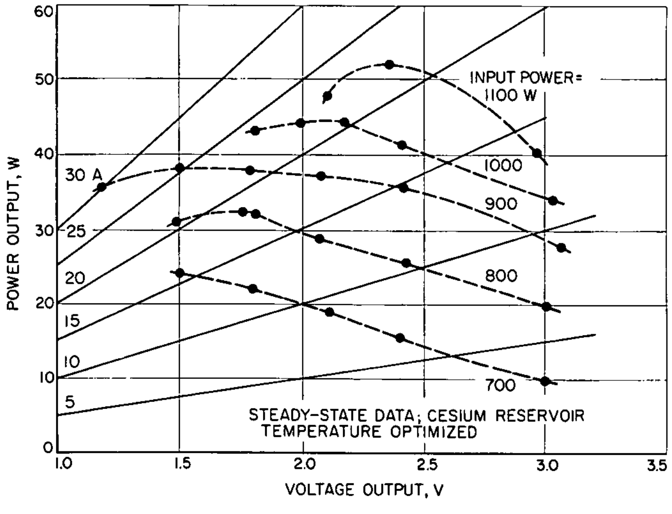

Fig. 8. Three-converter generator performance

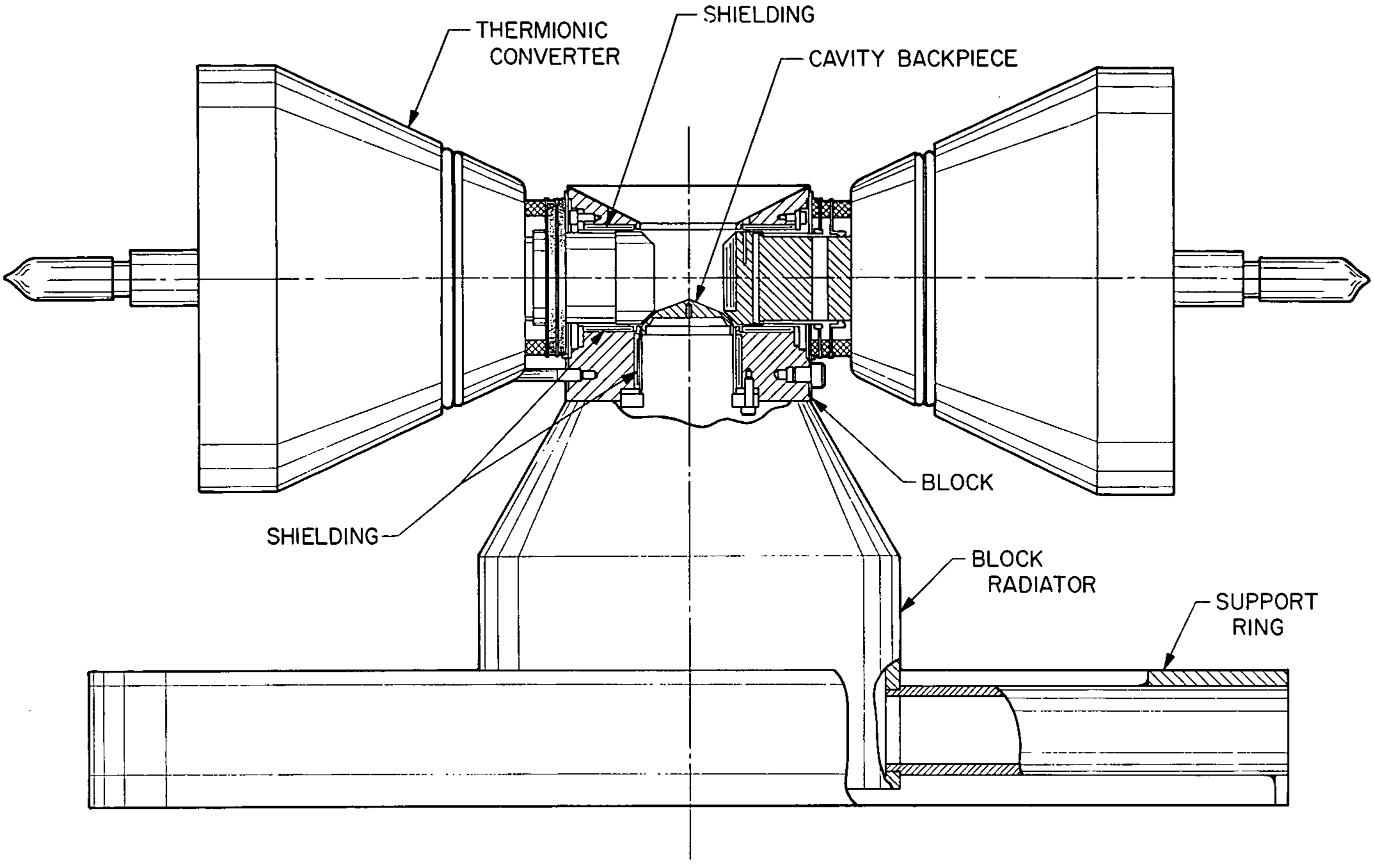

Fig. 9. Four-converter generator

The second generator tested (Fig. 9) consisted of four converters connected in series and radially mounted in a molybdenum cubical block. This unit was also tested in the laboratory with electron-bombardment heating (Ref. 6). The four-converter configuration was adopted after confirmation, during the solar tests of a five-converter generator, that the distribution of the solar flux in the thermal cavity was asymmetric and depended on the rim angle and geometric accuracy of the solar concentrator. The rear portion of the cavity was used as a reflector to improve the heat distribution in the cavity and as a radiator of excessive heat. Both the converters and a mockup of the generator successfully passed the environmental test requirements of the *Atlas/Agena.*

The generator tests were performed at heat input values ranging between 900 and 1650 W and at emitter temperatures of 1600, 1650, 1700°C, and 2000°K. The tests were performed at constant-voltage outputs of 4.0, 3.2, 2.8, and 2.4 V. The generator was tested for a total of 166 h and underwent 22 complete thermal cycles. The maximum power output observed was 154 W at 2.8 V for a total power input of 1620 W, with an efficiency of 9.5%. The electron-bombardment gun design used in the tests had substantial thermal losses (estimated at 400 W) by conduction, which contributed to the lower efficiency figure observed. The results of the tests are summarized in Table 4 and Fig. 10.

It was noted during the generator tests that, when mounted in a generator, individual converter performance disagreed with the results observed during the individual converter tests of the same converter. Attempts made to correlate the emitter operating temperatures with the performance of the converters, both when tested individually in the laboratory and when assembled in a generator configuration, were not successful (Fig. 11). Experiments performed using a molybdenum block with a single converter to simulate the generator configuration indicated the possibility of an increase in the interelectrode spacing as a result of the heat concentration by

Table 4. Performance of four-converter thermionic generator

Total power input, W	Voltage output, V	Power output, W	Efficiency, %
900	5.15	48.6	5.31
	3.10	49.0	5.37
1000	4.8	65.2	6.54
	3.35	71.4	7.14
	2.40	70.42	6.97
1100	4.0	88.31	8.04
	3.2	90.30	8.15
	2.4	87.2	7.81
1200	4.8	96.0	8.1
	3.2	105.0	8.8
	2.4	100.2	8.35
1400	3.0	99.5	8.0
	2.75	110.0	8.4
	2.0	103.5	7.2
1600	2.8	154.0	9.5
	2.3	140.0	7.73

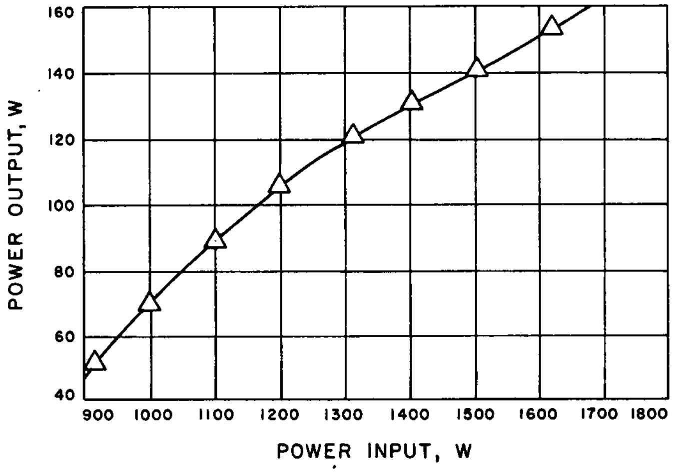

Fig. 10. Four-converter generator performance

the block on the thin emitter-support sleeve. Calculations made with an estimated thermal distribution indicated an additional emitter structure expansion of 0.002 in., resulting in an interelectrode spacing of approximately 4 to 5 mils. Cesium conduction tests are now in process to confirm the calculations.

The generator is presently at the Table Mountain Solar Test Facility undergoing solar tests using the newer, and more accurate, test installation presented in Fig. 12.

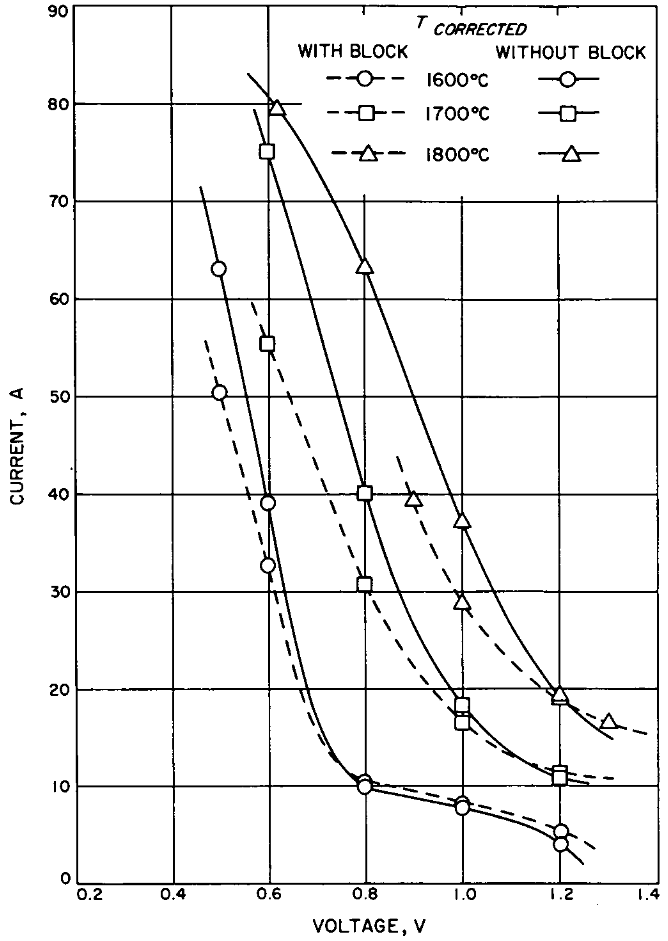

Fig. 11. Converter performance with and without generator block

V. Auxiliary Experiments

Several experiments were carried out at JPL in support of converter and generator tests. In one of these experiments, it was found that pure alumina (sapphire with less than 0.003% total impurity), in contact with molybdenum at high temperatures and in vacuum, reacts with the metal. At a temperature of 1350°C, a reaction was observed after 90 h of operation; at 1450°C, this reaction was observed after 10 h; and at 1500°C, the reaction was observed after 5 h and was very pronounced after 370 h. These tests were performed in a vacuum of better than 10^{-7} torr. It was observed that the molybdenum was attacked and had diffused into the sapphire, while metallic aluminum was effused. Deformation of the sapphire body and loss in weight was also observed. Aluminum was deposited on a cooler molybdenum plate ($\approx$600°C) which was placed in a manner to simulate the collector in a thermionic converter. Similar reactions

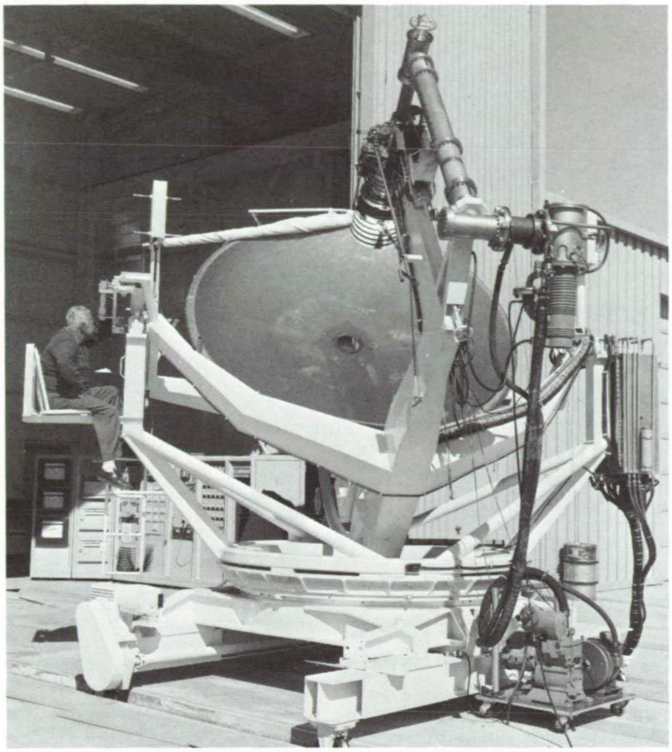

Fig. 12. Table Mountain Solar Test Facility

were also observed with Lucalox[1] in the presence of cesium vapor. The diffusion of aluminum to the collector in a thermionic converter drastically altered the collector work function; also the gradual buildup of materials could result in interelectrode shorting.

In another series of experiments, performed in order to verify the accuracy of temperature measurements with optical pyrometers, hohlraums of various length/diameter (L/D) ratios in several different metals were compared. The materials selected were those normally used as emitters of thermionic energy converters. A thin filament (0.002 in.) pyrometer was used during this experiment; the instrument was calibrated against a pyrometer and brightness standards calibrated by the National Bureau of Standards (NBS). It was observed that, in hohlraums with an L/D ratio of <6, errors of various degrees would result, depending on the method of drilling and bottom-finishing the hohlraums. Errors of up to 60°C were observed in a hohlraum with an L/D ratio of 4. In hohlraums with 8/1 or larger ratios, negligible errors were detected, regardless of materials or methods of hohlraum drilling. In shallow hohlraums, it was observed that, after extensive periods of heating, whisker growth appeared on the bottom and sides of the cavity. This growth altered the cavity emissivity values. Microscopic examination indicated this behavior may be related to crystal-lattice distortions induced during the drilling of the cavity. This phenomenon was much less pronounced in the cavities produced by electrical discharge machining. Differences in temperature measurements were also observed between broad- and narrow-filament optical pyrometers, as well as between two-color and filament-type pyrometers.

An investigation was performed to study possible relations between the shape of the emitter and that of the filaments used in electron bombardment. In a case where severe geometric mismatch existed, differences in emitter hohlraum temperatures of 130 to 140°C were estimated by use of different shapes of filament. In an experiment designed to simulate a concentric emitter, a molybdenum tube was heated with a helical filament (0.030-in.-diam tungsten). Longitudinal and radial differences in temperature distribution were observed after long-term operation. Longitudinal differences as high as 120°C (surface observation) and circumferential differences as high as 50°C were observed after filament sagging and deformation. Such differences in emitter temperature distribution may explain the shift of converter performance during long-term life tests.

VI. Summary

The research and development of solar thermionic power sources conducted during the past 5 yr under NASA–JPL guidance have yielded notable improvement. Marked advancements in the design and fabrication of converters, generators, solar concentrators and related test equipment have been achieved. The high-performance level and reproducibility obtained in practical hardware designs have demonstrated that thermionic energy conversion is now beyond the primary development stage and, under careful process control, is capable of extended and reliable operation.

---

[1] Lucalox is a tradename of a ceramic developed by General Electric.

References

1. Luebbers, Scott, "Result of Life Tests of Thermionic Converters," presented at the 1966 Thermionic Conversion Specialist Conference, Houston, Texas, Nov. 3, 1966.
2. Bernett, E. C., "Metallurgical Examination of Thermionic Converters," *Supporting Research and Advanced Development,* Space Programs Summary 37–39, Volume IV, pp. 65–69. Jet Propulsion Laboratory, Pasadena, Calif., June 30, 1966.
3. Campbell, A. E., *Final Report: High-Performance Thermionic Converters,* EOS-6952, Final. Electro-Optical Systems, Inc., Pasadena, Calif., Aug. 1963.
4. Jensen, A. O., and Baum, E. A., "Thermionic Converters – Design Status and Forecast," *Proceedings of the 15th Annual Power Source Conference, May 1961,* pp. 143–147.
5. Rouklove, P., "Thermionic Generator Development," *Supporting Research and Advanced Development,* Space Programs Summary 37–34, Volume IV, pp. 38–42. Jet Propulsion Laboratory, Pasadena, Calif., Aug. 31, 1965.
6. Rouklove, P., "Thermionic Converter and Generator Development," *Supporting Research and Advanced Development,* Space Programs Summary 37–40, Volume IV, pp. 1–14. Jet Propulsion Laboratory, Pasadena, Calif., Aug. 31, 1966.